# TEXAS DEPARTMENT OF TRANSPORTATION

| DIV. NO. | DIST. |
|---|---|
| 15 | SAT |
| STATE | STATE DIST. |
| TE/AS | SAT |
| CONT. | SECT. |
| 2452 | 01 |

# PLANS OF PROPOSED
# STATE HIGHWAY IMPROVEMENT

BEXAR COUNTY

LOOP 1604

FEDERAL AID PROJECT NO. NH 2000(704), etc.

SEE SHEET NO. 2
FOR SHEET INDEX

| | |
|---|---|
| DESIGN SPEED MAINLANE | = 110 KM/H |
| DESIGN SPEED FRONTAGE RD "B" & "D" | = 90 KM/H |
| DESIGN SPEED FRONTAGE RD "G" | = 100 KM/H |
| AREA OF DISTURBED SOIL | = 161.14 Ha |

**PROJ. NO. NH 2000(704)**

CONTROL: 2452-01-036
LIMITS: SEE ①
LENGTH OF RDWY: 7766.460 M
BRIDGE LENGTH: 145.040 M
TOTAL LENGTH: 7911.500 M

**PROJ. NO. NH 2000(704)☆**

CONTROL: 2452-01-037
LIMITS: SEE ②
LENGTH OF RDWY: 4700.394 M
BRIDGE LENGTH: 19.606 M
TOTAL LENGTH: 4720.000 M

**PROJ. NO. STP 2000(705)MM**

CONTROL: 2452-01-038
LIMITS: SEE ③
LENGTH OF RDWY: 1230.800 M
BRIDGE LENGTH: 269.200 M☆☆
TOTAL LENGTH: 1500.000 M

**PROJ. NO. STP 2000(703)HES**

CONTROL: 0849-01-036
LIMITS: SEE ④
LENGTH OF RDWY: 0.001 M
BRIDGE LENGTH: 0.000 M
TOTAL LENGTH: 0.001 M

**PROJ. NO. NH 2000(704), etc.**

CONTROL: 2452-01-036, etc.
LIMITS: SEE ⑤
COMBINED TOTALS: 13,697.660 M, 13.697 KM
COMBINED TOTALS: 433.850 M, 0.433 KM
COMBINED TOTALS: 14,131.510 M, 14.131 KM

FOR WORK CONSISTING OF UPGRADE TO 4 LANE
DIVIDED BY ADDING NORTHBOUND LANES

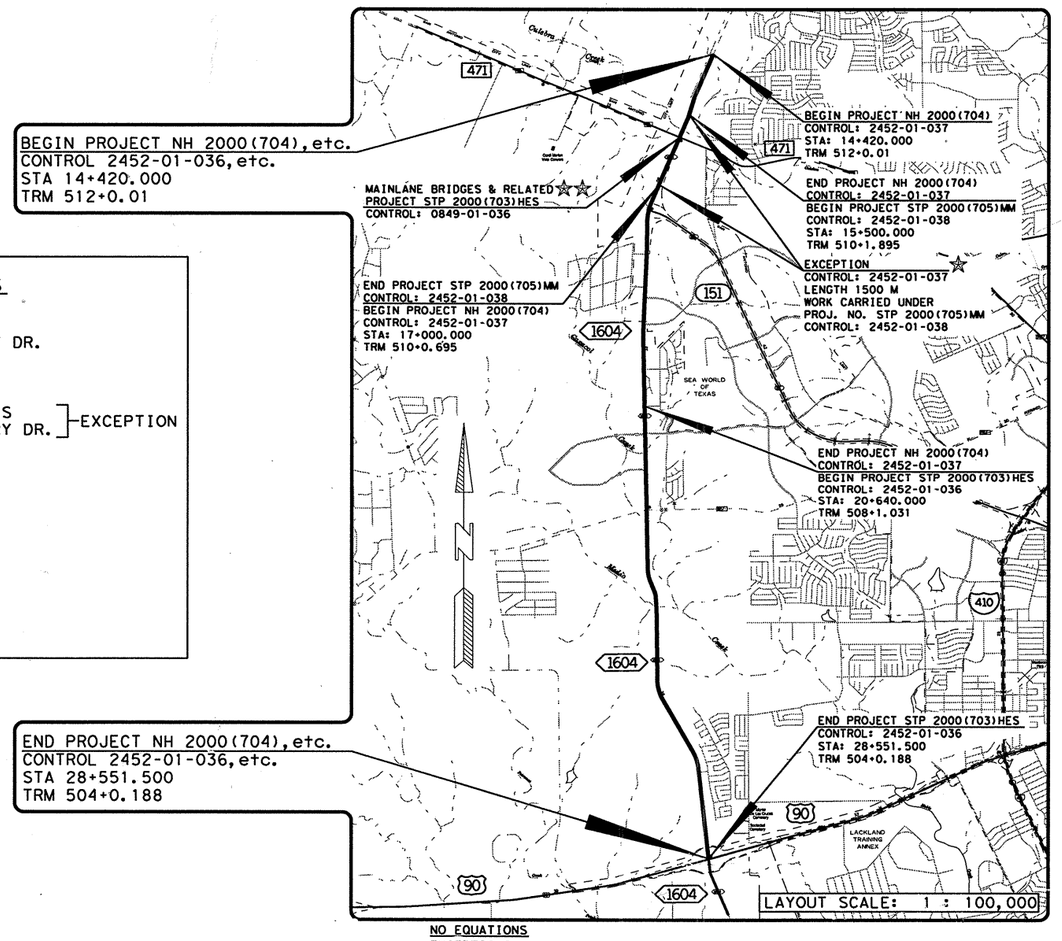


**ASSOCIATED PROJECT LIMITS**

① CONTROL: 2452-01-036
FROM: 0.60 KM N OF MILITARY DR.
TO: US 90

② CONTROL: 2452-01-037
FROM: 1.60 KM N. OF FM 471, S
TO: 0.60 KM N. OF MILITARY DR. ] EXCEPTION

③ CONTROL: 2452-01-038
FROM: 0.52 KM N. FM 471
TO: 0.98 KM S. FM 471

④ CONTROL: 0849-01-036
FROM: @ LP 1604
TO:

⑤ CONTROL: 2452-01-036, etc.
FROM: 1.6 KM N. OF FM 471
TO: US 90

NO EQUATIONS
EXCEPTIONS
☆ STA 15+500 THRU 17+000 =1500 M OF WORK CARRIED UNDER PROJECT NO. STP 2000(703)MM, CONTROL 2452-01-038
☆☆ MAINLANE BRIDGES & RELATED ONLY TO BE PAID FOR UNDER PROJECT NO. STP 2000(703)HES, CONTROL 0849-01-036
NO RAILROS

SPECIFICATIONS ADOPTED BY THE TEXAS DEPARTMENT OF TRANSPORTATION, MARCH 1, 1995 AND SPECIFICATION ITEMS LISTED AND DATED AS FOLLOWS, SHALL GOVERN ON THIS PROJECT: REQUIRED CONTACT PROVISIONS FOR ALL FEDERAL-AID CONSTRUCTION CONTRACTS (FORM 1273, DECEMBER 1995)

TDLR INSPECTION REQUIRED
TDLR NO. EABPRJA1000659

LETTING DATE: 01-03-2001
DATE CONTRACTOR BEGAN WORK: 08-01-2001
DATE WORK WAS ACCEPTED: 12-11-2007
FINAL CONTRACT COST: $
CONTRACTOR: Dean Word Company

FINAL PLANS STATEMENT:

THE PLANS HAVE BEEN REVISED TO SHOW PROJECT AS ACTUALLY BUILT.

AREA ENGINEER _____ P.E. DATE _____

STATE OF TEXAS
GINA E. GALLEGOS
88490
LICENSED PROFESSIONAL ENGINEER

TEXAS DEPARTMENT OF TRANSPORTATION

SUBMITTED FOR LETTING SEPT 19, 2000
David R. Ball, P.E.
AREA ENGINEER

APPROVED FOR LETTING
DIRECTOR, TRAFFIC OPERATIONS DIVISION

RECOMMENDED FOR LETTING 9/26/00
John P. Keller P.E.
DISTRICT ENGINEER

APPROVED FOR LETTING 11-8-00
for DIRECTOR, DESIGN DIVISION

©2000 Texas Department of Transportation
(512) 416-2055 ; all rights reserved

FILE: T:\ADVOCOP\...\...-adTITLESHEET.DGN
DISPLAYED 1 2 3 4 5 6 7 8 9 10 11 12 13 14 15 16 17 18 19 20 21 22 23 24 25 26 27 28 29 30 31 32 33 34 35 36 37 38 39 40 41 42 43 44 45 46 47 48 49 50 51 52 53 54 55 56 57 58 59 60 61 62 63

COUNTY BEXAR NH 2000(704)
PROJ. NO.
HWY. NO.
LETTING DATE
DATE ACCEPTED

| CO# | DESCRIPTION | PLAN SHEETS |
|---|---|---|
| 001 | Strm Drain & Culvert Addendum @ FM 471 (Culebra Rd) | 363A, 370A-B, 377A, 392A-B, 432A, 433A, 434A, 451A, 452A, 453A, 457A, 463A-C, 464A |
| 002 | BLDZR WORK (ORD COMP)(TY B) | N/A |
| 003 | Temporary Signal Revisions & Temporary VIVDS | 34A, 561A, 569A, 574A, 577A, 580A, 581A, 583A, 584A |
| 004 | Wingwall to be included at Culvert #2 | N/A |
| 005 | Temporary Posts for signs along Leslie Rd, etc. | N/A |
| 006 | Additional Construction Fence | N/A |
| 007 | SAWS Revisions (SAN SEW & WATER) | 883A, 884A-B, 885A, 886A, 887A, 894A, 901A, 903A |
| 008 | PREP ROW (ADDT'L CLEARING) | N/A |
| 009 | REVISED TEMP SPL SHORING | N/A |
| 010 | Revise Sewer Line @ Caracol Creek | 901A, 902A |
| 011 | SH 151 Revisions | 17B, 43C, 57A, 148A, 166a-B, 175A, 203a, 204a, 293A, 321a, 654A, 770A |
| 012 | Elimination of Alamo Concrete Drvy & Retaining Wall Addition | 3A, 40A, 194A, 195B-C, 337A, 602A, 641A, 757A, 758A |
| 013 | Vegetation Revisions: Block Sod and Temp Seeding | N/A |
| 014 | Sequence of Work Revisions (Phase 1A-1B; Misc Detours) | 27A, 67A-72A, 72B, 73A-B, 74B, 75A-B, 76A, 82B-G, 134A, 202A, 204B, 247A, 273A, 293B, 336B, 336D, 768A |
| 015 | SAWS Revisions II (Rock Extension & Creek Crossing) | 885B-D, 888A-D |
| 016 | Temporary Drainage across the Culebra Intersection | 456C-E |
| 017 | Mailbox Install (multiple) required along Leslie Road | N/A |
| 018 | SAWS Revisions III (Fire Hydrant Adjustment @ WWVista) | N/A |
| 019 | Colored Texturized Concrete | 25A, 26A, 199A, 212A, 213A, 338D, 339B, 340B, 341B |
| 020 | State Standard Revisions (C203, MBGF TR, etc) & Mow Strip | 198B, 199C, 230A, 231A, 346A, 353A-B, 507A, 508A, 513A, 514A, 521A, 522A, 527A, 528A, 536A, 551A, 552A, 554A-B, 555B-C, 556B |
| 021 | Incidental Pavement Markings | N/A |
| 022 | Time extension due to changes to time determination schedule | N/A |
| 023 | SAWS Revisions IV: Adjustment to Recycle Water Line | 883B, 894B, 900a, 900b |
| 024 | Sequence of Work Revisions (Phase 1B-Pavement Mrkings) | 75Ai, 76B |
| 025 | The installation of HEB Drvys and Misc Drvy (5A-C & 8A) | 17A, 27B, 28B, 43B, 199C, 200A, 201A, 202B, 336A, 336C, 336E-H, 370A, 432A, 434A, 451B, 651A |
| 026 | SAWS Revisions V: Restraint Systems | N/A |
| 027 | Adjustment to Line I 14 | 17A, 201B, 202C, 398A, 413A, 457B-C, 476A |
| 028 | Harwell Drvwys, Ret Wall, Misc Storm Drains & Inlets | 16A, 17D, 27C, 28C, 31A, 146A, 165A, 166C, 173A, 196A, 197A, 198C, 199D, 269A, 290A, 316A-B, 335A, 338A, 342A, 342B-H, 361A-H, 370D, 431B, 451C-D, 454A-E, 455B-C, 456A-B, 456F-G, 475A, 480A, 761A |
| 029 | SAWS Emergency Repair of 24" water in Culebra Creek | N/A |
| 030 | Haul Costs for Addl' PCTB from different stockpile | N/A |
| 031 | Shoring Poles | N/A |
| 032 | Sequence of Work Revisions (Phase 1C) | 82H-S, 105A |
| 033 | Potranco Intersection Pavement Marking Revisions | 66A |
| 034 | Hydraulic Revision | 366A |

| FED.RD. DIV.NO. | PROJECT NO. | | SHEET NO. |
|---|---|---|---|
| 6 | NH 2000 (704) etc. | | 1A |
| STATE | STATE DISTRICT | COUNTY | |
| TEXAS | SAT | Bexar | |
| CONT. | SECT. | JOB | HIGHWAY NO. |
| 2452 | 03 | 036 | LP 1604 |

| CO# | DESCRIPTION | PLAN SHEETS |
|---|---|---|
| 035 | BCS 1 & BCS 2 Revision and USACE Crk Mitigation | 373A, 374A, 393A, 396A-B, 519A |
| 036 | Bridge Class Structure 1 Revisions-Add Conc Box | 362A, 363B, 365A, 371A, 373B-E, 396C-G |
| 037 | Bridge Class Structure #3 Revisions | 183A, 375A-E |
| 039 | Install luminaires at the Culebra & Potranco Intersections | N/A |
| 040 | Add Object Markers for VIA's | N/A |
| 041 | Adds truncated domes in lieu of grooved pattern | N/A |
| 042 | Aesthetics and Exterior Paint | N/A |
| 043 | Correct time adjustment CO22 | N/A |
| 044 | Correct CO 43 | N/A |
| 045 | Add Item 340 Ty A (Sub for 345) | N/A |
| 046 | Project Acceleration - Minimize Impact to Weekday Traffic | N/A |
| 047 | Add Curb Inlet Ty C in lieu of Curb Inlet Ty 1 for Inlet 10A | N/A |
| 048 | Additional Temp signal work | 581B |
| 050 | SAWS Adjustment at Westwood Loop/Westwood Visa | N/A |
| 051 | SAWS Miscellaneous Revisions | 883C-D, 907-914 |
| 052 | Remove Concrete (Riprap) | 883E-H, 889A, 892A, 893A, 894A-C, 915-920 |
| 053 | Invoice for prelim installation of irrigation system | N/A |
| 054 | Misc Work for Irrigation System | N/A |
| 055 | TEMP LIGHT SYSTEM | N/A |
| 056 | Project Acceleration-Construct Culvert #27-Weekend Work | N/A |
| 057 | Revised Inlet Grades | 77B, 392C-D, 398A-C |
| 058 | Add Storm Drain I 27 A | N/A |
| 059 | Signal Work at the intersection of LP 1604 & Shaenfield Rd | 468A & 468B |
| 060 | Project Acceleration-Place Concrete Slab @ Night | 580A-E, 599A-F, 357A-C, 593A, 594A |
| 061 | Stamped Concrete: Culebra Intersection Island Treatments | N/A |
| 062 | Signal Work at the intersection of LP 1604 & Culebra Rd | 318A, 319A, 199F, 338E |
| 063 | Phase 2 - Revised Traffic Control Plan & Sequence of Work | 557A, 558A, 559A, 560A, 561A-G |
| 064 | Phase 2 - Roadway and Drainage Revisions | 93A-99A, 64A, 82T-82Z, 83A-91A, 91B-91I, 92AB, 99B-99F, 105B-105J |
| 065 | Revised Signing & Pavement Markings for Phase 2 | 8A, 8B, 27C, 28C, 150A, 151A, 154A, 156A, 159A-161A, 167A, 169A-171A, 178A, 179A, 181A, 183A, 186A, 188A, 208A-215A, 217A-225A, 229A-233A, 235A, 237A-242A, 254A, 255A, 257A, 258A, 275A, 276A, 278A, 279A, 280A, 281A, 298A, 298B, 300A, 301A, 304A, 305A, 308A, 308B, 309A, 309B, 323A, 323B, 325A, 327A, 328A, 330A, 331A, 331B, 331C, 332A, 335B, 336H, 343A, 344A, 345A-345C, 346B-346M, 346Q, 364A, 381A, 383B, 384A, 387A, 388A, 389A, 391A, 392A, 436A-438A, 440A, 441A, 442A, 445A, 446A-449A, 454G, 454H, 458A, 459A, 459B, 459C, 460A, 461A, 462A, 466A-468A |
| 066 | Inlet Adjustments in the Culebra Intersection | 40B, 43A-52A, 53G, 57B, 57C, 641B, 655B, 659A, 661A-664A, 669A-670A, 672A, 676A-679A, 686A, 691A-694A, 696A, 700A, 701A, 773A-786A, 788A-807A, 809A-814A |
| 067 | Addt'l Costs for Beam Placement | N/A |
| 068 | Miscellaneous Repairs for MBGF & SGT's | N/A |
| 069 | SAWS Adjustment at WalMart | N/A |

| FED.RD. DIV.NO. | PROJECT NO. | | SHEET NO. |
|---|---|---|---|
| 6 | NH 2000 (704) etc. | | 1B |
| STATE | STATE DISTRICT | COUNTY | |
| TEXAS | SAT | Bexar | |
| CONT. | SECT. | JOB | HIGHWAY NO. |
| 2452 | 03 | 036 | LP 1604 |

| CO# | DESCRIPTION | PLAN SHEETS |
|---|---|---|
| 070 | SAWS add'l cost for CO#15 | 884A |
| 071 | Temporary Service for Blazing Star | N/A |
| 072 | Addt'l cost for traffic signals at LP 1604 & SH 151 | N/A |
| 073 | Addt'l compensation for BCS #1 | 564A-D |
| 074 | Upgrade Box Culvert Standards & Revise Location of BCS #2 | 886A |
| 075 | Re-seed Phase I of Project Using Drill Seeding Method | 374B, 396H |
| 076 | Additional pavement markings & signs | N/A |
| 077 | Revise Inlet Grades | 43C, 644A, 649A, 650A, 651B, 655A, 760A, 761B, 767A, 768B, 726A |
| 078 | Revise Temp Signals at Military, Potranco & US 90 | N/A |
| 079 | Phase 2 - Permanent Traffic Signal Revisions | 582A, 584B, 587A-B, 599G-H |
| 080 | SAWS-Add Casing at Military | 564E-I, 565A, 566A, 567-A, 568A, 569A, 570A, 571A, 572A, 573A, 574B, 575A, 576A, 577B and 580F |
| 081 | Place Clay Liner for Critical Habitat Zone | N/A |
| 082 | Phase 2 - Roadway Illumination Revisions | 216A |
| 083 | Delivery Cost and Handling Fee for Excess Material | 615A, 622A |
| 084 | Buy Back Traf Sig Poles from CO#79 | N/A |
| 085 | SAWS-Extra Depth & Add Casing at Wiseman | N/A |
| 086 | Relap MBGF & Transitions in Phase I & II | N/A |
| 087 | Add Bird Deterrent | N/A |
| 088 | MBGF (STL POST) @ BCS #3 and Culvert #13 Revisions | 62B,881C-G |
| 089 | Construct Turnaround South of Big Mesa Drive | 247A-D, 449A |
| 090 | Traffic Management System Revisions | N/A |
| 091 | Time Extension for Milestone 1 | 833A, 839A |
| 092 | Driveway Detours @ Phase 2A & 2B | N/A |
| 093 | CO#93 Irrigation System | 87AA, 88AA, 97AA, 92AA-95AA |
| 094 | CO# Dove Canyon Detour | N/A |
| 095 | Irrigation System | 97A, 99G-99I, 159A, 160A, 171A |
| 096 | LP1604/Military Drive ADA Grade Revision | N/A |
| 097 | Project Overhead for Milestone 1 Delay (Unaudited) | 219AA, 305AA, 327AA, 4586AA, 467AA |
| 098 | Modify Drainage Inlets & Appurtanances at Wiseman & Military | N/A |
| 099 | Singleton Driveway | N/A |
| 100 | Brush Clearing, Chipping and Disposal for Dove Canyon Detour | 27C, 28A, 214A, 346E, 336A, 336B |
| 101 | Drainage Structures @ Dove Canyon Detour | N/A |
| 102 | CO#102-FA Work-Tie-In Grade Changes Dove Canyon Detour | N/A |
| 103 | CO#103-Storm Drainage Revisions @ Marbach Rd. Extension | N/A |
| 104 | Marbach Extension Signals & Permanent Signal Revisions | 238B, 387B, 387C, 468B,447B |
| 105 | CO#105-Temporary Signal @ Wiseman | 564EE-564FF, 564B, 566B-573B, 576A, 576B, 577C, 586A, 574C, 575A, 575B |
| 106 | Total Project HMACP Overrun/Underrun | 564J |
| 107 | RCP(900 mm) price escalation | N/A |
| 108 | CO#108 Buy Back Sign Stock Acct 15-317 | N/A |
| 109 | Purchase Surplus Inlet | N/A |
| 110 | CO#110-Flagpole Removal, Grading and Traffic Control | N/A |

| FED.RD. DIV.NO. | PROJECT NO. | | SHEET NO. |
|---|---|---|---|
| 6 | NH 2000 (704) etc. | | 1C |
| STATE | STATE DISTRICT | COUNTY | |
| TEXAS | SAT | Bexar | |
| CONT. | SECT. | JOB | HIGHWAY NO. |
| 2452 | 03 | 036 | LP 1604 |

| CO# | DESCRIPTION | PLAN SHEETS |
|---|---|---|
| 111 | CO#111-Re-Install Flagpole | N/A |
| 112 | New Detour F | N/A |
| 113 | CO#113-Crack Seal Pavement Repair | 92C |
| 114 | CO#114-Supplemental Signing Phase2B S.O.W. | N/A |
| 115 | CO#115-"Dura Curb" Delineation | 105K-105S |
| 116 | Traffic Signal Foundation Repairs & Power Line Ext Reimb | 92AA |
| 117 | Add Directional Arrows at US 90 | N/A |
| 118 | Added Repair Existing Flexible Pavement Structure | N/A |
| 119 | CO#119-Roadway Rehabilitation/Reconstruction | 179A-182A |
| 120 | CO#120-Add RRPM's @ Detour F | 179AB-182AB, 24A, 8 AB, 178A, 183AB, 219AB-221AB, 224AB-225AB, 254AB, 258AB, 260A |
| 121 | CO#121-Maintenance of Delineators on Dura-Curb @ NW Vista | N/A |
| 122 | CO#122-Illumination Revisions | N/A |
| 123 | CO#123-Median Cross-Section Revision | 35A, 617A, 622B-622E, 623A, 624A |
| 124 | CO#124-Interim Unit Bid Price Escalation | 209A |
| 125 | Signal Repair at US 90 | N/A |
| 126 | Inlet DI-I28 Modification | N/A |
| 127 | CO#127-Relocate Temporary Signal Pole US90/LP1604 | 460AR |
| 128 | CO#128-Cleaning of Pipe | N/A |
| 129 | CO#129-Add Various Access Locations | N/A |
| 130 | Addition of traffic barrier and barrels to facilitate traffi | 27CC, 28AA, 160AA, 170AA, 99J, 99K, 187A, 446AA, 234A, 235AA, 236AA, 237AA, 238AA, 331D-331G, 453A, 446R-446T |
| 131 | Walgreens Driveway | N/A |
| 132 | Emergency Traffic Signal Repairs at Wiseman | 27CC1, 28AA1, 219A, 219B |
| 133 | CO#133 Buy Back Concrete Stain to Stock Acct 15-310 | N/A |
| 134 | Correct Excav/Embank quantities | N/A |
| 135 | CO#135-Add ErosionControl/SW3P/Seeding | N/A |
| 136 | CO#136-Add Temp Detour Rt-Turn Lane EB Potranco to SB LP1604 | N/A |
| 137 | CO#137-Marbach Phase 2B Supplemental | N/A |
| 138 | CO#138-Add Signal Heads @ Wiseman Extension | 99Ea-99Ed |
| 139 | co#139-Signing Layout Revisions | 564J-a |
| 140 | CO#140-Revised Striping to Accompany CO#65 | 660A, 661AA-663AA, 673AA, 686AA-694AA, 696AA, 697A, 53a-53k |
| 141 | C.O. #141-Add Reconstructed Area on Exist LP 1604 Main lanes | 778AA, 779AA, 801AA-805AA, 807AA, 807B, 811AA, 812AA |
| 142 | Project Overhead Delay March 2004 thru December 2005 | 178AA |
| 143 | Add Escalation Items | N/A |
| 144 | Modify Wiseman Rd. on east side of inter to add LTL | N/A |
| 145 | Replace Delineators @ NW Vista College/LP 1604 Inter | 178B, 212C, 325B |
| 146 | Replace WW Mesh Conc @ Mow Strip w/ Fiber Rein Conc | N/A |
| 147 | Phase 2B Sequence of Work Details and Plans | N/A |
| 148 | Correction to Added Working Days | 99AA-99EE |
| 149 | Construct Concrete Islands @ Turnarounds | N/A |
| 150 | Escalations 7/1/06 to completion | 346B |
| 151 | Buyback Signs & Signal Poles | N/A |

| FED.RD. DIV.NO. | PROJECT NO. | | SHEET NO. |
|---|---|---|---|
| 6 | NH 2000 (704) etc. | | 1D |
| STATE | STATE DISTRICT | COUNTY | |
| TEXAS | SAT | Bexar | |
| CONT. | SECT. | JOB | HIGHWAY NO. |
| 2452 | 03 | 036 | LP 1604 |

| CO# | DESCRIPTION | PLAN SHEETS |
|---|---|---|
| 152 | Eliminate Mainlane Illum Conduit Bores | N/A |
| 153 | Dove Canyon TCP Detour | 622BB, 622DD, 624AA |
| 154 | HMAC Ty A Price Escalation (7/06 to Completion) | 99FF |
| 155 | Final Seeding Procedures for Phase 2 | N/A |
| 156 | TCP Channelizing Devices for Phase 2B NBFR | N/A |
| 157 | Perform Pavement Repairs on the LP 1604 NBFR | N/A |
| 158 | Add Equipment for Temp Erosion/Sediment Control Items | 346Z |
| 159 | Add Conc Median Island at Military | N/A |
| 160 | Add Payment for Bond Premium | 327AA |
| 161 | Add'l SW3P & Sign Repairs | N/A |
| 162 | Adjusting final quantities item # 5324-5145 | 873a |
| 163 | Adjustment items due to extended time of project. | N/A |
| 164 | Adjust quantity for the payment of escalation on TY-C surf | N/A |
| 165 | Extra Work for Relocate & Replace Signs | N/A |
| 166 | Dove Canyon Detour HMACP Removal | N/A |
| 167 | Time Impact Resolution between July 2006 & October 2007 | N/A |
| 168 | Add Barricades and dispute resolutions | N/A |
| 169 | Project Overhead for Time Impact 3/04 & 7/06-10/07 | N/A |
| 170 | Labor Escalation for extended project duration | N/A |
| 171 | Equipment escalation | N/A |
| 172 | Excavation/Embankment Inefficiency | N/A |
| 173 | Dispute Resolution of Final Issues | N/A |

| FED.RD. DIV.NO. | PROJECT NO. | | SHEET NO. |
|---|---|---|---|
| 6 | NH 2000 (704) etc. | | 1E |
| STATE | STATE DISTRICT | COUNTY | |
| TEXAS | SAT | Bexar | |
| CONT. | SECT. | JOB | HIGHWAY NO. |
| *2452* | *03* | *036* | *LP 1604* |

# ACTUAL DRILL SHAFT ELEVATIONS

## CSJ: 2452-01-036

LP 1604 NB MAINLANE OVERPASS @ CULEBRA CREEK & FM 471

PSN : 15-015-2452-01-173

| | Size (mm) | Top Elev | Bottom Elev |
|---|---|---|---|
| ABUT 1 | | | |
| DS 1 | 900 | 266.617 | 252.986 |
| DS 2 | 900 | 266.599 | 252.903 |
| DS 3 | 900 | 266.367 | 252.784 |
| DS 4 | 900 | 266.638 | 252.872 |
| BENT 2 | | | |
| DS 1 | 900 | 257.321 | 252.71 |
| DS 2 | 900 | 257.327 | 252.583 |
| DS 3 | 900 | 257.287 | 252.693 |
| BENT 3 | | | |
| DS 1 | 900 | 257.019 | 252.368 |
| DS 2 | 900 | 257.175 | 252.565 |
| DS 3 | 900 | 257.201 | 252.608 |
| BENT 4 | | | |
| DS 1 | 900 | 260.69 | 254.041 |
| DS 2 | 900 | 260.673 | 253.993 |
| DS 3 | 900 | 260.874 | 254.15 |
| BENT 5 | | | |
| DS 1 | 900 | 262.742 | 253.873 |
| DS 2 | 900 | 262.742 | 253.99 |
| DS 3 | 900 | 262.837 | 254.066 |

| | Size (mm) | Top Elev | Bottom Elev |
|---|---|---|---|
| BENT 6 | | | |
| DS 1 | 900 | 262.716 | 253.848 |
| DS 2 | 900 | 262.852 | 253.998 |
| DS 3 | 900 | 262.922 | 254.159 |
| BENT 7 | | | |
| DS 1 | 900 | 262.838 | 253.994 |
| DS 2 | 900 | 262.872 | 254.069 |
| DS 3 | 900 | 262.949 | 254.12 |
| BENT 8 | | | |
| DS 1 | 900 | 262.952 | 256.16 |
| DS 2 | 900 | 262.985 | 256.211 |
| DS 3 | 900 | 262.973 | 256.648 |
| ABUT 9 | | | |
| DS 1 | 900 | 267.767 | 257.008 |
| DS 2 | 900 | 267.777 | 256.886 |
| DS 3 | 900 | 267.912 | 257.046 |
| DS 4 | 900 | 268.074 | 257.232 |

| FED.RD. DIV.NO. | PROJECT NO. | | SHEET NO. |
|---|---|---|---|
| 6 | NH 2000(704) etc. | | 1F |
| STATE | STATE DISTRICT | COUNTY | |
| TEXAS | SAT | Bexar | |
| CONT. | SECT. | JOB | HIGHWAY NO. |
| 2452 | 01 | 036 | LP 1604 |

| LP 1604 SB MAINLANE OVERPASS @ CULEBRA CREEK & FM 471 | | | |
|---|---|---|---|
| PSN : 15-015-2452-01-174 | | | |
| | Size (mm) | Top Elev | Bottom Elev |
| ABUT 1 | | | |
| DS 1 | 900 | 266.47 | 252.819 |
| DS 2 | 900 | 266.39 | 252.891 |
| DS 3 | 900 | 266.339 | 252.862 |
| DS 4 | 900 | 266.189 | 252.646 |
| BENT 2 | | | |
| DS 1 | 900 | 257.265 | 252.71 |
| DS 2 | 900 | 257.162 | 252.527 |
| DS 3 | 900 | 257.102 | 252.445 |
| BENT 3 | | | |
| DS 1 | 900 | 257.17 | 252.465 |
| DS 2 | 900 | 257.26 | 252.544 |
| DS 3 | 900 | 257.141 | 252.321 |
| BENT 4 | | | |
| DS 1 | 900 | 260.929 | 254.18 |
| | Size (mm) | Top Elev | Bottom Elev |
| DS 2 | 900 | 260.846 | 254.119 |
| DS 3 | 900 | 260.771 | 254.065 |
| BENT 5 | | | |
| DS 1 | 900 | 262.975 | 254.14 |
| DS 2 | 900 | 262.905 | 253.97 |
| DS 3 | 900 | 262.845 | 253.939 |

| | Size (mm) | Top Elev | Bottom Elev |
|---|---|---|---|
| BENT 6 | | | |
| DS 1 | 900 | 262.951 | 254.158 |
| DS 2 | 900 | 262.86 | 254.012 |
| DS 3 | 900 | 262.775 | 253.889 |
| BENT 7 | | | |
| DS 1 | 900 | 262.926 | 254.08 |
| DS 2 | 900 | 262.817 | 253.978 |
| DS 3 | 900 | 262.78 | 253.905 |
| BENT 8 | | | |
| DS 1 | 900 | 263.376 | 256.137 |
| DS 2 | 900 | 263.29 | 256.06 |
| DS 3 | 900 | 263.204 | 255.943 |
| ABUT 9 | | | |
| DS 1 | 900 | 268.056 | 257.18 |
| DS 2 | 900 | 267.992 | 257.116 |
| | Size (mm) | Top Elev | Bottom Elev |
| DS 3 | 900 | 267.928 | 257.04 |
| DS 4 | 900 | 267.864 | 257.101 |

| LP 1604 NB FRONTAGE OVERPASS @ CULEBRA CREEK | | | |
|---|---|---|---|
| PSN : 15-015-2452-01-175 | | | |
| | Size | Top Elev | Bottom Elev |
| ABUT 1 | | | |
| DS 1 | 900 | 263.864 | 254.336 |
| DS 2 | 900 | 263.72 | 254.262 |
| DS 3 | 900 | 263.642 | 254.178 |
| DS 4 | 900 | 263.636 | 254.094 |
| DS 5 | 900 | 263.509 | 253.854 |
| BENT 2 | | | |
| DS 1 | 900 | 257.066 | 251.193 |
| DS 2 | 900 | 256.933 | 251.205 |
| DS 3 | 900 | 256.839 | 251.104 |
| DS 4 | 900 | 256.784 | 250.9 |

| | Size | Top Elev | Bottom Elev |
|---|---|---|---|
| BENT 3 | | | |
| DS 1 | 900 | 257.057 | 251.301 |
| DS 2 | 900 | 256.944 | 251.191 |
| DS 3 | 900 | 256.815 | 251.055 |
| DS 4 | 900 | 256.753 | 251.056 |
| ABUT 4 | | | |
| DS 1 | 900 | 261.966 | 254.365 |
| DS 2 | 900 | 261.957 | 254.283 |
| DS 3 | 900 | 261.877 | 253.976 |
| DS 4 | 900 | 261.715 | 254.124 |
| DS 5 | 900 | 261.659 | 254.047 |

| FED.RD. DIV.NO. | PROJECT NO. | | SHEET NO. |
|---|---|---|---|
| 6 | NH 2000(704) etc. | | 16 |
| STATE | STATE DISTRICT | COUNTY | |
| TEXAS | SAT | Bexar | |
| CONT. | SECT. | JOB | HIGHWAY NO. |
| 2452 | 01 | 036 | LP 1604 |

| LP 1604 SB FRONTAGE OVERPASS @ CULEBRA CREEK | | | |
|---|---|---|---|
| PSN : 15-015-2452-01-176 | | | |
| | Size | Top Elev | Bottom Elev |
| ABUT 1 | | | |
| DS 1 | 900 | 263.374 | 253.502 |
| DS 2 | 900 | 263.629 | 253.665 |
| DS 3 | 900 | 263.334 | 253.662 |
| DS 4 | 900 | 263.463 | 253.692 |
| DS 5 | 900 | 263.64 | 253.823 |
| DS 6 | 900 | 263.853 | 253.973 |
| BENT 2 | | | |
| DS 1 | 900 | 257.126 | 252.372 |
| DS 2 | 900 | 257.104 | 252.441 |
| DS 3 | 900 | 257.204 | 252.556 |
| DS 4 | 900 | 257.31 | 252.629 |
| DS 5 | 900 | 257.357 | 252.729 |

| | Size | Top Elev | Bottom Elev |
|---|---|---|---|
| BENT 3 | | | |
| DS 1 | 900 | 257.051 | 252.365 |
| DS 2 | 900 | 257.198 | 252.446 |
| DS 3 | 900 | 257.217 | 252.549 |
| DS 4 | 900 | 257.318 | 252.634 |
| DS 5 | 900 | 257.397 | 252.74 |
| ABUT 4 | | | |
| DS 1 | 900 | 261.547 | 253.474 |
| DS 2 | 900 | 261.527 | 253.614 |
| DS 3 | 900 | 261.606 | 253.528 |
| DS 4 | 900 | 261.735 | 253.696 |
| DS 5 | 900 | 261.787 | 253.832 |
| DS 6 | 900 | 261.882 | 253.77 |

| LP 1604 NB FRONTAGE ROAD OVERPASS @ MEDIO CREEK | | | |
|---|---|---|---|
| PSN : 15-015-2452-01-172 | | | |
| | Size | Top Elev | Bottom Elev |
| ABUT 1 | | | |
| DS 1 | 900 | 238.222 | 229.438 |
| DS 2 | 900 | 238.141 | 229.378 |
| DS 3 | 900 | 238.008 | 229.269 |
| | Size | Top Elev | Bottom Elev |
| DS 4 | 900 | 237.878 | 229.105 |
| BENT 2 | | | |
| DS 1 | 900 | 230.801 | 226.091 |
| DS 2 | 900 | 230.713 | 226.103 |
| DS 3 | 900 | 230.755 | 225.907 |

| | Size | Top Elev | Bottom Elev |
|---|---|---|---|
| BENT 3 | | | |
| DS 1 | 900 | 230.713 | 226.067 |
| DS 2 | 900 | 230.735 | 226.13 |
| DS 3 | 900 | 230.755 | 226.108 |
| | Size | Top Elev | Bottom Elev |
| ABUT 4 | | | |
| DS 1 | 900 | 239.284 | 228.922 |
| DS 2 | 900 | 239.358 | 228.945 |
| DS 3 | 900 | 239.442 | 229.22 |
| DS 4 | 900 | 239.551 | 229.396 |

| LP 1604 SB MAINLANE (FUTURE NB ML) OVERPASS @ MEDIO CREEK | | | |
|---|---|---|---|
| PSN : 15-015-2452-01-171 | | | |
| | Size | Top Elev | Bottom Elev |
| ABUT 1 | | | |
| DS 1 | 900 | 238.206 | 230.61 |
| DS 2 | 900 | 238.045 | 230.57 |
| DS 3 | 900 | 237.913 | 230.46 |
| | 900 | | |
| DS 4 | 900 | 237.78 | 230.24 |
| BENT 2 | | | |
| DS 1 | 900 | 231.029 | 227.64 |
| DS 2 | 900 | 230.933 | 227.42 |
| DS 3 | 900 | 230.933 | 227.18 |

| | Size | Top Elev | Bottom Elev |
|---|---|---|---|
| BENT 3 | | | |
| DS 1 | 900 | 230.93 | 227.45 |
| DS 2 | 900 | 230.887 | 227.45 |
| DS 3 | 900 | 230.939 | 227.46 |
| | 900 | | |
| ABUT 4 | | | |
| DS 1 | 900 | 238.835 | 230.36 |
| DS 2 | 900 | 238.905 | 230.25 |
| DS 3 | 900 | 239.004 | 230.44 |
| DS 4 | 900 | 239.067 | 230.59 |

| FED.RD. DIV.NO. | PROJECT NO. | | SHEET NO. |
|---|---|---|---|
| 6 | NH 2000(704) etc. | | 1H |
| STATE | STATE DISTRICT | COUNTY | |
| TEXAS | SAT | Bexar | |
| CONT. | SECT. | JOB | HIGHWAY NO. |
| 2452 | 01 | 036 | LP 1604 |

# INDEX OF SHEETS

| SHEET NO. | DESCRIPTION |
|---|---|
| 1 | TITLE SHEET |
| 2 | SHEET INDEX |
| 3 - 6 | PROJECT & BARRICADE LAYOUT |
| 7 - 11 | TYPICAL SECTIONS |
| 12-12R | GENERAL NOTES AND SPECIFICATIONS |
| 13-13F | ESTIMATE AND QUANTITIES SUMMARY |
| 14 - 15 | SEQUENCE OF WORK SUMMARY |
| 16 - 23 | EARTHWORK SUMMARY |
| 24 | EXIST GRADING SUMMARY |
| 25 - 26 | GRADING SUMMARY |
| 27 - 28 | DRIVEWAY & MAILBOX SUMMARY |
| 29 | LARGE STRUCTURE SUMMARY ( BRIDGE CLASS CULVERTS ) |
| 30 | SMALL STRUCTURE SUMMARY |
| 31 | STORM DRAIN & ARMOR CURB SLOT SUMMARY |
| 32 | LARGE STRUCTURE SUMMARY ( SPAN TYPE BRIDGES ) |
| 33 - 34 | TRAFFIC SIGNAL SUMMARY |
| 35 | ELECTRIC / SERVICE POLE SUMMARY |
| 36 - 39 | SIGNS TO BE REMOVED OR RELOCATED (GROUND MOUNTED) SUMMARY |
| 40 - 53 | SMALL SIGN SUMMARY |
| 54 - 57 | LARGE SIGN SUMMARY |
| 58 - 59 | PAVEMENT MARKING / DELINEATION SUMMARY |
| 60 | TRAFFIC MANAGEMENT SUMMARY |
| 61 - 62 | SW3P CONSOLIDATED SUMMARIES |
| 62A | LANDSCAPING SUMMARY |
| 63 | SCHEDULE OF BARRICADES |
| 64 | S.O.W. NARRATIVE |
| 65 - 104 | SEQUENCE OF WORK LAYOUTS |
| 105 | DETOUR LAYOUTS |
| 106 | VIA ( SFPM ) ( M ) |
| 107 | * BC ( 1 ) - 99 ( M ) |
| 108 | * BC ( 2 ) - 98 ( M ) |
| 109 | * BC ( 3 ) - 98 ( M ) |
| 110 | * BC ( 4 ) - 99 ( M ) |
| 111 | * BC ( 5 ) - 98 ( M ) |
| 112 | * BC ( 6 ) - 98 ( M ) |
| 113 | * BC ( 7 ) - 98 ( M ) |
| 114 | * BC ( 8 ) - 98 ( M ) |
| 115 | * BC ( 9 ) - 99 ( M ) |
| 116 | * BC ( 9A ) - 99 ( M ) |
| 117 | * BC ( 9B ) - 98 ( M ) |
| 118 | * BC ( 9C ) - 98 ( M ) |
| 119 | * WZ ( SPIS ) - 99 ( M ) |
| 120 | * WZ ( STPM ) - 97 ( M ) STATE STANDARDS |
| 121 | * WZ ( BD ) - 99 ( M ) |
| 122 | * WZ ( UL ) - 98 ( M ) |
| 123 - 124 | * WZ ( BTS-1,2 ) - 99 ( M ) |
| 125 | * WZ ( CD ) - 94 ( M ) |
| 126 | * WZ ( TD ) - 98 ( M ) |
| 127 | * WZ ( DERD ) - 98 ( M ) |
| 128 - 129 | * WZ ( BRK-1,2 ) - 98( M ) |
| 130 | * TCP NOTES - 98 ( M ) |
| 131 - 132 | * TCP (1-1),( 1-2 ) - 98 ( M ) |
| 133 - 135 | * TCP ( 2-1 ),( 2-2 ),( 2-6 ) - 98 ( M ) |
| 136 - 137 | * TCP ( 3-2 ),( 3-3 ) - 98 ( M ) |
| 138 - 142 | * TCP ( 6-1,2,3,4,5 ) - 98A( M ) |
| 143 | TCP ( 6-8 ) - 98 ( M ) |
| 144 | * TCP ( 7-1 ) - 98 ( M ) |
| 145 - 163 | GEOMETRIC LAYOUT SHEETS |
| 164 - 171 | HORIZONTAL ALIGNMENT DATA |
| 172 - 190 | EXISTING PLAN SHEETS |
| 191 - 247 | PLAN SHEETS |
| 248 - 315 | PROFILE SHEETS |
| 316 - 334 | INTERSECTION LAYOUTS |
| 335 - 346 | MISCELLANEOUS ROADWAY DETAILS |
| 347 - 348 | * LPCB ( 1 & 2 ) - 95 ( M ) |
| 349 - 350 | * PCTB ( 1 & 2 )- 95 ( M ) |
| 351 | * SSCB ( 2 ) - 99 ( M ) |
| 352 | * TRF ( M )( 99 ) |
| 353 | * MBGF - 95 ( A )( M ) STATE STANDARDS |
| 354 - 355 | * SGT ( 5 ),( 6 ) - 97 ( M ) |
| 356 - 357 | * RAMP - 00B ( M ) |
| 358 - 360 | * MB-96( M ) |
| 361 | * RHD - 97 ( M ) |
| 362 | LARGE EXT. DRAINAGE AREA MAP |
| 363 - 364 | SMALL EXT. DRAINAGE AREA MAP |
| 365 - 369 | HYDRAULIC DATA SHEET BCS OVER 42.5 CMS |
| 370 | HYDRAULIC DATA SHEET STRUCTURES UNDER 42.5 CMS |
| 371 - 372 | UPSTREAM BCS PROFILE SHEETS |
| 373 - 375 | BRIDGE CLASS CULVERT LAYOUTS |
| 376 - 392 | CULVERT LAYOUTS |
| 393 | * MC - MD ( M ) |
| 394 | * MC - 1.5-6 ( M ) |
| 395 | * MC - 1.8-5 ( M ) |
| 396 | * MC - 3.0-2 ( M ) STATE STANDARDS |
| 397 | * SCC - MD ( M ) |
| 398 | * SCC - 1.8 ( M ) |

# INDEX OF SHEETS

| SHEET NO. | DESCRIPTION |
|---|---|
| 399 | * SCP - 1.2 ( M ) |
| 400 | * SCP - 1.5 ( M ) |
| 401 | * SCP - 1.8 ( M ) STATE STANDARDS |
| 402 | * SCP - 3.0 ( M ) |
| 402A | * SCP - 3.0 ( M )( MOD ) DISTRICT STANDARD |
| 403 | * SCP - MD ( M ) |
| 404 - 405 | * FW - 0 ( M ) |
| 406 - 407 | * FW - 15 ( M ) STATE STANDARDS |
| 408 - 409 | * FW - 30 ( M ) |
| 410 - 411 | * FW - 45 ( M ) |
| 412 - 413 | * SW - 0 ( M ) |
| 414 | * RIPRAP HEADWALL ( M )( MOD ) DISTRICT STANDARD |
| 415 - 416 | * PSET - RP ( M ) |
| 417 - 418 | * PSET - RC ( M ) |
| 419 - 420 | * SETB - 0 - 3 ( M ) |
| 421 - 422 | * SETB - 0 - 6 ( M ) |
| 423 - 424 | * CD - SPR ( M ) STATE STANDARDS |
| 425 | * PD - SPR ( M ) |
| 426 | * TRAFFIC RAIL TYPE T6 ( M ) |
| 427 | * T6 - CM ( M ) |
| 428 | T6R ( M )(MOD) |
| 429 - 450 | INTERIOR DRAINAGE AREA MAP AND STORM DRAIN LAYOUT |
| 451 | RUNOFF COMPUTATION SHEET |
| 452 | STORM DRAIN COMPUTATION SHEET |
| 453 | INLET COMPUTATION SHEET |
| 454 - 468 | STORM DRAIN PROFILES |
| 470 | MISCELLANEOUS DRAINAGE DETAILS |
| 471 | * CURB INLET TYPE C ( M ) |
| 472 - 473 | * CURB INLET TY 1 THRU VIII ( UPPER & LOWER UNIT ) |
| 474 | * ARMOR CURB SLOT DETAIL ( M ) |
| 475 | * DROP INLET TYPE 3A ( M ) / GRATE TYPE 2 ( M ) |
| 476 | * DROP INLET TYPE 6 ( M ) / GRATE TYPE 2 ( M ) |
| 477 | * DROP INLET TYPE W-1 ( M ) / TYPE 3 & TYPE 4 ( M ) DISTRICT STANDARDS |
| 478 | * DROP INLET TYPE W-2 THRU W-5 ( M ) |
| 479 | * DROP INLET TYPE Y-1 ( M ) |
| 480 | * DROP INLET TYPE Y-2 THRU Y-5 ( M ) |
| 481 | * MANHOLE TYPE 1 THRU 5 ( M ) |
| 482 | * MANHOLE TYPE M ( M ) |
| 483 - 494 | LP 1604 N.B. MAINLANE OVERPASS @ CULEBRA RD. BRIDGE LAYOUT & DETAILS |
| 495 - 506 | LP 1604 S.B. MAINLANE OVERPASS @ CULEBRA RD. BRIDGE LAYOUT & DETAILS |
| 507 - 512 | LP 1604 N.B. FRONT. RD. OVERPASS @ CULEBRA CREEK BRIDGE LAYOUT & DETAILS |
| 513 - 518 | LP 1604 S.B. FRONT.RD. OVERPASS @ CULEBRA CREEK BRIDGE LAYOUT & DETAILS |
| 519 | CULEBRA CREEK GRADING PLAN |
| 520 | FUTURE CULEBRA CREEK DRAINAGE EASEMENT LAYOUT |
| 521 - 526 | LP 1604 N.B. FRONTAGE RD. OVERPASS @ MEDIO CREEK BRIDGE LAYOUT & DETAILS |
| 527 - 532 | LP 1604 S.B. MAINLANE (FUTURE N.B. M.L.) OVERPASS @ MEDIO CREEK BRIDGE LAYOUT & DETAILS |
| 533 | LP 1604 PRESTRESSED CONC I BEAMS |
| 534 | MEDIO CREEK GRADING PLAN |
| 535 | * CRR(M) |
| 536 | * BED - 95 ( M ) |
| 537 | * IBA ( M ) |
| 538 | * IBB ( M ) |
| 539 | * FD ( M ) |
| 540 | * IBTS ( M ) |
| 541 | * IBMS ( M ) |
| 542 | * MEBR ( C ) - 1 ( M ) |
| 543 | * MEBR ( C ) - 2 ( M ) |
| 544 | * BPA-1( M ) STATE STANDARDS |
| 545 | * PMDF ( C ) ( M ) |
| 546 - 548 | * PCP ( C ) ( M ) |
| 549 | * SEJ - A ( M ) |
| 550 | * ODSR ( M ) |
| 551 - 552 | * SSTR ( M ) |
| 553 - 554 | * C202 ( M ) |
| 555-555A | * T202 ( MOD )( M ) |
| 556 | * PR1 ( M ) |
| 557 - 580 | TRAFFIC SIGNAL INTERSECTION LAYOUTS & DETAILS |
| 581,581A - 587 | TEMPORARY TRAFFIC SIGNAL INTERSECTION LAYOUTS |
| 588 | * LOOP DETECTOR CONTROLLER FOUNDATION & CONDUIT TRENCH DETAILS |
| 589 | * MAST ARM POLE ELEVATION DETAILS |
| 590 | * STRAIN POLE ELEVATION DETAILS DISTRICT STANDARDS |
| 591 | * TIMBER POLE ELEVATION DETAILS |
| 592 | * ED ( 7 ) - 98 ( M ) |
| 593 - 594 | * SP - 130( 1,2 ) 96 ( M ) |
| 595 - 596 | * SMA - 130( 1,2, ) - 99 ( M ) |
| 597 | * MA - C -96(M) STATE STANDARDS |
| 598 | * MA - D - 99A(M) |
| 599 | * TS - FD - 99(M) |
| 600 | * LUM - A - 99 ( M ) |
| 601 | * CFA - 99 ( M ) |

# INDEX OF SHEETS

| SHEET NO. | DESCRIPTION |
|---|---|
| 602 - 626 | ILLUMINATION LAYOUTS |
| 627 | ILLUMINATION MISCELLANEOUS DETAILS |
| 628 - 631 | * RID ( 1 THRU 4 ) - 98 ( M ) |
| 632 - 635 | * ED ( 1 THRU 4 ) - 98 ( M ) STATE STANDARDS |
| 636 | * ED ( 4 ) - 98 ( M ) DISTRICT STANDARD |
| 637 - 702 | SIGNING LAYOUTS |
| 703 - 723 | SIGN DETAILS |
| 724 - 726 | SPECIAL SIGN DETAILS |
| 727 | * IE ( 1 ) - 95 ( M ) |
| 728 | * IM ( 1 ) - 95 ( M ) |
| 729 | * IM ( 2 ) - 93 ( M ) |
| 730 | * M ( 1 ) - 95 ( M ) |
| 731 | * M ( 3 ) - 97 ( M ) |
| 732 | * M ( 4 ) - 95 ( M ) |
| 733 | * R ( 1 ) - 98 ( M ) |
| 734 | * R ( 2 ) - 97 ( M ) |
| 735 | * R ( 3 ) - 95 ( M ) |
| 736 | * R ( 4 ) - 98 ( M ) STATE STANDARDS |
| 737 - 739 | * W ( 1 ),( 2 ),( 3 ) - 95 ( M ) |
| 740 - 744 | * SMD ( 1-1 THRU 1-5 ) - 98 ( M ) |
| 745 | * SMD ( 2-1 ) - 98 ( M ) |
| 746 | * SMD ( 2-2 ) - 98 ( M ) |
| 747 | * SMD ( 2-3 ) - 95A ( M ) |
| 748 | * SMD ( TY G ) - 97 ( M ) |
| 749 | * SMD ( RM ) - 98 ( M ) |
| 750 - 751 | * D & OM ( 1,2 ) - 95 ( M ) DISTRICT STANDARD |
| 752 | * D & OM ( VIA ) - 98 ( M ) STATE STANDARD |
| 753 | * RAD ( M ) DISTRICT STANDARD |
| 754 - 817 | PAVEMENT MARKING AND DELINEATION LAYOUTS |
| 818 | * PM ( 1 ) - 00A ( M ) |
| 819 | * PM ( 2 ) - 00A ( M ) STATE STANDARDS |
| 820 - 822 | * FPM ( 1,3,4) - 00 ( M ) |
| 823 - 825 | * TWLTLD ( M ) |
| 826 | * MLTBD ( M ) |
| 827 | * TPMD ( M ) DISTRICT STANDARD |
| 828 | * TYPICAL CROSSWALK DETAILS ( M ) |
| 829 - 840 | TRAFFIC MANAGEMENT LAYOUTS |
| 841 | TRENCH DETAILS |
| 842 | * MANHOLE ( COMPLETE )( JUNCTION BOX )( TY A ) STATE STANDARD |
| 843 | LP 1604 STORM WATER POLLUTION PREVENTION PLAN NARRATIVE |
| 844 - 858 | LP 1604 STORM WATER POLLUTION PREVENTION PROJECT INITIATION |
| 859 - 873 | LP 1604 STORM WATER POLLUTION PREVENTION PLAN CONSTRUCTION PHASE |
| 874 - 881 | * EC ( 1 THRU 8 ) - 95 ( M ) STATE STANDARD |
| 881A - 881B | LANDSCAPING LAYOUT & DETAILS |

## JOINT BID UTILITY RELOCATIONS

| SHEET NO. | DESCRIPTION |
|---|---|
| 882 - 900 | S.A.W.S. WATER LINE ADJUSTMENTS LAYOUTS, DETAILS & STANDARDS |
| 901 - 906 | S.A.W.S. SAN SEWER ADJUSTMENTS LAYOUTS, DETAILS & STANDARDS |

SHEETS OMITTED

469

STATE OF TEXAS
JOEL K. DAVENPORT, JR.
79276
REGISTERED
PROFESSIONAL ENGINEER

* THE STANDARDS SHEETS SPECIFICALLY IDENTIFIED ABOVE HAVE BEEN SELECTED BY ME OR UNDER MY RESPONSIBLE SUPERVISION AS BEING APPLICABLE TO THIS PROJECT.

Joel K. Davenport, Jr.
JOEL K. DAVENPORT, JR. P.E.

Texas Department of Transportation

## SHEET INDEX

| FED.RD. DIV.NO. | FEDERAL AID PROJECT NO. | | SHEET NO. |
|---|---|---|---|
| 6 | NH 2000(704),etc. | | 2 |
| STATE | DIST. | COUNTY | |
| TEXAS | SAT | BEXAR | |
| CONT. | SECT. | JOB | HIGHWAY NO. |
| 2452 | 01 | 03F,etc. | LP 1604 |

FILE T:\AO\DESIGN\LP1604fm471-90\TITLESHEET.DGN $DATE$
LEVEL DISPLAYED 1 2 3 4 5 6 7 8 9 10 11 12 13 14 15 16 17 18 19 20 21 22 23 24 25 26 27 28 29 30 31 32 33 34 35 36 37 38 39 40 41 42 43 44 45 46 47 48 49 50 51 52 53 54 55 56 57 58 59 60 61 62 63 64

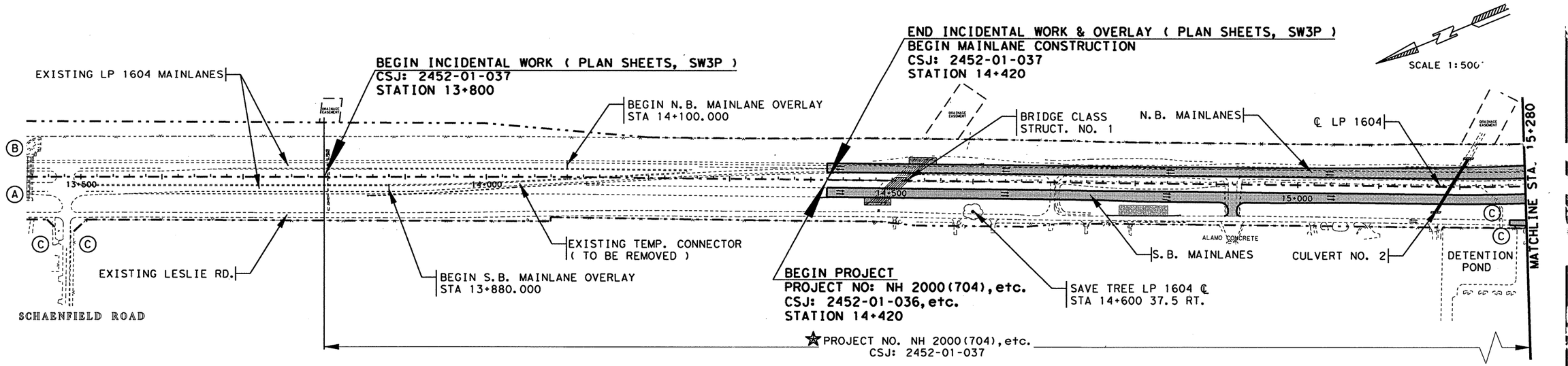


SEE SCHEDULE OF BARRICADES SHEET NO. 63 FOR CONSTRUCTION SIGN PLACEMENT.

Ⓐ Ⓑ Ⓒ #

★★ MAINLANE BRIDGES STA 15+795.900 TO STA 16+065.100 = 269.200 M
BRIDGES & RELATED ONLY TO BE PAID FOR UNDER
PROJECT NO. STP 2000(703)HES, CSJ: 0849-01-036.

★ EXCEPTION MAINLANE STA 15+500.000 TO STA 17+000.000 = 1500.000 M
WORK TO BE CARRIED UNDER PROJECT NO. STP 2000(705)MM,
CSJ: 2452-01-038 ( EXCLUDING MAINLANE BRIDGES & RELATED ).

STATE OF TEXAS
JOEL K. DAVENPORT, JR.
79276
REGISTERED PROFESSIONAL ENGINEER

Joel K. Davenport Jr. 9/19/00
Joel K. Davenport, Jr. P.E. 79276 Date

©2000

Texas Department of Transportation

# PROJECT & BARRICADE LAYOUT

SHEET 1 OF 4

| FED. RD. DIV. NO. | FEDERAL AID PROJECT NO. | | SHEET NO. |
|---|---|---|---|
| 6 | NH 2000(704), etc. | | 3 |
| STATE | DIST. | COUNTY | |
| TEXAS | SAT | BEXAR | |
| CONT. | SECT. | JOB | HIGHWAY NO. |
| 2452 | 01 | 036, etc. | LP 1604 |

ID1604fm471-90\projjoy01.dgn

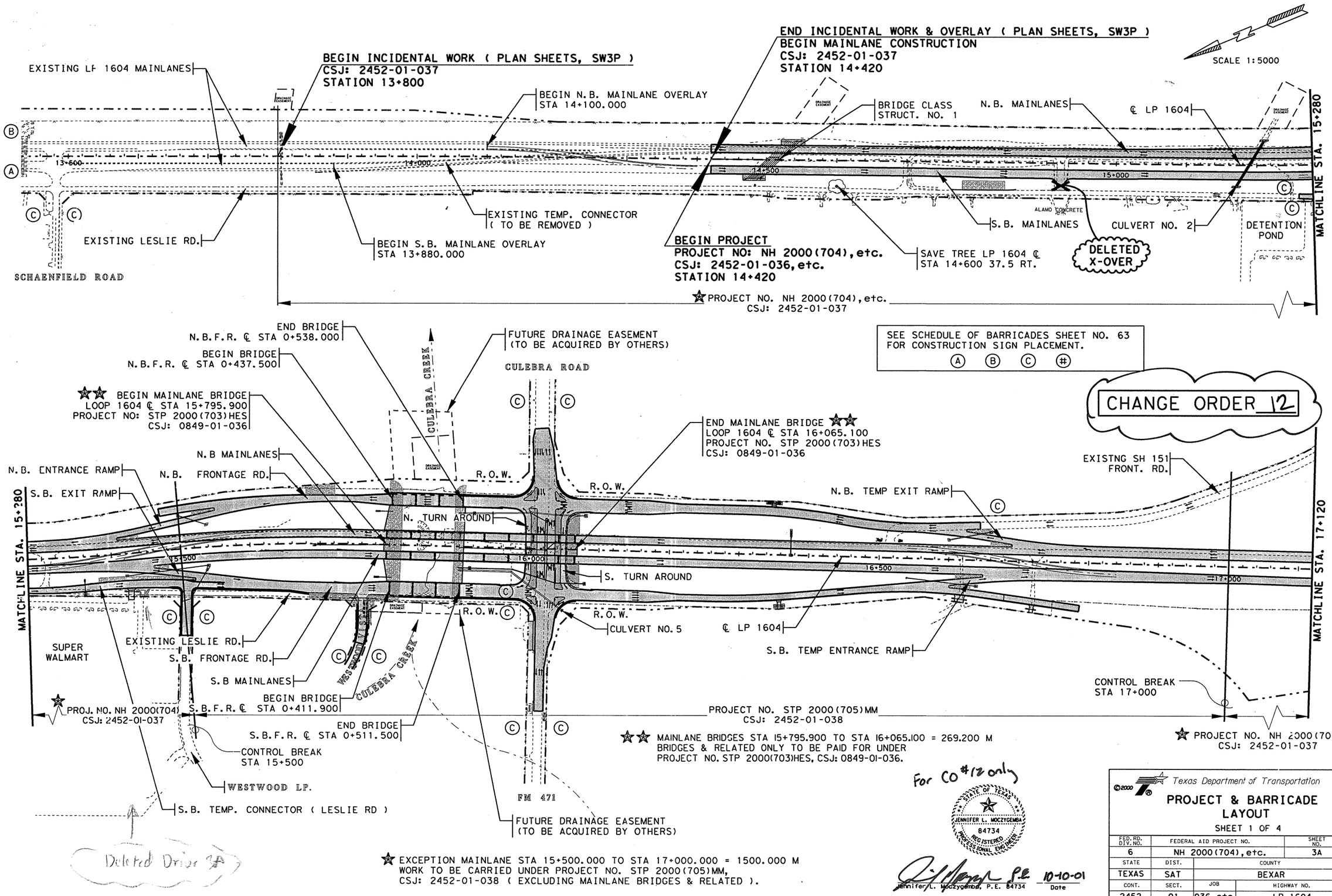


SEE SCHEDULE OF BARRICADES SHEET NO. 63
FOR CONSTRUCTION SIGN PLACEMENT.
Ⓐ Ⓑ Ⓒ #

CHANGE ORDER #2

★★ MAINLANE BRIDGES STA 15+795.900 TO STA 16+065.100 = 269.200 M
BRIDGES & RELATED ONLY TO BE PAID FOR UNDER
PROJECT NO. STP 2000(703)HES, CSJ: 0849-01-036.

★ EXCEPTION MAINLANE STA 15+500.000 TO STA 17+000.000 = 1500.000 M
WORK TO BE CARRIED UNDER PROJECT NO. STP 2000(705)MM,
CSJ: 2452-01-038 ( EXCLUDING MAINLANE BRIDGES & RELATED ).

For CO #12 only

STATE OF TEXAS
JENNIFER L. MOCZYGEMBA
84734
REGISTERED
PROFESSIONAL ENGINEER

Jennifer L. Moczygemba P.E. 10-10-01
Jennifer L. Moczygemba, P.E. 84734 Date

©2000
Texas Department of Transportation

# PROJECT & BARRICADE LAYOUT

SHEET 1 OF 4

| FED. RD. DIV. NO. | FEDERAL AID PROJECT NO. | | SHEET NO. |
|---|---|---|---|
| 6 | NH 2000(704), etc. | | 3A |
| STATE | DIST. | COUNTY | |
| TEXAS | SAT | BEXAR | |
| CONT. | SECT. | JOB | HIGHWAY NO. |
| 2452 | 01 | 036, etc. | LP 1604 |

10-02-01

lp1604fm471-95\proj1oy01.dgn

SEE SCHEDULE OF BARRICADES SHEET NO. 63
FOR CONSTRUCTION SIGN PLACEMENT.
(A) (B) (C) (#)

SCALE 1:5000

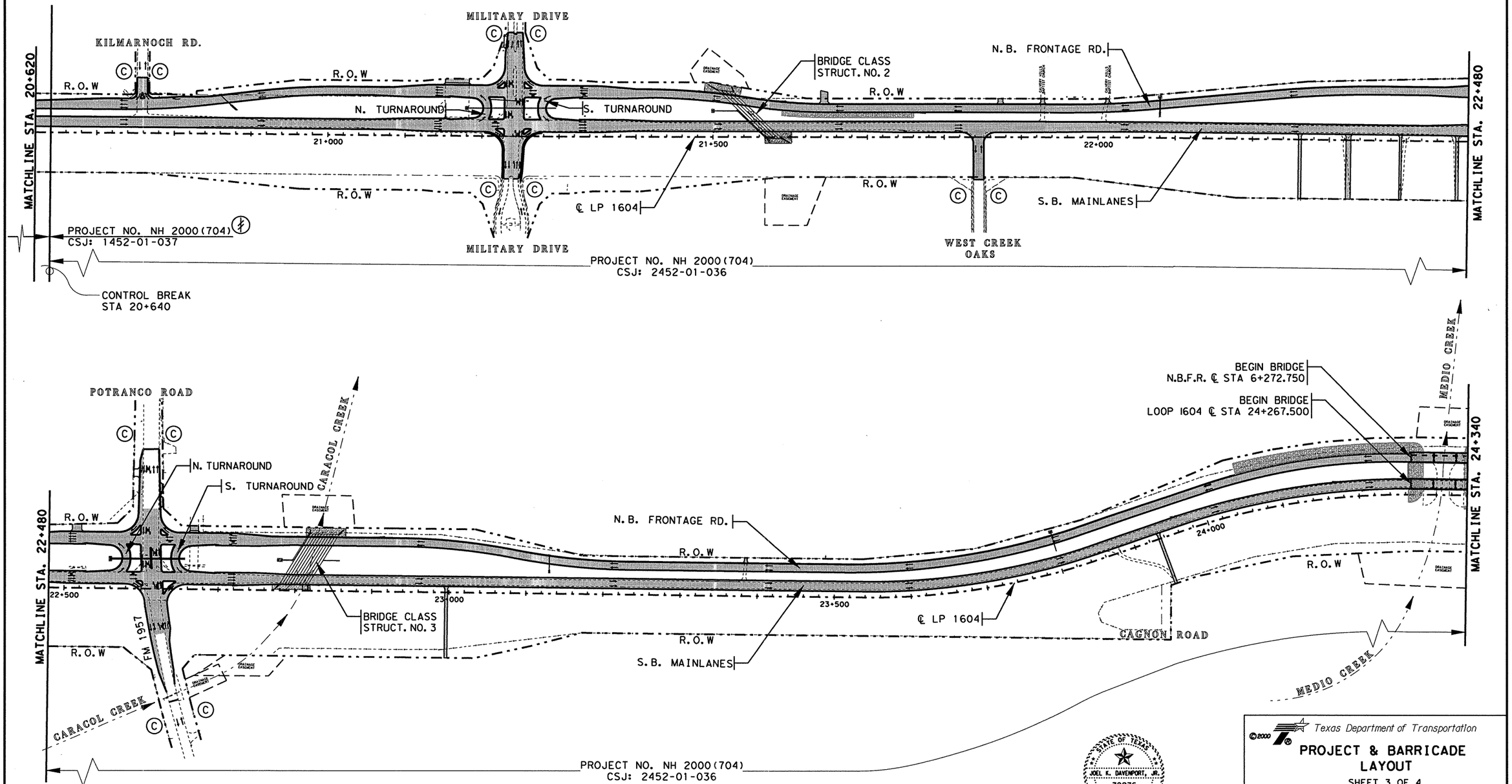


(#) SEE EXCEPTION RELATED NOTE SHEET NO. 3

STATE OF TEXAS
JOEL K. DAVENPORT, JR.
79276
REGISTERED
PROFESSIONAL ENGINEER

Joel K. Davenport, Jr. P.E. 79276 — 4/19/00 Date

©2000 Texas Department of Transportation

# PROJECT & BARRICADE LAYOUT

SHEET 3 OF 4

| FED. RD. DIV. NO. | FEDERAL AID PROJECT NO. | | SHEET NO. |
|---|---|---|---|
| 6 | NH 2000(704), etc. | | 5 |
| STATE | DIST. | COUNTY | |
| TEXAS | SAT | BEXAR | |
| CONT. | SECT. | JOB | HIGHWAY NO. |
| 2452 | 01 | 036, etc. | LP 1604 |

lp1604fm471-90\projloy03.dgn

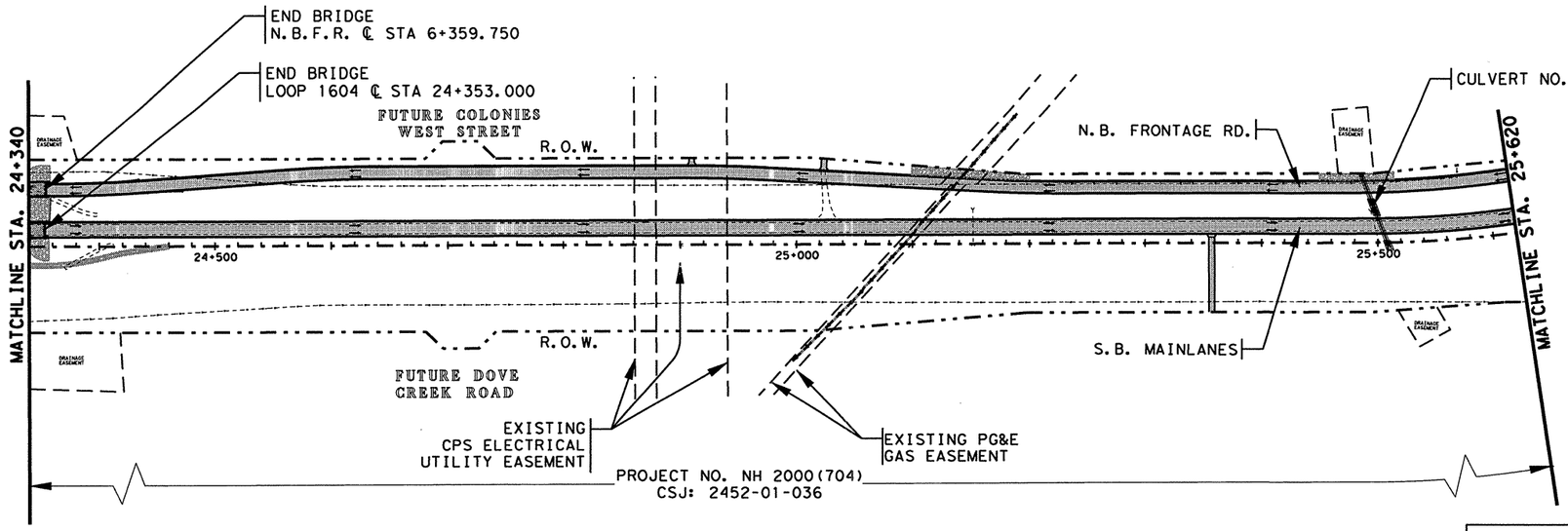


SCALE 1:5000

SEE SCHEDULE OF BARRICADES SHEET NO. 63
FOR CONSTRUCTION SIGN PLACEMENT.
Ⓐ Ⓑ Ⓒ #

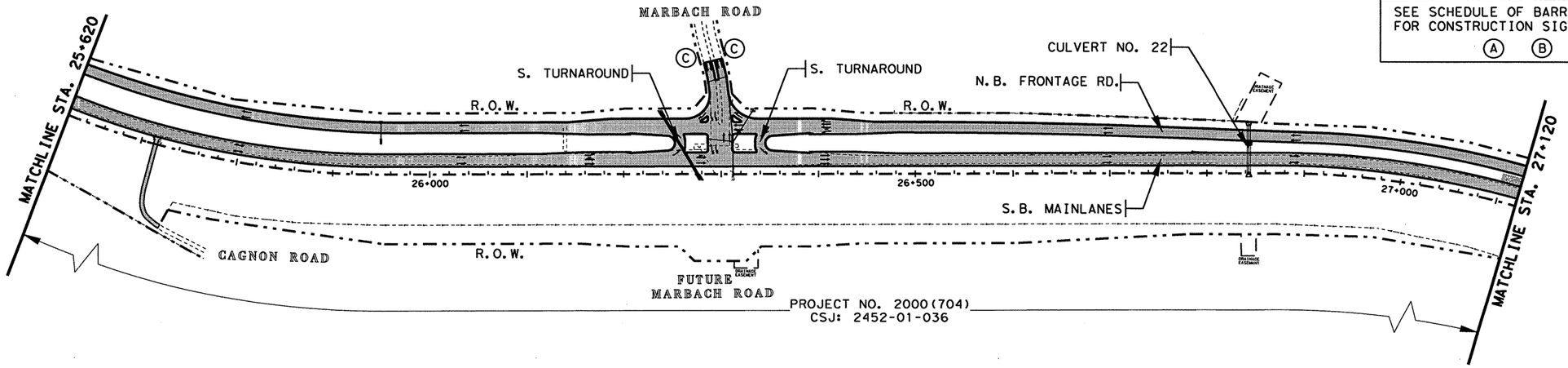


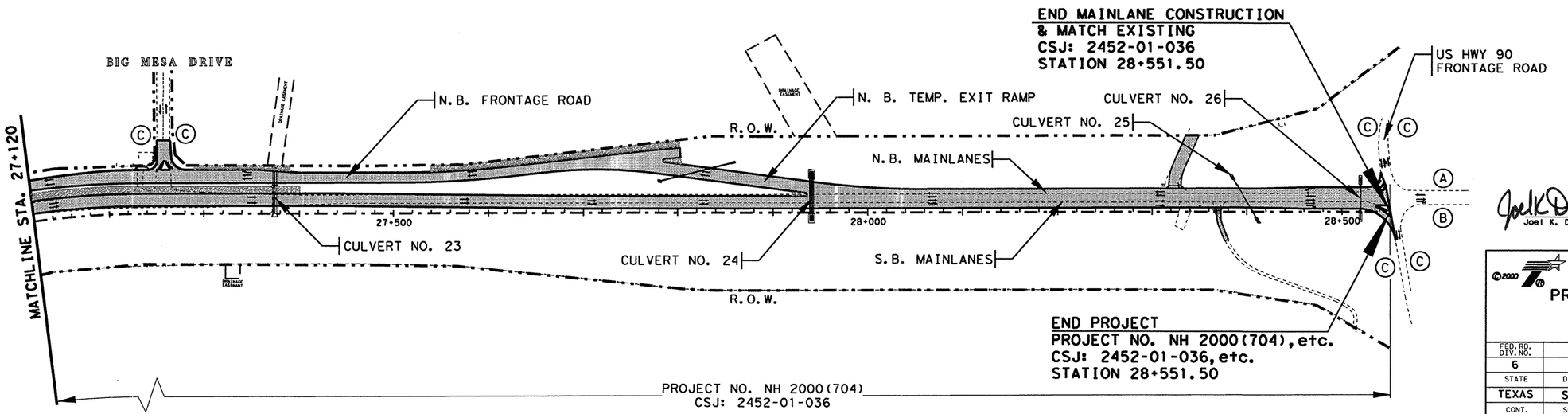


STATE OF TEXAS
JOEL K. DAVENPORT, JR.
79276
REGISTERED
PROFESSIONAL ENGINEER

Joel K. Davenport Jr. 9/19/00
Joel K. Davenport, Jr. P.E. 79276 Date

©2000
Texas Department of Transportation

# PROJECT & BARRICADE LAYOUT

SHEET 4 OF 4

| FED. RD. DIV. NO. | FEDERAL AID PROJECT NO. | | SHEET NO. |
|---|---|---|---|
| 6 | NH 2000(704), etc. | | 6 |
| STATE | DIST. | COUNTY | |
| TEXAS | SAT | BEXAR | |
| CONT. | SECT. | JOB | HIGHWAY NO. |
| 2452 | 01 | 036, etc. | LP 1604 |

ID1604fm471-90\projlay04.dgn

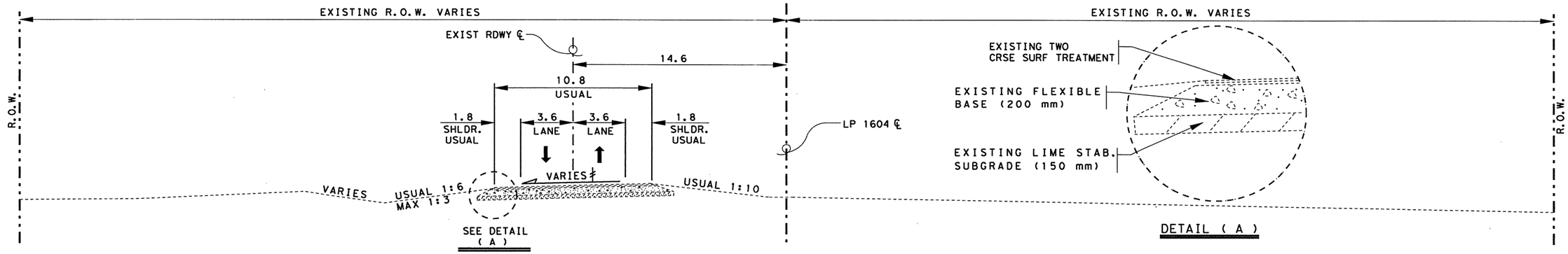


## EXISTING ROADWAY

STA 13+800 TO END OF PROJECT

♯ THE EXISTING ROADWAY CONSISTS OF VARYING SUPERELEVATED AND CROWNED SECTIONS.

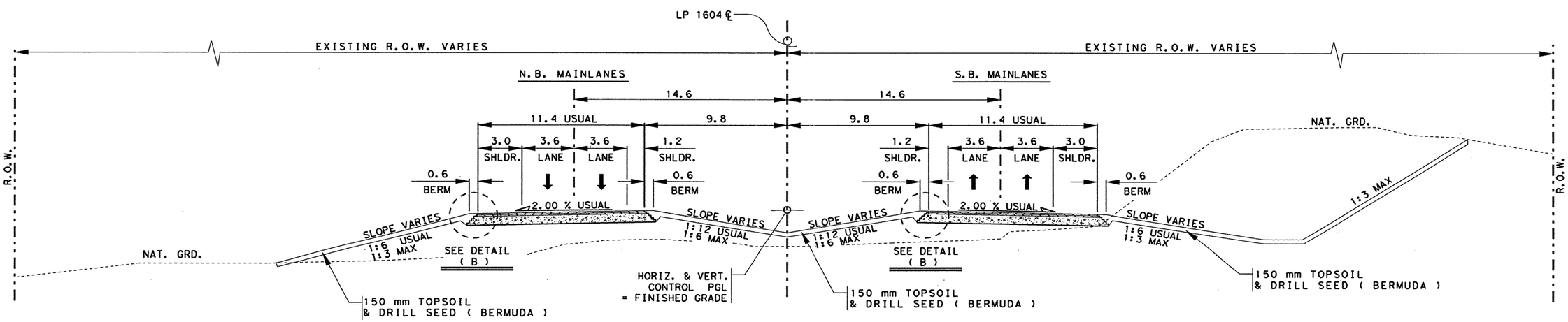


## DIVIDED MAINLANES

STA 14+420 TO STA 15+820 (+/-)
STA 16+070 TO STA 18+070 (+/-)

( FOR MORE DETAILS SEE MAINLANE PROFILE SHEETS. )

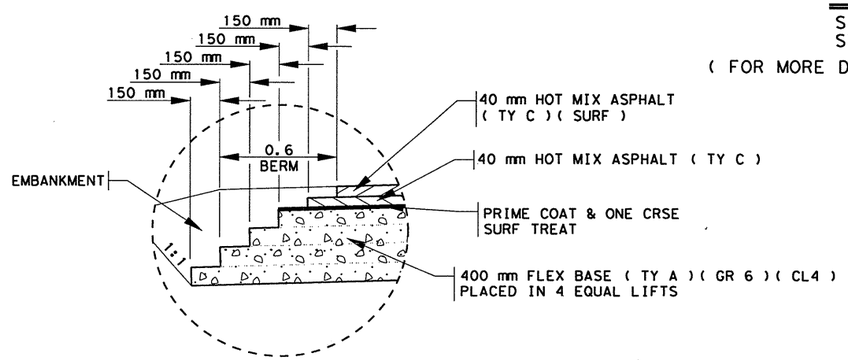


DETAIL ( B )

**NOTES:** SEE PROJECT X-SECTIONS FOR MORE DETAILS.

ALL DIMENSIONS ARE IN METERS UNLESS OTHERWISE NOTED.

SCALE: NTS

STATE OF TEXAS
JOEL K. DAVENPORT, JR.
79276
REGISTERED
PROFESSIONAL ENGINEER

Joel K. Davenport, Jr. P.E. 79276 — 9/19/00 Date

©2000 Texas Department of Transportation

# TYPICAL SECTIONS

SHEET 1 OF 5

| FED. RD. DIV.NO. | FEDERAL AID PROJECT NO. | | SHEET NO. |
|---|---|---|---|
| 6 | NH 2000(704), etc. | | 7 |
| STATE | DIST. | COUNTY | |
| TEXAS | SAT | BEXAR | |
| CONT. | SECT. | JOB | HIGHWAY NO. |
| 2452 | 01 | 036, etc. | LP 1604 |

lp1604fm471-90\typical-sections

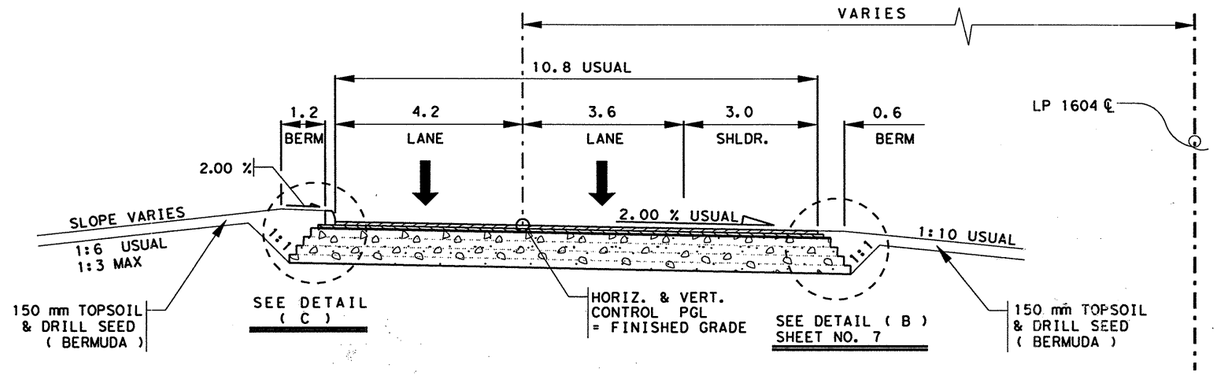


## FRONTAGE ROADS

STA 15+500 TO STA 27+640 (+/-)

NOTE: FRONTAGE RD. TYPICAL MAY BE APPLIED SYMMETRICALLY ABOUT THE LP 1604 ℄ FROM APPROX. STATIONS 15+500 TO 16+800

( FOR MORE DETAILS SEE FRONTAGE RD PROFILE SHEETS. )

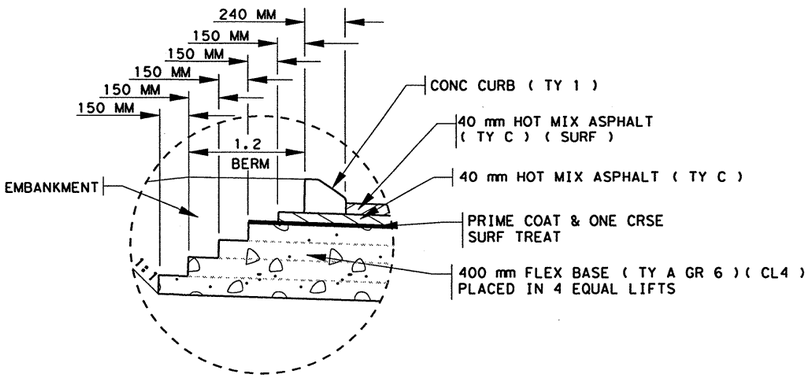


DETAIL ( C )

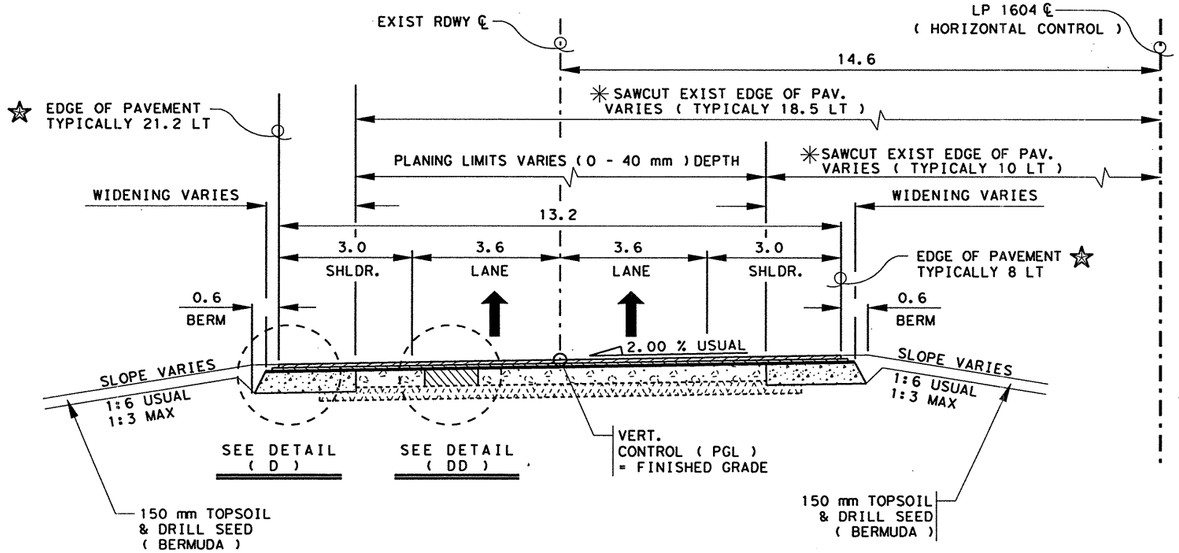


## S.B. MAINLANES ( PLANING, WIDENING & OVERLAY SECTION )

STA 18+600 TO STA 19+250, STA 19+370 TO STA 21+180
STA 21+300 TO STA 22+550, STA 22+670 TO STA 24+165

( FOR MORE DETAILS SEE MAINLANE PROFILE SHEETS. )

✳ ALL SAWCUTTING SHALL BE CONSIDERED SUBSIDIARY TO VARIOUS PERTINENT BID ITEMS. FOR MORE DETAILS ON WIDENING / SAWCUTTING SEE PLAN SHEETS.

☆ SOME EXIST. PAV. IS IN EXCESS OF WHATS NEEDED AND SHALL BE SAWCUT & REMOVED. THIS WORK SHALL BE CONSIDERED SUBSIDIARY TO RDWY. EXCAVATION. FOR MORE INFO. SEE PLAN SHEETS & PROJECT X-SECTIONS.

PLANING MAYBE CALLED FOR TO ELIMINATE THE EXISTING CROWN IN ROADWAY, FOR PLANING LIMITS SEE EXISTING PLAN SHEETS.

FOR LIMITS OF FLEXIBLE PAVEMENT REPAIR AREAS SEE EXISTING PLAN SHEETS.

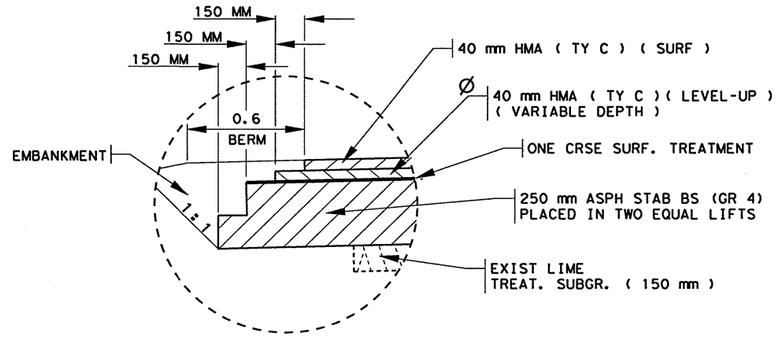


DETAIL ( D )

Ø DEPTH VARIES IN APPLICATION ( CONTRACTOR SHALL PLACE IN 50 MM MAX LIFTS ).

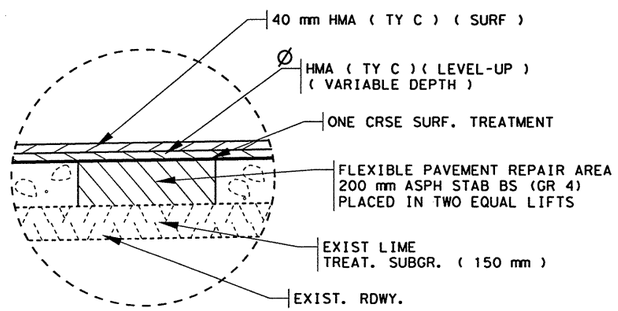


DETAIL ( DD )

NOTES: SEE PROJECT X-SECTIONS FOR MORE DETAILS.
ALL DIMENSIONS ARE IN METERS UNLESS OTHERWISE NOTED.
SCALE: NTS

STATE OF TEXAS
JOEL K. DAVENPORT, JR.
79276
REGISTERED
PROFESSIONAL ENGINEER

Joel K. Davenport, Jr. P.E. 79276 — 11/1/00
Date

©2000 Texas Department of Transportation

# TYPICAL SECTIONS

SHEET 2 OF 5

| FED. RD. DIV. NO. | FEDERAL AID PROJECT NO. | | SHEET NO. |
|---|---|---|---|
| 6 | NH 2000(704), etc. | | 8 |
| STATE | DIST. | COUNTY | |
| TEXAS | SAT | BEXAR | |
| CONT. | SECT. | JOB | HIGHWAY NO. |
| 2452 | 01 | 036, etc. | LP 1604 |

lp1604fm471-90\typical-sections

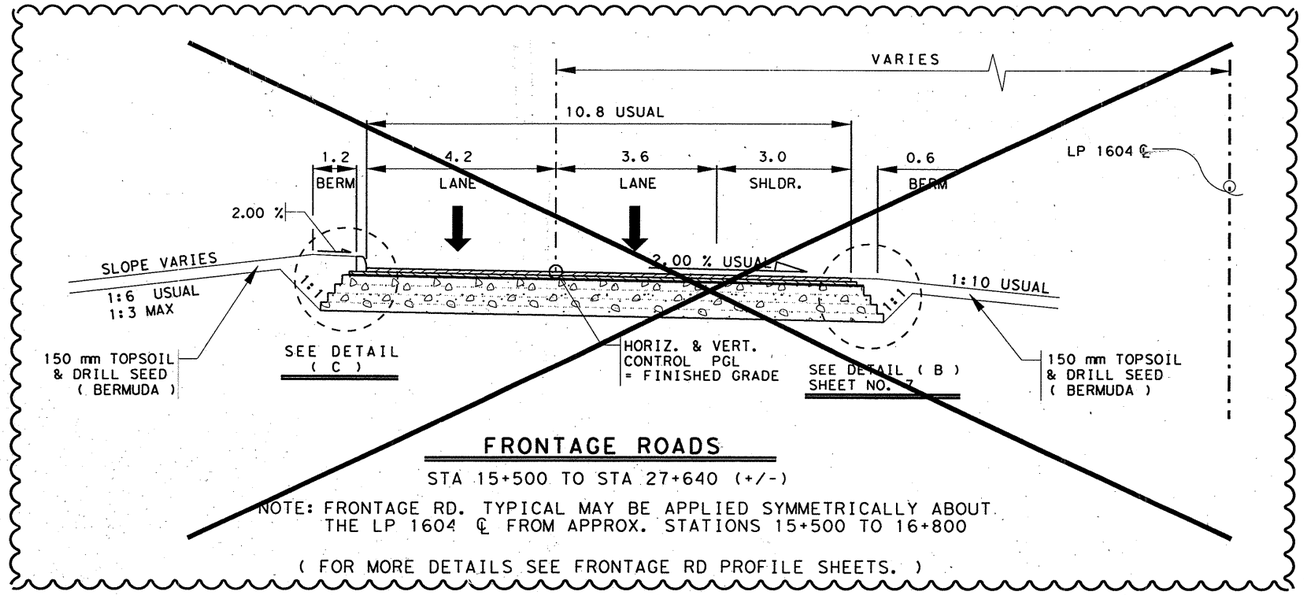


## FRONTAGE ROADS

STA 15+500 TO STA 27+640 (+/-)

NOTE: FRONTAGE RD. TYPICAL MAY BE APPLIED SYMMETRICALLY ABOUT THE LP 1604 ℄ FROM APPROX. STATIONS 15+500 TO 16+800

( FOR MORE DETAILS SEE FRONTAGE RD PROFILE SHEETS. )

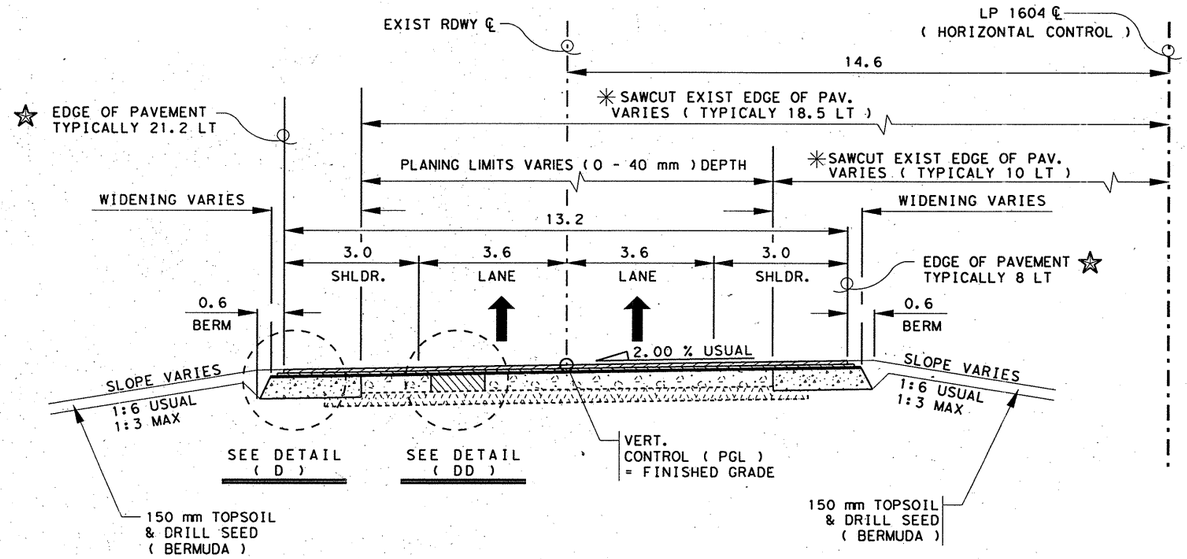


## S.B. MAINLANES ( PLANING, WIDENING & OVERLAY SECTION )

STA 18+600 TO STA 19+125, STA 19+505 TO STA 21+010
STA 21+300 TO STA 22+550, STA 22+670 TO STA 24+165

( FOR MORE DETAILS SEE MAINLANE PROFILE SHEETS. )

✳ ALL SAWCUTTING SHALL BE CONSIDERED SUBSIDIARY TO VARIOUS PERTINENT BID ITEMS. FOR MORE DETAILS ON WIDENING / SAWCUTTING SEE PLAN SHEETS.

☆ SOME EXIST. PAV. IS IN EXCESS OF WHATS NEEDED AND SHALL BE SAWCUT & REMOVED. THIS WORK SHALL BE CONSIDERED SUBSIDIARY TO RDWY. EXCAVATION. FOR MORE INFO SEE PLAN SHEETS & PROJECT X-SECTIONS.

⫽ PLANING MAYBE CALLED FOR TO ELIMINATE THE EXISTING CROWN IN ROADWAY, FOR PLANING LIMITS SEE EXISTING PLAN SHEETS.

⌗ FOR LIMITS OF FLEXIBLE PAVEMENT REPAIR AREAS SEE EXISTING PLAN SHEETS.

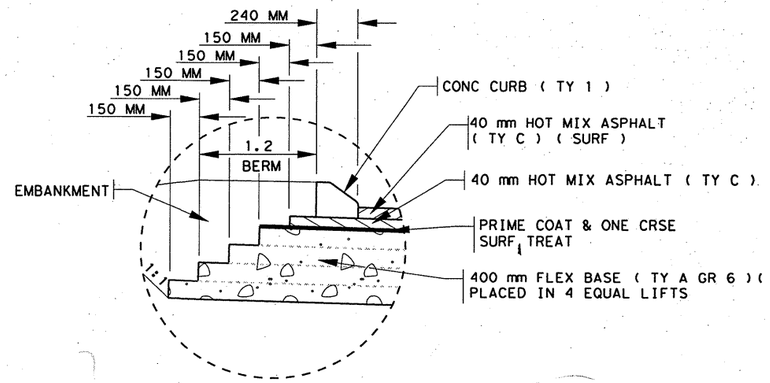


DETAIL ( C )

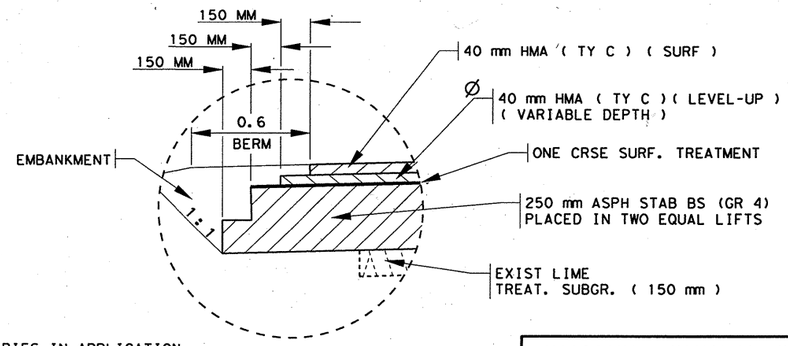


Ø DEPTH VARIES IN APPLICATION ( CONTRACTOR SHALL PLACE IN 50 MM MAX LIFTS ).

DETAIL ( D )

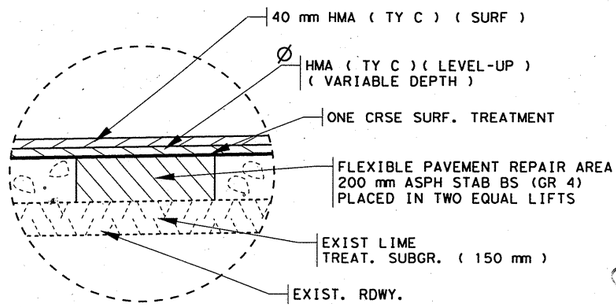


DETAIL ( DD )

CHANGE ORDER 64

REVISED SHEET

CHANGE ORDER NO. 64
-ELIMINATED ORIGINAL FRONT. RD. TYPICAL.
-SEE REVISED FRONT. RD. TYPICALS ON NEW SHEET.
-MODIFIED LIMITS OF REHAB SECTION FOR S'BD M'S (ADA PURPOSES)

NOTES: SEE PROJECT X-SECTIONS FOR MORE DETAILS.
ALL DIMENSIONS ARE IN METERS UNLESS OTHERWISE NOTED.
SCALE: NTS

STATE OF TEXAS
JEROME D. PAVLISKA
76075
REGISTERED
PROFESSIONAL ENGINEER

Jerome D. Pavliska, P.E. Date

©2000 Texas Department of Transportation

# TYPICAL SECTIONS

SHEET 2 OF 5

| FED.RD. DIV.NO. | FEDERAL AID PROJECT NO. | | SHEET NO. |
|---|---|---|---|
| 6 | NH 2000(704), etc. | | 8A |
| STATE | DIST. | COUNTY | |
| TEXAS | SAT | BEXAR | |
| CONT. | SECT. | JOB | HIGHWAY NO. |
| 2452 | 01 | 036, etc. | LP 1604 |

lp1604fm471-90\typical-sections

05-03-04

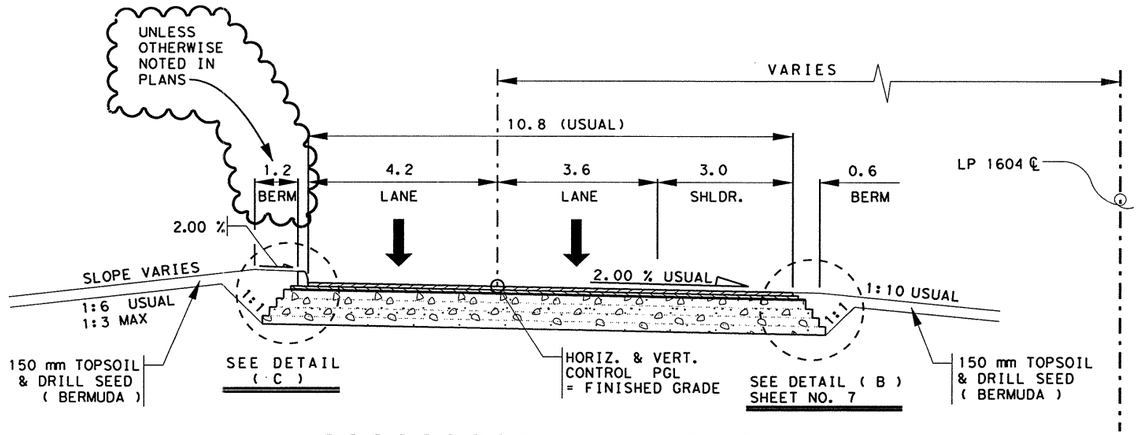


## FRONTAGE ROADS "B"&"D"

STA 15+500 TO STA 16+800 (+/-)

NOTE: FRONTAGE RD. TYPICAL MAY BE APPLIED SYMMETRICALLY ABOUT THE LP 1604 ℄ FROM APPROX. STATIONS 15+500 TO 16+800

( FOR MORE DETAILS SEE FRONTAGE RD PROFILE SHEETS. )

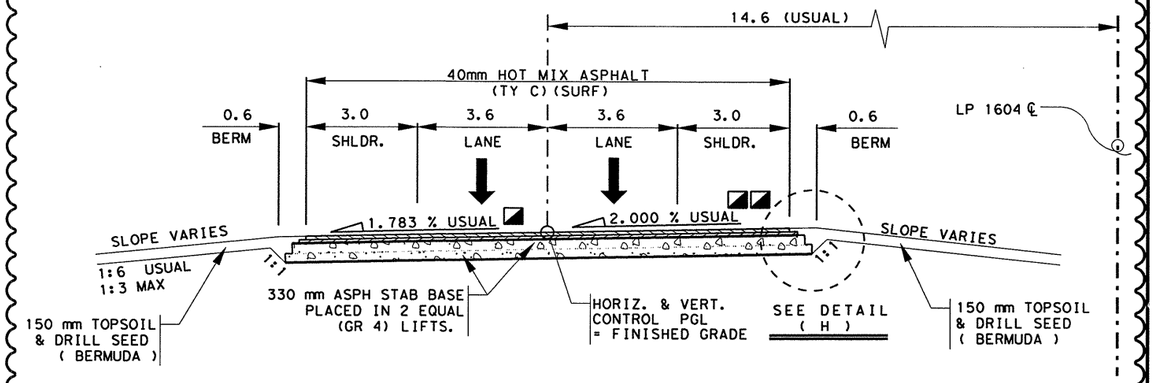


## SOUTHBOUND MAINLANES

◪ FROM STA 19+125 TO STA 19+505

◪◪ & STA 21+010 TO 21+300

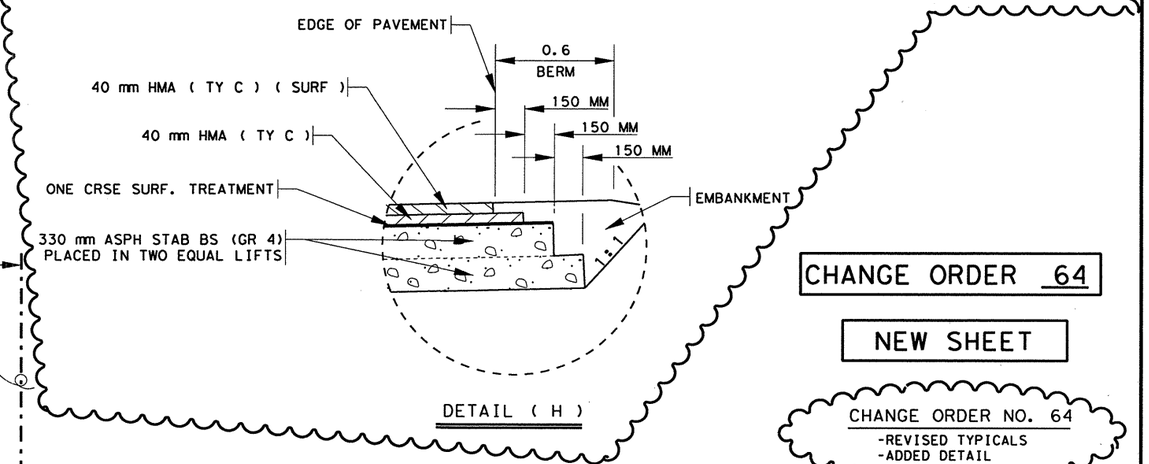


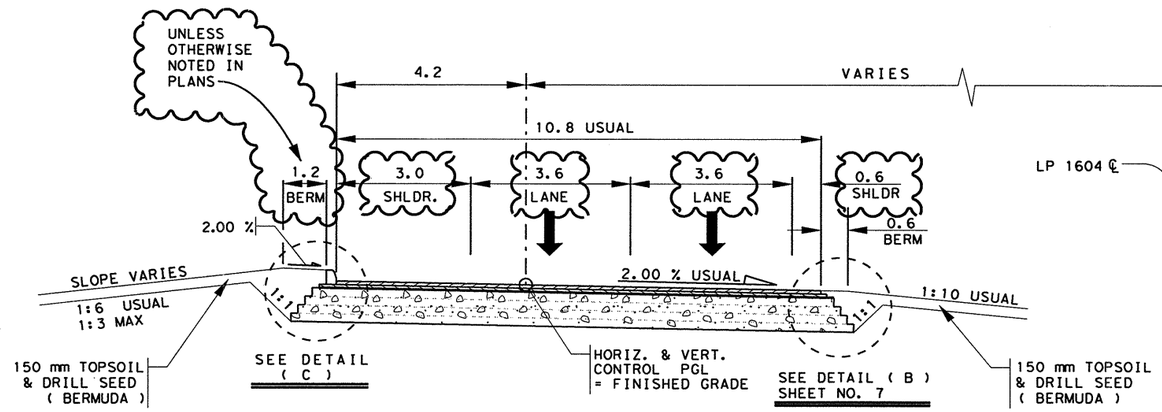


## FRONTAGE ROAD "G"

STA 18+100 TO STA 27+640 (+/-)

( FOR MORE DETAILS SEE FRONTAGE RD PROFILE SHEETS. )

NEW LANE CONFIGURATIONS

**CHANGE ORDER 64**

**NEW SHEET**

CHANGE ORDER NO. 64
-REVISED TYPICALS
-ADDED DETAIL

STATE OF TEXAS
JEROME D. PAVLISKA
76075
REGISTERED PROFESSIONAL ENGINEER

Jerome D. Pavliska, P.E. 5-3-04
Jerome D. Pavliska, P.E. Date

NOTES: SEE PROJECT X-SECTIONS FOR MORE DETAILS.
ALL DIMENSIONS ARE IN METERS UNLESS OTHERWISE NOTED.
SCALE: NTS

©2000
Texas Department of Transportation

# TYPICAL SECTIONS

SHEET 2A OF 5

| FED.RD. DIV. NO. | FEDERAL AID PROJECT NO. | | SHEET NO. |
|---|---|---|---|
| 6 | NH 2000(704), etc. | | 8B |
| STATE | DIST. | COUNTY | |
| TEXAS | SAT | BEXAR | |
| CONT. | SECT. | JOB | HIGHWAY NO. |
| 2452 | 01 | 036, etc. | LP 1604 |

lp1604fm471-90\typical-sections

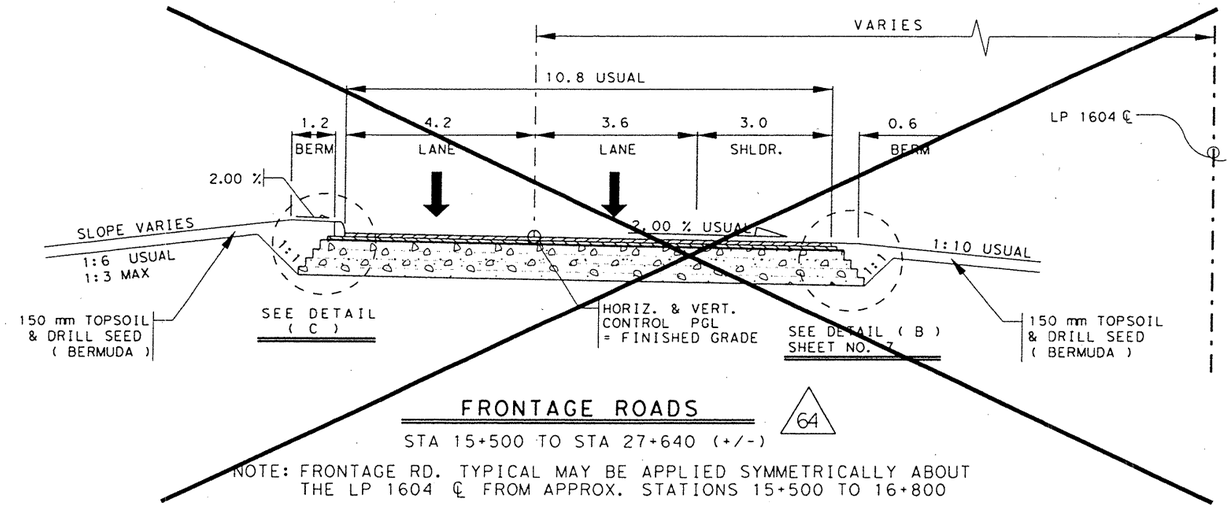


## FRONTAGE ROADS

64

STA 15+500 TO STA 27+640 (+/-)

NOTE: FRONTAGE RD. TYPICAL MAY BE APPLIED SYMMETRICALLY ABOUT THE LP 1604 ℄ FROM APPROX. STATIONS 15+500 TO 16+800

(FOR MORE DETAILS SEE FRONTAGE RD PROFILE SHEETS.)

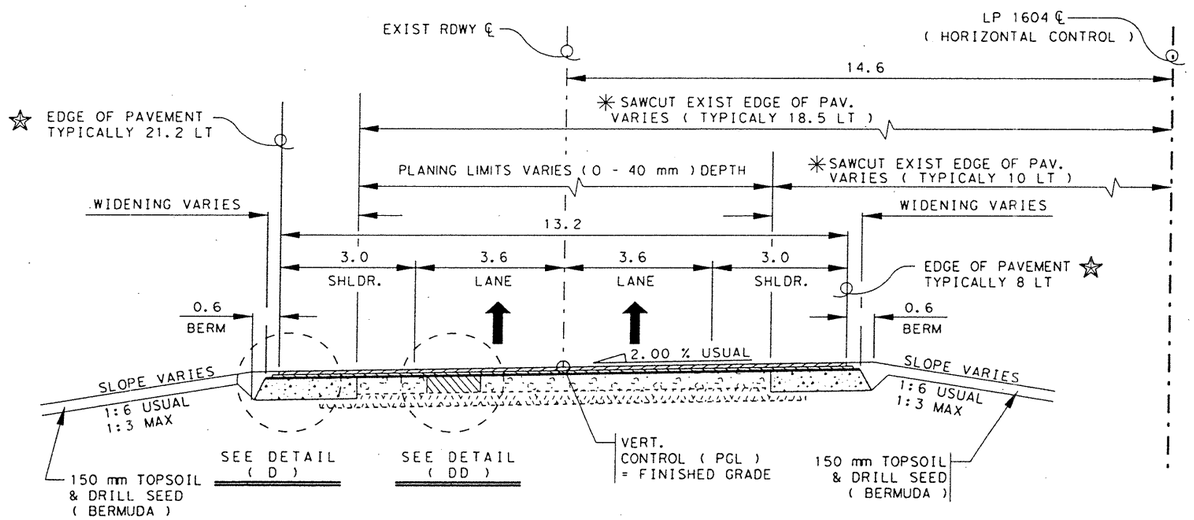


## S.B. MAINLANES ( PLANING, WIDENING & OVERLAY SECTION )

64

STA 18+600 TO STA 18+860, STA 19+505 TO STA 21+010
~~STA 21+300 TO STA 22+550,~~ STA 21+860 TO STA 22+550
STA 22+860 TO STA 24+165

(FOR MORE DETAILS SEE MAINLANE PROFILE SHEETS & ML X-SECTIONS.)

✳ ALL SAWCUTTING SHALL BE CONSIDERED SUBSIDIARY TO VARIOUS PERTINENT BID ITEMS. FOR MORE DETAILS ON WIDENING / SAWCUTTING SEE PLAN SHEETS.

✡ SOME EXIST. PAV. IS IN EXCESS OF WHATS NEEDED AND SHALL BE SAWCUT & REMOVED. THIS WORK SHALL BE CONSIDERED SUBSIDIARY TO RDWY. EXCAVATION. FOR MORE INFO. SEE PLAN SHEETS & PROJECT X-SECTIONS.

⫽ PLANING MAYBE CALLED FOR TO ELIMINATE THE EXISTING CROWN IN ROADWAY, FOR PLANING LIMITS SEE EXISTING PLAN SHEETS.

⊕ FOR LIMITS OF FLEXIBLE PAVEMENT REPAIR AREAS SEE EXISTING PLAN SHEETS.

#

REFERS TO CHANGES MADE AS PART OF CHANGE ORDER.

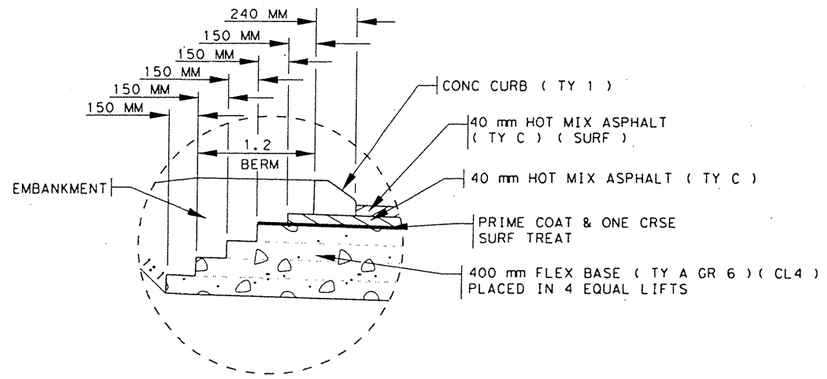


DETAIL ( C )

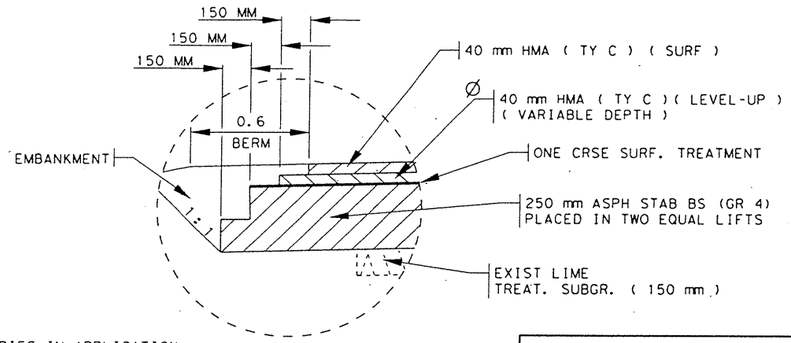


Ø DEPTH VARIES IN APPLICATION ( CONTRACTOR SHALL PLACE IN 50 MM MAX LIFTS ).

DETAIL ( D )

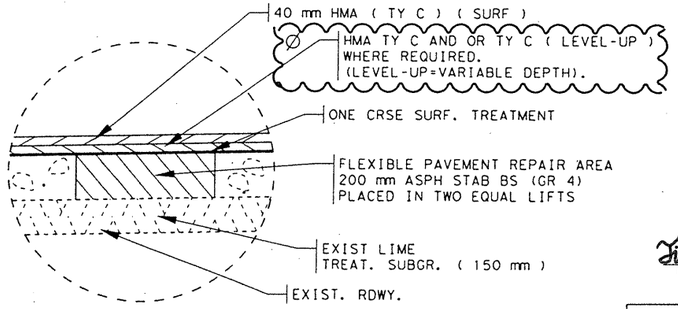


DETAIL ( DD )

CHANGE ORDER NO. 119
-MODIFIED SECTION & DETAIL DATA INVOLVING MAINLANE REHAB SECTION.

NOTES: SEE PROJECT X-SECTIONS FOR MORE DETAILS.
ALL DIMENSIONS ARE IN METERS UNLESS OTHERWISE NOTED.
SCALE: NTS

CHANGE ORDER 119

REVISED SHEET

STATE OF TEXAS
FITZGERALDO G. SANCHEZ
76084
LICENCED
PROFESSIONAL ENGINEER

Fitzgeraldo G. Sanchez 03-10-06
Fitzgeraldo G. Sanchez, P.E. Date

©2000 Texas Department of Transportation

# TYPICAL SECTIONS

SHEET 2 OF 5

| FED. RD. DIV. NO. | FEDERAL AID PROJECT NO. | | SHEET NO. |
|---|---|---|---|
| 6 | NH 2000(704), etc. | | 8A B |
| STATE | DIST. | COUNTY | |
| TEXAS | SAT | BEXAR | |
| CONT. | SECT. | JOB | HIGHWAY NO. |
| 2452 | 01 | 036, etc. | LP 1604 |

I:\AO\Design\lp1604fm471-90\typical-sections C.0#.dgn
2/23/2006

02-17-06

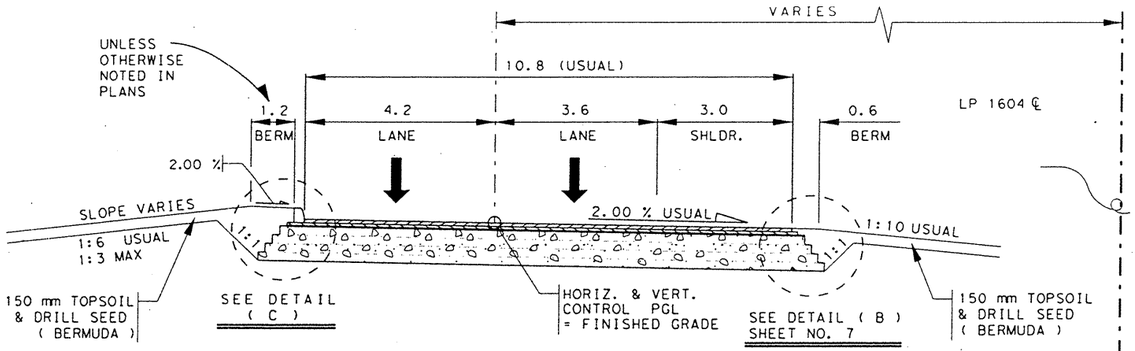


## FRONTAGE ROADS "B"&"D"

STA 15+500 TO STA 16+800 (+/-)

28

NOTE: FRONTAGE RD. TYPICAL MAY BE APPLIED SYMMETRICALLY ABOUT THE LP 1604 ℄ FROM APPROX. STATIONS 15+500 TO 16+800

(FOR MORE DETAILS SEE FRONTAGE RD PROFILE SHEETS.)

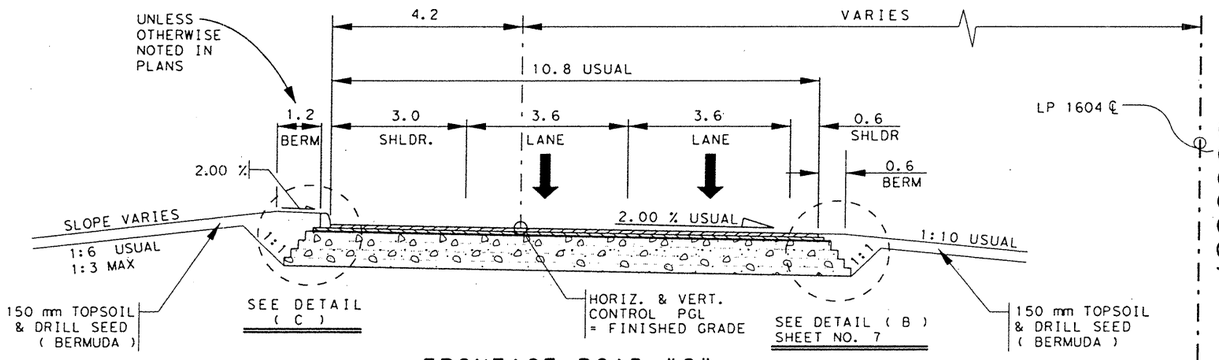


## FRONTAGE ROAD "G"

STA 18+100 TO STA 27+640 (+/-)

(FOR MORE DETAILS SEE FRONTAGE RD PROFILE SHEETS.)

NEW LANE CONFIGURATIONS 64

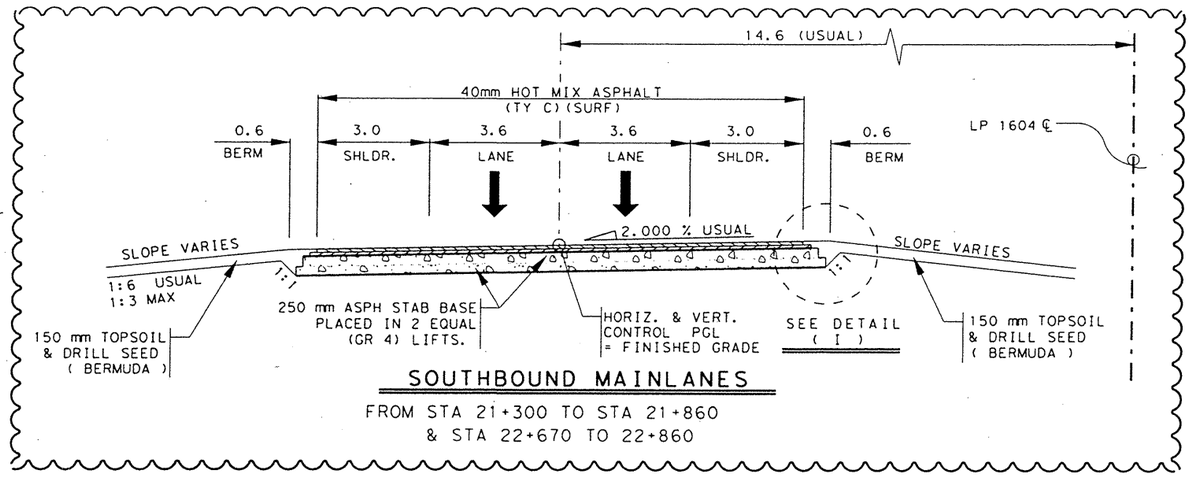


## SOUTHBOUND MAINLANES

FROM STA 21+300 TO STA 21+860
& STA 22+670 TO 22+860

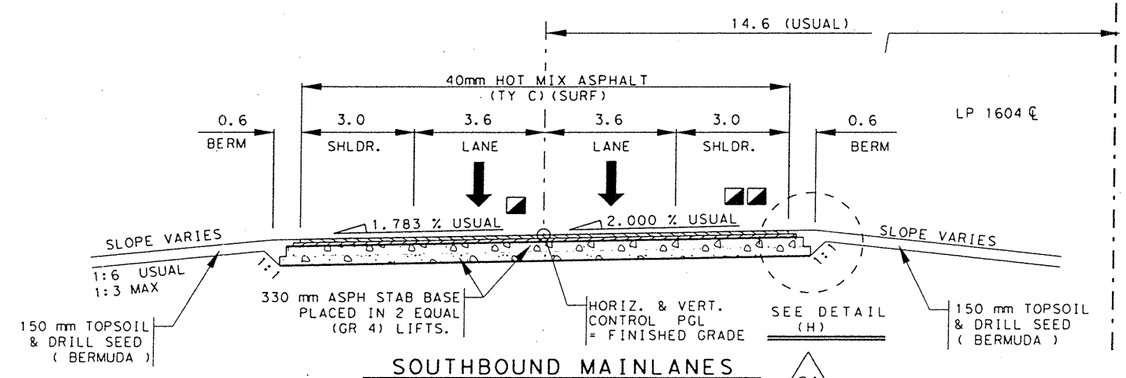


## SOUTHBOUND MAINLANES

64

FROM STA 19+125 TO STA 19+505
& STA 21+010 TO 21+300

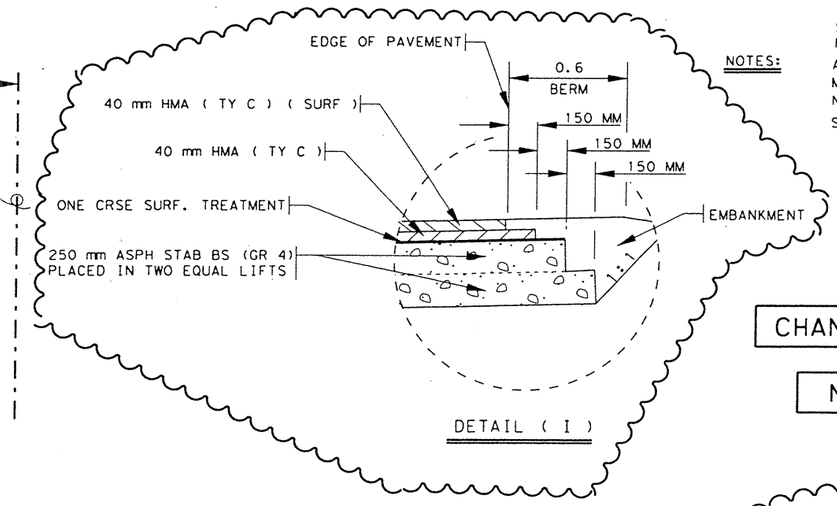


DETAIL ( I )

NOTES:

SEE PROJECT X-SECTIONS FOR MORE DETAILS.

ALL DIMENSIONS ARE IN METERS UNLESS OTHERWISE NOTED.

SCALE: NTS

CHANGE ORDER 119

NEW SHEET

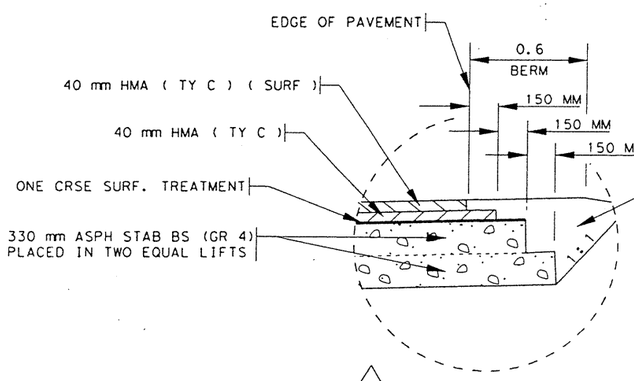


64 DETAIL ( H )

# CHANGE ORDER NO. 119

-REVISED/ADDED TYPICALS
-REVISED/ADDED DETAILS

STATE OF TEXAS
FITZGERALDO G. SANCHEZ
76084
LICENSED
PROFESSIONAL ENGINEER

Fitzgerald G Sanchez 03-10-06
Fitzgeraldo G. Sanchez, P.E. Date

REFERS TO CHANGES MADE AS PART OF CHANGE ORDER.

Texas Department of Transportation

## TYPICAL SECTIONS

SHEET 2A OF 5

| FEDERAL AID PROJECT NO. | | | SHEET NO. |
|---|---|---|---|
| FED. RD. DIV. NO. | NH 2000(704), etc. | | 88 B |
| 6 | DIST. | COUNTY | |
| STATE | SAT | BEXAR | |
| CONT. | SECT. | JOB | HIGHWAY NO. |
| 2452 | 01 | 036, etc. | LP 1604 |

02-17-06

T:\AO\Design\lp1604fm471-90\typical-sections C.O#.dgn
2/7/2006

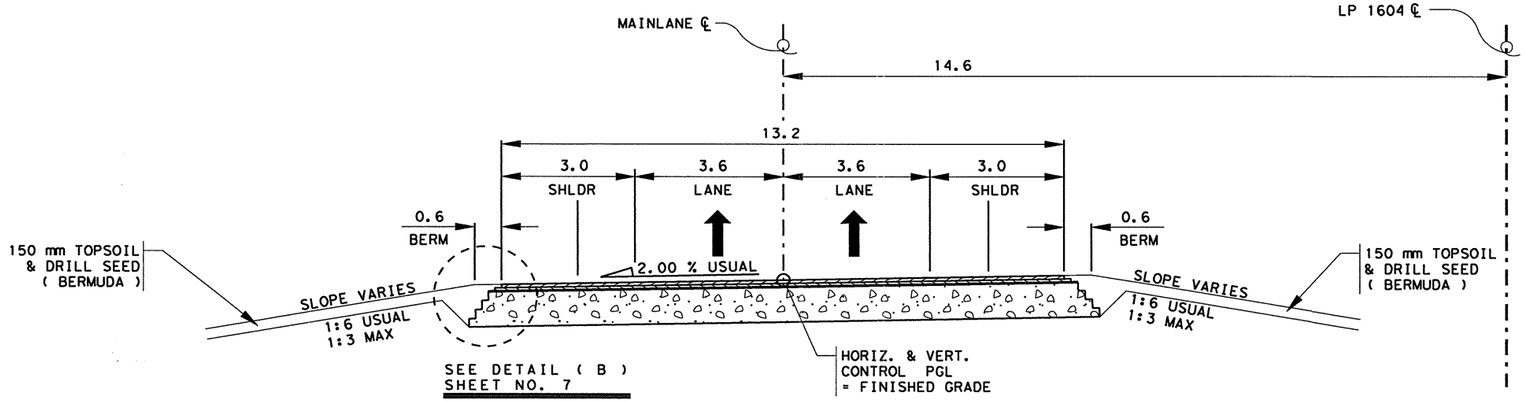


## S.B. MAINLANE

FROM STA 24+165 TO STA 28+060

( FOR MORE DETAILS SEE MAINLANE PROFILE SHEETS. )

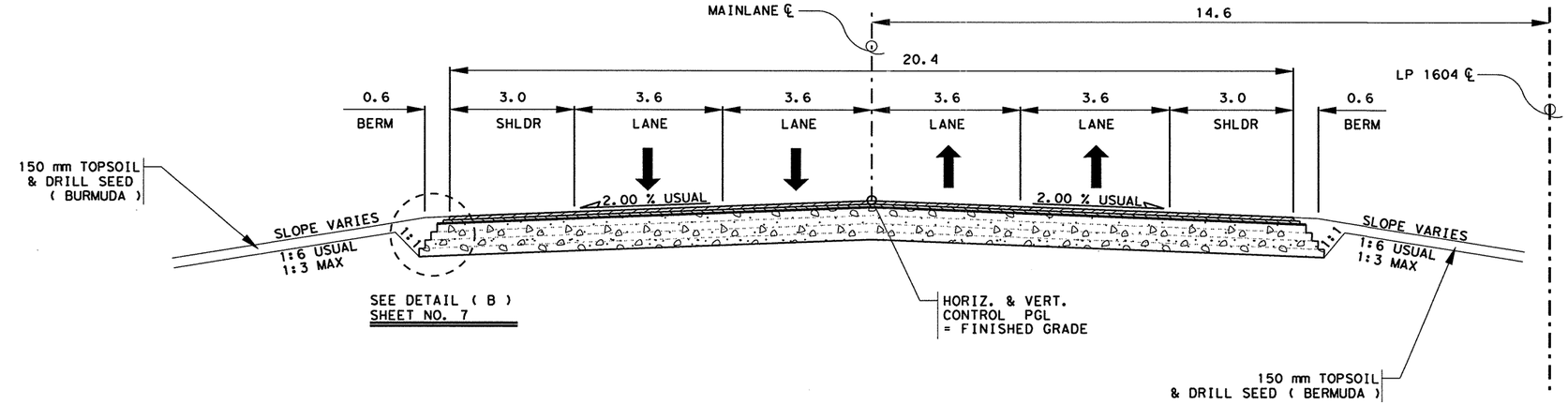


## NON-DIVIDED MAINLANES

FROM STA 28+060 TO END OF PROJECT

( FOR MORE DETAILS SEE MAINLANE PROFILE SHEETS. )

**NOTES:** SEE PROJECT X-SECTIONS FOR MORE DETAILS.

ALL DIMENSIONS ARE IN METERS UNLESS OTHERWISE NOTED.

SCALE: NTS

STATE OF TEXAS
JOEL K. DAVENPORT, JR.
79276
REGISTERED PROFESSIONAL ENGINEER

Joel K Davenport, Jr 9/19/00
Joel K. Davenport, Jr. P.E. 79276 Date

©2000 Texas Department of Transportation

# TYPICAL SECTIONS

SHEET 3 OF 5

| FED. RD. DIV. NO. | FEDERAL AID PROJECT NO. | | SHEET NO. |
|---|---|---|---|
| 6 | NH 2000(704), etc. | | 9 |
| STATE | DIST. | COUNTY | |
| TEXAS | SAT | BEXAR | |
| CONT. | SECT. | JOB | HIGHWAY NO. |
| 2452 | 01 | 036, etc. | LP 1604 |

lp1604fm471-90\typical-sections

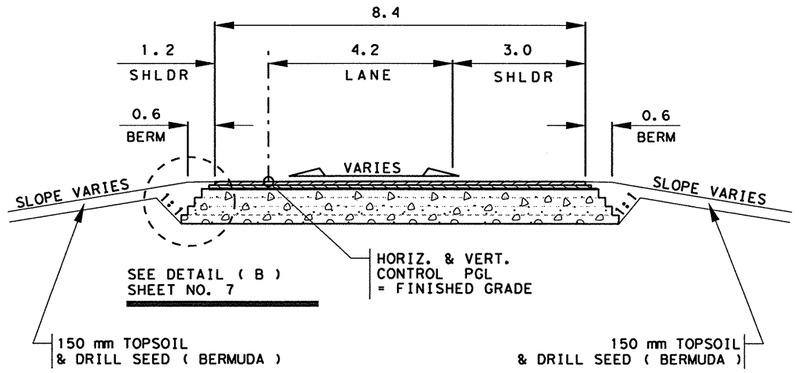


## RAMP ( 1 LANE )

( FOR MORE DETAILS SEE RAMP PROFILE SHEETS. )

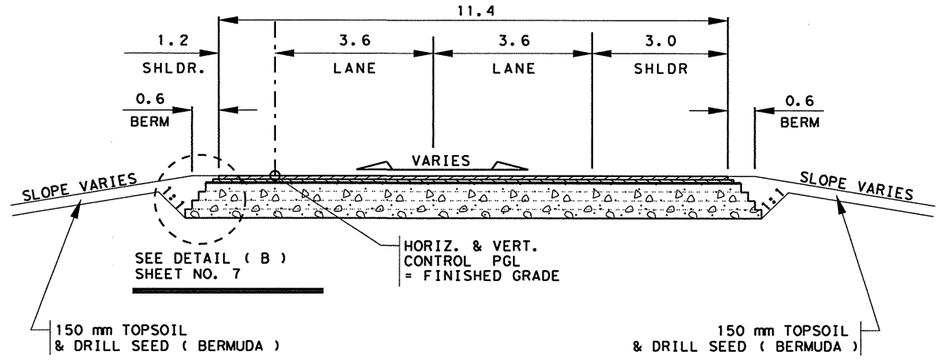


## RAMP ( 2 LANES )

( FOR MORE DETAILS SEE RAMP PROFILE SHEETS. )

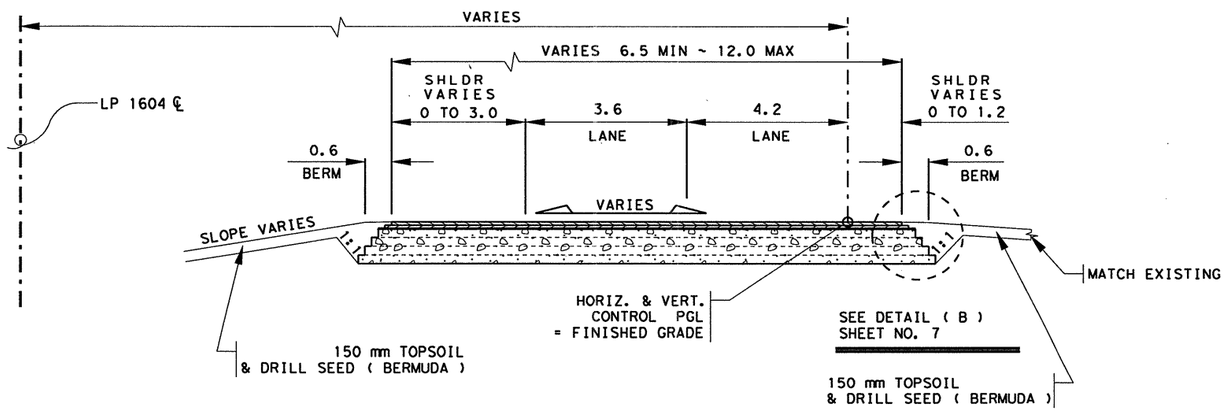


## TEMP. LESLIE ROAD CONNECTOR

( FOR MORE DETAILS SEE TEMP. LESLIE ROAD CONNECTOR PROFILE SHEET )

**NOTES:** SEE PROJECT X-SECTIONS FOR MORE DETAILS.

ALL DIMENSIONS ARE IN METERS UNLESS OTHERWISE NOTED.

SCALE: NTS

STATE OF TEXAS
JOEL K. DAVENPORT, JR.
79276
REGISTERED PROFESSIONAL ENGINEER

Joel K. Davenport Jr. 9/19/00
Joel K. Davenport, Jr. P.E. 79276 Date

Texas Department of Transportation

# TYPICAL SECTIONS

SHEET 4 OF 5

| FED.RD. DIV.NO. | FEDERAL AID PROJECT NO. | | SHEET NO. |
|---|---|---|---|
| 6 | NH 2000(704), etc. | | 10 |
| STATE | DIST. | COUNTY | |
| TEXAS | SAT | BEXAR | |
| CONT. | SECT. | JOB | HIGHWAY NO. |
| 2452 | 01 | 036, etc. | LP 1604 |

lp1604fm471-90\typical-sections

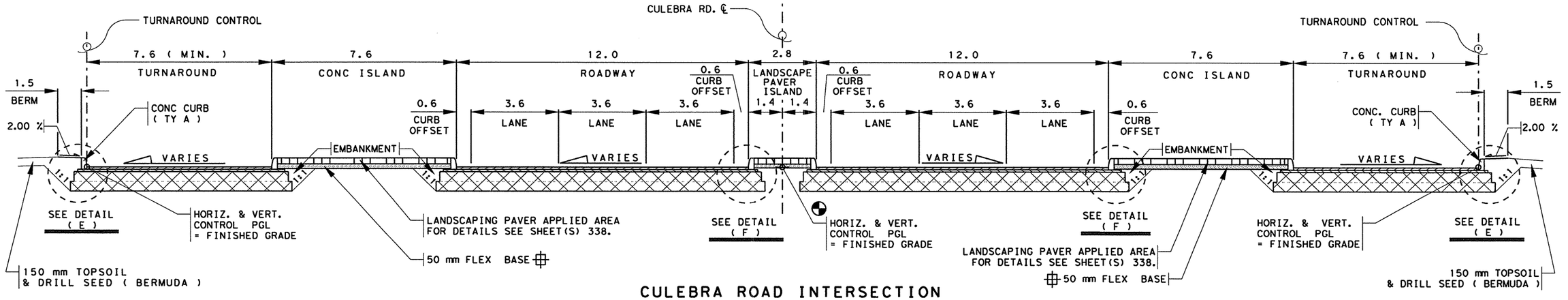


# CULEBRA ROAD INTERSECTION

( SEE SPECIFIC PROFILES FOR MORE RELATED INFORMATION )

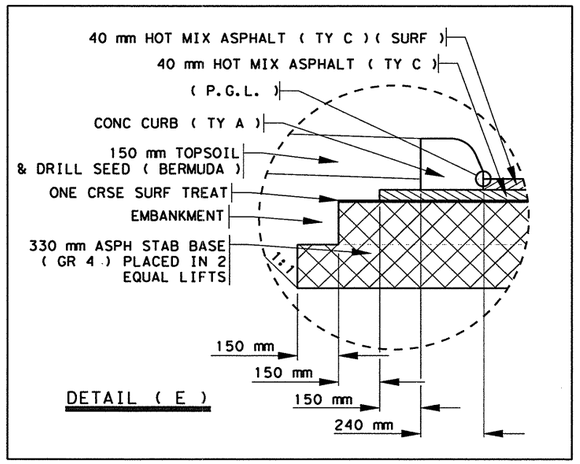


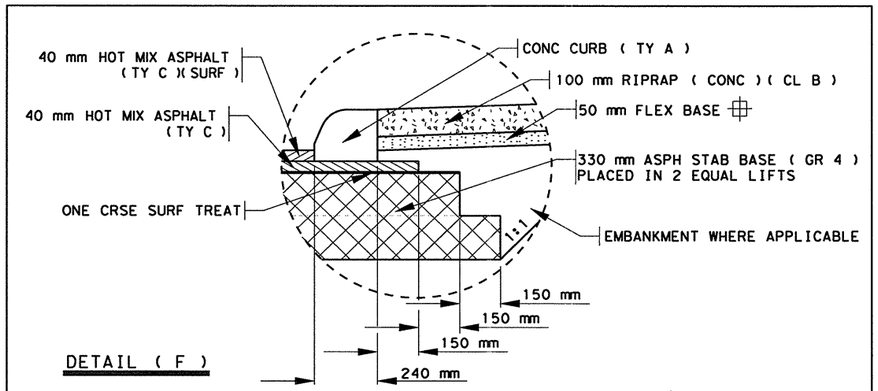


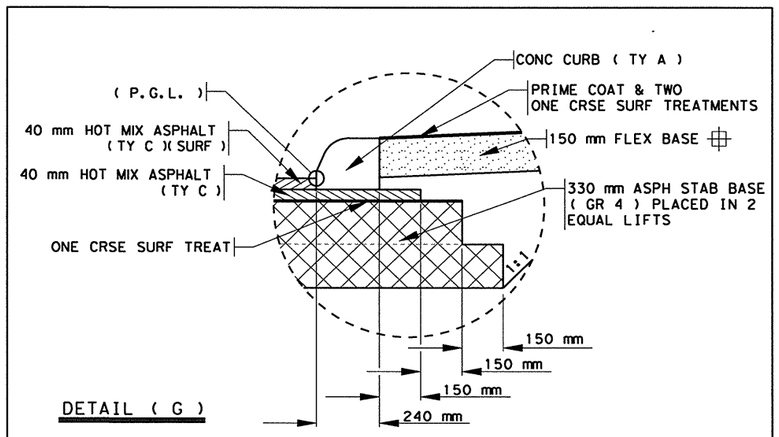


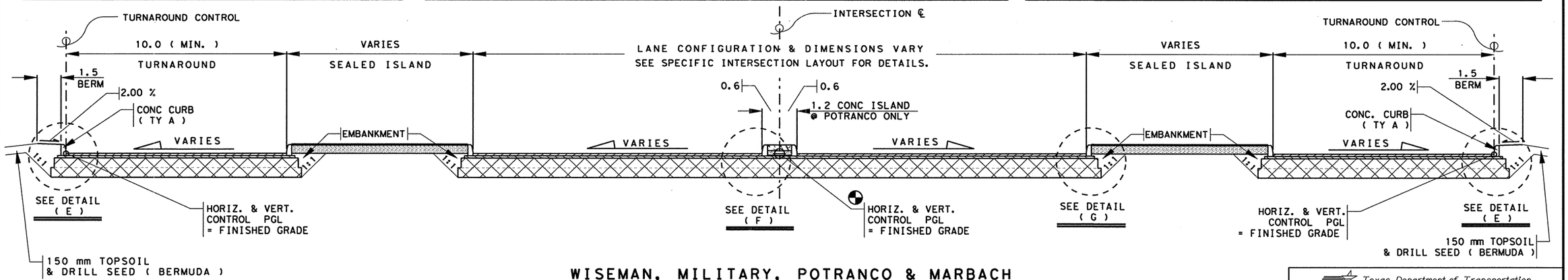


## WISEMAN, MILITARY, POTRANCO & MARBACH

( SEE SPECIFIC PROFILES FOR MORE RELATED INFORMATION )

NOTE: ADAPT TYPICAL FOR REMAINING SMALLER INTERSCTIONS.

NOTES: SEE PROJECT X-SECTIONS FOR MORE DETAILS.

ALL DIMENSIONS ARE IN METERS UNLESS OTHERWISE NOTED.

SCALE: NTS

⊕ P.G.L. = FINISH GRADE PROJECTED TO INTERSECTING STREET ℄

# FLEX BASE CAN BE OF ANY TYPE OR GRADE APPROVED BY THE ENGINEER. SEE ADDITIONAL NOTES ON SHEET NO. 335

STATE OF TEXAS
JOEL K. DAVENPORT, JR.
79276
REGISTERED
PROFESSIONAL ENGINEER

Joel K. Davenport, Jr. P.E. 79276 — Date 9/19/00

Texas Department of Transportation

# TYPICAL SECTIONS

SHEET 5 OF 5

| FED. RD. DIV. NO. | FEDERAL AID PROJECT NO. | | SHEET NO. |
|---|---|---|---|
| 6 | NH 2000(704), etc. | | 11 |
| STATE | DIST. | COUNTY | |
| TEXAS | SAT | BEXAR | |
| CONT. | SECT. | JOB | HIGHWAY NO. |
| 2452 | 01 | 036, etc. | LP 1604 |

lp1604fm471-90\typical-sections

GENERAL NOTES AND SPECIFICATION DATA--

GRADING REQUIREMENTS FOR:
ITEM 247 FLEX BASE (TY A GR 6) & ITEM 345 ASPH STAB BASE (GR 4)

| (MM) | 45 | 31.75 | 22.40 | 9.50 | 4.75 | 0.425 | SOIL CONSTANTS LL MAX | PI MAX | PI MIN | WET BALL MILL MAX |
|---|---|---|---|---|---|---|---|---|---|---|
| PERCENT RETAINED ON EACH SIEVE | | | | | | | | | | |
| (247) | 0-10 | - | - | - | 45-75 | 65-85 | 45 | 15 | - | *55 |
| PERCENT PASSING EACH SIEVE | | | | | | | | | | |
| (345) | 100 | 90-100 | 70-90 | 50-75 | 35-55 | 20-35 | 45 | 15 | - | *55 |

* THE MAXIMUM INCREASE IN MATERIAL PASSING THE 0.425 MM SIEVE SHALL NOT EXCEED 20.

========== COMPACTION REQUIREMENTS ==========

| ITEM | MATERIAL | COURSE | DENSITY |
|---|---|---|---|
| 247 | FLEX BASE | ALL | 98 % MINIMUM |

========== BASIS OF ESTIMATE ==========

| ITEM | DESCRIPTION | RATE/AREA | QUANT-UNIT |
|---|---|---|---|
| 168 | VEGETATIVE WATERING | 6 L * 48 CYC / 708,736 M2 (SEE NOTE ITEM 168) | 204,116 KL |
| 310 | ASPH MATRL (AE-P) | 0.9 L / 221,162 M2 | 199,046 L |
| 345 | ASPH STAB BS (330 MM) | 0.776 MGR / 79,876 M2 | 61,984 MGR |
| 351 | REPAIR EXIST PAV STRUCT (200 MM) | VARIOUS LOCATIONS (SEE NOTE ITEM 351) | 283.6 M2 |
| 580 | PROJECT MAINT (MOWING) | 2 CYCLES / YEAR | 8 CYC |
| 580 | PROJECT MAINT (LITTER PICKUP) | 4 CYCLES / YEAR | 16 CYC |
| 6056 | PORT CHANGE MSG SGN (TY I) | VARIOUS LOCATIONS | 140 DAY |

- THE FOLLOWING IS FOR CONTRACTOR'S INFORMATION ONLY - NON PAY

| | | |
|---|---|---|
| 100 | PERIMETER FENCE | 500 M |
| 204 | SPRINK (EMB) | 0.20 KL / M3 |
| 211 | ROLL (EMB) | 1 H / 250 M2 |
| 212 | ROLL (EMB) | 1 H / 250 M2 |
| 213 | ROLL (MED-B) (SUBGR) | 1 H / 250 M2 |
| 213 | ROLL (MED-B) (TPSL) | 1 H / 8360 M2 |
| 213 | FOR SURF TRMT | -SEE ITEM 316 NOTES- |
| 351 | ASPH STAB BS (GR 4) (BASE REPAIR) (200 MM) | 0.470 MGR / M2 |



| F.R. DIV.6 | TEXAS | NH 2000(704) , ETC | SHEET 12 |
|---|---|---|---|
| BEXAR COUNTY | | HWY LP 1604 | CONT 2452-1-36, ETC |

GENERAL NOTES AND SPECIFICATION DATA--

========== ASPHALTIC CONCRETE PAVEMENT ==========

| TYPE | LOCATION | DEPTH | RATE/AREA | QUANTITY |
|---|---|---|---|---|
| TY C (SURF) | MAINLANES, RAMPS, CONNECTORS, FRONT RD, INTERSECTIONS | 40 MM | .0940 MGR/437,968 M2 | 41,169 MGR |
| TY C | MAINLANES, RAMPS, CONNECTORS, FRONT RD, INTERSECTIONS | 40 MM | .0940 MGR/444,511 M2 | 41,784 MGR |
| TY C (LEVEL UP) | MAINLANE REHAB SECTION *** VARIABLE DEPTH (COMPUTER GENERATED) | *** | *** | 8,851 MGR |

========== SURFACE TREATMENT DATA ==========

| DESCRIPTION | ONE COURSE |
|---|---|
| AREA--M2 | 461,024 M2 |
| ASPH--TYPE | ----- SEE GEN NOTES ----- |
| ASPH--RATE (L/M2) | 1.36 L / M2 = 626,992 L |
| AGGR--TYPE/GR | TY PB / GR 4 |
| AGGR--RATE (M3/M2) | 1 / 110 = 4192 M3 |

THE FOLLOWING STANDARDS STATE AND/OR DISTRICT HAVE BEEN MODIFIED:
RIPRAP HEADWALL (M), T202 (M), SCP-3.0 (M) MOD

ALL PAVEMENT MARKINGS SHALL BE IN ACCORDANCE WITH THE TEXAS MUTCD.

THE LOCATION OF UTILITIES, EITHER UNDERGROUND OR OVERHEAD, SHOWN WITHIN THE RIGHT OF WAY ARE APPROXIMATE AND SHALL BE VERIFIED BY THE CONTRACTOR BEFORE BEGINNING CONSTRUCTION OPERATIONS.

THE FOLLOWING LIST OF SOME OF THE TELEPHONE NUMBERS OF THE UTILITY LOCATORS FOR VARIOUS UTILITIES THAT MAY BE ENCOUNTERED.

| | |
|---|---|
| GREY FOREST NATURAL GAS | 1-800-545-6005 |
| CITY OF GREY FOREST WATER | 695-8781 |
| CITY PUBLIC SERVICE | 978-3500 |
| SOUTHWESTERN BELL TELEPHONE | 1-800-828-5127 |
| TIME WARNER CABLE | 352-4672 |
| SAN ANTONIO WATER SYSTEM | 704-7109 OR 227-6143 |
| BEXAR METROPOLITAN WATER | 354-6546 |
| PG&E GAS TRANSMISSION TEXAS | 1-800-545-6005 |

GENERAL NOTES AND SPECIFICATION DATA--

IN ACCORDANCE WITH THE UNDERGROUND FACILITY DAMAGE PREVENTION ACT (ONE CALL BILL) THE PHONE NUMBER FOR A UTILITY LOCATOR IS 1-800-545-6005. IT IS THE CONTRACTOR RESPONSIBLITY TO MAKE ARRANGEMENTS FOR UTILITY LOCATORS AS NEEDED.

MOST EXISTING NATURAL GAS PIPELINES THAT WILL NO LONGER BE IN SERVICE ARE USUALLY ABANDONED-IN-PLACE. HOWEVER, THE FOLLOWING PROCEDURE SHALL BE USED WHENEVER AN EXISTING WRAPPED STEEL GAS PIPE HAS TO BE REMOVED (FOR WHATEVER REASON) DURING CONSTRUCTION OPERATIONS.

1. THE CONTRACTOR SHALL NOTIFY THE ENGINEER THAT THIS ACTIVITY IS GOING TO TAKE PLACE.

2. AS SOON AS THE PIPE IS REMOVED, THE CONTRACTOR SHALL COVER AND SECURE THE ENDS OF THE PIPE WITH A DOUBLE LAYER OF 6 MIL PLASTIC, THEN MOVE IT TO A SECURE STORAGE SITE WITHIN THE PROJECT LIMITS. CARE SHALL BE TAKEN TO AVOID DAMAGE TO THE PLASTIC AND IF DAMAGED, SHALL BE REPLACED BEFORE FURTHER HANDLING OF THE PIPE. IF THE WRAPPING IS DAMAGED, THE ENTIRE PIPE SHALL BE COVERED WITH PLASTIC.

3. THE ENGINEER WILL DETERMINE THE OWNER (UTILITY COMPANY) OF THE GAS LINE. IF IT BELONGS TO CITY PUBLIC SERVICE (CPS), THE ENGINEER WILL CONTACT CPS TO COORDINATE REMOVAL OF THE PIPE FROM THE PROJECT. THE CONTRACTOR WILL LOAD THE PIPE ONTO A CPS VEHICLE FOR CPS TO TRANSPORT THE PIPE TO THEIR MATERIAL RECOVERY AND DISPOSITION FACILITY. IF THE OWNER OF THE GAS PIPE CANNOT BE DETERMINED, THE STATE WILL MAKE ARRANGEMENTS TO TRANSPORT THE PIPE OFF THE PROJECT. THE CONTRACTOR WILL NOT BE RESPONSIBLE FOR DISPOSAL OF THE PIPE.

4. THE REMOVAL OF THE STEEL GAS PIPE FROM THE TRENCH IS SUBSIDIARY TO THE WORK THAT CREATED THE NEED TO REMOVE THE PIPE (STRUCTRURAL EXCAVATION, ROADWAY EXCAVATION, REMOVAL AND REPLACEMENT OF THE PIPE, ETC). THE WORK PERFORMED IN HANDLING THE PIPE AFTER IT HAS BEEN REMOVED (COVERING WITH PLASTIC, HAULING TO A SECURE STORAGE, AND LOADING ONTO THE GAS COMPANY'S TRANSPORTATION VEHICLE FOR FINAL REMOVAL) WILL BE PAID FOR THROUGH THE EXTRA WORK ORDER PROCESS.

THE CONTRACTOR SHALL BE RESPONSIBLE FOR CONTACTING THE TXDOT OR CITY OF SAN ANTONIO SIGNAL OPERATIONS OFFICE AT 210-615-5975 (TXDOT) OR 210-207-7765 (CITY) WHEN CONSTRUCTION OPERATIONS ARE WITHIN 120 M OF A SIGNALIZED INTERSECTION TO DETERMINE/VERIFY THE LOCATION OF LOOP DETECTORS, CONDUIT, GROUND-BOXES, ETC. ANY SIGNAL EQUIPMENT DAMAGED BY



| F.R. DIV.6 | TEXAS | NH 2000 (704) | , ETC | SHEET 12A |
|---|---|---|---|---|
| BEXAR | COUNTY | HWY LP 1604 | CONT 2452-1-36, ETC | |

GENERAL NOTES AND SPECIFICATION DATA--

THE CONTRACTOR'S OPERATIONS SHALL BE REPAIRED OR REPLACED BY THE CONTRACTOR AT THEIR EXPENSE. THE METHOD OF REPAIR OR REPLACEMENT SHALL BE PRE-APPROVED AND INSPECTED BY THE ENGINEER. DEPENDING ON THE TYPE AND EXTENT OF THE DAMAGE, THE STATE RESERVES THE RIGHT TO PERFORM THE REPAIR OR REPLACEMENT WORK WITH STATE OR CITY FORCES AND THE CONTRACTOR WILL BE BILLED FOR THE COST OF THIS WORK.

ALL EXISTING RAISED PAVEMENT MARKINGS SHALL BE REMOVED BY THE CONTRACTOR AS THE WORK PROGRESSES AS APPROVED BY THE ENGINEER. THIS WORK WILL NOT BE PAID FOR SEPARATELY BUT SHALL BE CONSIDERED SUBSIDIARY TO THE VARIOUS BID ITEMS. MATERIALS REMOVED SHALL BECOME THE PROPERTY OF THE CONTRACTOR FOR PROPER DISPOSAL.

MATERIALS LARGER THAN 100 MM IN SIZE WITHIN THE CONSTRUCTION LIMITS AND NOT INCORPORATED INTO THE ROADWAY CONSTRUCTION SHALL BE REMOVED FROM THE RIGHT OF WAY AND DISPOSED OF IN A PROPER MANNER ACCEPTABLE TO THE ENGINEER AT THE EXPENSE OF THE CONTRACTOR.

IN INSTANCES WHERE FIXED FEATURES REQUIRE, THE CROSS SECTION SLOPES MAY BE VARIED TO THE EXTENT DETERMINED/APPROVED BY THE ENGINEER.

IF WASTE AREAS OR MATERIAL SOURCE AREAS RESULT FROM THIS PROJECT, THE CONTRACTOR IS REMINDED TO FOLLOW THE REQUIREMENTS OF THE TEXAS AGGREGATE QUARRY AND PIT SAFETY ACT. IN ADDITION, IT IS REQUESTED THAT THESE AREAS NOT BE VISIBLE FROM ANY HIGHWAY ON THE STATE SYSTEM.

THE CONTRACTOR SHALL MAINTAIN THE RIGHT OF WAY IN A SATISFACTORY APPEARANCE AS SHOWN IN THE PLANS AND/OR AS DETERMINED/APPROVED BY THE ENGINEER.

ANY MATERIALS REMOVED AND NOT REUSED AND DETERMINED TO BE SALVAGEABLE BY THE ENGINEER, SHALL BE RETAINED BY THE OWNER AND SHALL BE STORED WITHIN THE PROJECT LIMITS IN A SECURE LOCATION OR DELIVERED UNDAMAGED TO THE SALVAGE/STORAGE YARD AS DIRECTED BY THE ENGINEER. MATERIALS THAT ARE NOT DETERMINED TO BE SALVAGABLE BY THE ENGINEER SHALL BECOME THE PROPERTY OF THE CONTRACTOR FOR PROPER DISPOSAL AT THEIR EXPENSE. SIGNS MUST BE DEFACED AND DISPOSED OF IN SUCH A MANNER THAT THEY WILL NOT REAPPEAR IN PUBLIC, AS A SIGN.

IN PREPARING HOLES FOR POSTS AND/OR FOUNDATIONS, CARE SHALL BE TAKEN SO AS NOT TO RUPTURE EXISTING DRAINAGE STRUCTURES, ELECTRICAL CONDUITS, PUBLIC UTILITIES, ETC.

ANY SIGN PANELS THAT ARE TO BE ADJUSTED AND/OR REMOVED AND REPLACED, SHALL BE DONE IN THE SAME WORKDAY UNLESS OTHERWISE APPROVED BY THE

GENERAL NOTES AND SPECIFICATION DATA--

ENGINEER.

SMALL SIGNS ON RAMPS AND FRONTAGE ROADS SHALL BE PLACED AT A LATERAL CLEARANCE OF 2.50 M TO 3.70 M FROM THE EDGE OF PAVEMENT AS DIRECTED/APPROVED BY THE ENGINEER.

SIGN TYPES FOR WHICH DETAILS ARE NOT SHOWN IN THE PLANS SHALL CONFORM WITH THE "TEXAS MUTCD".

========== SOIL STABLIZATION PRACTICES ==========

TEMPORARY (TEMP):
- __X___ TEMP. SEEDING
- _____ MULCHING (HAY OR STRAW)
- __X___ BUFFER ZONES
- __X__ PRESERV. OF NATURAL RESOURCES
- _____ FLEX. CHANNEL LINER
- _____ OTHER

PERMANENT (PERM):
- __X___ SEEDING
- __X___ BLACK SOD
- _____ OTHER
- _____ RETENTION BLANKET
- _____ CHANNEL LINER

STRUCTURAL PRACTICES

| _TEMP_ | _PERM_ | |
|---|---|---|
| __X___ | _____ | SILT FENCE |
| _____ | _____ | HAY BALES |
| __X___ | _____ | ROCK BERMS |
| _____ | _____ | PIPE SLOPE DRAINS |
| _____ | _____ | CHANNEL LINERS |
| _____ | _____ | STORM DRAINS |
| __X___ | _____ | STORM INLET SEDIMENT TRAP |
| _____ | _____ | STONE STRUCTURES |
| _____ | _____ | DIVERSION, INTERCEPTOR OR PERIMETER SWALES |
| _____ | _____ | DIVERSION, INTERCEPTOR OR PERIMETER DIKES |
| _____ | __X___ | PAVED FLUMES |
| __X___ | _____ | ROCK BEDDING AT CONSTRUCTION EXIT |
| _____ | _____ | TIMBER MATTING AT CONSTRUCTION EXIT |
| _____ | _____ | SEDIMENT TRAPS |
| _____ | _____ | SEDIMENT BASINS |
| _____ | __X___ | CURB AND GUTTER |
| _____ | _____ | VELOCITY CONTROL DEVICES |
| __X___ | _____ | OTHER (CONCRETE WASHOUT PITS) |

THE ABOVE INDICATED PRACTICES ARE PROPOSED TO CONTROL POLLUTANTS IN STORM WATER DISCHARGES. THESE PRACTICES ARE BASED ON INFORMATION



| F.R. DIV.6 | TEXAS | NH 2000(704) , ETC | SHEET 12B |
|---|---|---|---|
| BEXAR COUNTY | HWY LP 1604 | CONT 2452-1-36, ETC | |

GENERAL NOTES AND SPECIFICATION DATA--

CONTAINED IN TXDOT STORM WATER MANAGEMENT GUIDELINES. THE SCHEDULE OF IMPLEMENTATION OF THESE PRACTICES WILL BE BASED ON INTENDED SEQUENCE OF MAJOR SOIL DISTURBING ACTIVITIES. DISTURBED AREAS ON WHICH ACTIVITY HAS CEASED (TEMPORARILY OR PERMANENTLY) SHALL BE STABILIZED WITHIN 14 DAYS UNLESS ACTIVITIES ARE SCHEDULED TO RESUME WITHIN 21 DAYS.

ENDANGERED SPECIES INFORMATION IS REFERENCED IN THE ENVIRONMENTAL DOCUMENT.

--ITEM 2--
THE BIDDER'S ATTENTION IS DIRECTED TO THE FIRST PARAGRAPH OF ARTICLE 2.3 OF THE STANDARD SPECIFICATIONS. IN VIEW OF THE COMPLEX NATURE OF THE WORK, THE NEED FOR CLOSE COORDINATION WITH VARIOUS UTILITIES, TRAFFIC CONTROL CONSIDERATIONS, AND OTHER FACTORS INFLUENCING THE PROSECUTION OF THE WORK, IT IS STRONGLY RECOMMENDED THAT PROSPECTIVE BIDDERS EXAMINE THE SITE OF THE WORK IN COMPANY WITH THE ENGINEER.

TO FACILITATE THE REVIEW AND APPROVAL PROCESS OF FORMING DETAILS AND ERECTION DRAWINGS FOR MAJOR STRUCTURES, IN ADDITION TO THE REQUIREMENTS OF ITEM 5, THE CONTRACTOR SHALL SUBMIT TO THE AREA OFFICE AS A MINIMUM, THE FOLLOWING DOCUMENTS: APPROPRIATE SPACING AND SIZE OF ALL PROPOSED MEMBERS/COMPONENTS; SUPPORTING CALCULATIONS; AND COPIES OF THE MANUFACTURER'S RECOMMENDED SPACING CHARTS AND SAFE WORKING LOADS FOR BRACKETS, JOISTS, HANGERS, ETC.

--ITEM 8--
PRIMAVERA PROJECT SCHEDULER SOFTWARE WILL BE REQUIRED FOR THE CPM OF THIS PROJECT AS COVERED IN THE SPECIAL PROVISION TO THIS ITEM.

THE CONTRACTOR SHALL HAVE A TOTAL OF 655 WORKING DAYS TO COMPLETE THE ENTIRE PROJECT, INCLUDING PHASES 1A, 1B & 1C (MILESTONE 1) AND PHASES 2A & 2B.

THE CONTRACTOR SHALL HAVE 270 WORKING DAYS TO SUBSTANTIALLY COMPLETE MILESTONE 1. THE ROAD USER COST LIQUIDATED DAMAGES FOR MILESTONE 1 SHALL BE $2,240 PER WORKING DAY.

THE MAXIMUM NUMBER OF WORKING DAYS FOR COMPUTING THE INCENTIVE CREDIT FOR SUBSTANTIAL COMPLETION OF MILESTONE 1 SHALL BE 100 DAYS.

MILESTONE 1 INCLUDES PHASES 1A, 1B & 1C AND CONSISTS OF ALL WORK REQUIRED FOR THE RECONSTRUCTION OF LP 1604 MAINLANES, RAMPS, FRONTAGE ROADS & ALL INTERSECTING STREETS BETWEEN STA 14+420 (1.60 KM NORTH OF

GENERAL NOTES AND SPECIFICATION DATA--

--ITEM 8--, CONT'D
CULEBRA) AND STA 18+100 (2.08 KM SOUTH OF CULEBRA).

THE TIME CHARGE FOR MILESTONE 1 SHALL BEGIN AT THE START OF PHASE 1A, WHICH WILL NOT BE BEFORE JUNE 1, 2001 UNLESS OTHERWISE DIRECTED / APPROVED BY THE ENGINEER.

UNLESS OTHERWISE DIRECTED / APPROVED BY THE ENGINEER, THE CONTRACTOR SHALL NOT START WORK UNTIL CPS (GAS, OVERHEAD ELECTRIC AND UNDERGROUND ELECTRIC) UTILITY ADJUSTMENTS ARE COMPLETE. THESE ARE SCHEDULED TO BE COMPLETED BY JUNE 1, 2001.

THE TIME CHARGE FOR MILESTONE 1 SHALL END AT THE COMPLETION OF PHASES 1A, 1B & 1C AFTER TRAFFIC IS MOVED TO THE FINAL LANE ARRANGEMENT, AS SHOWN ON THE PLANS BETWEEN THE ABOVE STATION LIMITS.

IN ORDER TO ADEQUATELY SCHEDULE CONSTRUCTION INSPECTION PERSONNEL, THE CONTRACTOR WILL BE REQUIRED TO NOTIFY THE ENGINEER AT LEAST ONE WEEK PRIOR TO ANY WORK THAT IS PLANNED:

1. OUTSIDE OF THE HOURS 7:00 AM TO 6:00 PM, MONDAY THROUGH FRIDAY.
2. BETWEEN 6:00 PM AND 7:00 AM AFTER WORKING THE PREVIOUS DAY.
3. BETWEEN 7:00 AM AND 6:00 PM AFTER WORKING THE PREVIOUS NIGHT.
4. ANY TIME ON SATURDAY OR SUNDAY.

--ITEM 9--
WHEN DIRECTED/APPROVED BY THE ENGINEER, THE CONTRACTOR SHALL PROVIDE TWO UNIFORMED, OFF-DUTY PEACE OFFICERS WITH TWO PATROL CRUISERS (IF CRUISERS ARE AVAILABLE FROM THE ENFORCEMENT AGENCY INVOLVED) DURING ANY WORK THAT REQUIRES A LANE TO BE CLOSED. THESE OFFICERS IN THEIR PATROL CRUISERS (IF PROVIDED) SHALL BE LOCATED AS APPROVED BY THE ENGINEER, TO MONITOR TRAFFIC DURING THE LANE CLOSURE. ADDITIONAL OFFICERS AND CRUISERS MAY BE REQUIRED WHEN DIRECTED/APPROVED BY THE ENGINEER. THE OFFICERS WITH PATROL CRUISERS WILL BE PAID FOR THROUGH THE FORCE ACCOUNT PROCEDURES COVERED BY THE SPECIAL PROVISION TO THIS ITEM.

THE CONTRACTOR SHALL FURNISH 2 PHONE LINE(S) TO THE STATE'S PROJECT FIELD OFFICE. THE REIMBURSEMENT TO THE CONTRACTOR WILL BE IN ACCORDANCE WITH SPECIAL PROVISION TO THIS ITEM.

--ITEM 100--
THE CONTRACTOR SHALL NOT BEGIN ANY CLEARING OPERATIONS UNTIL THE ENGINEER HAS ESTABLISHED AND DEFINED THE TREES AND AREAS OF VEGETATION THAT SHOULD NOT BE REMOVED OR DISTURBED BY CONSTRUCTION ACTIVITIES.



| F.R. DIV.6 | TEXAS | NH 2000(704) | , ETC | SHEET 12C |
|---|---|---|---|---|
| BEXAR | COUNTY | HWY LP 1604 | CONT 2452-1-36, ETC | |

GENERAL NOTES AND SPECIFICATION DATA--

--ITEM 100--, CONT'D

ALL RIGHT OF WAY CLEARING OPERATIONS WILL BE COORDINATED WITH THE PROJECT'S SW3P AND AS DIRECTED/APPROVED BY THE ENGINEER.

THE CONTRACTOR MAY BE REQUIRED TO TRIM BRUSH AND TREE LIMBS TO A POINT APPROXIMATELY 600 MM INSIDE THE RIGHT OF WAY LINE, TO A CLEARANCE HEIGHT OF AT LEAST 4.0 M. NO VERTICAL FLAILING EQUIPMENT SHALL BE USED AND THE METHOD OF TRIMMING SHALL BE APPROVED BY THE ENGINEER. THE CUT LIMBS SHALL BE SPRAYED WITH PRUNING SPRAY. THE USE OF TAR BASED MATERIAL AS PRUNING SPRAY IS NOT ALLOWED. TO PREVENT POSSIBLE INFECTION FROM TREE TO TREE WHEN PRUNING LIVE OAK TREES, THE CONTRACTOR SHOULD DISINFECT THEIR PRUNING TOOLS WITH A RECOMMENDED SOLUTION OF 70% ISOPROPYL ALCOHOL BEFORE MOVING TO THE NEXT TREE.

A PERIMETER FENCE SHALL BE CONSTRUCTED AT THE LOCATIONS SHOWN ON THE PLANS AND AS DIRECTED BY THE ENGINEER. THIS FENCE WILL BE USED DURING CONSTRUCTION TO IDENTIFY LOCATIONS WHERE SOIL AND VEGETATION ARE NOT TO BE DISTURBED AND/OR DESTROYED BY CONSTRUCTION OPERATIONS. MATERIALS USED TO CONSTRUCT THIS FENCE SHALL BE CONSTRUCTION FENCE (1200 MM HEIGHT PLASTIC MESH OR APPROVED EQUIVALENT) ON STEEL T-POST (1800 MM MINIMUM HEIGHT). WORK AND MATERIALS FOR THIS FENCE WILL NOT BE PAID FOR SEPARATELY, BUT SHALL BE SUBSIDIARY TO ITEM 100.

THIS FENCE SHALL BE INSTALLED PRIOR TO ANY CLEARING OPERATIONS AND BE MAINTAINED UNTIL CONSTRUCTION IS COMPLETE IN THESE AREAS.

--ITEM 100 & 496--
REMOVAL OF SMALL STRUCTURE(S), AS SHOWN ON THE PLANS, WILL NOT BE PAID FOR SEPARATELY, BUT SHALL BE SUBSIDIARY TO ITEM 100.

REMOVAL OF LARGE STRUCTURE(S), AS SHOWN ON THE PLANS, WILL BE PAID FOR UNDER ITEM 496.

--ITEM 110--
PRIOR TO CONTRACT LETTING, PROSPECTIVE BIDDERS MAY OBTAIN A FREE COMPUTER DISKETTE OR A COMPUTERIZED TRANSFER OF FILES (FROM THE ENGINEER'S OFFICE) THAT CONTAINS THE EARTHWORK INFORMATION. IF THE CONTRACTOR WANTS COPIES OF THE ACTUAL CROSS-SECTIONS IN ADDITION TO OR INSTEAD OF THE DISKETTE, REPRODUCIBLE EARTHWORK CROSS-SECTIONS WILL BE AVAILABLE AT THE ENGINEER'S OFFICE FOR BORROWING BY COPYING-SERVICE COMPANIES FOR THE PURPOSE OF MAKING COPIES FOR THE PROSPECTIVE BIDDER AT THE BIDDER'S EXPENSE.

GENERAL NOTES AND SPECIFICATION DATA--

--ITEM 110--, CONT'D
WHERE EXCAVATION (CHANNEL) EXTENDS BEYOND THE RIGHT OF WAY FENCE THE CONTRACTOR SHALL REMOVE AND REPLACE THE FENCE TO A CONDITION COMPARABLE TO THAT AT REMOVAL, AT THEIR EXPENSE.

--ITEM 162--
ALL AREAS THAT RECEIVE TOPSOIL SHALL BE SODDED OR SEEDED, FERTILIZED AND WATERED, AS DIRECTED/APPROVED BY THE ENGINEER.

SEE NOTES UNDER ITEM 168 FOR WATERING RATES FOR SODDING AND SEEDING.

--ITEM 164--
FOR DRILL SEEDING PERMANENT WARM SEASON GRASSES: THE SEED DRILL SHALL BE CAPABLE OF PROPERLY STORING AND METERING THE RELEASE OF SMALL SEEDS (SUCH AS BERMUDA GRASS) SEPARATELY FROM FLUFFY TYPE SEEDS (SUCH AS BLUESTEM). DRILLS MANUFACTURED FOR PLANTING STANDARD GRAIN CROPS WILL NOT BE ACCEPTABLE.

SEE NOTES UNDER ITEM 168 FOR WATERING RATES FOR SODDING AND SEEDING.

--ITEM 168--
WATERING RATES FOR SOD: 11 LITERS PER SQ. M PER CYCLE WITH 3 CYCLES PER WEEK FOR THE FIRST 4 WEEKS THEN 11 LITERS PER SQ. M PER CYCLE WITH 1 CYCLE PER WEEK FOR THE NEXT 8 WEEKS.

WATERING RATES FOR SEEDING: 6 LITERS PER SQ. M PER CYCLE WITH 6 CYCLES PER WEEK FOR THE FIRST 4 WEEKS THEN 6 LITERS PER SQ. M PER CYCLE WITH 3 CYCLES PER WEEK FOR THE NEXT 8 WEEKS.

THESE WATERING RATES ARE TO ESTIMATE THE AMOUNT OF WATERING THAT MIGHT BE NEEDED TO SUPPLEMENT NATURAL RAINFALL TO KEEP THE SOIL MOIST UNTIL GERMINATION OF SEEDS AND GRASSES CAN OCCUR. THE CONTRACTOR WILL BE RESPONSIBLE TO ADJUST THESE RATES AS DIRECTED OR APPROVED BY THE ENGINEER TO TAKE INTO ACCOUNT ACTUAL FIELD CONDITIONS SUCH AS SOIL TEMPERATURE, SOIL TEXTURE, AIR TEMPERATURE, SUNNY VS. CLOUDY DAYS, ETC. INCREASING THE LITERS PER CYCLE TO DECREASE THE NO OF CYCLES PER WEEK WILL NOT BE ALLOWED.

--ITEM 192--
MULCH



| F.R. DIV.6 | TEXAS | NH 2000 (704) | , ETC | SHEET 12D |
|---|---|---|---|---|
| BEXAR | COUNTY | HWY LP 1604 | CONT 2452-1-36, ETC | |

GENERAL NOTES AND SPECIFICATION DATA--

--ITEM 192--, CONT'D
MULCH FOR SURFACE APPLICATIONS SHALL BE SHREDDED HARDWOOD MULCH. THE TEXTURE SHALL CONSIST OF PARTICLES RANGING IN SIZE FROM 50 MM TO 100 MM IN LENGTH, WITH A MINIMUM (NOT OVER 20% BY VOLUME) OF FINER PARTICLES AND DUST. MULCH OF THIS TYPE AND CLASS SHALL BE FREE OF STICKS, STONES, CLAY OR OTHER FOREIGN MATTER.

0.0283 CUBIC METER SAMPLES, ALONG WITH A LABEL FROM THE MANUFACTURER'S PACKAGES, SHALL BE SUBMITTED TO THE ENGINEER FOR APPROVAL. IF BULK MATERIALS ARE USED, TYPICAL SAMPLES OF EACH TYPE OF MATERIAL SHALL BE PROVIDED TO THE ENGINEER FOR APPROVAL. THESE SAMPLES, IF APPROVED BY THE ENGINEER, SHALL BE USED AS THE STANDARD BY WHICH OTHER MATERIALS SHALL BE JUDGED. ANY MATERIAL THAT, IN THE JUDGEMENT OF THE ENGINEER, IS BELOW THE QUALITY OF THESE SAMPLES MAY BE REJECTED. ANY REJECTED MATERIAL SHALL BE IMMEDIATELY REMOVED FROM THE SITE AT THE CONTRACTOR'S EXPENSE.

BACKFILL
ALL BACKFILLING OF TREE PITS SHALL BE DONE WITH SOIL EXCAVATED FROM THE PIT. ADDITIONAL CLEAN, SANDY, WEED-FREE SOIL MAY BE ADDED TO FILL VOIDS IN CLAYEY SOILS. SANDY SOIL MUST BE APPROVED BY THE ENGINEER BEFORE USE. NATIVE SOIL REMOVED FROM THE PLANTING PITS AND BEDS SHALL BE USED TO FORM WATERING BASINS. EXCESS SOIL SHALL BE REMOVED FROM THE SITE OR DISTRIBUTED AND LEVELED ON THE SITE BY THE CONTRACTOR AS DIRECTED BY THE ENGINEER.

STAKING OF PLANT MATERIAL FOR LOCATIONS
LOCATIONS FOR ALL TREES SHALL BE STAKED IN THE FIELD BY THE CONTRACTOR AND APPROVED BY THE ENGINEER PRIOR TO ANY EXCAVATION OF PLANT PITS. STAKES SHALL BE COLOR CODED TO DENOTE TREE LOCATIONS. AT THIS TIME, THE ENGINEER SHALL HAVE THE RIGHT TO MAKE ADJUSTMENTS TO THE PLANT LOCATIONS TO MEET FIELD CONDITIONS. THESE CHANGES SHALL BE CONSIDERED INCIDENTAL AND THE CONTRACTOR WILL NOT BE ENTITLED TO ANY ADDITIONAL COMPENSATION.

WATER AND WATERING
DURING THE PLANTING OPERATIONS, THE CONTRACTOR SHALL PROVIDE A QUANTITY AND FREQUENCY OF WATER APPLICATION TO KEEP THE GROUND AND BACKFILL MATERIAL MOIST TO A DEPTH OF AT LEAST 300 MM BELOW THE ROOTBALL AS A PART OF THIS CONTRACT AND ALL APPLICABLE MAINTENANCE PERIODS.

PRUNING

GENERAL NOTES AND SPECIFICATION DATA--

--ITEM 300--
THE ASPHALT BINDER USED IN THE MANUFACTURE OF NON-SURFACE LAYERS OF THE HOT MIX ASPHALTIC CONCRETE TYPE A, B AND/OR C, IN ACCORDANCE WITH THE SPECIAL SPECIFICATION, SHALL BE PG 64-22.

THE ASPHALT BINDER USED IN THE MANUFACTURE OF THE HOT MIX ASPHALTIC CONCRETE TYPE C (SURF), IN ACCORDANCE WITH THE SPECIAL SPECIFICATION, SHALL BE PG 76-22.

--ITEM 302--
PREVIOUSLY TESTED AGGREGATES DELIVERED TO THE PROJECT, WHICH ARE FOUND TO CONTAIN EXCESSIVE QUANTITIES OF DUST (MORE THAN 0.5 PERCENT PASSING THE 0.425 MM SIEVE) DURING PRECOATING, STOCKPILING OR HAULING OPERATIONS, MAY BE REJECTED BY THE ENGINEER. TEST METHOD TEX-200-F, PART I SHALL BE USED FOR TESTING.

AGGREGATE TYPE PB SHALL BE PRECOATED AGGREGATE CONSISTING OF CRUSHED SLAG, CRUSHED STONE OR NATURAL LIMESTONE ROCK ASPHALT.

--ITEM 302, 345 & 3117--
THE DISTRICT LABORATORY WILL UTILIZE THE IGNITION OVEN METHOD (TEX 236-F) FOR AGGREGATE GRADATION, WITH THE OPTION OF UTILIZING BELT OR VACUUM EXTRACTION GRADATION IN THE EVENT THE IGNITION OVEN MALFUNCTIONS.

--ITEM 316--
IT IS THE INTENT TO USE AC-15P LATEX, CRS-2P OR HFRS-2P. MATERIAL RATES SHOWN ARE BASED ON AC AND MAY BE ADJUSTED BY THE ENGINEER DEPENDING ON THE MATERIAL USED. IN THE EVENT EMULSIONS ARE USED, A MINIMUM 24 HOUR CURING PERIOD SHALL ELAPSE BEFORE PLACING ANY SUBSEQUENT ASPHALT COURSES. BECAUSE OF THE REQUIRED CURING PERIOD, THE CONTRACTOR SHALL OBTAIN APPROVAL FROM THE ENGINEER BEFORE USING EMULSIONS.

WHEN USING LATEX ASPHALT, THE CONTRACTOR SHALL TAKE PRECAUTIONARY MEASURES TO AVOID DRIFTING OF ASPHALT ONTO TRAFFIC AND ADJACENT PROPERTIES.

THE CONTRACTOR WILL BE REQUIRED TO SET A STRING LINE FOR ALL SURFACE TREATMENT OPERATIONS UNLESS OTHERWISE APPROVED BY THE ENGINEER.

THE LOCATION OF AGGREGATE STOCKPILES AT THE PROJECT SHALL BE APPROVED BY THE ENGINEER. THE AGGREGATE SHALL BE FREE OF EXCESS SURFACE



| F.R. DIV.6 | TEXAS | NH 2000 (704) | , ETC | SHEET 126 |
|---|---|---|---|---|
| BEXAR | COUNTY | HWY LP 1604 | CONT 2452-1-36, ETC | |

GENERAL NOTES AND SPECIFICATION DATA--

--ITEM 316--, CONT'D
MOISTURE, AS DETERMINED BY THE ENGINEER, BEFORE APPLICATION.

THE ADDITION OF BAGHOUSE FINES WILL NOT BE PERMITTED IN THE PRODUCTION OF PRECOATED MATERIAL.

MIXES THAT DO NOT MAINTAIN FLOW QUALITIES WHERE THE PRECOATED AGGREGATE CAN NOT BE SATISFACTORILY SPREAD BY APPROVED MECHANICAL SPREADING DEVICES WILL NOT BE ACCEPTABLE.

STOCKPILES OF AGGREGATE PRECOATED WITH AC MAY GENERATE EXCESSIVE HEAT BUILD-UP RESULTING IN DAMAGE TO THE ASPHALT AND/OR AGGREGATES IF ADEQUATE COOLING HAS NOT BEEN INITIALLY PROVIDED. STOCKPILES SHOWING EVIDENCE OF EXCESSIVE HEAT BUILD-UP CAN BE REJECTED BY THE ENGINEER.

AGGREGATES USED AS THE FINAL SURFACE ON THE DRIVING LANES SHALL HAVE A FLAKINESS INDEX NOT TO EXCEED 15 AND SHALL BE SUBJECTED TO 5 CYCLES OF THE SOUNDNESS TEST IN ACCORDANCE WITH TEST METHOD TEX-411-A. THE PERCENT LOSS SHALL NOT BE GREATER THAN 30 WHEN MAGNESIUM SULPHATE IS USED. THIS TEST WILL NOT APPLY TO BLENDS WITH CRUSHED TRAP ROCK, CRUSHED RHYOLITE, CRUSHED LIMESTONE ROCK ASPHALT OR LIGHTWEIGHT AGGREGATE.

ALL ROLLING SHALL BE IN ACCORDANCE WITH ITEM 213 (MEDIUM, TYPE B) AT THE APPROXIMATE RATE OF 1 H/3000 M2 OR AS DIRECTED/APPROVED BY THE ENGINEER. THE LIGHT PNEUMATIC ROLLER WILL BE ACCEPTABLE AT THE APPROXIMATE RATE OF 1 H/2000 M2. THE TIRE PRESSURE AND BALLAST OF ALL PNEUMATIC ROLLERS WILL BE OF CONTINUING INTEREST BY THE ENGINEER, AND WILL BE IN ACCORDANCE WITH ITEM 213.

ALL CONCRETE CURBS AND/OR CONCRETE ISLANDS THAT GET COATED WITH OIL DURING THE SURFACE TREATMENT OPERATION SHALL BE CLEANED AS DIRECTED/APPROVED BY THE ENGINEER PRIOR TO FINAL ACCEPTANCE OF THE PROJECT.

--ITEM 345--
RAW BASE MATERIAL SHALL BE STOCKPILED, TESTED AND APPROVED BEFORE USE. THE STOCKPILE SHALL BE BUILT IN LIFTS NOT TO EXCEED 600 MM AND IN SUCH A MANNER AS TO OBTAIN A MINIMUM WORKING FACE OF NOT LESS THAN 3 M AND A MAXIMUM WORKING FACE OF NOT MORE THAN 6 M. IF THE ASPHALT STABILIZED BASE IS PRODUCED FROM AN APPROVED FLEXIBLE BASE STOCKPILE, UP TO 15 PERCENT OF FIELD SAND, AS DIRECTED BY THE ENGINEER, MAY BE REQUIRED TO BE ADDED TO THE MATERIAL THROUGH THE COLD FEED SYSTEM.

GENERAL NOTES AND SPECIFICATION DATA--

--ITEM 192--, CONT'D
THERE SHALL BE NO PRUNING FOR FOLIAGE REDUCTION. PRUNING MAY BE DONE FOR AESTHETIC REASONS WITH THE APPROVAL OF THE ENGINEER. PRUNING SHALL BE LIMITED TO THE REMOVAL OF DAMAGED TREE PARTS ONLY IF THE DAMAGE IS MINOR AND WITH THE ENGINEER'S APPROVAL. EXCESSIVE DAMAGE DURING SHIPPING OR INSTALLATION SHALL BE CAUSE FOR THE REJECTION OF THE PLANT. ALL PRUNING SHALL BE ACCOMPLISHED WITH CLEAN, SHARP TOOLS SPECIFICALLY DESIGNED FOR THESE PURPOSES. THESE TOOLS SHALL BE DISINFECTED WITH SEVENTY PERCENT (70%) ETHYL ALCOHOL OR CHLORINE SOLUTION BETWEEN EACH TREE.

PLANT MATERIAL

BALLED AND BURLAPPED (B&B) MATERIAL WILL NOT BE ALLOWED FOR THIS PROJECT.

QUERCUS VIRGINIANA, LIVE OAK
ROOT CONDITION: CNT. NM 30
CALIPER: MIN. 50 MM
HEIGHT: 2.5 TO 3 M
SPREAD: 1.25 M
REMARKS: TREE SHALL HAVE GENERALLY SYMMETRICAL BRANCHING WHICH SHALL BEGIN AT LEAST ONE METER FROM THE SOIL LINE. ALL TREES SHALL BE NURSERY-GROWN IN CONTAINERS.

QUERCUS LACEYI, LACEY OAK
ROOT CONDITION: CNT. NM 10
CALIPER: MIN. 25 MM
HEIGHT: 1.5 TO 2 M
SPREAD: 0.75 M
REMARKS: TREE SHALL HAVE GENERALLY SYMMETRICAL BRANCHING WHICH SHALL BEGIN AT LEAST ONE HALF METER FROM THE SOIL LINE. ALL TREES SHALL BE NURSERY-GROWN IN CONTAINERS.

ULMUS CRASSIFOLIA, CEDAR ELM
ROOT CONDITION: CNT. NM 30
CALIPER: MIN. 50 MM
HEIGHT: 2.5 TO 3 M
SPREAD: 1 M
REMARKS: TREE SHALL HAVE GENERALLY SYMMETRICAL BRANCHING WHICH SHALL BEGIN AT LEAST ONE METER FROM THE SOIL LINE. ALL TREES SHALL BE NURSERY-GROWN IN CONTAINERS.

CARE, HANDLING AND QUALITY OF PLANT MATERIAL



| F.R. DIV.6 | TEXAS | NH 2000(704) | , ETC | SHEET 12E |
|---|---|---|---|---|
| BEXAR | COUNTY | HWY LP 1604 | | CONT 2452-1-36, ETC |

GENERAL NOTES AND SPECIFICATION DATA--

--ITEM 192--, CONT'D
ALL PLANTS SHALL BE TRUE TO SPECIES AND VARIETY AND SHALL CONFORM TO MEASUREMENTS AND CONDITIONS AS SPECIFIED, UNLESS OTHERWISE AGREED UPON BY THE ENGINEER.

PLANTS SHALL BE SUBJECT TO INSPECTIONS AND APPROVAL BY THE ENGINEER AT THE PLACE OF GROWTH AND UPON DELIVERY FOR CONFORMITY TO SPECIFICATIONS. SUCH APPROVAL SHALL NOT NEGATE THE RIGHT OF INSPECTION AND REJECTION DURING PROGRESS OF THE WORK. THE ENGINEER RESERVES THE RIGHT TO REFUSE INSPECTION AT ANY TIME IF, IN THE ENGINEER'S JUDGEMENT, A SUFFICIENT QUANTITY OF PLANTS IS NOT AVAILABLE FOR INSPECTION.

ALL PLANTS INSPECTED AT THE NURSERY BY THE ENGINEER SHALL BE TAGGED WITH SERIALIZED SELF-LOCKING TAGS. PLANTS DELIVERED TO THE SITE WITHOUT THESE TAGS OR WITH BROKEN TAGS MAY BE SUFFICIENT REASON FOR REJECTION. TAGS SHALL BE FURNISHED BY THE CONTRACTOR AT THE PRE-CONSTRUCTION CONFERENCE.

THE CONTRACTOR SHALL SUBMIT A WRITTEN PLAN TO THE ENGINEER FOR TRANSPORTING PLANT MATERIAL TO THE SITE FOR APPROVAL. SUCH A PLAN SHOULD INCLUDE DATE OF PICK-UP AT NURSERY OR PLACE OF STORAGE, TYPE OF VEHICLE USED FOR SHIPPING, METHOD OF PROTECTING PLANTS DURING TRANSIT, DATES IN TRANSIT, DATE OF DELIVERY TO SITE, PROJECTED DATE OF INSTALLATION, A MEANS AND LOCATION OF STORAGE, AND WATERING AND SHADING USED BETWEEN DELIVERY AND PLANTING; WHICH SHALL BE SUBJECT TO REVIEW BY THE ENGINEER. DO NOT STORE PLANT MATERIALS ON HARD PAVEMENT. IMMEDIATELY UNTIE MATERIAL UPON DELIVERY.

THE FOLLOWING CONSIDERATIONS FOR PRODUCT HANDLING BY THE CONTRACTOR SHALL BE EVALUATED DURING HOT WEATHER AND WHEN PRACTICAL. THE CONTRACTOR MAY BE REQUIRED TO TRANSPORT PLANT MATERIALS BETWEEN SUNSET AND SUNRISE IF TRANSPORTED IN AN OPEN TRAILER OR UNREFRIGERATED VAN. PROTECT TRUNKS, STEMS, BRANCHES AND ROOT BALLS FROM ALL DAMAGE DURING HANDLING, LOADING AND UNLOADING OPERATIONS. LOAD CONTAINERS ONTO TRANSPORT VEHICLE AND SECURE IN A MANNER THAT PROTECTS THE STRUCTURAL INTEGRITY OF TH EROOT BALLS AND BRANCHES. THE CONTRACTOR SHALL BE SOLELY RESPONSIBLE FOR THE SAFE TRANSPORTATION OF PLANTS TO THE SITE AND THEIR CONDITION UPON ARRIVAL. PLANTS DAMAGED, DEHYDRATED, OR ABUSED DURING TRANSIT AND STORAGE WILL BE REJECTED. PLANT MATERIALS SHALL NOT BE STORED ON CONCRETE OR ASPHALT, NOR SHALL THEIR CONTAINERS BE LEFT EXPOSED TO THE SUN. IF PLANTS ARE LEFT IN STORAGE OVER THE WEEKEND OR HOLIDAY, A MEANS OF PERIODICALLY WATERING AND INSPECTING CONTAINER MOISTURE SHALL BE PROVIDED.

THE ENGINEER MAY INSPECT ANY PHASE OF PRODUCT HANDLING AND MAY REJECT ANY PLANT MATERIAL IMPROPERLY HANDLED DURING ANY POINT OF THIS

GENERAL NOTES AND SPECIFICATION DATA--

--ITEM 192--, CONT'D
OPERATION.

PLANTS SHALL BE NURSERY GROWN IN ACCORDANCE WITH GOOD HORTICULTURAL PRACTICES UNDER CLIMATIC CONDITIONS SIMILAR TO THOSE OF THE PROJECT SITE FOR AT LEAST 12 MONTHS, UNLESS SPECIFICALLY OTHERWISE AUTHORIZED BY THE ENGINEER IN WRITING. UNLESS SPECIFICALLY NOTED OTHERWISE, ALL PLANTS SHALL BE HEAVY, SYMMETRICAL, TIGHTLY KNIT, SO TRAINED OR FAVORED IN DEVELOPMENT AND APPEARANCE AS TO BE SUPERIOR IN FORM, NUMBER OF BRANCHES, COMPACTNESS AND SYMMETRY.

THE CONTRACTOR SHALL NOT WORK SUBSOIL FOR PLANTING OPERATIONS WHEN MOISTURE CONTENT IS SO GREAT THAT EXCESSIVE COMPACTION WILL OCCUR NOR WHEN IT IS SO DRY THAT THE CLODS WILL NOT BREAK READILY. WATER SHALL BE APPLIED, IF NECESSARY.

DO NOT BIND OR HANDLE ANY PLANT WITH WIRE OR ROPE AT ANY TIME SO AS TO DAMAGE BARK OR BREAK BRANCHES. LIFT AND HANDLE PLANTS ONLY FROM THE BOTTOM OF CONTAINER.

INSTALLATION OF PLANT MATERIALS

1. SCARIFY THE WALLS AND BOTTOM OF ALL PLANT PITS IMMEDIATELY PRIOR TO THE PLACEMENT OF BACKFILL MATERIAL TO INSURE THE REMOVAL OF GLAZING CAUSED BY THE AUGER OR MECHANICAL HOLE DIGGER.
2. PLANT TREE SO THAT TOP OF ROOTBALL IS 25 MM ABOVE FINISHED GRADE.
3. CAREFULLY LOWER PLANT INTO PIT WITH BACKHOE OR APPROVED METHOD AND ADJUST ELEVATION.
4. CAREFULLY FILL PIT WITH SOIL AND COMPACT BY WATERING IN TO SUPPORT ROOTBALL.
5. SMOOTH PLANTED AREAS TO CONFORM TO SPECIFIED GRADES AFTER FULL SETTLEMENT HAS OCCURRED. CREATE WATERING BASINS AS SHOWN ON PLANS.
6. WATER ALL PLANTS IMMEDIATELY AFTER PLANTING.
7. SPREAD HARDWOOD MULCH TO A DEPTH OF 76 MM.

TREES SHALL BE STAKED FOR SUPPORT DURING THE SAME DAY AS PLANTED. PLANTS SHALL STAND PLUMB AFTER STAKING. THE CONTRACTOR SHALL REMOVE ANY TIES, TAGS OR TAPE ON THE TREE TRUNKS IMMEDIATELY AFTER PLANTING. THE CONTRACTOR SHALL BE RESPONSIBLE FOR MATERIAL REMAINING PLUMB AND STRAIGHT FOR ALL GIVEN CONDITIONS THROUGHOUT THE CONTRACT PERIOD. TREE SUPPORT SHALL BE INSTALLED AS OUTLINED IN THE DETAILS.

90-DAY ESTABLISHMENT PERIOD

THE NINETY (90) DAY ESTABLISHMENT PERIOD SHALL BEGIN AFTER THE LAST PLANT IS PLANTED. THE CONTRACTOR SHALL BE REQUIRED TO PERFORM ALL



| F.R. DIV.6 | TEXAS | NH 2000(704) | , ETC | SHEET 12F |
|---|---|---|---|---|
| BEXAR | COUNTY | HWY LP 1604 | CONT 2452-1-36, ETC | |

GENERAL NOTES AND SPECIFICATION DATA--

--ITEM 192--, CONT'D
MAINTENANCE AND ESTABLISHMENT ACTIVITIES AS CONTAINED IN ITEM 192 OF THE STANDARD SPECIFICATIONS DURING THE 90-DAY ESTABLISHMENT PERIOD. REQUIREMENTS FOR ANY NECESSARY MOWING AND TRIMMING DURING THIS PERIOD SHALL BE AS REQUIRED BY THE ENGINEER.

DURING THIS ESTABLISHMENT PERIOD, ALL PLANT BASINS AND MULCHED AREAS SHALL BE MAINTAINED WEED-FREE. NYLON STRING TRIMMERS SHALL NOT BE USED WITHIN THE PLANT BASINS OR PLANTING BEDS. A 76 MM LAYER OF MULCH SHALL BE MAINTAINED AT ALL TIMES WITHIN THE BASINS AND BEDS.

REPLACEMENT OF PLANT MATERIAL

AT THE END OF THE NINETY (90) DAY ESTABLISHMENT PERIOD, AN INVENTORY WILL BE MADE OF ALL PLANT MATERIAL ON THE PROJECT. IF ANY PLANTS ARE FOUND TO BE DEAD OR DYING, THEY SHALL BE NOTED FOR REPLACEMENT. THE CONTRACTOR WILL NOT BE ENTITLED TO ANY ADDITIONAL COMPENSATION FOR THE LABOR AND MATERIALS NEEDED TO COMPLETE PLANT REPLACEMENT.

FAILURE TO ACCOMPLISH REPLACEMENT OF PLANT MATERIAL DURING THE 90 DAY ESTABLISHMENT PERIOD WILL BE CONSIDERED NON-PERFORMANCE OF THE GUARANTEE AND MAINTENANCE REQUIREMENTS INCLUDED IN THIS CONTRACT AND THE ENGINEER MAY WITHHOLD PAYMENT UNTIL THE REQUIRED REPLACEMENT HAS BEEN ACCOMPLISHED.

--ITEM 193--
MULCHED AREAS SHALL BE MAINTAINED FREE OF WEEDS AND THE MULCH MAINTAINED AT 76 MM DEPTH. AN AREA COVERING 1 METER MEASURED FROM THE OUTSIDE EDGE OF THE MULCHED AREA AROUND EACH TREE SHALL BE MOWED EACH MONTH. FOR GROUPS OF TREES THAT ARE CLOSER THAN 3 METERS TOGETHER, MOW ALL THE AREAS BETWEEN THE TREES (MOW AS A GROUP). IRRIGATE AT A RATE OF 76 LITERS EVERY 14 DAYS FOR EACH TREE.

--ITEM 247--
FLEXIBLE BASE MATERIAL SHALL COME FROM A SOURCE APPROVED BY THE ENGINEER. IF THE FLEXIBLE BASE COMES FROM A STOCKPILE, THE STOCKPILE SHALL BE TESTED BEFORE DELIVERY TO THE PROJECT. THE STOCKPILE SHALL BE BUILT IN LIFTS NOT TO EXCEED 600 MM AND IN A MANNER AS TO OBTAIN A MINIMUM WORKING FACE OF NOT LESS THAN 3 M AND A MAXIMUM WORKING FACE OF NOT MORE THAN 6 M. FINAL ACCEPTANCE OF FLEXIBLE BASE MATERIAL WILL BE FROM TESTS MADE FROM WINDROW SAMPLES AND/OR THE STOCKPILE.

GENERAL NOTES AND SPECIFICATION DATA--

--ITEM 345--, CONT'D
FOR ALL MAT THICKNESSES, ASPHALT STABILIZED BASE SHALL NOT BE PLACED WHEN THE TEMPERATURE OF THE SURFACE ON WHICH THE MAT IS TO BE PLACED IS BELOW 10 DEGREES C.

THE DESIGN SHALL BE IN ACCORDANCE WITH TEST METHOD TEX-126-E.

WHEN IN-PLACE DENSITY IS REQUIRED, IT SHALL BE MEASURED WITH THE NUCLEAR GAUGE; HOWEVER, THE CONTRACTOR WILL BE REQUIRED TO REMOVE THREE (3) EACH, 102 MM DIAMETER UNDISTURBED CORES FOR THE FULL DEPTH OF THE PREVIOUS DAY'S PLACEMENT, AT A POINT DIRECTED/APPROVED BY THE ENGINEER, FOR CORRELATION. THIS REQUIREMENT FOR UNDISTURBED CORES MAY BE LATER WAIVED, IF CORRELATIONS PROVE SATISFACTORY. THE MATERIALS SHALL BE COMPACTED TO THE PERCENT DENSITY SHOWN IN TEST METHOD TEX-126-E.

IF THE MATERIALS FURNISHED ARE FOUND TO HAVE STRIPPING CHARACTERISTICS, THE ENGINEER MAY REQUIRE THE ADDITION OF AN APPROVED ANTISTRIPPING AGENT CONFORMING TO THE REQUIREMENTS OF ITEM 301. THE USE OF TEST METHOD TEX-531-C SHALL NOT BE REQUIRED TO EVALUATE THE MIX. THE COST OF THE ANTISTRIPPING AGENT SHALL BE CONSIDERED SUBSIDIARY TO THIS ITEM. A TEST SECTION WITHOUT THE ANTISTRIPPING AGENT WILL NOT BE REQUIRED.

NO COMMERCIAL OR CONTRACTOR'S R.A.P. WILL BE ALLOWED IN THE MIXTURE UNLESS APPROVED OTHERWISE IN ADVANCE BY THE ENGINEER.

THE ASPHALT PLANT SHALL BE EQUIPPED WITH TRUCK SCALES AS DEFINED IN ITEM 520.3(1) OF THE STANDARD SPECIFICATIONS. THREE MASS TICKETS BEARING THE DATE, THE TRUCK NUMBER AND THE GROSS, NET AND TARE MASS SHALL BE GIVEN THE TRUCK DRIVER BY THE CONTRACTOR'S OR PLANT PERSONNEL, AND THEN GIVEN TO THE STATE INSPECTOR AT THE PROJECT SITE. THE CONTRACTOR MAY BE REQUIRED TO RE-WEIGH LOADS OF ASPHALT STABILIZED BASE ON PUBLIC SCALES OR PORTABLE PLATFORM SCALES TO CHECK THE MASS OF THE MATERIAL.

--ITEM 351--
IT IS THE INTENT OF THIS ITEM TO DO THE SPOT PAVEMENT REPAIRS SHOWN IN THE PLANS AND ALSO REPAIR ANY FAILURES THAT MIGHT OCCUR DURING CONSTRUCTION. ALL WORK SHALL BE ACCOMPLISHED AS SOON AS POSSIBLE. WORK PERFORMED SHALL BE AS DIRECTED AND TO THE SATISFACTION OF THE ENGINEER.

--ITEM 354--
ALL MATERIAL (RAP) RESULTING FROM THE PLANING OPERATIONS WILL BE SOLD TO THE CONTRACTOR AS A LUMP SUM CREDIT ITEM. THE CONTRACTOR SHALL



| F.R. DIV.6 | TEXAS | NH 2000(704) | , ETC | SHEET 12H |
|---|---|---|---|---|
| BEXAR | COUNTY | HWY LP 1604 | CONT 2452-1-36, ETC | |

GENERAL NOTES AND SPECIFICATION DATA--

--ITEM 354--, CONT'D
REMOVE ALL SUCH MATERIAL FROM THE PROJECT SITE PRIOR TO FINAL ACCEPTANCE OF THE PROJECT. APPROXIMATELY 712 M3 OF MATERIAL WILL GENERATED UNDER THIS ITEM.

IF EXISTING BASE MATERIAL IS EXPOSED DURING PLANING OPERATIONS, THE CONTRACTOR SHALL SPRINKLE AND ROLL TO RECOMPACT THE SURFACE OF THE EXPOSED BASE MATERIAL, AS DIRECTED BY THE ENGINEER. THE CONTRACTOR SHALL THEN APPLY A ONE COURSE SURFACE TREATMENT TO IT PRIOR TO THE PLACEMENT OF THE NEW HOT MIX ASPHALT LIFT(S) REQUIRED.

ALL ROLLING, SPRINKLING AND ONE COURSE SURFACE TREATMENT REQUIRED FOR THE EXPOSED EXISTING BASE MATERIAL SHALL BE CONSIDERED SUBSIDIARY TO THIS ITEM.

--ITEM 420--
BENT CONCRETE WILL BE MEASURED FOR PAYMENT AS PLAN QUANTITY.

CONCRETE USED FOR THE FOLLOWING TYPE(S) OF WORK SHALL BE CONSIDERED TO BE "MISCELLANEOUS CONCRETE"; RIPRAP, CURB & SIDEWALK.

--ITEM 421--
GRADE 7 AGGREGATE MAY BE USED FOR CONCRETE. BUT, IT WILL REQUIRE WRITTEN APPROVAL FROM THE ENGINEER PRIOR TO ITS USE. IT WILL BE THE CONTRACTORS RESPONSIBILITY TO COORDINATE THIS APPROVAL WITH THEIR CONCRETE PRODUCER. CONCRETE WITH GRADE 7 AGGREGATE WILL NOT BE ACCEPTED AT THE PROJECT SITE UNTIL THIS WRITTEN APPROVAL IS ON FILE.

--ITEM 421 & 427--
ALL SURFACE FINISHES FOR CONCRETE SHALL RECEIVE A SURFACE AREA I CLASS D FINISH AS DIRECTED BY THE ENGINEER.

--ITEM 421 & 520--
AFTER THE CONCRETE PRODUCER CONTACTS THE DISTRICT CONCRETE LABORATORY OR THE AREA ENGINEER'S OFFICE (WHEN OUTSIDE THE SAN ANTONIO AREA) TO REQUEST A TXDOT INSPECTOR AT THE CONCRETE BATCH PLANT, TXDOT WILL DETERMINE IF AN INSPECTOR CAN BE SCHEDULED. IF AN INSPECTOR IS NOT AVAILABLE, TXDOT WILL NOTIFY THE PRODUCER. AT THAT TIME, IF THE CONCRETE PRODUCER HAS A TXDOT APPROVED AUTOMATED CONCRETE BATCH TICKET AND THE CONCRETE REQUESTED BY THE CONTRACTOR IS NOT FOR DRILL SHAFTS, COLUMNS, CAPS, ABUTMENTS, BRIDGE DECKS OR TOP SLAB OF A DIRECT TRAFFIC CULVERT. THE PRODUCER WILL BE ALLOWED TO BATCH THE CONCRETE WITHOUT A

GENERAL NOTES AND SPECIFICATION DATA--

--ITEM 421 & 520--, CONT'D
TXDOT INSPECTOR BEING PRESENT.

THE CONCRETE PRODUCERS WILL BE REQUIRED TO DEVELOP AND USE AN AUTOMATED CONCRETE BATCH TICKET THAT WILL CONTAIN THE SAME INFORMATION AS TXDOT'S CONCRETE BATCH TICKET. THE PRODUCER'S TICKET SHALL BE A COMPUTER PRINTOUT. THE PRODUCER'S TICKET SHALL BE SUBMITTED TO TXDOT FOR APPROVAL PRIOR TO USE. IT WILL BE THE CONTRACTOR'S RESPONSIBILITY TO INFORM THEIR CONCRETE PRODUCER OF THIS REQUIREMENT.

USE OF THE APPROVED TICKET IS REQUIRED FOR BATCHING MISCELLANEOUS CONCRETE. CONCRETE FOR DRILL SHAFTS, COLUMNS, CAPS, ABUTMENTS, BRIDGE DECKS OR TOP SLABS OF DIRECT TRAFFIC CULVERTS SHALL BE BATCHED IN THE PRESENCE OF A TXDOT INSPECTOR USING THE PRODUCER'S AUTOMATED CONCRETE BATCH TICKET.

--ITEM 432--
IN ALL RIPRAP SLOPES, 75 MM DIAMETER WEEP HOLES SHALL BE PROVIDED 3 M MAXIMUM SPACING AND BACKED WITH LOOSE GRADED GRAVEL OR CRUSHED STONE AND GALVANIZED HARDWARE CLOTH AS DIRECTED/APPROVED BY THE ENGINEER.

IN AREAS WHERE GUARD FENCE POSTS ARE TO BE PLACED IN RIPRAP, THE RIPRAP SHALL HAVE A BLOCKED OUT AREA AT LEAST 300 MM LARGER THAN THE POST.

RIPRAP APRONS USED AT SIGN LOCATIONS ARE FOR THE PURPOSE OF EROSION CONTROL AROUND DRILL SHAFT FOOTINGS. THE DETAIL SHOWN IN THE PLANS, OR AS DIRECTED BY THE ENGINEER, IS TYPICAL AND MAY BE MODIFIED TO MINIMIZE EROSION. THESE MODIFICATIONS MAY INCLUDE EXTENDING THE RIPRAP APRON TO THE EDGE OF THE SHOULDER OR CURB WHERE SIGNS ARE TO BE PLACED SIDE BY SIDE. AS DIRECTED BY THE ENGINEER.

--ITEM 440--
WHEN REINFORCING STEEL IS SHOWN ON THE PLANS WITH ENGLISH BAR SIZE DESIGNATIONS, BARS WITH METRIC SIZE DESIGNATIONS, CORRESPONDING TO THE FOLLOWING TABLE, WILL BE USED:

| ENGLISH SIZE | METRIC SIZE |
|---|---|
| 3 | 10 |
| 4 | 13 |
| 5 | 16 |
| 6 | 19 |
| 7 | 22 |
| 8 | 25 |
| 9 | 29 |



| F.R. DIV.6 | TEXAS | NH 2000 (704) , ETC | SHEET 12I |
|---|---|---|---|
| BEXAR COUNTY | | HWY LP 1604 | CONT 2452-1-36, ETC |

GENERAL NOTES AND SPECIFICATION DATA--

--ITEM 440--, CONT'D

| | |
|---|---|
| 10 | 32 |
| 11 | 36 |
| 14 | 43 |
| 18 | 57 |

--ITEM 442--
ALL STRUCTURAL STEEL SHALL RECEIVE PROTECTION SYSTEM II.

ALL ARMOR JOINTS SHALL RECEIVE PROTECTION SYSTEM II.

--ITEM 450--
FOR THE TRAFFIC RAIL TYPE T6, SUBSTITUTION OF A 5/8" DIAMETER BUTTON HEAD SHOULDER BOLT FOR THE 5/8" THROUGH HEX HEAD A307 BOLT THAT ATTACHES THE TUBULAR W-BEAM RAIL MEMBER TO THE VERTICAL STEEL POST IS PERMITTED.

--ITEM 454--
ALL SEALED EXPANSION JOINTS SHALL RECEIVE PROTECTION SYSTEM I OR II IN ACCORDANCE WITH ITEM 446.

--ITEM 462--
IF PRECAST UNITS ARE USED, THE FILL MATERIAL BETWEEN THE BOXES SHALL CONSIST OF CONCRETE AGGREGATE WIH A MINIMUM OF 100 KG PORTLAND CEMENT PER CUBIC METER (TWO SACK CONCRETE). THE TWO SACK CONCRETE IS PART OF THE BOX CULVERT WORK AND WILL NOT BE PAID FOR DIRECTLY.

THE PRECAST CULVERT END UNITS SHALL BE TIED TO THE CAST-IN-PLACE WINGS AS SHOWN IN THE PLANS OR IN A MANNER APPROVED BY THE ENGINEER.

--ITEM 462, 465 & 466--
BRIDGE CLASS CULVERTS NO. 1-3 AND CULVERTS NO. 2, 5, 6, 7, 10, 12, 22 AND 23 WERE DESIGNED TO BE PRECAST AND CAST-IN-PLACE, BUT MAY BE PRECAST.

--ITEM 465--
THE CONTRACTOR SHALL SHAPE INVERTS OF ALL PROPOSED CURB INLETS, DROP INLETS AND MANHOLES TO PRODUCE POSITIVE FLOW THROUGH STRUCTURE FROM ALL INLETS TO THE OUTLET OF THE STRUCTURE USING MISCELLANEOUS CONCRETE (CLASS B). THIS WORK SHALL BE CONSIDERED SUBSIDIARY TO THIS BID ITEM.

GENERAL NOTES AND SPECIFICATION DATA--

--ITEM 465--, CONT'D

FOR ALL PRECAST DROP INLETS, THE CONTRACTOR SHALL DESIGN AND PROVIDE SHOP DRAWINGS OF THE PROPOSED STRUCTURE FOR APPROVAL BY THE ENGINEER.

THE FOLLOWING INLETS SHALL BE PRECAST: DI-I12B, DI-I25, DI-I28, DI-ZI, DI-X1, DI-X2, DI-W1, DI-TA1.

--ITEM 467--
THE CONTRACTOR SHALL HAVE THE OPTION TO CAST IN PLACE OR USE PRECAST SAFETY END TREATMENTS WHERE CALLED FOR IN THE PLANS.

--ITEM 500--
"MATERIALS ON HAND" PAYMENTS WILL NOT BE CONSIDERED IN DETERMINING PERCENTAGES USED TO COMPUTE PAYMENT FOR ITEM "MOBILIZATION".

--ITEM 502--
STATE STANDARD SHEET(S) "TRAFFIC CONTROL PLAN (TCP)" REQUIRES THAT CERTAIN SIGNS ARE TO REMAIN IN PLACE UNTIL THE STANDARD PAVEMENT MARKINGS ARE PLACED. THE STANDARD MARKINGS SHOULD BE IN PLACE NO LONGER THAN 14 DAYS AFTER SURFACE TREATMENT OPERATIONS ARE COMPLETED.

WHEN ADVANCED WARNING FLASHING ARROW PANEL(S) IS/ARE SPECIFIED FOR USE ON THE PROJECT, THE CONTRACTOR SHALL BE REQUIRED TO FURNISH ONE STANDBY UNIT IN GOOD CONDITION AT THE JOB SITE READY FOR IMMEDIATE USE.

USE OF SHADOW VEHICLES WITH TRUCK MOUNTED ATTENUATORS AS CALLED FOR IN THE STATE STANDARD SHEET(S) "TRAFFIC CONTROL PLAN (TCP)" WILL NOT BE CONSIDERED OPTIONAL UNLESS OTHERWISE NOTED IN THE PLANS.

WHEN A SHADOW VEHICLE IS USED, THE CONTRACTOR SHALL PROVIDE TRUCK MOUNTED ATTENUATORS (TMA) IN ACCORDANCE WITH THE STATE STANDARD SHEET(S) "TRAFFIC CONTROL PLAN (TCP)", "BARRICADES AND CONSTRUCTION (BC)", AND TEXAS MUTCD.

STRIPING ON THE BACK OF ALL TRUCK MOUNTED ATTENUATORS SHALL BE 200 MM RED AND WHITE STRIPES PLACED IN AN INVERTED "V" DESIGN. SHEETING SHALL CONFORM WITH DEPARTMENTAL MATERIAL SPECIFICAITON D-9-8300, TYPE C.

IT SHALL BE THE CONTRACTOR'S RESPONSIBILITY TO ASSURE THAT PREVIOUSLY USED TRUCK MOUNTED ATTENUATORS MEET THE NCHRP 230 REQUIREMENTS AND ALL NEW TRUCK MOUNTED ATTENUATORS MEET NCHRP 350 REQUIREMENTS.



| F.R. DIV.6 | TEXAS | NH 2000(704) | , ETC | SHEET 12J |
|---|---|---|---|---|
| BEXAR | COUNTY | HWY LP 1604 | CONT 2452-1-36, ETC | |

GENERAL NOTES AND SPECIFICATION DATA--

--ITEM 502--, CONT'D
AFTER THE CONTRACTOR HAS BEEN NOTIFIED IN WRITING BY THE ENGINEER, THE TIME FRAME FOR THE CONTRACTOR TO PROVIDE PROPERLY MAINTAINED TRAFFIC CONTROL DEVICES IN COMPLIANCE WITH THE CONTRACT REQUIREMENTS, BEFORE THEY ARE CONSIDERED TO BE IN NON-COMPLIANCE WITH THIS ITEM, IS 48 HOURS REGARDLESS OF THE DAYS OF THE WEEK INVOLVED. IF THE CONTRACTOR DOESN'T TAKE THE NECESSARY STEPS APPROVED BY THE ENGINEER TO ELIMINATE THE NON-COMPLIANCE CONDITIONS WITHIN THE 48 HOURS ESTABLISHED ABOVE, NO PAYMENT WILL BE MADE FOR THIS ITEM FOR THE MONTH(S) IN NON-COMPLIANCE AS COVERED IN SECTION 502.4(7).

THE CONTRACTOR IS FULLY RESPONSIBLE FOR THE TRAFFIC CONTROL AND WILL BE RESPONSIBLE FOR FURNISHING ALL TRAFFIC CONTROL DEVICES AND FLAGGERS. THE CONSTRUCTION METHODS SHALL BE CONDUCTED TO PROVIDE THE LEAST POSSIBLE INTERFERENCE TO TRAFFIC SO AS TO PERMIT THE CONTINUOUS MOVEMENT OF TRAFFIC IN ALL ALLOWABLE DIRECTIONS AT ALL TIMES. THE CONTRACTOR SHALL CLEAN UP AND REMOVE FROM THE WORK AREA ALL LOOSE MATERIAL RESULTING FROM CONTRACT OPERATIONS AT THE END OF EACH WORK DAY. WHEN PLACING LOOP DETECTORS ACROSS THE ROADWAY AT LEAST ONE LANE SHALL REMAIN OPEN AT ALL TIMES.

THERE ARE EXISTING TRAFFIC SIGNALS PRESENTLY IN OPERATION WITHIN THE LIMITS OF THIS PROJECT. THE EXISTING TRAFFIC SIGNALS SHALL REMAIN IN OPERATION AT ALL TIMES EXCEPT WHEN NECESSARY TO BE TURNED OFF FOR SPECIFIC INSTALLATION OPERATIONS. WHENEVER IT IS NECESSARY FOR THE SIGNALS TO BE TURNED OFF, THE CONTRACTOR MAY BE REQUIRED TO HIRE OFF-DUTY POLICE OFFICERS TO CONTROL THE TRAFFIC UNTIL THE SIGNALS ARE BACK IN SATISFACTORY CONDITION.

--ITEM 504--
FOR ELECTRICAL WORK ON TYPE D ASPHALT MIX LABORATORY AND CONSTRUCTION SITE FIELD OFFICES WHICH WILL ALSO INCLUDE ELECTRICAL SERVICE TO SAID BUILDINGS, ELECTRICAL LICENSE REQUIREMENTS WILL BE AS OUTLINED IN SPECIAL PROVISION TO ITEM 8 (PROSECUTION AND PROGRESS) ARTICLE 8.3 (#1, B).

THE CONTRACTOR WILL BE REQUIRED TO FURNISH ONE FIELD OFFICE TYPE E. THE SITE/LOCATION PROPOSED BY THE CONTRACTOR FOR THE FIELD OFFICE HAS TO BE APPROVED BY THE ENGINEER. THE TYPE E FIELD OFFICE AND LABORATORY SHALL BE AT LEAST 65 M2 IN SIZE AND SHALL BE PARTITIONED INTO AT LEAST 5 WORKROOMS. THE FIELD OFFICE AND LABORATORY MAY BE FURNISHED SEPARATELY WITH THE FIELD OFFICE CONTAINING AT LEAST 55 M2 PARTITIONED INTO AT LEAST 4 WORKROOMS. THE FIELD OFFICE SHALL HAVE ADEQUATE WINDOWS AND DOORS, SHALL BE PROVIDED WITH THE NECESSARY PLAN TABLES, SHELVES, AND LOCKERS REQUIRED AND CONSTRUCTED AS DIRECTED/APPROVED BY

GENERAL NOTES AND SPECIFICATION DATA--

--ITEM 504--, CONT'D
THE ENGINEER, AND SHALL CONTAIN THE FACILITIES OF A TOILET AND LAVATORY. THE LABORATORY BUILDINGS SHALL BE SERVICED WITH ADEQUATE SINK AND DRAINAGE CONNECTIONS AND SHALL BE PROVIDED WITH NECESSARY WORK TABLES, SHELVES, WEIGHT TABLES, AND LOCKERS REQUIRED AND CONSTRUCTED AS DIRECTED/APPROVED BY THE ENGINEER.

THE FIELD OFFICE MAY BE LOCATED WITHIN THE EXISTING R.O.W. AT A LOCATION AGREED UPON BY THE ENGINEER.

THE CONTRACTOR SHALL PROVIDE IN THE FIELD OFFICE ONE (1) IBM COMPATIBLE PERSONAL COMPUTER WITH ALL THE REQUIRED PERIPHERAL EQUIPMENT AND SOFTWARE. THE SYSTEM WILL INCLUDE, AT A MINIMUM, THE FOLLOWING FEATURES:

| HARDWARE | SOFTWARE | PERIPHERALS |
|---|---|---|
| PENTIUM 300 OR EQUIV. | WIN 98 | 17" COLOR SVGA (1024X768) MONITOR |
| 128 MB RAM | MS-OFFICE SUITE | 600 DPI COLOR PRINTER |
| 4 GB HARD DRIVE | WINFAX | ALL CABLES |
| 56 KB FAX MODEM | PRIMAVERA | SURGE SUPPRESSOR |
| 16X CD-ROM | VIRUS SCAN | ALL REPAIRS AND MAINTENANCE |
| KEYBOARD & MOUSE | | ALL NECESSARY REPLACEMENTS |
| 3.5" FLOPPY DISK DRIVE | | |
| 100 MB ZIP DRIVE (WITH OPERATING SOFTWARE) | | |

ALL SOFTWARE SHALL BE OF THE LATEST EDITION AVAILABLE UNLESS OTHERWISE APPROVED BY THE ENGINEER. ALL HARDWARE AND SOFTWARE SHALL BE YEAR 2000 COMPLIANT.

THE DEPARTMENT MAY INSTALL ADDITIONAL SOFTWARE ON THE PC. IF SO, THE CONTRACTOR WILL BE REQUIRED TO SIGN AN AGREEMENT AUTHORIZING THE USE OF STATE OWNED SOFTWARE ON CONTRACTOR OWNED EQUIPMENT. THE DEPARTMENT WILL REMOVE ALL STATE OWNED SOFTWARE FROM THE PC BEFORE IT MAY BE REMOVED FROM THE PROJECT.

AT THE CONCLUSION OF THE PROJECT, THE ENTIRE PC SYSTEM AND SOFTWARE, EXCLUDING ANY STATE OWNED SOFTWARE, SHALL REMAIN THE PROPERTY OF THE CONTRACTOR.

THE STATE WILL PROVIDE THEIR OWN TELEPHONE(S) IN THE FIELD OFFICE, BUT THE CONTRACTOR WILL BE RESPONSIBLE FOR THE PHONE LINE(S) TO THE FIELD OFFICE. THE STATE WILL REIMBURSE THE CONTRACTOR FOR THE COST INCURRED FOR THE TELEPHONE SERVICE BY FORCE ACCOUNT PROCEDURE AS COVERED IN THE SPECIAL PROVISION TO ITEM 9.



| F.R. DIV.6 | TEXAS | NH 2000(704) , ETC | SHEET 12K |
|---|---|---|---|
| BEXAR COUNTY | | HWY LP 1604 | CONT 2452-1-36, ETC |

GENERAL NOTES AND SPECIFICATION DATA--

--ITEM 504--, CONT'D
THE CONTRACTOR WILL BE REQUIRED TO PROVIDE A STORAGE AREA INSIDE THE FIELD OFFICE FOR OFFICE TECHNICAL EQUIPMENT AS DIRECTED/APPROVED BY THE ENGINEER. THE STORAGE AREA SHALL BE A MINIMUM OF 6 M3 AND SHALL BE REASONABLY SECURE FROM FORCED ENTRY OR REMOVAL FROM THE PREMISES.

THE FIELD OFFICE PARKING AREA SHALL BE OF ADEQUATE MATERIAL, SHAPE AND SIZE TO ACCOMMODATE 8 VEHICLES AS APPROVED BY THE ENGINEER. WHEN DIRECTED BY THE ENGINEER (DEPENDING ON THE LOCATION), THE FIELD OFFICE AND THE PARKING AREA SHALL BE ENCLOSED WITH A FENCE AS DESCRIBED IN THIS ITEM.

IF THE CONTRACTOR OBTAINS THE ASPHALTIC MATERIAL FROM A SOURCE OTHER THAN A COMMERCIAL SOURCE PRESENTLY INSPECTED BY TXDOT, THE CONTRACTOR SHALL FURNISH A TYPE D STRUCTURE FOR THE ASPHALT MIX CONTROL LABORATORY FOR THE ENGINEER'S EXCLUSIVE USE. IN ADDITION TO THE REQUIREMENTS OF ITEM 504, THIS STRUCTURE SHALL HAVE A UTILITY SINK WITH AN ADEQUATE CLEAN POTABLE WATER SUPPLY FOR TESTING AND A MINIMUM HEIGHT OF 2.4 M AND PROVIDE A MINIMUM OF 37.2 M2 OF GROSS FLOOR AREA FOR PERMANENTLY LOCATED ASPHALT PLANTS OR 18.6 M2 FOR TEMPORARY PLANTS SERVING ONLY THIS PROJECT. THE FLOOR AREA WILL BE PARTITIONED INTO A MINIMUM OF TWO INTERCONNECTED ROOMS, WITH AN EXTERIOR DOOR AND A MINIMUM OF TWO WINDOWS PER ROOM. THE FLOOR SHALL HAVE SUFFICIENT STRENGTH TO SUPPORT THE TESTING EQUIPMENT AND HAVE AN IMPERVIOUS COVERING. PORTABLE STRUCTURES SHALL BE SUPPORT BLOCKED FOR STABILITY AND SHALL BE TIED DOWN.

THE TYPE D STRUCTURE SHALL BE ADEQUATELY AIR CONDITIONED AND BE FURNISHED WITH A MINIMUM OF ONE DESK, THREE CHAIRS, ONE FILE CABINET, A TELEPHONE LINE AND ONE BUILT-IN EQUIPMENT STORAGE CABINET FOR THE STORAGE OF NUCLEAR EQUIPMENT. THE CABINET SHALL BE A MINIMUM OF 1 M WIDE BY 0.6 M BY 1 M HIGH AND SHALL HAVE PROVISIONS FOR LOCKING SECURELY.

THE TYPE D STRUCTURE SHALL BE PROVIDED WITH A 240 VOLT ELECTRICAL SERVICE ENTRANCE AND A MINIMUM OF 2 CONVENIENCE OUTLETS PER WALL. THE SERVICE SHALL CONSIST OF A MINIMUM OF FOUR 120 VOLT CIRCUITS WITH 20 AMP BREAKERS AND NOT MORE THAN TWO GROUNDED CONVENIENCE OUTLETS PER CIRCUIT AND PROVISIONS FOR A MINIMUM OF TWO 220 VOLT WITH VENTS TO THE OUTSIDE. THE ELECTRICAL WORK WILL BE AS OUTLINED IN THE SPECIAL PROVISION TO ITEM 8 AND THE CONTRACTOR SHALL ENSURE THE ELECTRICAL WIRING OF THE STRUCTURE IS LARGE ENOUGH TO ACCOMMODATE THE NEEDS OF THE TESTING EQUIPMENT.

ASPHALT CONTENT WILL BE DETERMINED UTILIZING THE IGNITION METHOD SO THE STRUCTURE SHALL PROVIDE FOR THE FOLLOWING IN LIEU OF THE ITEM 504

GENERAL NOTES AND SPECIFICATION DATA--

--ITEM 504--, CONT'D
REQUIREMENTS FOR ASPHALT CONTENT BY EXTRACTION. THE ROOM TO CONTAIN THE IGNITION OVEN SHALL BE ADEQUATELY POWER VENTILATED AND CONTAIN A NEMA 6-50R (208/240 V, 50 A) OUTLET WITHIN 0.7 M OF THE IGNITION OVEN LOCATION AND AN INDEPENDENT EXHAUST OUTLET TO THE OUTSIDE NO FURTHER THAN 2.4 M FROM THE OVEN. THE SURFACE FOR THE IGNITION OVEN LOCATION SHALL BE LEVEL, STURDY, AND FIRE-PROOF WITH AT LEAST 0.15 M CLEARANCE BETWEEN THE FURNACE AND OTHER VERTICAL SURFACES.

THE CONTRACTOR WILL BE RESPONSIBLE FOR PROVIDING THE NECESSARY OFFICE FURNITURE CONSISTING OF DESKS, CHAIRS, FILING CABINETS, ETC. AS DIRECTED/APPROVED BY THE ENGINEER.

THE CONTRACTOR WILL BE REQUIRED TO CLEAN THE FIELD OFFICE AND/OR LABORATORY AS NEEDED BUT NO LESS THAN ONCE A WEEK. THIS WILL INCLUDE, BUT NOT LIMITED TO SWEEPING AND MOPPING FLOORS, CLEANING THE TOILET AND LAVATORY, AND EMPTYING WASTE BASKETS.

--ITEM 512--
PORTABLE CONCRETE TRAFFIC BARRIER WILL BE FURNISHED BY THE STATE. THE CONTRACTOR SHALL PICK UP THE BARRIERS AT A STORAGE SITE LOCATED AT LP 1604 & POTRANCO AND TRANSPORT THEM TO THE PROJECT LOCATION. WHEN THE BARRIERS ARE NO LONGER NEEDED ON THE PROJECT, THE CONTRACTOR SHALL REMOVE THE BARRIERS AND RETURN THEM TO A STORAGE SITE LOCATED AT LP 1604 & POTRANCO.

FOR ALL PORTABLE CONCRETE TRAFFIC BARRIER TO BE SUPPLIED BY TXDOT, THE CONTRACTOR WILL BE RESPONSIBLE FOR SUPPLYING ALL CONNECTING HARDWARE. THIS SHALL INCLUDE RE-BAR GRIDS FOR FULL SIZE BARRIER AND CONNECTING NUTS, BOLTS AND WASHERS FOR LOW PROFILE BARRIER. THE CONTRACTOR WILL ALSO BE RESPONSIBLE FOR FURNISHING THE END PINS FOR THE LOW PROFILE BARRIER. COSTS ASSOCIATED WITH FURNISHING THIS MATERIAL WILL NOT BE PAID DIRECTLY, BUT SHOULD BE CONSIDERED SUB- SIDIARY TO THE PORTABLE BARRIER ITEMS. IN ADDITION, THIS CONNECTING HARDWARE WILL REMAIN THE PROPERTY OF THE CONTRACTOR AFTER PROJECT COMPLETION.

THE CTB FURNISHED BY THE STATE COULD HAVE DIFFERENT TYPES OF LIFTING METHODS. THE TYPE THAT WILL BE PROVIDED DEPENDS ON WHAT IS AVAILABLE AT THE DESIGNATED STOCKPILE. IT WILL BE THE RESPONSIBILITY OF THE CONTRACTOR TO MODIFY THEIR LIFTING EQUIPMENT AND/OR THE BARRIER IF THE LIFTING EQUIPMENT AND BARRIER ARE NOT COMPATABLE.

THE CONTRACTOR WILL BE RESPONSIBLE FOR THE PORTABLE CTB FURNISHED BY THE STATE FROM THE TIME THEY ARE LOADED AT THE STATE'S STORAGE SITE UNTIL THEY ARE RETURNED TO STORAGE. CTB DAMAGED DURING LOADING,



| F.R. DIV.6 | TEXAS | NH 2000 (704) , ETC | SHEET 12L |
|---|---|---|---|
| BEXAR COUNTY | | HWY LP 1604 | CONT 2452-1-36, ETC |

GENERAL NOTES AND SPECIFICATION DATA--

--ITEM 512--, CONT'D
UNLOADING AND USE ON THE PROJECT SHALL BE REPAIRED OR REPLACED AS DIRECTED/APPROVED BY THE ENGINEER. THE REPAIRS OR REPLACEMENTS SHALL BE MADE BY THE CONTRACTOR AT THE CONTRACTOR'S EXPENSE; THEREFORE, ANY EXISTING DEFECTS TO THE CTB'S HAVE TO BE REPORTED BY THE CONTRACTOR TO THE ENGINEER TO DOCUMENT THE BARRIER'S CONDITION AT THE TIME OF LOADING. A SUFFICIENT NUMBER OF "DROP-IN" TYPE REBAR CONNECTORS HAVE TO BE FURNISHED BY THE CONTRACTOR.

COMMERCIALLY PRODUCED REFLECTOR TABS APPROVED BY THE ENGINEER SHALL BE PLACED ON TOP OF THE CTB'S AT 9 M INTERVALS. COST FOR FURNISHING AND PLACING TY C REFLECTOR TABS ON TOP OF CTB AND/OR SURFACE MOUNT FLEXIBLE DELINEATORS ON TOP OF LPCTB, IN ACCORDANCE WITH STATE STANDARD WZ(BD), IS CONSIDERED SUBSIDIARY TO THIS ITEM.

--ITEM 529--
CLASS "C" CONCRETE WILL BE REQUIRED FOR MACHINE EXTRUDED CURB.

CURB INLETS AND EXTENSIONS ARE BASED ON AN EXPOSED CURB HEIGHT OF 175 MM. IF THE TOP OF THE ROADWAY CURB IS NOT THE SAME AS THE TOP OF THE INLET, THE ROADWAY CURB HEIGHT WILL BE TRANSITIONED TO THE TOP OF INLET ELEVATIONS WITH A 1:40 TAPER.

--ITEM 531--
THE COLOR CONTRAST ON THE CURB RAMP REQUIRED BY STANDARD SHEET RAMP -00B WILL BE TERRA COTA. THE COLOR MAY BE APPLIED BY ADDING A DYE TO THE CONCRETE BEFORE THE RAMP IS POURED, A DYE ON THE SURFACE OF THE CONCRETE AFTER IT HAS BEEN POURED, BUT BEFORE IT SETS UP; OR A CONCRETE STAIN PLACED AFTER THE CONCRETE HAS CURED LONG ENOUGH TO ACCEPT THE STAIN. THE CONTRACTOR SHALL OBTAIN THE ENGINEER'S APPROVAL FOR THE METHOD SELECTED PRIOR TO PERFORMING THIS WORK. THE CONSTRUCTION PROCEDURE WILL BE IN ACCORDANCE WITH THE RECOMMENDATION OF THE MATERIAL MANUFACTURE. TO ENSURE THE RESULTING COLOR ON THE RAMP, THE CONTRACTOR MAY BE REQUIRED TO CONSTRUCT A 2X2 CONCRETE SAMPLE MADE WITH THE SAME MATERIAL BEING PROPOSED FOR THE RAMPS. THE WORK PERTAINING TO THE COLOR AND TEXTURE (GROOVES) CONTRAST OF THE CURB RAMP WILL NOT BE PAID FOR DIRECTLY, BUT WILL BE CONSIDERED SUBSIDARY TO THIS ITEM.

TRENCH DRAIN STRUCTURES FOR THIS ITEM SHALL BE NEENAH A-4999LX SERIES BOLTED TRANSVERSE DRAINAGE STRUCTURES, OR APPROVED EQUAL, TO CONFORM TO THE DIMENSIONS AS SHOWN ON THE PLANS, AS AVAILABLE FROM:

NEENAH FOUNDRY COMPANY
P.O. BOX 729

GENERAL NOTES AND SPECIFICATION DATA--

--ITEM 531--, CONT'D
NEENAH, WI 549576
(920) 725-7000

TRENCH COVER WILL BE A TYPE D, SOLID CHECKERED TOP, WITH A PERMA-GRIP OR NON-SLIP SURFACE.

THE TRENCH DRAIN STRUCTURE WILL NOT BE PAID FOR SEPARATELY, BUT SHALL BE CONSIDERED SUBSIDIARY TO THIS ITEM.

RAMP HANDRAILS ASSOCIATED WITH THE TRENCH DRAIN, AS SHOWN ON LAYOUT PLAN WILL NOT BE PAID FOR SEPARATELY, BUT SHALL BE CONSIDERED SUBSIDIARY TO THIS ITEM.

--ITEM 540--
TIMBER POSTS SHALL HAVE BEVELED TOPS AND SHALL NOT BE PAINTED.

GUARD FENCE POSTS TO BE PLACED IN PROPOSED AND/OR EXISTING AREAS OF RIPRAP, SIDEWALKS OR ANY OTHER CONCRETE SHALL HAVE A BLOCKED OUT AREA AT LEAST 300 MM LARGER THAN THE POST SIZE. AFTER THE GUARD FENCE IS INSTALLED, THE BLOCKED OUT AREA AROUND THE POST SHALL BE BACKFILLED WITH AN ASPHALTIC MIXTURE, APPROVED BY THE ENGINEER, FOR A DEPTH EQUAL TO THE CONCRETE DEPTH.

RAIL ELEMENTS, SALVAGED FROM THIS PROJECT UNDER ITEM 542 AND APPROVED BY THE ENGINEER, MAY BE USED UNDER THIS ITEM.

THE NOMINAL POST LENGTH SHALL BE 1830 MM INSTEAD OF THE 1695 MM DETAILED ON THE STATE STANDARD SHEET "METAL BEAM GUARD FENCE (MBGF)". THIS ADDITIONAL POST LENGTH IS REQUIRED FOR RAIL HEIGHT ADJUSTMENT ON A FUTURE ACP OVERLAY PROJECT.

--ITEM 610--
SPECIAL PROVISION 610-001 (METRIC) ALLOWS FOR THE USE OF PRE-APPROVED SHOP DRAWINGS FOR CERTAIN ILLUMINATION POLES. THE FOLLOWING SHOP DRAWINGS HAVE BEEN PRE-APPROVED AT THE TIME OF LETTING:

VALMONT METRIC DWG. NO. MDB00388 SHEET 1 OF 2, REVISED 1/20/99
VALMONT METRIC DWG. NO. MDB00388 SHEET 2 OF 2, REVISED 1/20/99

THE ENGINEER MAY ALLOW OTHER FABRICATOR'S SHOP DRAWINGS AND UPDATED (NEWER REVISION DATE) STANDARD SHOP DRAWINGS TO BE USED ON THIS PROJECT THAT HAVE BEEN APPROVED SINCE THE PROJECT LETTING DATE PROVIDED THAT THE STANDARD SHOP DRAWINGS CAN BE PROPERLY IDENTIFIED BY A LETTER OF



| F.R. DIV.6 | TEXAS | NH 2000(704) | , ETC | SHEET 12M |
|---|---|---|---|---|
| BEXAR | COUNTY | HWY LP 1604 | | CONT 2452-1-36, ETC |

GENERAL NOTES AND SPECIFICATION DATA--

--ITEM 610--, CONT'D
APPROVAL FROM THE TRAFFIC OPERATIONS DIVISION.

--ITEM 611--
WHEN THE EXISTING BALLAST IS LOCATED IN THE BASE OF THE ASSEMBLY, THIS BALLAST SHALL BE REMAIN THE PROPERTY OF THE STATE.

--ITEM 618--
IT MIGHT BE NECESSARY TO SAW CUT EXISTING CONCRETE AT SOME LOCATIONS FOR CONDUIT TO BE RUN TO THE PROPOSED LOCATION. THE EXISTING CONCRETE SHALL BE SAW CUT, REMOVED FROM THE WIRE FABRIC AND THE WIRE FABRIC CUT AND BENT TO ACCOMMODATE THE CONDUIT. AFTER THE CONDUIT HAS BEEN PLACED IN ITS FINAL POSITION, THE WIRE FABRIC SHALL BE BENT BACK TO ITS ORIGINAL POSITION AND THE TRENCH SHALL BE BACKFILLED WITH CL "A" CONCRETE. THIS WORK IS CONSIDERED SUBSIDARY TO THIS ITEM.

ALL POLYVINYL CHLORIDE CONDUIT (PVC) SHALL BE SCHEDULE 80.

--ITEM 620--
GROUNDING CONDUCTORS THAT SHARE THE SAME CONDUIT, JUNCTION BOX, GROUND BOX OR STRUCTURE SHALL BE BONDED TOGETHER AT EVERY ACCESSIBLE POINT IN ACCORDANCE WITH THE CURRENT NATIONAL CODE.

--ITEM 624--
GROUND BOXES SHALL BE AS SHOWN ON STATE STANDARD SHEET(S) "ELECTRICAL DETAILS ED(2)-98 (M). THE COVER SHALL BE CONSTRUCTED OF POLYMER CONCRETE.

CONCRETE APRONS SHALL BE PLACED AROUND ALL GROUND BOXES INSTALLED IN SEEDED / SODDED AREAS OR AS DIRECTED BY THE ENGINEER.

THE COVER SHALL BE LEGIBLY IMPRINTED WITH THE WORDS "DANGER HIGH VOLTAGE" AS REQUIRED BY STATE STANDARD SHEET(S) "ELECTRICAL DETAILS (ED)", IN 25 MM LETTERS. IN ADDITION, THE COVER SHALL ALSO INCLUDE THE WORDS "TRAFFIC SIGNAL", "TMS", "ILLUMINATION", OR OTHER ELECTRICAL SYSTEMS(S) BEING ADDRESSED BY THE GROUND BOX.

GROUND BOX LOCATIONS SHOWN ON THE PLANS ARE APPROXIMATE. IF POSSIBLE, THE GROUND BOXES SHOULD NOT BE PLACED IN SIDEWALKS OR DRIVEWAYS. ALTERNATE LOCATIONS SHALL BE AS DIRECTED/APPROVED BY THE ENGINEER.

GENERAL NOTES AND SPECIFICATION DATA--

--ITEM 628--
EACH SIGNAL INSTALLATION WILL REQUIRE A 120/240 VOLT ELECTRICAL POWER SERVICE. THE ENTIRE SIGNAL SYSTEM SHALL BE CONTINUOUSLY GROUNDED WITH A 1/C#6 SOLID BARE A.W.G. FROM SERVICE TO THE CONTROLLER AND FROM THE CONTROLLER TO THE SIGNAL POLES.

THE PROPOSED ELECTRICAL SERVICE SHALL BE CONSTRUCTED AS SHOWN ON APPLICABLE STATE STANDARD SHEET(S) "ELECTRICAL DETAILS (ED)"; AND AS SHOWN BELOW IN THE "ELECTRICAL SERVICE DATA SUMMARY"; AND IN ACCORDANCE WITH THIS ITEM. THE CONTRACTOR SHALL BE RESPONSIBLE FOR MAKING ALL ARRANGEMENTS FOR ELECTRICAL SERVICE AND COMPLIANCE WITH LOCAL STANDARDS AND PRACTICES FOR PROPER INSTALLATIONS.

ELECTRICAL SERVICE DATA SUMMARY

| | |
|---|---|
| LOCATION: | ALL TRAFFIC SIGNALS (5 LOCATIONS) |
| TYPE: | SERVICE POLE TYPE T(120/240)000(NS)GS(N)TP(O) |
| SERVICE CONDUIT: | 32 MM RMC |
| SERVICE CONDUCTORS: | 3/#4 |
| SAFETY SWITCH: | N/A |
| MAIN DISCONNECT: | N/A |
| TWO POLE CONTACTOR AMPS: | N/A |
| PANEL LOAD CENTER: | 70 AMP |
| BRANCH CIRCUIT BREAKERS: | 1 POLE/50 AMP |
| KVA: | <7.1 |

THE DISCONNECT OPERATING HANDLE FOR THE SERVICE ENCLOSURE SHALL BE FLANGE MOUNTED, NOT DOOR MOUNTED AND WILL LATCH THE DOOR WHEN THE SWITCH IS IN THE CLOSED POSITION. THE HANDLE SHALL BE LOCKABLE IN BOTH OPEN AND CLOSED POSITIONS.

STATE STANDARD ED(3)-98(M) REQUIRES THAT THE ENCLOSURE AND DISCONNECT COMBINATION BE RATED AS SERVICE ENTRANCE EQUIPMENT. THE MERE ASSEMBLAGE OF UL LISTED COMPONENTS DOES NOT MEET THIS REQUIREMENT AND WILL NOT BE ACCEPTED. THE ENCLOSURE AND DISCONNECT COMBINATION MUST HAVE A UL LABEL STATING "ENCLOSED INDUSTRIAL CONTROL PANEL" OR OTHER WORDING INDICATING THAT THE PANEL ASSEMBLY IS UL LISTED.

--ITEM 649--
TRAFFIC SIGN FACILITY INVENTORY WILL BE REQUIRED PRIOR TO THE COMMENCEMENT OF ANY WORK BY THE CONTRACTOR.

THE SIGN FACILITY INVENTORY SHALL SHOWN SIGN TYPE, SIZE, CONDITION, AND LOCATION.



| F.R. DIV.6 | TEXAS | NH 2000(704) | , ETC | SHEET 12N |
|---|---|---|---|---|
| BEXAR | COUNTY | HWY LP 1604 | CONT 2452-1-36, ETC | |

GENERAL NOTES AND SPECIFICATION DATA--

--ITEM 649--, CONT'D

THE SIGN FACILITIES INVENTORY SHALL BE CONDUCTED BY THE CONTRACTOR WITH THE ENGINEER PRESENT AND JOINTLY AGREED UPON.

ALL TRAFFIC SIGNS TO BE SALVAGED FOR RELOCATION SHALL BE STORED IN THE CONTRACTOR'S YARD AS DIRECTED/APPROVED BY THE ENGINEER.

--ITEM 656--
THE FOUNDATION FOR THE CONTROLLER ASSEMBLY SHALL BE PROVIDED BY THE CONTRACTOR USING THE ANCHOR BOLTS AND TEMPLATE SUPPLIED BY THE STATE. THE CONTRACTOR SHALL DEMONSTRATE TO THE ENGINEER'S SATISFACTION THAT THE FIELD WIRING IS PROPERLY INSTALLED AND THE STATE SHALL THEN INSTALL THE CONTROLLER ASSEMBLY ON THE COMPLETED FOUNDATION. THE STATE WILL CONNECT THE FIELD WIRING TO THE CONTROLLER, SET UP, AND TURN ON THE CONTROLLER.

--ITEM 662--
WORK ZONE MARKER TABS OR GUIDEMARKS PLACED PRIOR TO THE FINAL COURSE OF ASPHALTIC CONCRETE PAVEMENT OR SURFACE TREATMENT SHALL BE REMOVED DAILY BY THE CONTRACTOR AS THE ACP OPERATIONS PROGRESS. THIS REMOVAL SHALL BE CONSIDERED SUBSIDIARY TO THIS ITEM.

WHEN GUIDEMARK TABS ARE SET-UP IN THE PLANS TO BE USED ALONG WITH SHORT TERM MARKER TABS (THAT ARE PAID FOR BY THE EACH), THE GUIDEMARKS WILL NOT BE PAID FOR UNDER THEIR OWN ITEM BUT WILL BE INCLUDED WITH THE SHORT TERM PAY ITEM. THE CONTRACTOR STILL HAS TO INSTALL THE GUIDEMARKS IMMEDIATELY FOLLOWING THE FINAL ROLLING OF THE ACP IN ACCORDANCE WITH ITEM 662 AND THE STATE STANDARD SHEET(S) "BARRICADE AND CONSTRUCTION (BC)". THE SHORT TERM TABS CAN BE INSTALLED AT THE SAME TIME AS THE GUIDEMARK TABS.

--ITEM 666--
TY I MATERIAL SHALL BE TY B-ALKYD AS SPECIFIED IN DEPARTMENT MATERIALS SPECIFICATION D-9-8220.

AFTER THE SURFACE HAS CURED FOR TWO (2) DAYS, BEEN CLEANED AND PREPARED ACCORDING TO THE SPECIFICATIONS AND TO THE SATISFACTION OF THE ENGINEER, ALL MARKINGS SHALL BE APPLIED IN ACCORDANCE WITH THE PLANS, TEXAS MUTCD AND AS DIRECTED/APPROVED BY THE ENGINEER. THE THERMOPLASTIC MARKINGS MAY BE APPLIED DIRECTLY OVER EXISTING PAINTED PAVEMENT MARKINGS WHERE APPLICABLE.

GENERAL NOTES AND SPECIFICATION DATA--

--ITEM 666--, CONT'D
THE THERMOPLASTIC MARKINGS SHALL BE APPLIED SO AS TO CONSTANTLY MAINTAIN A TRUE AND ACCEPTABLE ALIGNMENT THROUGHOUT BOTH STRAIGHT AND HORIZONTALLY CURVED SECTIONS OF HIGHWAY. THIS ALIGNMENT SHALL BE SET BY THE CONTRACTOR AND SHALL BE IN ACCORDANCE WITH THE PLANS AND/OR AS DIRECTED/APPROVED BY THE ENGINEER.

EQUIPMENT USED SHALL BE CAPABLE OF PLACING A ONE HUNDRED MILLIMETER (100 MM) AND/OR TWO HUNDRED MILLIMETER (200 MM) SOLID OR BROKEN LINE AND SHALL BE CAPABLE OF PLACING A MINIMUM OF 18,000 METERS OF MARKING PER WORK DAY. THE EQUIPMENT SHALL BE CONSIDERED IN UNSATISFACTORY WORKING CONDITION IF IT FAILS TO HAVE AN AVERAGE HOURLY PLACEMENT RATE OF 2,100 METERS OF ACCEPTABLE ONE HUNDRED MILLIMETER (100 MM) AND/OR TWO HUNDRED MILLIMETER (200 MM) OF SOLID OR BROKEN LINES OVER FIVE CONSECUTIVE WORKING DAYS OF SEVEN HOURS OR MORE DUE TO EQUIPMENT MALFUNCTION.

THE MINIMUM THICKNESS OF TYPE I MARKINGS, AS MEASURED ON A FLAT PLATE BY MICROMETER OR SIMILAR DEVICE SHALL BE 3.0 MM (120 MILS) FOR ALL STOP BARS, CROSS WALKS, LEGENDS AND SYMBOLS. THE THICKNESS FOR ALL OTHER LINES (LANE, EDGE, NO PASSING, ETC.) SHALL BE 0.09 INCHES (90 MILS). THESE THICKNESSES ARE REQUIRED FOR THE FULL WIDTH AND LENGTH OF THE LINE BEING PLACED.

IF TY II MARKINGS ARE USED AS THE SEALER FOR THE TY I MARKINGS, THE TY II MARKINGS SHALL BE PLACED A MINIMUM OF 14 CALENDAR DAYS IN ADVANCE OF THE TY I MARKINGS. THE CONTRACTOR HAS THE OPTION OF USING AN ACRYLIC SEALER (MEETING THE REQUIREMENTS AS SHOWN IN THE SPECIAL PROVISION TO THIS ITEM) INSTEAD OF THE TYPE II MARKINGS AS A SEALER.

--ITEM 672--
RAISED PAVEMENT MARKERS SHALL NOT BE PLACED UNTIL THE ASPHALTIC CONCRETE PAVEMENT OR SURFACE TREATMENT HAS CURED A MINIMUM OF 48 HOURS.

THE BITUMINOUS ADHESIVE SHALL BE HEATED WITH EQUIPMENT APPROVED BY THE ENGINEER. THE EQUIPMENT SHALL BE CAPABLE OF HEATING AND MAINTAINING THE ADHESIVE AT A TEMPERATURE OF 200 DEGREES C, PLUS OR MINUS 5 DEGREES OR IN ACCORDANCE WITH THE MANUFACTURE'S RECOMMENDED TEMPERATURE. IT SHALL ALSO BE CAPABLE OF AGITATING THE MATERIAL TO MAINTAIN A UNIFORM CONSISTENCY AND TEMPERATURE.

IF ANY ADHESIVE IS BURNED DUE TO OVERHEATING, IT SHALL BE REPLACED AT THE CONTRACTOR'S EXPENSE. THE ADHESIVE WILL BE PACKAGED IN CARDBOARD CONTAINERS WITH A MASS LESS THAN 45 KG.





GENERAL NOTES AND SPECIFICATION DATA--

--ITEM 672--, CONT'D

ADHESIVE DISPENSING EQUIPMENT SHALL BE TRUCK OR TRAILER MOUNTED. ALL ADHESIVE MATERIAL SHALL BE PLACED DIRECTLY FROM THE HEATED DISPENSER TO THE PAVEMENT. PORTABLE OR NON-HEATED CONTAINERS WILL NOT BE ALLOWED FOR THE PLACEMENT OF THE ADHESIVE MATERIAL.

THE ADHESIVE APPLICATION SHALL BE OF SUFFICIENT THICKNESS SO THAT WHEN THE MARKERS ARE PRESSED INTO THE ADHESIVE, 3 MM OR MORE ADHESIVE WILL REMAIN UNDER 100% OF THE MARKER. THE ADHESIVE SHOULD EXTEND NOT LESS THAN 10 MM BUT NOT MORE THAN 40 MM BEYOND THE PERIMETER OF THE MARKER.

--ITEM 677--
ELIMINATION OF EXISTING THERMOPLASTIC PAVEMENT MARKINGS WILL CONSIST OF A MECHANICAL METHOD APPROVED BY THE ENGINEER (677.3(4)) FOLLOWED BY THE PLACEMENT OF A SURFACE TREATMENT (677.3(1)(2)).

--ITEM 680--
EXCEPT FOR THE CONTROLLER, WORK UNDER THIS ITEM SHALL CONSIST OF FURNISHING AND INSTALLING ALL REQUIRED MATERIALS AND EQUIPMENT NECESSARY FOR THE COMPLETE UPGRADING OF THE EXISTING TRAFFIC SIGNALS AT THE FOLLOWING INTERSECTIONS:

LP 1604 @ CULEBRA RD.
LP 1604 @ MILITARY DR.
LP 1604 @ POTRANCO RD.
LP 1604 @ MARBACH RD.
LP 1604 @ US HWY 90

AND FOR THE COMPLETE OPERATING TRAFFIC SIGNAL INSTALLATION AT THE FOLLOWING INTERSECTONS:

LP 1604 @ S.H. 151

ANY SIGNAL EQUIPMENT DAMAGED DURING CONSTRUCTION SHALL BE REPLACED IN IT'S ENTIRETY BY THE CONTRACTOR AT THEIR EXPENSE.

FOR THIS PROJECT, THE COMPLETE CONTROLLER ASSEMBLY AND CABINET WILL BE PROVIDED BY THE STATE. THE CONTRACTOR SHALL INSTALL ALL OTHER EQUIPMENT, FOUNDATIONS, AND PROPERLY LABELED FIELD WIRING IN ACCORDANCE WITH THE PLANS.

GENERAL NOTES AND SPECIFICATION DATA--

--ITEM 680--, CONT'D
ALL PERMANENT SMALL TRAFFIC SIGNAL RELATED SIGNS SHALL BE FURNISHED BY THE STATE AND INSTALLED BY THE CONTRACTOR. THE CONTRACTOR SHALL PROVIDE ALL NECESSARY HARDWARE FOR MOUNTING. THE COST OF ERECTING THESE SIGNS SHALL BE CONSIDERED SUBSIDIARY TO VARIOUS TRAFFIC SIGNAL BID ITEMS.

UNTIL THE PROJECT IS COMPLETED AND ACCEPTED, THE CONTRACTOR WILL BE RESPONSIBLE FOR THE MAINTENANCE OF THE TRAFFIC SIGNALS. THE CONTRACTOR SHALL ENSURE THAT ALL ELEMENTS OF THE TRAFFIC SIGNALS, EXTERNAL OF THE CONTROLLER, REMAIN IN OPERATION AT THEIR EXPENSE. THE CONTRACTOR SHALL COMPLETE ANY REPAIRS TO THE TRAFFIC SIGNALS WITHIN FOUR HOURS AFTER NOTIFICATION.

THE CONTRACTOR'S ATTENTION IS DIRECTED TO THE FACT THAT BOTH OVERHEAD AND UNDERGROUND UTILITY INSTALLATIONS EXIST IN THE VICINITY OF THIS CONSTRUCTION. THE EXACT LOCATION OF UNDERGROUND UTILITIES IS NOT CERTAIN. THE CONTRACTOR SHALL CONTACT THE AREA UTILITY COMPANIES FOR EXACT LOCATIONS OF UNDERGROUND UTILITIES AT LEAST 48 HOURS PRIOR TO DRILLING FOR FOUNDATIONS OR COMMENCING ANY WORK THAT MIGHT AFFECT PRESENT UTILITIES. THE LOCATIONS SHOWN ON THE PLANS FOR SIGNAL POLE FOUNDATIONS, CONTROLLER FOUNDATIONS, CONDUIT AND OTHER ITEMS MAY BE VARIED TO MEET LOCAL CONDITIONS, SUBJECT TO PRIOR APPROVAL BY THE ENGINEER. THE CONTRACTOR SHALL BE RESPONSIBLE FOR ADJUSTMENTS IN PROJECT CONSTRUCTION WHICH MAY BE NECESSARY BECAUSE OF CONFLICT WITH UTILITIES.

A CONTINUOUS BARE OR GREEN INSULATED COPPER WIRE NO. 8 AWG OR LARGER SHALL BE INSTALLED IN EVERY CONDUIT THROUGHOUT THE ELECTRICAL SYSTEM IN ACCORDANCE WITH ITEM 680, THE ELECTRICAL DETAIL SHEETS, AND THE LATEST EDITION OF THE NATIONAL ELECTRICAL CODE.

--ITEM 682--
ALL TRAFFIC SIGNAL SECTIONS SHALL BE MADE OF POLYCARBONATE RESIN AND SHALL BE BY THE SAME MANUFACTURER.

ALL TRAFFIC AND PEDESTRIAN SIGNAL FACES SHALL BE COVERED SO THAT THE SIGNAL FACES CANNOT BE SEEN FROM THE TIME OF INSTALLATION UNTIL PLACED IN OPERATION.

ALL PEDESTRIAN SIGNAL FACES SHALL BE SINGLE SECTION INCANDESCENT TYPE. DIE CAST POLYCARBONATE WILL BE AN ACCEPTABLE MATERIAL IN LIEU OF DIE CAST ALUMINUM. ALL MOUNTING ATTACHMENTS SHALL BE CONSTRUCTED OF STEEL PIPE AND SHALL BE MOUNTED AS SHOWN ON THE PLANS. THE PEDESTRIAN SIGNAL SHALL DISPLAY THE SYMBOLIZED MESSAGE AS SHOWN ON THE PLANS.



| F.R. DIV.6 | TEXAS | NH 2000 (704) | , ETC | SHEET 12P |
|---|---|---|---|---|
| BEXAR | COUNTY | HWY LP 1604 | CONT 2452-1-36, ETC | |

GENERAL NOTES AND SPECIFICATION DATA--

--ITEM 682--, CONT'D

AS APPROVED BY THE ENGINEER, THE CONTRACTOR SHALL FURNISH AND SUPPLY LAMPS THAT WILL FULLY ILLUMINATE THE ENTIRE FACE OF THE SIGNAL SECTION.

FOR ALL PROPOSED MAST ARM POLE ASSEMBLIES, MOUNTING BRACKET ASSEMBLY OPTION "B" AS SHOWN ON THE STATE STANDARD SHEET(S) "SINGLE MAST ARM ASSEMBLIES (SMA)" SHALL BE SUPPLIED BY THE CONTRACTOR.

--ITEM 684--
FOR EACH CABLE TERMINATING IN THE CONTROLLER CABINET AN EXTRA 3 M LENGTH SHALL BE PROVIDED. ALL CABLES SHALL BE CONTINUOUS WITHOUT SPLICES FROM TERMINAL POINT TO TERMINAL POINT OR AS DIRECTED/APPROVED BY THE ENGINEER. ALL PROPOSED SIGNAL CABLE SHALL BE #12 A.W.G. STRANDED COPPER. THE NUMBER OF CONDUCTORS REQUIRED SHALL BE AS SHOWN ON THE PLANS.

--ITEM 684 & 688--
ADDITIONAL SPECIFICATIONS FOR THE LOOP WIRE AND LOOP DETECTOR CABLE SHALL BE AS SHOWN ON THE CONSTRUCTION DETAIL SHEET.

--ITEM 686--
ALL STEEL POLE ASSEMBLIES AND PEDESTAL POLES FURNISHED BY THE CONTRACTOR SHALL BE BY THE SAME MANUFACTURER.

--ITEM 688--
IN LIEU OF THE SEALANT SPECIFIED UNDER SPECIAL SPECIFICATION "VEHICLE LOOP WIRE SEALANT", A SEALANT APPROVED BY THE ENGINEER MAY BE USED.

THE PEDESTRIAN PUSH BUTTON SHALL BE RAISED OR FLUSH AND BE A MINIMUM OF 51 MM IN THE SMALLEST DIMENSION. THE FORCE TO ACTIVATE THE CONTROL SHALL BE NO GREATER THAN 22 N.

THE PEDESTRIAN PUSH BUTTON SHALL BE WIRED WITH A 2/C#14 LOOP DETECTOR CABLE IN LIEU OF A #12 A.W.G. XHHW WIRE.

--ITEM 3117--
SURFACE TEST TYPE A (STRAIGHTEDGE) SHALL BE USED.

GENERAL NOTES AND SPECIFICATION DATA--

--ITEM 3117--, CONT'D
NO COMMERCIAL OR CONTRACTOR'S R.A.P. WILL BE ALLOWED IN THE MIXTURE UNLESS APPROVED OTHERWISE BY THE ENGINEER.

THE LONGITUDINAL JOINTS IN ONE LIFT SHALL BE OFFSET FROM THE PREVIOUS LIFT BY APPROXIMATELY 75 MM; HOWEVER, THE JOINTS IN THE TOP LIFT SHALL BE AT THE LANE LINES OR AS DIRECTED/APPROVED BY THE ENGINEER.

THE ASPHALT PLANT SHALL BE EQUIPPED WITH TRUCK SCALES AS DEFINED IN ITEM 520.3(1) OF THE STANDARD SPECIFICATIONS. THREE MASS TICKETS BEARING THE DATE, THE TRUCK NUMBER AND THE GROSS, NET AND TARE MASS SHALL BE GIVEN TO THE TRUCK DRIVER BY THE CONTRACTOR'S OR ASPHALT PLANT PERSONNEL, AND THEN GIVEN TO THE STATE INSPECTOR AT THE SPREADING AND FINISHING MACHINE. THE CONTRACTOR MAY BE REQUIRED TO WEIGH LOADS OF ASPHALTIC CONCRETE ON PUBLIC SCALES OR PORTABLE PLATFORM SCALES TO INSURE THE PROPER MASS OF MATERIAL.

THE DENSITY AND AGGREGATE CLASSIFICATION REQUIREMENTS FOR THE MAINLANES SHALL ALSO APPLY TO THE SHOULDERS.

THE MINIMUM SURFACE AGGREGATE CLASSIFICATION REQUIRED SHALL BE CLASS "B".

THE CONTRACTOR WILL BE REQUIRED TO SUBMIT A COPY OF THE TEX 233-F PRODUCTION CHARTS TO THE ENGINEER ON A WEEKLY BASIS. AT THE END OF THE ACP WORK, ALL THE PRODUCTION CHART ORIGINALS SHALL BE PROVIDED BY THE CONTRACTOR OR THE CONTRACTOR'S ACP PRODUCER TO THE ENGINEER.

CRUSHING OF THE AGGREGATE FOR HOT MIX AND IMMEDIATE USE FOR PRODUCTION OF THE MIX WILL NOT BE ALLOWED. THE AGGREGATE SHALL BE STOCKPILED UNTIL ENOUGH MATERIAL IS AVAILABLE FOR FIVE (5) DAYS OF HOT MIX PRODUCTION UNLESS PRIOR WRITTEN APPROVAL IS PROVIDED BY THE ENGINEER.

IN ORDER TO PROVIDE ADEQUATE TIME FOR DESIGN AND VERIFICATION OF THE MIX, A PRE-PLACEMENT MEETING SHALL BE HELD AT LEAST ONE MONTH PRIOR TO THE PLACEMENT OF THE HOT MIX.

THE MAIN PURPOSE OF HOT MIX CORES TAKEN BY THE STATE ARE FOR PAYMENT CALCULATIONS. IF (FOR QUALITY CONTROL PURPOSES) THE CONTRACTOR WANTS THE CORE INFORMATION SOONER THAN THE STATE CAN PROVIDE THESE RESULTS, THE CONTRACTOR SHOULD TAKE ADDITIONAL CORES FOR THEIR USE.

THE USE OF DIESEL AND/OR SOLVENTS AS ASPHALT RELEASE AGENTS IN THE PRODUCTION, TRANSPORTATION, AND/OR CONSTRUCTION OF THE HOT MIX APHALTIC CONCRETE IS PROHIBITED. ONLY APPROVED ASPHALT RELEASE AGENTS SHALL BE USED, THE APPROVED LIST MAY BE OBTAINED FROM THE DISTRICT LABORATORY





GENERAL NOTES AND SPECIFICATION DATA--

--ITEM 3117--, CONT'D
ENGINEER.

THE SPREADING AND FINISHING MACHINE SHALL BE EQUIPPED WITH AN APPROVED AUTOMATIC DUAL LONGITUDINAL SCREED CONTROL SYSTEM AND AUTOMATIC TRANSVERSE SCREED CONTROL SYSTEM. THE LONGITUDINAL CONTROLS SHALL BE CAPABLE OF OPERATING FROM ANY LONGITUDINAL GRADE REFERENCE INCLUDING A STRINGLINE, SKI, MOBILE STRINGLINE, OR MATCHING SHOE.

THE CONTRACTOR SHALL FURNISH ALL EQUIPMENT REQUIRED FOR GRADE REFERENCE. IT SHALL BE MAINTAINED IN GOOD OPERATING CONDITION BY PERSONNEL TRAINED IN THE USE OF THIS TYPE OF EQUIPMENT.

THE GRADE REFERENCE USED BY THE CONTRACTOR MAY BE OF ANY TYPE APPROVED BY THE ENGINEER. CONTROL POINTS, IF REQUIRED BY THE PLANS, SHALL BE ESTABLISHED FOR THE FINISHED PROFILE IN ACCORDANCE WITH ITEM 5, "CONTROL OF THE WORK". THESE POINTS SHALL BE SET AT INTERVALS NOT TO EXCEED 15 METERS. THE CONTRACTOR SHALL SET THE GRADE REFERENCE FROM THE CONTROL POINTS. THE GRADE REFERENCE SHALL HAVE SUFFICIENT SUPPORT SO THAT THE MAXIMUM DEFLECTION SHALL NOT EXCEED TWO (2) MILLIMETERS BETWEEN SUPPORTS.

--ITEM 4156--
THE FLOWABLE BACKFILL USED FOR BACKFILLING PIPES WILL NOT REQUIRE A SHRINKAGE COMPENSATOR.

STRENGTH OF THE FLOWABLE BACKFILL WILL BE VERIFIED BY OUR DISTRICT LABORATORY, FIELD TESTING WILL NOT BE REQUIRED, UNLESS IT IS DEEMED NECESSARY BY THE ENGINEER.

--ITEM 5162--
THE CONTRACTOR SHALL PROVIDE TO THE ENGINEER 2 TRANSPORTABLE CELLULAR TELEPHONE(S) FOR USE BY STATE INSPECTION PERSONNEL. THE PAYMENT TO THE CONTRACTOR WILL BE MADE BY THE ITEM 9.4 "FORCE ACCOUNT" PROCEDURE.

--ITEM 6003--
IN LIEU OF A SEALANT SPECIFIED UNDER THIS SPECIAL SPECIFICATION, A SEALANT APPROVED BY THE ENGINEER MAY BE USED FOR WORK UNDER ITEM 688.

--ITEM 6008--
ALL EXISTING SIGNAL EQUIPMENT AT THE INTERSECTIONS OF MILITARY DR WEST, POTRANCO ROAD, MARBACH ROAD AND U.S. 90, , WITH THE EXCEPTION OF THE

GENERAL NOTES AND SPECIFICATION DATA--

--ITEM 6008--, CONT'D
TRAFFIC SIGNAL CONTROLLER, REMOVED FROM THIS PROJECT SHALL REMAIN THE PROPERTY OF THE CONTRACTOR. THE CONTRACTOR SHALL DELIVER THE TRAFFIC SIGNAL CONTROLLER TO THE TEXAS DEPARTMENT OF TRANSPORTATION SIGNAL SHOP LOCATED AT 4615 NW LOOP 410, SAN ANTONIO, TEXAS.

A PRE-CONSTRUCTION TRAFFIC SIGNAL FACILITY AND TRAFFIC SIGN FACILITY INVENTORY WILL BE REQUIRED PRIOR TO THE COMMENCEMENT OF ANY WORK BY THE GENERAL CONTRACTOR AT THE INTERSECTION OF LOOP 1604 AT CULEBRA RD.

THE INVENTORY WILL LIST THE QUALITY AND CONDITION OF THE EQUIPMENT WHICH IS TO BE SALVAGED AND RETURNED TO THE CITY. THIS INVENTORY SHALL INCLUDE, BUT IS NOT LIMITED TO THE FOLLOWING EQUIPMENT AND MATERIALS:

- PEDESTRIAN SIGNAL HEADS
- TRAFFIC SIGNAL SECTIONS
- SERVICE BOX
- SIGNAL MOUNTING HARDWARE
- STEEL SIGNAL POLES AND MAST ARMS
- PEDESTRIAN PUSH BUTTONS AND SIGNS
- TRAFFIC SIGNAL CONTROLLER AND CABINET (ALL EQUIPMENT AND ACCESORIES LOCATED WITHIN THE CONTROLLER CABINET)
- METAL SPLICE BOXES
- SERVICE PEDESTALS
- PIPE POST
- STANDARD AND TRANSFORMER BASES
- BACKPLATES
- TRAFFIC SIGNAL LAMPS

THE SIGN INVENTORY SHALL SHOW SIGN TYPE, SIZE, CONDITION AND LOCATION.

BOTH THE SIGNAL AND SIGN FACILITIES INVENTORY SHALL BE CONDUCTED WITH THE CONTRACTOR AND ENGINEER PRESENT AND JOINTLY AGREED TO.

ALL TRAFFIC SIGNAL AND TRAFFIC SIGN EQUIPMENT AND MATERIALS FOR THE INTERSECTION OF CULEBRA ROAD TO BE SALVAGED SHALL BE RETURNED TO THE CITY OF SAN ANTONIO'S TRAFFIC OPERATIONS FACILITY AT 223 S. CHERRY STREET. THE TRAFFIC OPERATIONS ENGINEER MAY BE CONTACTED AT (210) 207-7765 TO SCHEDULE RETURNS.

NON-SALVAGE ITEMS SUCH AS WOOD POLES AND CABLE SHALL BE DISPOSED OF BY THE CONTRACTOR IN A MANNER IN ACCORDANCE WITH THE LOCAL , STATE AND/OR FEDERAL E.P.A. REQUIREMENTS.

--ITEM 6116--
ALL VIVDS EQUIPMENT SHALL REMAIN THE PROPERTY OF THE STATE. AFTER THE VIVDS IS NO LONGER REQUIRED, THE CONTRACTOR SHALL RETURN ALL EQUIPMENT TO MR. GILBERT MEIER WITH THE DISTRICT TRAFFIC SIGNAL SHOP OPERATIONS AT (210) 615-5975.

# ESTIMATE SUMMARY

| BEXAR COUNTY 2452-1-36, ETC WATER AND SEWER | | BEXAR COUNTY 2452-1-36, ETC BRIDGES | | BEXAR COUNTY 2452-1-36, ETC ROADWAY ITEMS | | ALT. | ITEM-CODE | | | DESCRIPTION | UNIT | TOTAL | |
|---|---|---|---|---|---|---|---|---|---|---|---|---|---|
| EST. | FINAL | EST. | FINAL | EST. | FINAL | | ITEM NO | DESC CODE | SP NO | | | EST. | FINAL |
| | | | | 14.290 | | | 100 | 5002 | | PREP ROW | KM | 14.290 | |
| | | | | 33.000 | | | 104 | 5017 | | REMOV CONC (DRCTN ISL) | M2 | 33.000 | |
| | | | | 937297.000 | | | 110 | 5001 | | EXCAVATION (RDWY) | M3 | 937297.000 | |
| | | 48330.000 | | | | | 110 | 5002 | | EXCAVATION (CHAN) | M3 | 48330.000 | |
| | | | | 417448.000 | | | 132 | 5018 | | EMBANK (ORD COMP) (TY B) (CL 3) | M3 | 417448.000 | |
| | | | | 50.000 | | | 150 | 5003 | | BLADING | H | 50.000 | |
| | | | | 50.000 | | | 156 | 5003 | | BLDZR WORK (ORD COMP) (TY A) | H | 50.000 | |
| | | | | 708736.000 | | | 160 | 5002 | | FURN AND PLAC TPSL (CL 2) (150 MM) | M2 | 708736.000 | |
| | | | | 708736.000 | | | 164 | 5025 | 002 | BRDCST SEED (PERM) (URBAN) (CLAY) | M2 | 708736.000 | |
| | | | | 204116.000 | | | 168 | 5001 | | VEGETATIVE WATERING | KL | 204116.000 | |
| | | | | 35.000 | | | 192 | 5281 | | CEDAR ELM (MIN 50 MM CAL) (CNTR) | EA | 35.000 | |
| | | | | 35.000 | | | 192 | 5325 | | LIVE OAK (MIN 50 MM CAL) (CNTR) | EA | 35.000 | |
| | | | | 36.000 | | | 192 | 5581 | | LACEY OAK (CTR NM 10) | EA | 36.000 | |
| | | | | 4.000 | | | 193 | 5001 | | PLANT MAINTENANCE | MO | 4.000 | |
| | | | | 73.000 | | | 193 | 5003 | | VEGETATIVE WATERING | KL | 73.000 | |
| | | | | 129468.000 | | | 247 | 5024 | 007 | FL BS (COMPL IN PLAC) (TY A GR6 CL 4) | M3 | 129468.000 | |
| | | | | 199046.000 | | | 310 | 5006 | | ASPH MATL (AE-P) | L | 199046.000 | |
| | | | | 4192.000 | | | 316 | 5028 | 001 | AGGR (TY PB, GR 4) | M3 | 4192.000 | |
| | | | | 626992.000 | | | 316 | 5226 | 001 | ASPH (AC-15P, HFRS-2P OR CRS-2P) | L | 626992.000 | |
| | | | | 61984.000 | | | 345 | 5004 | 002 | ASPH STAB BS (GR 4) | MGR | 61984.000 | |
| | | | | 283.600 | | | 351 | 5006 | | REPAIR EXIST FLEX PAV STRUCT (200 MM) | M2 | 283.600 | |
| | | | | 14009.000 | | | 354 | 5006 | 004 | PLANE ASPH CONC PAV (0 - 40 MM) | M2 | 14009.000 | |
| | | | | 1.000 | | | 354 | 5053 | 004 | SALV MATRL (CREDIT ITEM) | LS | 1.000 | |
| | | 315.300 | | 1911.800 | | | 400 | 5007 | 001 | CEM STABIL BKFL | M3 | 2227.100 | |
| | | 377.100 | | 410.000 | | | 400 | 5008 | 001 | CUT & RESTORING PAV | M2 | 787.100 | |
| | | 33.000 | | 2471.100 | | | 402 | 5001 | | TRENCH EXCAV PROTECTION | M | 2504.100 | |
| | | | | 2600.000 | | | 403 | 5001 | | TEMPORARY SPL SHORING | M2 | 2600.000 | |
| | | 964.900 | | | | | 416 | 5006 | 003 | DRILL SHAFT (900 MM) | M | 964.900 | |
| | | 272.400 | | | | | 420 | 5013 | 009 | CL C CONC (ABUT) | M3 | 272.400 | |
| | | 583.100 | | | | | 420 | 5014 | 009 | CL C CONC (BENT) | M3 | 583.100 | |
| | | | | 52.900 | | | 420 | 5050 | | CL C CONC (RAIL FOUNDATION) | M3 | 52.900 | |
| | | 12869.500 | | | | | 422 | 5001 | | REINF CONC SLAB | M2 | 12869.500 | |
| | | 5484.100 | | | | | 425 | 5006 | 001 | PRESTR CONC BEAM (TY IV) | M | 5484.100 | |
| | | 12323.000 | | | | | 428 | 5001 | 002 | CONC SURF TREAT | M2 | 12323.000 | |
| | | 1861.200 | | 3419.100 | | | 432 | 5001 | | RIPRAP (CONC) (CL B) | M3 | 5280.300 | |
| | | 4.000 | | | | | 444 | 5003 | | PROTECT ANGLE W/SIGN BRACKETS | EA | 4.000 | |
| | | 4.000 | | | | | 444 | 5005 | | SIGN & BRACKET | EA | 4.000 | |
| | | 38.000 | | | | | 450 | 5011 | | RAIL (TY T6) | M | 38.000 | |
| | | 287.100 | | | | | 450 | 5016 | | RAIL (TY C202) | M | 287.100 | |
| | | | | 114.000 | | | 450 | 5027 | | RAIL (CURB RAMP HANDRAIL) | M | 114.000 | |
| | | 1105.600 | | 180.000 | | | 450 | 5045 | | RAIL (TY SSTR) | M | 1285.600 | |
| | | 308.700 | | | | | 450 | 5060 | | RAIL (TY PR1) | M | 308.700 | |
| | | 494.100 | | | | | 450 | 5125 | | RAIL (TY T202) (MOD) | M | 494.100 | |
| | | | | 25.400 | | | 452 | 5014 | | REMOV RAIL (TY T1) | M | 25.400 | |
| | | 231.600 | | | | | 454 | 5006 | | SEALED EXPAN JTS (75MM OR 100MM) (TY A) | M | 231.600 | |
| | | | | 17.600 | | | 462 | 5006 | 001 | CONC BOX CULV (1500 MM X 600 MM) | M | 17.600 | |
| | | | | 982.572 | | | 462 | 5007 | 001 | CONC BOX CULV (1500 MM X 900 MM) | M | 982.572 | |
| | | | | 296.322 | | | 462 | 5008 | 001 | CONC BOX CULV (1500 MM X 1200 MM) | M | 296.322 | |
| | | | | 180.086 | | | 462 | 5013 | 001 | CONC BOX CULV (1800 MM X 900 MM) | M | 180.086 | |
| | | 378.069 | | | | | 462 | 5014 | 001 | CONC BOX CULV (1800 MM X 1200 MM) | M | 378.069 | |

## ESTIMATE & QUANTITY SHEET

| STATE DIST. NO. | COUNTY | PROJECT NO. | SHEET NO. |
|---|---|---|---|
| 15 | BEXAR | NH 2000 (704) | 13 |

# ESTIMATE SUMMARY

| BEXAR COUNTY 2452-1-36, ETC WATER AND SEWER | | | | BEXAR COUNTY 2452-1-36, ETC BRIDGES | | BEXAR COUNTY 2452-1-36, ETC ROADWAY ITEMS | | ALT. | ITEM-CODE | | | DESCRIPTION | UNIT | TOTAL | |
|---|---|---|---|---|---|---|---|---|---|---|---|---|---|---|---|
| EST. | FINAL | EST. | FINAL | EST. | FINAL | EST. | FINAL | EST. | FINAL | | ITEM NO | DESC CODE | SP NO | | | EST. | FINAL |
| | | | | | | 362.752 | | | | | 462 | 5035 | 001 | CONC BOX CULV (3000 MM X 2400 MM) | M | 362.752 | |
| | | | | | | 732.120 | | | | | 462 | 5037 | 001 | CONC BOX CULV (3000 MM X 3000 MM) | M | 732.120 | |
| | | | | | | | | 215.970 | | | 464 | 5003 | 001 | RC PIPE (CL III) (450 MM) | M | 215.970 | |
| | | | | | | | | 1435.542 | | | 464 | 5005 | 001 | RC PIPE (CL III) (600 MM) | M | 1435.542 | |
| | | | | | | | | 318.449 | | | 464 | 5007 | 001 | RC PIPE (CL III) (750 MM) | M | 318.449 | |
| | | | | | | | | 772.325 | | | 464 | 5009 | 001 | RC PIPE (CL III) (900 MM) | M | 772.325 | |
| | | | | | | | | 370.040 | | | 464 | 5010 | 001 | RC PIPE (CL III) (1050 MM) | M | 370.040 | |
| | | | | | | | | 248.184 | | | 464 | 5011 | 001 | RC PIPE (CL III) (1200 MM) | M | 248.184 | |
| | | | | | | | | 165.000 | | | 464 | 5020 | 001 | RC PIPE (CL IV) (600 MM) | M | 165.000 | |
| | | | | | | | | 114.746 | | | 464 | 5034 | 001 | RC PIPE (CL V) (1200 MM) | M | 114.746 | |
| | | | | | | | | 1.000 | | | 465 | 5004 | | MANH (COMPL) (TY M) | EA | 1.000 | |
| | | | | | | | | 49.000 | | | 465 | 5017 | | MANH (COMPL) (TY A) | EA | 49.000 | |
| | | | | | | | | 15.000 | | | 465 | 5027 | | INLET (COMPL) (DROP) (TY Y-1) | EA | 15.000 | |
| | | | | | | | | 21.000 | | | 465 | 5030 | | INLET (COMPL) (CURB) (TY I) | EA | 21.000 | |
| | | | | | | | | 1.000 | | | 465 | 5033 | | MANHOLE (COMPL) (TY 2) | EA | 1.000 | |
| | | | | | | | | 2.000 | | | 465 | 5034 | | MANHOLE (COMPL) (TY 1) | EA | 2.000 | |
| | | | | | | | | 3.000 | | | 465 | 5036 | | INLET (COMPL) (DROP) (TY 3A) | EA | 3.000 | |
| | | | | | | | | 2.000 | | | 465 | 5075 | | MANH (COMPL) (TY 3) | EA | 2.000 | |
| | | | | | | | | 4.000 | | | 465 | 5101 | | INLET (COMPL) (CURB) (TY II) | EA | 4.000 | |
| | | | | | | | | 1.000 | | | 465 | 5250 | | INLET (COMPL) (CURB) (TY IV) | EA | 1.000 | |
| | | | | | | | | 5.000 | | | 465 | 5365 | | INLET (COMPL) (DROP) (TY W-2) | EA | 5.000 | |
| | | | | | | | | 4.000 | | | 465 | 5486 | | INLET (COMPL) (DROP) (TY Y-2) | EA | 4.000 | |
| | | | | | | | | 2.000 | | | 466 | 5049 | 001 | WINGWALL (FW-15) (H=900 MM) | EA | 2.000 | |
| | | | | | | | | 2.000 | | | 466 | 5058 | 001 | WINGWALL (FW-30) (H=900 MM) | EA | 2.000 | |
| | | | | | | 2.000 | | | | | 466 | 5065 | 001 | WINGWALL (FW-30) (H=3000 MM) | EA | 2.000 | |
| | | | | | | | | 2.000 | | | 466 | 5067 | 001 | WINGWALL (FW-45) (H=900 MM) | EA | 2.000 | |
| | | | | | | 1.500 | | 2.000 | | | 466 | 5068 | 001 | WINGWALL (FW-45) (H=1200 MM) | EA | 3.500 | |
| | | | | | | 2.000 | | | | | 466 | 5072 | 001 | WINGWALL (FW-45) (H=2400 MM) | EA | 2.000 | |
| | | | | | | | | 4.000 | | | 466 | 5282 | 001 | WINGWALL (FW-0) (H = 900 MM) | EA | 4.000 | |
| | | | | | | | | 2.000 | | | 467 | 5007 | 001 | SET (TY I) (1500 MM X 900 MM) (1: 3) (C) | EA | 2.000 | |
| | | | | | | | | 2.000 | | | 467 | 5044 | 001 | SET (TY I) (1500 MM X 900 MM) (1: 6) (C) | EA | 2.000 | |
| | | | | | | | | 2.000 | | | 467 | 5047 | 001 | SET (TY I) (1800 MM X 900 MM) (1: 6) (C) | EA | 2.000 | |
| | | | | | | | | 5.000 | | | 467 | 5070 | 001 | SET (TY II) ( 600 MM) (RCP) (1: 3) | EA | 5.000 | |
| | | | | | | | | 1.000 | | | 467 | 5074 | 001 | SET (TY II) ( 600 MM) (RCP) (1: 4) | EA | 1.000 | |
| | | | | | | | | 3.000 | | | 467 | 5076 | 001 | SET (TY II) ( 900 MM) (RCP) (1: 4) | EA | 3.000 | |
| | | | | | | | | 4.000 | | | 467 | 5077 | 001 | SET (TY II) ( 450 MM) (RCP) (1: 6) | EA | 4.000 | |
| | | | | | | | | 46.000 | | | 467 | 5078 | 001 | SET (TY II) ( 600 MM) (RCP) (1: 6) | EA | 46.000 | |
| | | | | | | | | 8.000 | | | 467 | 5079 | 001 | SET (TY II) ( 750 MM) (RCP) (1: 6) | EA | 8.000 | |
| | | | | | | | | 14.000 | | | 467 | 5080 | 001 | SET (TY II) ( 900 MM) (RCP) (1: 6) | EA | 14.000 | |
| | | | | | | | | 4.000 | | | 467 | 5102 | 001 | SET (TY II) (1200 MM) (RCP) (1: 4) (C) | EA | 4.000 | |
| | | | | | | | | 9.000 | | | 467 | 5107 | 001 | SET (TY II) (1050 MM) (RCP) (1: 6) (C) | EA | 9.000 | |
| | | | | | | | | 4.000 | | | 467 | 5108 | 001 | SET (TY II) (1200 MM) (RCP) (1: 6) (C) | EA | 4.000 | |
| | | | | | | | | 4.000 | | | 467 | 5180 | 001 | SET (TY I) (1500 MM X 600 MM) (1: 6) (P) | EA | 4.000 | |
| | | | | | | | | 1.000 | | | 467 | 5240 | 001 | SET (TY II) (600 MM) (RCP) (1: 5) | EA | 1.000 | |
| | | | | | | | | 1.000 | | | 467 | 5423 | 001 | SET (TY I) (1500 MM X 900 MM) (1: 3) (P) | EA | 1.000 | |
| | | | | | | | | 2.000 | | | 496 | 5001 | | REMOV OLD STR (LARGE) | EA | 2.000 | |
| | | | | 0.030 | | | | 0.970 | | | 500 | 5001 | | MOBILIZATION | LS | 1.000 | |
| | | | | | | | | 42.000 | | | 502 | 5001 | 011 | BARRICADES, SIGNS AND TRAF HANDLE | MO | 42.000 | |
| | | | | | | | | 39755.000 | | | 508 | 5003 | | CONSTRUCT DETOURS (CL 3) | M2 | 39755.000 | |
| | | | | | | | | 3077.300 | | | 512 | 5002 | 005 | PORT CONC TRAF BAR (STKPL, INSTL & RETRN) | M | 3077.300 | |

## ESTIMATE & QUANTITY SHEET

| STATE DIST. NO. | COUNTY | PROJECT NO. | SHEET NO. |
|---|---|---|---|
| 15 | BEXAR | NH 2000 (704) | 13a |

# ESTIMATE SUMMARY

| BEXAR COUNTY 2452-1-36, ETC WATER AND SEWER | | BEXAR COUNTY 2452-1-36, ETC BRIDGES | | BEXAR COUNTY 2452-1-36, ETC ROADWAY ITEMS | | ALT | ITEM-CODE | | | DESCRIPTION | UNIT | TOTAL | |
|---|---|---|---|---|---|---|---|---|---|---|---|---|---|
| EST. | FINAL | EST. | FINAL | EST. | FINAL | | ITEM NO | DESC CODE | SP NO | | | EST. | FINAL |
| | | | | | | | 512 | 5003 | 005 | PORT CONC TRAF BAR (MOVE & RESET) | M | 1056.100 | |
| | | | | | | | 512 | 5004 | 005 | PORT CONC TRAF BAR (REMOVE) | M | 291.200 | |
| | | | | | | | 512 | 5006 | 005 | PORT CONC TRF BAR LOW PRF (MOV & RESET) | M | 235.000 | |
| | | | | | | | 512 | 5025 | 005 | PCTB LOW PRF (TY I) (STK, INSTL & RETRN) | M | 198.800 | |
| | | | | | | | 512 | 5026 | 005 | PCTB LOW PRF (TY II) (STK, INSTL & RETRN) | M | 36.200 | |
| | | | | | | | 529 | 5001 | | CONC CURB (TY 1) | M | 12814.000 | |
| | | | | | | | 529 | 5026 | | CONC CURB (TY A) | M | 3228.000 | |
| | | | | | | | 529 | 5027 | | CONC CURB (ARMOR CURB SLOT) | M | 48.000 | |
| | | | | | | | 530 | 5001 | | DRVWYS (CONC) (150 MM) | M2 | 597.000 | |
| | | | | | | | 530 | 5003 | | DRVWY (ASPH-CONC PAV) | M2 | 7649.000 | |
| | | | | | | | 530 | 5078 | | DRVWAYS (CONC) (200MM) | M2 | 234.000 | |
| | | | | | | | 531 | 5002 | | CONCRETE SIDEWALKS | M2 | 1043.000 | |
| | | | | | | | 536 | 5003 | | CONC DIRECT ISLAND | M2 | 1016.000 | |
| | | | | | | | 540 | 5005 | 007 | TERM ANCHOR SECT (2.67 MM) | EA | 16.000 | |
| | | | | | | | 540 | 5006 | 007 | MTL BEAM GD FEN (TIM POST) (2.67 MM) | M | 2509.300 | |
| | | | | | | | 540 | 5007 | 007 | MTL BM GD FEN (BLK OUT) TIM POST 2.67 MM | M | 618.000 | |
| | | | | | | | 542 | 5001 | | REMOV METAL BEAM GUARD FENCE | M | 744.800 | |
| | | | | | | | 542 | 5003 | | REMOV TERMINAL-ANCHOR SECTION | EA | 12.000 | |
| | | | | | | | 560 | 5001 | | MAILBOX INSTAL (SINGLE) | EA | 8.000 | |
| | | | | | | | 560 | 5002 | | MAILBOX INSTAL (DOUBLE) | EA | 1.000 | |
| | | | | | | | 580 | 5002 | | PROJECT MAINT (MOWING) | CYC | 8.000 | |
| | | | | | | | 580 | 5004 | | PROJECT MAINT (LITTER PICKUP) | CYC | 16.000 | |
| | | | | | | | 610 | 5001 | 001 | RDWY ILL ASSEM (TY SA 15T-3) (.4 KW) S | EA | 20.000 | |
| | | | | | | | 610 | 5002 | 001 | RDWY ILL ASSEM (TY SA 15T-3-3) (.4 KW) S | EA | 14.000 | |
| | | | | | | | 610 | 5003 | 001 | RDWY ILL ASSEM (TY SA 12T-3) (.25 KW) S | EA | 23.000 | |
| | | | | | | | 610 | 5017 | 001 | RDWY ILL AM U/P (TY SPL-CO) (.15KW) S (TY1) | EA | 8.000 | |
| | | | | | | | 618 | 5009 | | CONDUIT (PVC) (SCHD 40) (32 MM) | M | 4185.000 | |
| | | | | | | | 618 | 5011 | | CONDUIT (PVC) (SCHD 40) (50 MM) | M | 140.000 | |
| | | | | | | | 618 | 5016 | | CONDUIT (PVC) (SCHD 80) (32 MM) | M | 2523.000 | |
| | | | | | | | 618 | 5018 | | CONDUIT (PVC) (SCHD 80) (50 MM) | M | 309.000 | |
| | | | | | | | 618 | 5020 | | CONDUIT (PVC) (SCHD 80) (75 MM) | M | 1906.000 | |
| | | | | | | | 618 | 5026 | | CONDUIT (RM) (PUSH-BORE) (50 MM) | M | 40.000 | |
| | | | | | | | 618 | 5045 | | CONDUIT (PVC) (SCHD 40) (25 MM) | M | 40.000 | |
| | | | | | | | 620 | 5003 | | ELEC CONDUCTOR (NO. 8) BARE | M | 4411.000 | |
| | | | | | | | 620 | 5004 | | ELEC CONDUCTOR (NO. 6) BARE | M | 1245.000 | |
| | | | | | | | 620 | 5008 | | ELEC CONDUCTOR (NO. 10) INSULATED | M | 360.000 | |
| | | | | | | | 620 | 5009 | | ELEC CONDUCTOR (NO. 8) INSULATED | M | 8638.000 | |
| | | | | | | | 620 | 5010 | | ELEC CONDUCTOR (NO. 6) INSULATED | M | 942.000 | |
| | | | | | | | 624 | 5001 | | GROUND BOX TY A (122311) W/APRON | EA | 81.000 | |
| | | | | | | | 624 | 5004 | | GROUND BOX TY D (162922) W/APRON | EA | 31.000 | |
| | | | | | | | 624 | 5009 | | GROUND BOX TY D (162922) | EA | 1.000 | |
| | | | | | | | 628 | 5056 | | ELEC SERV TYS (240/480) 060 (NS) GS (T) TP (O) | EA | 16.000 | |
| | | | | | | | 628 | 5192 | | ELEC SERV TYT (120/240) 000 (NS) GS (N) TP (O) | EA | 5.000 | |
| | | | | | | | 636 | 5001 | | ALUM SIGNS (TY A) | M2 | 26.800 | |
| | | | | | | | 637 | 5001 | | ALUM SIGNS (TY G) | M2 | 307.900 | |
| | | | | | | | 644 | 5001 | | SMALL RDSD SGN ASSM (TY A) | EA | 227.000 | |
| | | | | | | | 644 | 5003 | | SMALL RDSD SGN ASSM (TY B) | EA | 11.000 | |
| | | | | | | | 644 | 5004 | | SMALL RDSD SGN ASSM (TY C) | EA | 5.000 | |
| | | | | | | | 644 | 5005 | | SMALL RDSD SGN ASSM (TY D-1) | EA | 12.000 | |
| | | | | | | | 644 | 5006 | | SMALL RDSD SGN ASSM (TY D-2) | EA | 2.000 | |

## ESTIMATE & QUANTITY SHEET

| STATE DIST. NO. | COUNTY | PROJECT NO. | SHEET NO. |
|---|---|---|---|
| 15 | BEXAR | NH 2000 (704) | 136 |

# ESTIMATE SUMMARY

| | | | | BEXAR COUNTY | | BEXAR COUNTY | | BEXAR COUNTY | | ALT | ITEM-CODE | | | DESCRIPTION | UNIT | TOTAL | |
|---|---|---|---|---|---|---|---|---|---|---|---|---|---|---|---|---|---|
| | | | | 2452-1-36, ETC | | 2452-1-36, ETC | | 2452-1-36, ETC | | | | | | | | | |
| | | | | WATER AND SEWER | | BRIDGES | | ROADWAY ITEMS | | | | | | | | | |
| EST. | FINAL | EST. | FINAL | EST. | FINAL | EST. | FINAL | EST. | FINAL | | ITEM NO | DESC CODE | SP NO | | | EST. | FINAL |
| | | | | | | | | 3.000 | | | 644 | 5007 | | SMALL RDSD SGN ASSM (TY D-3) | EA | 3.000 | |
| | | | | | | | | 10.000 | | | 644 | 5008 | | SMALL RDSD SGN ASSM (TY D-4) | EA | 10.000 | |
| | | | | | | | | 6.000 | | | 644 | 5010 | | SMALL RDSD SGN ASSM (TY D-6) | EA | 6.000 | |
| | | | | | | | | 123.000 | | | 644 | 5011 | | SMALL RDSD SGN ASSM (TY F) | EA | 123.000 | |
| | | | | | | | | 3.000 | | | 644 | 5039 | | SMALL RDSD SGN ASSM (TY RM) | EA | 3.000 | |
| | | | | | | | | 7819.000 | | | 647 | 5001 | | LG RDSD SGN SUPT (STRUCT STL) | KG | 7819.000 | |
| | | | | | | | | 4.000 | | | 649 | 5001 | | REMOV LARGE RDSD SGN ASSMS | EA | 4.000 | |
| | | | | | | | | 78.000 | | | 649 | 5002 | | REMOV SMALL RDSD SGN ASSMS | EA | 78.000 | |
| | | | | | | | | 1.000 | | | 649 | 5006 | | RELOC SMALL RDSD SGN ASSMS | EA | 1.000 | |
| | | | | | | | | 48.300 | | | 656 | 5001 | | FND LG RDSD SGN SUPT (300 MM DRIL SHFT) | M | 48.300 | |
| | | | | | | | | 78.300 | | | 656 | 5002 | | FND LG RDSD SGN SUPT (600 MM DRIL SHFT) | M | 78.300 | |
| | | | | | | | | 15.300 | | | 656 | 5003 | | FND FOR TRAF SIG (600 MM DRIL SHFT) | M | 15.300 | |
| | | | | | | | | 23.800 | | | 656 | 5004 | | FND FOR TRAF SIG (750 MM DRIL SHFT) | M | 23.800 | |
| | | | | | | | | 100.000 | | | 656 | 5005 | | FND FOR TRAF SIG (TYA) (900MM DRIL SHFT) | M | 100.000 | |
| | | | | | | | | 114.000 | | | 656 | 5010 | | FND FOR RDWY ILL ASM (TYA) (750MM DR SH) | M | 114.000 | |
| | | | | | | | | 5.000 | | | 656 | 5026 | | TRAF SIG CNTRL FND | EA | 5.000 | |
| | | | | | | | | 84.000 | | | 658 | 5018 | | DEL ASM TY A (D-SW) FLEX (1.8 M) | EA | 84.000 | |
| | | | | | | | | 76.000 | | | 658 | 5022 | | DEL ASM TY A (D-SY) FLEX (1.8 M) | EA | 76.000 | |
| | | | | | | | | 101.000 | | | 658 | 5066 | | OBJ MRK ASM TY 2 FLEX (OM-2SR) (1.8 M) | EA | 101.000 | |
| | | | | | | | | 4.000 | | | 658 | 5077 | | OBJ MRK ASM SURF MNT (K MARKER) | EA | 4.000 | |
| | | | | | | | | 10.000 | | | 658 | 5078 | | OBJ MRK ASM TY 3 (OM-3L) | EA | 10.000 | |
| | | | | | | | | 14.000 | | | 658 | 5079 | | OBJ MRK ASM TY 3 (OM-3R) | EA | 14.000 | |
| | | | | | | | | 37.000 | | | 658 | 5098 | | OBJ MRK ASM TY 2 SURF MNT (OM-2HP) (SPL) | EA | 37.000 | |
| | | | | | | | | 4390.000 | | | 662 | 5001 | 003 | WRK ZN PAV MRK REMOV (W) (SLD) (100 MM) | M | 4390.000 | |
| | | | | | | | | 5230.000 | | | 662 | 5023 | 003 | WRK ZN PAV MRK REMOV (Y) (SLD) (100 MM) | M | 5230.000 | |
| | | | | | | | | 976.000 | | | 662 | 5042 | 003 | WRK ZN PAV MRK REMOV (CL B) TY I-C | EA | 976.000 | |
| | | | | | | | | 3998.000 | | | 662 | 5043 | 003 | WRK ZN PAV MRK REMOV (CL B) TY II-A-A | EA | 3998.000 | |
| | | | | | | | | 1720.000 | | | 662 | 5045 | 003 | WRK ZN PAV MRK REMOV (CL C) TY W | EA | 1720.000 | |
| | | | | | | | | 1460.000 | | | 662 | 5046 | 003 | WRK ZN PAV MRK REMOV (CL C) TY Y | EA | 1460.000 | |
| | | | | | | | | 230.000 | | | 662 | 5047 | 003 | WRK ZN PAV MRK REMOV (CL D) TY W | EA | 230.000 | |
| | | | | | | | | 35260.000 | | | 662 | 5049 | 003 | WRK ZN PAV MRK NON-REMV (W) (SLD) 100 MM | M | 35260.000 | |
| | | | | | | | | 2051.000 | | | 662 | 5050 | 003 | WRK ZN PAV MRK NON-REMV (W) (BRK) 100 MM | M | 2051.000 | |
| | | | | | | | | 309.000 | | | 662 | 5057 | 003 | WRK ZN PAV MRK NON-REMV (W) (SLD) 600 MM | M | 309.000 | |
| | | | | | | | | 60.000 | | | 662 | 5058 | 003 | WRK ZN PAV MRK NON-REMOV (W) (ARROW) | EA | 60.000 | |
| | | | | | | | | 57.000 | | | 662 | 5062 | 003 | WRK ZN PAV MRK NON-REMOV (W) (WORD) | EA | 57.000 | |
| | | | | | | | | 37207.000 | | | 662 | 5069 | 003 | WRK ZN PAV MRK NON-REMV (Y) (SLD) 100 MM | M | 37207.000 | |
| | | | | | | | | 30.000 | | | 662 | 5070 | 003 | WRK ZN PAV MRK NON-REMV (Y) (BRK) 100 MM | M | 30.000 | |
| | | | | | | | | 83.000 | | | 662 | 5076 | 003 | WRK ZN PAV MRK NON-REMV (Y) (SLD) 600 MM | M | 83.000 | |
| | | | | | | | | 10264.000 | | | 662 | 5081 | 003 | WRK ZN PAV MRK SH TRM (TAB) TY W | EA | 10264.000 | |
| | | | | | | | | 586.000 | | | 662 | 5082 | 003 | WRK ZN PAV MRK SH TRM (TAB) TY Y | EA | 586.000 | |
| | | | | | | | | 26176.000 | | | 666 | 5001 | 007 | REFL PAV MRK TY I (W) (SLD) (100 MM) | M | 26176.000 | |
| | | | | | | | | 9169.000 | | | 666 | 5002 | 007 | REFL PAV MRK TY I (W) (BRK) (100 MM) | M | 9169.000 | |
| | | | | | | | | 149.000 | | | 666 | 5003 | 007 | REFL PAV MRK TY I (W) (DOT) (100 MM) | M | 149.000 | |
| | | | | | | | | 3151.000 | | | 666 | 5006 | 007 | REFL PAV MRK TY I (W) (SLD) (200 MM) | M | 3151.000 | |
| | | | | | | | | 44.000 | | | 666 | 5007 | 007 | REFL PAV MRK TY I (W) (BRK) (200 MM) | M | 44.000 | |
| | | | | | | | | 1972.000 | | | 666 | 5012 | 007 | REFL PAV MRK TY I (W) (SLD) (600 MM) | M | 1972.000 | |
| | | | | | | | | 109.000 | | | 666 | 5013 | 007 | REFL PAV MRK TY I (W) (ARROW) | EA | 109.000 | |
| | | | | | | | | 39.000 | | | 666 | 5014 | 007 | REFL PAV MRK TY I (W) (DBL ARROW) | EA | 39.000 | |
| | | | | | | | | 109.000 | | | 666 | 5017 | 007 | REFL PAV MRK TY I (W) (WORD) | EA | 109.000 | |
| | | | | | | | | 34794.000 | | | 666 | 5024 | 007 | REFL PAV MRK TY I (Y) (SLD) (100 MM) | M | 34794.000 | |

## ESTIMATE & QUANTITY SHEET

| STATE DIST. NO. | COUNTY | PROJECT NO. | SHEET NO. |
|---|---|---|---|
| 15 | BEXAR | NH 2000 (704) | 13c |

# ESTIMATE SUMMARY

| BEXAR COUNTY 2452-1-36, ETC WATER AND SEWER | | BEXAR COUNTY 2452-1-36, ETC BRIDGES | | BEXAR COUNTY 2452-1-36, ETC ROADWAY ITEMS | | ALT. | ITEM-CODE | | | DESCRIPTION | UNIT | TOTAL | |
|---|---|---|---|---|---|---|---|---|---|---|---|---|---|
| EST. | FINAL | EST. | FINAL | EST. | FINAL | | ITEM NO | DESC CODE | SP NO | | | EST. | FINAL |
| | | | | | | | 666 | 5029 | 007 | REFL PAV MRK TY I (Y) (SLD) (200 MM) | M | 645.000 | |
| | | | | | | | 666 | 5032 | 007 | REFL PAV MRK TY I (Y) (SLD) (600 MM) | M | 955.000 | |
| | | | | | | | 666 | 5034 | 007 | REFL PAV MRK TY I (Y) (MED NOSE) | EA | 13.000 | |
| | | | | | | | 666 | 5035 | 007 | REFL PAV MRK TY II (W) (SLD) (100 MM) | M | 26176.000 | |
| | | | | | | | 666 | 5036 | 007 | REFL PAV MRK TY II (W) (BRK) (100 MM) | M | 9169.000 | |
| | | | | | | | 666 | 5037 | 007 | REFL PAV MRK TY II (W) (DOT) (100 MM) | M | 149.000 | |
| | | | | | | | 666 | 5039 | 007 | REFL PAV MRK TY II (W) (SLD) (200 MM) | M | 3151.000 | |
| | | | | | | | 666 | 5044 | 007 | REFL PAV MRK TY II (W) (SLD) (600 MM) | M | 1972.000 | |
| | | | | | | | 666 | 5045 | 007 | REFL PAV MRK TY II (W) (ARROW) | EA | 118.000 | |
| | | | | | | | 666 | 5046 | 007 | REFL PAV MRK TY II (W) (DBL ARROW) | EA | 48.000 | |
| | | | | | | | 666 | 5049 | 007 | REFL PAV MRK TY II (W) (WORD) | EA | 118.000 | |
| | | | | | | | 666 | 5056 | 007 | REFL PAV MRK TY II (Y) (SLD) (100 MM) | M | 34794.000 | |
| | | | | | | | 666 | 5060 | 007 | REFL PAV MRK TY II (Y) (SLD) (200 MM) | M | 645.000 | |
| | | | | | | | 666 | 5063 | 007 | REFL PAV MRK TY II (Y) (SLD) (600 MM) | M | 955.000 | |
| | | | | | | | 666 | 5065 | 007 | REFL PAV MRK TY II (Y) (MED NOSE) | EA | 13.000 | |
| | | | | | | | 666 | 5123 | 007 | REFL PAV MRK TY II (W) (BRK) (200 MM) | M | 44.000 | |
| | | | | | | | 672 | 5037 | 004 | RAIS PAV MRKR CL B (REFL) TY II-A-A (HV) | EA | 1167.000 | |
| | | | | | | | 672 | 5038 | 004 | RAIS PAV MRKR CL B (REFL) TY II-C-R (HV) | EA | 4636.000 | |
| | | | | | | | 677 | 5001 | | ELIM EXT PAV MRK & MRKR (100 MM) | M | 2173.000 | |
| | | | | | | | 677 | 5018 | | ELIM EXT PAV MRK & MRKR (RAIS PAV MRKR) | EA | 584.000 | |
| | | | | | | | 680 | 5001 | 004 | INSTAL OF HWY TRAF SIG (ISOLATED) | EA | 6.000 | |
| | | | | | | | 681 | 5001 | | TEMP TRAF SIGNALS FOR CONSTRUCTION | EA | 5.000 | |
| | | | | | | | 682 | 5002 | | VEH SIG SEC (300 MM) | EA | 214.000 | |
| | | | | | | | 682 | 5005 | | PED SIG SEC (2 INDICATIONS IN 1 SEC) | EA | 50.000 | |
| | | | | | | | 682 | 5019 | | LOUVER (ADJUSTABLE) (300 MM) | EA | 12.000 | |
| | | | | | | | 684 | 5004 | | TRAF SIG CBL (TY A) (4 CONDR) (12 AWG) | M | 3440.000 | |
| | | | | | | | 684 | 5007 | | TRAF SIG CBL (TY A) (7 CONDR) (12 AWG) | M | 2770.000 | |
| | | | | | | | 684 | 5044 | | TRAF SIG CBL (TY C) (2 CONDR) (14 AWG) | M | 8485.000 | |
| | | | | | | | 686 | 5002 | 001 | TRAF SIG POLE ASM (STL) STR (TY B) (9.1 M) | EA | 7.000 | |
| | | | | | | | 686 | 5005 | 001 | TRAF SIG POLE ASM STL STR (TYB) 9.1 M LUM | EA | 2.000 | |
| | | | | | | | 686 | 5010 | 001 | TRAF SIG POLE ASM (STL) 1 ARM (8.5 M) | EA | 1.000 | |
| | | | | | | | 686 | 5011 | 001 | TRAF SIG POLE ASM (STL) 1 ARM (9.8 M) | EA | 5.000 | |
| | | | | | | | 686 | 5012 | 001 | TRAF SIG POLE ASM (STL) 1 ARM (11.0 M) | EA | 1.000 | |
| | | | | | | | 686 | 5013 | 001 | TRAF SIG POLE ASM (STL) 1 ARM (12.2 M) | EA | 6.000 | |
| | | | | | | | 686 | 5014 | 001 | TRAF SIG POLE ASM (STL) 1 ARM (13.4 M) | EA | 9.000 | |
| | | | | | | | 686 | 5015 | 001 | TRAF SIG POLE ASM (STL) 1 ARM (14.6 M) | EA | 1.000 | |
| | | | | | | | 688 | 5001 | | PED DETECT (PUSH BTN) | EA | 50.000 | |
| | | | | | | | 688 | 5011 | | VEH DETECT (SAWCUT) | M | 2280.000 | |
| | | | | | | | 3117 | 5074 | 001 | HOT MIX (TY C) (LEVEL UP) (PG 64-22) | MGR | 8851.000 | |
| | | | | | | | 3117 | 5084 | 001 | HOT MIX (TY C) (SURF) (PG 76-22) | MGR | 41169.000 | |
| | | | | | | | 3117 | 5103 | 001 | HOT MIX (TY C) (PG 64-22) | MGR | 41784.000 | |
| | | | | | | | 4156 | 5001 | | FLOWABLE BACKFILL | M3 | 99.300 | |
| | | | | | | | 5002 | 5004 | | ROCK FILTER DAMS (TY 2) | M | 992.000 | |
| | | | | | | | 5002 | 5005 | | ROCK FILTER DAMS (REMOV & REPLAC) (TY 2) | M | 1984.000 | |
| | | | | | | | 5002 | 5006 | | ROCK FILTER DAMS (REMOV) (TY 2) | M | 992.000 | |
| | | | | | | | 5002 | 5007 | | ROCK FILTER DAMS (TY 3) | M | 755.000 | |
| | | | | | | | 5002 | 5008 | | ROCK FILTER DAMS (REMOV & REPLAC) (TY 3) | M | 1510.000 | |
| | | | | | | | 5002 | 5009 | | ROCK FILTER DAMS (REMOV) (TY 3) | M | 755.000 | |
| | | | | | | | 5005 | 5001 | | BKHOE WORK (EROSN CONT) (CL 1) | H | 16.000 | |
| | | | | | | | 5005 | 5002 | | FRNT END LDR WORK (EROSN CONT) (CL 1) | H | 16.000 | |

## ESTIMATE & QUANTITY SHEET

| STATE DIST. NO. | COUNTY | PROJECT NO. | SHEET NO. |
|---|---|---|---|
| 15 | BEXAR | NH 2000 (704) | 13d |

# ESTIMATE SUMMARY

| BEXAR COUNTY 2452-1-36, ETC WATER AND SEWER | | BEXAR COUNTY 2452-1-36, ETC BRIDGES | | BEXAR COUNTY 2452-1-36, ETC ROADWAY ITEMS | | ALT | ITEM-CODE | | | DESCRIPTION | UNIT | TOTAL | |
|---|---|---|---|---|---|---|---|---|---|---|---|---|---|
| EST. | FINAL | EST. | FINAL | EST. | FINAL | | ITEM NO | DESC CODE | SP NO | | | EST. | FINAL |
| | | | | | | | 5006 | 5001 | | CONSTRUCT EXIT (TY 1) | M2 | 420.000 | |
| | | | | | | | 5006 | 5002 | | CONSTRUCT EXIT (REMOV & REPLAC) (TY 1) | M2 | 420.000 | |
| | | | | | | | 5006 | 5003 | | CONSTRUCT EXIT (REMOV) (TY 1) | M2 | 420.000 | |
| | | | | | | | 5012 | 5001 | | TEMP SEDMT CONT FENCE | M | 17781.000 | |
| | | | | | | | 5012 | 5002 | | TEMP SEDMT CONT FENCE (REMOV & REPLAC) | M | 35562.000 | |
| | | | | | | | 5012 | 5003 | | TEMP SEDMT CONT FENCE (REMOV) | M | 17781.000 | |
| | | | | | | | 5027 | 5001 | | LANDSCAPE PAVERS | M2 | 4155.000 | |
| | | | | | | | 5028 | 5001 | | VEH IMP ATTN ASSEM BRLS | EA | 224.000 | |
| | | | | | | | 5028 | 5002 | | VEH IMP ATTN ASSEM BRLS (MOVE & RESET) | EA | 658.000 | |
| | | | | | | | 5028 | 5003 | | VEH IMP ATTN ASSEM BRLS (REMOVE) | EA | 224.000 | |
| | | | | | | | 5098 | 5075 | | QUADGD SYS (REMV) (760MM) (TY B) (10 BAY) | EA | 1.000 | |
| | | | | | | | 5119 | 5003 | | SINGLE GDRAIL TERM (TY III) | EA | 24.000 | |
| | | | | | | | 5137 | 5001 | | SAN SEW (ADJUST MANHOLE) | EA | 1.000 | |
| | | | | | | | 5137 | 5002 | | SAN SEW (TRENCH EXCAV PROTECTION) | M | 212.000 | |
| | | | | | | | 5137 | 5008 | | SAN SEW MANH (COMPL) | EA | 3.000 | |
| | | | | | | | 5137 | 5010 | | SAN SEW (SELECT BEDDING) | M3 | 56.000 | |
| | | | | | | | 5137 | 5011 | | SAN SEW (CONCRETE ENCASEMENT) | M3 | 1.000 | |
| | | | | | | | 5137 | 5012 | | SAN SEW (CONCRETE CRADLES) | M3 | 1.600 | |
| | | | | | | | 5137 | 5013 | | SAN SEW (CUT & RESTORE PAVEMENT) | M2 | 17.600 | |
| | | | | | | | 5137 | 5017 | | SAN SEW (FLOWABLE BACKFILL) | M3 | 642.000 | |
| | | | | | | | 5137 | 5028 | | SAN SEW (ABANDON MANHOLE) | EA | 1.000 | |
| | | | | | | | 5137 | 5053 | | SAN SEWER (525 MM) (PVC) | M | 212.000 | |
| | | | | | | | 5137 | 5054 | | SAN SEWER (ABANDONED PIPE) (525 MM) | M | 196.000 | |
| | | | | | | | 5137 | 5055 | | STEEL CASING (1075 MM) (OPEN CUT) | M | 80.000 | |
| | | | | | | | 5324 | 5004 | | ADJUST EXIST VALVE BOX | EA | 6.000 | |
| | | | | | | | 5324 | 5006 | | TRENCH EXCAVATION PROTECTION | M | 2606.700 | |
| | | | | | | | 5324 | 5010 | | PIPE WTR MAIN (DI) (400 MM) | M | 1276.000 | |
| | | | | | | | 5324 | 5011 | | PIPE WTR MAIN (DI) (600 MM) | M | 775.900 | |
| | | | | | | | 5324 | 5015 | | GATE VALVE AND BOX (400 MM) | EA | 7.000 | |
| | | | | | | | 5324 | 5018 | | TIE-IN (MAIN) (300 MM) | EA | 1.000 | |
| | | | | | | | 5324 | 5019 | | TIE-IN (MAIN) (600 MM) | EA | 5.000 | |
| | | | | | | | 5324 | 5020 | | STD FIRE HYDRANT W/150 MM VALVE & BOX | EA | 6.000 | |
| | | | | | | | 5324 | 5023 | | TEMP BLOW-OFF (50 MM) | EA | 1.000 | |
| | | | | | | | 5324 | 5024 | | PERM BLOW-OFF (50 MM) | EA | 1.000 | |
| | | | | | | | 5324 | 5027 | | CUT & REPL ASPH PAV W/150MM ASPH TRT BS | M2 | 83.500 | |
| | | | | | | | 5324 | 5038 | | DUCTILE-IRON FITTINGS | KG | 59003.500 | |
| | | | | | | | 5324 | 5039 | | HYDROSTATIC PRESSURE TEST | EA | 8.000 | |
| | | | | | | | 5324 | 5051 | | GATE VALVE AND BOX (300 MM) | EA | 1.000 | |
| | | | | | | | 5324 | 5053 | | AUTOMATIC AIR RELEASE VALVE (25 MM) | EA | 2.000 | |
| | | | | | | | 5324 | 5054 | | TIE-IN (MAIN) (400 MM) | EA | 5.000 | |
| | | | | | | | 5324 | 5056 | | CUT AND REPLACE CONC SDWLK, DRVWY, ETC | M2 | 1.560 | |
| | | | | | | | 5324 | 5058 | | PIPE WATER MAIN (DI) (500 MM) | M | 4.900 | |
| | | | | | | | 5324 | 5059 | | TIE-IN (MAIN) (500 MM) | EA | 1.000 | |
| | | | | | | | 5324 | 5061 | | AUTOMATIC AIR RELEASE VALVE (50 MM) | EA | 2.000 | |
| | | | | | | | 5324 | 5062 | | FLOWABLE BACKFILL | M3 | 449.300 | |
| | | | | | | | 5324 | 5063 | | BUTTERFLY VALVE AND BOX (500 MM) | EA | 1.000 | |
| | | | | | | | 5324 | 5074 | | TEMP BLOW-OFF (100 MM) | EA | 5.000 | |
| | | | | | | | 5324 | 5083 | | BUTTERFLY VALVE AND BOX (600 MM) | EA | 2.000 | |
| | | | | | | | 5324 | 5127 | | PIPE WTR MAIN (DI) (300 MM) | M | 6.100 | |
| | | | | | | | 5324 | 5145 | | JACK OR BORE (STL CASING) (1075 MM) | M | 17.700 | |

| | | | |
|---|---|---|---|
| 420.000 | | | |
| 420.000 | | | |
| 420.000 | | | |
| 17781.000 | | | |
| 35562.000 | | | |
| 17781.000 | | | |
| 3283.000 | | 872.000 | |
| 224.000 | | | |
| 658.000 | | | |
| 224.000 | | | |
| 1.000 | | | |
| 24.000 | | | |
| | 1.000 | | |
| | 212.000 | | |
| | 3.000 | | |
| | 56.000 | | |
| | 1.000 | | |
| | 1.600 | | |
| | 17.600 | | |
| | 642.000 | | |
| | 1.000 | | |
| | 212.000 | | |
| | 196.000 | | |
| | 80.000 | | |
| | 6.000 | | |
| | 2606.700 | | |
| | 1276.000 | | |
| | 775.900 | | |
| | 7.000 | | |
| | 1.000 | | |
| | 5.000 | | |
| | 6.000 | | |
| | 1.000 | | |
| | 1.000 | | |
| | 83.500 | | |
| | 59003.500 | | |
| | 8.000 | | |
| | 1.000 | | |
| | 2.000 | | |
| | 5.000 | | |
| | 1.560 | | |
| | 4.900 | | |
| | 1.000 | | |
| | 2.000 | | |
| | 449.300 | | |
| | 1.000 | | |
| | 5.000 | | |
| | 2.000 | | |
| | 6.100 | | |
| | 17.700 | | |

## ESTIMATE & QUANTITY SHEET

| STATE DIST. NO. | COUNTY | PROJECT NO. | SHEET NO. |
|---|---|---|---|
| 15 | BEXAR | NH 2000 (704) | 13e |

# ESTIMATE SUMMARY

| BEXAR COUNTY 2452-1-36, ETC WATER AND SEWER | | BEXAR COUNTY 2452-1-36, ETC BRIDGES | | BEXAR COUNTY 2452-1-36, ETC ROADWAY ITEMS | | ALT | ITEM-CODE | | | DESCRIPTION | UNIT | TOTAL | |
|---|---|---|---|---|---|---|---|---|---|---|---|---|---|
| EST. | FINAL | EST. | FINAL | EST. | FINAL | | ITEM NO | DESC CODE | SP NO | | | EST. | FINAL |
| 17.200 | | | | | | | 5324 | 5146 | | JACK OR BORE (STL CASING) (1375 MM) | M | 17.200 | |
| 126.500 | | | | | | | 5324 | 5147 | | PIPE (STL CASING) (1075MM) (OPEN CUT) | M | 126.500 | |
| 169.600 | | | | | | | 5324 | 5148 | | PIPE (STL CASING) (1375MM) (OPEN CUT) | M | 169.600 | |
| 578.660 | | | | | | | 5324 | 5149 | | PIPE WTR MAIN (925 MM) (DI) | M | 578.660 | |
| 4.000 | | | | | | | 5324 | 5150 | | TIE-IN MAIN (925 MM) | EA | 4.000 | |
| 4.000 | | | | | | | 5324 | 5151 | | BUTTERFLY VLV W/BOX COMPL (925 MM) | EA | 4.000 | |
| | | | | | | 5.000 | 6008 | 5001 | | SALV TRAF SIGNALS | EA | 5.000 | |
| | | | | | | 9.000 | 6023 | 5001 | | PEDESTAL POLE ASSEM | EA | 9.000 | |
| | | | | | | 140.000 | 6056 | 5001 | | PORT CHANGE MES SGN (TYPE I) | DAY | 140.000 | |
| | | | | | | 1020.000 | 6438 | 5005 | | VIVDS COMMUNICATION CABLE (COAXIAL) | M | 1020.000 | |
| | | | | | | 5.000 | 6438 | 5007 | | VIVDS TEMPORARY | EA | 5.000 | |
| | | | | | | 12065.000 | 6605 | 5001 | | MLT-DUCT CND SYS (100MM) CONC ENC (2-WAY) | M | 12065.000 | |
| | | | | | | 3066.000 | 6605 | 5002 | | MLT-DUCT CND SYS (100MM) (BORED) | M | 3066.000 | |
| | | | | | | | | | | | | | |
| | | | | | | | | | | | | | |
| | | | | | | | | | | | | | |
| | | | | | | | | | | STATE FORCE ACCOUNT WORK (PART) | | | |
| | | | | | | | | | | 01 FURN CONTROLLER | LS | 1.000 | |
| | | | | | | | | | | 02 FURN SMALL SIGNS | LS | 1.000 | |
| | | | | | | | | | | | | | |
| | | | | | | | | | | CONTRACTOR FORCE ACCOUNT WORK (PART) | | | |
| | | | | | | | | | | FURN CELLULAR PHONES | LS | 1.000 | |
| | | | | | | | | | | FURN PHONE LINES | LS | 1.000 | |
| | | | | | | | | | | FURN OFFICER(S) AND CRUISER(S) | LS | 1.000 | |

ESTIMATE & QUANTITY SHEET

| STATE DIST. NO. | COUNTY | PROJECT NO. | SHEET NO. |
|---|---|---|---|
| 15 | BEXAR | NH 2000 (704) | 13f |

| | | 0662 5001 | | | 0662 5023 | | | 0662 5042 | | | 0662 5043 | | | 0662 5045 | | | 0662 5046 | | | 0662 5049 | | | 0662 5050 | | | 0662 5057 | | | 0662 5058 | | | 0662 5062 | | | 0662 5069 | | | 0662 5070 | | | 0662 5076 | | |
|---|---|---|---|---|---|---|---|---|---|---|---|---|---|---|---|---|---|---|---|---|---|---|---|---|---|---|---|---|---|---|---|---|---|---|---|---|---|---|---|---|---|---|---|
| | | WRK ZN PAV MRK REMOV (W) (SLD) (100 MM) | | | WRK ZN PAV MRK REMOV (Y) (SLD)(100 MM) | | | WRK ZN PAV MRK REMOV (CL B) TY I-C | | | WRK ZN PAV MRK REMOV (CL B) TY II-A-A | | | WRK ZN PAV MRK REMOV (CL C) TY W | | | WRK ZN PAV MRK REMOV (CL C) TY Y | | | WRK ZN PAV MRK NON-REMV (W)(SLD)100 MM | | | WRK ZN PAV MRK NON-REMV (W)(BRK)100 MM | | | WRK ZN PAV MRK NON-REMV (W)(SLD)600 MM | | | WRK ZN PAV MRK NON-REMV (W) (ARROW) | | | WRK ZN PAV MRK NON-REMV (W) (WORD) | | | WRK ZN PAV MRK NON-REMV (Y)(SLD)100 MM | | | WRK ZN PAV MRK NON-REMV (Y)(BRK)100 MM | | | WRK ZN PAV MRK NON-REMV (Y)(SLD)600 MM | | |
| | | 2452-01- | | | 2452-01- | | | 2452-01- | | | 2452-01- | | | 2452-01- | | | 2452-01- | | | 2452-01- | | | 2452-01- | | | 2452-01- | | | 2452-01- | | | 2452-01- | | | 2452-01- | | | 2452-01- | | | 2452-01- | | |
| SHEET NO. | PHASE | -037 | -038 | -036 | -037 | -038 | -036 | -037 | -038 | -036 | -037 | -038 | -036 | -037 | -038 | -036 | -037 | -038 | -036 | -037 | -038 | -036 | -037 | -038 | -036 | -037 | -038 | -036 | -037 | -038 | -036 | -037 | -038 | -036 | -037 | -038 | -036 | -037 | -038 | -036 | -037 | -038 | -036 |
| 65 | 1A | | | | | | | | 210 | | | 184 | | | 838 | | | 694 | | | 1880 | | | 168 | | | 50 | | | 16 | | | 14 | | | 980 | | | 30 | | | 20 | | |
| 66 | 1A | | | | | | | | 192 | | | 202 | | | 808 | | | 766 | | | 1880 | | | 216 | | | 50 | | | 19 | | | 18 | | | 1150 | | | | | | 30 | | |
| TOTAL FOR PHASE 1A | | | | | | | | | 402 | | | 386 | | | 1646 | | | 1460 | | | 3760 | | | 384 | | | 100 | | | 35 | | | 32 | | | 2130 | | | 30 | | | 50 | | |
| 67 | 1B | 260 | | | 260 | | | | | | 138 | | | | | | | | | 1400 | | | | | | | | | | | | | | | 1400 | | | | | | | | |
| 68 | 1B | 120 | 120 | | 120 | 120 | | | | | 60 | 10 | | | | | | | | 600 | | | | | | | | | | | | | | | 600 | | | | | | | | |
| 69 | 1B | | 80 | | | 80 | | | | | | 12 | | | | | | | | | | | | | | | | | | | | | | | | | | | | | | | | |
| 70 | 1B | | 220 | | | 220 | | | | | 166 | 70 | | | | | | | | 2000 | 620 | | | | | | | | | | | | | | 2000 | 620 | | | | | | | |
| 71 | 1B | 400 | | | 320 | | | | | | 38 | | | | | | | | | 120 | | | | | | | | | | | | | | | 120 | | | | | | | | |
| 72 | 1B | 960 | | | 1680 | | | | | | 140 | | | | | | | | | 720 | | | | | | | | | | | | | | | | | | | | | | | |
| 73 | 1B | 480 | 20 | | 680 | 20 | | | | | 54 | 4 | | | | | | | | 260 | | | | | | | | | | | | | | | | | | | | | | | |
| 74 | 1B | | 80 | | | 80 | | | | | | 8 | | | | | | | | | | | | | | | | | | | | | | | | | | | | | | | | |
| 75 | 1B | 740 | 530 | | 740 | 530 | | | | | 120 | 70 | | | | | | | | 700 | 310 | | | | | | | | | | | | | | 700 | 310 | | | | | | | |
| 76 | 1B | 380 | | | 380 | | | | | | 38 | | | | | | | | | 140 | | | | | | | | | | | | | | | 60 | | | | | | | | |
| TOTAL FOR PHASE 1B | | 3340 | 1050 | | 4180 | 1050 | | | | | 754 | 174 | | | | | | | | 5940 | 930 | | | | | | | | | | | | | | 4880 | 930 | | | | | | | |
| 77 | 1C | | | | | | | | | | | | | | | | | | | | | | | | | | | | | | | | | | | | | | | | | | |
| 78 | 1C | | | | | | | | | | | | | | | | | | | | | | | | | | | | | | | | | | | | | | | | | | |
| 79 | 1C | | | | | | | | | | | | | | | | | | | | | | | | | | | | | | | | | | | | | | | | | | |
| 80 | 1C | | | | | | | | | | | | | | | | | | | | | | | | | | | | | | | | | | | | | | | | | | |
| 81 | 1C | | | | | | | | | | | | | | | | | | | | | | | | | | | | | | | | | | | | | | | | | | |
| 82 | 1C | | | | | | | | | | | | | | | | | | | | | | | | | | | | | | | | | | | | | | | | | | |
| TOTAL FOR PHASE 1C | | | | | | | | | | | | | | | | | | | | | | | | | | | | | | | | | | | | | | | | | | | |
| SUB TOTAL 2452-01-037 | | 3340 | | | 4180 | | | | | | 754 | | | | | | | | | 5940 | | | | | | | | | | | | | | | 4880 | | | | | | | | |
| SUB TOTAL 2452-01-036 | | | | | | | | | | | | | | | | | | | | | | | | | | | | | | | | | | | | | | | | | | | |
| SUB TOTAL 2452-01-038 | | | 1050 | | | 1050 | | | 402 | | | 560 | | | 1646 | | | 1460 | | | 4690 | | | 384 | | | 100 | | | 35 | | | 32 | | | 3060 | | | 30 | | | 50 | | |
| TOTAL FOR PHASE 1 | | | 4390 | | | 5230 | | | 402 | | | 1314 | | | 1646 | | | 1460 | | | 10630 | | | 384 | | | 100 | | | 35 | | | 32 | | | 7940 | | | 30 | | | 50 | | |
| 83 | 2A | | | | | | | | | | | | | | | | | | | | | | | | | | | | | | | | | | | | | | | | | | |
| 84 | 2A | | | | | | | | | | | | | | | | | | | | | | | | | | | | | | | | | | | | | | | | | | |
| 85 | 2A | | | | | | | | | | | | | | | | | | | | | | | | | | | | | | | | | | | | | | | | | | |
| 86 | 2A | | | | | | | | | | | | | | | | | | | | | | | | | | | | | | | | | | | | | | | | | | |
| 87 | 2A | | | | | | | | | | | | | | | | | | | | | | | | | | | | | | | | | | | | | | | | | | |
| 88 | 2A | | | | | | | | | | | | | | | | | | | | | | | | | | | | | | | | | | | | | | | | | | |
| 89 | 2A | | | | | | | | | | | | | | | | | | | | | | | | | | | | | | | | | | | | | | | | | | |
| 90 | 2A | | | | | | | | 18 | | | 260 | | | 74 | | | | | | 1670 | | | | | | | | | 3 | | | 3 | | | 1560 | | | | | | | | |
| 91 | 2A | | | | | | | | | | | 254 | | | | | | | | | 760 | | | | | | | | | | | | | | | 1560 | | | | | | | | |
| TOTAL FOR PHASE 2A | | | | | | | | | 18 | | | 514 | | | 74 | | | | | | 2430 | | | | | | | | | 3 | | | 3 | | | 3120 | | | | | | | | |
| 92 | 2B | | | | | | | 220 | | | | | | | | | | | | 1671 | | | 660 | | | 53 | | | 8 | | | 8 | | | 2458 | | | | | | 33 | | |
| 93 | 2B | | | | | | | 98 | | 22 | | | | | | | | | | 1286 | | 320 | 294 | | 66 | | | | 3 | | | 3 | | | 2323 | | | 509 | | | | | |
| 94 | 2B | | | | | | | | | 56 | | | | | | | | | | | | 812 | | | 167 | | | 78 | | | 3 | | | 3 | | | 1410 | | | | | |
| 95 | 2B | | | | | | | | | 123 | | | | | | | | | | | | 1530 | | | 368 | | | 78 | | | | | | | | | 2860 | | | | | |
| 96 | 2B | | | | | | | | | 37 | | 322 | | | | | | | | | | 2920 | | | 112 | | | | | | | | | | | | 3368 | | | | | |
| 97 | 2B | | | | | | | | | | | 480 | | | | | | | | | | 2880 | | | | | | | | | | | | | | | 2880 | | | | | |
| 98 | 2B | | | | | | | | | | | 977 | | | | | | | | | | 3039 | | | | | | | | | 8 | | | 8 | | | 2931 | | | | | |
| 99 | 2B | | | | | | | | | | | 391 | | | | | | | | | | 2424 | | | | | | | | | | | | | | | 2344 | | | | | |
| 100 | 2B | | | | | | | | | | | | | | | | | | | 1250 | | | | | | | | | | | | | | | 1084 | | | | | | | | |
| 101 | 2B | | | | | | | | | | | | | | | | | | | 1180 | | 260 | | | | | | | | | | | | | 1180 | | 260 | | | | | |
| 102 | 2B | | | | | | | | | | | | | | | | | | | | | 684 | | | | | | | | | | | | | | | 550 | | | | | |
| 103 | 2B | | | | | | | | | | | | | | | | | | | | | 1234 | | | | | | | | | | | | | | | 1280 | | | | | |
| 104 | 2B | | | | | | | | | | | | | | | | | | | | | 710 | | | | | | | | | | | | | | | 710 | | | | | |
| TOTAL FOR PHASE 2B | | | | | | | | 318 | | 238 | | 2170 | | | | | | | | 5387 | | 16813 | 954 | | 713 | 53 | | 156 | 11 | | 11 | 11 | | 11 | 7045 | | 19102 | | | 33 | | |
| SUB TOTAL 2452-01-037 | | | | | | | | 318 | | | | | | | | | | | | 5387 | | | 954 | | | 53 | | | 11 | | | 11 | | | 7045 | | | | | 33 | | |
| SUB TOTAL 2452-01-036 | | | | | | | | | | 256 | | 2684 | | | 74 | | | | | | 19243 | | | 713 | | | 156 | | | 14 | | | 14 | | | 22222 | | | | | | | |
| SUB TOTAL 2452-01-038 | | | | | | | | | | | | | | | | | | | | | | | | | | | | | | | | | | | | | | | | | | | | |
| TOTAL FOR PHASE 2 | | | | | | | | | 574 | | | 2684 | | | 74 | | | | | | 24630 | | | 1667 | | | 209 | | | 25 | | | 25 | | | 29267 | | | | | 33 | | |
| PROJECT TOTAL 2452-01-037 | | 3340 | | | 4180 | | | 318 | | | 754 | | | | | | | | | 11327 | | | 954 | | | 53 | | | 11 | | | 11 | | | 11925 | | | | | 33 | | |
| PROJECT TOTAL 2452-01-036 | | | | | | | | | | 256 | | 2684 | | | 74 | | | | | | 19243 | | | 713 | | | 156 | | | 14 | | | 14 | | | 22222 | | | | | | | |
| PROJECT TOTAL 2452-01-038 | | | 1050 | | | 1050 | | | 402 | | | 560 | | | 1646 | | | 1460 | | | 4690 | | | 384 | | | 100 | | | 35 | | | 32 | | | 3060 | | | 30 | | | 50 | | |
| PROJECT TOTAL | | | 4390 | | | 5230 | | | 976 | | | 3998 | | | 1720 | | | 1460 | | | 35260 | | | 2051 | | | 309 | | | 60 | | | 57 | | | 37207 | | | 30 | | | 83 | | |

FILE: H:\go\design\lp1604fm471-90\summaries\seqofwork.dgn
LEVEL DISPLAYED
1 2 3 4 5 6 7 8 9 10 11 12 13 14 15 16 17 18 19 20 21 22 23 24 25 26 27 28 29 30 31 32
33 34 35 36 37 38 39 40 41 42 43 44 45 46 47 48 49 50 51 52 53 54 55 56 57 58 59 60 61 62 63
15 SEP 2000

©2000 Texas Department of Transportation

# SEQUENCE OF WORK SUMMARY

SHEET 1 OF 2

| FED. RD. DIV. NO. | FEDERAL AID PROJECT NO. | | SHEET NO. |
|---|---|---|---|
| 6 | NH 2000(704), ETC. | | 14 |
| STATE | DIST. | COUNTY | |
| TEXAS | SAT | BEXAR | |
| CONT. | SECT. | JOB | HIGHWAY NO. |
| 2452 | 01 | 036, ETC | LP 1604 |

| | | 0662 5047 | | | 0662 5081 | | | 0662 5082 | | | 0403 5001 | | | 0508 5003 | | | 0512 5002 | | | 0512 5003 | | | 0512 5006 | | | 0512 5025 | | | 0512 5026 | | | 0677 5001 | | | 5028 5001 | | | 5028 5002 | | | 5028 5003 | | |
|---|---|---|---|---|---|---|---|---|---|---|---|---|---|---|---|---|---|---|---|---|---|---|---|---|---|---|---|---|---|---|---|---|---|---|---|---|---|---|---|---|---|---|---|
| | | WRK ZN PAV MRK REMOV (CL C) TY Y 150MM | | | WRK ZN PAV MRK SH TRM (TAB) TY W | | | WRK ZN PAV MRK SH TRM (TAB) TY Y | | | TEMPORARY SPL SHORING | | | CONSTRUCT DETOURS (CL 3) | | | PORT CONC TRAF BAR(STKPL,INSTL & RETRN) | | | PORT CONC TRAF BAR (MOVE & RESET) | | | PORT CONC TRF BAR LOW PRF(MOV & RESET) | | | PCTB LOW PRF (TY I)(STK,INSTL & RETRN) | | | PCTB LOW PRF (TY II)(STK,INSTL & RETRN) | | | ELIM EXT PAV MRK & MRKR (100 MM) | | | VEH IMP ATTN ASSEM BRLS | | | VEH IMP ATTN ASSEM BRLS (MOVE & RESET) | | | VEH IMP ATTN ASSEM BRLS (REMOVE) | | |
| | | 2452-01- | | | 2452-01- | | | 2452-01- | | | 2452-01- | | | 2452-01- | | | 2452-01- | | | 2452-01- | | | 2452-01- | | | 2452-01- | | | 2452-01- | | | 2452-01- | | | 2452-01- | | | 2452-01- | | | 2452-01- | | |
| SHEET NO. | PHASE | -037 | -038 | -036 | -037 | -038 | -036 | -037 | -038 | -036 | -037 | -038 | -036 | -037 | -038 | -036 | -037 | -038 | -036 | -037 | -038 | -036 | -037 | -038 | -036 | -037 | -038 | -036 | -037 | -038 | -036 | -037 | -038 | -036 | -037 | -038 | -036 | -037 | -038 | -036 | -037 | -038 | -036 |
| 65 | 1A | | 230 | | | | | | | | | | | | 3270 | | | | | | | | | | | | | | | | | | | | | | | | | | | | | |
| 66 | 1A | | | | | | | | | | | | | | 3850 | | | | | | | | | | | | | | | | | | | | | | | | | | | | | |
| TOTAL FOR PHASE 1A | | | 230 | | | | | | | | | | | | 7120 | | | | | | | | | | | | | | | | | | | | | | | | | | | | | |
| 67 | 1B | | | | | | | | | | | | | 3666 | | | 291.2 | | | | | | | | | | | | | | | 1200 | | | 70 | | | | | | | | |
| 68 | 1B | | | | | | | | | | 700 | | | 2075 | 45 | | 236.6 | | | | | | | | | | | | | | 240 | 240 | | 42 | | | | | | | | |
| 69 | 1B | | | | | | | | | | 1900 | | | | 7 | | | | | | | | | | | | | | | | 160 | | | 14 | | | | | | | | |
| 70 | 1B | | | | | | | | | | | | | 3581 | 1960 | | 364 | | | | | | | | | | | | | 1380 | 740 | | 70 | | | | | | | | |
| 71 | 1B | | | | | | | | | | | | | 677 | | | 136.5 | | | | | | | | | | | | | 710 | | | 28 | | | | | | | | |
| 72 | 1B | | | | | | | | | | | | | 2808 | | | | | | 136.5 | | | | | | | | | | | | | | | 42 | | | | | | | |
| 73 | 1B | | | | | | | | | | | | | 1478 | 7 | | | | | 127.4 | | | | | | | | | 400 | 40 | | | | | 14 | | | | | | | |
| 74 | 1B | | | | | | | | | | | | | | 15 | | | | | | | | | | | | | | | 120 | | | | | | | | | | | |
| 75 | 1B | | | | | | | | | | | | | 4523 | 1670 | | | | | 172.3 | | | | | | | | | | | | | | | 42 | | | | | | | |
| 76 | 1B | | | | | | | | | | | | | 2116 | | | | | | 81.9 | | | | | | | | | | | | | | | 14 | | | | | | | |
| TOTAL FOR PHASE 1B | | | | | | | | | | | 2600 | | | 20924 | 3704 | | 1028.3 | | | 518.1 | | | | | | | | | 3930 | 1300 | | 210 | 14 | | 112 | | | | | | | |
| 77 | 1C | | | | | | | | | | | | | | | | | | | | | | | 48.8 | | | | | | 12.2 | | | | | | | | | | | | | |
| 78 | 1C | | | | | | | | | | | | | | 608 | | | | | | | | | 61 | | | | | | | | | | | | | | | | | | | |
| 79 | 1C | | | | | | | | | | | | | | | | | | | | | | | | | | | | | | | | | | | | | | | | | | |
| 80 | 1C | | | | | | | | | | | | | | | | | | | | | | | | | | | | | | | | | | | | | | | | | | |
| 81 | 1C | | | | | | | | | | | | | | | | | | | | | | | | | | | | | | | | | | | | | | | | | | |
| 82 | 1C | | | | | | | | | | | | | | | | | | | | | | | | | | | | | | | | | | | | | | | | | | |
| TOTAL FOR PHASE 1C | | | | | | | | | | | | | | | 608 | | | | | | | | | 61 | | | | 48.8 | | | 12.2 | | | | | | | | | | | | |
| SUB TOTAL 2452-01-037 | | | | | | | | | | | | | | 20924 | | | 1028.3 | | | 518.1 | | | | | | | | | 3930 | | | 210 | | | 112 | | | | | | | |
| SUB TOTAL 2452-01-036 | | | | | | | | | | | | | | | | | | | | | | | | | | | | | | | | | | | | | | | | | | | |
| SUB TOTAL 2452-01-038 | | | 230 | | | | | | | | 2600 | | | | 11432 | | | | | | | | | 61 | | | 48.8 | | | 12.2 | | | 1300 | | | 14 | | | | | | | |
| TOTAL FOR PHASE 1 | | | 230 | | | | | | | | 2600 | | | | 32356 | | | 1028.3 | | | 518.1 | | | 61 | | | 48.8 | | | 12.2 | | | 5230 | | | 224 | | | 112 | | | | |
| 83 | 2A | | | | | | | | | | | | | | | | 290 | | | | | | | | | | | | | | | | | | 56 | | | | 28 | | | |
| 84 | 2A | | | | | | | | | | | | | | | | 180 | | | | | | | | | | | | | | | | | | 28 | | | | | | | |
| 85 | 2A | | | | | | | | | | | | | | | | | | 90 | | | | | | | | | | | | | | | | | | | | 14 | | | |
| 86 | 2A | | | | | | | | | | | | | | | | | | 120 | | | | | | | | | | | | | | | | | | | | 28 | | | |
| 87 | 2A | | | | | | | | | | | | | | | | | | | | | | | | | | | | | | | | | | | | | | | | | | |
| 88 | 2A | | | | | | | | | | | | | | | | | | 70 | | | | | | | | | | | | | | | | | | | | 14 | | | |
| 89 | 2A | | | | | | | | | | | | | | | | | | 120 | | | | | | | | | | | | | | | | | | | | 42 | | | |
| 90 | 2A | | | | | | | | | | | | | | | 3228 | | | 130 | | | | | | | | 150 | | | 24 | | | 880 | | | | | | 42 | | | |
| 91 | 2A | | | | | | | | | | | | | | | 3306 | | | | | | 280 | | | | | | | | | | 300 | | | | | | 42 | | | |
| TOTAL FOR PHASE 2A | | | | | | | | | | | | | | | | 6534 | 470 | | 530 | | | 280 | | | | 150 | | | 24 | | | 1180 | | | 84 | | | 182 | 28 | | | |
| 92 | 2B | | | | | | | | | | | | | | | | | | | 128 | | | | | | | | | | | | 963 | | | 28 | | | | | | | |
| 93 | 2B | | | | | | | | | | | | | | | | 166 | | | | | | | | | | | | | | 1180 | 260 | | 28 | | | | | | | |
| 94 | 2B | | | | | | | | | | | | | | | | | | 92 | | | | | | | | | | | | | 700 | | | | | | 14 | | | |
| 95 | 2B | | | | | | | | | | | | | | | | | | 109 | | | | | | | | | | | | | 700 | | | | | | 14 | | | |
| 96 | 2B | | | | | | | | | | | | | | | 865 | | | | | | | | | | | | | | | | 530 | | | | | | 14 | | | 14 |
| 97 | 2B | | | | | | | | | | | | | | | | | | 73 | | | | | | | | | | | | | | | | | | 14 | | | 14 |
| 98 | 2B | | | | | | | | | | | | | | | | | | 114 | | | | | | | | | | | | | | | | | | 42 | | | 42 |
| 99 | 2B | | | | | | | | | | | | | | | | | | | | | 130 | | | 174 | | | | | | | | | | | | 42 | | | 42 |
| 100 | 2B | | | | | | | | | | | | | | | | 128 | | | | | | | | | | | | | | 1084 | | | 28 | | | | 28 | | |
| 101 | 2B | | | | | | | | | | | | | | | | | | 166 | | | | | | | | | | | | 1180 | 260 | | 28 | | | | 28 | | |
| 102 | 2B | | | | | | | | | | | | | | | | | | 92 | | | | | | | | | | | | | 550 | | | | | | 14 | | | 14 |
| 103 | 2B | | | | | | | | | | | | | | | | | | 109 | | | | | | | | | | | | | 1280 | | | | | | 14 | | | 14 |
| 104 | 2B | | | | | | | | | | | | | | | | | | | | | | | | | | | | | | | 710 | | | | | | | | | |
| TOTAL FOR PHASE 2B | | | | | | | | | | | | | | | | 865 | 294 | | 755 | 128 | | 130 | | | 174 | | | | | | 4407 | | 4990 | | | 112 | | | 168 | 56 | | 140 |
| SUB TOTAL 2452-01-037 | | | | | * | | | | | | | | | | | | 764 | | | 128 | | | | | | | | | | | 4407 | | | | | 196 | | | 84 | | | |
| SUB TOTAL 2452-01-036 | | | | | | | * | | | | | | | | | 7399 | | | 1285 | | | 410 | | | 174 | | | 150 | | | 24 | | | 6170 | | | | | | 350 | | | 140 |
| SUB TOTAL 2452-01-038 | | | | | | * | | | | | | | | | | | | | | | | | | | | | | | | | | | | | | | | | | | | | |
| TOTAL FOR PHASE 2 | | | | | | | | | | | | | | | | 7399 | | | 2049 | | | 538 | | | 174 | | | 150 | | | 24 | | | 10577 | | | | | | 546 | | | 224 |
| PROJECT TOTAL 2452-01-037 | | | | | 3170 | | | 184 | | | | | | 20924 | | | 1792.3 | | | 646.1 | | | | | | | | | | | | 8337 | | | 210 | | | 308 | | | 84 | | |
| PROJECT TOTAL 2452-01-036 | | | | | | | 4794 | | | 340 | | | | | | 7399 | | | 1285 | | | 410 | | | 174 | | | 150 | | | 24 | | | 6170 | | | | | | 350 | | | 140 |
| PROJECT TOTAL 2452-01-038 | | | 230 | | | 2300 | | | 62 | | | 2600 | | | 11432 | | | | | | | | | 61 | | | 48.8 | | | 12.2 | | | 1300 | | | 14 | | | | | | | |
| PROJECT TOTAL | | | 230 | | | 10264 | | | 586 | | | 2600 | | | 39755 | | | 3077.3 | | | 1056.1 | | | 235 | | | 198.8 | | | 36.2 | | | 15807 | | | 224 | | | 658 | | | 224 |

* TABS TO BE PLACED DURING FINAL HOT MIX PLACEMENT

FILE t:\go\design\lp1604fm471-90\summaries\seqofwork.dgn 26 OCT 2000
LEVEL 1 2 3 4 5 6 7 8 9 10 11 12 13 14 15 16 17 18 19 20 21 22 23 24 25 26 27 28 29 30 31 32
DISPLAYED 1 3 30 45 50 62 67 89 94 104 124 134 145 156 167 178 189 195 205 216 225 235 245 255 265 276 286 296 306 316 326 336 346 356 366 376 386 396 406 416 426 436 446 456

©2000

Texas Department of Transportation

# SEQUENCE OF WORK SUMMARY

SHEET 2 OF 2

| FED. RD. DIV. NO. | FEDERAL AID PROJECT NO. | | SHEET NO. |
|---|---|---|---|
| 6 | NH 2000(704), ETC. | | 15 |
| STATE | DIST. | COUNTY | |
| TEXAS | SAT | BEXAR | |
| CONT. | SECT. | JOB | HIGHWAY NO. |
| 2452 | 01 | 036,ETC | LP 1604 |

SHEET 191
PLAN SHEET 1 OF 57

| STATION | EXCAVATION (RDWY) | EMBANK (ORD COMP) (TY B) (CL 3) |
|---|---|---|
| 13+800.000 | 0 | 0 |
| 13+820.000 | 75 | 0 |
| 13+840.000 | 75 | 0 |
| 13+860.000 | 96 | 0 |
| 13+880.000 | 96 | 0 |
| 13+900.000 | 69 | 0 |
| 13+920.000 | 72 | 0 |
| 13+940.000 | 77 | 0 |
| 13+960.000 | 85 | 0 |
| 13+980.000 | 94 | 0 |
| SHEET TOTAL | 739 | 0 |

SHEET 192
PLAN SHEET 2 OF 57

| STATION | EXCAVATION (RDWY) | EMBANK (ORD COMP) (TY B) (CL 3) |
|---|---|---|
| 14+000.000 | 106 | 0 |
| 14+020.000 | 120 | 0 |
| 14+040.000 | 129 | 0 |
| 14+060.000 | 145 | 0 |
| 14+080.000 | 167 | 0 |
| 14+100.000 | 182 | 0 |
| 14+120.000 | 197 | 0 |
| 14+140.000 | 225 | 0 |
| 14+160.000 | 251 | 0 |
| 14+180.000 | 260 | 0 |
| 14+200.000 | 267 | 0 |
| 14+220.000 | 266 | 0 |
| 14+240.000 | 253 | 0 |
| SHEET TOTAL | 2568 | 0 |

SHEET 193
PLAN SHEET 3 OF 57

| STATION | EXCAVATION (RDWY) | EMBANK (ORD COMP) (TY B) (CL 3) |
|---|---|---|
| 14+260.000 | 220 | 0 |
| 14+280.000 | 189 | 0 |
| 14+300.000 | 173 | 0 |
| 14+320.000 | 158 | 0 |
| 14+340.000 | 144 | 0 |
| 14+360.000 | 131 | 0 |
| 14+380.000 | 119 | 0 |
| 14+400.000 | 110 | 0 |
| 14+420.000 | 323 | 4 |
| 14+440.000 | 448 | 62 |
| 14+460.000 | 378 | 268 |
| 14+480.000 | 356 | 614 |
| 14+500.000 | 295 | 1080 |
| SHEET TOTAL | 3044 | 2028 |

SHEET 194
PLAN SHEET 4 OF 57

| STATION | EXCAVATION (RDWY) | EMBANK (ORD COMP) (TY B) (CL 3) |
|---|---|---|
| 14+520.000 | 254 | 1442 |
| 14+540.000 | 210 | 1597 |
| 14+560.000 | 216 | 1677 |
| 14+580.000 | 231 | 1628 |
| 14+600.000 | 211 | 1460 |
| 14+620.000 | 255 | 1322 |
| 14+640.000 | 364 | 1122 |
| 14+660.000 | 416 | 705 |
| 14+680.000 | 539 | 244 |
| 14+700.000 | 942 | 21 |
| 14+720.000 | 1676 | 8 |
| 14+740.000 | 2324 | 8 |
| 14+760.000 | 2702 | 8 |
| 14+780.000 | 3035 | 8 |
| SHEET TOTAL | 13375 | 11250 |

SHEET 195
PLAN SHEET 5 OF 57

| STATION | EXCAVATION (RDWY) | EMBANK (ORD COMP) (TY B) (CL 3) |
|---|---|---|
| 14+800.000 | 3229 | 8 |
| 14+820.000 | 3278 | 8 |
| 14+840.000 | 3181 | 8 |
| 14+860.000 | 2933 | 8 |
| 14+880.000 | 2517 | 8 |
| 14+900.000 | 1898 | 8 |
| 14+920.000 | 1231 | 10 |
| 14+940.000 | 906 | 18 |
| 14+960.000 | 770 | 56 |
| 14+980.000 | 565 | 139 |
| 15+000.000 | 410 | 262 |
| 15+020.000 | 294 | 416 |
| 15+040.000 | 206 | 586 |
| SHEET TOTAL | 21418 | 1535 |

SHEET 196
PLAN SHEET 6 OF 57

| STATION | EXCAVATION (RDWY) | EMBANK (ORD COMP) (TY B) (CL 3) |
|---|---|---|
| 15+060.000 | 157 | 779 |
| 15+080.000 | 131 | 1095 |
| 15+100.000 | 100 | 1552 |
| 15+120.000 | 69 | 1915 |
| 15+140.000 | 69 | 2188 |
| 15+160.000 | 71 | 2458 |
| 15+180.000 | 112 | 2606 |
| 15+200.000 | 128 | 2604 |
| 15+220.000 | 70 | 2566 |
| 15+240.000 | 54 | 2578 |
| 15+260.000 | 75 | 2580 |
| 15+280.000 | 133 | 2507 |
| 15+300.000 | 166 | 2204 |
| SHEET TOTAL | 1335 | 27632 |

SHEET 197
PLAN SHEET 7 OF 57

| STATION | EXCAVATION (RDWY) | EMBANK (ORD COMP) (TY B) (CL 3) |
|---|---|---|
| 15+320.000 | 160 | 1749 |
| 15+340.000 | 185 | 1339 |
| 15+360.000 | 265 | 938 |
| 15+380.000 | 401 | 586 |
| 15+400.000 | 757 | 411 |
| 15+420.000 | 1835 | 256 |
| 15+440.000 | 3387 | 205 |
| 15+460.000 | 5272 | 150 |
| 15+480.000 | 7292 | 27 |
| 15+500.000 | 8664 | 30 |
| SUB-TOTAL | 28218 | 5691 |
| TOTAL 2452-01-037 | 69958 | 48136 |
| BEGIN C.S.J. 2452-01-038 | | |
| 15+520.000 | 10052 | 28 |
| 15+540.000 | 10811 | 29 |
| 15+560.000 | 10675 | 26 |
| SUB-TOTAL | 31538 | 83 |
| SHEET TOTAL | 59756 | 5774 |

FILE rwsum.dgn 13 SEP 2000
LEVEL DISPLAYED 1 2 3 4 5 6 7 8 9 10 11 12 13 14 15 16 17 18 19 20 21 22 23 24 25 26 27 28 29 30 31 32 33 34 35 36 37 38 39 40 41 42 43 44 45 46 47 48 49 50 51 52 53 54 55 56 57 58 59 60 61 62 63

©2000 Texas Department of Transportation

# EARTHWORK SUMMARY

SHEET 1 OF 8

| FED.RD. DIV.NO. | FEDERAL AID PROJECT NO. | | SHEET NO. |
|---|---|---|---|
| 6 | NH 2000(704),etc. | | 16 |
| STATE | DIST. | COUNTY | |
| TEXAS | SAT | BEXAR | |
| CONT. | SECT. | JOB | HIGHWAY NO. |
| 2452 | 01 | 036,etc. | LP 1604 |

SHEET 191
PLAN SHEET 1 OF 57

| STATION | EXCAVATION (RDWY) | EMBANK (ORD COMP) (TY B) (CL 3) |
|---|---|---|
| 13+800.000 | 0 | 0 |
| 13+820.000 | 75 | 0 |
| 13+840.000 | 75 | 0 |
| 13+860.000 | 96 | 0 |
| 13+880.000 | 96 | 0 |
| 13+900.000 | 69 | 0 |
| 13+920.000 | 72 | 0 |
| 13+940.000 | 77 | 0 |
| 13+960.000 | 85 | 0 |
| 13+980.000 | 94 | 0 |
| SHEET TOTAL | 739 | 0 |

SHEET 192
PLAN SHEET 2 OF 57

| STATION | EXCAVATION (RDWY) | EMBANK (ORD COMP) (TY B) (CL 3) |
|---|---|---|
| 14+000.000 | 106 | 0 |
| 14+020.000 | 120 | 0 |
| 14+040.000 | 129 | 0 |
| 14+060.000 | 145 | 0 |
| 14+080.000 | 167 | 0 |
| 14+100.000 | 182 | 0 |
| 14+120.000 | 197 | 0 |
| 14+140.000 | 225 | 0 |
| 14+160.000 | 251 | 0 |
| 14+180.000 | 260 | 0 |
| 14+200.000 | 267 | 0 |
| 14+220.000 | 266 | 0 |
| 14+240.000 | 253 | 0 |
| SHEET TOTAL | 2568 | 0 |

SHEET 193
PLAN SHEET 3 OF 57

| STATION | EXCAVATION (RDWY) | EMBANK (ORD COMP) (TY B) (CL 3) |
|---|---|---|
| 14+260.000 | 220 | 0 |
| 14+280.000 | 189 | 0 |
| 14+300.000 | 173 | 0 |
| 14+320.000 | 158 | 0 |
| 14+340.000 | 144 | 0 |
| 14+360.000 | 131 | 0 |
| 14+380.000 | 119 | 0 |
| 14+400.000 | 110 | 0 |
| 14+420.000 | 323 | 4 |
| 14+440.000 | 448 | 62 |
| 14+460.000 | 378 | 268 |
| 14+480.000 | 356 | 614 |
| 14+500.000 | 295 | 1080 |
| SHEET TOTAL | 3044 | 2028 |

SHEET 194
PLAN SHEET 4 OF 57

| STATION | EXCAVATION (RDWY) | EMBANK (ORD COMP) (TY B) (CL 3) |
|---|---|---|
| 14+520.000 | 254 | 1442 |
| 14+540.000 | 210 | 1597 |
| 14+560.000 | 216 | 1677 |
| 14+580.000 | 231 | 1628 |
| 14+600.000 | 211 | 1460 |
| 14+620.000 | 255 | 1322 |
| 14+640.000 | 364 | 1122 |
| 14+660.000 | 416 | 705 |
| 14+680.000 | 539 | 244 |
| 14+700.000 | 942 | 21 |
| 14+720.000 | 1676 | 8 |
| 14+740.000 | 2324 | 8 |
| 14+760.000 | 2702 | 8 |
| 14+780.000 | 3035 | 8 |
| SHEET TOTAL | 13375 | 11250 |

SHEET 195
PLAN SHEET 5 OF 57

| STATION | EXCAVATION (RDWY) | EMBANK (ORD COMP) (TY B) (CL 3) |
|---|---|---|
| 14+800.000 | 3229 | 8 |
| 14+820.000 | 3278 | 8 |
| 14+840.000 | 3181 | 8 |
| 14+860.000 | 2933 | 8 |
| 14+880.000 | 2517 | 8 |
| 14+900.000 | 1898 | 8 |
| 14+920.000 | 1231 | 10 |
| 14+940.000 | 906 | 18 |
| 14+960.000 | 770 | 56 |
| 14+980.000 | 565 | 139 |
| 15+000.000 | 410 | 262 |
| 15+020.000 | 294 | 416 |
| 15+040.000 | 206 | 586 |
| SHEET TOTAL | 21418 | 1535 |

SHEET 196A
PLAN SHEET 6 OF 57

| STATION | EXCAVATION (RDWY) | EMBANK (ORD COMP) (TY B) (CL 3) |
|---|---|---|
| 15+060.000 | 157 | 779 |
| 15+080.000 | 131 | 1095 |
| 15+100.000 | 100 | 1552 |
| 15+120.000 | 69 | 1915 |
| 15+140.000 | 69 | 2188 |
| 15+160.000 | 71 | 2458 |
| 15+180.000 | 112 | 2606 |
| 15+200.000 | 143 | 2603 |
| 15+220.000 | 97 | 2566 |
| 15+240.000 | 77 | 2579 |
| 15+260.000 | 92 | 2580 |
| 15+280.000 | 139 | 2507 |
| 15+300.000 | 166 | 2204 |
| SHEET TOTAL | 1423 | 27,632 |

28

SHEET 197A
PLAN SHEET 7 OF 57

| STATION | EXCAVATION (RDWY) | EMBANK (ORD COMP) (TY B) (CL 3) |
|---|---|---|
| 15+320.000 | 160 | 1749 |
| 15+340.000 | 181 | 1339 |
| 15+360.000 | 259 | 938 |
| 15+380.000 | 404 | 586 |
| 15+400.000 | 779 | 411 |
| 15+420.000 | 1804 | 256 |
| 15+440.000 | 3324 | 205 |
| 15+460.000 | 5229 | 150 |
| 15+480.000 | 7289 | 27 |
| 15+500.000 | 9946 | 30 |
| SUB-TOTAL | 29,375 | 5691 |
| TOTAL 2452-01-037 | 71,942 | 48,136 |
| BEGIN C.S.J. 2452-01-038 | | |
| 15+520.000 | 11479 | 27 |
| 15+540.000 | 11150 | 29 |
| 15+560.000 | 10999 | 26 |
| SUB-TOTAL | 33,628 | 82 |
| SHEET TOTAL | 63,003 | 5773 |

28

CHANGE ORDER NO. 28

-EARTHWORK REVISIONS NEEDED TO ALLOW FOR NEW STORM DRAIN LINE I2A, RELOCATED STORM DRAIN LINE I5A AND GRADING REVISIONS NEEDED IN THE VICINITY OF WESTWOOD LP & WESTWOOD VISTA.

CHANGE ORDER 28

REVISED SHEET

©2003 Texas Department of Transportation

# EARTHWORK SUMMARY

SHEET 1 OF 8

| FED. RD. DIV. NO. | FEDERAL AID PROJECT NO. | SHEET NO. |
|---|---|---|
| 6 | NH 2000(704), etc. | 16A |
| STATE | DIST. | COUNTY |
| TEXAS | SAT | BEXAR |
| CONT. | SECT. | JOB / HIGHWAY NO. |
| 2452 | 01 | 036, etc. / LP 1604 |

FILE: earthworksum.dgn
LEVEL DISPLAYED: 1 2 3 4 5 6 7 8 9 10 11 12 13 14 15 16 17 18 19 20 21 22 23 24 25 26 27 28 29 30 31 32 33 34 35 36 37 38 39 40 41 42 43 44 45 46 47 48 49 50 51 52 53 54 55 56 57 58 59 60 61 62 63 64 65 66 67 68 69 70 71 72 73 74 75 76 77 78 79 80 81 82 83 84 85 86 87 88 89 90 91 92 93 94 95 96 97 98 99 100 101 102 103 104 105 106 107 108 109 110 111 112 113 114 115 116 117 118 119 120 121 122 123 124 125 126 127 128 129 130 131 132
$DATE$

SHEET 198
PLAN SHEET 8 OF 57

| STATION | EXCAVATION (RDWY) | EMBANK (ORD COMP) (TY B) (CL 3) |
|---|---|---|
| 15+580.000 | 10606 | 25 |
| 15+600.000 | 9742 | 51 |
| 15+620.000 | 8266 | 419 |
| 15+640.000 | 7303 | 641 |
| 15+660.000 | 5903 | 663 |
| 15+680.000 | 3113 | 1664 |
| 15+700.000 | 780 | 4286 |
| 15+720.000 | 80 | 6969 |
| 15+740.000 | 29 | 8844 |
| 15+760.000 | 13 | 11162 |
| 15+780.000 | 8 | 13208 |
| 15+800.000 | 12 | 12547 |
| 15+820.000 | 0 | 279 |
| 15+840.000 | 0 | 0 |
| SHEET TOTAL | 45855 | 60758 |

SHEET 199
PLAN SHEET 9 OF 57

| STATION | EXCAVATION (RDWY) | EMBANK (ORD COMP) (TY B) (CL 3) |
|---|---|---|
| 15+860.000 | 0 | 0 |
| 15+880.000 | 0 | 0 |
| 15+900.000 | 0 | 0 |
| 15+920.000 | 7136 | 196 |
| 15+940.000 | 1648 | 271 |
| 15+960.000 | 1379 | 84 |
| 15+980.000 | 1058 | 77 |
| 16+000.000 | 0 | 0 |
| * 16+020.000 | 5058 | 14927 |
| 16+040.000 | 0 | 0 |
| 16+060.000 | 0 | 0 |
| 16+080.000 | 0 | 0 |
| 16+100.000 | 799 | 6927 |
| SHEET TOTAL | 17078 | 22482 |

* INCLUDES 5058 M3 CUT AND 14927 M3 FILL FOR CULEBRA RD.

SHEET 200
PLAN SHEET 10 OF 57

| STATION | EXCAVATION (RDWY) | EMBANK (ORD COMP) (TY B) (CL 3) |
|---|---|---|
| 16+120.000 | 842 | 6408 |
| 16+140.000 | 882 | 5964 |
| 16+160.000 | 926 | 5560 |
| 16+180.000 | 917 | 5248 |
| 16+200.000 | 835 | 4952 |
| 16+220.000 | 718 | 4477 |
| 16+240.000 | 608 | 4046 |
| 16+260.000 | 509 | 3578 |
| 16+280.000 | 429 | 2978 |
| 16+300.000 | 395 | 2481 |
| 16+320.000 | 451 | 2002 |
| 16+340.000 | 623 | 1517 |
| 16+360.000 | 848 | 1082 |
| SHEET TOTAL | 8983 | 50293 |

SHEET 201
PLAN SHEET 11 OF 57

| STATION | EXCAVATION (RDWY) | EMBANK (ORD COMP) (TY B) (CL 3) |
|---|---|---|
| 16+380.000 | 1045 | 711 |
| 16+400.000 | 1063 | 460 |
| 16+420.000 | 941 | 330 |
| 16+440.000 | 855 | 227 |
| 16+460.000 | 825 | 154 |
| 16+480.000 | 788 | 149 |
| 16+500.000 | 792 | 124 |
| 16+520.000 | 983 | 57 |
| 16+540.000 | 978 | 66 |
| 16+560.000 | 768 | 99 |
| 16+580.000 | 754 | 87 |
| 16+600.000 | 872 | 76 |
| 16+620.000 | 814 | 89 |
| SHEET TOTAL | 11478 | 2629 |

SHEET 202
PLAN SHEET 12 OF 57

| STATION | EXCAVATION (RDWY) | EMBANK (ORD COMP) (TY B) (CL 3) |
|---|---|---|
| 16+640.000 | 703 | 76 |
| 16+660.000 | 744 | 55 |
| 16+680.000 | 712 | 87 |
| 16+700.000 | 759 | 100 |
| 16+720.000 | 1135 | 61 |
| 16+740.000 | 1684 | 28 |
| 16+760.000 | 2337 | 18 |
| 16+780.000 | 2736 | 22 |
| 16+800.000 | 3029 | 19 |
| 16+820.000 | 3577 | 11 |
| 16+840.000 | 3837 | 9 |
| 16+860.000 | 3945 | 8 |
| 16+880.000 | 4433 | 8 |
| SHEET TOTAL | 29631 | 502 |

SHEET 203
PLAN SHEET 13 OF 57

| STATION | EXCAVATION (RDWY) | EMBANK (ORD COMP) (TY B) (CL 3) |
|---|---|---|
| 16+900.000 | 4999 | 8 |
| 16+920.000 | 5545 | 8 |
| 16+940.000 | 6113 | 7 |
| 16+960.000 | 6448 | 7 |
| 16+980.000 | 6528 | 8 |
| 17+000.000 | 6497 | 8 |
| SUB-TOTAL | 36130 | 46 |
| TOTAL 2452-01-038 | 180693 | 136793 |
| BEGIN C.S.J. 2452-01-037 | | |
| 17+020.000 | 6465 | 8 |
| 17+040.000 | 6292 | 8 |
| 17+060.000 | 5997 | 8 |
| 17+080.000 | 5605 | 8 |
| 17+100.000 | 4825 | 8 |
| 17+120.000 | 3681 | 8 |
| 17+140.000 | 2456 | 8 |
| SUB-TOTAL | 35321 | 56 |
| SHEET TOTAL | 71451 | 102 |

SHEET 204
PLAN SHEET 14 OF 57

| STATION | EXCAVATION (RDWY) | EMBANK (ORD COMP) (TY B) (CL 3) |
|---|---|---|
| 17+160.000 | 1205 | 156 |
| 17+180.000 | 416 | 966 |
| 17+200.000 | 368 | 2219 |
| 17+220.000 | 329 | 3135 |
| 17+240.000 | 126 | 3657 |
| 17+260.000 | 67 | 3648 |
| 17+280.000 | 62 | 3492 |
| 17+300.000 | 42 | 3447 |
| 17+320.000 | 45 | 2965 |
| 17+340.000 | 37 | 2231 |
| 17+360.000 | 3 | 1712 |
| 17+380.000 | 9 | 1455 |
| 17+400.000 | 9 | 1332 |
| SHEET TOTAL | 2718 | 30415 |

©2000 Texas Department of Transportation

# EARTHWORK SUMMARY

SHEET 2 OF 8

| FED. RD. DIV. NO. | FEDERAL AID PROJECT NO. | | SHEET NO. |
|---|---|---|---|
| 6 | NH 2000(704), etc. | | 17 |
| STATE | DIST. | COUNTY | |
| TEXAS | SAT | BEXAR | |
| CONT. | SECT. | JOB | HIGHWAY NO. |
| 2452 | 01 | 036, etc. | LP 1604 |

FILE: rwsum.dgn
LEVEL DISPLAYED
13 SEP 2000

SHEET 198
PLAN SHEET 8 OF 57

| STATION | EXCAVATION (RDWY) | EMBANK (ORD COMP) (TY B) (CL 3) |
|---|---|---|
| 15+580.000 | 10606 | 25 |
| 15+600.000 | 9613 | 51 |
| 15+620.000 | 8137 | 419 |
| 15+640.000 | 7303 | 641 |
| 15+660.000 | 5903 | 663 |
| 15+680.000 | 3113 | 1664 |
| 15+700.000 | 777 | 4286 |
| 15+720.000 | 76 | 6969 |
| 15+740.000 | 26 | 8844 |
| 15+760.000 | 120 | 11162 |
| 15+780.000 | 109 | 13208 |
| 15+800.000 | 5 | 12547 |
| 15+820.000 | 0 | 279 |
| 15+840.000 | 0 | 0 |
| SHEET TOTAL | 45788 | 62249 |

25 SHEET 199A
PLAN SHEET 9 OF 57

| STATION | EXCAVATION (RDWY) | EMBANK (ORD COMP) (TY B) (CL 3) |
|---|---|---|
| 15+860.000 | 0 | 0 |
| 15+880.000 | 0 | 0 |
| 15+900.000 | 0 | 0 |
| 15+920.000 | 7136 | 196 |
| 15+940.000 | 1648 | 271 |
| 15+960.000 | 1379 | 84 |
| 15+980.000 | 1058 | 77 |
| 16+000.000 | 0 | 0 |
| * 16+020.000 | 5058 | 14927 |
| 16+040.000 | 0 | 0 |
| 16+060.000 | 0 | 0 |
| 16+080.000 | 0 | 0 |
| 25 → 16+100.000 | 834 | 6927 |
| 25 SHEET TOTAL | 17113 | 22482 |

* INCLUDES 5058 M3 CUT AND 14927 M3 FILL FOR CULEBRA RD.

25 SHEET 200A
PLAN SHEET 10 OF 57

| STATION | EXCAVATION (RDWY) | EMBANK (ORD COMP) (TY B) (CL 3) |
|---|---|---|
| 25 16+120.000 | 826 | 6408 |
| 16+140.000 | 847 | 5964 |
| 16+160.000 | 874 | 5560 |
| 16+180.000 | 848 | 5248 |
| ** 16+200.000 | 1281 | 4952 |
| 16+220.000 | 658 | 4479 |
| 16+240.000 | 587 | 4054 |
| 16+260.000 | 513 | 3585 |
| 16+280.000 | 459 | 2980 |
| 16+300.000 | 430 | 2481 |
| 16+320.000 | 458 | 2018 |
| 16+340.000 | 618 | 1533 |
| 16+360.000 | 847 | 1084 |
| 25 SHEET TOTAL | 9246 | 50346 |

** INCLUDES 531 M3 EXCAVATION FOR HEB DRIVEWAYS 5A

~~SHEET 201A~~
PLAN SHEET 11 OF 57

| STATION | EXCAVATION (RDWY) | EMBANK (ORD COMP) (TY B) (CL 3) |
|---|---|---|
| 25 16+380.000 | 1033 | 713 |
| ** 16+400.000 | 1538 | 496 |
| 16+420.000 | 933 | 365 |
| 16+440.000 | 856 | 228 |
| 16+460.000 | 826 | 154 |
| 16+480.000 | 789 | 149 |
| 16+500.000 | 791 | 124 |
| 16+520.000 | 984 | 57 |
| 16+540.000 | 978 | 66 |
| 16+560.000 | 768 | 99 |
| 27 16+580.000 | 754 | 87 |
| 27 16+600.000 | 752 | 83 |
| 27 16+620.000 | 694 | 95 |
| BEGIN EARTHWORK REVISIONS C.O. # 27 STA. 16+580 THRU 16+680 (LINE I-14) | | |
| 27 25 SHEET TOTAL | 11696 | 2716 |

** INCLUDES 494 M3 EXCAVATION FOR HEB DRIVEWAYS 5B

~~SHEET 202A~~
PLAN SHEET 12 OF 57

| STATION | EXCAVATION (RDWY) | EMBANK (ORD COMP) (TY B) (CL 3) |
|---|---|---|
| 25 27 16+640.000 | 703 | 76 |
| 27 16+660.000 | 749 | 55 |
| 27 16+680.000 | 717 | 87 |
| ~~16+700.000~~ | ~~759~~ | ~~100~~ |
| 16+720.000 | 1135 | 61 |
| 16+740.000 | 1684 | 28 |
| 16+760.000 | 2337 | 18 |
| *** 16+780.000 | ~~1676~~ 1205 | 22 |
| 16+800.000 | ~~1969~~ 3029 | 20 |
| 16+820.000 | 3577 | 11 |
| 16+840.000 | 3837 | 9 |
| 16+860.000 | 3999 | 8 |
| 25 → 16+880.000 | 4487 | 8 |
| END EARTHWORK REVISIONS C.O. # 27 STA. 16+580 THRU 16+680 (LINE I-14) | | |
| 27 25 SHEET TOTAL | ~~27629~~ 11696 | 503 |

*** INCLUDES DRIVEWAY 8A 29347

SHEET 203
PLAN SHEET 13 OF 57

| STATION | EXCAVATION (RDWY) | EMBANK (ORD COMP) (TY B) (CL 3) |
|---|---|---|
| 16+900.000 | 4999 | 8 |
| 16+920.000 | 5545 | 8 |
| 16+940.000 | 6113 | 7 |
| 16+960.000 | 6448 | 7 |
| 16+980.000 | 6528 | 8 |
| 17+000.000 | 6497 | 8 |
| SUB-TOTAL | 36130 | 46 |
| TOTAL 2452-01-038 | 181784 | 138283 |
| BEGIN C.S.J. 2452-01-037 | | |
| 17+020.000 | 6465 | 8 |
| 17+040.000 | 6292 | 8 |
| 17+060.000 | 5997 | 8 |
| 17+080.000 | 5605 | 8 |
| 17+100.000 | 4825 | 8 |
| 17+120.000 | 3681 | 8 |
| 17+140.000 | 2456 | 8 |
| SUB-TOTAL | 35321 | 56 |
| SHEET TOTAL | 71451 | 102 |

SHEET 204
PLAN SHEET 14 OF 57

| STATION | EXCAVATION (RDWY) | EMBANK (ORD COMP) (TY B) (CL 3) |
|---|---|---|
| 17+160.000 | 1205 | 156 |
| 17+180.000 | 416 | 966 |
| 17+200.000 | 779 | 2204 |
| 17+220.000 | 740 | 3133 |
| 17+240.000 | 126 | 3657 |
| 17+260.000 | 67 | 3648 |
| 17+280.000 | 62 | 3492 |
| 17+300.000 | 41 | 3447 |
| 17+320.000 | 45 | 2965 |
| 17+340.000 | 37 | 2231 |
| 17+360.000 | 3 | 1712 |
| 17+380.000 | 9 | 1455 |
| 17+400.000 | 9 | 1332 |
| SHEET TOTAL | 3539 | 30398 |

25 CHANGE ORDER NO. 25
(THE INSTALLATION OF THE H.E.B. DRIVEWAYS (DRVY 5A, 5B &8A))

27 CHANGE ORDER NO. 27
(ADJUSTMENT TO LINE I-14)

CHANGE ORDER NO. 27
-EARTHWORK REVISIONS NEEDED TO ALLOW FOR REVISED STORM DRAIN LINE I-14 (STATION 16+580 THRU 16+680).

CHANGE ORDER 27

FILE $FILE$ | LEVEL | DISPLAYED | $DATE$

©2000 Texas Department of Transportation

# EARTHWORK SUMMARY

SHEET 2 OF 8

| FED. RD. DIV. NO. | FEDERAL AID PROJECT NO. | | SHEET NO. |
|---|---|---|---|
| 6 | NH 2000(704), etc. | | 17A |
| STATE | DIST. | COUNTY | |
| TEXAS | SAT | BEXAR | |
| CONT. | SECT. | JOB | HIGHWAY NO. |
| 2452 | 01 | 036, etc. | LP 1604 |

SHEET 198
PLAN SHEET 8 OF 57

| STATION | EXCAVATION (RDWY) | EMBANK (ORD COMP) (TY B) (CL 3) |
|---|---|---|
| 15+580.000 | 10606 | 25 |
| 15+600.000 | 9742 | 51 |
| 15+620.000 | 8266 | 419 |
| 15+640.000 | 7303 | 641 |
| 15+660.000 | 5903 | 663 |
| 15+680.000 | 3113 | 1664 |
| 15+700.000 | 780 | 4286 |
| 15+720.000 | 80 | 6969 |
| 15+740.000 | 29 | 8844 |
| 15+760.000 | 13 | 11162 |
| 15+780.000 | 8 | 13208 |
| 15+800.000 | 12 | 12547 |
| 15+820.000 | 0 | 279 |
| 15+840.000 | 0 | 0 |
| SHEET TOTAL | 45855 | 60758 |

△25 SHEET 199A
PLAN SHEET 9 OF 57

| STATION | EXCAVATION (RDWY) | EMBANK (ORD COMP) (TY B) (CL 3) |
|---|---|---|
| 15+860.000 | 0 | 0 |
| 15+880.000 | 0 | 0 |
| 15+900.000 | 0 | 0 |
| 15+920.000 | 7136 | 196 |
| 15+940.000 | 1648 | 271 |
| 15+960.000 | 1379 | 84 |
| 15+980.000 | 1058 | 77 |
| 16+000.000 | 0 | 0 |
| * 16+020.000 | 5058 | 14927 |
| 16+040.000 | 0 | 0 |
| 16+060.000 | 0 | 0 |
| 16+080.000 | 0 | 0 |
| △25 → 16+100.000 | 834 | 6927 |
| △25 SHEET TOTAL | 17113 | 22482 |

* INCLUDES 5058 M3 CUT AND 14927 M3 FILL FOR CULEBRA RD.

△25 SHEET 200A
PLAN SHEET 10 OF 57

| STATION | EXCAVATION (RDWY) | EMBANK (ORD COMP) (TY B) (CL 3) |
|---|---|---|
| △25 16+120.000 | 826 | 6408 |
| 16+140.000 | 847 | 5964 |
| 16+160.000 | 874 | 5560 |
| 16+180.000 | 848 | 5248 |
| ** 16+200.000 | 1281 | 4952 |
| 16+220.000 | 658 | 4479 |
| 16+240.000 | 587 | 4054 |
| 16+260.000 | 513 | 3585 |
| 16+280.000 | 459 | 2980 |
| 16+300.000 | 430 | 2481 |
| 16+320.000 | 458 | 2018 |
| 16+340.000 | 618 | 1533 |
| 16+360.000 | 847 | 1084 |
| △25 SHEET TOTAL | 9246 | 50346 |

** INCLUDES 531 M3 EXCAVATION FOR HEB DRIVEWAYS 5A

SHEET 201A
PLAN SHEET 11 OF 57

| STATION | EXCAVATION (RDWY) | EMBANK (ORD COMP) (TY B) (CL 3) |
|---|---|---|
| △25 16+380.000 | 1033 | 713 |
| ** 16+400.000 | 1538 | 496 |
| 16+420.000 | 933 | 365 |
| 16+440.000 | 856 | 228 |
| 16+460.000 | 826 | 154 |
| 16+480.000 | 789 | 149 |
| 16+500.000 | 791 | 124 |
| 16+520.000 | 984 | 57 |
| 16+540.000 | 978 | 66 |
| 16+560.000 | 768 | 99 |
| △27 16+580.000 | 754 | 87 |
| △27 16+600.000 | 752 | 83 |
| △27 16+620.000 | 694 | 95 |
| △27 △25 SHEET TOTAL | 11696 | 2716 |

** INCLUDES 494 M3 EXCAVATION FOR HEB DRIVEWAYS 5B

~~SHEET 202A~~
PLAN SHEET 12 OF 57

| STATION | EXCAVATION (RDWY) | EMBANK (ORD COMP) (TY B) (CL 3) |
|---|---|---|
| △25 △27 16+640.000 | 703 | 76 |
| △27 16+660.000 | 749 | 55 |
| △27 16+680.000 | 717 | 87 |
| 16+700.000 | 759 | 100 |
| 16+720.000 | 1135 | 61 |
| 16+740.000 | 1684 | 28 |
| 16+760.000 | 2337 | 18 |
| *** 16+780.000 | ~~1676~~ 2334 | 22 |
| 16+800.000 | ~~1969~~ 3029 | 20 |
| 16+820.000 | 3577 | 11 |
| 16+840.000 | 3837 | 9 |
| 16+860.000 | 3999 | 8 |
| △25 → 16+880.000 | 4487 | 8 |
| △27 △25 SHEET TOTAL | ~~27629~~ 29347 | 503 |

*** INCLUDES DRIVEWAY 8A

SHEET 203
PLAN SHEET 13 OF 57

| STATION | EXCAVATION (RDWY) | EMBANK (ORD COMP) (TY B) (CL 3) |
|---|---|---|
| 16+900.000 | 4999 | 8 |
| 16+920.000 | 5545 | 8 |
| 16+940.000 | 6113 | 7 |
| 16+960.000 | 6448 | 7 |
| 16+980.000 | 6528 | 8 |
| 17+000.000 | 6497 | 8 |
| SUB-TOTAL | 36130 | 46 |
| TOTAL 2452-01-038 | 181784 | 138283 |
| BEGIN C.S.J. 2452-01-037 | | |
| 17+020.000 | 6465 | 8 |
| 17+040.000 | 6292 | 8 |
| 17+060.000 | 5997 | 8 |
| 17+080.000 | 5605 | 8 |
| 17+100.000 | 4825 | 8 |
| 17+120.000 | 3681 | 8 |
| 17+140.000 | 2456 | 8 |
| SUB-TOTAL | 35321 | 56 |
| SHEET TOTAL | 71451 | 102 |

~~SHEET 204A~~
PLAN SHEET 14 OF 57

| STATION | EXCAVATION (RDWY) | EMBANK (ORD COMP) (TY B) (CL 3) |
|---|---|---|
| 17+160.000 | 1205 | 156 |
| ~~17+180.000~~ | ~~416~~ | ~~966~~ |
| △11 17+200.000 | 779 | 2204 |
| 17+220.000 | 740 | 3133 |
| 17+240.000 | 126 | 3657 |
| ~~17+260.000~~ | ~~87~~ | ~~3648~~ |
| 17+280.000 | 62 | 3492 |
| ~~17+300.000~~ | ~~41~~ | ~~3447~~ |
| ~~17+320.000~~ | ~~45~~ | ~~2965~~ |
| 17+340.000 | 37 | 2231 |
| 17+360.000 | 3 | 1712 |
| 17+380.000 | 9 | 1455 |
| 17+400.000 | 9 | 1332 |
| △11 SHEET TOTAL | 3539 | 30398 |

EARTHWORK
REVISIONS C.O. # 11
STA. 17+160 THRU 17+400

△25 CHANGE ORDER NO. 25
(THE INSTALLATION OF THE H.E.B. DRIVEWAYS (DRVY 5A, 5B &8A))

△27 CHANGE ORDER NO. 27
REVISED STORM DRAIN LINE I-14
(STATION 16+580 THRU 16+680).

CHANGE ORDER NO. 11
-EARTHWORK REVISIONS NEEDED TO ALLOW FOR REVISED ALIGNMENT OF SH 151

CHANGE ORDER 11

©2000 Texas Department of Transportation

# EARTHWORK SUMMARY

SHEET 2 OF 8

| FED.RD. DIV.NO. | FEDERAL AID PROJECT NO. | | SHEET NO. |
|---|---|---|---|
| 6 | NH 2000(704), etc. | | 17B |
| STATE | DIST. | COUNTY | |
| TEXAS | SAT | BEXAR | |
| CONT. | SECT. | JOB | HIGHWAY NO. |
| 2452 | 01 | 036, etc. | LP 1604 |

FILE: t:\AO\Design\lp1604fm471-90\Summaries\earthworksum.dgn 08/01/02
LEVEL 1 2 3 4 5 6 7 8 9 10 11 12 13 14 15 16 17 18 19 20 21 22 23 24 25 26 27 28 29 30 31 32
DISPLAYED 33 34 35 36 37 38 39 40 41 42 43 44 45 46 47 48 49 50 51 52 53 54 55 56 57 58 59 60 61 62 63

SHEET 198
PLAN SHEET 8 OF 57

| STATION | EXCAVATION (RDWY) | EMBANK (ORD COMP) (TY B) (CL 3) |
|---|---|---|
| 15+580.000 | 10606 | 25 |
| 15+600.000 | 9742 | 51 |
| 15+620.000 | 8266 | 419 |
| 15+640.000 | 7303 | 641 |
| 15+660.000 | 5903 | 663 |
| 15+680.000 | 3113 | 1664 |
| 15+700.000 | 780 | 4286 |
| 15+720.000 | 80 | 6969 |
| 15+740.000 | 29 | 8844 |
| 15+760.000 | 13 | 11162 |
| 15+780.000 | 8 | 13208 |
| 15+800.000 | 12 | 12547 |
| 15+820.000 | 0 | 279 |
| 15+840.000 | 0 | 0 |
| SHEET TOTAL | 45855 | 60758 |

SHEET 199A
PLAN SHEET 9 OF 57

| STATION | EXCAVATION (RDWY) | EMBANK (ORD COMP) (TY B) (CL 3) |
|---|---|---|
| 15+860.000 | 0 | 0 |
| 15+880.000 | 0 | 0 |
| 15+900.000 | 0 | 0 |
| 15+920.000 | 7136 | 196 |
| 15+940.000 | 1648 | 271 |
| 15+960.000 | 1379 | 84 |
| 15+980.000 | 1058 | 77 |
| 16+000.000 | 0 | 0 |
| * 16+020.000 | 5058 | 14927 |
| 16+040.000 | 0 | 0 |
| 16+060.000 | 0 | 0 |
| 16+080.000 | 0 | 0 |
| 16+100.000 | 834 | 6927 |
| SHEET TOTAL | 17113 | 22482 |

BEGIN EARTHWORK
REVISIONS C.O. # 25
STA. 16+100 THRU 16+880
(HEB DRIVEWAYS)

* INCLUDES 5058 M3 CUT AND 14927 M3 FILL FOR CULEBRA RD.

SHEET 200A
PLAN SHEET 10 OF 57

| STATION | EXCAVATION (RDWY) | EMBANK (ORD COMP) (TY B) (CL 3) |
|---|---|---|
| 16+120.000 | 826 | 6408 |
| 16+140.000 | 847 | 5964 |
| 16+160.000 | 874 | 5560 |
| 16+180.000 | 848 | 5248 |
| * *16+200.000 | 1281 | 4952 |
| 16+220.000 | 658 | 4479 |
| 16+240.000 | 587 | 4054 |
| 16+260.000 | 513 | 3585 |
| 16+280.000 | 459 | 2980 |
| 16+300.000 | 430 | 2481 |
| 16+320.000 | 458 | 2018 |
| 16+340.000 | 618 | 1533 |
| 16+360.000 | 847 | 1084 |
| SHEET TOTAL | 9246 | 50346 |

* * INCLUDES 531 M3 EXCAVATION FOR HEB DRIVEWAYS 5A

SHEET 201A
PLAN SHEET 11 OF 57

| STATION | EXCAVATION (RDWY) | EMBANK (ORD COMP) (TY B) (CL 3) |
|---|---|---|
| 16+380.000 | 1033 | 713 |
| * *16+400.000 | 1538 | 496 |
| 16+420.000 | 933 | 365 |
| 16+440.000 | 856 | 228 |
| 16+460.000 | 826 | 154 |
| 16+480.000 | 789 | 149 |
| 16+500.000 | 791 | 124 |
| 16+520.000 | 984 | 57 |
| 16+540.000 | 978 | 66 |
| 16+560.000 | 768 | 99 |
| 16+580.000 | 754 | 87 |
| 16+600.000 | 872 | 76 |
| 16+620.000 | 814 | 89 |
| SHEET TOTAL | 11936 | 2703 |

* * INCLUDES 494 M3 EXCAVATION FOR HEB DRIVEWAYS 5B

SHEET 202B
PLAN SHEET 12 OF 57

| STATION | EXCAVATION (RDWY) | EMBANK (ORD COMP) (TY B) (CL 3) |
|---|---|---|
| 16+640.000 | 703 | 76 |
| 16+660.000 | 749 | 55 |
| 16+680.000 | 712 | 87 |
| 16+700.000 | 759 | 100 |
| 16+720.000 | 1135 | 61 |
| 16+740.000 | 1684 | 28 |
| 16+760.000 | 2337 | 18 |
| *** 16+780.000 | 2334 | 22 |
| 16+800.000 | 3029 | 20 |
| 16+820.000 | 3577 | 11 |
| 16+840.000 | 3837 | 9 |
| 16+860.000 | 3999 | 8 |
| 16+880.000 | 4487 | 8 |
| SHEET TOTAL | 29342 | 503 |

END EARTHWORK
REVISIONS C.O. # 25
STA. 16+100 THRU 16+880
(HEB DRIVEWAYS)

*** INCLUDES DRIVEWAY 8A

SHEET 203
PLAN SHEET 13 OF 57

| STATION | EXCAVATION (RDWY) | EMBANK (ORD COMP) (TY B) (CL 3) |
|---|---|---|
| 16+900.000 | 4999 | 8 |
| 16+920.000 | 5545 | 8 |
| 16+940.000 | 6113 | 7 |
| 16+960.000 | 6448 | 7 |
| 16+980.000 | 6528 | 8 |
| 17+000.000 | 6497 | 8 |
| SUB-TOTAL | 36130 | 46 |
| TOTAL 2452-01-038 | 181784 | 138283 |
| BEGIN C.S.J. 2452-01-037 | | |
| 17+020.000 | 6465 | 8 |
| 17+040.000 | 6292 | 8 |
| 17+060.000 | 5997 | 8 |
| 17+080.000 | 5605 | 8 |
| 17+100.000 | 4825 | 8 |
| 17+120.000 | 3681 | 8 |
| 17+140.000 | 2456 | 8 |
| SUB-TOTAL | 35321 | 56 |
| SHEET TOTAL | 71451 | 102 |

SHEET 204
PLAN SHEET 14 OF 57

| STATION | EXCAVATION (RDWY) | EMBANK (ORD COMP) (TY B) (CL 3) |
|---|---|---|
| 17+160.000 | 1205 | 156 |
| 17+180.000 | 416 | 966 |
| 17+200.000 | 368 | 2219 |
| 17+220.000 | 329 | 3135 |
| 17+240.000 | 26 | 3657 |
| 17+260.000 | 67 | 3648 |
| 17+280.000 | 62 | 3492 |
| 17+300.000 | 42 | 3447 |
| 17+320.000 | 45 | 2965 |
| 17+340.000 | 37 | 2231 |
| 17+360.000 | 3 | 1712 |
| 17+380.000 | 9 | 1455 |
| 17+400.000 | 9 | 1332 |
| SHEET TOTAL | 2718 | 30415 |

CHANGE ORDER NO. 25
-EARTHWORK REVISIONS NEEDED TO ALLOW FOR DRIVEWAYS 5A, 5B, 5C AND 8A

CHANGE ORDER 25

©2000 Texas Department of Transportation

EARTHWORK SUMMARY
SHEET 2 OF 8

| FED. RD. DIV. NO. | FEDERAL AID PROJECT NO. | | SHEET NO. |
|---|---|---|---|
| 6 | NH 2000(704), etc. | | 17A/C |
| STATE | DIST. | COUNTY | |
| TEXAS | SAT | BEXAR | |
| CONT. | SECT. | JOB | HIGHWAY NO. |
| 2452 | 01 | 036, etc. | LP 1604 |

FILE: t:\AUS\Design\lp1604fm471-90\Summaries\earthworksum.dgn 08/20/02
LEVEL DISPLAYED
1 2 3 4 5 6 7 8 9 10 11 12 13 14 15 16 17 18 19 20 21 22 23 24 25 26 27 28 29 30 31 32
33 34 35 36 37 38 39 40 41 42 43 44 46 47 48 49 50 51 52 53 54 55 56 57 58 59 60 61 62 63

SHEET 198C
PLAN SHEET 8 OF 57

| STATION | EXCAVATION (RDWY) | EMBANK (ORD COMP) (TY B) (CL 3) |
|---|---|---|
| 15+580.000 | 10987 | 24 |
| 15+600.000 | 9991 | 63 |
| 15+620.000 | 8512 | 430 |
| 15+640.000 | 7593 | 639 |
| 15+660.000 | 6003 | 693 |
| 15+680.000 | 3131 | 1695 |
| 15+700.000 | 779 | 4351 |
| 15+720.000 | 71 | 7047 |
| 15+740.000 | 75 | 8963 |
| 15+760.000 | 170 | 11725 |
| 15+780.000 | 192 | 13147 |
| 15+800.000 | 92 | 12793 |
| 15+820.000 | 0 | 283 |
| 15+840.000 | 0 | 0 |
| SHEET TOTAL | 47,596 | 61,823 |

SHEET 199D
PLAN SHEET 9 OF 57

| STATION | EXCAVATION (RDWY) | EMBANK (ORD COMP) (TY B) (CL 3) |
|---|---|---|
| 15+860.000 | 0 | 0 |
| 15+880.000 | 0 | 0 |
| 15+900.000 | 0 | 0 |
| 15+920.000 | 3644 | 217 |
| 15+940.000 | 1601 | 243 |
| 15+960.000 | 1496 | 79 |
| 15+980.000 | 1308 | 84 |
| 16+000.000 | 1022 | 120 |
| 16+020.000 | 1023 | 58 |
| CULEBRA RD | 5058 | 14927 |
| 16+040.000 | 574 | 1698 |
| 16+060.000 | 55 | 3782 |
| 16+080.000 | 476 | 5686 |
| 16+100.000 | 834 | 6927 |
| SHEET TOTAL | 17,091 | 33,821 |

SHEET 200A
PLAN SHEET 10 OF 57

| STATION | EXCAVATION (RDWY) | EMBANK (ORD COMP) (TY B) (CL 3) |
|---|---|---|
| 16+120.000 | 826 | 6408 |
| 16+140.000 | 847 | 5964 |
| 16+160.000 | 874 | 5560 |
| 16+180.000 | 848 | 5248 |
| ** 16+200.000 | 1281 | 4952 |
| 16+220.000 | 658 | 4479 |
| 16+240.000 | 587 | 4054 |
| 16+260.000 | 513 | 3585 |
| 16+280.000 | 459 | 2980 |
| 16+300.000 | 430 | 2481 |
| 16+320.000 | 458 | 2018 |
| 16+340.000 | 618 | 1533 |
| 16+360.000 | 847 | 1084 |
| SHEET TOTAL | 9246 | 50346 |

** INCLUDES 531 M3 EXCAVATION FOR HEB DRIVEWAYS 5A

SHEET 201A
PLAN SHEET 11 OF 57

| STATION | EXCAVATION (RDWY) | EMBANK (ORD COMP) (TY B) (CL 3) |
|---|---|---|
| 16+380.000 | 1033 | 713 |
| ** 16+400.000 | 1538 | 496 |
| 16+420.000 | 933 | 365 |
| 16+440.000 | 856 | 228 |
| 16+460.000 | 826 | 154 |
| 16+480.000 | 789 | 149 |
| 16+500.000 | 791 | 124 |
| 16+520.000 | 984 | 57 |
| 16+540.000 | 978 | 66 |
| 16+560.000 | 768 | 99 |
| 16+580.000 | 754 | 87 |
| 16+600.000 | 752 | 83 |
| 16+620.000 | 694 | 95 |
| SHEET TOTAL | 11696 | 2716 |

** INCLUDES 494 M3 EXCAVATION FOR HEB DRIVEWAYS 5B

SHEET 202A
PLAN SHEET 12 OF 57

| STATION | EXCAVATION (RDWY) | EMBANK (ORD COMP) (TY B) (CL 3) |
|---|---|---|
| 16+640.000 | 703 | 76 |
| 16+660.000 | 749 | 55 |
| 16+680.000 | 717 | 87 |
| 16+700.000 | 759 | 100 |
| 16+720.000 | 1135 | 61 |
| 16+740.000 | 1684 | 28 |
| 16+760.000 | 2337 | 18 |
| *** 16+780.000 | 2334 | 22 |
| 16+800.000 | 3029 | 20 |
| 16+820.000 | 3577 | 11 |
| 16+840.000 | 3837 | 9 |
| 16+860.000 | 3999 | 8 |
| 16+880.000 | 4487 | 8 |
| SHEET TOTAL | 29347 | 503 |

*** INCLUDES DRIVEWAY 8A

SHEET 203
PLAN SHEET 13 OF 57

| STATION | EXCAVATION (RDWY) | EMBANK (ORD COMP) (TY B) (CL 3) |
|---|---|---|
| 16+900.000 | 4999 | 8 |
| 16+920.000 | 5545 | 8 |
| 16+940.000 | 6113 | 7 |
| 16+960.000 | 6448 | 7 |
| 16+980.000 | 6528 | 8 |
| 17+000.000 | 6497 | 8 |
| SUB-TOTAL | 36130 | 46 |
| TOTAL 2452-01-038 | 181784 | 138283 |
| BEGIN C.S.J. 2452-01-037 | | |
| 17+020.000 | 6465 | 8 |
| 17+040.000 | 6292 | 8 |
| 17+060.000 | 5997 | 8 |
| 17+080.000 | 5605 | 8 |
| 17+100.000 | 4825 | 8 |
| 17+120.000 | 3681 | 8 |
| 17+140.000 | 2456 | 8 |
| SUB-TOTAL | 35321 | 56 |
| SHEET TOTAL | 71451 | 102 |

SHEET 204A
PLAN SHEET 14 OF 57

| STATION | EXCAVATION (RDWY) | EMBANK (ORD COMP) (TY B) (CL 3) |
|---|---|---|
| 17+160.000 | 1205 | 156 |
| 17+180.000 | 416 | 966 |
| 17+200.000 | 779 | 2204 |
| 17+220.000 | 740 | 3133 |
| 17+240.000 | 126 | 3657 |
| 17+260.000 | 67 | 3648 |
| 17+280.000 | 62 | 3492 |
| 17+300.000 | 41 | 3447 |
| 17+320.000 | 45 | 2965 |
| 17+340.000 | 37 | 2231 |
| 17+360.000 | 3 | 1712 |
| 17+380.000 | 9 | 1455 |
| 17+400.000 | 9 | 1332 |
| SHEET TOTAL | 3539 | 30398 |

△11 CHANGE ORDER NO. 11
SH 151 REVISIONS.

△25 CHANGE ORDER NO. 25
(THE INSTALLATION OF THE H.E.B. DRIVEWAYS (DRVY 5A, 5B, 5C & 8A).

△27 CHANGE ORDER NO. 27
REVISED STORM DRAIN LINE I-14 (STATION 16+580 THRU 16+680).

CHANGE ORDER NO. 28
-EARTHWORK REVISIONS NEEDED TO ALLOW FOR NEW STORM DRAIN LINE I2A, RELOCATED STORM DRAIN LINE I5A AND GRADING REVISIONS NEEDED IN THE VICINITY OF WESTWOOD LP & WESTWOOD VISTA.

△# REFERS TO CHANGES MADE AS PART OF CHANGE ORDER.

CHANGE ORDER 28

REVISED SHEET

©2003 Texas Department of Transportation

# EARTHWORK SUMMARY

SHEET 2 OF 8

| FED. RD. DIV. NO. | FEDERAL AID PROJECT NO. | | SHEET NO. |
|---|---|---|---|
| 6 | NH 2000(704), etc. | | 17D |
| STATE | DIST. | COUNTY | |
| TEXAS | SAT | BEXAR | |
| CONT. | SECT. | JOB | HIGHWAY NO. |
| 2452 | 01 | 036, etc. | LP 1604 |

FILE $FILE$
LEVEL DISPLAYED
$DATE$

1/27/03

SHEET 205
PLAN SHEET 15 OF 57

| STATION | EXCAVATION (RDWY) | EMBANK (ORD COMP) (TY B) (CL 3) |
|---|---|---|
| 17+420.000 | 3 | 1138 |
| 17+440.000 | 29 | 898 |
| 17+460.000 | 61 | 783 |
| 17+480.000 | 171 | 718 |
| 17+500.000 | 356 | 618 |
| 17+520.000 | 287 | 639 |
| 17+540.000 | 176 | 885 |
| 17+560.000 | 141 | 1024 |
| 17+580.000 | 84 | 962 |
| 17+600.000 | 122 | 848 |
| 17+620.000 | 229 | 597 |
| 17+640.000 | 426 | 317 |
| 17+660.000 | 648 | 162 |
| SHEET TOTAL | 2733 | 9589 |

SHEET 206
PLAN SHEET 16 OF 57

| STATION | EXCAVATION (RDWY) | EMBANK (ORD COMP) (TY B) (CL 3) |
|---|---|---|
| 17+680.000 | 938 | 81 |
| 17+700.000 | 1355 | 43 |
| 17+720.000 | 1866 | 54 |
| 17+740.000 | 2239 | 57 |
| 17+760.000 | 2512 | 53 |
| 17+780.000 | 3060 | 52 |
| 17+800.000 | 3558 | 56 |
| 17+820.000 | 4161 | 63 |
| 17+840.000 | 4869 | 60 |
| 17+860.000 | 5443 | 55 |
| 17+880.000 | 5909 | 56 |
| 17+900.000 | 5844 | 59 |
| 17+920.000 | 5102 | 59 |
| SHEET TOTAL | 46856 | 748 |

SHEET 207
PLAN SHEET 17 OF 57

| STATION | EXCAVATION (RDWY) | EMBANK (ORD COMP) (TY B) (CL 3) |
|---|---|---|
| 17+940.000 | 3834 | 52 |
| 17+960.000 | 2643 | 46 |
| 17+980.000 | 1693 | 37 |
| 18+000.000 | 738 | 41 |
| 18+020.000 | 173 | 356 |
| 18+040.000 | 101 | 998 |
| 18+060.000 | 210 | 773 |
| 18+080.000 | 366 | 247 |
| 18+100.000 | 580 | 162 |
| 18+120.000 | 833 | 56 |
| 18+140.000 | 782 | 350 |
| 18+160.000 | 569 | 764 |
| 18+180.000 | 481 | 864 |
| SHEET TOTAL | 13003 | 4746 |

SHEET 208
PLAN SHEET 18 OF 57

| STATION | EXCAVATION (RDWY) | EMBANK (ORD COMP) (TY B) (CL 3) |
|---|---|---|
| 18+200.000 | 579 | 514 |
| 18+220.000 | 1177 | 108 |
| 18+240.000 | 2083 | 15 |
| 18+260.000 | 2728 | 16 |
| 18+280.000 | 2969 | 16 |
| 18+300.000 | 2672 | 20 |
| 18+320.000 | 2055 | 37 |
| 18+340.000 | 1508 | 91 |
| 18+360.000 | 1042 | 201 |
| 18+380.000 | 675 | 336 |
| 18+400.000 | 447 | 549 |
| 18+420.000 | 334 | 824 |
| 18+440.000 | 259 | 1074 |
| SHEET TOTAL | 18528 | 3801 |

SHEET 209
PLAN SHEET 19 OF 57

| STATION | EXCAVATION (RDWY) | EMBANK (ORD COMP) (TY B) (CL 3) |
|---|---|---|
| 18+460.000 | 161 | 1352 |
| 18+480.000 | 130 | 1496 |
| 18+500.000 | 98 | 1504 |
| 18+520.000 | 38 | 1361 |
| 18+540.000 | 40 | 1016 |
| 18+560.000 | 67 | 592 |
| 18+580.000 | 187 | 222 |
| 18+600.000 | 342 | 75 |
| 18+620.000 | 614 | 36 |
| 18+640.000 | 894 | 18 |
| 18+660.000 | 972 | 15 |
| 18+680.000 | 926 | 10 |
| 18+700.000 | 783 | 14 |
| SHEET TOTAL | 5252 | 7711 |

SHEET 210
PLAN SHEET 20 OF 57

| STATION | EXCAVATION (RDWY) | EMBANK (ORD COMP) (TY B) (CL 3) |
|---|---|---|
| 18+720.000 | 856 | 17 |
| 18+740.000 | 1232 | 15 |
| 18+760.000 | 1545 | 17 |
| 18+780.000 | 1631 | 15 |
| 18+800.000 | 1522 | 13 |
| 18+820.000 | 1373 | 14 |
| 18+840.000 | 1225 | 21 |
| 18+860.000 | 1027 | 21 |
| 18+880.000 | 847 | 19 |
| 18+900.000 | 739 | 44 |
| 18+920.000 | 623 | 104 |
| 18+940.000 | 531 | 358 |
| 18+960.000 | 354 | 938 |
| SHEET TOTAL | 13505 | 1596 |

SHEET 211
PLAN SHEET 21 OF 57

| STATION | EXCAVATION (RDWY) | EMBANK (ORD COMP) (TY B) (CL 3) |
|---|---|---|
| 18+980.000 | 177 | 1267 |
| 19+000.000 | 106 | 932 |
| 19+020.000 | 224 | 528 |
| 19+040.000 | 780 | 499 |
| 19+060.000 | 1528 | 351 |
| 19+080.000 | 2418 | 70 |
| 19+100.000 | 3220 | 13 |
| 19+120.000 | 3406 | 10 |
| 19+140.000 | 2987 | 10 |
| 19+160.000 | 2229 | 11 |
| 19+180.000 | 1102 | 51 |
| 19+200.000 | 223 | 458 |
| 19+220.000 | 17 | 1597 |
| SHEET TOTAL | 18417 | 5797 |

©2000 Texas Department of Transportation

# EARTHWORK SUMMARY

SHEET 3 OF 8

| FED. RD. DIV. NO. | FEDERAL AID PROJECT NO. | | SHEET NO. |
|---|---|---|---|
| 6 | NH 2000(704), etc. | | 18 |
| STATE | DIST. | COUNTY | |
| TEXAS | SAT | BEXAR | |
| CONT. | SECT. | JOB | HIGHWAY NO. |
| 2452 | 01 | 036, etc. | LP 1604 |

FILE rwsum.dgn
LEVEL DISPLAYED 1 2 3 4 5 6 7 8 9 10 11 12 13 14 15 16 17 18 19 20 21 22 23 24 25 26 27 28 29 30 31 32 33 34 35 56 63 70 38 39 40 41 42 43 44 45 46 47 48 49 50 51 52 53 54 55 56 65 66 75 85 86 96 06 16 26 36
13 SEP 2000

SHEET 212
PLAN SHEET 22 OF 57

| STATION | EXCAVATION (RDWY) | EMBANK (ORD COMP) (TY B) (CL 3) |
|---|---|---|
| 19+240.000 | 6 | 2692 |
| 19+260.000 | 17 | 1463 |
| 19+280.000 | 0 | 0 |
| * 19+300.000 | 3516 | 3744 |
| 19+320.000 | 0 | 0 |
| 19+340.000 | 0 | 0 |
| 19+360.000 | 0 | 0 |
| 19+380.000 | 1267 | 12 |
| 19+400.000 | 3366 | 28 |
| 19+420.000 | 4269 | 21 |
| 19+440.000 | 5049 | 20 |
| 19+460.000 | 5584 | 18 |
| 19+480.000 | 5745 | 18 |
| SHEET TOTAL | 28819 | 8016 |

* INCLUDES 3516 M3 CUT AND 3744 M3 FILL FOR WISEMAN RD.

SHEET 213
PLAN SHEET 23 OF 57

| STATION | EXCAVATION (RDWY) | EMBANK (ORD COMP) (TY B) (CL 3) |
|---|---|---|
| 19+500.000 | 5669 | 18 |
| 19+520.000 | 5596 | 16 |
| 19+540.000 | 5097 | 17 |
| 19+560.000 | 3901 | 23 |
| 19+580.000 | 2618 | 23 |
| 19+600.000 | 1862 | 25 |
| 19+620.000 | 1951 | 31 |
| 19+640.000 | 2424 | 31 |
| 19+660.000 | 2597 | 27 |
| 19+680.000 | 2314 | 26 |
| 19+700.000 | 1838 | 26 |
| 19+720.000 | 1014 | 128 |
| 19+740.000 | 231 | 503 |
| SHEET TOTAL | 37112 | 894 |

SHEET 214
PLAN SHEET 24 OF 57

| STATION | EXCAVATION (RDWY) | EMBANK (ORD COMP) (TY B) (CL 3) |
|---|---|---|
| 19+760.000 | 121 | 709 |
| 19+780.000 | 199 | 614 |
| 19+800.000 | 169 | 523 |
| 19+820.000 | 99 | 546 |
| 19+840.000 | 41 | 974 |
| 19+860.000 | 17 | 1497 |
| 19+880.000 | 10 | 1874 |
| 19+900.000 | 8 | 1537 |
| 19+920.000 | 27 | 674 |
| 19+940.000 | 159 | 195 |
| 19+960.000 | 423 | 36 |
| 19+980.000 | 603 | 30 |
| 20+000.000 | 532 | 30 |
| SHEET TOTAL | 2408 | 9239 |

SHEET 215
PLAN SHEET 25 OF 57

| STATION | EXCAVATION (RDWY) | EMBANK (ORD COMP) (TY B) (CL 3) |
|---|---|---|
| 20+020.000 | 322 | 42 |
| 20+040.000 | 276 | 42 |
| 20+060.000 | 607 | 21 |
| 20+080.000 | 1054 | 12 |
| 20+100.000 | 1284 | 8 |
| 20+120.000 | 904 | 17 |
| 20+140.000 | 358 | 22 |
| 20+160.000 | 135 | 184 |
| 20+180.000 | 19 | 687 |
| 20+200.000 | 9 | 1049 |
| 20+220.000 | 7 | 683 |
| 20+240.000 | 78 | 178 |
| 20+260.000 | 239 | 59 |
| SHEET TOTAL | 5292 | 3004 |

SHEET 216
PLAN SHEET 26 OF 57

| STATION | EXCAVATION (RDWY) | EMBANK (ORD COMP) (TY B) (CL 3) |
|---|---|---|
| 20+280.000 | 397 | 52 |
| 20+300.000 | 453 | 62 |
| 20+320.000 | 471 | 59 |
| 20+340.000 | 536 | 43 |
| 20+360.000 | 553 | 38 |
| 20+380.000 | 553 | 39 |
| 20+400.000 | 523 | 41 |
| 20+420.000 | 376 | 51 |
| 20+440.000 | 173 | 82 |
| 20+460.000 | 67 | 162 |
| 20+480.000 | 83 | 224 |
| 20+500.000 | 105 | 161 |
| 20+520.000 | 134 | 74 |
| SHEET TOTAL | 4424 | 1088 |

SHEET 217
PLAN SHEET 27 OF 57

| STATION | EXCAVATION (RDWY) | EMBANK (ORD COMP) (TY B) (CL 3) |
|---|---|---|
| 20+540.000 | 171 | 48 |
| 20+560.000 | 149 | 48 |
| 20+580.000 | 91 | 65 |
| 20+600.000 | 52 | 105 |
| 20+620.000 | 49 | 124 |
| 20+640.000 | 62 | 111 |
| SUB-TOTAL | 574 | 501 |
| TOTAL 2452-07-037 | 234962 | 87201 |
| BEGIN C.S.J. 2452-01-036 | | |
| 20+660.000 | 57 | 131 |
| 20+680.000 | 71 | 117 |
| 20+700.000 | 192 | 61 |
| 20+720.000 | 286 | 40 |
| 20+740.000 | 295 | 46 |
| 20+760.000 | 526 | 40 |
| 20+780.000 | 587 | 26 |
| SUB-TOTAL | 2014 | 461 |
| SHEET TOTAL | 2588 | 962 |

SHEET 218
PLAN SHEET 28 OF 57

| STATION | EXCAVATION (RDWY) | EMBANK (ORD COMP) (TY B) (CL 3) |
|---|---|---|
| 20+800.000 | 369 | 29 |
| 20+820.000 | 345 | 31 |
| 20+840.000 | 441 | 30 |
| 20+860.000 | 594 | 25 |
| 20+880.000 | 839 | 17 |
| 20+900.000 | 1006 | 33 |
| 20+920.000 | 1141 | 56 |
| 20+940.000 | 1315 | 68 |
| 20+960.000 | 1438 | 64 |
| 20+980.000 | 1511 | 53 |
| 21+000.000 | 1472 | 56 |
| 21+020.000 | 1378 | 59 |
| 21+040.000 | 1265 | 53 |
| SHEET TOTAL | 13114 | 574 |

©2000 Texas Department of Transportation

# EARTHWORK SUMMARY

SHEET 4 OF 8

| FED.RD. DIV.NO. | FEDERAL AID PROJECT NO. | SHEET NO. |
|---|---|---|
| 6 | NH 2000(704), etc. | 19 |
| STATE | DIST. | COUNTY |
| TEXAS | SAT | BEXAR |
| CONT. | SECT. | JOB / HIGHWAY NO. |
| 2452 | 01 | 036, etc. / LP 1604 |

FILE rwsum.dgn
LEVEL
DISPLAYED
13 SEP 2000

SHEET 219
PLAN SHEET 29 OF 57

| STATION | EXCAVATION (RDWY) | EMBANK (ORD COMP) (TY B) (CL 3) |
|---|---|---|
| 21+060.000 | 1182 | 46 |
| 21+080.000 | 1151 | 40 |
| 21+100.000 | 1064 | 39 |
| 21+120.000 | 891 | 39 |
| 21+140.000 | 778 | 31 |
| 21+160.000 | 690 | 35 |
| 21+180.000 | 632 | 48 |
| 21+200.000 | 0 | 0 |
| 21+220.000 | 0 | 0 |
| * 21+240.000 | 3277 | 891 |
| 21+260.000 | 0 | 0 |
| 21+280.000 | 0 | 0 |
| 21+300.000 | 0 | 0 |
| 21+320.000 | 1029 | 65 |
| SHEET TOTAL | 10694 | 1234 |

* INCLUDES 3277 M3 CUT AND 891 M3 FILL FOR MILITARY DR.

SHEET 220
PLAN SHEET 30 OF 57

| STATION | EXCAVATION (RDWY) | EMBANK (ORD COMP) (TY B) (CL 3) |
|---|---|---|
| 21+340.000 | 1229 | 49 |
| 21+360.000 | 1395 | 39 |
| 21+380.000 | 1371 | 39 |
| 21+400.000 | 1307 | 42 |
| 21+420.000 | 1027 | 108 |
| 21+440.000 | 387 | 355 |
| 21+460.000 | 74 | 765 |
| 21+480.000 | 20 | 1081 |
| 21+500.000 | 4 | 1283 |
| 21+520.000 | 3 | 1772 |
| 21+540.000 | 2 | 2543 |
| 21+560.000 | 1 | 2485 |
| 21+580.000 | 2 | 1965 |
| SHEET TOTAL | 6822 | 12526 |

SHEET 221
PLAN SHEET 31 OF 57

| STATION | EXCAVATION (RDWY) | EMBANK (ORD COMP) (TY B) (CL 3) |
|---|---|---|
| 21+600.000 | 2 | 1756 |
| 21+620.000 | 3 | 1327 |
| 21+640.000 | 26 | 651 |
| 21+660.000 | 356 | 140 |
| 21+680.000 | 919 | 19 |
| 21+700.000 | 1128 | 34 |
| 21+720.000 | 1046 | 49 |
| 21+740.000 | 1005 | 45 |
| 21+760.000 | 935 | 48 |
| 21+780.000 | 818 | 48 |
| 21+800.000 | 691 | 51 |
| 21+820.000 | 533 | 43 |
| 21+840.000 | 365 | 32 |
| 21+860.000 | 264 | 28 |
| SHEET TOTAL | 8091 | 4271 |

SHEET 222
PLAN SHEET 32 OF 57

| STATION | EXCAVATION (RDWY) | EMBANK (ORD COMP) (TY B) (CL 3) |
|---|---|---|
| 21+880.000 | 219 | 26 |
| 21+900.000 | 169 | 35 |
| 21+920.000 | 124 | 56 |
| 21+940.000 | 93 | 81 |
| 21+960.000 | 69 | 105 |
| 21+980.000 | 84 | 113 |
| 22+000.000 | 121 | 99 |
| 22+020.000 | 190 | 73 |
| 22+040.000 | 342 | 52 |
| 22+060.000 | 490 | 46 |
| 22+080.000 | 617 | 43 |
| 22+100.000 | 652 | 46 |
| 22+120.000 | 601 | 50 |
| SHEET TOTAL | 3771 | 825 |

SHEET 223
PLAN SHEET 33 OF 57

| STATION | EXCAVATION (RDWY) | EMBANK (ORD COMP) (TY B) (CL 3) |
|---|---|---|
| 22+140.000 | 590 | 51 |
| 22+160.000 | 632 | 48 |
| 22+180.000 | 767 | 38 |
| 22+200.000 | 940 | 35 |
| 22+220.000 | 989 | 36 |
| 22+240.000 | 973 | 37 |
| 22+260.000 | 922 | 34 |
| 22+280.000 | 1003 | 33 |
| 22+300.000 | 1201 | 36 |
| 22+320.000 | 1296 | 37 |
| 22+340.000 | 1456 | 35 |
| 22+360.000 | 1697 | 43 |
| 22+380.000 | 1883 | 55 |
| SHEET TOTAL | 14349 | 518 |

SHEET 224
PLAN SHEET 34 OF 57

| STATION | EXCAVATION (RDWY) | EMBANK (ORD COMP) (TY B) (CL 3) |
|---|---|---|
| 22+400.000 | 2031 | 50 |
| 22+420.000 | 2182 | 50 |
| 22+440.000 | 2327 | 58 |
| 22+460.000 | 2590 | 47 |
| 22+480.000 | 2781 | 81 |
| 22+500.000 | 2391 | 158 |
| 22+520.000 | 1755 | 184 |
| 22+540.000 | 1531 | 210 |
| 22+560.000 | 766 | 106 |
| 22+580.000 | 0 | 0 |
| * 22+600.000 | 5582 | 2569 |
| 22+620.000 | 0 | 0 |
| 22+640.000 | 0 | 0 |
| 22+660.000 | 0 | 0 |
| 22+680.000 | 162 | 148 |
| 22+700.000 | 45 | 644 |
| SHEET TOTAL | 24143 | 4305 |

* INCLUDES 5582 M3 CUT AND 2569 M3 FILL FOR POTRANCO RD.

SHEET 225
PLAN SHEET 35 OF 57

| STATION | EXCAVATION (RDWY) | EMBANK (ORD COMP) (TY B) (CL 3) |
|---|---|---|
| 22+720.000 | 10 | 968 |
| 22+740.000 | 13 | 1042 |
| 22+760.000 | 15 | 1118 |
| 22+780.000 | 14 | 1364 |
| 22+800.000 | 12 | 2088 |
| 22+820.000 | 33 | 3056 |
| 22+840.000 | 52 | 3074 |
| 22+860.000 | 42 | 1964 |
| 22+880.000 | 25 | 1356 |
| 22+900.000 | 18 | 1542 |
| 22+920.000 | 19 | 1714 |
| 22+940.000 | 19 | 1849 |
| 22+960.000 | 20 | 1979 |
| SHEET TOTAL | 292 | 23114 |

©2000 Texas Department of Transportation

# EARTHWORK SUMMARY

SHEET 5 OF 8

| FED.RD. DIV.NO. | FEDERAL AID PROJECT NO. | | SHEET NO. |
|---|---|---|---|
| 6 | NH 2000(704), etc. | | 20 |
| STATE | DIST. | COUNTY | |
| TEXAS | SAT | BEXAR | |
| CONT. | SECT. | JOB | HIGHWAY NO. |
| 2452 | 01 | 036, etc. | LP 1604 |

FILE rwsum.dgn
LEVEL DISPLAYED
13 SEP 2000

SHEET 226
PLAN SHEET 36 OF 57

| STATION | EXCAVATION (RDWY) | EMBANK (ORD COMP) (TY B) (CL 3) |
|---|---|---|
| 22+980.000 | 22 | 2025 |
| 23+000.000 | 22 | 1930 |
| 23+020.000 | 192 | 1506 |
| 23+040.000 | 929 | 603 |
| 23+060.000 | 1882 | 36 |
| 23+080.000 | 2149 | 11 |
| 23+100.000 | 1867 | 11 |
| 23+120.000 | 1576 | 11 |
| 23+140.000 | 1340 | 11 |
| 23+160.000 | 1075 | 11 |
| 23+180.000 | 848 | 12 |
| 23+200.000 | 702 | 13 |
| 23+220.000 | 587 | 12 |
| SHEET TOTAL | 13191 | 6192 |

SHEET 227
PLAN SHEET 37 OF 57

| STATION | EXCAVATION (RDWY) | EMBANK (ORD COMP) (TY B) (CL 3) |
|---|---|---|
| 23+240.000 | 531 | 12 |
| 23+260.000 | 511 | 12 |
| 23+280.000 | 483 | 14 |
| 23+300.000 | 449 | 18 |
| 23+320.000 | 431 | 19 |
| 23+340.000 | 428 | 16 |
| 23+360.000 | 387 | 14 |
| 23+380.000 | 317 | 15 |
| 23+400.000 | 291 | 24 |
| 23+420.000 | 308 | 34 |
| 23+440.000 | 346 | 28 |
| 23+460.000 | 350 | 23 |
| 23+480.000 | 347 | 29 |
| 23+500.000 | 288 | 37 |
| SHEET TOTAL | 5467 | 295 |

SHEET 228
PLAN SHEET 38 OF 57

| STATION | EXCAVATION (RDWY) | EMBANK (ORD COMP) (TY B) (CL 3) |
|---|---|---|
| 23+520.000 | 221 | 45 |
| 23+540.000 | 186 | 41 |
| 23+560.000 | 217 | 25 |
| 23+580.000 | 306 | 16 |
| 23+600.000 | 369 | 16 |
| 23+620.000 | 466 | 13 |
| 23+640.000 | 448 | 12 |
| 23+660.000 | 421 | 11 |
| 23+680.000 | 434 | 13 |
| 23+700.000 | 409 | 13 |
| 23+720.000 | 462 | 11 |
| 23+740.000 | 573 | 10 |
| 23+760.000 | 640 | 13 |
| SHEET TOTAL | 5152 | 239 |

SHEET 229
PLAN SHEET 39 OF 57

| STATION | EXCAVATION (RDWY) | EMBANK (ORD COMP) (TY B) (CL 3) |
|---|---|---|
| 23+780.000 | 622 | 14 |
| 23+800.000 | 638 | 11 |
| 23+820.000 | 717 | 9 |
| 23+840.000 | 790 | 8 |
| 23+860.000 | 795 | 11 |
| 23+880.000 | 629 | 30 |
| 23+900.000 | 493 | 32 |
| 23+920.000 | 324 | 78 |
| 23+940.000 | 93 | 381 |
| 23+960.000 | 21 | 937 |
| 23+980.000 | 21 | 1523 |
| 24+000.000 | 24 | 2064 |
| 24+020.000 | 26 | 2625 |
| SHEET TOTAL | 5193 | 7723 |

SHEET 230
PLAN SHEET 40 OF 57

| STATION | EXCAVATION (RDWY) | EMBANK (ORD COMP) (TY B) (CL 3) |
|---|---|---|
| 24+040.000 | 24 | 3080 |
| 24+060.000 | 24 | 3401 |
| 24+080.000 | 27 | 3565 |
| 24+100.000 | 26 | 3600 |
| 24+120.000 | 27 | 3545 |
| 24+140.000 | 29 | 3401 |
| 24+160.000 | 28 | 3253 |
| 24+180.000 | 68 | 3145 |
| 24+200.000 | 101 | 3091 |
| 24+220.000 | 93 | 3203 |
| 24+240.000 | 93 | 3325 |
| 24+260.000 | 88 | 3631 |
| SHEET TOTAL | 628 | 40240 |

SHEET 231
PLAN SHEET 41 OF 57

| STATION | EXCAVATION (RDWY) | EMBANK (ORD COMP) (TY B) (CL 3) |
|---|---|---|
| 24+280.000 | 804 | 763 |
| 24+300.000 | 0 | 0 |
| 24+320.000 | 0 | 0 |
| 24+340.000 | 0 | 0 |
| 24+360.000 | 1050 | 608 |
| 24+380.000 | 396 | 1828 |
| 24+400.000 | 891 | 377 |
| 24+420.000 | 1566 | 15 |
| 24+440.000 | 1788 | 80 |
| 24+460.000 | 1673 | 246 |
| 24+480.000 | 1772 | 471 |
| 24+500.000 | 2112 | 623 |
| 24+520.000 | 2589 | 587 |
| SHEET TOTAL | 14641 | 5598 |

SHEET 232
PLAN SHEET 42 OF 57

| STATION | EXCAVATION (RDWY) | EMBANK (ORD COMP) (TY B) (CL 3) |
|---|---|---|
| 24+540.000 | 3027 | 500 |
| 24+560.000 | 3464 | 419 |
| 24+580.000 | 3862 | 355 |
| 24+600.000 | 4308 | 351 |
| 24+620.000 | 4845 | 358 |
| 24+640.000 | 5471 | 365 |
| 24+660.000 | 6230 | 292 |
| 24+680.000 | 7029 | 144 |
| 24+700.000 | 7942 | 43 |
| 24+720.000 | 8754 | 14 |
| 24+740.000 | 9334 | 11 |
| 24+760.000 | 9840 | 11 |
| 24+780.000 | 10185 | 11 |
| 24+800.000 | 10305 | 11 |
| SHEET TOTAL | 94596 | 2885 |

FILE rwsum.dgn 13 SEP 2000
LEVEL
DISPLAYED

©2000 Texas Department of Transportation

# EARTHWORK SUMMARY

SHEET 6 OF 8

| FED.RD. DIV.NO. | FEDERAL AID PROJECT NO. | | SHEET NO. |
|---|---|---|---|
| 6 | NH 2000(704), etc. | | 21 |
| STATE | DIST. | COUNTY | |
| TEXAS | SAT | BEXAR | |
| CONT. | SECT. | JOB | HIGHWAY NO. |
| 2452 | 01 | 036, etc. | LP 1604 |

SHEET 233
PLAN SHEET 43 OF 57

| STATION | EXCAVATION (RDWY) | EMBANK (ORD COMP) (TY B) (CL 3) |
|---|---|---|
| 24+820.000 | 10407 | 11 |
| 24+840.000 | 10484 | 11 |
| 24+860.000 | 10473 | 11 |
| 24+880.000 | 10295 | 11 |
| 24+900.000 | 9935 | 10 |
| 24+920.000 | 9500 | 10 |
| 24+940.000 | 8947 | 13 |
| 24+960.000 | 8247 | 25 |
| 24+980.000 | 7499 | 63 |
| 25+000.000 | 6703 | 154 |
| 25+020.000 | 5951 | 259 |
| 25+040.000 | 5267 | 422 |
| 25+060.000 | 4513 | 582 |
| SHEET TOTAL | 108221 | 1582 |

SHEET 234
PLAN SHEET 44 OF 57

| STATION | EXCAVATION (RDWY) | EMBANK (ORD COMP) (TY B) (CL 3) |
|---|---|---|
| 25+080.000 | 3863 | 650 |
| 25+100.000 | 3361 | 690 |
| 25+120.000 | 2913 | 700 |
| 25+140.000 | 2562 | 674 |
| 25+160.000 | 2240 | 590 |
| 25+180.000 | 1922 | 513 |
| 25+200.000 | 1655 | 436 |
| 25+220.000 | 1422 | 371 |
| 25+240.000 | 1251 | 336 |
| 25+260.000 | 1143 | 288 |
| 25+280.000 | 1097 | 232 |
| 25+300.000 | 1131 | 161 |
| 25+320.000 | 1261 | 93 |
| SHEET TOTAL | 25821 | 5734 |

SHEET 235
PLAN SHEET 45 OF 57

| STATION | EXCAVATION (RDWY) | EMBANK (ORD COMP) (TY B) (CL 3) |
|---|---|---|
| 25+340.000 | 1517 | 42 |
| 25+360.000 | 1889 | 17 |
| 25+380.000 | 2210 | 11 |
| 25+400.000 | 2272 | 11 |
| 25+420.000 | 1944 | 11 |
| 25+440.000 | 1319 | 38 |
| 25+460.000 | 653 | 283 |
| 25+480.000 | 264 | 704 |
| 25+500.000 | 248 | 772 |
| 25+520.000 | 339 | 497 |
| 25+540.000 | 488 | 287 |
| 25+560.000 | 708 | 139 |
| 25+580.000 | 904 | 53 |
| SHEET TOTAL | 14755 | 2865 |

SHEET 236
PLAN SHEET 46 OF 57

| STATION | EXCAVATION (RDWY) | EMBANK (ORD COMP) (TY B) (CL 3) |
|---|---|---|
| 25+600.000 | 1028 | 18 |
| 25+620.000 | 1167 | 12 |
| 25+640.000 | 1265 | 11 |
| 25+660.000 | 1305 | 11 |
| 25+680.000 | 1312 | 11 |
| 25+700.000 | 1245 | 11 |
| 25+720.000 | 1070 | 12 |
| 25+740.000 | 891 | 14 |
| 25+760.000 | 765 | 34 |
| 25+780.000 | 689 | 45 |
| 25+800.000 | 670 | 41 |
| 25+820.000 | 638 | 45 |
| 25+840.000 | 584 | 53 |
| SHEET TOTAL | 12629 | 318 |

SHEET 237
PLAN SHEET 47 OF 57

| STATION | EXCAVATION (RDWY) | EMBANK (ORD COMP) (TY B) (CL 3) |
|---|---|---|
| 25+860.000 | 488 | 173 |
| 25+880.000 | 449 | 220 |
| 25+900.000 | 485 | 108 |
| 25+920.000 | 551 | 53 |
| 25+940.000 | 554 | 42 |
| 25+960.000 | 592 | 26 |
| 25+980.000 | 731 | 15 |
| 26+000.000 | 672 | 17 |
| 26+020.000 | 534 | 18 |
| 26+040.000 | 580 | 19 |
| 26+060.000 | 711 | 26 |
| 26+080.000 | 867 | 35 |
| 26+100.000 | 920 | 39 |
| SHEET TOTAL | 8134 | 791 |

SHEET 238
PLAN SHEET 48 OF 57

| STATION | EXCAVATION (RDWY) | EMBANK (ORD COMP) (TY B) (CL 3) |
|---|---|---|
| 26+120.000 | 936 | 40 |
| 26+140.000 | 945 | 48 |
| 26+160.000 | 852 | 51 |
| 26+180.000 | 808 | 40 |
| 26+200.000 | 611 | 56 |
| 26+220.000 | 405 | 145 |
| 26+240.000 | 278 | 294 |
| 26+260.000 | 0 | 0 |
| 26+280.000 | 0 | 0 |
| * 26+300.000 | 2163 | 1249 |
| 26+320.000 | 0 | 0 |
| 26+340.000 | 0 | 0 |
| 26+360.000 | 0 | 0 |
| 26+380.000 | 430 | 95 |
| SHEET TOTAL | 7428 | 2018 |

* INCLUDES 2163 M3 CUT AND 1240 M3 FILL FOR MARBACH RD.

SHEET 239
PLAN SHEET 49 OF 57

| STATION | EXCAVATION (RDWY) | EMBANK (ORD COMP) (TY B) (CL 3) |
|---|---|---|
| 26+400.000 | 553 | 72 |
| 26+420.000 | 748 | 28 |
| 26+440.000 | 922 | 19 |
| 26+460.000 | 1054 | 16 |
| 26+480.000 | 1162 | 13 |
| 26+500.000 | 1179 | 11 |
| 26+520.000 | 1058 | 18 |
| 26+540.000 | 903 | 36 |
| 26+560.000 | 783 | 45 |
| 26+580.000 | 749 | 34 |
| 26+600.000 | 742 | 22 |
| 26+620.000 | 738 | 16 |
| 26+640.000 | 780 | 13 |
| 26+660.000 | 846 | 12 |
| SHEET TOTAL | 12217 | 355 |

FILE rwsum.dgn
LEVEL DISPLAYED
13 SEP 2000

©2000 Texas Department of Transportation

# EARTHWORK SUMMARY

SHEET 7 OF 8

| FED. RD. DIV. NO. | FEDERAL AID PROJECT NO. | | SHEET NO. |
|---|---|---|---|
| 6 | NH 2000(704), etc. | | 22 |
| STATE | DIST. | COUNTY | |
| TEXAS | SAT | BEXAR | |
| CONT. | SECT. | JOB | HIGHWAY NO. |
| 2452 | 01 | 036, etc. | LP 1604 |

SHEET 240
PLAN SHEET 50 OF 57

| STATION | EXCAVATION (RDWY) | EMBANK (ORD COMP) (TY B) (CL 3) |
|---|---|---|
| 26+680.000 | 902 | 12 |
| 26+700.000 | 918 | 12 |
| 26+720.000 | 892 | 12 |
| 26+740.000 | 770 | 12 |
| 26+760.000 | 558 | 21 |
| 26+780.000 | 337 | 70 |
| 26+800.000 | 199 | 183 |
| 26+820.000 | 168 | 314 |
| 26+840.000 | 202 | 440 |
| 26+860.000 | 229 | 408 |
| 26+880.000 | 205 | 256 |
| 26+900.000 | 250 | 154 |
| SHEET TOTAL | 5630 | 1894 |

SHEET 241
PLAN SHEET 51 OF 57

| STATION | EXCAVATION (RDWY) | EMBANK (ORD COMP) (TY B) (CL 3) |
|---|---|---|
| 26+920.000 | 420 | 70 |
| 26+940.000 | 756 | 25 |
| 26+960.000 | 1105 | 13 |
| 26+980.000 | 1159 | 12 |
| 27+000.000 | 1005 | 11 |
| 27+020.000 | 919 | 12 |
| 27+040.000 | 869 | 12 |
| 27+060.000 | 810 | 13 |
| 27+080.000 | 758 | 16 |
| 27+100.000 | 716 | 20 |
| 27+120.000 | 693 | 24 |
| 27+140.000 | 681 | 34 |
| 27+160.000 | 652 | 39 |
| SHEET TOTAL | 10543 | 301 |

SHEET 242
PLAN SHEET 52 OF 57

| STATION | EXCAVATION (RDWY) | EMBANK (ORD COMP) (TY B) (CL 3) |
|---|---|---|
| 27+180.000 | 613 | 33 |
| 27+200.000 | 646 | 30 |
| 27+220.000 | 686 | 25 |
| 27+240.000 | 652 | 22 |
| 27+260.000 | 650 | 18 |
| 27+280.000 | 747 | 24 |
| 27+300.000 | 735 | 53 |
| 27+320.000 | 520 | 86 |
| 27+340.000 | 396 | 97 |
| 27+360.000 | 364 | 114 |
| 27+380.000 | 280 | 142 |
| 27+400.000 | 228 | 202 |
| 27+420.000 | 228 | 176 |
| SHEET TOTAL | 6745 | 1022 |

SHEET 243
PLAN SHEET 53 OF 57

| STATION | EXCAVATION (RDWY) | EMBANK (ORD COMP) (TY B) (CL 3) |
|---|---|---|
| 27+440.000 | 364 | 106 |
| 27+460.000 | 511 | 122 |
| 27+480.000 | 574 | 151 |
| 27+500.000 | 553 | 228 |
| 27+520.000 | 499 | 333 |
| 27+540.000 | 446 | 417 |
| 27+560.000 | 370 | 463 |
| 27+580.000 | 299 | 494 |
| 27+600.000 | 236 | 563 |
| 27+620.000 | 173 | 684 |
| 27+640.000 | 127 | 788 |
| 27+660.000 | 126 | 795 |
| 27+680.000 | 143 | 793 |
| SHEET TOTAL | 4421 | 5937 |

SHEET 244
PLAN SHEET 54 OF 57

| STATION | EXCAVATION (RDWY) | EMBANK (ORD COMP) (TY B) (CL 3) |
|---|---|---|
| 27+700.000 | 159 | 821 |
| 27+720.000 | 169 | 863 |
| 27+740.000 | 158 | 938 |
| 27+760.000 | 175 | 1018 |
| 27+780.000 | 184 | 1112 |
| 27+800.000 | 173 | 1203 |
| 27+820.000 | 180 | 941 |
| 27+840.000 | 177 | 618 |
| 27+860.000 | 162 | 533 |
| 27+880.000 | 177 | 462 |
| 27+900.000 | 201 | 461 |
| 27+920.000 | 229 | 464 |
| 27+940.000 | 180 | 411 |
| SHEET TOTAL | 2324 | 9845 |

SHEET 245
PLAN SHEET 55 OF 57

| STATION | EXCAVATION (RDWY) | EMBANK (ORD COMP) (TY B) (CL 3) |
|---|---|---|
| 27+960.000 | 124 | 330 |
| 27+980.000 | 129 | 245 |
| 28+000.000 | 119 | 171 |
| 28+020.000 | 180 | 98 |
| 28+040.000 | 285 | 38 |
| 28+060.000 | 441 | 18 |
| 28+080.000 | 536 | 12 |
| 28+100.000 | 535 | 8 |
| 28+120.000 | 553 | 10 |
| 28+140.000 | 558 | 13 |
| 28+160.000 | 534 | 13 |
| 28+180.000 | 492 | 12 |
| 28+200.000 | 456 | 13 |
| SHEET TOTAL | 4942 | 981 |

SHEET 246
PLAN SHEET 56 OF 57

| STATION | EXCAVATION (RDWY) | EMBANK (ORD COMP) (TY B) (CL 3) |
|---|---|---|
| 28+220.000 | 420 | 11 |
| 28+240.000 | 376 | 9 |
| 28+260.000 | 330 | 8 |
| 28+280.000 | 310 | 9 |
| 28+300.000 | 315 | 11 |
| 28+320.000 | 331 | 8 |
| 28+340.000 | 282 | 11 |
| 28+360.000 | 210 | 22 |
| 28+380.000 | 176 | 47 |
| 28+400.000 | 166 | 79 |
| 28+420.000 | 182 | 103 |
| 28+440.000 | 210 | 109 |
| 28+460.000 | 271 | 79 |
| SHEET TOTAL | 3579 | 506 |

SHEET 247
PLAN SHEET 57 OF 57

| STATION | EXCAVATION (RDWY) | EMBANK (ORD COMP) (TY B) (CL 3) |
|---|---|---|
| 28+480.000 | 329 | 42 |
| 28+500.000 | 328 | 16 |
| 28+520.000 | 245 | 54 |
| 28+540.000 | 300 | 54 |
| 28+551.500 | 196 | 3 |
| SHEET TOTAL | 1398 | 169 |
| | | |
| | | |
| 2452-01-036 | 450945 | 145318 |
| 2452-01-037 | 305659 | 135337 |
| 2452-01-038 | 180693 | 136793 |
| | | |
| | | |
| GRAND TOTAL | 937297 | 417448 |

©2000 Texas Department of Transportation

# EARTHWORK SUMMARY

SHEET 8 OF 8

| FED. RD. DIV. NO. | FEDERAL AID PROJECT NO. | | SHEET NO. |
|---|---|---|---|
| 6 | NH 2000(704), etc. | | 23 |
| STATE | DIST. | COUNTY | |
| TEXAS | SAT | BEXAR | |
| CONT. | SECT. | JOB | HIGHWAY NO. |
| 2452 | 01 | 036, etc. | LP 1604 |

FILE rwsum.dgn
LEVEL 1 2 3 4 5 6 7 8 9 10 11 12 13 14 15 16 17 18 19 20 21 22 23 24 25 26 27 28 29 30 31 32
DISPLAYED 33 34 35 36 37 38 39 40 41 42 43 44 45 46 47 48 49 50 51 52 53 54 55 56 57 58 59 60 61 62 63
13 SEP 2000

| SHEET NO. | STATION TO STATION | 104-5001 ✳ REMOV CONC (PAV) M2 | 104-5003 ✳ REMOV CONC (RIPRAP) M2 | 104-5009 ✳ REMOV CONC (SDWLK) M2 | 104-5011 ✳ REMOV CONC (DRWY) M2 | 104-5014 ✳ REMOV CONC (CURB) M | 104-5017 REMOV CONC (DRCTN ISL) M2 | 351-5006 REPAIR EXIST FLEX PAV STRUCT (200mm) M2 | 452-5014 REMOV RAIL (TY 1) M | 496-5001 REMOV OLD STR (LARGE) EA | 496-5002 ✳ REMOV OLD STR (SMALL) EA | 496-5003 ✳ REMOV OLD STR (PIPE) EA | 512-5004 PORT. CONC TRAF BAR (REMOVE) M | 542-5001 REMOV METAL BEAM GUARD FENCE M | 542-5003 REMOV TERMINAL ANCHOR SECTION EA | 5098-**** QUADGD SYS (REMOVE) (760mm) (TY B) (10 BAY) EA | 354-5006 PLANE ASPH CONC PAV (0-40 MM) M2 | | |
|---|---|---|---|---|---|---|---|---|---|---|---|---|---|---|---|---|---|---|---|
| | | EST. | EST. | EST. | EST. | EST. | | EST. | EST. | EST. | EST. | EST. | | EST. | EST. | | EST. | | |
| 172 | 13+800 TO 15+140 | 563 | | | | | | | | | | | 291.2 | | | 1 | 9,806 | | |
| 173 | 15+140 TO 15+500 | | | | | | | | | | 1 | | | | | | | | |
| 175 | 17+000 TO 17+300 | | | | | | | | | | | 1 | | | | | | | |
| 176 | 17+300 TO 18+020 | | | | | | | | | | 1 | 2 | | | | | | | |
| 177 | 18+020 TO 18+740 | | | | | | | | | | 1 | 4 | | 15.2 | | | | | |
| 178 | 18+740 TO 19+460 | | | 100.6 | | 456 | | 111.6 | | | | 6 | | | | | 482 | | |
| 179 | 19+460 TO 20+180 | | | | | 68 | | | | | | 2 | | | | | | | |
| 180 | 20+180 TO 20+900 | | | | | | | | | | | 2 | | | | | | | |
| **CSJ 2452-01-037 TOTALS** | | 563 | | 100.6 | | 524 | | 111.6 | | | 3 | 17 | 291.2 | 15.2 | | 1 | 10,288 | | |
| 173 | 15+500 TO 15+860 | | 580 | | | | | | | 1 | | | | 106.4 | 2 | | | | |
| 174 | 15+860 TO 16+580 | | 160 | | | | | | | | 1 | 1 | | 91.2 | 2 | | | | |
| **CSJ 2452-01-038 TOTALS** | | | 740 | | | | | 100 | | 1 | 1 | 1 | | 197.6 | 4 | | | | |
| 180 | 20+180 TO 20+900 | | | | | 100 | | | | | | | | | | | | | |
| 181 | 20+900 TO 21+620 | | | | 1,850 | 340 | | 72 | | | 1 | 2 | | | | | 56 | | |
| 182 | 21+620 TO 22+340 | | | | | | | | | | | 1 | | | | | 300 | | |
| 183 | 22+340 TO 23+060 | | | | | 470 | | | 25.4 | | | 4 | | 45.6 | 4 | | 886 | | |
| 184 | 23+060 TO 23+780 | | | | | | | | | | | | | | | | 1,395 | | |
| 185 | 23+780 TO 24+500 | | 2,400 | | | | | | | 1 | | | | 486.4 | 4 | | 1,084 | | |
| 186 | 24+500 TO 25+220 | | | | | | | | | | | 1 | | | | | | | |
| 187 | 25+220 TO 25+940 | | | | | | | | | | | 1 | | | | | | | |
| 188 | 25+940 TO 26+660 | | | | | 194 | | | | | | 1 | | | | | | | |
| 189 | 26+660 TO 27+380 | | | | | | | | | | | 2 | | | | | | | |
| 190 | 27+380 TO 28+551 | | | | | | 33 | | | | | 4 | | | | | | | |
| **CSJ 2452-01-036 TOTALS** | | | 2,400 | | | 1,104 | 33 | 72 | 25.4 | 1 | 1 | 16 | | 532 | 8 | | 3,721 | | |
| **PROJECT TOTALS** | | 563 | 3,140 | 100.6 | 1,850 | 1,628 | 33 | 283.6 | 25.4 | 2 | 5 | 34 | 291.2 | 729.6 | 12 | 1 | 14,009 | | |

✳ ITEMS SUPPLIED FOR CONTRACTORS INFORMATION ONLY, SHALL BE CONSIDERED SUBSIDIARY TO ITEM 100 "PREP OF R.O.W.".

©2000 Texas Department of Transportation

# EXISTING GRADING SUMMARY

SHEET 1 OF 1

| FED.RD. DIV.NO. | FEDERAL AID PROJECT NO. | | SHEET NO. |
|---|---|---|---|
| 6 | NH 2000(704), etc. | | 24 |
| STATE | DIST. | COUNTY | |
| TEXAS | SAT | BEXAR | |
| CONT. | SECT. | JOB | HIGHWAY NO. |
| 2452 | 01 | 036, etc. | LP 1604 |

FOR REVIEW ONLY
1 2 3 4 5 6 7 8 9 10 11 12 13 14 15 16 17 18 19 20 21 22 23 24 25 26 27 28 29 30 31 32 33 34 35 36 37 38 39 40 41 42 43 44 45 46 47 48 49 50 51 52 53 54 55 56 57 58 59 60 61 62 63 64 65 66 67 68 69 70 71 72 73 74 75 76 77 78 79 80 81 82 83 84 85 86 87 88 89 90 91 92 93 94 95 96 97 98 99 100
gradsum.dgn

| SHEET NO. | STATION TO STATION | 104-5001 ✳ REMOV CONC (PAV) M2 | 104-5003 ✳ REMOV CONC (RIPRAP) M2 | 104-5009 ✳ REMOV CONC (SDWLK) M2 | 104-5011 ✳ REMOV CONC (DRWY) M2 | 104-5014 ✳ REMOV CONC (CURB) M | 104-5017 ✳ REMOV CONC (DRCTN ISL) M2 | 351-5006 REPAIR EXIST FLEX PAV STRUCT (200mm) M2 | 452-5014 REMOV RAIL (TY 1) M | 496-5001 REMOV OLD STR (LARGE) EA | 496-5002 ✳ REMOV OLD STR (SMALL) EA | 496-5003 ✳ REMOV OLD STR (PIPE) EA | 512-5004 PORT. CONC TRAF BAR (REMOVE) M | 542-5001 REMOV METAL BEAM GUARD FENCE M | 542-5003 REMOV TERMINAL ANCHOR SECTION EA | 5098-**** QUADGD SYS (REMOVE) (760mm) (TY B) (10 BAY) EA | 354-5006 PLANE ASPH CONC PAV (0-40 MM) M2 | 496-5004 REMOV OLD STR (PIPE) M | 104-5016 REMOV CONC (RET. WALL) M2 | REMOV CATTLE GUARD EA | REMOV GATE EA |
|---|---|---|---|---|---|---|---|---|---|---|---|---|---|---|---|---|---|---|---|---|---|
| | | EST. | EST. | EST. | EST. | EST. | | EST. | EST. | EST. | EST. | EST. | | EST. | EST. | | EST. | EST. | EST. | EST. | EST. |
| 172 | 13+800 TO 15+140 | | | | | | | | | | | | | | | | | | | | |
| 173 | 15+140 TO 15+500 | 563 | | | | | | | | | 1 | | 291.2 | | | 1 | 9806 | | | | |
| 175 | 17+000 TO 17+300 | | | | | | | | | | | 1 | | | | | | | | | |
| 176 | 17+300 TO 18+020 | | | | | | | | | | 1 | 2 | | | | | | | | | |
| 177 | 18+020 TO 18+740 | | | | | | | | | | 1 | 4 | | 15.2 | | | | | | | |
| 178 | 18+740 TO 19+460 | | | 100.6 | | 456 | | 0 | | | | 6 | | | | | 90 | | 12 | 1 | |
| 179 | 19+460 TO 20+180 | | | | | 68 | | 39 | | | | 2 | | | | | | | | | 1 |
| 180 | 20+180 TO 20+900 | | | | | | | 400 | | | | 2 | | | | | | | | | |
| **CSJ 2452-01-037 TOTALS** | | 563 | - | 100.6 | - | 524 | - | 439 | - | - | 3 | 17 | 291.2 | 15.2 | - | 1 | 9896 | - | 12 | 1 | 1 |
| 173 | 15+500 TO 15+860 | | 580 | | | | | | | 1 | | | | 106.4 | 2 | | | | | | |
| 174 | 15+860 TO 16+580 | | 160 | | | | | | | | 1 | 1 | | 91.2 | 2 | | | 167.6 | | | |
| **CSJ 2452-01-038 TOTALS** | | - | 740 | - | - | - | - | - | - | 1 | 1 | 1 | - | 197.6 | 4 | - | - | 167.6 | - | - | - |
| 180 | 20+180 TO 20+900 | | | | | 100 | | 786 | | | | 2 | | | | | | | | | |
| 181 | 20+900 TO 21+620 | | | | 1850/264 | 340/169 | | 50 | | | 1 | 2 | | | | | 0 | 24.4 | | | |
| 182 | 21+620 TO 22+340 | | | | | | | 622 | | | | 1 | | | | | 170 | - | | | |
| 183 | 22+340 TO 23+060 | | | | | 470 | | | 25.4 | 1 | | 4 | | 45.6 | 4 | | 798 | | | | |
| 184 | 23+060 TO 23+780 | | | | | | | | | | | | | | | | 1395 | | | | |
| 185 | 23+780 TO 24+500 | | 2400 | | | | | | | 1 | | | | 486.4 | 4 | | 1084 | | | | |
| 186 | 24+500 TO 25+220 | | | | | | | | | | | 1 | | | | | | 33.6 | | | |
| 187 | 25+220 TO 25+940 | | | | | | | | | | | 1 | | | | | | | | | |
| 188 | 25+940 TO 26+660 | | | | | 194/229 | | | | | | 1 | | | | | | 27.6 | | | |
| 189 | 26+660 TO 27+380 | | | | | | | | | | | 2 | | | | | | | | | |
| 190 | 27+380 TO 28+551 | | | | | | 33 | | | | | 4 | | | | | | | | | |
| **CSJ 2452-01-036 TOTALS** | | - | 2400 | - | 1850/264 | 1104/398 | 33 | 1458 | 25.4 | 2 | 1 | 18 | - | 532 | 8 | - | 3447 | 85.6 | - | - | - |
| **PROJECT TOTALS** | | 563 | 3140 | 100.6 | 1850/264 | 1104/398 | 33 | 1897 | 25.4 | 3 | 5 | 36 | 291.2 | 744.8 | 12 | 1 | 13343 | 253.2 | 12 | 1 | 1 |

△64 △64 △64 △37 △25 △64 △64 △64 △64

CHANGE ORDER NO. 119
-REVISIONS/UPDATED QUANTITIES AS PER THE VARIOUS CHANGE ORDERS.

✳ ITEMS SUPPLIED FOR CONTRACTORS INFORMATION ONLY, SHALL BE CONSIDERED SUBSIDIARY TO ITEM 100 "PREP OF R.O.W.".

△# REFERS TO CHANGES MADE AS PART OF CHANGE ORDER.

©2000

Texas Department of Transportation

# EXISTING GRADING SUMMARY

SHEET 1 OF 1

| FED. RD. DIV. NO. | FEDERAL AID PROJECT NO. | | SHEET NO. |
|---|---|---|---|
| 6 | NH 2000(704), etc. | | 24A |
| STATE | DIST. | COUNTY | |
| TEXAS | SAT | BEXAR | |
| CONT. | SECT. | JOB | HIGHWAY NO. |
| 2452 | 01 | 036, etc. | LP 1604 |

02-17-06

T:\AO\Design\lp1604fm471-90\Summaries\existgradingsummary2.dgn
2/7/2006

| SHEET NO. | STATION TO STATION | 100-5002 PREP R.O.W. KM | 110-5001 EXCAVATION (RDWY) M3 | 132-5018 EMBANK (CRD COMP) (TY3) (CL3) M3 | 150-5003 BLADING H | 156-5003 BLDZR WORK (CRD COMP) (TY A) H | 160-5002 FURN AND PLAC TPSL (CL 2) (150 MM) M2 | 164-5025 BRDCST SEED (PERM) (URBAN) (CLAY) M2 | 247-5024 FL BS (COMPL IN PLACE) (TY A GR 6 CL 4) M3 | 310-5006 ASPH MATL (AE-P) L | ONE CRSE SURF TRMT M2 | 316-5028 AGGR (TY PB (GR4) M3 | 316-5226 ASPH (AC-15P HFRS-2P OR CRS-2P) L | 345-5004 ASPH STAB BS (GR 4) MGR | 420-5050 CL C CONC (RAIL FOUNDATION) M3 | 432-5001 RIPRAP (CONC) (CL B) M3 | 450-5027 RAIL (CURB RMP HANDRAIL) M | 450-5045 RAIL (TY SSTR) M |
|---|---|---|---|---|---|---|---|---|---|---|---|---|---|---|---|---|---|---|
| | | EST. | EST. | EST. | EST. | EST. | EST. | EST. | EST. | EST. | EST. | EST. | EST. | EST. | | EST. | EST. | EST. |
| 191 | 13+800 TO 13+980 | | | | | | 3528 | 3528 | | | | | | | | | | |
| 192 | 13+980 TO 14+240 | | | | | | 5096 | 5096 | | | | | | | | | | |
| 193 | 14+240 TO 14+500 | 0.26 | - | - | | | 7096 | 7096 | 797 | 1008 | 1920 | 17 | 2611 | | | | | |
| 194 | 14+500 TO 14+780 | 0.28 | - | - | 6 | 6 | 16019 | 16019 | 2793 | 3534 | 6730 | 61 | 9153 | | | | | |
| 195 | 14+780 TO 15+040 | 0.26 | - | - | | | 12346 | 12346 | 2702 | 3285 | 6521 | 59 | 8869 | | | 85 | | |
| 196 | 15+040 TO 15+300 | 0.26 | - | - | 3 | 3 | 14735 | 14735 | 3019 | 4026 | 7296 | 66 | 9923 | | | | | |
| 197 | 15+300 TO 15+500 | 0.20 | - | - | | | 10697 | 10697 | 4050 | 4608 | 10351 | 94 | 14077 | 449 | | 109 | | |
| 203 | 17+000 TO 17+140 | 0.14 | - | - | | | 9376 | 9376 | 1591 | 2263 | 3851 | 35 | 5237 | | | | | |
| 204 | 17+140 TO 17+400 | 0.26 | - | - | | | 14928 | 14928 | 2810 | 2906 | 8010 | 73 | 10894 | 952 | | | | |
| 205 | 17+400 TO 17+660 | 0.26 | - | - | | | 12923 | 12923 | 2681 | 2890 | 8646 | 79 | 11758 | 1693 | | | | |
| 206 | 17+660 TO 17+920 | 0.26 | - | - | | | 21832 | 21832 | 2629 | 3276 | 6338 | 58 | 8620 | | | | | |
| 207 | 17+920 TO 18+180 | 0.26 | - | - | 4 | 4 | 13896 | 13896 | 2803 | 4130 | 8139 | 74 | 11069 | 1096 | | 55 | | |
| 208 | 18+180 TO 18+440 | 0.26 | - | - | | | 11090 | 11090 | 3534 | 5555 | 8552 | 78 | 11631 | | 17.6 | 112 | | 60 |
| 209 | 18+440 TO 18+700 | 0.26 | - | - | | | 9994 | 9994 | 2554 | 4154 | 8422 | 77 | 11454 | 646 | 35.3 | 130 | | 120 |
| 210 | 18+700 TO 18+960 | 0.26 | - | - | | | 11951 | 11951 | 1477 | 3708 | 9683 | 88 | 13169 | 1915 | | 39 | | |
| 211 | 18+960 TO 19+220 | 0.26 | - | - | 4 | 4 | 14741 | 14741 | 2005 | 4895 | 8484 | 77 | 11538 | 98 | | 28 | | |
| 212 | 19+220 TO 19+480 | 0.26 | - | - | | | 11241 | 11241 | 908 | 2278 | 10760 | 98 | 14634 | 5381 | | 211 | | |
| 213 | 19+480 TO 19+740 | 0.26 | - | - | 4 | 4 | 13177 | 13177 | 1255 | 3021 | 6666 | 61 | 9066 | 796 | | 196 | | |
| 214 | 19+740 TO 20+000 | 0.26 | - | - | 6 | 6 | 10177 | 10177 | 1288 | 3102 | 6696 | 61 | 9106 | 756 | | 163 | | |
| 215 | 20+000 TO 20+260 | 0.26 | - | - | | | 8698 | 8698 | 1213 | 3060 | 7548 | 69 | 10265 | 1072 | | 99 | | |
| 216 | 20+260 TO 20+520 | 0.26 | - | - | | | 8407 | 8407 | 1258 | 3027 | 6617 | 60 | 8999 | 776 | | | | |
| 217 | 20+520 TO 20+640 | 0.12 | - | - | | | 3478 | 3478 | 598 | 1441 | 3095 | 28 | 4209 | 335 | | | | |
| **CSJ 2452-01-037 TOTALS** | | 4.90 | | | 27 | 27 | 245426 | 245426 | 41965 | 66167 | 144325 | 1313 | 196282 | 15965 | 52.9 | 1227 | | 180 |
| 197 | 15+500 TO 15+560 | 0.06 | - | - | | | 5080 | 5080 | 1575 | 2135 | 4586 | 42 | 6237 | 634 | | 33 | | |
| 198 | 15+560 TO 15+840 | 0.28 | - | - | | | 26373 | 26373 | 5535 | 6688 | 13831 | 126 | 18810 | 1205 | | 203 | 114 | |
| 199 | 15+840 TO 16+100 | 0.26 | - | - | | | 18034 | 18034 | 2040 | 4569 | 24331 | 221 | 33090 | 12168 | | | | |
| 200 | 16+100 TO 16+360 | 0.26 | - | - | | | 28459 | 28459 | 5640 | 7659 | 13630 | 124 | 18537 | | | | | |
| 201 | 16+360 TO 16+620 | 0.26 | - | - | | | 17589 | 17589 | 5470 | 7239 | 13207 | 120 | 17962 | | | 20 | | |
| 202 | 16+620 TO 16+880 | 0.26 | - | - | | | 18929 | 18929 | 4733 | 5364 | 11464 | 104 | 15591 | | | 71 | | |
| 203 | 16+880 TO 17+000 | 0.12 | - | - | | | 9255 | 9255 | 1451 | 1944 | 3520 | 32 | 4787 | | | | | |
| **CSJ 2452-01-038 TOTALS** | | 1.50 | | | | | 123719 | 123719 | 26444 | 35598 | 84569 | 769 | 115014 | 14007 | | 327 | 114 | |
| 217 | 20+640 TO 20+780 | 0.14 | - | - | | | 3791 | 3791 | 588 | 1450 | 4328 | 39 | 5886 | 794 | | | | |
| 218 | 20+780 TO 21+040 | 0.26 | - | - | | | 11836 | 11836 | 1332 | 3211 | 6782 | 62 | 9224 | 657 | | | | |
| 219 | 21+040 TO 21+320 | 0.28 | - | - | | | 12646 | 12646 | 992 | 3738 | 15616 | 142 | 21238 | 6644 | | | | |
| 220 | 21+320 TO 21+580 | 0.26 | - | - | 8 | 8 | 12190 | 12190 | 1402 | 3387 | 7218 | 66 | 9816 | 969 | | | | |
| 221 | 21+580 TO 21+860 | 0.28 | - | - | | | 7618 | 7618 | 1355 | 3261 | 8246 | 75 | 11215 | 1683 | | | | |
| 222 | 21+860 TO 22+120 | 0.26 | - | - | | | 8669 | 8669 | 1261 | 3036 | 6666 | 61 | 9066 | 524 | | | | |
| 223 | 22+120 TO 22+380 | 0.26 | - | - | | | 15138 | 15138 | 1261 | 3035 | 6622 | 60 | 9006 | 922 | | | | |
| 224 | 22+380 TO 22+700 | 0.32 | - | - | | | 15164 | 15164 | 1214 | 4416 | 21934 | 199 | 29830 | 8737 | | | | |
| 225 | 22+700 TO 22+960 | 0.26 | - | - | 12 | 12 | 15661 | 15661 | 1378 | 3328 | 7149 | 65 | 9723 | 1007 | | | | |
| 226 | 22+960 TO 23+220 | 0.26 | - | - | | | 15146 | 15146 | 1266 | 3047 | 6635 | 60 | 9024 | 922 | | | | |
| 227 | 23+220 TO 23+500 | 0.28 | - | - | | | 7709 | 7709 | 1354 | 3259 | 7123 | 65 | 9687 | 993 | | | | |
| 228 | 23+500 TO 23+760 | 0.26 | - | - | | | 8577 | 8577 | 1206 | 2902 | 6440 | 59 | 8758 | 909 | | | | |
| 229 | 23+760 TO 24+020 | 0.26 | - | - | | | 11990 | 11990 | 1251 | 3011 | 6591 | 60 | 8964 | 921 | | | | |
| 230 | 24+020 TO 24+260 | 0.24 | - | - | | | 12029 | 12029 | 1772 | 3000 | 6309 | 57 | 8580 | 522 | | 574 | | |
| 231 | 24+260 TO 24+520 | 0.26 | - | - | | | 10461 | 10461 | 1820 | 2103 | 4395 | 40 | 5977 | | | 80 | | |
| 232 | 24+520 TO 24+800 | 0.28 | - | - | | | 23096 | 23096 | 2951 | 3430 | 7126 | 65 | 9691 | | | | | |
| 233 | 24+800 TO 25+060 | 0.26 | - | - | | | 19536 | 19536 | 2741 | 3185 | 6617 | 60 | 8999 | | | | | |
| 234 | 25+060 TO 25+320 | 0.26 | - | - | | | 11394 | 11394 | 2741 | 3185 | 6617 | 60 | 8999 | | | 80 | | |
| 235 | 25+320 TO 25+580 | 0.26 | - | - | | | 11457 | 11457 | 2712 | 3130 | 6544 | 59 | 8900 | | | 50 | | |
| 236 | 25+580 TO 25+840 | 0.26 | - | - | | | 11884 | 11884 | 2641 | 3003 | 6378 | 58 | 8674 | | | | | |
| 237 | 25+840 TO 26+100 | 0.26 | - | - | | | 11669 | 11669 | 2697 | 3106 | 6512 | 59 | 8856 | | | | | |
| 238 | 26+100 TO 26+380 | 0.28 | - | - | | | 10339 | 10339 | 2178 | 3570 | 13193 | 120 | 17942 | 4947 | | | | |
| 239 | 26+380 TO 26+640 | 0.28 | - | - | | | 12538 | 12538 | 3142 | 3773 | 7602 | 69 | 10339 | | | | | |
| 240 | 26+640 TO 26+900 | 0.24 | - | - | | | 8448 | 8448 | 2538 | 2954 | 6129 | 56 | 8335 | | | | | |
| 241 | 26+900 TO 27+160 | 0.26 | - | - | | | 8337 | 8337 | 2831 | 3351 | 6840 | 62 | 9302 | | | 58 | | |
| 242 | 27+160 TO 27+420 | 0.26 | - | - | | | 6303 | 6303 | 2833 | 3431 | 8036 | 73 | 10929 | 861 | | 293 | | |
| 243 | 27+420 TO 27+680 | 0.26 | - | - | | | 9810 | 9810 | 2745 | 3195 | 6628 | 60 | 9014 | | | 107 | | |
| 244 | 27+680 TO 27+940 | 0.26 | - | - | 3 | 3 | 11399 | 11399 | 3258 | 4467 | 7899 | 72 | 10743 | | | 124 | | |
| 245 | 27+940 TO 28+200 | 0.26 | - | - | | | 7247 | 7247 | 2410 | 3162 | 5909 | 54 | 8036 | | | | | |
| 246 | 28+200 TO 28+460 | 0.26 | - | - | | | 5740 | 5740 | 2254 | 2804 | 5519 | 50 | 7506 | | | | | |
| 247 | 28+460 TO 28+511.5 | 0.07 | - | - | | | 1769 | 1769 | 935 | 1351 | 2527 | 23 | 3437 | | | | | |
| **CSJ 2452-01-036 TOTALS** | | 7.89 | | | 23 | 23 | 339591 | 339591 | 61059 | 97281 | 232130 | 2110 | 315696 | 32012 | | 1366 | | |
| **PROJECT TOTALS** | | 14.29 | | | 50 | 50 | 708736 | 708736 | 129468 | 199046 | 461024 | 4192 | 626992 | 61984 | 52.9 | 2920 | 114 | 180 |

✳ FOR CONTRACTORS INFORMATION ONLY

NOTE(S): 1) QUANTITIES INCLUDE THAT OF PROPOSED PLAN SHEETS.

Texas Department of Transportation

# GRADING SUMMARY

SHEET 1 OF 2

| FED. RD. DIV. NO. | FEDERAL AID PROJECT NO. | | SHEET NO. |
|---|---|---|---|
| 6 | | | 25 |
| STATE | DIST. | COUNTY | |
| TEXAS | SAT | BEXAR | |
| CONT. | SECT. | JOB | HIGHWAY NO. |
| 2452 | 01 | 036, ETC | LP 1604 |

gradsum.dgn

| FILE $FILE$ | $DATE$ |
|---|---|
| LEVEL | 1 1 2 3 4 5 6 7 8 9 10 11 12 13 14 15 16 17 18 19 20 21 22 23 24 25 26 27 28 29 30 31 01 02 |
| DISPLAYED | 1 3 3 4 5 3 5 3 6 3 7 1 8 5 3 9 4 0 4 1 4 2 4 3 4 4 4 5 4 6 4 7 4 8 4 9 5 0 5 1 5 2 5 3 5 4 5 5 5 6 5 7 5 8 5 9 6 0 6 1 6 2 6 3 |

| SHEET NO. | STATION TO STATION | 100-5002 PREP R.O.W. KM | 110-5001 EXCAVATION (ROWY) M3 | 132-5018 EMBANK (ORD COMP) (TY3) (CL3) M3 | 150-5003 BLADING H | 156-5003 BLDZR WORK (ORD COMP) (TY A) H | 160-5002 FURN AND PLAC TPSL (CL 2) (150 MM) M2 | 164-5025 BRDCST SEED (PERM) (URBAN) (CLAY) M2 | 247-5024 FL BS (COMPL IN PLAC) (TY A GR 6 CL 4) M3 | 310-5006 ASPH MATL (AE-P) L | ONE CRSE SURF TRMT M2 | 316-5028 AGGR (TY PB GR4) M3 | 316-5226 ASPH (AC-15P, HFRS-2P OR CRS-2P) L | 345-5004 ASPH STAB BS (GR 4) MGR | 420-5050 CL C CONC (RAIL FOUNDATION) M3 | 432-5001 RIPRAP (CONC) (CL B) M3 | 450-5027 RAIL (CURB RAMP HANDRAIL) M | 450-5045 RAIL (TY SSTR) M |
|---|---|---|---|---|---|---|---|---|---|---|---|---|---|---|---|---|---|---|
| | | EST. | EST. | EST. | EST. | EST. | EST. | EST. | EST. | EST. | EST. | EST. | EST. | EST. | | EST. | EST. | EST. |
| 191 | 13+800 TO 13+980 | | | | | | 3528 | 3528 | | | | | | | | | | |
| 192 | 13+980 TO 14+240 | | | | | | 5096 | 5096 | | | | | | | | | | |
| 193 | 14+240 TO 14+500 | 0.26 | - | - | | | 7096 | 7096 | 797 | 1008 | 1920 | 17 | 2611 | | | | | |
| 194 | 14+500 TO 14+780 | 0.28 | - | - | 6 | 6 | 16019 | 16019 | 2793 | 3534 | 6730 | 61 | 9153 | | | | | |
| 195 | 14+780 TO 15+040 | 0.26 | - | - | | | 12346 | 12346 | 2702 | 3285 | 6521 | 59 | 8869 | | | 85 | | |
| 196 | 15+040 TO 15+300 | 0.26 | - | - | 3 | 3 | 14735 | 14735 | 3019 | 4026 | 7296 | 66 | 9923 | | | | | |
| 197 | 15+300 TO 15+500 | 0.20 | - | - | | | 10697 | 10697 | 4050 | 4608 | 10351 | 94 | 14077 | 449 | | 109 | | |
| 203 | 17+000 TO 17+140 | 0.14 | - | - | | | 9376 | 9376 | 1591 | 2263 | 3851 | 35 | 5237 | | | | | |
| 204 | 17+140 TO 17+400 | 0.26 | - | - | | | 14928 | 14928 | 2810 | 2906 | 8010 | 73 | 10894 | 952 | | | | |
| 205 | 17+400 TO 17+660 | 0.26 | - | - | | | 12923 | 12923 | 2681 | 2890 | 8646 | 79 | 11758 | 1693 | | | | |
| 206 | 17+660 TO 17+920 | 0.26 | - | - | | | 21832 | 21832 | 2629 | 3276 | 6338 | 58 | 8620 | | | | | |
| 207 | 17+920 TO 18+180 | 0.26 | - | - | 4 | 4 | 13896 | 13896 | 2803 | 4130 | 8139 | 74 | 11069 | 1096 | | 55 | | |
| 208 | 18+180 TO 18+440 | 0.26 | - | - | | | 11090 | 11090 | 3534 | 5555 | 8552 | 78 | 11631 | | 17.6 | 112 | | 60 |
| 209 | 18+440 TO 18+700 | 0.26 | - | - | | | 9994 | 9994 | 2554 | 4154 | 8422 | 77 | 11454 | 646 | 35.3 | 130 | | 120 |
| 210 | 18+700 TO 18+960 | 0.26 | - | - | | | 11951 | 11951 | 1477 | 3708 | 9683 | 88 | 13169 | 1915 | | 39 | | |
| 211 | 18+960 TO 19+220 | 0.26 | - | - | 4 | 4 | 14741 | 14741 | 2005 | 4895 | 8484 | 77 | 11538 | 98 | | 28 | | |
| 212 | 19+220 TO 19+480 | 0.26 | - | - | | | 11241 | 11241 | 908 | 2278 | 10760 | 98 | 14634 | 5381 | | 85 | | |
| 213 | 19+480 TO 19+740 | 0.26 | - | - | 4 | 4 | 13177 | 13177 | 1255 | 3021 | 6666 | 61 | 9066 | 796 | | 0 | | |
| 214 | 19+740 TO 20+000 | 0.26 | - | - | 6 | 6 | 10177 | 10177 | 1288 | 3102 | 6696 | 61 | 9106 | 756 | | 163 | | |
| 215 | 20+000 TO 20+260 | 0.26 | - | - | | | 8698 | 8698 | 1213 | 3060 | 7548 | 69 | 10265 | 1072 | | 99 | | |
| 216 | 20+260 TO 20+520 | 0.26 | - | - | | | 8407 | 8407 | 1258 | 3027 | 6617 | 60 | 8999 | 776 | | | | |
| 217 | 20+520 TO 20+640 | 0.12 | - | - | | | 3478 | 3478 | 598 | 1441 | 3095 | 28 | 4209 | 335 | | | | |
| **CSJ 2452-01-037 TOTALS** | | 4.90 | | | 27 | 27 | 245426 | 245426 | 41965 | 66167 | 144325 | 1313 | 196282 | 15965 | 52.9 | 905 | | 180 |
| 197 | 15+500 TO 15+560 | 0.06 | - | - | | | 5080 | 5080 | 1575 | 2135 | 4586 | 42 | 6237 | 634 | | 33 | | |
| 198 | 15+560 TO 15+840 | 0.28 | - | - | | | 26373 | 26373 | 5535 | 6688 | 13831 | 126 | 18810 | 1205 | | 203 | 114 | |
| 199 | 15+840 TO 16+100 | 0.26 | - | - | | | 18034 | 18034 | 2040 | 4569 | 24331 | 221 | 33090 | 12168 | | | | |
| 200 | 16+100 TO 16+360 | 0.26 | - | - | | | 28459 | 28459 | 5640 | 7659 | 13630 | 124 | 18537 | | | | | |
| 201 | 16+360 TO 16+620 | 0.26 | - | - | | | 17589 | 17589 | 5470 | 7239 | 13207 | 120 | 17962 | | | 20 | | |
| 202 | 16+620 TO 16+880 | 0.26 | - | - | | | 18929 | 18929 | 4733 | 5364 | 11464 | 104 | 15591 | | | 71 | | |
| 203 | 16+880 TO 17+000 | 0.12 | - | - | | | 9255 | 9255 | 1451 | 1944 | 3520 | 32 | 4787 | | | | | |
| **CSJ 2452-01-038 TOTALS** | | 1.50 | | | | | 123719 | 123719 | 26444 | 35598 | 84569 | 769 | 115014 | 14007 | | 327 | 114 | |
| 217 | 20+640 TO 20+780 | 0.14 | - | - | | | 3791 | 3791 | 588 | 1450 | 4328 | 39 | 5886 | 794 | | | | |
| 218 | 20+780 TO 21+040 | 0.26 | - | - | | | 11836 | 11836 | 1332 | 3211 | 6782 | 62 | 9224 | 657 | | | | |
| 219 | 21+040 TO 21+320 | 0.28 | - | - | | | 12646 | 12646 | 992 | 3738 | 15616 | 142 | 21238 | 6644 | | | | |
| 220 | 21+320 TO 21+580 | 0.26 | - | - | 8 | 8 | 12190 | 12190 | 1402 | 3387 | 7218 | 66 | 9816 | 969 | | | | |
| 221 | 21+580 TO 21+860 | 0.28 | - | - | | | 7618 | 7618 | 1355 | 3261 | 8246 | 75 | 11215 | 1683 | | | | |
| 222 | 21+860 TO 22+120 | 0.26 | - | - | | | 8669 | 8669 | 1261 | 3036 | 6666 | 61 | 9066 | 524 | | | | |
| 223 | 22+120 TO 22+380 | 0.26 | - | - | | | 15138 | 15138 | 1261 | 3035 | 6622 | 60 | 9006 | 922 | | | | |
| 224 | 22+380 TO 22+700 | 0.32 | - | - | | | 15164 | 15164 | 1214 | 4416 | 21934 | 199 | 29830 | 8737 | | | | |
| 225 | 22+700 TO 22+960 | 0.26 | - | - | 12 | 12 | 15661 | 15661 | 1378 | 3328 | 7149 | 65 | 9723 | 1007 | | | | |
| 226 | 22+960 TO 23+220 | 0.26 | - | - | | | 15146 | 15146 | 1266 | 3047 | 6635 | 60 | 9024 | 922 | | | | |
| 227 | 23+220 TO 23+500 | 0.28 | - | - | | | 7709 | 7709 | 1354 | 3259 | 7123 | 65 | 9687 | 993 | | | | |
| 228 | 23+500 TO 23+760 | 0.26 | - | - | | | 8577 | 8577 | 1206 | 2902 | 6440 | 59 | 8758 | 909 | | | | |
| 229 | 23+760 TO 24+020 | 0.26 | - | - | | | 11990 | 11990 | 1251 | 3011 | 6591 | 60 | 8964 | 921 | | | | |
| 230 | 24+020 TO 24+260 | 0.24 | - | - | | | 12029 | 12029 | 1772 | 3000 | 6309 | 57 | 8580 | 522 | | 574 | | |
| 231 | 24+260 TO 24+520 | 0.26 | - | - | | | 10461 | 10461 | 1820 | 2103 | 4395 | 40 | 5977 | | | 80 | | |
| 232 | 24+520 TO 24+800 | 0.28 | - | - | | | 23096 | 23096 | 2951 | 3430 | 7126 | 65 | 9691 | | | | | |
| 233 | 24+800 TO 25+060 | 0.26 | - | - | | | 19536 | 19536 | 2741 | 3185 | 6617 | 60 | 8999 | | | | | |
| 234 | 25+060 TO 25+320 | 0.26 | - | - | | | 11394 | 11394 | 2741 | 3185 | 6617 | 60 | 8999 | | | 80 | | |
| 235 | 25+320 TO 25+580 | 0.26 | - | - | | | 11457 | 11457 | 2712 | 3130 | 6544 | 59 | 8900 | | | 50 | | |
| 236 | 25+580 TO 25+840 | 0.26 | - | - | | | 11884 | 11884 | 2641 | 3003 | 6378 | 58 | 8674 | | | | | |
| 237 | 25+840 TO 26+100 | 0.26 | - | - | | | 11669 | 11669 | 2697 | 3106 | 6512 | 59 | 8856 | | | | | |
| 238 | 26+100 TO 26+380 | 0.28 | - | - | | | 10339 | 10339 | 2178 | 3570 | 13193 | 120 | 17942 | 4947 | | | | |
| 239 | 26+380 TO 26+640 | 0.28 | - | - | | | 12538 | 12538 | 3142 | 3773 | 7602 | 69 | 10339 | | | | | |
| 240 | 26+640 TO 26+900 | 0.24 | - | - | | | 8448 | 8448 | 2538 | 2954 | 6129 | 56 | 8335 | | | | | |
| 241 | 26+900 TO 27+160 | 0.26 | - | - | | | 8337 | 8337 | 2831 | 3351 | 6840 | 62 | 9302 | | | 58 | | |
| 242 | 27+160 TO 27+420 | 0.26 | - | - | | | 6303 | 6303 | 2833 | 3431 | 8036 | 73 | 10929 | 861 | | 293 | | |
| 243 | 27+420 TO 27+680 | 0.26 | - | - | | | 9810 | 9810 | 2745 | 3195 | 6628 | 60 | 9014 | | | 107 | | |
| 244 | 27+680 TO 27+940 | 0.26 | - | - | 3 | 3 | 11399 | 11399 | 3258 | 4467 | 7899 | 72 | 10743 | | | 124 | | |
| 245 | 27+940 TO 28+200 | 0.26 | - | - | | | 7247 | 7247 | 2410 | 3162 | 5909 | 54 | 8036 | | | | | |
| 246 | 28+200 TO 28+460 | 0.26 | - | - | | | 5740 | 5740 | 2254 | 2804 | 5519 | 50 | 7506 | | | | | |
| 247 | 28+460 TO 28+511.5 | 0.07 | - | - | | | 1769 | 1769 | 935 | 1351 | 2527 | 23 | 3437 | | | | | |
| **CSJ 2452-01-036 TOTALS** | | 7.89 | | | 23 | 23 | 339591 | 339591 | 61059 | 97281 | 232130 | 2110 | 315696 | 32012 | | 1366 | | |
| **PROJECT TOTALS** | | 14.29 | | | 50 | 50 | 708736 | 708736 | 129468 | 199046 | 461024 | 4192 | 626992 | 61984 | 52.9 | 2598 | 114 | 180 |

CHANGE ORDER NO. 19

CHANGE ORDER NO. 19
-ELIMINATES LANDSCAPE PAVERS
-SEE REVISED PLAN SHTS 212A, 213A, 339B, 340B, 341B, AND 199A

✳ FOR CONTRACTORS INFORMATION ONLY

NOTE(S): 1) QUANTITIES INCLUDE THAT OF PROPOSED PLAN SHEETS.

©2000

Texas Department of Transportation

# GRADING SUMMARY

SHEET 1 OF 2

| FED.RD. DIV.NO. | FEDERAL AID PROJECT NO. | | SHEET NO. |
|---|---|---|---|
| 6 | | | 25A |
| STATE | DIST. | COUNTY | |
| TEXAS | SAT | BEXAR | |
| CONT. | SECT. | JOB | HIGHWAY NO. |
| 2452 | 01 | 036, ETC | LP 1604 |

gradsum.dgn
FILE $FILE$ $DATE$
LEVEL 1 2 3 4 5 6 7 8 9 10 11 12 13 14 15 16 17 18 19 20 21 22 23 24 25 26 27 28 29 30 31 32
DISPLAYED 33 34 35 36 37 38 39 40 41 42 43 44 45 46 47 48 49 50 51 52 53 54 55 56 57 58 59 60 61 62 63

| SHEET NO. | STATION TO STATION | 529-5001 CONC CURB (TY I) M | 529-5026 CONC CURB (TY A) M | 530-5001 DRVWYS (CONC) (150 MM) M2 | 530-5003 DRVWY (ASPH-CONC PAV) M2 | 530-5078 DRVWAYS (CONC) (200 MM) M2 | 531-5002 CONCRETE SIDEWALK M2 | 536-5003 CONC DIRECT ISLAND M2 | 540-5005 TERM ANCHOR SECT (2.67 MM) EA | 540-5006 MTL BEAM GD FEN (TIM POST) (2.67 MM) M | 540-5007 MTL BM GD FEN (BLK OUT) TIM POST (2.67 MM) M | 560-5001 INSTALL MAILBOX SINGLE EA | 560-5002 INSTALL MAILBOX DOUBLE EA | 3117-5103 HOT MIX (TY C) (PG 64-22) MGR | 3117-5084 HOT MIX (TY C) SURF (PG 76-22) MGR | 3117-5074 HOT MIX (TY C) (LEVEL-UP) (PG 64-22) MGR | 5027-5001 LANDSCAPE PAVERS M2 | 5#9-5003 SINGLE GDRAIL TERM (TY III) EA |
|---|---|---|---|---|---|---|---|---|---|---|---|---|---|---|---|---|---|---|
| | | EST. | EST. | EST. | EST. | EST. | EST. | EST. | EST. | EST. | EST. | EST. | EST. | EST. | EST. | EST. | EST. | EST. |
| 191 | 13+800 TO 13+980 | | | | | | | | | | | | | | 107 | | | |
| 192 | 13+980 TO 14+240 | | | | | | | | | | | | | | 429 | | | |
| 193 | 14+240 TO 14+500 | | | | | | | | | 76 | | | | 180 | 557 | | | 1 |
| 194 | 14+500 TO 14+780 | | | | | | | | 3 | 98.8 | | | | 633 | 601 | | | 1 |
| 195 | 14+780 TO 15+040 | | | | | 234 | | | | 60.8 | | | | 613 | 584 | | | 1 |
| 196 | 15+040 TO 15+300 | | | | 52 | | | | | | | | | 686 | 654 | | | |
| 197 | 15+300 TO 15+500 | 115 | | | 288 | | | | 1 | 129.2 | | | | 971 | 925 | | | |
| 203 | 17+000 TO 17+140 | | | | | | | | | | | | | 362 | 346 | | | |
| 204 | 17+140 TO 17+400 | | | | | | | | | | | | | 753 | 720 | | | |
| 205 | 17+400 TO 17+660 | | | | 280 | | | | | | | 1 | | 813 | 929 | | | |
| 206 | 17+660 TO 17+920 | | | | 299 | | | | | | | | | 596 | 566 | | | |
| 207 | 17+920 TO 18+180 | 109 | | | | | | | 1 | | 38 | | | 764 | 758 | | | |
| 208 | 18+180 TO 18+440 | 260 | | | | | | | | 45.6 | | | | 800 | 763 | | | 2 |
| 209 | 18+440 TO 18+700 | 263 | | | | | | | 1 | 38 | | | | 793 | 760 | 155 | | |
| 210 | 18+700 TO 18+960 | 305 | | | 248 | | 115 | 113 | | | | 1 | | 899 | 864 | 653 | | |
| 211 | 18+960 TO 19+220 | 261 | | | | | | | | | | | | 806 | 774 | 724 | | |
| 212 | 19+220 TO 19+480 | 273 | 488 | | 242 | | 142 | 69 | | | | 1 | | 989 | 946 | 174 | 246 | |
| 213 | 19+480 TO 19+740 | 262 | | 49 | 409 | | | | | | | 1 | | 623 | 591 | 425 | 740 | |
| 214 | 19+740 TO 20+000 | 261 | | | 38 | | | | 2 | 152 | 60.8 | 1 | | 626 | 594 | 498 | | 1 |
| 215 | 20+000 TO 20+260 | 256 | | | 253 | | | 121 | | 205.2 | | 1 | | 695 | 664 | 486 | | 1 |
| 216 | 20+260 TO 20+520 | 261 | | | | | | | | | | | | 618 | 587 | 881 | | |
| 217 | 20+520 TO 20+640 | 120 | | | | | | | | | | | | 290 | 275 | 296 | | |
| **CSJ 2452-01-037 TOTALS** | | 2746 | 488 | 49 | 2109 | 234 | 257 | 303 | 8 | 805.6 | 98.8 | 6 | | 13510 | 13994 | 4292 | 986 | 7 |
| 197 | 15+500 TO 15+560 | 231 | | | | | | | 1 | 7.6 | | | | 428 | 405 | | | |
| 198 | 15+560 TO 15+840 | 619 | | | | | | | | 235.7 | | | | 1290 | 1222 | | | 3 |
| 199 | 15+840 TO 16+100 | 406 | 1228 | | 437 | | 513 | | | 228 | 38 | 1 | | 1867 | 1790 | | 2297 | 2 |
| 200 | 16+100 TO 16+360 | 522 | | | 127 | | | | | 30.4 | | | | 1274 | 1211 | | | 2 |
| 201 | 16+360 TO 16+620 | 522 | | | 148 | | | | | | | | 1 | 1234 | 1171 | | | |
| 202 | 16+620 TO 16+880 | 193 | | | 103 | | | | | | | 1 | | 1075 | 1027 | | | |
| 203 | 16+880 TO 17+000 | | | | | | | | | | | | | 331 | 317 | | | |
| **CSJ 2452-01-038 TOTALS** | | 2493 | 1228 | | 815 | | 513 | | 1 | 501.7 | 38 | 2 | 1 | 7499 | 7143 | | 2297 | 7 |
| 217 | 20+640 TO 20+780 | 176 | | | | | | 24 | | | | | | 408 | 389 | 484 | | |
| 218 | 20+780 TO 21+040 | 261 | | | | | | | | | | | | 637 | 606 | 517 | | |
| 219 | 21+040 TO 21+320 | 374 | 550 | 339 | | | 273 | 163 | | | | | | 1209 | 1175 | 397 | | |
| 220 | 21+320 TO 21+580 | 263 | 20 | | | | | | 2 | 68.4 | 91.2 | | | 675 | 643 | 834 | | 1 |
| 221 | 21+580 TO 21+860 | 281 | | | 162 | | | | 1 | 205.2 | | | | 774 | 737 | 771 | | 2 |
| 222 | 21+860 TO 22+120 | 262 | | | 147 | | | | | | | | | 629 | 598 | 341 | | |
| 223 | 22+120 TO 22+380 | 261 | | | 880 | | | | | | | | | 619 | 587 | 421 | | |
| 224 | 22+380 TO 22+700 | 480 | 459 | 209 | 870 | | | 288 | | | | | | 1776 | 1725 | 99 | | |
| 225 | 22+700 TO 22+960 | 261 | | | | | | | 2 | 53.2 | 91.2 | | | 668 | 637 | 200 | | 2 |
| 226 | 22+960 TO 23+220 | 263 | | | 393 | | | | | | | | | 620 | 588 | 118 | | |
| 227 | 23+220 TO 23+500 | 280 | | | 29 | | | | | | | | | 666 | 632 | 197 | | |
| 228 | 23+500 TO 23+760 | 249 | | | | | | | | | | | | 602 | 571 | 63 | | |
| 229 | 23+760 TO 24+020 | 260 | | | 293 | | | | | | | | | 616 | 585 | 82 | | |
| 230 | 24+020 TO 24+260 | 256 | | | | | | | 1 | 115.2 | 230.4 | | | 590 | 560 | 35 | | 2 |
| 231 | 24+260 TO 24+520 | 174 | | | | | | | | 159.6 | 68.4 | | | 404 | 390 | | | 2 |
| 232 | 24+520 TO 24+800 | 281 | | | | | | | | | | | | 654 | 632 | | | |
| 233 | 24+800 TO 25+060 | 261 | | | 100 | | | | | | | | | 607 | 587 | | | |
| 234 | 25+060 TO 25+320 | 261 | | | | | | | | | | | | 607 | 587 | | | |
| 235 | 25+320 TO 25+580 | 261 | | | 356 | | | | | | | | | 601 | 580 | | | |
| 236 | 25+580 TO 25+840 | 244 | | | 421 | | | | | | | | | 585 | 566 | | | |
| 237 | 25+840 TO 26+100 | 253 | | | | | | | | | | | | 598 | 578 | | | |
| 238 | 26+100 TO 26+380 | 362 | 453 | | | | | 57 | | | | | | 1009 | 994 | | | |
| 239 | 26+380 TO 26+640 | 281 | 30 | | | | | | | | | | | 698 | 675 | | | |
| 240 | 26+640 TO 26+900 | 240 | | | | | | | | 83.6 | | | | 563 | 544 | | | 1 |
| 241 | 26+900 TO 27+160 | 261 | | | | | | | | 258.4 | | | | 628 | 607 | | | |
| 242 | 27+160 TO 27+420 | 284 | | | 60 | | | 63 | 1 | 258.4 | | | | 726 | 707 | | | |
| 243 | 27+420 TO 27+680 | 261 | | | | | | | | | | | | 608 | 588 | | | |
| 244 | 27+680 TO 27+940 | 124 | | | | | | | | | | | | 727 | 709 | | | |
| 245 | 27+940 TO 28+200 | | | | | | | | | | | | | 548 | 541 | | | |
| 246 | 28+200 TO 28+460 | | | | 1014 | | | | | | | | | 511 | 504 | | | |
| 247 | 28+460 TO 28+511.5 | | | | | | | 118 | | | | | | 212 | 210 | | | |
| **CSJ 2452-01-036 TOTALS** | | 7575 | 1512 | 548 | 4725 | | 273 | 713 | 7 | 1202 | 481.2 | | | 20775 | 20032 | 4559 | | 10 |
| **PROJECT TOTALS** | | 12814 | 3228 | 597 | 7649 | 257 | 1043 | 1016 | 16 | 2509.3 | 618.2 | 8 | 1 | 41784 | 41169 | 8851 | 3283 | 24 |

✳ FOR CONTRACTORS INFORMATION ONLY

NOTE (S): 1) QUANTITIES INCLUDE THAT OF PROPOSED PLAN SHEETS.

©2000

Texas Department of Transportation

# GRADING SUMMARY

SHEET 2 OF 2

| FED.RD. DIV.NO. | FEDERAL AID PROJECT NO. | | SHEET NO. |
|---|---|---|---|
| 6 | NH 2000(704),etc. | | 26 |
| STATE | DIST. | COUNTY | |
| TEXAS | SAT | BEXAR | |
| CONT. | SECT. | JOB | HIGHWAY NO. |
| 2452 | 01 | 036,etc. | LP 1604 |


FILE f:\ao\design\lp1604fm471-90\summaries\gradsum.dgn 31 OCT 2000
LEVEL DISPLAYED
lp1604fm471-90\summaries\gradsum.dgn

| SHEET NO. | STATION TO STATION | 529-5001 CONC CURB (TY I) M | 529-5026 CONC CURB (TY A) M | 530-5001 DRVWYS (CONC) (150 MM) M2 | 530-5003 DRVWY (ASPH-CONC PAV) M2 | 530-5078 DRVWYS (CONC) (200 MM) M2 | 531-5002 CONCRETE SIDEWALK M2 | 536-5003 CONC DIRECT ISLAND M2 | 540-5005 TERM ANCHOR SECT (2.67 MM) EA | 540-5006 MTL BEAM GD FEN (TIM POST) (2.67 MM) M | 540-5007 MTL BM GD FEN (BLK OUT) TIM POST (2.67 MM) M | 560-5001 INSTALL MAILBOX SINGLE EA | 560-5002 INSTALL MAILBOX DOUBLE EA | 3117-5103 HOT MIX (TY C) (PG 64-22) MGR | 3117-5084 HOT MIX (TY C) SURF (PG 76-22) MGR | 3117-5074 HOT MIX (TY C) (LEVEL-UP) (PG 64-22) MGR | 5027-5001 LANDSCAPE PAVERS M2 | 5119-5003 SINGLE GDRAIL TERM (TY III) EA |
|---|---|---|---|---|---|---|---|---|---|---|---|---|---|---|---|---|---|---|
| | | EST. | EST. | EST. | EST. | EST. | EST. | EST. | EST. | EST. | EST. | EST. | EST. | EST. | EST. | EST. | EST. | EST. |
| 191 | 13+800 TO 13+980 | | | | | | | | | | | | | | 107 | | | |
| 192 | 13+980 TO 14+240 | | | | | | | | | | | | | | 429 | | | |
| 193 | 14+240 TO 14+500 | | | | | | | | | 76 | | | | 180 | 557 | | | 1 |
| 194 | 14+500 TO 14+780 | | | | | | | | 3 | 98.8 | | | | 633 | 601 | | | 1 |
| 195 | 14+780 TO 15+040 | | | | | 234 | | | | 60.8 | | | | 613 | 584 | | | 1 |
| 196 | 15+040 TO 15+300 | | | | 52 | | | | | | | | | 686 | 654 | | | |
| 197 | 15+300 TO 15+500 | 115 | | | 288 | | | | 1 | 129.2 | | | | 971 | 925 | | | |
| 203 | 17+000 TO 17+140 | | | | | | | | | | | | | 362 | 346 | | | |
| 204 | 17+140 TO 17+400 | | | | | | | | | | | | | 753 | 720 | | | |
| 205 | 17+400 TO 17+660 | | | | 280 | | | | | | | 1 | | 813 | 929 | | | |
| 206 | 17+660 TO 17+920 | | | | 299 | | | | | | | | | 596 | 566 | | | |
| 207 | 17+920 TO 18+180 | 109 | | | | | | | 1 | | 38 | | | 764 | 758 | | | |
| 208 | 18+180 TO 18+440 | 260 | | | | | | | | 45.6 | | | | 800 | 763 | | | 2 |
| 209 | 18+440 TO 18+700 | 263 | | | | | | | 1 | 38 | | | | 793 | 760 | 155 | | |
| 210 | 18+700 TO 18+960 | 305 | | | 248 | | 115 | 113 | | | | 1 | | 899 | 864 | 653 | | |
| 211 | 18+960 TO 19+220 | 261 | | | | | | | | | | | | 806 | 774 | 724 | | |
| 212 | 19+220 TO 19+480 | 273 | 488 | | 242 | | 142 | 69 | | | | 1 | | 989 | 946 | 174 | ~~246~~ 0 | |
| 213 | 19+480 TO 19+740 | 262 | | 49 | 409 | | | | | | | 1 | | 623 | 591 | 425 | ~~740~~ 0 | |
| 214 | 19+740 TO 20+000 | 261 | | | 38 | | | | 2 | 152 | 60.8 | 1 | | 626 | 594 | 498 | | 1 |
| 215 | 20+000 TO 20+260 | 256 | | | 253 | | | 121 | | 205.2 | | 1 | | 695 | 664 | 486 | | 1 |
| 216 | 20+260 TO 20+520 | 261 | | | | | | | | | | | | 618 | 587 | 881 | | |
| 217 | 20+520 TO 20+640 | 120 | | | | | | | | | | | | 290 | 275 | 296 | | |
| **CSJ 2452-01-037 TOTALS** | | 2746 | 488 | 49 | 2109 | 234 | 257 | 303 | 8 | 805.6 | 98.8 | 6 | | 13510 | 13994 | 4292 | ~~986~~ 0 | 7 |
| 197 | 15+500 TO 15+560 | 231 | | | | | | | 1 | 7.6 | | | | 428 | 405 | | | |
| 198 | 15+560 TO 15+840 | 619 | | | | | | | | 235.7 | | | | 1290 | 1222 | | | 3 |
| 199 | 15+840 TO 16+100 | 406 | 1228 | | 437 | | 513 | | | 228 | 38 | 1 | | 1867 | 1790 | | ~~2297~~ 0 | 2 |
| 200 | 16+100 TO 16+360 | 522 | | | 127 | | | | | 30.4 | | | | 1274 | 1211 | | | 2 |
| 201 | 16+360 TO 16+620 | 522 | | | 148 | | | | | | | | 1 | 1234 | 1171 | | | |
| 202 | 16+620 TO 16+880 | 193 | | | 103 | | | | | | | 1 | | 1075 | 1027 | | | |
| 203 | 16+880 TO 17+000 | | | | | | | | | | | | | 331 | 317 | | | |
| **CSJ 2452-01-038 TOTALS** | | 2493 | 1228 | | 815 | | 513 | | 1 | 501.7 | 38 | 2 | 1 | 7499 | 7143 | | ~~2297~~ 0 | 7 |
| 217 | 20+640 TO 20+780 | 176 | | | | | | 24 | | | | | | 408 | 389 | 484 | | |
| 218 | 20+780 TO 21+040 | 261 | | | | | | | | | | | | 637 | 606 | 517 | | |
| 219 | 21+040 TO 21+320 | 374 | 550 | 339 | | | 273 | 163 | | | | | | 1209 | 1175 | 397 | | |
| 220 | 21+320 TO 21+580 | 263 | 20 | | | | | | 2 | 68.4 | 91.2 | | | 675 | 643 | 834 | | 1 |
| 221 | 21+580 TO 21+860 | 281 | | | 162 | | | | 1 | 205.2 | | | | 774 | 737 | 771 | | 2 |
| 222 | 21+860 TO 22+120 | 262 | | | 147 | | | | | | | | | 629 | 598 | 341 | | |
| 223 | 22+120 TO 22+380 | 261 | | | 880 | | | | | | | | | 619 | 587 | 421 | | |
| 224 | 22+380 TO 22+700 | 480 | 459 | 209 | 870 | | | 288 | | | | | | 1776 | 1725 | 99 | | |
| 225 | 22+700 TO 22+960 | 261 | | | | | | | 2 | 53.2 | 91.2 | | | 668 | 637 | 200 | | 2 |
| 226 | 22+960 TO 23+220 | 263 | | | 393 | | | | | | | | | 620 | 588 | 118 | | |
| 227 | 23+220 TO 23+500 | 280 | | | 29 | | | | | | | | | 666 | 632 | 197 | | |
| 228 | 23+500 TO 23+760 | 249 | | | | | | | | | | | | 602 | 571 | 63 | | |
| 229 | 23+760 TO 24+020 | 260 | | | 293 | | | | | | | | | 616 | 585 | 82 | | |
| 230 | 24+020 TO 24+260 | 256 | | | | | | | 1 | 115.2 | 230.4 | | | 590 | 560 | 35 | | 2 |
| 231 | 24+260 TO 24+520 | 174 | | | | | | | | 159.6 | 68.4 | | | 404 | 390 | | | 2 |
| 232 | 24+520 TO 24+800 | 281 | | | | | | | | | | | | 654 | 632 | | | |
| 233 | 24+800 TO 25+060 | 261 | | | 100 | | | | | | | | | 607 | 587 | | | |
| 234 | 25+060 TO 25+320 | 261 | | | | | | | | | | | | 607 | 587 | | | |
| 235 | 25+320 TO 25+580 | 261 | | | 356 | | | | | | | | | 601 | 580 | | | |
| 236 | 25+580 TO 25+840 | 244 | | | 421 | | | | | | | | | 585 | 566 | | | |
| 237 | 25+840 TO 26+100 | 253 | | | | | | | | | | | | 598 | 578 | | | |
| 238 | 26+100 TO 26+380 | 362 | 453 | | | | | 57 | | | | | | 1009 | 994 | | | |
| 239 | 26+380 TO 26+640 | 281 | 30 | | | | | | | | | | | 698 | 675 | | | |
| 240 | 26+640 TO 26+900 | 240 | | | | | | | | 83.6 | | | | 563 | 544 | | | 1 |
| 241 | 26+900 TO 27+160 | 261 | | | | | | | | 258.4 | | | | 628 | 607 | | | |
| 242 | 27+160 TO 27+420 | 284 | | | 60 | | | 63 | 1 | 258.4 | | | | 726 | 707 | | | |
| 243 | 27+420 TO 27+680 | 261 | | | | | | | | | | | | 608 | 588 | | | |
| 244 | 27+680 TO 27+940 | 124 | | | | | | | | | | | | 727 | 709 | | | |
| 245 | 27+940 TO 28+200 | | | | | | | | | | | | | 548 | 541 | | | |
| 246 | 28+200 TO 28+460 | | | | 1014 | | | | | | | | | 511 | 504 | | | |
| 247 | 28+460 TO 28+511.5 | | | | | | | 118 | | | | | | 212 | 210 | | | |
| **CSJ 2452-01-036 TOTALS** | | 7575 | 1512 | 548 | 4725 | | 273 | 713 | 7 | 1202 | 481.2 | | | 20775 | 20032 | 4559 | | 10 |
| **PROJECT TOTALS** | | 12814 | 3228 | 597 | 7649 | 257 | 1043 | 1016 | 16 | 2509.3 | 618.2 | 8 | 1 | 41784 | 41169 | 8851 | ~~3283~~ 0 | 24 |

CHANGE ORDER NO. 19

CHANGE ORDER NO. 19

-ELIMINATES LANDSCAPE PAVERS
-SEE REVISED PLAN SHTS 212A, 213A, 339B, 340B, 341B, AND 199A

✳ FOR CONTRACTORS INFORMATION ONLY

NOTE (S): 1) QUANTITIES INCLUDE THAT OF PROPOSED PLAN SHEETS.

©2000

Texas Department of Transportation

# GRADING SUMMARY

SHEET 2 OF 2

| FED. RD. DIV. NO. | FEDERAL AID PROJECT NO. | | SHEET NO. |
|---|---|---|---|
| 6 | NH 2000(704), etc. | | 26A |
| STATE | DIST. | COUNTY | |
| TEXAS | SAT | BEXAR | |
| CONT. | SECT. | JOB | HIGHWAY NO. |
| 2452 | 01 | 036, etc. | LP 1604 |

lp1604fm471-90\summaries\gradsum.dgn
$DATE$
FILE $FILE$
LEVEL 1 2 3 4 5 6 7 8 9 10 11 12 13 14 15 16 17 18 19 20 21 22 23 24 25 26 27 28 29 30 31 32
DISPLAYED 33 34 35 36 37 38 39 40 41 42 43 44 45 46 47 48 49 50 51 52 53 54 55 56 57 58 59 60 61 62 63

## DRIVEWAY SUMMARY (ITEM 530)

| DRIVEWAY NUMBER (#) | STATION | WIDTH @ ROW (M) | LENGTH (M) | 530-5001 DRVWYS (CONC) (150mm) M2 | 530-5003 DRVWY (ASPHALT-CONC PAV) M2 | 530-5078 DRVWAYS (CONC) (200mm) M2 |
|---|---|---|---|---|---|---|
| 1 | 14+920 RT | 10.0 | 17.0 | | | 234.0 |
| 2 | 15+272 RT | 10.0 | 4.0 | | 52.0 | |
| 3 ≠ | 15+424 RT | 8.0 | 17.5 | | 149.0 | |
| 3A ≠ | 15+448 RT | 10.0 | 13.0 | | 139.0 | |
| 9 ≠ | 17+542 RT | 5.0 | 55.0 | | 280.0 | |
| 10 ≠ | 17+784 RT | 7.0 | 42.0 | | 299.0 | |
| 11 ≠ | 18+937 RT | 4.0 | 61.0 | | 248.0 | |
| 12 ≠ | 19+435 RT | 3.0 | 82.0 | | 242.0 | |
| 13 ≠ | 1+576 LT | 4.0 | 12.0 | 49.0 | | |
| 14 ≠ | 19+627 RT | 5.0 | 81.0 | | 409.0 | |
| 15 | 19+828 LT | 4.0 | 8.0 | | 38.0 | |
| 16 | 20+022 LT | 4.0 | 62.0 | | 253.0 | |
| **CSJ: 2451-01-037 TOTALS** | | | | 49.0 | 2109 | 234.0 |
| (℄ FM 471) 4 | 10+156 LT | 43.0 | 10.0 | | 437.0 | |
| 5 ≠ | 16+350 LT | 5.0 | 8.0 | | 52.0 | |
| 6 ≠ | 16+360 RT | 5.0 | 14.0 | | 75.0 | |
| 7 ≠ | 16+617 RT | 13.0 | 11.0 | | 148.0 | |
| 8 ≠ | 16+720 RT | 5.0 | 12.0 | | 103.0 | |
| **CSJ: 2451-01-038 TOTALS** | | | | | 815.0 | |
| 17 | 21+167 LT | 31.0 | 8.0 | 257.0 | | |
| (℄ MILITARY DRIVE) 18 | 0+263 LT | 14.0 | 6.0 | 82.0 | | |
| 19 | 21+644 LT | 9.0 | 17.0 | | 162.0 | |
| 20 | 21+873 LT | 6.0 | 8.0 | | 54.0 | |
| 21 | 21+928 LT | 5.0 | 8.0 | | 49.0 | |
| 22 | 22+013 LT | 5.0 | 7.0 | | 44.0 | |
| 23 ≠ | 22+262 RT | 4.0 | 87.0 | | 352.0 | |
| 24 ≠ | 22+325 RT | 6.0 | 87.0 | | 528.0 | |
| 25 | 22+392 LT | 3.0 | 87.0 | | 266.0 | |
| 26 | 22+466 LT | 4.0 | 87.0 | | 352.0 | |
| 27 | 22+517 LT | 12.0 | 10.0 | | 131.0 | |
| (℄ POTRANCO ROAD) 28 | 20+369 LT | 10.0 | 8.0 | 89.0 | | |
| 29 | 20+347 RT | 13.0 | 4.0 | 60.0 | | |
| 30 | 20+330 RT | 13.0 | 4.0 | 60.0 | | |
| 31 | 22+669 LT | 11.0 | 10.0 | | 121.0 | |
| 32 | 22+996 LT | 4.0 | 97.0 | | 393.0 | |
| 33 | 23+385 LT | 4.0 | 8.0 | | 29.0 | |
| 34 | 23+934 LT | 4.0 | 68.0 | | 293.0 | |
| 35 | 24+910 LT | 5.0 | 7.0 | | 40.0 | |
| 36 | 25+025 LT | 5.0 | 11.0 | | 60.0 | |
| 37 ≠ | 25+357 RT | 5.0 | 69.0 | | 356.0 | |
| 38 ≠ | 25+715 RT | 4.0 | 103.0 | | 421.0 | |
| 39 | 27+234 LT | 11.0 | 5.0 | | 60.0 | |
| 40 | 28+325 LT | 14.0 | 61.0 | | 862.0 | |
| 41 | 28+370 LT | 4.0 | 36.0 | | 152.0 | |
| **CSJ: 2451-01-036 TOTALS** | | | | 548.0 | 4725.0 | |
| **PROJECT TOTALS** | | | | 1034.0 | 7649.0 | 234.0 |

## MAILBOX SUMMARY (ITEM 560)

(℄ FM 471)

| PLAN SHEET NO. | APPROX. STA. (LT. OR RT.) | TYPE / QUANT. S | D | M |
|---|---|---|---|---|
| 199 | 10+165 LT | 1 | | |
| 201 | 16+607 RT | | 1 | |
| 202 | 16+715 RT | 1 | | |
| **CSJ: 2452-01-038 TOTALS** | | 2 | 1 | |

| PLAN SHEET NO. | APPROX. STA. (LT. OR RT.) | TYPE / QUANT. S | D | M |
|---|---|---|---|---|
| 205 | 17+535 RT | 1 | | |
| 210 | 18+932 RT | 1 | | |
| 212 | 19+430 LT | 1 | | |
| 213 | 19+575 LT | 1 | | |
| 214 | 19+820 LT | 1 | | |
| 215 | 20+017 LT | 1 | | |
| **CSJ: 2451-01-037 TOTALS** | | 6 | | |
| **PROJECT TOTALS** | | 8 | 1 | |

TYPE
S = SINGLE
D = DOUBLE
M = MULTIPLE

NOTES:

ALL STATIONING REFERENCED IS APPROXIMATE AND ALONG THE ℄ OF LOOP 1604 UNLESS OTHERWISE NOTED.

- FOR FURTHER DETAILS ON DRIVEWAYS SEE SHEET(S) 28,336

≠ DRAINAGE STRUCTURE ASSCOCIATED WITH DRIVEWAY, FOR FUTHER INFO. AND ADDITIONAL PAY ITEMS SEE SHEET 2 OF 2 THIS SUMMARY.

LEVELS DISPLAYED
1 2 3 4 5 6 7 8 9 10 11 12 13 14 15 16
17 18 19 20 21 22 23 24 25 26 27 28 29 30 31 32
33 34 35 36 37 38 39 40 41 42 43 44 45 46 47 48
49 50 51 52 53 54 55 56 57 58 59 60 61 62
ACC: t:\ao\design\lp1604fm471-90\
FILE: drivesum1p1604.dgn

©2000

Texas Department of Transportation

## DRIVEWAY & MAILBOX SUMMARY

SHEET 1 OF 2

| FED.RD. DIV.NO. | FEDERAL AID PROJECT NO. | | SHEET NO. |
|---|---|---|---|
| 6 | NH 2000(704),etc. | | 27 |
| STATE | DIST. | COUNTY | |
| TEXAS | SAT | BEXAR | |
| CONT. | SECT. | JOB | HIGHWAY NO. |
| 2452 | 01 | 036,etc. | LP 1604 |

## DRIVEWAY SUMMARY (ITEM 530)

| DRIVEWAY NUMBER (#) | STATION | WIDTH @ ROW (M) | LENGTH (M) | 530-5001 DRVWYS (CONC) (150mm) M2 | 530-5003 DRVWY (ASPHALT-CONC PAV) M2 | ~~530-5078~~ ~~DRVWAYS (CONC) (200mm)~~ ~~M2~~ | 530-5003 CONSTRUCT DETOURS (CL 3) ⊛ M2 | |
|---|---|---|---|---|---|---|---|---|
| ~~1~~ | ~~14+920 RT~~ | ~~10.0~~ | ~~17.0~~ | | | ~~234.0~~ | | - ELIMINATED, C.O. # 12 . |
| 2 | 15+272 RT | 10.0 | 4.0 | | 52.0 | | | |
| 3 ≠ | 15+424 RT | 8.0 | 17.5 | | 149.0 | | | |
| ~~3A ≠~~ | ~~15+448 RT~~ | ~~10.0~~ | ~~13.0~~ | | ~~139.0~~ | | | - ELIMINATED, C.O. # 11 . |
| 3A ≠ | 15+552 RT | 9.1 | 14.0 | | | | | |
| 3B ≠ | 15+576 RT | 9.1 | | | | | | |
| 3C ≠ | 15+617 RT | 9.1 | | | | | | |
| 9 ≠ | 17+542 RT | 5.0 | 55.0 | | 280.0 | | | |
| 10 ≠ | 17+784 RT | 7.0 | 42.0 | | 299.0 | | | |
| 11 ≠ | 18+937 RT | 4.0 | 61.0 | | 248.0 | | | |
| 12 ≠ | 19+435 RT | 3.0 | 82.0 | | 242.0 | | | |
| 13 ≠ | 1+576 LT | 5.0 | 12.0 | 49.0 | | | | |
| | | | | | | | | |
| 14 ≠ | 19+627 RT | 5.0 | 81.0 | | 409.0 | | | |
| 15 | 19+828 LT | 4.0 | 8.0 | | 38.0 | | | |
| 16 | 20+022 LT | 4.0 | 62.0 | | 253.0 | | | |
| CSJ: 2451-01-037 TOTALS | | | | 49.0 | 1970.0 | ~~234.0~~ | | |
| (℄ FM 471) 4 | 10+156 LT | 43.0 | 10.0 | | 437.0 | | | |
| 5 ≠ | 16+350 LT | 5.0 | 8.0 | | 52.0 | | | |
| (H.E.B.) TEMP 5A | 16+193 LT | (SEE LAYOUT) | | | | | 469.0 | |
| (H.E.B.) 5A | 16+193 LT | (SEE LAYOUT) | | | | | | |
| (H.E.B.) TEMP 5B | 16+403 LT | (SEE LAYOUT) | | | | | 498.0 | |
| (H.E.B.) 5B ≠ | 16+403 LT | (SEE LAYOUT) | | | | | | |
| (WHATABURGER) 5C ≠ | 16+326 LT | (SEE LAYOUT) | | | | | | |
| 6 ≠ | 16+360 RT | 5.0 | 14.0 | | 75.0 | | | |
| 7 ≠ | 16+617 RT | 13.0 | 11.0 | | 148.0 | | | |
| 8 ≠ | 16+720 RT | 5.0 | 12.0 | | 103.0 | | | |
| 8A ≠ | 16+748 RT | (SEE LAYOUT) | | | 199.0 | | | |
| CSJ: 2451-01-038 TOTALS | | | | | 962.0 | | 967.0 | |
| 17 | 21+167 LT | 31.0 | 8.0 | 257.0 | | | | |
| (℄ MILITARY DRIVE) 18 | 0+263 LT | 14.0 | 6.0 | 82.0 | | | | |
| 19 | 21+644 LT | 9.0 | 17.0 | | 162.0 | | | |
| | | | | | | | | |
| 20 | 21+873 LT | 6.0 | 8.0 | | 54.0 | | | |
| 21 | 21+928 LT | 5.0 | 8.0 | | 49.0 | | | |
| 22 | 22+013 LT | 5.0 | 7.0 | | 44.0 | | | |
| 23 ≠ | 22+262 RT | 4.0 | 87.0 | | 352.0 | | | |
| 24 ≠ | 22+325 RT | 6.0 | 87.0 | | 528.0 | | | |
| 25 | 22+392 LT | 3.0 | 87.0 | | 266.0 | | | |
| 26 | 22+466 LT | 4.0 | 87.0 | | 352.0 | | | |
| 27 | 22+517 LT | 12.0 | 10.0 | | 131.0 | | | |
| (℄ POTRANCO ROAD) 28 | 20+369 LT | 10.0 | 8.0 | 89.0 | | | | |
| 29 | 20+347 RT | 13.0 | 4.0 | 60.0 | | | | |
| 30 | 20+330 RT | 13.0 | 4.0 | 60.0 | | | | |
| 31 | 22+669 LT | 11.0 | 10.0 | | 121.0 | | | |
| 32 | 22+996 LT | 4.0 | 97.0 | | 393.0 | | | |
| 33 | 23+385 LT | 4.0 | 8.0 | | 29.0 | | | |
| 34 | 23+934 LT | 4.0 | 68.0 | | 293.0 | | | |
| 35 | 24+910 LT | 5.0 | 7.0 | | 40.0 | | | |
| 36 | 25+025 LT | 5.0 | 11.0 | | 60.0 | | | |
| 37 ≠ | 25+357 RT | 5.0 | 69.0 | | 356.0 | | | |
| 38 ≠ | 25+715 RT | 4.0 | 103.0 | | 421.0 | | | |
| 39 | 27+234 LT | 11.0 | 5.0 | | 60.0 | | | |
| 40 | 28+325 LT | 14.0 | 61.0 | | 862.0 | | | |
| 41 | 28+370 LT | 4.0 | 36.0 | | 152.0 | | | |
| CSJ: 2451-01-036 TOTALS | | | | 548.0 | 4725.0 | | | |
| PROJECT TOTALS | | | | 1034.0 | 7472.0 | 0 | 967.0 | |

## MAILBOX SUMMARY (ITEM 560)

| PLAN SHEET NO. | APPROX. STA. (LT. OR RT.) | TYPE / QUANT. S | D | M |
|---|---|---|---|---|
| (℄ FM 471) 199 | 10+165 LT | 1 | | |
| 201 | 16+607 RT | | 1 | |
| 202 | 16+715 RT | 1 | | |
| | | | | |
| CSJ: 2452-01-038 TOTALS | | 2 | 1 | |

| PLAN SHEET NO. | APPROX. STA. (LT. OR RT.) | TYPE / QUANT. S | D | M |
|---|---|---|---|---|
| 205 | 17+535 RT | 1 | | |
| 210 | 18+932 RT | 1 | | |
| 212 | 19+430 LT | 1 | | |
| 213 | 19+575 LT | 1 | | |
| 214 | 19+820 LT | 1 | | |
| 215 | 20+017 LT | 1 | | |
| | | | | |
| CSJ: 2451-01-037 TOTALS | | 6 | | |
| | | | | |
| PROJECT TOTALS | | 8 | 1 | |

TYPE
S = SINGLE
D = DOUBLE
M = MULTIPLE

CHANGE ORDER 14

NOTES:

ALL STATIONING REFERENCED IS APPROXIMATE AND ALONG THE ℄ OF LOOP 1604 UNLESS OTHERWISE NOTED.

- FOR FURTHER DETAILS ON DRIVEWAYS SEE LAYOUTS & SEE SHEET(S) 28A, 336A.

≠ DRAINAGE STRUCTURE ASSCOCIATED WITH DRIVEWAY, FOR FUTHER INFO. AND ADDITIONAL PAY ITEMS SEE SHEET 2 OF 2 THIS SUMMARY.

⊛ ITEM USED TO PAY FOR TEMPORARY DRIVES EXCLUDING PIPE, S.E.T.'S AND CEMENT STABILIZED BACKFILL (SEE NEXT SHEET FOR THE ADDITIONAL PAY ITEMS.).

CHANGE ORDER NO. 14
- QUANTITY REVISIONS AS PER CHANGE ORDER(S) 14 .

©2000
Texas Department of Transportation

**DRIVEWAY & MAILBOX SUMMARY**

SHEET 1 OF 2

| FED.RD. DIV.NO. | FEDERAL AID PROJECT NO. | | SHEET NO. |
|---|---|---|---|
| 6 | NH 2000(704),etc. | | 27A |
| STATE | DIST. | COUNTY | |
| TEXAS | SAT | BEXAR | |
| CONT. | SECT. | JOB | HIGHWAY NO. |
| 2452 | 01 | 036,etc. | LP 1604 |

LEVELS DISPLAYED
1 2 3 4 1 5 6 7 8 9 10 11 12 3 1 4 15 16
17 18 19 20 21 22 23 24 25 26 27 28 29 30 31 32
33 34 35 36 37 38 39 40 41 42 43 44 45 46 47 48
50 51 52 53 54 55 56 57 58 59 60 61 62 4
ACC: t:\ao\design\lp1604fm471-90\
FILE: drivesum1p1604.dgn

## DRIVEWAY SUMMARY (ITEM 530)

| | DRIVEWAY NUMBER (#) | STATION | WIDTH @ ROW (M) | LENGTH (M) | 530-5001 DRVWYS (CONC) (150mm) M2 | 530-5003 DRVWY (ASPHALT-CONC PAV) M2 | ~~530-5018~~ ~~DRVWYS (CONC) (200mm)~~ M2 | 530-5003 CONSTRUCT DETOURS (CL 3) ⊛ M2 | |
|---|---|---|---|---|---|---|---|---|---|
| | ~~1~~ | ~~14+920 RT~~ | ~~18.0~~ | ~~11.0~~ | | | ~~234.0~~ | | 12 |
| | 2 | 15+272 RT | 10.0 | 4.0 | | 52.0 | | | |
| | 3 ≠ | 15+424 RT | 8.0 | 17.5 | | 149.0 | | | |
| | 3A ≠ | 15+448 RT | 10.0 | 13.0 | | 139.0 | | | |
| | 3A ≠ | 15+552 RT | 9.1 | 14.0 | | | | | |
| | 3B ≠ | 15+576 RT | 9.1 | | | | | | |
| | 3C ≠ | 15+617 RT | 9.1 | | | | | | |
| | 9 ≠ | 17+542 RT | 5.0 | 55.0 | | 280.0 | | | |
| | 10 ≠ | 17+784 RT | 7.0 | 42.0 | | 299.0 | | | |
| | 11 ≠ | 18+937 RT | 4.0 | 61.0 | | 248.0 | | | |
| | 12 ≠ | 19+435 RT | 3.0 | 82.0 | | 242.0 | | | |
| | 13 ≠ | 1+576 LT | 5.0 | 12.0 | 49.0 | | | | |
| | | | | | | | | | |
| | 14 ≠ | 19+627 RT | 5.0 | 81.0 | | 409.0 | | | |
| | 15 | 19+828 LT | 4.0 | 8.0 | | 38.0 | | | |
| | 16 | 20+022 LT | 4.0 | 62.0 | | 253.0 | | | |
| | CSJ: 2451-01-037 TOTALS | | | | 49.0 | 2109.0 | ~~234.0~~ | | |
| (℄ FM 471) | 4 | 10+156 LT | 43.0 | 10.0 | | 437.0 | | | |
| | ~~5~~ ≠ | ~~16+950 LT~~ | ~~6.0~~ | ~~8.0~~ | | ~~52.0~~ | | | |
| (H.E.B.) | TEMP 5A | 16+193 LT | (SEE LAYOUT) | | | | | 469.0 | 14 |
| (H.E.B.) | 5A | 16+193 LT | (SEE LAYOUT) | | 140.0 | | | | |
| (H.E.B.) | TEMP 5B | 16+403 LT | (SEE LAYOUT) | | | | | 498.0 | 14 |
| (H.E.B.) | 5B ≠ | 16+403 LT | (SEE LAYOUT) | | 166.0 | | | | |
| (WHATABURGER) | 5C ≠ | 16+326 LT | (SEE LAYOUT) | | 83.0 | | | | |
| | 6 ≠ | 16+360 RT | 5.0 | 14.0 | | 75.0 | | | |
| | 7 ≠ | 16+617 RT | 13.0 | 11.0 | | 148.0 | | | |
| | 8 ≠ | 16+720 RT | 5.0 | 12.0 | | 103.0 | | | |
| | 8A ≠ | 16+748 RT | (SEE LAYOUT) | | | 199.0 | | | |
| | CSJ: 2451-01-038 TOTALS | | | | 389.0 | 962.0 | | 967.0 | |
| | 17 | 21+167 LT | 31.0 | 8.0 | 257.0 | | | | |
| (℄ MILITARY DRIVE) | 18 | 0+263 LT | 14.0 | 6.0 | 82.0 | | | | |
| | 19 | 21+644 LT | 9.0 | 17.0 | | 162.0 | | | |
| | | | | | | | | | |
| | 20 | 21+873 LT | 6.0 | 8.0 | | 54.0 | | | |
| | 21 | 21+928 LT | 5.0 | 8.0 | | 49.0 | | | |
| | 22 | 22+013 LT | 5.0 | 7.0 | | 44.0 | | | |
| | 23 ≠ | 22+262 RT | 4.0 | 87.0 | | 352.0 | | | |
| | 24 ≠ | 22+325 RT | 6.0 | 87.0 | | 528.0 | | | |
| | 25 | 22+392 LT | 3.0 | 87.0 | | 266.0 | | | |
| | 26 | 22+466 LT | 4.0 | 87.0 | | 352.0 | | | |
| | 27 | 22+517 LT | 12.0 | 10.0 | | 131.0 | | | |
| (℄ POTRANCO ROAD) | 28 | 20+369 LT | 10.0 | 8.0 | 89.0 | | | | |
| | 29 | 20+347 RT | 13.0 | 4.0 | 60.0 | | | | |
| | 30 | 20+330 RT | 13.0 | 4.0 | 60.0 | | | | |
| | 31 | 22+669 LT | 11.0 | 10.0 | | 121.0 | | | |
| | 32 | 22+996 LT | 4.0 | 97.0 | | 393.0 | | | |
| | 33 | 23+385 LT | 4.0 | 8.0 | | 29.0 | | | |
| | 34 | 23+934 LT | 4.0 | 68.0 | | 293.0 | | | |
| | 35 | 24+910 LT | 5.0 | 7.0 | | 40.0 | | | |
| | 36 | 25+025 LT | 5.0 | 11.0 | | 60.0 | | | |
| | 37 ≠ | 25+357 RT | 5.0 | 69.0 | | 356.0 | | | |
| | 38 ≠ | 25+715 RT | 4.0 | 103.0 | | 421.0 | | | |
| | 39 | 27+234 LT | 11.0 | 5.0 | | 60.0 | | | |
| | 40 | 28+325 LT | 14.0 | 61.0 | | 862.0 | | | |
| | 41 | 28+370 LT | 4.0 | 36.0 | | 152.0 | | | |
| | CSJ: 2451-01-036 TOTALS | | | | 548.0 | 4725.0 | | | |
| | PROJECT TOTALS | | | | 986.0 | 7796.0 | 0 | 967.0 | |

## MAILBOX SUMMARY (ITEM 560)

| (℄ FM 471) | PLAN SHEET NO. | APPROX. STA. (LT. OR RT.) | TYPE / QUANT. S | D | M |
|---|---|---|---|---|---|
| | 199 | 10+165 LT | 1 | | |
| | 201 | 16+607 RT | | 1 | |
| | 202 | 16+715 RT | 1 | | |
| | | | | | |
| | CSJ: 2452-01-038 TOTALS | | 2 | 1 | |
| | PLAN SHEET NO. | APPROX. STA. (LT. OR RT.) | TYPE / QUANT. S | D | M |
| | 205 | 17+535 RT | 1 | | |
| | 210 | 18+932 RT | 1 | | |
| | 212 | 19+430 LT | 1 | | |
| | 213 | 19+575 LT | 1 | | |
| | 214 | 19+820 LT | 1 | | |
| | 215 | 20+017 LT | 1 | | |
| | | | | | |
| | CSJ: 2451-01-037 TOTALS | | 6 | | |
| | | | | | |
| | PROJECT TOTALS | | 8 | 1 | |

TYPE
S = SINGLE
D = DOUBLE
M = MULTIPLE

CHANGE ORDER 25

**NOTES:**

ALL STATIONING REFERENCED IS APPROXIMATE AND ALONG THE ℄ OF LOOP 1604 UNLESS OTHERWISE NOTED.

- FOR FURTHER DETAILS ON DRIVEWAYS SEE LAYOUTS & SEE SHEET(S) 28A, 336A.

≠ DRAINAGE STRUCTURE ASSCOCIATED WITH DRIVEWAY, FOR FUTHER INFO. AND ADDITIONAL PAY ITEMS SEE SHEET 2 OF 2 THIS SUMMARY.

⊛ ITEM USED TO PAY FOR TEMPORARY DRIVES EXCLUDING PIPE, S.E.T.'S AND CEMENT STABILIZED BACKFILL (SEE NEXT SHEET FOR THE ADDITIONAL PAY ITEMS.).

CHANGE ORDER NO. 25
-DRIVEWAY DELETIONS, ADDENDUMS AND QUANTITY REVISIONS AS PER CHANGE ORDER(S) 25.

©2000
Texas Department of Transportation

**DRIVEWAY & MAILBOX SUMMARY**

SHEET 1 OF 2

| FED.RD. DIV.NO. | FEDERAL AID PROJECT NO. | SHEET NO. |
|---|---|---|
| 6 | NH 2000(704), etc. | 27A |
| STATE | DIST. | COUNTY |
| TEXAS | SAT | BEXAR |
| CONT. | SECT. | JOB / HIGHWAY NO. |
| 2452 | 01 | 036, etc. / LP 1604 |


LEVELS DISPLAYED
1 2 3 4 5 6 7 8 9 10 11 12 13 14 15 16
17 18 19 20 21 22 23 24 25 26 27 28 29 30 31 32
33 34 35 36 37 38 39 40 41 42 43 44 45 46 47 48
50 51 E2 53 54 55 56 57 58 59 60 61 62
ACC: t:\ao\design\lp1604fm471-90\
FILE: drivesum1p1604.dgn

## DRIVEWAY SUMMARY (ITEM 530)

| | DRIVEWAY NUMBER (#) | STATION | WIDTH @ ROW (M) | LENGTH (M) | 530-5001 DRVWYS (CONC) (150mm) M2 | 530-5003 DRVWY (ASPHALT-CONC PAV) M2 | 530-5078 DRVWY (CON) (200mm) M2 | 530- DRVWY (ASPH CONC PAV) (SPL.) M2 | |
|---|---|---|---|---|---|---|---|---|---|
| | ~~1~~ | ~~14+520 RT~~ | ~~10.0~~ | ~~17.0~~ | | | ~~234.0~~ | | 12 ELIMINATED AS PART OF C.O.# 12 |
| | 2 | 15+272 RT | 10.0 | 4.0 | | 52.0 | | | |
| | 3 ≠ | 15+424 RT | 8.0 | 17.0 | 146.0 | | | | 28 |
| | ~~3A ≠~~ | ~~15+448 RT~~ | ~~10.0~~ | ~~15.0~~ | | ~~135.0~~ | | | 12 ELIMINATED AS PART OF C.O.# 12 |
| | 3A ≠ | 15+452 RT | (SEE LAYOUT) | | 114.0 | | | | 28 |
| | 3B ≠ | 15+576 RT | (SEE LAYOUT) | | 165.0 | | | | 28 |
| | 3C ≠ | 15+617 RT | (SEE LAYOUT) | | 165.0 | | | | 28 |
| | 9 ≠ | 17+542 RT | 5.0 | 55.0 | | 280.0 | | | |
| | 10 ≠ | 17+784 RT | 7.0 | 42.0 | | 299.0 | | | |
| | 11 ≠ | 18+937 RT | 4.0 | 61.0 | | 248.0 | | | |
| | 12 ≠ | 19+435 RT | 3.0 | 82.0 | | 242.0 | | | |
| (LANFORD PROPERTY) | 13 ≠ | (NBFR) 1+576 LT | (SEE LAYOUT) | | 50.0 | 440.0 | | | 64 |
| | 14 ≠ | 19+627 RT | 5.0 | 81.0 | | 409.0 | | | |
| | 15 | 19+828 LT | (SEE LAYOUT) | | 132.0 | | | ~~70.0~~ | 64 |
| | 16 | 20+022 RT | 4.0 | 61.0 | | 253.0 | | | |
| | CSJ: 2452-01-037 TOTALS | | | | 772 | 2223.0 | | ~~70.0~~ | 28 12 64 |
| (℄ FM 471) | ~~4~~ | ~~18+156 LT~~ | ~~43.0~~ | ~~18.0~~ | | ~~437.0~~ | | | 28 ELIMINATED AS PART OF C.O.# 28 |
| | ~~5 ≠~~ | ~~18+398 LT~~ | ~~5.0~~ | ~~8.0~~ | | ~~52.0~~ | | | 25 ELIMINATED AS PART OF C.O.# 25 |
| (H.E.B.) | 5A | 16+193 LT | (SEE LAYOUT) | | 140.0 | | | | 25 |
| (H.E.B.) | 5B ≠ | 16+403 LT | (SEE LAYOUT) | | 166.0 | | | | 25 |
| (WHATABURGER) | 5C ≠ | 16+326 LT | (SEE LAYOUT) | | 83.0 | | | | 25 |
| | 6 ≠ | 16+360 RT | 5.0 | 14.0 | | 75.0 | | | |
| | 7 ≠ | 16+617 RT | 13.0 | 11.0 | | 148.0 | | | |
| | 8 ≠ | 16+720 RT | 5.0 | 12.0 | | 103.0 | | | |
| (SPL. SEALE DRIVEWAY) | 8A ≠ | 16+778 RT | (SEE LAYOUT) | | | 199.0 | | | 25 |
| | CSJ: 2452-01-038 TOTALS | | | | 389.0 | 525.0 | | | 25 64 |
| TEXACO/SHELL (MILITARY) | 17 | 21+167 LT | 31.0 | 8.0 | 254.0 | | | | 64 |
| TEXACO/SHELL (MILITARY) | 18 | (MIL) 0+263 LT | 14.0 | 6.0 | 170.0 | | | | 64 |
| (BLAZING STAR RV) | 19 | 21+646 LT | (SEE LAYOUT) | | | | | 479.0 | 64 |
| | 20 | 21+873 LT | 6.0 | 8.0 | | 54.0 | | | |
| (CALVARY HILLS) | 21 | 21+928 LT | (SEE LAYOUT) | | | 49.0 | | | 64 |
| (CALVARY HILLS) | 22 | 22+013 LT | (SEE LAYOUT) | | | 44.0 | | | 64 |
| | 23 ≠ | 22+262 RT | 4.0 | 87.0 | | 352.0 | | | |
| | 24 ≠ | 22+325 RT | 6.0 | 87.0 | | 528.0 | | | |
| | 25 | 22+392 RT | 3.0 | 87.0 | | 266.0 | | | |
| | 26 | 22+466 LT | 4.0 | 87.0 | | 352.0 | | | 64 |
| (BILL MILLER) | 27 | 22+517 LT | (SEE LAYOUT) | | 161.0 | | | | 64 |
| (BILL MILLER) | 28 | 20+369 LT | (SEE LAYOUT) | | 147.0 | | | | 64 |
| (SHAMROCK) | 29 | 20+347 RT | (SEE LAYOUT) | | | CONSTRUCTED BY OTHERS | | | 64 |
| (SHAMROCK) | 30 | 20+330 RT | (SEE LAYOUT) | | | | | | 64 |
| (SHAMROCK) | 31 | 22+669 LT | (SEE LAYOUT) | | | | | | 64 |
| | 32 | 22+996 RT | 4.0 | 97.0 | | 393.0 | | | |
| | 33 | 23+385 LT | 4.0 | 8.0 | | 29.0 | | | |
| (N. OF MEDIO CREEK) | 33A | 23+940 LT | 4.0 | 8.0 | | 37.0 | | | 64 |
| | 34 | 23+934 RT | 4.0 | 68.0 | | 293.0 | | | |
| | 35 | 24+910 LT | 5.0 | 7.0 | | 40.0 | | | |
| | 36 | 25+025 LT | 5.0 | 11.0 | | 60.0 | | | |
| | 37 ≠ | 25+357 RT | 5.0 | 69.0 | | 356.0 | | | |
| | 38 ≠ | 25+715 RT | 4.0 | 103.0 | | 421.0 | | | |
| (BIG MESA CONVEN. STORE) | 39 | 27+234 LT | (SEE LAYOUT) | | 103.0 | | | | 64 |
| | 40 | 28+325 LT | 14.0 | 61.0 | | 862.0 | | | |
| | 41 | 28+370 LT | 4.0 | 36.0 | | 152.0 | | | |
| (TOWN HOMES OF WESTCREEK) | 42 | 21+464 RT | 14.0 | 12.0 | | 172.0 | | | 64 |
| | CSJ: 2452-01-036 TOTALS | | | | 835.0 | 4,460.0 | | 479.0 | |
| | PROJECT TOTALS | | | | 1996.0 | 7208.0 | 0 | 479.0 | 64 |

## MAILBOX SUMMARY (ITEM 560)

(℄ FM 471)

| PLAN SHEET NO. | APPROX. STA. (LT. OR RT.) | TYPE / QUANT. S | D | M |
|---|---|---|---|---|
| 199 | 10+165 LT | 1 | | |
| 201 | 16+607 RT | | 1 | |
| 202 | 16+715 RT | 1 | | |
| CSJ: 2452-01-038 TOTALS | | 2 | 1 | |

| PLAN SHEET NO. | APPROX. STA. (LT. OR RT.) | TYPE / QUANT. S | D | M |
|---|---|---|---|---|
| 205 | 17+535 RT | 1 | | |
| 210A | 18+932 RT | 1 | | |
| 212B | 19+430 LT | 1 | | |
| 213B | 19+575 LT | 1 | | |
| 214A | 19+810 LT | 1 | | |
| 215A | 20+017 LT | 1 | | |
| CSJ: 2451-01-037 TOTALS | | 6 | | |
| PROJECT TOTALS | | 8 | 1 | |

TYPE
S = SINGLE
D = DOUBLE
M = MULTIPLE

NOTES:

ALL STATIONING REFERENCED IS APPROXIMATE AND ALONG THE ℄ OF LOOP 1604 UNLESS OTHERWISE NOTED.

- FOR FURTHER DETAILS ON DRIVEWAYS SEE LAYOUTS & SEE SHEET(S) 28A, 336A.

≠ DRAINAGE STRUCTURE ASSCOCIATED WITH DRIVEWAY, FOR FUTHER INFO. AND ADDITIONAL PAY ITEMS SEE SHEET 2 OF 2 THIS SUMMARY.

(#) REFERS TO CHANGES MADE AS PART OF CHANGE ORDER.

CHANGE ORDER NO. 99
-DRIVEWAY DELETIONS, ADDENDUMS AND QUANTITY REVISIONS AS PER THE VARIOUS CHANGE ORDER(S).

STATE OF TEXAS
RUBEN GUERRERO
95031
LICENCED PROFESSIONAL ENGINEER

Ruben Guerrero, P.E. 95031 — Date 9-30-05

CHANGE ORDER 99

REVISED SHEET

©2000 TxDOT

Texas Department of Transportation

**DRIVEWAY & MAILBOX SUMMARY**

SHEET 1 OF 2

| FED. RD. DIV. NO. | FEDERAL AID PROJECT NO. | | SHEET NO. |
|---|---|---|---|
| 6 | NH 2000(704), etc. | | 27C |
| STATE | DIST. | COUNTY | |
| TEXAS | SAT | BEXAR | |
| CONT. | SECT. | JOB | HIGHWAY NO. |
| 2452 | 01 | 036, etc. | LP 1604 |

LEVELS DISPLAYED
1 2 3 4 5 6 7 8 9 10 11 12 13 14 15 16
17 18 19 20 21 22 23 24 25 26 27 28 29 30 31 32
33 34 35 36 37 38 39 40 41 42 43 44 45 46 47 48
49 50 51 52 53 54 55 56 57 58 59 60 61 62
ACC: t:\oo\design\lp1604fm471-90\
FILE: drivesum*lp1604.dgn

## DRIVEWAY SUMMARY (ITEM 530)

| | DRIVEWAY NUMBER (#) | STATION | WIDTH @ ROW (M) | LENGTH (M) | 530-5001 DRVWYS (CONC) (150mm) M2 | 530-5003 DRVWY (ASPHALT-CONC PAV) M2 | ~~530-5078~~ ~~DRVWAYS (CONC) (200mm)~~ ~~M2~~ | 530-5003 CONSTRUCT DETOURS (CL 3) ⊛ M2 | |
|---|---|---|---|---|---|---|---|---|---|
| | ~~1~~ | ~~14+320 RT~~ | ~~10.0~~ | ~~17.0~~ | | | ~~234.0~~ | | 12 |
| | 2 | 15+272 RT | 10.0 | 4.0 | | 52.0 | | | |
| | 3 ≠ | 15+424 RT | 8.0 | 17.0 | 146.0 | 0.0 | | | |
| | ~~3A ≠~~ | ~~15+440 RT~~ | ~~10.0~~ | ~~17.0~~ | | ~~170.0~~ | | | 11 |
| | 3A ≠ | 15+452 RT | 7.6 | 14.0 | 114.0 | 0.0 | | | |
| | 3B ≠ | 15+576 RT | 9.1 | 17.1 | 165.0 | | | | |
| | 3C ≠ | 15+617 RT | 9.1 | 17.1 | 165.0 | | | | |
| | 9 ≠ | 17+542 RT | 5.0 | 55.0 | | 280.0 | | | |
| | 10 ≠ | 17+784 RT | 7.0 | 42.0 | | 299.0 | | | |
| | 11 ≠ | 18+937 RT | 4.0 | 61.0 | | 248.0 | | | |
| | 12 ≠ | 19+435 RT | 3.0 | 82.0 | | 242.0 | | | |
| | 13 ≠ | 1+576 LT | 5.0 | 12.0 | 49.0 | | | | |
| | | | | | | | | | |
| | 14 ≠ | 19+627 RT | 5.0 | 81.0 | | 409.0 | | | |
| | 15 | 19+828 LT | 4.0 | 8.0 | | 38.0 | | | |
| | 16 | 20+022 LT | 4.0 | 62.0 | | 253.0 | | | |
| | CSJ: 2451-01-037 TOTALS | | | | 639 | 1821.0 | ~~234.0~~ | | 11 12 |
| (℄ FM 471) | 4 | 10+156 LT | 43.0 | 10.0 | | 437.0 | | | |
| | ~~5 ≠~~ | ~~16+350 LT~~ | ~~5.0~~ | ~~8.0~~ | | ~~56.0~~ | | | 13 |
| (H.E.B.) | 5A | 16+193 LT | (SEE LAYOUT) | | 140.0 | | | | 13 |
| (H.E.B.) | 5B ≠ | 16+403 LT | (SEE LAYOUT) | | 166.0 | | | | 13 |
| | 5C ≠ | 16+326 LT | (SEE LAYOUT) | | 83.0 | | | | 13 |
| | 6 ≠ | 16+360 RT | 5.0 | 14.0 | | 75.0 | | | |
| (WHATABURGER) | 7 ≠ | 16+617 RT | 13.0 | 11.0 | | 148.0 | | | |
| | 8 ≠ | 16+720 RT | 5.0 | 12.0 | | 103.0 | | | |
| | 8A ≠ | 16+748 RT | (SEE LAYOUT) | | | 199.0 | | | |
| | | | | | | | | | |
| | | | | | | | | | |
| | CSJ: 2451-01-038 TOTALS | | | | 389.0 | 962.0 | | | 13 |
| | | | | | | | | | |
| | 17 | 21+167 LT | 31.0 | 8.0 | 257.0 | | | | |
| (℄ MILITARY DRIVE) | 18 | 0+263 LT | 14.0 | 6.0 | 82.0 | | | | |
| | 19 | 21+644 LT | 9.0 | 17.0 | | 162.0 | | | |
| | 20 | 21+873 LT | 6.0 | 8.0 | | 54.0 | | | |
| | 21 | 21+928 LT | 5.0 | 8.0 | | 49.0 | | | |
| | 22 | 22+013 LT | 5.0 | 7.0 | | 44.0 | | | |
| | 23 ≠ | 22+262 RT | 4.0 | 87.0 | | 352.0 | | | |
| | 24 ≠ | 22+325 RT | 6.0 | 87.0 | | 528.0 | | | |
| | 25 | 22+392 LT | 3.0 | 87.0 | | 266.0 | | | |
| | 26 | 22+466 LT | 4.0 | 87.0 | | 352.0 | | | |
| | 27 | 22+517 LT | 12.0 | 10.0 | | 131.0 | | | |
| | 28 | 20+369 LT | 10.0 | 8.0 | 89.0 | | | | |
| (℄ POTRANCO ROAD) | 29 | 20+347 RT | 13.0 | 4.0 | 60.0 | | | | |
| | 30 | 20+330 RT | 13.0 | 4.0 | 60.0 | | | | |
| | 31 | 22+669 LT | 11.0 | 10.0 | | 121.0 | | | |
| | 32 | 22+996 LT | 4.0 | 97.0 | | 393.0 | | | |
| | 33 | 23+385 LT | 4.0 | 8.0 | | 29.0 | | | |
| | | | | | | | | | |
| | 34 | 23+934 LT | 4.0 | 68.0 | | 293.0 | | | |
| | 35 | 24+910 LT | 5.0 | 7.0 | | 40.0 | | | |
| | 36 | 25+025 LT | 5.0 | 11.0 | | 60.0 | | | |
| | 37 ≠ | 25+357 RT | 5.0 | 69.0 | | 356.0 | | | |
| | 38 ≠ | 25+715 RT | 4.0 | 103.0 | | 421.0 | | | |
| | 39 | 27+234 LT | 11.0 | 5.0 | | 60.0 | | | |
| | 40 | 28+325 LT | 14.0 | 61.0 | | 862.0 | | | |
| | 41 | 28+370 LT | 4.0 | 36.0 | | 152.0 | | | |
| | 42 | | | | | | | | |
| | CSJ: 2451-01-036 TOTALS | | | | 548.0 | 4,762.0 | | | |
| | PROJECT TOTALS | | | | | | 0 | 0 | |

## MAILBOX SUMMARY (ITEM 560)

| PLAN SHEET NO. | APPROX. STA. (LT. OR RT.) | TYPE / QUANT. S | D | M |
|---|---|---|---|---|
| (℄ FM 471) 199 | 10+165 LT | 1 | | |
| 201 | 16+607 RT | | 1 | |
| 202 | 16+715 RT | 1 | | |
| | | | | |
| CSJ: 2452-01-038 TOTALS | | 2 | 1 | |

| PLAN SHEET NO. | APPROX. STA. (LT. OR RT.) | TYPE / QUANT. S | D | M |
|---|---|---|---|---|
| 205 | 17+535 RT | 1 | | |
| 210 | 18+932 RT | 1 | | |
| 212 | 19+430 LT | 1 | | |
| 213 | 19+575 LT | 1 | | |
| 214 | 19+820 LT | 1 | | |
| 215 | 20+017 LT | 1 | | |
| | | | | |
| CSJ: 2451-01-037 TOTALS | | 6 | | |
| | | | | |
| PROJECT TOTALS | | 8 | 1 | |

TYPE
S = SINGLE
D = DOUBLE
M = MULTIPLE

NOTES:

ALL STATIONING REFERENCED IS APPROXIMATE AND ALONG THE ℄ OF LOOP 1604 UNLESS OTHERWISE NOTED.

- FOR FURTHER DETAILS ON DRIVEWAYS SEE LAYOUTS & SEE SHEET(S) 28A, 336A.

≠ DRAINAGE STRUCTURE ASSCOCIATED WITH DRIVEWAY, FOR FUTHER INFO. AND ADDITIONAL PAY ITEMS SEE SHEET 2 OF 2 THIS SUMMARY.

⊛ ITEM USED TO PAY FOR TEMPORARY DRIVES EXCLUDING PIPE, S.E.T.'S AND CEMENT STABILIZED BACKFILL (SEE NEXT SHEET FOR THE ADDITIONAL PAY ITEMS.).

(#) REFERS TO CHANGES MADE AS PART OF CHANGE ORDER.

**CHANGE ORDER NO. 28**

-DRIVEWAY DELETIONS, ADDENDUMS AND QUANTITY REVISIONS AS PER THE VERIOUS CHANGE ORDER(S).

CHANGE ORDER 28

REVISED SHEET

©2000

Texas Department of Transportation

**DRIVEWAY & MAILBOX SUMMARY**

SHEET 1 OF 2

| FED.RD. DIV.NO. | FEDERAL AID PROJECT NO. | | SHEET NO. |
|---|---|---|---|
| 6 | NH 2000(704), etc. | | 27C |
| STATE | DIST. | COUNTY | |
| TEXAS | SAT | BEXAR | |
| CONT. | SECT. | JOB | HIGHWAY NO. |
| 2452 | 01 | 036, etc. | LP 1604 |

07-03-03

LEVELS DISPLAYED
1 2 3 4 5 6 7 8 9 10 11 12 13 14 15 16 17 18 19 20 21 22 23 24 25 26 27 28 29 30 31 32 33 34 35 36 37 38 39 40 41 42 43 44 45 46 47 48 49 50 51 52 53 54 55 56 57 58 59 60 61 62
ACC: t:\oo\design\lp1604fm471-90\
FILE: drivesum1p1604.dgn

## DRIVEWAY SUMMARY (ITEM 530)

| | DRIVEWAY NUMBER (#) | STATION | WIDTH @ ROW (M) | LENGTH (M) | 530-5001 DRVWYS (CONC) (150mm) M2 | 530-5003 DRVWY (ASPHALT-CONC PAV) M2 | 530-5078 DRVWY (CON) (200mm) M2 | 530- DRVWY (ASPH CONC PAV) (SPL.) M2 | |
|---|---|---|---|---|---|---|---|---|---|
| | ~~1~~ | ~~14+520 RT~~ | ~~10.0~~ | ~~11.0~~ | | ~~234.0~~ | | | 17 ELIMINATED AS PART OF C.O.# 12 |
| | 2 | 15+272 RT | 10.0 | 4.0 | | 52.0 | | | |
| | 3 ≠ | 15+424 RT | 8.0 | 17.0 | 146.0 | | | | |
| | ~~3A ≠~~ | ~~15+448 RT~~ | ~~10.0~~ | ~~15.0~~ | | ~~150.0~~ | | | 17 ELIMINATED AS PART OF C.O.# 12 |
| | 3A ≠ | 15+452 RT | (SEE LAYOUT) | | 114.0 | | | | 28 |
| | 3B ≠ | 15+576 RT | (SEE LAYOUT) | | 165.0 | | | | |
| | 3C ≠ | 15+617 RT | (SEE LAYOUT) | | 165.0 | | | | |
| | 9 ≠ | 17+542 RT | 5.0 | 55.0 | | 280.0 | | | |
| | 10 ≠ | 17+784 RT | 7.0 | 42.0 | | 299.0 | | | |
| | 11 ≠ | 18+937 RT | 4.0 | 61.0 | | 248.0 | | | |
| | 12 ≠ | 19+435 RT | 3.0 | 82.0 | | 242.0 | | | |
| (LANFORD PROPERTY) | 13 ≠ | (NBFR) 1+576 LT | (SEE LAYOUT) | | 50.0 | 432.0 | | | |
| | 14 ≠ | 19+627 RT | 5.0 | 81.0 | | 409.0 | | | |
| | 15 | 19+828 LT | (SEE LAYOUT) | | | | | 70.0 | |
| | 16 | 20+022 RT | 4.0 | 61.0 | | 253.0 | | | |
| | CSJ: 2452-01-037 TOTALS | | | | 640 | 2215.0 | | 70.0 | 28 17 |
| (℄ FM 471) | ~~4~~ | ~~18+156 LT~~ | ~~43.0~~ | ~~18.0~~ | | ~~137.0~~ | | | 28 ELIMINATED AS PART OF C.O.# 28 |
| | ~~5 ≠~~ | ~~16+350 LT~~ | ~~5.0~~ | ~~8.0~~ | | ~~62.0~~ | | | 25 ELIMINATED AS PART OF C.O.# 25 |
| (H.E.B.) | 5A | 16+193 LT | (SEE LAYOUT) | | 140.0 | | | | 25 |
| (H.E.B.) | 5B ≠ | 16+403 LT | (SEE LAYOUT) | | 166.0 | | | | 25 |
| (WHATABURGER) | 5C ≠ | 16+326 LT | (SEE LAYOUT) | | 83.0 | | | | 25 |
| | 6 ≠ | 16+360 RT | 5.0 | 14.0 | | 75.0 | | | |
| | 7 ≠ | 16+617 RT | 13.0 | 11.0 | | 148.0 | | | |
| | 8 ≠ | 16+720 RT | 5.0 | 12.0 | | 103.0 | | | |
| (SPL. SEALE DRIVEWAY) | 8A ≠ | 16+778 RT | (SEE LAYOUT) | | | 199.0 | | | 25 |
| | CSJ: 2452-01-038 TOTALS | | | | 389.0 | 525.0 | | | 25 |
| TEXACO/SHELL (MILITARY) | 17 | 21+167 LT | 31.0 | 8.0 | 254.0 | | | | |
| TEXACO/SHELL (MILITARY) | 18 | (MIL) 0+263 LT | 14.0 | 6.0 | 170.0 | | | | |
| (BLAZING STAR RV) | 19 | 21+646 LT | (SEE LAYOUT) | | | | | 479.0 | |
| | 20 | 21+873 LT | 6.0 | 8.0 | | 54.0 | | | |
| (CALVARY HILLS) | 21 | 21+928 LT | (SEE LAYOUT) | | | 49.0 | | | |
| (CALVARY HILLS) | 22 | 22+013 LT | (SEE LAYOUT) | | | 44.0 | | | |
| | 23 ≠ | 22+262 RT | 4.0 | 87.0 | | 352.0 | | | |
| | 24 ≠ | 22+325 RT | 6.0 | 87.0 | | 528.0 | | | |
| | 25 | 22+392 RT | 3.0 | 87.0 | | 266.0 | | | |
| | 26 | 22+466 LT | 4.0 | 87.0 | | 352.0 | | | |
| (BILL MILLER) | 27 | 22+517 LT | (SEE LAYOUT) | | 161.0 | | | | |
| (BILL MILLER) | 28 | 20+369 LT | (SEE LAYOUT) | | 147.0 | | | | |
| (SHAMROCK) | 29 | 20+347 RT | (SEE LAYOUT) | | | CONSTRUCTED BY OTHERS | | | |
| (SHAMROCK) | 30 | 20+330 RT | (SEE LAYOUT) | | | | | | |
| (SHAMROCK) | 31 | 22+669 LT | (SEE LAYOUT) | | | | | | |
| | 32 | 22+996 RT | 4.0 | 97.0 | | 393.0 | | | |
| | 33 | 23+385 LT | 4.0 | 8.0 | | 29.0 | | | |
| (N. OF MEDIO CREEK) | 33A | 23+940 LT | 4.0 | 8.0 | | 37.0 | | | |
| | 34 | 23+934 RT | 4.0 | 68.0 | | 293.0 | | | |
| | 35 | 24+910 LT | 5.0 | 7.0 | | 40.0 | | | |
| | 36 | 25+025 LT | 5.0 | 11.0 | | 60.0 | | | |
| | 37 ≠ | 25+357 RT | 5.0 | 69.0 | | 356.0 | | | |
| | 38 ≠ | 25+715 RT | 4.0 | 103.0 | | 421.0 | | | |
| (BIG MESA CONVEN. STORE) | 39 | 27+234 LT | (SEE LAYOUT) | | 103.0 | | | | |
| | 40 | 28+325 LT | 14.0 | 61.0 | | 862.0 | | | |
| | 41 | 28+370 LT | 4.0 | 36.0 | | 152.0 | | | |
| (TOWN HOMES OF WESTCREEK) | 42 | 21+464 RT | 14.0 | 12.0 | | 172.0 | | | |
| | CSJ: 2452-01-036 TOTALS | | | | 835.0 | 4,460.0 | | 479.0 | |
| | PROJECT TOTALS | | | | 1864.0 | 7200.0 | 0 | 549.0 | |

(℄ FM 471)

## MAILBOX SUMMARY (ITEM 560)

| PLAN SHEET NO. | APPROX. STA. (LT. OR RT.) | TYPE / QUANT. S | D | M |
|---|---|---|---|---|
| 199 | 10+165 LT | 1 | | |
| 201 | 16+607 RT | | 1 | |
| 202 | 16+715 RT | 1 | | |
| | | | | |
| CSJ: 2452-01-038 TOTALS | | 2 | 1 | |

| PLAN SHEET NO. | APPROX. STA. (LT. OR RT.) | TYPE / QUANT. S | D | M |
|---|---|---|---|---|
| 205 | 17+535 RT | 1 | | |
| 210A | 18+932 RT | 1 | | |
| 212B | 19+430 LT | 1 | | |
| 213B | 19+575 LT | 1 | | |
| 214A | 19+820 LT | 1 | | |
| 215A | 20+017 LT | 1 | | |
| | | | | |
| CSJ: 2451-01-037 TOTALS | | 6 | | |
| | | | | |
| PROJECT TOTALS | | 8 | 1 | |

TYPE
S = SINGLE
D = DOUBLE
M = MULTIPLE

NOTES:

ALL STATIONING REFERENCED IS APPROXIMATE AND ALONG THE ℄ OF LOOP 1604 UNLESS OTHERWISE NOTED.

- FOR FURTHER DETAILS ON DRIVEWAYS SEE LAYOUTS & SEE SHEET(S) 28A, 336A.

≠ DRAINAGE STRUCTURE ASSCOCIATED WITH DRIVEWAY, FOR FUTHER INFO. AND ADDITIONAL PAY ITEMS SEE SHEET 2 OF 2 THIS SUMMARY.

(#) REFERS TO CHANGES MADE AS PART OF CHANGE ORDER.

CHANGE ORDER NO. 64

-DRIVEWAY DELETIONS, ADDENDUMS AND QUANTITY REVISIONS AS PER THE VARIOUS CHANGE ORDER(S).

CHANGE ORDER 64

REVISED SHEET

©2000 Texas Department of Transportation

**DRIVEWAY & MAILBOX SUMMARY**

SHEET 1 OF 2

| FED. RD. DIV. NO. | FEDERAL AID PROJECT NO. | | SHEET NO. |
|---|---|---|---|
| 6 | NH 2000(704), etc. | | 27C |
| STATE | DIST. | COUNTY | |
| TEXAS | SAT | BEXAR | |
| CONT. | SECT. | JOB | HIGHWAY NO. |
| 2452 | 01 | 036, etc. | I.P. 1604 |

LEVELS DISP. 1 2 3 4 5 6 7 8 9 10 11 12 13 14 15 16 17 18 19 20 21 22 23 24 25 26 27 28 29 30 31 32 33 34 35 45 56 57 58 59 60 61 62 ACC: t:\oo\design\lp1604fm471-90\ FILE: drivesum*lp1604.dgn

## DRIVEWAY SUMMARY (ITEM 530)

| | DRIVEWAY NUMBER (#) | STATION | WIDTH @ ROW (M) | LENGTH (M) | 530-5001 DRVWYS (CONC) (150mm) M2 | 530-5003 DRVWY (ASPHALT-CONC PAV) M2 | 530-5078 DRVWY (CON) (200mm) M2 | 530- DRVWY (ASPH CONC PAV) (SPL.) M2 | |
|---|---|---|---|---|---|---|---|---|---|
| | ~~1~~ | ~~14+320 RT~~ | ~~10.0~~ | ~~14.0~~ | | | ~~234.0~~ | | 17 |
| | 2 | 15+272 RT | 10.0 | 4.0 | | 52.0 | | | |
| | 3 ≠ | 15+424 RT | 8.0 | 17.0 | 146.0 | | | | 28 |
| | ~~3A ≠~~ | ~~15+448 RT~~ | ~~10.0~~ | ~~13.0~~ | | ~~130.0~~ | | | 17 |
| | 3A ≠ | 15+452 RT | (SEE LAYOUT) | | 114.0 | | | | 28 |
| | 3B ≠ | 15+576 RT | (SEE LAYOUT) | | 165.0 | | | | 28 |
| | 3C ≠ | 15+617 RT | (SEE LAYOUT) | | 165.0 | | | | 28 |
| | 9 ≠ | 17+542 RT | 5.0 | 55.0 | | 280.0 | | | |
| | 10 ≠ | 17+784 RT | 7.0 | 42.0 | | 299.0 | | | |
| | 11 ≠ | 18+937 RT | 4.0 | 61.0 | | 248.0 | | | |
| | 12 ≠ | 19+435 RT | 3.0 | 82.0 | | 242.0 | | | |
| (LANFORD PROPERTY) | 13 ≠ | (NBFR) 1+576 LT | (SEE LAYOUT) | | 50.0 | 440.0 | | | 64 |
| | | | | | | | | | |
| | 14 ≠ | 19+627 RT | 5.0 | 81.0 | | 409.0 | | | |
| | 15 | 19+828 LT | (SEE LAYOUT) | | 132.0 | | | ~~70.0~~ | 99 |
| | 16 | 20+022 RT | 4.0 | 61.0 | | 253.0 | | | |
| | CSJ: 2452-01-037 TOTALS | | | | 772 | 2223.0 | | ~~70.0~~ | 28 17 64 99 |
| (℄ FM 471) | ~~4~~ | ~~18+156 LT~~ | ~~43.0~~ | ~~18.0~~ | | ~~437.0~~ | | | 28 |
| | ~~5 ≠~~ | ~~18+358 LT~~ | ~~5.0~~ | ~~8.0~~ | | ~~52.0~~ | | | 25 |
| (H.E.B.) | 5A | 16+193 LT | (SEE LAYOUT) | | 140.0 | | | | 25 |
| (H.E.B.) | 5B ≠ | 16+403 LT | (SEE LAYOUT) | | 166.0 | | | | 25 |
| (WHATABURGER) | 5C ≠ | 16+326 LT | (SEE LAYOUT) | | 83.0 | | | | 25 |
| | 6 ≠ | 16+360 RT | 5.0 | 14.0 | | 75.0 | | | |
| | 7 ≠ | 16+617 RT | 13.0 | 11.0 | | 148.0 | | | |
| | 8 ≠ | 16+720 RT | 5.0 | 12.0 | | 103.0 | | | |
| (SPL. SEALE DRIVEWAY) | 8A ≠ | 16+778 RT | (SEE LAYOUT) | | | 199.0 | | | 25 |
| | | | | | | | | | |
| | | | | | | | | | |
| | CSJ: 2452-01-038 TOTALS | | | | 389.0 | 525.0 | | | 25 64 |
| TEXACO/SHELL (MILITARY) | 17 | 21+167 LT | 31.0 | 8.0 | 254.0 | | | | 64 |
| TEXACO/SHELL (MILITARY) | 18 | (MIL) 0+263 LT | 14.0 | 6.0 | 170.0 | | | | 64 |
| (BLAZING STAR RV) | 19 | 21+646 LT | (SEE LAYOUT) | | | | | 479.0 | 64 |
| | 20 | 21+873 LT | 6.0 | 8.0 | | 54.0 | | | |
| (CALVARY HILLS) | 21 | 21+928 LT | (SEE LAYOUT) | | | 49.0 | | | 64 |
| (CALVARY HILLS) | 22 | 22+013 LT | (SEE LAYOUT) | | | 44.0 | | | 64 |
| | 23 ≠ | 22+262 RT | 4.0 | 87.0 | | 352.0 | | | |
| | 24 ≠ | 22+325 RT | 6.0 | 87.0 | | 528.0 | | | |
| | 25 | 22+392 RT | 3.0 | 87.0 | | 266.0 | | | |
| | 26 | 22+466 LT | 4.0 | 87.0 | | 352.0 | | | 64 |
| (BILL MILLER) | 27 | 22+517 LT | (SEE LAYOUT) | | 161.0 | | | | 64 |
| (BILL MILLER) | 28 | 20+369 LT | (SEE LAYOUT) | | 147.0 | | | | 64 |
| (SHAMROCK) | 29 | 20+347 RT | (SEE LAYOUT) | | | CONSTRUCTED BY OTHERS | | | 64 |
| (SHAMROCK) | 30 | 20+330 RT | (SEE LAYOUT) | | | | | | 64 |
| (SHAMROCK) | 31 | 22+669 LT | (SEE LAYOUT) | | | | | | 64 |
| | 32 | 22+996 RT | 4.0 | 97.0 | | 393.0 | | | |
| | 33 | 23+385 LT | 4.0 | 8.0 | | 29.0 | | | |
| (N. OF MEDIO CREEK) | 33A | 23+940 LT | 4.0 | 8.0 | | 37.0 | | | 64 |
| | 34 | 23+934 RT | 4.0 | 68.0 | | 293.0 | | | |
| | 35 | 24+910 LT | 5.0 | 7.0 | | 40.0 | | | |
| | 36 | 25+025 LT | 5.0 | 11.0 | | 60.0 | | | |
| | 37 ≠ | 25+357 RT | 5.0 | 69.0 | | 356.0 | | | |
| | ~~38 ≠~~ | ~~25+715 RT~~ | ~~4.0~~ | ~~103.0~~ | | ~~421.0~~ | | | 28 |
| ~~(DODGE CITY TRAIL)~~ | ~~38A~~ | ~~(DODGE) 0+000 LT~~ | ~~(SEE LAYOUT)~~ | | | ~~296.0~~ | | | ELIMINATED AS PART OF 129 |
| (DODGE CITY TRAIL) | 38B | (DODGE) 0+090 LT | (SEE LAYOUT) | | | 296.0 | | | 129 |
| (BIG MESA CONVEN. STORE) | 39 | 27+234 LT | (SEE LAYOUT) | | 103.0 | | | | 64 |
| | 40 | 28+325 LT | 14.0 | 61.0 | | 862.0 | | | |
| | 41 | 28+370 LT | 4.0 | 36.0 | | 152.0 | | | |
| (TOWN HOMES OF WESTCREEK) | 42 | 21+464 RT | 14.0 | 12.0 | | 172.0 | | | 64 |
| (MARBACH RD. EAST) | 43 | (MAR) 0+222 LT | (SEE LAYOUT) | | 30.2 | | | | |
| ~~SWAGGERS @ MILITARY~~ | ~~44~~ | ~~21+132 RT~~ | ~~(SEE LAYOUT)~~ | | ~~273.0~~ | | | | 129 |
| | CSJ: 2452-01-036 TOTALS | | | | 1138.2 | 4335 | | 479.0 | 64 |
| | PROJECT TOTALS | | | | 2299.2 | 7186.0 | 0 | 479.0 | 64 99 129 |

## MAILBOX SUMMARY (ITEM 560)

| | PLAN SHEET NO. | APPROX. STA. (LT. OR RT.) | TYPE / QUANT. S | D | M |
|---|---|---|---|---|---|
| (℄ FM 471) | 199 | 10+165 LT | 1 | | |
| | 201 | 16+607 RT | | 1 | |
| | 202 | 16+715 RT | 1 | | |
| | | | | | |
| | CSJ: 2452-01-038 TOTALS | | 2 | 1 | |

| | PLAN SHEET NO. | APPROX. STA. (LT. OR RT.) | TYPE / QUANT. S | D | M |
|---|---|---|---|---|---|
| | 205 | 17+535 RT | 1 | | |
| | 210A | 18+932 RT | 1 | | |
| | 212B | 19+430 LT | 1 | | |
| | 213B | 19+575 LT | 1 | | |
| 64 | 214A | 19+810 LT | 1 | | |
| | 215A | 20+017 LT | 1 | | |
| | | | | | |
| | CSJ: 2451-01-037 TOTALS | | 6 | | |
| | | | | | |
| | PROJECT TOTALS | | 8 | 1 | |

TYPE
S = SINGLE
D = DOUBLE
M = MULTIPLE

NOTES:

ALL STATIONING REFERENCED IS APPROXIMATE AND ALONG THE ℄ OF LOOP 1604 UNLESS OTHERWISE NOTED.

- FOR FURTHER DETAILS ON DRIVEWAYS SEE LAYOUTS & SEE SHEET(S) 28A, 336A.

≠ DRAINAGE STRUCTURE ASSCOCIATED WITH DRIVEWAY, FOR FUTHER INFO. AND ADDITIONAL PAY ITEMS SEE SHEET 2 OF 2 THIS SUMMARY.

(#) REFERS TO CHANGES MADE AS PART OF CHANGE ORDER.

CHANGE ORDER NO. 129

-DRIVEWAY DELETIONS, ADDENDUMS AND QUANTITY REVISIONS AS PER THE VARIOUS CHANGE ORDER(S).

STATE OF TEXAS
FITZGERALDO G. SANCHEZ
76084
LICENCED PROFESSIONAL ENGINEER

Fitzgerald G. Sanchez 06-15-06
Fitzgerald G. Sanchez, P.E. Date

CHANGE ORDER 129

REVISED SHEET

Texas Department of Transportation

**DRIVEWAY & MAILBOX SUMMARY**

SHEET 1 OF 2

| FED.RD. DIV.NO. | FEDERAL AID PROJECT NO. | | SHEET NO. |
|---|---|---|---|
| 6 | NH 2000(704),etc. | | 27C |
| STATE | DIST. | COUNTY | |
| TEXAS | SAT | BEXAR | |
| CONT. | SECT. | JOB | HIGHWAY NO. |
| 2452 | 01 | 036,etc. | LP 1604 |

6-09-06

LEVELS DISPLAYED
1 2 3 4 5 6 7 8 9 10 11 12 13 14 15 16
17 18 19 20 21 22 23 24 25 26 27 28 29 30 31 32
33 34 35 36 37 38 39 40 41 42 43 44 45 46 47 48
49 50 51 52 53 54 55 56 57 58 59 60 61 62

ACC: t:\ao\design\lp1604fm471-90\
FILE: T:\AO\Design\lp1604fm471-90\Summaries\dr_vesum*lp1604.dgn

## DRIVEWAY SUMMARY (ITEM 530)

| | DRIVEWAY NUMBER (#) | STATION | WIDTH @ ROW (M) | LENGTH (M) | 530-5001 DRVWYS (CONC) (150mm) M2 | 530-5003 DRVWY (ASPHALT-CONC PAV) M2 | 530-5078 DRVWY (CON) (200mm) M2 | 530- DRVWY (ASPH CONC PAV) (SPL.) M2 | |
|---|---|---|---|---|---|---|---|---|---|
| | ~~1~~ | ~~14+320 RT~~ | ~~10.0~~ | ~~11.0~~ | | | ~~234.0~~ | | 17 |
| | 2 | 15+272 RT | 10.0 | 4.0 | | 52.0 | | | |
| | 3 ≠ | 15+424 RT | 8.0 | 17.0 | 146.0 | | | | 28 |
| | ~~3A ≠~~ | ~~15+440 RT~~ | ~~10.0~~ | ~~13.0~~ | | ~~139.0~~ | | | 17 |
| | 3A ≠ | 15+452 RT | (SEE LAYOUT) | | 114.0 | | | | 28 |
| | 3B ≠ | 15+576 RT | (SEE LAYOUT) | | 165.0 | | | | 28 |
| | 3C ≠ | 15+617 RT | (SEE LAYOUT) | | 165.0 | | | | 28 |
| | 9 ≠ | 17+542 RT | 5.0 | 55.0 | | 280.0 | | | |
| | 10 ≠ | 17+784 RT | 7.0 | 42.0 | | 299.0 | | | |
| | 11 ≠ | 18+937 RT | 4.0 | 61.0 | | 248.0 | | | |
| | 12 ≠ | 19+435 RT | 3.0 | 82.0 | | 242.0 | | | |
| (LANFORD PROPERTY) | 13 ≠ | (NBFR) 1+576 LT | (SEE LAYOUT) | | 50.0 | 440.0 | | | 64 |
| | | | | | | | | | |
| | 14 ≠ | 19+627 RT | 5.0 | 81.0 | | 409.0 | | | |
| | 15 | 19+828 LT | (SEE LAYOUT) | | 132.0 | | | ~~70.0~~ | 59 |
| | 16 | 20+022 RT | 4.0 | 61.0 | | 253.0 | | | |
| | CSJ: 2452-01-037 TOTALS | | | | 772 | 2223.0 | | ~~70.0~~ | 28 17 64 59 |
| (℄ FM 471) | ~~4~~ | ~~18+156 LT~~ | ~~43.0~~ | ~~18.0~~ | | ~~437.0~~ | | | 28 |
| | ~~5 ≠~~ | ~~18+358 LT~~ | ~~5.0~~ | ~~8.0~~ | | ~~52.0~~ | | | 25 |
| (H.E.B.) | 5A | 16+193 LT | (SEE LAYOUT) | | 140.0 | | | | 25 |
| (H.E.B.) | 5B ≠ | 16+403 LT | (SEE LAYOUT) | | 166.0 | | | | 25 |
| (WHATABURGER) | 5C ≠ | 16+326 LT | (SEE LAYOUT) | | 83.0 | | | | 25 |
| | 6 ≠ | 16+360 RT | 5.0 | 14.0 | | 75.0 | | | |
| | 7 ≠ | 16+617 RT | 13.0 | 11.0 | | 148.0 | | | |
| | 8 ≠ | 16+720 RT | 5.0 | 12.0 | | 103.0 | | | |
| (SPL. SEALE DRIVEWAY) | 8A ≠ | 16+778 RT | (SEE LAYOUT) | | | 199.0 | | | 25 |
| | | | | | | | | | |
| | | | | | | | | | |
| | CSJ: 2452-01-038 TOTALS | | | | 389.0 | 525.0 | | | 25 64 |
| TEXACO/SHELL (MILITARY) | 17 | 21+167 LT | 31.0 | 8.0 | 254.0 | | | | 64 |
| TEXACO/SHELL (MILITARY) | 18 | (MIL) 0+263 LT | 14.0 | 6.0 | 170.0 | | | | 64 |
| (BLAZING STAR RV) | 19 | 21+646 LT | (SEE LAYOUT) | | | | | 479.0 | 64 |
| | 20 | 21+873 LT | 6.0 | 8.0 | | 54.0 | | | |
| (CALVARY HILLS) | 21 | 21+928 LT | (SEE LAYOUT) | | | 49.0 | | | 64 |
| (CALVARY HILLS) | 22 | 22+013 LT | (SEE LAYOUT) | | | 44.0 | | | 64 |
| | 23 ≠ | 22+262 RT | 4.0 | 87.0 | | 352.0 | | | |
| | 24 ≠ | 22+325 RT | 6.0 | 87.0 | | 528.0 | | | |
| | 25 | 22+392 RT | 3.0 | 87.0 | | 266.0 | | | |
| | 26 | 22+466 LT | 4.0 | 87.0 | | 352.0 | | | 64 |
| (BILL MILLER) | 27 | 22+517 LT | (SEE LAYOUT) | | 161.0 | | | | 64 |
| (BILL MILLER) | 28 | 20+369 LT | (SEE LAYOUT) | | 147.0 | | | | 64 |
| (SHAMROCK) | 29 | 20+347 RT | (SEE LAYOUT) | | | CONSTRUCTED BY OTHERS | | | 64 |
| (SHAMROCK) | 30 | 20+330 RT | (SEE LAYOUT) | | | | | | 64 |
| (SHAMROCK) | 31 | 22+669 LT | (SEE LAYOUT) | | | | | | 64 |
| | 32 | 22+996 RT | 4.0 | 97.0 | | 393.0 | | | |
| | 33 | 23+385 LT | 4.0 | 8.0 | | 29.0 | | | |
| (N. OF MEDIO CREEK) | 33A | 23+940 LT | 4.0 | 8.0 | | 37.0 | | | 64 |
| | 34 | 23+934 RT | 4.0 | 68.0 | | 293.0 | | | |
| | 35 | 24+910 LT | 5.0 | 7.0 | | 40.0 | | | |
| | 36 | 25+025 LT | 5.0 | 11.0 | | 60.0 | | | |
| | 37 ≠ | 25+357 RT | 5.0 | 69.0 | | 356.0 | | | |
| | ~~38 ≠~~ | ~~25+715 RT~~ | ~~4.0~~ | ~~103.0~~ | | ~~421.0~~ | | | 28 |
| ~~(DODGE CITY TRAIL)~~ | ~~38A~~ | ~~(DODGE) 0+055 RT~~ | ~~(SEE LAYOUT)~~ | | | ~~296.0~~ | | | ELIMINATED AS PART OF 129 |
| (DODGE CITY TRAIL) | 38B | (DODGE) 0+090 LT | (SEE LAYOUT) | | | 296.0 | | | 129 |
| (BIG MESA CONVEN. STORE) | 39 | 27+234 LT | (SEE LAYOUT) | | 103.0 | | | | 64 |
| | 40 | 28+325 LT | 14.0 | 61.0 | | 862.0 | | | |
| | 41 | 28+370 LT | 4.0 | 36.0 | | 152.0 | | | |
| (TOWN HOMES OF WESTCREEK) | 42 | 21+464 RT | 14.0 | 12.0 | | 172.0 | | | 64 |
| (MARBACH RD. EAST) | 43 | (MAR) 0+222 LT | (SEE LAYOUT) | | 30.2 | | | | |
| SWITCHERS @ MILITARY | 44 | 21+132 RT | (SEE LAYOUT) | | 273.0 | | | | 129 |
| | CSJ: 2452-01-036 TOTALS | | | | 1138.2 | 4335 | | 479.0 | 64 |
| | PROJECT TOTALS | | | | 2299.2 | 7186.0 | 0 | 479.0 | 64 59 129 |

## MAILBOX SUMMARY (ITEM 560)

| PLAN SHEET NO. | APPROX. STA. (LT. OR RT.) | TYPE / QUANT. S | D | M |
|---|---|---|---|---|
| 199 | 10+165 LT | 1 | | |
| 201 | 16+607 RT | | 1 | |
| 202 | 16+715 RT | 1 | | |
| | | | | |
| CSJ: 2452-01-038 TOTALS | | 2 | 1 | |

(℄ FM 471)

| PLAN SHEET NO. | APPROX. STA. (LT. OR RT.) | TYPE / QUANT. S | D | M |
|---|---|---|---|---|
| 205 | 17+535 RT | 1 | | |
| 210A | 18+932 RT | 1 | | |
| 212B | 19+430 LT | 1 | | |
| 213B | 19+575 LT | 1 | | |
| 214A | 19+810 LT | 1 | | |
| 215A | 20+017 LT | 1 | | |
| | | | | |
| CSJ: 2451-01-037 TOTALS | | 6 | | |
| | | | | |
| PROJECT TOTALS | | 8 | 1 | |

64

TYPE
S = SINGLE
D = DOUBLE
M = MULTIPLE

NOTES:

ALL STATIONING REFERENCED IS APPROXIMATE AND ALONG THE ℄ OF LOOP 1604 UNLESS OTHERWISE NOTED.

- FOR FURTHER DETAILS ON DRIVEWAYS SEE LAYOUTS & SEE SHEET(S) 28A, 336A.

≠ DRAINAGE STRUCTURE ASSCOCIATED WITH DRIVEWAY, FOR FUTHER INFO. AND ADDITIONAL PAY ITEMS SEE SHEET 2 OF 2 THIS SUMMARY.

△# REFERS TO CHANGES MADE AS PART OF CHANGE ORDER.

CHANGE ORDER NO. 131
-DRIVEWAY DELETIONS, ADDENDUMS AND QUANTITY REVISIONS AS PER THE VARIOUS CHANGE ORDER(S).

STATE OF TEXAS
FITZGERALDO G. SANCHEZ
76084
LICENCED
PROFESSIONAL ENGINEER

Fitzgeraldo G. Sanchez 07-11-06
Fitzgeraldo G. Sanchez, P.E. Date

CHANGE ORDER 131

REVISED SHEET

© 2000 Texas Department of Transportation

DRIVEWAY & MAILBOX SUMMARY

SHEET 1 OF 2

| FED.RD. DIV.NO. | FEDERAL AID PROJECT NO. | | SHEET NO. |
|---|---|---|---|
| 6 | NH 2000(704),etc. | | 27C C1 |
| STATE | DIST. | COUNTY | |
| TEXAS | SAT | BEXAR | |
| CONT. | SECT. | JOB | HIGHWAY NO. |
| 2452 | 01 | 036,etc. | LP 1604 |

6-09-06

LEVELS DISPLAYED
1 2 3 4 5 6 7 8 9 10 11 12 13 14 15 16
17 18 19 20 21 22 23 24 25 26 27 28 29 30 31 32
33 34 35 36 37 38 39 40 41 42 43 44 45 46 47 48
50 51 52 53 54 55 56 57 58 59 60 61 62

ACC: t:\oo\design\lp1604fm471-90\
FILE: T:\AO\Design\lp1604fm471-90\Summaries\drivesum*lp1604.dgn

Plotted on: $DATE$

| DRIVEWAY NUMBER ⟨#⟩ | LOCATION | PROPOSED STRUCTURE | "Y" | "A" US | "B" DS | USFL ELEV | DSFL ELEV | LENGTH | SAFETY END TREATMENT (TY I) (H=1500mm X 600mm) (1:6) (P) | SAFETY END TREATMENT (TY II) (900mm) (RCP) (1:6) | SAFETY END TREATMENT (TY II) (750mm) (RCP) (1:6) | SAFETY END TREATMENT (TY II) (600mm) (RCP) (1:6) | CEMENT STAB BACKFILL |
|---|---|---|---|---|---|---|---|---|---|---|---|---|---|
| | | | | | | | | M | EA | EA | EA | EA | M3 |
| 3 | 15+424 RT | 1-600mm X 13.29 RCP (CL III) | 56.2 | 9.9 | 10.5 | 272.90 | 272.72 | 13.3 | | | | 2 | 2.4 |
| 3A | 15+448 RT | 1-600mm X 12.14 RCP (CL III) | 58.1 | 9.1 | 10.2 | 273.17 | 273.00 | 12.1 | | | | 2 | 2.2 |
| 9 | 17+542 RT | 1-900mm X 14.14 RCP (CL III) | 32.0 | 12.1 | 12.7 | 288.04 | 287.92 | 14.1 | | 2 | | | 3.4 |
| 10 | 17+785 RT | 1-750mm X 18.19 RCP (CL III) | 30.0 | 13.3 | 13.9 | 294.70 | 294.56 | 18.2 | | | 2 | | 3.8 |
| 11 | 18+937 RT | 1-600mm X 12.89 RCP (CL III) | 0.0 | 9.8 | 10.3 | 287.70 | 287.60 | 12.9 | | | | 2 | 2.3 |
| 12 | 19+435 RT | 1-600mm X 12.15 RCP (CL III) | 0.0 | 9.4 | 9.9 | 287.82 | 287.72 | 12.2 | | | | 2 | 2.2 |
| 13 | 19+576 LT | 2-600mm X 5.20 RCP (CL III) | 70.0 | 6.7 | 6.2 | 291.03 | 290.86 | 10.4 | | | | 4 | 1.6 |
| 14 | 19+627 RT | 1-600mm X 8.37 RCP (CL III) | 0.0 | 6.8 | 8.8 | 288.25 | 288.09 | 8.4 | | | | 2 | 1.5 |
| **CSJ: 2452-01-037 TOTALS** | | | | | | | | 101.6 | | 2 | 2 | 14 | 19.4 |
| 5 | 16+350 LT | 2-900mm X 6.4 RCP (CL III) | 76.3 | 8.4 | 8.8 | 263.60 | 263.48 | 12.8 | | 4 | | | 1.5 |
| 6 | 16+360 RT | 2-1500mm X 600mm X 8.53 MBC | 74.7 | 7.7 | 8.0 | 264.24 | 264.16 | 17.6 | 4 | | | | 10.4 |
| 7 | 16+617 RT | 1-600mm X 14.29 RCP (CL III) | 57.7 | 10.6 | 11.2 | 268.86 | 268.73 | 14.3 | | | | 2 | 2.6 |
| 8 | 16+720 RT | 1-600mm X 5.92 RCP (CL III) | 69.9 | 6.8 | 8.0 | 272.79 | 272.57 | 5.9 | | | | 2 | 1.1 |
| **CSJ: 2452-01-038 TOTALS** | | | | | | | | 50.6 | 4 | 4 | | 4 | 15.6 |
| 23 | 22+262 RT | 1-600mm X 11.01 RCP (CL III) | 0.0 | 8.7 | 9.5 | 253.20 | 253.02 | 11.0 | | | | 2 | 2 |
| 24 | 22+325 RT | 1-600mm X 8.66 RCP (CL III) | 0.0 | 9.2 | 8.4 | 252.23 | 252.06 | 8.7 | | | | 2 | 1.6 |
| 37 | 25+357 RT | 1-600mm X 12.44 RCP (CL III) | 0.0 | 9.5 | 10.2 | 253.27 | 253.17 | 12.4 | | | | 2 | 2.2 |
| 38 | 25+715 RT | 1-600mm X 9.59 RCP (CL III) | 0.0 | 8.2 | 8.6 | 254.41 | 254.36 | 9.6 | | | | 2 | 1.7 |
| **CSJ: 2452-01-036 TOTALS** | | | | | | | | 41.7 | | | | 8 | 7.5 |
| **PROJECT TOTALS** | | | | | | | | 193.9 | 4 | 6 | 4 | 26 | 42.5 |

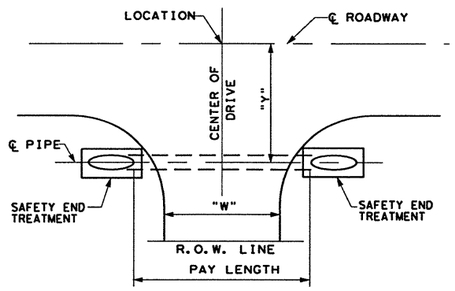


DRIVEWAY W/PIPE
TYPICAL PLAN VIEW

NOT TO SCALE

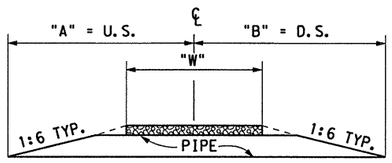


DRIVEWAY W/PIPE
TYPICAL SECTION

NOT TO SCALE

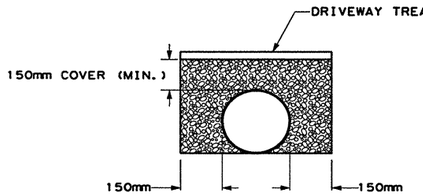


TYPICAL SECTION
CEMENT STABILIZED BACKFILL

NOT TO SCALE

NOTE(S):

S.E.T. (TY I) SHALL BE CONSTRUCTED UTILIZING THE PD-SPR (M) STD. WITH PIPE RUNNERS.

A S.E.T. (TY II) SHALL BE CONSTRUCTED UTILIZING THE RIPRAP HDWL (M)(MOD) STD.

FOR MORE DETAILS ON DRIVEWAYS SEE SHEET(S) 27, 336.

STATE OF TEXAS
JOEL K. DAVENPORT, JR.
79276
REGISTERED PROFESSIONAL ENGINEER

Joel K. Davenport Jr. 10/24/00
Joel K. Davenport Jr. P.E. Date

©2000 Texas Department of Transportation

## DRIVEWAY & MAILBOX SUMMARY

SHEET 2 OF 2

| FED.RD. DIV.NO. | FEDERAL AID PROJECT NO. | | SHEET NO. |
|---|---|---|---|
| 6 | NH 2000(704),etc. | | 28 |
| STATE | DIST. | COUNTY | |
| TEXAS | SAT | BEXAR | |
| CONT. | SECT. | JOB | HIGHWAY NO. |
| 2452 | 01 | 036,etc. | LP 1604 |

pope*drv*pipe.dgn

| DRIVEWAY NUMBER (#) | LOCATION | PROPOSED STRUCTURE | "Y" (±) | "A" US | "B" DS | USFL ELEV | DSFL ELEV | PAY LENGTH (PIPE /BOX) | CONCRETE STAB BACKFILL | CONCRETE COLLAR (CL A) | RIPRAP (CONC) (CL B) | CMP (GALSTL 450mm) ⚡ | INLET DROP (TY 3) (COMPL) | INLET TRAFFIC TY X-5 (COMPL) | SAFETY END TREATMENT (TY II) (600mm) (RCP) (1:4) | SAFETY END TREATMENT (TY II) (450mm) (RCP) (1:6) | SAFETY END TREATMENT (TY II) (600mm) (RCP) (1:6) | SAFETY END TREATMENT (TY II) (750mm) (RCP) (1:6) | SAFETY END TREATMENT (TY II) (900mm) (RCP) (1:6) | SAFETY END TREATMENT (TY II) (600mm) (RCP) (1:3) | SAFETY END TREATMENT (TY I) (H=1500mm X 600mm) (1:6) (P) | ✳ SAWCUT EXIST. | |
|---|---|---|---|---|---|---|---|---|---|---|---|---|---|---|---|---|---|---|---|---|---|---|---|
| | | | | | | | | M | M3 | EA | M3 | M | EA | EA | EA | EA | EA | EA | EA | EA | EA | M | |
| ~~3~~ | ~~15+424 RT~~ | ~~1-600mm X 13.29 RCP (CL III)~~ | ~~56.2~~ | ~~9.9~~ | ~~10.5~~ | ~~272.90~~ | ~~272.72~~ | ~~13.3~~ | ~~2.4~~ | | | | | | | | 2 | | | | | | 28 |
| 3 | 15+425 RT | 1-600mm X 25.9 RCP (CL III) | SEE LAYOUT | 13.1 | 18.0 | D.I. I5A | 272.365 | 25.9 | 13.0 | | 1.7 | | 1 | | | | 1 | | | | | | |
| ~~3A~~ | ~~15+440 RT~~ | ~~1-600mm X 12.14 RCP (CL III)~~ | ~~58.1~~ | ~~9.1~~ | ~~10.2~~ | ~~273.17~~ | ~~273.00~~ | ~~12.1~~ | ~~2.2~~ | | | | | | | | 2 | | | | | | |
| 3A | 15+452 RT | 1-600mm X 22.9 RCP (CL III) | SEE LAYOUT | 12.5 | 14.5 | 273.134 | D.I. I5A | 22.9 | 9.1 | | | | | | | | 1 | | | | | | |
| 3B | 15+576 RT | 1-600mm X 20.8 RCP (CL III) | SEE LAYOUT | 13.0 | 14.0 | 271.716 | 270.929 | 20.8 | ✳ 56.7 | 1 | | 0.9 | | 1 | | | 2 | | | | | | |
| 3C | 15+617 RT | 1-600mm X 20.8 RCP (CL III) | SEE LAYOUT | 11.6 | 15.4 | 270.536 | 269.749 | 20.8 | ✳ 63.9 | 1 | | 1.1 | | 1 | | | 2 | | | | | | |
| 9 | 17+542 RT | 1-900mm X 14.14 RCP (CL III) | 32.0 | 12.1 | 12.7 | 288.04 | 287.92 | 14.1 | 3.4 | | | | | | | | 2 | | 2 | | | | |
| 10 | 17+785 RT | 1-750mm X 18.19 RCP (CL III) | 30.0 | 13.3 | 13.9 | 294.70 | 294.56 | 18.2 | 3.8 | | | | | | | | | 2 | | | | | |
| 11 | 18+937 RT | 1-600mm X 12.89 RCP (CL III) | 0.0 | 9.8 | 10.3 | 287.70 | 287.60 | 12.9 | 2.3 | | | | | | | | 2 | | | | | | |
| 12 | 19+435 RT | 1-600mm X 12.15 RCP (CL III) | 0.0 | 9.4 | 9.9 | 287.82 | 287.72 | 12.2 | 2.2 | | | | | | | | 2 | | | | | | |
| 13 | 19+576 LT | 1-450mm X 7.80 RCP (CL III) | SEE LAYOUT | 6.3 | 6.9 | 291.00 | 290.85 | 7.8 | 5.1 | | | | | | | 2 | | | | | | | 64 |
| 14 | 19+627 RT | 1-600mm X 8.37 RCP (CL III) | 0.0 | 6.8 | 8.8 | 288.25 | 288.09 | 8.4 | 1.5 | | | | | | | | 2 | | | | | | |
| 15 | 19+845 LT | 1-600mm X 9.8 RCP (CL III) | SEE LAYOUT | 7.5 | 9.5 | 286.000 | 285.650 | 9.8 | 12.0 | | | | | | | | | | | 2 | | 14 | |
| **CSJ: 2452-01-037 TOTALS** | | | | | | | | | 173.0 | 2 | 1.7 | 2 | 1 | 2 | | 2 | 16 | 2 | 2 | 2 | | 14 | |
| ~~5~~ | ~~16+350 LT~~ | ~~2-900mm X 6.4 RCP (CL III)~~ | ~~76.3~~ | ~~8.4~~ | ~~8.8~~ | ~~263.60~~ | ~~263.48~~ | ~~12.8~~ | ~~1.5~~ | | | | | | | | | | 4 | | | | 25 |
| 5A | 16+193 LT | -NO PIPE REQUIRED- | | | | | | | | | | | | | | | | | | | | | |
| 5B | 16+402 LT | 1-600mm X 24.9 RCP (CL III) | SEE LAYOUT | 15.6 | 16.4 | 264.578 | 264.100 | 24.9 | 8.6 | | | | | | | | 2 | | | | | | |
| 5C | 16+323 LT | 1-600mm X 15.7 RCP (CL III) | SEE LAYOUT | 10.2 | 12.9 | 263.345 | 263.000 | 15.7 | 5.6 | | | | | | | | 2 | | | | | | |
| 6 | 16+360 RT | 2-1500mm X 600mm X 8.53 MBC | 74.7 | 7.7 | 8.0 | 264.24 | 264.16 | 17.6 | 10.4 | | | | | | | | | | | | 4 | | |
| 7 | 16+617 RT | 1-600mm X 14.29 RCP (CL III) | 57.7 | 10.6 | 11.2 | 268.86 | 268.73 | 14.3 | 2.6 | | | | | | | | 2 | | | | | | |
| 8 | 16+720 RT | 1-600mm X 5.92 RCP (CL III) | 69.9 | 6.8 | 8.0 | 272.79 | 272.57 | 5.9 | 1.1 | | | | | | | | 2 | | | | | | |
| 8A | 16+780 RT | 1-450mm X 34.6 RCP (CL III) | SEE LAYOUT | 16.6 | 23.4 | 272.114 | 271.346 | 34.6 | 27.3 | | | | | | | 2 | | | | | | | |
| **CSJ: 2452-01-038 TOTALS** | | | | | | | | | 55.6 | | | | | | | 2 | 8 | | 0 | | 4 | | |
| 18 | 0+263 LT | -NO PIPE REQUIRED- | | | | | | | | | 3.5 | | | | | | | | | | | | |
| 19 | 21+645.921 LT | 1-600mm X 28.9 RCP (CL III) | SEE LAYOUT | 17.9 | 13.2 | DROP INLET | 259.200 | 28.9 | 44.0 | | 4.1 | | 1 | | 1 | | | | | | | 35 | 64 |
| 42 | 21+466 RT | 1-600mm X 22.5 RCP (CL III) | 0.0 | 13.6 | 16.3 | 258.18 | 256.99 | 22.5 | | | | | | | | | 2 | | | | | | |
| 23 | 22+262 RT | 1-600mm X 11.01 RCP (CL III) | 0.0 | 8.7 | 9.5 | 253.20 | 253.02 | 11.0 | | | | | | | | | 2 | | | | | | |
| 24 | 22+325 RT | 1-600mm X 8.66 RCP (CL III) | 0.0 | 9.2 | 8.4 | 252.23 | 252.06 | 8.7 | 2 | | | | | | | | 2 | | | | | | |
| 27 | 22+517 LT | -NO PIPE REQUIRED- | | | | | | | | | 2.2 | | | | | | | | | | | | |
| 28 | 20+369 LT | -NO PIPE REQUIRED- | | | | | | | | | 4.5 | | | | | | | | | | | | |
| 37 | 25+357 RT | 1-600mm X 12.44 RCP (CL III) | 0.0 | 9.5 | 10.2 | 253.27 | 253.17 | 12.4 | 2.2 | | | | | | | | 2 | | | | | | |
| 38 | 25+715 RT | 1-600mm X 9.59 RCP (CL III) | 0.0 | 8.2 | 8.6 | 254.41 | 254.36 | 9.6 | 1.7 | | | | | | | | 2 | | | | | | |
| **CSJ: 2452-01-036 TOTALS** | | | | | | | | | 49.9 | | 14.3 | | 1 | | 1 | | 10 | | | | | | |
| **PROJECT TOTALS** | | | | | | | | | 280.9 | 2 | 16.0 | 2 | 2 | 2 | 1 | 4 | 32 | 2 | 2 | 2 | 4 | 49 | |

✳✳ INCLUDES CEMENT STAB BKFILL FOR TRAFFIC INLET

# REFERS TO CHANGES MADE AS PART OF CHANGE ORDER.

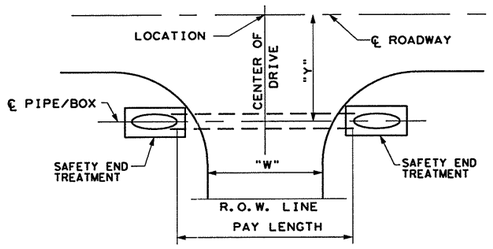


DRIVEWAY WITH PIPE/BOX
TYPICAL PLAN VIEW
NOT TO SCALE

**CHANGE ORDER NO. 99**

-DRIVEWAY DELETIONS, ADDENDUMS AND QUANTITY REVISIONS AS PER THE VARIOUS CHANGE ORDER(S).

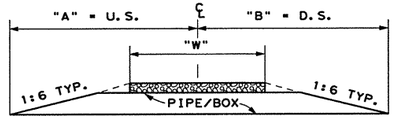


DRIVEWAY WITH PIPE/BOX
TYPICAL SECTION
NOT TO SCALE

✳ SHOWN FOR CONTRACTORS INFORMATION ONLY

⚡ CMP- 2mm THICKNESS & 68mm x 13mm CORRUGATION.

✳✳ INCLUDES CEMENT STAB BKFILL FOR TRAFFIC INLET

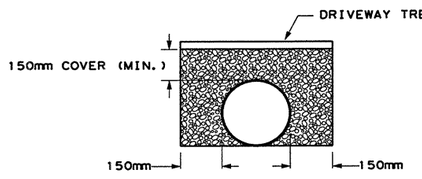


TYPICAL SECTION
CEMENT STABILIZED BACKFILL
NOT TO SCALE

NOTE(S):

S.E.T. (TY I) SHALL BE CONSTRUCTED UTILIZING THE PD-SPR (M) STD. WITH PIPE RUNNERS.

A.S.E.T. (TY II) SHALL BE CONSTRUCTED UTILIZING THE RIPRAP HDWL (M) (MOD) STD.

FOR MORE DETAILS SEE DRIVEWAY LAYOUTS AND DETAIL SHEETS.

CHANGE ORDER 99

REVISED SHEET

STATE OF TEXAS — RUBEN GUERRERO — 95031 — LICENSED PROFESSIONAL ENGINEER

Ruben Guerrero, P.E. 95031 — Date 7-30-05

©2000 Texas Department of Transportation

## DRIVEWAY & MAILBOX SUMMARY

SHEET 2 OF 2

| FED.RD. DIV.NO. | FEDERAL AID PROJECT NO. | | SHEET NO. |
|---|---|---|---|
| 6 | NH 2000(704),etc. | | 28A |
| STATE | DIST. | COUNTY | |
| TEXAS | SAT | BEXAR | |
| CONT. | SECT. | JOB | HIGHWAY NO. |
| 2452 | 01 | 036,etc. | LP 1604 |

07-22-05

Plotted on: 8/8/2005

LEVELS DISPLAYED
1 2 3 4 5 6 7 8 9 10 11 12 13 14 15 16 17 18 19 20 21 22 23 24 25 26 27 28 29 30 31 32 33 34 35 36 37 38 39 40 41 42 43 44 45 46 47 48 49 50 51 52 53 54 55 56 57 58 59 60 61 62 63 64 65 66 67 68 69 70 71 72 73 74 75 76 77 78 79 80 81 82 83 84 85 86 87 88 89 90 91 92 93 94 95 96 97 98 99 100 101 102 103 104 105 106 107 108 109 110 111 112 113 114 115 116 117 118 119 120 121 122 123 124 125 126 127 128

ACC: T:\ROUTESIGN\ 1604FM471
FILE: PAPE DIV PIPE P.DGN

Plotted on: $DATE$

| DRIVEWAY NUMBER (#) | LOCATION | PROPOSED STRUCTURE | "Y" (±) | "A" US | "B" DS | USFL ELEV | DSFL ELEV | PAY LENGTH (PIPE /BOX) | SAFETY END TREATMENT (TY I) (H=1500mm X 600mm) (1:6) (P) | SAFETY END TREATMENT (TY II) (900mm) (RCP) (1:6) | SAFETY END TREATMENT (TY II) (750mm) (RCP) (1:6) | SAFETY END TREATMENT (TY II) (600mm) (RCP) (1:6) | CEMENT STAB BACKFILL | SAFETY END TREATMENT (TY II) (600mm) (RCP) (1:4) | SAFETY END TREATMENT (TY II) (450mm) (RCP) (1:6) | INLET DROP (TY 3) | RIPRAP (CONC) (CL B) | RIPRAP (CONC) FLUME (CL B) |
|---|---|---|---|---|---|---|---|---|---|---|---|---|---|---|---|---|---|---|
| | | | | | | | | M | EA | EA | EA | EA | M3 | EA | EA | EA | M3 | M3 |
| 3 | 15+424 RT | 1-600mm X 13.29 RCP (CL III) | 56.2 | 9.9 | 10.5 | 272.90 | 272.72 | 13.3 | | | | 2 | 2.4 | | | | | |
| 3A | 15+448 RT | 1-600mm X 12.14 RCP (CL III) | 58.1 | 9.1 | 10.2 | 273.17 | 273.00 | 12.1 | | | | 2 | 2.2 | | | | | |
| 9 | 17+542 RT | 1-900mm X 14.14 RCP (CL III) | 32.0 | 12.1 | 12.7 | 288.04 | 287.92 | 14.1 | | 2 | | | 3.4 | | | | | |
| 10 | 17+785 RT | 1-750mm X 18.19 RCP (CL III) | 30.0 | 13.3 | 13.9 | 294.70 | 294.56 | 18.2 | | | 2 | | 3.8 | | | | | |
| 11 | 18+937 RT | 1-600mm X 12.89 RCP (CL III) | 0.0 | 9.8 | 10.3 | 287.70 | 287.60 | 12.9 | | | | 2 | 2.3 | | | | | |
| 12 | 19+435 RT | 1-600mm X 12.15 RCP (CL III) | 0.0 | 9.4 | 9.9 | 287.82 | 287.72 | 12.2 | | | | 2 | 2.2 | | | | | |
| 13 | 19+576 LT | 1-600mm X 5.20 RCP (CL III) | 70.0 | 6.7 | 6.2 | 291.03 | 290.86 | 10.4 | | | | 4 | 1.6 | | | | | |
| 14 | 19+627 RT | 1-600mm X 8.37 RCP (CL III) | 0.0 | 6.8 | 8.8 | 288.25 | 288.09 | 8.4 | | | | 2 | 1.5 | | | | | |
| CSJ: 2452-01-037 TOTALS | | | | | | | | ~~134.7~~ 101.6 | | 2 | 2 | 14 | 19.4 | | | | | |
| ~~5~~ | ~~16+350 LT~~ | ~~2-900mm X 6.4 RCP (CL III)~~ | ~~76.3~~ | ~~6.4~~ | ~~8.6~~ | ~~283.66~~ | ~~283.48~~ | ~~12.8~~ | | ~~4~~ | | | ~~1.5~~ | | | | | |
| 5A | 16+193 LT | -NO PIPE REQUIRED- | | | | | | | | | | | | | | | | |
| 5B | 16+402 LT | 1-600mm X 24.9 RCP (CL III) | SEE LAYOUT | 15.6 | 16.4 | 264.578 | 264.100 | 24.9 | | | | 2 | 8.6 | | | | | |
| 5C | 16+323 LT | 1-600mm X 15.7 RCP (CL III) | SEE LAYOUT | 10.2 | 12.9 | 263.345 | 263.000 | 15.7 | | | | 2 | 5.6 | | | | | |
| 6 | 16+360 RT | 2-1500mm X 600mm X 8.53 MBC | 74.7 | 7.7 | 8.0 | 264.24 | 264.16 | 17.6 | 4 | | | | 10.4 | | | | | |
| 7 | 16+617 RT | 1-600mm X 14.29 RCP (CL III) | 57.7 | 10.6 | 11.2 | 268.86 | 268.73 | 14.3 | | | | 2 | 2.6 | | | | | |
| 8 | 16+720 RT | 1-600mm X 5.92 RCP (CL III) | 69.9 | 6.8 | 8.0 | 272.79 | 272.57 | 5.9 | | | | 2 | 1.1 | | | | | |
| 8A | 16+780 RT | 1-450mm X 34.6 RCP (CL III) | SEE LAYOUT | 16.6 | 23.4 | 272.114 | 271.346 | 34.6 | | | | | 27.3 | | 2 | | | |
| CSJ: 2452-01-038 TOTALS | | | | | | | | 113.0 | 4 | (05) | | 8 | 55.6 | | 2 | | | |
| 23 | 22+262 RT | 1-600mm X 11.01 RCP (CL III) | 0.0 | 8.7 | 9.5 | 253.20 | 253.02 | 11.0 | | | | 2 | 2 | | | | | |
| 24 | 22+325 RT | 1-600mm X 8.66 RCP (CL III) | 0.0 | 9.2 | 8.4 | 252.23 | 252.06 | 8.7 | | | | 2 | 1.6 | | | | | |
| 37 | 25+357 RT | 1-600mm X 12.44 RCP (CL III) | 0.0 | 9.5 | 10.2 | 253.27 | 253.17 | 12.4 | | | | 2 | 2.2 | | | | | |
| 38 | 25+715 RT | 1-600mm X 9.59 RCP (CL III) | 0.0 | 8.2 | 8.6 | 254.41 | 254.36 | 9.6 | | | | 2 | 1.7 | | | | | |
| CSJ: 2452-01-036 TOTALS | | | | | | | | 41.7 | | | | 8 | 7.5 | | | | | |
| PROJECT TOTALS | | | | | | | | 289.4 | 4 | 2 | 2 | 30 | 82.5 | | 2 | | | |

ELIMINATED AS PART OF C.O. # 25

ADDED AS PART OF C.O. # 25.

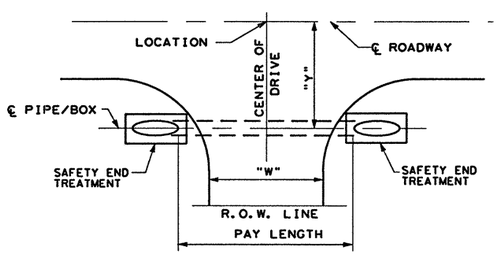


DRIVEWAY WITH PIPE/BOX
TYPICAL PLAN VIEW
NOT TO SCALE

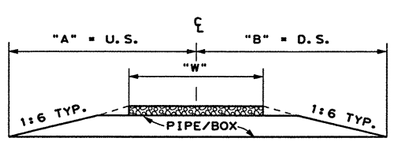


DRIVEWAY WITH PIPE/BOX
TYPICAL SECTION
NOT TO SCALE

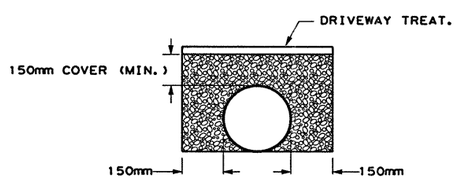


TYPICAL SECTION
CEMENT STABILIZED BACKFILL
NOT TO SCALE

CHANGE ORDER NO. 25

-SHEET REVISED TO ACCOUNT FOR DRIVEWAY DELETIONS, ADDENDUMS AND THE REVISED QUANTITIES ASSOCIATED WITH VARIOUS CHANGE ORDERS.

STATE OF TEXAS
JENNIFER L. MOCZYGEMBA
84734
REGISTERED PROFESSIONAL ENGINEER

Jennifer L. Moczygemba, P.E. 84734

For CO # 25

5-29-02
Date

CHANGE ORDER 25

NOTE(S):

S.E.T. (TY I) SHALL BE CONSTRUCTED UTILIZING THE PD-SPR (M) STD. WITH PIPE RUNNERS.

A S.E.T. (TY II) SHALL BE CONSTRUCTED UTILIZING THE RIPRAP HDWL (M)(MOD) STD.

FOR MORE DETAILS ON DRIVEWAYS SEE LAYOUTS & SEE SHEET(S) 27A, 336A.

©2000 Texas Department of Transportation

## DRIVEWAY & MAILBOX SUMMARY

SHEET 2 OF 2

| FED.RD. DIV.NO. | FEDERAL AID PROJECT NO. | | SHEET NO. |
|---|---|---|---|
| 6 | NH 2000(704), etc. | | 28B |
| STATE | DIST. | COUNTY | |
| TEXAS | SAT | BEXAR | |
| CONT. | SECT. | JOB | HIGHWAY NO. |
| 2452 | 01 | 036, etc. | LP 1604 |

pape+drv+pipe.dgn

Plotted on: $DATE$

| DRIVEWAY NUMBER (#) | LOCATION | PROPOSED STRUCTURE | "Y" (±) | "A" US | "B" DS | USFL ELEV | DSFL ELEV | PAY LENGTH (PIPE /BOX) | SAFETY END TREATMENT (TY I) (H=1500mm X 600mm) (1:6) (P) | SAFETY END TREATMENT (TY II) (900mm) (RCP) (1:6) | SAFETY END TREATMENT (TY II) (750mm) (RCP) (1:6) | SAFETY END TREATMENT (TY II) (600mm) (RCP) (1:6) | CEMENT STAB BACKFILL | SAFETY END TREATMENT (TY II) (600mm) (RCP) (1:4) | SAFETY END TREATMENT (TY II) (450mm) (RCP) (1:6) | INLET DROP (TY 3) (COMPL) | RIPRAP (CONC) (CL B) | INLET TRAFFIC TY X-5 (COMPL) | CMP (GALSTL 450mm) (RISER) | CONCRETE COLLAR (CL A) |
|---|---|---|---|---|---|---|---|---|---|---|---|---|---|---|---|---|---|---|---|---|
| | | | | | | | | M | EA | EA | EA | EA | M3 | EA | EA | EA | M3 | EA | M | EA |
| ~~3~~ | ~~15+424 RT~~ | ~~1-600mm X 19.29 RCP (CL III)~~ | ~~SEE LAYOUT~~ | ~~9.9~~ | ~~10.5~~ | ~~272.50~~ | ~~272.42~~ | ~~19.3~~ | | | | ~~2~~ | ~~2.1~~ | | | | | | | |
| 3 | 15+425 RT | 1-600mm X 25.9 RCP (CL III) | SEE LAYOUT | 13.1 | 18.0 | D.I. I5A | 272.365 | 25.9 | | | | 1 | 13.0 | | | 1 | 1.7 | | | |
| ~~3A~~ | ~~15+440 RT~~ | ~~1-600mm X 12.14 RCP (CL III)~~ | ~~SEE LAYOUT~~ | ~~9.1~~ | ~~10.2~~ | ~~273.17~~ | ~~273.08~~ | ~~12.1~~ | | | | ~~2~~ | ~~2.2~~ | | | | | | | |
| 3A | 15+452 RT | 1-600mm X 22.9 RCP (CL III) | SEE LAYOUT | 12.5 | 14.5 | 273.134 | D.I. I5A | 22.9 | | | | 1 | 9.1 | | | | | | | |
| 3B | 15+576 RT | 1-600mm X 20.8 RCP (CL III) | SEE LAYOUT | 13.0 | 14.0 | 271.716 | 270.929 | 20.8 | | | | 2 | ✱✱ 56.7 | | | | | 1 | 0.9 | 1 |
| 3C | 15+617 RT | 1-600mm X 20.8 RCP (CL III) | SEE LAYOUT | 11.6 | 15.4 | 270.536 | 269.749 | 20.8 | | | | 2 | ✱✱ 63.9 | | | | | 1 | 1.1 | 1 |
| 9 | 17+542 RT | 1-900mm X 14.14 RCP (CL III) | 32.0 | 12.1 | 12.7 | 288.04 | 287.92 | 14.1 | | 2 | | 2 | 3.4 | | | | | | | |
| 10 | 17+785 RT | 1-750mm X 18.19 RCP (CL III) | 30.0 | 13.3 | 13.9 | 294.70 | 294.56 | 18.2 | | | 2 | | 3.8 | | | | | | | |
| 11 | 18+937 RT | 1-600mm X 12.89 RCP (CL III) | 0.0 | 9.8 | 10.3 | 287.70 | 287.60 | 12.9 | | | | 2 | 2.3 | | | | | | | |
| 12 | 19+435 RT | 1-600mm X 12.15 RCP (CL III) | 0.0 | 9.4 | 9.9 | 287.82 | 287.72 | 12.2 | | | | 2 | 2.2 | | | | | | | |
| 13 | 19+576 LT | 1-600mm X 5.20 RCP (CL III) | 70.0 | 6.7 | 6.2 | 291.03 | 290.86 | 10.4 | | | | 4 | 1.6 | | | | | | | |
| 14 | 19+627 RT | 1-600mm X 8.37 RCP (CL III) | 0.0 | 6.8 | 8.8 | 288.25 | 288.09 | 8.4 | | | | 2 | 1.5 | | | | | | | |
| **CSJ: 2452-01-037 TOTALS** | | | | | | | | 166.6 | | 2 | 2 | 18 | 157.5 | | | 1 | 1.7 | 2 | 2.0 | 2 |
| ~~5~~ | ~~16+350 LT~~ | ~~2-900mm X 6.4 RCP (CL III)~~ | ~~76.3~~ | ~~8.4~~ | ~~8.8~~ | ~~263.60~~ | ~~263.48~~ | ~~12.8~~ | | ~~4~~ | | | ~~1.5~~ | | | | | | | |
| 5A | 16+193 LT | -NO PIPE REQUIRED- | | | | | | | | | | | | | | | | | | |
| 5B | 16+402 LT | 1-600mm X 24.9 RCP (CL III) | SEE LAYOUT | 15.6 | 16.4 | 264.578 | 264.100 | 24.9 | | | | 2 | 8.6 | | | | | | | |
| 5C | 16+323 LT | 1-600mm X 15.7 RCP (CL III) | SEE LAYOUT | 10.2 | 12.9 | 263.345 | 263.000 | 15.7 | | | | 2 | 5.6 | | | | | | | |
| 6 | 16+360 RT | 2-1500mm X 600mm X 8.53 MBC | 74.7 | 7.7 | 8.0 | 264.24 | 264.16 | 17.6 | 4 | | | | 10.4 | | | | | | | |
| 7 | 16+617 RT | 1-600mm X 14.29 RCP (CL III) | 57.7 | 10.6 | 11.2 | 268.86 | 268.73 | 14.3 | | | | 2 | 2.6 | | | | | | | |
| 8 | 16+720 RT | 1-600mm X 5.92 RCP (CL III) | 69.9 | 6.8 | 8.0 | 272.79 | 272.57 | 5.9 | | | | 2 | 1.1 | | | | | | | |
| 8A | 16+780 RT | 1-450mm X 34.6 RCP (CL III) | SEE LAYOUT | 16.6 | 23.4 | 272.114 | 271.346 | 34.6 | | | | | 27.3 | | 2 | | | | | |
| **CSJ: 2452-01-038 TOTALS** | | | | | | | | 113.0 | 4 | 0 | | 8 | 55.6 | | 2 | | | | | |
| 23 | 22+262 RT | 1-600mm X 11.01 RCP (CL III) | 0.0 | 8.7 | 9.5 | 253.20 | 253.02 | 11.0 | | | | 2 | 2 | | | | | | | |
| 24 | 22+325 RT | 1-600mm X 8.66 RCP (CL III) | 0.0 | 9.2 | 8.4 | 252.23 | 252.06 | 8.7 | | | | 2 | 1.6 | | | | | | | |
| 37 | 25+357 RT | 1-600mm X 12.44 RCP (CL III) | 0.0 | 9.5 | 10.2 | 253.27 | 253.17 | 12.4 | | | | 2 | 2.2 | | | | | | | |
| 38 | 25+715 RT | 1-600mm X 9.59 RCP (CL III) | 0.0 | 8.2 | 8.6 | 254.41 | 254.36 | 9.6 | | | | 2 | 1.7 | | | | | | | |
| **CSJ: 2452-01-036 TOTALS** | | | | | | | | 41.7 | | | | 8 | 7.5 | | | | | | | |
| **PROJECT TOTALS** | | | | | | | | 321.3 | 4 | 2 | 2 | 34 | 220.6 | | 2 | 1 | 1.7 | 2 | 2.0 | 2 |

25

(#) REFERS TO CHANGES MADE AS PART OF CHANGE ORDER.

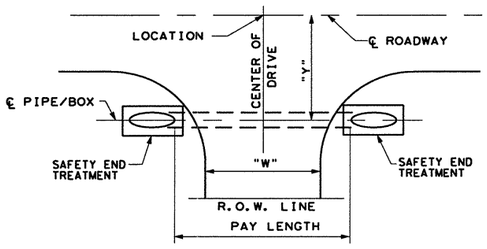


DRIVEWAY WITH PIPE/BOX
TYPICAL PLAN VIEW
NOT TO SCALE

**CHANGE ORDER NO. 28**

-DRIVEWAY DELETIONS, ADDENDUMS AND QUANTITY REVISIONS AS PER THE VARIOUS CHANGE ORDER(S).

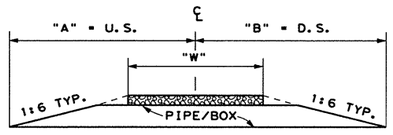


DRIVEWAY WITH PIPE/BOX
TYPICAL SECTION
NOT TO SCALE

✱ SHOWN FOR CONTRACTORS INFORMATION ONLY

CMP- 2mm THICKNESS & 68mm x 13mm CORRUGATION.

✱✱ INCLUDES CEMENT STAB BKFILL FOR TRAFFIC INLET

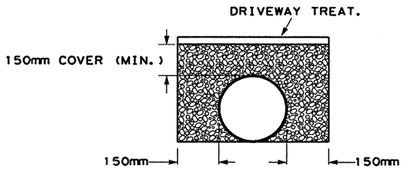


TYPICAL SECTION
CEMENT STABILIZED BACKFILL
NOT TO SCALE

CHANGE ORDER 28

REVISED SHEET

STATE OF TEXAS
JEROME D. PAVLISKA
76075
REGISTERED
PROFESSIONAL ENGINEER

Jerome D. Pavlisko, P.E. 8-11-03
Jerome D. Pavlisko, P.E. Date

NOTE(S):

S.E.T. (TY I) SHALL BE CONSTRUCTED UTILIZING THE PD-SPR (M) STD. WITH PIPE RUNNERS.

A S.E.T. (TY II) SHALL BE CONSTRUCTED UTILIZING THE RIPRAP HDWL (M)(MOD) STD.

FOR MORE DETAILS SEE DRIVEWAY LAYOUTS AND DETAIL SHEETS.

©2000 Texas Department of Transportation

**DRIVEWAY & MAILBOX SUMMARY**

SHEET 2 OF 2

| FED.RD. DIV.NO. | FEDERAL AID PROJECT NO. | | SHEET NO. |
|---|---|---|---|
| 6 | NH 2000(704),etc. | | 28C |
| STATE | DIST. | COUNTY | |
| TEXAS | SAT | BEXAR | |
| CONT. | SECT. | JOB | HIGHWAY NO. |
| 2452 | 01 | 036,etc. | LP 1604 |

07-11-03

LEVEL: $LEVEL$
ACC: T:\AO\DESIGN\ 1604FM471
FILE: PAPE-DIV-PIPE.DGN

Plotted on: 11/24/2004

| DRIVEWAY NUMBER (#) | LOCATION | PROPOSED STRUCTURE | "Y" (±) | "A" US | "B" DS | USFL ELEV | DSFL ELEV | PAY LENGTH (PIPE /BOX) | CONCRETE STAB BACKFILL | CONCRETE COLLAR (CL A) | RIPRAP (CONC) (CL B) | CMP (GALSTL 450mm) ⚡ | INLET DROP (TY 3) (COMPL) | INLET TRAFFIC TY X-5 (COMPL) | SAFETY END TREATMENT (TY II) (600mm) (RCP) (1:4) | SAFETY END TREATMENT (TY II) (450mm) (RCP) (1:6) | SAFETY END TREATMENT (TY II) (600mm) (RCP) (1:6) | SAFETY END TREATMENT (TY II) (750mm) (RCP) (1:6) | SAFETY END TREATMENT (TY II) (900mm) (RCP) (1:6) | SAFETY END TREATMENT (TY II) (600mm) (RCP) (1:3) | SAFETY END TREATMENT (TY I) (H=1500mm X 600mm) (1:6) (P) |
|---|---|---|---|---|---|---|---|---|---|---|---|---|---|---|---|---|---|---|---|---|---|
| | | | | | | | | M | M3 | EA | M3 | M | EA | EA | EA | EA | EA | EA | EA | EA | EA |
| ~~3~~ | ~~15+424 RT~~ | ~~1-600mm X 13.29 RCP (CL III)~~ | ~~56.2~~ | ~~9.9~~ | ~~10.5~~ | ~~272.90~~ | ~~272.72~~ | ~~13.3~~ | ~~2.4~~ | | | | | | | | ~~2~~ | | | | |
| 3 | 15+425 RT | 1-600mm X 25.9 RCP (CL III) | SEE LAYOUT | 13.1 | 18.0 | D.I. 15A | 272.365 | 25.9 | 13.0 | | 1.7 | | 1 | | | | 1 | | | | |
| ~~3A~~ | ~~15+440 RT~~ | ~~1-600mm X 12.14 RCP (CL III)~~ | ~~50.1~~ | ~~9.1~~ | ~~10.2~~ | ~~273.17~~ | ~~273.00~~ | ~~12.1~~ | ~~2.2~~ | | | | | | | | ~~2~~ | | | | |
| 3A | 15+452 RT | 1-600mm X 22.9 RCP (CL III) | SEE LAYOUT | 12.5 | 14.5 | 273.134 | D.I. 15A | 22.9 | 9.1 | | | | | | | | 1 | | | | |
| 3B | 15+576 RT | 1-600mm X 20.8 RCP (CL III) | SEE LAYOUT | 13.0 | 14.0 | 271.716 | 270.929 | 20.8 | ✣ 56.7 | 1 | | 0.9 | | 1 | | | 2 | | | | |
| 3C | 15+617 RT | 1-600mm X 20.8 RCP (CL III) | SEE LAYOUT | 11.6 | 15.4 | 270.536 | 269.749 | 20.8 | ✣ 63.9 | 1 | | 1.1 | | 1 | | | 2 | | | | |
| 9 | 17+542 RT | 1-900mm X 14.14 RCP (CL III) | 32.0 | 12.1 | 12.7 | 288.04 | 287.92 | 14.1 | 3.4 | | | | | | | | 2 | | 2 | | |
| 10 | 17+785 RT | 1-750mm X 18.19 RCP (CL III) | 30.0 | 13.3 | 13.9 | 294.70 | 294.56 | 18.2 | 3.8 | | | | | | | | | 2 | | | |
| 11 | 18+937 RT | 1-600mm X 12.89 RCP (CL III) | 0.0 | 9.8 | 10.3 | 287.70 | 287.60 | 12.9 | 2.3 | | | | | | | | 2 | | | | |
| 12 | 19+435 RT | 1-600mm X 12.15 RCP (CL III) | 0.0 | 9.4 | 9.9 | 287.82 | 287.72 | 12.2 | 2.2 | | | | | | | | 2 | | | | |
| 13 | 19+576 LT | 1-450mm X 7.80 RCP (CL III) | SEE LAYOUT | 6.3 | 6.9 | 291.00 | 290.85 | 7.8 | 5.1 | | | | | | | 2 | | | | | |
| 14 | 19+627 RT | 1-600mm X 8.37 RCP (CL III) | 0.0 | 6.8 | 8.8 | 288.25 | 288.09 | 8.4 | 1.5 | | | | | | | | 2 | | | | |
| 15 | 19+845 LT | 1-600mm X 10.2 RCP (CL III) | SEE LAYOUT | 5.3 | 5.3 | 284.767 | 284.162 | 10.2 | 14.4 | | | | | | | | | | | 2 | |
| CSJ: 2452-01-037 TOTALS | | | | | | | | | 75.4 | 2 | 1.7 | 2 | 1 | 2 | | 2 | 14 | 2 | 2 | 2 | |

28 ✣ INCLUDES CEMENT STAB BKFILL FOR TRAFFIC INLET

| | | | | | | | | | | | | | | | | | | | | | |
|---|---|---|---|---|---|---|---|---|---|---|---|---|---|---|---|---|---|---|---|---|---|
| ~~5~~ | ~~16+350 LT~~ | ~~2-900mm X 6.4 RCP (CL III)~~ | ~~76.3~~ | ~~6.4~~ | ~~6.8~~ | ~~263.60~~ | ~~263.48~~ | ~~12.8~~ | ~~1.5~~ | | | | | | | | | | ~~4~~ | | |
| 5A | 16+193 LT | -NO PIPE REQUIRED- | | | | | | | | | | | | | | | | | | | |
| 5B | 16+402 LT | 1-600mm X 24.9 RCP (CL III) | SEE LAYOUT | 15.6 | 16.4 | 264.578 | 264.100 | 24.9 | 8.6 | | | | | | | | 2 | | | | |
| 5C | 16+323 LT | 1-600mm X 15.7 RCP (CL III) | SEE LAYOUT | 10.2 | 12.9 | 263.345 | 263.000 | 15.7 | 5.6 | | | | | | | | 2 | | | | |
| 6 | 16+360 RT | 2-1500mm X 600mm X 8.53 MBC | 74.7 | 7.7 | 8.0 | 264.24 | 264.16 | 17.6 | 10.4 | | | | | | | | | | | 4 | |
| 7 | 16+617 RT | 1-600mm X 14.29 RCP (CL III) | 57.7 | 10.6 | 11.2 | 268.86 | 268.73 | 14.3 | 2.6 | | | | | | | | 2 | | | | |
| 8 | 16+720 RT | 1-600mm X 5.92 RCP (CL III) | 69.9 | 6.8 | 8.0 | 272.79 | 272.57 | 5.9 | 1.1 | | | | | | | | 2 | | | | |
| 8A | 16+780 RT | 1-450mm X 34.6 RCP (CL III) | SEE LAYOUT | 16.6 | 23.4 | 272.114 | 271.346 | 34.6 | 27.3 | | | | | | | 2 | | | | | |
| CSJ: 2452-01-038 TOTALS | | | | | | | | | 55.6 | | | | | | | 2 | 8 | | 0 | | 4 |

| | | | | | | | | | | | | | | | | | | | | | |
|---|---|---|---|---|---|---|---|---|---|---|---|---|---|---|---|---|---|---|---|---|---|
| 18 | 0+263 LT | -NO PIPE REQUIRED- | | | | | | | | | 3.5 | | | | | | | | | | |
| 19 | 21+642 LT | 1-600mm X 28.9 RCP (CL III) | SEE LAYOUT | 15.5 | 13.4 | DROP INLET | 259.200 | 28.9 | 44.0 | | 4.1 | | 1 | | 1 | | | | | | |
| 42 | 21+466 RT | 1-600mm X 22.5 RCP (CL III) | 0.0 | 13.6 | 16.3 | 258.18 | 256.99 | 22.5 | | | | | | | | | 2 | | | | |
| 23 | 22+262 RT | 1-600mm X 11.01 RCP (CL III) | 0.0 | 8.7 | 9.5 | 253.20 | 253.02 | 11.0 | | | | | | | | | 2 | | | | |
| 24 | 22+325 RT | 1-600mm X 8.66 RCP (CL III) | 0.0 | 9.2 | 8.4 | 252.23 | 252.06 | 8.7 | 2 | | | | | | | | 2 | | | | |
| 27 | 22+517 LT | -NO PIPE REQUIRED- | | | | | | | | | 2.2 | | | | | | | | | | |
| 28 | 20+369 LT | -NO PIPE REQUIRED- | | | | | | | | | 4.5 | | | | | | | | | | |
| 37 | 25+357 RT | 1-600mm X 12.44 RCP (CL III) | 0.0 | 9.5 | 10.2 | 253.27 | 253.17 | 12.4 | 2.2 | | | | | | | | 2 | | | | |
| 38 | 25+715 RT | 1-600mm X 9.59 RCP (CL III) | 0.0 | 8.2 | 8.6 | 254.41 | 254.36 | 9.6 | 1.7 | | | | | | | | 2 | | | | |
| CSJ: 2452-01-036 TOTALS | | | | | | | | | 49.9 | | 14.3 | | 1 | | 1 | | 10 | | | | |
| PROJECT TOTALS | | | | | | | | | 280.9 | 2 | 16.0 | 2 | 2 | 2 | 1 | 4 | 32 | 2 | 2 | 2 | 4 |

# REFERS TO CHANGES MADE AS PART OF CHANGE ORDER.

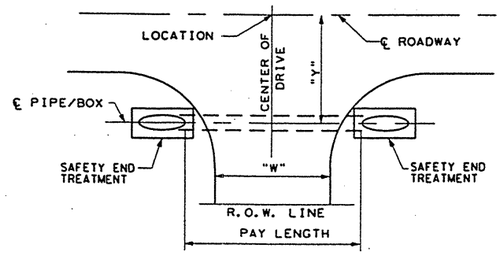


DRIVEWAY WITH PIPE/BOX
TYPICAL PLAN VIEW
NOT TO SCALE

CHANGE ORDER NO. 64

-DRIVEWAY DELETIONS, ADDENDUMS AND QUANTITY REVISIONS AS PER THE VARIOUS CHANGE ORDER(S).

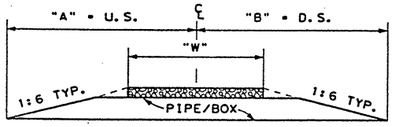


DRIVEWAY WITH PIPE/BOX
TYPICAL SECTION
NOT TO SCALE

✳ SHOWN FOR CONTRACTORS INFORMATION ONLY

⚡ CMP- 2mm THICKNESS & 68mm x 13mm CORRUGATION.

✣ INCLUDES CEMENT STAB BKFILL FOR TRAFFIC INLET

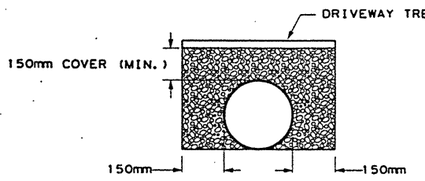


TYPICAL SECTION
CEMENT STABILIZED BACKFILL
NOT TO SCALE

CHANGE ORDER 64

REVISED SHEET

NOTE(S):

S.E.T. (TY I) SHALL BE CONSTRUCTED UTILIZING THE PD-SPR (M) STD. WITH PIPE RUNNERS.

A.S.E.T. (TY II) SHALL BE CONSTRUCTED UTILIZING THE RIPRAP HDWL (M) (MOD) STD.

FOR MORE DETAILS SEE DRIVEWAY LAYOUTS AND DETAIL SHEETS.

©2000 Texas Department of Transportation

## DRIVEWAY & MAILBOX SUMMARY

SHEET 2 OF 2

| FED. RD. DIV. NO. | FEDERAL AID PROJECT NO. | | SHEET NO. |
|---|---|---|---|
| 6 | NH 2000(704), etc. | | 28C |
| STATE | DIST. | COUNTY | |
| TEXAS | SAT | BEXAR | |
| CONT. | SECT. | JOB | HIGHWAY NO. |
| 2452 | 01 | 036, etc. | LP 1604 |

LEVELS DISPLAYED 1 2 3 4 5 6 7 8 9 10 11 12 13 14 15 16 17 18 19 20 21 22 23 24 25 26 27 28 29 30 31 32 33 34 35 36 37 38 39 40 41 42 43 44 45 46 47 48 49 50 51 52 53 54 55 56 57 58 59 60 61 62 63 64 65 66 67 68 69 70 71 72 73 74 75 76 77 78 79 80 81 82 83 84 85 86 87 88 89 90 91 92 93 94 95 96 97 98 99 100 101 102 103 104 105 106 107 108 109 110 111 112 113 114 115 116 117 118 119 120 121 122 123 124 125 126 127 128 129 130 131 132 133 134 135 136 137 138 139 140 141 142 143 144 145 146 147 148 149 150 151 152 153 154 155 156 157 158 159 160 161 162 163 164 165 166 167 168 169 170 171 172 173 174 175 176 177 178 179 180 181 182 183 184 185 186 187 188 189 190 191 192 193 194 195 196 197 198 199 200 201 202 203 204 205 206 207 208 209 210 211 212 213 214 215 216 217 218 219 220 221 222 223 224 225 226 227 228 229 230 231 232 233 234 235 236 237 238 239 240 241 242 243 244 245 246 247 248 249 250 251 252 253 254 255

ACCT:\AO\DESIGN 1604FM471
FILE: PAPE DIV PIPE P.DGN

| DRIVEWAY NUMBER ⟨#⟩ | LOCATION | PROPOSED STRUCTURE | "Y" (±) | "A" US | "B" DS | USFL ELEV | DSFL ELEV | PAY LENGTH (PIPE /BOX) | CONCRETE STAB BACKFILL | CONCRETE COLLAR (CL A) | RIPRAP (CONC) (CL B) | CMP (GALSTL) 450mm | INLET DROP (TY 3) (COMPL) | INLET TRAFFIC TY X-5 (COMPL) | SAFETY END TREATMENT (TY II) (600mm) (RCP) (1:4) | SAFETY END TREATMENT (TY II) (450mm) (RCP) (1:6) | SAFETY END TREATMENT (TY II) (600mm) (RCP) (1:6) | SAFETY END TREATMENT (TY II) (750mm) (RCP) (1:6) | SAFETY END TREATMENT (TY II) (900mm) (RCP) (1:6) | SAFETY END TREATMENT (TY II) (600mm) (RCP) (1:3) | TY II S.E.T. DES 3 ARCH C.M.P 1:6 | SAFETY END TREATMENT (TY I) (H=1500mm X 600mm) (1:6) (P) | SAWCUT EXIST. | |
|---|---|---|---|---|---|---|---|---|---|---|---|---|---|---|---|---|---|---|---|---|---|---|---|---|
| | | | | | | | | M | M3 | EA | M3 | M | EA | EA | EA | EA | EA | EA | EA | EA | EA | EA | M | |
| ~~3~~ | ~~15+424 RT~~ | ~~1-600mm X 13.29 RCP (CL III)~~ | ~~56.2~~ | ~~9.9~~ | ~~10.5~~ | ~~272.90~~ | ~~272.72~~ | ~~13.3~~ | ~~2.4~~ | | | | | | | | ~~2~~ | | | | | | | |
| 3 | 15+425 RT | 1-600mm X 25.9 RCP (CL III) | SEE LAYOUT | 13.1 | 18.0 | D.I. 15A | 272.365 | 25.9 | 13.0 | | 1.7 | | 1 | | | | 1 | | | | | | | |
| ~~3A~~ | ~~15+448 RT~~ | ~~1-600mm X 12.14 RCP (CL III)~~ | ~~58.1~~ | ~~9.1~~ | ~~10.2~~ | ~~273.17~~ | ~~273.00~~ | ~~12.1~~ | ~~2.2~~ | | | | | | | | ~~2~~ | | | | | | | |
| 3A | 15+452 RT | 1-600mm X 22.9 RCP (CL III) | SEE LAYOUT | 12.5 | 14.5 | 273.134 | D.I. 15A | 22.9 | 9.1 | | | | | | | | 1 | | | | | | | |
| 3B | 15+576 RT | 1-600mm X 20.8 RCP (CL III) | SEE LAYOUT | 13.0 | 14.0 | 271.716 | 270.929 | 20.8 | ✣ 56.7 | 1 | | 0.9 | | 1 | | | 2 | | | | | | | |
| 3C | 15+617 RT | 1-600mm X 20.8 RCP (CL III) | SEE LAYOUT | 11.6 | 15.4 | 270.536 | 269.749 | 20.8 | ✣ 63.9 | 1 | | 1.1 | | 1 | | | 2 | | | | | | | |
| 9 | 17+542 RT | 1-900mm X 14.14 RCP (CL III) | 32.0 | 12.1 | 12.7 | 288.04 | 287.92 | 14.1 | 3.4 | | | | | | | | 2 | | 2 | | | | | |
| 10 | 17+785 RT | 1-750mm X 18.19 RCP (CL III) | 30.0 | 13.3 | 13.9 | 294.70 | 294.56 | 18.2 | 3.8 | | | | | | | | | 2 | | | | | | |
| 11 | 18+937 RT | 1-600mm X 12.89 RCP (CL III) | 0.0 | 9.8 | 10.3 | 287.70 | 287.60 | 12.9 | 2.3 | | | | | | | | 2 | | | | | | | |
| 12 | 19+435 RT | 1-600mm X 12.15 RCP (CL III) | 0.0 | 9.4 | 9.9 | 287.82 | 287.72 | 12.2 | 2.2 | | | | | | | | 2 | | | | | | | |
| 13 | 19+576 LT | 1-450mm X 7.80 RCP (CL III) | SEE LAYOUT | 6.3 | 6.9 | 291.00 | 290.85 | 7.8 | 5.1 | | | | | | | 2 | | | | | | | | 64 |
| 14 | 19+627 RT | 1-600mm X 8.37 RCP (CL III) | 0.0 | 6.8 | 8.8 | 288.25 | 288.09 | 8.4 | 1.5 | | | | | | | | 2 | | | | | | | |
| 15 | 19+845 LT | 1-600mm X 9.8 RCP (CL III) | SEE LAYOUT | 7.5 | 9.5 | 286.000 | 285.650 | 9.8 | 12.0 | | | | | | | | | | | 2 | | | 14 | 99 |
| | | **CSJ: 2452-01-037 TOTALS** | | | | | | | 173.0 | 2 | 1.7 | 2 | 1 | 2 | | 2 | 16 | 2 | 2 | 2 | | | 14 | |
| ~~5~~ | ~~16+350 LT~~ | ~~2-900mm X 6.4 RCP (CL III)~~ | ~~76.3~~ | ~~8.4~~ | ~~8.8~~ | ~~263.60~~ | ~~263.48~~ | ~~12.8~~ | ~~1.5~~ | | | | | | | | | | | | | | | |
| 5A | 16+193 LT | -NO PIPE REQUIRED- | | | | | | | | | | | | | | | | | | | | | | |
| 5B | 16+402 LT | 1-600mm X 24.9 RCP (CL III) | SEE LAYOUT | 15.6 | 16.4 | 264.578 | 264.100 | 24.9 | 8.6 | | | | | | | | 2 | | | | | | | |
| 5C | 16+323 LT | 1-600mm X 15.7 RCP (CL III) | SEE LAYOUT | 10.2 | 12.9 | 263.345 | 263.000 | 15.7 | 5.6 | | | | | | | | 2 | | | | | | | |
| 6 | 16+360 RT | 2-1500mm X 600mm X 8.53 MBC | 74.7 | 7.7 | 8.0 | 264.24 | 264.16 | 17.6 | 10.4 | | | | | | | | | | | | | 4 | | |
| 7 | 16+617 RT | 1-600mm X 14.29 RCP (CL III) | 57.7 | 10.6 | 11.2 | 268.86 | 268.73 | 14.3 | 2.6 | | | | | | | | 2 | | | | | | | |
| 8 | 16+720 RT | 1-600mm X 5.92 RCP (CL III) | 69.9 | 6.8 | 8.0 | 272.79 | 272.57 | 5.9 | 1.1 | | | | | | | | 2 | | | | | | | |
| 8A | 16+780 RT | 1-450mm X 34.6 RCP (CL III) | SEE LAYOUT | 16.6 | 23.4 | 272.114 | 271.346 | 34.6 | 27.3 | | | | | | | 2 | | | | | | | | 25 |
| | | **CSJ: 2452-01-038 TOTALS** | | | | | | | 55.6 | | | | | | | 2 | 8 | | | | | 4 | | |
| 18 | 0+263 LT | -NO PIPE REQUIRED- | | | | | | | | | 3.5 | | | | | | | | | | | | | |
| 19 | 21+645.921 LT | 1-600mm X 28.9 RCP (CL III) | SEE LAYOUT | 17.9 | 13.2 | DROP INLET | 259.200 | 28.9 | 44.0 | | 4.1 | | 1 | | 1 | | | | | | | | 35 | |
| 42 | 21+466 RT | 1-600mm X 22.5 RCP (CL III) | 0.0 | 13.6 | 16.3 | 258.18 | 256.99 | 22.5 | | | | | | | | | 2 | | | | | | | |
| 23 | 22+262 RT | 1-600mm X 11.01 RCP (CL III) | 0.0 | 8.7 | 9.5 | 253.20 | 253.02 | 11.0 | | | | | | | | | 2 | | | | | | | |
| 24 | 22+325 RT | 1-600mm X 8.66 RCP (CL III) | 0.0 | 9.2 | 8.4 | 252.23 | 252.06 | 8.7 | 2 | | | | | | | | 2 | | | | | | | |
| 27 | 22+517 LT | -NO PIPE REQUIRED- | | | | | | | | | 2.2 | | | | | | | | | | | | | |
| 28 | 20+369 LT | -NO PIPE REQUIRED- | | | | | | | | | 4.5 | | | | | | | | | | | | | |
| 37 | 25+357 RT | 1-600mm X 12.44 RCP (CL III) | 0.0 | 9.5 | 10.2 | 253.27 | 253.17 | 12.4 | 2.2 | | | | | | | | | | | | | | | |
| ~~38~~ | ~~25+715 RT~~ | ~~1-600mm X 9.59 RCP (CL III)~~ | ~~0.0~~ | ~~8.2~~ | ~~8.6~~ | ~~254.41~~ | ~~254.36~~ | ~~9.6~~ | ~~1.7~~ | | | | | | | | ~~2~~ | | | | | | | |
| ~~39A~~ | ~~35+02 RT~~ | ~~1-600mm X 28.8 RCP (CL III)~~ | ~~SEE LAYOUT~~ | ~~16.3~~ | ~~16.0~~ | ~~253.83~~ | ~~253.70~~ | ~~28.8~~ | ~~2.8~~ | | | | | | | | ~~2~~ | | | | | | | |
| 44 | 21+132 RT | 2-DES 3 ARCH PIPES (CMP) | SEE LAYOUT | 9.0 | 13.0 | 268.47 | 267.83 | 32 | 20 | | | | | | | | | | | | 4 | | | |
| | | **CSJ: 2452-01-036 TOTALS** | | | | | | | 68.2 | | 14.3 | | 1 | 1 | | | 6 | | | | 4 | | | |
| | | **PROJECT TOTALS** | | | | | | | 296.8 | 2 | 16.0 | 2 | 2 | 2 | 1 | 4 | 28 | 2 | 2 | 2 | 4 | 4 | 49 | 99 129 |

28 ✣ INCLUDES CEMENT STAB BKFILL FOR TRAFFIC INLET

# CHANGE ORDER 129

# REVISED SHEET

#  REFERS TO CHANGES MADE AS PART OF CHANGE ORDER.

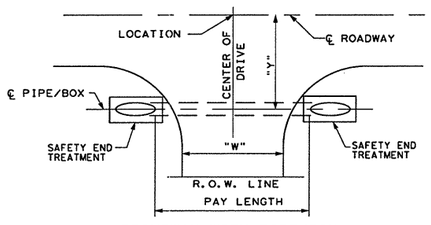


DRIVEWAY WITH PIPE/BOX
TYPICAL PLAN VIEW
NOT TO SCALE

**CHANGE ORDER NO. 129**

-DRIVEWAY DELETIONS, ADDENDUMS AND QUANTITY REVISIONS AS PER THE VARIOUS CHANGE ORDER(S).

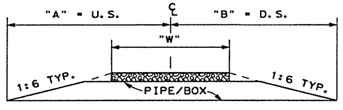


DRIVEWAY WITH PIPE/BOX
TYPICAL SECTION
NOT TO SCALE

✳ SHOWN FOR CONTRACTORS INFORMATION ONLY

CMP- 2mm THICKNESS & 68mm x 13mm CORRUGATION.

✣ INCLUDES CEMENT STAB BKFILL FOR TRAFFIC INLET

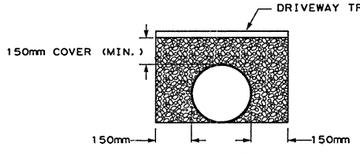


TYPICAL SECTION
CEMENT STABILIZED BACKFILL
NOT TO SCALE

NOTE(S):

S.E.T. (TY I) SHALL BE CONSTRUCTED UTILIZING THE PD-SPR (M) STD. WITH PIPE RUNNERS.

A.S.E.T. (TY II) SHALL BE CONSTRUCTED UTILIZING THE RIPRAP HDWL (M) (MOD) STD.

FOR MORE DETAILS SEE DRIVEWAY LAYOUTS AND DETAIL SHEETS.

STATE OF TEXAS
FITZGERALDO G. SANCHEZ
76084
LICENCED PROFESSIONAL ENGINEER

Fitzgerald G. Sanchez 06-13-06
Fitzgeraldo G. Sanchez, P.E. Date

©2000 Texas Department of Transportation

## DRIVEWAY & MAILBOX SUMMARY

SHEET 2 OF 2

| FED.RD. DIV.NO. | FEDERAL AID PROJECT NO. | | SHEET NO. |
|---|---|---|---|
| 6 | NH 2000(704),etc. | | 28A |
| STATE | DIST. | COUNTY | |
| TEXAS | SAT | BEXAR | |
| CONT. | SECT. | JOB | HIGHWAY NO. |
| 2452 | 01 | 036,etc. | LP 1604 |

6-09-06

LEVELS DISPLAYED
1 2 3 4 5 6 7 8 9 10 11 12 13 14 15 16
17 18 19 20 21 22 23 24 25 26 27 28 29 30 31 32
33 34 35 36 37 38 39 40 41 42 43 44 45 46 47 48
49 50 51 52 53 54 55 65 75 85 95 106 116 263
ACC: 481a1a1:/usr/d481303
FILE: .DGN
I-90\Summaries\pope\drv\pipeP.dgn
6/15/2006

| DRIVEWAY NUMBER (#) | LOCATION | PROPOSED STRUCTURE | "Y" (±) | "A" US | "B" DS | USFL ELEV | DSFL ELEV | PAY LENGTH (PIPE /BOX) | CONCRETE STAB BACKFILL | CONCRETE COLLAR (CL A) | RIPRAP (CONC) (CL B) | CMP (GALSTL) 450mm | INLET DROP (TY 3) (COMPL) | INLET TRAFFIC TY X-5 (COMPL) | SAFETY END TREATMENT (TY II) (600mm) (RCP) (1:4) | SAFETY END TREATMENT (TY II) (450mm) (RCP) (1:6) | SAFETY END TREATMENT (TY II) (600mm) (RCP) (1:6) | SAFETY END TREATMENT (TY II) (750mm) (RCP) (1:6) | SAFETY END TREATMENT (TY II) (900mm) (RCP) (1:6) | SAFETY END TREATMENT (TY II) (600mm) (RCP) (1:3) | TY II S.E.T. DES 3 ARCH C.M.P 1:6 | SAFETY END TREATMENT (TY I) (H=1500mm X 600mm) (1:6) (P) | SAWCUT EXIST. | CMP AR (GAL STL DES 3) | |
|---|---|---|---|---|---|---|---|---|---|---|---|---|---|---|---|---|---|---|---|---|---|---|---|---|---|
| | | | | | | | | M | M3 | EA | M3 | M | EA | EA | EA | EA | EA | EA | EA | EA | EA | EA | M | M | |
| ~~3~~ | ~~15+424 RT~~ | ~~1-600mm X 13.29 RCP (CL III)~~ | ~~56.2~~ | ~~9.9~~ | ~~10.5~~ | ~~272.90~~ | ~~272.72~~ | ~~13.3~~ | ~~2.4~~ | | | | | | | | ~~2~~ | | | | | | | | |
| 3 | 15+425 RT | 1-600mm X 25.9 RCP (CL III) | SEE LAYOUT | 13.1 | 18.0 | D.I. 15A | 272.365 | 25.9 | 13.0 | | 1.7 | | 1 | | | | 1 | | | | | | | | |
| ~~3A~~ | ~~15+440 RT~~ | ~~1-600mm X 12.14 RCP (CL III)~~ | ~~50.1~~ | ~~9.1~~ | ~~10.2~~ | ~~273.17~~ | ~~273.00~~ | ~~12.1~~ | ~~2.2~~ | | | | | | | | ~~2~~ | | | | | | | | |
| 3A | 15+452 RT | 1-600mm X 22.9 RCP (CL III) | SEE LAYOUT | 12.5 | 14.5 | 273.134 | D.I. 15A | 22.9 | 9.1 | | | | | | | | 1 | | | | | | | | |
| 3B | 15+576 RT | 1-600mm X 20.8 RCP (CL III) | SEE LAYOUT | 13.0 | 14.0 | 271.716 | 270.929 | 20.8 | ⁂ 56.7 | 1 | | 0.9 | | 1 | | | 2 | | | | | | | | |
| 3C | 15+617 RT | 1-600mm X 20.8 RCP (CL III) | SEE LAYOUT | 11.6 | 15.4 | 270.536 | 269.749 | 20.8 | ⁂ 63.9 | 1 | | 1.1 | | 1 | | | 2 | | | | | | | | |
| 9 | 17+542 RT | 1-900mm X 14.14 RCP (CL III) | 32.0 | 12.1 | 12.7 | 288.04 | 287.92 | 14.1 | 3.4 | | | | | | | | 2 | | 2 | | | | | | |
| 10 | 17+785 RT | 1-750mm X 18.19 RCP (CL III) | 30.0 | 13.3 | 13.9 | 294.70 | 294.56 | 18.2 | 3.8 | | | | | | | | | 2 | | | | | | | |
| 11 | 18+937 RT | 1-600mm X 12.89 RCP (CL III) | 0.0 | 9.8 | 10.3 | 287.70 | 287.60 | 12.9 | 2.3 | | | | | | | | 2 | | | | | | | | |
| 12 | 19+435 RT | 1-600mm X 12.15 RCP (CL III) | 0.0 | 9.4 | 9.9 | 287.82 | 287.72 | 12.2 | 2.2 | | | | | | | | 2 | | | | | | | | |
| 13 | 19+576 LT | 1-450mm X 7.80 RCP (CL III) | SEE LAYOUT | 6.3 | 6.9 | 291.00 | 290.85 | 7.8 | 5.1 | | | | | | | 2 | | | | | | | | | 64 |
| 14 | 19+627 RT | 1-600mm X 8.37 RCP (CL III) | 0.0 | 6.8 | 8.8 | 288.25 | 288.09 | 8.4 | 1.5 | | | | | | | | 2 | | | | | | | | |
| 15 | 19+845 LT | 1-600mm X 9.8 RCP (CL III) | SEE LAYOUT | 7.5 | 9.5 | 286.000 | 285.650 | 9.8 | 12.0 | | | | | | | | | | | 2 | | | 14 | | 99 |
| **CSJ: 2452-01-037 TOTALS** | | | | | | | | | 173.0 | 2 | 1.7 | 2 | 1 | 2 | | 2 | 16 | 2 | 2 | 2 | | | 14 | | |
| ~~5~~ | ~~16+350 LT~~ | ~~2-300mm X 6.4 RCP (CL III)~~ | ~~76.3~~ | ~~8.4~~ | ~~8.6~~ | ~~263.60~~ | ~~263.48~~ | ~~12.8~~ | ~~1.5~~ | | | | | | | | | | | | | | | | |
| 5A | 16+193 LT | -NO PIPE REQUIRED- | | | | | | | | | | | | | | | | | | | | | | | |
| 5B | 16+402 LT | 1-600mm X 24.9 RCP (CL III) | SEE LAYOUT | 15.6 | 16.4 | 264.578 | 264.100 | 24.9 | 8.6 | | | | | | | | 2 | | | | | | | | |
| 5C | 16+323 LT | 1-600mm X 15.7 RCP (CL III) | SEE LAYOUT | 10.2 | 12.9 | 263.345 | 263.000 | 15.7 | 5.6 | | | | | | | | 2 | | | | | | | | |
| 6 | 16+360 RT | 2-1500mm X 600mm X 8.53 MBC | 74.7 | 7.7 | 8.0 | 264.24 | 264.16 | 17.6 | 10.4 | | | | | | | | | | | | | 4 | | | |
| 7 | 16+617 RT | 1-600mm X 14.29 RCP (CL III) | 57.7 | 10.6 | 11.2 | 268.86 | 268.73 | 14.3 | 2.6 | | | | | | | | 2 | | | | | | | | |
| 8 | 16+720 RT | 1-600mm X 5.92 RCP (CL III) | 69.9 | 6.8 | 8.0 | 272.79 | 272.57 | 5.9 | 1.1 | | | | | | | | 2 | | | | | | | | |
| 8A | 16+780 RT | 1-450mm X 34.6 RCP (CL III) | SEE LAYOUT | 16.6 | 23.4 | 272.114 | 271.346 | 34.6 | 27.3 | | | | | | | 2 | | | | | | | | | 25 |
| **CSJ: 2452-01-038 TOTALS** | | | | | | | | | 55.6 | | | | | | | 2 | 8 | | | | | 4 | | | |
| 18 | 0+263 LT | -NO PIPE REQUIRED- | | | | | | | 20 | | 3.5 | | | | | | | | | | | | | | |
| 19 | 21+645.921 LT | 1-600mm X 28.9 RCP (CL III) | SEE LAYOUT | 17.9 | 13.2 | DROP INLET | 259.200 | 28.9 | 44.0 | | 4.1 | | 1 | | 1 | | | | | | | | 35 | | 64 |
| 42 | 21+466 RT | 1-600mm X 22.5 RCP (CL III) | 0.0 | 13.6 | 16.3 | 258.18 | 256.99 | 22.5 | | | | | | | | | 2 | | | | | | | | |
| 23 | 22+262 RT | 1-600mm X 11.01 RCP (CL III) | 0.0 | 8.7 | 9.5 | 253.20 | 253.02 | 11.0 | | | | | | | | | 2 | | | | | | | | |
| 24 | 22+325 RT | 1-600mm X 8.66 RCP (CL III) | 0.0 | 9.2 | 8.4 | 252.23 | 252.06 | 8.7 | 2 | | | | | | | | 2 | | | | | | | | |
| 27 | 22+517 LT | -NO PIPE REQUIRED- | | | | | | | | | 2.2 | | | | | | | | | | | | | | |
| 28 | 20+369 LT | -NO PIPE REQUIRED- | | | | | | | | | 4.5 | | | | | | | | | | | | | | |
| 37 | 25+357 RT | 1-600mm X 12.44 RCP (CL III) | 0.0 | 9.5 | 10.2 | 253.27 | 253.17 | 12.4 | 2.2 | | | | | | | | | | | | | | | | |
| ~~38~~ | ~~25+715 RT~~ | ~~1-600mm X 9.59 RCP (CL III)~~ | ~~0.0~~ | ~~8.2~~ | ~~8.6~~ | ~~254.41~~ | ~~254.36~~ | ~~9.6~~ | ~~1.7~~ | | | | | | | | ~~2~~ | | | | | | | | |
| 39 | 25+762 RT | 1-600mm X 8.66 RCP (CL III) | 0.0 | 8.2 | 8.6 | 254.46 | 254.36 | 8.6 | 2.0 | | | | | | | | | | | | | | | | |
| 44 | 21+132 RT | 2-DES 3 ARCH PIPES (CMP) | SEE LAYOUT | 3.0 | 11.0 | 268.171 | 267.831 | 12 | 20 | | | | | | | | | | | | 2 | | | | |
| **CSJ: 2452-01-036 TOTALS** | | | | | | | | | 68.2 | | 14.3 | 1 | 1 | 1 | | | 6 | | | | 4 | | | | |
| **PROJECT TOTALS** | | | | | | | | | 296.8 | 2 | 16.0 | 2 | 2 | 2 | 1 | 4 | 28 | 2 | 2 | 2 | 4 | 4 | 49 | 32 | 99 129 |

⚠28 ⁂ INCLUDES CEMENT STAB BKFILL FOR TRAFFIC INLET

⚠# REFERS TO CHANGES MADE AS PART OF CHANGE ORDER.

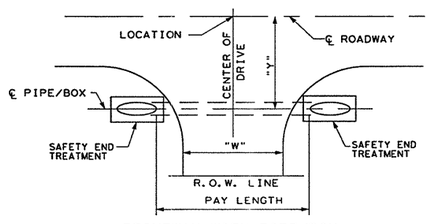


DRIVEWAY WITH PIPE/BOX
TYPICAL PLAN VIEW
NOT TO SCALE

CHANGE ORDER NO. 131

-DRIVEWAY DELETIONS, ADDENDUMS AND QUANTITY REVISIONS AS PER THE VARIOUS CHANGE ORDER(S).

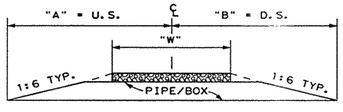


DRIVEWAY WITH PIPE/BOX
TYPICAL SECTION
NOT TO SCALE

✳ SHOWN FOR CONTRACTORS INFORMATION ONLY

CMP- 2mm THICKNESS & 68mm x 13mm CORRUGATION.

⁂ INCLUDES CEMENT STAB BKFILL FOR TRAFFIC INLET

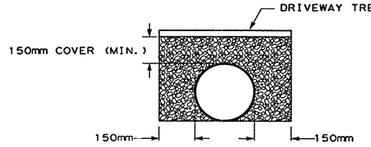


TYPICAL SECTION
CEMENT STABILIZED BACKFILL
NOT TO SCALE

NOTE(S):

S.E.T. (TY I) SHALL BE CONSTRUCTED UTILIZING THE PD-SPR (M) STD. WITH PIPE RUNNERS.

A S.E.T. (TY II) SHALL BE CONSTRUCTED UTILIZING THE RIPRAP HDWL (M)(MOD) STD.

FOR MORE DETAILS SEE DRIVEWAY LAYOUTS AND DETAIL SHEETS.

CHANGE ORDER 131

REVISED SHEET

STATE OF TEXAS
FITZGERALDO G. SANCHEZ
76084
LICENCED PROFESSIONAL ENGINEER

Fitzgeraldo G. Sanchez 07-11-06
Fitzgeraldo G. Sanchez, P.E. Date

©2000 Texas Department of Transportation

**DRIVEWAY & MAILBOX SUMMARY**

SHEET 2 OF 2

| FED.RD. DIV.NO. | FEDERAL AID PROJECT NO. | | SHEET NO. |
|---|---|---|---|
| 6 | NH 2000(704), etc. | | 28A A2 |
| STATE | DIST. | COUNTY | |
| TEXAS | SAT | BEXAR | |
| CONT. | SECT. | JOB | HIGHWAY NO. |
| 2452 | 01 | 036, etc. | LP 1604 |

6-09-06


1-90\Summaries\popesdrv\popesP.dgn
7/5/2006
ACC: 481a1a1:/usr/d481303
FILE: .DGN
LEVELS DISPLAYED
1 2 3 4 5 6 7 8 9 10 11 12 13 14 15 16
17 18 19 20 21 22 23 24 25 26 27 28 29 30 31 32
33 34 35 36 37 38 39 40 41 42 43 44 45 46 47 48
49 50 51 52 53 54 55 56 57 58 59 60 61 62 63

PLOTTED ON: 09/19/00

# LARGE STRUCTURE SUMMARY
(BRIDGE CLASS CULVERTS)

| SHEET NO. | BCS NO. | PERMANENT STRUCTURE NO. | LOCATION | *400 STRUCT EXCAV (CULV LARGE) | 402 TRENCH EXCAV PROTECTION | 462 CONC BOX CULV (1800MM X 1200MM) | 462 CONC BOX CULV (3000MM X 2400MM) | 462 CONC BOX CULV (3000MM X 3000MM) | 466 WINGWALL (FW-30) (H=3000MM) | 466 WINGWALL (FW-45) (H=1200MM) | 466 WINGWALL (FW-45) (H=2400MM) | 400 CEMENT STABIL BKFL | 432 RIPRAP (CONC) (CL B) | 400 CUT & RESTORING PAV | 450 RAIL (TY T6) |
|---|---|---|---|---|---|---|---|---|---|---|---|---|---|---|---|
| | | | | M3 | M | M | M | M | EA | EA | EA | M3 | M3 | M2 | M |
| | | | CSJ: 2452-01-037 | | | | | | | | | | | | |
| 373 | 1 | 015-2452-01-036 | STA 14+500.060 TO 14+519.666 | 758.1 | 33.0 | 378.069 | | | | 1.5 | | | 89.6 | | |
| | | | TOTAL CSJ: 2452-01-037 | 758.1 | 33.0 | 378.069 | | | | 1.5 | | | 89.6 | | |
| | | | | | | | | | | | | | | | |
| | | | | | | | | | | | | | | | |
| | | | CSJ: 2452-01-036 | | | | | | | | | | | | |
| 374 | 2 | 15-015-2452-01-170 | STA 21+568.382 TO 21+588.199 | 4092.0 | | | 362.752 | | | | 2 | 315.3 | 171.1 | 170.8 | |
| 375 | 3 | 015-2452-01-029 | STA 22+773.461 TO 22+813.182 | 1911.2 | | | | 732.120 | 2 | | | | 143.5 | 206.3 | 38 |
| | | | TOTAL CSJ: 2452-01-036 | 6003.2 | | | 362.752 | 732.120 | 2 | | 2 | 315.3 | 314.6 | 377.1 | 38 |
| | | | | | | | | | | | | | | | |
| | | | TOTAL | 6761.3 | 33.0 | 378.069 | 362.752 | 732.120 | 2 | 1.5 | 2 | 315.3 | 404.2 | 377.1 | 38 |

*SUPPLIED FOR CONTRACTOR'S INFORMATION ONLY

555 EAST RAMSEY SAN ANTONIO TEXAS 78216 PHONE (210)375-9000 FAX (210)375-9010
PAPE-DAWSON ENGINEERS
CIVIL & ENVIRONMENTAL

STATE OF TEXAS
K. STEPHEN BONNETTE
60928
REGISTERED PROFESSIONAL ENGINEER

K. STEPHEN BONNETTE, P.E. 09/20/00 DATE

© 2000 Texas Department of Transportation

LOOP 1604
LARGE STRUCTURE SUMMARY
(BRIDGE CLASS CULVERTS)

| DN: | | | | | PROJECT NO. | | |
|---|---|---|---|---|---|---|---|
| CK DN: | | | | | NH 2000 (704), etc. | | |
| DW: | CONTROL | SECTION | JOB | DIST. | STATE | COUNTY | HIGHWAY NO. | SHEET NO. |
| CK DW: | 2452 | 01 | 036 etc. | SAT | TX | BEXAR | LOOP 1604 | 29 |

DESIGN FILENAME: \394N16\civil\design\summaries\394l6suml.dgn

PLOTTED ON: 09/19/00

# SMALL STRUCTURE SUMMARY

| SHEET NO. | DRAINAGE AREA | LOCATION | *400 STRUCT EXCAV | 402 TRENCH EXCAV PROTECTION | 464 RCP (CL III) (600MM) | 464 RCP (CL III) (750MM) | 464 RCP (CL III) (900MM) | 464 RCP (CL III) (1050MM) | 464 RCP (CL III) (1200MM) | 462 CONC BOX CULV (1500MM X 900MM) | 462 CONC BOX CULV (1500MM X 1200MM) | 462 CONC BOX CULV (1800MM X 900MM) | 467 SET (TY I) (1500MM X 900MM) (1:3) | 467 SET (TY I) (1800MM X 900MM) (1:6) | 467 SET (TY I) (1500MM X 900MM) (1:6) | 467 SET (TY II) (600MM) (RCP) (1:6) | 467 SET (TY II) (750MM) (RCP) (1:6) | 467 SET (TY II) (900MM) (RCP) (1:4) | 467 SET (TY II) (900MM) (RCP) (1:6) | 467 SET (TY II) (1050MM) (RCP) (1:6) C | 467 SET (TY II) (1200MM) (RCP) (1:4) C | 467 SET (TY II) (1200MM) (RCP) (1:6) C | 467 SET (TY II) (1200MM) (RCP) (1:6) | 466 WINGWALL (FW-0) (H=900MM) |
|---|---|---|---|---|---|---|---|---|---|---|---|---|---|---|---|---|---|---|---|---|---|---|---|---|
| | | | M3 | M | M | M | M | M | M | M | M | M | EA | EA | EA | EA | EA | EA | EA | EA | EA | EA | EA | EA |
| | | CSJ: 2452-01-038 | | | | | | | | | | | | | | | | | | | | | | |
| 376 | 2 | STA 15+189.169 | 704.1 | | | | | | | 230.553 | | | | | | | | | | | | | | |
| 377 | 5 | STA 0+627.197 SB FRONTAGE ROAD | 744.9 | 137.6 | | | | | | 165.768 | | | | | | | | | | | | | | 1 |
| | | TOTAL CSJ: 2452-01-038 | 1449.0 | 137.6 | | | | | | 396.321 | | | | | | | | | | | | | | 1 |
| | | CSJ: 2452-01-037 | | | | | | | | | | | | | | | | | | | | | | |
| 378 | 6 | STA 17+258.686 | 388.7 | 47.0 | | | | | | 246.802 | | | | | | | | | | | | | | |
| 379 | 7 | STA 18+039.195 | 664.7 | 53.5 | | | | | | | | 80.574 | | | | | | | | | | | | 2 |
| 380 | 8 | STA 18+172.639 | 329.6 | 69.8 | | 88.842 | | | | | | | | | | | 1 | | | | | | | |
| 381 | 9 | STA 18+485.369 | 814.0 | 43.2 | | | 143.748 | | | | | | | | | | | 2 | 2 | | | | | |
| 382 | 10 | STA 19+024.824 | 950.7 | 51.2 | | | | | | | 117.369 | | | | | | | | | | | | | |
| 383 | 11 | STA 19+257.771 | 819.5 | 53.0 | | | | | 83.928 | | | | | | | | | | | | | | 2 | |
| 384 | 12 | STA 19+745.630 | 1296.7 | 80.3 | | | | | | 189.830 | | | | | | | | | | | | | | |
| 385 | 13 | STA 19+866.572 | 424.2 | 51.5 | | | 73.774 | | | | | | | | | | | 1 | | | | | | |
| | | TOTAL CSJ: 2452-01-037 | 5688.1 | 449.5 | | 88.842 | 217.522 | | 83.928 | 436.632 | 117.369 | 80.574 | | | | | 1 | 3 | 2 | | | | 2 | 2 |
| | | CSJ: 2452-01-036 | | | | | | | | | | | | | | | | | | | | | | |
| 386 | 20 | STA 25+508.364 | 446.6 | 33.6 | | | | | 105.830 | | | | | | | | | | | | | 4 | 2 | |
| 387 | 21 | STA 26+275.758 | 302.0 | 24.5 | 60.813 | | | | | | | | | | | 6 | | | | | | | | |
| 388 | 22 | STA 26+843.216 | 356.5 | 29.2 | | | | | | 101.184 | | | 2 | | 2 | | | | | | | | | |
| 389 | 23 | STA 27+374.290 | 384.6 | 28.1 | | | | | | | | 99.512 | | 2 | | | | | | | | | | 1 |
| 390 | 24 | STA 27+940.509 | 309.0 | | | | | 123.513 | | | | | | | | | | | | 6 | | | | |
| 391 | 25 | STA 28+406.130 | 148.1 | 41.5 | | | 48.597 | | | | | | | | | | | | 2 | | | | | |
| 392 | 26 | STA 28+519.714 | 186.0 | 26.3 | | | | 33.117 | | | | | | | | | | | | 2 | | | | |
| | | TOTAL CSJ: 2452-01-036 | 2132.8 | 183.2 | 60.813 | | 48.597 | 156.630 | 105.830 | 101.184 | | 99.512 | 2 | 2 | 2 | 6 | | | 2 | 8 | 4 | 2 | | 1 |
| | | TOTAL | 9269.9 | 770.3 | 60.813 | 88.842 | 266.119 | 156.630 | 189.758 | 934.137 | 117.369 | 180.086 | 2 | 2 | 2 | 6 | 1 | 3 | 4 | 8 | 4 | 2 | 2 | 4 |

*SUPPLIED FOR CONTRACTOR'S INFORMATION ONLY

| SHEET NO. | DRAINAGE AREA | LOCATION | 466 WINGWALL (FW-15) (H=900MM) | 466 WINGWALL (FW-45) (H=900MM) | 466 WINGWALL (FW-45) (H=1200MM) | 466 WINGWALL (FW-30) (H=900MM) | 400 CEMENT STABIL BKFL | 432 RIPRAP (CONC) (CL B) | 400 CUT & RESTORING PAV | 465 INLET (COMPL) (DROP) (TY Y-1) | 465 INLET (COMPL) (DROP) (TY Y-2) | 465 INLET (COMPL) (DROP) (TY W-2) | 465 INLET (COMPL) (DROP) (TY 3A) | 464 RCP (CL V) (1200MM) | 464 RCP (CL IV) (600MM) |
|---|---|---|---|---|---|---|---|---|---|---|---|---|---|---|---|
| | | | EA | EA | EA | EA | M3 | M3 | M2 | EA | EA | EA | EA | M | M |
| | | CSJ: 2452-01-038 | | | | | | | | | | | | | |
| 376 | 2 | STA 15+189.169 | | | | 2 | | 10.8 | | | | | | | |
| 377 | 5 | STA 0+627.197 SB FRONTAGE ROAD | | | | | 85.3 | 0.9 | 40.2 | | | | | | |
| | | TOTAL CSJ: 2452-01-038 | | | | 2 | 85.3 | 11.7 | 40.2 | | | | | | |
| | | CSJ: 2452-01-037 | | | | | | | | | | | | | |
| 378 | 6 | STA 17+258.686 | | 2 | | | | 15.8 | | | | | | | |
| 379 | 7 | STA 18+039.195 | | | | | 269.1 | 8.8 | 51.6 | | | | | | |
| 380 | 8 | STA 18+172.639 | | | | | 93.0 | | 31.5 | | | | | | |
| 381 | 9 | STA 18+485.369 | | | | | 146.0 | | 42.3 | | | | | | |
| 382 | 10 | STA 19+024.824 | | | 2 | | 390.5 | 14.6 | 99.2 | | | | | | |
| 383 | 11 | STA 19+257.771 | | | | | 287.1 | 4.5 | 66.8 | | | 1 | | 114.746 | |
| 384 | 12 | STA 19+745.630 | 2 | | | | 152.4 | 9.6 | 53.4 | | | | | | |
| 385 | 13 | STA 19+866.572 | | | | | 130.6 | 1.6 | 25.0 | 1 | | | | | |
| | | TOTAL CSJ: 2452-01-037 | 2 | 2 | 2 | | 1468.7 | 54.9 | 369.8 | 1 | | 1 | | 114.746 | |
| | | CSJ: 2452-01-036 | | | | | | | | | | | | | |
| 386 | 20 | STA 25+508.364 | | | | | | | | | | | | | |
| 387 | 21 | STA 26+275.758 | | | | | | | | | | | | | 165.000 |
| 388 | 22 | STA 26+843.216 | | | | | | 4.1 | | | 1 | | | | |
| 389 | 23 | STA 27+374.290 | | | | | | 2.2 | | | | | 2 | | |
| 390 | 24 | STA 27+940.509 | | | | | | | | | | | | | |
| 391 | 25 | STA 28+406.130 | | | | | | | | | | | | | |
| 392 | 26 | STA 28+519.714 | | | | | | | | | | | | | |
| | | TOTAL CSJ: 2452-01-036 | | | | | | 6.3 | | | 1 | | 2 | | 165.000 |
| | | TOTAL | 2 | 2 | 2 | 2 | 1554.0 | 72.9 | 410.0 | 1 | 1 | 1 | 2 | 114.746 | 165.000 |

555 EAST RAMSEY SAN ANTONIO TEXAS 78216 PHONE (210)375-9000 FAX (210)375-9010
PAPE-DAWSON ENGINEERS CIVIL & ENVIRONMENTAL

STATE OF TEXAS K. STEPHEN BONNETTE 60928 REGISTERED PROFESSIONAL ENGINEER

09/20/00
K. STEPHEN BONNETTE, P.E. DATE

© 2000 Texas Department of Transportation

LOOP 1604
SMALL STRUCTURE SUMMARY

| | | | | | | | | | |
|---|---|---|---|---|---|---|---|---|---|
| DN: | | | | | | | PROJECT NO. | | |
| CK DN: | | | | | | | NH 2000 (704), etc. | | |
| DW: | CONTROL | SECTION | JOB | DIST. | STATE | COUNTY | HIGHWAY NO. | | SHEET NO. |
| CK DW: | 2452 | 01 | 036 etc. | SAT | TX | BEXAR | LOOP 1604 | | 30 |

DESIGN FILENAME: \3941\16\civil\design\summaries\3941l6sum1.dgn

PLOTTED ON: 10/24/00

# STORM DRAIN SUMMARY

| SHEET NO. | STORM DRAIN PROFILE SHEET | *400 STRUCT EXCAV | 402 TRENCH EXCAV PROTECTION | 462 CONC BOX CULV (1500mm X 900mm) | 462 CONC BOX CULV (1500mm X 1200mm) | 464 RCP (CL III) (450mm) | 464 RCP (CL III) (600mm) | 464 RCP (CL III) (750mm) | 464 RCP (CL III) (900mm) | 464 RCP (CL III) (1050mm) | 464 RCP (CL III) (1200mm) | 465 INLET (COMPL) (CURB) (TY I) | 465 INLET (COMPL) (CURB) (TY II) | 465 INLET (COMPL) (CURB) (TY IV) | 465 INLET (COMP) (DROP) (TY Y-1) | 465 INLET (COMP) (DROP) (TY Y-2) | 465 INLET (COMP) (DROP) (TY W-2) | 465 MANHOLE (COMPL) (TY 1) | 465 MANHOLE (COMPL) (TY 2) | 465 MANHOLE (COMPL) (TY 3) | 465 MANHOLE (COMPL) (TY M) | 432 RIPRAP (CONC) (CL B) | 41564165 FLOWABLE BACKFILL |
|---|---|---|---|---|---|---|---|---|---|---|---|---|---|---|---|---|---|---|---|---|---|---|---|
| | | M3 | M | M | M | M | M | M | M | M | M | EA | EA | EA | EA | EA | EA | EA | EA | EA | EA | M3 | M3 |
| | CSJ: 2452-01-038 | | | | | | | | | | | | | | | | | | | | | | |
| 454 | LINE I-1 THRU I-3 | 120.1 | | | | | 108.096 | | | | | | | | 1 | | | | | | | | |
| 455 | LINE I-4 THRU I-7 | 60.1 | | | | | 20.135 | 19.454 | | | | | | | | | | | | | | 3.2 | |
| 456 | LINE I-8 & 14 | 100.0 | | | | 67.782 | 35.105 | | | | | | | | | | | | | | | | 99.3 |
| 457 | LINES I-10 THRU I-14 & 10 | 685.8 | 168.0 | 48.435 | | | 91.394 | | 27.979 | | | | | | 2 | | 1 | | | | | 10.2 | |
| 464 | LINES X, XA, ZA & ZB | 1010.8 | 211.0 | | | | 29.793 | | 166.029 | 16.464 | | 3 | | | 2 | | | 2 | | | | 6.4 | |
| 463 | LINES Y & Z | 1875.2 | 332.0 | | 178.953 | | 144.058 | | | | | 5 | 1 | | | | 1 | | | | | 13.2 | |
| | TOTAL CSJ: 2452-01-038 | 3852.0 | 711.0 | 48.435 | 178.953 | 67.782 | 428.581 | 19.454 | 194.008 | 16.464 | | 8 | 1 | | 5 | | 2 | 2 | | | | 33.0 | 99.3 |
| | | | | | | | | | | | | | | | | | | | | | | | |
| | CSJ: 2452-01-037 | | | | | | | | | | | | | | | | | | | | | | |
| 454 | LINE I-1 THRU I-3 | 421.5 | 122.0 | | | | 170.697 | | | | | | | | 2 | | | | | | | 6.4 | |
| 455 | LINE I-4 THRU I-7 | 110.7 | 67.0 | | | | 54.742 | | | | | | | | 2 | | | | | | | 6.4 | |
| 458 | LINES I-15, I-16, I-25 & I-26 | 298.4 | 13.0 | | | | 22.656 | 107.958 | | | | | | | | | 1 | | | | | 4.5 | |
| 457 | LINES I-10 THRU I-14 & 10 | 33.1 | 21.5 | | | | 20.403 | | | | | 2 | | | | | | | | | | | |
| 454 | LINES I20A, I27 & I30 | 101.8 | | | | | 14.933 | | | | | | | | | | | | | | | | |
| 468 | LINES T, TA & TB | 537.6 | 166.0 | | | | 82.266 | 64.410 | 32.926 | | | 4 | | | 1 | | | | | | | 3.2 | |
| 465 | LINE W | 390.9 | 100.0 | | | | 86.602 | | 44.720 | | | | 2 | 1 | | | | | | | | | |
| 466 | LINE WA THRU WB | 427.2 | 118.5 | | | | 115.350 | | | | | 1 | 1 | | | 2 | | | | | | 8.2 | |
| | TOTAL CSJ: 2452-01-037 | 2321.2 | 608.0 | | | | 567.649 | 172.368 | 77.646 | | | 7 | 3 | 1 | 5 | 2 | 1 | | | | | 28.7 | |
| | | | | | | | | | | | | | | | | | | | | | | | |
| | CSJ: 2452-01-036 | | | | | | | | | | | | | | | | | | | | | | |
| 458 | LINES I-15, I-16, I-25 & I-26 | 812.3 | 151.6 | | | | 21.383 | | | 109.397 | | 1 | | | 1 | | | | 1 | | | 3.2 | |
| 454 | LINES I20A, I27 & I30 | 48.3 | | | | | 76.387 | | | | | | | | | | | | | | | | |
| 460 | LINE I-28, I-31 & I-32 | 1103.6 | 163.0 | | | | 43.258 | | 194.852 | 87.549 | | | | | 2 | 1 | | | | 1 | 1 | 12.3 | |
| 461 | LINE I-35, I-36, I-37 & I-40 | 345.7 | 54.2 | | | | 44.781 | 19.585 | | | 58.426 | 1 | | | 1 | | 1 | | | 1 | | 9.5 | |
| 462 | LINE I-48 & I-53 | 68.4 | | | | 148.188 | 18.454 | | | | | 1 | | | | | | | | | | | |
| 467 | LINES U & V | 126.2 | 13.0 | | | | 62.836 | | | | | 3 | | | | | | | | | | | |
| | TOTAL CSJ: 2452-01-036 | 2504.5 | 381.8 | | | 148.188 | 267.099 | 19.585 | 194.852 | 196.946 | 58.426 | 6 | | | 4 | 1 | 1 | | 1 | 2 | 1 | 25.0 | |
| | | | | | | | | | | | | | | | | | | | | | | | |
| | TOTAL | 8677.7 | 1700.8 | 48.435 | 178.953 | 215.970 | 1263.329 | 211.407 | 466.506 | 213.410 | 58.426 | 21 | 4 | 1 | 14 | 3 | 4 | 2 | 1 | 2 | 1 | 86.7 | 99.3 |

*SUPPLIED FOR CONTRACTOR'S INFORMATION ONLY

# STORM DRAIN SUMMARY

| SHEET NO. | STORM DRAIN PROFILE SHEET | 467 SET (TY II) (450mm) (RCP) (1:6) | 467 SET (TY II) (600mm) (RCP) (1:3) | 467 SET (TY II) (600mm) (RCP) (1:4) | 467 SET (TY II) (600mm) (RCP) (1:5) | 467 SET (TY II) (600mm) (RCP) (1:6) | 467 SET (TY II) (750mm) (RCP) (1:6) | 467 SET (TY II) (900mm) (RCP) (1:6) | 467 SET (TY II) (1050mm) (RCP) (1:6) | 465 INLET (COMP) (DROP) (TY 3A) | 467 SET (TY I) (1500mm X 900mm) (1:3) |
|---|---|---|---|---|---|---|---|---|---|---|---|
| | | EA | EA | EA | EA | EA | EA | EA | EA | EA | EA |
| | CSJ: 2452-01-038 | | | | | | | | | | |
| 454 | LINE I-1 THRU I-3 | | | | | | | | | | |
| 455 | LINE I-4 THRU I-7 | | | | | 1 | 1 | | | | |
| 456 | LINE I-8 & 14 | | 2 | | | | | | | | |
| 457 | LINES I-10 THRU I-14 & 10 | | 1 | | | | | 1 | | | 1 |
| 464 | LINES X, XA, ZA & ZB | | | | | | | | | | |
| 463 | LINES Y & Z | | | | | | | | | 1 | |
| | TOTAL CSJ: 2452-01-038 | | 3 | | | 1 | 1 | 1 | | 1 | 1 |
| | | | | | | | | | | | |
| | CSJ: 2452-01-037 | | | | | | | | | | |
| 454 | LINE I-1 THRU I-3 | | 1 | | | | | | | | |
| 455 | LINE I-4 THRU I-7 | | 1 | | | 1 | | | | | |
| 458 | LINES I-15, I-16, I-25 & I-26 | | | | | 2 | 3 | | | | |
| 457 | LINES I-10 THRU I-14 & 10 | | | | | | | | | | |
| 454 | LINES I-20A, I-27 & I-30 | | | | | 2 | | | | | |
| 468 | LINES T, TA & TB | | | | | | | 1 | | | |
| 465 | LINE W | | | | | | | | | | |
| 466 | LINE WA THRU WB | | | | | | | | | | |
| | TOTAL CSJ: 2452-01-037 | | 2 | | | 5 | 3 | 1 | | | |
| | | | | | | | | | | | |
| | CSJ: 2452-01-036 | | | | | | | | | | |
| 458 | LINES I-15, I-16, I-25 & I-26 | | | | | 1 | | | 1 | | |
| 454 | LINES I20A, I27 & I30 | | | | | 4 | | | | | |
| 460 | LINE I-28, I-31 & I-32 | | | | | 2 | | 2 | | | |
| 461 | LINE I-35, I-36, I-37 & I-40 | | | 1 | | 1 | 1 | | | | |
| 462 | LINE I-48 & I-53 | 4 | | | 1 | | | | | | |
| 467 | LINES U & V | | | | | | | | | | |
| | TOTAL CSJ: 2452-01-036 | 4 | | 1 | 1 | 8 | 1 | 2 | 1 | | |
| | | | | | | | | | | | |
| | TOTAL | 4 | 5 | 1 | 1 | 14 | 5 | 4 | 1 | 1 | 1 |

# ARMOR CURB SUMMARY

| SHEET NO. | INTERIOR DRAINAGE AREA MAP SHEET | 529 CONC CURB (ARMOR CURB SLOT) | *432 RIPRAP (CONC) (CL B) |
|---|---|---|---|
| | | M | M3 |
| | CSJ: 2452-01-038 | | |
| 431 | STA 15+500 TO 15+860 | 6 | 1.8 |
| 432 | STA 15+860 TO 16+580 | 15 | 5.4 |
| 434 | STA 16+580 TO 17+000 | | |
| | TOTAL CSJ: 2452-01-038 | 21 | 7.2 |
| | | | |
| | CSJ: 2452-01-037 | | |
| 429 | STA 13+800 TO 14+420 | | |
| 430 | STA 14+420 TO 15+140 | | |
| 431 | STA 15+140 TO 15+500 | | |
| 434 | STA 17+000 TO 17+300 | | |
| 435 | STA 17+300 TO 18+020 | | |
| 436 | STA 18+020 TO 18+740 | | |
| 437 | STA 18+740 TO 19+460 | 6 | 1.8 |
| 438 | STA 19+460 TO 20+180 | 3 | |
| 439 | STA 20+180 TO 20+640 | | |
| | TOTAL CSJ: 2452-01-037 | 9 | 1.8 |
| | | | |
| | CSJ: 2452-01-036 | | |
| 439 | STA 20+640 TO 20+900 | | |
| 440 | STA 20+900 TO 21+620 | 3 | 0.9 |
| 441 | STA 21+620 TO 22+340 | | |
| 442 | STA 22+340 TO 23+060 | | |
| 443 | STA 23+060 TO 23+780 | 3 | 0.9 |
| 444 | STA 23+780 TO 24+500 | 3 | 0.9 |
| 445 | STA 24+500 TO 25+220 | | |
| 446 | STA 25+220 TO 25+940 | 6 | |
| 447 | STA 25+940 TO 26+660 | 3 | 0.9 |
| 448 | STA 26+660 TO 27+380 | | |
| 449 | STA 27+380 TO 28+100 | | |
| 450 | STA 28+100 TO 28+554.079 | | |
| | TOTAL CSJ: 2452-01-036 | 18 | 3.6 |
| | | | |
| | TOTAL | 48 | 12.6 |

555 EAST RAMSEY SAN ANTONIO TEXAS 78216 PHONE (210)375-9000 FAX (210)375-9010
PAPE-DAWSON ENGINEERS CIVIL & ENVIRONMENTAL
STATE OF TEXAS K. STEPHEN BONNETTE 60928 REGISTERED PROFESSIONAL ENGINEER
09/20/00
K. STEPHEN BONNETTE, P.E. DATE

© 2000 Texas Department of Transportation

## LOOP 1604
## STORM DRAIN & ARMOR CURB SLOT SUMMARY

| DN: | | | | | | PROJECT NO. | | |
|---|---|---|---|---|---|---|---|---|
| CK DN: | | | | | | NH 2000 (704), etc. | | |
| DW: | CONTROL | SECTION | JOB | DIST. | STATE | COUNTY | HIGHWAY NO. | SHEET NO. |
| CK DW: | 2452 | 01 | 036 | SAT | TX | BEXAR | LOOP 1604 | 31 |

DESIGN FILENAME: k:\394\lv6\civil\design\summaries\394lv6sum1.dgn

# STORM DRAIN SUMMARY

| SHEET NO. | STORM DRAIN PROFILE SHEET | *400 STRUCT EXCAV | 402 TRENCH EXCAV PROTECTION | 462 CONC BOX CULV (1500mm x 900mm) | 462 CONC BOX CULV (1500mm x 1200mm) | 464 RCP (CL III) (450mm) | 464 RCP (CL III) (600mm) | 464 RCP (CL III) (750mm) | 464 RCP (CL III) (900mm) | 464 RCP (CL III) (1050mm) | 464 RCP (CL III) (1200mm) | 465 INLET (COMPL) (CURB) (TY I) | 465 INLET (COMPL) (CURB) (TY II) | 465 INLET (COMPL) (CURB) (TY IV) | 465 INLET (COMP) (DROP) (TY Y-1) | 465 INLET (COMP) (DROP) (TY Y-2) | 465 INLET (COMP) (DROP) (TY W-2) | 465 MANHOLE (COMPL) (TY 1) | 465 MANHOLE (COMPL) (TY 2) | 465 MANHOLE (COMPL) (TY 3) | 465 MANHOLE (COMPL) (TY M) | 432 RIPRAP (CONC) (CL B) | 41564165 FLOWABLE BACKFILL | 4xx empty | 4xx empty |
|---|---|---|---|---|---|---|---|---|---|---|---|---|---|---|---|---|---|---|---|---|---|---|---|---|---|
| | | M3 | M | M | M | M | M | M | M | M | M | EA | EA | EA | EA | EA | EA | EA | EA | EA | EA | M3 | M3 | EA | EA |
| | CSJ: 2452-01-038 | | | | | | | | | | | | | | | | | | | | | | | | |
| 454 | LINE I-1 THRU I-3 | 120.1 | | | | | 108.096 | | | | | | | | | | | | | | | | | | |
| 455 | LINE I-4 THRU I-7 | 60.1 | | | | | 20.135 | 19.454 | | | | | | | 1 | | | | | | | 3.2 | | | |
| 456 | LINE I-8 & 14 | 100.0 | | | | 67.782 | 35.105 | | | | | | | | | | | | | | | | 99.3 | | |
| 457 | LINES I-10 THRU I-14 & 10 | 685.8 | 168.0 | 48.435 | | | 91.394 | | 27.979 | | | | | | 2 | | 1 | | | | | 10.2 | | | |
| 464 | LINES X, XA, ZA & ZB | 1010.8 | 211.0 | | | | 29.793 | | 166.029 | 16.464 | | 3 | | | 2 | | | 2 | | | | 6.4 | | | |
| 463 | LINES Y & Z | 1875.2 | 332.0 | | 178.953 | | 144.058 | | | | | 5 | 1 | | | | 1 | | | | | 13.2 | | | |
| | TOTAL CSJ: 2452-01-038 | 3852.0 | 711.0 | 48.435 | 178.953 | 67.782 | 428.581 | 19.454 | 194.008 | 16.464 | | 8 | 1 | | 5 | | 2 | 2 | | | | 33.0 | 99.3 | | |
| | CSJ: 2452-01-037 | | | | | | | | | | | | | | | | | | | | | | | | |
| 454 | LINE I-1 THRU I-3 | 421.5 | 122.0 | | | | 170.697 | | | | | | | | 2 | | | | | | | 6.4 | | | |
| 455 | LINE I-4 THRU I-7 | 110.7 | 67.0 | | | | 54.742 | | | | | | | | 2 | | | | | | | 6.4 | | | |
| 458 | LINES I-15, I-16, I-25 & I-26 | 298.4 | 13.0 | | | | 22.656 | 107.958 | | | | | | | | | 1 | | | | | 4.5 | | | |
| 457 | LINES I-10 THRU I-14 & 10 | 33.1 | 21.5 | | | | 20.403 | | | | | 2 | | | | | | | | | | | | | |
| 454 | LINES I20A, I27 & I30 | 101.8 | | | | | 14.933 | | | | | | | | | | | | | | | | | | |
| 468 | LINES T, TA & TB | 537.6 | 166.0 | | | | 82.266 | 64.410 | 32.926 | | | 4 | | | 1 | | | | | | | 3.2 | | | |
| 465 | LINE W | 390.9 | 100.0 | | | | 86.602 | | 44.720 | | | | 2 | 1 | | | | | | | | | | | |
| 466 | LINE WA THRU WB | 427.2 | 118.5 | | | | 115.350 | | | | | 1 | 1 | | | 2 | | | | | | 8.2 | | | |
| | TOTAL CSJ: 2452-01-037 | 2321.2 | 608.0 | | | | 567.649 | 172.368 | 77.646 | | | 7 | 3 | 1 | 5 | 2 | 1 | | | | | 28.7 | | | |
| | CSJ: 2452-01-036 | | | | | | | | | | | | | | | | | | | | | | | | |
| 458 | LINES I-15, I-16, I-25 & I-26 | 812.3 | 151.6 | | | | 21.383 | | | 109.397 | | 1 | | | 1 | | | | 1 | | | 3.2 | | | |
| 454 | LINES I20A, I27 & I30 | 48.3 | | | | | 76.387 | | | | | | | | | | | | | | | | | | |
| 460 | LINE I-28, I-31 & I-32 | 1103.6 | 163.0 | | | | 43.258 | | 194.852 | 87.549 | | | | | 2 | 1 | | | | 1 | 1 | 12.3 | | | |
| 461 | LINE I-35, I-36, I-37 & I-40 | 345.7 | 54.2 | | | | 44.781 | 19.585 | | | 58.426 | 1 | | | 1 | | 1 | | | 1 | | 9.5 | | | |
| 462 | LINE I-48 & I-53 | 68.4 | | | | 148.188 | 18.454 | | | | | 1 | | | | | | | | | | | | | |
| 467 | LINES U & V | 126.2 | 13.0 | | | | 62.836 | | | | | 3 | | | | | | | | | | | | | |
| | TOTAL CSJ: 2452-01-036 | 2504.5 | 381.8 | | | 148.188 | 267.099 | 19.585 | 194.852 | 196.946 | 58.426 | 6 | | | 4 | 1 | 1 | | 1 | 2 | 1 | 25.0 | | | |
| | TOTAL | 8677.7 | 1700.8 | 48.435 | 178.953 | 215.970 | 1263.329 | 211.407 | 466.506 | 213.410 | 58.426 | 21 | 4 | 1 | 14 | 3 | 4 | 2 | 1 | 2 | 1 | 86.7 | 99.3 | | |

*SUPPLIED FOR CONTRACTOR'S INFORMATION ONLY

# STORM DRAIN SUMMARY

| SHEET NO. | STORM DRAIN PROFILE SHEET | 467 SET (TY II) (450mm) (RCP) (1:6) | 467 SET (TY II) (600mm) (RCP) (1:3) | 467 SET (TY II) (600mm) (RCP) (1:4) | 467 SET (TY II) (600mm) (RCP) (1:5) | 467 SET (TY II) (600mm) (RCP) (1:6) | 467 SET (TY II) (750mm) (RCP) (1:6) | 467 SET (TY II) (900mm) (RCP) (1:6) | 467 SET (TY II) (1050mm) (RCP) (1:6) | 465 INLET (COMP) (DROP) (TY 3A) | 467 SET (TY I) (1500mm x 900mm) (1:3) |
|---|---|---|---|---|---|---|---|---|---|---|---|
| | | EA | EA | EA | EA | EA | EA | EA | EA | EA | EA |
| | CSJ: 2452-01-038 | | | | | | | | | | |
| 454 | LINE I-1 THRU I-3 | | | | | | | | | | |
| 455 | LINE I-4 THRU I-7 | | | | | 1 | 1 | | | | |
| 456 | LINE I-8 & 14 | | 2 | | | | | | | | |
| 457 | LINES I-10 THRU I-14 & 10 | | 1 | | | | | 1 | | | 1 |
| 464 | LINES X, XA, ZA & ZB | | | | | | | | | | |
| 463 | LINES Y & Z | | | | | | | | | 1 | |
| | TOTAL CSJ: 2452-01-038 | | 3 | | | 1 | 1 | 1 | | 1 | 1 |
| | CSJ: 2452-01-037 | | | | | | | | | | |
| 454 | LINE I-1 THRU I-3 | | 1 | | | | | | | | |
| 455 | LINE I-4 THRU I-7 | | 1 | | | 1 | | | | | |
| 458 | LINES I-15, I-16, I-25 & I-26 | | | | | 2 | 3 | | | | |
| 457 | LINES I-10 THRU I-14 & 10 | | | | | | | | | | |
| 454 | LINES I-20A, I-27 & I-30 | | | | | 2 | | | | | |
| 468 | LINES T, TA & TB | | | | | | | 1 | | | |
| 465 | LINE W | | | | | | | | | | |
| 466 | LINE WA THRU WB | | | | | | | | | | |
| | TOTAL CSJ: 2452-01-037 | | 2 | | | 5 | 3 | 1 | | | |
| | CSJ: 2452-01-036 | | | | | | | | | | |
| 458 | LINES I-15, I-16, I-25 & I-26 | | | | | 1 | | | 1 | | |
| 454 | LINES I20A, I27 & I30 | | | | | 4 | | | | | |
| 460 | LINE I-28, I-31 & I-32 | | | | | 2 | | 2 | | | |
| 461 | LINE I-35, I-36, I-37 & I-40 | | | 1 | | 1 | 1 | | | | |
| 462 | LINE I-48 & I-53 | 4 | | | 1 | | | | | | |
| 467 | LINES U & V | | | | | | | | | | |
| | TOTAL CSJ: 2452-01-036 | 4 | | 1 | 1 | 8 | 1 | 2 | 1 | | |
| | TOTAL | 4 | 5 | 1 | 1 | 14 | 5 | 4 | 1 | 1 | 1 |

# ARMOR CURB SUMMARY

| SHEET NO. | INTERIOR DRAINAGE AREA MAP SHEET | 529 CONC CURB (ARMOR CURB SLOT) | *432 RIPRAP (CONC) (CL B) |
|---|---|---|---|
| | | M | M3 |
| | CSJ: 2452-01-038 | | |
| 431 | STA 15+500 TO 15+860 | 6 | 1.8 |
| 432 | STA 15+860 TO 16+580 | 15 | 5.4 |
| 434 | STA 16+580 TO 17+000 | | |
| | TOTAL CSJ: 2452-01-038 | 21 | 7.2 |
| | CSJ: 2452-01-037 | | |
| 429 | STA 13+800 TO 14+420 | | |
| 430 | STA 14+420 TO 15+140 | | |
| ~~431~~ | ~~STA 15+140 TO 15+500~~ | | |
| 434 | STA 17+000 TO 17+300 | | |
| 435 | STA 17+300 TO 18+020 | | |
| 436 | STA 18+020 TO 18+740 | | |
| 437 | STA 18+740 TO 19+460 | 6 | 1.8 |
| 438 | STA 19+460 TO 20+180 | 3 | |
| 439 | STA 20+180 TO 20+640 | | |
| | ~~TOTAL CSJ: 2452-01-037~~ | ~~9~~ | ~~1.8~~ |
| | CSJ: 2452-01-036 | | |
| 439 | STA 20+640 TO 20+900 | | |
| ~~440~~ | ~~STA 20+900 TO 21+620~~ | ~~3~~ | ~~0.9~~ |
| 441 | STA 21+620 TO 22+340 | | |
| 442 | STA 22+340 TO 23+060 | | |
| 443 | STA 23+060 TO 23+780 | 3 | 0.9 |
| 444 | STA 23+780 TO 24+500 | 3 | 0.9 |
| 445 | STA 24+500 TO 25+220 | | |
| 446 | STA 25+220 TO 25+940 | 6 | |
| 447 | STA 25+940 TO 26+660 | 3 | 0.9 |
| 448 | STA 26+660 TO 27+380 | | |
| 449 | STA 27+380 TO 28+100 | | |
| 450 | STA 28+100 TO 28+554.079 | | |
| | ~~TOTAL CSJ: 2452-01-036~~ | ~~18~~ | ~~3.6~~ |
| | TOTAL | ~~48~~ | ~~12.6~~ |

ELIMINATED ACI'S & PLACED CURB INLETS (CO #28)

CHANGE ORDER NO. 28

DELETED ARMOR CURB SLOTS TO BE PLACED AT WESTWOOD LP. REPLACED WITH STORM DRAIN & CURB INLES.

CHANGE ORDER 28

△# REFERS TO CHANGES MADE AS PART OF CHANGE ORDER.

© 2001 Texas Department of Transportation

LOOP 1604
STORM DRAIN & ARMOR CURB SLOT SUMMARY

| Dsn | | | | | PROJECT NO. |
|---|---|---|---|---|---|
| Ck Dsn | | | | | NH 2000 (704), etc. |
| Dsn | CONTROL | SECTION | JOB | DIST. | STATE | COUNTY | HIGHWAY NO. | SHEET NO. |
| Ck Dsn | 2452 | 01 | 036 | SAT | TX | BEXAR | LOOP 1604 | 31A |

etc.

01-23-03

PLOTTED ON: 8DATE8

DESIGN FILENAME: $FILE8

# LARGE STRUCTURE SUMMARY

| | | | | NB MAINLANE OVERPASS @ CULEBRA CREEK & CULEBRA RD. | SB MAINLANE OVERPASS @ CULEBRA CREEK & CULEBRA RD. | | NB FRONTAGE RD. OVERPASS @ CULEBRA CREEK | SB FRONTAGE RD. OVERPASS @ CULEBRA CREEK | | NB FRONTAGE RD. OVERPASS @ MEDIO CREEK | SB MAINLANE. OVERPASS @ MEDIO CREEK | | | |
|---|---|---|---|---|---|---|---|---|---|---|---|---|---|---|
| CONTROL-SECTION-JOB | | | | 0849-01-036 | | | 2452-041-038 | | | 2452-041-036 | | | | |
| PERMANENT STRUCTURE NUMBER | | | | 15-015-2452-01-173 | 15-015-2452-01-174 | | 15-015-2452-01-175 | 15-015-2452-01-176 | | 15-015-2452-01-172 | 15-015-2452-01-171 | | | |
| BEGIN BRIDGE STATION | | | | 15+795.900 | 15+795.900 | | 0+437.500 | 0+411.900 | | 6+272.750 | 24+267.500 | | | |
| END BRIDGE STATION | | | | 16+065.100 | 16+065.100 | | 0+538.000 | 0+511.500 | | 6+359.750 | 24+353.000 | | | |
| LENGTH ( METERS ) | | | | 269.200 | 269.200 | | 100.500 | 99.600 | | 87.000 | 85.500 | | | |
| LAYOUT SHEET NO. | | | | 483-485 | 495-497 | | 507 | 513 | | 521 | 527 | | | |
| ITEM | DESC CODE | DESCRIPTION | UNIT | | | TOTAL | | | TOTAL | | | TOTAL | PROJECT TOTALS | UNIT |
| 110 | 5002 | EXCAVATION (CHANNEL) | M3 | 8,529 | 8,529 | 17,058 | 8,529 | 8,529 | 17,058 | 7,107 | 7,107 | 14,214 | 48,330 | M3 |
| 416 | 5006 | DRILLED SHAFT (900 MM) | M | 246.1 | 246.1 | 492.2 | 131.9 | 152.8 | 284.7 | 103.6 | 84.4 | 188.0 | 964.9 | M |
| 420 | 5013 | CLASS "C" CONCRETE (ABUT) | M3 | 37.0 | 37.0 | 74.0 | 53.8 | 63.0 | 116.8 | 40.0 | 41.6 | 81.6 | 272.4 | M3 |
| 420 | 5014 | CLASS "C" CONCRETE (BENT) | M3 | 168.2 | 168.2 | 336.4 | 64.0 | 74.9 | 138.9 | 54.3 | 53.5 | 107.8 | 583.1 | M3 |
| 422 | 5001 | REINFORCED CONCRETE SLAB | M2 | 3,230.4 | 3,230.4 | 6,460.8 | 1,869.3 | 2,211.1 | 4,080.4 | 1,148.4 | 1,179.9 | 2,328.3 | 12,869.5 | M2 |
| | | | | | | | | | | | | | | |
| 425 | 5006 | PRESTRESSED CONC BM (TYPE IV) | M | 1,378.7 | 1,378.7 | 2,757.4 | 801.6 | 893.7 | 1,695.3 | 520.2 | 511.2 | 1,031.4 | 5,484.1 | M |
| 428 | 5001 | CONCRETE SURFACE TREATMENT | M2 | 3,069 | 3,069 | 6,138 | 1,809 | 2,151 | 3,960 | 1,096 | 1,129 | 2,225 | 12,323 | M2 |
| 432 | 5001 | RIPRAP (CONC) (CL B) | M3 | ~~302~~ 296 | ~~284~~ 278 | ~~586~~ 574 | 250 | 205 | 455 | 199 | 217 | ~~416~~ | ~~1457~~ 1445 | M3 |
| 444 | 5003 | PROTECTIVE ANGLE W/SIGN BRACKETS | EA | 1 | 1 | 2 | | | | | | | 2 | EA |
| 444 | 5005 | SIGN & BRACKET | EA | 1 | 1 | 2 | | | | | | | 2 | EA |
| | | | | | | | | | | | | | | |
| 450 | 5045 | RAIL (TY SSTR) | M | 552.8 | 552.8 | 1,105.6 | | | | | | | 1,105.6 | M |
| 450 | 5016 | RAIL (TY C202) | M | | | | 100.5 | 99.6 | 200.1 | 87.0 | | 87.0 | 287.1 | M |
| 450 | 5060 | RAIL (TY PRI) | M | | | | 107.7 | 106.8 | 214.5 | 94.2 | | 94.2 | 308.7 | M |
| 450 | 5054 | RAIL (TY T202)(MOD) | M | | | | 107.7 | 106.8 | 214.5 | 94.2 | 185.4 | 279.6 | 494.1 | M |
| 454 | 5006 | SEALED EXP JT SEJ-A (100 MM) | M | 48.0 | 48.0 | 96.0 | 37.2 | 44.4 | 81.6 | 26.4 | 27.6 | 54.0 | 231.6 | M |
| | | | | | | | | | | | | | | |
| 5027 | 5001 | LANDSCAPING PAVERS | M2 | ~~436~~ 0 | ~~436~~ 0 | ~~872~~ 0 | | | | | | | ~~872~~ 0 | M2 |
| | | | | | | | | | | | | | | |
| | | | | | | | | | | | | | | |


STATE OF TEXAS
Manching W. Yu
84851
REGISTERED PROFESSIONAL ENGINEER


Manching W. Yu
10-26-2000

S & B INFRASTRUCTURE, LTD.

©2000 TEXAS DEPARTMENT OF TRANSPORTATION

**LOOP 1604**
**LARGE STRUCTURE SUMMARY**
**(Span Type Bridges)**

| | | | |
|---|---|---|---|
| DESIGNED BY: DE | CHECKED BY: KL | DATE: 09-18-00 | |
| DRAWN BY: TC | CHECKED BY: MW | DATE: 09-18-00 | |
| APPROVED BY: MW | DATE: 09-18-00 | PROJECT NO: 9432 | |

| FED. RD. DIV. NO. | FEDERAL AID PROJECT NO. | SHEET NO. |
|---|---|---|
| 6 | NH 2000 (704), etc. | 32 |

| STATE | STATE DIST. NO. | COUNTY | |
|---|---|---|---|
| TEXAS | SAT | BEXAR | |
| CONT. | SECT. | JOB | HIGHWAY NO. |
| 2452 | 01 | 036, etc. | LP 1604 |


26 OCT 2000 16:30:05 s:\project\u9432.200\design*data\cadd\dgn\large*str.dgn

# TRAFFIC SIGNAL SUMMARY DATA

| PLAN SHEET NUMBER | LOCATION | ITEM 618 CONDUIT | | | ITEM 620 ELEC CONDR | | | ITEM 624 GROUND BOX | | ITEM 625 | ITEM 628 | ITEM 656 FOUNDATIONS | | | | ITEM 680 | ITEM 681 | ITEM 682 SIGNAL SECTIONS | | | ITEM 684 TRAF SIG CABLE | | | ITEM 686 SIGNAL POLE ASSEMBLIES | | | | | | | |
|---|---|---|---|---|---|---|---|---|---|---|---|---|---|---|---|---|---|---|---|---|---|---|---|---|---|---|---|---|---|---|
| | | PVC SCH 80 32 mm | PVC SCH 80 50 mm | PVC SCH 80 75 mm | NO. 6 BARE | NO. 10 INSUL. | NO. 6 INSUL. | TYPE "A" | TYPE "D" | STEEL WIRE STRAND 7.94 mm | ELECT SERV TY T "TP" | TRAF SIG CNTRL | 600 mm DRILL SHAFT | 750 mm DRILL SHAFT TY A | 900 mm DRILL SHAFT TY A | INSTAL OF HWY TRAF SIG | TEMP TRAF SIG | VEH. SIG. SEC 300 mm | PED. SIG. SEC 2 IND 300 mm | LOUVER ADJUST -ABLE | TYPE A 4 CNDR 12 AWG | TYPE A 7 CNDR 12 AWG | TYPE C 2 CNDR 14 AWG | STEEL STRAIN TY B 9.1 M | STEEL STRAIN TY B 9.1 M LUM | MAST STL 1 ARM 8.5 M | MAST STL 1 ARM 9.8 M | MAST STL 1 ARM 11.0 M | MAST STL 1 ARM 12.2 M | MAST STL 1 ARM 13.4 M | MAST STL 1 ARM 14.6 M |
| | | M | M | M | M | M | M | EA. | EA. | M | EA. | EA. | M | M | M | EA. | EA. | EA. | EA. | EA. | M | M | M | EA. | EA. | EA. | EA. | EA. | EA. | EA. | EA. |
| CONTROL: 2452-01-038 | | | | | | | | | | | | | | | | | | | | | | | | | | | | | | |
| 557 | LOOP 1604 @ F.M. 471 | 587 | 138 | 615 | 330 | | 205 | 11 | 8 | | 1 | 1 | 3.4 | 3.4 | 20 | 1 | 1 | 46 | 12 | | 1,125 | 775 | 2,410 | | | 1 | | 1 | 3 | 1 |
| | TOTALS | 587 | 138 | 615 | 330 | | 205 | 11 | 8 | | 1 | 1 | 3.4 | 3.4 | 20 | 1 | 1 | 46 | 12 | | 1,125 | 775 | 2,410 | | | 1 | | 1 | 3 | 1 |
| CONTROL: 2452-01-037 | | | | | | | | | | | | | | | | | | | | | | | | | | | | | | |
| 562 | LOOP 1604 @ S.H. 151 E.B. | 335 | 12 | 58 | 145 | | 40 | 9 | 1 | 100 | 1 | 1 | | | 20 | 1 | | 18 | | 6 | 250 | | 685 | 5 | | | | | | |
| | TOTALS | 335 | 12 | 58 | 145 | | 40 | 9 | 1 | 100 | 1 | 1 | | | 20 | 1 | | 18 | | 6 | 250 | | 685 | 5 | | | | | | |
| CONTROL: 2452-01-036 | | | | | | | | | | | | | | | | | | | | | | | | | | | | | | |
| 565 | LOOP 1604 @ MILITARY DR. WEST | 501 | 63 | 384 | 245 | | 120 | 11 | 8 | | 1 | 1 | 3.4 | 10.2 | 12 | 1 | 1 | 46 | 12 | | 620 | 520 | 1,360 | | | | 2 | 1 | | 3 | |
| 570 | LOOP 1604 @ F.M. 1957 | 515 | 72 | 405 | 250 | | 135 | 11 | 8 | | 1 | 1 | 3.4 | 6.8 | 16 | 1 | 1 | 46 | 12 | | 660 | 530 | 1,550 | | | | 2 | | 1 | 3 | |
| 575 | LOOP 1604 @ MARBACH RD. | 453 | 24 | 349 | 235 | | 70 | 10 | 6 | | 1 | 1 | 5.1 | 3.4 | 16 | 1 | 1 | 34 | 10 | 6 | 475 | 410 | 1,160 | | | 1 | | | 4 | | |
| 578 | LOOP 1604 @ U.S. 90 NORTH F.R. | 132 | | 95 | 40 | 360 | | 4 | 1 | 110 | | | | | 16 | 1 | 1 | 24 | 4 | | 310 | 535 | 1,320 | 2 | 2 | | | | | |
| | TOTALS | 1601 | 159 | 1233 | 770 | 360 | 325 | 36 | 23 | 110 | 3 | 3 | 11.9 | 20.4 | 60 | 4 | 4 | 150 | 38 | 6 | 2065 | 1995 | 5390 | 2 | 2 | 1 | 4 | 1 | 5 | 6 |
| PROJECT TOTALS | | 2,523 | 309 | 1,906 | 1,245 | 360 | 570 | 56 | 32 | 220 | 5 | 5 | 15.3 | 23.8 | 100 | 6 | 5 | 214 | 50 | 12 | 3,440 | 2,770 | 8,485 | 7 | 2 | 1 | 5 | 1 | 6 | 9 |

⚹-FOR CONTRACTOR'S INFORMATION ONLY

LEVELS DIS 1 7 8 19 | 1 7 8 19 20 21 22 23 24 25 26 27 28 29 30 31 32 | 33 34 35 36 37 38 39 40 41 42 43 44 45 46 47 48 | 49 50 51 52 53 54 56 57 58 59 60 61 62 | ACC: | FILE: .DGN

# TRAFFIC SIGNAL SUMMARY DATA

©2000 Texas Department of Transportation



| FED. RD. DIV. NO. | FEDERAL AID PROJECT NO. | | SHEET NO. |
|---|---|---|---|
| 6 | NH 2000(704), Etc. | | 33 |
| STATE | DIST. | COUNTY | |
| TEXAS | SAT | BEXAR | |
| CONT. | SECT. | JOB | HIGHWAY NO. |
| 2452 | 01 | 036, Etc. | LOOP 1604 |

# TRAFFIC SIGNAL SUMMARY DATA

| PLAN SHEET NUMBER | LOCATION | ITEM 688 DETECTORS: PED PUSH BUTTON | ITEM 688 DETECTORS: VEH DET SAW CUT | ITEM 6008: SALV TRAF SIG | ITEM 6023: PED POLE ASSMBY | ITEM 6438 VIDEO IMAGING VEHICLE DETECTION SYSTEM ✳: PRCSR SYSTEM | ITEM 6438 VIDEO IMAGING VEHICLE DETECTION SYSTEM ✳: CAMERA ASSBLY | ITEM 6438 VIDEO IMAGING VEHICLE DETECTION SYSTEM ✳: SET-UP SYSTEM | ITEM 6438 VIVDS: COMM. CABLE CO-AXIAL | ITEM 6438 VIVDS: VIVDS TEMP. |
|---|---|---|---|---|---|---|---|---|---|---|
| | | EA. | M | EA. | EA. | EA. | EA. | EA. | M | EA. |
| CONTROL: 2452-01-038 | | | | | | | | | | |
| 557 | LOOP 1604 @ F.M. 471 | 12 | 600 | 1 | 2 | 1 | 4 | 1 | 200 | 1 |
| TOTALS | | 12 | 600 | 1 | 2 | 1 | 4 | 1 | 200 | 1 |
| CONTROL: 2452-01-037 | | | | | | | | | | |
| 562 | LOOP 1604 @ S.H. 151 E.B | | 300 | | | | | | | |
| TOTALS | | | 300 | | | | | | | |
| CONTROL: 2452-01-036 | | | | | | | | | | |
| 565 | LOOP 1604 @ MILITARY DR. WEST | 12 | 425 | 1 | 2 | 1 | 4 | 1 | 200 | 1 |
| 570 | LOOP 1604 @ F.M. 1957 | 12 | 435 | 1 | 2 | 1 | 4 | 1 | 200 | 1 |
| 575 | LOOP 1604 @ MARBACH RD. | 10 | 285 | 1 | 3 | 1 | 4 | 1 | 175 | 1 |
| 578 | LOOP 1604 @ U.S. 90 NORTH F.R. | 4 | 235 | 1 | | 1 | 4 | 1 | 245 | 1 |
| TOTALS | | 38 | 1380 | 4 | 7 | 4 | 16 | 4 | 820 | 4 |
| PROJECT TOTALS | | 50 | 2,280 | 5 | 9 | 5 | 20 | 5 | 1,020 | 5 |

✳-FOR CONTRACTOR'S INFORMATION ONLY

SHEET 2 OF 2

# TRAFFIC SIGNAL SUMMARY DATA

©2000 Texas Department of Transportation

| FED. RD. DIV. NO. | FEDERAL AID PROJECT NO. | | SHEET NO. |
|---|---|---|---|
| 6 | NH 2000(704), Etc. | | 34 |
| STATE | DIST. | COUNTY | |
| TEXAS | SAT | BEXAR | |
| CONT. | SECT. | JOB | HIGHWAY NO. |
| 2452 | 01 | 036, Etc. | LOOP 1604 |

LEVELS DI: ACC: FILE: .DGN

# TRAFFIC SIGNAL SUMMARY DATA

✳

| PLAN SHEET NUMBER | LOCATION | ITEM 688 DETECTORS: PED PUSH BUTTON (EA.) | ITEM 688 DETECTORS: VEH DET SAW CUT (M) | ITEM 6008: SALV TRAF SIG (EA.) | ITEM 6023: PED POLE ASSMBY (EA.) | ITEM 6438 VIDEO IMAGING VEHICLE DETECTION SYSTEM: PRCSR SYSTEM (EA.) | CAMERA ASSBLY (EA.) | SET-UP SYSTEM (EA.) | ITEM 6438 VIVDS: COMM. CABLE CO-AXIAL (M) | VIVDS TEMP. (EA.) |
|---|---|---|---|---|---|---|---|---|---|---|
| CONTROL: 2452-01-038 | | | | | | | | | | |
| 557/561 | LOOP 1604 @ F.M. 471 | 12 | 600 | 1 | 2 | 1 | 6 | 1 | 200 | 1 |
| 581/581A | | | | | | | ◆ | | | |
| CSJ TOTALS | | 12 | 600 | 1 | 2 | 1 | 6 | 1 | 200 | 1 |
| | | | | | | | ◆ | | | |
| CONTROL: 2452-01-037 | | | | | | | | | | |
| 562/564 | LOOP 1604 @ S.H. 151 S. CONN. | | 300 | | | | | | | |
| CSJ TOTALS | | | 300 | | | | | | | |
| CONTROL: 2452-01-036 | | | | | | | | | | |
| 565/569 | LOOP 1604 @ MILITARY DR. WEST | 12 | 425 | 1 | 2 | 1 | 6 | 0 | 200 | 1 |
| 582 | | | | | | | ◆ | ◆ | | |
| 570/574 | LOOP 1604 @ F.M. 1957 | 12 | 435 | 1 | 2 | 1 | 6 | 0 | 200 | 1 |
| 583/584 | | | | | | | ◆ | ◆ | | |
| 575/577 | LOOP 1604 @ MARBACH RD. | 10 | 285 | 1 | 3 | 1 | 3 | 0 | 175 | 1 |
| 585/586 | | | | | | | ◆ | ◆ | | |
| 578/580 | LOOP 1604 @ U.S. 90 NORTH F.R. | 4 | 235 | 1 | | 1 | 4 | 0 | 245 | 1 |
| 587 | | | | | | | | ◆ | | |
| CSJ TOTALS | | 38 | 1,380 | 4 | 7 | 4 | 19 | 0 | 820 | 4 |
| | | | | | | | ◆ | ◆ | | |
| PROJECT TOTALS | | 50 | 2,280 | 5 | 9 | 5 | 25 | 1 | 1,020 | 5 |

◆ CHANGE ORDER NO. 3

✳-FOR CONTRACTOR'S INFORMATION ONLY

SHEET 2 OF 2

TRAFFIC SIGNAL SUMMARY DATA

©2000 Texas Department of Transportation

| FED. RD. DIV. NO. | FEDERAL AID PROJECT NO. | | SHEET NO. |
|---|---|---|---|
| 6 | NH 2000(704), Etc. | | 34A |
| STATE | DIST. | COUNTY | |
| TEXAS | SAT | BEXAR | |
| CONT. | SECT. | JOB | HIGHWAY NO. |
| 2452 | 01 | 036, Etc. | LOOP 1604 |

## ELECTICAL LAYOUT DATA

| ITEM | DESC CODE | DESCRIPTION | UNIT | CSJ 2452-01-037 SHEET NUMBER | | | CSJ 2452-01-038 SHEET NUMBER | | | | | | CSJ 2452-01-037 SHEET NUMBER | | | | | | | | | CSJ 2452-01-036 SHEET NUMBER | | | | | | | | CSJ 2452-01-036 | CSJ 2452-01-037 | CSJ 2452-041-038 | TOTAL EST QTY | FINAL QTY |
|---|---|---|---|---|---|---|---|---|---|---|---|---|---|---|---|---|---|---|---|---|---|---|---|---|---|---|---|---|---|---|---|---|---|
| | | | | 602 | 603 | 604 | 604 | 605 | 606 | 608 | 609 | 610 | 610 | 611 | 612 | 613 | 614 | 615 | 616 | 617 | 618 | 619 | 620 | 621 | 622 | 623 | 624 | 625 | 626 | | | | | |
| 0610 | 5001 | RDWY ILL ASSEM (TY SA 15T-3) (.4KW) S | EA | | | | | | 4 | | | | | | | | | | | 4 | | | 4 | | 4 | 4 | | | | | 12 | 4 | 4 | 20 | |
| 0610 | 5003 | RDWY ILL ASSEM (TY SA 12T-3) (.25KW) S | EA | 1 | | | | 2 | | 4 | | | | | | 2 | 2 | 2 | 2 | | 1 | 1 | | 1 | | | 1 | 1 | 3 | 7 | 10 | 6 | 23 | |
| 0610 | 5002 | RDWY ILL ASSEM (TY SA 15T-3-3) (.4KW) S | EA | | 1 | 2 | | | | | 3 | 1 | 2 | 2 | 3 | | | | | | | | | | | | | | | | 10 | 4 | 14 | |
| 0610 | 5017 | RDWY ILL AM U/P (TY SPL-CO) (.15KW) S (TY1) | EA | | | | | | 8 | | | | | | | | | | | | | | | | | | | | | | | 8 | 8 | |
| 0618 | 5009 | CONDUIT (PVC) (SCHD 40) (32 MM) | M | 30 | 51 | 140 | 62 | 221 | 264 | 291 | 372 | 122 | 153 | 255 | 195 | 110 | 78 | 303 | 31 | 261 | 10 | 10 | 261 | 50 | 261 | 256 | 10 | 230 | 158 | 1236 | 1617 | 1332 | 4185 | |
| 0618 | 5011 | CONDUIT (PVC) (SCHD 40) (50 MM) | M | | | | | | 140 | | | | | | | | | | | | | | | | | | | | | | | 140 | 140 | |
| 0618 | 5026 | CONDUIT (RM) (PUSH-BORE) (50 MM) | M | | | | | | 40 | | | | | | | | | | | | | | | | | | | | | | | 40 | 40 | |
| 0618 | 5045 | CONDUIT (PVC) (SCHD 40) (25 MM) | M | | | | | | 40 | | | | | | | | | | | | | | | | | | | | | | | 40 | 40 | |
| 0620 | 5003 | ELEC CONDUCTOR (NO. 8) BARE | M | 30 | 51 | 140 | 62 | 221 | 490 | 291 | 372 | 122 | 153 | 255 | 195 | 110 | 78 | 303 | 31 | 261 | 10 | 10 | 261 | 50 | 261 | 256 | 10 | 230 | 158 | 1236 | 1617 | 1558 | 4411 | |
| 0620 | 5009 | ELEC CONDUCTOR (NO. 8) INSULATED | M | 60 | 102 | 280 | 124 | 442 | 980 | 582 | 722 | 82 | 306 | 510 | 390 | 220 | 156 | 606 | 62 | 522 | 20 | 20 | 522 | 100 | 522 | 512 | 20 | 460 | 316 | 2472 | 3234 | 2932 | 8638 | |
| 0620 | 5010 | ELEC CONDUCTOR (NO. 6) INSULATED | M | | | | | | | | 210 | 162 | | | | | | | | | | | | | | | | | | | | 372 | 372 | |
| 0624 | 5001 | GROUND BOX TY A (122311) W\APRON | EA | 1 | | | 1 | 1 | 5 | 1 | 2 | | | | | 1 | | 2 | 1 | 1 | 1 | 1 | 1 | 1 | 1 | 1 | 1 | 2 | | 8 | 7 | 10 | 25 | |
| 0628 | 5056 | ELEC SERV TYS (240/480) 060 (NS) GS (T) TP (O) | EA | 1 | | | | 1 | 1 | | 1 | | | | | 1 | | 1 | 1 | 1 | 1 | 1 | 1 | 1 | 1 | 1 | 1 | | | 7 | 6 | 3 | 16 | |
| 0656 | 5010 | FND FOR RDWY ILL ASM (TY A) (750 MM DR SH) | M | 2 | 2 | 4 | | 4 | 8 | 8 | 6 | 2 | 4 | 4 | 6 | 4 | 4 | 4 | 4 | 8 | 2 | 2 | 8 | 2 | 8 | 8 | 2 | 2 | 6 | 38 | 48 | 28 | 114 | |

## ELECTRIC SERVICE DATA

| SERVICE POLE NO. | SHEET NO. | CONTROL SECTION & JOB NO. | ELECTRIC SERVICE DESCRIPTION (SEE ED (3)-98 (M)) | ELECTRIC SERVICE CONDUIT SIZE | SERVICE CONDUCTORS NO/SIZE | SAFETY SWITCH AMPS | MAIN DISCONNECT | | TWO-POLE CONTACTOR AMPS | PANEL BD/ LOADCENTER AMP RATING (min) | CURCUIT NO. | BRANCH CKT. BKR. POLE/AMPS | BRANCH CIRCUIT AMPS | KVA LOAD |
|---|---|---|---|---|---|---|---|---|---|---|---|---|---|---|
| | | | | | | | MAIN BKR. | CKT. BKR. POLE/AMP | | | | | | |
| 1 | 602 | CSJ 2452-041-037 | ELEC SERV TYS (240/480) 060 (NS) GS (T) TP (O) | 38 MM | 3/#6 | N/A | 2P/60 | 2P/60 | 2P-60 | 70 AMP | 100 | 2P/20 | 0.75 | 0.360 |
| 2 | 605 | CSJ 2452-041-038 | ELEC SERV TYS (240/480) 060 (NS) GS (T) TP (O) | 38 MM | 3/#6 | N/A | 2P/60 | 2P/60 | 2P-60 | 70 AMP | 200 | 2P/30 | 8.70 | 4.176 |
| 3 | 606 | | ELEC SERV TYS (240/480) 060 (NS) GS (T) TP (O) | 38 MM | 3/#6 | N/A | 2P/60 | 2P/60 | 2P-60 | 70 AMP | 300 | 2P/30 | 8.40 | 4.032 |
| 4 | 609 | | ELEC SERV TYS (240/480) 060 (NS) GS (T) TP (O) | 38 MM | 3/#6 | N/A | 2P/60 | 2P/60 | 2P-60 | 70 AMP | 400 | 2P/30 | 10.20 | 14.112 |
| | | | | | | | | | | | 500 | 2P/30 | 19.20 | IN ABOVE |
| 5 | 613 | CSJ 2452-041-037 | ELEC SERV TYS (240/480) 060 (NS) GS (T) TP (O) | 38 MM | 3/#6 | N/A | 2P/60 | 2P/60 | 2P-60 | 70 AMP | 600 | 2P/20 | 1.50 | 0.720 |
| 6 | 615 | | ELEC SERV TYS (240/480) 060 (NS) GS (T) TP (O) | 38 MM | 3/#6 | N/A | 2P/60 | 2P/60 | 2P-60 | 70 AMP | 700 | 2P/20 | 3.75 | 1.800 |
| 7 | 616 | | ELEC SERV TYS (240/480) 060 (NS) GS (T) TP (O) | 38 MM | 3/#6 | N/A | 2P/60 | 2P/60 | 2P-60 | 70 AMP | 800 | 2P/20 | 0.75 | 0.360 |
| 8 | 617 | | ELEC SERV TYS (240/480) 060 (NS) GS (T) TP (O) | 38 MM | 3/#6 | N/A | 2P/60 | 2P/60 | 2P-60 | 70 AMP | 900 | 2P/20 | 4.80 | 2.300 |
| 9 | 618 | | ELEC SERV TYS (240/480) 060 (NS) GS (T) TP (O) | 38 MM | 3/#6 | N/A | 2P/60 | 2P/60 | 2P-60 | 70 AMP | 1000 | 2P/20 | 0.75 | 0.360 |
| 10 | 619 | CSJ 2452-041-036 | ELEC SERV TYS (240/480) 060 (NS) GS (T) TP (O) | 38 MM | 3/#6 | N/A | 2P/60 | 2P/60 | 2P-60 | 70 AMP | 1100 | 2P/20 | 0.75 | 0.360 |
| 11 | 620 | | ELEC SERV TYS (240/480) 060 (NS) GS (T) TP (O) | 38 MM | 3/#6 | N/A | 2P/60 | 2P/60 | 2P-60 | 70 AMP | 1200 | 2P/20 | 4.80 | 2.300 |
| 12 | 621 | | ELEC SERV TYS (240/480) 060 (NS) GS (T) TP (O) | 38 MM | 3/#6 | N/A | 2P/60 | 2P/60 | 2P-60 | 70 AMP | 1300 | 2P/20 | 0.75 | 0.360 |
| 13 | 622 | | ELEC SERV TYS (240/480) 060 (NS) GS (T) TP (O) | 38 MM | 3/#6 | N/A | 2P/60 | 2P/60 | 2P-60 | 70 AMP | 1400 | 2P/20 | 4.80 | 2.300 |
| 14 | 623 | | ELEC SERV TYS (240/480) 060 (NS) GS (T) TP (O) | 38 MM | 3/#6 | N/A | 2P/60 | 2P/60 | 2P-60 | 70 AMP | 1500 | 2P/20 | 4.80 | 2.300 |
| 15 | 624 | | ELEC SERV TYS (240/480) 060 (NS) GS (T) TP (O) | 38 MM | 3/#6 | N/A | 2P/60 | 2P/60 | 2P-60 | 70 AMP | 1600 | 2P/20 | 0.75 | 0.360 |
| 16 | 625 | | ELEC SERV TYS (240/480) 060 (NS) GS (T) TP (O) | 38 MM | 3/#6 | N/A | 2P/60 | 2P/60 | 2P-60 | 70 AMP | 1700 | 2P/20 | 3.00 | 1.440 |

FILE: I:\co\design\lp1604fm471-90\summaries\illumsum.dgn
LEVEL DISPLAYED: 1 2 3 4 5 6 7 8 9 10 11 12 13 14 15 16 17 18 19 20 21 22 23 24 25 26 27 28 29 30 31 32 33 34 35 36 37 38 39 40 41 42 43 44 45 46 47 48 49 50 51 52 53 54 55 56 57 58 59 60 61 62 63
12 SEP 2000

STATE OF TEXAS
JOEL K. DAVENPORT, JR.
79276
REGISTERED PROFESSIONAL ENGINEER

Joel K. Davenport, Jr. P.E. 79276 — 9/19/00 Date

©2000 Texas Department of Transportation

# ILLUMINATION ELEC/SERV POLE SUMMARY DATA

| FED. RD. DIV. NO. | FEDERAL AID PROJECT NO. | | SHEET NO. |
|---|---|---|---|
| 6 | NH 2000(704), etc. | | 35 |
| STATE | DIST. | COUNTY | |
| TEXAS | SAT | BEXAR | |
| CONT. | SECT. | JOB | HIGHWAY NO. |
| 2452 | 01 | 036, etc. | LP 1604 |

# ELECTICAL LAYOUT DATA

| ITEM | DESC CODE | DESCRIPTION | UNIT | CSJ 2452-01-037 SHEET NUMBER | | | CSJ 2452-01-038 SHEET NUMBER | | | | | | CSJ 2452-01-037 SHEET NUMBER | | | | | | | | | | | | CSJ 2452-01-036 SHEET NUMBER | | | | | | | | | | | | | | CSJ 2452-01-036 | CSJ 2452-01-037 | CSJ 2452-041-038 | TOTAL EST QTY | FINAL QTY |
|---|---|---|---|---|---|---|---|---|---|---|---|---|---|---|---|---|---|---|---|---|---|---|---|---|---|---|---|---|---|---|---|---|---|---|---|---|---|---|---|---|---|---|
| | | | | 602A | 603 | 604 | 604 | 605 | 606 | 608 | 609 | 610 | 610 | 611 | 612 | 613 | 614 | 615 | 615A | 616 | 617 | 617A | 618 | 619 | 620 | 621 | 622 | 622A | 622B | 622C | 622D | 622E | 623A | 624A | 625 | 626 | | | | | | | |
| 0610 | 5001 | RDWY ILL ASSEM (TY SA 15T-3) (.4KW) S | EA | | | | | | 4 | | | | | | | | | | | | 4 | 4 | | | 4 | | 4 | | | | | | 4 | | | | 12 | 4 | 4 | 20 | |
| 0610 | 5003 | RDWY ILL ASSEM (TY SA 12T-3) (.25KW) S | EA | 1 | | | | 2 | | 4 | | | | | | 2 | 2 | 2 | 2 | 2 | | | 1 | 1 | | 1 | | 1 | 2 | 1 | 1 | 1 | | 1 | 1 | 3 | 14 | 9 | 6 | 29 | 28 |
| 0610 | 5002 | RDWY ILL ASSEM (TY SA 15T-3-3) (.4KW) S | EA | | 1 | 2 | | | | | 3 | 1 | 2 | 2 | 3 | | | | | | | | | | | | | | | | | | | | | | 10 | 4 | 14 | |
| 0610 | 5017 | RDWY ILL AM U/P (TY SPL-CO) (.15KW) S (TY1) | EA | | | | 8 | | | | | | | | | | | | | | | | | | | | | | | | | | | | | | | | 8 | 8 | |
| 0618 | 5009 | CONDUIT (PVC) (SCHD 40) (32 MM) | M | 30 | 51 | 140 | 62 | 221 | 264 | 291 | 372 | 122 | 153 | 255 | 195 | 110 | 78 | 303 | 303 | 31 | 261 | 271 | 10 | 10 | 261 | 50 | 261 | 50 | 117 | 10 | 65 | 80 | 260 | 40 | 230 | 158 | 1592 | 1597 | 1332 | 4521 | |
| 0618 | 5011 | CONDUIT (PVC) (SCHD 40) (50 MM) | M | | | | | | 140 | | | | | | | | | | | | | | | | | | | | | | | | | | | | | | 140 | 140 | |
| 0618 | 5026 | CONDUIT (RM) (PUSH-BORE) (50 MM) | M | | | | | | 40 | | | | | | | | | | | | | | | | | | | 18 | | | | | 40 | | | | 58 | | 40 | 98 | |
| 0618 | 5045 | CONDUIT (PVC) (SCHD 40) (25 MM) | M | | | | | | 40 | | | | | | | | | | | | | | | | | | | | | | | | | | | | | | 40 | 40 | |
| 0620 | 5003 | ELEC CONDUCTOR (NO. 8) BARE | M | 30 | 51 | 140 | 62 | 221 | 490 | 291 | 372 | 122 | 153 | 255 | 195 | 110 | 78 | 303 | 303 | 31 | 261 | 271 | 10 | 10 | 261 | 50 | 261 | 52 | 137 | 10 | 65 | 80 | 260 | 80 | 230 | 158 | 1654 | 1597 | 1558 | 4809 | |
| 0620 | 5009 | ELEC CONDUCTOR (NO. 8) INSULATED | M | 60 | 102 | 280 | 124 | 442 | 980 | 582 | 722 | 82 | 306 | 510 | 390 | 220 | 156 | 606 | 606 | 62 | 522 | 542 | 20 | 20 | 522 | 100 | 522 | 104 | 274 | 20 | 130 | 160 | 520 | 160 | 460 | 316 | 3308 | 3194 | 2932 | 9434 | |
| 0620 | 5010 | ELEC CONDUCTOR (NO. 6) INSULATED | M | | | | | | | | 210 | 162 | | | | | | | | | | | | | | | | | | | | | | | | | | | 372 | 372 | |
| 0624 | 5001 | GROUND BOX TY A (122311) W\APRON | EA | | | | 1 | 1 | 5 | 1 | 2 | | | | | 1 | | 2 | 2 | 1 | 1 | 1 | 1 | 1 | 1 | 1 | 1 | 1 | | | | | | 1 | 2 | | 13 | 6 | 10 | 29 | |
| 0628 | 5056 | ELEC SERV TYS (240/480) 060 (NS) GS (T) TP (O) | EA | | | | | 1 | 1 | | 1 | | | | | 1 | | 1 | 1 | 1 | 1 | 1 | 1 | 1 | 1 | 1 | 1 | 10 | 1 | 1 | 1 | 10 | 10 | 1 | | 12 | 5 | 3 | 20 | 19 |
| 0656 | 5010 | FND FOR RDWY ILL ASM (TY A) (750 MM DR SH) | M | 2 | 2 | 4 | | 4 | 8 | 8 | 6 | 2 | 4 | 4 | 6 | 4 | 4 | 4 | 4 | 4 | 8 | 8 | 2 | 2 | 8 | 2 | 8 | 2 | 4 | 2 | 2 | 2 | 8 | 4 | 2 | 6 | 52 | 46 | 28 | 126 | |

△12 △82 △82 △82

# ELECTRIC SERVICE DATA

| SERVICE POLE NO. | SHEET NO. | CONTROL SECTION & JOB NO. | ELECTRIC SERVICE DESCRIPTION (SEE ED (3)-98 (M)) | ELECTRIC SERVICE CONDUIT SIZE | SERVICE CONDUCTORS NO/SIZE | SAFETY SWITCH AMPS | MAIN DISCONNECT | | TWO-POLE CONTACTOR AMPS | PANEL BD/ LOADCENTER AMP RATING (min) | CURCUIT NO. | BRANCH CKT. BKR. POLE/AMPS | BRANCH CIRCUIT AMPS | KVA LOAD |
|---|---|---|---|---|---|---|---|---|---|---|---|---|---|---|
| | | | | | | | MAIN BKR. | CKT. BKR. POLE/AMP | | | | | | |
| ~~1~~ | ~~602~~ | ~~CSJ 2452-041-037~~ | ~~ELEC SERV TYS (240/480) 060 (NS) GS (T) TP (O)~~ | ~~38 MM~~ | ~~3/#6~~ | ~~N/A~~ | ~~2P/60~~ | ~~2P/60~~ | ~~2P-60~~ | ~~70 AMP~~ | ~~100~~ | ~~2P/20~~ | ~~0.75~~ | ~~0.360~~ |
| 2 | 605 | CSJ 2452-041-038 | ELEC SERV TYS (240/480) 060 (NS) GS (T) TP (O) | 38 MM | 3/#6 | N/A | 2P/60 | 2P/60 | 2P-60 | 70 AMP | 200 | 2P/30 | 8.70 | 4.176 |
| 3 | 606 | | ELEC SERV TYS (240/480) 060 (NS) GS (T) TP (O) | 38 MM | 3/#6 | N/A | 2P/60 | 2P/60 | 2P-60 | 70 AMP | 300 | 2P/30 | 8.40 | 4.032 |
| 4 | 609 | | ELEC SERV TYS (240/480) 060 (NS) GS (T) TP (O) | 38 MM | 3/#6 | N/A | 2P/60 | 2P/60 | 2P-60 | 70 AMP | 400 | 2P/30 | 10.20 | 14.112 |
| | | | | | | | | | | | 500 | 2P/30 | 19.20 | IN ABOVE |
| 5 | 613 | CSJ 2452-041-037 | ELEC SERV TYS (240/480) 060 (NS) GS (T) TP (O) | 38 MM | 3/#6 | N/A | 2P/60 | 2P/60 | 2P-60 | 70 AMP | 600 | 2P/20 | 1.50 | 0.720 |
| △82 6 | 615A | | ELEC SERV TYS (240/480) 060 (NS) GS (T) TP (O) | 38 MM | 3/#6 | N/A | 2P/60 | 2P/60 | 2P-60 | 70 AMP | 700 | 2P/20 | 3.75 | 1.800 |
| 7 | 616 | | ELEC SERV TYS (240/480) 060 (NS) GS (T) TP (O) | 38 MM | 3/#6 | N/A | 2P/60 | 2P/60 | 2P-60 | 70 AMP | 800 | 2P/20 | 0.75 | 0.360 |
| 8 | 617A | | ELEC SERV TYS (240/480) 060 (NS) GS (T) TP (O) | 38 MM | 3/#6 | N/A | 2P/60 | 2P/60 | 2P-60 | 70 AMP | 900 | 2P/20 | 4.80 | 2.300 |
| 9 | 618 | | ELEC SERV TYS (240/480) 060 (NS) GS (T) TP (O) | 38 MM | 3/#6 | N/A | 2P/60 | 2P/60 | 2P-60 | 70 AMP | 1000 | 2P/20 | 0.75 | 0.360 |
| 10 | 619 | CSJ 2452-041-036 | ELEC SERV TYS (240/480) 060 (NS) GS (T) TP (O) | 38 MM | 3/#6 | N/A | 2P/60 | 2P/60 | 2P-60 | 70 AMP | 1100 | 2P/20 | 0.75 | 0.360 |
| 11 | 620 | | ELEC SERV TYS (240/480) 060 (NS) GS (T) TP (O) | 38 MM | 3/#6 | N/A | 2P/60 | 2P/60 | 2P-60 | 70 AMP | 1200 | 2P/20 | 4.80 | 2.300 |
| 12 | 621 | | ELEC SERV TYS (240/480) 060 (NS) GS (T) TP (O) | 38 MM | 3/#6 | N/A | 2P/60 | 2P/60 | 2P-60 | 70 AMP | 1300 | 2P/20 | 0.75 | 0.360 |
| 13 | 622 | | ELEC SERV TYS (240/480) 060 (NS) GS (T) TP (O) | 38 MM | 3/#6 | N/A | 2P/60 | 2P/60 | 2P-60 | 70 AMP | 1400 | 2P/20 | 4.80 | 2.300 |
| △82 1000 | 622B | | ELEC SERV TYS (240/480) 060 (NS) GS (T) TP (O) | 32 MM | 2/#6 | N/A | 2P/60 | 2P/60 | 2P-60 | 70 AMP | 5000 | 2P/20 | 0.75 | 0.360 |
| 13A | 622C | | ELEC SERV TYS (240/480) 060 (NS) GS (T) TP (O) | 38 MM | 3/#6 | N/A | 2P/60 | 2P/60 | 2P-60 | 70 AMP | 6000 | 2P/20 | 0.75 | 0.360 |
| 13B | 622D | | ELEC SERV TYS (240/480) 060 (NS) GS (T) TP (O) | 38 MM | 3/#6 | N/A | 2P/60 | 2P/60 | 2P-60 | 70 AMP | 7000 | 2P/20 | 0.75 | 0.360 |
| 13C | 622E | | ELEC SERV TYS (240/480) 060 (NS) GS (T) TP (O) | 38 MM | 3/#6 | N/A | 2P/60 | 2P/60 | 2P-60 | 70 AMP | 8000 | 2P/20 | 0.75 | 0.360 |
| 14 | 623A | | ELEC SERV TYS (240/480) 060 (NS) GS (T) TP (O) | 38 MM | 3/#6 | N/A | 2P/60 | 2P/60 | 2P-60 | 70 AMP | 1500 | 2P/20 | 4.80 | 2.300 |
| 15 | 624A | | ELEC SERV TYS (240/480) 060 (NS) GS (T) TP (O) | 38 MM | 3/#6 | N/A | 2P/60 | 2P/60 | 2P-60 | 70 AMP | 1600 | 2P/20 | 0.75 | 0.360 |
| 16 | 625 | | ELEC SERV TYS (240/480) 060 (NS) GS (T) TP (O) | 38 MM | 3/#6 | N/A | 2P/60 | 2P/60 | 2P-60 | 70 AMP | 1700 | 2P/20 | 3.00 | 1.440 |

△12

CHANGE ORDER NO. 122

-ILLUMINATION REVISIONS OR ADDENDUMS DUE TO NEW INTERSECTIONS.

△# REFERS TO CHANGES MADE AS PART OF CHANGE ORDER.

STATE OF TEXAS
FITZGERALDO G. SANCHEZ
76084
LICENCED PROFESSIONAL ENGINEER

Fitzgeraldo G. Sanchez, P.E. 04-03-06 Date

©2000 Texas Department of Transportation

## ILLUMINATION ELEC/SERV POLE SUMMARY DATA

| FED. RD. DIV. NO. | FEDERAL AID PROJECT NO. | | SHEET NO. |
|---|---|---|---|
| 6 | NH 2000(704), etc. | | 35A |
| STATE | DIST. | COUNTY | |
| TEXAS | SAT | BEXAR | |
| CONT. | SECT. | JOB | HIGHWAY NO. |
| 2452 | 01 | 036, etc. | LP 1604 |

3-28-06

T:\AO\Design\lp1604fm471-90\Summaries\illumsum.dgn
3/28/2006
FILE T:\AO\Design\lp1604fm471-90\Summaries\illumsum.dgn 3/28/2006
LEVEL 1 2 3 4 5 6 7 8 9 10 11 12 13 14 15 16 17 18 19 20 21 22 23 24 25 26 27 28 29 30 31 32
DISPLAYED 33 34 35 36 37 38 39 40 41 42 43 44 45 46 47 48 49 50 51 52 53 54 55 56 57 58 59 60 61 62 63

| PLAN SHEET NO. | REMOVING EXISTING SIGN PANELS (SIGN ONLY) | | | | | PLAN SHEET NO. | EXISTING ROADSIDE SIGNS TO BE REMOVED (SIGN AND MOUNT) | | | | | | | | | PLAN SHEET NO. | REMOVE AND/OR RELOCATE GROUND MOUNT SIGN | | | | | | | | |
|---|---|---|---|---|---|---|---|---|---|---|---|---|---|---|---|---|---|---|---|---|---|---|---|---|---|
| | SIGN NO. | SIGN TYPE | SIGN DIMENSIONS | SMALL SIGNS | LARGE SIGNS | | SIGN NO. | SIGN TYPE | SIGN DIMENSIONS | EXIST. TYPE OF MOUNT | EXIST. POST SIZE | EXIST. SHAFT DRILL SIZE 300 mm NON. REINF. | EXIST. SHAFT DRILL SIZE 600 mm REINF. | SMALL SIGNS | LARGE SIGNS | | SIGN NO. | SIGN TYPE | SIGN DIMENSIONS | EXIST. TYPE OF MOUNT | EXIST. POST SIZE | EXIST. SHAFT DRILL SIZE 300 mm NON. REINF. | EXIST. SHAFT DRILL SIZE 600 mm REINF. | SMALL SIGNS | LARGE SIGNS |
| | | | | | | CONTROL: 2452-01-037 | | | | | | | | | | | | | | | | | | | |
| | | | | | | 1/57 | 1 | FW4-2R | 1200 X 1200 | F | | X | | X | | | | | | | | | | | |
| | | | | | | | 2 | FW4-2R | 1200 X 1200 | F | | X | | X | | | | | | | | | | | |
| | | | | | | 2/57 | 1 | M3-1 / M1-6L | 600 X 300 / 600 X 600 | A | | X | | X | | | | | | | | | | | |
| | | | | | | | 2 | SW6-2 | 1200 X 1200 | F | | X | | X | | | | | | | | | | | |
| | | | | | | | 3 | R5-1A | 900 X 600 | A | | X | | X | | | | | | | | | | | |
| | | | | | | | 4 | R5-1A | 900 X 600 | A | | X | | X | | | | | | | | | | | |
| | | | | | | 3/57 | 1 | FR4-1 | 1200 X 1500 | F | | X | | X | | | | | | | | | | | |
| | | | | | | | 2 | SW6-3 | 1200 X 1200 | F | | X | | X | | | | | | | | | | | |
| | | | | | | | 3 | R4-7 | 600 X 750 | A | | X | | X | | | | | | | | | | | |
| | | | | | | | 4 | (SPL) | 2400 X 1200 | 320 | | | | | X | | | | | | | | | | |
| | | | | | | 4/57 | 1 | R2-1 | 600 X 750 | A | | X | | X | | | | | | | | | | | |
| | | | | | | | 3 | SW6-1 | 1200 X 1200 | F | | X | | X | | | | | | | | | | | |
| | | | | | | | 4 | M3-3 / M1-6L | 600 X 300 / 600 X 600 | A | | X | | X | | | | | | | | | | | |
| | | | | | | CONTROL: 2452-01-038 | | | | | | | | | | | | | | | | | | | |
| | | | | | | 9C/57 | 10 | SW3-3 | 1200 X1200 | F | | X | | X | | | | | | | | | | | |
| | | | | | | | 12 | M2-1 / M1-6L | 600 X 300 / 600 X 600 | A | | X | | X | | | | | | | | | | | |
| | | | | | | 9D/57 | 1A | W2-6B | 1200 X 1200 | F | | X | | X | | | | | | | | | | | |
| | | | | | | | 4 | R3-8R(SPL) | 750 X 750 | A | | X | | X | | | | | | | | | | | |
| | | | | | | | 6 | M4-6 / R3-9B | 600 X 300 / 600 X 900 | A | | X | | X | | | | | | | | | | | |
| | | | | | | | 7 | D1-2 | 2400 X 600 | D-2 | | X | | X | | | | | | | | | | | |
| | | | | | | | 15 | R2-1 | 600 X 750 | A | | X | | X | | | | | | | | | | | |
| | | | | | | | 16 | M4-11 / R3-9B | 600 X 300 / 600 X 900 | A | | X | | X | | | | | | | | | | | |
| | | | | | | | 23 | M2-1 / M1-6L | 600 X 300 / 600 X 600 | A | | X | | X | | | | | | | | | | | |
| | | | | | | | 24 | W2-1 | 750 X 750 | A | | X | | X | | | | | | | | | | | |
| | | | | | | | 26 | SW3-3 | 1200 X 1200 | D-6 | | X | | X | | | | | | | | | | | |
| | | | | | | CONTROL: 2452-01-037 | | | | | | | | | | | | | | | | | | | |
| | | | | | | 13A/57 | 2 | M3-3G / M1-6L / M6-2R | 600 X 300 / 600 X 600 / 525 X 375 | A | | X | | X | | | | | | | | | | | |
| | | | | | | | 3 | M3-3G / M1-6L / M6-2R | 600 X 300 / 600 X 600 / 525 X 375 | A | | X | | X | | | | | | | | | | | |
| | | | | | | 14/57 | 1 | D1-4 | 2400 X 1200 | 320 | | | | | X | | | | | | | | | | |
| | | | | | | | 3 | R5-1A | 900 X 600 | A | | X | | X | | | | | | | | | | | |
| | | | | | | | 4 | R5-1A | 900 X 600 | A | | X | | X | | | | | | | | | | | |
| | | | | | | | 6 | D1-2 | 2400 X 600 | D-2 | | X | | X | | | | | | | | | | | |
| | | | | | | | | | | CONTROL: 2452-01-037 SHEET TOTALS | | | | 17 | 2 | | | | | | | | | | |
| | | | | | | | | | | CONTROL: 2452-01-038 SHEET TOTALS | | | | 11 | | | | | | | | | | | |

LEVELS DISPLAYED
1 2 3 4 5 6 7 8 9 10 11 12 13 14 15 16
17 18 19 20 21 22 23 24 25 26 27 28 29 30 31 32
33 34 35 36 37 38 39 40 41 42 43 44 45 46 47 48
49 50 51 52 53 54 55 56 57 58 59 60 61 62 63 64

ACC:

FILE: sgnsumrmove.dgn

©2000 Texas Department of Transportation

# SUMMARY OF SIGNS TO BE REMOVED AND/OR RELOCATED (GROUND MOUNTED)

| FED. RD. DIV. NO. | FEDERAL AID PROJECT NO. | | SHEET NO. |
|---|---|---|---|
| 6 | NH 2000(704), etc. | | 36 |
| STATE | DIST. | COUNTY | |
| TEXAS | SAT | BEXAR | |
| CONT. | SECT. | JOB | HIGHWAY NO. |
| 2452 | 01 | 036, etc. | LP 1604 |

| PLAN SHEET NO. | REMOVING EXISTING SIGN PANELS (SIGN ONLY) | | | | | PLAN SHEET NO. | EXISTING ROADSIDE SIGNS TO BE REMOVED (SIGN AND MOUNT) | | | | | | | | | PLAN SHEET NO. | REMOVE AND/OR RELOCATE GROUND MOUNT SIGN | | | | | | | | |
|---|---|---|---|---|---|---|---|---|---|---|---|---|---|---|---|---|---|---|---|---|---|---|---|---|---|
| | SIGN NO. | SIGN TYPE | SIGN DIMENSIONS | SMALL SIGNS | LARGE SIGNS | | SIGN NO. | SIGN TYPE | SIGN DIMENSIONS | EXIST. TYPE OF MOUNT | EXIST. POST SIZE | EXIST. SHAFT DRILL SIZE 300 mm NON. REINF. | EXIST. SHAFT DRILL SIZE 600 mm REINF. | SMALL SIGNS | LARGE SIGNS | | SIGN NO. | SIGN TYPE | SIGN DIMENSIONS | EXIST. TYPE OF MOUNT | EXIST. POST SIZE | EXIST. SHAFT DRILL SIZE 300 mm NON. REINF. | EXIST. SHAFT DRILL SIZE 600 mm REINF. | SMALL SIGNS | LARGE SIGNS |
| | | | | | | CONTROL: 2452-01-037 | | | | | | | | | | | | | | | | | | | |
| | | | | | | 16/57 | 1 | D1-3 | 2400 X 900 | D-4 | | X | | X | | 22/57 | 11 | I-2A | 1200 X 1200 | F | | X | | X | |
| | | | | | | | | | | | | | | | | | | I-2A | 1200 X 1200 | | | | | | |
| | | | | | | 19/57 | 5 | W2-2 | 1200 X 1200 | F | | X | | X | | | | | | | | | | | |
| | | | | | | | 10 | W1-4R | 750 X 750 | A | | X | | X | | | | | | | | | | | |
| | | | | | | 20/57 | 1 | M4-6 | 600 X 300 | A | | X | | X | | | | | | | | | | | |
| | | | | | | | | R3-9B | 600 X 900 | | | | | | | | | | | | | | | | |
| | | | | | | | 2 | D1-3 | 2400 X 900 | D-3 | | X | | X | | | | | | | | | | | |
| | | | | | | | 7 | M3-1 | 600 X 300 | B | | X | | X | | | | | | | | | | | |
| | | | | | | | | M1-6L | 600 X 600 | | | | | | | | | | | | | | | | |
| | | | | | | | | M6-1L | 525 X 375 | | | | | | | | | | | | | | | | |
| | | | | | | | | M3-3 | 600 X 300 | | | | | | | | | | | | | | | | |
| | | | | | | | | M1-6L | 600 X 600 | | | | | | | | | | | | | | | | |
| | | | | | | | | M6-1R | 525 X 375 | | | | | | | | | | | | | | | | |
| | | | | | | | 8 | W2-2 | 750 X 750 | A | | X | | X | | | | | | | | | | | |
| | | | | | | | 12 | M4-6 | 600 X 300 | A | | X | | X | | | | | | | | | | | |
| | | | | | | | | R3-9B | 600 X 900 | | | | | | | | | | | | | | | | |
| | | | | | | | 13 | FR1-1 | 1200 X 1200 | F | | X | | X | | | | | | | | | | | |
| | | | | | | | 14 | M4-6 | 600 X 300 | A | | X | | X | | | | | | | | | | | |
| | | | | | | | | R3-9B | 600 X 900 | | | | | | | | | | | | | | | | |
| | | | | | | | 15 | W2-2 | 750 X 750 | A | | X | | X | | | | | | | | | | | |
| | | | | | | | 16 | D1-2 | 2400 X 600 | D-2 | | X | | X | | | | | | | | | | | |
| | | | | | | | 19 | M4-6 | 600 X 300 | A | | X | | X | | | | | | | | | | | |
| | | | | | | | | R3-9B | 600 X 900 | | | | | | | | | | | | | | | | |
| | | | | | | 21/57 | 3 | SPL | 1800 X 600 | D-1 | | | | | X | | | | | | | | | | |
| | | | | | | | 6 | W2-2 | 750 X 750 | A | | X | | X | | | | | | | | | | | |
| | | | | | | 22/57 | 24 | D1 | 2400 X 300 | D-1 | | X | | X | | | | | | | | | | | |
| | | | | | | 22A/57 | 4 | I-2A | 1200 X 1200 | F | | X | | X | | | | | | | | | | | |
| | | | | | | | 5 | I-2A | 1200 X 1200 | | | | | | | | | | | | | | | | |
| | | | | | | 25/57 | 9 | D1 | 2400 X 600 | D-2 | | X | | X | | | | | | | | | | | |
| | | | | | | 27/57 | 4 | W2-2 | 750 X 750 | A | | X | | X | | | | | | | | | | | |
| | | | | | | CONTROL: 2452-01-036 | | | | | | | | | | | | | | | | | | | |
| | | | | | | 28/57 | 1 | W2-2 | 750 X 750 | A | | X | | X | | | | | | | | | | | |
| | | | | | | 30/57 | 7 | D1 | 2400 X 300 | D-1 | | X | | X | | | | | | | | | | | |
| | | | | | | 33/57 | 5 | W2-1 | 750 X 750 | A | | X | | X | | | | | | | | | | | |
| | | | | | | | 8 | SW3-3 | 1200 X 1200 | F | | X | | X | | | | | | | | | | | |
| | | | | | | 34/57 | 18 | D1-3 | 2400 X 900 | 320 | | | | | X | | | | | | | | | | |
| | | | | | | | | | | CONTROL: 2452-01-037 SHEET TOTALS | | | | 18 | 1 | | | | | | | | | | 1 | |
| | | | | | | | | | | CONTROL: 2452-01-036 SHEET TOTALS | | | | 4 | 1 | | | | | | | | | | | |

LEVELS DISPLAYED
1 2 3 4 5 6 7 8 9 10 11 12 13 14 15 16 17 18 19 20 21 22 23 24 25 26 27 28 29 30 31 32 33 34 35 36 37 38 39 40 41 42 43 44 45 46 47 48 49 50 51 52 53 54 55 56 57 58 59 60 61 62 63

ACC:

FILE: sgnsunremove.dgn

©2000 Texas Department of Transportation

# SUMMARY OF SIGNS TO BE REMOVED AND/OR RELOCATED (GROUND MOUNTED)

| FED. RD. DIV. NO. | FEDERAL AID PROJECT NO. | | SHEET NO. |
|---|---|---|---|
| 6 | NH 2000(704), etc. | | 37 |
| STATE | DIST. | COUNTY | |
| TEXAS | SAT | BEXAR | |
| CONT. | SECT. | JOB | HIGHWAY NO. |
| 2452 | 01 | 036, etc. | LP 1604 |

| PLAN SHEET NO. | REMOVING EXISTING SIGN PANELS (SIGN ONLY) | | | | | PLAN SHEET NO. | EXISTING ROADSIDE SIGNS TO BE REMOVED (SIGN AND MOUNT) | | | | | | | | | PLAN SHEET NO. | REMOVE AND/OR RELOCATE GROUND MOUNT SIGN | | | | | | | | |
|---|---|---|---|---|---|---|---|---|---|---|---|---|---|---|---|---|---|---|---|---|---|---|---|---|---|
| | SIGN NO. | SIGN TYPE | SIGN DIMENSIONS | SMALL SIGNS | LARGE SIGNS | | SIGN NO. | SIGN TYPE | SIGN DIMENSIONS | EXIST. TYPE OF MOUNT | EXIST. POST SIZE | EXIST. SHAFT DRILL SIZE 300 mm NON. REINF. | EXIST. SHAFT DRILL SIZE 600 mm REINF. | SMALL SIGNS | LARGE SIGNS | | SIGN NO. | SIGN TYPE | SIGN DIMENSIONS | EXIST. TYPE OF MOUNT | EXIST. POST SIZE | EXIST. SHAFT DRILL SIZE 300 mm NON. REINF. | EXIST. SHAFT DRILL SIZE 600 mm REINF. | SMALL SIGNS | LARGE SIGNS |
| | | | | | | CONTROL: 2452-01-036 | | | | | | | | | | | | | | | | | | | |
| | | | | | | 34A/57 | 3 | M2-1 | 600 X 300 | A | | X | | X | | | | | | | | | | | |
| | | | | | | | 9 | M1-6L | 600 X 600 | | | | | | | | | | | | | | | | |
| | | | | | | | | D1-2 | 2400 X 600 | D-2 | | X | | X | | | | | | | | | | | |
| | | | | | | | | D1 | 1800 X 300 | D-1 | | X | | X | | | | | | | | | | | |
| | | | | | | 34A/57 | 10 | M3-4 | 600 X 300 | A | | X | | X | | | | | | | | | | | |
| | | | | | | | | M1-6F | 600 X 600 | | | | | | | | | | | | | | | | |
| | | | | | | | 12 | M2-1 | 600 X 300 | A | | X | | X | | | | | | | | | | | |
| | | | | | | | | M1-6L | 600 X 600 | | | | | | | | | | | | | | | | |
| | | | | | | | 13 | SW3-3 | 1200 X 1200 | F | | X | | X | | | | | | | | | | | |
| | | | | | | | 14 | D1-2A | 2700 X 600 | D-2 | | X | | X | | | | | | | | | | | |
| | | | | | | | 15B | M3-3 | 600 X 300 | A | | X | | X | | | | | | | | | | | |
| | | | | | | | | M1-6L | 600 X 600 | | | | | | | | | | | | | | | | |
| | | | | | | | | M6-3 | 600 X 600 | | | | | | | | | | | | | | | | |
| | | | | | | | | M3-1 | 600 X 300 | | | | | | | | | | | | | | | | |
| | | | | | | | | M1-6L | 600 X 600 | | | | | | | | | | | | | | | | |
| | | | | | | | | M6-1R | 600 X 600 | | | | | | | | | | | | | | | | |
| | | | | | | | 17 | R2-1 | 600 X 750 | A | | X | | X | | | | | | | | | | | |
| | | | | | | | 18A | W8-13 | 900 X 900 | A | | X | | X | | | | | | | | | | | |
| | | | | | | 34B/57 | 14 | SW3-3 | 1200 X 1200 | F | | X | | X | | | | | | | | | | | |
| | | | | | | | 18 | SPL | 1200 X 1200 | F | | X | | X | | | | | | | | | | | |
| | | | | | | | 19 | W2-1 | 1200 X 1200 | F | | X | | X | | | | | | | | | | | |
| | | | | | | 35/57 | 3 | W2-1 | 750 X 750 | A | | X | | X | | | | | | | | | | | |
| | | | | | | | 8 | D1-3 | 2400 X 900 | D1-2 | | X | | X | | | | | | | | | | | |
| | | | | | | | 10 | W3-3(SPL) | 1200 X 1200 | F | | X | | X | | | | | | | | | | | |
| | | | | | | 48/57 | 9 | W2-2 | 750 X 750 | A | | X | | X | | | | | | | | | | | |
| | | | | | | 49/57 | 7 | W2-2 | 750 X 750 | A | | X | | X | | | | | | | | | | | |
| | | | | | | 51/57 | 4 | SW8-6(SPL) | 1200 X 1200 | F | | X | | X | | | | | | | | | | | |
| | | | | | | | | SW13-1 | 600 X 600 | | | | | | | | | | | | | | | | |
| | | | | | | | 5 | W2-2 | 750 X 750 | A | | X | | X | | | | | | | | | | | |
| | | | | | | 52/57 | 11 | W2-2 | 750 X 750 | A | | X | | X | | | | | | | | | | | |
| | | | | | | 53/57 | 1 | M3-1 | 600 X 300 | A | | X | | X | | | | | | | | | | | |
| | | | | | | | | M1-6L | 600 X 600 | | | | | | | | | | | | | | | | |
| | | | | | | | 2 | SW8-6(SPL) | 1200 X 1200 | F | | X | | X | | | | | | | | | | | |
| | | | | | | | | SW13-1 | 600 X 600 | | | | | | | | | | | | | | | | |
| | | | | | | 55/57 | 4 | W2-6B | 1200 X 1200 | F | | X | | X | | | | | | | | | | | |
| | | | | | | 56/57 | 1 | M3-1 | 600 X 300 | A | | X | | X | | | | | | | | | | | |
| | | | | | | | | M1-6L | 600 X 600 | | | | | | | | | | | | | | | | |
| | | | | | | | | | CONTROL: 2452-01-036 SHEET TOTALS | | | | | 25 | | | | | | | | | | | |

LEVELS DISPLAYED
1 2 3 4 5 6 7 8 9 10 11 12 13 14 15 16
17 18 19 20 21 22 23 24 25 26 27 28 29 30 31 32
33 34 35 36 37 38 39 40 41 42 43 44 45 46 47 48
49 50 51 52 53 54 55 56 57 58 59 60 61 62 63

ACC:

FILE: sgnsummremove.dgn

SHEET 3 OF 4

©2000 Texas Department of Transportation

# SUMMARY OF SIGNS TO BE REMOVED AND/OR RELOCATED (GROUND MOUNTED)

| FED. RD. DIV. NO. | FEDERAL AID PROJECT NO. | | SHEET NO. |
|---|---|---|---|
| 6 | NH 2000(704), etc. | | 38 |
| STATE | DIST. | COUNTY | |
| TEXAS | SAT | BEXAR | |
| CONT. | SECT. | JOB | HIGHWAY NO. |
| 2452 | 01 | 036, etc. | LP 1604 |

| PLAN SHEET NO. | REMOVING EXISTING SIGN PANELS (SIGN ONLY) | | | | | PLAN SHEET NO. | EXISTING ROADSIDE SIGNS TO BE REMOVED (SIGN AND MOUNT) | | | | | | | | | PLAN SHEET NO. | REMOVE AND/OR RELOCATE GROUND MOUNT SIGN | | | | | | | | |
|---|---|---|---|---|---|---|---|---|---|---|---|---|---|---|---|---|---|---|---|---|---|---|---|---|---|
| | SIGN NO. | SIGN TYPE | SIGN DIMENSIONS | SMALL SIGNS | LARGE SIGNS | | SIGN NO. | SIGN TYPE | SIGN DIMENSIONS | EXIST. TYPE OF MOUNT | EXIST. POST SIZE | EXIST. SHAFT DRILL SIZE 300 mm NON. REINF. | EXIST. SHAFT DRILL SIZE 600 mm REINF. | SMALL SIGNS | LARGE SIGNS | | SIGN NO. | SIGN TYPE | SIGN DIMENSIONS | EXIST. TYPE OF MOUNT | EXIST. POST SIZE | EXIST. SHAFT DRILL SIZE 300 mm NON. REINF. | EXIST. SHAFT DRILL SIZE 600 mm REINF. | SMALL SIGNS | LARGE SIGNS |
| | | | | | | CONTROL: 2452-01-036 | | | | | | | | | | | | | | | | | | | |
| | | | | | | 57/57 | 4 | D1-2 | 2700 X 600 | D-2 | | X | | X | | | | | | | | | | | |
| | | | | | | | 5 | M2-1 | 600 X 300 | A | | X | | X | | | | | | | | | | | |
| | | | | | | | | M1-4A2 | 600 X 600 | | | | | | | | | | | | | | | | |
| | | | | | | | 8A | M3-2 | 600 X 300 | C | | X | | X | | | | | | | | | | | |
| | | | | | | | | M1-4A2 | 600 X 600 | | | | | | | | | | | | | | | | |
| | | | | | | | | M6-3 | 600 X 600 | | | | | | | | | | | | | | | | |
| | | | | | | | | M3-3 | 600 X 300 | | | | | | | | | | | | | | | | |
| | | | | | | | | M1-6L | 600 X 600 | | | | | | | | | | | | | | | | |
| | | | | | | | | M6-3 | 600 X 600 | | | | | | | | | | | | | | | | |
| | | | | | | | | M3-4 | 600 X 300 | | | | | | | | | | | | | | | | |
| | | | | | | | | M1-4A2 | 600 X 600 | | | | | | | | | | | | | | | | |
| | | | | | | | | M6-1R | 600 X 600 | | | | | | | | | | | | | | | | |
| | | | | | | CONTROL: 2452-01-036 SHEET TOTALS | | | | | | | | 3 | | | | | | | | | | | |

LEVELS DISPLAYED
1 2 3 4 5 6 7 8 9 10 11 12 13 14 15 16
17 18 19 20 21 22 23 24 25 26 27 28 29 30 31 32
33 34 35 36 37 38 39 40 41 42 43 44 45 46 47 48
49 50 51 52 53 54 55 56 57 58 59 60 61 62 63

ACC:

FILE: sgnsumremove.dgn

©2000 Texas Department of Transportation

# SUMMARY OF SIGNS TO BE REMOVED AND/OR RELOCATED (GROUND MOUNTED)

| FED. RD. DIV. NO. | FEDERAL AID PROJECT NO. | | SHEET NO. |
|---|---|---|---|
| 6 | NH 2000(704), etc. | | 39 |
| STATE | DIST. | COUNTY | |
| TEXAS | SAT | BEXAR | |
| CONT. | SECT. | JOB | HIGHWAY NO. |
| 2452 | 01 | 036, etc. | LP 1604 |

LEVELS DISPLAYED

ACC:

FILE: sgnsumsmall.dgn

# SUMMARY OF SMALL SIGNS

| PLAN SHEET NO. | SIGN NO. | SIGN TYPE | SIGN TEXT | SIGN DIMENSIONS | REFLECTIVE SHEETING | PLYWOOD TYPE A | ALUMINUM TYPE A | TYPE OF MOUNT | | | | | | | | | | | | | | | MILEPOSTS | |
|---|---|---|---|---|---|---|---|---|---|---|---|---|---|---|---|---|---|---|---|---|---|---|---|---|
| | | | | | | | | RAIL MNT | A EA. | A-1 EA. | B EA. | C EA. | D-1 EA. | D-2 EA. | D-3 EA. | D-4 EA. | D-5 EA. | D-6 EA. | F EA. | F (MOD) EA. | G EA. | 4" TUBE EA. | 6" TUBE EA. | MP EA. | MW EA. |
| | | | CONTROL 2452-01-037 | | | | | | | | | | | | | | | | | | | | | |
| 4/57 | 2 | D1-1 | JCT SH 16 5 | 1860 X 300 | C | X | | | | | | | X | | | | | | | | | | | |
| " | 6 | W2-2 | SYM SIDE ROAD - RT | 750 X 750 | C | X | | | X | | | | | | | | | | | | | | | |
| 5/57 | 1 | R6-1R | ONE WAY | 900 X 300 | A | X | | | X | | | | | | | | | | | | | | | |
| " | 2 | R6-1R | ONE WAY | 900 X 300 | A | X | | | X | | | | | | | | | | | | | | | |
| " | 3 | R2-1 | SPEED LIMIT 55 | 600 X 750 | A | X | | | X | | | | | | | | | | | | | | | |
| " | 4 | R5-1 | DO NOT ENTER | 750 X 750 | C | X | | | X | | | | | | | | | | | | | | | |
| " | 5 | R5-1 | DO NOT ENTER | 750 X 750 | C | X | | | X | | | | | | | | | | | | | | | |
| " | 6 | R1-1 | STOP | 750 X 750 | C | X | | | X | | | | | | | | | | | | | | | |
| " | 7 | R1-1 | STOP | 750 X 750 | C | X | | | X | | | | | | | | | | | | | | | |
| 6/57 | 1 | M3-1 | NORTH | 600 X 300 | A | | X | | X | | | | | | | | | | | | | | | |
| | | M1-6L | LOOP 1604 | 600 X 600 | A | | X | | | | | | | | | | | | | | | | | |
| " | 3 | R1-1 | STOP | 750 X 750 | C | X | | | X | | | | | | | | | | | | | | | |
| 7/57 | 3 | W13-2 | EXIT 40 MPH | 1200 X 1500 | C | X | | | | | | | | | | | | | X | | | | | |
| " | 4 | R1-1 | STOP | 750 X 750 | C | X | | | X | | | | | | | | | | | | | | | |
| " | 5 | SR5-1A | WRONG WAY | 1200 X 900 | C | X | | | | | | | | | | | | | X | | | | | |
| " | 6 | SW6-3 | SYM TWO-WAY TRAFFIC | 1200 X 1200 | C | X | | | | | | | | | | | | | X | | | | | |
| | | (SPL) | TEMPORARY | 900 X 200 | C | X | | | | | | | | | | | | | | | | | | |
| " | 7 | SR5-1A | WRONG WAY | 1200 X 900 | C | X | | | | | | | | | | | | | X | | | | | |
| " | 12 | R1-1 | STOP | 750 X 750 | C | X | | | X | | | | | | | | | | | | | | | |
| | | | CONTROL: 2452-01-038 | | | | | | | | | | | | | | | | | | | | | |
| | 8 | FR4-3B | DO NOT CROSS DOUBLE WHITE LINE | 1200 X 1200 | A | X | | | | | | | | | | | | | X | | | | | |
| " | 9 | FR4-3B | DO NOT CROSS DOUBLE WHITE LINE | 1200 X 1200 | A | X | | | | | | | | | | | | | X | | | | | |
| " | 10 | SR5-1 | DO NOT ENTER | 1200 X 1200 | C | X | | | | | | | | | | | | | X | | | | | |
| " | 11 | SR5-1 | DO NOT ENTER | 1200 X 1200 | C | X | | | | | | | | | | | | | X | | | | | |
| " | 13 | R1-1 | STOP | 750 X 750 | C | X | | | X | | | | | | | | | | | | | | | |
| 8/57 | 1 | FW4-1R | SYM MERGE | 1200 X 1200 | C | X | | | | | | | | | | | | | X | | | | | |
| " | 2 | SW3-3 | SYM SIGNAL AHEAD | 1200 X 1200 | C | X | | | | | | | | | | | | | X | | | | | |
| " | 3 | R5-1 | DO NOT ENTER | 750 X 750 | C | X | | | X | | | | | | | | | | | | | | | |
| " | 4 | R5-1 | DO NOT ENTER | 750 X 750 | C | X | | | X | | | | | | | | | | | | | | | |
| " | 5 | R6-1R | ONE WAY | 900 X 300 | A | X | | | X | | | | | | | | | | | | | | | |
| " | 6 | R6-1R | ONE WAY | 900 X 300 | A | X | | | X | | | | | | | | | | | | | | | |
| " | 7 | R1-1 | STOP | 750 X 750 | C | X | | | X | | | | | | | | | | | | | | | |
| " | 8 | D1-1 | CULEBRA RD | 1500 X 300 | C | X | | | | | | | X | | | | | | | | | | | |
| " | 9 | I-3 | CULEBRA CREEK | 600 X 450 | C | X | | | X | | | | | | | | | | | | | | | |
| " | 10 | I-3 | CULEBRA CREEK | 600 X 450 | C | X | | | X | | | | | | | | | | | | | | | |
| " | 11 | R3-8L | LT TURN ONLY/LT TURN OR ST/RT | 1200 X 750 | A | X | | X | | | | | | | | | | | | | | | | |
| | | (SPL) | TURN ONLY | | | | | | | | | | | | | | | | | | | | | |
| " | 12 | R3-8L | LT TURN ONLY/LT TURN OR ST/RT | 1200 X 750 | A | X | | X | | | | | | | | | | | | | | | | |
| | | (SPL) | TURN ONLY | | | | | | | | | | | | | | | | | | | | | |
| 9A/57 | 1 | R6-1L | ONE WAY | 900 X 300 | A | X | | | X | (MOUNTED BACK TO BACK) | | | | | | | | | | | | | | |
| | | R6-1P | ONE WAY | 900 X 300 | A | X | | | | | | | | | | | | | | | | | | |
| " | 2 | FR1-2 | YIELD | 1500 X 1500 X 1500 | C | X | | | | | | | | | | | | | X | | | | | |
| " | 3 | FR1-2 | YIELD | 1500 X 1500 X 1500 | C | X | | | | | | | | | | | | | X | | | | | |
| | | | CONTROL: 2452-01-037 SHEET TOTALS | | | | | | 12 | | | | 1 | | | | | | 4 | | | | | |
| | | | CONTROL: 2452-01-038 SHEET TOTALS | | | | | 2 | 9 | | | | 1 | | | | | | 8 | | | | | |

ALUMINUM SIGN BLANKS (TYPE A)

| Square Meters | Min. Thickness |
|---|---|
| Less than 0.7 | 2.0 mm |
| 0.7 to 1.4 | 2.5 mm |
| Greater than 1.4 | 3.0 mm |

Sign supports shall be located as shown on the plans, except that the Engineer may shift the sign supports, within design guidelines, where necessary to secure a more desirable location to avoid conflict with utilities. Unless otherwise shown on the plans, the Contractor shall stake and the Engineer will verify all sign support locations.

Reflective sheeting will be designated as:

Type A - Engineer Grade
Type B - Super Engineer Grade
Type C - High Specific Intensity

©2000

Texas Department of Transportation

SMALL SIGN SUMMARY
SHEET 1 OF 14

| FED. RD. DIV. NO. | FEDERAL AID PROJECT NO. | SHEET NO. |
|---|---|---|
| 6 | NH 2000(704),etc. | 40 |

| STATE | DIST. | COUNTY |
|---|---|---|
| TEXAS | SAT | BEXAR |

| CONT. | SECT. | JOB | HIGHWAY NO. |
|---|---|---|---|
| 2452 | 01 | 036,etc. | LP 1604 |

LEVELS [illegible]
ACC:
FILE: sgnsumsmall.dgn

# SUMMARY OF SMALL SIGNS

| PLAN SHEET NO. | SIGN NO. | SIGN TYPE | SIGN TEXT | SIGN DIMENSIONS | REFLECTIVE SHEETING | PLYWOOD TYPE A | ALUMINUM TYPE A | TYPE OF MOUNT | | | | | | | | | | | | | | | | MILEPOSTS | |
|---|---|---|---|---|---|---|---|---|---|---|---|---|---|---|---|---|---|---|---|---|---|---|---|---|---|
| | | | | | | | | RAIL MNT | A EA. | A-1 EA. | B EA. | C EA. | D-1 EA. | D-2 EA. | D-3 EA. | D-4 EA. | D-5 EA. | D-6 EA. | F EA. | F (MOD) EA. | G EA. | 4" TUBE EA. | 6" TUBE EA. | MP EA. | MW EA. |
| | | | CONTROL 2452-01-037 | | | | | | | | | | | | | | | | | | | | | | |
| 4/57 | 2 | D1-1 | JCT SH 16 5 | 1860 X 300 | C | X | | | | | | | X | | | | | | | | | | | | |
| " | 6 | W2-2 | SYM SIDE ROAD - RT | 750 X 750 | C | X | | | X | | | | | | | | | | | | | | | | |
| ~~5/57~~ | ~~1~~ | ~~R6-1R~~ | ~~ONE WAY~~ | ~~900 X 300~~ | ~~A~~ | ~~X~~ | | | ~~X~~ | | | | | | | | | | | | | | | | |
| " | 2 | R6-1R | ONE WAY | 900 X 300 | A | X | | | X | | | | | | | | | | | | | | | | |
| " | 3 | R2-1 | SPEED LIMIT 55 | 600 X 750 | A | X | | | X | | | | | | | | | | | | | | | | |
| " | ~~4~~ | ~~R5-1~~ | ~~DO NOT ENTER~~ | ~~750 X 750~~ | ~~C~~ | ~~X~~ | | | ~~X~~ | | | | | | | | | | | | | | | | |
| " | 5 | R5-1 | DO NOT ENTER | 750 X 750 | C | X | | | X | | | | | | | | | | | | | | | | |
| " | 6 | R1-1 | STOP | 750 X 750 | C | X | | | X | | | | | | | | | | | | | | | | |
| " | ~~7~~ | R1-1 | STOP | 750 X 750 | C | X | | | ~~X~~ | | | | | | | | | | | | | | | | |
| 6/57 | 1 | M3-1 | NORTH | 600 X 300 | A | | X | | X | | | | | | | | | | | | | | | | |
| | | M1-6L | LOOP 1604 | 600 X 600 | A | | X | | | | | | | | | | | | | | | | | | |
| " | 3 | R1-1 | STOP | 750 X 750 | C | X | | | X | | | | | | | | | | | | | | | | |
| 7/57 | 3 | W13-2 | EXIT 40 MPH | 1200 X 1500 | C | X | | | | | | | | | | | | | X | | | | | | |
| " | 4 | R1-1 | STOP | 750 X 750 | C | X | | | X | | | | | | | | | | | | | | | | |
| " | 5 | SR5-1A | WRONG WAY | 1200 X 900 | C | X | | | | | | | | | | | | | X | | | | | | |
| " | 6 | SW6-3 | SYM TWO-WAY TRAFFIC | 1200 X 1200 | C | X | | | | | | | | | | | | | | | | | | | |
| | | (SPL) | TEMPORARY | 900 X 200 | C | X | | | | | | | | | | | | | X | | | | | | |
| " | 7 | SR5-1A | WRONG WAY | 1200 X 900 | C | X | | | | | | | | | | | | | | | | | | | |
| " | 12 | R1-1 | STOP | 750 X 750 | C | X | | | X | | | | | | | | | | X | | | | | | |
| | | | CONTROL: 2452-01-038 | | | | | | | | | | | | | | | | | | | | | | |
| | 8 | FR4-3B | DO NOT CROSS DOUBLE WHITE LINE | 1200 X 1200 | A | X | | | | | | | | | | | | | X | | | | | | |
| " | 9 | FR4-3B | DO NOT CROSS DOUBLE WHITE LINE | 1200 X 1200 | A | X | | | | | | | | | | | | | X | | | | | | |
| " | 10 | SR5-1 | DO NOT ENTER | 1200 X 1200 | C | X | | | | | | | | | | | | | X | | | | | | |
| " | 11 | SR5-1 | DO NOT ENTER | 1200 X 1200 | C | X | | | | | | | | | | | | | X | | | | | | |
| " | 13 | R1-1 | STOP | 750 X 750 | C | X | | | X | | | | | | | | | | | | | | | | |
| 8/57 | 1 | FW4-1R | SYM MERGE | 1200 X 1200 | C | X | | | | | | | | | | | | | X | | | | | | |
| " | 2 | SW3-3 | SYM SIGNAL AHEAD | 1200 X 1200 | C | X | | | | | | | | | | | | | X | | | | | | |
| " | 3 | R5-1 | DO NOT ENTER | 750 X 750 | C | X | | | X | | | | | | | | | | | | | | | | |
| " | 4 | R5-1 | DO NOT ENTER | 750 X 750 | C | X | | | X | | | | | | | | | | | | | | | | |
| " | 5 | R6-1R | ONE WAY | 900 X 300 | A | X | | | X | | | | | | | | | | | | | | | | |
| " | 6 | R6-1R | ONE WAY | 900 X 300 | A | X | | | X | | | | | | | | | | | | | | | | |
| " | 7 | R1-1 | STOP | 750 X 750 | C | X | | | X | | | | | | | | | | | | | | | | |
| " | 8 | D1-1 | CULEBRA RD | 1500 X 300 | C | X | | | | | | | X | | | | | | | | | | | | |
| " | 9 | I-3 | CULEBRA CREEK | 600 X 450 | C | X | | | X | | | | | | | | | | | | | | | | |
| " | 10 | I-3 | CULEBRA CREEK | 600 X 450 | C | X | | | X | | | | | | | | | | | | | | | | |
| " | 11 | R3-8L | LT TURN ONLY/LT TURN OR ST/RT | 1200 X 750 | A | X | | X | | | | | | | | | | | | | | | | | |
| | | (SPL) | TURN ONLY | | | | | | | | | | | | | | | | | | | | | | |
| " | 12 | R3-8L | LT TURN ONLY/LT TURN OR ST/RT | 1200 X 750 | A | X | | X | | | | | | | | | | | | | | | | | |
| | | (SPL) | TURN ONLY | | | | | | | | | | | | | | | | | | | | | | |
| 9A/57 | 1 | R6-1L | ONE WAY | 900 X 300 | A | X | | | X | (MOUNTED BACK TO BACK) | | | | | | | | | | | | | | | |
| | | R6-1R | ONE WAY | 900 X 300 | A | X | | | | | | | | | | | | | | | | | | | |
| " | 2 | FR1-2 | YIELD | 1500 X 1500 X 1500 | C | X | | | | | | | | | | | | | X | | | | | | |
| " | 3 | FR1-2 | YIELD | 1500 X 1500 X 1500 | C | X | | | | | | | | | | | | | X | | | | | | |
| | | | CONTROL: 2452-01-037 SHEET TOTALS | | | | | | 12 | | | | 1 | | | | | | 4 | | | | | | |
| | | | CONTROL: 2452-01-038 SHEET TOTALS | | | | | 2 | 9 | | | | 1 | | | | | | 8 | | | | | | |

ELIMINATED ALL SIGNS ON THIS SHEET EXCEPT NO. 3

-FOR SIGNING ADDENDUM ASSOCIATED WITH CHANGE ORDER NO. 12 ONLY.

ALUMINUM SIGN BLANKS (TYPE A)

| Square Meters | Min. Thickness |
|---|---|
| Less than 0.7 | 2.0 mm |
| 0.7 to 1.4 | 2.5 mm |
| Greater than 1.4 | 3.0 mm |

Sign supports shall be located as shown on the plans, except that the Engineer may shift the sign supports, within design guidelines, where necessary to secure a more desirable location or to avoid conflict with utilities. Unless otherwise shown on the plans, the Contractor shall stake and the Engineer will verify all sign support locations.

Reflective sheeting will be designated as:

Type A - Engineer Grade
Type B - Super Engineer Grade
Type C - High Specific Intensity

©2000 Texas Department of Transportation

SMALL SIGN SUMMARY

| FED. ROAD DIV. NO. | FEDERAL AID PROJECT NO. | SHEET NO. |
|---|---|---|
| 6 | NH 2000(704), etc. | 40A |

| STATE | COUNTY |
|---|---|
| TEXAS | BEXAR |

| DIST. | HIGHWAY NO. |
|---|---|
| SAT | |

| CONT. | SECT. | JOB |
|---|---|---|
| | | |

# SUMMARY OF SMALL SIGNS

| PLAN SHEET NO. | SIGN NO. | SIGN TYPE | SIGN TEXT | SIGN DIMENSIONS | REFLECTIVE SHEETING | PLYWOOD TYPE A | ALUMINUM TYPE A | RAIL MNT | A EA. | A-1 EA. | B EA. | C EA. | D-1 EA. | D-2 EA. | D-3 EA. | D-4 EA. | D-5 EA. | D-6 EA. | F EA. | F (MOD) EA. | G EA. | 4" TUBE EA. | 6" TUBE EA. | MILEPOSTS MP EA. | MILEPOSTS MW EA. |
|---|---|---|---|---|---|---|---|---|---|---|---|---|---|---|---|---|---|---|---|---|---|---|---|---|---|
| | | | CONTROL 2452-01-037 | | | | | | | | | | | | | | | | | | | | | | |
| 4/57 | 2 | D1-1 | JCT SH 16 5 | 1860 X 300 | C | X | | | | | | | X | | | | | | | | | | | | |
| " | 6 | W2-2 | SYM SIDE ROAD - RT | 750 X 750 | C | X | | | X | | | | | | | | | | | | | | | | |
| 5/57 | 1 | ~~R6-1R~~ | ~~ONE WAY~~ | ~~900 X 300~~ | ~~A~~ | ~~X~~ | | | ~~X~~ | /12 | | | | | | | | | | | | | | | |
| " | 2 | ~~R6-1R~~ | ~~ONE WAY~~ | ~~900 X 300~~ | ~~A~~ | ~~X~~ | | | ~~X~~ | /12 | | | | | | | | | | | | | | | |
| " | 3 | R2-1 | SPEED LIMIT 55 | 600 X 750 | A | X | | | X | | | | | | | | | | | | | | | | |
| " | 3A | R2-1 | SPEED LIMIT 55 | 600 X 750 | A | X | | | X | | | | | | | | | | | | | | | | |
| " | 4 | ~~R5-1~~ | ~~DO NOT ENTER~~ | ~~750 X 750~~ | ~~C~~ | ~~X~~ | | | ~~X~~ | /12 | | | | | | | | | | | | | | | |
| " | 5 | ~~R5-1~~ | ~~DO NOT ENTER~~ | ~~750 X 750~~ | ~~C~~ | ~~X~~ | | | ~~X~~ | /12 | | | | | | | | | | | | | | | |
| " | 6 | ~~R1-1~~ | ~~STOP~~ | ~~750 X 750~~ | ~~C~~ | ~~X~~ | | | ~~X~~ | /12 | | | | | | | | | | | | | | | |
| " | 7 | ~~R1-1~~ | ~~STOP~~ | ~~750 X 750~~ | ~~C~~ | ~~X~~ | | | ~~X~~ | /12 | | | | | | | | | | | | | | | |
| 6/57 | 1 | M3-1 | NORTH | 600 X 300 | A | X | | | X | | | | | | | | | | | | | | | | |
| | | M1-6L | LOOP 1604 | 600 X 600 | A | X | | | | | | | | | | | | | | | | | | | |
| " | 3 | R1-1 | STOP | 750 X 750 | C | X | | | X | | | | | | | | | | | | | | | | |
| 7/57 | 3 | W13-2 | EXIT 40 MPH | 1200 X 1500 | C | X | | | | | | | | | | | | | | | | | | | |
| " | 4 | R1-1 | STOP | 750 X 750 | C | X | | | X | | | | | | | | | | | | | | | | |
| " | 5 | SR5-1A | WRONG WAY | 1200 X 900 | C | X | | | | | | | | | | | | | | | | | | | |
| " | 6 | SW6-3 | SYM TWO-WAY TRAFFIC | 1200 X 1200 | C | X | | | | | | | | | | | | | | | | | | | |
| | | (SPL) | TEMPORARY | 900 X 200 | C | X | | | | | | | | | | | | | | | | | | | |
| " | 7 | SR5-1A | WRONG WAY | 1200 X 900 | C | X | | | | | | | | | | | | | | | | | | | |
| " | 12 | R1-1 | STOP | 750 X 750 | C | X | | | X | | | | | | | | | | | | | | | | |
| | | | CONTROL: 2452-01-038 | | | | | | | | | | | | | | | | | | | | | | |
| | 8 | FR4-3B | DO NOT CROSS DOUBLE WHITE LINE | 1200 X 1200 | A | X | | | | | | | | | | | | | | | | | | | |
| " | 9 | FR4-3B | DO NOT CROSS DOUBLE WHITE LINE | 1200 X 1200 | A | X | | | | | | | | | | | | | | | | | | | |
| " | 10 | SR5-1 | DO NOT ENTER | 1200 X 1200 | C | X | | | | | | | | | | | | | | | | | | | |
| " | 11 | SR5-1 | DO NOT ENTER | 1200 X 1200 | C | X | | | | | | | | | | | | | | | | | | | |
| " | 13 | R1-1 | STOP | 750 X 750 | C | X | | | X | | | | | | | | | | | | | | | | |
| 8/57 | 1 | FW4-1R | SYM MERGE | 1200 X 1200 | C | X | | | | | | | | | | | | | | | | | | | |
| " | 2 | SW3-3 | SYM SIGNAL AHEAD | 1200 X 1200 | C | X | | | | | | | | | | | | | | | | | | | |
| " | 3 | R5-1 | DO NOT ENTER | 750 X 750 | C | X | | | X | | | | | | | | | | | | | | | | |
| " | 4 | R5-1 | DO NOT ENTER | 750 X 750 | C | X | | | X | | | | | | | | | | | | | | | | |
| " | 5 | R6-1R | ONE WAY | 900 X 300 | A | X | | | X | | | | | | | | | | | | | | | | |
| " | 6 | R6-1R | ONE WAY | 900 X 300 | A | X | | | X | | | | | | | | | | | | | | | | |
| " | 7 | R1-1 | STOP | 750 X 750 | C | X | | | X | | | | | | | | | | | | | | | | |
| " | 8 | D1-1 | CULEBRA RD | 1500 X 300 | C | X | | | | | | | | | | | | | | | | | | | |
| " | 9 | I-3 | CULEBRA CREEK | 600 X 450 | C | X | | | X | | | | | | | | | | | | | | | | |
| " | 10 | I-3 | CULEBRA CREEK | 600 X 450 | C | X | | | X | | | | | | | | | | | | | | | | |
| " | 11 | R3-8L | LT TURN ONLY/LT TURN OR ST/RT | 1200 X 750 | A | X | | X | | | | | | | | | | | | | | | | | |
| | | (SPL) | TURN ONLY | | | | | | | | | | | | | | | | | | | | | | |
| " | 12 | R3-8L | LT TURN ONLY/LT TURN OR ST/RT | 1200 X 750 | A | X | | X | | | | | | | | | | | | | | | | | |
| | | (SPL) | TURN ONLY | | | | | | | | | | | | | | | | | | | | | | |
| 9A/57 | 1 | R6-1L | ONE WAY | 900 X 300 | A | X | | | X | | (MOUNTED BACK TO BACK) | | | | | | | | | | | | | | |
| | | R6-1R | ONE WAY | 900 X 300 | A | X | | | | | | | | | | | | | | | | | | | |
| " | 2 | FR1-2 | YIELD | 500 X 1500 | C | X | | | | | | | | | | | | | X | | | | | | |
| " | 3 | FR1-2 | YIELD | 500 X 1500 | C | X | | | | | | | | | | | | | X | | | | | | |
| | | | CONTROL: 2452-01-037 SHEET TOTALS | | | | | 2 | 7 | | | | 1 | | | | | | 4 | | | | | | |
| | | | CONTROL: 2452-01-038 SHEET TOTALS | | | | | | 9 | | | | 1 | | | | | | 8 | | | | | | |

CHANGE ORDER 65

REVISED SHEET

CHANGE ORDER NO. 65
- CHANGE ORDER RELATED SIGNING REVISIONS.
- REVISED QUANTITIES

# REFERS TO CHANGES MADE AS PART OF CHANGE ORDER.

ALUMINUM SIGN BLANKS (TYPE A)

| Square Meters | Min. Thickness |
|---|---|
| Less than 0.7 | 2.0 mm |
| 0.7 to 1.4 | 2.5 mm |
| Greater than 1.4 | 3.0 mm |

Sign supports shall be located as shown on the plans, except that the Engineer may shift the sign supports, within design guidelines, where necessary to secure a more desirable location or to avoid conflict with utilities. Unless otherwise shown on the plans, the Contractor shall stake and the Engineer will verify all sign support locations.

Reflective sheeting will be designated as:

Type A - Engineer Grade
Type B - Super Engineer Grade
Type C - High Specific Intensity

©2004 Texas Department of Transportation

## SMALL SIGN SUMMARY
SHEET 1 OF 14

| FED. RD. DIV. NO. | FEDERAL AID PROJECT NO. | | SHEET NO. |
|---|---|---|---|
| 6 | NH 2000(704), etc. | | 40B |
| STATE | DIST. | COUNTY | |
| TEXAS | SAT | BEXAR | |
| CONT. | SECT. | JOB | HIGHWAY NO. |
| 2452 | 01 | 036, etc. | LP 1604 |

LEVELS DISPLAY
ACC:
FILE: sgn\summsmall.dgn

LEVELS DISPLAYED
1 3 4 5 6 7 8 9 10 11 12 13 14 15 16 17 18 19 20 21 22 23 24 25 26 27 28 29 30 31 32 33 34 35 36 37 38 39 40 41 42 43 44 45 46 47 48 49 50 51 52 53 54 55 56 57 58 59 60 61 62 63

ACC:

FILE: sgnsumsmall.dgn

# SUMMARY OF SMALL SIGNS

| PLAN SHEET NO. | SIGN NO. | SIGN TYPE | SIGN TEXT | SIGN DIMENSIONS | REFLECTIVE SHEETING | PLYWOOD TYPE A | ALUMINUM TYPE A | TYPE OF MOUNT | | | | | | | | | | | | | | | | MILEPOSTS | |
|---|---|---|---|---|---|---|---|---|---|---|---|---|---|---|---|---|---|---|---|---|---|---|---|---|---|
| | | | | | | | | RAIL MNT | A EA. | A-1 EA. | B EA. | C EA. | D-1 EA. | D-2 EA. | D-3 EA. | D-4 EA. | D-5 EA. | D-6 EA. | F EA. | F (MOD) EA. | G EA. | 4" TUBE EA. | 6" TUBE EA. | MP EA. | MW EA. |
| | | | CONTROL: 2452-01-038 | | | | | | | | | | | | | | | | | | | | | | |
| 9A/57 | 3A | I-3 | CULEBRA CREEK | 600 X 450 | C | X | | | X | | | | | | | | | | | | | | | | |
| " | 3B | I-3 | CULEBRA CREEK | 600 X 450 | C | X | | X | | | | | | | | | | | | | | | | | |
| " | 4 | M3-1 | NORTH | 600 X 300 | A | | X | | X | | | | | | | | | | | | | | | | |
| | | M1-6L | LOOP 1604 | 600 X 600 | A | | X | | | | | | | | | | | | | | | | | | |
| | | M5-3L | TURNAROUND ARROW | 525 X 375 | A | | X | | | | | | | | | | | | | | | | | | |
| " | 5 | D1-3a | LEON VALLEY 6 | 2740 x 1210 | C | X | | | | | | | | | | | | X | | | | | | | |
| | | (SPL) | WILLIAM H. TAFT HS 1 | | | | | | | | | | | | | | | | | | | | | | |
| | | | CASTROVILLE 24 | | | | | | | | | | | | | | | | | | | | | | |
| " | 6 | R3-7R | RT LANE MUST TURN RT | 750 X 750 | A | X | | | X | | | | | | | | | | | | | | | | |
| " | 7 | M3-1 | NORTH | 600 X 300 | A | | X | | | | X | | | | | | | | | | | | | | |
| | | M1-6F | FARM ROAD 471 | 600 X 600 | A | | X | | | | | | | | | | | | | | | | | | |
| | | M6-1L | LT ARROW | 525 X 375 | A | | X | | | | | | | | | | | | | | | | | | |
| | | M3-3 | SOUTH | 600 X 300 | A | | X | | | | | | | | | | | | | | | | | | |
| | | M1-6F | FARM ROAD 471 | 600 X 600 | A | | X | | | | | | | | | | | | | | | | | | |
| | | M6-1R | RT ARROW | 525 X 375 | A | | X | | | | | | | | | | | | | | | | | | |
| " | 9 | R3-7L | LT LANE MUST TURN LT | 750 X 750 | A | X | | | X | | | | | | | | | | | | | | | | |
| " | 10 | FR1-2 | YIELD | 1500 X 1500 X 1500 | C | X | | | | | | | | | | | | | X | | | | | | |
| " | 11 | SR5-1 | DO NOT ENTER | 1200 X 1200 | C | X | | | | | | | | | | | | | X | | | | | | |
| " | 11A | SR5-1 | DO NOT ENTER | 1200 X 1200 | C | X | | | | | | | | | | | | | X | | | | | | |
| " | 12 | SR5-1 | DO NOT ENTER | 1200 X 1200 | C | X | | | | | | | | | | | | | X | | | | | | |
| " | 13 | R6-1L | ONE WAY | 900 X 300 | A | X | | | X | (MOUNTED BACK TO BACK) | | | | | | | | | | | | | | | |
| | | R6-1R | ONE WAY | 900 X 300 | A | X | | | | | | | | | | | | | | | | | | | |
| " | 14 | W12-3 | SYM CLEARANCE AHEAD | 2100 X 610 | C | X | | | | BRIDGE MOUNTS | | | | | | | | | | | | | | | |
| | 14A | (SPL) | LT TURN ARROW ONLY | 1000 X 760 | C | X | | | | | | | | | | | | | | | | | | | |
| | | (SPL) | LT TURN/ST ARROW | 1000 X 760 | C | X | | | | | | | | | | | | | | | | | | | |
| | | (SPL) | ST ARROW ONLY | 1000 X 760 | C | X | | | | | | | | | | | | | | | | | | | |
| 9B/57 | 1 | R3-8R | STR ARROW/RT ARROW ONLY | 750 X 750 | A | X | | | X | | | | | | | | | | | | | | | | |
| | | (SPL) | | | | | | | | | | | | | | | | | | | | | | | |
| " | 2 | M3-3 | SOUTH | 600 X 300 | A | | X | | X | | | | | | | | | | | | | | | | |
| | | M1-6L | LOOP 1604 | 600 X 600 | A | | X | | | | | | | | | | | | | | | | | | |
| | | M5-3L | TURNAROUND ARROW | 525 X 375 | A | | X | | | | | | | | | | | | | | | | | | |
| " | 3 | R3-7R | RT LANE MUST TURN RT | 750 X 750 | A | X | | | X | | | | | | | | | | | | | | | | |
| " | 4 | M3-1 | NORTH | 600 X 300 | A | | X | | | | X | | | | | | | | | | | | | | |
| | | M1-6F | LOOP 1604 | 600 X 600 | A | | X | | | | | | | | | | | | | | | | | | |
| | | M6-1L | LT ARROW | 525 X 375 | A | | X | | | | | | | | | | | | | | | | | | |
| | | M3-1 | NORTH | 600 X 300 | A | | X | | | | | | | | | | | | | | | | | | |
| | | M1-6F | FARM ROAD 471 | 600 X 600 | A | | X | | | | | | | | | | | | | | | | | | |
| | | M6-1R | RT ARROW | 525 X 375 | A | | X | | | | | | | | | | | | | | | | | | |
| " | 5 | SR5-1 | DO NOT ENTER | 1200 X 1200 | C | X | | | | | | | | | | | | | X | | | | | | |
| " | 6 | SR5-1 | DO NOT ENTER | 1200 X 1200 | C | X | | | | | | | | | | | | | X | | | | | | |
| " | 7 | R3-7L | LT LANE MUST TURN LT | 750 X 750 | A | X | | | X | | | | | | | | | | | | | | | | |
| " | 9 | W12-3 | SYM CLEARANCE AHEAD | 2100 X 610 | C | X | | | | BRIDGE MOUNTS | | | | | | | | | | | | | | | |
| | 9A | (SPL) | LT TURN ARROW ONLY | 1000 X 760 | C | X | | | | | | | | | | | | | | | | | | | |
| | | (SPL) | LT TURN/ST ARROW | 1000 X 760 | C | X | | | | | | | | | | | | | | | | | | | |
| | | (SPL) | ST ARROW ONLY | 1000 X 760 | C | X | | | | | | | | | | | | | | | | | | | |
| " | 10 | R6-1R | ONE WAY | 900 X 300 | A | X | | | X | (MOUNTED BACK TO BACK) | | | | | | | | | | | | | | | |
| | | R6-1L | ONE WAY | 900 X 300 | A | X | | | | | | | | | | | | | | | | | | | |
| " | 11 | FR1-2 | YIELD | 1500 X 1500 X 1500 | C | X | | | | | | | | | | | | | X | | | | | | |
| " | 12 | FR1-2 | YIELD | 1500 X 1500 X 1500 | C | X | | | | | | | | | | | | | X | | | | | | |
| 9C/57 | 1 | D1-2A | ⇧ CASTROVILLE 24 | 2740 X 600 | C | X | | | | | | | | | | | X | | | | | | | | |
| | | | ⇦ JCT FM 1957 4 | | | | | | | | | | | | | | | | | | | | | | |
| " | 2 | FW4-2R | SYM MERGE | 1200 X 1200 | C | X | | | | | | | | | | | | | X | | | | | | |
| | | | **CONTROL: 2452-01-038 SHEET TOTALS** | | | | | 1 | 10 | | 2 | | | | | 1 | | 1 | 9 | | | | | | |

ALUMINUM SIGN BLANKS (TYPE A)

| Square Meters | Min. Thickness |
|---|---|
| Less than 0.7 | 2.0 mm |
| 0.7 to 1.4 | 2.5 mm |
| Greater than 1.4 | 3.0 mm |

Sign supports shall be located as shown on the plans, except that the Engineer may shift the sign supports, within design guidelines, where necessary to secure a more desirable location or to avoid conflict with utilities. Unless otherwise shown on the plans, the Contractor shall stake and the Engineer will verify all sign support locations.

Reflective sheeting will be designated as:

Type A - Engineer Grade
Type B - Super Engineer Grade
Type C - High Specific Intensity

©2000

Texas Department of Transportation

SMALL SIGN SUMMARY
SHEET 2 OF 14

| FED. RD. DIV. NO. | FEDERAL AID PROJECT NO. | SHEET NO. |
|---|---|---|
| 6 | NH 2000(704),etc. | 41 |

| STATE | DIST. | COUNTY |
|---|---|---|
| TEXAS | SAT | BEXAR |

| CONT. | SECT. | JOB | HIGHWAY NO. |
|---|---|---|---|
| 2452 | 01 | 036,etc. | LP 1604 |

LEVELS DISPLAYED

ACC:

FILE: sgnsumsmall.dgn

# SUMMARY OF SMALL SIGNS

| PLAN SHEET NO. | SIGN NO. | SIGN TYPE | SIGN TEXT | SIGN DIMENSIONS | REFLECTIVE SHEETING | PLYWOOD TYPE A | ALUMINUM TYPE A | TYPE OF MOUNT: RAIL MNT | A EA. | A-1 EA. | B EA. | C EA. | D-1 EA. | D-2 EA. | D-3 EA. | D-4 EA. | D-5 EA. | D-6 EA. | F EA. | F (MOD) EA. | G EA. | 4" TUBE EA. | 6" TUBE EA. | MILEPOSTS MP EA. | MILEPOSTS MW EA. |
|---|---|---|---|---|---|---|---|---|---|---|---|---|---|---|---|---|---|---|---|---|---|---|---|---|---|
| | | | CONTROL: 2452-01-038 | | | | | | | | | | | | | | | | | | | | | | |
| 9C/57 | 3 | M3-3 | SOUTH | 600 X 300 | A | | X | | X | | | | | | | | | | | | | | | | |
| | | M1-6F | FARM ROAD 471 | 600 X 600 | A | | X | | | | | | | | | | | | | | | | | | |
| " | 4 | R2-1 | SPEED LIMIT 55 | 600 X 750 | A | X | | | X | | | | | | | | | | | | | | | | |
| " | 5 | D2-2 | WILLIAM H. TAFT HS 1 | 2700 X 900 | C | X | | | | | | | | | | | X | | | | | | | | |
| | | (SPL) | CASTROVILLE 24 | | | | | | | | | | | | | | | | | | | | | | |
| " | 6 | W2-6B | HIGHWAY INTERSECTION 1000 FT | 1200 X 1200 | C | X | | | | | | | | | | | | X | | | | | | | |
| " | 7 | M2-1 | JCT | 525 X 375 | A | | X | | X | | | | | | | | | | | | | | | | |
| | | M1-6L | LOOP 1604 | 600 X 600 | A | | X | | | | | | | | | | | | | | | | | | |
| " | 8 | SW3-3 | SYM SIGNAL AHEAD | 1200 X 1200 | C | X | | | | | | | | | | | | X | | | | | | | |
| " | 9 | FW12-2T | SYM CLEARANCE AHEAD | 1200 X 1200 | C | X | | | | | | | | | | | | X | | | | | | | |
| " | 11 | D1-3A | ⇧ LEON VALLEY 6 | 2700 X 900 | C | X | | | | | | | | | | | X | | | | | | | | |
| | | | ⇧ JCT SH 16 5 | | C | X | | | | | | | | | | | | | | | | | | | |
| | | | JCT FM 1967 4⇨ | | C | X | | | | | | | | | | | | | | | | | | | |
| " | 13 | R3-8R | ST OR RT TURN/RT TURN ONLY | 750 X 750 | A | X | | | X | | | | | | | | | | | | | | | | |
| | | (SPL) | | | | | | | | | | | | | | | | | | | | | | | |
| " | 14 | R3-7R | RT LANE MUST TURN RT | 750 X 750 | A | X | | | X | | | | | | | | | | | | | | | | |
| " | 15 | M3-1 | NORTH | 600 X 300 | A | | X | | | | | X | | | | | | | | | | | | | |
| | | M1-6F | FARM ROAD 471 | 600 X 600 | A | | X | | | | | | | | | | | | | | | | | | |
| | | M6-3 | ST ARROW | 525 X 375 | A | | X | | | | | | | | | | | | | | | | | | |
| | | M3-1 | NORTH | 600 X 300 | A | | X | | | | | | | | | | | | | | | | | | |
| | | M1-6L | LOOP 1604 | 600 X 600 | A | | X | | | | | | | | | | | | | | | | | | |
| | | M6-3 | ST ARROW | 525 X 375 | A | | X | | | | | | | | | | | | | | | | | | |
| | | M3-3 | SOUTH | 600 X 300 | A | | X | | | | | | | | | | | | | | | | | | |
| | | M1-6L | LOOP 1604 | 600 X 600 | A | | X | | | | | | | | | | | | | | | | | | |
| | | M6-1R | RT ARROW | 525 X 375 | A | | X | | | | | | | | | | | | | | | | | | |
| " | 16 | R4-7 | SYM KEEP RIGHT | 600 X 750 | A | X | | | X | | | | | | | | | | | | | | | | |
| " | 17 | R3-8L | LT TURN ONLY/LT TURN OR ST | 750 X 750 | A | X | | | | (ATTACHED TO BACK OF NO. 16) | | | | | | | | | | | | | | | |
| " | 18 | R3-8L | LT TURN ONLY/LT TURN OR ST | 750 X 750 | A | X | | | X | (MOUNT BACK TO BACK) | | | | | | | | | | | | | | | |
| | | R3-8L | LT TURN ONLY/LT TURN OR ST | 750 X 750 | A | X | | | | | | | | | | | | | | | | | | | |
| " | 19 | D1-2A | ⇧ LEON VALLEY 6 | 2740 X 600 | C | X | | | | | | | | | | X | | | | | | | | | |
| | | | ⇦ JCT SH 16 5 | | | | | | | | | | | | | | | | | | | | | | |
| 9D/57 | 1 | W2-6B | HIGHWAY INTERSECTION 1000 FT | 1200 X 1200 | C | X | | | | | | | | | | | | X | | | | | | | |
| " | 2 | M2-1 | JCT | 525 X 375 | A | | X | | X | | | | | | | | | | | | | | | | |
| | | M1-6L | LOOP 1604 | 600 X 600 | A | | X | | | | | | | | | | | | | | | | | | |
| " | 3 | FW12-2T | SYM CLEARANCE AHEAD | 1200 X 1200 | C | X | | | | | | | | | | | | X | | | | | | | |
| " | 5 | R3-8R | ST ARROW/RT TURN ONLY | 750 X 750 | A | X | | | X | | | | | | | | | | | | | | | | |
| | | (SPL) | | | | | | | | | | | | | | | | | | | | | | | |
| " | 8 | M3-3 | SOUTH | 600 X 300 | A | | X | | | | | X | | | | | | | | | | | | | |
| | | M1-6L | LOOP 1604 | 600 X 600 | A | | X | | | | | | | | | | | | | | | | | | |
| | | M6-3 | ST ARROW | 525 X 375 | A | | X | | | | | | | | | | | | | | | | | | |
| | | M3-3 | NORTH | 600 X 300 | A | | X | | | | | | | | | | | | | | | | | | |
| | | M1-6L | LOOP 1604 | 600 X 600 | A | | X | | | | | | | | | | | | | | | | | | |
| | | M6-1R | RT ARROW | 525 X 375 | A | | X | | | | | | | | | | | | | | | | | | |
| | | M3-1 | SOUTH | 600 X 300 | A | | X | | | | | | | | | | | | | | | | | | |
| | | M1-6F | FM 471 | 600 X 600 | A | | X | | | | | | | | | | | | | | | | | | |
| | | M6-3 | ST ARROW | 525 X 375 | A | | X | | | | | | | | | | | | | | | | | | |
| " | 9 | R3-7R | RT LANE MUST TURN RT | 750 X 750 | A | X | | | X | | | | | | | | | | | | | | | | |
| " | 10 | M3-3 | SOUTH | 600 X 300 | A | | X | | | | X | | | | | | | | | | | | | | |
| | | M1-6L | LOOP 1604 | 600 X 600 | A | | X | | | | | | | | | | | | | | | | | | |
| | | M6-1L | LT ARROW | 525 X 375 | A | | X | | | | | | | | | | | | | | | | | | |
| | | M3-1 | NORTH | 600 X 300 | A | | X | | | | | | | | | | | | | | | | | | |
| | | M1-6F | FARM ROAD 471 | 600 X 600 | A | | X | | | | | | | | | | | | | | | | | | |
| | | M6-3 | ST ARROW | 525 X 375 | A | | X | | | | | | | | | | | | | | | | | | |
| | | | **CONTROL: 2452-01-038 SHEET TOTALS** | | | | | | 10 | | 1 | 2 | | | | 1 | | 2 | 5 | | | | | | |

©2000

Texas Department of Transportation

**SMALL SIGN SUMMARY**
SHEET 3 OF 14

| FED. RD. DIV. NO. | FEDERAL AID PROJECT NO. | SHEET NO. |
|---|---|---|
| 6 | NH 2000(704),etc. | 42 |

| STATE | DIST. | COUNTY |
|---|---|---|
| TEXAS | SAT | BEXAR |

| CONT. | SECT. | JOB | HIGHWAY NO. |
|---|---|---|---|
| 2452 | 01 | 036,etc. | LP 1604 |

Sign supports shall be located as shown on the plans, except that the Engineer may shift the sign supports, within design guidelines, where necessary to secure a more desirable location or to avoid conflict with utilities. Unless otherwise shown on the plans, the Contractor shall stake and the Engineer will verify all sign support locations.

Reflective sheeting will be designated as:

Type A - Engineer Grade
Type B - Super Engineer Grade
Type C - High Specific Intensity

ALUMINUM SIGN BLANKS (TYPE A)

| Square Meters | Min. Thickness |
|---|---|
| Less than 0.7 | 2.0 mm |
| 0.7 to 1.4 | 2.5 mm |
| Greater than 1.4 | 3.0 mm |

LEVELS DISPLAYED
1 3 4 5 6 7 8 9 10 11 12 13 14 15 16
17 18 19 20 21 22 23 24 25 26 27 28 29 30 31 32
33 34 35 36 37 38 39 40 41 42 43 44 45 46 47 48
49 50 51 52 53 54 55 56 57 58 59 60 61 62 63

ACC:

FILE: sgnsumsmall.dgn

# SUMMARY OF SMALL SIGNS

| PLAN SHEET NO. | SIGN NO. | SIGN TYPE | SIGN TEXT | SIGN DIMENSIONS | REFLECTIVE SHEETING | PLYWOOD TYPE A | ALUMINUM TYPE A | TYPE OF MOUNT: RAIL MNT | A EA. | A-1 EA. | B EA. | C EA. | D-1 EA. | D-2 EA. | D-3 EA. | D-4 EA. | D-5 EA. | D-6 EA. | F EA. | F (MOD) EA. | G EA. | 4" TUBE EA. | 6" TUBE EA. | MILEPOSTS: MP EA. | MILEPOSTS: MW EA. |
|---|---|---|---|---|---|---|---|---|---|---|---|---|---|---|---|---|---|---|---|---|---|---|---|---|---|
| | | | CONTROL 2452-01-038 | | | | | | | | | | | | | | | | | | | | | | |
| 9D/57 | 11 | R4-7 | SYM KEEP RIGHT | 600 X 750 | A | X | | | X | | | | | | | | | | | | | | | | |
| " | 12 | R3-8L | LT TURN ONLY/LT TURN OR ST | 750 X 750 | A | X | | | | (ATTACHED TO BACK OF NO. 11) | | | | | | | | | | | | | | | |
| " | 13 | R6-1L | ONE WAY | 900 X 300 | A | X | | | X | (MOUNTED BACK TO BACK) | | | | | | | | | | | | | | | |
| | | R6-1R | ONE WAY | 900 X 300 | A | X | | | | | | | | | | | | | | | | | | | |
| " | 14 | FR1-2 | YIELD | 1500 X 1500 X 1500 | C | X | | | | (ATTACHED TO BACK OF NO. 14A) | | | | | | | | | | | | | | | |
| " | 14A | SR5-1 | DO NOT ENTER | 1200 X 900 | C | X | | | | | | | | | | | | X | | | | | | | |
| " | 17 | M4-11 | BEGIN | 600 X 150 | A | X | | | X | | | | | | | | | | | | | | | | |
| | | R3-9B | CENTER LANE TURNING ONLY | 600 X 900 | A | X | | | | | | | | | | | | | | | | | | | |
| " | 18 | M3-1 | NORTH | 600 X 300 | A | | X | | X | | | | | | | | | | | | | | | | |
| | | M1-6F | FARM ROAD 471 | 600 X 600 | A | | X | | | | | | | | | | | | | | | | | | |
| " | 19 | M4-11 | BEGIN | 600 X 150 | A | X | | | X | | | | | | | | | | | | | | | | |
| | | R3-9B | CENTER LANE TURNING ONLY | 600 X 900 | A | X | | | | | | | | | | | | | | | | | | | |
| " | 20 | D1-3a | ⇧ JCT FM 1957 4<br>⇧ CASTROVILLE 24<br>JCT SH 16 5 ⇨ | 2700 X 900 | C | X | | | | | | | | | | | X | | | | | | | | |
| " | 25 | SW3-3 | SYM SIGNAL AHEAD | 1200 X 1200 | C | X | | | | | | | | | | | | X | | | | | | | |
| 10/57 | 1 | R6-1R | ONE WAY | 900 X 300 | A | X | | | X | | | | | | | | | | | | | | | | |
| " | 2 | SW3-3 | SYM SIGNAL AHEAD | 1200 X 1200 | C | X | | | | | | | | | | | | X | | | | | | | |
| " | 3 | SW3-3 | SYM SIGNAL AHEAD | 1200 X 1200 | C | X | | | | | | | | | | | | X | | | | | | | |
| " | 5 | R3-8L | LT TURN ONLY/LT TURN OR ST | 750 X 750 | A | X | | | X | | | | | | | | | | | | | | | | |
| " | 6 | R6-1R | ONE WAY | 900 X 300 | A | X | | | X | | | | | | | | | | | | | | | | |
| 11/57 | 4 | SR5-1 | DO NOT ENTER | 1200 X 1200 | C | X | | | | | | | | | | | | X | | | | | | | |
| " | 5 | SR5-1 | DO NOT ENTER | 1200 X 1200 | C | X | | | | | | | | | | | | X | | | | | | | |
| " | 6 | FW4-1R | SYM MERGE | 1200 X 1200 | C | X | | | | | | | | | | | | X | | | | | | | |
| " | 7 | R6-1R | ONE WAY | 900 X 300 | A | X | | | X | | | | | | | | | | | | | | | | |
| 12/57 | 1 | W13-2 | EXIT 45 MPH | 1200 X 1500 | C | X | | | | | | | | | | | | X | | | | | | | |
| | | | CONTROL 2452-01-037 | | | | | | | | | | | | | | | | | | | | | | |
| 14/57 | 2 | FW4-1R | SYM MERGE | 1200 X 1200 | C | X | | | | | | | | | | | | X | | | | | | | |
| " | 5 | D1-1 | JCT SH 16 5 ⇨ | 2400 X 300 | C | X | | | | | | | | | X | | | | | | | | | | |
| " | 10 | SW3-3 | SYM SIGNAL AHEAD | 1200 X 1200 | C | X | | | | | | | | | | | | X | | | | | | | |
| | | SPL | LEFT 2 LANES | | C | X | | | | | | | | | | | | | | | | | | | |
| 15/57 | 1 | R6-1L | ONE WAY | 900 X 300 | A | X | | | X | | | | | | | | | | | | | | | | |
| " | 2 | M3-3 | SOUTH | 600 X 300 | A | | X | | X | | | | | | | | | | | | | | | | |
| | | M1-6L | LOOP 1604 | 600 X 600 | A | | X | | | | | | | | | | | | | | | | | | |
| | | M6-3 | ST ARROW | 525 X 375 | A | | X | | | | | | | | | | | | | | | | | | |
| " | 4 | R6-1L | ONE WAY | 900 X 300 | A | X | | | X | | | | | | | | | | | | | | | | |
| " | 5 | SR5-1 | DO NOT ENTER | 1200 X 1200 | C | X | | | | | | | | | | | | X | | | | | | | |
| " | 6 | SR5-1 | DO NOT ENTER | 1200 X 1200 | C | X | | | | | | | | | | | | X | | | | | | | |
| " | 7 | R6-1R | ONE WAY | 900 X 300 | A | X | | | X | | | | | | | | | | | | | | | | |
| " | 8 | FR2-1 | SPEED LIMIT 70 | 1200 X 1500 | A | X | | | | | | | | | | | | X | | | | | | | |
| " | 9 | FW4-2R | SYM MERGE | 1200 X 1200 | C | X | | | | | | | | | | | | X | | | | | | | |
| 16/57 | 2 | R6-1R | ONE WAY | 900 X 300 | A | X | | | X | | | | | | | | | | | | | | | | |
| " | 3 | SW3-3 | SYM SIGNAL AHEAD | 1200 X 1200 | C | X | | | | | | | | | | | | X | | | | | | | |
| " | 4 | SW3-3 | SYM SIGNAL AHEAD | 1200 X 1200 | C | X | | | | | | | | | | | | X | | | | | | | |
| | | | CONTROL: 2452-01-038 SHEET TOTALS | | | | | | 9 | | | | | | | | 1 | 8 | | | | | | | |
| | | | CONTROL: 2452-01-037 SHEET TOTALS | | | | | | 5 | | | | | | 1 | | | 8 | | | | | | | |

ALUMINUM SIGN BLANKS (TYPE A)

| Square Meters | Min. Thickness |
|---|---|
| Less than 0.7 | 2.0 mm |
| 0.7 to 1.4 | 2.5 mm |
| Greater than 1.4 | 3.0 mm |

Sign supports shall be located as shown on the plans, except that the Engineer may shift the sign supports, within design guidelines, where necessary to secure a more desirable location or to avoid conflict with utilities. Unless otherwise shown on the plans, the Contractor shall stake and the Engineer will verify all sign support locations.

Reflective sheeting will be designated as:

Type A - Engineer Grade
Type B - Super Engineer Grade
Type C - High Specific Intensity

©2000

Texas Department of Transportation

SMALL SIGN SUMMARY
SHEET 4 OF 14

| FED. RD. DIV. NO. | FEDERAL AID PROJECT NO. | SHEET NO. |
|---|---|---|
| 6 | NH 2000(704),etc. | 43 |

| DIST. | COUNTY | HIGHWAY NO. |
|---|---|---|
| SAT | BEXAR | LP 1604 |

| CONT. | SECT. | JOB |
|---|---|---|
| 2452 | 01 | 036,etc. |

LEVELS DISPL.
1 | 3 4 5 6 7 8 9 10 11 12 13 15 16
17 18 19 20 21 22 23 24 25 26 27 28 29 30 31 32
33 34 35 36 37 38 39 40 41 42 43 44 45 46 47 48
49 50 51 52 53 54 55 56 57 58 59 60 61 62 63

ACC:

FILE: sgnsumsmall.dgn

# SUMMARY OF SMALL SIGNS

| PLAN SHEET NO. | SIGN NO. | SIGN TYPE | SIGN TEXT | SIGN DIMENSIONS | REFLECTIVE SHEETING | PLYWOOD TYPE A | ALUMINUM TYPE A | TYPE OF MOUNT: RAIL MNT | A EA. | A-1 EA. | B EA. | C EA. | D-1 EA. | D-2 EA. | D-3 EA. | D-4 EA. | D-5 EA. | D-6 EA. | F EA. | F (MOD) EA. | G EA. | 4" TUBE EA. | 6" TUBE EA. | MILEPOSTS: MP EA. | MILEPOSTS: MW EA. |
|---|---|---|---|---|---|---|---|---|---|---|---|---|---|---|---|---|---|---|---|---|---|---|---|---|---|
| | | | CONTROL 2452-01-038 | | | | | | | | | | | | | | | | | | | | | | |
| 9D/57 | 11 | R4-7 | SYM KEEP RIGHT | 600 X 750 | A | X | | | X | | | | | | | | | | | | | | | | |
| " | 12 | R3-8L | LT TURN ONLY/LT TURN OR ST | 750 X 750 | A | X | | | | (ATTACHED TO BACK OF NO. 11) | | | | | | | | | | | | | | | |
| " | 13 | R6-1L | ONE WAY | 900 X 300 | A | X | | | X | (MOUNTED BACK TO BACK) | | | | | | | | | | | | | | | |
| | | R6-1R | ONE WAY | 900 X 300 | A | X | | | | | | | | | | | | | | | | | | | |
| " | 14 | FR1-2 | YIELD | 1500 X 1500 X 1500 | C | X | | | | (ATTACHED TO BACK OF NO. 14A) | | | | | | | | | | | | | | | |
| " | 14A | SR5-1 | DO NOT ENTER | 1200 X 900 | C | X | | | | | | | | | | | | X | | | | | | | |
| " | 17 | M4-11 | BEGIN | 600 X 150 | A | X | | | X | | | | | | | | | | | | | | | | |
| | | R3-9B | CENTER LANE TURNING ONLY | 600 X 900 | A | X | | | | | | | | | | | | | | | | | | | |
| " | 18 | M3-1 | NORTH | 600 X 300 | A | | X | | X | | | | | | | | | | | | | | | | |
| | | M1-6F | FARM ROAD 471 | 600 X 600 | A | | X | | | | | | | | | | | | | | | | | | |
| " | 19 | M4-11 | BEGIN | 600 X 150 | A | X | | | X | | | | | | | | | | | | | | | | |
| | | R3-9B | CENTER LANE TURNING ONLY | 600 X 900 | A | X | | | | | | | | | | | | | | | | | | | |
| " | 20 | D1-3a | ⇧ JCT FM 1957 4<br>⇧ CASTROVILLE 24<br>JCT SH 16 5 ⇨ | 2700 X 900 | C | X | | | | | | | | | | | X | | | | | | | | |
| " | 25 | SW3-3 | SYM SIGNAL AHEAD | 1200 X 1200 | C | X | | | | | | | | | | | | X | | | | | | | |
| 10/57 | 1 | R6-1R | ONE WAY | 900 X 300 | A | X | | | X | | | | | | | | | | | | | | | | |
| " | 2 | SW3-3 | SYM SIGNAL AHEAD | 1200 X 1200 | C | X | | | | | | | | | | | | X | | | | | | | |
| " | 3 | SW3-3 | SYM SIGNAL AHEAD | 1200 X 1200 | C | X | | | | | | | | | | | | X | | | | | | | |
| " | 5 | R3-8L | LT TURN ONLY/LT TURN OR ST | 750 X 750 | A | X | | | X | | | | | | | | | | | | | | | | |
| " | 6 | R6-1R | ONE WAY | 900 X 300 | A | X | | | X | | | | | | | | | | | | | | | | |
| 11/57 | 4 | SR5-1 | DO NOT ENTER | 1200 X 1200 | C | X | | | | | | | | | | | | X | | | | | | | |
| " | 5 | SR5-1 | DO NOT ENTER | 1200 X 1200 | C | X | | | | | | | | | | | | X | | | | | | | |
| " | 6 | FW4-1R | SYM MERGE | 1200 X 1200 | C | X | | | | | | | | | | | | X | | | | | | | |
| " | 7 | R6-1R | ONE WAY | 900 X 300 | A | X | | | X | | | | | | | | | | | | | | | | |
| 12/57 | 1 | W13-2 | EXIT 45 MPH | 1200 X 1500 | C | X | | | | | | | | | | | | X | | | | | | | |
| | | | CONTROL 2452-01-037 | | | | | | | | | | | | | | | | | | | | | | |
| 14/57 | 2 | FW4-1R | SYM MERGE | 1200 X 1200 | C | X | | | | | | | | | | | | X | | | | | | | |
| " | 5 | D1-1 | JCT SH 16 5 ⇨ | 2400 X 300 | C | X | | | | | | | | | X | | | | | | | | | | |
| " | 10 | SW3-3 | SYM SIGNAL AHEAD | 1200 X 1200 | C | X | | | | | | | | | | | | X | | | | | | | |
| | | SPL | LEFT 2 LANES | | C | X | | | | | | | | | | | | | | | | | | | |
| 15/57 | 1 | R6-1L | ONE WAY | 900 X 300 | A | X | | | X | | | | | | | | | | | | | | | | |
| " | 2 | M3-3 | SOUTH | 600 X 300 | A | | X | | X | | | | | | | | | | | | | | | | |
| | | M1-6L | LOOP 1604 | 600 X 600 | A | | X | | | | | | | | | | | | | | | | | | |
| | | M6-3 | ST ARROW | 525 X 375 | A | | X | | | | | | | | | | | | | | | | | | |
| " | 4 | R6-1L | ONE WAY | 900 X 300 | A | X | | | X | | | | | | | | | | | | | | | | |
| " | 5 | SR5-1 | DO NOT ENTER | 1200 X 1200 | C | X | | | | | | | | | | | | X | | | | | | | |
| " | 6 | SR5-1 | DO NOT ENTER | 1200 X 1200 | C | X | | | | | | | | | | | | X | | | | | | | |
| " | 7 | R6-1R | ONE WAY | 900 X 300 | A | X | | | X | | | | | | | | | | | | | | | | |
| " | 8 | FR2-1 | SPEED LIMIT 55 | 1200 X 1500 | A | X | | | | | | | | | | | | X | | | | | | | |
| " | 9 | FW4-2R | SYM MERGE | 1200 X 1200 | C | X | | | | | | | | | | | | X | | | | | | | |
| 16/57 | 2 | R6-1R | ONE WAY | 900 X 300 | A | X | | | X | | | | | | | | | | | | | | | | |
| " | 3 | SW3-3 | SYM SIGNAL AHEAD | 1200 X 1200 | C | X | | | | | | | | | | | | X | | | | | | | |
| " | 4 | SW3-3 | SYM SIGNAL AHEAD | 1200 X 1200 | C | X | | | | | | | | | | | | X | | | | | | | |
| | | | **CONTROL: 2452-01-038 SHEET TOTALS** | | | | | | 9 | | | | | | | | 1 | 8 | | | | | | | |
| | | | **CONTROL: 2452-01-037 SHEET TOTALS** | | | | | | 5 | | | | | | 1 | | | 8 | | | | | | | |

©2004 Texas Department of Transportation

SMALL SIGN SUMMARY
SHEET 4 OF 14

| FED. RD. DIV. NO. | FEDERAL AID PROJECT NO. | SHEET NO. |
|---|---|---|
| 6 | NH 2000(704), etc. | 43A |

| STATE | DIST. | COUNTY | CONT. | SECT. | JOB | HIGHWAY NO. |
|---|---|---|---|---|---|---|
| TEXAS | SAT | BEXAR | 2452 | 01 | 036, etc. | LP 1604 |

Sign supports shall be located as shown on the plans, except that the Engineer may shift the sign supports, within design guidelines, where necessary to secure a more desirable location or to avoid conflict with utilities. Unless otherwise shown on the plans, the Contractor shall stake and the Engineer will verify all sign support locations.

Reflective sheeting will be designated as:

Type A - Engineer Grade
Type B - Super Engineer Grade
Type C - High Specific Intensity

ALUMINUM SIGN BLANKS (TYPE A)

| Square Meters | Min. Thickness |
|---|---|
| Less than 0.7 | 2.0 mm |
| 0.7 to 1.4 | 2.5 mm |
| Greater than 1.4 | 3.0 mm |

CHANGE ORDER NO. 65
- CHANGE ORDER RELATED SIGNING REVISIONS.
- REVISED QUANTITIES

REVISED SHEET

CHANGE ORDER 65

# SUMMARY OF SMALL SIGNS

| PLAN SHEET NO. | SIGN NO. | SIGN TYPE | SIGN TEXT | SIGN DIMENSIONS | REFLECTIVE SHEETING | PLYWOOD TYPE A | ALUMINUM TYPE A | TYPE OF MOUNT: RAIL MNT | A EA. | A-1 EA. | B EA. | C EA. | D-1 EA. | D-2 EA. | D-3 EA. | D-4 EA. | D-5 EA. | D-6 EA. | F EA. | F (MOD) EA. | G EA. | 4" TUBE EA. | 6" TUBE EA. | MILEPOSTS MP EA. | MILEPOSTS MW EA. |
|---|---|---|---|---|---|---|---|---|---|---|---|---|---|---|---|---|---|---|---|---|---|---|---|---|---|
| | | | CONTROL: 2452-01-038 | | | | | | | | | | | | | | | | | | | | | | |
| 651A | 4 | R5-1 | DO NOT ENTER | 1200 x 1200 | C | X | | | | X | | | | | | | | | | X | | | | | |
| (12/57) | 5 | R1-1 | STOP | 750 x 750 | C | X | | | | X | | | | | | | | | | X | | | | | |
| | 6 | R5-1 | DO NOT ENTER | 750 x 750 | C | X | | | | X | | | | | | | | | | X | | | | | |
| | 7 | R6-1R | ONE WAY | 900 x 300 | C | X | | | | X | | | | | | | | | | X | | | | | |
| CONTROL: 2452-01-038 SHEET TOTALS | | | | | | | | | 3 | | | | | | | | | | | 1 | | | | | |

New Sheet

CHANGE ORDER 25

CHANGE ORDER NO. 25

-REQUIRED SIGNING ADDENDUM
ASSOCIATED WITH DRIVEWAY 8A.

ALUMINUM SIGN BLANKS (TYPE A)

| Square Meters | Min. Thickness |
|---|---|
| Less than 0.7 | 2.0 mm |
| 0.7 to 1.4 | 2.5 mm |
| Greater than 1.4 | 3.0 mm |

Sign supports shall be located as shown on the plans, except that the Engineer may shift the sign supports, within design guidelines, where necessary to secure a more desirable location or to avoid conflict with utilities. Unless otherwise shown on the plans, the Contractor shall stake and the Engineer will verify all sign support locations.

Reflective sheeting will be designated as:

Type A - Engineer Grade
Type B - Super Engineer Grade
Type C - High Specific Intensity

©2000 Texas Department of Transportation

SMALL SIGN SUMMARY

| FED. RD. DIV. NO. | FEDERAL AID PROJECT NO. | | SHEET NO. |
|---|---|---|---|
| 6 | NH 2000(704), etc. | | 43B |
| STATE | DIST. | COUNTY | |
| TEXAS | SAT | BEXAR | |
| CONT. | SECT. | JOB | HIGHWAY NO. |
| 2452 | 01 | 036, etc. | LP 1604 |

03-31-03

LEVELS DISPL.
1 3 4 5 6 7 8 9 10 11 12 13 14 15 16
17 18 19 20 21 22 23 24 25 26 27 28 29 30 31 32
33 34 35 36 37 38 39 40 41 42 43 44 45 46 47 48
49 50 51 52 53 54 55 56 57 58 59 60 61 62 63

ACC:

FILE: sgnsumsmall.dgn

# SUMMARY OF SMALL SIGNS

| PLAN SHEET NO. | SIGN NO. | SIGN TYPE | SIGN TEXT | SIGN DIMENSIONS | REFLECTIVE SHEETING | ALUMINUM TYPE A | PLYWOOD TYPE A | RAIL MNT A EA. | RAIL MNT A-1 EA. | TYPE OF MOUNT: A EA. | A-1 EA. | B EA. | C EA. | D-1 EA. | D-2 EA. | D-3 EA. | D-4 EA. | D-5 EA. | D-6 EA. | F EA. | F (MOD) EA. | G EA. | 4" TUBE EA. | 6" TUBE EA. | MILEPOSTS MP EA. | MILEPOSTS MW EA. |
|---|---|---|---|---|---|---|---|---|---|---|---|---|---|---|---|---|---|---|---|---|---|---|---|---|---|---|
| | | | CONTROL: 2452-01-038 | | | | | | | | | | | | | | | | | | | | | | | |
| 10/57 | 13 | SW9-2L | LANE ENDS MERGE LEFT | 1200 x 1200 | C | X | X | | | X | | | | | | | | | | | | | | | | |
| 12/57 | 7 | SW9-2L | LANE ENDS MERGE LEFT | 1200 x 1200 | C | X | X | | | X | | | | | | | | | | | | | | | | |
| | 8 | FR4-3B | DO NOT CROSS DOUBLE WHITE | 1200 x 1200 | C | X | X | | | X | | | | | | | | | | | | | | | | |
| | 9 | FR4-3B | DO NOT CROSS DOUBLE WHITE | 1200 x 1200 | C | X | X | | | X | | | | | | | | | | | | | | | | |
| | 10 | SR5-1 | DO NOT ENTER | 1200 x 1200 | C | X | X | | | X | | | | | | | | | | | | | | | | |
| | 11 | R5-1A | WRONG WAY | 900 x 600 | C | X | X | | | X | | | | | | | | | | | | | | | | |
| | 12 | R5-1A | WRONG WAY | 900 x 600 | C | X | X | | | X | | | | | | | | | | | | | | | | |
| | 13 | FR4-3B | DO NOT CROSS DOUBLE WHITE | 1200 x 1200 | C | X | X | | | | | | | | | | | | | | | | | | | |
| | 14 | R6-1R | ONE WAY | 900 x 300 | A | X | X | | | X | | | | | | | | | | | | | | | | |
| | 15 | R6-1R | ONE WAY | 900 x 300 | A | X | X | | | X | | | | | | | | | | | | | | | | |
| 15/57 | 10 | R5-1 | ONE WAY | 750 x 750 | C | X | X | | | X | | | | | | | | | | | | | | | | |
| | 11 | R5-1 | DO NOT ENTER | 750 x 750 | C | X | X | | | | | | | | | | | | | | | | | | | |
| | 12 | R3-2 | NO LEFT TURN | 600 x 600 | C | X | X | | | X | | | | | | | | | | | | | | | | |

CONTROL: 2452-01-038 SHEET TOTALS 12

CHANGE ORDER 16

CHANGE ORDER NO. 16

-ADDED SIGNS IN PHASE I

ALUMINUM SIGN BLANKS (TYPE A)

| Square Meters | Min. Thickness |
|---|---|
| Less than 0.7 | 2.0 mm |
| 0.7 to 1.4 | 2.5 mm |
| Greater than 1.4 | 3.0 mm |

Sign supports shall be located as shown on the plans, except that the Engineer may shift the sign supports, within design guidelines, where necessary to secure a more desirable location or to avoid conflict with utilities. Unless otherwise shown on the plans, the Contractor shall stake and the Engineer will verify all sign support locations.

Reflective sheeting will be designated as:

Type A - Engineer Grade
Type B - Super Engineer Grade
Type C - High Specific Intensity

©2000 Texas Department of Transportation

## SMALL SIGN SUMMARY

| FED. RD. DIV. NO. | FEDERAL AID PROJECT NO. | | SHEET NO. |
|---|---|---|---|
| 6 | NH 2000(704), etc. | | 43C |
| STATE | DIST. | COUNTY | |
| TEXAS | SAT | BEXAR | |
| CONT. | SECT. | JOB | HIGHWAY NO. |
| 2452 | 01 | 036, etc. | LP 1604 |

LEVELS DIS. 1 3 4 5 6 7 8 9 10 11 21 31 41 51 61 71 81 91 92 121 122 123 124 125 126 127 128 129 303 132 134 135 136 137 139 140 141 142 143 144 145 146 147 148 150 151 152 153 154 155 156 157 158 159 160 161 162 163 ACC: FILE: sgnsumsmall.dgn

# SUMMARY OF SMALL SIGNS

| PLAN SHEET NO. | SIGN NO. | SIGN TYPE | SIGN TEXT | SIGN DIMENSIONS | REFLECTIVE SHEETING | PLYWOOD TYPE A | ALUMINUM TYPE A | TYPE OF MOUNT: RAIL MNT | TYPE OF MOUNT: A EA. | TYPE OF MOUNT: A-1 EA. | TYPE OF MOUNT: B EA. | TYPE OF MOUNT: C EA. | TYPE OF MOUNT: D-1 EA. | TYPE OF MOUNT: D-2 EA. | TYPE OF MOUNT: D-3 EA. | TYPE OF MOUNT: D-4 EA. | TYPE OF MOUNT: D-5 EA. | TYPE OF MOUNT: D-6 EA. | TYPE OF MOUNT: F EA. | TYPE OF MOUNT: F (MOD) EA. | TYPE OF MOUNT: G EA. | TYPE OF MOUNT: 4" TUBE EA. | TYPE OF MOUNT: 6" TUBE EA. | MILEPOSTS: MP EA. | MILEPOSTS: MW EA. |
|---|---|---|---|---|---|---|---|---|---|---|---|---|---|---|---|---|---|---|---|---|---|---|---|---|---|
| | | | CONTROL: 2452-01-037 | | | | | | | | | | | | | | | | | | | | | | |
| 654A | 11A | W1-8 | CHEVRON | 450 x 610 | C | X | | | X | | | | | | | | | | | | | | | | |
| (14 / 57) | 11B | W1-8 | CHEVRON | 450 x 610 | C | X | | | X | | | | | | | | | | | | | | | | |
| | 11C | W1-8 | CHEVRON | 450 x 610 | C | X | | | X | | | | | | | | | | | | | | | | |
| | 13 | W1-1R | RT. TURN ARROW | 1200x1200 | C | X | | | | | | | | | | | | | X | | | | | | |
| | | W13-1 | 25 M.P.H. | 450 x 450 | C | X | | | | | | | | | | | | | | | | | | | |
| | | | | | | | | | | | | | | | | | | | 1 | | | | | | |
| | | | | | | | | | 3 | | | | | | | | | | | | | | | | |

CONTROL: 2452-01-037 SHEET TOTALS

-FOR SIGNING ADDENDUM ASSOCIATED WITH CHANGE ORDER NO. 11 ONLY.

ALUMINUM SIGN BLANKS (TYPE A)

| Square Meters | Min. Thickness |
|---|---|
| Less than 0.7 | 2.0 mm |
| 0.7 to 1.4 | 2.5 mm |
| Greater than 1.4 | 3.0 mm |

Sign supports shall be located as shown on the plans, except that the Engineer may shift the sign supports, within design guidelines, where necessary to secure a more desirable location or to avoid conflict with utilities. Unless otherwise shown on the plans, the Contractor shall stake and the Engineer will verify all sign support locations.

Reflective sheeting will be designated as:

Type A - Engineer Grade
Type B - Super Engineer Grade
Type C - High Specific Intensity

©2000 Texas Department of Transportation

## SMALL SIGN SUMMARY

| FED.RD. DIV.NO. | FEDERAL AID PROJECT NO. | SHEET NO. |
|---|---|---|
| 6 | NH 2000(704), etc. | 43 |
| STATE | DIST. | COUNTY |
| TEXAS | SAT | BEXAR |
| CONT. | SECT. | JOB / HIGHWAY NO. |
| 2452 | 01 | 036, etc. / LP 1604 |

LEVELS DISPLAYED ACC:
FILE: sgnsumsmall.dgn

LEVELS DISPLAYED
1 2 3 4 5 6 7 8 9 10 11 12 13 14 15 16 17 18 19 20 21 22 23 24 25 26 27 28 29 30 31 32 33 34 35 36 37 38 39 40 41 42 43 44 45 46 47 48 49 50 51 52 53 54 55 56 57 58 59 60 61 62 63
ACC:
FILE: sgnsumsmall.dgn

# SUMMARY OF SMALL SIGNS

| PLAN SHEET NO. | SIGN NO. | SIGN TYPE | SIGN TEXT | SIGN DIMENSIONS | REFLECTIVE SHEETING | PLYWOOD TYPE A | ALUMINUM TYPE A | TYPE OF MOUNT | | | | | | | | | | | | | | | MILEPOSTS | |
|---|---|---|---|---|---|---|---|---|---|---|---|---|---|---|---|---|---|---|---|---|---|---|---|---|
| | | | | | | | | RAIL MNT | A EA. | A-1 EA. | B EA. | C EA. | D-1 EA. | D-2 EA. | D-3 EA. | D-4 EA. | D-5 EA. | D-6 EA. | F EA. | F (MOD) EA. | G EA. | 4" TUBE EA. | 6" TUBE EA. | MP EA. | MW EA. |
| | | | CONTROL: 2452-01-037 | | | | | | | | | | | | | | | | | | | | | |
| 17/57 | 1 | R5-1 | DO NOT ENTER | 750 X 750 | C | X | | | X | | | | | | | | | | | | | | | |
| " | 2 | R5-1 | DO NOT ENTER | 750 X 750 | C | X | | | X | | | | | | | | | | | | | | | |
| " | 3 | R1-1 | STOP | 750 X 750 | C | X | | | X | | | | | | | | | | | | | | | |
| " | 4 | R6-1R | ONE WAY | 900 X 300 | X | X | | | X | | | | | | | | | | | | | | | |
| " | 5 | R6-1R | ONE WAY | 900 X 300 | A | X | | | X | | | | | | | | | | | | | | | |
| " | 7 | W2-2 | SYM SIDE RD - RT | 750 X 750 | C | X | | | X | | | | | | | | | | | | | | | |
| " | 8 | D1-1 | VALLEY MEADOW DR ⇨ | 2900 X 300 | C | X | | | | | | | | | X | | | | | | | | | |
| " | 9 | R5-1 | DO NOT ENTER | 750 X 750 | C | X | | | X | | | | | | | | | | | | | | | |
| " | 10 | R5-1 | DO NOT ENTER | 750 X 750 | C | X | | | X | | | | | | | | | | | | | | | |
| " | 11 | R1-1 | STOP | 750 X 750 | C | X | | | X | | | | | | | | | | | | | | | |
| " | 12 | R6-1R | ONE WAY | 900 X 300 | A | X | | | X | | | | | | | | | | | | | | | |
| " | 13 | R6-1R | ONE WAY | 900 X 300 | A | X | | | X | | | | | | | | | | | | | | | |
| 18/57 | 3 | W2-2 | SYM SIDE RD - LT | 750 X 750 | C | X | | | X | | | | | | | | | | | | | | | |
| 19/57 | 1 | SR1-2 | YIELD | 1050 X 1050 X 1050 | C | X | | | X | | | | | | | | | | | | | | | |
| " | 2 | R6-1R | ONE WAY | 900 X 300 | A | X | | | X | | | | | | | | | | | | | | | |
| " | 3 | R6-1R | ONE WAY | 900 X 300 | A | X | | | X | | | | | | | | | | | | | | | |
| " | 6 | W2-2 | SYM SIDE RD-RT | 750 X 750 | C | X | | | X | | | | | | | | | | | | | | | |
| " | 7 | D1-1 | MISTY WOODS DR | 2700 X 300 | C | X | | | | | | | | | X | | | | | | | | | |
| " | 8 | R5-1 | DO NOT ENTER | 750 X 750 | C | X | | | X | | | | | | | | | | | | | | | |
| " | 9 | R5-1 | DO NOT ENTER | 750 X 750 | C | X | | | X | | | | | | | | | | | | | | | |
| 20/57 | 3 | R3-7R | RT LANE MUST TURN RT | 750 X 750 | A | X | | | X | | | | | | | | | | | | | | | |
| " | 4 | R5-1 | DO NOT ENTER | 750 X 750 | C | X | | | X | | | | | | | | | | | | | | | |
| " | 5 | R5-1 | DO NOT ENTER | 750 X 750 | C | X | | | X | | | | | | | | | | | | | | | |
| " | 6 | SR1-2 | YIELD | 1050 X 1050 X 1050 | C | X | | | X | | | | | | | | | | | | | | | |
| " | 9 | W2-2 | SYM SIDE RD - RT | 750 X 750 | C | X | | | X | | | | | | | | | | | | | | | |
| " | 10 | R5-1 | DO NOT ENTER | 750 X 750 | C | X | | | X | | | | | | | | | | | | | | | |
| " | 11 | R5-1 | DO NOT ENTER | 750 X 750 | C | X | | | X | | | | | | | | | | | | | | | |
| " | 17 | R6-1R | ONE WAY | 900 X 300 | A | X | | | X | | | | | | | | | | | | | | | |
| " | 18 | R6-1R | ONE WAY | 900 X 300 | A | X | | | X | | | | | | | | | | | | | | | |
| " | 20 | W2-2 | SYM SIDE RD - LT | 750 X 750 | C | X | | | X | | | | | | | | | | | | | | | |
| 21/57 | 4 | R3-8R (SPL) | ST ARROW/RT TURN ONLY | 750 X 750 | A | X | | | X | | | | | | | | | | | | | | | |
| " | 5 | D1-1 | WISEMAN BLVD | 2400 X 300 | C | X | | | | | | | | X | | | | | | | | | | |
| " | 8 | M3-1 | NORTH | 600 X 300 | A | | X | | X | | | | | | | | | | | | | | | |
| | | M1-6L | LOOP 1604 | 600 X 600 | A | | X | | | | | | | | | | | | | | | | | |
| | | M5-3L | TURNAROUND ARROW | 525 X 375 | A | | X | | | | | | | | | | | | | | | | | |
| 22/57 | 1 | M3-3 | SOUTH | 600 X 300 | A | | X | | X | | | | | | | | | | | | | | | |
| | | M1-6L | LOOP 1604 | 600 X 600 | A | | X | | | | | | | | | | | | | | | | | |
| | | M5-3L | TURNAROUND ARROW | 525 X 375 | A | | X | | | | | | | | | | | | | | | | | |
| " | 2 | R3-8R (SPL) | ST ARROW/RT TURN ONLY | 750 X 750 | A | X | | | X | | | | | | | | | | | | | | | |
| " | 3 | SR5-1A | WRONG WAY | 1200 X 900 | C | X | | | | | | | | | | | | | X | | | | | |
| | | | **CONTROL: 2452-01-037 SHEET TOTALS** | | | | | | 32 | | | | 1 | 1 | 1 | | | | 1 | | | | | |

©2000 Texas Department of Transportation

**SMALL SIGN SUMMARY**
SHEET 5 OF 14

| FED. RD. DIV. NO. | FEDERAL AID PROJECT NO. | SHEET NO. |
|---|---|---|
| 6 | NH 2000(704),etc. | 44 |

| STATE | DIST. | COUNTY |
|---|---|---|
| TEXAS | SAT | BEXAR |

| CONT. | SECT. | JOB | HIGHWAY NO. |
|---|---|---|---|
| 2452 | 01 | 036,etc. | LP 1604 |

Sign supports shall be located as shown on the plans, except that the Engineer may shift the sign supports, within design guidelines, where necessary to secure a more desirable location or to avoid conflict with utilities. Unless otherwise shown on the plans, the Contractor shall stake and the Engineer will verify all sign support locations.

Reflective sheeting will be designated as:

Type A - Engineer Grade
Type B - Super Engineer Grade
Type C - High Specific Intensity

ALUMINUM SIGN BLANKS (TYPE A)

| Square Meters | Min. Thickness |
|---|---|
| Less than 0.7 | 2.0 mm |
| 0.7 to 1.4 | 2.5 mm |
| Greater than 1.4 | 3.0 mm |

# SUMMARY OF SMALL SIGNS

| PLAN SHEET NO. | SIGN NO. | SIGN TYPE | SIGN TEXT | SIGN DIMENSIONS | REFLECTIVE SHEETING | PLYWOOD TYPE A | ALUMINUM TYPE A | TYPE OF MOUNT | | | | | | | | | | | | | | | MILEPOSTS | |
|---|---|---|---|---|---|---|---|---|---|---|---|---|---|---|---|---|---|---|---|---|---|---|---|---|
| | | | | | | | | RAIL MNT | A EA. | A-1 EA. | B EA. | C EA. | D-1 EA. | D-2 EA. | D-3 EA. | D-4 EA. | D-5 EA. | D-6 EA. | F EA. | F (MOD) EA. | G EA. | 4" TUBE EA. | 6" TUBE EA. | MP EA. | MW EA. |
| | | | CONTROL: 2452-01-037 | | | | | | | | | | | | | | | | | | | | | |
| 17/57 | 1 | R5-1 | DO NOT ENTER | 750 X 750 | C | X | | | X | | | | | | | | | | | | | | | |
| " | 2 | R5-1 | DO NOT ENTER | 750 X 750 | C | X | | | X | | | | | | | | | | | | | | | |
| " | 3 | R1-1 | STOP | 750 X 750 | C | X | | | X | | | | | | | | | | | | | | | |
| " | 4 | R6-1R | ONE WAY | 900 X 300 | X | X | | | X | | | | | | | | | | | | | | | |
| " | 5 | R6-1R | ONE WAY | 900 X 300 | A | X | | | X | | | | | | | | | | | | | | | |
| " | 7 | W2-2 | SYM SIDE RD - RT | 750 X 750 | C | X | | | X | | | | | | | | | | | | | | | |
| " | 8 | D1-1 | VALLEY MEADOW DR ⇨ | 2900 X 300 | C | X | | | | | | | | | X | | | | | | | | | |
| " | 9 | R5-1 | DO NOT ENTER | 750 X 750 | C | X | | | X | | | | | | | | | | | | | | | |
| " | 10 | R5-1 | DO NOT ENTER | 750 X 750 | C | X | | | X | | | | | | | | | | | | | | | |
| " | 11 | R1-1 | STOP | 750 X 750 | C | X | | | X | | | | | | | | | | | | | | | |
| " | 12 | R6-1R | ONE WAY | 900 X 300 | A | X | | | X | | | | | | | | | | | | | | | |
| " | 13 | R6-1R | ONE WAY | 900 X 300 | A | X | | | X | | | | | | | | | | | | | | | |
| 18/57 | 3 | W2-2 | SYM SIDE RD - LT | 750 X 750 | C | X | | | X | | | | | | | | | | | | | | | |
| 19/57 | 1 | SR1-2 | YIELD | 1050 X 1050 X 1050 | C | X | | | X | | | | | | | | | | | | | | | |
| " | 2 | R6-1R | ONE WAY | 900 X 300 | A | X | | | X | | | | | | | | | | | | | | | |
| " | 3 | R6-1R | ONE WAY | 900 X 300 | A | X | | | X | | | | | | | | | | | | | | | |
| " | 6 | W2-2 | SYM SIDE RD-RT | 750 X 750 | C | X | | | X | | | | | | | | | | | | | | | |
| " | 7 | D1-1 | MISTY WOODS DR | 2700 X 300 | C | X | | | | | | | | | X | | | | | | | | | |
| " | 8 | R5-1 | DO NOT ENTER | 750 X 750 | C | X | | | X | | | | | | | | | | | | | | | |
| " | 9 | R5-1 | DO NOT ENTER | 750 X 750 | C | X | | | X | | | | | | | | | | | | | | | |
| 20/57 | 3 | R3-7R | RT LANE MUST TURN RT | 750 X 750 | A | X | | | X | | | | | | | | | | | | | | | |
| " | 4 | R5-1 | DO NOT ENTER | 750 X 750 | C | X | | | X | | | | | | | | | | | | | | | |
| " | 5 | R5-1 | DO NOT ENTER | 750 X 750 | C | X | | | X | | | | | | | | | | | | | | | |
| " | 6 | SR1-2 | YIELD | 1050 X 1050 X 1050 | C | X | | | X | | | | | | | | | | | | | | | |
| " | 9 | W2-2 | SYM SIDE RD - RT | 750 X 750 | C | X | | | X | | | | | | | | | | | | | | | |
| " | 10 | R5-1 | DO NOT ENTER | 750 X 750 | C | X | | | X | | | | | | | | | | | | | | | |
| " | 11 | R5-1 | DO NOT ENTER | 750 X 750 | C | X | | | X | | | | | | | | | | | | | | | |
| " | 17 | R6-1R | ONE WAY | 900 X 300 | A | X | | | X | | | | | | | | | | | | | | | |
| " | 18 | R6-1R | ONE WAY | 900 X 300 | A | X | | | X | | | | | | | | | | | | | | | |
| " | 20 | W2-2 | SYM SIDE RD - LT | 750 X 750 | C | X | | | X | | | | | | | | | | | | | | | |
| 21/57 | 4 | R3-8R (SPL) | ST ARROW/RT TURN ONLY | 750 X 750 | A | X | | | X | | | | | | | | | | | | | | | |
| " | 5 | D1-1 | WISEMAN BLVD | 2400 X 300 | C | X | | | | | | | | X | | | | | | | | | | |
| " | 8 | M3-1 | NORTH | 600 X 300 | A | | X | | X | | | | | | | | | | | | | | | |
| | | M1-6L | LOOP 1604 | 600 X 600 | A | | X | | | | | | | | | | | | | | | | | |
| | | M5-3L | TURNAROUND ARROW | 525 X 375 | A | | X | | | | | | | | | | | | | | | | | |
| 22/57 | 1 | M3-3 | SOUTH | 600 X 300 | A | | X | | X | | | | | | | | | | | | | | | |
| | | M1-6L | LOOP 1604 | 600 X 600 | A | | X | | | | | | | | | | | | | | | | | |
| | | M5-3L | TURNAROUND ARROW | 525 X 375 | A | | X | | | | | | | | | | | | | | | | | |
| ~~"~~ | ~~2~~ | ~~R3-8R (SPL)~~ | ~~ST ARROW/RT TURN ONLY~~ | ~~750 X 750~~ | ~~A~~ | ~~X~~ | | | ~~X~~ | | | | | | | | | | | | | | | |
| " | 3 | SR5-1A | WRONG WAY | 1200 X 900 | C | X | | | | | | | | | | | | | | X | | | | |
| | | | CONTROL: 2452-01-037 SHEET TOTALS | | | | | | 31 | | | | 1 | 1 | 1 | | | | 1 | | | | | |

©2004 Texas Department of Transportation

SMALL SIGN SUMMARY
SHEET 5 OF 14

| FED. RDS. DIV. NO. | FEDERAL AID PROJECT NO. | SHEET NO. |
|---|---|---|
| 6 | NH 2000(704),etc. | 44A |

| STATE | DIST. | COUNTY |
|---|---|---|
| TEXAS | SAT | BEXAR |

| CONT. | SECT. | JOB | HIGHWAY NO. |
|---|---|---|---|
| 2452 | 01 | 036,etc. | LP 1604 |

Sign supports shall be located as shown on the plans, except that the Engineer may shift the sign supports, within design guidelines, where necessary to secure a more desirable location or to avoid conflict with utilities. Unless otherwise shown on the plans, the Contractor shall stake and the Engineer will verify all sign support locations.

Reflective sheeting will be designated as:

Type A - Engineer Grade
Type B - Super Engineer Grade
Type C - High Specific Intensity

ALUMINUM SIGN BLANKS (TYPE A)

| Square Meters | Min. Thickness |
|---|---|
| Less than 0.7 | 2.0 mm |
| 0.7 to 1.4 | 2.5 mm |
| Greater than 1.4 | 3.0 mm |

**CHANGE ORDER NO. 65**

-CHANGE ORDER RELATED SIGNING REVISIONS.
-REVISED QUANTITIES

REVISED SHEET

CHANGE ORDER 65

LEVELS DISPLAYED
1 | 3 4 5 6 7 8 9 10 11 12 3 4 5 6
17 18 19 20 21 22 23 24 25 26 27 28 29 30 31 32
33 34 35 36 37 38 39 40 41 42 43 44 45 46 47 48
49 50 51 52 53 54 55 56 57 58 59 60 61 62 63

ACC:

FILE: sgnsumsmall.dgn

# SUMMARY OF SMALL SIGNS

| PLAN SHEET NO. | SIGN NO. | SIGN TYPE | SIGN TEXT | SIGN DIMENSIONS | REFLECTIVE SHEETING | PLYWOOD TYPE A | ALUMINUM TYPE A | TYPE OF MOUNT | | | | | | | | | | | | | | | MILEPOSTS | |
|---|---|---|---|---|---|---|---|---|---|---|---|---|---|---|---|---|---|---|---|---|---|---|---|---|
| | | | | | | | | RAIL MNT | A EA. | A-1 EA. | B EA. | C EA. | D-1 EA. | D-2 EA. | D-3 EA. | D-4 EA. | D-5 EA. | D-6 EA. | F EA. | F (MOD) EA. | G EA. | 4" TUBE EA. | 6" TUBE EA. | MP EA. | MW EA. |
| | | | CONTROL: 2452-01-037 | | | | | | | | | | | | | | | | | | | | | |
| 17/57 | 4 | SR5-1A | WRONG WAY | 1200 X 900 | C | X | | | | | | | | | | | | | X | | | | | |
| " | 5 | R3-7R | RT LANE MUST TURN RT | 750 X 750 | A | X | | | X | | | | | | | | | | | | | | | |
| " | 6 | SR5-1 | DO NOT ENTER | 1200 X 1200 | C | X | | | | | | | | | | | | | X | | | | | |
| " | 7 | SR5-1 | DO NOT ENTER | 1200 X 1200 | C | X | | | | | | | | | | | | | X | | | | | |
| 22/57 | 8 | FR1-2 | YIELD | 1500 X 1500 X 1500 | C | X | | | | | | | | | | | | | X | | | | | |
| " | 9 | R4-7 | SYM KEEP RIGHT | 600 X 750 | A | X | | | X | | | | | | | | | | | | | | | |
| " | 10 | M3-3 | SOUTH | 600 X 300 | A | | X | | | | X | | | | | | | | | | | | | |
| | | M1-6L | LOOP 1604 | 600 X 600 | A | | X | | | | | | | | | | | | | | | | | |
| | | M6-3 | ST ARROW | 525 X 375 | A | | X | | | | | | | | | | | | | | | | | |
| | | M3-1 | NORTH | 600 X 300 | A | | X | | | | | | | | | | | | | | | | | |
| | | M1-6R | LOOP 1604 | 600 X 600 | A | | X | | | | | | | | | | | | | | | | | |
| | | M6-1R | RT ARROW | 525 X 375 | A | | X | | | | | | | | | | | | | | | | | |
| " | 12 | R6-1R | ONE WAY | 900 X 300 | A | X | | | X | | (MOUNTED BACK TO BACK) | | | | | | | | | | | | | |
| | | R6-1L | ONE WAY | 900 X 300 | A | X | | | | | | | | | | | | | | | | | | |
| " | 13 | FR1-2 | YIELD | 1500 X 1500 X 1500 | C | X | | | | | | | | | | | | | X | | | | | |
| " | 14 | SR5-1A | WRONG WAY | 1200 X 900 | C | X | | | | | | | | | | | | | X | | | | | |
| " | 15 | SR5-1A | WRONG WAY | 1200 X 900 | C | X | | | | | | | | | | | | | X | | | | | |
| " | 17 | SR5-1 | DO NOT ENTER | 1200 X 1200 | C | X | | | | | | | | | | | | | X | | | | | |
| " | 18 | SR5-1 | DO NOT ENTER | 1200 X 1200 | C | X | | | | | | | | | | | X | | X | | | | | |
| " | 19 | M3-3 | SOUTH | 600 X 300 | A | | X | | X | | | | | | | | | | | | | | | |
| | | M1-6L | LOOP 1604 | 600 X 600 | A | | X | | | | | | | | | | | | | | | | | |
| | | M6-1L | LT ARROW | 525 X 375 | A | | X | | | | | | | | | | | | | | | | | |
| " | 20 | W1-9L | LG ARROW BOARD - LT | 2400 X 900 | C | X | | | | | | | | | | | | | | | | | | |
| " | 21 | R6-1L | ONE WAY | 900 X 300 | A | X | | | X | | | | | | | | | | | | | | | |
| " | 22 | FR1-1 | STOP | 1200 X 1200 | C | X | | | | | | | | | | | | | X | | | | | |
| " | 23 | R6-1R | ONE WAY | 900 X 300 | A | X | | | X | | | | | | | | | | | | | | | |
| 22A/57 | 1 | R6-1R | ONE WAY | 900 X 300 | A | X | | | X | | (MOUNTED BACK TO BACK) | | | | | | | | | | | | | |
| | | R6-1L | ONE WAY | 900 X 300 | A | X | | | | | | | | | | | | | | | | | | |
| " | 2 | FR1-1 | STOP | 1200 X 1200 | C | X | | | | | | | | | | | | | X | | | | | |
| " | 3 | FR1-2 | YIELD | 1500 X 1500 X 1500 | C | X | | | | | | | | | | | | | X | | | | | |
| " | 6 | R3-8L (SPL) | LT TURN ONLY/LT TURN ONLY | 750 X 750 | A | X | | | X | | | | | | | | | | | | | | | |
| " | 7 | R3-8L (SPL) | LT TURN ONLY/LT TURN ONLY | 750 X 750 | A | X | | | X | | | | | | | | | | | | | | | |
| " | 8 | FR1-1 | STOP | 1200 X 1200 | C | X | | | | | | | | | | | | | X | | | | | |
| " | 9 | FR1-2 | YIELD | 1500 X 1500 X 1500 | C | X | | | | | | | | | | | | | X | | | | | |
| 23/57 | 1 | R6-1R | ONE WAY | 900 X 300 | A | X | | | X | | | | | | | | | | | | | | | |
| " | 2 | W2-1 | SYM CROSS ROAD | 750 X 750 | C | X | | | X | | | | | | | | | | | | | | | |
| " | 3 | D1-2 | WISEMAN BLVD<br>⇧ SEA WORLD | 1800 X 600 | C | X | | | | | | | | | X | | | | | | | | | |
| " | 4 | M3-3 | SOUTH | 600 X 300 | A | | X | | X | | | | | | | | | | | | | | | |
| | | M1-6L | LOOP 1604 | 600 X 600 | A | | X | | | | | | | | | | | | | | | | | |
| " | 5 | R2-1 | SPEED LIMIT 70 | 600 X 750 | A | X | | | X | | | | | | | | | | | | | | | |
| " | 6 | R6-1R | ONE WAY | 900 X 300 | A | X | | | X | | | | | | | | | | | | | | | |
| 24/57 | 1 | R6-1R | ONE WAY | 900 X 300 | A | X | | | X | | | | | | | | | | | | | | | |
| | | | CONTROL: 2452-01-037 SHEET TOTALS | | | | | | 15 | | 1 | | | 1 | | 1 | | | 14 | | | | | |

ALUMINUM SIGN BLANKS (TYPE A)

| Square Meters | Min. Thickness |
|---|---|
| Less than 0.7 | 2.0 mm |
| 0.7 to 1.4 | 2.5 mm |
| Greater than 1.4 | 3.0 mm |

Sign supports shall be located as shown on the plans, except that the Engineer may shift the sign supports, within design guidelines, where necessary to secure a more desirable location or to avoid conflict with utilities. Unless otherwise shown on the plans, the Contractor shall stake and the Engineer will verify all sign support locations.

Reflective sheeting will be designated as:

Type A - Engineer Grade
Type B - Super Engineer Grade
Type C - High Specific Intensity

©2000

Texas Department of Transportation

SMALL SIGN SUMMARY
SHEET 6 OF 14

| FED. ROAD DIV. NO. | FEDERAL AID PROJECT NO. | SHEET NO. |
|---|---|---|
| 6 | NH 2000(704),etc. | 45 |

| STATE | DIST. | COUNTY | HIGHWAY NO. |
|---|---|---|---|
| TEXAS | SAT | BEXAR | LP 1604 |

| CONT. | SECT. | JOB |
|---|---|---|
| 2452 | 01 | 036,etc. |

# SUMMARY OF SMALL SIGNS

| PLAN SHEET NO. | SIGN NO. | SIGN TYPE | SIGN TEXT | SIGN DIMENSIONS | REFLECTIVE SHEETING | PLYWOOD TYPE A | ALUMINUM TYPE A | RAIL MNT | A EA. | A-1 EA. | B EA. | C EA. | D-1 EA. | D-2 EA. | D-3 EA. | D-4 EA. | D-5 EA. | D-6 EA. | F EA. | F (MOD) EA. | G EA. | 4" TUBE EA. | 6" TUBE EA. | MILEPOSTS MP EA. | MILEPOSTS MW EA. |
|---|---|---|---|---|---|---|---|---|---|---|---|---|---|---|---|---|---|---|---|---|---|---|---|---|---|
| | | | CONTROL: 2452-01-037 | | | | | | | | | | | | | | | | | | | | | | |
| 22/57 | 4 | SR5-1A | WRONG WAY | 1200 X 900 | C | X | | | | | | | | | | | | | | | | | | | |
| " | 5 | R3-7R | RT LANE MUST TURN RT | 750 X 750 | A | X | | | X | | | | | | | | | | | | | | | | |
| " | 6 | SR5-1 | DO NOT ENTER | 1200 X 1200 | C | X | | | | | | | | | | | | | | | | | | | |
| " | 7 | SR5-1 | DO NOT ENTER | 1200 X 1200 | C | X | | | | | | | | | | | | | | | | | | | |
| 24/57 | 8 | FR1-2 | YIELD | 1500 X 1500 X 1500 | C | X | | | | | | | | | | | | | | | | | | | |
| " | 9 | R4-7 | SYM KEEP RIGHT | 600 X 750 | A | X | | | X | | | | | | | | | | | | | | | | |
| " | 10 | M3-3 | SOUTH | 600 X 300 | A | | X | | | | | | | | | | | | | | | | | | |
| | | M1-6L | LOOP 1604 | 600 X 600 | A | | X | | | | | | | | | | | | | | | | | | |
| | | M6-3 | ST ARROW | 525 X 375 | A | | X | | | | | | | | | | | | | | | | | | |
| | | M3-1 | NORTH | 600 X 300 | A | | X | | | | | | | | | | | | | | | | | | |
| | | M1-6R | LOOP 1604 | 600 X 600 | A | | X | | | | | | | | | | | | | | | | | | |
| | | M6-1R | RT ARROW | 525 X 375 | A | | X | | | | | | | | | | | | | | | | | | |
| " | 12 | R6-1R | ONE WAY | 900 X 300 | A | X | | | X | | | | | | | | | | | | | | | | |
| | | R6-1L | ONE WAY | 900 X 300 | A | X | | | | | | | | | | | | | | | | | | | |
| " | 13 | FR1-2 | YIELD | 1500 X 1500 X 1500 | C | X | | | | | | | | | | | | | | | | | | | |
| " | 14 | SR5-1A | WRONG WAY | 1200 X 900 | C | X | | | | | | | | | | | | | | | | | | | |
| " | 15 | SR5-1A | WRONG WAY | 1200 X 900 | C | X | | | | | | | | | | | | | | | | | | | |
| " | 17 | SR5-1 | DO NOT ENTER | 1200 X 1200 | C | X | | | | | | | | | | | | | | | | | | | |
| " | 18 | SR5-1 | DO NOT ENTER | 1200 X 1200 | C | X | | | | | | | | | | | | | | | | | | | |
| " | 19 | M3-3 | SOUTH | 600 X 300 | A | | X | | X | | | | | | | | | | | | | | | | |
| | | M1-6L | LOOP 1604 | 600 X 600 | A | | X | | | | | | | | | | | | | | | | | | |
| | | M6-1L | LT ARROW | 525 X 375 | A | | X | | | | | | | | | | | | | | | | | | |
| " | 20 | W1-9L | LG ARROW BOARD - LT | 2400 X 900 | C | X | | | X | | | | | | | | | | | | | | | | |
| " | 21 | R6-1L | ONE WAY | 900 X 300 | A | X | | | X | | | | | | | | | | | | | | | | |
| " | 2 | FR1-1 | STOP | 1200 X 1200 | G | * | | | | | | | | | | | | | | | | | | | |
| " | 22 | FR1-1 | STOP | 1200 X 1200 | G | * | | | | | | | | | | | | | | | | | | | |
| " | 23 | R6-1R | ONE WAY | 900 X 300 | A | X | | | X | | | | | | | | | | | | | | | | |
| 22A/57 | 1 | R6-1R | ONE WAY | 900 X 300 | A | X | | | X | | | | | | | | | | | | | | | | |
| | | R6-1L | ONE WAY | 900 X 300 | A | X | | | | | | | | | | | | | | | | | | | |
| " | 2 | FR1-2 | YIELD | 1500 X 1500 X 1500 | C | X | | | | | | | | | | | | | | | | | | | |
| " | 6 | R3-8L | LT TURN ONLY/LT TURN ONLY | 750 X 750 | A | X | | | X | | | | | | | | | | | | | | | | |
| | | (SPL) | | | | | | | | | | | | | | | | | | | | | | | |
| " | 7 | R3-8L | LT TURN ONLY/LT TURN ONLY | 750 X 750 | A | X | | | X | | | | | | | | | | | | | | | | |
| | | (SPL) | | | | | | | | | | | | | | | | | | | | | | | |
| " | 6 | FR1-1 | STOP | 1200 X 1200 | G | * | | | | | | | | | | | | | | | | | | | |
| " | 3 | FR1-8 | YIELD | [illegible] | C | * | | | | | | | | | | | | | | | | | | | |
| 23/57 | 1 | R6-1R | ONE WAY | 900 X 300 | A | X | | | X | | | | | | | | | | | | | | | | |
| " | 2 | W2-1 | SYM CROSS ROAD | 750 X 750 | C | X | | | X | | | | | | | | | | | | | | | | |
| " | 3 | D1-2 | WISEMAN BLVD<br>⇧ SEA WORLD | 1800 X 600 | C | X | | | | | | | | | | | | | | | | | | | |
| " | 4 | M3-3 | SOUTH | 600 X 300 | A | | X | | X | | | | | | | | | | | | | | | | |
| | | M1-6L | LOOP 1604 | 600 X 600 | A | | X | | | | | | | | | | | | | | | | | | |
| " | 5 | R2-1 | SPEED LIMIT 10 | 600 X 750 | A | * | | | X | | | | | | | | | | | | | | | | |
| " | 6 | R6-1R | ONE WAY | 900 X 300 | A | X | | | X | | | | | | | | | | | | | | | | |
| 24/57 | 1 | R6-1R | ONE WAY | 900 X 300 | A | X | | | X | | | | | | | | | | | | | | | | |

CONTROL: 2452-01-037 SHEET TOTALS 14

CHANGE ORDER 65

REVISED SHEET

CHANGE ORDER NO. 65
- CHANGE ORDER RELATED SIGNING REVISIONS.
- REVISED QUANTITIES

ALUMINUM SIGN BLANKS (TYPE A)

| Square Meters | Min. Thickness |
|---|---|
| Less than 0.7 | 2.0 mm |
| 0.7 to 1.4 | 2.5 mm |
| Greater than 1.4 | 3.0 mm |

Sign supports shall be located as shown on the plans, except that the Engineer may shift the sign supports, within design guidelines, where necessary to secure a more desirable location or to avoid conflict with utilities. Unless otherwise shown on the plans, the Contractor shall stake and the Engineer will verify all sign support locations.

Reflective sheeting will be designated as:

Type A - Engineer Grade
Type B - Super Engineer Grade
Type C - High Specific Intensity

©2004 Texas Department of Transportation

SMALL SIGN SUMMARY
SHEET 6 OF 14

| FED. RD. DIV. NO. | FEDERAL AID PROJECT NO. | SHEET NO. |
|---|---|---|
| 6 | NH 2000(704), etc. | 45A |
| STATE | DIST. | COUNTY |
| TEXAS | SAT | BEXAR |
| CONT. | SECT. | JOB / HIGHWAY NO. |
| 2452 | 01 | 036, etc. / LP 1604 |

03-24-04

LEVELS DISPLAYED
1 | 3 | 4 | 5 | 6 | 7 | 8 | 9 | 10 | 11 | 21 | 31 | 41 | 51 | 61
71 | 81 | 92 | 121 | 122 | 123 | 124 | 125 | 126 | 127 | 129 | 130 | 131 | 132
133 | 141 | 151 | 161 | 171 | 181 | 191 | 194 | 201 | 142 | 143 | 144 | 145 | 146 | 147 | 148
149 | 150 | 151 | 152 | 153 | 154 | 155 | 156 | 157 | 158 | 159 | 160 | 161 | 162 | 163
ACC:
FILE: sgnsumsmall.dgn

LEVELS DISPLAYED
1 3 4 5 6 7 8 9 10 11 12 13 14 15 16 17 18 19 20 21 22 23 24 25 26 27 28 29 30 31 32 33 34 35 36 37 38 39 40 41 42 43 44 45 46 47 48 49 50 51 52 53 54 55 56 57 58 59 60 61 62 63

ACC:

FILE: sgnsumsmall.dgn

# SUMMARY OF SMALL SIGNS

| PLAN SHEET NO. | SIGN NO. | SIGN TYPE | SIGN TEXT | SIGN DIMENSIONS | REFLECTIVE SHEETING | PLYWOOD TYPE A | ALUMINUM TYPE A | TYPE OF MOUNT | | | | | | | | | | | | | | MILEPOSTS | |
|---|---|---|---|---|---|---|---|---|---|---|---|---|---|---|---|---|---|---|---|---|---|---|---|
| | | | | | | | | RAIL MNT | A EA. | A-1 EA. | B EA. | C EA. | D-1 EA. | D-2 EA. | D-3 EA. | D-4 EA. | D-5 EA. | D-6 EA. | F EA. | F (MOD) EA. | G EA. | 4" TUBE EA. | 6" TUBE EA. | MP EA. | MW EA. |
| | | | CONTROL: 2452-01-037 | | | | | | | | | | | | | | | | | | | | |
| 25/57 | 1 | R3-8R (SPL) | ST ARROW/RT TURN ONLY | 750 X 750 | A | X | | | X | | | | | | | | | | | | | | |
| " | 2 | R3-7R | RT LANE MUST TURN RT | 750 X 750 | A | X | | | X | | | | | | | | | | | | | | |
| " | 3 | R5-1 | DO NOT ENTER | 750 X 750 | C | X | | | X | | | | | | | | | | | | | | |
| " | 4 | R4-7 | SYM KEEP RIGHT | 600 X 750 | A | X | | | X | | | | | | | | | | | | | | |
| " | 5 | SR1-2 | YIELD | 1050 X 1050 X 1050 | C | X | | | X | | | | | | | | | | | | | | |
| " | 6 | R6-1R | ONE WAY | 900 X 300 | A | X | | | X | | | | | | | | | | | | | | |
| " | 7 | R6-1R | ONE WAY | 900 X 300 | A | X | | | X | | | | | | | | | | | | | | |
| " | 8 | R5-1 | DO NOT ENTER | 750 X 750 | C | X | | | X | | | (ATTACH TO BACK OF NO. 2) | | | | | | | | | | | |
| 26/57 | 1 | W2-2 | SYM SIDE RD - RT | 750 X 750 | C | X | | | X | | | | | | | | | | | | | | |
| " | 2 | D1-2A | REED RD ⇨ | 1680 X 300 | C | X | | | | | | | X | | | | | | | | | | |
| | | | CONTROL: 2452-01-036 | | | | | | | | | | | | | | | | | | | | |
| 27/57 | 1 | SR5-1 | DO NOT ENTER | 1200 X 1200 | C | X | | | | | | | | | | | | | X | | | | |
| " | 2 | R4-7 | SYM KEEP RIGHT | 600 X 750 | A | X | | | X | | | | | | | | | | | | | | |
| " | 3 | SR1-2 | YIELD | 1050 X 1050 X 1050 | C | X | | | X | | | | | | | | | | | | | | |
| " | 5 | R6-1R | ONE WAY | 900 X 300 | A | X | | | X | | | | | | | | | | | | | | |
| 28/57 | 2 | W2-2 | SYM SIDE RD - RT | 750 X 750 | C | X | | | X | | | | | | | | | | | | | | |
| " | 3 | D1-1 | KILMARNOCH LN ⇨ | 2400 X 300 | C | X | | | | | | | X | | | | | | | | | | |
| " | 4 | SR5-1 | DO NOT ENTER | 1200 X 1200 | C | X | | | | | | | | | | | | | X | | | | |
| " | 5 | W2-1 | SYM CROSS ROAD | 750 X 750 | C | X | | | X | | | | | | | | | | | | | | |
| " | 6 | SW3-3 | SYM SIGNAL AHEAD | 1200 X 1200 | C | X | | | | | | | | | | | | | X | | | | |
| " | 7 | D1-1 | MILITARY DR | 1500 X 300 | C | X | | | | | | | X | | | | | | | | | | |
| " | 8 | R3-8L | LT TURN ONLY/LT TURN OR ST | 750 X 750 | A | X | | | X | | | | | | | | | | | | | | |
| " | 9 | R3-8R (SPL) | ST ARROW/RT TURN ONLY | 750 X 750 | A | X | | | X | | | | | | | | | | | | | | |
| 29/57 | 2 | R3-7R | RT TURN MUST TURN RT | 750 X 750 | A | X | | | X | | | | | | | | | | | | | | |
| " | 3 | FR1-2 | YIELD | 1500 X 1500 X 1500 | C | X | | | | | | | | | | | | | X | (MOUNTED BACK TO BACK) | | | |
| " | 4 | SR5-1 | DO NOT ENTER | 1200 X 1200 | C | X | | | | | | | | | | | | | | | | | |
| " | 5 | SR5-1 | DO NOT ENTER | 1200 X 1200 | C | X | | | | | | | | | | | | | X | | | | |
| " | 6 | SR5-1 | DO NOT ENTER | 1200 X 1200 | C | X | | | | | | | | | | | | | X | | | | |
| " | 7 | M3-3 | SOUTH | 600 X 300 | A | | X | | | | X | | | | | | | | | | | | |
| | | M1-6L | LOOP 1604 | 600 X 600 | A | | X | | | | | | | | | | | | | | | | |
| | | M6-3 | ST ARROW | 525 X 375 | A | | X | | | | | | | | | | | | | | | | |
| | | M3-1 | NORTH | 600 X 300 | A | | X | | | | | | | | | | | | | | | | |
| | | M1-6L | LOOP 1604 | 600 X 600 | A | | X | | | | | | | | | | | | | | | | |
| | | M6-1R | RT ARROW | 525 X 375 | A | | X | | | | | | | | | | | | | | | | |
| " | 8 | FR1-2 | YIELD | 1500 X 1500 X 1500 | C | X | | | | | | | | | | | | | X | | | | |
| " | 9 | FR1-2 | YIELD | 1500 X 1500 X 1500 | C | X | | | | | | | | | | | | | X | | | | |
| " | 11 | M3-1 | NORTH | 600 X 300 | A | | X | | X | | | | | | | | | | | | | | |
| | | M1-6L | LOOP 1604 | 600 X 600 | A | | X | | | | | | | | | | | | | | | | |
| | | M5-3L | TURNAROUND ARROW | 525 X 375 | A | | X | | | | | | | | | | | | | | | | |
| " | 12 | SR5-1A | WRONG WAY | 1200 X 900 | C | X | | | | | | | | | | | | | X | | | | |
| | | | **CONTROL: 2452-01-037 SHEET TOTALS** | | | | | | 9 | | | | 1 | | | | | | | | | | |
| | | | **CONTROL: 2452-01-036 SHEET TOTALS** | | | | | | 9 | | 1 | | 2 | | | | | | 9 | | | | |

ALUMINUM SIGN BLANKS (TYPE A)

| Square Meters | Min. Thickness |
|---|---|
| Less than 0.7 | 2.0 mm |
| 0.7 to 1.4 | 2.5 mm |
| Greater than 1.4 | 3.0 mm |

Sign supports shall be located as shown on the plans, except that the Engineer may shift the sign supports, within design guidelines, where necessary to secure a more desirable location or to avoid conflict with utilities. Unless otherwise shown on the plans, the Contractor shall stake and the Engineer will verify all sign support locations.

Reflective sheeting will be designated as:

Type A - Engineer Grade
Type B - Super Engineer Grade
Type C - High Specific Intensity

©2000

Texas Department of Transportation

SMALL SIGN SUMMARY
SHEET 7 OF 14

| FED. RD. DIV. NO. | FEDERAL AID PROJECT NO. | SHEET NO. |
|---|---|---|
| 6 | NH 2000(704),etc. | 46 |

| STATE | DIST. | COUNTY | |
|---|---|---|---|
| TEXAS | SAT | BEXAR | |
| CONT. | SECT. | JOB | HIGHWAY NO. |
| 2452 | 01 | 036,etc. | LP 1604 |

LEVELS DISPLA...
1 3 4 5 6 7 8 9 10 11 12 13 14 15 16
17 18 19 20 21 22 23 24 25 26 27 28 29 30 31 32
33 34 35 36 37 38 39 40 41 42 43 44 45 46 47 48
49 50 51 52 53 54 55 56 57 58 59 60 61 62 63

ACC:

FILE: sgnsumsmall.dgn

# SUMMARY OF SMALL SIGNS

| PLAN SHEET NO. | SIGN NO. | SIGN TYPE | SIGN TEXT | SIGN DIMENSIONS | REFLECTIVE SHEETING | PLYWOOD TYPE A | ALUMINUM TYPE A | TYPE OF MOUNT | | | | | | | | | | | | | | | MILEPOSTS | |
|---|---|---|---|---|---|---|---|---|---|---|---|---|---|---|---|---|---|---|---|---|---|---|---|---|
| | | | | | | | | RAIL MNT | A EA. | A-1 EA. | B EA. | C EA. | D-1 EA. | D-2 EA. | D-3 EA. | D-4 EA. | D-5 EA. | D-6 EA. | F EA. | F (MOD) EA. | G EA. | 4" TUBE EA. | 6" TUBE EA. | MP EA. | MW EA. |
| | | | CONTROL: 2452-01-037 | | | | | | | | | | | | | | | | | | | | | |
| 25/57 | 1 | R3-8R (SPL) | ST ARROW/RT TURN ONLY | 750 X 750 | A | X | | | X | | | | | | | | | | | | | | | |
| " | 2 | R3-7R | RT LANE MUST TURN RT | 750 X 750 | A | X | | | X | | | | | | | | | | | | | | | |
| " | 3 | R5-1 | DO NOT ENTER | 750 X 750 | C | X | | | X | | | | | | | | | | | | | | | |
| " | 4 | R4-7 | SYM KEEP RIGHT | 600 X 750 | A | X | | | X | | | | | | | | | | | | | | | |
| " | 5 | SR1-2 | YIELD | 1050 X 1050 X 1050 | C | X | | | X | | | | | | | | | | | | | | | |
| " | 6 | R6-1R | ONE WAY | 900 X 300 | A | X | | | X | | | | | | | | | | | | | | | |
| " | 7 | R6-1R | ONE WAY | 900 X 300 | A | X | | | X | | | | | | | | | | | | | | | |
| " | 8 | R5-1 | DO NOT ENTER | 750 X 750 | C | X | | | X | | | (ATTACH TO BACK OF NO. 2) | | | | | | | | | | | | |
| 26/57 | 1 | W2-2 | SYM SIDE RD - RT | 750 X 750 | C | X | | | X | | | | | | | | | | | | | | | |
| " | 2 | D1-2A | REED RD ⇨ | 1680 X 300 | C | X | | | | | | | X | | | | | | | | | | | |
| | | | CONTROL: 2452-01-036 | | | | | | | | | | | | | | | | | | | | | |
| 27/57 | 1 | SR5-1 | DO NOT ENTER | 1200 X 1200 | C | X | | | | | | | | | | | | | X | | | | | |
| " | 2 | R4-7 | SYM KEEP RIGHT | 600 X 750 | A | X | | | X | | | | | | | | | | | | | | | |
| " | 3 | SR1-2 | YIELD | 1050 X 1050 X 1050 | C | X | | | X | | | | | | | | | | | | | | | |
| " | 5 | R6-1R | ONE WAY | 900 X 300 | A | X | | | X | | | | | | | | | | | | | | | |
| 28/57 | 2 | W2-2 | SYM SIDE RD - RT | 750 X 750 | C | X | | | X | | | | | | | | | | | | | | | |
| " | 3 | D1-1 | KILMARNOCH LN ⇨ | 2400 X 300 | C | X | | | | | | | X | | | | | | | | | | | |
| " | 4 | SR5-1 | DO NOT ENTER | 1200 X 1200 | C | X | | | | | | | | | | | | | X | | | | | |
| " | 5 | W2-1 | SYM CROSS ROAD | 750 X 750 | C | X | | | X | | | | | | | | | | | | | | | |
| " | 6 | SW3-3 | SYM SIGNAL AHEAD | 1200 X 1200 | C | X | | | | | | | | | | | | | X | | | | | |
| " | 7 | D1-1 | MILITARY DR | 1500 X 300 | C | X | | | | | | | X | | | | | | | | | | | |
| ~~"~~ | ~~8~~ | ~~R3-8L~~ | ~~LT TURN ONLY/LT TURN OR ST~~ | ~~750 X 750~~ | ~~A~~ | ~~X~~ | | | ~~X~~ | | | | | | | | | | | | | | | |
| ~~"~~ | ~~9~~ | ~~R3-8R~~ (SPL) | ~~ST ARROW/RT TURN ONLY~~ | ~~750 X 750~~ | ~~A~~ | ~~X~~ | | | ~~X~~ | | | | | | | | | | | | | | | |
| 29/57 | 2 | R3-7R | RT TURN MUST TURN RT | 750 X 750 | A | X | | | X | | | | | | | | | | | | | | | |
| " | 3 | FR1-2 | YIELD | 1500 X 1500 X 1500 | C | X | | | | | | | | | | | | | X | (MOUNTED BACK TO BACK) | | | | |
| " | 4 | SR5-1 | DO NOT ENTER | 1200 X 1200 | C | X | | | | | | | | | | | | | | | | | | |
| " | 5 | SR5-1 | DO NOT ENTER | 1200 X 1200 | C | X | | | | | | | | | | | | | X | | | | | |
| " | 6 | SR5-1 | DO NOT ENTER | 1200 X 1200 | C | X | | | | | | | | | | | | | X | | | | | |
| " | 7 | M3-3 | SOUTH | 600 X 300 | A | | X | | | | X | | | | | | | | | | | | | |
| | | M1-6L | LOOP 1604 | 600 X 600 | A | | X | | | | | | | | | | | | | | | | | |
| | | M6-3 | ST ARROW | 525 X 375 | A | | X | | | | | | | | | | | | | | | | | |
| | | M3-1 | NORTH | 600 X 300 | A | | X | | | | | | | | | | | | | | | | | |
| | | M1-6L | LOOP 1604 | 600 X 600 | A | | X | | | | | | | | | | | | | | | | | |
| | | M6-1R | RT ARROW | 525 X 375 | A | | X | | | | | | | | | | | | | | | | | |
| " | 8 | FR1-2 | YIELD | 1500 X 1500 X 1500 | C | X | | | | | | | | | | | | | X | | | | | |
| " | 9 | FR1-2 | YIELD | 1500 X 1500 X 1500 | C | X | | | | | | | | | | | | | X | | | | | |
| " | 11 | M3-1 | NORTH | 600 X 300 | A | | X | | X | | | | | | | | | | | | | | | |
| | | M1-6L | LOOP 1604 | 600 X 600 | A | | X | | | | | | | | | | | | | | | | | |
| | | M5-3L | TURNAROUND ARROW | 525 X 375 | A | | X | | | | | | | | | | | | | | | | | |
| " | 12 | SR5-1A | WRONG WAY | 1200 X 900 | C | X | | | | | | | | | | | | | X | | | | | |
| | | | **CONTROL: 2452-01-037 SHEET TOTALS** | | | | | | 8 | | | | 1 | | | | | | | | | | | |
| | | | **CONTROL: 2452-01-036 SHEET TOTALS** | | | | | | 7 | | 1 | | 2 | | | | | | 9 | | | | | |

ALUMINUM SIGN BLANKS (TYPE A)

| Square Meters | Min. Thickness |
|---|---|
| Less than 0.7 | 2.0 mm |
| 0.7 to 1.4 | 2.5 mm |
| Greater than 1.4 | 3.0 mm |

Sign supports shall be located as shown on the plans, except that the Engineer may shift the sign supports, within design guidelines, where necessary to secure a more desirable location or to avoid conflict with utilities. Unless otherwise shown on the plans, the Contractor shall stake and the Engineer will verify all sign support locations.

Reflective sheeting will be designated as:

Type A - Engineer Grade
Type B - Super Engineer Grade
Type C - High Specific Intensity

**CHANGE ORDER NO. 65**
- CHANGE ORDER RELATED SIGNING REVISIONS.
- REVISED QUANTITIES

REVISED SHEET

CHANGE ORDER 65

©2004 Texas Department of Transportation

SMALL SIGN SUMMARY
SHEET 7 OF 14

| FED. RD. DIV. NO. | FEDERAL AID PROJECT NO. | SHEET NO. |
|---|---|---|
| 6 | NH 2000(704),etc. | 46A |

| STATE | DIST. | COUNTY |
|---|---|---|
| TEXAS | SAT | BEXAR |

| CONT. | SECT. | JOB | HIGHWAY NO. |
|---|---|---|---|
| 2452 | 01 | 036,etc. | LP 1604 |

LEVELS DISPLAYED
1 3 4 5 6 7 8 9 10 11 12 31 41 51 61
17 18 19 20 21 22 23 24 25 26 27 28 29 30 31 32
33 34 35 36 37 38 39 40 41 42 43 44 45 46 47 48
49 50 51 52 53 54 55 56 57 58 59 60 61 62 63

ACC:

FILE: sgnsumsmall.dgn

# SUMMARY OF SMALL SIGNS

| PLAN SHEET NO. | SIGN NO. | SIGN TYPE | SIGN TEXT | SIGN DIMENSIONS | REFLECTIVE SHEETING | PLYWOOD TYPE A | ALUMINUM TYPE A | TYPE OF MOUNT | | | | | | | | | | | | | | | MILEPOSTS | |
|---|---|---|---|---|---|---|---|---|---|---|---|---|---|---|---|---|---|---|---|---|---|---|---|---|
| | | | | | | | | RAIL MNT | A EA. | A-1 EA. | B EA. | C EA. | D-1 EA. | D-2 EA. | D-3 EA. | D-4 EA. | D-5 EA. | D-6 EA. | F EA. | F (MOD) EA. | G EA. | 4" TUBE EA. | 6" TUBE EA. | MP EA. | MW EA. |
| | | | CONTROL: 2452-01-036 | | | | | | | | | | | | | | | | | | | | | |
| 29/57 | 13 | SR5-1A | WRONG WAY | 1200 X 900 | C | X | | | | | | | | | | | | X | | | | | | |
| " | 14 | R3-7R | RT LANE MUST TURN RT | 750 X 750 | A | X | | | X | | | | | | | | | | | | | | | |
| " | 15 | FR1-2 | YIELD | 1500 X 1500 X 1500 | C | X | | | | | | | | | | | | X | (MOUNTED BACK TO BACK) | | | | | |
| " | 16 | SR5-1 | DO NOT ENTER | 1200 X 1200 | C | X | | | | | | | | | | | | | | | | | | |
| " | 17 | M3-1 | NORTH | 600 X 300 | A | | X | | | | X | | | | | | | | | | | | | |
| | | M1-6L | LOOP 1604 | 600 X 600 | A | | X | | | | | | | | | | | | | | | | | |
| | | M6-3 | ST ARROW | 525 X 375 | A | | X | | | | | | | | | | | | | | | | | |
| | | M3-3 | SOUTH | 600 X 300 | A | | X | | | | | | | | | | | | | | | | | |
| | | M1-6L | LOOP 1604 | 600 X 600 | A | | X | | | | | | | | | | | | | | | | | |
| | | M6-1R | RT ARROW | 525 X 375 | A | | X | | | | | | | | | | | | | | | | | |
| " | 18 | FR1-2 | YIELD | 1500 X 1500 X 1500 | C | X | | | | | | | | | | | | X | | | | | | |
| " | 19 | FR1-2 | YIELD | 1500 X 1500 X 1500 | C | X | | | | | | | | | | | | X | | | | | | |
| 29A/57 | 1 | R4-7 | SYM KEEP RIGHT | 600 X 750 | A | X | | | X | | | | | | | | (MOUNTED BACK TO BACK) | | | | | | | |
| " | 2 | R3-8L | LT TURN ONLY/LT TURN OR ST | 750 X 750 | A | X | | | | | | | | | | | | | | | | | | |
| " | 3 | R3-8L | LT TURN ONLY/LT TURN OR ST | 750 X 750 | A | X | | | | | | | | | | | (ATTACHED TO BACK OF NO. 8) | | | | | | | |
| " | 4 | M3-3 | SOUTH | 600 X 300 | A | | X | | X | | | | | | | | | | | | | | | |
| | | M1-6L | LOOP 1604 | 600 X 600 | A | | X | | | | | | | | | | | | | | | | | |
| | | M6-1L | LT ARROW | 525 X 375 | A | | X | | | | | | | | | | | | | | | | | |
| " | 5 | SR5-1 | DO NOT ENTER | 1200 X 1200 | C | X | | | | | | | | | | | | X | | | | | | |
| " | 6 | SR5-1 | DO NOT ENTER | 1200 X 1200 | C | X | | | | | | | | | | | | X | | | | | | |
| " | 7 | R6-1R | ONE WAY | 900 X 300 | A | X | | | X | | | | | | | | (MOUNTED BACK TO BACK) | | | | | | | |
| | | R6-1L | ONE WAY | 900 X 300 | A | X | | | | | | | | | | | | | | | | | | |
| " | 8 | R4-7 | SYM KEEP RIGHT | 600 X 750 | A | X | | | X | | | | | | | | | | | | | | | |
| " | 9 | M3-1 | NORTH | 600 X 300 | A | | X | | X | | | | | | | | | | | | | | | |
| | | M1-6L | LOOP 1604 | 600 X 600 | A | | X | | | | | | | | | | | | | | | | | |
| | | M6-1L | LT ARROW | 525 X 375 | A | | X | | | | | | | | | | | | | | | | | |
| " | 10 | R6-1R | ONE WAY | 900 X 300 | A | X | | | X | | | | | | | | (MOUNTED BACK TO BACK) | | | | | | | |
| | | R6-1L | ONE WAY | 900 X 300 | A | X | | | | | | | | | | | | | | | | | | |
| 30/57 | 1 | SW3-3 | SYM SIGNAL AHEAD | 1200 X 1200 | C | X | | | | | | | | | | | | X | | | | | | |
| " | 2 | D1-1 | MILITARY DR | 1500 X 300 | C | X | | | | | | | X | | | | | | | | | | | |
| " | 3 | R3-8R (SPL) | ST ARROW/RT TURN ONLY | 750 X 750 | A | X | | | X | | | | | | | | | | | | | | | |
| " | 4 | M3-3 | SOUTH | 600 X 300 | A | | X | | X | | | | | | | | | | | | | | | |
| | | M1-6L | LOOP 1604 | 600 X 600 | A | | X | | | | | | | | | | | | | | | | | |
| | | M5-3L | TURNAROUND ARROW | 525 X 375 | A | | X | | | | | | | | | | | | | | | | | |
| " | 5 | SR5-1A | WRONG WAY | 1200 X 900 | C | X | | | | | | | | | | | | X | | | | | | |
| " | 6 | SR5-1A | WRONG WAY | 1200 X 900 | C | X | | | | | | | | | | | | X | | | | | | |
| " | 8 | R3-8L (SPL) | LT TURN OR ST/ST ARROW | 750 X 750 | A | X | | | X | | | | | | | | | | | | | | | |
| " | 9 | M3-3 | SOUTH | 600 X 300 | A | | X | | X | | | | | | | | | | | | | | | |
| | | M1-6L | LOOP 1604 | 600 X 600 | A | | X | | | | | | | | | | | | | | | | | |
| " | 10 | R2-1 | SPEED LIMIT 70 | 600 X 750 | A | X | | | X | | | | | | | | | | | | | | | |
| 31/57 | 1 | R6-1R | ONE WAY | 900 X 300 | A | X | | | X | | | | | | | | | | | | | | | |
| " | 2 | R6-1R | ONE WAY | 900 X 300 | A | X | | | X | | | | | | | | | | | | | | | |
| " | 3 | SR5-1 | DO NOT ENTER | 1200 X 1200 | C | X | | | | | | | | | | | | X | | | | | | |
| **CONTROL: 2452-01-036 SHEET TOTALS** | | | | | | | | | 14 | | 1 | | 1 | | | | | | 10 | | | | | |

ALUMINUM SIGN BLANKS (TYPE A)

| Square Meters | Min. Thickness |
|---|---|
| Less than 0.7 | 2.0 mm |
| 0.7 to 1.4 | 2.5 mm |
| Greater than 1.4 | 3.0 mm |

Sign supports shall be located as shown on the plans, except that the Engineer may shift the sign supports, within design guidelines, where necessary to secure a more desirable location or to avoid conflict with utilities. Unless otherwise shown on the plans, the Contractor shall stake and the Engineer will verify all sign support locations.

Reflective sheeting will be designated as:

Type A - Engineer Grade
Type B - Super Engineer Grade
Type C - High Specific Intensity

©2000

Texas Department of Transportation

SMALL SIGN SUMMARY
SHEET 8 OF 14

| FED. RD. DIV. NO. | FEDERAL AID PROJECT NO. | SHEET NO. |
|---|---|---|
| 6 | NH 2000(704),etc. | 47 |

| STATE | DIST. | COUNTY |
|---|---|---|
| TEXAS | SAT | BEXAR |

| CONT. | SECT. | JOB | HIGHWAY NO. |
|---|---|---|---|
| 2452 | 01 | 036,etc. | LP 1604 |

# SUMMARY OF SMALL SIGNS

| PLAN SHEET NO. | SIGN NO. | SIGN TYPE | SIGN TEXT | SIGN DIMENSIONS | REFLECTIVE SHEETING | PLYWOOD TYPE A | ALUMINUM TYPE A | RAIL MNT | A EA. | A-1 EA. | B EA. | C EA. | D-1 EA. | D-2 EA. | D-3 EA. | D-4 EA. | D-5 EA. | D-6 EA. | F EA. | F (MOD) EA. | G EA. | 4" TUBE EA. | 6" TUBE MP | 6" TUBE EA. | MILEPOSTS MP | MILEPOSTS MW EA. |
|---|---|---|---|---|---|---|---|---|---|---|---|---|---|---|---|---|---|---|---|---|---|---|---|---|---|---|
| | | | CONTROL: 2452-01-036 | | | | | | | | | | | | | | | | | | | | | | | |
| 29/57 | 13 | SR5-1A | WRONG WAY | 1200 X 900 | C | X | | | | | | | | | | | | | | | | | | | | |
| " | 14 | R3-7R | RT LANE MUST TURN RT | 750 X 750 | A | X | | | X | | | | | | | | | | | | | | | | | |
| " | 15 | FR1-2 | YIELD | 1500 X 1500 X 1500 | C | X | | | | | | | | | | | | | | X | (MOUNTED BACK TO BACK) | | | | | |
| " | 16 | SR5-1 | DO NOT ENTER | 1200 X 1200 | C | X | | | | | | | | | | | | | | | | | | | | |
| " | 17 | M3-1 | NORTH | 600 X 300 | A | | X | | | | | | | | | | | | | | | | | | | |
| | | M1-6L | LOOP 1604 | 600 X 600 | A | | X | | | | | | | | | | | | | | | | | | | |
| | | M6-3 | ST ARROW | 525 X 375 | A | | X | | | | | | | | | | | | | | | | | | | |
| | | M3-3 | SOUTH | 600 X 300 | A | | X | | | | | | | | | | | | | | | | | | | |
| | | M1-6L | LOOP 1604 | 600 X 600 | A | | X | | | | | | | | | | | | | | | | | | | |
| | | M6-1R | RT ARROW | 525 X 375 | A | | X | | | | | | | | | | | | | | | | | | | |
| " | 18 | FR1-2 | YIELD | 1500 X 1500 X 1500 | C | X | | | | | | | | | | | | | | X | (MOUNTED BACK TO BACK) | | | | | |
| " | 19 | FR1-2 | YIELD | 1500 X 1500 X 1500 | C | X | | | | | | | | | | | | | | | | | | | | |
| 29A/57 | 1 | R4-7 | SYM KEEP RIGHT | 600 X 750 | A | X | | | X | | | | | | | | | | | | | | | | | |
| " | 2 | R3-8L | LT TURN ONLY/LT TURN OR ST | 750 X 750 | A | X | | | | | | | | | | | | | | | | | | | | |
| " | 3 | R3-8L | LT TURN ONLY/LT TURN OR ST | 750 X 750 | A | X | | | | | | | | | | | | | | | | | | | | |
| " | 4 | M3-3 | SOUTH | 600 X 300 | A | | X | | X | | | | | | | | | | | | | | | | | |
| | | M1-6L | LOOP 1604 | 600 X 600 | A | | X | | | | | | | | | | | | | | | | | | | |
| | | M6-1L | LT ARROW | 525 X 375 | A | | X | | | | | | | | | | | | | | | | | | | |
| " | 5 | SR5-1 | DO NOT ENTER | 1200 X 1200 | C | X | | | | | | | | | | | | | | | | | | | | |
| " | 6 | SR5-1 | DO NOT ENTER | 1200 X 1200 | C | X | | | | | | | | | | | | | | | | | | | | |
| " | 7 | R6-1R | ONE WAY | 900 X 300 | A | X | | | X | | | | | | | | | | | | | | | | | |
| | | R6-1L | ONE WAY | 900 X 300 | A | X | | | | | | | | | | | | | | | | | | | | |
| " | 8 | R4-7 | SYM KEEP RIGHT | 600 X 750 | A | X | | | X | | | | | | | | | | | | | | | | | |
| " | 9 | M3-1 | NORTH | 600 X 300 | A | | X | | X | | | | | | | | | | | | | | | | | |
| | | M1-6L | LOOP 1604 | 600 X 600 | A | | X | | | | | | | | | | | | | | | | | | | |
| | | M6-1L | LT ARROW | 525 X 375 | A | | X | | | | | | | | | | | | | | | | | | | |
| " | 10 | R6-1R | ONE WAY | 900 X 300 | A | X | | | X | | | | | | | | | | | | | | | | | |
| | | R6-1L | ONE WAY | 900 X 300 | A | X | | | | | | | | | | | | | | | | | | | | |
| 30/57 | 1 | SW3-3 | SYM SIGNAL AHEAD | 1200 X 1200 | C | X | | | | | | | | | | | | | | | | | | | | |
| " | 2 | D1-1 | MILITARY DR | 1500 X 300 | C | X | | | | | | | | | | | | | | | | | | | | |
| " | 3 | R3-8R | ST ARROW/RT TURN ONLY | 750 X 750 | A | X | | | X | | | | | | | | | | | | | | | | | |
| | | 1SPC7 | | | | | | | | | | | | | | | | | | | | | | | | |
| " | 4 | M3-3 | SOUTH | 600 X 300 | A | | X | | X | | | | | | | | | | | | | | | | | |
| | | M1-6L | LOOP 1604 | 600 X 600 | A | | X | | | | | | | | | | | | | | | | | | | |
| | | M6-3L | TURNAROUND ARROW | 525 X 375 | A | | X | | | | | | | | | | | | | | | | | | | |
| " | 5 | SR5-1A | WRONG WAY | 1200 X 900 | C | X | | | | | | | | | | | | | | | | | | | | |
| " | 6 | SR5-1A | WRONG WAY | 1200 X 900 | C | X | | | | | | | | | | | | | | | | | | | | |
| " | 8 | R3-8L | LT TURN OR ST/ST ARROW | 750 X 750 | A | X | | | X | | | | | | | | | | | | | | | | | |
| | | 1SPC7 | | | | | | | | | | | | | | | | | | | | | | | | |
| " | 9 | M3-3 | SOUTH | 600 X 300 | A | | X | | X | | | | | | | | | | | | | | | | | |
| | | M1-6L | LOOP 1604 | 600 X 600 | A | | X | | | | | | | | | | | | | | | | | | | |
| | | M6-3 | ST ARROW | 525 X 375 | A | | X | | | | | | | | | | | | | | | | | | | |
| " | 10 | R2-1 | SPEED LIMIT 70 | 600 X 750 | A | X | | | X | | | | | | | | | | | | | | | | | |
| 31/57 | 1 | R6-1R | ONE WAY | 900 X 300 | A | X | | | X | | | | | | | | | | | | | | | | | |
| " | 2 | R6-1R | ONE WAY | 900 X 300 | A | X | | | X | | | | | | | | | | | | | | | | | |
| " | 3 | SR5-1 | DO NOT ENTER | 1200 X 1200 | C | X | | | | | | | | | | | | | | | | | | | | |

CONTROL: 2452-01-036 SHEET TOTALS 9 8 1 1 1

CHANGE ORDER 65

REVISED SHEET

CHANGE ORDER NO. 65
- CHANGE ORDER RELATED SIGNING REVISIONS.
- REVISED QUANTITIES

ALUMINUM SIGN BLANKS (TYPE A)

| Square Meters | Min. Thickness |
|---|---|
| Less than 0.7 | 2.0 mm |
| 0.7 to 1.4 | 2.5 mm |
| Greater than 1.4 | 3.0 mm |

Sign supports shall be located as shown on the plans, except that the Engineer may shift the sign supports, within design guidelines, where necessary to secure a more desirable location or to avoid conflict with utilities. Unless otherwise shown on the plans, the Contractor shall stake and the Engineer will verify all sign support locations.

Reflective sheeting will be designated as:

Type A - Engineer Grade
Type B - Super Engineer Grade
Type C - High Specific Intensity

©2004 Texas Department of Transportation

SMALL SIGN SUMMARY
SHEET 8 OF 14

| FED. RD. DIV. NO. | FEDERAL AID PROJECT NO. | | SHEET NO. |
|---|---|---|---|
| 6 | NH 2000(704), etc. | | 47A |
| STATE | DIST. | COUNTY | |
| TEXAS | SAT | BEXAR | |
| CONT. | SECT. | JOB | HIGHWAY NO. |
| 2452 | 01 | 036, etc. | LP 1604 |

03-24-04

LEVELS DISPLAYED 1 2 3 4 5 6 7 8 9 10 11 12 13 14 15 16 17 18 19 20 21 22 23 24 25 26 27 28 29 30 31 32 33 34 35 36 37 38 39 40 41 42 43 44 45 46 47 48 49 50 51 52 53 54 55 56 57 58 59 60 61 62 63 ACC:

FILE: sgnsumsmall.dgn

LEVELS DISPLAYED
1 3 4 5 6 7 8 9 10 11 12 13 14 15 16 17 18 19 20 21 22 23 24 25 26 27 28 29 30 31 32 33 34 35 36 37 38 39 40 41 42 43 44 45 46 47 48 49 50 51 52 53 54 55 56 57 58 59 60 61 62 63

ACC:

FILE: sgnsumsmall.dgn

# SUMMARY OF SMALL SIGNS

| PLAN SHEET NO. | SIGN NO. | SIGN TYPE | SIGN TEXT | SIGN DIMENSIONS | REFLECTIVE SHEETING | PLYWOOD TYPE A | ALUMINUM TYPE A | TYPE OF MOUNT | | | | | | | | | | | | | | | MILEPOSTS | |
|---|---|---|---|---|---|---|---|---|---|---|---|---|---|---|---|---|---|---|---|---|---|---|---|---|
| | | | | | | | | RAIL MNT | A EA. | A-1 EA. | B EA. | C EA. | D-1 EA. | D-2 EA. | D-3 EA. | D-4 EA. | D-5 EA. | D-6 EA. | F EA. | F (MOD) EA. | G EA. | 4" TUBE EA. | 6" TUBE EA. | MP EA. | MW EA. |
| | | | CONTROL: 2452-01-036 | | | | | | | | | | | | | | | | | | | | | |
| 31/57 | 4 | SR5-1 | DO NOT ENTER | 1200 X 1200 | C | X | | | | | | | | | | | | X | | | | | | |
| " | 5 | R6-1R | ONE WAY | 900 X 300 | A | X | | | X | | | | | | | | | | | | | | | |
| " | 6 | R6-1R | ONE WAY | 900 X 300 | A | X | | | X | | | | | | | | | | | | | | | |
| " | 7 | W2-1 | SYM CROSS ROAD | 750 X 750 | C | X | | | X | | | | | | | | | | | | | | | |
| " | 8 | W2-2 | SYM SIDE RD - RT | 750 X 750 | C | X | | | X | | | | | | | | | | | | | | | |
| " | 9 | D1-1 | WESTCREEK OAKS DR ⇨ | 3050 X 300 | C | X | | | | | | | | | X | | | | | | | | | |
| " | 10 | R1-1 | STOP | 750 X 750 | C | X | | | X | | | | | | | | | | | | | | | |
| 32/57 | 1 | SW19-8 | CHURCH | 1200 X 1200 | C | X | | | | | | | | | | | | X | | | | | | |
| | | (SPL) | | | | | | | | | | | | | | | | | | | | | | |
| " | 2 | R6-1R | ONE WAY | 900 X 300 | A | X | | | X | | | | | | | | | | | | | | | |
| " | 3 | R6-1R | ONE WAY | 900 X 300 | A | X | | | X | | | | | | | | | | | | | | | |
| " | 4 | R6-1R | ONE WAY | 900 X 300 | A | X | | | X | | | | | | | | | | | | | | | |
| 33/57 | 1 | D2-1 | JCT FM 471 4 | 2000 X 300 | C | X | | | | | | | X | | | | | | | | | | | |
| " | 2 | R6-1R | ONE WAY | 900 X 300 | A | X | | | X | | | | | | | | | | | | | | | |
| " | 3 | R6-1R | ONE WAY | 900 X 300 | A | X | | | X | | | | | | | | | | | | | | | |
| " | 4 | M2-1 | JCT | 525 X 375 | A | | X | | X | | | | | | | | | | | | | | | |
| | | M1-6F | FARM ROAD 1957 | 600 X 600 | A | | X | | | | | | | | | | | | | | | | | |
| " | 6 | SW3-3 | SYM SIGNAL AHEAD | 1200 X 1200 | C | X | | | | | | | | | | | | X | | | | | | |
| " | 7 | SW3-3 | SYM SIGNAL AHEAD | 1200 X 1200 | C | X | | | | | | | | | | | | X | | | | | | |
| 34/57 | 1 | M3-3 | SOUTH | 600 X 300 | A | | X | | X | | | | | | | | | | | | | | | |
| | | M1-6L | LOOP 1604 | 600 X 600 | A | | X | | | | | | | | | | | | | | | | | |
| | | M5-3L | TURNAROUND ARROW | 525 X 375 | A | | X | | | | | | | | | | | | | | | | | |
| " | 2 | SR5-1A | WRONG WAY | 1200 X 900 | C | X | | | | | | | | | | | | X | | | | | | |
| " | 3 | SR5-1A | WRONG WAY | 1200 X 900 | C | X | | | | | | | | | | | | X | | | | | | |
| " | 4 | R3-7R | RT LANE MUST TURN RT | 750 X 750 | A | X | | | X | | | | | | | | | | | | | | | |
| " | 5 | M3-4 | WEST | 600 X 300 | A | | X | | | | X | | | | | | | | | | | | | |
| | | M1-6F | FARM ROAD 1957 | 600 X 600 | A | | X | | | | | | | | | | | | | | | | | |
| | | M6-1L | LT ARROW | 525 X 375 | A | | X | | | | | | | | | | | | | | | | | |
| | | M3-2 | EAST | 600 X 300 | A | | X | | | | | | | | | | | | | | | | | |
| | | M1-6F | FARM ROAD 1957 | 600 X 600 | A | | X | | | | | | | | | | | | | | | | | |
| | | M6-1R | RT ARROW | 525 X 375 | A | | X | | | | | | | | | | | | | | | | | |
| " | 6 | SR5-1 | DO NOT ENTER | 1200 X 1200 | C | X | | | | | | | | | | | | X | | | | | | |
| " | 7 | SR5-1 | DO NOT ENTER | 1200 X 1200 | C | X | | | | | | | | | | | | X | | | | | | |
| " | 8 | FR1-2 | YIELD | 1500 X 1500 X 1500 | C | X | | | | | | | | | | | | X | | | | | | |
| " | 8A | FR1-2 | YIELD | 1500 X 1500 X 1500 | C | X | | | | | | | | | | | | X | | | | | | |
| " | 9 | FR1-2 | YIELD | 1500 X 1500 X 1500 | C | X | | | | | | | | | | | | X | | | | | | |
| " | 10 | M3-1 | NORTH | 600 X 300 | A | | X | | X | | | | | | | | | | | | | | | |
| | | M1-6L | LOOP 1604 | 600 X 600 | A | | X | | | | | | | | | | | | | | | | | |
| " | 11 | R6-1R | ONE WAY | 900 X 300 | A | X | | | X | | | | | | | | | | | | | | | |
| " | 12 | R6-1R | ONE WAY | 900 X 300 | A | X | | | X | | | | | | | | | | | | | | | |
| " | 13 | R2-1 | SPEED LIMIT 60 | 600 X 750 | A | X | | | X | | | | | | | | | | | | | | | |
| " | 14 | R6-1R | ONE WAY | 900 X 300 | A | X | | | X | | | | | | | | | | | | | | | |
| | | | **CONTROL: 2452-01-036 SHEET TOTALS** | | | | | | 18 | | 1 | | 1 | | 1 | | | | 11 | | | | | |

©2000

Texas Department of Transportation

SMALL SIGN SUMMARY
SHEET 9 OF 14

| FED. RD. DIV. NO. | FEDERAL AID PROJECT NO. | SHEET NO. |
|---|---|---|
| 6 | NH 2000(704),etc. | 48 |

| STATE | DIST. | COUNTY |
|---|---|---|
| TEXAS | SAT | BEXAR |

| CONT. | SECT. | JOB | HIGHWAY NO. |
|---|---|---|---|
| 2452 | 01 | 036,etc. | LP 1604 |

Sign supports shall be located as shown on the plans, except that the Engineer may shift the sign supports, within design guidelines, where necessary to secure a more desirable location or to avoid conflict with utilities. Unless otherwise shown on the plans, the Contractor shall stake and the Engineer will verify all sign support locations.

Reflective sheeting will be designated as:

Type A - Engineer Grade
Type B - Super Engineer Grade
Type C - High Specific Intensity

ALUMINUM SIGN BLANKS (TYPE A)

| Square Meters | Min. Thickness |
|---|---|
| Less than 0.7 | 2.0 mm |
| 0.7 to 1.4 | 2.5 mm |
| Greater than 1.4 | 3.0 mm |

LEVELS DISPLAYED ACC:
FILE: sgnsumsmall.dgn

# SUMMARY OF SMALL SIGNS

| PLAN SHEET NO. | SIGN NO. | SIGN TYPE | SIGN TEXT | SIGN DIMENSIONS | REFLECTIVE SHEETING | PLYWOOD TYPE A | ALUMINUM TYPE A | TYPE OF MOUNT: RAIL MNT | A EA. | A-1 EA. | B EA. | C EA. | D-1 EA. | D-2 EA. | D-3 EA. | D-4 EA. | D-5 EA. | D-6 EA. | F EA. | F (MOD) EA. | G EA. | 4" TUBE EA. | 6" TUBE EA. | MILEPOSTS MP EA. | MILEPOSTS MW EA. |
|---|---|---|---|---|---|---|---|---|---|---|---|---|---|---|---|---|---|---|---|---|---|---|---|---|---|
| | | | CONTROL: 2452-01-036 | | | | | | | | | | | | | | | | | | | | | | |
| 31/57 | 4 | SR5-1 | DO NOT ENTER | 1200 X 1200 | C | X | | | | | | | | | | | | | X | | | | | | |
| " | 5 | R6-1R | ONE WAY | 900 X 300 | A | X | | | X | | | | | | | | | | | | | | | | |
| " | 6 | R6-1R | ONE WAY | 900 X 300 | A | X | | | X | | | | | | | | | | | | | | | | |
| " | 7 | W2-1 | SYM CROSS ROAD | 750 X 750 | C | X | | | X | | | | | | | | | | | | | | | | |
| " | 8 | W2-2 | SYM SIDE RD - RT | 750 X 750 | C | X | | | X | | | | | | | | | | | | | | | | |
| " | 9 | D1-1 | WESTCREEK OAKS DR ⇨ | 3050 X 300 | C | X | | | | | | | | | X | | | | | | | | | | |
| " | 10 | R1-1 | STOP | 750 X 750 | C | X | | | X | | | | | | | | | | | | | | | | |
| 32/57 | 1 | SW19-8 (SPL) | CHURCH | 1200 X 1200 | C | X | | | | | | | | | | | | | X | | | | | | |
| " | 2 | R6-1R | ONE WAY | 900 X 300 | A | X | | | X | | | | | | | | | | | | | | | | |
| " | 3 | R6-1R | ONE WAY | 900 X 300 | A | X | | | X | | | | | | | | | | | | | | | | |
| " | 4 | R6-1R | ONE WAY | 900 X 300 | A | X | | | X | | | | | | | | | | | | | | | | |
| 33/57 | 1 | D2-1 | JCT FM 471 4 | 2000 X 300 | C | X | | | | | | | X | | | | | | | | | | | | |
| " | 2 | R6-1R | ONE WAY | 900 X 300 | A | X | | | X | | | | | | | | | | | | | | | | |
| " | 3 | R6-1R | ONE WAY | 900 X 300 | A | X | | | X | | | | | | | | | | | | | | | | |
| " | 4 | M2-1 | JCT | 525 X 375 | A | | X | | X | | | | | | | | | | | | | | | | |
| | | M1-6F | FARM ROAD 1957 | 600 X 600 | A | | X | | | | | | | | | | | | | | | | | | |
| " | 6 | SW3-3 | SYM SIGNAL AHEAD | 1200 X 1200 | C | X | | | | | | | | | | | | | X | | | | | | |
| " | 7 | SW3-3 | SYM SIGNAL AHEAD | 1200 X 1200 | C | X | | | | | | | | | | | | | X | | | | | | |
| 34/57 | 1 | M3-3 | SOUTH | 600 X 300 | A | | X | | X | | | | | | | | | | | | | | | | |
| | | M1-6L | LOOP 1604 | 600 X 600 | A | | X | | | | | | | | | | | | | | | | | | |
| | | M5-3L | TURNAROUND ARROW | 525 X 375 | A | | X | | | | | | | | | | | | | | | | | | |
| " | 2 | SR5-1A | WRONG WAY | 1200 X 900 | C | X | | | | | | | | | | | | | X | | | | | | |
| " | 3 | SR5-1A | WRONG WAY | 1200 X 900 | C | X | | | | | | | | | | | | | X | | | | | | |
| " | 4 | R3-7R | RT LANE MUST TURN RT | 750 X 750 | A | X | | | X | | | | | | | | | | | | | | | | |
| " | 5 | M3-4 | WEST | 600 X 300 | A | | X | | | | X | | | | | | | | | | | | | | |
| | | M1-6F | FARM ROAD 1957 | 600 X 600 | A | | X | | | | | | | | | | | | | | | | | | |
| | | M6-1L | LT ARROW | 525 X 375 | A | | X | | | | | | | | | | | | | | | | | | |
| | | M3-2 | EAST | 600 X 300 | A | | X | | | | | | | | | | | | | | | | | | |
| | | M1-6F | FARM ROAD 1957 | 600 X 600 | A | | X | | | | | | | | | | | | | | | | | | |
| | | M6-1R | RT ARROW | 525 X 375 | A | | X | | | | | | | | | | | | | | | | | | |
| " | 6 | SR5-1 | DO NOT ENTER | 1200 X 1200 | C | X | | | | | | | | | | | | | X | | | | | | |
| " | 7 | SR5-1 | DO NOT ENTER | 1200 X 1200 | C | X | | | | | | | | | | | | | X | | | | | | |
| " | 8 | FR1-2 | YIELD | 1500 X 1500 X 1500 | C | X | | | | | | | | | | | | | X | | | | | | |
| " | 8A | FR1-2 | YIELD | 1500 X 1500 X 1500 | C | X | | | | | | | (ATTACH TO BACK OF NO. 6) | | | | | | ~~X~~ | | | | | | |
| " | 9 | FR1-2 | YIELD | 1500 X 1500 X 1500 | C | X | | | | | | | | | | | | | X | | | | | | |
| " | 10 | M3-1 | NORTH | 600 X 300 | A | | X | | X | | | | | | | | | | | | | | | | |
| | | M1-6L | LOOP 1604 | 600 X 600 | A | | X | | | | | | | | | | | | | | | | | | |
| " | 11 | R6-1R | ONE WAY | 900 X 300 | A | X | | | X | | | | | | | | | | | | | | | | |
| " | 12 | R6-1R | ONE WAY | 900 X 300 | A | X | | | X | | | | | | | | | | | | | | | | |
| " | 13 | R2-1 | SPEED LIMIT 55 | 600 X 750 | A | X | | | X | | | | | | | | | | | | | | | | |
| " | 14 | R6-1R | ONE WAY | 900 X 300 | A | X | | | X | | | | | | | | | | | | | | | | |
| | | | CONTROL: 2452-01-036 SHEET TOTALS | | | | | | 18 | | 1 | | 1 | | 1 | | | | 10 | | | | | | |

CHANGE ORDER 65

REVISED SHEET

**CHANGE ORDER NO. 65**
- CHANGE ORDER RELATED SIGNING REVISIONS.
- REVISED QUANTITIES

ALUMINUM SIGN BLANKS (TYPE A)

| Square Meters | Min. Thickness |
|---|---|
| Less than 0.7 | 2.0 mm |
| 0.7 to 1.4 | 2.5 mm |
| Greater than 1.4 | 3.0 mm |

Sign supports shall be located as shown on the plans, except that the Engineer may shift the sign supports, within design guidelines, where necessary to secure a more desirable location or to avoid conflict with utilities. Unless otherwise shown on the plans, the Contractor shall stake and the Engineer will verify all sign support locations.

Reflective sheeting will be designated as:

Type A - Engineer Grade
Type B - Super Engineer Grade
Type C - High Specific Intensity

©2004 Texas Department of Transportation

SMALL SIGN SUMMARY
SHEET 9 OF 14

| FED. RD. DIV. NO. | FEDERAL AID PROJECT NO. | | SHEET NO. |
|---|---|---|---|
| 6 | NH 2000(704), etc. | | 48A |
| STATE | DIST. | COUNTY | |
| TEXAS | SAT | BEXAR | |
| CONT. | SECT. | JOB | HIGHWAY NO. |
| 2452 | 01 | 036, etc. | LP 1604 |

LEVELS DISPLAYED
1 3 4 5 6 7 8 9 10 11 12 13 14 15 16 17 18 19 20 21 22 23 24 25 26 27 28 29 30 31 32 33 34 35 36 37 38 39 40 41 42 43 44 45 46 47 48 49 50 51 52 53 54 55 56 57 58 59 60 61 62 63
ACC:
FILE: sgnsumsmall.dgn

# SUMMARY OF SMALL SIGNS

| PLAN SHEET NO. | SIGN NO. | SIGN TYPE | SIGN TEXT | SIGN DIMENSIONS | REFLECTIVE SHEETING | PLYWOOD TYPE A | ALUMINUM TYPE A | TYPE OF MOUNT | | | | | | | | | | | | | | MILEPOSTS | |
|---|---|---|---|---|---|---|---|---|---|---|---|---|---|---|---|---|---|---|---|---|---|---|---|
| | | | | | | | | RAIL MNT | A EA. | A-1 EA. | B EA. | C EA. | D-1 EA. | D-2 EA. | D-3 EA. | D-4 EA. | D-5 EA. | D-6 EA. | F EA. | F (MOD) EA. | G EA. | 4" TUBE EA. | 6" TUBE EA. | MP EA. | MW EA. |
| | | | CONTROL: 2452-01-036 | | | | | | | | | | | | | | | | | | | | |
| 34/57 | 15 | D9-3a | SYM CAMPING | 600 X 600 | C | X | | | | | X | | | | | | | | | | | | | |
| | | M6-1BL | LT ARROW | 525 X 375 | C | X | | | | | | | | | | | | | | | | | | |
| | | D9-3a | SYM CAMPING | 600 X 600 | C | X | | | | | | | | | | | | | | | | | | |
| | | M6-1BR | RT ARROW | 525 X 375 | C | X | | | | | | | | | | | | | | | | | | |
| " | 16 | D1-3a | POTRANCO RD | 2700 X 900 | C | X | | | | | | | | | | | | X | | | | | | |
| | | | ⇦ SAN ANTONIO 14 | | | | | | | | | | | | | | | | | | | | | |
| | | | RIO MEDINA 12 ⇨ | | | | | | | | | | | | | | | | | | | | | |
| " | 17 | R3-8R | ST ARROW/RT TURN ONLY | 750 X 750 | A | X | | | X | | | | | | | | | | | | | | | |
| | | (SPL) | | | | | | | | | | | | | | | | | | | | | | |
| " | 19 | M3-1 | NORTH | 600 X 300 | A | | X | | X | | | | | | | | | | | | | | | |
| | | M1-6L | LOOP 1604 | 600 X 600 | A | | X | | | | | | | | | | | | | | | | | |
| | | M5-3L | TURNAROUND ARROW | 525 X 375 | A | | X | | | | | | | | | | | | | | | | | |
| " | 20 | SR5-1A | WRONG WAY | 1200 X 900 | C | X | | | | | | | | | | | | | X | | | | | |
| " | 21 | SR5-1A | WRONG WAY | 1200 X 900 | C | X | | | | | | | | | | | | | X | | | | | |
| " | 22 | R3-7R | RT LANE MUST TURN RT | 750 X 750 | A | X | | | X | | | | | | | | | | | | | | | |
| " | 23 | M3-2 | EAST | 600 X 300 | A | | X | | | | X | | | | | | | | | | | | | |
| | | M1-6F | FARM ROAD 1957 | 600 X 600 | A | | X | | | | | | | | | | | | | | | | | |
| | | M6-1L | LT ARROW | 525 X 375 | A | | X | | | | | | | | | | | | | | | | | |
| | | M3-4 | WEST | 600 X 300 | A | | X | | | | | | | | | | | | | | | | | |
| | | M1-6F | FARM ROAD 1957 | 600 X 600 | A | | X | | | | | | | | | | | | | | | | | |
| | | M6-1R | RT ARROW | 525 X 375 | A | | X | | | | | | | | | | | | | | | | | |
| " | 24 | SR5-1 | DO NOT ENTER | 1200 X 1200 | A | X | | | | | | | | | | | | | X | | | | | |
| " | 25 | FR1-2 | YIELD | 1500 X 1500 X 1500 | C | X | | | | | | | | | | | | | X | | | | | |
| " | 26 | FR1-2 | YIELD | 1500 X 1500 X 1500 | C | X | | | | | | | | | | | | | X | | | | | |
| " | 27 | FR1-2 | YIELD | 1500 X 1500 X 1500 | C | X | | | | | | | | | | | | | X | | | | | |
| 34A/57 | 1 | R3-8R | ST ARROW/RT TURN ONLY | 750 X 750 | A | X | | | X | | | | | | | | | | | | | | | |
| | | (SPL) | | | | | | | | | | | | | | | | | | | | | | |
| " | 4 | M3-4 | WEST | 600 X 300 | A | | X | | | | | X | | | | | | | | | | | | |
| | | M1-6F | FARM ROAD 1957 | 600 X 600 | A | | X | | | | | | | | | | | | | | | | | |
| | | M6-3 | ST ARROW | 525 X 375 | A | | X | | | | | | | | | | | | | | | | | |
| | | M3-3 | SOUTH | 600 X 300 | A | | X | | | | | | | | | | | | | | | | | |
| | | M1-6L | LOOP 1604 | 600 X 600 | A | | X | | | | | | | | | | | | | | | | | |
| | | M6-3 | ST ARROW | 525 X 375 | A | | X | | | | | | | | | | | | | | | | | |
| | | M3-1 | NORTH | 600 X 300 | A | | X | | | | | | | | | | | | | | | | | |
| | | M1-6L | LOOP 1604 | 600 X 600 | A | | X | | | | | | | | | | | | | | | | | |
| | | M6-1R | RT ARROW | 525 X 375 | A | | X | | | | | | | | | | | | | | | | | |
| " | 5 | R3-7R | RT LANE MUST TURN RT | 750 X 750 | A | X | | | X | | | | | | | | | | | | | | | |
| " | 7 | SR5-1 | DO NOT ENTER | 1200 X 1200 | C | X | | | | | | | | | | | | | X | | | | | |
| " | 8 | M3-4 | WEST | 600 X 300 | A | | X | | X | | | | | | | | | | | | | | | |
| | | M1-6F | FARM ROAD 1957 | 600 X 600 | A | | X | | | | | | | | | | | | | | | | | |
| " | 11 | R2-1 | SPEED LIMIT 45 | 600 X 750 | A | X | | | X | | | | | | | | | | | | | | | |
| " | 11A | M2-1 | JCT | 525 X 375 | A | | X | | X | | | | | | | | | | | | | | | |
| | | M1-6L | LOOP 1604 | 600 X 600 | A | | X | | | | | | | | | | | | | | | | | |
| " | 11B | W2-6B | HIGHWAY INTERSECTION 1000 FT | 1200 X 1200 | C | X | | | | | | | | | | | | | X | | | | | |
| " | 13A | SW3-3 | SYM SIGNAL AHEAD | 1200 X 1200 | C | X | | | | | | | | | | | | | X | | | | | |
| " | 15 | D1-2A | ⇦ JCT FM 471 4 | 2700 X 600 | C | X | | | | | | | | | | | X | | | | | | | |
| | | | JCT US 90 4 ⇨ | | | | | | | | | | | | | | | | | | | | | |
| " | 15A | R3-8R | ST OR RT TURN/RT TURN ONLY | 750 X 750 | A | X | | | | | | | | | | | | | | | | | | |
| **CONTROL: 2452-01-036 SHEET TOTALS** | | | | | | | | | 9 | | 2 | 1 | | | | 1 | | 1 | 9 | | | | | |

ALUMINUM SIGN BLANKS (TYPE A)

| Square Meters | Min. Thickness |
|---|---|
| Less than 0.7 | 2.0 mm |
| 0.7 to 1.4 | 2.5 mm |
| Greater than 1.4 | 3.0 mm |

Sign supports shall be located as shown on the plans, except that the Engineer may shift the sign supports, within design guidelines, where necessary to secure a more desirable location or to avoid conflict with utilities. Unless otherwise shown on the plans, the Contractor shall stake and the Engineer will verify all sign support locations.

Reflective sheeting will be designated as:

Type A - Engineer Grade
Type B - Super Engineer Grade
Type C - High Specific Intensity

©2000

Texas Department of Transportation

SMALL SIGN SUMMARY
SHEET 10 OF 14

| FED. RD. DIV. NO. | FEDERAL AID PROJECT NO. | SHEET NO. |
|---|---|---|
| 6 | NH 2000(704),etc. | 49 |

| STATE | DIST. | COUNTY |
|---|---|---|
| TEXAS | SAT | BEXAR |

| CONT. | SECT. | JOB | HIGHWAY NO. |
|---|---|---|---|
| 2452 | 01 | 036,etc. | LP 1604 |

# SUMMARY OF SMALL SIGNS

LEVELS DISPLAYED
1 | 3 | 4 | 5 | 6 | 7 | 8 | 9 | 10 | 11 | 12 | 13 | 14 | 15 | 16
17 | 18 | 19 | 20 | 21 | 22 | 23 | 24 | 25 | 26 | 27 | 28 | 29 | 30 | 31 | 32
33 | 34 | 35 | 36 | 37 | 38 | 39 | 40 | 41 | 42 | 43 | 44 | 45 | 46 | 47 | 48
49 | 50 | 51 | 52 | 53 | 54 | 55 | 56 | 57 | 58 | 59 | 60 | 61 | 62 | 63

ACC:

FILE: sgnsumsmall.dgn

| PLAN SHEET NO. | SIGN NO. | SIGN TYPE | SIGN TEXT | SIGN DIMENSIONS | REFLECTIVE SHEETING | PLYWOOD TYPE A | ALUMINUM TYPE A | RAIL MNT | A EA. | A-1 EA. | B EA. | C EA. | D-1 EA. | D-2 EA. | D-3 EA. | D-4 EA. | D-5 EA. | D-6 EA. | F EA. | F (MOD) EA. | G EA. | 4" TUBE EA. | 6" TUBE EA. | MILEPOSTS MP EA. | MILEPOSTS MW EA. |
|---|---|---|---|---|---|---|---|---|---|---|---|---|---|---|---|---|---|---|---|---|---|---|---|---|---|
| | | | CONTROL: 2452-01-036 | | | | | | | | | | | | | | | | | | | | | | |
| 34/57 | 15 | D9-3a | SYM CAMPING | 600 X 600 | C | X | | | | | | | | | | | | | | | | | | | |
| | | M6-1BL | LT ARROW | 525 X 375 | C | X | | | | | | | | | | | | | | | | | | | |
| | | D9-3a | SYM CAMPING | 600 X 600 | C | X | | | | | | | | | | | | | | | | | | | |
| | | M6-1BR | RT ARROW | 525 X 375 | C | X | | | | | | | | | | | | | | | | | | | |
| " | 16 | D1-3a | POTRANCO RD | 2700 X 900 | C | X | | | | | | | | | | | | | | | | | | | |
| | | | ⇦ SAN ANTONIO 14 | | | | | | | | | | | | | | | | | | | | | | |
| | | | RIO MEDINA 12 ⇨ | | | | | | | | | | | | | | | | | | | | | | |
| " | 17 | R3-8 | ST ARROW/ST ARROW/RT TURN ONLY | 1200 X 750 | A | X | | | X | | | | | | | | | | | | | | | | |
| | | (SPL) | | | | | | | | | | | | | | | | | | | | | | | |
| " | 19 | M3-1 | NORTH | 600 X 300 | A | | X | | X | | | | | | | | | | | | | | | | |
| | | M1-6L | LOOP 1604 | 600 X 600 | A | | X | | | | | | | | | | | | | | | | | | |
| | | M5-3L | TURNAROUND ARROW | 525 X 375 | A | | X | | | | | | | | | | | | | | | | | | |
| " | 20 | SR5-1A | WRONG WAY | 1200 X 900 | C | X | | | | | | | | | | | | | | | | | | | |
| " | 21 | SR5-1A | WRONG WAY | 1200 X 900 | C | X | | | | | | | | | | | | | | | | | | | |
| " | 22 | R3-7R | RT LANE MUST TURN RT | 750 X 750 | A | X | | | X | | | | | | | | | | | | | | | | |
| " | 23 | M3-2 | EAST | 600 X 300 | A | | X | | | | | | | | | | | | | | | | | | |
| | | M1-6F | FARM ROAD 1957 | 600 X 600 | A | | X | | | | | | | | | | | | | | | | | | |
| | | M6-1L | LT ARROW | 525 X 375 | A | | X | | | | | | | | | | | | | | | | | | |
| | | M3-4 | WEST | 600 X 300 | A | | X | | | | | | | | | | | | | | | | | | |
| | | M1-6F | FARM ROAD 1957 | 600 X 600 | A | | X | | | | | | | | | | | | | | | | | | |
| | | M6-1R | RT ARROW | 525 X 375 | A | | X | | | | | | | | | | | | | | | | | | |
| " | 24 | SR5-1 | DO NOT ENTER | 1200 X 1200 | A | X | | | | | | | | | | | | | | | | | | | |
| " | 25 | FR1-2 | YIELD | 1500 X 1500 X 1500 | C | X | | | | | | | | | | | | | | | | | | | |
| " | 26 | FR1-2 | YIELD | 1500 X 1500 X 1500 | C | X | | | | | | | | | | | | | | | | | | | |
| " | 27 | FR1-2 | YIELD | 1500 X 1500 X 1500 | C | X | | | | | | | | | | | | | | | | | | | |
| 34A/57 | 1 | R3-8R | ST ARROW/RT TURN ONLY | 750 X 750 | A | X | | | X | | | | | | | | | | | | | | | | |
| | | (SPL) | | | | | | | | | | | | | | | | | | | | | | | |
| " | 4 | M3-4 | WEST | 600 X 300 | A | | X | | | | | | | | | | | | | | | | | | |
| | | M1-6F | FARM ROAD 1957 | 600 X 600 | A | | X | | | | | | | | | | | | | | | | | | |
| | | M6-3 | ST ARROW | 525 X 375 | A | | X | | | | | | | | | | | | | | | | | | |
| | | M3-3 | SOUTH | 600 X 300 | A | | X | | | | | | | | | | | | | | | | | | |
| | | M1-6L | LOOP 1604 | 600 X 600 | A | | X | | | | | | | | | | | | | | | | | | |
| | | M6-3 | ST ARROW | 525 X 375 | A | | X | | | | | | | | | | | | | | | | | | |
| | | M3-1 | NORTH | 600 X 300 | A | | X | | | | | | | | | | | | | | | | | | |
| | | M1-6L | LOOP 1604 | 600 X 600 | A | | X | | | | | | | | | | | | | | | | | | |
| | | M6-1R | RT ARROW | 525 X 375 | A | | X | | | | | | | | | | | | | | | | | | |
| " | 5 | R3-7R | RT LANE MUST TURN RT | 750 X 750 | A | X | | | X | | | | | | | | | | | | | | | | |
| " | 7 | SR5-1 | DO NOT ENTER | 1200 X 1200 | C | X | | | | | | | | | | | | | | | | | | | |
| " | 8 | M3-4 | WEST | 600 X 300 | A | | X | | X | | | | | | | | | | | | | | | | |
| | | M1-6F | FARM ROAD 1957 | 600 X 600 | A | | X | | | | | | | | | | | | | | | | | | |
| " | 11 | R2-1 | SPEED LIMIT 45 | 600 X 750 | A | X | | | X | | | | | | | | | | | | | | | | |
| " | 11A | M2-1 | JCT | 525 X 375 | A | | X | | X | | | | | | | | | | | | | | | | |
| | | M1-6L | LOOP 1604 | 600 X 600 | A | | X | | | | | | | | | | | | | | | | | | |
| " | 11B | W2-6B | HIGHWAY INTERSECTION 1000 FT | 1200 X 1200 | C | X | | | | | | | | | | | | | | | | | | | |
| " | 13A | SW3-3 | SYM SIGNAL AHEAD | 1200 X 1200 | C | X | | | | | | | | | | | | | | | | | | | |
| " | 15 | D1-2A | ⇦ JCT FM 471 4 | 2700 X 600 | C | X | | | | | | | | | | | | | | | | | | | |
| | | | JCT US 90 4 ⇨ | | | | | | | | | | | | | | | | | | | | | | |
| " | 15A | R3-8R | ST OR RT TURN/RT TURN ONLY | 750 X 750 | A | X | | | X | | | | | | | | | | | | | | | | |

CONTROL: 2452-01-036 SHEET TOTALS 9

CHANGE ORDER 65

REVISED SHEET

CHANGE ORDER NO. 65
- CHANGE ORDER RELATED SIGNING REVISIONS.
- REVISED QUANTITIES

ALUMINUM SIGN BLANKS (TYPE A)

| Square Meters | Min. Thickness |
|---|---|
| Less than 0.7 | 2.0 mm |
| 0.7 to 1.4 | 2.5 mm |
| Greater than 1.4 | 3.0 mm |

Sign supports shall be located as shown on the plans, except that the Engineer may shift the sign supports, within design guidelines, where necessary to secure a more desirable location or to avoid conflict with utilities. Unless otherwise shown on the plans, the Contractor shall stake and the Engineer will verify all sign support locations.

Reflective sheeting will be designated as:

Type A - Engineer Grade
Type B - Super Engineer Grade
Type C - High Specific Intensity

©2004 Texas Department of Transportation

SMALL SIGN SUMMARY
SHEET 10 OF 14

| FED.RD. DIV.NO. | FEDERAL AID PROJECT NO. | | SHEET NO. |
|---|---|---|---|
| 6 | NH 2000(704), etc. | | 49A |
| STATE | DIST. | COUNTY | |
| TEXAS | SAT | BEXAR | |
| CONT. | SECT. | JOB | HIGHWAY NO. |
| 2452 | 01 | 036, etc. | LP 1604 |

LEVELS DISPLAY
1 3 4 5 6 7 8 9 10 11 12 13 14 15 16 17 18 19 20 21 22 23 24 25 26 27 28 29 30 31 32 33 34 35 36 37 38 39 40 41 42 43 44 45 46 47 48 49 50 51 52 53 54 55 56 57 58 59 60 61 62 63

ACC:

FILE: sgnsumsmall.dgn

# SUMMARY OF SMALL SIGNS

| PLAN SHEET NO. | SIGN NO. | SIGN TYPE | SIGN TEXT | SIGN DIMENSIONS | REFLECTIVE SHEETING | PLYWOOD TYPE A | ALUMINUM TYPE A | TYPE OF MOUNT | | | | | | | | | | | | | | | MILEPOSTS | |
|---|---|---|---|---|---|---|---|---|---|---|---|---|---|---|---|---|---|---|---|---|---|---|---|---|
| | | | | | | | | RAIL MNT | A EA. | A-1 EA. | B EA. | C EA. | D-1 EA. | D-2 EA. | D-3 EA. | D-4 EA. | D-5 EA. | D-6 EA. | F EA. | F (MOD) EA. | G EA. | 4" TUBE EA. | 6" TUBE EA. | MP EA. | MW EA. |
| | | | CONTROL: 2452-01-036 | | | | | | | | | | | | | | | | | | | | | |
| 34A/57 | 15C | M3-4 | WEST | 600 X 300 | A | | X | | | | | X | | | | | | | | | | | | |
| | | M1-6F | FARM ROAD 1957 | 600 X 600 | A | | X | | | | | | | | | | | | | | | | | |
| | | M6-3 | ST ARROW | 525 X 375 | A | | X | | | | | | | | | | | | | | | | | |
| | | M3-3 | SOUTH | 600 X 300 | A | | X | | | | | | | | | | | | | | | | | |
| | | M1-6L | LOOP 1604 | 600 X 600 | A | | X | | | | | | | | | | | | | | | | | |
| | | M6-3 | ST ARROW | 525 X 375 | A | | X | | | | | | | | | | | | | | | | | |
| | | M3-1 | NORTH | 600 X 300 | A | | X | | | | | | | | | | | | | | | | | |
| | | M1-6L | LOOP 1604 | 600 X 600 | A | | X | | | | | | | | | | | | | | | | | |
| | | M6-1R | RT ARROW | 525 X 375 | A | | X | | | | | | | | | | | | | | | | | |
| " | 15D | R3-7R | RT LANE MUST TURN RT | 750 X 750 | A | X | | | X | | | | | | | | | | | | | | | |
| " | 16 | M3-2 | EAST | 600 X 300 | A | | X | | X | | | | | | | | | | | | | | | |
| | | M1-6F | FARM ROAD 1957 | 600 X 600 | A | | X | | | | | | | | | | | | | | | | | |
| " | 18 | W8-15 | WATCH FOR WATER ON ROAD | 900 X 900 | C | X | | | X | | | | | | | | | | | | | | | |
| " | 19 | M4-11 | BEGIN | 750 X 300 | A | X | | | X | | | | | | | | | | | | | | | |
| | | R3-9A | SYM TURNING LANE | 750 X 900 | A | X | | | | | | | | | | | | | | | | | | |
| " | 21 | R2-1 | SPEED LIMIT 45 | 600 X 750 | A | X | | | X | | | | | | | | | | | | | | | |
| 34B/57 | 1 | R4-7 | SYM KEEP RIGHT | 600 X 750 | A | X | | | | | (ATTACH TO BACK OF NO. 2) | | | | | | | | | | | | | |
| " | 2 | R3-8L | LT TURN ONLY/LT TURN OR ST | 750 X 750 | A | X | | | X | | | | | | | | | | | | | | | |
| " | 3 | R3-8L | LT TURN ONLY/LT TURN OR ST | 750 X 750 | A | X | | | | | (ATTACH TO BACK OF NO. 8) | | | | | | | | | | | | | |
| " | 4 | D1-2a | ⇧ RIO MEDINA 12 | 2700 X 600 | C | X | | | | | | | | | | X | | | | | | | | |
| | | | JCT US 90 4 ⇨ | | | | | | | | | | | | | | | | | | | | | |
| " | 5 | M3-3 | SOUTH | 600 X 300 | A | | X | | X | | | | | | | | | | | | | | | |
| | | M1-6L | LOOP 1604 | 600 X 600 | A | | X | | | | | | | | | | | | | | | | | |
| | | M6-1L | LT ARROW | 525 X 375 | A | | X | | | | | | | | | | | | | | | | | |
| " | 6 | SR5-1 | DO NOT ENTER | 1200 X 1200 | C | X | | | | | | | | | | | | | X | | | | | |
| " | 7 | R6-1R | ONE WAY | 900 X 300 | A | X | | | X | | (MOUNT BACK TO BACK) | | | | | | | | | | | | | |
| | | R6-1L | ONE WAY | 900 X 300 | A | X | | | | | | | | | | | | | | | | | | |
| " | 8 | R4-7 | SYM KEEP RIGHT | 600 X 750 | A | X | | | X | | | | | | | | | | | | | | | |
| " | 9 | D1-2a | ⇧ SAN ANTONIO 14 | 2700 X 600 | C | X | | | | | | | | | | X | | | | | | | | |
| | | | ⇦ JCT FM 471 4 | | | | | | | | | | | | | | | | | | | | | |
| " | 10 | M3-3 | SOUTH | 600 X 300 | A | | X | | X | | | | | | | | | | | | | | | |
| | | M1-6L | LOOP 1604 | 600 X 600 | A | | X | | | | | | | | | | | | | | | | | |
| | | M6-1L | LT ARROW | 525 X 375 | A | | X | | | | | | | | | | | | | | | | | |
| " | 12 | R6-1R | ONE WAY | 900 X 300 | A | X | | | X | | (MOUNT BACK TO BACK) | | | | | | | | | | | | | |
| | | R6-1L | ONE WAY | 900 X 300 | A | X | | | | | | | | | | | | | | | | | | |
| " | 13 | SR5-1 | DO NOT ENTER | 1200 X 1200 | C | X | | | | | | | | | | | | | X | | | | | |
| " | 15 | SW3-3 | SYM SIGNAL AHEAD | 1200 X 1200 | C | X | | | | | | | | | | | | | X | | | | | |
| " | 16 | M2-1 | JCT | 525 X 375 | A | | X | | X | | | | | | | | | | | | | | | |
| | | M1-6L | LOOP 1604 | 600 X 600 | A | | X | | | | | | | | | | | | | | | | | |
| " | 17 | W2-6B | SYM HIGHWAY INTERSECTION 1000 FT | 1200 X 1200 | C | X | | | | | | | | | | | | | X | | | | | |
| " | 20 | D1-2a | ⇧ JCT US 90 4 | 2700 X 600 | C | X | | | | | | | | | | X | | | | | | | | |
| | | | JCT FM 471 4 ⇨ | | | | | | | | | | | | | | | | | | | | | |
| 35/57 | 1 | SW3-3 | SYM SIGNAL AHEAD | 1200 X 1200 | C | X | | | | | | | | | | | | | X | | | | | |
| " | 2 | SW3-3 | SYM SIGNAL AHEAD | 1200 X 1200 | C | X | | | | | | | | | | | | | X | | | | | |
| " | 4 | D1-3a | POTRANCO RD | 2700 X 900 | C | X | | | | | | | | | | | | X | | | | | | |
| | | | ⇦ RIO MEDINA 12 | | | | | | | | | | | | | | | | | | | | | |
| | | | SAN ANTONIO 14 ⇨ | | | | | | | | | | | | | | | | | | | | | |
| **CONTROL: 2452-01-036 SHEET TOTALS** | | | | | | | | | 12 | | | 1 | | | | 3 | | 1 | 6 | | | | | |

ALUMINUM SIGN BLANKS (TYPE A)

| Square Meters | Min. Thickness |
|---|---|
| Less than 0.7 | 2.0 mm |
| 0.7 to 1.4 | 2.5 mm |
| Greater than 1.4 | 3.0 mm |

Sign supports shall be located as shown on the plans, except that the Engineer may shift the sign supports within design guidelines, where necessary to secure a more desirable location or to avoid conflict with utilities. Unless otherwise shown on the plans, the Contractor shall stake and the Engineer will verify all sign support locations.

Reflective sheeting will be designated as:

Type A - Engineer Grade
Type B - Super Engineer Grade
Type C - High Specific Intensity

©2000

Texas Department of Transportation

SMALL SIGN SUMMARY
SHEET 11 OF 14

| FED. RD. DIV. NO. | FEDERAL AID PROJECT NO. | SHEET NO. |
|---|---|---|
| 6 | NH 2000(704),etc. | 50 |

| STATE | DIST. | COUNTY |
|---|---|---|
| TEXAS | SAT | BEXAR |

| CONT. | SECT. | JOB | HIGHWAY NO. |
|---|---|---|---|
| 2452 | 01 | 036,etc. | LP 1604 |

# SUMMARY OF SMALL SIGNS

| PLAN SHEET NO. | SIGN NO. | SIGN TYPE | SIGN TEXT | SIGN DIMENSIONS | REFLECTIVE SHEETING | PLYWOOD TYPE A | ALUMINUM TYPE A | RAIL MNT | TYPE OF MOUNT: A E.A. | A-1 E.A. | B E.A. | C E.A. | D-1 E.A. | D-2 E.A. | D-3 E.A. | D-4 E.A. | D-5 E.A. | D-6 E.A. | F E.A. | F (MOD) E.A. | G E.A. | 4" TUBE E.A. | 6" TUBE E.A. | MILEPOSTS MP E.A. | MILEPOSTS MW E.A. |
|---|---|---|---|---|---|---|---|---|---|---|---|---|---|---|---|---|---|---|---|---|---|---|---|---|---|
| | | | CONTROL: 2452-01-036 | | | | | | | | | | | | | | | | | | | | | | |
| 34A/57 | 15C | M3-4 | WEST | 600 X 300 | A | | X | | | | | X | | | | | | | | | | | | | |
| | | M1-6F | FARM ROAD 1957 | 600 X 600 | A | | X | | | | | | | | | | | | | | | | | | |
| | | M6-3 | ST ARROW | 525 X 375 | A | | X | | | | | | | | | | | | | | | | | | |
| | | M3-3 | SOUTH | 600 X 300 | A | | X | | | | | | | | | | | | | | | | | | |
| | | M1-6L | LOOP 1604 | 600 X 600 | A | | X | | | | | | | | | | | | | | | | | | |
| | | M6-3 | ST ARROW | 525 X 375 | A | | X | | | | | | | | | | | | | | | | | | |
| " | 15D | R3-7R | RT LANE MUST TURN RT | 750 X 750 | A | X | | X | | | | | | | | | | | | | | | | | |
| | | M3-1 | NORTH | 600 X 300 | A | | X | | | | | | | | | | | | | | | | | | |
| | | M1-6L | LOOP 1604 | 600 X 600 | A | | X | | | | | | | | | | | | | | | | | | |
| | | M6-1R | RT ARROW | 525 X 375 | A | | X | | | | | | | | | | | | | | | | | | |
| " | 16 | M3-2 | EAST | 600 X 300 | A | | X | X | | | | | | | | | | | | | | | | | |
| | | M1-6F | FARM ROAD 1957 | 600 X 600 | A | | X | | | | | | | | | | | | | | | | | | |
| " | 18 | W8-15 | WATCH FOR WATER ON ROAD | 900 X 900 | C | X | | X | | | | | | | | | | | | | | | | | |
| " | 19 | M4-11 | BEGIN | 750 X 300 | A | X | | X | | | | | | | | | | | | | | | | | |
| | | R3-9A | SYM TURNING LANE | 750 X 900 | A | X | | | | | | | | | | | | | | | | | | | |
| " | 21 | R2-1 | SPEED LIMIT 45 | 600 X 750 | A | X | | X | | | | | | | | | | | | | | | | | |
| 34B/57 | 1 | R4-7 | SYM KEEP RIGHT | 600 X 750 | A | X | | | | | | | | | | | | | | | | | | | |
| " | 2 | R3-8L | LT TURN ONLY/LT TURN OR ST | 750 X 750 | A | X | | | | | | | | | | | | | | | | | | | |
| " | 3 | R3-8L | LT TURN ONLY/LT TURN OR ST | 750 X 750 | A | X | | | | | | | | | | | | | | | | | | | |
| " | 4 | D1-2a | ⇧ RIO MEDINA 12<br>JCT US 90 4 ⇨ | 2700 X 600 | C | X | | | | | | | | | | | | | | | | | | | |
| " | 5 | M3-3 | SOUTH | 600 X 300 | A | | X | X | | | | | | | | | | | | | | | | | |
| | | M1-6L | LOOP 1604 | 600 X 600 | A | | X | | | | | | | | | | | | | | | | | | |
| | | M6-1L | LT ARROW | 525 X 375 | A | | X | | | | | | | | | | | | | | | | | | |
| " | 6 | SR3 | DO NOT ENTER | 1200 X 1200 | C | X | | | | | | | | | | | | | | | | | | | |
| " | 7 | R6-1R | ONE WAY | 900 X 300 | A | X | | X | | | | | | | | | | | | | | | | | |
| | | R6-1L | ONE WAY | 900 X 300 | A | X | | | | | | | | | | | | | | | | | | | |
| " | 8 | R4-7 | SYM KEEP RIGHT | 600 X 750 | A | X | | X | | | | | | | | | | | | | | | | | |
| " | 9 | D1-2a | ⇧ SAN ANTONIO 14<br>⇦ JCT FM 471 4 | 2700 X 600 | C | X | | | | | | | | | | | | | | | | | | | |
| " | 10 | M3-3 | SOUTH | 600 X 300 | A | | X | X | | | | | | | | | | | | | | | | | |
| | | M1-6L | LOOP 1604 | 600 X 600 | A | | X | | | | | | | | | | | | | | | | | | |
| | | M6-1L | LT ARROW | 525 X 375 | A | | X | | | | | | | | | | | | | | | | | | |
| " | 12 | R6-1R | ONE WAY | 900 X 300 | A | X | | X | | | | | | | | | | | | | | | | | |
| | | R6-1L | ONE WAY | 900 X 300 | A | X | | | | | | | | | | | | | | | | | | | |
| " | 13 | SR5-1 | DO NOT ENTER | 1200 X 1200 | C | X | | | | | | | | | | | | | | | | | | | |
| " | 15 | SW3-3 | SYM SIGNAL AHEAD | 1200 X 1200 | C | X | | | | | | | | | | | | | | | | | | | |
| " | 16 | M2-1 | JCT | 525 X 375 | A | | X | X | | | | | | | | | | | | | | | | | |
| | | M1-6L | LOOP 1604 | 600 X 600 | A | | X | | | | | | | | | | | | | | | | | | |
| " | 17 | W2-6B | SYM HIGHWAY INTERSECTION 1000 FT | 1200 X 1200 | C | X | | | | | | | | | | | | | | | | | | | |
| " | 20 | D1-2a | ⇧ JCT US 90 4<br>JCT FM 471 4 ⇨ | 2700 X 600 | C | X | | | | | | | | | | | | | | | | | | | |
| 35/57 | 1 | SW3-3 | SYM SIGNAL AHEAD | 1200 X 1200 | C | X | | | | | | | | | | | | | | | | | | | |
| " | 2 | SW3-3 | SYM SIGNAL AHEAD | 1200 X 1200 | C | X | | | | | | | | | | | | | | | | | | | |
| " | 4 | D1-3a | POTRANCO RD 12<br>⇦ RIO MEDINA 12<br>SAN ANTONIO 14 ⇨ | 2700 X 900 | C | X | | | | | | | | | | | | | | | | | | | |
| | | | | | | | | | 12 | 1 | 1 | 1 | | | | 3 | | 1 | 5 | | | | | | |

CHANGE ORDER 65

REVISED SHEET

CHANGE ORDER NO. 65
- CHANGE ORDER RELATED SIGNING REVISIONS.
- REVISED QUANTITIES

ALUMINUM SIGN BLANKS (TYPE A)

| Square Meters | Min. Thickness |
|---|---|
| Less than 0.7 | 2.0 mm |
| 0.7 to 1.4 | 2.5 mm |
| Greater than 1.4 | 3.0 mm |

Sign supports shall be located as shown on the plans, except that the Engineer may shift the sign supports, within design guidelines, where necessary to secure a more desirable location or to avoid conflict with utilities. Unless otherwise shown on the plans, the Contractor shall stake and the Engineer will verify all sign support locations.

Reflective sheeting will be designated as:

Type A - Engineer Grade
Type B - Super Engineer Grade
Type C - High Specific Intensity

CONTROL: 2452-01-036 SHEET TOTALS

©2004 Texas Department of Transportation

SMALL SIGN SUMMARY
SHEET 11 OF 14

| FED. RD. DIV. NO. | FEDERAL AID PROJECT NO. | SHEET NO. |
|---|---|---|
| 6 | NH 2000(704), etc. | 50A |
| STATE | DIST. | COUNTY |
| TEXAS | SAT | BEXAR |
| CONT. | SECT. | JOB / HIGHWAY NO. |
| 2452 | 01 | 036, etc. / LP 1604 |

LEVELS DISPLAY
1 | 3 4 5 16 17 18 19 10 11 12 13 14 15 16
17 18 19 20 21 22 23 24 25 26 27 28 29 30 31 32
33 34 35 36 37 38 39 40 41 42 43 44 45 46 47 48
49 50 51 52 53 54 55 56 57 58 59 60 61 62 63

ACC:

FILE: sgnsumsmall.dgn

LEVELS DISPLAYED
1 3 4 5 6 7 8 9 10 11 12 13 14 15 16 17 18 19 20 21 22 23 24 25 26 27 28 29 30 31 32 33 34 35 36 37 38 39 40 41 42 43 44 45 46 47 48 49 50 51 52 53 54 55 56 57 58 59 60 61 62 63
ACC:
FILE: sgnsumsmall.dgn

# SUMMARY OF SMALL SIGNS

| PLAN SHEET NO. | SIGN NO. | SIGN TYPE | SIGN TEXT | SIGN DIMENSIONS | REFLECTIVE SHEETING | PLYWOOD TYPE A | ALUMINUM TYPE A | TYPE OF MOUNT | | | | | | | | | | | | | | | | MILEPOSTS | |
|---|---|---|---|---|---|---|---|---|---|---|---|---|---|---|---|---|---|---|---|---|---|---|---|---|---|
| | | | | | | | | RAIL MNT | A EA. | A-1 EA. | B EA. | C EA. | D-1 EA. | D-2 EA. | D-3 EA. | D-4 EA. | D-5 EA. | D-6 EA. | F EA. | F (MOD) EA. | G EA. | 4" TUBE EA. | 6" TUBE EA. | MP EA. | MW EA. |
| | | | CONTROL: 2452-01-036 | | | | | | | | | | | | | | | | | | | | | | |
| 35/57 | 5 | D9-3A | SYM CAMPING | 600 X 600 | C | X | | | | | X | | | | | | | | | | | | | | |
| | | M6-1BL | LT ARROW | 525 X 375 | C | X | | | | | | | | | | | | | | | | | | | |
| | | D9-3A | SYM CAMPING | 600 X 600 | C | X | | | | | | | | | | | | | | | | | | | |
| | | M6-1BR | RT ARROW | 525 X 375 | C | X | | | | | | | | | | | | | | | | | | | |
| " | 6 | R3-8R | ST ARROW/RT TURN ONLY | 750 X 750 | A | X | | | X | | | | | | | | | | | | | | | | |
| | | (SPL) | | | | | | | | | | | | | | | | | | | | | | | |
| " | 7 | M3-3 | SOUTH | 600 X 300 | A | | X | | X | | | | | | | | | | | | | | | | |
| | | M1-6L | LOOP 1604 | 600 X 600 | A | | X | | | | | | | | | | | | | | | | | | |
| " | 9 | R2-1 | SPEED LIMIT 70 | 600 X 750 | A | X | | | X | | | | | | | | | | | | | | | | |
| " | 11 | D2-1 | JCT US 90 4 | 1800 X 300 | C | X | | | | | | | X | | | | | | | | | | | | |
| 36/57 | 1 | M2-1 | JCT | 600 X 300 | A | | X | | X | | | | | | | | | | | | | | | | |
| | | M1-6F | FARM ROAD 1957 | 600 X 600 | A | | X | | | | | | | | | | | | | | | | | | |
| " | 2 | R6-1R | ONE WAY | 900 X 300 | A | X | | | X | | | | | | | | | | | | | | | | |
| 37/57 | 1 | R6-1R | ONE WAY | 900 X 300 | A | X | | | X | | | | | | | | | | | | | | | | |
| 39/57 | 1 | R6-1R | ONE WAY | 900 X 300 | A | X | | | X | | | | | | | | | | | | | | | | |
| 41/57 | 1 | I3 | MEDIO CREEK | 600 X 450 | C | X | | | X | | | | | | | | | | | | | | | | |
| " | 2 | I3 | MEDIO CREEK | 600 X 450 | C | X | | | X | | | | | | | | | | | | | | | | |
| 42/57 | 1 | R2-1 | SPEED LIMIT 60 | 600 X 750 | A | X | | | X | | | | | | | | | | | | | | | | |
| " | 2 | R2-1 | SPEED LIMIT 70 | 600 X 750 | A | X | | | X | | | | | | | | | | | | | | | | |
| 43/57 | 1 | R6-1R | ONE WAY | 900 X 300 | A | X | | | X | | | | | | | | | | | | | | | | |
| " | 2 | R6-1R | ONE WAY | 900 X 300 | A | X | | | X | | | | | | | | | | | | | | | | |
| 45/57 | 1 | R6-1R | ONE WAY | 900 X 300 | A | X | | | X | | | | | | | | | | | | | | | | |
| 46/57 | 1 | R6-1R | ONE WAY | 900 X 300 | A | X | | | X | | | | | | | | | | | | | | | | |
| 47/57 | 1 | R2-1 | SPEED LIMIT 60 | 600 X 750 | A | X | | | X | | | | | | | | | | | | | | | | |
| " | 2 | W2-2 | SYM SIDE RD - LT | 750 X 750 | A | X | | | X | | | | | | | | | | | | | | | | |
| 48/57 | 2 | R3-7R | RT LANE MUST TURN RT | 750 X 750 | A | X | | | X | | | | | | | | | | | | | | | | |
| " | 3 | SR5-1 | DO NOT ENTER | 1200 X 1200 | C | X | | | | | | | | | | | | | X | | | | | | |
| " | 4 | R1-2 | YIELD | 1050 X 1050 X 1050 | C | X | | | X | | | | | | | | | | | | | | | | |
| " | 6 | M3-1 | NORTH | 600 X 300 | A | | X | | X | | | | | | | | | | | | | | | | |
| | | M1-6L | LOOP 1604 | 600 X 600 | A | | X | | | | | | | | | | | | | | | | | | |
| | | M5-3L | TURNAROUND ARROW | 525 X 375 | A | | X | | | | | | | | | | | | | | | | | | |
| " | 7 | M3-1 | NORTH | 600 X 300 | A | | X | | X | | | | | | | | | | | | | | | | |
| | | M1-6L | LOOP 1604 | 600 X 600 | A | | X | | | | | | | | | | | | | | | | | | |
| " | 8 | R3-8L | LT TURN OR ST/ST ARROW | 750 X 750 | A | X | | | X | | | | | | | | | | | | | | | | |
| | | (SPL) | | | | | | | | | | | | | | | | | | | | | | | |
| " | 10 | SW3-3 | SYM SIGNAL AHEAD | 1200 X 1200 | C | X | | | | | | | | | | | | | X | | | | | | |
| " | 11 | D1-1 | ⇦ MARBACH RD | 2100 X 300 | C | X | | | | | | | X | | | | | | | | | | | | |
| " | 12 | SR5-1A | WRONG WAY | 1200 X 900 | C | X | | | | | | | | | | | | | X | | | | | | |
| " | 13 | SR5-1A | WRONG WAY | 1200 X 900 | C | X | | | | | | | | | | | | | X | | | | | | |
| " | 14 | SR5-1 | DO NOT ENTER | 1200 X 1200 | C | X | | | | | | | | | | | | | X | | | | | | |
| " | 15 | SR5-1 | DO NOT ENTER | 1200 X 1200 | C | X | | | | | | | | | | | | | X | | | | | | |
| " | 16 | R1-2 | YIELD | 1050 X 1050 X 1050 | C | X | | | X | | | | | | | | | | | | | | | | |
| 48A/57 | 1 | SR1-2 | YIELD | 1050 X 1050 X 1050 | C | X | | | X | | | | | | | | | | | | | | | | |
| **CONTROL: 2452-01-036 SHEET TOTALS** | | | | | | | | | 24 | | 1 | | 2 | | | | | | 6 | | | | | | |

ALUMINUM SIGN BLANKS (TYPE A)

| Square Meters | Min. Thickness |
|---|---|
| Less than 0.7 | 2.0 mm |
| 0.7 to 1.4 | 2.5 mm |
| Greater than 1.4 | 3.0 mm |

Sign supports shall be located as shown on the plans, except that the Engineer may shift the sign supports, within design guidelines, where necessary to secure a more desirable location or to avoid conflict with utilities. Unless otherwise shown on the plans, the Contractor shall stake and the Engineer will verify all sign support locations.

Reflective sheeting will be designated as:

Type A - Engineer Grade
Type B - Super Engineer Grade
Type C - High Specific Intensity

©2000 Texas Department of Transportation

SMALL SIGN SUMMARY
SHEET 12 OF 14

| FED. RD. DIV. NO. | FEDERAL AID PROJECT NO. | SHEET NO. |
|---|---|---|
| 6 | NH 2000(704),etc. | 51 |

| STATE | DIST. | COUNTY |
|---|---|---|
| TEXAS | SAT | BEXAR |

| CONT. | SECT. | JOB | HIGHWAY NO. |
|---|---|---|---|
| 2452 | 01 | 036,etc. | LP 1604 |

# SUMMARY OF SMALL SIGNS

| PLAN SHEET NO. | SIGN NO. | SIGN TYPE | SIGN TEXT | SIGN DIMENSIONS | REFLECTIVE SHEETING | PLYWOOD TYPE A | ALUMINUM TYPE A | RAIL MNT | A EA. | A-1 EA. | B EA. | C EA. | D-1 EA. | D-2 EA. | D-3 EA. | D-4 EA. | D-5 EA. | D-6 EA. | F EA. | F (MOD) EA. | G EA. | 4" TUBE EA. | 6" TUBE EA. | MILEPOSTS MP EA. | MILEPOSTS MW EA. |
|---|---|---|---|---|---|---|---|---|---|---|---|---|---|---|---|---|---|---|---|---|---|---|---|---|---|
| | | | CONTROL: 2452-01-036 | | | | | | | | | | | | | | | | | | | | | | |
| 35/57 | 5 | D9-3A | SYM CAMPING | 600 X 600 | C | X | | | | | X | | | | | | | | | | | | | | |
| | | M6-1BL | LT ARROW | 525 X 375 | C | X | | | | | | | | | | | | | | | | | | | |
| | | D9-3A | SYM CAMPING | 600 X 600 | C | X | | | | | | | | | | | | | | | | | | | |
| | | M6-1BR | RT ARROW | 525 X 375 | C | X | | | | | | | | | | | | | | | | | | | |
| | 6 | R9-6R | ST ARROW/RT TURN ONLY | 750 X 750 | A | X | | | X | | | | | | | | | | | | | | | | |
| | | SGNL | | | | | | | | | | | | | | | | | | | | | | | |
| " | 7 | M3-3 | SOUTH | 600 X 300 | A | | X | | X | | | | | | | | | | | | | | | | |
| | | M1-6L | LOOP 1604 | 600 X 600 | A | | X | | | | | | | | | | | | | | | | | | |
| " | 9 | R2-1 | SPEED LIMIT 55 | 600 X 750 | A | X | | | X | | | | | | | | | | | | | | | | |
| " | 11 | D2-1 | JCT US 90 4 | 1800 X 300 | C | X | | | | | | | | | | | | | | | | | | | |
| 36/57 | 1 | M2-1 | JCT | 600 X 300 | A | | X | | X | | | | | | | | | | | | | | | | |
| | | M1-6F | FARM ROAD 1957 | 600 X 600 | A | | X | | | | | | | | | | | | | | | | | | |
| " | 2 | R6-1R | ONE WAY | 900 X 300 | A | X | | | X | | | | | | | | | | | | | | | | |
| 37/57 | 1 | R6-1R | ONE WAY | 900 X 300 | A | X | | | X | | | | | | | | | | | | | | | | |
| 39/57 | 1 | R6-1R | ONE WAY | 900 X 300 | A | X | | | X | | | | | | | | | | | | | | | | |
| 41/57 | 1 | I3 | MEDIO CREEK | 600 X 450 | C | X | | | X | | | | | | | | | | | | | | | | |
| " | 2 | I3 | MEDIO CREEK | 600 X 450 | C | X | | | X | | | | | | | | | | | | | | | | |
| 42/57 | 1 | R3-1 | SPEED LIMIT 60 | 600 X 750 | A | X | | | X | | | | | | | | | | | | | | | | |
| " | 2 | R3-1 | SPEED LIMIT 70 | 600 X 750 | A | X | | | X | | | | | | | | | | | | | | | | |
| 43/57 | 1 | R6-1R | ONE WAY | 900 X 300 | A | X | | | X | | | | | | | | | | | | | | | | |
| " | 2 | R6-1R | ONE WAY | 900 X 300 | A | X | | | X | | | | | | | | | | | | | | | | |
| 45/57 | 1 | R6-1R | ONE WAY | 900 X 300 | A | X | | | X | | | | | | | | | | | | | | | | |
| 46/57 | 1 | R6-1R | ONE WAY | 900 X 300 | A | X | | | X | | | | | | | | | | | | | | | | |
| 47/57 | 1 | R3-1 | SPEED LIMIT 60 | 600 X 750 | A | X | | | X | | | | | | | | | | | | | | | | |
| " | 2 | W2-2 | SYM SIDE RD - LT | 750 X 750 | A | X | | | X | | | | | | | | | | | | | | | | |
| 48/57 | 2 | R3-7R | RT LANE MUST TURN RT | 750 X 750 | A | X | | | X | | | | | | | | | | | | | | | | |
| " | 3 | SR5-1 | DO NOT ENTER | 1200 X 1200 | C | X | | | | | | | | | | | | | | | | | | | |
| " | 4 | R1-2 | YIELD | 1050 X 1050 X 1050 | C | X | | | X | | | | | | | | | | | | | | | | |
| " | 6 | M3-1 | NORTH | 600 X 300 | A | | X | | X | | | | | | | | | | | | | | | | |
| | | M1-6L | LOOP 1604 | 600 X 600 | A | | X | | | | | | | | | | | | | | | | | | |
| | | M5-3L | TURNAROUND ARROW | 525 X 375 | A | | X | | X | | | | | | | | | | | | | | | | |
| " | 7 | M3-1 | NORTH | 600 X 300 | A | | X | | X | | | | | | | | | | | | | | | | |
| | | M1-6L | LOOP 1604 | 600 X 600 | A | | X | | | | | | | | | | | | | | | | | | |
| " | 8 | R9-6L | LT TURN OR STRT ARROW | 750 X 750 | A | X | | | X | | | | | | | | | | | | | | | | |
| | | CSTM | | | | | | | | | | | | | | | | | | | | | | | |
| " | 10 | SW3-3 | SYM SIGNAL AHEAD | 1200 X 1200 | C | X | | | | | | | | | | | | | | | | | | | |
| " | 11 | D1-1 | ⇦ MARBACH RD | 2100 X 300 | C | X | | | | | | | | | | | | | | | | | | | |
| " | 12 | SR5-1A | WRONG WAY | 1200 X 900 | C | X | | | | | | | | | | | | | | | | | | | |
| " | 13 | SR5-1A | WRONG WAY | 1200 X 900 | C | X | | | | | | | | | | | | | | | | | | | |
| " | 14 | SR5-1 | DO NOT ENTER | 1200 X 1200 | C | X | | | | | | | | | | | | | | | | | | | |
| " | 15 | SR5-1 | DO NOT ENTER | 1200 X 1200 | C | X | | | | | | | | | | | | | | | | | | | |
| " | 16 | R1-2 | YIELD | 1050 X 1050 X 1050 | C | X | | | X | | | | | | | | | | | | | | | | |
| 48A/57 | 1 | SR1-2 | YIELD | 1050 X 1050 X 1050 | C | X | | | X | | | | | | | | | | | | | | | | |
| | | | | | | | | | 18 | 1 | 2 | | 2 | | | | | | 5 | | | | | | |

CHANGE ORDER 65

REVISED SHEET

**CHANGE ORDER NO. 65**
- CHANGE ORDER RELATED SIGNING REVISIONS.
- REVISED QUANTITIES

ALUMINUM SIGN BLANKS (TYPE A)

| Square Meters | Min. Thickness |
|---|---|
| Less than 0.7 | 2.0 mm |
| 0.7 to 1.4 | 2.5 mm |
| Greater than 1.4 | 3.0 mm |

Sign supports shall be located as shown on the plans, except that the Engineer may shift the sign supports, within design guidelines, where necessary to secure a more desirable location or to avoid conflict with utilities. Unless otherwise shown on the plans, the Contractor shall stake and the Engineer will verify all sign support locations.

Reflective sheeting will be designated as:

Type A - Engineer Grade
Type B - Super Engineer Grade
Type C - High Specific Intensity

**CONTROL: 2452-01-036 SHEET TOTALS**

©2004 Texas Department of Transportation

## SMALL SIGN SUMMARY
SHEET 12 OF 14

| FED. RD. DIV. NO. | FEDERAL AID PROJECT NO. | | SHEET NO. |
|---|---|---|---|
| 6 | NH 2000(704), etc. | | 51A |
| STATE | DIST. | COUNTY | |
| TEXAS | SAT | BEXAR | |
| CONT. | SECT. | JOB | HIGHWAY NO. |
| 2452 | 01 | 036, etc. | LP 1604 |

02-25-04

LEVELS DISPLAY
1 3 4 5 6 7 8 9 10 11 12 13 14 15 16
17 18 19 20 21 22 23 24 25 26 27 28 29 30 31 32
33 34 35 36 37 38 39 40 41 42 43 44 45 46 47 48
49 50 51 52 53 54 55 56 57 58 59 60 61 62 63
ACC:
FILE: sgnsumsmall.dgn

LEVELS DISPLAYED

ACC:

FILE: sgnsumsmall.dgn

# SUMMARY OF SMALL SIGNS

| PLAN SHEET NO. | SIGN NO. | SIGN TYPE | SIGN TEXT | SIGN DIMENSIONS | REFLECTIVE SHEETING | PLYWOOD TYPE A | ALUMINUM TYPE A | TYPE OF MOUNT | | | | | | | | | | | | | | | MILEPOSTS | |
|---|---|---|---|---|---|---|---|---|---|---|---|---|---|---|---|---|---|---|---|---|---|---|---|---|
| | | | | | | | | RAIL MNT | A EA. | A-1 EA. | B EA. | C EA. | D-1 EA. | D-2 EA. | D-3 EA. | D-4 EA. | D-5 EA. | D-6 EA. | F EA. | F (MOD) EA. | G EA. | 4" TUBE EA. | 6" TUBE EA. | MP EA. | MW EA. |
| | | | CONTROL: 2452-01-036 | | | | | | | | | | | | | | | | | | | | | |
| 18A/57 | 2 | M3-3 | SOUTH | 600 X 300 | A | | X | | X | | | | | | | | | | | | | | | | |
| | | M1-6L | LOOP 1604 | 600 X 600 | A | | X | | | | | | | | | | | | | | | | | | |
| | | M6-1L | LT ARROW | 525 X 375 | A | | X | | | | | | | | | | | | | | | | | | |
| " | 3 | R6-1L | ONE WAY | 900 X 300 | A | X | | | X | | | | (MOUNTED BACK TO BACK) | | | | | | | | | | | | |
| | | R6-1R | ONE WAY | 900 X 300 | A | X | | | | | | | | | | | | | | | | | | | |
| " | 4 | W1-9L | LG ARROW BOARD - LT | 2400 X 900 | C | X | | | | | | | | | | X | | | | | | | | | |
| " | 5 | R6-1L | ONE WAY | 900 X 300 | A | X | | | X | | | | | | | | | | | | | | | | |
| " | 6 | M3-1 | NORTH | 600 X 300 | A | | X | | X | | | | | | | | | | | | | | | | |
| | | M1-6L | LOOP 1604 | 600 X 600 | A | | X | | | | | | | | | | | | | | | | | | |
| | | M6-1L | LT ARROW | 525 X 375 | A | | X | | | | | | | | | | | | | | | | | | |
| " | 7 | R6-1L | ONE WAY | 900 X 300 | A | X | | | X | | | | (MOUNTED BACK TO BACK) | | | | | | | | | | | | |
| | | R6-1R | ONE WAY | 900 X 300 | A | X | | | | | | | | | | | | | | | | | | | |
| " | 8 | SR1-2 | YIELD | 1050 X 1050 X 1050 | C | X | | | X | | | | | | | | | | | | | | | | |
| " | 9 | R5-1 | DO NOT ENTER | 750 X 750 | C | X | | | X | | | | | | | | | | | | | | | | |
| " | 10 | R4-7 | SYM KEEP RIGHT | 600 X 750 | A | X | | | X | | | | | | | | | | | | | | | | |
| " | 11 | M3-3 | SOUTH | 600 X 300 | A | | X | | | | X | | | | | | | | | | | | | | |
| | | M1-6L | LOOP 1604 | 600 X 600 | A | | X | | | | | | | | | | | | | | | | | | |
| | | M6-3 | ST ARROW | 525 X 375 | A | | X | | | | | | | | | | | | | | | | | | |
| | | M3-1 | NORTH | 600 X 300 | A | | X | | | | | | | | | | | | | | | | | | |
| | | M1-6L | LOOP 1604 | 600 X 600 | A | | X | | | | | | | | | | | | | | | | | | |
| | | M6-1R | RT ARROW | 525 X 375 | A | | X | | | | | | | | | | | | | | | | | | |
| 49/57 | 1 | SW3-3 | SYM SIGNAL AHEAD | 1200 X 1200 | C | X | | | | | | | | | | | | | X | | | | | | |
| " | 2 | D1-1 | MARBACH RD ⇨ | 2100 X 300 | C | X | | | | | | | X | | | | | | | | | | | | |
| " | 3 | R3-8R | ST ARROW/RT TURN ONLY | 750 X 750 | A | X | | | X | | | | | | | | | | | | | | | | |
| | | (SPL) | | | | | | | | | | | | | | | | | | | | | | | |
| " | 4 | SR5-1A | WRONG WAY | 1200 X 900 | C | X | | | | | | | | | | | | | X | | | | | | |
| " | 5 | SR5-1A | WRONG WAY | 1200 X 900 | C | X | | | | | | | | | | | | | X | | | | | | |
| " | 6 | M3-3 | SOUTH | 600 X 300 | A | | X | | X | | | | | | | | | | | | | | | | |
| | | M1-6L | LOOP 1604 | 600 X 600 | A | | X | | | | | | | | | | | | | | | | | | |
| | | M5-3L | TURNAROUND ARROW | 525 X 375 | A | | X | | | | | | | | | | | | | | | | | | |
| " | 8 | R3-8L | LT TURN ONLY/ST ARROW | 750 X 750 | A | X | | | X | | | | | | | | | | | | | | | | |
| | | (SPL) | | | | | | | | | | | | | | | | | | | | | | | |
| " | 9 | M3-3 | SOUTH | 600 X 300 | A | | X | | X | | | | | | | | | | | | | | | | |
| | | M1-6L | LOOP 1604 | 600 X 600 | A | | X | | | | | | | | | | | | | | | | | | |
| " | 10 | R2-1 | SPEED LIMIT 70 | 600 X 750 | A | X | | | X | | | | | | | | | | | | | | | | |
| 50/57 | 1 | W2-1 | SYM CROSS ROAD | 750 X 750 | C | X | | | X | | | | | | | | | | | | | | | | |
| 51/57 | 1 | M3-1 | NORTH | 600 X 300 | A | | X | | X | | | | | | | | | | | | | | | | |
| | | M1-6L | LOOP 1604 | 600 X 600 | A | | X | | | | | | | | | | | | | | | | | | |
| " | 2 | R2-1 | SPEED LIMIT 60 | 600 X 750 | A | X | | | X | | | | | | | | | | | | | | | | |
| " | 3 | SW6-2 | SYM DIVIDED HIGHWAY ENDS | 1219 X 1219 | C | X | | | | | | | | | | | | | X | | | | | | |
| 52/57 | 1 | W2-2 | SYM SIDE RD - RT | 750 X 750 | C | X | | | X | | | | | | | | | | | | | | | | |
| " | 2 | R3-8L | ST ARROW/RT TURN ONLY | 750 X 750 | A | X | | | X | | | | | | | | | | | | | | | | |
| | | (SPL) | | | | | | | | | | | | | | | | | | | | | | | |
| " | 3 | D1-1 | BIG MESA DR ⇨ | 2100 X 300 | C | X | | | | | | | X | | | | | | | | | | | | |
| " | 4 | R3-7R | RT LANE MUST TURN RT | 750 X 750 | A | X | | | X | | | | | | | | | | | | | | | | |
| " | 5 | R5-1 | DO NOT ENTER | 750 X 750 | C | X | | | X | | | | | | | | | | | | | | | | |
| **CONTROL: 2452-01-036 SHEET TOTALS** | | | | | | | | | 20 | | 1 | | 2 | | | 1 | | | 4 | | | | | | |

©2000

Texas Department of Transportation

## SMALL SIGN SUMMARY

SHEET 13 OF 14

| FED. RD. DIV. NO. | FEDERAL AID PROJECT NO. | SHEET NO. |
|---|---|---|
| 6 | NH 2000(704),etc. | 52 |

| STATE | DIST. | COUNTY |
|---|---|---|
| TEXAS | SAT | BEXAR |

| CONT. | SECT. | JOB | HIGHWAY NO. |
|---|---|---|---|
| 2452 | 01 | 036,etc. | LP 1604 |

Sign supports shall be located as shown on the plans, except that the Engineer may shift the sign supports, within design guidelines, where necessary to secure a more desirable location or to avoid conflict with utilities. Unless otherwise shown on the plans, the Contractor shall stake and the Engineer will verify all sign support locations.

Reflective sheeting will be designated as:

Type A - Engineer Grade
Type B - Super Engineer Grade
Type C - High Specific Intensity

ALUMINUM SIGN BLANKS (TYPE A)

| Square Meters | Min. Thickness |
|---|---|
| Less than 0.7 | 2.0 mm |
| 0.7 to 1.4 | 2.5 mm |
| Greater than 1.4 | 3.0 mm |

# SUMMARY OF SMALL SIGNS

| PLAN SHEET NO. | SIGN NO. | SIGN TYPE | SIGN TEXT | SIGN DIMENSIONS | REFLECTIVE SHEETING | PLYWOOD TYPE A | ALUMINUM TYPE A | TYPE OF MOUNT: RAIL MNT | A EA. | A-1 EA. | B EA. | C EA. | D-1 EA. | D-2 EA. | D-3 EA. | D-4 EA. | D-5 EA. | D-6 EA. | F EA. | F (MOD) EA. | G EA. | 4" TUBE EA. | 6" TUBE EA. | MILEPOSTS: MP EA. | MILEPOSTS: MW EA. |
|---|---|---|---|---|---|---|---|---|---|---|---|---|---|---|---|---|---|---|---|---|---|---|---|---|---|
| | | | CONTROL: 2452-01-036 | | | | | | | | | | | | | | | | | | | | | | |
| 48A/57 | 2 | M3-3 | SOUTH | 600 X 300 | A | | X | | X | | | | | | | | | | | | | | | | |
| | | M1-6L | LOOP 1604 | 600 X 600 | A | | X | | X | | | | | | | | | | | | | | | | |
| | | M6-1L | LT ARROW | 525 X 375 | A | | X | | X | | | | | | | | | | | | | | | | |
| " | 3 | R6-1L | ONE WAY | 900 X 300 | A | X | | | X | | | | | | | | | | | | | | | | |
| | | R6-1R | ONE WAY | 900 X 300 | A | X | | | X | | | | | | | | | | | | | | | | |
| " | 4 | W1-9L | LG ARROW BOARD - LT | 2400 X 900 | C | X | | | | | | | | | | | | | | | | | | | |
| " | 5 | R6-1L | ONE WAY | 900 X 300 | A | X | | | X | | | | | | | | | | | | | | | | |
| " | 6 | M3-1 | NORTH | 600 X 300 | A | | X | | X | | | | | | | | | | | | | | | | |
| | | M1-6L | LOOP 1604 | 600 X 600 | A | | X | | X | | | | | | | | | | | | | | | | |
| | | M6-1L | LT ARROW | 525 X 375 | A | | X | | X | | | | | | | | | | | | | | | | |
| " | 7 | R6-1L | ONE WAY | 900 X 300 | A | X | | | X | | | | | | | | | | | | | | | | |
| | | R6-1R | ONE WAY | 900 X 300 | A | X | | | | | | | | | | | | | | | | | | | |
| " | 8 | SR1-C | YIELD | 900 X 900 | C | X | | | X | | | | | | | | | | | X | | | | | |
| " | 9 | SR5-1 | DO NOT ENTER | 1200 X 1200 | C | X | | | | | | | | | | | | | | | | | | | |
| " | 10 | R4-7 | SYM KEEP RIGHT | 600 X 750 | A | X | | | X | | | | | | | | | | | | | | | | |
| " | 11 | M3-3 | SOUTH | 600 X 300 | A | | X | | | | X | | | | | | | | | | | | | | |
| | | M1-6L | LOOP 1604 | 600 X 600 | A | | X | | | | | | | | | | | | | | | | | | |
| | | M6-3 | ST ARROW | 525 X 375 | A | | X | | | | | | | | | | | | | | | | | | |
| | | M3-1 | NORTH | 600 X 300 | A | | X | | | | | | | | | | | | | | | | | | |
| | | M1-6L | LOOP 1604 | 600 X 600 | A | | X | | | | | | | | | | | | | | | | | | |
| | | M6-1R | RT ARROW | 525 X 375 | A | | X | | | | | | | | | | | | | | | | | | |
| 49/57 | 1 | SW3-3 | SYM SIGNAL AHEAD | 1200 X 1200 | C | X | | | | | | | | | | | | | | | | | | | |
| " | 2 | D1-1 | MARBACH RD ⇨ | 2100 X 300 | C | X | | | | | | | | | | | | | | | | | | | |
| " | 3 | R3-8R | ST ARROW/RT TURN ONLY | 750 X 750 | A | X | | | | | | | | | | | | | | | | | | | |
| " | 4 | SR5-1A | WRONG WAY | 1200 X 900 | C | X | | | | | | | | | | | | | | | | | | | |
| " | 5 | SR5-1A | WRONG WAY | 1200 X 900 | C | X | | | | | | | | | | | | | | | | | | | |
| " | 6 | M3-3 | SOUTH | 600 X 300 | A | | X | | | | X | | | | | | | | | | | | | | |
| | | M1-6L | LOOP 1604 | 600 X 600 | A | | X | | | | | | | | | | | | | | | | | | |
| | | M5-3L | TURNAROUND ARROW | 525 X 375 | A | | X | | | | | | | | | | | | | | | | | | |
| " | 7 | R3-8L | LT TURN ONLY/ST ARROW | 750 X 750 | A | X | | | | | | | | | | | | | | | | | | | |
| " | 8 | R3-8L | LT TURN ONLY/ST ARROW | 750 X 750 | A | X | | | | | | | | | | | | | | | | | | | |
| " | 9 | M3-3 | SOUTH | 600 X 300 | A | | X | | | | X | | | | | | | | | | | | | | |
| | | M1-6L | LOOP 1604 | 600 X 600 | A | | X | | | | | | | | | | | | | | | | | | |
| " | 10 | R2-1 | SPEED LIMIT 50 | 600 X 750 | A | X | | | | | | | | | | | | | | | | | | | |
| " | 11 | R2-1 | SPEED LIMIT 50 | 600 X 750 | A | X | | | | | | | | | | | | | | | | | | | |
| 50/57 | 1 | W2-1 | SYM CROSS ROAD | 750 X 750 | C | X | | | X | | | | | | | | | | | | | | | | |
| 51/57 | 1 | M3-1 | NORTH | 600 X 300 | A | | X | | X | | | | | | | | | | | | | | | | |
| | | M1-6L | LOOP 1604 | 600 X 600 | A | | X | | | | | | | | | | | | | | | | | | |
| " | 2 | R2-1 | SPEED LIMIT 50 | 900 X 750 | A | X | | | X | | | | | | | | | | | | | | | | |
| " | 3 | SW6-2 | SYM DIVIDED HIGHWAY ENDS | 1219 X 1219 | C | X | | | | | | | | | | | | | | | | | | | |
| 52/57 | 1 | W2-2 | SYM SIDE RD - RT | 750 X 750 | C | X | | | X | | | | | | | | | | | | | | | | |
| " | 2 | R3-8L (SPL) | ST ARROW/RT TURN ONLY | 750 X 750 | A | X | | | X | | | | | | | | | | | | | | | | |
| " | 3 | D1-1 | BIG MESA DR ⇨ | 2100 X 300 | C | X | | | | | | | | | | | | | | | | | | | |
| " | 4 | R3-7R | RT LANE MUST TURN RT | 750 X 750 | A | X | | | X | | | | | | | | | | | | | | | | |
| " | 5 | R5-1 | DO NOT ENTER | 750 X 750 | C | X | | | X | | | | | | | | | | | | | | | | |

**CONTROL: 2452-01-036 SHEET TOTALS** 14 1 1 2 1 5

CHANGE ORDER 65

REVISED SHEET

**CHANGE ORDER NO. 65**
- CHANGE ORDER RELATED SIGNING REVISIONS.
- REVISED QUANTITIES

ALUMINUM SIGN BLANKS (TYPE A)

| Square Meters | Min. Thickness |
|---|---|
| Less than 0.7 | 2.0 mm |
| 0.7 to 1.4 | 2.5 mm |
| Greater than 1.4 | 3.0 mm |

Sign supports shall be located as shown on the plans, except that the Engineer may shift the sign supports, within design guidelines, where necessary to secure a more desirable location or to avoid conflict with utilities. Unless otherwise shown on the plans, the Contractor shall stake and the Engineer will verify all sign support locations.

Reflective sheeting will be designated as:

Type A - Engineer Grade
Type B - Super Engineer Grade
Type C - High Specific Intensity

©2004 Texas Department of Transportation

## SMALL SIGN SUMMARY
SHEET 13 OF 14

| FED. RD. DIV. NO. | FEDERAL AID PROJECT NO. | SHEET NO. |
|---|---|---|
| 6 | NH 2000(704), etc. | 52A |
| STATE | DIST. | COUNTY |
| TEXAS | SAT | BEXAR |
| CONT. | SECT. | JOB / HIGHWAY NO. |
| 2452 | 01 | 036, etc. / LP 1604 |

LEVELS DISPLAYED ACC:
1 1 3 4 5 6 7 8 9 10 11 12 13 14 15 16
17 18 19 20 21 22 23 24 25 26 27 28 29 30 31 32
33 34 35 36 37 38 39 40 41 42 43 44 45 46 47 48
49 50 51 52 53 54 55 56 57 58 59 60 61 62 63
FILE: sgnsumsmall.dgn

LEVELS DISPLAYED
1 3 4 5 6 7 8 9 10 11 12 13 14 15 16 17 18 19 20 21 22 23 24 25 26 27 28 29 30 31 32 33 34 35 36 37 38 39 40 41 42 43 44 45 46 47 48 49 50 51 52 53 54 55 56 57 58 59 60 61 62 63

ACC:

FILE: sgnsumsmall.dgn

# SUMMARY OF SMALL SIGNS

| PLAN SHEET NO. | SIGN NO. | SIGN TYPE | SIGN TEXT | SIGN DIMENSIONS | REFLECTIVE SHEETING | PLYWOOD TYPE A | ALUMINUM TYPE A | TYPE OF MOUNT | | | | | | | | | | | | | | | MILEPOSTS | |
|---|---|---|---|---|---|---|---|---|---|---|---|---|---|---|---|---|---|---|---|---|---|---|---|---|
| | | | | | | | | RAIL MNT | A EA. | A-1 EA. | B EA. | C EA. | D-1 EA. | D-2 EA. | D-3 EA. | D-4 EA. | D-5 EA. | D-6 EA. | F EA. | F (MOD) EA. | G EA. | 4" TUBE EA. | 6" TUBE EA. | MP EA. | MW EA. |
| | | | CONTROL: 2452-01-036 | | | | | | | | | | | | | | | | | | | | | |
| 52/57 | 6 | R5-1 | DO NOT ENTER | 750 X 750 | C | X | | | X | | | | | | | | | | | | | | | |
| " | 7 | R4-7 | SYM KEEP RIGHT | 600 X 750 | A | X | | | X | | | | | | | | | | | | | | | |
| " | 8 | SR1-2 | YIELD | 1500 X 1500 X 1500 | C | X | | | | | | | | | | | | | X | | | | | |
| " | 9 | W1-9R | LG ARROW BOARD-RT | 2400 X 900 | C | X | | | | | | | | | | X | | | | | | | | |
| " | 10 | R5-1 | DO NOT ENTER | 750 X 750 | C | X | | | X | | | | | | | | | | | | | | | |
| 54/57 | 1 | FR4-7 | SYM KEEP RIGHT | 1200 X 1500 | A | X | | | | | | | | | | | | | X | | | | | |
| " | 2 | SR5-1A | WRONG WAY | 1200 X 900 | C | X | | | | | | | | | | | | | X | | | | | |
| " | 3 | SR5-1A | WRONG WAY | 1200 X 900 | C | X | | | | | | | | | | | | | X | | | | | |
| " | 4 | M3-3 | SOUTH | 600 X 300 | A | | X | | X | | | | | | | | | | | | | | | |
| | | M1-6L | LOOP 1604 | 600 X 600 | A | | X | | | | | | | | | | | | | | | | | |
| " | 5 | SR5-1 | DO NOT ENTER | 1200 X 1200 | C | X | | | | | | | | | | | | | X | | | | | |
| 55/57 | 1 | R2-1 | SPEED LIMIT 70 | 600 X 750 | A | X | | | X | | | | | | | | | | | | | | | |
| " | 2 | SW6-3 | SYM TWO WAY TRAFFIC | 1200 X 1200 | C | X | | | | | | | | | | | | | X | | | | | |
| " | 3 | M3-1 | NORTH | 600 X 300 | A | | X | | X | | | | | | | | | | | | | | | |
| | | M1-6L | LOOP 1604 | 600 X 600 | A | | X | | | | | | | | | | | | | | | | | |
| | | M6-2R | ⇗ | 525 X 375 | A | | X | | | | | | | | | | | | | | | | | |
| " | 5 | W2-6B | HIGHWAY INTERSECTION 1000 FT | 1200 X 1200 | C | X | | | | | | | | | | | | | X | | | | | |
| 56/57 | 2 | R2-1 | SPEED LIMIT 70 | 600 X 750 | A | X | | | X | | | | | | | | | | | | | | | |
| " | 3 | FR4-7 | SYM KEEP RIGHT | 1200 X 1500 | A | X | | | | | | | | | | | | | X | | | | | |
| " | 4 | M2-1 | JCT | 525 X 375 | A | | X | | X | | | | | | | | | | | | | | | |
| | | M1-4A2 | 90 | 600 X 600 | A | | X | | | | | | | | | | | | | | | | | |
| " | 5 | SW3-3 | SYM SIGNAL AHEAD | 1200 X 1200 | C | X | | | | | | | | | | | | | X | | | | | |
| 57/57 | 1 | FR1-2 | YIELD | 1050 X 1050 X 1050 | C | X | | | | | | | | | | | | | X | | | | | |
| " | 2 | SR5-1 | DO NOT ENTER | 1200 X 1200 | C | X | | | | | (ATTACH TO BACK OF NO. 1) | | | | | | | | | | | | | |
| " | 3 | M3-1 | NORTH | 600 X 300 | A | | X | | X | | | | | | | | | | | | | | | |
| | | M1-6L | LOOP 1604 | 600 X 600 | A | | X | | | | | | | | | | | | | | | | | |
| " | 6 | D1-2 | ⇧SAN ANTONIO 13 | 2700 X 600 | C | X | | | | | | | | | | X | | | | | | | | |
| | | | HONDO 27 ⇨ | | | | | | | | | | | | | | | | | | | | | |
| " | 7 | R3-8L | ST ARROW/RT TURN ONLY | 750 X 750 | A | X | | | X | | | | | | | | | | | | | | | |
| | | (SPL) | | | | | | | | | | | | | | | | | | | | | | |
| " | 8 | M3-2 | EAST | 600 X 300 | A | | X | | | | | X | | | | | | | | | | | | |
| | | M1-4A2 | 90 | 600 X 600 | A | | X | | | | | | | | | | | | | | | | | |
| | | M6-3 | ST ARROW | 525 X 375 | A | | X | | | | | | | | | | | | | | | | | |
| | | M3-3 | SOUTH | 600 X 300 | A | | X | | | | | | | | | | | | | | | | | |
| | | M1-6L | LOOP 1604 | 600 X 600 | A | | X | | | | | | | | | | | | | | | | | |
| | | M6-3 | ST ARROW | 525 X 375 | A | | X | | | | | | | | | | | | | | | | | |
| | | M3-4 | WEST | 600 X 300 | A | | X | | | | | | | | | | | | | | | | | |
| | | M1-4A2 | 90 | 600 X 600 | A | | X | | | | | | | | | | | | | | | | | |
| | | M6-1R | RT ARROW | 525 X 375 | A | | X | | | | | | | | | | | | | | | | | |
| " | 9 | FR1-2 | YIELD | 1050 X 1050 X 1050 | C | X | | | | | | | | | | | | | X | | | | | |
| " | 10 | SR5-1 | DO NOT ENTER | 1200 X 1200 | C | X | | | | | (ATTACH TO BACK OF NO. 9) | | | | | | | | | | | | | |

| | | | | | | | | | | | | | | | | | | | | | | | | |
|---|---|---|---|---|---|---|---|---|---|---|---|---|---|---|---|---|---|---|---|---|---|---|---|---|
| CONTROL: 2452-01-036 SHEET TOTALS | | | | 10 | | | 1 | | | | | 2 | | | 11 | | | | | | | | | |
| CONTROL: 2452-01-036 TOTALS | | | | 116 | | 7 | 3 | 8 | | 1 | 7 | | 2 | 66 | | | | | | | | | | |
| CONTROL: 2452-01-037 TOTALS | | | | 73 | | 1 | | 3 | 2 | 2 | 1 | | | 27 | | | | | | | | | | |
| CONTROL: 2452-01-038 TOTALS | | | | 38 | | 3 | 2 | 1 | | | 2 | | 4 | 30 | | | | | | | | | | |
| PROJECT TOTALS | | | | 227 | | 11 | 5 | 12 | 2 | 3 | 10 | | 6 | 127 | | | | | | | | | | |

ALUMINUM SIGN BLANKS (TYPE A)

| Square Meters | Min. Thickness |
|---|---|
| Less than 0.7 | 2.0 mm |
| 0.7 to 1.4 | 2.5 mm |
| Greater than 1.4 | 3.0 mm |

Sign supports shall be located as shown on the plans, except that the Engineer may shift the sign supports, within design guidelines, where necessary to secure a more desirable location or to avoid conflict with utilities. Unless otherwise shown on the plans, the Contractor shall stake and the Engineer will verify all sign support locations.

Reflective sheeting will be designated as:

Type A - Engineer Grade
Type B - Super Engineer Grade
Type C - High Specific Intensity

©2000

Texas Department of Transportation

SMALL SIGN SUMMARY
SHEET 14 OF 14

| DIST. | COUNTY | SHEET NO. |
|---|---|---|
| 6 | BEXAR | 53 |

FEDERAL AID PROJECT NO. NH 2000(704),etc.

| CONT. | SECT. | JOB | HIGHWAY NO. |
|---|---|---|---|
| 2452 | 01 | 036,etc. | LP 1604 |

LEVELS DISPLAYED
1 2 3 4 5 6 7 8 9 10 11 12 13 14 15 16 17 18 19 20 21 22 23 24 25 26 27 28 29 30 31 32 33 34 35 36 37 38 39 40 41 42 43 44 45 46 47 48 49 50 51 52 53 54 55 56 57 58 59 60 61 62 63

ACC:

FILE: sgnsumsmall.dgn

# SUMMARY OF SMALL SIGNS

| PLAN SHEET NO. | SIGN NO. | SIGN TYPE | SIGN TEXT | SIGN DIMENSIONS | REFLECTIVE SHEETING | PLYWOOD TYPE A | ALUMINUM TYPE A | TYPE OF MOUNT: RAIL MNT | A EA. | A-1 EA. | B EA. | C EA. | D-1 EA. | D-2 EA. | D-3 EA. | D-4 EA. | D-5 EA. | D-6 EA. | F EA. | F (MOD) EA. | G EA. | 4" TUBE EA. | 6" TUBE EA. | MILEPOSTS MP EA. | MILEPOSTS MW EA. |
|---|---|---|---|---|---|---|---|---|---|---|---|---|---|---|---|---|---|---|---|---|---|---|---|---|---|
| | | | CONTROL: 2452-01-037 | | | | | | | | | | | | | | | | | | | | | | |
| 19/57 | 11 | R1-1 | STOP | 750 X 750 | C | X | | | X | | | | | | | | | | | | | | | | |
| 21/57 | 1A | M3-1 | NORTH | 600 x 300 | A | | X | | X | | | | | | | | | | | | | | | | |
| | | M1-6L | LOOP 1604 | 600 x 600 | A | | X | | | | | | | | | | | | | | | | | | |
| | 4A | SW3-3 | SYM SIGNAL AHEAD | 1200 x 1200 | C | X | | | | | | | | | | | | X | | | | | | | |
| | 4B | SW3-3 | SYM SIGNAL AHEAD | 1200 x 1200 | C | X | | | | | | | | | | | | X | | | | | | | |
| | 9 | R3-8 | LT TURN ONLY/ST ARROW/ST ARROW | 1200 x 750 | A | X | | | X | | | | | | | | | | | | | | | | |
| | | (SPL) | | | | | | | | | | | | | | | | | | | | | | | |
| 22/57 | 1A | R3-8 | LT TURN ONLY/ST ARROW/ST ARROW | 1200 X 750 | A | X | | | X | | | | | | | | | | | | | | | | |
| | | (SPL) | | | | | | | | | | | | | | | | | | | | | | | |
| | 2A | R3-8 | ST ARROW/ST ARROW/RT TURN ONLY | 1200 X 750 | A | X | | | X | | | | | | | | | | | | | | | | |
| | | (SPL) | | | | | | | | | | | | | | | | | | | | | | | |
| | 5B | R3-7L | LT LANE MUST TURN LT | 750 X 750 | A | X | | | | | | (ATTACH TO NO. 6) | | | | | | | | | | | | | |
| | 13A | FR1-2 | YIELD | 1500 X 1500 X 1500 | C | X | | | | | | | | | | | | X | | | | | | | |
| | 16A | R3-7L | LT LANE MUST TURN LT | 750 X 750 | A | X | | | | | | (ATTACH TO NO. 17) | | | | | | | | | | | | | |
| | 21A | FR1-2 | YIELD | 1500 X 1500 X 1500 | C | X | | | | | | | | | | | | X | | | | | | | |
| 23/57 | 1A | SW3-3 | SYM SIGNAL AHEAD | 1200 X 1200 | C | X | | | | | | | | | | | | X | | | | | | | |
| | 1B | SW3-3 | SYM SIGNAL AHEAD | 1200 X 1200 | C | X | | | | | | | | | | | | X | | | | | | | |
| | | | CONTROL: 2452-01-036 | | | | | | | | | | | | | | | | | | | | | | |
| 28/57 | 10 | SW3-3 | SYM SIGNAL AHEAD | 1200 X 1200 | C | X | | | | | | | | | | | | X | | | | | | | |
| 29/57 | 1A | SR5-1A | WRONG WAY | 1200 X 900 | C | X | | | | | | | | | | | | X | | | | | | | |
| | 1B | SR5-1A | WRONG WAY | 1200 X 900 | C | X | | | | | | | | | | | | X | | | | | | | |
| | 1C | R3-7L | LT LANE MUST TURN LT | 750 X 750 | A | X | | | | | | (ATTACH TO NO. 6) | | | | | | | | | | | | | |
| | 10B | R3-8 | LT TURN ONLY/ST ARROW/ST ARROW | 1200 X 750 | A | X | | | X | | | | | | | | | | | | | | | | |
| | | (SPL) | | | | | | | | | | | | | | | | | | | | | | | |
| | 10C | R3-8 | ST ARROW/ST ARROW/RT TURN ONLY | 1200 X 750 | A | X | | | X | | | | | | | | | | | | | | | | |
| | | (SPL) | | | | | | | | | | | | | | | | | | | | | | | |
| | 14A | R3-7L | LT LANE MUST TURN LT | 750 X 750 | A | X | | | X | | | | | | | | | | | | | | | | |
| | 19A | M3-3 | SOUTH | 600 X 300 | A | | X | | X | | | | | | | | | | | | | | | | |
| | | M1-6L | LOOP 1604 | 600 X 600 | A | | X | | | | | | | | | | | | | | | | | | |
| | | M5-3L | TURNAROUND ARROW | 525 X 375 | A | | X | | | | | | | | | | | | | | | | | | |
| 30/57 | 1A | SW3-3 | SYM SIGNAL AHEAD | 1200 X 1200 | C | X | | | | | | | | | | | | X | | | | | | | |
| | 3A | R3-8 | ST ARROW/ST ARROW/RT TURN ONLY | 1200 X 750 | A | X | | | X | | | | | | | | | | | | | | | | |
| | | (SPL) | | | | | | | | | | | | | | | | | | | | | | | |
| | 8A | R3-8 | LT TURN ONLY/ST ARROW/ST ARROW | 1200 X 750 | A | X | | | X | | | | | | | | | | | | | | | | |
| | | (SPL) | | | | | | | | | | | | | | | | | | | | | | | |
| 34/57 | 15A | R3-8 | LT TURN ONLY/ST ARROW/ST ARROW | 1200 X 750 | A | X | | | X | | | | | | | | | | | | | | | | |
| | | (SPL) | | | | | | | | | | | | | | | | | | | | | | | |
| | 23A | R3-7L | LT LANE MUST TURN LT | 750 X 750 | A | X | | | | | | (ATTACH TO NO. 24A) | | | | | | | | | | | | | |
| | 24A | SR5-1 | DO NOT ENTER | 1200 X 1200 | A | X | | | | | | | | | | | | X | | | | | | | |
| | 28 | R3-7L | LT LANE MUST TURN LT | 750 X 750 | A | X | | | | | | (ATTACH TO NO. 7) | | | | | | | | | | | | | |
| | | | CONTROL: 2452-01-037 SHEET TOTALS | | | | | | 5 | | | | | | | | | 6 | | | | | | | |
| | | | CONTROL: 2452-01-036 SHEET TOTALS | | | | | | 7 | | | | | | | | | 5 | | | | | | | |

ALUMINUM SIGN BLANKS (TYPE A)

| Square Meters | Min. Thickness |
|---|---|
| Less than 0.7 | 2.0 mm |
| 0.7 to 1.4 | 2.5 mm |
| Greater than 1.4 | 3.0 mm |

Sign supports shall be located as shown on the plans, except that the Engineer may shift the sign supports, within design guidelines, where necessary to secure a more desirable location or to avoid conflict with utilities. Unless otherwise shown on the plans, the Contractor shall stake and the Engineer will verify all sign support locations.

Reflective sheeting will be designated as:

Type A - Engineer Grade
Type B - Super Engineer Grade
Type C - High Specific Intensity

CHANGE ORDER NO. 65
- CHANGE ORDER RELATED SIGNING REVISIONS.
- REVISED QUANTITIES

NEW SHEET

CHANGE ORDER 65

©2004 Texas Department of Transportation

SMALL SIGN SUMMARY
SHEET 1 OF 2

| FED. RD. DIV. NO. | FEDERAL AID PROJECT NO. | SHEET NO. |
|---|---|---|
| 6 | NH 2000(704),etc. | 53E |

| STATE | DIST. | COUNTY |
|---|---|---|
| TEXAS | SAT | BEXAR |

| CONT. | SECT. | JOB | HIGHWAY NO. |
|---|---|---|---|
| 2452 | 01 | 036,etc. | LP 1604 |

02-25-04

# SUMMARY OF SMALL SIGNS

| PLAN SHEET NO. | SIGN NO. | SIGN TYPE | SIGN TEXT | SIGN DIMENSIONS | REFLECTIVE SHEETING | PLYWOOD TYPE A | ALUMINUM TYPE A | RAIL MNT | A EA. | A-1 EA. | TYPE OF MOUNT: A | A-1 | B | C | D-1 | D-2 | D-3 | D-4 | D-5 | D-6 | F | F (MOD) | G | 4" TUBE | 6" TUBE | MILEPOSTS MP | MILEPOSTS MW |
|---|---|---|---|---|---|---|---|---|---|---|---|---|---|---|---|---|---|---|---|---|---|---|---|---|---|---|---|
| | | | CONTROL: 2452-01-036 | | | | | | | | | | | | | | | | | | | | | | | | |
| 35/57 | 6A | R3-8 (SPL) | ST ARROW/ST ARROW/RT TURN ONLY | 1200 X 750 | A | X | | | X | | | | | | | | | | | | | | | | | | |
| | 6B | R3-8 (SPL) | LT TURN ONLY/ST ARROW/ST ARROW | 1200 X 750 | A | X | | | X | | | | | | | | | | | | | | | | | | |
| 42/57 | 3 | W2-2 | SYM SIDE RD - RT | 1200 x 1200 | C | X | | | | | | | | | | | | | | | X | | | | | | |
| | 4 | D1-1 | DOVE CANYON ⇨ | 2400 x 300 | C | X | | | | | | | | | X | | | | | | | | | | | | |
| | 5 | R6-1R | ONE WAY | 900 X 300 | A | X | | | X | | | | (ATTACH TO NO. 8) | | | | | | | | | | | | | | |
| | 6 | R3-8R (SPL) | ST ARROW/RT TURN ONLY | 750 X 750 | A | X | | | X | | | | | | | | | | | | X | | | | | | |
| | 7 | R3-7R | RT LANE MUST TURN RT | 750 X 750 | A | X | | | | | | | | | | | | | | | X | | | | | | |
| | 8 | SR5-1 | DO NOT ENTER | 1200 x 1200 | C | X | | | | | | | | | | | | | | | X | | | | | | |
| | 9 | SR5-1 | DO NOT ENTER | 1200 x 1200 | C | X | | | | | | | | | | | | | | | X | | | | | | |
| | 10 | FR1-2 | YIELD | 1500 x 1500 x 1500 | C | X | | | | | | | | | | | | | | | X | | | | | | |
| 47/57 | 3 | SW3-3 | SYM SIGNAL AHEAD | 1200 x 1200 | C | X | | | | | | | | | | | | | | | X | | | | | | |
| | 4 | SW3-3 | SYM SIGNAL AHEAD | 1200 x 1200 | C | X | | | | | | | | | | | | | | | X | | | | | | |
| 48/57 | 2A | R3-7L | LT LANE MUST TURN LT | 750 X 750 | A | X | | | | | | | | (ATTACH TO NO. 3) | | | | | | | | | | | | | |
| | 4A | R1-2 | YIELD | 1050 x 1050 x 1050 | C | X | | | | | | | | | (ATTACH TO NO. 9 ON SHT 48a) | | | | | | | | | | | | |
| | 4B | R1-2 | YIELD | 1050 x 1050 x 1050 | C | X | | | X | | | | | | | | | | | | | | | | | | |
| | 9A | R3-8 (SPL) | LT TURN ONLY/ST ARROW/ST ARROW | 1200 X 750 | A | X | | | X | | | | | | | | | | | | | | | | | | |
| | 9B | R3-8 (SPL) | LT TURN ONLY/ST ARROW/ST ARROW | 1200 X 750 | A | X | | | X | | | | | | | | (ATTACH TO NO. 14) | | | | | | | | | | |
| | 13A | R3-7L | LT LANE MUST TURN LT | 750 X 750 | A | X | | | | | | | | | | | | | | | | | | | | | |
| 49/57 | 1A | SW3-3 | SYM SIGNAL AHEAD | 1200 x 1200 | C | X | | | | | | | | | | | | | | | X | | | | | | |
| | 3A | R3-8 (SPL) | ST ARROW/ST ARROW/RT TURN ONLY | 1200 X 750 | A | X | | | X | | | | | | | | | | | | | | | | | | |
| | 8A | R3-8 (SPL) | LT TURN ONLY/ST ARROW/ST ARROW | 1200 X 750 | A | X | | | X | | | | | | | | | | | | | | | | | | |
| CONTROL: 2452-01-038 SHEET TOTALS | | | | | | | | | 9 | | | | | | 1 | | | | | | 7 | | | | | | |

CHANGE ORDER 65

NEW SHEET

CHANGE ORDER NO. 65
- CHANGE ORDER RELATED SIGNING REVISIONS.
- REVISED QUANTITIES

ALUMINUM SIGN BLANKS (TYPE A)

| Square Meters | Min. Thickness |
|---|---|
| Less than 0.7 | 2.0 mm |
| 0.7 to 1.4 | 2.5 mm |
| Greater than 1.4 | 3.0 mm |

Sign supports shall be located as shown on the plans, except that the Engineer may shift the sign supports, within design guidelines, where necessary to secure a more desirable location or to avoid conflict with utilities. Unless otherwise shown on the plans, the Contractor shall stake and the Engineer will verify all sign support locations.

Reflective sheeting will be designated as:

Type A - Engineer Grade
Type B - Super Engineer Grade
Type C - High Specific Intensity

©2004 Texas Department of Transportation

SMALL SIGN SUMMARY
SHEET 2 OF 2

| FED. RD. DIV. NO. | FEDERAL AID PROJECT NO. | SHEET NO. |
|---|---|---|
| 6 | NH 2000(704), etc. | 53F |
| STATE | DIST. | COUNTY |
| TEXAS | SAT | BEXAR |
| CONT. | SECT. | JOB / HIGHWAY NO. |
| 2452 | 01 | 036, etc. / LP 1604 |

03-25-04

LEVELS DISPL ACC:
1 3 4 5 6 7 8 9 10 11 21 31 41 51 61
17 18 19 20 21 22 23 24 25 26 27 28 29 30 31 32
33 34 45 53 63 73 83 93 04 11 24 34 44 54 64 74 84
48 49 50 61 52 53 54 55 65 75 85 95 06 16 26 36
FILE: sgnsumsmall.dgn

LEVELS DISPLAYED
1 3 4 5 6 7 8 9 10 11 12 13 14 15 16
17 18 19 20 21 22 23 24 25 26 27 28 29 30 31 32
33 34 35 36 37 38 39 40 41 42 43 44 45 46 47 48
49 50 51 52 53 54 55 56 57 58 59 60 61 62 63

ACC:

FILE: sgnsumsmall.dgn

# SUMMARY OF SMALL SIGNS

| PLAN SHEET NO. | SIGN NO. | SIGN TYPE | SIGN TEXT | SIGN DIMENSIONS | REFLECTIVE SHEETING | PLYWOOD TYPE A | ALUMINUM TYPE A | TYPE OF MOUNT | | | | | | | | | | | | | | | MILEPOSTS | |
|---|---|---|---|---|---|---|---|---|---|---|---|---|---|---|---|---|---|---|---|---|---|---|---|---|
| | | | | | | | | RAIL MNT | A EA. | A-1 EA. | B EA. | C EA. | D-1 EA. | D-2 EA. | D-3 EA. | D-4 EA. | D-5 EA. | D-6 EA. | F EA. | F (MOD) EA. | G EA. | 4" TUBE EA. | 6" TUBE EA. | MP EA. | MW EA. |
| | | | CONTROL: 2452-01-036 | | | | | | | | | | | | | | | | | | | | | |
| 52/57 | 6 | R5-1 | DO NOT ENTER | 750 X 750 | C | X | | | X | | | | | | | | | | | | | | | |
| " | 7 | R4-7 | SYM KEEP RIGHT | 600 X 750 | A | X | | | X | | | | | | | | | | | | | | | |
| " | 8 | SR1-2 | YIELD | 1500 X 1500 X 1500 | C | X | | | | | | | | | | | | | X | | | | | |
| " | 9 | W1-9R | LG ARROW BOARD-RT | 2400 X 900 | C | X | | | | | | | | | | X | | | | | | | | |
| " | 10 | R5-1 | DO NOT ENTER | 750 X 750 | C | X | | | X | | | | | | | | | | | | | | | |
| 54/57 | 1 | FR4-7 | SYM KEEP RIGHT | 1200 X 1500 | A | X | | | | | | | | | | | | | X | | | | | |
| " | 2 | SR5-1A | WRONG WAY | 1200 X 900 | C | X | | | | | | | | | | | | | X | | | | | |
| " | 3 | SR5-1A | WRONG WAY | 1200 X 900 | C | X | | | | | | | | | | | | | X | | | | | |
| " | 4 | M3-3 | SOUTH | 600 X 300 | A | | X | | X | | | | | | | | | | | | | | | |
| | | M1-6L | LOOP 1604 | 600 X 600 | A | | X | | | | | | | | | | | | | | | | | |
| " | 5 | SR5-1 | DO NOT ENTER | 1200 X 1200 | C | X | | | | | | | | | | | | | X | | | | | |
| ~~55/57~~ | ~~1~~ | ~~R2-1~~ | ~~SPEED LIMIT 70~~ | ~~600 X 750~~ | ~~A~~ | ~~X~~ | | | ~~X~~ | | | | | | | | | | | | | | | |
| " | 2 | SW6-3 | SYM TWO WAY TRAFFIC | 1200 X 1200 | C | X | | | | | | | | | | | | | X | | | | | |
| " | 3 | M3-1 | NORTH | 600 X 300 | A | | X | | X | | | | | | | | | | | | | | | |
| | | M1-6L | LOOP 1604 | 600 X 600 | A | | X | | | | | | | | | | | | | | | | | |
| | | M6-2R | ⇗ | 525 X 375 | A | | X | | | | | | | | | | | | | | | | | |
| " | 5 | W2-6B | HIGHWAY INTERSECTION 1000 FT | 1200 X 1200 | C | X | | | | | | | | | | | | | X | | | | | |
| 56/57 | 2 | R2-1 | SPEED LIMIT 55 | 600 X 750 | A | X | | | X | | | | | | | | | | | | | | | |
| " | 3 | FR4-7 | SYM KEEP RIGHT | 1200 X 1500 | A | X | | | | | | | | | | | | | X | | | | | |
| " | 4 | M2-1 | JCT | 525 X 375 | A | | X | | X | | | | | | | | | | | | | | | |
| | | M1-4A2 | 90 | 600 X 600 | A | | X | | | | | | | | | | | | | | | | | |
| " | 5 | SW3-3 | SYM SIGNAL AHEAD | 1200 X 1200 | C | X | | | | | | | | | | | | | X | | | | | |
| 57/57 | 1 | FR1-2 | YIELD | 1050 X 1050 X 1050 | C | X | | | | | | | | | | | | | X | | | | | |
| " | 2 | SR5-1 | DO NOT ENTER | 1200 X 1200 | C | X | | | | | (ATTACH TO BACK OF NO. 1) | | | | | | | | | | | | | |
| " | 3 | M3-1 | NORTH | 600 X 300 | A | | X | | X | | | | | | | | | | | | | | | |
| | | M1-6L | LOOP 1604 | 600 X 600 | A | | X | | | | | | | | | | | | | | | | | |
| " | 6 | D1-2 | ⇧SAN ANTONIO 13<br>HONDO 27 ⇨ | 2700 X 600 | C | X | | | | | | | | | | X | | | | | | | | |
| " | 7 | R3-8L | ST ARROW/RT TURN ONLY | 750 X 750 | A | X | | | X | | | | | | | | | | | | | | | |
| | | (SPL) | | | | | | | | | | | | | | | | | | | | | | |
| " | 8 | M3-2 | EAST | 600 X 300 | A | | X | | | | | X | | | | | | | | | | | | |
| | | M1-4A2 | 90 | 600 X 600 | A | | X | | | | | | | | | | | | | | | | | |
| | | M6-3 | ST ARROW | 525 X 375 | A | | X | | | | | | | | | | | | | | | | | |
| | | M3-3 | SOUTH | 600 X 300 | A | | X | | | | | | | | | | | | | | | | | |
| | | M1-6L | LOOP 1604 | 600 X 600 | A | | X | | | | | | | | | | | | | | | | | |
| | | M6-3 | ST ARROW | 525 X 375 | A | | X | | | | | | | | | | | | | | | | | |
| | | M3-4 | WEST | 600 X 300 | A | | X | | | | | | | | | | | | | | | | | |
| | | M1-4A2 | 90 | 600 X 600 | A | | X | | | | | | | | | | | | | | | | | |
| | | M6-1R | RT ARROW | 525 X 375 | A | | X | | | | | | | | | | | | | | | | | |
| " | 9 | FR1-2 | YIELD | 1050 X 1050 X 1050 | C | X | | | | | | | | | | | | | X | | | | | |
| " | 10 | SR5-1 | DO NOT ENTER | 1200 X 1200 | C | X | | | | | (ATTACH TO BACK OF NO. 9) | | | | | | | | | | | | | |
| | | | CONTROL: 2452-01-036 SHEET TOTALS | | | | | | 9 | | | 1 | | | | 2 | | | 11 | | | | | |

ALUMINUM SIGN BLANKS (TYPE A)

| Square Meters | Min. Thickness |
|---|---|
| Less than 0.7 | 2.0 mm |
| 0.7 to 1.4 | 2.5 mm |
| Greater than 1.4 | 3.0 mm |

Sign supports shall be located as shown on the plans, except that the Engineer may shift the sign supports, within design guidelines, where necessary to secure a more desirable location or to avoid conflict with utilities. Unless otherwise shown on the plans, the Contractor shall stake and the Engineer will verify all sign support locations.

Reflective sheeting will be designated as:

Type A - Engineer Grade
Type B - Super Engineer Grade
Type C - High Specific Intensity

CHANGE ORDER NO. 65
- CHANGE ORDER RELATED SIGNING REVISIONS.
- REVISED QUANTITIES

REVISED SHEET

CHANGE ORDER 65

©2004 Texas Department of Transportation

SMALL SIGN SUMMARY
SHEET 14 OF 14

| FED. RD. DIV. NO. | FEDERAL AID PROJECT NO. | SHEET NO. |
|---|---|---|
| 6 | NH 2000(704),etc. | 53G |

| STATE | DIST. | COUNTY |
|---|---|---|
| TEXAS | SAT | BEXAR |

| CONT. | SECT. | JOB | HIGHWAY NO. |
|---|---|---|---|
| 2452 | 01 | 036,etc. | LP 1604 |

02-25-04

T:\AO\Design\lp1604fm471-90\PD*Phase2*change*order*mylars\submital\plansheets\summaries\sgnsumsmall.dgn
8/4/2006

LEVELS DISPLAYED
ACC:
FILE: sgnsumsmall.dgn

# SUMMARY OF SMALL SIGNS

| PLAN SHEET NO. | SIGN NO. | SIGN TYPE | SIGN TEXT | SIGN DIMENSIONS | REFLECTIVE SHEETING | PLYWOOD TYPE A | ALUMINUM TYPE A | TYPE OF MOUNT | | | | | | | | | | | | | | | MILEPOSTS | |
|---|---|---|---|---|---|---|---|---|---|---|---|---|---|---|---|---|---|---|---|---|---|---|---|---|
| | | | | | | | | RAIL MNT | A EA. | A-1 EA. | B EA. | C EA. | D-1 EA. | D-2 EA. | D-3 EA. | D-4 EA. | D-5 EA. | D-6 EA. | F EA. | F (MOD) EA. | G EA. | 4" TUBE EA. | 6" TUBE EA. | MP EA. | MW EA. |
| | | | CONTROL: 2452-01-037 | | | | | | | | | | | | | | | | | | | | | |
| 20/57 | | | | | | | | | | | | | | | | | | | | | | | | |
| " | 3 | R3-7R | RT LANE MUST TURN RT | 750 X 750 | A | X | | | X | | | | | | | | | | | | | | | |
| " | 4 | R5-1 | DO NOT ENTER | 750 X 750 | C | X | | | X | | | | | | | | | | | | | | | |
| " | 5 | R5-1 | DO NOT ENTER | 750 X 750 | C | X | | | X | | | | | | | | | | | | | | | |
| " | 6 | SR1-2 | YIELD | 1050 X 1050 X 1050 | C | X | | | X | | | | | | | | | | | | | | | |
| " | 9 | W2-2 | SYM SIDE RD - RT | 750 X 750 | C | X | | | X | | | | | | | | | | | | | | | |
| " | 10 | R5-1 | DO NOT ENTER | 750 X 750 | C | X | | | X | | | | | | | | | | | | | | | |
| " | 11 | R5-1 | DO NOT ENTER | 750 X 750 | C | X | | | X | | | | | | | | | | | | | | | |
| " | 17 | R6-1R | ONE WAY | 900 X 300 | A | X | | | X | | | | | | | | | | | | | | | |
| " | 18 | R6-1R | ONE WAY | 900 X 300 | A | X | | | X | | | | | | | | | | | | | | | |
| " | ~~20~~ | ~~W2-2~~ | ~~SYM SIDE RD - LT~~ | ~~750 X 750~~ | ~~C~~ | ~~X~~ | | | ~~X~~ | | | ORIGINAL SIGN ELIMINATED AND REPLACED WITH SIGN BELOW | | | | | | | | | | | | |
| " | 20 | W2-1 | SYM CROSS RD | 750 X 750 | C | X | | | X | | | (SIGN REPLACES ORIGINALLY CALLED FOR W2-2) | | | | | | | | | | | | |
| 21/57 | | | | | | | | | | | | | | | | | | | | | | | | |
| 65 | 1A | M3-1 | NORTH | 600 X 300 | A | | X | | X | | | SIGN DATA MISSING FROM C.O. #65 SUMMARY. | | | | | | | | | | | | |
| | | W1-6L | LOOP 1604 | 600 X 600 | A | | X | | | | | | | | | | | | | | | | | |
| " | 4 | R3-8R (SPL) | ST ARROW/RT TURN ONLY | 750/750 | A | X | | | X | | | | | | | | | | | | | | | |
| 65 | 4A | SW3-3 | SYM SIGNAL AHEAD | 1200 X 1200 | C | X | | | | | | | | | | | | | X | | | | | |
| 65 | 4B | SW3-3 | SYM SIGNAL AHEAD | 1200 X 1200 | C | X | | | | | | | | | | | | | X | | | | | |
| " | 5 | D1-1 | WISEMAN BLVD. | 2400 X 300 | C | X | | | | | | | X | | | | | | | | | | | |
| 65 | 8 | M3-1 | NORTH | 600 X 300 | A | | X | | X | | | | | | | | | | | | | | | |
| | | M1-6L | LOOP 1604 | 600 X 600 | A | | X | | | | | | | | | | | | | | | | | |
| | | M5-3L | TURNAROUND ARROW | 525 X 375 | A | | X | | | | | | | | | | | | | | | | | |
| 65 | 9 | R3-8 (SPL) | ST ARROW/ST ARROW/LT TURN ONLY | 1200 X 750 | A | X | | | X | | | | | | | | | | | | | | | |
| " | 9A | R3-8 (SPL) | ST ARROW/ST ARROW/RT TURN ONLY | 1200 X 750 | A | X | | | X | | | | | | | | | | | | | | | |
| 22/57 | 1 | M3-3 | SOUTH | 600 X 300 | A | | X | | X | | | | | | | | | | | | | | | |
| | | M1-6L | LOOP 1604 | 600 X 600 | A | | X | | | | | | | | | | | | | | | | | |
| | | M5-3L | TURNAROUND ARROW | 525 X 375 | A | | X | | | | | | | | | | | | | | | | | |
| 65 | 1A | R3-8 (SPL) | ST ARROW/ST ARROW/LT TURN ONLY | 1200 X 750 | A | X | | | X | | | | | | | | | | | | | | | |
| 65 | ~~2~~ | ~~R3-8 (SPL)~~ | ~~ST ARROW/RT TURN ONLY~~ | ~~750 X 750~~ | ~~A~~ | ~~X~~ | | | ~~X~~ | | | ORIGINAL SIGN(S) ELIMINATED AS PART OF C.O. #65 | | | | | | | | | | | | |
| " | 2A | R3-8 (SPL) | ST ARROW/ST ARROW/RT TURN ONLY | 1200 X 750 | A | X | | | X | | | | | | | | | | | | | | | |
| " | 3 | SR5-1A | WRONG WAY | 1200 X 900 | C | X | | | | | | | | | | | | | X | | | | | |
| " | 4 | SR5-1A | WRONG WAY | 1200 X 900 | C | X | | | | | | | | | | | | | X | | | | | |
| | 5B | R3-7R | RIGHT LANE MUST TURN RIGHT | 750 X 750 | A | X | | | X | | | | | | | | | | | | | | | |
| 65 | 5B | R3-7L | LEFT LANE MUST TURN LEFT | 750 X 750 | A | X | | | X | | | | | | | | | | | | | | | |
| " | 6 | SR5-1 | DO NOT ENTER | 1200 X 1200 | C | X | | | X | | | | | | | | | | | | | | | |
| " | 7 | SR5-1 | DO NOT ENTER | 1200 X 1200 | C | X | | | X | | | | | | | | | | | | | | | |
| | | | **CONTROL: 2452-01-037 SHEET TOTALS** | | | | | | 22 | | | | 1 | | | | | | 4 | | | | | |

(#) REFERENCES CHANGES MADE AS PART OF CHANGE ORDER.

ALUMINUM SIGN BLANKS (TYPE A)

| Square Meters | Min. Thickness |
|---|---|
| Less than 0.7 | 2.0 mm |
| 0.7 to 1.4 | 2.5 mm |
| Greater than 1.4 | 3.0 mm |

Sign supports shall be located as shown on the plans, except that the Engineer may shift the sign supports, within design guidelines, where necessary to secure a more desirable location or to avoid conflict with utilities. Unless otherwise shown on the plans, the Contractor shall stake and the Engineer will verify all sign support locations.

Reflective sheeting will be designated as:

Type A - Engineer Grade
Type B - Super Engineer Grade
Type C - High Specific Intensity

CHANGE ORDER NO. 139

- UPDATED SUMMARY REFLECTS ALL RELATIVE C.O.'S
- REVISED/ADDED/DELETED SIGNS.
- NEW SHEET /QUANTITIES

©2000

Texas Department of Transportation

SMALL SIGN SUMMARY SUPPLEMENTAL

SHEET 1 OF 11

| FED. RD. DIV. NO. | FEDERAL AID PROJECT NO. | SHEET NO. |
|---|---|---|
| 6 | NH 2000(704),etc. | 53a |

| STATE | DIST. | COUNTY |
|---|---|---|
| TEXAS | SAT | BEXAR |

| CONT. | SECT. | JOB | HIGHWAY NO. |
|---|---|---|---|
| 2452 | 01 | 036,etc. | LP 1604 |

7-31-06

T:\AO\Design\lp1604fm471-90\PD*Phase2*change*order*mylars\submittal\plansheets\summaries\sgnsumsmall.dgn
8/4/2006
LEVELS DISPLAYED
ACC:
FILE: sgnsumsmall.dgn

# SUMMARY OF SMALL SIGNS

| PLAN SHEET NO. | SIGN NO. | SIGN TYPE | SIGN TEXT<br>SYM CROSS RD | SIGN DIMENSIONS | REFLECTIVE SHEETING | PLYWOOD TYPE A | ALUMINUM TYPE A | RAIL MNT | A EA. | A-1 EA. | B EA. | C EA. | D-1 EA. | D-2 EA. | D-3 EA. | D-4 EA. | D-5 EA. | D-6 EA. | F EA. | F (MOD) EA. | G EA. | 4" TUBE EA. | 6" TUBE EA. | MILEPOSTS MP EA. | MILEPOSTS MW EA. |
|---|---|---|---|---|---|---|---|---|---|---|---|---|---|---|---|---|---|---|---|---|---|---|---|---|---|
| | | | CONTROL: 2452-01-037 | | | | | | | | | | | | | | | | | | | | | | |
| 22/57 | | | | | | | | | | | | | | | | | | | | | | | | | |
| " | 8 | FR1-2 | YIELD | 1500 X 1500 X 1500 | C | X | | | | | | | | | | | | | X | | | | | | |
| " | 9 | R4-7 | SYM KEEP RIGHT | 600 X 750 | A | X | | | X | | | | | | | | | | | | | | | | |
| " | 10 | M3-3 | SOUTH | 600 X 300 | A | | X | | | | X | | | | | | | | X | | | | | | |
| | | M1-6L | LOOP 1604 | 600 X 600 | A | | X | | | | | | | | | | | | X | | | | | | |
| | | M6-3 | ST ARROW | 525 X 375 | A | | X | | | | | | | | | | | | X | | | | | | |
| | | M3-1 | NORTH | 600 X 300 | A | | X | | | | | | | | | | | | X | | | | | | |
| | | M1-6R | LOOP 1604 | 600 X 600 | A | | X | | | | | | | | | | | | X | | | | | | |
| | | M6-1R | RT ARROW | 525 X 375 | A | | X | | | | | | | | | | | | X | | | | | | |
| " | 12 | R6-1R | ONE WAY | 900 X 300 | A | X | | | | X | | | | | | | | | | | | | | | |
| | | R6-1L | ONE WAY | 900 X 300 | A | X | | | | | | | | | | | | | | | | | | | |
| (MOUNTED BACK TO BACK) | | | | | | | | | | | | | | | | | | | | | | | | | |
| " | 13 | FR1-2 | YIELD | 1500 X 1500 X 1500 | C | X | | | | | | | | | | | | | X | | | | | | |
| 65 | 13A | FR1-2 | YIELD | 1500 X 1500 X 1500 | C | X | | | | | | | | | | | | | X | | | | | | |
| " | 14 | SR5-1A | WRONG WAY | 1200 X 900 | C | X | | | | | | | | | | | | | X | | | | | | |
| " | 15 | SR5-1A | WRONG WAY | 1200 X 900 | C | X | | | | | | | | | | | | | X | | | | | | |
| " | ~~15A~~ | ~~R3-7R~~ | ~~RIGHT LANE MUST TURN RIGHT~~ | ~~750 X 750~~ | ~~A~~ | ~~X~~ | | | ~~X~~ | | | | | | | | | | | | | | | | |
| 65 | 15A | R3-7R | RIGHT LANE MUST TURN RIGHT | 750 X 750 | A | X | | | X | | | | | | | | | | | | | | | | |
| " | 16A | R3-7L | LEFT LANE MUST TURN LEFT | 750 X 750 | A | X | | | X | | | | | | | | | | | | | | | | |
| (MOUNTED BACK TO BACK) | | | | | | | | | | | | | | | | | | | | | | | | | |
| " | ~~16B~~ | FR1-2 | YIELD | ~~1500 X 1500 X 1500~~ | C | X | | | | | | | | | | | | | X | | | | | | |
| " | 17 | SR5-1 | DO NOT ENTER | 1200 X 1200 | C | X | | | | | | | | | | | | | | | | | | | |
| " | 18 | SR5-1 | DO NOT ENTER | 1200 X 1200 | C | X | | | | | | | | | | | | | | | | | | | |
| " | ~~19~~ | ~~M3-3~~ | ~~SOUTH~~ | ~~600 X 300~~ | ~~A~~ | ~~X~~ | | | ~~X~~ | | | | | | | | | | | | | | | | |
| | | ~~M1-6L~~ | ~~LOOP 1604~~ | ~~600 X 600~~ | ~~A~~ | ~~X~~ | | | | | | | | | | | | | | | | | | | |
| | | ~~M6-1R~~ | ~~LT ARROW~~ | ~~525 X 375~~ | ~~A~~ | ~~X~~ | | | | | | | | | | | | | | | | | | | |
| " | 19 | M3-1 | NORTH | 600 X 300 | A | | X | | | | X | | | | | | | | X | | | | | | |
| | | M1-6L | LOOP 1604 | 600 X 600 | A | | X | | | | | | | | | | | | X | | | | | | |
| | | M6-3 | ST ARROW | 525 X 375 | A | | X | | | | | | | | | | | | X | | | | | | |
| | | M3-3 | SOUTH | 600 X 300 | A | | X | | | | | | | | | | | | X | | | | | | |
| | | M1-6L | LOOP 1604 | 600 X 600 | A | | X | | | | | | | | | | | | X | | | | | | |
| | | M6-1R | RT ARROW | 525 X 375 | A | | X | | | | | | | | | | | | X | | | | | | |
| " | 20 | W1-9L | LG ARROW BOARD LT | ~~2400 X 900~~ | ~~C~~ | ~~X~~ | | | | | | | | | | | | | | | | | | | |
| " | 21 | R6-1L | ONE WAY | ~~900 X 300~~ | ~~A~~ | ~~X~~ | | | | | | | | | | | | | | | | | | | |
| 65 | 21A | FR1-2 | YIELD | 1500 X 1500 X 1500 | C | X | | | | | | | | | | | | | X | | | | | | |
| " | 21C | FR1-2 | YIELD | ~~1500 X 1500 X 1500~~ | C | X | | | | | | | | | | | | | X | | | | | | |
| 65 | 22 | FR1-1 | STOP | ~~1200 X 1200~~ | C | X | | | | | | | | | | | | | | | | | | | |
| " | 23 | R6-1R | ONE WAY | 900 X 300 | A | X | | | X | | | | | | | | | | | | | | | | |
| 22A/57 | | | | | | | | | | | | | | | | | | | | | | | | | |
| " | 1 | R6-1R | ONE WAY | 900 X 300 | A | X | | | X | | | | | | | | | | | | | | | | |
| | | R6-1L | ONE WAY | 900 X 300 | A | X | | | | | | | | | | | | | | | | | | | |
| 65 | 2 | FR1-1 | STOP | 1200 X 1200 | C | X | | | | | | | | | | | | | | | | | | | |
| 65 | 3 | FR1-2 | YIELD | 1500 X 1500 X 1500 | C | X | | | | | | | | | | | | | | | | | | | |
| 65 | 6 | R3-8 (SPL) | LT TURN ONLY/LT TURN ONLY | 750 X 750 | A | X | | | X | | | | | | | | | | | | | | | | |
| 65 | 7 | R3-8 (SPL) | LT TURN ONLY/LT TURN ONLY | 750 X 750 | A | X | | | X | | | | | | | | | | | | | | | | |
| | | | | | | | | | 6 | 2 | 10 | | | | | | | | | | | | | | |

CONTROL: 2452-01-037 SHEET TOTALS

REFERENCES CHANGES MADE AS PART OF CHANGE ORDER.

CHANGE ORDER NO. 139

- UPDATED SUMMARY REFLECTS ALL RELATIVE C.O.'S
- REVISED/ADDED/DELETED SIGNS.
- NEW SHEET /QUANTITIES

ALUMINUM SIGN BLANKS (TYPE A)

| Square Meters | Min. Thickness |
|---|---|
| Less than 0.7 | 2.0 mm |
| 0.7 to 1.4 | 2.5 mm |
| Greater than 1.4 | 3.0 mm |

Sign supports shall be located as shown on the plans, except that the Engineer may shift the sign supports, within design guidelines, where necessary to secure a more desirable location or to avoid conflict with utilities. Unless otherwise shown on the plans, the Contractor shall stake and the Engineer will verify all sign support locations.

Reflective sheeting will be designated as:

Type A - Engineer Grade
Type B - Super Engineer Grade
Type C - High Specific Intensity

©2000 Texas Department of Transportation

SMALL SIGN SUMMARY SUPPLEMENTAL

SHEET 2 OF 11

| FED. RD. DIV. NO. | FEDERAL AID PROJECT NO. | | SHEET NO. |
|---|---|---|---|
| 6 | NH 2000(704), etc. | | 53b |
| STATE | DIST. | COUNTY | |
| TEXAS | SAT | BEXAR | |
| CONT. | SECT. | JOB | HIGHWAY NO. |
| 2452 | 01 | 036, etc. | LP 1604 |

T:\AO\Design\lp1604fm471-90\PD*Phase2*change*order*mylars\submittal\plansheets\summaries\sgnsumsmall.dgn
8/4/2006

LEVELS DISPL
1 3 4 5 6 7 8 9 10 11 12 13 14 15 16
17 18 19 20 21 22 23 24 25 26 27 28 29 30 31 32
33 34 35 36 37 38 39 40 41 42 43 44 45 46 47 48
49 50 51 52 53 54 55 56 57 58 59 60 61 62 63

ACC:

FILE: sgnsumsmall.dgn

# SUMMARY OF SMALL SIGNS

| PLAN SHEET NO. | SIGN NO. | SIGN TYPE | SIGN TEXT | SIGN DIMENSIONS | REFLECTIVE SHEETING | PLYWOOD TYPE A | ALUMINUM TYPE A | TYPE OF MOUNT: RAIL MNT | A EA. | A-1 EA. | B EA. | C EA. | D-1 EA. | D-2 EA. | D-3 EA. | D-4 EA. | D-5 EA. | D-6 EA. | F EA. | F (MOD) EA. | G EA. | 4" TUBE EA. | 6" TUBE EA. | MILEPOSTS MP EA. | MILEPOSTS MW EA. |
|---|---|---|---|---|---|---|---|---|---|---|---|---|---|---|---|---|---|---|---|---|---|---|---|---|---|
| | | | CONTROL: 2452-01-037 | | | | | | | | | | | | | | | | | | | | | | |
| 22A/57 | | | | | | | | | | | | | | | | | | | | | | | | | |
| " | 7A | R6-1R | ONE WAY | 900 X 300 | A | X | | | X | | | (MOUNTED BACK TO BACK) | | | | | | | | | | | | | |
| | | R6-1L | ONE WAY | 900 X 300 | A | X | | | | | | | | | | | | | | | | | | | |
| 65 | ~~8~~ | ~~FR1-1~~ | ~~STOP~~ | ~~1200 X 1200~~ | ~~C~~ | ~~X~~ | | | | | | | | | | | | | X | ORIGINALLY CALLED FOR SIGN(S) WAS ELIMINATED AS PART OF C.O. #65 | | | | | |
| 65 | ~~9~~ | ~~FR1-2~~ | ~~YIELD~~ | ~~1500 X 1500 X 1500~~ | ~~C~~ | ~~X~~ | | | | | | | | | | | | | X | | | | | | |
| " | 9A | M3-1 | NORTH | 600 X 300 | A | | X | | X | | | | | | | | | | | | | | | | |
| | | M1-6L | LOOP 1604 | 600 X 600 | A | | X | | | | | | | | | | | | | | | | | | |
| | | M6-1L | LT ARROW | 525 X 375 | A | | X | | | | | | | | | | | | | | | | | | |
| 23/57 | | | | | | | | | | | | | | | | | | | | | | | | | |
| " | 1 | R6-1R | ONE WAY | 900 X 300 | A | X | | | X | | | | | | | | | | | | | | | | |
| 65 | 1A | SW3-3 | SYM SIGNAL AHEAD | 1200 X 1200 | C | X | | | | | | | | | | | | | X | | | | | | |
| 65 | 1B | SW3-3 | SYM SIGNAL AHEAD | 1200 X 1200 | C | X | | | | | | | | | | | | | X | | | | | | |
| " | 2 | W2-1 | SYM CROSS ROAD | 750 X 750 | C | X | | | X | | | | | | | | | | | | | | | | |
| " | 3 | D1-2 | WISEMAN BLVD ⇧ SEA WORLD | 1800 X 600 | C | X | | | | | | | | X | | | | | | | | | | | |
| " | 4 | M3-3 | SOUTH | 600 X 300 | A | | X | | X | | | | | | | | | | | | | | | | |
| | | M1-6L | LOOP 1604 | 600 X 300 | A | | X | | | | | | | | | | | | | | | | | | |
| 65 | ~~5~~ | ~~R2-1~~ | ~~SPEED LIMIT 70~~ | ~~600 X 750~~ | ~~A~~ | ~~X~~ | | | ~~X~~ | | | ORIGINALLY CALLED FOR SIGN(S) ELIMINATED AS PART OF C.O. #65 | | | | | | | | | | | | | |
| " | 6 | R6-1R | ONE WAY | 900 X 300 | A | X | | | X | | | | | | | | | | | | | | | | |
| | | | CONTROL: 2452-01-036 | | | | | | | | | | | | | | | | | | | | | | |
| 28/57 | | | | | | | | | | | | | | | | | | | | | | | | | |
| " | 2 | W2-2 | SYM SIDE RD - RT | 750 X 750 | C | X | | | X | | | | | | | | | | | | | | | | |
| " | 3 | D1-1 | KILMARNOCH LN ⇨ | 2400 X 300 | C | X | | | | | | | X | | | | | | | | | | | | |
| " | 4 | SR5-1 | DO NOT ENTER | 1200 X 1200 | C | X | | | | | | | | | | | | | X | | | | | | |
| " | 5 | W2-1 | SYM CROSS ROAD | 750 X 750 | C | X | | | X | | | | | | | | | | | | | | | | |
| " | 6 | SW3-3 | SYM SIGNAL AHEAD | 1200 X 1200 | C | X | | | | | | | | | | | | | X | | | | | | |
| " | 7 | D1-1 | MILITARY DR | 1500 X 300 | C | X | | | | | | | X | | | | | | | | | | | | |
| 65 | ~~8~~ | ~~R3-8L~~ | ~~LT TURN ONLY/LT TURN OR ST~~ | ~~750 X 750~~ | ~~A~~ | ~~X~~ | | | ~~X~~ | | | ORIGINALLY CALLED FOR SIGN(S) ELIMINATED AS PART OF C.O. # 65 | | | | | | | | | | | | | |
| 65 | ~~9~~ | ~~R3-8 (SPL)~~ | ~~ST ARROW/RT TURN ONLY~~ | ~~750 X 750~~ | ~~A~~ | ~~X~~ | | | ~~X~~ | | | | | | | | | | | | | | | | |
| 65 | 10 | SW3-3 | SYM SIGNAL AHEAD | 1200 X 1200 | C | X | | | | | | | | | | | | | X | | | | | | |
| 29/57 | | | | | | | | | | | | | | | | | | | | | | | | | |
| 65 | 1A | SR5-1A | WRONG WAY | 1200 X 900 | C | X | | | | | | | | | | | | | X | | | | | | |
| 65 | 1B | SR5-1A | WRONG WAY | 1200 X 900 | C | X | | | | | | | | | | | | | X | | | | | | |
| 65 | 1C | R3-7L | LT LANE MUST TURN LT | 750 X 750 | A | X | | | X | | | | | | | | | | | | | | | | |
| " | 2 | R3-7R | RT TURN MUST TURN RT | 750 X 750 | A | X | | | X | | | | | | | | | | | | | | | | |
| " | 3 | FR1-2 | YIELD | 1500 X 1500 X 1500 | C | X | | | | | | | | | | | | | X | (MOUNTED BACK TO BACK) | | | | | |
| " | 4 | SR5-1 | DO NOT ENTER | 1200 X 1200 | C | X | | | | | | | | | | | | | | | | | | | |
| " | 5 | SR5-1 | DO NOT ENTER | 1200 X 1200 | C | X | | | | | | | | | | | | | X | | | | | | |
| | | | **CONTROL: 2452-01-037 SHEET TOTALS** | | | | | | 6 | | | | | 1 | | | | | 2 | | | | | | |
| | | | **CONTROL: 2452-01-036 SHEET TOTALS** | | | | | | 4 | | | | 2 | | | | | | 7 | | | | | | |

# REFERENCES CHANGES MADE AS PART OF CHANGE ORDER.

CHANGE ORDER NO. 139

- UPDATED SUMMARY REFLECTS ALL RELATIVE C.O.'S
- REVISED/ADDED/DELETED SIGNS.
- NEW SHEET /QUANTITIES

ALUMINUM SIGN BLANKS (TYPE A)

| Square Meters | Min. Thickness |
|---|---|
| Less than 0.7 | 2.0 mm |
| 0.7 to 1.4 | 2.5 mm |
| Greater than 1.4 | 3.0 mm |

Sign supports shall be located as shown on the plans, except that the Engineer may shift the sign supports, within design guidelines, where necessary to secure a more desirable location or to avoid conflict with utilities. Unless otherwise shown on the plans, the Contractor shall stake and the Engineer will verify all sign support locations.

Reflective sheeting will be designated as:

Type A - Engineer Grade
Type B - Super Engineer Grade
Type C - High Specific Intensity

©2000

Texas Department of Transportation

SMALL SIGN SUMMARY SUPPLEMENTAL

SHEET 3 OF 11

| FED. RD. DIV. NO. | FEDERAL AID PROJECT NO. | SHEET NO. |
|---|---|---|
| 6 | NH 2000(704),etc. | 52c |

| STATE | DIST. | COUNTY | HIGHWAY NO. |
|---|---|---|---|
| TEXAS | SAT | BEXAR | LP 1604 |

| CONT. | SECT. | JOB |
|---|---|---|
| 2452 | 01 | 036,etc. |

7-31-06

T:\AO\Design\p1604fm471-90\PD*Phase2*change*order*mylars\submittal\plansheets\summaries\sgnsumsmall.dgn
8/4/2006
LEVELS DISPL
1 3 4 5 6 7 8 9 10 11 21 31 41 51 61
7 81 91 101 121 131 141 151 161 171 181
2 22 23 24 25 26 27 28 29 30 31 32
33 34 35 36 37 38 39 40 41 42 43 44 45 46 47 48
49 50 51 52 53 54 55 56 57 58 59 60 61 62 63
ACC:
FILE: sgnsumsmall.dgn

# SUMMARY OF SMALL SIGNS

| PLAN SHEET NO. | SIGN NO. | SIGN TYPE | SIGN TEXT | SIGN DIMENSIONS | REFLECTIVE SHEETING | PLYWOOD TYPE A | ALUMINUM TYPE A | RAIL MNT | A EA. | A-1 EA. | B EA. | C EA. | D-1 EA. | D-2 EA. | D-3 EA. | D-4 EA. | D-5 EA. | D-6 EA. | F EA. | F (MOD) EA. | G EA. | 4" TUBE EA. | 6" TUBE EA. | MILEPOSTS MP EA. | MILEPOSTS MW EA. |
|---|---|---|---|---|---|---|---|---|---|---|---|---|---|---|---|---|---|---|---|---|---|---|---|---|---|
| | | | CONTROL: 2452-01-036 | | | | | | | | | | | | | | | | | | | | | | |
| 29/57 | | | | | | | | | | | | | | | | | | | | | | | | | |
| " | 6 | SR5-1 | DO NOT ENTER | 1200 X 1200 | C | X | | | | | | | | | | | | | X | | | | | | |
| " | 7 | M3-3 | SOUTH | 600 X 300 | A | | X | | | | | | | | | | | | | | | | | | |
| | | M1-6L | LOOP 1604 | 600 X 600 | A | | X | | | | | | | | | | | | | | | | | | |
| | | M6-3 | ST ARROW | 525 X 375 | A | | X | | | | | | | | | | | | | | | | | | |
| | | M3-1 | NORTH | 600 X 300 | A | | X | | | | | | | | | | | | | | | | | | |
| | | M1-6L | LOOP 1604 | 600 X 600 | A | | X | | | | | | | | | | | | | | | | | | |
| | | M6-1R | RT ARROW | 525 X 375 | A | | X | | | | | | | | | | | | | | | | | | |
| " | 8 | FR1-2 | YIELD | 1500 X 1500 X 1500 | C | X | | | | | | | | | | | | | X | | | | | | |
| " | 9 | FR1-2 | YIELD | 1500 X 1500 X 1500 | C | X | | | | | | | | | | | | | | | | | | | |
| 65 | 10B | R3-8 (SPL) | LT TURN ONLY/ST ARROW/ST ARROW | 1200 X 750 | A | X | | | X | | | | | | | | | | | | | | | | |
| 65 | 10C | R3-8 (SPL) | ST ARROW/ST ARROW/RT TURN ONLY | 1200 X 750 | A | X | | | X | | | | | | | | | | | | | | | | |
| " | 11 | M3-1 | NORTH | 600 X 300 | A | | X | | | X | | | | | | | | | | | | | | | |
| | | M1-6L | LOOP 1604 | 600 X 600 | A | | X | | | X | | | | | | | | | | | | | | | |
| | | M5-3L | TURNAROUND ARROW | 525 X 375 | A | | X | | | X | | | | | | | | | | | | | | | |
| " | 12 | SR5-1A | WRONG WAY | 1200 X 900 | C | X | | | | | | | | | | | | | | | | | | | |
| " | 13 | SR5-1A | WRONG WAY | 1200 X 900 | C | X | | | | | | | | | | | | | | | | | | | |
| " | 14 | R3-7R | RT LANE MUST TURN RT | 750 X 750 | A | X | | | X | | | | | | | | | | | | | | | | |
| 65 | 14A | R3-7L | LT LANE MUST TURN LEFT | 750 X 750 | A | X | | | X | | | | | | | | | | | | | | | | |
| " | 15 | FR1-2 | YIELD | 1500 X 1500 X 1500 | C | X | | | | | | | | | | | | | | | | | | | |
| " | 16 | SR5-1 | DO NOT ENTER | 1200 X 1200 | C | X | | | | | | | | | | | | | | | | | | | |
| " | 17 | M3-1 | NORTH | 600 X 300 | A | | X | | | X | | | | | | | | | | | | | | | |
| | | M1-6L | LOOP 1604 | 600 X 600 | A | | X | | | X | | | | | | | | | | | | | | | |
| | | M6-3 | ST ARROW | 525 X 375 | A | | X | | | X | | | | | | | | | | | | | | | |
| | | M3-3 | SOUTH | 600 X 300 | A | | X | | | X | | | | | | | | | | | | | | | |
| | | M1-6L | LOOP 1604 | 600 X 600 | A | | X | | | X | | | | | | | | | | | | | | | |
| | | M6-1R | RT ARROW | 525 X 375 | A | | X | | | X | | | | | | | | | | | | | | | |
| " | 18 | FR1-2 | YIELD | 1500 X 1500 X 1500 | C | X | | | | | | | | | | | | | | | | | | | |
| " | 19 | FR1-2 | YIELD | 1500 X 1500 X 1500 | C | X | | | | | | | | | | | | | | | | | | | |
| 65 | 19A | M3-3 | SOUTH | 600 X 300 | A | | X | | | X | | | | | | | | | | | | | | | |
| | | M1-6L | LOOP 1604 | 600 X 600 | A | | X | | | X | | | | | | | | | | | | | | | |
| | | M5-3L | TURN AROUND ARROW | 525 X 375 | A | | X | | | X | | | | | | | | | | | | | | | |
| 30/57 | | | | | | | | | | | | | | | | | | | | | | | | | |
| " | 1 | SW3-3 | SYM SIGNAL AHEAD | 1200 X 1200 | C | X | | | | | | | | | | | | | X | | | | | | |
| 65 | 1A | SW3-3 | SYM SIGNAL AHEAD | 1200 X 1200 | C | X | | | | | | | | | | | | | | | | | | | |
| " | 2 | D1-1 | MILITARY DR | 1500 X 300 | C | X | | | | | | | | | | | | | | | | | | | |
| 65 | 3 | R3-8R (SPL) | ST ARROW/RT TURN ONLY | 750 X 750 | A | X | | | X | | | | | | | | | | | | | | | | |
| 65 | 3A | R3-8 (SPL) | ST ARROW/ST ARROW/RT TURN ONLY | 1200 X 750 | A | X | | | X | | | | | | | | | | | | | | | | |
| 65 | 4 | M3-3 | SOUTH | 600 X 300 | A | | X | | X | | | | | | | | | | | | | | | | |
| | | M1-6L | LOOP 1604 | 600 X 600 | A | | X | | X | | | | | | | | | | | | | | | | |
| | | M5-3L | TURNAROUND ARROW | 525 X 375 | A | | X | | X | | | | | | | | | | | | | | | | |
| | | | | | | | | | 7 | | | | 1 | | | | | | 10 | | | | | | |

CONTROL: 2452-01-036 SHEET TOTALS

(#) REFERENCES CHANGES MADE AS PART OF CHANGE ORDER.

CHANGE ORDER NO. 139

- UPDATED SUMMARY REFLECTS ALL RELATIVE C.O.'S
- REVISED/ADDED/DELETED SIGNS.
- NEW SHEET /QUANTITIES

ORIGINALLY CALLED FOR SIGN(S) ELIMINATED AS PART OF C.O. # 65

ALUMINUM SIGN BLANKS (TYPE A)

| Square Meters | Min. Thickness |
|---|---|
| Less than 0.7 | 2.0 mm |
| 0.7 to 1.4 | 2.5 mm |
| Greater than 1.4 | 3.0 mm |

Sign supports shall be located as shown on the plans, except that the Engineer may shift the sign supports, within design guidelines, where necessary to secure a more desirable location or to avoid conflict with utilities. Unless otherwise shown on the plans, the Contractor shall stake and the Engineer will verify all sign support locations.

Reflective sheeting will be designated as:

Type A - Engineer Grade
Type B - Super Engineer Grade
Type C - High Specific Intensity

©2000 Texas Department of Transportation

SMALL SIGN SUMMARY SUPPLEMENTAL

SHEET 4 OF 11

| FED.RD. DIV.NO. | FEDERAL AID PROJECT NO. | | SHEET NO. |
|---|---|---|---|
| 6 | NH 2000(704), etc. | | 53 |
| STATE | DIST. | COUNTY | |
| TEXAS | SAT | BEXAR | |
| CONT. | SECT. | JOB | HIGHWAY NO. |
| 2452 | 01 | 036, etc. | LP 1604 |

7-31-06

T:\AO\Design\lp1604fm471-90\PD*Phase2*change*order*mylars\submital\plansheets\summaries\sgnsumsmall.dgn
8/4/2006

LEVELS DISPL.
1 3 4 5 6 7 8 9 10 11 12 13 14 15 16
17 18 19 20 21 22 23 24 25 26 27 28 29 30 31 32
33 34 35 36 37 38 39 40 41 42 43 44 45 46 47 48
49 50 51 52 53 54 55 56 57 58 59 60 61 62 63

ACC:

FILE: sgnsumsmall.dgn

# SUMMARY OF SMALL SIGNS

| PLAN SHEET NO. | SIGN NO. | SIGN TYPE | SIGN TEXT | SIGN DIMENSIONS | REFLECTIVE SHEETING | PLYWOOD TYPE A | ALUMINUM TYPE A | TYPE OF MOUNT: RAIL MNT | A EA. | A-1 EA. | B EA. | C EA. | D-1 EA. | D-2 EA. | D-3 EA. | D-4 EA. | D-5 EA. | D-6 EA. | F EA. | F (MOD) EA. | G EA. | 4" TUBE EA. | 6" TUBE EA. | MILEPOSTS MP EA. | MILEPOSTS MW EA. |
|---|---|---|---|---|---|---|---|---|---|---|---|---|---|---|---|---|---|---|---|---|---|---|---|---|---|
| | | | CONTROL: 2452-01-036 | | | | | | | | | | | | | | | | | | | | | | |
| 30/57 | | | | | | | | | | | | | | | | | | | | | | | | | |
| 65 | ~~5~~ | ~~SR5-1A~~ | ~~WRONG WAY~~ | ~~1200 X 900~~ | ~~C~~ | ~~X~~ | | | | | | | | | | | | ~~X~~ | | | ORIGINALLY CALLED FOR SIGN(S) ELIMINATED AS PART OF C.O. #65 | | | | |
| 65 | ~~6~~ | ~~SR5-1A~~ | ~~WRONG WAY~~ | ~~1200 X 900~~ | ~~C~~ | ~~X~~ | | | | | | | | | | | | ~~X~~ | | | | | | | |
| 65 | ~~8~~ | ~~R3-8L~~ (SPL) | ~~LT TURN OR ST/ST ARROW~~ | ~~750 X 750~~ | ~~A~~ | ~~X~~ | | | ~~X~~ | | | | | | | | | | | | | | | | |
| 65 | 8A | R3-8 (SPL) | LT TURN ONLY/ST ARROW/ST ARROW | 1200 X 750 | A | X | | | X | | | | | | | | | | | | | | | | |
| 65 | ~~9~~ | ~~M3-3~~ | ~~SOUTH~~ | ~~600 X 300~~ | ~~A~~ | | ~~X~~ | | ~~X~~ | | | | | | | | | | | | | | | | |
| | | ~~M1-6L~~ | ~~LOOP 1604~~ | ~~600 X 600~~ | ~~A~~ | | ~~X~~ | | | | | | | | | | | | | | | | | | |
| | ~~10~~ | ~~R2-1~~ | ~~SPEED LIMIT 70~~ | ~~600 X 750~~ | ~~A~~ | ~~X~~ | | | ~~X~~ | | | | | | | | | | | | | | | | |
| 31/57 | | | | | | | | | | | | | | | | | | | | | | | | | |
| " | 1 | R6-1R | ONE WAY | 900 X 300 | A | X | | | X | | | | | | | | | | | | | | | | |
| " | 2 | R6-1R | ONE WAY | 900 X 300 | A | X | | | X | | | | | | | | | | | | | | | | |
| " | 3 | SR5-1 | DO NOT ENTER | 1200 X 1200 | C | X | | | | | | | | | | | | X | | | | | | | |
| " | 4 | SR5-1 | DO NOT ENTER | 1200 X 1200 | C | X | | | | | | | | | | | | X | | | | | | | |
| 65 | ~~5~~ | ~~R6-1R~~ | ~~ONE WAY~~ | ~~900 X 300~~ | ~~A~~ | ~~X~~ | | | ~~X~~ | | | | ORIGINALLY CALLED FOR SIGN(S) ELIMINATED AS PART OF C.O. #65 | | | | | | | | | | | | |
| " | 6 | R6-1R | ONE WAY | 900 X 300 | A | X | | | X | | | | | | | | | | | | | | | | |
| " | 7 | W2-1 | SYM CROSS ROAD | 750 X 750 | C | X | | | X | | | | | | | | | | | | | | | | |
| " | 8 | W2-2 | SYM SIDE RD - RT | 750 X 750 | C | X | | | X | | | | | | | | | | | | | | | | |
| " | 9 | D1-1 | WESTCREEK OAKS DR ⇨ | 3050 X 300 | C | X | | | | | | | | | X | | | | | | | | | | |
| " | 10 | R1-1 | STOP | 750 X 750 | C | X | | | X | | | | | | | | | | | | | | | | |
| 34/57 | | | | | | | | | | | | | | | | | | | | | | | | | |
| " | 1 | M3-3 | SOUTH | 600 X 300 | A | | X | | X | | | | | | | | | | | | | | | | |
| | | M1-6L | LOOP 1604 | 600 X 600 | A | | X | | | | | | | | | | | | | | | | | | |
| | | M5-3L | TURNAROUND ARROW | 525 X 375 | A | | X | | | | | | | | | | | | | | | | | | |
| " | 2 | SR5-1A | WRONG WAY | 1200 X 900 | C | X | | | | | | | | | | | | X | | | | | | | |
| " | 3 | SR5-1A | WRONG WAY | 1200 X 900 | C | X | | | | | | | | | | | | X | | | | | | | |
| " | 4 | R3-7R | RT LANE MUST TURN RT | 750 X 750 | A | X | | | X | | | | | | | | | | | | | | | | |
| " | 5 | M3-4 | WEST | 600 X 300 | A | | X | | | | | | | | | | | | | | | | | | |
| | | M1-6F | FARM ROAD 1957 | 600 X 600 | A | | X | | | | | | | | | | | | | | | | | | |
| | | M6-1L | LT ARROW | 525 X 375 | A | | X | | | | | | | | | | | | | | | | | | |
| | | M3-2 | EAST | 600 X 300 | A | | X | | | | | | | | | | | | | | | | | | |
| | | M1-6F | FARM ROAD 1957 | 600 X 600 | A | | X | | | | | | | | | | | | | | | | | | |
| | | M6-1R | RT ARROW | 525 X 375 | A | | X | | | | | | | | | | | | | | | | | | |
| " | 6 | SR5-1 | DO NOT ENTER | 1200 X 1200 | C | X | | | | | | | | | | | | X | | | | | | | |
| " | 7 | SR5-1 | DO NOT ENTER | 1200 X 1200 | C | X | | | | | | | | | | | | X | | | | | | | |
| " | 8 | FR1-2 | YIELD | 1500 X 1500 X 1500 | C | X | | | | | | | | | | | | X | | | | | | | |
| " | 8A | FR1-2 | YIELD | 1500 X 1500 X 1500 | C | X | | | | | | | | | | | | X | | | | | | | |
| " | 9 | FR1-2 | YIELD | 1500 X 1500 X 1500 | C | X | | | | | | | | | | | | X | | | | | | | |
| " | 10 | M3-1 | NORTH | 600 X 300 | A | | X | | X | | | | | | | | | | | | | | | | |
| | | M1-6L | LOOP 1604 | 600 X 600 | A | | X | | | | | | | | | | | | | | | | | | |
| " | 11 | R6-1R | ONE WAY | 900 X 300 | A | X | | | X | | | | | | | | | | | | | | | | |
| | | | **CONTROL: 2452-01-036 SHEET TOTALS** | | | | | | 11 | | | | | | 1 | | | | | 9 | | | | | |

△# REFERENCES CHANGES MADE AS PART OF CHANGE ORDER.

ALUMINUM SIGN BLANKS (TYPE A)

| Square Meters | Min. Thickness |
|---|---|
| Less than 0.7 | 2.0 mm |
| 0.7 to 1.4 | 2.5 mm |
| Greater than 1.4 | 3.0 mm |

Sign supports shall be located as shown on the plans, except that the Engineer may shift the sign supports, within design guidelines, where necessary to secure a more desirable location or to avoid conflict with utilities. Unless otherwise shown on the plans, the Contractor shall stake and the Engineer will verify all sign support locations.

Reflective sheeting will be designated as:

Type A - Engineer Grade
Type B - Super Engineer Grade
Type C - High Specific Intensity

**CHANGE ORDER NO. 139**

- UPDATED SUMMARY REFLECTS ALL RELATIVE C.O.'S
- REVISED/ADDED/DELETED SIGNS.
- NEW SHEET /QUANTITIES

©2000

Texas Department of Transportation

SMALL SIGN SUMMARY SUPPLEMENTAL

SHEET 5 OF 11

| FED. RD. DIV. NO. | FEDERAL AID PROJECT NO. | SHEET NO. |
|---|---|---|
| 6 | NH 2000(704),etc. | 536 |

| STATE | DIST. | COUNTY |
|---|---|---|
| TEXAS | SAT | BEXAR |

| CONT. | SECT. | JOB | HIGHWAY NO. |
|---|---|---|---|
| 2452 | 01 | 036,etc. | LP 1604 |

7-31-06

# SUMMARY OF SMALL SIGNS

| PLAN SHEET NO. | SIGN NO. | SIGN TYPE | SIGN TEXT | SIGN DIMENSIONS | REFLECTIVE SHEETING | PLYWOOD TYPE A | ALUMINUM TYPE A | TYPE OF MOUNT: RAIL MNT | A EA. | A-1 EA. | B EA. | C EA. | D-1 EA. | D-2 EA. | D-3 EA. | D-4 EA. | D-5 EA. | D-6 EA. | F EA. | F (MOD) EA. | G EA. | 4" TUBE EA. | 6" TUBE EA. | MILEPOSTS MP EA. | MILEPOSTS MW EA. |
|---|---|---|---|---|---|---|---|---|---|---|---|---|---|---|---|---|---|---|---|---|---|---|---|---|---|
| | | | CONTROL: 2452-01-036 | | | | | | | | | | | | | | | | | | | | | | |
| 34/57 | | | | | | | | | | | | | | | | | | | | | | | | | |
| " | 12 | R6-1R | ONE WAY | 900 X 300 | A | X | | | X | | | | | | | | | | | | | | | | |
| 65 | ~~13~~ | ~~R2-1~~ | ~~SPEED LIMIT 60~~ | ~~600 X 750~~ | ~~A~~ | ~~X~~ | | | ~~X~~ | ← | | | ORIGINALLY CALLED FOR SIGN(S) ELIMINATED AS PART OF C.O. #65 | | | | | | | | | | | | |
| 65 | 13 | R2-1 | SPEED LIMIT 55 | 600 X 750 | A | X | | | X | ← | | | THIS SIGN REPLACES THE ABOVE ELIMINATED | | | | | | | | | | | | |
| " | 14 | R6-1R | ONE WAY | 900 X 300 | A | X | | | X | | | | | | | | | | | | | | | | |
| " | 15 | D9-3a | SYM CAMPING | 600 X 600 | C | X | | | | | | | | | | | | | | | | | | | |
| | | M6-1BL | LT ARROW | 525 X 375 | C | X | | | | | | | | | | | | | | | | | | | |
| | | D9-3a | SYM CAMPING | 600 X 600 | C | X | | | | | | | | | | | | | | | | | | | |
| | | M6-1BR | RT ARROW | 525 X 375 | C | X | | | | | | | | | | | | | | | | | | | |
| 65 | 15A | R3-8 | ST ARROW/ST ARROW/LT TURN ONLY | 1200 X 750 | A | X | | | X | | | | | | | | | | | | | | | | |
| | | (SPL) | | | | | | | | | | | | | | | | | | | | | | | |
| | 16 | D1-3a | POTRANCO RD | 2700 X 900 | C | X | | | | | | | | | | | | X | | | | | | | |
| | | | ⇦ SAN ANTONIO 14 | | | | | | | | | | | | | | | | | | | | | | |
| | | | RIO MEDINA 12 ⇨ | | | | | | | | | | | | | | | | | | | | | | |
| 65 | ~~17~~ | ~~R3-8R~~ | ~~ST ARROW/RT TURN ONLY~~ | ~~750 X 750~~ | ~~A~~ | ~~X~~ | | | ~~X~~ | ← | | | ORIGINALLY CALLED FOR SIGN(S) ELIMINATED AS PART OF C.O. #65 | | | | | | | | | | | | |
| | | (SPL) | | | | | | | | | | | | | | | | | | | | | | | |
| 65 | 17 | | ST ARROW/ST ARROW/RT TURN ONLY | 1200 X 750 | A | X | | | X | ← | | | THIS SIGN REPLACES THE ABOVE | | | | | | | | | | | | |
| 65 | 19 | M3-1 | NORTH | 600 X 300 | A | | X | | X | | | | | | | | | | | | | | | | |
| | | M1-6L | LOOP 1604 | 600 X 600 | A | | X | | | | | | | | | | | | | | | | | | |
| | | M5-3L | TURNAROUND ARROW | 525 X 375 | A | | X | | | | | | | | | | | | | | | | | | |
| 65 | 20 | SR5-1A | WRONG WAY | 1200 X 900 | C | X | | | | | | | | | | | | | X | | | | | | |
| " | 21 | SR5-1A | WRONG WAY | 1200 X 900 | C | X | | | | | | | | | | | | | X | | | | | | |
| " | 22 | R3-7R | RT LANE MUST TURN RT | 750 X 750 | A | X | | | X | | | | | | | | | | | | | | | | |
| " | 23 | M3-2 | EAST | 600 X 300 | A | | X | | | | X | | | | | | | | | | | | | | |
| | | M1-6F | FARM ROAD 1957 | 600 X 600 | A | | X | | | | | | | | | | | | | | | | | | |
| | | M6-1L | LT ARROW | 525 X 375 | A | | X | | | | | | | | | | | | | | | | | | |
| | | M3-4 | WEST | 600 X 300 | A | | X | | | | | | | | | | | | | | | | | | |
| | | M1-6F | FARM ROAD 1957 | 600 X 600 | A | | X | | | | | | | | | | | | | | | | | | |
| | | M6-1R | RT ARROW | 525 X 375 | A | | X | | | | | | | | | | | | | | | | | | |
| " | 24 | SR5-1 | DO NOT ENTER | 1200 X 1200 | A | X | | | | | | | | | | | | | X | | | | | | |
| 65 | 24A | SR5-1 | DO NOT ENTER | 1200 X 1200 | A | X | | | | | | | | | | | | | X | | | | | | |
| " | 25 | FR1-2 | YIELD | ~~1500 X 1500 X 1600~~ | C | X | | | | | | | | | | | | | X | | | | | | |
| " | 26 | FR1-2 | YIELD | ~~1500 X 1500 X 1600~~ | C | X | | | | | | | | | | | | | X | | | | | | |
| " | 27 | FR1-2 | YIELD | ~~1500 X 1500 X 1600~~ | C | X | | | | | | | | | | | | | | | | | | | |
| 65 | 28 | R3-7L | LT LANE MUST TURN LT | 750 X 750 | A | X | | | X | | | | | | | | | | | | | | | | |
| 34B/57 | | | | | | | | | | | | | | | | | | | | | | | | | |
| " | 1 | R4-7 | SYM KEEP RIGHT | 600 X 750 | A | X | | | | | (ATTACH TO BACK OF NO. 2) | | | | | | | | | | | | | | |
| " | 2 | R3-8L | LT TURN ONLY/LT TURN OR ST | 750 X 750 | A | X | | | X | | | | | | | | | | | | | | | | |
| " | 3 | R3-8L | LT TURN ONLY/LT TURN OR ST | 750 X 750 | A | X | | | | | (ATTACH TO BACK OF NO. 8) | | | | | | | | | | | | | | |
| " | 4 | D1-2a | ⇧ RIO MEDINA 12 | 2700 X 600 | C | X | | | | | | | | | | X | | | | | | | | | |
| | | | JCT US 90 4 ⇨ | | | | | | | | | | | | | | | | | | | | | | |
| " | 5 | M3-3 | SOUTH | 600 X 300 | A | | X | | X | | | | | | | | | | | | | | | | |
| | | M1-6L | LOOP 1604 | 600 X 600 | A | | X | | | | | | | | | | | | | | | | | | |
| | | M6-1L | LT ARROW | 525 X 375 | A | | X | | | | | | | | | | | | | | | | | | |
| | | | **CONTROL: 2452-01-036 SHEET TOTALS** | | | | | | 10 | | | | | | | 1 | | 1 | 6 | | | | | | |

# REFERENCES CHANGES MADE AS PART OF CHANGE ORDER.

**CHANGE ORDER NO. 136**

- UPDATED SUMMARY REFLECTS ALL RELATIVE C.O.'S
- REVISED/ADDED/DELETED SIGNS.
- NEW SHEET /QUANTITIES

ALUMINUM SIGN BLANKS (TYPE A)

| Square Meters | Min. Thickness |
|---|---|
| Less than 0.7 | 2.0 mm |
| 0.7 to 1.4 | 2.5 mm |
| Greater than 1.4 | 3.0 mm |

Sign supports shall be located as shown on the plans, except that the Engineer may shift the sign supports, within design guidelines, where necessary to secure a more desirable location or to avoid conflict with utilities. Unless otherwise shown on the plans, the Contractor shall stake and the Engineer will verify all sign support locations.

Reflective sheeting will be designated as:

Type A - Engineer Grade
Type B - Super Engineer Grade
Type C - High Specific Intensity

©2000 Texas Department of Transportation

SMALL SIGN SUMMARY SUPPLEMENTAL
SHEET 6 OF 11

| FED. RD. DIV. NO. | FEDERAL AID PROJECT NO. | SHEET NO. |
|---|---|---|
| 6 | NH 2000(704),etc. | 534 |
| STATE | COUNTY | |
| TEXAS | BEXAR | |
| CONT. | JOB | HIGHWAY NO. |
| 2452 | 01 036,etc. | LP 1604 |
| DIST. | SECT. | |
| SAT | | |

7-31-06

T:\A0\Design\p1604fm471-90\PD*Phase2*change*order*mylars\submittal\plansheets\summaries\sgnsumsmall.dgn
8/4/2006
LEVELS DISPL
ACC:
FILE: sgnsumsmall.dgn

# SUMMARY OF SMALL SIGNS

| PLAN SHEET NO. | SIGN NO. | SIGN TYPE | SIGN TEXT | SIGN DIMENSIONS | REFLECTIVE SHEETING | PLYWOOD TYPE A | ALUMINUM TYPE A | RAIL MNT | A EA. | A-1 EA. | B EA. | C EA. | D-1 EA. | D-2 EA. | D-3 EA. | D-4 EA. | D-5 EA. | D-6 EA. | F EA. | F (MOD) EA. | G EA. | 4" TUBE EA. | 6" TUBE EA. | MILEPOSTS MP EA. | MILEPOSTS MW EA. |
|---|---|---|---|---|---|---|---|---|---|---|---|---|---|---|---|---|---|---|---|---|---|---|---|---|---|
| | | | CONTROL: 2452-01-036 | | | | | | | | | | | | | | | | | | | | | | |
| 34B/57 | | | | | | | | | | | | | | | | | | | | | | | | | |
| 65 | 6 | SR5-1 | DO NOT ENTER | 1200 X 1200 | C | X | | | | | | | | | | | | | | | | | | | |
| " | 7 | R6-1R | ONE WAY | 900 X 300 | A | X | | | X | | | | | | | | | | | | | | | | |
| | | R6-1L | ONE WAY | 900 X 300 | A | X | | | | | | | | | | | | | | | | | | | |
| " | 8 | R4-7 | SYM KEEP RIGHT | 600 X 750 | A | X | | | X | | | | | | | | | | | | | | | | |
| " | 9 | D1-2o | ⇧ SAN ANTONIO 14<br>⇦ JCT FM 471 4 | 2700 X 600 | C | X | | | | | | | | | | | | | | | | | | | |
| " | 10 | M3-3 | SOUTH | 600 X 300 | A | | X | | X | | | | | | | | | | | | | | | | |
| | | M1-6L | LOOP 1604 | 600 X 600 | A | | X | | | | | | | | | | | | | | | | | | |
| | | M6-1L | LT ARROW | 525 X 375 | A | | X | | | | | | | | | | | | | | | | | | |
| " | 12 | R6-1R | ONE WAY | 900 X 300 | A | X | | | X | | | | | | | | | | | | | | | | |
| | | R6-1L | ONE WAY | 900 X 300 | A | X | | | | | | | | | | | | | | | | | | | |
| " | 13 | SR5-1 | DO NOT ENTER | 1200 X 1200 | C | X | | | | | | | | | | | | | | | | | | | |
| " | 15 | SW3-3 | SYM SIGNAL AHEAD | 1200 X 1200 | C | X | | | | | | | | | | | | | | | | | | | |
| " | 16 | M2-1 | JCT | 525 X 375 | A | | X | | X | | | | | | | | | | | | | | | | |
| | | M1-6L | LOOP 1604 | 600 X 600 | A | | X | | | | | | | | | | | | | | | | | | |
| " | 17 | W2-6B | SYM HIGHWAY INTERSECTION 1000 FT | 1200 X 1200 | C | X | | | | | | | | | | | | | | | | | | | |
| " | 20 | D1-2o | ⇧ JCT US 90 4<br>JCT FM 471 4 ⇨ | 2700 X 600 | C | X | | | | | | | | | | | | | | | | | | | |
| 35/57 | | | | | | | | | | | | | | | | | | | | | | | | | |
| " | 1 | SW3-3 | SYM SIGNAL AHEAD | 1200 X 1200 | C | X | | | | | | | | | | | | | | | | | | | |
| " | 2 | SW3-3 | SYM SIGNAL AHEAD | 1200 X 1200 | C | X | | | | | | | | | | | | | | | | | | | |
| " | 4 | D1-3o | POTRANCO RD<br>⇦ RIO MEDINA 12<br>SAN ANTONIO 14 ⇨ | 2700 X 900 | C | X | | | | | | | | | | | | | | | | | | | |
| " | 5 | D9-3A | SYM CAMPING | 600 X 600 | C | X | | | | | | | | | | | | | | | | | | | |
| | | M6-1BL | LT ARROW | 525 X 375 | C | X | | | | | | | | | | | | | | | | | | | |
| | | D9-3A | SYM CAMPING | 600 X 600 | C | X | | | | | | | | | | | | | | | | | | | |
| | | M6-1BR | RT ARROW | 525 X 375 | C | X | | | | | | | | | | | | | | | | | | | |
| 65 | 6 | R3-8R | ~~ST ARROW/RT TURN ONLY~~ | ~~750 X 750~~ | ~~A~~ | ~~X~~ | | | ~~X~~ | | | | | | | | | | | | | | | | |
| | | (SPL) | | | | | | | | | | | | | | | | | | | | | | | |
| 65 | 6A | R3-8 | ST ARROW/ST ARROW /RT TURN ONLY | 1200 X 750 | A | X | | | X | | | | | | | | | | | | | | | | |
| | | (SPL) | | | | | | | | | | | | | | | | | | | | | | | |
| 65 | 6B | R3-8 | LT TURN ONLY/ST ARROW/ST ARROW | 1200 X 750 | A | X | | | X | | | | | | | | | | | | | | | | |
| | | (SPL) | | | | | | | | | | | | | | | | | | | | | | | |
| " | 7 | M3-3 | SOUTH | 600 X 300 | A | | X | | X | | | | | | | | | | | | | | | | |
| | | M1-6L | LOOP 1604 | 600 X 600 | A | | X | | | | | | | | | | | | | | | | | | |
| 65 | 9 | R2-1 | ~~SPEED LIMIT 70~~ | ~~600 X 750~~ | ~~A~~ | ~~X~~ | | | ~~X~~ | | | | | | | | | | | | | | | | |
| 65 | 9 | R2-1 | SPEED LIMIT 55 | 600 X 750 | A | X | | | X | | | | | | | | | | | | | | | | |
| " | 11 | D2-1 | JCT US 90 4 | 1800 X 300 | C | X | | | | | | | | | | | | | | | | | | | |
| 42/57 | | | | | | | | | | | | | | | | | | | | | | | | | |
| " | 1 | R2-1 | SPEED LIMIT 60 | 600 X 750 | A | X | | | X | | | | | | | | | | | | | | | | |
| " | 1A | SR5-1 | DO NOT ENTER | 1200 X 1200 | C | X | | | | | | | | | | | | | | | | | | | |
| " | 1B | SR1-2 | YIELD | 1050 X 1050 X 1050 | C | X | | | X | | | | | | | | | | | | | | | | |
| | | | CONTROL: 2452-01-036 SHEET TOTALS | | | 10 | | | | | 1 | 1 | | | | 2 | | 1 | 6 | | | | | | |

ORIGINALLY CALLED FOR SIGN(S) WAS ELIMINATED AS PART OF C.O. #65

(MOUNT BACK TO BACK)

(MOUNT BACK TO BACK)

ORIGINALLY CALLED FOR SIGN(S) ELIMINATED AS PART OF C.O. #65

THIS SIGN REPLACES THE ABOVE

ORIGINALLY CALLED FOR SIGN(S) ELIMINATED AS PART OF C.O. #65

THIS SIGN REPLACES THE ABOVE

ORIGINALLY CALLED FOR SIGN(S) ELIMINATED AS PART OF C.O. #65

## CHANGE ORDER NO. 139

- UPDATED SUMMARY REFLECTS ALL RELATIVE C.O.'S
- REVISED/ADDED/DELETED SIGNS.
- NEW SHEET /QUANTITIES

ALUMINUM SIGN BLANKS (TYPE A)

| Square Meters | Min. Thickness |
|---|---|
| Less than 0.7 | 2.0 mm |
| 0.7 to 1.4 | 2.5 mm |
| Greater than 1.4 | 3.0 mm |

Sign supports shall be located as shown on the plans, except that the Engineer may shift the sign supports, within design guidelines, where necessary to secure a more desirable location or to avoid conflict with utilities. Unless otherwise shown on the plans, the Contractor shall stake and the Engineer will verify all sign support locations.

Reflective sheeting will be designated as:

Type A - Engineer Grade
Type B - Super Engineer Grade
Type C - High Specific Intensity

# 6 REFERENCES CHANGES MADE AS PART OF CHANGE ORDER.

©2000 Texas Department of Transportation

## SMALL SIGN SUMMARY SUPPLEMENTAL

SHEET 7 OF 11

| FED.RD. DIV.NO. | FEDERAL AID PROJECT NO. | | SHEET NO. |
|---|---|---|---|
| 6 | NH 2000(704), etc. | | 53g |
| STATE | DIST. | COUNTY | |
| TEXAS | SAT | BEXAR | |
| CONT. | SECT. | JOB | HIGHWAY NO. |
| 2452 | 01 | 036, etc. | LP 1604 |

7-31-06

LEVELS DISPLAY
1 3 4 5 6 7 8 9 10 11 12 13 14 15 16
17 18 19 20 21 22 23 24 25 26 27 28 29 30 31 32
33 34 35 36 37 38 39 40 41 42 43 44 45 46 47 48
49 50 51 52 53 54 55 56 57 58 59 60 61 62 63

ACC:

FILE: sgnsumsmall.dgn

# SUMMARY OF SMALL SIGNS

| PLAN SHEET NO. | SIGN NO. | SIGN TYPE | SIGN TEXT | SIGN DIMENSIONS | REFLECTIVE SHEETING | PLYWOOD TYPE A | ALUMINUM TYPE A | TYPE OF MOUNT | | | | | | | | | | | | | | | MILEPOSTS | |
|---|---|---|---|---|---|---|---|---|---|---|---|---|---|---|---|---|---|---|---|---|---|---|---|---|
| | | | | | | | | RAIL MNT | A EA. | A-1 EA. | B EA. | C EA. | D-1 EA. | D-2 EA. | D-3 EA. | D-4 EA. | D-5 EA. | D-6 EA. | F EA. | F (MOD) EA. | G EA. | 4" TUBE EA. | 6" TUBE EA. | MP EA. | MW EA. |
| | | | CONTROL: 2452-01-036 | | | | | | | | | | | | | | | | | | | | | |
| 42/57 | | | | | | | | | | | | | | | | | | | | | | | | |
| " | 1C | SR5-1 | DO NOT ENTER | 1200 X 1200 | C | X | | | | | | | | | | | | X | | | | | | |
| " | 1D | R6-1R | ONE WAY | 900 X 300 | A | X | | | X | | | | | | | | | | | | | | | |
| " | ~~2~~ | ~~R2-1~~ | ~~SPEED LIMIT 70~~ | ~~600 X 750~~ | ~~A~~ | ~~X~~ | | | ~~X~~ | ← | | | ORIGINALLY CALLED FOR SIGN(S) ELIMINATED AS PART OF C.O. #65 | | | | | | | | | | | |
| " | 3 | W2-2 | SYM SIDE RD - LT | 750 X 750 | A | X | | | X | | | | | | | | | | | | | | | |
| 65 | 4 | D1-1 | DOVE CANYON ⇨ | 2100 X 300 | C | X | | | | | | | X | | | | | | | | | | | |
| 65 | 5 | R6-1R | ONE WAY | 900 X 300 | A | X | | | X | | | | | | | | | | | | | | | |
| 65 | 6 | R3-8R (SPL) | ST ARROW/RT TURN ONLY | 750 X 750 | A | X | | | X | | | | | | | | | | | | | | | |
| 65 | 7 | R3-7R | RT LANE MUST TURN RT | 750 X 750 | A | X | | | X | | | | | | | | | | | | | | | |
| 65 | 8 | SR5-1 | DO NOT ENTER | 1200 X 1200 | C | X | | | | | | | | | | | | X | | | | | | |
| 65 | 9 | SR5-1 | DO NOT ENTER | 1200 X 1200 | C | X | | | | | | | | | | | | X | | | | | | |
| 65 | 10 | FR1-2 | YIELD | 1500 X 1500 X 1500 | C | X | | | | | | | | | | | | X | | | | | | |
| 43/57 | | | | | | | | | | | | | | | | | | | | | | | | |
| " | 1 | R6-1R | ONE WAY | 900 X 300 | A | X | | | X | | | | | | | | | | | | | | | |
| " | 2 | R6-1R | ONE WAY | 900 X 300 | A | X | | | X | | | | | | | | | | | | | | | |
| " | 3 | W2-2 | SYM SIDE RD - RT | 750 X 750 | A | X | | | X | | | | | | | | | | | | | | | |
| " | 4 | D1-1 | DESERT WOLF ⇨ | 2100 X 300 | C | X | | | | | | | X | | | | | | | | | | | |
| 44/57 | | | | | | | | | | | | | | | | | | | | | | | | |
| " | 1 | W2-2 | SYM SIDE RD - RT | 750 X 750 | A | X | | | X | | | | | | | | | | | | | | | |
| " | 2 | D1-1 | DESERT WOLF ⇨ | 2100 X 300 | C | X | | | | | | | X | | | | | | | | | | | |
| " | 3 | SR5-1 | DO NOT ENTER | 1200 X 1200 | C | X | | | | | | | | | | | | X | | | | | | |
| " | 4 | SR1-2 | YIELD | 1050 X 1050 X 1050 | C | X | | | X | | | | | | | | | | | | | | | |
| " | 5 | R6-1R | ONE WAY | 900 X 300 | A | X | | | X | | | | | | | | | | | | | | | |
| " | 6 | SR5-1 | DO NOT ENTER | 1200 X 1200 | C | X | | | | | | | | | | | | X | | | | | | |
| " | 7 | W2-2 | SYM SIDE RD - RT | 750 X 750 | A | X | | | X | | | | | | | | | | | | | | | |
| " | 8 | R3-8R (SPL) | ST ARROW/RT TURN ONLY | 750 X 750 | A | X | | | X | | | | | | | | | | | | | | | |
| " | 9 | D1-1 | EMORY PEAK ⇨ | 2100 X 300 | C | X | | | | | | | X | | | | | | | | | | | |
| 45/57 | | | | | | | | | | | | | | | | | | | | | | | | |
| " | 1 | R6-1R | ONE WAY | 900 X 300 | A | X | | | X | | | | | | | | | | | | | | | |
| " | 2 | SR5-1 | DO NOT ENTER | 1200 X 1200 | C | X | | | | | | | | | | | | X | | | | | | |
| " | 3 | SR5-1 | DO NOT ENTER | 1200 X 1200 | C | X | | | | | | | | | | | | X | | | | | | |
| " | 4 | R3-7R | RT LANE MUST TURN RT | 750 X 750 | A | X | | | X | | | | | | | | | | | | | | | |
| " | 5 | FR1-2 | YIELD | 1500 X 1500 X 1500 | C | X | | | | | | | | | | | | X | | | | | | |
| " | 6 | W2-2 | SYM SIDE RD - RT | 750 X 750 | A | X | | | X | | | | | | | | | | | | | | | |
| " | 7 | D1-1 | DESERT WOLF ⇨ | 2100 X 300 | C | X | | | | | | | X | | | | | | | | | | | |
| 46/57 | | | | | | | | | | | | | | | | | | | | | | | | |
| " | 1 | R6-1R | ONE WAY | 900 X 300 | A | X | | | X | | | | | | | | | | | | | | | |
| | | | **CONTROL: 2452-01-036 SHEET TOTALS** | | | | | | 17 | | | | 5 | | | | | | 9 | | | | | |

#65 REFERENCES CHANGES MADE AS PART OF CHANGE ORDER.

**CHANGE ORDER NO. 139**

- UPDATED SUMMARY REFLECTS ALL RELATIVE C.O.'S
- REVISED/ADDED/DELETED SIGNS.
- NEW SHEET /QUANTITIES

ALUMINUM SIGN BLANKS (TYPE A)

| Square Meters | Min. Thickness |
|---|---|
| Less than 0.7 | 2.0 mm |
| 0.7 to 1.4 | 2.5 mm |
| Greater than 1.4 | 3.0 mm |

Sign supports shall be located as shown on the plans, except that the Engineer may shift the sign supports, within design guidelines, where necessary to secure a more desirable location or to avoid conflict with utilities. Unless otherwise shown on the plans, the Contractor shall stake and the Engineer will verify all sign support locations.

Reflective sheeting will be designated as:

Type A - Engineer Grade
Type B - Super Engineer Grade
Type C - High Specific Intensity

©2000

Texas Department of Transportation

## SMALL SIGN SUMMARY SUPPLEMENTAL

SHEET 8 OF 11

| FED. RD. DIV. NO. | FEDERAL AID PROJECT NO. | SHEET NO. |
|---|---|---|
| 6 | NH 2000(704),etc. | 53h |

| STATE | DIST. | COUNTY |
|---|---|---|
| TEXAS | SAT | BEXAR |

| CONT. | SECT. | JOB | HIGHWAY NO. |
|---|---|---|---|
| 2452 | 01 | 036,etc. | LP 1604 |

LEVELS DISPLA.. ACC:
FILE: sgnsummall.dgn

# SUMMARY OF SMALL SIGNS

| PLAN SHEET NO. | SIGN NO. | SIGN TYPE | SIGN TEXT | SIGN DIMENSIONS | REFLECTIVE SHEETING | PLYWOOD TYPE A | ALUMINUM TYPE A | TYPE OF MOUNT: RAIL MNT | A EA. | A-1 EA. | B EA. | C EA. | D-1 EA. | D-2 EA. | D-3 EA. | D-4 EA. | D-5 EA. | D-6 EA. | F EA. | F (MOD) EA. | G EA. | 4" TUBE EA. | 6" TUBE EA. | MILEPOSTS MP EA. | MILEPOSTS MW EA. |
|---|---|---|---|---|---|---|---|---|---|---|---|---|---|---|---|---|---|---|---|---|---|---|---|---|---|
| | | | CONTROL: 2452-01-036 | | | | | | | | | | | | | | | | | | | | | | |
| 46/57 | | | | | | | | | | | | | | | | | | | | | | | | | |
| " | 2 | SR5-1 | DO NOT ENTER | 1200 X 1200 | C | X | | | | | | | | | | | | X | | | | | | | |
| " | 3 | R3-8R | ST ARROW/RT TURN ONLY | 750 X 750 | A | X | | | X | | | | | | | | | | | | | | | | |
| | | (SPL) | | | | | | | | | | | | | | | | | | | | | | | |
| " | 4 | R3-7R | RT LANE MUST TURN RT | 750 X 750 | A | X | | | X | | | | | | | | | | | | | | | | |
| " | 5 | SR5-1 | DO NOT ENTER | 1200 X 1200 | C | X | | | | | | | | | | | | X | | | | | | | |
| " | 6 | MR1-1 | STOP | 750 X 750 | C | X | | | X | | | | | | | | | | | | | | | | |
| " | 7 | FR1-2 | YIELD | 1500 X 1500 X 1500 | C | X | | | | | | | | | | | | X | | | | | | | |
| 47/57 | | | | | | | | | | | | | | | | | | | | | | | | | |
| 65 | ~~1~~ | ~~R2-1~~ | ~~SPEED LIMIT 60~~ | ~~600 X 750~~ | ~~A~~ | ~~X~~ | | | ~~X~~ | | | | ORIGINALLY CALLED FOR SIGN(S) ELIMINATED AS PART OF C.O. #65 | | | | | | | | | | | | |
| 65 | ~~2~~ | ~~W2-2~~ | ~~SYM SIDE RD - RT~~ | ~~750 X 750~~ | ~~A~~ | ~~X~~ | | | ~~X~~ | | | | ORIGINAL SIGN CALLED FOR ELIMINATED AND REPLACED WITH FOLLOWING | | | | | | | | | | | | |
| " | 2 | W2-1 | SYM CROSS RD | 750 X 750 | A | X | | | X | | | | SIGN REQUIRED HERE TO BE SUPPLIED BY OTHERS (DEVELOPER) | | | | | | | | | | | | |
| 65 | 3 | SW3-3 | SYM SIGNAL AHEAD | 1200 X 1200 | C | X | | | | | | | | | | | | X | | | | | | | |
| 65 | 4 | SW3-3 | SYM SIGNAL AHEAD | 1200 X 1200 | C | X | | | | | | | | | | | | X | | | | | | | |
| 48/57 | | | | | | | | | | | | | | | | | | | | | | | | | |
| " | 2 | R3-7R | RT LANE MUST TURN RT | 750 X 750 | A | X | | | X | | | | | | | | | | | | | | | | |
| 65 | 2A | R3-7L | LT LANE MUST TURN LT | 750 X 750 | A | X | | | X | | | | | | | | | | | | | | | | |
| " | 3 | SR5-1 | DO NOT ENTER | 1200 X 1200 | C | X | | | | | | | | | | | | X | | | | | | | |
| " | 4 | R1-2 | YIELD | 1050 X 1050 X 1050 | C | X | | | X | | | | | | | | | | | | | | | | |
| 65 | 4A | R1-2 | YIELD | 1050 X 1050 X 1050 | C | X | | | X | | | | | | | | | | | | | | | | |
| 65 | 4B | R1-2 | YIELD | 1050 X 1050 X 1050 | C | X | | | X | | | | | | | | | | | | | | | | |
| 65 | 6 | M3-1 | NORTH | 600 X 300 | A | | X | | X | | | | SIGN RELOCATED AS PER C.O. # 65 | | | | | | | | | | | | |
| | | M1-6L | LOOP 1604 | 600 X 600 | A | | X | | | | | | | | | | | | | | | | | | |
| | | M5-3L | TURNAROUND ARROW | 525 X 375 | A | | X | | | | | | | | | | | | | | | | | | |
| " | 7 | M3-1 | NORTH | 600 X 300 | A | | X | | X | | | | | | | | | | | | | | | | |
| | | M1-6L | LOOP 1604 | 600 X 600 | A | | X | | | | | | | | | | | | | | | | | | |
| " | ~~8~~ | ~~R3-8L~~ | ~~LT TURN OR ST/ST ARROW~~ | ~~750 X 750~~ | ~~A~~ | ~~X~~ | | | ~~X~~ | | | | ORIGINALLY CALLED FOR SIGN(S) ELIMINATED AS PART OF C.O. #65 | | | | | | | | | | | | |
| | | (SPL) | | | | | | | | | | | | | | | | | | | | | | | |
| 65 | 9A | R3-8 | LT TURN ONLY/ST ARROW/ST ARROW | 1200 X 750 | A | X | | | X | | | | | | | | | | | | | | | | |
| | | (SPL) | | | | | | | | | | | | | | | | | | | | | | | |
| 65 | 9B | R3-8 | ST ARROW/ST ARROWRT TURN ONLY | 1200 X 750 | A | X | | | X | | | | | | | | | | | | | | | | |
| | | (SPL) | | | | | | | | | | | | | | | | | | | | | | | |
| 65 | ~~10~~ | ~~SW3-3~~ | ~~SYM SIGNAL AHEAD~~ | ~~1200 X 1200~~ | ~~C~~ | ~~X~~ | | | | | | | | | | | | ~~X~~ | ORIGINALLY CALLED FOR SW3-3 ELIMINATED AS PART OF C.O. #65 | | | | | | |
| " | 11 | D1-1 | MARBACH RD | 2100 X 300 | C | X | | | | | | | X | | | | | | | | | | | | |
| " | 12 | SR5-1A | WRONG WAY | 1200 X 900 | C | X | | | | | | | | | | | | X | | | | | | | |
| " | 13 | SR5-1A | WRONG WAY | 1200 X 900 | C | X | | | | | | | | | | | | X | | | | | | | |
| 65 | 13A | R3-7L | LT LANE MUST TURN LT | 750 X 750 | A | X | | | X | | | | | | | | | | | | | | | | |
| # | 13B | R3-7R | RT LANE MUST TURN RT | 750 X 750 | A | X | | | X | | | | SIGN TO BE SUPPLIED BY DEVELOPER. | | | | | | | | | | | | |
| " | 14 | SR5-1 | DO NOT ENTER | 1200 X 1200 | C | X | | | | | | | | | | | | X | | | | | | | |
| " | 15 | SR5-1 | DO NOT ENTER | 1200 X 1200 | C | X | | | | | | | | | | | | X | | | | | | | |
| " | 16 | R1-2 | YIELD | 1050 X 1050 X 1050 | C | X | | | X | | | | | | | | | | | | | | | | |
| | | | **CONTROL: 2452-01-036 SHEET TOTALS** | | | | | | 16 | | | | 1 | | | | | 10 | | | | | | | |

# REFERENCES CHANGES MADE AS PART OF CHANGE ORDER.

ALUMINUM SIGN BLANKS (TYPE A)

| Square Meters | Min. Thickness |
|---|---|
| Less than 0.7 | 2.0 mm |
| 0.7 to 1.4 | 2.5 mm |
| Greater than 1.4 | 3.0 mm |

Sign supports shall be located as shown on the plans, except that the Engineer may shift the sign supports, within design guidelines, where necessary to secure a more desirable location or to avoid conflict with utilities. Unless otherwise shown on the plans, the Contractor shall stake and the Engineer will verify all sign support locations.

Reflective sheeting will be designated as:

Type A - Engineer Grade
Type B - Super Engineer Grade
Type C - High Specific Intensity

**CHANGE ORDER NO. 139**

- UPDATED SUMMARY REFLECTS ALL RELATIVE C.O.'S
- REVISED/ADDED/DELETED SIGNS.
- NEW SHEET /QUANTITIES

©2000 Texas Department of Transportation

SMALL SIGN SUMMARY SUPPLEMENTAL
SHEET 9 OF 11

| FED. RD. DIV. NO. | FEDERAL AID PROJECT NO. | SHEET NO. |
|---|---|---|
| 6 | NH 2000(704),etc. | 531 |

| STATE | DIST. | COUNTY |
|---|---|---|
| TEXAS | SAT | BEXAR |

| CONT. | SECT. | JOB | HIGHWAY NO. |
|---|---|---|---|
| 2452 | 01 | 036,etc. | LP 1604 |

7-11-05

LEVELS DISPLAYED
1 3 4 5 6 7 8 9 10 11 12 13 14 15 16
17 18 19 20 21 22 23 24 25 26 27 28 29 30 31 32
33 34 35 36 37 38 39 40 41 42 43 44 45 46 47 48
49 50 51 52 53 54 55 56 57 58 59 60 61 62 63

ACC:

FILE: sgnsumsmall.dgn

# SUMMARY OF SMALL SIGNS

| PLAN SHEET NO. | SIGN NO. | SIGN TYPE | SIGN TEXT | SIGN DIMENSIONS | REFLECTIVE SHEETING | PLYWOOD TYPE A | ALUMINUM TYPE A | TYPE OF MOUNT: RAIL MNT | A EA. | A-1 EA. | B EA. | C EA. | D-1 EA. | D-2 EA. | D-3 EA. | D-4 EA. | D-5 EA. | D-6 EA. | F EA. | F (MOD) EA. | G EA. | 4" TUBE EA. | 6" TUBE EA. | MILEPOSTS MP EA. | MILEPOSTS MW EA. |
|---|---|---|---|---|---|---|---|---|---|---|---|---|---|---|---|---|---|---|---|---|---|---|---|---|---|
| | | | CONTROL: 2452-01-036 | | | | | | | | | | | | | | | | | | | | | | |
| 48A/57 | | | | | | | | | | | | | | | | | | | | | | | | | |
| 65 | ~~1~~ | ~~SR1-2~~ | ~~YIELD~~ | ~~1050 X 1050 X 1050~~ | ~~C~~ | ~~X~~ | | | ~~X~~ | | | SIGN ORIGINALLY CALLED FOR ON THIS SHEET WAS ELIMINATED AND SHOWN ON PRIOR SHEET. | | | | | | | | | | | | | |
| " | 2 | M3-3 | SOUTH | 600 X 300 | A | | X | | X | | | | | | | | | | | | | | | | |
| | | M1-6L | LOOP 1604 | 600 X 600 | A | | X | | | | | | | | | | | | | | | | | | |
| | | M6-1L | LT ARROW | 525 X 375 | A | | X | | | | | | | | | | | | | | | | | | |
| " | 3 | R6-1L | ONE WAY | 900 X 300 | A | X | | | X | | | | (MOUNTED BACK TO BACK) | | | | | | | | | | | | |
| | | R6-1R | ONE WAY | 900 X 300 | A | X | | | | | | | | | | | | | | | | | | | |
| 65 | 4 | W1-9L | LG ARROW BOARD - LT | 2400 X 900 | C | X | | | | | | | | | | X | | | | | | | | | |
| " | 5 | R6-1L | ONE WAY | 900 X 300 | A | X | | | X | | | ORIGINALLY CALLED FOR SIGN(S) ELIMINATED (NO LONGER NEEDED). | | | | | | | | | | | | | |
| " | 6 | M3-1 | NORTH | 600 X 300 | A | | X | | X | | | | | | | | | | | | | | | | |
| | | M1-6L | LOOP 1604 | 600 X 600 | A | | X | | | | | | | | | | | | | | | | | | |
| | | M6-1L | LT ARROW | 525 X 375 | A | | X | | | | | | | | | | | | | | | | | | |
| " | 7 | R6-1L | ONE WAY | 900 X 300 | A | X | | | | | | | (MOUNTED BACK TO BACK) | | | | | | | | | | | | |
| | | R6-1R | ONE WAY | 900 X 300 | A | X | | | | | | | | | | | | | | | | | | | |
| 65 | 8 | SR1-2 | YIELD | 1050 X 1050 X 1050 | C | X | | | X | | | SIGN ORIGINALLY CALLED FOR ON THIS SHEET WAS ELIMINATED AND SHOWN ON PRIOR SHEET. | | | | | | | | | | | | | |
| 65 | 9 | R5-1 | DO NOT ENTER | 750 X 750 | C | X | | | X | | | ORIGINAL SIGN CALLED FOR WAS ELIMINATED AND CHANGED TO THE FOLLOWING SR5-1. | | | | | | | | | | | | | |
| 65 | 9 | R5-1 | DO NOT ENTER | 1200 X 1200 | C | X | | | X | | | | | | | | | | | | | | | | |
| " | 10 | R4-7 | SYM KEEP RIGHT | 600 X 750 | A | X | | | X | | | | | | | | | | | | | | | | |
| " | 11 | M3-3 | SOUTH | 600 X 300 | A | | X | | | | X | | | | | | | | | | | | | | |
| | | M1-6L | LOOP 1604 | 600 X 600 | A | | X | | | | | | | | | | | | | | | | | | |
| | | M6-3 | ST ARROW | 525 X 375 | A | | X | | | | | | | | | | | | | | | | | | |
| | | M3-1 | NORTH | 600 X 300 | A | | X | | | | | | | | | | | | | | | | | | |
| | | M1-6L | LOOP 1604 | 600 X 600 | A | | X | | | | | | | | | | | | | | | | | | |
| | | M6-1R | RT ARROW | 525 X 375 | A | | X | | | | | | | | | | | | | | | | | | |
| 49/57 | | | | | | | | | | | | | | | | | | | | | | | | | |
| 65 | 1 | SW3-3 | SYM SIGNAL AHEAD | 1200 X 1200 | C | X | | | | | | | | | | | | | X | | | | | | |
| 65 | 1A | SW3-3 | SYM SIGNAL AHEAD | 1200 X 1200 | C | X | | | | | | | | | | | | | X | | | | | | |
| " | 2 | D1-1 | MARBACH RD. | 2100 X 300 | C | X | | | | | | | X | | | | | | | | | | | | |
| 65 | ~~3~~ | ~~R3-8R~~ (SPL) | ~~ST ARROW/RT TURN ONLY~~ | ~~750 X 750~~ | ~~A~~ | ~~X~~ | | | ~~X~~ | | | SIGN ORIGINALLY CALLED FOR ON THIS SHEET WAS ELIMINATED AS PART OF C.O. #65 | | | | | | | | | | | | | |
| 65 | 3A | R3-8 (SPL) | ST ARROW/ST ARROW/RT TURN ONLY | 750 X 750 | A | X | | | X | | | | | | | | | | | | | | | | |
| " | 4 | SR5-1A | WRONG WAY | 1200 X 900 | C | X | | | | | | | | | | | | | X | | | | | | |
| " | 5 | SR5-1A | WRONG WAY | 1200 X 900 | C | X | | | | | | | | | | | | | X | | | | | | |
| 65 | 6 | M3-3 | SOUTH | 600 X 300 | A | | X | | X | | | SIGN ORIGINALLY CALLED FOR WAS RELOCATED AS PART OF C.O. #65. | | | | | | | | | | | | | |
| | | M1-6L | LOOP 1604 | 600 X 600 | A | | X | | | | | | | | | | | | | | | | | | |
| | | M5-3L | TURNAROUND ARROW | 525 X 375 | A | | X | | | | | | | | | | | | | | | | | | |
| 65 | ~~8~~ | ~~R3-8L~~ (SPL) | ~~LT TURN ONLY/ST ARROW~~ | ~~750 X 750~~ | ~~A~~ | ~~X~~ | | | ~~X~~ | | | SIGN ORIGINALLY CALLED FOR ON THIS SHEET WAS ELIMINATED AS PART OF C.O. #65 | | | | | | | | | | | | | |
| " | 9 | M3-3 | SOUTH | 600 X 300 | A | | X | | X | | | | | | | | | | | | | | | | |
| | | M1-6L | LOOP 1604 | 600 X 600 | A | | X | | | | | | | | | | | | | | | | | | |
| 65 | ~~10~~ | ~~R2-1~~ | ~~SPEED LIMIT 70~~ | ~~600 X 750~~ | ~~A~~ | | ~~X~~ | | ~~X~~ | | | SIGN ORIGINALLY CALLED FOR ON THIS SHEET WAS ELIMINATED AS PART OF C.O. #65 | | | | | | | | | | | | | |
| | | | **CONTROL: 2452-01-036 SHEET TOTALS** | | | | | | 15 | | | | 1 | | | 1 | | | 4 | | | | | | |

△# REFERENCES CHANGES MADE AS PART OF CHANGE ORDER.

**CHANGE ORDER NO. 129**

- UPDATED SUMMARY REFLECTS ALL RELATIVE C.O.'S
- REVISED/ADDED/DELETED SIGNS.
- NEW SHEET /QUANTITIES

ALUMINUM SIGN BLANKS (TYPE A)

| Square Meters | Min. Thickness |
|---|---|
| Less than 0.7 | 2.0 mm |
| 0.7 to 1.4 | 2.5 mm |
| Greater than 1.4 | 3.0 mm |

Sign supports shall be located as shown on the plans, except that the Engineer may shift the sign supports, within design guidelines, where necessary to secure a more desirable location or to avoid conflict with utilities. Unless otherwise shown on the plans, the Contractor shall stake and the Engineer will verify all sign support locations.

Reflective sheeting will be designated as:

Type A - Engineer Grade
Type B - Super Engineer Grade
Type C - High Specific Intensity

©2000

Texas Department of Transportation

# SMALL SIGN SUMMARY SUPPLEMENTAL

SHEET 10 OF 11

| FED. RD. DIV. NO. | FEDERAL AID PROJECT NO. | SHEET NO. |
|---|---|---|
| 6 | NH 2000(704),etc. | 53j |

| STATE | DIST. | COUNTY |
|---|---|---|
| TEXAS | SAT | BEXAR |

| CONT. | SECT. | JOB | HIGHWAY NO. |
|---|---|---|---|
| 2452 | 01 | 036,etc. | LP 1604 |

7-31-06

LEVELS DISPLA. | ACC:
FILE: sgnsumsmall.dgn

# SUMMARY OF SMALL SIGNS

| PLAN SHEET NO. | SIGN NO. | SIGN TYPE | SIGN TEXT | SIGN DIMENSIONS | REFLECTIVE SHEETING | PLYWOOD TYPE A | ALUMINUM TYPE A | TYPE OF MOUNT: RAIL MNT | A EA. | A-1 EA. | B EA. | C EA. | D-1 EA. | D-2 EA. | D-3 EA. | D-4 EA. | D-5 EA. | D-6 EA. | F EA. | F (MOD) EA. | G EA. | 4" TUBE EA. | 6" TUBE EA. | MILEPOSTS MP EA. | MILEPOSTS MW EA. |
|---|---|---|---|---|---|---|---|---|---|---|---|---|---|---|---|---|---|---|---|---|---|---|---|---|---|
| | | | CONTROL: 2452-01-036 | | | | | | | | | | | | | | | | | | | | | | |
| 51/57 | | | | | | | | | | | | | | | | | | | | | | | | | |
| " | 1 | M3-1 | NORTH | 600 X 300 | A | | X | | X | | | | | | | | | | | | | | | | |
| | | M1-6L | LOOP 1604 | 600 X 600 | A | | X | | | | | | | | | | | | | | | | | | |
| | | | | | | | | | | | | | | | | | | | | | | | | | |
| 65 | ~~2~~ | ~~R2-1~~ | ~~SPEED LIMIT 60~~ | ~~600 X 750~~ | ~~A~~ | ~~X~~ | | | ~~X~~ | | | | ORIGINALLY CALLED FOR SIGN(S) ELIMINATED AS PART OF C.O. #65 | | | | | | | | | | | | |
| " | 3 | SW6-2 | SYM DIVIDED HIGHWAY ENDS | 1219 X 1219 | C | X | | | | | | | | | | | | | X | | | | | | |
| " | 4A | W2-2 | SYM SIDE RD - LT | 750 X 750 | A | X | | | X | | | | | | | | | | | | | | | | |
| " | 5A | D1-1 | SPURS RANCH RD ⇨ | 2100 X 300 | C | X | | | | | | | X | | | | | | | | | | | | |
| 52/57 | | | | | | | | | | | | | | | | | | | | | | | | | |
| " | 1 | W2-2 | SYM SIDE RD - RT | 750 X 750 | C | X | | | X | | | | | | | | | | | | | | | | |
| " | 2 | R3-8L | ST ARROW/RT TURN ONLY | 750 X 750 | A | X | | | X | | | | | | | | | | | | | | | | |
| | | (SPL) | | | | | | | | | | | | | | | | | | | | | | | |
| " | 3 | D1-1 | BIG MESA DR ⇨ | 2100 X 300 | C | X | | | | | | | X | | | | | | | | | | | | |
| " | 4 | R3-7R | RT LANE MUST TURN RT | 750 X 750 | A | X | | | X | | | | | | | | | | | | | | | | |
| " | 5 | R5-1 | DO NOT ENTER | 750 X 750 | C | X | | | X | | | | | | | | | | | | | | | | |
| " | 6 | R5-1 | DO NOT ENTER | 750 X 750 | C | X | | | X | | | | | | | | | | | | | | | | |
| " | 7 | R4-7 | SYM KEEP RIGHT | 600 X 750 | A | X | | | X | | | | | | | | | | | | | | | | |
| " | 8 | SR1-2 | YIELD | 1500 X 1500 X 1500 | C | X | | | | | | | | | | | | | X | | | | | | |
| " | 8A | SR5-1 | DO NOT ENTER | 750 X 750 | C | X | | | | | | | | | | | | | X | | | | | | |
| " | 8B | SR5-1 | DO NOT ENTER | 750 X 750 | C | X | | | | | | | | | | | | | X | | | | | | |
| " | 8C | R3-8R | ST ARROW/RT TURN ONLY | 750 X 750 | A | X | | | X | | | | | | | | | | | | | | | | |
| | | (SPL) | | | | | | | | | | | | | | | | | | | | | | | |
| " | 8D | R3-7R | RT LANE MUST TURN RT | 750 X 750 | A | X | | | X | | | | | | | | | | | | | | | | |
| " | 8E | R6-1R | ONE WAY | 900 X 300 | A | X | | | X | | | | | | | | | | | | | | | | |
| " | 8F | FR1-2 | YIELD | 1500 X 1500 X 1500 | C | X | | | | | | | | | | | | | X | | | | | | |
| " | 9 | W1-9R | LG ARROW BOARD-RT | 2400 X 900 | C | X | | | | | | | | | | X | | | | | | | | | |
| " | 10 | R5-1 | DO NOT ENTER | 750 X 750 | C | X | | | X | | | | | | | | | | | | | | | | |
| **CONTROL: 2452-01-036 SHEET TOTALS** | | | | | | | | | 12 | | | | 2 | | | 1 | | | 5 | | | | | | |

#65 REFERENCES CHANGES MADE AS PART OF CHANGE ORDER.

CHANGE ORDER NO. 139
- UPDATED SUMMARY REFLECTS ALL RELATIVE C.O.'S
- REVISED/ADDED/DELETED SIGNS.
- NEW SHEET /QUANTITIES

ALUMINUM SIGN BLANKS (TYPE A)

| Square Meters | Min. Thickness |
|---|---|
| Less than 0.7 | 2.0 mm |
| 0.7 to 1.4 | 2.5 mm |
| Greater than 1.4 | 3.0 mm |

Sign supports shall be located as shown on the plans, except that the Engineer may shift the sign supports, within design guidelines, where necessary to secure a more desirable location or to avoid conflict with utilities. Unless otherwise shown on the plans, the Contractor shall stake and the Engineer will verify all sign support locations.

Reflective sheeting will be designated as:

Type A - Engineer Grade
Type B - Super Engineer Grade
Type C - High Specific Intensity

©2000
Texas Department of Transportation

SMALL SIGN SUMMARY SUPPLEMENTAL
SHEET 11 OF 11

| FED. ROAD DIV. NO. | FEDERAL AID PROJECT NO. | SHEET NO. |
|---|---|---|
| 6 | NH 2000(704),etc. | 53k |

| STATE | DIST. | COUNTY |
|---|---|---|
| TEXAS | SAT | BEXAR |

| CONT. | SECT. | JOB | HIGHWAY NO. |
|---|---|---|---|
| 2452 | 01 | 036,etc. | LP 1604 |

# SUMMARY OF LARGE SIGNS

| PLAN SHEET NO. | SIGN NO. | SIGN TYPE | SIGN BACKGROUND COLOR | SIGN BACKGROUND REFL. | SIGN TEXT | SIGN DIMENSIONS | ROUTE SHIELDS, EXIT ONLY PANELS, & OTHER ATTACHMENTS ALUMINUM (TYPE A) | BACKGROUND SUBSTRATE (SQ METERS) GROUND MOUNT PLYWOOD (TYPE A) | GROUND MOUNT ALUMINUM (TYPE G) | OVERHEAD ALUMINUM (TYPE O) | TYPE OF MOUNT | "X" DIMENSION ◒ post ① | post ② | post ③ | GALVANIZED STRUCTURAL STEEL SIZE | LINEAR METERS post ① | post ② | post ③ | TOTAL WEIGHT KGS. | DRILLED SHAFT LINEAR METERS NON-REINF 300ϕ | REINFORCED 600ϕ | 750ϕ |
|---|---|---|---|---|---|---|---|---|---|---|---|---|---|---|---|---|---|---|---|---|---|---|
| 4/57 | 5 | M1-6F3B<br>F3-1A | WHITE<br>GREEN | BLACK<br>WHITE | FM 471<br>Culebra Rd<br>EXIT 1/2 MILE | 1.066 X 0.914<br>4.724 X 2.895 | 1.0 | | 13.8 | | 320 | 1.57 | 2.20 | | W200x27 | 6.443 | 7.072 | | 412 | | 5.2 | |
| 6/57 | 2 | M1-6F3B<br>F2-1 | WHITE<br>GREEN | BLACK<br>WHITE | FM 471<br>Culebra Rd | 1.066 X 0.914<br>4.724 X 3.352 | 1.0 | | 15.8 | | 320 | 1.76 | 2.47 | | W200x27 | 7.094 | 6.203 | | 437 | | 5.2 | |
| 7/57 | 1 | SPL | RED | WHITE | | 2.400 X 1.200 | | | 2.9 | | 320 | - | - | | S75X8 | 3.258 | 3.258 | | 103 | 2.1 | | |
| 7/57 | 2 | E5-1 | GREEN | WHITE | EXIT | 1.800 X 1.500 | | | 2.7 | | 320 | .207 | .258 | | S75X8 | 3.677 | 3.728 | | 108 | 2.1 | | |
| | | | | | | C.S.J. 2452-01-037 CONTROL SHEET TOTALS | 2.0 | | 35.2 | | | | | | | | | | 1060 | 4.2 | 10.4 | |
| 9a/57 | 5 | D1-3a<br>(SPL) | GREEN | WHITE | LEON VALLEY 6<br>WILLIAM H. TAFT HIGH SCHOOL 1⇨<br>CASTROVILLE 24 ⇨ | 2.743 X 1.217 | | | 3.3 | | 320 | .690 | 1.18 | | S75X8 | 3.878 | 4.362 | | 117 | 2.1 | | |
| 9a/57 | 8 | SD14-1<br>EW12-3 | GREEN<br>YELLOW | WHITE<br>BLACK | TURNAROUND<br>XX FT XX IN | 2.400 X 1.200<br>2.400 X 0.450 | | | 2.9<br>1.1 | | 320 | - | - | | S75X8 | 3.708 | 3.708 | | 106 | 2.1 | | |
| 9b/57 | 8 | SD14-1<br>EW12-3 | GREEN<br>YELLOW | WHITE<br>BLACK | TURNAROUND<br>XX FT XX IN | 2.400 X 1.200<br>2.400 X 0.450 | | | 2.9<br>1.1 | | 320 | - | - | | S75X8 | 3.708 | 3.708 | | 106 | 2.1 | | |
| 10/57 | 4 | D1-3a<br>(SPL) | GREEN | WHITE | WILLIAM H. TAFT HIGH SCHOOL 1<br>⇦ CASTROVILLE 24<br>LEON VALLEY 6 ⇨ | 2.743 X 1.217 | | | 3.3 | | 320 | .587 | 1.00 | | S75x8 | 3.774 | 4.187 | | 115 | 2.1 | | |
| 11/57 | 1 | M1-6L4B<br>(SPL) | GREEN<br>GREEN | WHITE<br>BLACK | SOUTH<br>LOOP 1604 | 3.200 X 3.505 | | | 11.2 | | 320 | .717 | 1.04 | | W150X18 | 6.204 | 6.524 | | 273 | | 4.0 | |
| 11/57 | 2 | M1-6T3B<br>F3-1a<br>E11-1a<br>(SPL) | WHITE<br>GREEN<br>YELLOW | BLACK<br>WHITE<br>BLACK | TEXAS 151 Stotzer Frwy<br>Sea World<br>EXIT 1/2 MILE<br>LEFT EXIT | 4.419 X 3.657 | | | 16.2 | | 320 | .655 | .861 | | W200X27 | 6.294 | 6.500 | | 372 | | 5.2 | |
| | | | | | | C.S.J. 2452-01-038 CONTROL SHEET TOTALS | 0.0 | | 42.0 | | | | | | | | | | 1089 | 8.4 | 9.2 | |

QUANTITIES FOR C.S.J. 2452-01-037

QUANTITIES FOR C.S.J. 2452-01-038

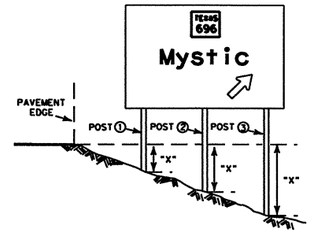


◒ The "X" dimension is the elevation difference at the post between the ground and the edge of pavement or top of curb.

Sign supports shall be located as shown on the plans, except that the Engineer may shift the sign supports, within design guidelines, where necessary to secure a more desirable location or to avoid conflict with utilities. Unless otherwise shown on the plans, the Contractor shall stake and the Engineer will verify all sign support locations.

The post lengths listed here are approximations, The corrected post lengths will be furnished by the Engineer after the contractor has placed the stud posts.

Tower heights shall be verified with the Engineer before fabrication.

## FABRICATION REQUIREMENTS

**SIGN BACKGROUND:**

| COLOR | MATERIAL |
|---|---|
| Blue | Type C (High Specific Intensity) |
| Brown | Type C (High Specific Intensity) |
| Green | Type C (High Specific Intensity) |
| Orange | Type C (High Specific Intensity) |
| White | Type A (Engineer Grade) |
| Yellow | Type C (High Specific Intensity) |

**SIGN LEGEND AND BORDERS:**

| COLOR | MATERIAL |
|---|---|
| White | Type C (High Specific Intensity) |
| Black | Vinyl Non-reflec. Decal Sheeting |

**ROUTE SHEILDS, EXIT ONLY PANELS, AND OTHER ATTACHMENTS:**

See IM(1)M, IE(2)M and IE(4)M for additional details

**ROUTING PLAQUES:**

- HC - HAZARDOUS CARGO PERMITTED
- NHC - HAZARDOUS CARGO PROHIBITED
- AIRPORT
- H - HOSPITAL

©2000 Texas Department of Transportation

# LARGE SIGN SUMMARY

SHEET 1 OF 4

| FED.RD. DIV.NO. | FEDERAL AID PROJECT NO. | | SHEET NO. |
|---|---|---|---|
| 6 | NH 2000 (704),etc. | | 54 |
| STATE | DIST. | COUNTY | |
| TEXAS | SAT | BEXAR | |
| CONT. | SECT. | JOB | HIGHWAY NO. |
| 2452 | 01 | 036,etc. | LP 1604 |

LEW
FILE: sgnsumlarge.dgn
ACC:

# SUMMARY OF LARGE SIGNS

| PLAN SHEET NO. | SIGN NO. | SIGN TYPE | SIGN BACKGROUND COLOR | SIGN BACKGROUND REFL. | SIGN TEXT | SIGN DIMENSIONS | ROUTE SHIELDS, EXIT ONLY PANELS, & OTHER ATTACHMENTS ALUMINUM (TYPE A) | BACKGROUND SUBSTRATE (SQ METERS) GROUND MOUNT PLYWOOD (TYPE A) | GROUND MOUNT ALUMINUM (TYPE G) | OVERHEAD ALUMINUM (TYPE O) | TYPE OF MOUNT | "X" DIMENSION ◒ post ① | post ② | post ③ | GALVANIZED STRUCTURAL STEEL SIZE | LINEAR METERS post ① | post ② | post ③ | TOTAL WEIGHT KGS. | DRILLED SHAFT LINEAR METERS NON-REINF 300ϕ | REINFORCED 600ϕ | 750ϕ |
|---|---|---|---|---|---|---|---|---|---|---|---|---|---|---|---|---|---|---|---|---|---|---|
| 11/57 | 3 | M1-6T3B<br>F3-1a<br>E11-1a (SPL) | WHITE<br>GREEN<br>YELLOW | BLACK<br>WHITE<br>BLACK | TEXAS 151 Stotzer Frwy<br>Sea World<br>EXIT 1/2 MILE<br>LEFT EXIT | 4.419 X 3.657 | | | 16.2 | | 320 | .685 | .945 | | W200X27 | 6.324 | 6.584 | | 375 | | 5.2 | |
| 12/57 | 2 | E5-1 | GREEN | WHITE | EXIT | 1.800 X 1.500 | | | 2.7 | | 320 | - | - | | S75X8 | 3.558 | 3.558 | | 104 | 2.1 | | |
| 12/57 | 5 | SPL | WHITE | RED | | 2.438 X 1.219 | | | 3.0 | | 320 | - | - | | S75X8 | 3.277 | 3.277 | | 102 | 2.1 | | |
| 13/57 | 2 | M1-6F3B<br>F2-1 | WHITE<br>GREEN | BLACK<br>WHITE | FM 471<br>Culebra Rd | 1.066 X 0.914<br>5.181 X 2.286 | 1.0 | | 11.8 | | 320 | 1.37 | .589 | | W150X22 | 5.634 | 4.857 | | 286 | | 4.6 | |
| | | | | | | C.S.J. 2452-01-038 CONTROL SHEET TOTALS | 1.0 | | 33.7 | | | | | | | | | | 867 | 4.2 | 9.8 | |
| 13/57 | 1 | M1-6F3B<br>F3-1a | WHITE<br>GREEN | BLACK<br>WHITE | FM 471<br>Culebra Rd<br>EXIT 1/4 MILE | 1.066 X 0.914<br>4.724 X 2.895 | 1.0 | | 13.7 | | 320 | 1.39 | 0.68 | | W150X22 | 6.266 | 5.557 | | 305 | | 4.6 | |
| 13a/57 | 1 | M1-6L4B<br>F2-1<br>M1-6L4B | WHITE<br>GREEN<br>WHITE | BLACK<br>WHITE<br>BLACK | NORTH LOOP 1604 ↖ \| SOUTH LOOP 1604 ↗ | 1.549 X 0.914<br>5.028 X 3.048<br>1.549 X 0.914 | 1.4<br><br>1.4 | | 15.3 | | 320 | 0.18 | 0.38 | | W150X22 | 5.286 | 5.486 | | 272 | | 5.7 | |
| 14/57 | 7 | M1-6T3B<br>F2-1<br>E11-1a (SPL) | WHITE<br>GREEN<br>YELLOW | BLACK<br>WHITE<br>BLACK | TEXAS 151 Stotzer Frwy<br>Sea World<br>LEFT 2 LANES | 0.939 X 0.914<br>4.724 X 3.048<br>4.724 X 0.838 | 0.9<br><br>4.0 | | 14.4 | | 320 | 1.17 | 1.62 | | W150X22 | 6.204 | 6.647 | | 321 | | 4.6 | |
| 14/57 | 8 | M1-6T3B<br>F2-1<br>E11-1a (SPL) | WHITE<br>GREEN<br>YELLOW | BLACK<br>WHITE<br>BLACK | TEXAS 151 Stotzer Frwy<br>Sea World<br>LEFT 2 LANES | 0.939 X 0.914<br>4.724 X 3.048<br>4.724 X 0.838 | 0.9<br><br>4.0 | | 14.4 | | 320 | .797 | 1.05 | | W150X22 | 5.827 | 6.082 | | 300 | | 4.6 | |
| 14/57 | 9 | R3-8 (SPL) | WHITE | BLACK | ONLY ONLY | 2.44 X 1.20 | | | 2.9 | | 320 | .572 | .812 | | S75X8 | 3.742 | 3.982 | | 113 | 2.1 | | |
| | | | | | | C.S.J. 2452-01-037 CONTROL SHEET TOTALS | 13.6 | | 60.7 | | | | | | | | | | 1311 | 2.1 | 19.5 | |

QUANTITIES FOR C.S.J. 2452-01-038

QUANTITIES FOR C.S.J. 2452-01-037

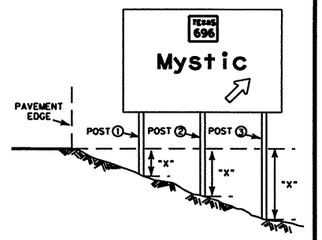


◒ The "X" dimension is the elevation difference at the post between the ground and the edge of pavement or top of curb.

Sign supports shall be located as shown on the plans, except that the Engineer may shift the sign supports, within design guidelines, where necessary to secure a more desirable location or to avoid conflict with utilities. Unless otherwise shown on the plans, the Contractor shall stake and the Engineer will verify all sign support locations.

The post lengths listed here are approximations, The corrected post lengths will be furnished by the Engineer after the contractor has placed the stud posts.

Tower heights shall be verified with the Engineer before fabrication.

## FABRICATION REQUIREMENTS

**SIGN BACKGROUND:**

| COLOR | MATERIAL |
|---|---|
| Blue | Type C (High Specific Intensity) |
| Brown | Type C (High Specific Intensity) |
| Green | Type C (High Specific Intensity) |
| Orange | Type C (High Specific Intensity) |
| White | Type A (Engineer Grade) |
| Yellow | Type C (High Specific Intensity) |

**SIGN LEGEND AND BORDERS:**

| COLOR | MATERIAL |
|---|---|
| White | Type C (High Specific Intensity) |
| Black | Vinyl Non-reflec. Decal Sheeting |

**ROUTE SHEILDS, EXIT ONLY PANELS, AND OTHER ATTACHMENTS:**

See IM(1)M, IE(2)M and IE(4)M for additional details

**ROUTING PLAQUES:**

(HC) - HAZARDOUS CARGO PERMITTED

(HC) - HAZARDOUS CARGO PROHIBITED

- AIRPORT

H - HOSPITAL

©2000 Texas Department of Transportation

# LARGE SIGN SUMMARY

SHEET 2 OF 4

| FED.RD. DIV.NO. | FEDERAL AID PROJECT NO. | | SHEET NO. |
|---|---|---|---|
| 6 | NH 2000 (704), etc. | | 55 |
| STATE | DIST. | COUNTY | |
| TEXAS | SAT | BEXAR | |
| CONT. | SECT. | JOB | HIGHWAY NO. |
| 2452 | 01 | 036, etc. | LP 1604 |

LEVEL: 1 2 3 4 5 6 7 | 8 9 10 11 12 13 14 15 16 17 | 18 19 20 21 22 23 24 25 26 27 28 29 30 31 32 33 34 35 36 37 38 39 40 41 42 43 44 45 46 47 48 49 50 51 52 53 54 55 56 57 58 59 60 61 62 63 | ACC: | FILE: sgnsumlarge.dgn

# SUMMARY OF LARGE SIGNS

| PLAN SHEET NO. | SIGN NO. | SIGN TYPE | SIGN BACKGROUND COLOR | SIGN BACKGROUND REFL. | SIGN TEXT | SIGN DIMENSIONS | ROUTE SHIELDS, EXIT ONLY PANELS, & OTHER ATTACHMENTS ALUMINUM (TYPE A) | BACKGROUND SUBSTRATE (SQ METERS) GROUND MOUNT PLYWOOD (TYPE A) | GROUND MOUNT ALUMINUM (TYPE G) | OVERHEAD ALUMINUM (TYPE O) | TYPE OF MOUNT | "X" DIMENSION ◒ post ① | post ② | post ③ | GALVANIZED STRUCTURAL STEEL SIZE | LINEAR METERS post ① | post ② | post ③ | TOTAL WEIGHT KGS. | DRILLED SHAFT LINEAR METERS NON-REINF 300ϕ | REINFORCED 600ϕ | 750ϕ |
|---|---|---|---|---|---|---|---|---|---|---|---|---|---|---|---|---|---|---|---|---|---|---|
| 14/57 | 9a | R3-8 (SPL) | WHITE | BLACK | 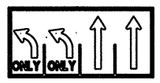  | 2.44 X 1.20 | | | 2.9 | | 320 | .572 | .812 | | S75X8 | 3.742 | 3.982 | | 113 | 2.1 | | |
| 15/57 | 3 | M1-6T3B<br>F2-1 (SPL) | WHITE<br>GREEN | BLACK<br>WHITE | 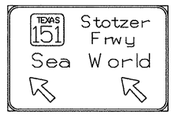  | 0.939 X 0.914<br>4.572 X 3.048 | 0.9 | | 13.9 | | 320 | .237 | .366 | | W150x22 | 5.287 | 5.396 | | 273 | | 4.6 | |
| 17/57 | 6 | M1-6F3B<br>F3-1A | WHITE<br>GREEN | BLACK<br>WHITE | 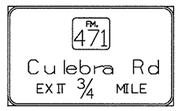  | 1.066 X 0.914<br>4.724 X 2.895 | 1.0 | | 13.7 | | 320 | .395 | .632 | | W150X22 | 5.272 | 5.509 | | 279 | | 4.6 | |
| 18/57 | 1 | M1-6T3B<br>F2-1<br>E11-1e | WHITE<br>GREEN<br>YELLOW | BLACK<br>WHITE<br>BLACK | 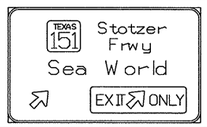  | 0.939 X 0.914<br>5.486 X 3.352<br>2.743 X 0.762 | 0.9<br>2.1 | | 18.4 | | 320 | - | - | | W200X27 | 6.106 | 6.106 | | 347 | | 5.2 | |
| 18/57 | 2 | E5-1 | GREEN | WHITE | 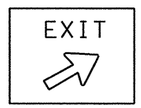  | 1.800 X 1.500 | | | 2.7 | | 320 | .207 | .258 | | S75X8 | 3.677 | 3.728 | | 108 | 2.1 | | |
| 18/57 | 4 | F2-1<br>M1-6L4D | GREEN<br>WHITE | WHITE<br>BLACK | 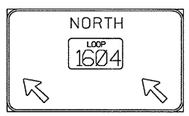  | 5.029 X 3.048<br>1.549 X 0.914 | 1.4 | | 15.3 | | 320 | .734 | .492 | | W150X22 | 5.764 | 5.522 | | 287 | | 4.6 | |
| 19/57 | 4 | M1-6T3B<br>F2-1 (SPL)<br>E11-1e | WHITE<br>GREEN<br>YELLOW | BLACK<br>WHITE<br>BLACK | 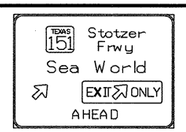  | 0.939 X 0.914<br>5.486 X 3.962<br>2.743 X 0.762 | 0.9<br>2.1 | | 21.7 | | 320 | 1.13 | 1.86 | | W200X31 | 7.077 | 7.808 | | 504 | | 5.8 | |
| 21/57 | 1 | M1-6T3B<br>F3-1A | WHITE<br>GREEN | BLACK<br>WHITE | 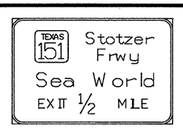  | 0.939 X 0.914<br>4.572 X 3.048 | 0.9 | | 13.9 | | 320 | .833 | 1.61 | | W150X22 | 6.040 | 6.634 | | 321 | | 4.6 | |
| 21/57 | 2 | D1-3 | GREEN<br>GREEN<br>BLUE | WHITE<br>WHITE<br>WHITE | 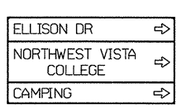  | 2.590 X 1.217 | | | 3.2 | | 320 | -.71 | -1.6 | | S75X8 | 2.470 | 2.022 | | 87 | 2.1 | | |
| 21/57 | 7 | D1 (SPL) | GREEN | WHITE | 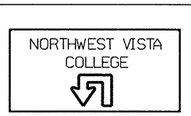  | 2.438 X 1.219 | | | 3.0 | | 320 | .769 | .941 | | S75X8 | 3.958 | 4.130 | | 116 | 2.1 | | |
| | | | | | C.S.J. 2452-01-037 CONTROL SHEET TOTALS | | 10.2 | | 108.7 | | | | | | C.S.J. 2452-01-037 CONTROL SHEET TOTALS | | | | 2435 | 8.4 | 29.4 | |

QUANTITIES FOR C.S.J. 2452-01-037

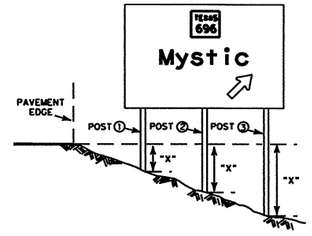


◒ The "X" dimension is the elevation difference at the post between the ground and the edge of pavement or top of curb.

Sign supports shall be located as shown on the plans, except that the Engineer may shift the sign supports, within design guidelines, where necessary to secure a more desirable location or to avoid conflict with utilities. Unless otherwise shown on the plans, the Contractor shall stake and the Engineer will verify all sign support locations.

The post lengths listed here are approximations, The corrected post lengths will be furnished by the Engineer after the contractor has placed the stud posts.

Tower heights shall be verified with the Engineer before fabrication.

## FABRICATION REQUIREMENTS

**SIGN BACKGROUND:**

| COLOR | MATERIAL |
|---|---|
| Blue | Type C (High Specific Intensity) |
| Brown | Type C (High Specific Intensity) |
| Green | Type C (High Specific Intensity) |
| Orange | Type C (High Specific Intensity) |
| White | Type A (Engineer Grade) |
| Yellow | Type C (High Specific Intensity) |

**SIGN LEGEND AND BORDERS:**

| COLOR | MATERIAL |
|---|---|
| White | Type C (High Specific Intensity) |
| Black | Vinyl Non-reflec. Decal Sheeting |

**ROUTE SHEILDS, EXIT ONLY PANELS, AND OTHER ATTACHMENTS:**

See IM(1)M, IE(2)M and IE(4)M for additional details

**ROUTING PLAQUES:**

- HC - HAZARDOUS CARGO PERMITTED
- NC - HAZARDOUS CARGO PROHIBITED
- AIRPORT
- H - HOSPITAL

©2000 Texas Department of Transportation

## LARGE SIGN SUMMARY
SHEET 3 OF 4

| FED.RD. DIV.NO. | FEDERAL AID PROJECT NO. | SHEET NO. |
|---|---|---|
| 6 | NH 2000 (704), etc. | 56 |
| STATE | DIST. | COUNTY |
| TEXAS | SAT | BEXAR |
| CONT. | SECT. | JOB / HIGHWAY NO. |
| 2452 | 01 | 036, etc. / LP 1604 |

LEVEL 1 2 3 4 5 6 7 | FILE: sgnsumlarge.dgn | ACC:

# SUMMARY OF LARGE SIGNS

| PLAN SHEET NO. | SIGN NO. | SIGN TYPE | SIGN BACKGROUND COLOR | SIGN BACKGROUND REFL. | SIGN TEXT | SIGN DIMENSIONS | ROUTE SHIELDS, EXIT ONLY PANELS, & OTHER ATTACHMENTS ALUMINUM (TYPE A) | BACKGROUND SUBSTRATE (SQ METERS) GROUND MOUNT PLYWOOD (TYPE A) | GROUND MOUNT ALUMINUM (TYPE G) | OVERHEAD ALUMINUM (TYPE O) | TYPE OF MOUNT | "X" DIMENSION ◒ post ① | post ② | post ③ | GALVANIZED STRUCTURAL STEEL SIZE | LINEAR METERS post ① | post ② | post ③ | TOTAL WEIGHT KGS. | DRILLED SHAFT LINEAR METERS NON-REINF 300ϕ | REINFORCED 600ϕ | 750ϕ |
|---|---|---|---|---|---|---|---|---|---|---|---|---|---|---|---|---|---|---|---|---|---|---|
| 22/57 | 16 | SD14-1 | GREEN | WHITE | TURNAROUND ⇦ | 2.400 X 1.200 | | | 2.9 | | 320 | - | - | | S75X8 | 3.17 | 3.17 | | 102 | 2.1 | | |
| 22a/57 | 10 | SD14-1 | GREEN | WHITE | TURNAROUND ⇦ | 2.400 X 1.200 | | | 2.9 | | 320 | .609 | .824 | | S75X8 | 3.779 | 3.994 | | 114 | 2.1 | | |
| | | | | | **C.S.J. 2452-01-037 CONTROL SHEET TOTALS** | | | | 5.8 | | | | | | | | | | 216 | 4.2 | | |
| 29/57 | 1 | SD14-1 | GREEN | WHITE | TURNAROUND ⇦ | 2.400 X 1.200 | | | 2.9 | | 320 | .285 | .465 | | S75X8 | 3.45 | 3.63 | | 108 | 2.1 | | |
| 29/57 | 10 | SD14-1 | GREEN | WHITE | TURNAROUND ⇦ | 2.400 X 1.200 | | | 2.9 | | 320 | | | | S75X8 | 3.17 | 3.17 | | 102 | 2.1 | | |
| 34a/57 | 6 | SD14-1 | GREEN | WHITE | TURNAROUND ⇦ | 2.400 X 1.200 | | | 2.9 | | 320 | .217 | .354 | | S75X8 | 3.387 | 3.524 | | 107 | 2.1 | | |
| 34b/57 | 11 | SD14-1 | GREEN | WHITE | TURNAROUND ⇦ | 2.400 X 1.200 | | | 2.9 | | 320 | - | - | | S75X8 | 3.170 | 3.170 | | 102 | 2.1 | | |
| 48/57 | 1 | SD14-1 | GREEN | WHITE | TURNAROUND ⇦ | 2.400 X 1.200 | | | 2.9 | | 320 | - | - | | S75X8 | 3.170 | 3.170 | | 102 | 2.1 | | |
| 48/57 | 5 | SD14-1 | GREEN | WHITE | TURNAROUND ⇦ | 2.400 X 1.200 | | | 2.9 | | 320 | - | - | | S75X8 | 3.170 | 3.170 | | 102 | 2.1 | | |
| 48a/57 | 4 | W1-9L | YELLOW | BLACK | ⇦ | 2.400 X .900 | | | 2.2 | | 320 | 0.5 | 0.5 | | S75X8 | 2.630 | 2.630 | | 109 | 2.1 | | |
| 52/57 | 4 | W1-9R | YELLOW | BLACK | ⇨ | 2.400 X .900 | | | 2.2 | | 320 | 0.5 | 0.5 | | S75X8 | 2.630 | 2.630 | | 109 | 2.1 | | |
| | | | | | **C.S.J. 2452-01-036 CONTROL SHEET TOTALS** | | | | 21.8 | | | | | | | | | | 841 | 16.8 | | |
| | | | | | | | | | | | | | | | | | | | | | | |

**PAGE TOTALS**

**QUANTITIES FOR C.S.J. 2452-01-037**

**QUANTITIES FOR C.S.J. 2452-01-036**

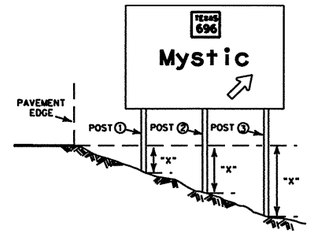


◒ The "X" dimension is the elevation difference at the post between the ground and the edge of pavement or top of curb.

Sign supports shall be located as shown on the plans, except that the Engineer may shift the sign supports, within design guidelines, where necessary to secure a more desirable location or to avoid conflict with utilities. Unless otherwise shown on the plans, the Contractor shall stake and the Engineer will verify all sign support locations.

The post lengths listed here are approximations, The corrected post lengths will be furnished by the Engineer after the contractor has placed the stud posts.

Tower heights shall be verified with the Engineer before fabrication.

## FABRICATION REQUIREMENTS

**SIGN BACKGROUND:**

| COLOR | MATERIAL |
|---|---|
| Blue | Type C (High Specific Intensity) |
| Brown | Type C (High Specific Intensity) |
| Green | Type C (High Specific Intensity) |
| Orange | Type C (High Specific Intensity) |
| White | Type A (Engineer Grade) |
| Yellow | Type C (High Specific Intensity) |

**SIGN LEGEND AND BORDERS:**

| COLOR | MATERIAL |
|---|---|
| White | Type C (High Specific Intensity) |
| Black | Vinyl Non-reflec. Decal Sheeting |

**ROUTE SHEILDS, EXIT ONLY PANELS, AND OTHER ATTACHMENTS:**

See IM(1)M, IE(2)M and IE(4)M for additional details

**ROUTING PLAQUES:**

- HC - HAZARDOUS CARGO PERMITTED
- NHC - HAZARDOUS CARGO PROHIBITED
- AIRPORT
- H - HOSPITAL

©2000 Texas Department of Transportation

## LARGE SIGN SUMMARY

SHEET 4 OF 4

| FED.RD. DIV.NO. | FEDERAL AID PROJECT NO. | SHEET NO. |
|---|---|---|
| 6 | NH 2000 (704), etc. | 57 |

| STATE | DIST. | COUNTY | |
|---|---|---|---|
| TEXAS | SAT | BEXAR | |
| CONT. | SECT. | JOB | HIGHWAY NO. |
| 2452 | 01 | 036, etc. | LP 1604 |

LEVEL: 1 2 3 4 5 6 7 8 9 10 11 12 13 14 15 16 17 18 19 20 21 22 23 24 25 26 27 28 29 30 31 32 33 34 35 36 37 38 39 40 41 42 43 44 45 46 47 48 49 50 51 52 53 54 55 56 57 58 59 60 61 62 63 ACC: FILE: sgnsumlarge.dgn

# SUMMARY OF LARGE SIGNS

| PLAN SHEET NO. | SIGN NO. | SIGN TYPE | SIGN BACKGROUND COLOR | SIGN BACKGROUND REFL. | SIGN TEXT | SIGN DIMENSIONS | ROUTE SHIELDS, EXIT ONLY PANELS, & OTHER ATTACHMENTS ALUMINUM (TYPE A) | BACKGROUND SUBSTRATE (SQ METERS) GROUND MOUNT PLYWOOD (TYPE A) | GROUND MOUNT ALUMINUM (TYPE G) | OVERHEAD ALUMINUM (TYPE O) | TYPE OF MOUNT | "X" DIMENSION ⊖ post ① | post ② | post ③ | GALVANIZED STRUCTURAL STEEL SIZE | LINEAR METERS post ① | post ② | post ③ | TOTAL WEIGHT KGS. | DRILLED SHAFT LINEAR METERS NON-REINF 300ϕ | REINFORCED 600ϕ | 750ϕ |
|---|---|---|---|---|---|---|---|---|---|---|---|---|---|---|---|---|---|---|---|---|---|---|
| 654A (14/57) | 12 | W1-9R | YELLOW | BLACK | 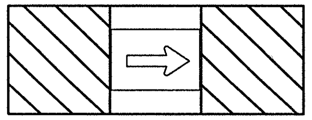 | 2.400 X .900 | | | 2.2 | | 320 | 0.5 | 0.5 | | S75X8 | 2.630 | 2.630 | | 109 | 2.1 | | |
| C.S.J. 2452-01-037 CONTROL SHEET TOTALS | | | | | | | | | 2.2 | | | | | | | | | | | | | |
| PAGE TOTALS | | | | | | | | | | | | | | | | | | | 109 | 2.1 | | |

QUANTITIES FOR C.S.J. 2452-01-037

QUANTITIES FOR C.S.J. 2452-01-036

-FOR SIGNING ADDENDUM ASSOCIATED WITH CHANGE ORDER NO. 11 ONLY.

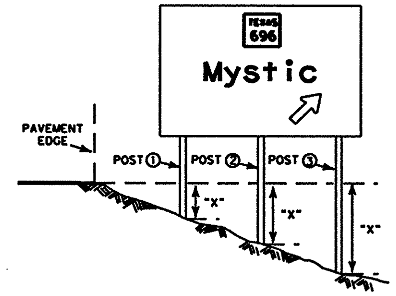


⊖ The "X" dimension is the elevation difference at the post between the ground and the edge of pavement or top of curb.

Sign supports shall be located as shown on the plans, except that the Engineer may shift the sign supports, within design guidelines, where necessary to secure a more desirable location or to avoid conflict with utilities. Unless otherwise shown on the plans, the Contractor shall stake and the Engineer will verify all sign support locations.

The post lengths listed here are approximations, The corrected post lengths will be furnished by the Engineer after the contractor has placed the stud posts.

Tower heights shall be verified with the Engineer before fabrication.

## FABRICATION REQUIREMENTS

**SIGN BACKGROUND:**

| COLOR | MATERIAL |
|---|---|
| Blue | Type C (High Specific Intensity) |
| Brown | Type C (High Specific Intensity) |
| Green | Type C (High Specific Intensity) |
| Orange | Type C (High Specific Intensity) |
| White | Type A (Engineer Grade) |
| Yellow | Type C (High Specific Intensity) |

**SIGN LEGEND AND BORDERS:**

| COLOR | MATERIAL |
|---|---|
| White | Type C (High Specific Intensity) |
| Black | Vinyl Non-reflec. Decal Sheeting |

**ROUTE SHEILDS, EXIT ONLY PANELS, AND OTHER ATTACHMENTS:**

See IM(1)M, IE(2)M and IE(4)M for additional details

**ROUTING PLAQUES:**

- HC - HAZARDOUS CARGO PERMITTED
- HC (prohibited) - HAZARDOUS CARGO PROHIBITED
- AIRPORT
- HOSPITAL

©2000 Texas Department of Transportation

# LARGE SIGN SUMMARY

| FED. RD. DIV. NO. | FEDERAL AID PROJECT NO. | | | SHEET NO. |
|---|---|---|---|---|
| 6 | NH 2000 (704), etc. | | | 57A |
| STATE | DIST. | COUNTY | | |
| TEXAS | SAT | BEXAR | | |
| CONT. | SECT. | JOB | HIGHWAY NO. | |
| 2452 | 01 | 036, etc. | LP 1604 | |

LEVELS DISPLAYED: 1 3 4 5 6 7 8 9 10 11 12 13 14 15 16 / 17 18 19 20 21 22 23 24 25 26 27 28 29 30 31 32 / 33 34 35 36 37 38 39 40 41 42 43 44 45 46 47 48 / 49 50 51 52 53 54 55 56 57 58 59 60 61 62 63
ACC:
FILE: sgnsumlarge.dgn

# SUMMARY OF LARGE SIGNS

| PLAN SHEET NO. | SIGN NO. | SIGN TYPE | SIGN BACKGROUND COLOR | SIGN BACKGROUND REFL. | SIGN TEXT | SIGN DIMENSIONS | ROUTE SHIELDS, EXIT ONLY PANELS, & OTHER ATTACHMENTS ALUMINUM (TYPE A) | BACKGROUND SUBSTRATE (SQ METERS) GROUND MOUNT PLYWOOD (TYPE A) | GROUND MOUNT ALUMINUM (TYPE G) | OVERHEAD ALUMINUM (TYPE O) | TYPE OF MOUNT | "X" DIMENSION ◒ post ① | post ② | post ③ | GALVANIZED STRUCTURAL STEEL SIZE | LINEAR METERS post ① | post ② | post ③ | TOTAL WEIGHT KGS. | DRILLED SHAFT LINEAR METERS NON-REINF 300ϕ | REINFORCED 600ϕ | 750ϕ |
|---|---|---|---|---|---|---|---|---|---|---|---|---|---|---|---|---|---|---|---|---|---|---|
| 22/57 | 16 | SD14-1 | GREEN | WHITE | TURNAROUND | 2.400 X 1.200 | | | 2.9 | | 320 | - | - | | S75X8 | 3.17 | 3.17 | | 102 | 2.1 | | |
| ~~22a/57~~ | ~~10~~ | ~~SD14-1~~ | GREEN | WHITE | TURNAROUND | ~~2.400 X 1.200~~ | | | ~~2.9~~ | | 320 | .609 | .824 | | ~~S75X8~~ | 3.779 | 3.994 | | ~~114~~ | ~~2.1~~ | | |
| | | | | | C.S.J. 2452-01-037 CONTROL SHEET TOTALS | | | | 2.9 | | | | | | | | | | 102 | 2.1 | | |
| 29/57 | 1 | SD14-1 | GREEN | WHITE | TURNAROUND | 2.400 X 1.200 | | | 2.9 | | 320 | .285 | .465 | | S75X8 | 3.45 | 3.63 | | 108 | 2.1 | | |
| 29/57 | 10 | SD14-1 | GREEN | WHITE | TURNAROUND | 2.400 X 1.200 | | | 2.9 | | 320 | | | | S75X8 | 3.17 | 3.17 | | 102 | 2.1 | | |
| ~~34a/57~~ | ~~6~~ | ~~SD14-1~~ | GREEN | WHITE | TURNAROUND | ~~2.400 X 1.200~~ | | | ~~2.9~~ | | 320 | .217 | .354 | | S75X8 | 3.387 | 3.524 | | ~~107~~ | ~~2.1~~ | | |
| ~~34b/57~~ | ~~11~~ | ~~SD14-1~~ | GREEN | WHITE | TURNAROUND | 2.400 X 1.200 | | | ~~2.9~~ | | 320 | - | - | | S75X8 | 3.170 | 3.170 | | ~~102~~ | ~~2.1~~ | | |
| 48/57 | 1 | SD14-1 | GREEN | WHITE | TURNAROUND | 2.400 X 1.200 | | | 2.9 | | 320 | - | - | | S75X8 | 3.170 | 3.170 | | 102 | 2.1 | | |
| 48/57 | 5 | SD14-1 | GREEN | WHITE | TURNAROUND | 2.400 X 1.200 | | | 2.9 | | 320 | - | - | | S75X8 | 3.170 | 3.170 | | 102 | 2.1 | | |
| 48a/57 | 4 | W1-9L | YELLOW | BLACK | | 2.400 X .900 | | | 2.2 | | 320 | 0.5 | 0.5 | | S75X8 | 2.630 | 2.630 | | 109 | 2.1 | | |
| 52/57 | 4 | W1-9R | YELLOW | BLACK | | 2.400 X .900 | | | 2.2 | | 320 | 0.5 | 0.5 | | S75X8 | 2.630 | 2.630 | | 109 | 2.1 | | |
| | | | | | C.S.J. 2452-01-036 CONTROL SHEET TOTALS | | | | 16.0 | | | | | | | | | | 632 | 12.6 | | |
| | | | | | | | | | | | | | | | | | | | PAGE TOTALS | | | |

QUANTITIES FOR C.S.J. 2452-01-037

QUANTITIES FOR C.S.J. 2452-01-036

CHANGE ORDER NO. 65
- REMOVED SIGNS
- REVISED QUANTITIES

REVISED SHEET

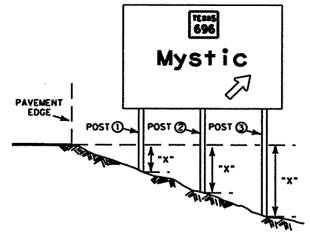


◒ The "X" dimension is the elevation difference at the post between the ground and the edge of pavement or top of curb.

Sign supports shall be located as shown on the plans, except that the Engineer may shift the sign supports, within design guidelines, where necessary to secure a more desirable location or to avoid conflict with utilities. Unless otherwise shown on the plans, the Contractor shall stake and the Engineer will verify all sign support locations.

The post lengths listed here are approximations, The corrected post lengths will be furnished by the Engineer after the contractor has placed the stud posts.

Tower heights shall be verified with the Engineer before fabrication.

## FABRICATION REQUIREMENTS

SIGN BACKGROUND:

| COLOR | MATERIAL |
|---|---|
| Blue | Type C (High Specific Intensity) |
| Brown | Type C (High Specific Intensity) |
| Green | Type C (High Specific Intensity) |
| Orange | Type C (High Specific Intensity) |
| White | Type A (Engineer Grade) |
| Yellow | Type C (High Specific Intensity) |

SIGN LEGEND AND BORDERS:

| COLOR | MATERIAL |
|---|---|
| White | Type C (High Specific Intensity) |
| Black | Vinyl Non-reflec. Decal Sheeting |

ROUTE SHEILDS, EXIT ONLY PANELS, AND OTHER ATTACHMENTS:

See IM(1)M, IE(2)M and IE(4)M for additional details

ROUTING PLAQUES:

(HC) - HAZARDOUS CARGO PERMITTED

(HC) - HAZARDOUS CARGO PROHIBITED

- AIRPORT

H - HOSPITAL

©2004 Texas Department of Transportation

# LARGE SIGN SUMMARY

SHEET 4 OF 4

| FED.RD. DIV.NO. | FEDERAL AID PROJECT NO. | SHEET NO. |
|---|---|---|
| 6 | NH 2000 (704), etc. | 57B |
| STATE | DIST. | COUNTY |
| TEXAS | SAT | BEXAR |
| CONT. | SECT. | JOB | HIGHWAY NO. |
| 2452 | 01 | 036, etc. | LP 1604 |

LEVEL PLAYED ACC: FILE: sgnsumlarge.dgn

1 3 4 5 6 7 8 9 10 11 12 13 14 15 16
7 8 9 20 21 22 23 24 25 26 27 28 29 30 31 32
33 34 35 36 37 38 39 40 41 42 43 44 45 46 47 48
49 50 51 52 53 54 55 56 57 58 59 60 61 62 63

# SUMMARY OF LARGE SIGNS

| PLAN SHEET NO. | SIGN NO. | SIGN TYPE | SIGN BACKGROUND COLOR | SIGN BACKGROUND REFL. | SIGN TEXT | SIGN DIMENSIONS | ROUTE SHIELDS, EXIT ONLY PANELS, & OTHER ATTACHMENTS ALUMINUM (TYPE A) | BACKGROUND SUBSTRATE (SQ METERS) GROUND MOUNT PLYWOOD (TYPE A) | GROUND MOUNT ALUMINUM (TYPE G) | OVERHEAD ALUMINUM (TYPE O) | TYPE OF MOUNT | "X" DIMENSION ◒ post ① | post ② | post ③ | GALVANIZED STRUCTURAL STEEL SIZE | LINEAR METERS post ① | post ② | post ③ | TOTAL WEIGHT KGS. | DRILLED SHAFT LINEAR METERS NON-REINF 300ϕ | REINFORCED 600ϕ | 750ϕ |
|---|---|---|---|---|---|---|---|---|---|---|---|---|---|---|---|---|---|---|---|---|---|---|
| ⚠11 654A (14/57) | 12 | W1-9R | YELLOW | BLACK | 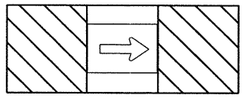 | 2.400 X .900 | | 2.2 | | | 320 | 0.5 | 0.5 | | S75X8 | 2.630 | 2.630 | | 109 | 2.1 | | |
| 662A (22/57) | 21B | SD14-1 | GREEN | WHITE | TURNAROUND ⇦ | 2.400 X 1.200 | | | 2.9 | | 320 | 0.609 | 0.824 | | S75X8 | 3.779 | 3.994 | | 114 | 2.1 | | |
| 676A (34/57) | 9A | SD14-1 | GREEN | WHITE | TURNAROUND ⇦ | 2.400 X 1.200 | | | 2.9 | | 320 | 0.217 | 0.354 | | S75X8 | 3.170 | 3.521 | | 107 | 2.1 | | |
| 676A (34A/57) | 29 | SD14-1 | GREEN | WHITE | TURNAROUND ⇦ | 2.400 X 1.200 | | | 2.9 | | 320 | - | - | | S75X8 | 3.170 | 3.170 | | 102 | 2.1 | | |

QUANTITIES FOR C.S.J. 2452-01-037

QUANTITIES FOR C.S.J. 2452-01-036

CHANGE ORDER NO. 65
- ADDED NEW SIGNS
- REVISED QUANTITIES

REVISED SHEET

⚠# REFERS TO CHANGES MADE AS PART OF CHANGE ORDER.

| C.S.J. 2452-01-037 CONTROL SHEET TOTALS | ⚠11 2.2 | 8.7 |
|---|---|---|
| PAGE TOTALS | 432 | 8.4 |

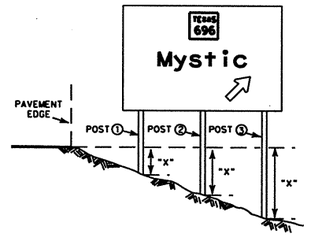


◒ The "X" dimension is the elevation difference at the post between the ground and the edge of pavement or top of curb.

Sign supports shall be located as shown on the plans, except that the Engineer may shift the sign supports, within design guidelines, where necessary to secure a more desirable location or to avoid conflict with utilities. Unless otherwise shown on the plans, the Contractor shall stake and the Engineer will verify all sign support locations.

The post lengths listed here are approximations, The corrected post lengths will be furnished by the Engineer after the contractor has placed the stud posts.

Tower heights shall be verified with the Engineer before fabrication.

## FABRICATION REQUIREMENTS

SIGN BACKGROUND:

| COLOR | MATERIAL |
|---|---|
| Blue | Type C (High Specific Intensity) |
| Brown | Type C (High Specific Intensity) |
| Green | Type C (High Specific Intensity) |
| Orange | Type C (High Specific Intensity) |
| White | Type A (Engineer Grade) |
| Yellow | Type C (High Specific Intensity) |

SIGN LEGEND AND BORDERS:

| COLOR | MATERIAL |
|---|---|
| White | Type C (High Specific Intensity) |
| Black | Vinyl Non-reflec. Decal Sheeting |

ROUTE SHEILDS, EXIT ONLY PANELS, AND OTHER ATTACHMENTS:

See IM(1)M, IE(2)M and IE(4)M for additional details

ROUTING PLAQUES:

- (HC) - HAZARDOUS CARGO PERMITTED
- (HC) - HAZARDOUS CARGO PROHIBITED
- ✈ - AIRPORT
- H - HOSPITAL

©2004 Texas Department of Transportation

# LARGE SIGN SUMMARY

| FED. RD. DIV. NO. | FEDERAL AID PROJECT NO. | | SHEET NO. |
|---|---|---|---|
| 6 | NH 2000 (704), etc. | | 57C |
| STATE | DIST. | COUNTY | |
| TEXAS | SAT | BEXAR | |
| CONT. | SECT. | JOB | HIGHWAY NO. |
| 2452 | 01 | 036, etc. | LP 1604 |

LEVEL PLAYED
1 3 4 5 6 7 8 9 10 11 12 13 14 15 16 ACC:
7 18 19 20 21 22 23 24 25 26 27 28 29 30 31 32
33 34 35 36 37 38 39 40 41 42 43 44 45 46 47 48
49 50 51 52 53 54 55 56 57 58 59 60 61 62 63 FILE: sgnsumlarge.dgn

| SHEET NO. | STATION TO STATION | 0658-5018 DEL ASM TY A (D-SW) FLEX (1.8M) EA EST. | 0658-5022 DEL ASM TY A (D-SY) FLEX (1.8M) EA EST. | 0658-5066 TY 2 FLEX (OM-2SR) (1.8M) EA EST. | 0658-5077 SURF MNT (K-MRKR) EA EST. | OBJ MRK ASM 0658-5098 TY 2 SURF MNT (OM-2HP) (SPL) EA EST. | 0658-5078 TY 3 SURF MNT (OM-3L) EA EST. | 0658-5079 TY 3 SURF MNT (OM-3R) EA EST. | REFLECTIVE PAVEMENT MARKING TY I WHITE 0666-5001 (SLD) (100mm) M EST. | 0666-5002 (BRK) (100mm) M EST. | 0666-5003 (DOT) (100mm) M EST. | 0666-5006 (SLD) (200mm) M EST. | 0666-5007 (BRK) (200mm) M EST. | 0666-5012 (SLD) (600mm) M EST. | 0666-5013 (ARROW) EA EST. | 0666-5014 (DBL ARROW) EA EST. | 0666-5017 (WORD) EA EST. | YELLOW 0666-5024 (SLD) (100mm) M EST. | 0666-5029 (SLD) (200mm) M EST. | 0666-5032 (SLD) (600mm) M EST. | 0666-5034 (MED NOSE) EA EST. | 0432-5001 RIPRAP (CONC) (CL B) APRONS M3 EST. |
|---|---|---|---|---|---|---|---|---|---|---|---|---|---|---|---|---|---|---|---|---|---|---|---|---|
| 754 | BEGIN TO 13+980 | | | | | | | | 102 | 27 | | | | | | | | 102 | | | | | |
| 755 | 13+980 TO 14+240 | | | | | | | | 400 | 96 | | | | | | | | 400 | | | | | |
| 756 | 14+240 TO 14+500 | | | 1 | | | | 1 | 520 | 132 | | | | | | | | 520 | | | | | |
| 757 | 14+500 TO 14+780 | | | 1 | | | | 1 | 560 | 138 | | | | | | | | 560 | | | | | 4.0 |
| 758 | 14+780 TO 15+040 | 2 | | | | | | 1 | 648 | 132 | | | | | 3 | | 3 | 520 | | | | | 7.0 |
| 759 | 15+040 TO 15+300 | 9 | 2 | 2 | | | | | 520 | 156 | | | | | | | | 724 | | | | | 3.5 |
| 760 | 15+300 TO 15+560 | 13 | | | | 1 | | | 834 | 108 | | 238 | | 32 | | | | 923 | | | | | 5.5 |
| | | | | | | | | | | | | | | | | | | | | | | | |
| 769 | 16+880 TO 17+140 | 3 | | | | | | | 280 | 74 | | 60 | 16 | | 2 | | 2 | 280 | | | | | 3.0 |
| 769 | 16+880 TO 17+140 | | | | | | | | | | | | | | | | | | | | | | 1.5 |
| 770 | 17+140 TO 17+400 | | | 2 | | | | | 763 | 137 | | 85 | | 18 | 2 | | 4 | 590 | | | | | 9.0 |
| 771 | 17+400 TO 17+660 | | | | | | | | 1022 | 165 | | 105 | | 111 | 4 | | 2 | 776 | | | | | 9.5 |
| 772 | 17+660 TO 17+920 | | | | | | | | 520 | 132 | | | | | | | | 520 | | | | | 3.0 |
| 773 | 17+920 TO 18+180 | 5 | 6 | 3 | | | | | 573 | 174 | | | | | | | | 818 | | | | | 10.5 |
| 774 | 18+180 TO 18+440 | 11 | 17 | | | 1 | 1 | 1 | 444 | 171 | | 146 | | 55 | 2 | 1 | 2 | 704 | | | | | 4.0 |
| 775 | 18+440 TO 18+700 | 4 | 4 | 2 | | | | | 267 | 192 | | 13 | | 2 | 1 | 1 | 1 | 602 | | | | | 9.5 |
| 776 | 18+700 TO 18+960 | | | 2 | | | | | 418 | 207 | | 112 | | 32 | 4 | | 4 | 556 | | | | | 8.0 |
| 777 | 18+960 TO 19+220 | | | 2 | | | | | 348 | 249 | | | | | 3 | 2 | 3 | 520 | | | | | 6.0 |
| 778 | 19+220 TO 19+480 | | | 7 | 4 | | | | 537 | 159 | | 175 | | 41 | 7 | 2 | 7 | 183 | 158 | 46 | | | 13.5 |
| 779 | WISEMAN BLVD. | | | | | | | | 21 | 21 | 17 | | | 8 | 2 | | 2 | 58 | | 30 | 2 | | |
| 780 | 19+480 TO 19+740 | | | 1 | | | | | 260 | 126 | | | | | | | | 520 | | | | | 4.0 |
| 781 | 19+740 TO 20+000 | | | 2 | | | | 1 | 260 | 132 | | | | | | | | 520 | | | | | 1.0 |
| 782 | 20+000 TO 20+260 | | | 2 | | 1 | 1 | | 334 | 141 | | 143 | | 20 | 3 | | 3 | 520 | | | | | 5.0 |
| 783 | 20+260 TO 20+520 | | | | | | | | 260 | 126 | | | | | | | | 520 | | | | | 2.0 |
| 784 | 20+520 TO 20+780 | | | | | | | | 120 | 60 | | | | | | | | 240 | | | | | |
| | | | | | | | | | | | | | | | | | | | | | | | |
| CSJ 2452-01-037 TOTALS | | 47 | 29 | 27 | 4 | 3 | 2 | 5 | 10011 | 3055 | 17 | 1077 | 16 | 319 | 33 | 6 | 33 | 11676 | 158 | 76 | 2 | 109.5 | |

| | | | | | | | | | | | | | | | | | | | | | | | |
|---|---|---|---|---|---|---|---|---|---|---|---|---|---|---|---|---|---|---|---|---|---|---|---|
| 760 | 15+300 TO 15+560 | 3 | 9 | | | 1 | | | 213 | 39 | | 44 | | 51 | | | | 376 | | | | | 2.0 |
| 761 | 15+560 TO 15+840 | | 11 | 4 | | | 2 | 1 | 940 | 300 | | 149 | | 115 | | | | 1186 | | 166 | | | 5.0 |
| 762 | 15+840 TO 16+020 | | | 7 | | 3 | 1 | 1 | 826 | 225 | | 135 | | 123 | 6 | 3 | 6 | 598 | 12 | 58 | | | 7.5 |
| 763 | 16+020 TO 16+200 | | | 7 | | 5 | 1 | 1 | 748 | 222 | | 149 | | 99 | 6 | 3 | 6 | 585 | 14 | 6 | | | 5.5 |
| 764 | CULEBRA RD. | | | | | | | | 331 | 84 | 34 | 14 | | 68 | 6 | 4 | 6 | 510 | | 69 | 1 | | 13.0 |
| 765 | CULEBRA RD. | | | | | | | | 379 | 84 | 34 | 42 | | 71 | 5 | 2 | 5 | 386 | | 82 | 1 | | 12.5 |
| 766 | 16+200 TO 16+360 | | | | | | | | 320 | 200 | | | | | | | | 640 | | | | | 6.5 |
| 767 | 16+360 TO 16+620 | 1 | 9 | | | 1 | | | 520 | 276 | | 275 | | 30 | | | | 1038 | | | | | 8.5 |
| 768 | 16+620 TO 16+880 | 17 | 3 | | | 1 | | | 739 | 198 | | 422 | 2 | 42 | 1 | | 1 | 759 | | | | | 2.5 |
| 769 | 16+880 TO 17+140 | 4 | | | | | | | 240 | 60 | | | 26 | | 2 | | 2 | 240 | | | | | 1.5 |
| | | | | | | | | | | | | | | | | | | | | | | | |
| CSJ 2452-01-038 TOTALS | | 25 | 32 | 18 | | 11 | 4 | 3 | 5256 | 1688 | 68 | 1230 | 28 | 599 | 26 | 12 | 26 | 6318 | 26 | 381 | 2 | 64.5 | |

| | | | | | | | | | | | | | | | | | | | | | | | |
|---|---|---|---|---|---|---|---|---|---|---|---|---|---|---|---|---|---|---|---|---|---|---|---|
| 784 | 20+520 TO 20+780 | | | 2 | | 1 | | | 144 | 72 | | 76 | | 12 | | | | 280 | | | | | 3.0 |
| 785 | 20+780 TO 21+040 | | | | | | | | 287 | 132 | | | | | 1 | | 1 | 520 | | | | | 8.0 |
| 786 | 21+040 TO 21+320 | | | 10 | | 6 | | | 512 | 180 | | 178 | | 195 | 9 | 5 | 9 | 233 | 93 | 44 | | | 11.0 |
| 787 | MILITARY DR. | | | | | | | | 125 | 81 | 25 | | | 108 | 2 | 2 | 2 | 600 | | 109 | 4 | | |
| 788 | 21+320 TO 21+580 | | | 2 | | | | 1 | 356 | 150 | | 12 | | | 3 | 1 | 3 | 520 | | | | | 8.0 |
| 789 | 21+580 TO 21+860 | | | | | | 1 | 1 | 332 | 139 | | | | | | | | 638 | | | | | 8.0 |
| 790 | 21+860 TO 22+120 | | | | | | | | 291 | 132 | | | | | | | | 520 | | | | | 4.0 |
| 791 | 22+120 TO 22+380 | | | | | | | | 260 | 132 | | | | | | | | 520 | | | | | 6.0 |
| 792 | 22+380 TO 22+700 | | | 10 | | 8 | | | 660 | 210 | | 225 | | 186 | 9 | 5 | 9 | 305 | 92 | 48 | | | 22.0 |
| 793 | POTRANCO RD. | | | | | | | | 445 | 138 | 25 | | | 138 | 7 | 4 | 7 | 1052 | | 161 | 2 | | 21.0 |
| 794 | 22+700 TO 22+960 | | | 2 | | | | 2 | 335 | 153 | | | | | 3 | 1 | 3 | 520 | | | | | 7.5 |
| 795 | 22+960 TO 23+220 | | | | | | | | 260 | 129 | | | | | | | | 520 | | | | | 2.0 |
| 796 | 23+220 TO 23+500 | | | | | | | | 260 | 141 | | | | | | | | 520 | | | | | 1.0 |
| 797 | 23+500 TO 23+760 | | | | | | | | 257 | 126 | | | | | | | | 504 | | | | | |
| 798 | 23+760 TO 24+020 | | | | | | | | 258 | 129 | | | | | | | | 515 | | | | | 1.0 |
| 799 | 24+020 TO 24+260 | | | | | | 1 | 1 | 242 | 123 | | | | | | | | 496 | | | | | |
| 800 | 24+260 TO 24+520 | | | 4 | | | 1 | 1 | 260 | 131 | | | | | | | | 520 | | | | | 2.0 |
| 801 | 24+520 TO 24+800 | | | | | | | | 260 | 138 | | | | | | | | 520 | | | | | 2.0 |
| 802 | 24+800 TO 25+060 | | | | | | | | 260 | 132 | | | | | | | | 520 | | | | | 2.0 |
| 803 | 25+060 TO 25+320 | | | | | | | | 260 | 129 | | | | | | | | 520 | | | | | |
| 804 | 25+320 TO 25+580 | | | 4 | | | | | 258 | 129 | | | | | | | | 512 | | | | | 1.0 |
| 805 | 25+580 TO 25+840 | | | | | | | | 256 | 123 | | | | | | | | 499 | | | | | 1.0 |
| 806 | 25+840 TO 26+100 | | | | | | | | 258 | 129 | | | | | | | | 511 | | | | | 2.0 |
| 807 | 26+100 TO 26+380 | | | 6 | | 4 | | | 558 | 170 | | 111 | | 169 | 6 | 3 | 6 | 216 | 72 | 47 | | | 9.0 |
| 808 | MARBACH RD. | | | | | | | | 45 | 30 | 14 | 70 | | 87 | 2 | | 2 | 185 | | 34 | 3 | | 6.5 |
| 809 | 26+380 TO 26+640 | | | | | | | | 351 | 153 | | 10 | | | 3 | | 3 | 560 | | | | | 9.0 |
| 810 | 26+640 TO 26+900 | | | 2 | | | 1 | | 260 | 132 | | | | | | | | 521 | | | | | 1.0 |
| 811 | 26+900 TO 27+160 | | | | | | | | 262 | 135 | | | | | | | | 535 | | | | | 3.0 |
| 812 | 27+160 TO 27+420 | | | 4 | | 1 | | | 343 | 140 | | 109 | | 15 | 3 | | 3 | 520 | | | | | 6.5 |
| 813 | 27+420 TO 27+680 | | 7 | | | | | | 284 | 126 | | | | | | | | 520 | | | | | |
| 814 | 27+680 TO 27+940 | 8 | 4 | 1 | | 1 | | | 520 | 132 | | | | 52 | | | | 512 | 9 | 5 | | | 4.0 |
| 815 | 27+940 TO 28+200 | 4 | | 1 | | | | | 520 | 132 | | | | | | | | 320 | 195 | 50 | | | 4.0 |
| 816 | 28+200 TO 28+460 | | | 2 | | | | | 520 | 126 | | | | | | | | 520 | | | | | 4.0 |
| 817 | 28+460 TO END | | | 6 | | 2 | | | 410 | 72 | | 53 | | 92 | 2 | | 2 | 526 | | | | | 6.0 |
| | | | | | | | | | | | | | | | | | | | | | | | |
| CSJ 2452-01-036 TOTALS | | 12 | 15 | 56 | | 23 | 4 | 6 | 10909 | 4426 | 64 | 844 | | 1054 | 50 | 21 | 50 | 16800 | 461 | 498 | 9 | 165.5 | |

| PROJECT TOTALS | 84 | 76 | 101 | 4 | 37 | 10 | 14 | 26176 | 9169 | 149 | 3151 | 44 | 1972 | 109 | 39 | 109 | 34794 | 645 | 955 | 13 | 339.5 |
|---|---|---|---|---|---|---|---|---|---|---|---|---|---|---|---|---|---|---|---|---|---|

NOTE(s):
THE TY II PAVEMENT MARKINGS PROVIDE FOR SURFACE PREPARATION (SEALER) OF THE TY I REFLECTORIZED PAVEMENT MARKINGS TO BE PLACED.

△ RIPRAP CONC (CL B) FROM RESPECTIVE
□ SIGNING LAYOUTS. (APRONS)

LEVELS DISPLAYED
1 2 3 4 5 6 7 8 9 10 11 12 21 31 41 51 61 71 81 91 02 02 22 32 42 52 62 72 82 92 03 03 13 23 33 43 53 63 73 83 93 04 14 24 34 44 54 64 74 84 94 05 15 26 35 45 56 57 65 76 86 96 06 16 26 36
ACC:
FILE: pavmrksum1.dgn

©2000
Texas Department of Transportation

# PAVEMENT MARKING & DELINEATION SUMMARY

SHEET 1 OF 2

| FED. RD. DIV. NO. | FEDERAL AID PROJECT NO. | | SHEET NO. |
|---|---|---|---|
| 6 | NH 2000(704), etc. | | 58 |
| STATE | DIST. | COUNTY | |
| TEXAS | SAT | BEXAR | |
| CONT. | SECT. | JOB | HIGHWAY NO. |
| 2452 | 01 | 036, etc. | LP 1604 |

| SHEET NO. | STATION TO STATION | 0666-5035 REFLECTIVE PAVEMENT MARKING TY II WHITE (SLD) (100mm) M | 0666-5036 WHITE (BRK) (100mm) M | 0666-5037 WHITE (DOT) (100mm) M | 0666-5039 WHITE (SLD) (200mm) M | 0666-5044 WHITE (BRK) (200mm) M | 0666-5045 WHITE (SLD) (600mm) M | 0666-5046 WHITE (ARROW) EA | 0666-5049 WHITE (DBL ARROW) EA | 0666-5056 WHITE (WORD) EA | 0666-5060 YELLOW (SLD) (100mm) M | 0666-5063 YELLOW (SLD) (200mm) M | 0666-5065 YELLOW (SLD) (600mm) M | YELLOW (MED NOSE) EA | 0672-5037 RAISED PAVEMENT MARKERS CLASS B (REFL) TY II-A-A EA | 0672-5038 RAISED PAVEMENT MARKERS CLASS B (REFL) TY II-C-R EA | 0677-5001 ELIM EXT PAV MRK & MRKRS (100MM) M | 0677-5018 ELIM EXT PAV MRK & MRKRS (RAIS PAV MRK) EA |
|---|---|---|---|---|---|---|---|---|---|---|---|---|---|---|---|---|---|---|
| | | EST. | EST. | EST. | EST. | EST. | EST. | EST. | EST. | EST. | EST. | EST. | EST. | EST. | EST. | EST. | EST. | EST. |
| 754 | BEGIN TO 13•980 | 102 | 27 | | | | | | | | 102 | | | | | 8 | 231 | 44 |
| 755 | 13•980 TO 14•240 | 400 | 96 | | | | | | | | 400 | | | | | 34 | 583 | 106 |
| 756 | 14•240 TO 14•500 | 520 | 132 | | | | | | | | 520 | | | | | 44 | 405 | 110 |
| 757 | 14•500 TO 14•780 | 560 | 138 | | | | | | | | 560 | | | | | 46 | | |
| 758 | 14•780 TO 15•040 | 648 | 132 | | | | | | | 3 | 520 | | | | | 84 | | |
| 759 | 15•040 TO 15•300 | 520 | 156 | | | | | | | | 724 | | | | 35 | 49 | 130 | |
| 760 | 15•300 TO 15•560 | 834 | 108 | | 238 | | 32 | | | | 923 | | | | 97 | 75 | | |
| | | | | | | | | | | | | | | | | | | |
| 769 | 16•880 TO 17•140 | 280 | 74 | | 60 | 16 | | | | 2 | 280 | | | | | 46 | | |
| 769 | 16•880 TO 17•140 | | | | | | | | | | | | | | | | | |
| 770 | 17•140 TO 17•400 | 763 | 137 | | 85 | | 18 | | | 4 | 590 | | | | | 67 | | |
| 771 | 17•400 TO 17•660 | 1022 | 165 | | 105 | | 111 | | | 2 | 776 | | | | | 101 | | |
| 772 | 17•660 TO 17•920 | 520 | 132 | | | | | | | | 520 | | | | | 43 | | |
| 773 | 17•920 TO 18•180 | 573 | 174 | | | | | | | | 818 | | | | | 60 | 204 | 39 |
| 774 | 18•180 TO 18•440 | 444 | 171 | | 146 | | 55 | | 1 | 2 | 704 | | | | | 95 | | |
| 775 | 18•440 TO 18•700 | 267 | 192 | | 13 | | 2 | | 1 | 1 | 602 | | | | | 68 | | |
| 776 | 18•700 TO 18•960 | 418 | 207 | | 112 | | 32 | | | 4 | 556 | | | | | 114 | | |
| 777 | 18•960 TO 19•220 | 348 | 249 | | | | | | 2 | 3 | 520 | | | | | 99 | | |
| 778 | 19•220 TO 19•480 | 537 | 159 | | 175 | | 41 | | 2 | 7 | 183 | 158 | 46 | | 95 | 133 | | |
| 779 | WISEMAN BLVD. | 21 | 21 | 17 | | | 8 | | | 2 | 58 | | 30 | 2 | 37 | 10 | | |
| 780 | 19•480 TO 19•740 | 260 | 126 | | | | | | | | 520 | | | | | 44 | | |
| 781 | 19•740 TO 20•000 | 260 | 132 | | | | | | | | 520 | | | | | 43 | | |
| 782 | 20•000 TO 20•260 | 334 | 141 | | 143 | | 20 | | | 3 | 520 | | | | | 82 | | |
| 783 | 20•260 TO 20•520 | 260 | 126 | | | | | | | | 520 | | | | | 44 | | |
| 784 | 20•520 TO 20•780 | 120 | 60 | | | | | | | | 240 | | | | | 20 | | |
| | | | | | | | | | | | | | | | | | | |
| CSJ 2452-01-037 TOTALS | | 10011 | 3055 | 17 | 1077 | 16 | 319 | 33 | 6 | 33 | 11676 | 158 | 76 | 2 | 264 | 1409 | 1553 | 299 |
| 760 | 15•500 TO 15•560 | 213 | 39 | | 44 | | 51 | | | | 376 | | | | 34 | 13 | | |
| 761 | 15•560 TO 15•840 | 940 | 300 | | 149 | | 115 | | | | 1186 | | 166 | | 8 | 132 | | |
| 762 | 15•840 TO 16•020 | 826 | 225 | | 135 | | 123 | 6 | 3 | 6 | 598 | 12 | 58 | | 4 | 169 | | |
| 763 | 16•020 TO 16•200 | 748 | 222 | | 149 | | 99 | 6 | 3 | 6 | 585 | 14 | 6 | | 5 | 180 | | |
| 764 | CULEBRA RD. | 331 | 84 | 34 | 14 | | 68 | 6 | 4 | 6 | 510 | | 69 | 1 | 72 | 61 | | |
| 765 | CULEBRA RD. | 379 | 84 | 34 | 42 | | 71 | 5 | 2 | 5 | 386 | | 82 | 1 | 51 | 63 | | |
| 766 | 16•200 TO 16•360 | 320 | 200 | | | | | | | | 640 | | | | | 67 | | |
| 767 | 16•360 TO 16•620 | 520 | 276 | | 275 | | 30 | | | | 1038 | | | | | 136 | | |
| 768 | 16•620 TO 16•880 | 739 | 198 | | 422 | 2 | 42 | 1 | | 1 | 759 | | | | | 120 | 270 | 50 |
| 769 | 16•880 TO 17•140 | 240 | 60 | | | 26 | | 2 | | 2 | 240 | | | | | 40 | | |
| | | | | | | | | | | | | | | | | | | |
| CSJ 2452-01-038 TOTALS | | 5256 | 1688 | 68 | 1230 | 28 | 599 | 26 | 12 | 26 | 6318 | 26 | 381 | 2 | 174 | 981 | 270 | 50 |
| 784 | 20•520 TO 20•780 | 144 | 72 | | 76 | | 12 | | | | 280 | | | | | 36 | | |
| 785 | 20•780 TO 21•040 | 287 | 132 | | | | | 1 | | 1 | 520 | | | | | 48 | | |
| 786 | 21•040 TO 21•320 | 512 | 180 | | 178 | | 195 | 9 | 5 | 9 | 233 | 93 | 44 | | 89 | 161 | | |
| 787 | MILITARY DR. | 125 | 81 | 25 | | | 108 | 6 | 6 | 6 | 600 | | 109 | 4 | 107 | 46 | | |
| 788 | 21•320 TO 21•580 | 356 | 150 | | 12 | | | 3 | 1 | 3 | 520 | | | | | 65 | | |
| 789 | 21•580 TO 21•860 | 332 | 139 | | | | | | | | 638 | | | | | 58 | | |
| 790 | 21•860 TO 22•120 | 291 | 132 | | | | | | | | 520 | | | | | 51 | | |
| 791 | 22•120 TO 22•380 | 260 | 132 | | | | | | | | 520 | | | | | 42 | | |
| 792 | 22•380 TO 22•700 | 660 | 210 | | 225 | | 186 | 9 | 5 | 9 | 305 | 92 | 48 | | 90 | 183 | | |
| 793 | POTRANCO RD. | 445 | 138 | 25 | | | 138 | 12 | 9 | 12 | 1052 | | 161 | 2 | 116 | 412 | | |
| 794 | 22•700 TO 22•960 | 335 | 153 | | | | | 3 | 1 | 3 | 520 | | | | | 60 | | |
| 795 | 22•960 TO 23•220 | 260 | 129 | | | | | | | | 520 | | | | | 44 | | |
| 796 | 23•220 TO 23•500 | 260 | 141 | | | | | | | | 520 | | | | | 46 | | |
| 797 | 23•500 TO 23•760 | 257 | 126 | | | | | | | | 504 | | | | | 43 | | |
| 798 | 23•760 TO 24•020 | 258 | 129 | | | | | | | | 515 | | | | | 43 | | |
| 799 | 24•020 TO 24•260 | 242 | 123 | | | | | | | | 496 | | | | | 41 | | |
| 800 | 24•260 TO 24•520 | 260 | 131 | | | | | | | | 520 | | | | | 43 | | |
| 801 | 24•520 TO 24•800 | 260 | 138 | | | | | | | | 520 | | | | | 46 | | |
| 802 | 24•800 TO 25•060 | 260 | 132 | | | | | | | | 520 | | | | | 43 | | |
| 803 | 25•060 TO 25•320 | 260 | 129 | | | | | | | | 520 | | | | | 43 | | |
| 804 | 25•320 TO 25•580 | 258 | 129 | | | | | | | | 512 | | | | | 43 | | |
| 805 | 25•580 TO 25•840 | 256 | 123 | | | | | | | | 499 | | | | | 42 | | |
| 806 | 25•840 TO 26•100 | 258 | 129 | | | | | | | | 511 | | | | | 42 | | |
| 807 | 26•100 TO 26•380 | 558 | 170 | | 111 | | 169 | 6 | 3 | 6 | 216 | 72 | 47 | | 25 | 107 | | |
| 808 | MARBACH RD. | 45 | 30 | 14 | 70 | | 87 | 2 | | 2 | 185 | | 34 | 3 | 38 | 33 | | |
| 809 | 26•380 TO 26•640 | 351 | 153 | | 10 | | | 3 | | 3 | 560 | | | | | 68 | | |
| 810 | 26•640 TO 26•900 | 260 | 132 | | | | | | | | 521 | | | | | 42 | | |
| 811 | 26•900 TO 27•160 | 262 | 135 | | | | | | | | 535 | | | | | 43 | | |
| 812 | 27•160 TO 27•420 | 343 | 140 | | 109 | | 15 | 3 | | 3 | 520 | | | | | 64 | | |
| 813 | 27•420 TO 27•680 | 284 | 126 | | | | | | | | 520 | | | | | 44 | | |
| 814 | 27•680 TO 27•940 | 520 | 132 | | | | 52 | | | | 512 | 9 | 5 | | | 46 | | |
| 815 | 27•940 TO 28•200 | 520 | 132 | | | | | | | | 320 | 195 | 50 | | 87 | 42 | | |
| 816 | 28•200 TO 28•460 | 520 | 126 | | | | | | | | 520 | | | | 87 | 44 | | |
| 817 | 28•460 TO END | 410 | 72 | | 53 | | 92 | 2 | | 2 | 526 | | | | 90 | 32 | 350 | 235 |
| | | | | | | | | | | | | | | | | | | |
| CSJ 2452-01-036 TOTALS | | 10909 | 4426 | 64 | 844 | | 1054 | 59 | 30 | 59 | 16800 | 461 | 498 | 9 | 729 | 2246 | 350 | 235 |
| PROJECT TOTALS | | 26176 | 9169 | 149 | 3151 | 44 | 1972 | 118 | 48 | 118 | 34794 | 645 | 955 | 13 | 1167 | 4636 | 2173 | 584 |

LEVELS DISPLAYED
1 2 3 4 5 6 7 8 9 10 11 12 13 14 15 16
17 18 19 20 21 22 23 24 25 26 27 28 29 30 31 32
33 34 35 36 37 38 39 40 41 42 43 44 45 46 47 48
49 50 51 52 53 54 55 56 57 58 59 60 61 62

ACC:

FILE: pavmrksum2.dgn

NOTE(s):

THE TY II PAVEMENT MARKINGS PROVIDE FOR SURFACE PREPARATION (SEALER) OF THE TY I REFLECTORIZED PAVEMENT MARKINGS TO BE PLACED.

© 2000

Texas Department of Transportation

# PAVEMENT MARKING & DELINEATION SUMMARY

SHEET 2 OF 2

| FED. RD. DIV. NO. | FEDERAL AID PROJECT NO. | | SHEET NO. |
|---|---|---|---|
| 6 | NH 2000(704), etc. | | 59 |
| STATE | DIST. | COUNTY | |
| TEXAS | SAT | BEXAR | |
| CONT. | SECT. | JOB | HIGHWAY NO. |
| 2452 | 01 | 036, etc. | LP 1604 |

# TRAFFIC MANAGEMENT SUMMARY
## LP 1604
## (CSJ 2452-01-037, CSJ 2452-01-038, CSJ 2452-01-036)

✳

| SHEET NO. | STATION TO STATION | CONDT MULTIDUCT PVC (100MM) CONC. ENC. [2-WAY] M | CONDT MULTIDUCT PVC (100MM) (BORED) M | MANHOLE (COMPL) (TY-A) EA | 1/C #14 AWG (TRACER WIRE) M | | | | | | | | | | | |
|---|---|---|---|---|---|---|---|---|---|---|---|---|---|---|---|---|
| | | EST. | EST. | EST. | EST. | | | | | | | | | | | |
| 829 | 13+800 TO 15+140 | 680 | 60 | 1 | 710 | | | | | | | | | | | |
| 830 | 15+140 TO 15+500 | 350 | 60 | 2 | 380 | | | | | | | | | | | |
| 831 | 17+000 TO 18+020 | 866 | 292 | 4 | 1012 | | | | | | | | | | | |
| 832 | 18+020 TO 19+460 | 1237 | 710 | 12 | 1592 | | | | | | | | | | | |
| 833 | 19+460 TO 20+640 | 1157 | 40 | 2 | 1177 | | | | | | | | | | | |
| **CSJ 2452-01-037 TOTALS** | | 4290 | 1162 | 21 | 4871 | | | | | | | | | | | |
| 830 | 15+500 TO 15+860 | 355 | 20 | 1 | 365 | | | | | | | | | | | |
| 831 | 15+860 TO 16+580 | 620 | 346 | 4 | 793 | | | | | | | | | | | |
| 832 | 16+580 TO 17+000 | 358 | 124 | 2 | 420 | | | | | | | | | | | |
| **CSJ 2452-01-038 TOTALS** | | 1333 | 490 | 7 | 1578 | | | | | | | | | | | |
| 834 | 20+640 TO 20+900 | 250 | 20 | 2 | 260 | | | | | | | | | | | |
| 835 | 20+900 TO 21+620 | 610 | 400 | 4 | 810 | | | | | | | | | | | |
| 836 | 21+620 TO 23+060 | 1311 | 450 | 4 | 1536 | | | | | | | | | | | |
| 837 | 23+060 TO 24+500 | 1432 | 40 | 1 | 1452 | | | | | | | | | | | |
| 838 | 24+500 TO 25+940 | 1420 | 20 | 1 | 1430 | | | | | | | | | | | |
| 839 | 25+940 TO 27+380 | 1339 | 484 | 8 | 1581 | | | | | | | | | | | |
| 840 | 27+380 TO 28+511.5 | 80 | 0 | 1 | 80 | | | | | | | | | | | |
| **CSJ 2452-01-036 TOTALS** | | 6442 | 1414 | 21 | 7149 | | | | | | | | | | | |
| **PROJECT TOTALS** | | 12065 | 3066 | 49 | 13598 | | | | | | | | | | | |

✳ FOR CONTRACTORS INFORMATION ONLY
(SEE TRENCH DETAILS)

NOTE: THE CONTRACTOR SHALL NOTIFY THE OFFICE OF TRAFFIC MANAGEMENT AT TRANSGUIDE, 3500 N.W. LOOP 410, (210)731-5111, PRIOR TO BEGINNING ANY WORK ASSOCIATED WITH THE ABOVE LISTED ITEMS.

FILE $FILE$ LEVEL DISPLAYED $DATE$

©2000

Texas Department of Transportation

# TRAFFIC MANAGEMENT SUMMARY

SHEET 1 OF 1

| FED.RD. DIV.NO. | FEDERAL AID PROJECT NO. | | SHEET NO. |
|---|---|---|---|
| 6 | NH 2000(704),etc. | | 60 |
| STATE | DIST. | COUNTY | |
| TEXAS | SAT | BEXAR | |
| CONT. | SECT. | JOB | HIGHWAY NO. |
| 2452 | 01 | 036,etc. | LP 1604 |

Plotted on: 09/19/00

# STORM WATER POLLUTION PREVENTION PLAN PROJECT INITIATION SUMMARY

| SHEET NUMBER | ROCK FILTER DAM (TY 2) | ROCK FILTER DAM (REMOV & REPLAC) (TY 2) | ROCK FILTER DAM (REMOV) (TY 2) | ROCK FILTER DAM (TY 3) | ROCK FILTER DAM (REMOV & REPLAC) (TY 3) | ROCK FILTER DAM (REMOV) (TY 3) | TEMP SED CONT FENCE | TEMP SED CONT FENCE (REMOV & REPLAC) | TEMP SED CONT FENCE (REMOV) | BKHOE WORK (EROSN CONT) (CL 1) | FRONT END LDR WORK (EROSN CONT) (CL 1) | CONSTRUCT EXIT (TY 1) | CONSTRUCT EXIT (REMOV & REPLAC) (TY 1) | CONSTRUCT EXIT (REMOV) (TY 1) |
|---|---|---|---|---|---|---|---|---|---|---|---|---|---|---|
| | M | M | M | M | M | M | M | M | M | HR | HR | M2 | M2 | M2 |
| | 5002 | 5002 | 5002 | 5002 | 5002 | 5002 | 5012 | 5012 | 5012 | 5005 | 5005 | 5006 | 5006 | 5006 |
| 844 | | | | | | | | | | | | | | |
| 845 | | | | | | | | | | | | | | |
| 846 | | | | | | | | | | | | | | |
| 847 | | | | | | | | | | | | | | |
| 848 | | | | | | | | | | | | | | |
| 849 | | | | | | | | | | | | | | |
| 850 | | | | | | | | | | | | | | |
| 851 | 20 | 40 | 20 | | | | 1620 | 3240 | 1620 | | | | | |
| 852 | 20 | 40 | 20 | 80 | 160 | 80 | 805 | 1610 | 805 | | | | | |
| 853 | 70 | 140 | 70 | 80 | 160 | 80 | 1135 | 2270 | 1135 | | | | | |
| 854 | | | | | | | 1990 | 3980 | 1990 | | | | | |
| 855 | 10 | 20 | 10 | 70 | 140 | 70 | 1935 | 3870 | 1935 | | | | | |
| 856 | 30 | 60 | 30 | 30 | 60 | 30 | 945 | 1890 | 945 | | | | | |
| 857 | 40 | 80 | 40 | 35 | 70 | 35 | 1135 | 2270 | 1135 | | | | | |
| 858 | 60 | 120 | 60 | 45 | 90 | 45 | 575 | 1150 | 575 | | | | | |
| **CSJ 2452-01-036 TOTAL** | 250 | 500 | 250 | 340 | 680 | 340 | 10140 | 20280 | 10140 | | | | | |
| 844 | 20 | 40 | 20 | | | | | | | | | | | |
| 845 | | | | 85 | 170 | 85 | 1020 | 2040 | 1020 | | | | | |
| 846 | | | | | | | | | | | | | | |
| 847 | | | | | | | | | | | | | | |
| 848 | 40 | 80 | 40 | 30 | 60 | 30 | 495 | 990 | 495 | | | | | |
| 849 | 55 | 110 | 55 | 50 | 100 | 50 | 1055 | 2110 | 1055 | | | | | |
| 850 | 100 | 200 | 100 | 135 | 270 | 135 | 930 | 1860 | 930 | | | | | |
| 851 | 15 | 30 | 15 | 20 | 40 | 20 | 810 | 1620 | 810 | | | | | |
| 852 | | | | | | | | | | | | | | |
| 853 | | | | | | | | | | | | | | |
| 854 | | | | | | | | | | | | | | |
| 855 | | | | | | | | | | | | | | |
| 856 | | | | | | | | | | | | | | |
| 857 | | | | | | | | | | | | | | |
| 858 | | | | | | | | | | | | | | |
| **CSJ 2452-01-037 TOTAL** | 230 | 460 | 230 | 320 | 640 | 320 | 4310 | 8620 | 4310 | | | | | |
| 844 | | | | | | | | | | | | | | |
| 845 | | | | | | | 356 | 712 | 356 | | | | | |
| 846 | | | | 95 | 190 | 95 | 1935 | 3870 | 1935 | | | | | |
| 847 | 15 | 30 | 15 | | | | 460 | 920 | 460 | | | | | |
| 848 | | | | | | | | | | | | | | |
| 849 | | | | | | | | | | | | | | |
| 850 | | | | | | | | | | | | | | |
| 851 | | | | | | | | | | | | | | |
| 852 | | | | | | | | | | | | | | |
| 853 | | | | | | | | | | | | | | |
| 854 | | | | | | | | | | | | | | |
| 855 | | | | | | | | | | | | | | |
| 856 | | | | | | | | | | | | | | |
| 857 | | | | | | | | | | | | | | |
| 858 | | | | | | | | | | | | | | |
| **CSJ 2452-01-038 TOTAL** | 15 | 30 | 15 | 95 | 190 | 95 | 2751 | 5502 | 2751 | | | | | |
| **PROJECT TOTAL** | 495 | 990 | 495 | 755 | 1510 | 755 | 17201 | 34402 | 17201 | | | | | |

555 EAST RAMSEY SAN ANTONIO TEXAS 78216
PHONE (210)375-9000
FAX (210)375-9010
PAPE-DAWSON ENGINEERS
CIVIL & ENVIRONMENTAL

STATE OF TEXAS
K. STEPHEN BONNETTE
60928
REGISTERED PROFESSIONAL ENGINEER

K. STEPHEN BONNETTE, P.E. 9/20/00 DATE

© 2000 Texas Department of Transportation

## SW3P CONSOLIDATED SUMMARIES

SHEET 1 OF 2

| DN: | | | | | | PROJECT NO. | | |
|---|---|---|---|---|---|---|---|---|
| CK DN: | | | | | | NH 2000 (704), etc. | | |
| DW: | CONTROL | SECTION | JOB | DIST. | STATE | COUNTY | HIGHWAY NO. | SHEET NO. |
| CK DW: | 2452 | 01 | 036 etc. | SAT | TX | BEXAR | LOOP 1604 | 61 |

Design Filename: j:\sa41\16\civil\design\summaries\sw3p.dgn

Plotted on: 10/26/00

## STORM WATER POLLUTION PREVENTION PLAN CONSTRUCTION PHASE SUMMARY

| SHEET NUMBER | ROCK FILTER DAM (TY 2) | ROCK FILTER DAM (REMOV & REPLAC) (TY 2) | ROCK FILTER DAM (REMOV) (TY 2) | ROCK FILTER DAM (TY 3) | ROCK FILTER DAM (REMOV & REPLAC) (TY 3) | ROCK FILTER DAM (REMOV) (TY 3) | TEMP SED CONT FENCE | TEMP SED CONT FENCE (REMOV & REPLAC) | TEMP SED CONT FENCE (REMOV) | BKHOE WORK (EROSN CONT) (CL 1) | FRONT END LDR WORK (EROSN CONT) (CL 1) | CONSTRUCT EXIT (TY 1) | CONSTRUCT EXIT (REMOV & REPLAC) (TY 1) | CONSTRUCT EXIT (REMOV) (TY 1) |
|---|---|---|---|---|---|---|---|---|---|---|---|---|---|---|
| | M | M | M | M | M | M | M | M | M | HR | HR | M2 | M2 | M2 |
| | 5002 | 5002 | 5002 | 5002 | 5002 | 5002 | 5012 | 5012 | 5012 | 5005 | 5005 | 5006 | 5006 | 5006 |
| 859 | | | | | | | | | | | | | | |
| 860 | | | | | | | | | | | | | | |
| 861 | | | | | | | | | | | | | | |
| 862 | | | | | | | | | | | | | | |
| 863 | | | | | | | | | | | | | | |
| 864 | | | | | | | | | | | | | | |
| 865 | | | | | | | | | | | | | | |
| 866 | 15 | 30 | 15 | | | | 20 | 40 | 20 | | | | | |
| 867 | 65 | 130 | 65 | | | | 10 | 20 | 10 | | | | | |
| 868 | 35 | 70 | 35 | | | | 20 | 40 | 20 | | | | | |
| 869 | | | | | | | 70 | 140 | 70 | | | | | |
| 870 | 35 | 70 | 35 | | | | 50 | 100 | 50 | | | | | |
| 871 | 23 | 46 | 23 | | | | 110 | 220 | 110 | | | | | |
| 872 | 65 | 130 | 65 | | | | 10 | 20 | 10 | | | | | |
| 873 | 20 | 40 | 20 | | | | | | | | | | | |
| CSJ 2452-01-036 TOTAL | 258 | 516 | 258 | | | | 290 | 580 | 290 | | | 140 | 140 | 140 |
| 859 | | | | | | | | | | | | | | |
| 860 | 40 | 80 | 40 | | | | 50 | 100 | 50 | 8 | 8 | | | |
| 861 | | | | | | | | | | | | | | |
| 862 | | | | | | | | | | | | | | |
| 863 | 25 | 50 | 25 | | | | 40 | 80 | 40 | | | | | |
| 864 | 25 | 50 | 25 | | | | 50 | 100 | 50 | | | | | |
| 865 | 59 | 118 | 59 | | | | 30 | 60 | 30 | 4 | 4 | | | |
| 866 | | | | | | | 10 | 20 | 10 | | | | | |
| 867 | | | | | | | | | | | | | | |
| 868 | | | | | | | | | | | | | | |
| 869 | | | | | | | | | | | | | | |
| 870 | | | | | | | | | | | | | | |
| 871 | | | | | | | | | | | | | | |
| 872 | | | | | | | | | | | | | | |
| 873 | | | | | | | | | | | | | | |
| CSJ 2452-01-037 TOTAL | 149 | 298 | 149 | | | | 180 | 360 | 180 | 12 | 12 | 140 | 140 | 140 |
| 859 | | | | | | | | | | | | | | |
| 860 | | | | | | | 30 | 60 | 30 | | | | | |
| 861 | 75 | 150 | 75 | | | | 20 | 40 | 20 | | | | | |
| 862 | 15 | 30 | 15 | | | | 60 | 120 | 60 | 4 | 4 | | | |
| 863 | | | | | | | | | | | | | | |
| 864 | | | | | | | | | | | | | | |
| 865 | | | | | | | | | | | | | | |
| 866 | | | | | | | | | | | | | | |
| 867 | | | | | | | | | | | | | | |
| 868 | | | | | | | | | | | | | | |
| 869 | | | | | | | | | | | | | | |
| 870 | | | | | | | | | | | | | | |
| 871 | | | | | | | | | | | | | | |
| 872 | | | | | | | | | | | | | | |
| 873 | | | | | | | | | | | | | | |
| CSJ 2452-01-038 TOTAL | 90 | 180 | 90 | | | | 110 | 220 | 110 | 4 | 4 | 140 | 140 | 140 |
| PROJECT TOTAL | 497 | 994 | 497 | | | | 580 | 1160 | 580 | 16 | 16 | 420 | 420 | 420 |

555 EAST RAMSEY SAN ANTONIO TEXAS 78216
PHONE (210)375-9000
FAX (210)375-9010
PAPE-DAWSON ENGINEERS
CIVIL & ENVIRONMENTAL

STATE OF TEXAS
K. STEPHEN BONNETTE
60928
REGISTERED PROFESSIONAL ENGINEER

K. STEPHEN BONNETTE, P.E. 9/20/00
DATE

© 2000 Texas Department of Transportation

# SW3P CONSOLIDATED SUMMARIES

SHEET 2 OF 2

| | | | | | | | | |
|---|---|---|---|---|---|---|---|---|
| DN: | | | | | | PROJECT NO. | | |
| CK DN: | | | | | | NH 2000 (704), etc. | | |
| DW: | CONTROL | SECTION | JOB | DIST. | STATE | COUNTY | HIGHWAY NO. | SHEET NO. |
| CK DW: | 2452 | 01 | 036 | SAT | TX | BEXAR | LOOP 1604 | 62 |

Design Filename: j:\3941\16\civil\design\summaries\sw3p.dgn

etc.

# LANDSCAPING SUMMARY

## CSJ 2452-01-038

| ITEM # | 192-5281 | 192-5325 | 192-5581 | 193-5001 | 193-5003 |
|---|---|---|---|---|---|
| SHEET NO. | CEDAR ELM<br>EA | LIVE OAK<br>EA | LACEY OAK<br>EA | LANDSCAPE MAINTENCE<br>MO | VEGETATIVE WATERING ⊛<br>KL |
| | EST. | EST. | EST. | EST. | EST. |
| 881A | 35 | 35 | 36 | 4 | 73 |
| | | | | | |
| | | | | | |
| | | | | | |
| PROECT TOTALS | 35 | 35 | 36 | 4 | 73 |

⊛ FOR TREE WATERING RATES SEE GENERAL NOTES UNDER ITEM 193.

I:\1604fm471-90\LANDSCAPE\SUMMARY.DGN

©2000 Texas Department of Transportation

**LANDSCAPING SUMMARY**

| FED.RD. DIV.NO. | FEDERAL AID PROJECT NO. | | SHEET NO. |
|---|---|---|---|
| 6 | NH 2000(704),etc. | | 62A |
| STATE | DIST. | COUNTY | |
| TEXAS | SAT | BEXAR | |
| CONT. | SECT. | JOB | HIGHWAY NO. |
| 2452 | 01 | 036,etc. | LP 1604 |

# LANDSCAPE & IRRIGATION SUMMARY
## CSJ 2452-01-038

| ITEM # | 192-5281 | 192-5325 | 192-5581 | 193-5001 | 170-5001 |
|---|---|---|---|---|---|
| SHEET NO. | CEDAR ELM | LIVE OAK | LACEY OAK | LANDSCAPE MAINTENANCE | IRRIGATION SYSTEM |
| | EA | EA | EA | MO | LS |
| | EST. | EST. | EST. | EST. | EST. |
| 881A | 37 | 37 | 38 | 12 | |
| | | | | | 1 |
| | | | | | |
| PROJECT TOTALS | 37 | 37 | 38 | 12 | 1 |

| DESCRIPTION | QUANTITY | UNIT |
|---|---|---|
| MASTER VALVE | 2 * | EA |
| SECTION VALVE | 4 * | EA |
| DRIPLINE ASSEMBLY | 112 * | EA |
| LENGTH OF BORES | 65 * | M |
| CONTROLLERS | 4 * | EA |
| BACKFLOW DEVICE | 2 * | EA |
| FILTERS | 4 * | EA |
| QUICK COUPLERS | 4 * | EA |
| METERS | 2 * | EA |
| LENGTH OF LATERAL LINES | 260 * | M |
| LENGTH OF MAIN LINES | 340 * | M |

ITEM 170-5001 (IRRIGATION) IS A LUMP SUM ITEM. ALL QUANTITIES FLAGGED WITH (*) ARE SHOWN FOR CONTRACTORS INFORMATION ONLY

Change Order No. 87

Revised Sheet

STATE OF TEXAS
MICHAEL A. TEAL
1955
REGISTERED LANDSCAPE ARCHITECT

Michael A. Teal

©2000 Texas Department of Transportation

**LANDSCAPE & IRRIGATION SUMMARY**

| FED.RD. DIV.NO. | FEDERAL AID PROJECT NO. | | SHEET NO. |
|---|---|---|---|
| 6 | NH 2000(704),etc. | | 628 |
| STATE | DIST. | COUNTY | |
| TEXAS | SAT | BEXAR | |
| CONT. | SECT. | JOB | HIGHWAY NO. |
| 2452 | 01 | 036 etc | I.P. 1604 |

# SCHEDULE OF BARRICADES

| SIGN/BARRICADE USE | SG20-8 | SG20-1 | G20-1bL | G20-1bR | G20-2a | SG20-6 | EG20-9 | ER20-5 | CW20-1A | CW20-1B | CW20-1C | CW20-1D | CW20-2A | CW20-2B | CW20-2D | CW20-5AR, -5AL | CW20-5BR, -5BL + PLAQUE | CW20-5DR, -5DL + PLAQUE | CW8-9a | CW8-11 |
|---|---|---|---|---|---|---|---|---|---|---|---|---|---|---|---|---|---|---|---|---|
| A | ✓ | ✓ | | | | ✓ | ✓ | ✓ | ✓ | ✓ | ✓ | ✓ | | | | | | | | |
| B | | | | | ✓ | | | | | | | | | | | | | | | |
| C | | | | | ✓ | | | | | | | ✓ | | | | | | | | |
| 1 | | | | | | | | | | ✓ | | ✓ | ✓ | ✓ | ✓ | ✓ | ✓ | ✓ | | |
| 2 | | | | | | | | | | | | | | | | ✓ | ✓ | ✓ | | |
| 3 | | | ✓ | ✓ | | | | | | | | | | | | | | | | |
| 4 | | | | | | | | | | | | | | | | | | | ✓ | ✓ |
| 5 | | | | | | | | | | | | | | | | | | | | |

| SIGN/BARRICADE USE | SCW9-2R, -2L | ECW1-4R, -4L | SCW6-3 | FCW1-6AR, -6AL | SCW13-1 | SCW1-8 | R4-1 | R4-7B | R2-5A | VERTICAL PANEL | VP(F) R/L | PLASTIC DRUM | FLASHING ARROW PANEL TRAILER | ** PORTABLE CHANGEABLE MESSAGE SIGN TRAILER | R11-2 | ER20-5 | CW20-7B | CW20-7D | CW1-6 | |
|---|---|---|---|---|---|---|---|---|---|---|---|---|---|---|---|---|---|---|---|---|
| A | | | | | | | | | ✓ | | | | | | | ✓ | | | | |
| B | | | | | | | | | | | | | | | | | | | | |
| C | | | | | | | | | | | | | | | | | | | | |
| 1 | | ✓ | | | ✓ | ✓ | ✓ | ✓ | | ✓ | ✓ | ✓ | ✓ | ✓ | | | | | | |
| 2 | | | | | | ✓ | | ✓ | | ✓ | ✓ | ✓ | | | | | | | | |
| 3 | | | | ✓ | ✓ | ✓ | | ✓ | | | | | ✓ | | | | | | | |
| 4 | ✓ | | ✓ | ✓ | ✓ | ✓ | | ✓ | ✓ | ✓ | ✓ | ✓ | ✓ | ✓ | ✓ | | ✓ | ✓ | ✓ | |
| 5 | | | | | | | | | | | | | | | | | | | | |

** ELECTRONIC MESSAGE BOARD SHALL BE PAID FOR DIRECTLY UNDER ITEM # 6056 AND NOT CONSIDERED SUBSIDIARY TO BARRICADES.

NOTE: FOR LOCATION OF SIGN/BARRICADE USE SEE PROJECT & BARRICADE LAYOUT SHEET

BARRICADES SHALL NOT BE USED AS A SIGN SUPPORT. SUPPORTS FOR SIGNS SHALL BE TEMPORARY, FIXED, OR PORTABLE SIGN SUPPORTS AS DIRECTED BY THE ENGINEER OR IN ACCORDANCE WITH THE BC STANDARDS CALLED FOR IN THE PLANS AND THE LATEST VERSION OF TEXAS MUTCD.

NOTE: CERTAIN SIGNS MUST BE USED IN CONJUNCTION WITH OTHER SIGNS. EXAMPLE: "FLAGMAN AHEAD" MUST HAVE A "BE PREPARED TO STOP".

## GENERAL NOTES FOR SEQUENCE OF WORK:

THE CONTRACTOR MAY, WITH THE APPROVAL OF AND AS DIRECTED BY THE ENGINEER, BE REQUIRED TO VARY THE NUMBER AND LOCATION OF SIGNS AND BARRICADES FROM THAT INDICATED ON THE PLANS. THIS MAY BE DONE IN ORDER TO MAINTAIN A SAFE AND UNINTERRUPTED FLOW OF TRAFFIC PARTICULARLY IN THOSE AREAS OF IMMEDIATE WORK.

SIGNS/BARRICADE MAINTENANCE SHALL BE DONE ON A DAILY BASIS. THE MAINTENANCE OF THE SIGNS/BARRICADES ARE THE RESPONSIBILITY OF THE CONTRACTOR.

SIGNS, BARRICADES, ETC. LISTED HEREON ARE CONSIDERED TO BE THE MINIMUM REQUIRED FOR TRAFFIC HANDLING ON THIS PROJECT.

ALL TRAFFIC CONTROL WORK AND DEVICES SHALL BE IN ACCORDANCE WITH THE LATEST VERSION OF THE TEXAS MANUAL ON UNIFORM TRAFFIC CONTROL DEVICES (TMUTCD).

DUE TO THE SEQUENCE REQUIRED IN THE CONSTRUCTION OF THE DRAINAGE STRUCTURES IN THE VARIOUS PHASES OF SOME WORK, THE INLET ENDS OF SOME OF THE NEW STRUCTURES MAY NEED TO BE TEMPORARILY CLOSED UNTIL THE OUTFALL ENDS ARE COMPLETED.

CONTRACTOR SHALL PROVIDE ACCESS TO INTERSECTING STREETS & DRIVEWAYS AT ALL TIMES EXCEPT WHERE SPECIFICALLY SHOWN TO BE CLOSED. ADEQUACY OF ACCESS WILL BE AT THE DISCRETION OF THE ENGINEER.

ALL CONSTRUCTION TRAFFIC SHALL BE REGULATED SO AS TO CAUSE A MINIMUM OF INCONVENIENCE TO THE TRAVELING PUBLIC. AT TIMES WHEN IT IS NECESSARY FOR TRUCKS TO STOP, UNLOAD OR CROSS ROADWAYS UNDER TRAFFIC, WARNING SIGNS AND A FLAGGER SHALL BE PROVIDED AS NECESSARY TO ADEQUATELY PROTECT PUBLIC TRAVEL.

NO ADDITIONAL COMPENSATION WILL BE ALLOWED FOR THE WORK REQUIRED BY THESE PROVISIONS. SUCH WORK SHOULD BE CONSIDERED SUBSIDIARY TO THE VARIOUS ITEMS FOR WHICH BIDS ARE REQUIRED AND ITS COST INCLUDED IN THE UNIT PRICES BID, EXCEPT AS OTHERWISE SHOWN IN THE PLANS.

THERE ARE FLASHING ARROW PANEL UNITS REQUIRED FOR THIS PROJECT. THESE UNITS ARE FOR THE CLOSING OF TRAFFIC LANES. THE CONTRACTOR SHALL BE REQUIRED TO FURNISH ONE STANDBY UNIT. THIS STANDBY UNIT SHALL BE AVAILABLE AT THE JOB SITE AT ALL TIMES. IT WILL BE IN GOOD WORKING CONDITION AND READY FOR IMMEDIATE USE.

THERE ARE PORTABLE CHANGEABLE ELECTRONIC MESSAGE SIGN UNITS REQUIRED FOR THIS PROJECT. THESE UNITS ARE FOR THE HANDLING OF TRAFFIC THROUGH WORK AREA'S. THE CONTRACTOR SHALL BE REQUIRED TO FURNISH ONE STANDBY UNIT. THIS STANDBY UNIT SHALL BE AVAILABLE AT THE JOB SITE AT ALL TIMES. IT WILL BE IN GOOD WORKING CONDITION AND READY FOR IMMEDIATE USE. DIRECT PAYMENT SHALL BE MADE FOR EACH DAY USED.

## SIGN/BARRICADE USE LEGEND

BARRICADES & BARRICADE SIGNS AT LOCATIONS A, B, & C AS SHOWN ON EACH PHASE ARE TO REMAIN IN PLACE FOR THE ENTIRE DURATION OF THE PROJECT.

A. TO BE USED ON MAINLANE APPROACHES.

B. TO BE USED ON MAINLANE DEPARTURES.

C. TO BE USED AT INTERSECTING ROADWAYS.

1 TO BE USED WHEN DETOURING MAINLANES AND MAINLANE CONNECTION TRAFFIC.

2 TO BE USED WHEN DETOURING ALL OTHER TRAFFIC.

3 TO BE USED FOR LANE CLOSURES ON ALL OTHER TYPE FACILITIES.

4 TO BE USED AS DIRECTED BY THE ENGINEER

5 TO BE USED FOR LANE CLOSURES ON FRONTAGE RD'S AND FRONTAGE RD. CONNECTORS.

## APPLICABLE TCP STANDARDS

TCP (NOTES) - 98(M)
TCP (1-1), (1-2) - 98(M)
TCP (2-1), (2-2), (2-6) - 98(M)
TCP (3-2), (3-3) - 98(M)
TCP (6-1, 2, 3, 4, 5) - 98A(M)
TCP (6-8) - 98(M)
TCP (7-1) - 98(M)

STATE OF TEXAS
JOEL K. DAVENPORT, JR.
79276
REGISTERED
PROFESSIONAL ENGINEER

Joel K. Davenport Jr. 10/26/00
Joel K. Davenport, Jr. P.E. 79276 Date

©2000 Texas Department of Transportation

SCHEDULE OF BARRICADES

| FED. RD. DIV. NO. | FEDERAL AID PROJECT NO. | | SHEET NO. |
|---|---|---|---|
| 6 | NH 2000(704), etc. | | 63 |
| STATE | DIST. | COUNTY | |
| TEXAS | 15 | BEXAR | |
| CONT. | SECT. | JOB | HIGHWAY NO. |
| 2542 | 01 | 036, etc. | LP 1604 |

LEVELS DISP
1 2 3 4 5 6 7 8 9 10 11 12 13 14 15 16 17 18 19 20 21 22 23 24 25 26 27 28 29 30 31 32 33 34 35 36 37 38 39 40 41 42 43 44 45 46 47 48 49 50 51 52 53 54 55 56 57 58 59 60 61 63

FILE: sch-of-barricades.dgn

THE PROJECT IS COMPRISED OF BASICALLY TWO PHASES. PHASE 1 CONSTRUCTS LP 1604 FROM BEGINNING STA 14+420 (1.6 KM NORTH OF CULEBRA) TO STA 18+100 (2.08 KM SOUTH OF CULEBRA) FOR A SUB-TOTAL LENGTH OF 3.68 KM. PHASE 2 CONSTRUCTS THE REMAINING PORTION OF LP 1604 FROM STA 18+100 (2.08 KM SOUTH OF CULEBRA) TO ENDING STA 28+551.5 (US 90) FOR A SUB-TOTAL LENGTH OF 10.45 KM. THE ENTIRE PROJECT IS A TOTAL LENGTH OF 14.13 KM. PHASE 1 (MILESTONE #1) SHALL BE COMPLETED PRIOR TO BEGINNING PHASE 2 UNLESS OTHERWISE APPROVED/DIRECTED BY THE ENGINEER. EACH PHASE IS FURTHER BROKEN INTO SUB-PHASES AND STAGES AS DESCRIBED AS FOLLOWS:

## PHASE 1 - (MILESTONE #1) FROM BEGINING STA 14+420 (1.6 KM NORTH OF CULEBRA) TO STA 18+100 (2.08 KM SOUTH OF CULEBRA)

PHASE 1A (IMMEDIATE IMPROVEMENTS @ TWO EXISTING INTERSECTIONS)
IMPROVE THE EXISTING INTERSECTIONS @ CULEBRA & @ POTRANCO. THIS WORK CONSISTS OF WIDENING EXISTING ROADWAY. REMOVE & REPLACE CONC ISLANDS, MBGF. INSTALL TEMPORARY TRAFFIC SIGNALS AND OVERLAY ENTIRE WIDTH OF ROAD. PLACE PAVEMENT MARKINGS AND OPEN UP TO TRAFFIC.

COMPLETE ALL SAN ANTONIO WATER SYSTEMS WATER ADJUSTMENTS FOR PHASE 1.

PHASE 1B
TRAFFIC TO REMAIN CROSSING CULEBRA CREEK ON THE EXISTING BRIDGE. CONSTRUCT THREE OF THE FOUR BRIDGES @ CULEBRA CREEK / CULEBRA ROAD INTERCHANGE. CONSTRUCT ALL THE SOUTH- BOUND MAINLANES, FRONTAGE ROADS & RAMPS WITH STRUCTURES.

STAGE A - FROM THE BEGINNING OF PROJECT TO STA 15+600 AND FROM STA 16+640 TO STA 18+300, CONSTRUCT TEMPORARY OUTSIDE WIDENING ON THE EXISTING ROADWAY AND SHIFT TWO-WAY TRAFFIC ON THE OUTSIDE PORTION OF THE EXISTING ROAD. CONSTRUCT THE INSIDE PORTION OF THE NORTH- BOUND MAINLANES. WIDEN AND/OR CONSTRUCT CROSS DRAINAGE STRUCTURES FROM 14.6 LEFT OF CENTERLINE TO AT LEAST THE CENTERLINE.

STAGE B - FROM THE BEGINNING OF PROJECT TO STA 15+600 AND FROM STA 16+640 TO STA 18+300, CONSTRUCT TEMPORARY INSIDE WIDENING ON THE NEWLY CONSTRUCTED ROADWAY AND SHIFT TWO-WAY TRAFFIC ON THE INSIDE PORTION OF THE NORTH BOUND MAINLANES AND CONSTRUCT THE OUTSIDE PORTION OF THE NORTH BOUND MAINLANES. WIDEN AND/OR CONSTRUCT CROSS DRAINAGE STRUCTURES FROM 14.6 LEFT OF CENTERLINE TO THE EAST.

UPON THE COMPLETION OF PHASE 1B INCLUDING STAGES A & B, PLACE FINAL LIFT OF HOT MIX, PERMANENT MARKINGS & SIGNS AND FINAL VEGTATION THROUGHOUT THESE NEWLY CONSTRUCTED AREAS.

PHASE 1C - (STAGES A & B)
CONSTRUCT BOTH OF THE CULEBRA RD & FRONTAGE ROAD INTERSECTIONS TO THE FIRST LIFT OF HOT MIX. THE RAISED ISLANDS AT CULEBRA SHALL BE CONSTRUCTED AT THE END OF PHASE 1C - STAGE C & D. CONSTRUCT TRANSITION CONNECTOR FROM STA 18+300 TO STA 18+500 IN PREPARATION TO SWITCH TRAFFIC ONTO NEWLY CONSTRUCTED ROADWAY.

STAGE A - CONSTRUCT THE TWO SOUTHERN HALVES OF THE FRONTAGE ROAD & CULEBRA INTERSECTIONS. THRU TRAFFIC ON LP 1604 SHALL REMAIN IN IT'S CURRENT POSITION. ONE LANE OF THRU TRAFFIC SHALL BE CLOSED ON CULEBRA TO ACCOMADATE CONSTRUCTION.

STAGE B - CONSTRUCT THE TWO NORTHERN HALVES OF THE FRONTAGE ROAD & CULEBRA INTERSECTIONS. THRU TRAFFIC ON LP 1604 TO REMAIN OPEN IN IT'S CURRENT POSITION. THRU TRAFFIC ON CULEBRA SHALL BE MAINTAINED ON AT LEAST ONE LANE IN EACH DIRECTION AND SHALL REMAIN OPEN AT ALL TIMES. DUE TO SOME EXPECTED GRADE DIFFERENCES, THE CONTRACTOR SHALL HAVE A GRADE TRANSITION BETWEEN THE EXISTING AND THE PROPOSED ROADWAY.

UPON THE COMPLETION OF PHASES 1C - STAGES A & B TO THE FIRST LIFT OF HOT MIX. PLACE PAVEMENT MARKINGS AND SIGNS BEFORE SWITCHING LP 1604 TRAFFIC ONTO NEWLY CONSTRUCTED MAINLANES, RAMPS AND/OR FRONTAGE ROADS.

PHASE 1C - (STAGES C & D)
CONSTRUCT THE MID-SECTION OF CULEBRA INTERSECTION AND THE NORTH- BOUND MAINLANES FROM STA 15+600 TO STA 16+640. THIS WORK INCLUDES REMOVING & REPLACING THE REMAINING SPAN BRIDGE @ CULEBRA CREEK / CULEBRA INTERSECTION AND IT'S APPROACHES.

STAGE C - CONSTRUCT THE SOUTHERN MID-SECTIION OF CULEBRA BETWEEN THE FRONTAGE ROADS. THRU TRAFFIC ON LP 1604 IS NOT AFFECTED AND REMAINS ON THE NEWLY CONSTRUCTED FRONTAGE ROADS. THRU TRAFFIC ON CULEBRA SHALL REMAIN OPEN TRAVELING OVER THE GRADE- TRANSITIONS INSTALLED DURING PHASE 1C- STAGE B. THE LANE CONFIGURATIONS ON CULEBRA SHALL BE AS DIRECTED BY THE ENGINEER

STAGE D - CONSTRUCT THE NORTHERN MID-SECTION OF CULEBRA BETWEEN THE FRONTAGE ROADS. THRU TRAFFIC ON LP 1604 IS STILL NOT AFFECTED AND REMAINS ON IT'S CURRENT POSITION. THRU TRAFFIC ON CULEBRA SHALL BE SHIFTED ONTO THE NEWLY CONSTRUCTED SOUTHERN MID-SECTION BETWEEN THE FRONTAGE ROADS AND THE LANE CONFIGURATIONS ON CULEBRA SHALL BE AS DIRECTED BY THE ENGINEER.

UPON COMPLETION OF PHASE 1C - STAGES C & D TO THE FIRST LIFT OF HOT MIX, CONSTRUCT THE RAISED ISLANDS AT CULEBRA INTERSECTION. PLACE FINAL LIFT OF HOT MIX, PERMANENT PAVEMENT MARKINGS AND SIGNS THROUGHOUT PHASE 1C - STAGES A, B, C & D. SHOULDER UP THE RESULTING EDGE DROP, PLACE FINAL VEGATATION AND CLEAN UP.

## PHASE 2 - FROM STA 18+100 (2.08 KM SOUTH OF CULEBRA) TO ENDING STA 28+551.5 (US 90)

PHASE 2A
CONSTRUCT NORTH- BOUND FRONTAGE ROAD. TRAFFIC ON LP 1604 SHALL REMAIN ON THE EXISTING ROAD. THE INTERSECTIONS ALONG THE FRONTAGE ROAD SHALL BE CONSTRUCTED IN STAGES MAINTAINING AT LEAST ONE OF TRAFFIC IN EACH DIRECTION. AT MAJOR INTERSECTIONS, ADDITIONAL LANES MAY BE REQUIRED TO REMAIN OPEN AS DIRECTED BY THE ENGINEER. RAISED ISLAND AT BIG MESA SHALL BE CONSTRUCTED AT THE END OF PHASE 2B.

FROM STA 27+900 TO THE END OF PROJECT, CONSTRUCT TEMPORARY WIDENING ON THE WEST HALF OF THE EXISTING ROADWAY AND SHIFT TWO-WAY TRAFFIC ON THE WEST PORTION AND CONSTRUCT THE EAST HALF OF THE PROPOSED ROADWAY. THE TEMPORARY WIDENING SHALL ALLOW FOR TWO-WAY TRAFFIC AND A DEDICATED RIGHT TURN LANE FROM SOUTH- BOUND LP 1604 TO WEST US 90.

COMPLETE ALL SAN ANTONIO WATER SYSTEMS WATER & SANITARY SEWER UTILITY ADJUSTMENTS FOR PHASE 2

STAGE A, B & C - CONSTRUCT THE TRANSITION CONNECTORS FROM STA 18+100 TO STA 18+600.

UPON THE COMPLETION OF PHASE 2A TO THE FIRST LIFT OF HOT MIX. CONSTRUCT DETOUR # 1 FROM STA 23+540 TO STA 23+800 & PLACE WORK ZONE PAVEMENT MARKINGS ON THE NEWLY CONSTRUCTED FRONTAGE ROAD. GRADE TRANSITION RAMPS SHALL BE PLACED ON THE NEWLY CONSTRUCTED MEDIO CREEK BRIDGE AND AT ALL DRIVEWAYS BEFORE TRAFFIC IS SWITCHED ONTO THE NORTH- BOUND FRONTAGE ROAD.

PHASE 2B
CONSTRUCT SOUTH- BOUND MAINLANES. FROM STA 23+600 (MEDIO CREEK) TO END OF PROJECT, TWO- WAY LP 1604 TRAFFIC SHALL BE PLACED ON THE NEWLY CONSTRUCTED NORTH- BOUND FRONTAGE ROAD AND/OR MAINLANES. REMOVE EXISTING BRIDGE & CONSTRUCT THE PROPOSED BRIDGE @ MEDIO CREEK. CONSTRUCT CROSS- STRUCTURES TO MATCH THE PORTION THAT WAS BUILT DURING PHASE 2A.

STAGE A
SOUTH- BOUND MAINLANE OUTSIDE WIDENING. FROM STA 18+600 TO STA 23+600 (MEDIO CREEK), USE DETOUR #1 FROM STA 23+540 TO STA 23+800 TO DIVIDE THE TRAFFIC ON LP 1604. SOUTH- BOUND LP 1604 TRAFFIC SHALL REMAIN ON THE EXISTING ROADWAY IN ONE LANE. NORTH- BOUND LP 1604 TRAFFIC SHALL BE SWITCHED ONTO THE NEWLY CONSTRUCTED NORTH- BOUND FRONTAGE ROAD. CONSTRUCT STRUCTURES FROM 14.6 LT OF THE CENTERLINE EAST TO MATCH THE PORTION THAT WAS BUILT DURING PHASE 2A.

STAGE B
SOUTH-BOUND MAINLANE INSIDE WIDENING. FROM STA 18+600 TO STA 23+600 (MEDIO CREEK), CONTINUE USING DETOUR #1 TO KEEP LP 1604 TRAFFIC DIVIDED. ONLY THE SOUTH-BOUND TRAFFIC IS SHIFTED EAST TO THE NEWLY WIDENED MAINLANES. CONSTRUCT STRUCTURES FROM 14.6 LT OF CENTERLINE WEST TO FINAL POSITION.

UPON THE COMPLETION OF PHASES 2B TO THE FIRST LIFT OF HOT MIX, CONSTRUCT RAISED ISLAND AT BIG MESA. PLACE THE FINAL LIFT OF HOT MIX AND FINAL PAVEMENT MARKINGS & SIGNS OVER ENTIRE PHASE 2A & 2B SECITONS. SHOULDER UP THE RESULTING EDGE DROP, PLACE FINAL VEGATATION AND CLEAN UP.

FILE $FILE$ LEVEL DISPLAYED $DATE$

STATE OF TEXAS
JOEL K. DAVENPORT, JR.
79276
REGISTERED PROFESSIONAL ENGINEER

Joel K. Davenport, Jr. 9/20/00
Joel K. Davenport, Jr. P.E. 79276 Date

©2000
Texas Department of Transportation

# SEQUENCE OF WORK NARRATIVE

| FED.RD. DIV.NO. | FEDERAL AID PROJECT NO. | | SHEET NO. |
|---|---|---|---|
| 6 | NH 2000(704), ETC. | | 64 |
| STATE | DIST. | COUNTY | |
| TEXAS | SAT | BEXAR | |
| CONT. | SECT. | JOB | HIGHWAY NO. |
| 2452 | 01 | 036,ETC | LP 1604 |

Plotted on: 01/26/2004

SEQUENCE OF WORK PLAN NARRATIVE
AND SEQUENCE OF WORK
PHASES 2A AND 2B

I. SEQUENCE OF WORK

Overview

The northbound frontage road will be constructed during Phase 2A with traffic utilizing the existing Loop 1604 roadway. Two-way traffic will then be switched to the northbound frontage road while the southbound mainlanes are constructed during Phase 2B.

Of the major intersections (Wiseman Blvd, Military Drive, Potranco Rd, and Marbach Rd) only Wiseman Blvd will be closed to traffic during construction except as indicated below. The remaining major intersections will be constructed in stages per the Sequence of Work Plan. The minor intersections (North Ellison Drive, Reed Road, Kilmarnoch Drive, Big Mesa Drive, Westcreek Oaks, Dove Canyon Road and Misty Woods Drive) will be constructed via closure of the intersections to traffic.

The Contractor has the option of presenting a plan to the Engineer for approval for construction of Potranco Road and Marbach Road by closing the intersections to traffic. The plan shall include only weekend construction activities, and shall require the intersections be open to traffic during the week. Plan shall also include a construction sequencing and timeline for completion of the construction activities and a detour plan. These intersections will not be allowed to be closed concurrently.

Contractor shall minimize disruption to the traveling public by limiting intersection closures to weekends only. North Ellison and Wiseman Blvd shall not be closed concurrently. Construction of Reed Rd., Kilmarnoch Dr. and Big Mesa Dr. shall be the last items constructed under Phase 2A. Upon completion of Big Mesa Dr. and Reed Rd., both intersections will be closed to traffic until the traffic shift to the NBFR under Phase 2B. Reed Rd, and Kilmarnoch Dr shall not be closed concurrently. Big Mesa Dr and Marbach Rd shall not be closed concurrently.

The Contractor shall present a plan to the Engineer for approval delineating a timeline schedule and sequencing plan for intersection closure and construction. The following stipulations shall apply to the sequencing plan.

Phase 2A - Northbound Frontage Road/East half of Major Intersections

Construction shall be completed in the following sequence:

1. Construct permanent Culvert 25 and 26. Construction shall be night time or weekend and shall be done under traffic.
2. Install temporary traffic signals at Military Dr. intersection. Contractor shall be considerate of location of permanent signal poles.
3. In accordance with the details of the Sequence of Work, construct:
   a. Detours
   b. Place CTB's and VIA's as shown on the Sequence of Work Plan for Phase 2A.
4. Construct the Phase 2A portion of both the permanent and/or temporary drainage structures as shown on the Sequence of Work Plan.
5. Construct the northbound frontage road through the Hot Mix TY C and place topsoil and seeding between NBFR and the East right-of-way line.
   a. Provide for temporary driveway access as shown on the Sequence of Work Plan and as approved by the Engineer.
      i. The Blazing Star RV Resort driveway shall not be constructed until sufficient length of the NBFR has been completed south of the existing driveway to allow negotiable access to the temporary cross-over at Westcreek Oakes Drive.
   b. Construct the frontage road sections requiring flex base (from intersection to intersection).
   c. Construct intersections, as outlined in Overview above.
      i. Each intersection must be completed to a level as approved by the Engineer before the next intersection is started.
      ii. Closed intersections may be opened to traffic at such times as deemed appropriate by the Engineer.
      iii. Construct portions of the major intersections using the staged construction as outlined in the Sequence of Work and detailed above.
         (a) Construction shall include the placement of conduit and foundations for permanent traffic signals
6. Install temporary traffic signals at all of the remaining major intersections. Contractor shall be considerate of location of permanent signal poles.
7. Construct temporary roadway connection from the southbound mainlanes to the northbound frontage road at STA 18+140 and Dove Canyon detour as shown on Sequence of Work layouts.

Phase 2B - Southbound Mainlanes/West half of Major Intersections

The work shall be completed in the following sequence:

1. Place CTB's and VIA's as shown on the Sequence of Work Plan for Phase 2B.
2. Move traffic to NBFR
   a. Revise placement of temporary traffic signal heads to match that of Phase 2B temporary traffic signal plans, two shall be accomplished prior to moving traffic to the NBFR.
3. Complete construction of the drainage structures.
4. Construct the southbound mainlanes, remaining portion of the major intersections, Dove Canyon Road through Hot Mix TY C and the southbound mainlane Medio Creek bridge.
   a. Construct portions of the major intersections using the staged construction as outlined in the Sequence of Work and detailed above.
   b. Major intersection construction shall include conduit and foundations for permanent traffic signals.
   c. Dove Canyon Road reconstruction
      i. Contractor shall minimize disruption to access of existing development residents by scheduling road closures at non-peak hours and shall limit closures to no more than one hour at a time. Access for emergency services must be provided at all times. Any closures/disruptions must be approved by the Engineer and coordinated with existing development, prior to implementation.
      ii. Dove Canyon detour shall be constructed prior to start of road reconstruction.
      iii. Detour shall require daily grade modification from STA 0+000 to STA 0+125 to accommodate corresponding level of roadway reconstruction.
      iv. The detour within these limits shall consist of a material as approved by the Engineer and shall receive the normal construct detour surface until the detour reaches final grade.
      v. Temporary drainage and any incidentals required are the responsibility of the contractor and are not a separate pay item. This will include, but not be limited to, ditch revisions and/or grading required to facilitate drainage, pipe, erosion control devices, etc., and will be considered subsidiary to Item 508 "Construct Detours".
5. Construct the Westcreek Oaks intersection by closing the intersection and providing detour per the Sequence of Work.
6. Install permanent traffic signals at the major intersections.
7. Place permanent signs.
8. Place Hot Mix Type C (Surf) and place permanent pavement markings.
9. Move traffic to ultimate lane configuration.

Phase 3 - Final Clean-up

1. Place remaining lift of Hot Mix TY C (SURF) on Phase 2A constructed roadways.
2. Place permanent pavement markings and remaining signage.
3. Upon completion of the work and before final acceptance is made, the Contractor shall shape and finish such portion of the right-of-way as may have been disturbed in making the above provisions for traffic and will be required to leave the entire right-of-way in a smooth, neat and orderly condition with no weeds.

CHANGE ORDER NO. 63 | NEW SHEET

555 EAST RAMSEY SAN ANTONIO TEXAS 78216
PHONE (210)375-9000
FAX (210)375-9010
PAPE-DAWSON ENGINEERS
CIVIL & ENVIRONMENTAL

STATE OF TEXAS
J. KENT O'BRIEN
64398
REGISTERED PROFESSIONAL ENGINEER

J. KENT O'BRIEN, P.E. 1/27/2004 DATE

© 2000 Texas Department of Transportation

LOOP 1604
SEQUENCE OF WORK NARRATIVE

SHEET OF

| DWN | | | | | PROJECT NO. | | |
|---|---|---|---|---|---|---|---|
| CK DWN | | | | | NH 2000 (704), etc. | | |
| DWN | CONTROL | SECTION | JOB | DIST. | STATE | COUNTY | HIGHWAY NO. | SHEET NO. |
| CK DWN | 2452 | 01 | 036 | SAT | TX | BEXAR | LOOP 1604 | 64A |

Design Filename: p:\52\2011\design\civil\plansheets\tcp\52011nar.dgn

| PAVEMENT MARKING ESTIMATED QUANTITIES | | 2452-01-038 |
|---|---|---|
| ITEM | UNIT | QTY |
| WK ZN PAV MARK | | |
| REMOV (CL B) TY I-C | EA | 210 |
| REMOV (CL B) TY II-A-A | EA | 184 |
| REMOV (CL C) TY W | EA | 838 |
| REMOV (CL C) TY Y | EA | 694 |
| REMOV (CL C) TY Y 150 MM | EA | 230 |
| NON-REMV (W) (SLD) 100 MM | M | 1880 |
| NON-REMV (W) (BRK) 100 MM | M | 168 |
| NON-REMV (W) (SLD) 600 MM | M | 50 |
| NON-REMOV (W) (ARROW) | EA | 16 |
| NON-REMOV (W) (WORD) | EA | 14 |
| NON-REMV (Y) (SLD) 100 MM | M | 980 |
| NON-REMV (Y) (BRK) 100 MM | M | 30 |
| NON-REMV (Y) (SLD) 600 MM | M | 20 |

| ESTIMATED QUANTITIES | | 2452-01-038 |
|---|---|---|
| ITEM | UNIT | QTY |
| CONSTRUCT DETOURS (CL 3) | M2 | 3270 |
| * REMOV CONC (DRCTN ISL) | M2 | 105 |
| * MTL BEAM GD FEN (TIM POST) (3.43 MM) | M | 100 |
| * TERMINAL ANCHOR SECTION (INSTALL ONLY) | EA | 2 |
| * REMOV METAL BEAM GUARD FENCE | M | 100 |
| * REMOV TERMINAL-ANCHOR SECTION | EA | 2 |
| * ASPHALT STAB BASE GR 4 | MGR | 1921 |
| * HOT MIX TY C | MGR | 1352 |

* FOR CONTRACTOR'S INFORMATION ONLY.
SUBSIDIARY TO CONSTRUCTION DETOURS

CONSTRUCTION DETOUR

TRAFFIC FLOW DIRECTION

SCALE 1:1500

POT 10+476.959

PI STA 10+446.96

S 66°21'19" E

S 70°37'05" E

10+400

PI STA 10+346.56

20.8

45

60

* REMOVE & REPLACE EXISTING MBGF & TERM ANCHOR SECT.

25 R

60

50

10

80

90

10+300

LP 1604

LP 1604

21.91" W

00

15+900

16+000

16+100

16+200

* REMOVE EXISTING CONC ISLANDS ( 4 LOCATIONS)
REPAIR PAVEMENT & REPLACE CONCRETE ISLANDS AS PART OF CONSTRUCTION DETOURS

20 R

CULEBRA CREEK

* REMOVE PARK & ROW

22.8

17.2

LESLIE ROAD SHALL BE CLOSED TO ACCOMODATE BRIDGE CONSTRUCTION OVER CULEBRA CREEK.
DETOUR NORTH BOUND TRAFFIC ON LESLIE ROAD WEST TO WESTWOOD LOOP & CULEBRA INTERSECTION
DETOUR SOUTH BOUND TRAFFIC ON LESLIE ROAD ON TO SOUTH BOUND LP 1604 TO CULEBRA ROAD.

10+200

POT 10+193.116

* CLOSE EXISTING LESLIE ROAD TO THRU TRAFFIC

CULEBRA ROAD

S 61° 45' 10.62" E

10+100

POT 10+093.412

CULEBRA CENTERLINE

17.2

22.8

| 0.6 SHR | 3.6 LANE | 3.6 LANE | 3.6 LANE | 3.6 LANE | 3.6 LANE | 3.6 LANE | 0.6 SHR |
|---|---|---|---|---|---|---|---|

* 50 mm HOT MIX TY C

VARIES VARIES

CONSTRUCTION DETOUR (CL 3)
* 250 MM ASPHALT STAB BASE GR 4

TYPICAL SECTION ON CULEBRA

* FOR CONTRACTOR'S INFORMATION ONLY.
SUBSIDIARY TO CONSTRUCTION DETOURS

LP 1604 CENTERLINE

14.6

13.2

9.6

| 0.6 SHR | 3.6 LANE | 3.6 LANE | 3.6 LANE | 3.6 LANE | 3.6 LANE | 3.6 LANE | 0.6 SHR |
|---|---|---|---|---|---|---|---|

* 50 mm HOT MIX TY C

VARIES VARIES

CONSTRUCTION DETOUR (CL 3)
* 250 MM ASPHALT STAB BASE GR 4

TYPICAL SECTION ON LP 1604

* FOR CONTRACTOR'S INFORMATION ONLY.
SUBSIDIARY TO CONSTRUCTION DETOURS

STATE OF TEXAS
JOEL K. DAVENPORT, JR.
79276
REGISTERED PROFESSIONAL ENGINEER

Joel K Davenport Jr 9/19/00
Joel K. Davenport, Jr., P.E. 79276 Date

FILE: t:\roadesign\ip\1604fm471-90\sow\phase1\ph1a*sow1.dgn 15 SEP 2000
LEVEL DISPLAYED

©2000

Texas Department of Transportation

# SEQUENCE OF WORK PHASE IA

SHEET 1 OF 2

| FED. RD. DIV. NO. | FEDERAL AID PROJECT NO. | | SHEET NO. |
|---|---|---|---|
| 6 | NH 2000(704), ETC. | | 65 |
| STATE | DIST. | COUNTY | |
| TEXAS | SAT | BEXAR | |
| CONT. | SECT. | JOB | HIGHWAY NO. |
| 2452 | 01 | 036, ETC | LP 1604 |

| PAVEMENT MARKING ESTIMATED QUANTITIES | | 2452-01-038 |
|---|---|---|
| ITEM | UNIT | QTY |
| WK ZN PAV MRK | | |
| REMOV (CL A) TY II-A-A | EA | 202 |
| REMOV (CL B) TY I-C | EA | 192 |
| REMOV (CL C) TY W | EA | 808 |
| REMOV (CL C) TY Y | EA | 766 |
| NON-REMV (W) (SLD) 100 MM | M | 1880 |
| NON-REMV (W) (BRK) 100 MM | M | 216 |
| NON-REMV (W) (SLD) 600 MM | M | 50 |
| NON-REMOV (W) (ARROW) | EA | 19 |
| NON-REMOV (W) (WORD) | EA | 18 |
| NON-REMV (Y) (SLD) 100 MM | M | 1150 |
| NON-REMV (Y) (SLD) 600 MM | M | 30 |

| SEQUENCE OF WORK ESTIMATED QUANTITIES | | 2452-01-038 |
|---|---|---|
| ITEM | UNIT | QTY |
| CONSTRUCT DETOURS (CL 3) | M2 | 3850 |
| * REMOV CONC (DRCTN ISL) | M2 | 73 |
| * RIPRAP (CONC) (CL B) | M3 | 130 |
| * CONC CURB (TY 1) | M | 100 |

* FOR CONTRACTOR'S INFORMATION ONLY. SUBSIDIARY TO CONSTRUCTION DETOURS

CONSTRUCTION DETOUR

TRAFFIC FLOW DIRECTION

SCALE 1:1500

POTRANCO RD

N 89° 23' 07.22" E

20+400

20+300

20+200

PT 20+280.133

PC 20+058.441

N 73° 31' 16.36" E

LP 1604

S 0° 11' 52.87" E

22+400

22+500

22+600

22+700

22+800

22+900

* REMOVE EXISTING CONC ISLANDS ( 4 LOCATIONS)
REPAIR PAVEMENT & REPLACE CONCRETE ISLANDS AS PART OF CONSTRUCTION DETOURS

CAROCAL CREEK

25 R TYP

70

25

45

100

15

70

45

45

25

13.2

9.6

7.8

CONSTRUCTION DETOUR (CL 3)
* 250 MM ASPHALT STAB BASE GR 4

LP 1604 CENTERLINE

14.6

13.2

9.6

0.6 SHR | 3.6 LANE | 3.6 LANE | 3.6 LANE | 3.6 LANE | 3.6 LANE | 3.6 LANE | 0.6 SHR

* 50 MM HOT MIX (TY C)

VARIES

VARIES

TYPICAL SECTION ON LP 1604

* FOR CONTRACTOR'S INFORMATION ONLY. SUBSIDIARY TO CONSTRUCTION DETOURS

STATE OF TEXAS
JOEL K. DAVENPORT, JR.
79276
REGISTERED PROFESSIONAL ENGINEER

Joel K. Davenport, Jr. 9/19/00
Joel K. Davenport, Jr. P.E. 79276 Date

©2000

Texas Department of Transportation

# SEQUENCE OF WORK PHASE IA

SHEET 2 OF 2

| FED. RD. DIV. NO. | FEDERAL AID PROJECT NO. | | SHEET NO. |
|---|---|---|---|
| 6 | NH 2000(704), ETC. | | 66 |
| STATE | DIST. | COUNTY | |
| TEXAS | SAT | BEXAR | |
| CONT. | SECT. | JOB | HIGHWAY NO. |
| 2452 | 01 | 036, ETC | LP 1604 |

FILE: t:\gov\design\lp1604fm471-90\sow\phase1\ph1a*sow2.dgn 15 SEP 2000

LEVEL DISPLAYED

SCALE 1:1500

| PAVEMENT MARKING ESTIMATED QUANTITES | | 2452-01-038 |
|---|---|---|
| ITEM | UNIT | QTY |
| WK ZN PAV MRK | | |
| REMOV (CL A) TY II-A-A | EA | 202 |
| REMOV (CL B) TY I-C | EA | 192 |
| REMOV (CL C) TY W | EA | 1096 |
| REMOV (CL C) TY Y | EA | 806 |
| REMOV (W)(SLD)100 MM | M | 1880 |
| NON-REMOV (W)(SLD)100 MM | M | 0 |
| NON-REMOV (W)(BRK)100 MM | M | 0 |
| NON-REMOV (W)(SLD)600 MM | M | 50 |
| NON-REMOV (W) (ARROW) | EA | 19 |
| NON-REMOV (W) (WORD) | EA | 18 |
| REMOV (Y)(SLD)100 MM | M | 1150 |
| NON-REMOV (Y)(SLD)100 MM | M | 0 |
| NON-REMOV (Y)(SLD)600 MM | M | 0 |

| SEQUENCE OF WORK ESTIMATED QUANTITIES | | 2452-01-038 |
|---|---|---|
| ITEM | UNIT | QTY |
| CONSTRUCT DETOURS (CL 3) | M2 | 3850 |
| * REMOV CONC (DRCTN ISL) | M2 | 73 |
| * RIPRAP (CONC)(CL B) | M3 | 130 |
| * CONC CURB (TY 1) | M | 100 |

* FOR CONTRACTOR'S INFORMATION ONLY. SUBSIDIARY TO CONSTRUCTION DETOURS

CONSTRUCTION DETOUR

TRAFFIC FLOW DIRECTION

POTRANCO RD

N 89° 23' 07.22" E

20+400

20+300

20+200

PT 20+280.133

PC 20+058.441

LP 1604

S 0° 11' 52.87" E

22+400

22+500

22+600

22+700

22+800

22+900

* REMOVE EXISTING CONC ISLANDS ( 4 LOCATIONS)
REPAIR PAVEMENT & REPLACE CONCRETE ISLANDS AS PART OF CONSTRUCTION DETOURS

CAROCAL CREEK

CHANGE ORDER NO 33

-REVISED QUANTITIES TO ANTICIPATE CONSTRUCTION IN PHASE 2

CONSTRUCTION DETOUR (CL 3)
* 250 MM ASPHALT STAB BASE GR 4

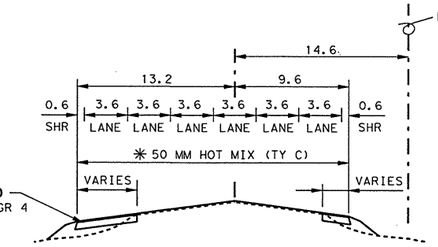


TYPICAL SECTION ON LP 1604

* FOR CONTRACTOR'S INFORMATION ONLY. SUBSIDIARY TO CONSTRUCTION DETOURS

CHANGE ORDER NO 33

STATE OF TEXAS
JENNIFER L. MOCZYGEMBA
84734
REGISTERED PROFESSIONAL ENGINEER

Jennifer L. Moczygemba, P.E. 84734 — 8-7-2002 Date

© 2000 Texas Department of Transportation

# SEQUENCE OF WORK PHASE IA

SHEET 2 OF 2

| FED. RD. DIV. NO. | FEDERAL AID PROJECT NO. | | SHEET NO. |
|---|---|---|---|
| 6 | NH 2000(704), ETC. | | 66A |
| STATE | DIST. | COUNTY | |
| TEXAS | SAT | BEXAR | |
| CONT. | SECT. | JOB | HIGHWAY NO. |
| 2452 | 01 | 036, ETC | LP 1604 |

08/06/02

FILE: t:\MO\Design\lp1604fm471-90\sow\Phase1\ph1+sow2+c033.dgn 08/07/02

LEVEL DISPLAYED 1 2 3 4 5 6 7 8 9 10 11 21 31 41 51 61 71 81 91 02 12 22 32 42 52 62 72 82 93 03 13 23 33 43 53 63 73 83 94 04 14 24 34 44 54 64 74 84 95 05 15 25 35 45 55 65 75 85 96 06 16 26 36 46 56 66 76 86 97 07 63

DRAINAGE & ROADWAY CONSTRUCTION

CONSTRUCTION DETOUR

TRAFFIC FLOW DIRECTION

V.I.A. ASSEMBLY ( 14 BARRELS EACH LOCATION )

SCALE 1:2000

| PAVEMENT MARKING ESTIMATED QUANTITES | | 2452-01-037 |
|---|---|---|
| ITEM | UNIT | QTY |
| WK ZN PAV MRK | | |
| REMOV (W) (SLD) (100 MM) | M | 260 |
| REMOV (Y) (SLD) (100 MM) | M | 260 |
| REMOV (CL B) TY II-A-A | EA | 138 |
| NON-REMV (W)(SLD)100 MM | M | 1400 |
| NON-REMV (Y)(SLD)100 MM | M | 1400 |
| ELIM EXT PAV MRK & MRKR (100 MM) | M | 1200 |
| | | |

中 PLACE AT TRANSITIONS STA. 14+200 TO 14+400

| SEQUENCE OF WORK ESTIMATED QUANTITIES | | 2452-01-037 |
|---|---|---|
| ITEM | UNIT | QTY |
| CONSTRUCT DETOURS (CL 3) | M2 | 3666 |
| PORT CONC TRAF BAR(STKPL,INSTL & RETRN) | M | 291.2 |
| VEH IMP ATTN ASSEM BRLS | EA | 70 |
| | | |
| | | |

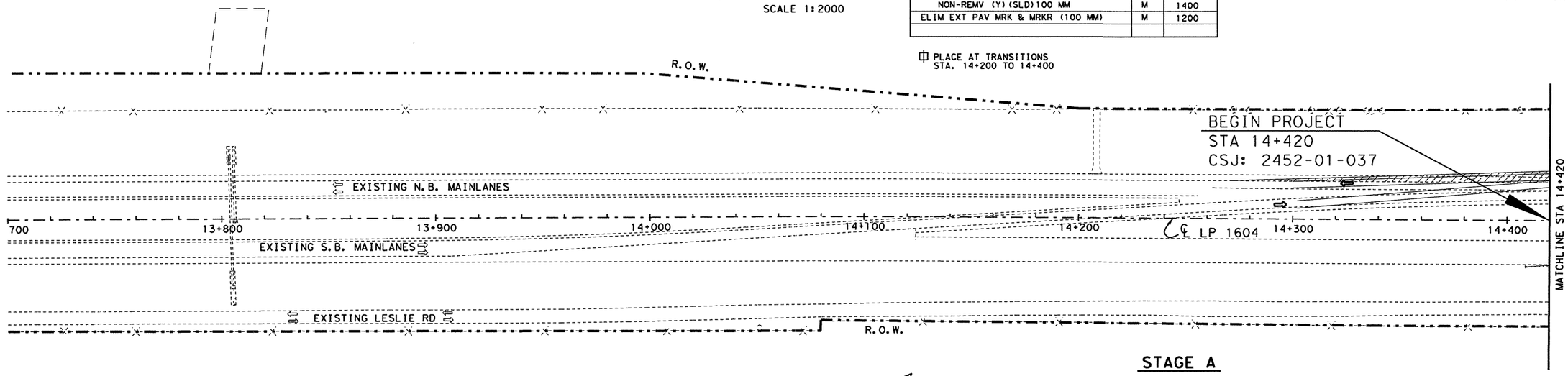


STAGE A

SCALE 1:2000

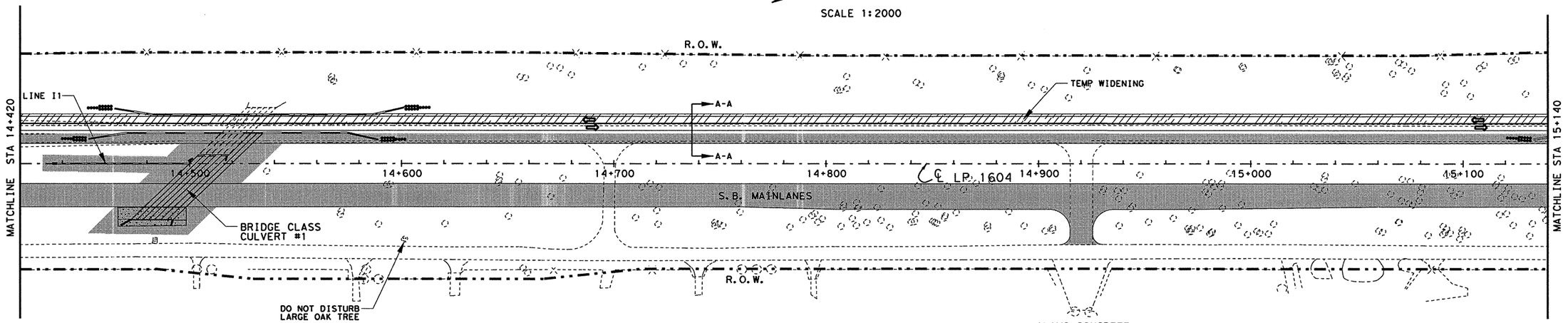


STAGE A

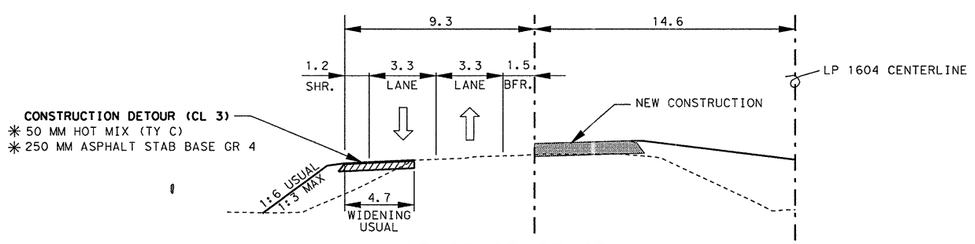


## STAGE IB STAGE A

TYPICAL SECTION A-A ON LP 1604

✳ FOR CONTRACTOR'S INFORMATION ONLY. SUBSIDIARY TO CONSTRUCTION DETOURS

STATE OF TEXAS
JOEL K. DAVENPORT, JR.
79276
REGISTERED PROFESSIONAL ENGINEER

Joel K. Davenport, Jr. P.E. 79276

9/9/00
Date

©2000 Texas Department of Transportation

# SEQUENCE OF WORK PHASE IB

SHEET 1 OF 10

| FED. RD. DIV. NO. | FEDERAL AID PROJECT NO. | | SHEET NO. |
|---|---|---|---|
| 6 | NH 2000(704), ETC. | | 67 |
| STATE | DIST. | COUNTY | |
| TEXAS | SAT | BEXAR | |
| CONT. | SECT. | JOB | HIGHWAY NO. |
| 2452 | 01 | 036,ETC | LP 1604 |

FILE: H:\ao\design\lp1604fm471-90\sow\phase1\pm*1bdst*a1.dgn 15 SEP 2000

LEVEL DISPLAYED 1 2 3 4 5 6 7 8 9 10 11 12 21 31 41 51 61 71 81 91 202 212 222 232 242 252 262 272 282 292 303 313 32 33 34 35 36 37 38 39 40 41 42 43 44 45 46 47 48 49 50 51 52 53 54 55 56 57 58 59 60 63

DRAINAGE & ROADWAY CONSTRUCTION

PORT. CONCRETE TRAFFIC BARRIER

TRAFFIC FLOW DIRECTION

V.I.A. ASSEMBLY (14 BARRELS EACH LOCATION)

SCALE 1:2000

PAVEMENT MARKING ESTIMATED QUANTITIES 2452-01-037

| ITEM | UNIT | QTY |
|---|---|---|
| ~~WK ZN PAV MRK~~ | | |
| ~~REMOV (W) (SLD) (100 MM)~~ | ~~M~~ | ~~260~~ 0 |
| ~~REMOV (Y) (SLD) (100 MM)~~ | ~~M~~ | ~~260~~ 0 |
| ~~REMOV (CL B) TY II A A~~ | ~~EA~~ | ~~130~~ 0 |
| ~~NON REMV (W) (SLD) 100 MM~~ | ~~M~~ | ~~1400~~ 0 |
| ~~NON REMV (Y) (SLD) 100 MM~~ | ~~M~~ | ~~1400~~ 0 |
| ~~ELIM EXT PAV MRK & MRKR (100 MM)~~ | ~~M~~ | ~~1200~~ 0 |

~~PLACE AT TRANSITIONS STA. 14+200 TO 14+400~~

SEQUENCE OF WORK ESTIMATED QUANTITIES 2452-01-037

| ITEM | UNIT | QTY |
|---|---|---|
| ~~CONSTRUCT DETOURS (CL 3)~~ | ~~M2~~ | ~~3666~~ 0 |
| PORT CONC TRAF BAR (STKPL, INSTL & RETRN) | M | ~~291.2~~ 219.5 |
| VEH IMP ATTN ASSEM BRLS | EA | ~~70~~ 42 |

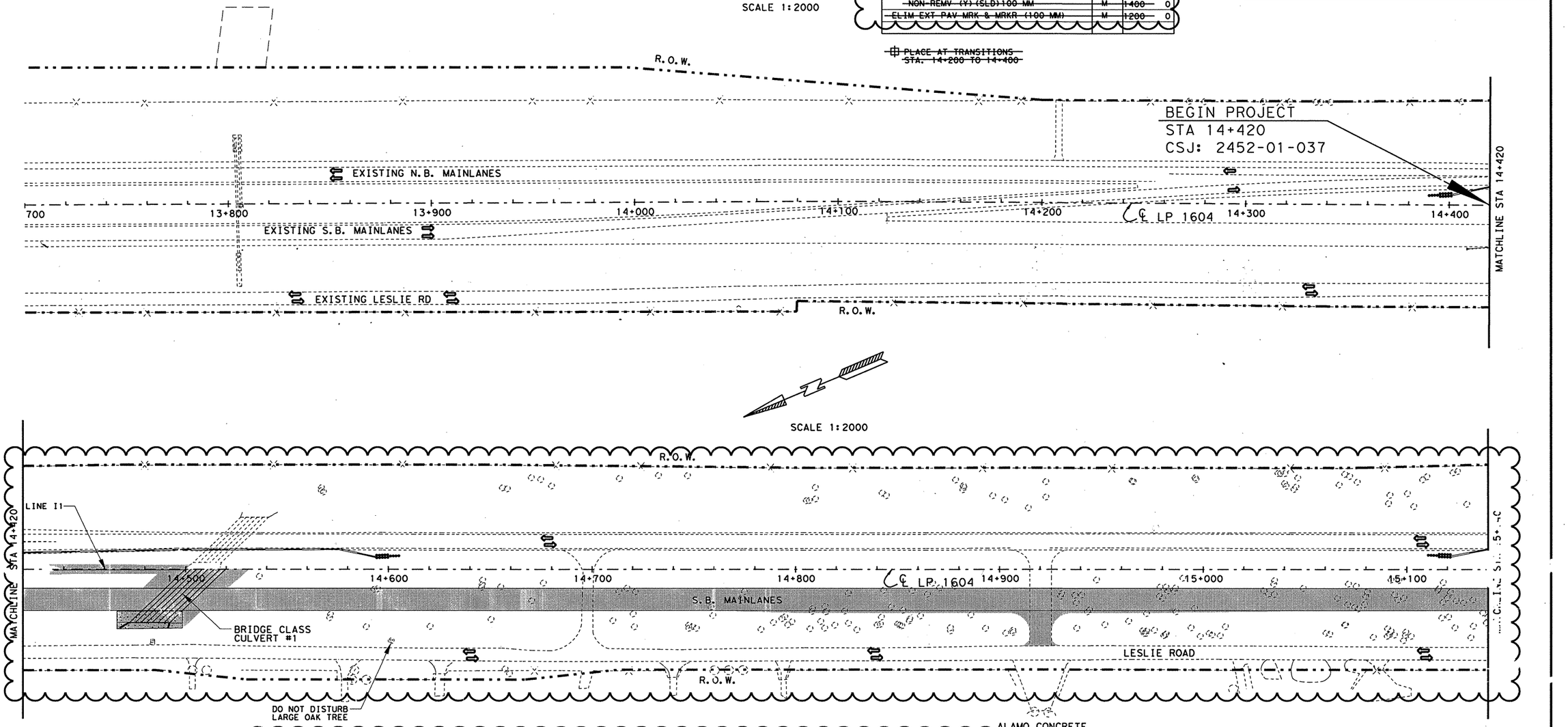


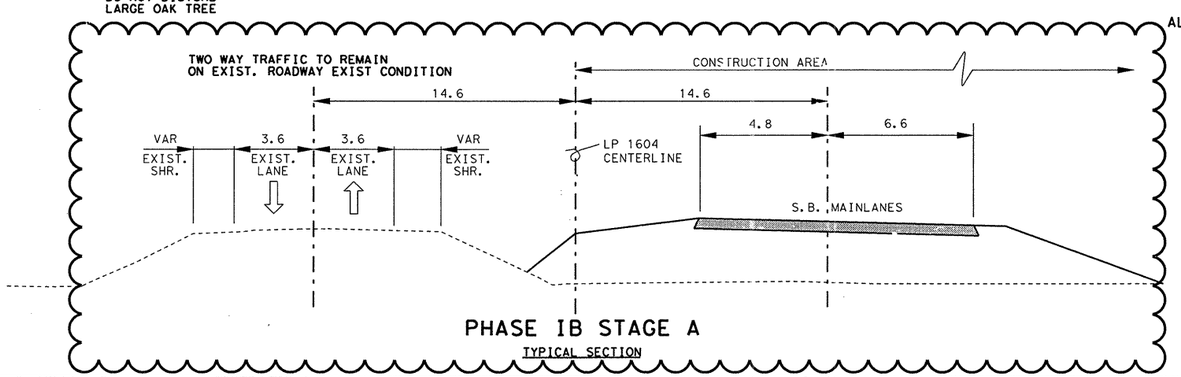


CHANGE ORDER 14

REVISED SHEET

STATE OF TEXAS
TERRY G. McCOY
75016
REGISTERED PROFESSIONAL ENGINEER

Terry G. McCoy, P.E. 2-28-02 Date

© 2001 Texas Department of Transportation

# SEQUENCE OF WORK PHASE IB STAGE A

SHEET 1 OF 10

| FED. RD. DIV. NO. | FEDERAL AID PROJECT NO. | | SHEET NO. |
|---|---|---|---|
| 6 | NH 2000(704), ETC. | | 67A |
| STATE | DIST. | COUNTY | |
| TEXAS | SAT | BEXAR | |
| CONT. | SECT. | JOB | HIGHWAY NO. |
| 2452 | 01 | 036, ETC | LP 1604 |

FILE $FILE$ $DATE$
LEVEL 1 2 3 4 5 6 7 8 9 10 11 12 13 14 15 16 17 18 19 20 21 22 23 24 25 26 27 28 29 30 31 32
DISPLAYED 33 34 35 55 63 75 83 94 01 41 42 43 44 45 46 47 48 49 50 51 52 53 54 55 56 57 58 59 60 63

DRAINAGE & ROADWAY CONSTRUCTION

CONSTRUCTION DETOUR

SPAN TYPE BRIDGE CONSTRUCTION

TRAFFIC FLOW DIRECTION

V.I.A. ASSEMBLY ( 14 BARRELS EACH LOCATION )

SPECIAL SHORING

| PAVEMENT MARKING ESTIMATED QUANTITES | | 2452-01-037 | 2452-01-038 |
|---|---|---|---|
| ITEM | UNIT | QTY | QTY |
| WK ZN PAV MRK | | | |
| REMOV (W) (SLD) (100 MM) | M | 120 | 120 |
| REMOV (Y) (SLD) (100 MM) | M | 120 | 120 |
| REMOV (CL B) TY II-A-A | EA | 60 | 10 |
| NON-REMV (W) (SLD) 100 MM | M | 600 | |
| NON-REMV (Y) (SLD) 100 MM | M | 600 | |
| ELIM EXT PAV MRK & MRKR (100 MM) | | 240 | 240 |
| | | | |

| SEQUENCE OF WORK ESTIMATED QUANTITIES | | 2452-01-037 | 2452-01-038 |
|---|---|---|---|
| ITEM | UNIT | QTY | QTY |
| TEMPORARY SPL SHORING | M2 | | 700 |
| CONSTRUCT DETOURS (CL 3) | M2 | 2075 | 45 |
| PORT CONC TRAF BAR(STKPL,INSTL & RETRN) | M | 236.6 | |
| VEH IMP ATTN ASSEM BRLS | EA | 42 | |
| | | | |

PLACE AT TRANSITIONS STA. 15+440 TO 15+560

SCALE 1:2000

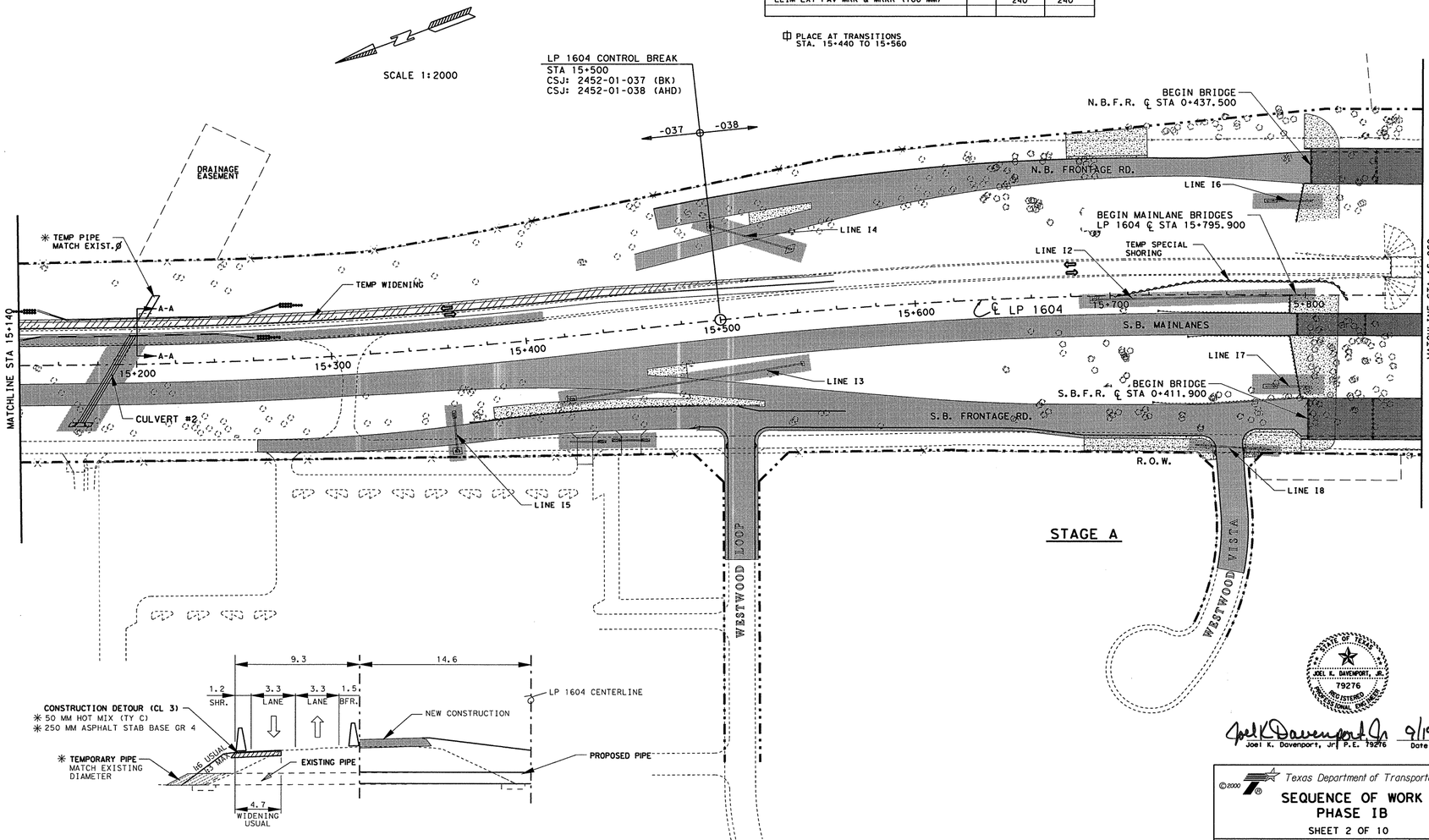





## PHASE IB STAGE A

TYPICAL SECTION A-A ON LP 1604

✳ FOR CONTRACTOR'S INFORMATION ONLY. SUBSIDIARY TO CONSTRUCTION DETOURS

STATE OF TEXAS
JOEL K. DAVENPORT, JR.
79276
REGISTERED
PROFESSIONAL ENGINEER

Joel K. Davenport Jr 9/19/00

Joel K. Davenport, Jr. P.E. 79276 — Date

©2000

Texas Department of Transportation

# SEQUENCE OF WORK PHASE IB

SHEET 2 OF 10

| FED. RD. DIV. NO. | FEDERAL AID PROJECT NO. | | SHEET NO. |
|---|---|---|---|
| 6 | NH 2000(704), ETC. | | 68 |
| STATE | DIST. | COUNTY | |
| TEXAS | SAT | BEXAR | |
| CONT. | SECT. | JOB | HIGHWAY NO. |
| 2452 | 01 | 036,ETC | LP 1604 |

FILE: t:\go\design\lp1604fm471-90\sow\phase1\ph1b+st+a2.dgn 15 SEP 2000
LEVEL DISPLAYED

DRAINAGE & ROADWAY CONSTRUCTION

TEMPORARY SHORING

SPAN TYPE BRIDGE CONSTRUCTION

TRAFFIC FLOW DIRECTION

V.I.A. ASSEMBLY (14 BARRELS EACH LOCATION

PORT. CONCRETE TRAFFIC BARRIER

| PAVEMENT MARKING ESTIMATED QUANTITES | | 2452-01-037 | 2452-01-038 |
|---|---|---|---|
| ITEM | UNIT | QTY | QTY |
| ~~WK ZN PAV MRK~~ | | | |
| ~~REMOV (W) (SLD) (100 MM)~~ | M | ~~120~~ | ~~120~~ |
| ~~REMOV (Y) (SLD) (100 MM)~~ | M | ~~120~~ | ~~120~~ |
| ~~REMOV (CL B) TY II A A~~ | EA | ~~60~~ | ~~10~~ |
| ~~NON REMV (W) (SLD) 100 MM~~ | M | ~~600~~ | |
| ~~NON REMV (Y) (SLD) 100 MM~~ | M | ~~600~~ | |
| ~~ELIM EXT PAV MRK & MRKR (100 MM)~~ | | ~~240~~ | ~~240~~ |

~~⊞ PLACE AT TRANSITIONS STA. 15+440 TO 15+560~~

| SEQUENCE OF WORK ESTIMATED QUANTITIES | | 2452-01-037 | 2452-01-038 |
|---|---|---|---|
| ITEM | UNIT | QTY | QTY |
| TEMPORARY SPL SHORING | M2 | | ~~700~~ 0 |
| ~~CONSTRUCT DETOURS (CL 3)~~ | M2 | ~~2075~~ 0 | ~~45~~ 0 |
| PORT CONC TRAF BAR(STKPL, INSTL & RETRN) | M | ~~236.6~~ 118.9 | |
| VEH IMP ATTN ASSEM BRLS | EA | ~~42~~ 14 | |

SCALE 1:2000

LP 1604 CONTROL BREAK
STA 15+500
CSJ: 2452-01-037 (BK)
CSJ: 2452-01-038 (AHD)

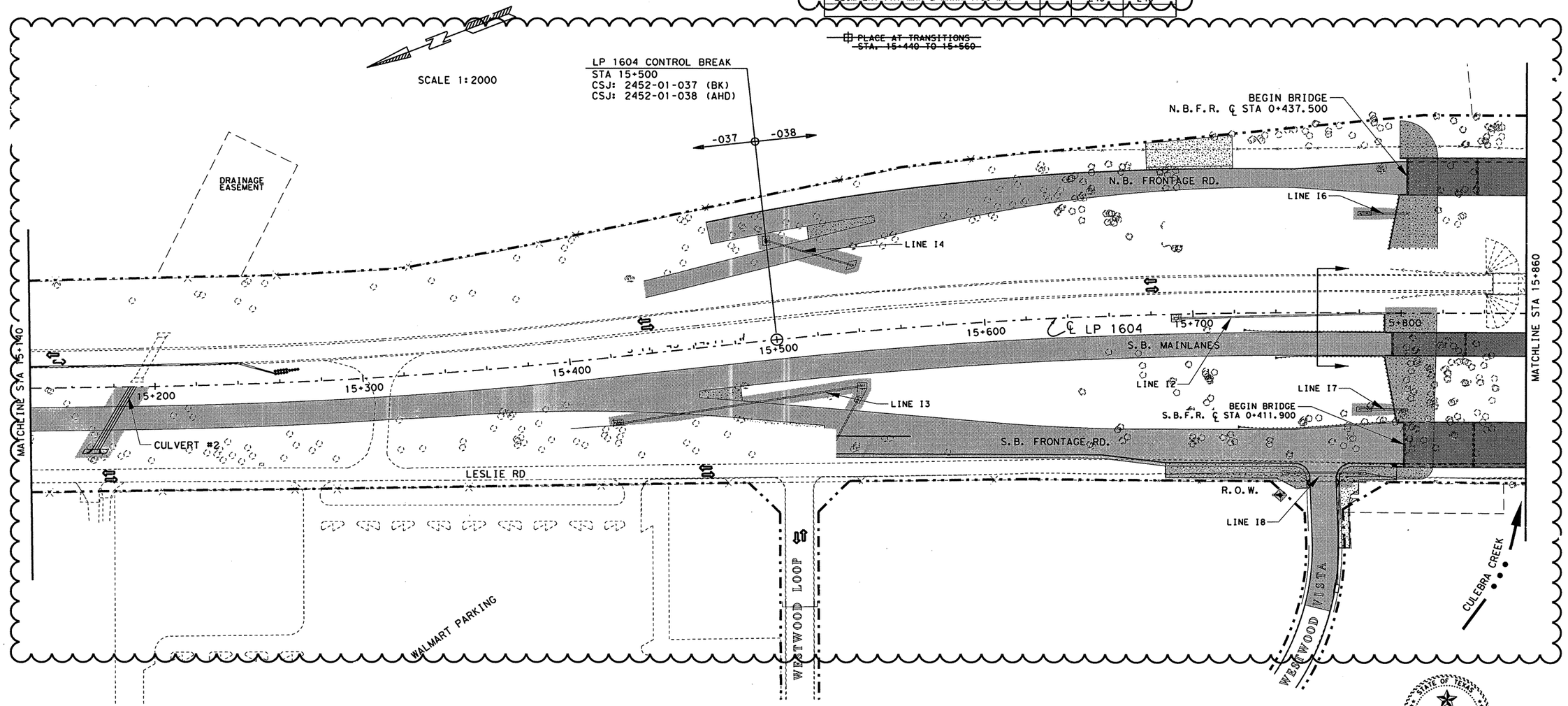


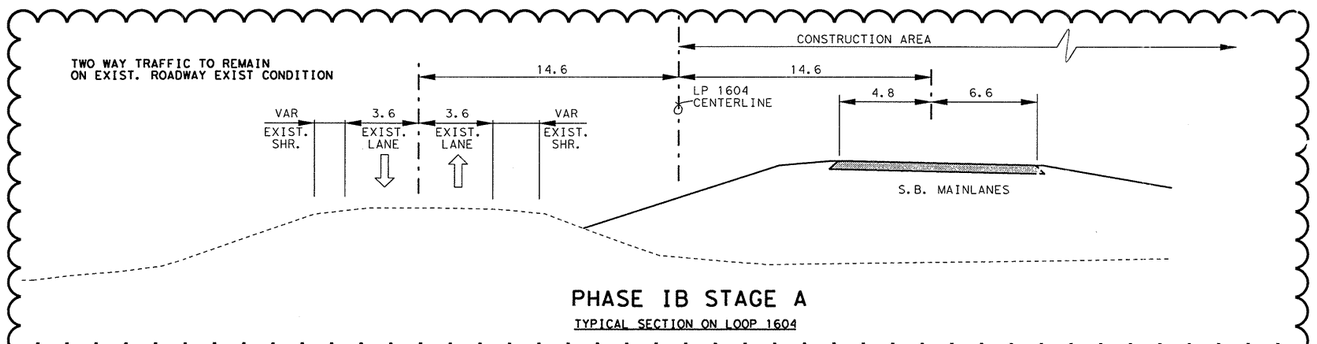


PHASE IB STAGE A

TYPICAL SECTION ON LOOP 1604

STATE OF TEXAS
TERRY G. McCOY
75016
REGISTERED
PROFESSIONAL ENGINEER

Terry G. McCoy, P.E. — 2-28-02 (date)

CHANGE ORDER 14

REVISED SHEET

© 2001

Texas Department of Transportation

SEQUENCE OF WORK
PHASE IB STAGE A

SHEET 2 OF 10

| FED. RD. DIV. NO. | FEDERAL AID PROJECT NO. | | SHEET NO. |
|---|---|---|---|
| 6 | NH 2000(704), ETC. | | 68A |
| STATE | DIST. | COUNTY | |
| TEXAS | SAT | BEXAR | |
| CONT. | SECT. | JOB | HIGHWAY NO. |
| 2452 | 01 | 036, ETC | LP 1604 |

FILE $FILE$ $DATE$

LEVEL DISPLAYED
1 2 3 4 5 6 7 8 9 10 11 21 31 41 51 61 71 81 91 02 12 22 32 42 52 62 72 82 93 03 13 23
53 54 55 56 57 58 59 04 14 24 34 44 54 64 74 84 95 05 15 25 35 45 55 65 75 85 96 06 63

| PAVEMENT MARKING ESTIMATED QUANTITES | | 2452-01-038 |
|---|---|---|
| ITEM | UNIT | QTY |
| WK ZN PAV MRK | | |
| ⊕ REMOV (W) (SLD) (100 MM) | M | 80 |
| ⊕ REMOV (Y) (SLD) (100 MM) | M | 80 |
| REMOV (CL B) TY II-A-A | EA | 12 |
| ELIM EXT PAV MRK & MRKR (100 MM) | M | 160 |
| | | |
| | | |
| | | |
| | | |

⊕ PLACE AT TRANSITIONS STA. 16+540 TO 16+580

| SEQUENCE OF WORK ESTIMATED QUANTITIES | | 2452-01-038 |
|---|---|---|
| ITEM | UNIT | QTY |
| TEMPORARY SPL SHORING | M2 | 1900 |
| CONSTRUCT DETOURS (CL 3) | M2 | 7 |
| VEH IMP ATTN ASSEM BRLS | EA | 14 |
| | | |
| | | |

SCALE 1:2000

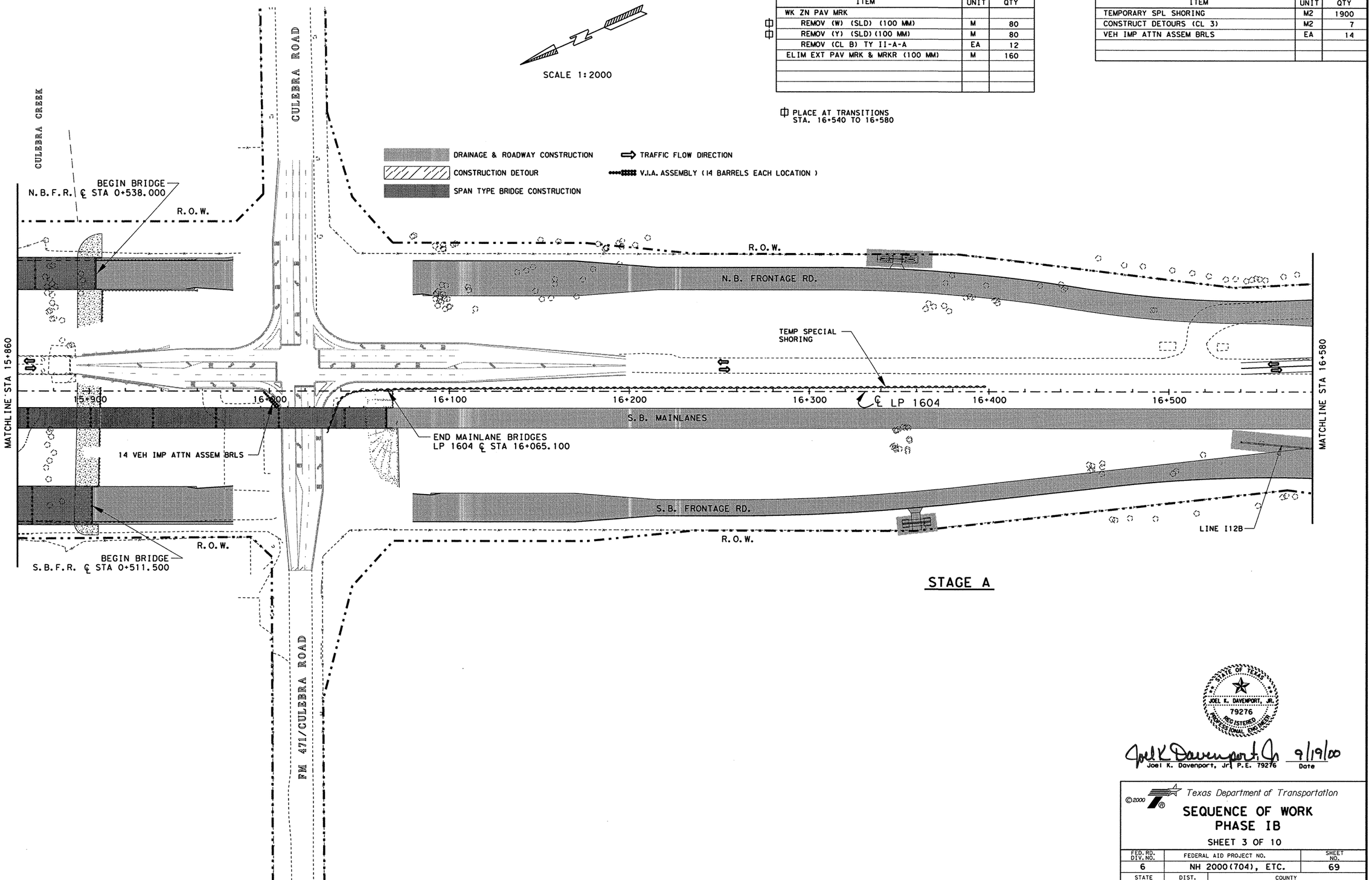


STAGE A

STATE OF TEXAS
JOEL K. DAVENPORT, JR.
79276
REGISTERED
PROFESSIONAL ENGINEER

Joel K Davenport Jr 9/19/00
Joel K. Davenport, Jr. P.E. 79276 Date

FILE: f:\co\design\lp1604fm471-90\sow\phase1\sh*1b*st*o3.dgn 15 SEP 2000
LEVEL: 1 2 3 4 5 6 7 8 9 10 11 12 13 14 15 16 17 18 19 20 21 22 23 24 25 26 27 28 29 30 31 32
DISPLAYED 33 45 55 65 75 85 94 04 14 24 34 44 54 64 74 84 94 05 15 25 35 45 55 65 75 85 96 0 63

© 2000 Texas Department of Transportation

# SEQUENCE OF WORK PHASE IB

SHEET 3 OF 10

| FED.RD. DIV.NO. | FEDERAL AID PROJECT NO. | | SHEET NO. |
|---|---|---|---|
| 6 | NH 2000(704), ETC. | | 69 |
| STATE | DIST. | COUNTY | |
| TEXAS | SAT | BEXAR | |
| CONT. | SECT. | JOB | HIGHWAY NO. |
| 2452 | 01 | 036, ETC | LP 1604 |

| PAVEMENT MARKING ESTIMATED QUANTITES | | | 2452-01-038 |
|---|---|---|---|
| ITEM | UNIT | QTY | |
| ~~WK ZN PAV MRK~~ | | | |
| ~~REMOV (W) (SLD) (100 MM)~~ | M | ~~80~~ 0 | |
| ~~REMOV (Y) (SLD) (100 MM)~~ | M | ~~80~~ 0 | |
| ~~REMOV (CL B) TY II A A~~ | EA | ~~12~~ 0 | |
| ~~ELIM EXT PAV MRK & MRKR (100 MM)~~ | M | ~~160~~ 0 | |

| SEQUENCE OF WORK ESTIMATED QUANTITIES | | | 2452-01-038 |
|---|---|---|---|
| ITEM | UNIT | QTY | |
| TEMPORARY SPL SHORING | M2 | ~~1900~~ 1377 | |
| CONSTRUCT DETOURS (CL 3) 498 | M2 | ~~7154~~ | |
| VEH IMP ATTN ASSEM BRLS | EA | 14 | |
| PORT CONC TRAF BAR(STKPL, INSTL &RETRN) | M | 429.8 | |
| MTL BEAM GD FEN (TIM POST) (2.67 MM) | M | 64.5 | |
| INSTALL TERM ANCH SECT (2.67 MM) | EA | 2 | |
| REMOV OLD STR(PIPE) | M | 100.2 | |

SCALE 1:2000

~~PLACE AT TRANSITIONS STA. 16+540 TO 16+580~~

* DUE TO EXPECTED GRADE DIFFERENCES THE CONTRACTOR SHALL HAVE TRANSITIONAL RAMPING BETWEEN THE EXISTING & PROPOSED ROADWAY. ALL LABOR AND MATERIALS REQUIRED FOR THIS WORK SHALL BE SUBSIDIARY TO CONSTRUCT DETOUR AND NO DIRECT PAYMENT SHALL BE MADE.

DRAINAGE & ROADWAY CONSTRUCTION
SPAN TYPE BRIDGE CONSTRUCTION
TRANSITIONAL RAMPING
TRAFFIC FLOW DIRECTION
V.I.A. ASSEMBLY (14 BARRELS EACH LOCATION)
PORT. CONCRETE TRAFFIC BARRIER
METAL BEAM GUARDRAIL FENCE

CULEBRA CREEK
CULEBRA ROAD
END BRIDGE N.B.F.R. ℄ STA 0+538.000
R.O.W.
EXIST METAL BEAM GUARDRAIL TO REMAIN.
METAL BEAM GUARDRAIL FENCE TO BE INSTALLED AND SECURED TO PCTB.
REMOV PIPE 32.2M
REMOV PIPE 68M
TEMPORARY DRIVEWAY 5B
EST ● ~~454 M2~~ 498 M2
REFER TO SHEET 336D FOR DETAILS
N.B. FRONTAGE RD.
STA 16+402.40
TEMP. SHORING LOCATION "B" SEE SHEET 82B FOR DETAILS.
PORT. CONCRETE TRAFFIC BARRIER
* TRANSITIONAL RAMPING
MATCHLINE STA 15+860
15+900
16+000
16+100
16+200
16+300
℄ LP 1604
16+400
16+500
MATCHLINE STA 16+580
S.B. MAINLANES
INSTALL PCTB
INSTALL TERM ANCHOR
END MAINLANE BRIDGES LP 1604 ℄ STA 16+065.100
S.B. FRONTAGE RD.
LINE I12B
R.O.W.
END BRIDGE S.B.F.R. ℄ STA 0+511.500
CULEBRA EB'D & WB'D TRAFFIC TO BE CLOSED TEMPORARY DURING VARIOUS BRIDGE CONSTRUCTION OPERATIONS. THESE CLOSURES WILL REQUIRE SEVEN DAYS ADVANCE NOTICE AND SHALL BE COMPLETED ON WEEKENDS AS DIRECTED BY THE ENGINEER. SEE SHEET 82C FOR DETOUR INFORMATION.
FM 471/CULEBRA ROAD

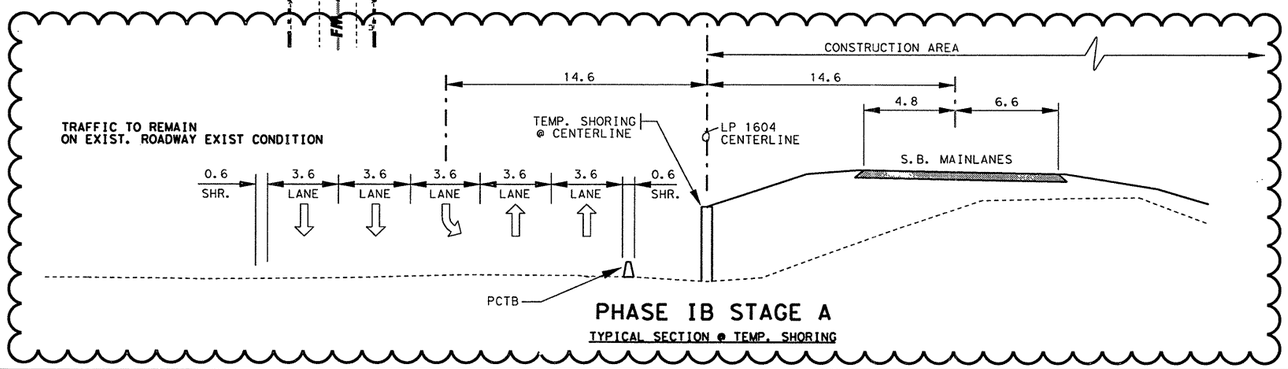


PHASE IB STAGE A
TYPICAL SECTION @ TEMP. SHORING

CHANGE ORDER 14

REVISED SHEET

STATE OF TEXAS
TERRY G. McCOY
75016
REGISTERED PROFESSIONAL ENGINEER

Terry G. McCoy, P.E. 3-22-02
Date

© 2001
Texas Department of Transportation

SEQUENCE OF WORK
PHASE IB STAGE A

SHEET 3 OF 10

| FED. RD. DIV. NO. | FEDERAL AID PROJECT NO. | | SHEET NO. |
|---|---|---|---|
| 6 | NH 2000(704), ET . | | 69A |
| STATE | DIST. | COUNTY | |
| TEXAS | SAT | BEXAR | |
| CONT. | SECT. | JOB | HIGHWAY NO. |
| 2452 | 01 | 036, ETC | LP 1604 |

FILE: t:\AO\Design\lp1604fm471-90\sow_Phase1ch*gh*1b*st*03.dgn 03/21/02

| LEVEL | 1 | 2 | 3 | 4 | 5 | 6 | 7 | 8 | 9 | 10 | 11 | 12 | 13 | 14 | 15 | 16 | 17 | 18 | 19 | 20 | 21 | 22 | 23 | 24 | 25 | 26 | 27 | 28 | 29 | 30 | 31 | 32 |
|---|---|---|---|---|---|---|---|---|---|---|---|---|---|---|---|---|---|---|---|---|---|---|---|---|---|---|---|---|---|---|---|---|
| DISPLAYED | 33 | 34 | 35 | 36 | 37 | 38 | 39 | 40 | 41 | 42 | 43 | 44 | 45 | 46 | 47 | 48 | 49 | 50 | 51 | 52 | 53 | 54 | 55 | 56 | 57 | 58 | 59 | 60 | 61 | 62 | 63 | 64 |

DRAINAGE & ROADWAY CONSTRUCTION

CONSTRUCTION DETOUR

TRAFFIC FLOW DIRECTION

V.I.A. ASSEMBLY (14 BARRELS EACH LOCATION)

| PAVEMENT MARKING ESTIMATED QUANTITES | | 2452-01-038 | 2452-01-037 |
|---|---|---|---|
| ITEM | UNIT | QTY | QTY |
| WK ZN PAV MRK | | | |
| REMOV (W) (SLD) (100 MM) | M | 220 | |
| REMOV (Y) (SLD) (100 MM) | M | 220 | |
| REMOV (CL B) TY II-A-A | EA | 70 | 166 |
| NON-REMV (W) (SLD) 100 MM | M | 620 | 2000 |
| NON-REMV (Y) (SLD) 100 MM | M | 620 | 2000 |
| ELIM EXT PAV MRK & MRKR (100 MM) | M | 740 | 1380 |
| | | | |

| SEQUENCE OF WORK ESTIMATED QUANTITIES | | 2452-01-038 | 2452-01-037 |
|---|---|---|---|
| ITEM | UNIT | QTY | QTY |
| CONSTRUCT DETOURS (CL 3) | M2 | 1960 | 3581 |
| PORT CONC TRAF BAR (STKPL, INSTL & RETRN) | M | | 364 |
| VEH IMP ATTN ASSEM BRLS | EA | | 70 |
| | | | |
| | | | |

PLACE AT TRANSITIONS STA. 16+580 TO 16+690

SCALE 1 : 2000

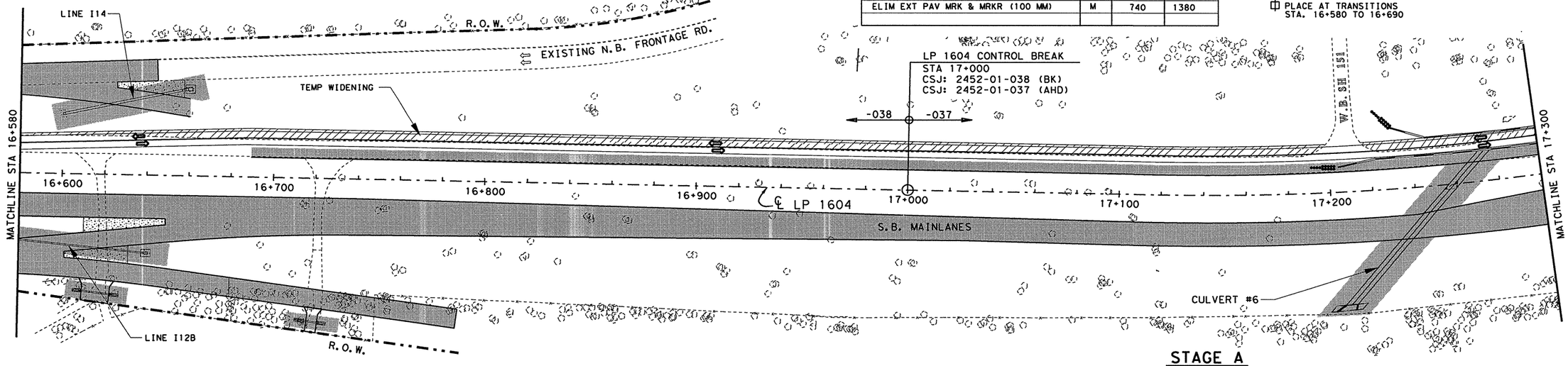


STAGE A

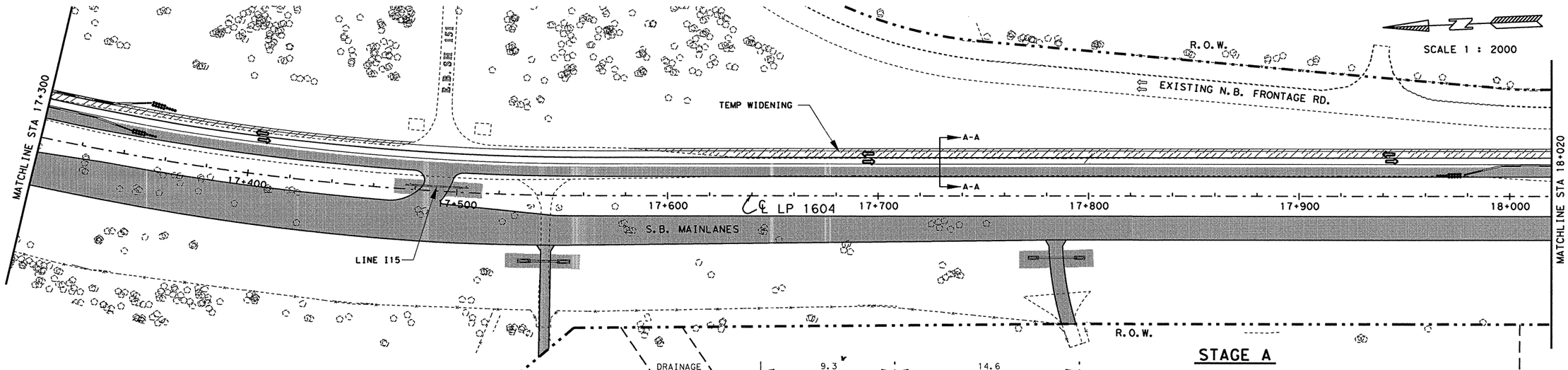


STAGE A

PHASE IB STAGE A

TYPICAL SECTION A-A ON LP 1604

✳ FOR CONTRACTOR'S INFORMATION ONLY. SUBSIDIARY TO CONSTRUCTION DETOURS

STATE OF TEXAS
JOEL K. DAVENPORT, JR.
79276
REGISTERED PROFESSIONAL ENGINEER

Joel K. Davenport, Jr. 9/19/00
Joel K. Davenport, Jr. P.E. 79276 Date

©2000

Texas Department of Transportation

# SEQUENCE OF WORK PHASE IB

SHEET 4 OF 10

| FED. RD. DIV. NO. | FEDERAL AID PROJECT NO. | | SHEET NO. |
|---|---|---|---|
| 6 | NH 2000(704), ETC. | | 70 |
| STATE | DIST. | COUNTY | |
| TEXAS | SAT | BEXAR | |
| CONT. | SECT. | JOB | HIGHWAY NO. |
| 2452 | 01 | 036, ETC | LP 1604 |

FILE: h:\co\design\lp1604fm471-90\sow\phase1\ph1bst*04.dgn 15 SEP 2000

LEVEL DISPLAYED 1 2 3 4 5 6 7 8 9 10 11 21 31 41 51 61 71 81 92 02 12 22 32 42 52 62 72 82 93 03 13 2 3 3 5 3 5 3 5 3 6 3 7 3 8 3 9 4 0 4 1 4 2 4 3 4 4 4 5 4 6 4 7 4 8 4 9 5 0 5 1 5 2 5 3 5 4 5 5 5 6 5 7 5 8 5 9 6 0 63

DRAINAGE & ROADWAY CONSTRUCTION

CONSTRUCTION DETOUR

TRAFFIC FLOW DIRECTION

V.I.A. ASSEMBLY (14 BARRELS EACH LOCATION)

PORT. CONCRETE TRAFFIC BARRIER

SCALE 1 : 2000

| PAVEMENT MARKING ESTIMATED QUANTITIES | | 2452-01-038 | | 2452-01-037 | |
|---|---|---|---|---|---|
| ITEM | UNIT | QTY. | | QTY. | |
| ~~WK ZN PAV MRK~~ | | | | | |
| ~~REMOV (W) (SLD) (100 MM)~~ | ~~M~~ | ~~220~~ | 0 | | |
| ~~REMOV (Y) (SLD) (100 MM)~~ | ~~M~~ | ~~220~~ | 0 | | |
| ~~REMOV (CL B) TY II A A~~ | ~~EA~~ | ~~70~~ | 0 | ~~166~~ | 0 |
| ~~NON REMV (W) (SLD) 100 MM~~ | ~~M~~ | ~~620~~ | 0 | ~~2000~~ | 0 |
| ~~NON REMV (Y) (SLD) 100 MM~~ | ~~M~~ | ~~620~~ | 0 | ~~2000~~ | 0 |
| ~~ELIM EXT PAV MRK & MRKR (100 MM)~~ | ~~M~~ | ~~740~~ | 0 | ~~1380~~ | 0 |

| SEQUENCE OF WORK ESTIMATED QUANTITIES | | 2452-01-038 | | 2452-01-037 | |
|---|---|---|---|---|---|
| ITEM | UNIT | QTY. | | QTY. | |
| CONSTRUCT DETOURS (CL 3) | M2 | ~~1960~~ | 0 | ~~3581~~ | 0 |
| PORT CONC TRAF BAR (STKPL, INSTL & RETRN) | M | | | ~~364~~ | 192 |
| VEH IMP ATTN ASSEM BRLS | EA | | | ~~70~~ | 42 |

~~PLACE AT TRANSITIONS STA 16+580 TO 16+630~~

EXISTING N.B. FRONTAGE RD.

MATCHLINE STA 16+580

REFER TO SHEET 82G REGARDING DETOUR ROUTE

LINE I14

LINE I12B

R.O.W.

LP 1604 CONTROL BREAK
STA 17+000
CSJ: 2452-01-038 (BK)
CSJ: 2452-01-037 (AHD)

-038 -037

CONSTRUCT DETOUR (CL 3) EST. @ 558 M2 (SEE SHEET 82G FOR DETAILS AND PAY QUANTITY)

S 24° 27' 21.91" W

16+600 16+700 16+800 16+900 ℄ LP 1604 17+000 17+100 17+200

S.B. MAINLANES

W.B. SH 151

CULVERT #6

MATCHLINE STA 17+300

MATCHLINE STA 17+300

E.B. SH 151

17+400 17+500 17+600 ℄ LP 1604 17+700 17+800 17+900 18+000

S.B. MAINLANES

R.O.W.

EXISTING N.B. FRONTAGE RD.

SCALE 1 : 2000

MATCHLINE STA 18+020

DRAINAGE EASEMENT

R.O.W.

1. DETOUR SHALL CONSIST OF 250MM ASPH STAB BASE (GR 4) WITH 50MM TY C ACP.
2. GRADES FO DETOUR SHALL BE AS APPROVED BY THE ENGINEER.
3. A 1:3 SLOPE (MIN.) WILL BE REQUIRED AT THE EDGE OF LP 1604 DURING NON-WORK HOURS.

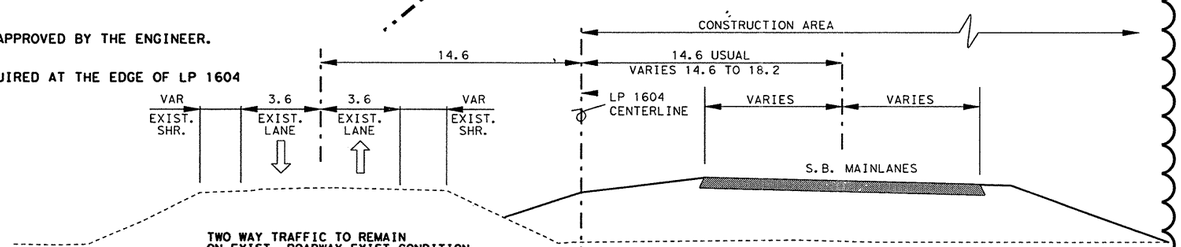


PHASE IB STAGE A

TYPICAL SECTION ON LP 1604

CHANGE ORDER 14

REVISED SHEET

©2000 Texas Department of Transportation

SEQUENCE OF WORK
PHASE IB STAGE A

SHEET 4 OF 10

| FED. RD. DIV. NO. | FEDERAL AID PROJECT NO. | | SHEET NO. |
|---|---|---|---|
| 6 | NH 2000(704), ETC. | | 70A |
| STATE | DIST. | COUNTY | |
| TEXAS | SAT | BEXAR | |
| CONT. | SECT. | JOB | HIGHWAY NO. |
| 2452 | 01 | 036, ETC | LP 1604 |

STATE OF TEXAS
TERRY G. McCOY
75016
REGISTERED
PROFESSIONAL ENGINEER

Terry G. McCoy, P.E.

3.8.02
Date

FILE: $FILE$ $DATE$

LEVEL DISPLAYED
1 2 3 4 5 6 7 8 9 10 11 12 13 14 15 16 17 18 19 20 21 22 23 24 25 26 27 28 29 30 31 32
33 34 35 36 37 38 39 40 41 42 43 44 45 46 47 48 49 50 51 52 53 54 55 56 57 58 59 60 61 63

DRAINAGE & ROADWAY CONSTRUCTION

CONSTRUCTION DETOUR

TRAFFIC FLOW DIRECTION

V.I.A. ASSEMBLY (14 BARRELS EACH LOCATION)

| PAVEMENT MARKING ESTIMATED QUANTITES | | 2452-01-037 |
|---|---|---|
| ITEM | UNIT | QTY |
| WK ZN PAV MRK | | |
| 中 REMOV (W) (SLD) (100 MM) | M | 400 |
| 中 REMOV (Y) (SLD) (100 MM) | M | 320 |
| REMOV (CL A) TY II-A-A | EA | 38 |
| NON-REMV (W) (SLD) 100 MM | M | 120 |
| NON-REMV (Y) (SLD) 100 MM | M | 120 |
| ELIM EXT PAV MRK & MRKR (100 MM) | M | 710 |
| | | |
| | | |

中 PLACE AT TRANSITIONS STA. 18+080 TO 18+240

| SEQUENCE OF WORK ESTIMATED QUANTITIES | | 2452-01-037 |
|---|---|---|
| ITEM | UNIT | QTY |
| CONSTRUCT DETOURS (CL 3) | M2 | 667 |
| PORT CONC TRAF BAR (STKPL, INSTL & RETRN) | M | 136.5 |
| VEH IMP ATTN ASSEM BRLS | EA | 28 |
| | | |
| | | |

SCALE 1:2000

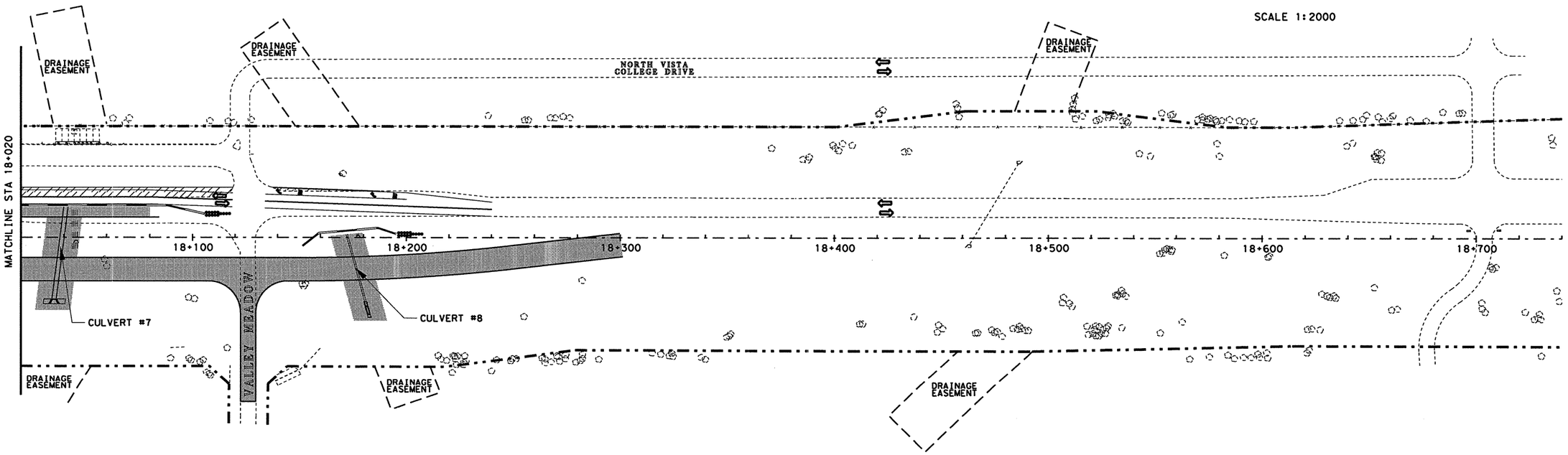


## STAGE A

STATE OF TEXAS
JOEL K. DAVENPORT, JR.
79276
REGISTERED PROFESSIONAL ENGINEER

Joel K. Davenport, Jr. 9/19/00

Joel K. Davenport, Jr. P.E. 79276 — Date

©2000

Texas Department of Transportation

# SEQUENCE OF WORK PHASE IB

SHEET 5 OF 10

| FED. RD. DIV. NO. | FEDERAL AID PROJECT NO. | | SHEET NO. |
|---|---|---|---|
| 6 | NH 2000(704), ETC. | | 71 |
| STATE | DIST. | COUNTY | |
| TEXAS | SAT | BEXAR | |
| CONT. | SECT. | JOB | HIGHWAY NO. |
| 2452 | 01 | 036, ETC | LP 1604 |

FILE: H:\go\design\lp1604fm471-90\sow\phase1\ph*1b*st*05.dgn 15 SEP 2000

LEVEL DISPLAYED 1 2 3 4 5 6 7 8 9 10 11 12 13 14 15 16 17 18 19 20 21 22 23 24 25 26 27 28 29 30 31 32 33 34 35 55 63 75 83 94 04 14 24 34 44 54 64 74 84 95 05 15 26 36 45 55 66 76 85 96 63

DRAINAGE & ROADWAY CONSTRUCTION

TRANSITIONAL RAMPING

CONSTRUCTION DETOUR

TRAFFIC FLOW DIRECTION

V.I.A. ASSEMBLY ( 14 BARRELS EACH LOCATION )

PORT. CONCRETE TRAFFIC BARRIER

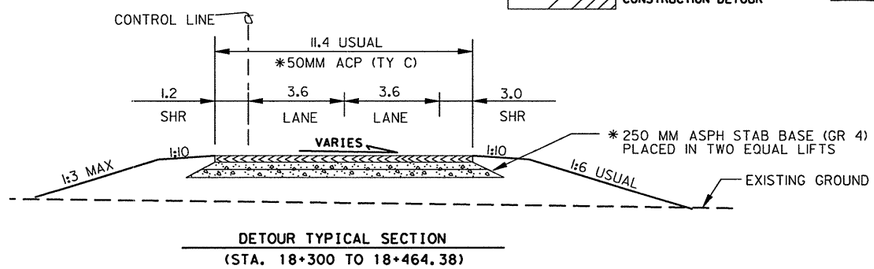


DETOUR TYPICAL SECTION
(STA. 18+300 TO 18+464.38)

* FOR CONTRACTORS INFORMATION ONLY. ALL LABOR & MATERIALS REQUIRED FOR THE INSTALLATION OF THE DETOUR SHALL NOT BE PAID FOR DIRECTLY AND SHALL BE CONSIDERED SUBSIDIARY TO CONSTRUCT DETOURS

PAVEMENT MARKING ESTIMATED QUANTITIES 2458-01-037

| ITEM | UNIT | QTY |
|---|---|---|
| ~~WK ZN PAV MRK~~ | | |
| ~~REMOV (W) (SLD) (100 MM)~~ | ~~M~~ | ~~400~~ 0 |
| ~~REMOV (Y) (SLD) (100 MM)~~ | ~~M~~ | ~~320~~ 0 |
| ~~REMOV (CL A) TY II A A~~ | ~~EA~~ | ~~38~~ 0 |
| ~~NON REMV (W) (SLD) 100 MM~~ | ~~M~~ | ~~120~~ 0 |
| ~~NON REMV (Y) (SLD) 100 MM~~ | ~~M~~ | ~~120~~ 0 |
| ~~ELIM EXT PAV MRK & MRKR (100 MM)~~ | ~~M~~ | ~~710~~ 0 |

~~PLACE AT TRANSITIONS STA. 18+080 TO 18+240~~

SEQUENCE OF WORK ESTIMATED QUANTITIES 2452-01-037

| ITEM | UNIT | QTY |
|---|---|---|
| CONSTRUCT DETOURS (CL 3) | M2 | ~~687~~ 1754 |
| PORT CONC TRAF BAR(STKPL, INSTL & RETRN) | M | ~~136.5~~ 182.9 |
| VEH IMP ATTN ASSEM BRLS | EA | ~~28~~ 42 |
| CMP AR (GALV STL DES 3) | M | 186 |
| SET (TY II) (DES 3) (CMP) (1:6) | EA | 2 |
| REMOV OLD STRUCTURE (PIPE) | ~~EA~~ M | ~~1~~ 21.6 |

* (1) DETOUR SHALL CONSIST OF 250MM ASPH STAB BASE (GR 4) WITH 50MM TY C ACP.

(2) GRADES FOR DETOUR SHALL BE AS APPROVED BY THE ENGINEER.

(3) A 1:3 SLOPE (MIN.) WILL BE REQUIRED AT THE EDGE OF LP 1604 DURING NON-WORK HOURS.

SCALE 1:2000

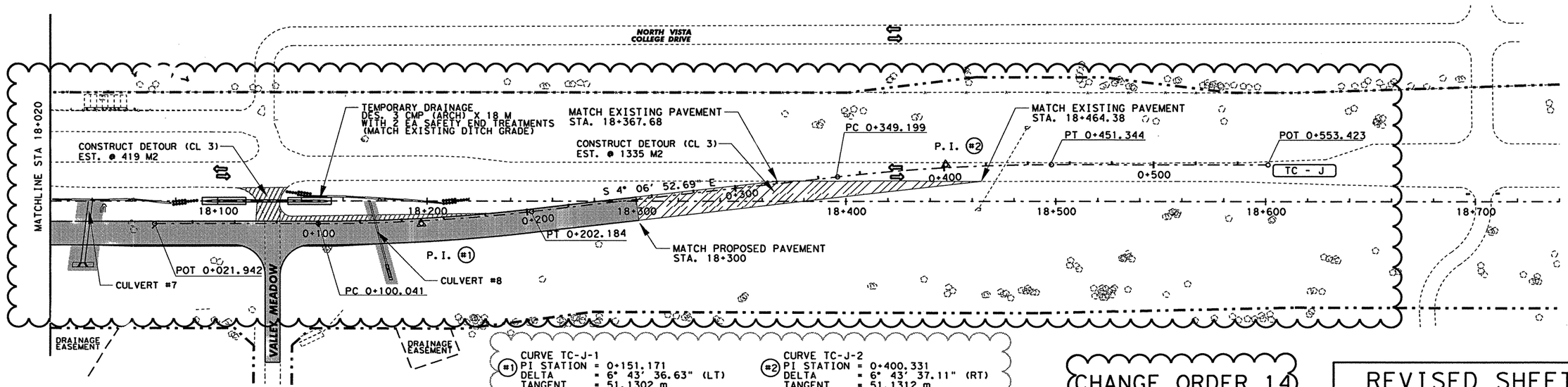


(#1) CURVE TC-J-1
PI STATION = 0+151.171
DELTA = 6° 43' 36.63" (LT)
TANGENT = 51.1302 m
LENGTH = 102.1428 m
RADIUS = 870.0000 m
X = 628,135.9458
Y = 4,182,733.5182

(#2) CURVE TC-J-2
PI STATION = 0+400.331
DELTA = 6° 43' 37.11" (RT)
TANGENT = 51.1312 m
LENGTH = 102.1448 m
RADIUS = 870.0000 m
X = 628,135.8319
Y = 4,182,484.8840

NOTE: EXISTING ALIGNMENT TC-J INCLUDED FOR CLARIFICATION. FOR HORIZONTAL ALIGNMENT DATA SEE SHEET 167.

CHANGE ORDER 14

REVISED SHEET

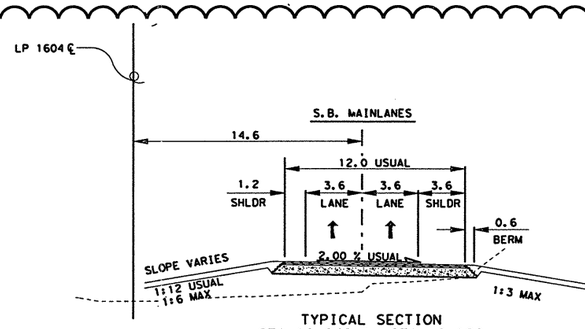


TYPICAL SECTION
STA 18+040 to STA 18+120

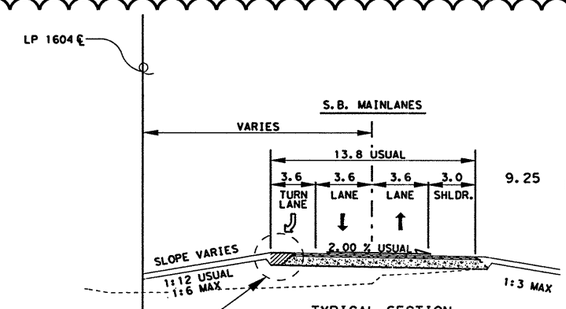


TYPICAL SECTION
STA 18+120 to STA 18+231

SEE DETOUR TYPICAL SECTION THIS SHEET

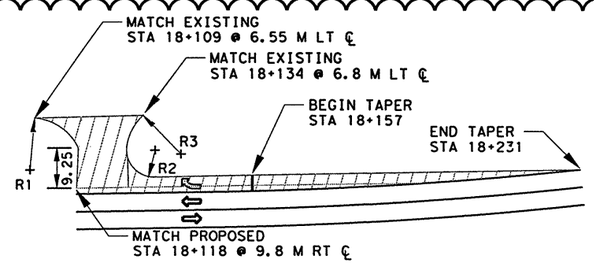


TEMPORARY RIGHT TURN LANE
STA 18+130 TO STA 18+231

NOTE: HOLD 3.6 M LANE FROM STA 18+135 TO 18+157
R1: 12.0 M RADIUS @ STA. 18+107.7 (5.4 M RT ℄)
R2: 6.3 M RADIUS @ STA. 18+135.8 (1.2 M RT ℄)
R3: 12.2 M RADIUS @ STA. 18+141.6 (2.2 M RT ℄)

STATE OF TEXAS
TERRY G. McCOY
75016
REGISTERED PROFESSIONAL ENGINEER

Terry G. McCoy, P.E. 3.22.02
Date

© 2000 Texas Department of Transportation

SEQUENCE OF WORK
PHASE IB STAGE A
SHEET 5 OF 10

| FED.RD. DIV.NO. | FEDERAL AID PROJECT NO. | | SHEET NO. |
|---|---|---|---|
| 6 | NH 2000(704), ETC. | | 71A |
| STATE | DIST. | COUNTY | |
| TEXAS | SAT | BEXAR | |
| CONT. | SECT. | JOB | HIGHWAY NO. |
| 2452 | 01 | 036, ETC | LP 1604 |

FILE: t:\AO\Design\01604fm711-90\sow\Phase1\ch+ph1b+st+05.dgn 03/21/02
LEVEL DISPLAYED
1 2 3 4 5 6 7 8 9 10 11 12 13 14 15 16 17 18 19 20 21 22 23 24 25 26 27 28 29 30 31 32
33 34 35 36 37 38 39 40 41 42 43 44 45 46 47 48 49 50 51 52 53 54 55 56 57 58 59 60 61 63

DRAINAGE & ROADWAY CONSTRUCTION

CONSTRUCTION DETOUR

TRAFFIC FLOW DIRECTION

V.I.A. ASSEMBLY ( 14 BARRELS EACH LOCATION )

SCALE 1:2000

| PAVEMENT MARKING ESTIMATED QUANTITES | | 2452-01-037 |
|---|---|---|
| ITEM | UNIT | QTY |
| WK ZN PAV MRK | | |
| REMOV (W) (SLD) (100 MM) | M | 960 |
| REMOV (Y) (SLD) (100 MM) | M | 1680 |
| REMOV (CL A) TY II-A-A | EA | 140 |
| NON-REMV (W) (SLD) 100 MM | M | 720 |

⊕ PLACE AT TRANSITIONS STA. 14+200 TO 14+420

| SEQUENCE OF WORK ESTIMATED QUANTITIES | | 2452-01-037 |
|---|---|---|
| ITEM | UNIT | QTY |
| CONSTRUCT DETOURS (CL 3) | M2 | 2808 |
| PORT CONC TRAF BAR (MOVE & RESET) | M | 136.5 |
| VEH IMP ATTN ASSEM BRLS (MOVE & RESET) | EA | 42 |

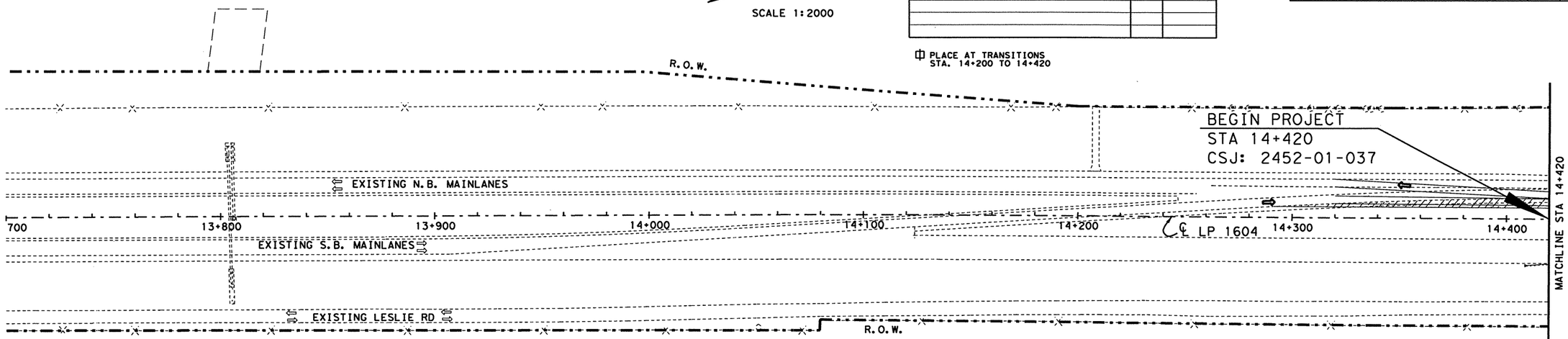


STAGE B

SCALE 1:2000

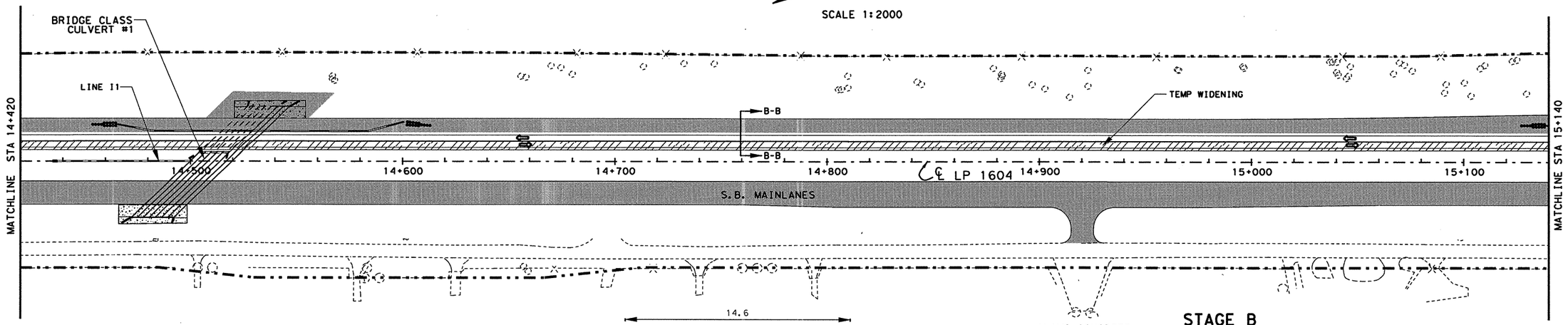


STAGE B

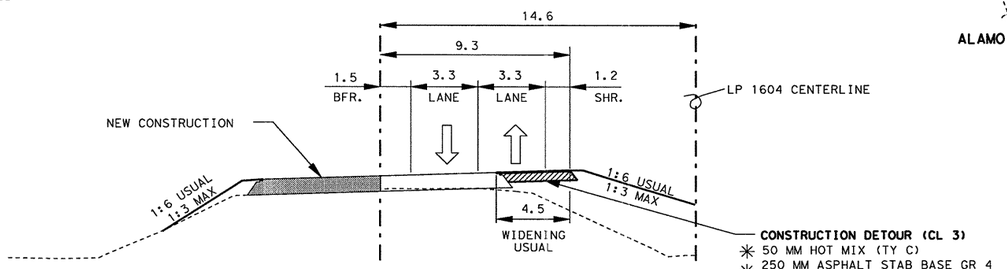


## PHASE IB STAGE B

TYPICAL SECTION B-B ON LP 1604

✳ FOR CONTRACTOR'S INFORMATION ONLY. SUBSIDIARY TO CONSTRUCTION DETOURS

STATE OF TEXAS
JOEL K. DAVENPORT, JR.
79276
REGISTERED PROFESSIONAL ENGINEER

Joel K. Davenport, Jr. 9/19/00
Joel K. Davenport, Jr. P.E. 79276 Date

©2000

Texas Department of Transportation

# SEQUENCE OF WORK PHASE IB

SHEET 6 OF 10

| FED. RD. DIV. NO. | FEDERAL AID PROJECT NO. | | SHEET NO. |
|---|---|---|---|
| 6 | NH 2000(704), ETC. | | 72 |
| STATE | DIST. | COUNTY | |
| TEXAS | SAT | BEXAR | |
| CONT. | SECT. | JOB | HIGHWAY NO. |
| 2452 | 01 | 036,ETC | LP 1604 |

FILE I:\ao\design\lp1604fm471-90\sow\phase1\lp1bst1b1.dgn 15 SEP 2000

LEVEL DISPLAYED 1 2 3 4 5 6 7 8 9 10 11 12 13 14 15 16 17 18 19 20 21 22 23 24 25 26 27 28 29 30 31 32 33 34 35 55 63 67 68 73 74 75 76 77 78 79 80 81 82 83 84 85 86 87 88 89 90 91 92 93 94 95 96 97 98 99 100 101 102 103 104 105 106 107 108 109 110 111 112 113 114 115 116 117 118 119 120 121 122 123 124 125 126 127 128 129 130 131 132 63

NOTES:
PAYMENT FOR WORK ZONE PAVEMENT MARKING REMOVABLE LINE SIMULATIONS SHALL BE BY EACH TRAFFIC BUTTON OR REFLECTIVE MARKER

REFER TO TCP (2-4)98 FOR REQUIRED TEMPORARY SIGNING FOR LANE REDUCTION

PAVEMENT MARKINGS SHALL COMPLY TO T.M.U.T.C.D. OR AS DIRECTED BY THE ENGINEER

USE WORK ZONE CHANNELING DEVICES TO DELINEATE TRAFFIC AS PER T.M.U.T.C.D. OR AS DIRECTED BY THE ENGINEER

CONSTRUCTION DETOUR

DRAINAGE & ROADWAY CONSTRUCTION

PORT. CONCRETE TRAFFIC BARRIER

TRAFFIC FLOW DIRECTION

V.I.A. ASSEMBLY (14 BARRELS EACH LOCATION)

SCALE 1:2000

PAVEMENT MARKING ESTIMATED QUANTITES 2452-01-037

| ITEM | | UNIT | QTY |
|---|---|---|---|
| WK ZN PAV MRK | | | |
| ~~REMOV (W) (SLD) (100 MM)~~ | | M | ~~960~~ |
| ~~REMOV (Y) (SLD) (100 MM)~~ | | M | ~~1680~~ |
| REMOV (CL B) TY I-C | | EA | ~~1450~~ 51 |
| REMOV (CL B) TY II-A-A | ~~140~~ | EA | ~~720~~ 383 |
| REMOV (CL C) TY W | (TRAF BTN) | EA | 150 |
| REMOV (CL C) TY Y | (TRAF BTN) | EA | 1140 |
| NON-REMV (W) (SLD) 100 MM | | M | ~~710~~ 1980 |
| NON-REMV (Y) (SLD) 600MM | | M | 155 |
| ELIM EXT PAV MRK & MRKR (100 MM) | | M | 1190 |

SEQUENCE OF WORK ESTIMATED QUANTITIES 2452-01-037

| ITEM | UNIT | QTY |
|---|---|---|
| CONSTRUCT DETOURS (CL 3) | M2 | ~~2808~~ 1040 |
| PORT CONC TRAF BAR (MOVE & RESET) | M | ~~136.5~~ 145.6 |
| VEH IMP ATTN ASSEM BRLS (MOVE & RESET) | EA | ~~28~~ 42 |
| CMP AR (GALV STL DES 3) | M | 180 |
| SET (TY II) (DES 3) (CMP) (1:6) | EA | 2 |
| REMOV OLD STRUCTURE (PIPE) | EA | |

~~M~~ 183.0

BEGIN PROJECT
STA 14+420
CSJ: 2452-01-037

R.O.W.

PLACE AT TRANSITION:
STA 14+200 TO 14+420

WRK ZN PAV MRK (LINE SIMULATION)
(REMOV) (CL B) (TY II A-A) @ 6 M O.C.
EST @ 87 EA.
(REMOV) (CL C) (TY Y)
EST @ 260 EA.

WRK ZN PAV MRK (LINE SIMULATION)
(REMOV) (CL B) (TY I-C) @ 6 M O.C.
EST @ 51 EA.
(REMOV) (CL C) (TY W)
EST @ 150 EA

BEGIN DETOUR
PC 10+000.000
11.0 LT "G" STA 14+100

P.I. #1

PT 10+119.775

PC 10+181.683

WRK ZN PAV MRK
(NON-REMOV) (W) (SLD) (100MM)
EST @ 20 M

EXISTING N.B. MAINLANES

S 31° 44' 41" W

700 13+800 13+900 ℄ LP 1604 14+000 10+000 10+100 10+200 10+300 14+400 10+500

EXISTING S.B. MAINLANES

BEGIN SB'D LP 1604
LANE TRANS (2 TO 1)
STA 13+900

TEMPORARY DRAINAGE
DES. 3 CMP (ARCH) X 180 M
WITH 2 EA SAFETY END TREATMENTS
(MATCH EXISTING DITCH GRADE)

END SB'D LP 1604
LANE TRANS (2 TO 1)
STA 14+200

P.I. #2

END DETOUR
PT 10+301.468
14.6 RT "G" STA 14+400

WRK ZN PAV MRK (NON-REMOV) (W) (SLD) (100)
EST @ 520 M

EXISTING LESLIE RD.

R.O.W.

WRK ZN PAV MRK
(NON-REMOV) (Y) (SLD) (600)
EST @ 155 M
ELIM EXT PAV MRK & MRKR (100)
EST @ 155 M * 6 = 930 M

WRK ZN PAV MRK (LINE SIMULATION)
(REMOV) (CL B) (TY II A-A) @ 6 M O.C.
EST @ 54 EA.
(REMOV) (CL C) (TY Y)
EST @ 160 EA.

MATCHLINE STA 14+420

MATCHLINE STA 15+140

CONTROL LINE

6.0 USUAL
*50MM ACP (TY C)
1.2 SHR | 3.6 LANE | 1.2 SHR
VARIES
*250 MM ASPH STAB BASE (GR 4) PLACED IN TWO EQUAL LIFTS
1:6 USUAL | 1:10 | 1:10 | 1:6 USUAL
EXISTING GROUND

DETOUR TYPICAL SECTION

* FOR CONTRACTOR' INFORMATION ONLY. ALL LABOR & MATERIALS REQUIRED FOR THE INSTALLATION OF THE DETOUR SHALL NOT BE PAID FOR DIRECTLY AND SHALL BE CONSIDERED SUBSIDIARY TO CONSTRUCT DETOURS

#1 PI STATION = 100+59.996
DELTA = 8° 27' 09.01" (RT)
TANGENT = 59.996 m
LENGTH = 119.775 m
RADIUS = 811.903 m
X = 629,463.9539
Y = 4,186,507.7206

#2 PI STATION = 102+41.677
DELTA = 8° 09' 32.96" (LT)
TANGENT = 59.994 m
LENGTH = 119.785 m
RADIUS = 841.160 m
X = 629,368.2505
Y = 4,186,353.0341

SCALE 1:2000

BRIDGE CLASS CULVERT #1

WRK ZN PAV MRK (DOUBLE LINE SIMULATION)
(REMOV) (CL B) (TY II A-A) @ 6 M O.C.
EST @ 242 EA.
(REMOV) (CL C) (TY Y)
EST @ 720 EA.

LINE 11

14+500 14+600 14+700 14+800 ℄ LP 1604 14+900 15+000 15+100

WRK ZN PAV MRK
(NON-REMOV) (W) (SLD) (100MM)
EST @ 1440 M

EXISTING LESLIE RD.

ALAMO CONCRETE

CONSTRUCTION AREA
14.6 | 14.6
1.2 SHR. | 3.6 LANE | 3.6 LANE | 3.0 SHR.
LP 1604 CENTERLINE ℄
1:6 USUAL
1:5 MAX.
PLACE TRAFFIC ON NEWLY CONSTRUCTED ROADWAY.

PHASE IB STAGE B
TYPICAL SECTION ON LP 1604

CHANGE ORDER 14

REVISED SHEET

© 2001 Texas Department of Transportation

SEQUENCE OF WORK
PHASE IB STAGE B
SHEET 6 OF 10

| FED. RD. DIV. NO. | FEDERAL AID PROJECT NO. | | SHEET NO. |
|---|---|---|---|
| 6 | NH 2000(704), ETC. | | 72A |
| STATE | DIST. | COUNTY | |
| TEXAS | SAT | BEXAR | |
| CONT. | SECT. | JOB | HIGHWAY NO. |
| 2452 | 01 | 036,ETC | LP 1604 |

STATE OF TEXAS
TERRY G. McCOY
75016
REGISTERED PROFESSIONAL ENGINEER

Terry G. McCoy, P.E.

3.8.02
Date

FILE $FILE$
LEVEL DISPLAYED
$DATE$

SCALE: 1:2000 H
1:400 V

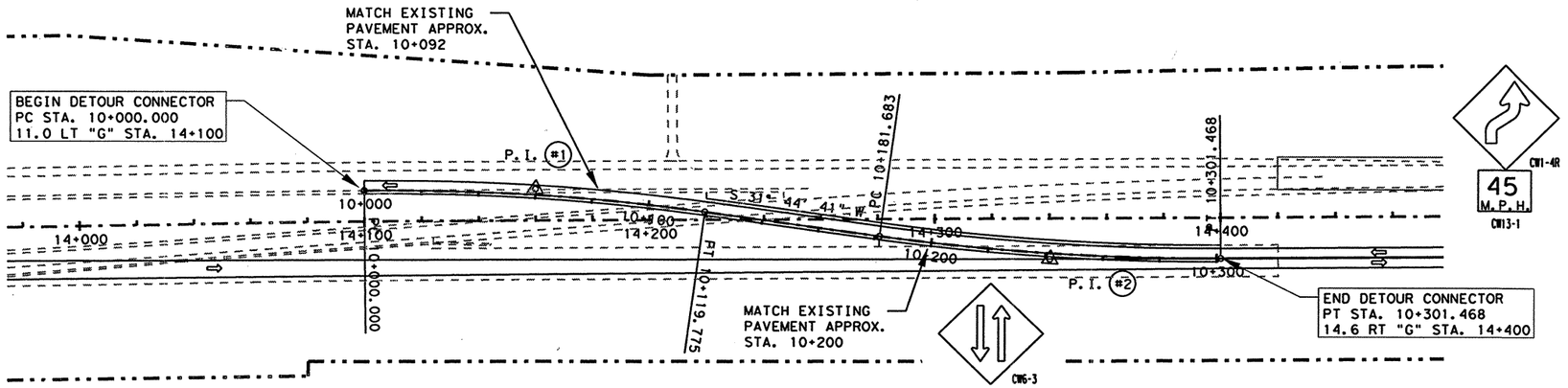


P.I. #1
DELTA = 8° 27' 09.01" (RT)
TANGENT = 59.996 m
LENGTH = 119.775 m
RADIUS = 811.903 m
X = 629,463.9539
Y = 4,186,507.7206

P.I. #2
PI STATION = 102+41.677
DELTA = 8° 09' 32.96" (LT)
TANGENT = 59.994 m
LENGTH = 119.785 m
RADIUS = 841.160 m
X = 629,368.2505
Y = 4,186,353.0341

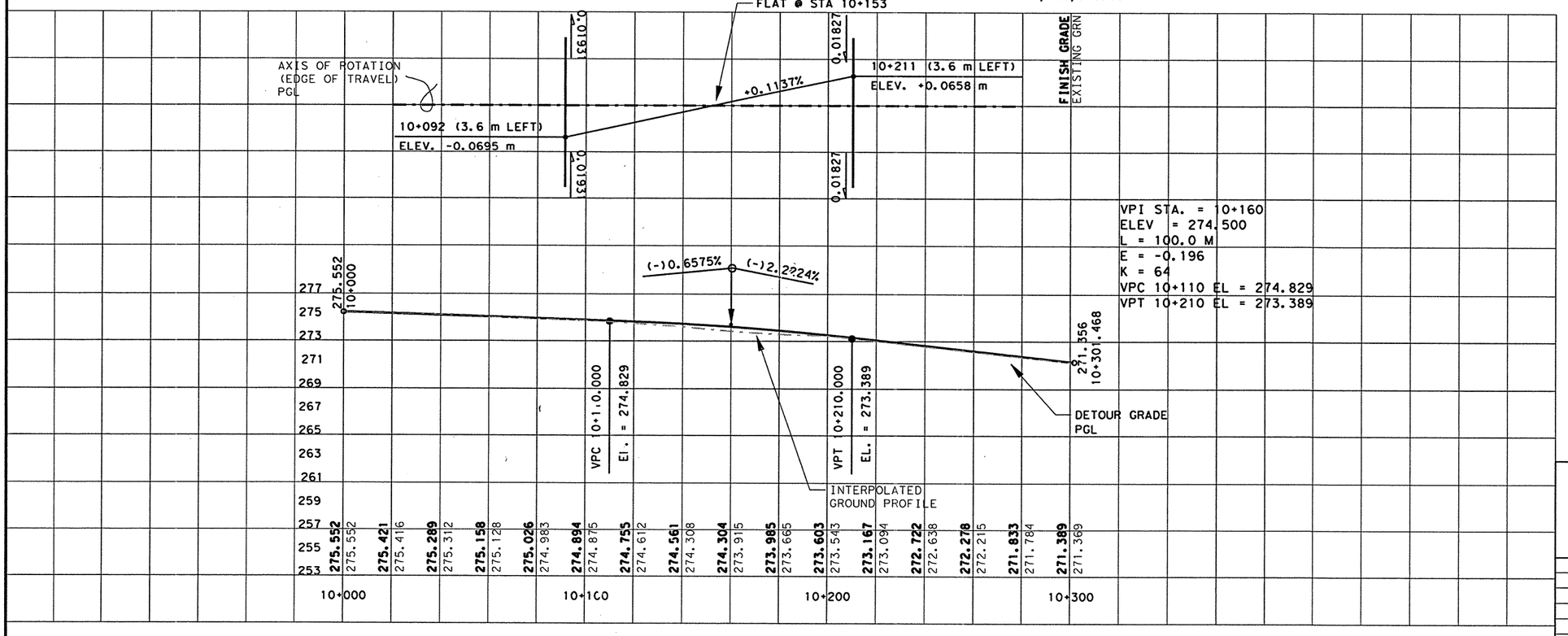


LEVELS DISPLAYED
1 2 3 4 5 6 7 8 9 10 11 12 13 14 15 16
17 18 19 20 21 22 23 24 25 26 27 28 29 30 31 32
33 34 35 36 37 38 39 40 41 42 43 44 45 46 47 48
49 50 51 52 53 54 55 56 57 58 59 60 61 62 63

ACC: t:\oo\design\lp1604fm471-90\
FILE: det2*conn.dgn

CHANGE ORDER 14

NEW SHEET

NOTE(S): ALL DIMENSIONS ARE IN METERS UNLESS OTHERWISE NOTED.

FOR PAY QUANTITIES SEE SHEET 72A .

CHANNELING DEVICES AND SIGNS SHALL COMPLY TO T.M.U.T.C.D. OR AS DIRCTED BY THE ENGINEER.

STATE OF TEXAS
TERRY G. McCOY
75016
REGISTERED
PROFESSIONAL ENGINEER

Terry G. McCoy, P.E. 3-20-02
Date

©2002
Texas Department of Transportation

# SEQUENCE OF WORK
# DETOUR 2 CONNECTOR
PHASE IB STAGE B
SHEET 6B OF 10

| FED. RD. DIV. NO. | FEDERAL AID PROJECT NO. | | SHEET NO. |
|---|---|---|---|
| 6 | NH 2000(704), etc. | | 72B |
| STATE | DIST. | COUNTY | |
| TEXAS | SAT | BEXAR | |
| CONT. | SECT. | JOB | HIGHWAY NO. |
| 2452 | 01 | 036, etc | LP 1604 |

DRAINAGE & ROADWAY CONSTRUCTION

CONSTRUCTION DETOUR

SPAN TYPE BRIDGE CONSTRUCTION

TRAFFIC FLOW DIRECTION

V.I.A. ASSEMBLY ( 14 BARRELS EACH LOCATION )

| PAVEMENT MARKING ESTIMATED QUANTITES | | 2452-01-037 | 2452-01-038 |
|---|---|---|---|
| ITEM | UNIT | QTY | QTY |
| WK ZN PAV MRK | | | |
| REMOV (W) (SLD) (100 MM) | M | 480 | 20 |
| REMOV (Y) (SLD) (100 MM) | M | 680 | 20 |
| REMOV (CL A) TY II-A-A | EA | 54 | 4 |
| NON-REMV (W) (SLD) 100 MM | M | 260 | |
| ELIM EXT PAV MRK & MRKR (100 MM) | M | 400 | 40 |
| | | | |
| | | | |

| SEQUENCE OF WORK ESTIMATED QUANTITIES | | 2452-01-037 | 2452-01-038 |
|---|---|---|---|
| ITEM | UNIT | QTY | QTY |
| CONSTRUCT DETOURS (CL 3) | M2 | 1478 | 7 |
| PORT CONC TRAF BAR (MOVE & RESET) | M | 127.4 | |
| VEH IMP ATTN ASSEM BRLS (MOVE & RESET) | EA | 14 | |
| | | | |
| | | | |

PLACE AT TRANSITIONS STA. 15+420 TO 15+520

SCALE 1:2000

LP 1604 CONTROL BREAK
STA 15+500
CSJ: 2452-01-037 (BK)
CSJ: 2452-01-038 (AHD)

-037 -038

BEGIN BRIDGE
N.B.F.R. ℄ STA 0+437.500

DRAINAGE EASEMENT

CULVERT #2

TEMP WIDENING

LINE I6

LINE I4

BEGIN MAINLANE BRIDGES
LP 1604 ℄ STA 15+795.900

LINE I2

15+200 15+300 15+400 15+500 15+600 ℄ LP 1604 15+700 15+800

MATCHLINE STA 15+140

MATCHLINE STA 15+860

LINE I7

LINE I3

BEGIN BRIDGE
S.B.F.R. ℄ STA 0+411.900

R.O.W.

LINE I5A

LINE I8

WESTWOOD LOOP

WESTWOOD VISTA

DUE TO SIGNIFICANT GRADE CHANGES, ACCESS ONTO WESTWOOD LOOP IS NOT EXPECTED TO REMAIN OPEN AT ALL TIMES. DURING THE CLOSURE OF WESTWOOD LOOP, DETOUR AFFECTED TRAFFIC ONTO LP 1604 & CULEBRA TO THE WESTWOOD LOOP & CULEBRA INTERSECTION.

## STAGE B

STATE OF TEXAS
JOEL K. DAVENPORT, JR.
79276
REGISTERED PROFESSIONAL ENGINEER

Joel K Davenport Jr 9/19/00

Joel K. Davenport, Jr. P.E. 79276 — Date

FILE: H:\ao\design\p1604fm471-90\sow\phase1\opt*bst*dv2.dgn 15 SEP 2000

LEVEL DISPLAYED

©2000

Texas Department of Transportation

# SEQUENCE OF WORK PHASE IB

SHEET 7 OF 10

| FED. RD. DIV. NO. | FEDERAL AID PROJECT NO. | | SHEET NO. |
|---|---|---|---|
| 6 | NH 2000(704), ETC. | | 73 |
| STATE | DIST. | COUNTY | |
| TEXAS | SAT | BEXAR | |
| CONT. | SECT. | JOB | HIGHWAY NO. |
| 2452 | 01 | 036, ETC | LP 1604 |

P.I. #1
PI STATION = 100+60.000
DELTA = 10° 25' 00.33" (LT)
TANGENT = 60.000 m
LENGTH = 119.669 m
RADIUS = 658.220 m
X = 628,978.8508
Y = 4,185,453.2494

P.I. #2
PI STATION = 103+03.097
DELTA = 9° 44' 03.41" (RT)
TANGENT = 60.000 m
LENGTH = 119.711 m
RADIUS = 704.616 m
X = 628,931.0603
Y = 4,185,214.5585

DRAINAGE & ROADWAY CONSTRUCTION
CONSTRUCTION DETOUR
SPAN TYPE BRIDGE CONSTRUCTION
TRAFFIC FLOW DIRECTION
V.I.A. ASSEMBLY (14 BARRELS EACH LOCATION)
PORT. CONCRETE TRAFFIC BARRIERS
TEMP. SHORING

| PAVEMENT MARKING ESTIMATED QUANTITIES | | 2452-01-037 | | 2452-01-038 | |
|---|---|---|---|---|---|
| ITEM | UNIT | QTY | | QTY | |
| WK ZN PAV MRK | | | | | |
| ~~REMOV (W) (SLD) (100 MM)~~ | ~~M~~ | ~~480~~ | | ~~20~~ | |
| ~~REMOV (Y) (SLD) (100 MM)~~ | ~~M~~ | ~~600~~ | | ~~20~~ | |
| REMOV (CL B) TY I-C | EA | ~~54~~ 80 | | ~~40~~ 42 | |
| REMOV (CL B) TY II-A-A | EA | ~~84~~ 120 | | ~~40~~ 42 | |
| REMOV (CL C) TY W (TRAF BTN) | EA | 240 | | 120 | |
| REMOV (CL C) TY Y (TRAF BTN) | EA | ~~260~~ 360 | | 120 | |
| NON-REMV (W) (SLD) (100 MM) | M | ~~260~~ 240 | | | |
| ELIM EXT PAV MRK & MRKR (100 MM) | M | ~~400~~ | | ~~40~~ 150 | |

| SEQUENCE OF WORK ESTIMATED QUANTITIES | | 2452-01-037 | | 2452-01-038 | |
|---|---|---|---|---|---|
| ITEM | UNIT | QTY | | QTY | |
| CONSTRUCT DETOURS (CL 3) | M2 | ~~1470~~ 1880 | | ~~7~~ 330 | |
| PORT CONC TRAF BAR (MOVE & RESET) | M | ~~127.1~~ 100.6 | | | |
| ~~YEL IMP ATTN ASSEM BRLS (MOVE & RESET)~~ | ~~EA~~ | ~~14~~ | | | |
| CMP AR (ALUM/STL) (DES 3) | M | | | ~~80~~ | |
| SET (TY II) (DES 3) (RCP) (1:6) | EA | 1 | | 1 | |
| REMOV OLD STRUCTURE (PIPE) | ~~EA~~ | | | ~~1~~ | |

M 1604.6

NOTES:
PAYMENT FOR WORK ZONE PAVEMENT MARKING REMOVABLE LINE SIMULATIONS SHALL BE BY EACH TRAFFIC BUTTON OR REFLECTIVE MARKER

PAVEMENT MARKINGS SHALL COMPLY TO T.M.U.T.C.D. OR AS DIRECTED BY THE ENGINEER

USE WORK ZONE CHANNELING DEVICES TO DELINEATE TRAFFIC AS PER T.M.U.T.C.D. OR AS DIRECTED BY THE ENGINEER

~~PLACE AT TRANSITIONS~~
~~STA. 15+420 TO 15+520~~

LP 1604 CONTROL BREAK
STA 15+500
CSJ: 2452-01-037 (BK)
CSJ: 2452-01-038 (AHD)

-037 -038

WRK ZN PAV MRK (*LINE SIMULATION*)
(REMOV) (CL B) (TY I-C) @ 6 M O.C.
EST @ 122 EA.
(REMOV) (CL C) (TY W)
EST @ 360 EA

SCALE 1:2000

BEGIN BRIDGE
N.B.F.R. ℄ STA 0+437.500

LINE I6

BEGIN MAINLANE BRIDGES
LP 1604 ℄ STA 15+795.900

END DETOUR
PT STA 10+362.81
14.6 LT "G" STA 15+63

LINE I4

LINE I2

S 24° 47' 21.91" W

℄ LP 1604

MATCHLINE STA 15+860

LINE I7

BEGIN BRIDGE
S.B.F.R. ℄ STA 0+411.900

LINE I3

R.O.W.

LINE I8

CULEBRA CREEK

WESTWOOD VISTA

WESTWOOD LOOP

MATCHLINE STA 15+140

DRAINAGE EASEMENT

CULVERT #2

P.I. #2

P.I. #1

PT 10+119.669

PC 10+243.097

15+200 15+300 15+400 15+500 15+600 15+700

10+000 10+100 10+200 10+300 10+400 10+500

BEGIN DETOUR
PC STA 10+000
14.6 RT "G" STA 15+260

TEMPORARY DRAINAGE
DES. 3 CMP (ARCH) X 180 M
WITH 2 EA SAFETY END TREATMENTS
(MATCH EXISTING DITCH GRADE)

WRK ZN PAV MRK ("*DOUBLE*" *LINE SIMULATION*)
(REMOV) (CL B) (TY II A-A) @ 6 M O.C.
EST @ 162 EA.
(REMOV) (CL C) (TY Y)
EST @ 480 EA

WRK ZN PAV MRK
(NON-REMOV) (W) (SLD) (100MM)
EST @ 240 M

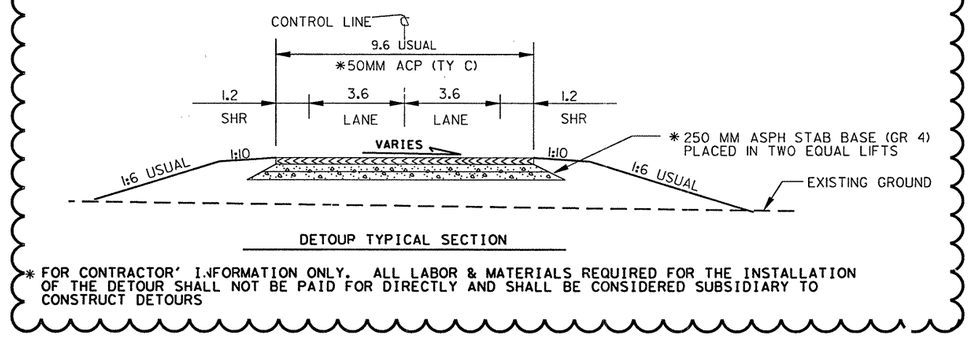


DETOUP TYPICAL SECTION

* FOR CONTRACTOR' INFORMATION ONLY. ALL LABOR & MATERIALS REQUIRED FOR THE INSTALLATION OF THE DETOUR SHALL NOT BE PAID FOR DIRECTLY AND SHALL BE CONSIDERED SUBSIDIARY TO CONSTRUCT DETOURS

CHANGE ORDER 14

REVISED SHEET

STATE OF TEXAS
TERRY G. McCOY
75016
REGISTERED PROFESSIONAL ENGINEER

Terry G. McCoy, P.E. 3.8.02
Date

© 2001 Texas Department of Transportation

SEQUENCE OF WORK
PHASE IB STAGE B

SHEET 7 OF 10

| FED. RD. DIV. NO. | FEDERAL AID PROJECT NO. | | SHEET NO. |
|---|---|---|---|
| 6 | NH 2000(704), ETC. | | 73A |
| STATE | DIST. | COUNTY | |
| TEXAS | SAT | BEXAR | |
| CONT. | SECT. | JOB | HIGHWAY NO. |
| 2452 | 01 | 036, ETC | LP 1604 |

FILE $FILE$
LEVEL
DISPLAYED
$DATE$

P.I. #1
PI STATION = 10+060.000
DELTA = 10° 25' 00.33" (LT)
TANGENT = 60.000 m
LENGTH = 119.669 m
RADIUS = 658.220 m
X = 628,978.8508
Y = 4,185,453.2494

P.I. #2
PI STATION = 10+303.097
DELTA = 9° 44' 03.41" (RT)
TANGENT = 60.000 m
LENGTH = 119.711 m
RADIUS = 704.616 m
X = 628,931.0603
Y = 4,185,214.5585

SCALE: 1:2000 H
1:400 V

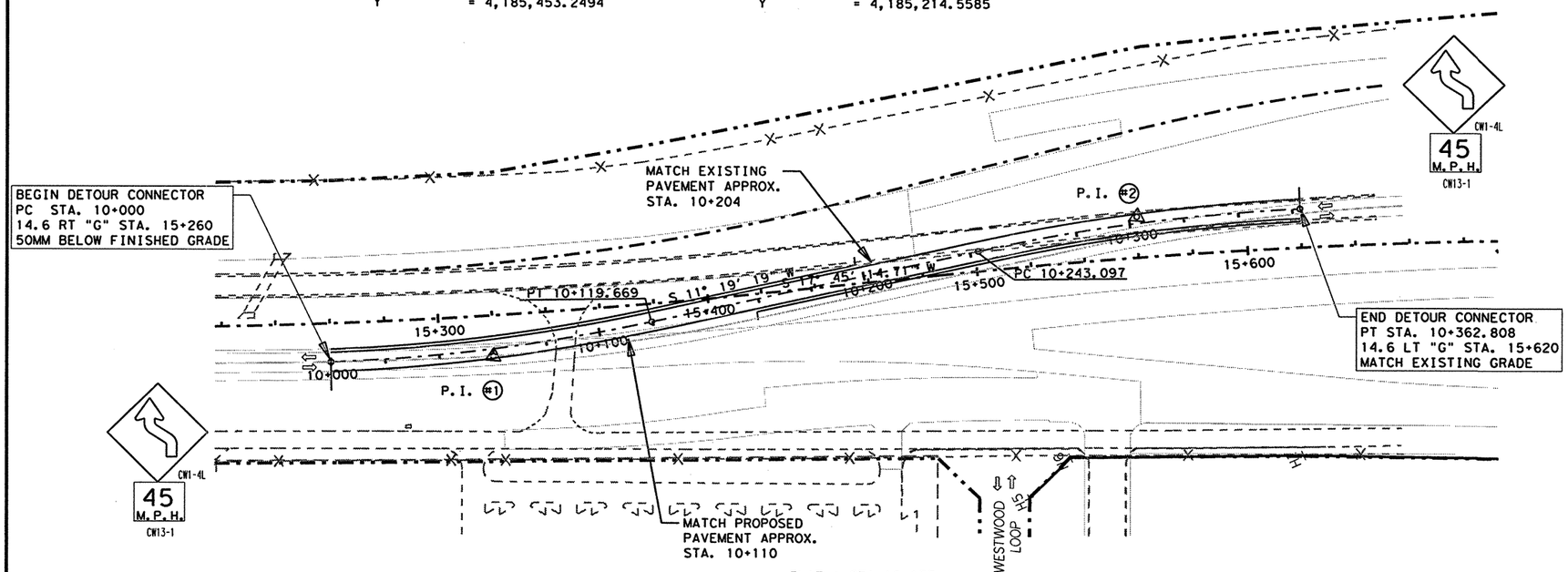


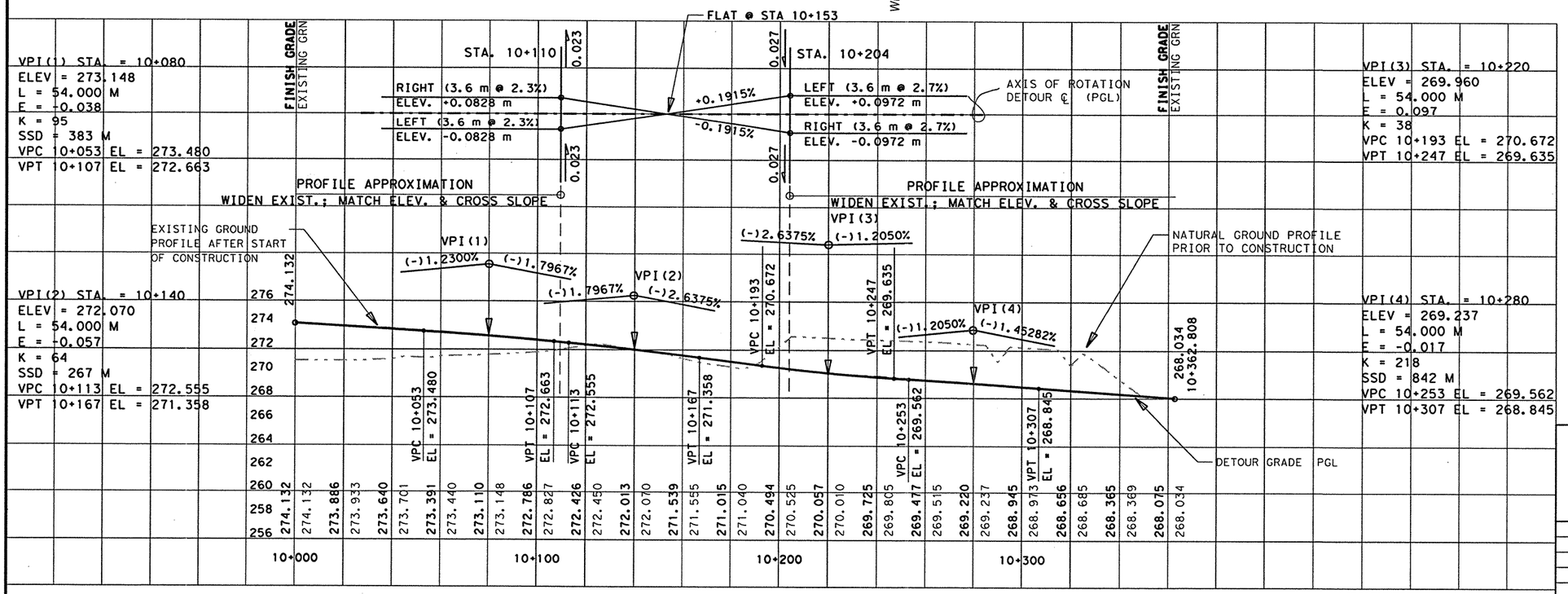


VPI(1) STA. = 10+080
ELEV = 273.148
L = 54.000 M
E = +0.038
K = 95
SSD = 383 M
VPC 10+053 EL = 273.480
VPT 10+107 EL = 272.663

VPI(2) STA. = 10+140
ELEV = 272.070
L = 54.000 M
E = +0.057
K = 64
SSD = 267 M
VPC 10+113 EL = 272.555
VPT 10+167 EL = 271.358

VPI(3) STA. = 10+220
ELEV = 269.960
L = 54.000 M
E = 0.097
K = 38
VPC 10+193 EL = 270.672
VPT 10+247 EL = 269.635

VPI(4) STA. = 10+280
ELEV = 269.237
L = 54.000 M
E = -0.017
K = 218
SSD = 842 M
VPC 10+253 EL = 269.562
VPT 10+307 EL = 268.845

CHANGE ORDER 14

NEW SHEET

NOTE(S): ALL DIMENSIONS ARE IN METERS UNLESS OTHERWISE NOTED.

FOR PAY QUANTITIES SEE SHEET 73A.

CHANNELING DEVICES AND SIGNS SHALL COMPLY TO T.M.U.T.C.D. OR AS DIRECTED BY THE ENGINEER.

STATE OF TEXAS
TERRY G. McCOY
75016
REGISTERED
PROFESSIONAL ENGINEER

Terry G. McCoy, P.E. 4-17-02
Date

LEVELS DISPLAYED
1 2 3 4 5 6 7 8 9 10 11 12 13 41 51 61
7 18 19 20 21 22 23 24 25 26 27 28 29 30 31 32
33 34 35 36 37 38 39 40 41 42 43 44 45 46 47 48
49 50 51 62 53 54 55 65 75 85 96 106 263

ACC: t:\oo\design\lp1604fm471-90\
FILE: de12*conn.dgn

©2002
Texas Department of Transportation

# SEQUENCE OF WORK
## DETOUR 1 CONNECTOR
PHASE IB STAGE B
SHEET 7B OF 10

| FED. RD. DIV. NO. | FEDERAL AID PROJECT NO. | | SHEET NO. |
|---|---|---|---|
| 6 | NH 2000(704),etc. | | 73B |
| STATE | DIST. | COUNTY | |
| TEXAS | SAT | BEXAR | |
| CONT. | SECT. | JOB | HIGHWAY NO. |
| 2452 | 01 | 036,etc | LP 1604 |

| PAVEMENT MARKING ESTIMATED QUANTITES | | 2452-01-038 |
|---|---|---|
| ITEM | UNIT | QTY |
| WK ZN PAV MRK | | |
| ⊕ REMOV (W) (SLD) (100 MM) | M | 80 |
| ⊕ REMOV (Y) (SLD)(100 MM) | M | 80 |
| REMOV (CL A) TY II-A-A | EA | 8 |
| ELIM EXT PAV MRK & MRKR (100 MM) | M | 120 |

⊕ PLACE AT TRANSITIONS STA. 16+555 TO 16+580

| SEQUENCE OF WORK ESTIMATED QUANTITIES | | 2452-01-038 |
|---|---|---|
| ITEM | UNIT | QTY |
| CONSTRUCT DETOURS (CL 3) | M2 | 15 |

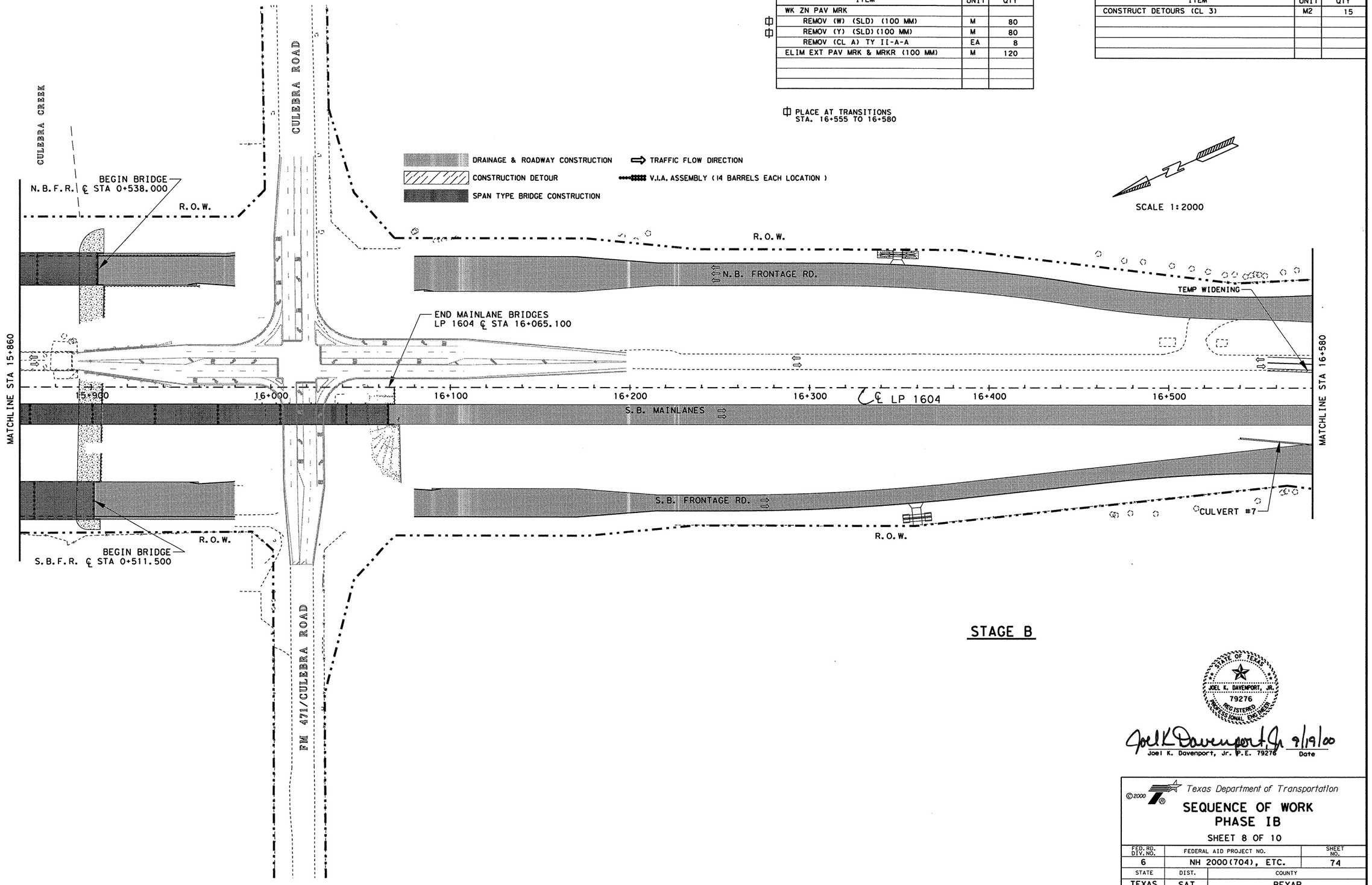


STAGE B

STATE OF TEXAS
JOEL K. DAVENPORT, JR.
79276
REGISTERED
PROFESSIONAL ENGINEER

Joel K Davenport, Jr 9/19/00
Joel K. Davenport, Jr. P.E. 79276 Date

©2000
Texas Department of Transportation

# SEQUENCE OF WORK PHASE IB

SHEET 8 OF 10

| FED. RD. DIV. NO. | FEDERAL AID PROJECT NO. | | SHEET NO. |
|---|---|---|---|
| 6 | NH 2000(704), ETC. | | 74 |
| STATE | DIST. | COUNTY | |
| TEXAS | SAT | BEXAR | |
| CONT. | SECT. | JOB | HIGHWAY NO. |
| 2452 | 01 | 036,ETC | LP 1604 |

FILE: t:\roo\design\lp1604fm471-90\sow\phase1\pm1bsst#b3.dgn 15 SEP 2000

LEVEL DISPLAYED: 1 2 3 4 5 6 7 8 9 10 11 12 13 14 15 16 17 18 19 20 21 22 23 24 25 26 27 28 29 30 31 32 33 34 35 36 37 38 39 40 41 42 43 44 45 46 47 48 49 50 51 52 53 54 55 56 57 58 59 60 63

## PAVEMENT MARKING ESTIMATED QUANTITIES 2452-01-038

| ITEM | UNIT | QTY |
|---|---|---|
| WK ZN PAV MRK | | |
| ~~REMOV (W) (SLD) (100 MM)~~ | ~~M~~ | ~~80~~ |
| ~~REMOV (Y) (SLD) (100 MM)~~ | ~~M~~ | ~~80~~ |
| REMOV (CL B) TY I-C | EA | ~~0~~ 28 |
| REMOV (CL B) TY II-A-A | EA | ~~0~~ 28 |
| REMOV (CL C) TY W | EA | 80 |
| REMOV (CL C) TY Y | EA | 80 |
| NON-REMV (W) (SLD) (100 MM) | M | 243 |
| ELIM EXT PAV MRK & MRKR (100 MM) | M | 120 |

⊕ PLACE AT TRANSITIONS STA. 16+555 TO 16+580

## SEQUENCE OF WORK ESTIMATED QUANTITIES 2452-01-038

| ITEM | UNIT | QTY |
|---|---|---|
| CONSTRUCT DETOURS (CL 3) | M2 | ~~15~~ 469 |
| | | |
| | | |
| Remov Old Str (Pipe) | M | 68 |

SCALE 1:2000

CULEBRA CREEK

CULEBRA ROAD

L

R.O.W.

TEMPORARY DRIVEWAY 5A
CONTRUCT DETOUR (CL 3)
EST @ 454 M2
REFER TO SHEET 336B FOR
DETAILS & PAY QUANTITIES
REMOV 68 M

R.O.W.

WRK ZN PAV MRK
(NON-REMOV) (W) (SLD) (100MM)
MAINTAIN TRAFFIC FROM W'BD SH151

TY III BARRICADES
ROAD CLOSED SIGN

BEGIN DETOUR
PC STA 10+000
14.6 LT "G" STA 16+540

N.B. FRONTAGE RD.

END MAINLANE BRIDGES
LP 1604 ℄ STA 16+065.100

STA 16+193.063

TEMP. SHORING
BUILT IN STAGE A

MATCHLINE STA 15+860

15+900 16+000 16+100 16+200 16+300 ℄ LP 1604 16+400 16+500 10+000

MATCHLINE STA 16+580

S.B. MAINLANES

WRK ZN PAV MRK (*LINE SIMULATION*)
STA 16+540 TO 16+580
(REMOV) (CL B) (TY I-C) @ 6 M O.C.
EST @ 28 EA.
(REMOV) (CL C) (TY W)
EST @ 80 EA

WRK ZN PAV MRK (*"DOUBLE" LINE SIMULATION*)
(REMOV) (CL B) (TY II A-A) @ 6 M O.C.
EST @ 28 EA.
(REMOV) (CL C) (TY Y)
EST @ 80 EA

S.B. FRONTAGE RD.

CULVERT #7

R.O.W.

R.O.W.

END BRIDGE
S.B.F.R. ℄ STA 0+511.500

FM 471-CULEBRA ROAD

DRAINAGE & ROADWAY CONSTRUCTION
SPAN TYPE BRIDGE CONSTRUCTION
CONSTRUCTION DETOUR
TRAFFIC FLOW DIRECTION
V.I.A. ASSEMBLY (14 BARRELS EACH LOCATION)
PORT. CONCRETE TRAFFIC BARRIER
TEMP. SHORING

STATE OF TEXAS
TERRY E. McCOY
75016
REGISTERED PROFESSIONAL ENGINEER

Terry E. McCoy, P.E. — Date 3.22.02

CHANGE ORDER 14

REVISED SHEET

©2000 Texas Department of Transportation

SEQUENCE OF WORK
PHASE IB STAGE B

SHEET 8 OF 10

| FED. RD. DIV. NO. | FEDERAL AID PROJECT NO. | | SHEET NO. |
|---|---|---|---|
| 6 | NH 2000(704), ETC. | | 74A |
| STATE | DIST. | COUNTY | |
| TEXAS | SAT | BEXAR | |
| CONT. | SECT. | JOB | HIGHWAY NO. |
| 2452 | 01 | 036, ETC | LP 1604 |

FILE: $FILE$ $DATE$
LEVEL: 1 2 3 4 5 6 7 8 9 10 11 12 13 14 15 16 17 18 19 20 21 22 23 24 25 26 27 28 29 30 31 32
DISPLAYED: 33 34 35 36 37 38 39 40 41 42 43 44 45 46 47 48 49 50 51 52 53 54 55 56 57 58 59 60 | 63

DRAINAGE & ROADWAY CONSTRUCTION

CONSTRUCTION DETOUR

TRAFFIC FLOW DIRECTION

V.I.A. ASSEMBLY (14 BARRELS EACH LOCATION)

SCALE 1 : 2000

| PAVEMENT MARKING ESTIMATED QUANTITES | | 2452-01-038 | 2452-01-037 |
|---|---|---|---|
| ITEM | UNIT | QTY | QTY |
| WK ZN PAV MRK | | | |
| 中 REMOV (W) (SLD) (100 MM) | M | 530 | 740 |
| 中 REMOV (Y) (SLD) (100 MM) | M | 530 | 740 |
| REMOV (CL A) TY II-A-A | EA | 70 | 120 |
| NON-REMV (W) (SLD) 100 MM | M | 310 | 700 |
| NON-REMV (Y) (SLD) 100 MM | M | 310 | 700 |
| | | | |
| | | | |

| SEQUENCE OF WORK ESTIMATED QUANTITIES | | 2452-01-038 | 2452-01-037 |
|---|---|---|---|
| ITEM | UNIT | QTY | QTY |
| CONSTRUCT DETOURS (CL 3) | M2 | 1670 | 4523 |
| PORT CONC TRAF BAR (MOVE & RESET) | M | | 172.3 |
| VEH IMP ATTN ASSEM BRLS (MOVE & RESET) | EA | | 42 |
| | | | |
| | | | |

中 PLACE AT TRANSITIONS STA. 16+580 TO 16+690

LINE I14

R.O.W.

EXISTING N.B. FRONTAGE RD.

LP 1604 CONTROL BREAK
STA 17+000
CSJ: 2452-01-038 (BK)
CSJ: 2452-01-037 (AHD)

-038 -037

W.B. SH 151

TEMP WIDENING

MATCHLINE STA 16+580

16+600 16+700 16+800 16+900 ℄ LP 1604 17+000 17+100 17+200

MATCHLINE STA 17+300

CULVERT #6

LINE I12B

R.O.W.

STAGE B

SCALE 1 : 2000

R.O.W.

EXISTING N.B. FRONTAGE RD.

N.B. SH 151

LINE I16

TEMP WIDENING

MATCHLINE STA 17+300

17+400 17+500 17+600 ℄ LP 1604 17+700 17+800 17+900 18+000

MATCHLINE STA 18+020

LINE I15

R.O.W.

STAGE B

DRAINAGE EASEMENT

14.6

9.3

1.5 BFR. 3.3 LANE 3.3 LANE 1.2 SHR.

LP 1604 CENTERLINE

CONSTRUCTION DETOUR (CL 3)
* 50 MM HOT MIX (TY C)
* 250 MM ASPHALT STAB BASE GR 4

NEW CONSTRUCTION

1:6 USUAL 1:3 MAX

1:6 USUAL 1:3 MAX

4.5

WIDENING USUAL

## PHASE IIB STAGE B

TYPICAL SECTION B-B ON LP 1604

* FOR CONTRACTOR'S INFORMATION ONLY. SUBSIDIARY TO CONSTRUCTION DETOURS

STATE OF TEXAS
JOEL K. DAVENPORT, JR.
79276
REGISTERED
PROFESSIONAL ENGINEER

Joel K Davenport Jr 9/19/00

Joel K. Davenport, Jr. P.E. 79276 Date

©2000

Texas Department of Transportation

# SEQUENCE OF WORK PHASE IB

SHEET 9 OF 10

| FED.RD. DIV.NO. | FEDERAL AID PROJECT NO. | | SHEET NO. |
|---|---|---|---|
| 6 | NH 2000(704), ETC. | | 75 |
| STATE | DIST. | COUNTY | |
| TEXAS | SAT | BEXAR | |
| CONT. | SECT. | JOB | HIGHWAY NO. |
| 2452 | 01 | 036, ETC | LP 1604 |

FILE: t:\roo\design\lp1604fm471-90\sow\phase1\ph1bst1b04.dgn 15 SEP 2000

LEVEL DISPLAYED
1 2 3 4 5 6 7 8 9 10 11 21 31 41 51 61 71 81 91 92 02 12 22 32 42 52 62 72 82 92 93 03 13 23
33 43 53 63 73 83 93 04 14 24 34 44 54 64 74 84 94 05 15 25 35 45 55 65 75 85 95 60 63

DRAINAGE & ROADWAY CONSTRUCTION

CONSTRUCTION DETOUR

PORT. CONCRETE TRAFFIC BARRIER

TRAFFIC FLOW DIRECTION

V.I.A. ASSEMBLY (14 BARRELS EACH LOCATION)

NOTES: PAVEMENT MARKINGS AND ARROWS SHALL COMPLY TO T.M.U.T.C.D. OR AS DIRECTED BY THE ENGINEER

PAYMENT FOR WORK ZONE PAVEMENT MARKING REMOVABLE LINE SIMULATIONS SHALL BE BY EACH TRAFFIC BUTTON OR REFLECTIVE MARKER

USE WORK ZONE CHANNELING DEVICES TO DELINEATE TRAFFIC AS PER T.M.U.T.C.D. OR AS DIRECTED BY THE ENGINEER

P. I. (#1) PI STATION = 10+060.000
DELTA = 9° 20' 27.27" (RT)
TANGENT = 60.000 m
LENGTH = 119.734 m
RADIUS = 734.431 m
X = 628,507.2185
Y = 4,184,264.0700

P. I. (#2) PI STATION = 10+242.156
DELTA = 8° 45' 57.48" (LT)
TANGENT = 60.000 m
LENGTH = 119.766 m
RADIUS = 782.808 m
X = 628,405.7514
Y = 4,184,112.4716

| PAVEMENT MARKING ESTIMATED QUANTITIES | | 2452-01-038 | 2452-01-037 |
|---|---|---|---|
| ITEM | UNIT | QTY | QTY |
| WK ZN PAV MRK | | | |
| ~~REMOV (W) (SLD) (100 MM)~~ | ~~M~~ | ~~530~~ | ~~740~~ |
| ~~REMOV (Y) (SLD) (100 MM)~~ | ~~M~~ | ~~530~~ | ~~740~~ |
| REMOV (CL B) TY I-C | EA | 102 | 18 |
| REMOV (CL B) TY II-A-A | EA | ~~70~~ 142 | ~~120~~ 365 |
| REMOV (CL C) TY W (TRAF BTN) | EA | 300 | 50 |
| REMOV (CL C) TY Y (TRAF BTN) | EA | 420 | 500 |
| NON-REMV (W) (SLD) 100 MM | M | ~~310~~ 320 | ~~700~~ 2010 |
| NON-REMV (Y) (SLD) 100 MM | M | ~~310~~ | ~~700~~ 1548 |
| NON-REMV (Y) (SLD) 600 MM | M | | 160 |
| NON-REMV (Y) (MED NOSE) | EA | | 1 |
| NON-REMV (W) ARROW | EA | | 2 |
| NON-REMV (W) WORD | EA | | 2 |

| SEQUENCE OF WORK ESTIMATED QUANTITIES | | 2452-01-038 | 2452-01-037 |
|---|---|---|---|
| ITEM | UNIT | QTY | QTY |
| CONSTRUCT DETOURS (CL 3) | M2 | ~~1670~~ 1400 | ~~4523~~ 95 |
| PORT CONC TRAF BAR (MOVE & RESET) | M | | ~~172.3~~ 191.1 |
| VEH IMP ATTN ASSEM BRLS (MOVE & RESET) | EA | | 42 |
| CMP AR (GALV STL DES 3) | M | 180 | |
| SET (TY II) (DES 3) (CMP) (1:6) | EA | 2 | |
| REMOV OLD STRUCTURE (PIPE) | ~~EA~~ | ~~1~~ | |

~~PLACE AT TRANSITIONS STA. 16+580 TO 16+690~~

M 180.0

SCALE 1 : 2000

LP 1604 CONTROL BREAK
CSJ: 2452-01-038 CSJ: 2452-01-037

MAINTAIN TRAFFIC FROM W'BD SH151

TEMPORARY DRAINAGE DES. 3 CMP (ARCH) X 180 M WITH 2 EA SAFETY END TREATMENTS (MATCH EXISTING DITCH GRADE)

EXISTING N.B. FRONTAGE RD.

R.O.W.

LINE I14

MATCHLINE STA 16+580

W.B. SH 151

MATCHLINE STA 17+300

P.I. (#1)

S 35° 47' 42" W

PC 10+182.156

S 24° 27' 21.91" W

16+600 16+700 16+800 16+900 17+000 17+100 17+200

℄ LP 1604

PT 10+119.734

P.I. (#2)

10+200 10+300

END DETOUR
PT STA 10+301.92
14.6 RT "G" STA 16+840

WRK ZN PAV MRK (NON-REMOV) (W) (SLD) (100MM)

CULVERT #6

LINE I12B

R.O.W.

WRK ZN PAV MRK (*LINE SIMULATION*)
STA 16+580 TO 16+840
(REMOV) (CL B) (TY I-C) @ 6 M O.C.
EST @ 102 EA.
(REMOV) (CL C) (TY W)
EST @ 300 EA

CONTROL LINE ℄
9.6 USUAL
*50MM ACP (TY C)
1.2 SHR | 3.6 LANE | 3.6 LANE | 1.2 SHR
VARIES
1:6 USUAL | 1:10 | 1:10 | 1:6 USUAL
* 250 MM ASPH STAB BASE (GR 4) PLACED IN TWO EQUAL LIFTS
EXISTING GROUND
DETOUR TYPICAL SECTION

* FOR CONTRACTOR' INFORMATION ONLY. ALL LABOR & MATERIALS REQUIRED FOR THE INSTALLATION OF THE DETOUR SHALL NOT BE PAID FOR DIRECTLY AND SHALL BE CONSIDERED SUBSIDIARY TO CONSTRUCT DETOURS

WRK ZN PAV MRK (*"DOUBLE" LINE SIMULATION*)
STA 16+580 TO 17+240
(REMOV) (CL B) (TY II A-A) @ 6 M O.C.
EST @ 224 EA.
(REMOV) (CL C) (TY Y)
EST @ 660 EA

SCALE 1 : 2000

ACCELERATED CONSTRUCTION AREA
COMPLETE CONSTRUCTION AND OPEN INTERSECTION AT EARLIEST POSSIBLE DATE

TYPE III BARRICADE

LINE I16

E.B. SH 151

WRK ZN PAV MRK (*"DOUBLE" LINE SIMULATION*)
STA 17+780 TO 18+020
(REMOV) (CL B) (TY II A-A) @ 6 M O.C.
EST @ 88 EA.
(REMOV) (CL C) (TY Y)
EST @ 260 EA

EXISTING N.B. FRONTAGE RD.

R.O.W.

WRK ZN PAV MRK
(NON-REMOV) (W) (SLD) (100MM)

MATCHLINE STA 17+300

17+400 17+500 17+600 17+700 17+800 17+900 18+000

℄ LP 1604

MATCHLINE STA 18+020

SH 151 DETOUR AHEAD

DRUMS @ 35 M SPACING

LINE I15

SH 151 DETOUR

SH 151 DETOUR

NOTE: SIGNS CALLED OUT ON THIS SHEET WILL BE PROVIDED BY TXDOT

WRK ZN PAV MRK (*LINE SIMULATION*)
(REMOV) (CL B) (TY I-C) @ 6 M O.C.
EST @ 18 EA.
(REMOV) (CL C) (TY W)
EST @ 50 EA

(#1) 5M RADIUS
17+503.7 @ 4.9M LT.

(#2) 20M RADIUS
17+516.8 @ 12.6M LT.

E.B. SH 151

MATCH PROPOSED PAVEMENT STA. 17+503

℄ LP 1604

RADIUS (#2)

RADIUS (#1)

CONSTRUCT DETOUR (CL 3) EST. @ 95 M2

MATCH EXISTING PAVEMENT STA. 16+492

MATCH EXISTING PAVEMENT STA. 17+515

DETOUR DETAIL
(STA. 16+492 TO STA. 17+515)

DRAINAGE EASEMENT

CONSTRUCTION AREA

14.6 | 14.6

TRAFFIC TO BE PLACED ON PROPOSED SOUTHBOUND MAINLANES.

1.2 SHR. | 3.6 LANE | 3.6 LANE | 3.0 SHR.

LP 1604 CENTERLINE ℄

1:6 USUAL
1:5 MAX

STAGE IB STAGE B
TYPICAL SECTION ON LP 1604

CHANGE ORDER 14

REVISED SHEET

©2002 Texas Department of Transportation

SEQUENCE OF WORK
PHASE IB STAGE B

SHEET 9 OF 10

| FED.RD. DIV.NO. | FEDERAL AID PROJECT NO. | | SHEET NO. |
|---|---|---|---|
| 6 | NH 2000(704), FTC. | | 75A |
| STATE | DIST. | COUNTY | |
| TEXAS | SAT | BEXAR | |
| CONT. | SECT. | JOB | HIGHWAY NO. |
| 2452 | 01 | 036, ETC | LP 1604 |

STATE OF TEXAS
TERRY G. McCOY
75016
REGISTERED PROFESSIONAL ENGINEER

Terry G. McCoy, P.E.

3.22.02
Date

FILE: t:\AO\Design\lp1604fm471-90\sow\Phase1\chrph*1b*st*b4.dgn 03/21/02

LEVEL 1 1 2 3 4 5 6 7 8 9 10 11 12 13 14 15 16 17 18 19 20 21 22 23 24 25 26 27 28 29 30 31 32
DISPLAYED 33 34 35 36 37 38 39 40 41 42 43 44 45 46 47 48 49 50 51 52 53 54 55 56 57 58 59 60 61 62 63

DRAINAGE & ROADWAY CONSTRUCTION

CONSTRUCTION DETOUR

PORT. CONCRETE TRAFFIC BARRIER

TRAFFIC FLOW DIRECTION

V.I.A. ASSEMBLY (14 BARRELS EACH LOCATION)

NOTES: PAVEMENT MARKINGS AND ARROWS SHALL COMPLY TO T.M.U.T.C.D. OR AS DIRECTED BY THE ENGINEER

PAYMENT FOR WORK ZONE PAVEMENT MARKING REMOVABLE LINE SIMULATIONS SHALL BE BY EACH TRAFFIC BUTTON OR REFLECTIVE MARKER

USE WORK ZONE CHANNELING DEVICES TO DELINEATE TRAFFIC AS PER T.M.U.T.C.D. OR AS DIRECTED BY THE ENGINEER

P.I. (#1)
PI STATION = 10+060.000
DELTA = 9° 20' 27.27" (RT)
TANGENT = 60.000 m
LENGTH = 119.734 m
RADIUS = 734.431 m
X = 628,507.2185
Y = 4,184,264.0700

P.I. (#2)
PI STATION = 10+242.156
DELTA = 8° 45' 57.48" (LT)
TANGENT = 60.000 m
LENGTH = 119.766 m
RADIUS = 782.808 m
X = 628,405.7514
Y = 4,184,112.4716

| PAVEMENT MARKING ESTIMATED QUANTITES | | 2452-01-038 | 2452-01-037 |
|---|---|---|---|
| ITEM | UNIT | QTY | QTY |
| WK ZN PAV MRK | | | |
| ~~REMOV (W) (SLD) (100 MM)~~ | ~~M~~ | ~~530~~ | ~~740~~ |
| ~~REMOV (Y) (SLD) (100 MM)~~ | ~~M~~ | ~~530~~ | ~~740~~ |
| REMOV (CL B) TY I-C | EA | 102 | 18 |
| REMOV (CL B) TY II-A-A | EA | ~~70~~ 142 | ~~120~~ 365 |
| REMOV (CL C) TY W (TRAF BTN) | EA | 300 | 50 |
| REMOV (CL C) TY Y (TRAF BTN) | EA | 420 | 500 |
| NON-REMV (W) (SLD) 100 MM | M | ~~310~~ 320 | ~~700~~ 2010 |
| ~~NON-REMV (Y) (SLD) 100 MM~~ | ~~M~~ | ~~330~~ | ~~300~~ 1528 |
| NON-REMV (Y) (SLD) 600 MM | M | | 240 |
| ~~NON-REMV (Y) (MED NOSE)~~ | ~~EA~~ | | |
| NON-REMV (W) ARROW | EA | | 2 |
| NON-REMV (W) WORD | EA | | 2 |

| SEQUENCE OF WORK ESTIMATED QUANTITIES | | 2452-01-038 | 2452-01-037 |
|---|---|---|---|
| ITEM | UNIT | QTY | QTY |
| CONSTRUCT DETOURS (CL 3) | M2 | ~~1670~~ 1400 | ~~4523~~ 95 |
| PORT CONC TRAF BAR (MOVE & RESET) | M | | ~~172.3~~ 191.1 |
| VEH IMP ATTN ASSEM BRLS (MOVE & RESET) | EA | | 42 |
| CMP AR (GALV STL DES 3) | M | 180 | |
| SET (TY II) (DES 3) (CMP) (1:6) | EA | 2 | |
| REMOV OLD STRUCTURE (PIPE) | EA | 1 | |

~~PLACE AT TRANSITIONS STA. 16+580 TO 16+690~~

SCALE 1 : 2000

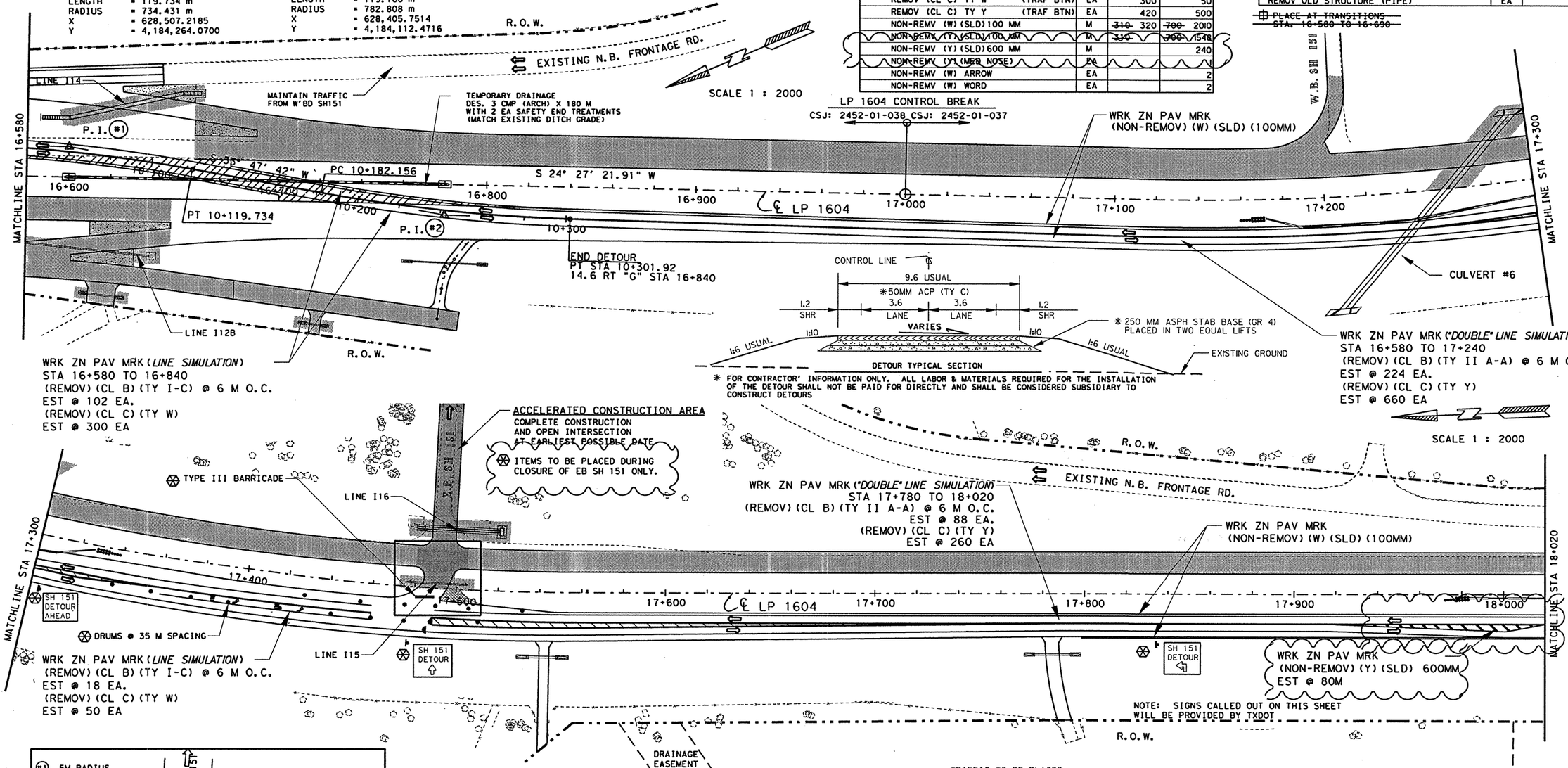





* FOR CONTRACTOR' INFORMATION ONLY. ALL LABOR & MATERIALS REQUIRED FOR THE INSTALLATION OF THE DETOUR SHALL NOT BE PAID FOR DIRECTLY AND SHALL BE CONSIDERED SUBSIDIARY TO CONSTRUCT DETOURS

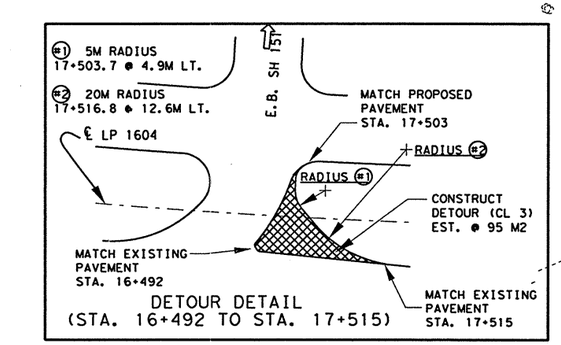


DETOUR DETAIL
(STA. 16+492 TO STA. 17+515)

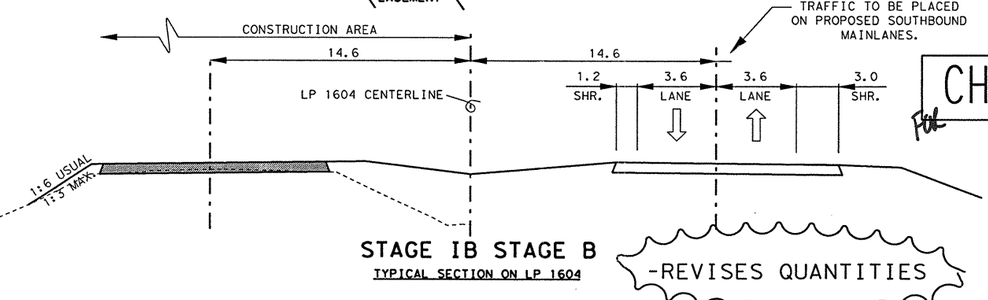


STAGE IB STAGE B
TYPICAL SECTION ON LP 1604

-REVISES QUANTITIES

CHANGE ORDER 24

REVISED SHEET

©2002

Texas Department of Transportation

SEQUENCE OF WORK
PHASE IB STAGE B

SHEET 9 OF 10

| FED. RD. DIV. NO. | FEDERAL AID PROJECT NO. | | SHEET NO. |
|---|---|---|---|
| 6 | NH 2000(704), ETC. | | 75Ai |
| STATE | DIST. | COUNTY | |
| TEXAS | SAT | BEXAR | |
| CONT. | SECT. | JOB | HIGHWAY NO. |
| 2452 | 01 | 036, ETC | LP 1604 |

JENNIFER L. MOCZYGEMBA 84734 REGISTERED PROFESSIONAL ENGINEER

Jennifer L. Moczygemba, P.E. 84734 — P.E. — 7-23-02 Date

FILE: t:\MO\Design\lp1604fm471-90\sow\Phase1\ch*ph1b*st*b04*CO.dgn 07/23/02
LEVEL DISPLAYED: 1 2 3 4 5 6 7 8 9 10 11 12 13 14 15 16 17 18 19 20 21 22 23 24 25 26 27 28 29 30 31 32 33 34 35 36 37 38 39 40 41 42 43 44 45 46 47 48 49 50 51 52 53 54 55 56 57 58 59 60 61 62 63

P.I. (#1)

PI STATION = 10+060.000
DELTA = 9° 20′ 27.27" (RT)
TANGENT = 60.000 m
LENGTH = 119.734 m
RADIUS = 734.431 m
X = 628,507.2185
Y = 4,184,264.0700

P.I. (#2)

PI STATION = 10+242.156
DELTA = 8° 45′ 57.48" (LT)
TANGENT = 60.000 m
LENGTH = 119.766 m
RADIUS = 782.808 m
X = 628,405.7514
Y = 4,184,112.4716

SCALE: 1:2000 H
1:400 V

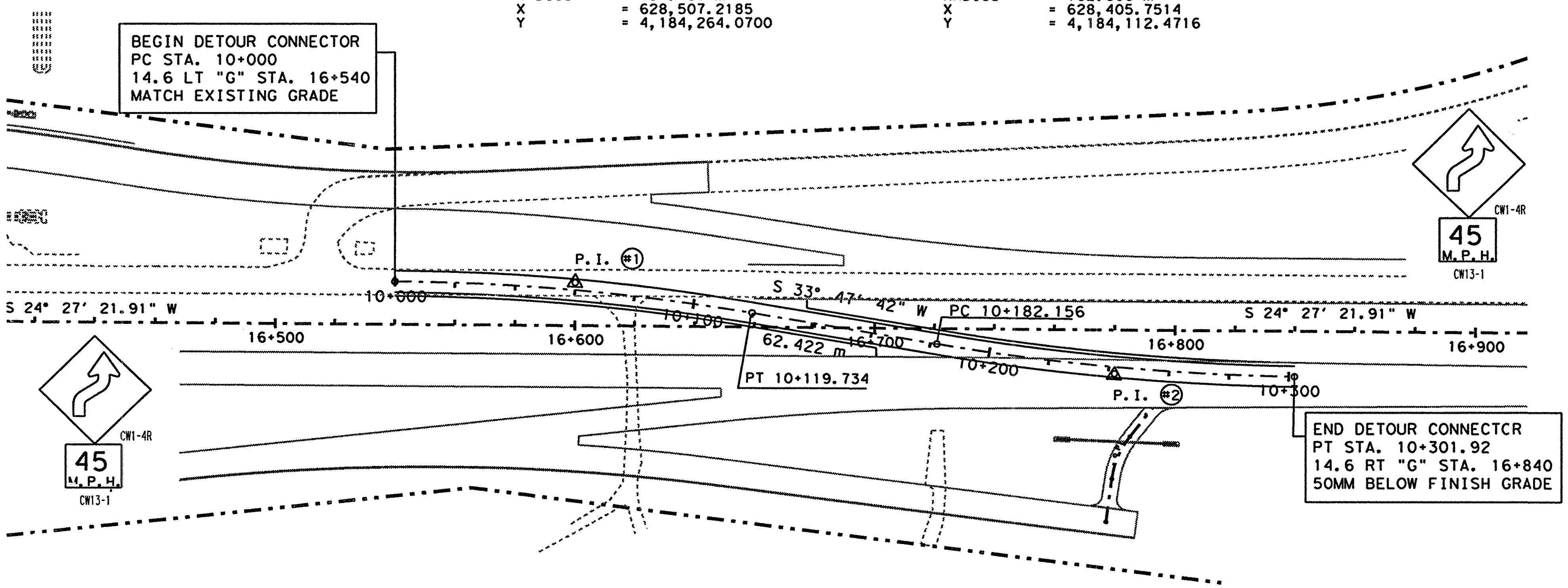


CHANGE ORDER 14

NEW SHEET

NOTE(S): ALL DIMENSIONS ARE IN METERS UNLESS OTHERWISE NOTED.

FOR PAY QUANTITIES SEE SHEET 75A.

CHANNELING DEVICES AND SIGNS SHALL COMPLY TO T.M.U.T.C.D. OR AS DIRECTED BY THE ENGINEER.

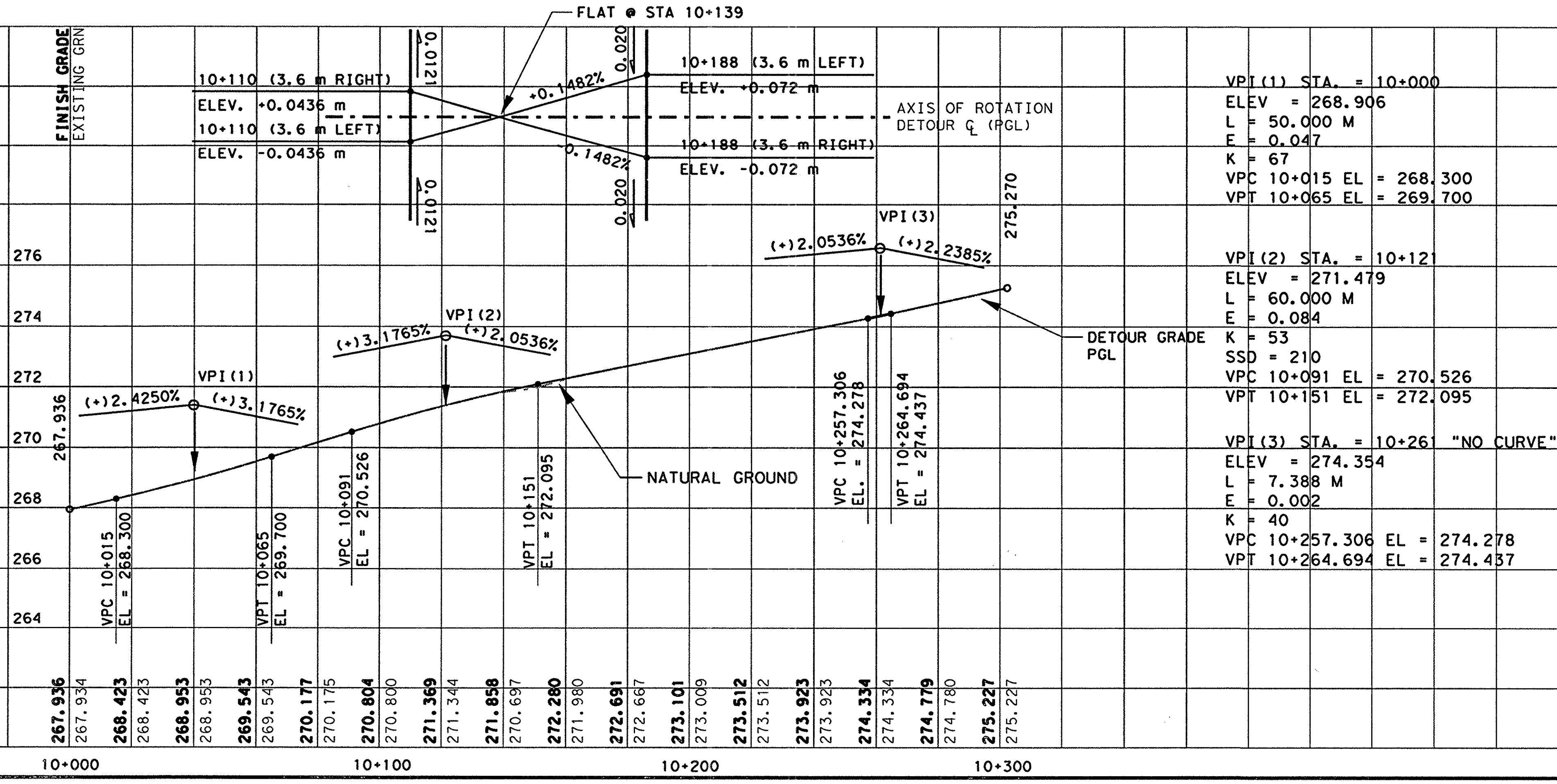


STATE OF TEXAS
TERRY G. McCOY
75016
REGISTERED PROFESSIONAL ENGINEER

Terry G. McCoy, P.E. 3-20-02
Date

©2002 Texas Department of Transportation

# SEQUENCE OF WORK
# DETOUR 3 CONNECTOR

PHASE IB STAGE B
SHEET 9B OF 10

| FED. RD. DIV. NO. | FEDERAL AID PROJECT NO. | | SHEET NO. |
|---|---|---|---|
| 6 | NH 2000(704), etc. | | 75B |
| STATE | DIST. | COUNTY | |
| TEXAS | SAT | BEXAR | |
| CONT. | SECT. | JOB | HIGHWAY NO. |
| 2452 | 01 | 036, etc | LP 1604 |

LEVELS DISPLAYED
ACC: t:ao\design\lp1604fm471-90\
FILE: det2*conn.dgn

DRAINAGE & ROADWAY CONSTRUCTION

CONSTRUCTION DETOUR

TRANSITIONAL RAMPING

TRAFFIC FLOW DIRECTION

V.I.A. ASSEMBLY (14 BARRELS EACH LOCATION)

| PAVEMENT MARKING ESTIMATED QUANTITES | | 2452-01-037 |
|---|---|---|
| ITEM | UNIT | QTY |
| WK ZN PAV MRK | | |
| REMOV (W) (SLD) (100 MM) | M | 380 |
| REMOV (Y) (SLD) (100 MM) | M | 380 |
| REMOV (CL A) TY II-A-A | EA | 38 |
| NON-REMV (W) (SLD) 100 MM | M | 140 |
| NON-REMV (Y) (SLD) 100 MM | M | 60 |

| SEQUENCE OF WORK ESTIMATED QUANTITIES | | 2452-01-037 |
|---|---|---|
| ITEM | UNIT | QTY |
| CONSTRUCT DETOURS (CL 3) | M2 | 2116 |
| PORT CONC TRF BAR (MOVE & RESET) | M | 81.9 |
| VEH IMP ATTN ASSEM BRLS (MOVE & RESET) | M | 14 |

⊕ PLACE AT TRANSITIONS STA. 18+080 TO 18+245

✳ DUE TO EXPECTED GRADE DIFFERENCES THE CONTRACTOR SHALL HAVE TRANSITIONAL RAMPING BETWEEN THE EXISTING & PROPOSED ROADWAY. ALL LABOR AND MATERIALS REQUIRED FOR THIS WORK SHALL BE SUBSIDIARY TO CONSTRUCT DETOUR AND NO DIRECT PAYMENT SHALL BE MADE.

SCALE 1:2000

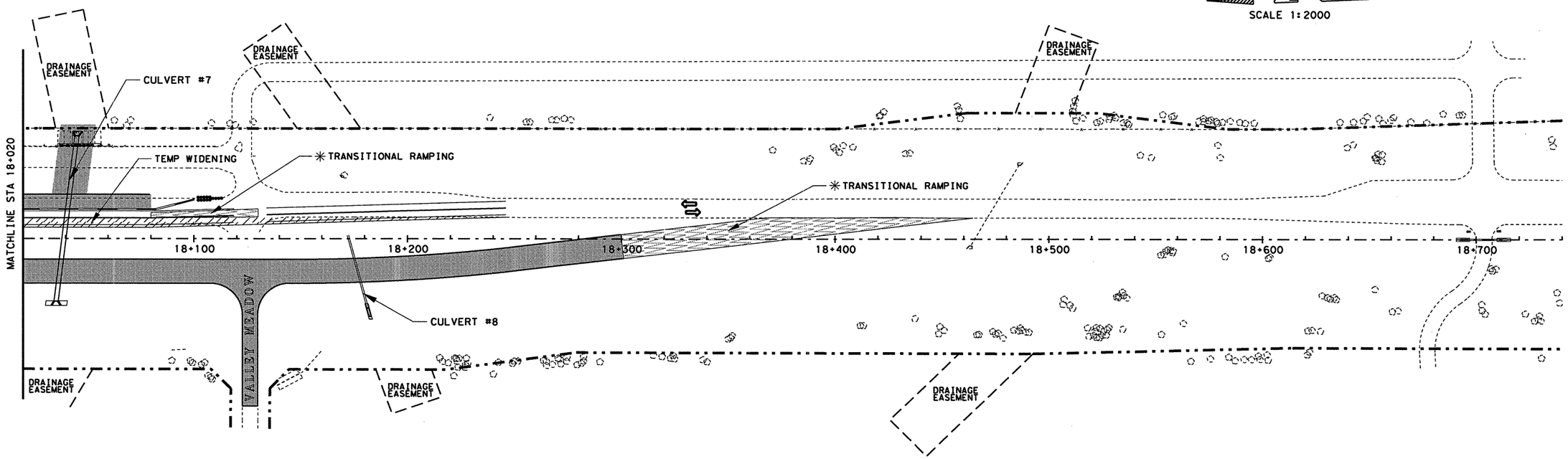


STAGE B

STATE OF TEXAS
JOEL K. DAVENPORT, JR.
79276
REGISTERED
PROFESSIONAL ENGINEER

Joel K Davenport, Jr 9/19/00

Joel K. Davenport, Jr., P.E. 79276 — Date

©2000

Texas Department of Transportation

# SEQUENCE OF WORK PHASE IB

SHEET 10 OF 10

| FED. RD. DIV. NO. | FEDERAL AID PROJECT NO. | | SHEET NO. |
|---|---|---|---|
| 6 | NH 2000(704), ETC. | | 76 |
| STATE | DIST. | COUNTY | |
| TEXAS | SAT | BEXAR | |
| CONT. | SECT. | JOB | HIGHWAY NO. |
| 2452 | 01 | 036, ETC | LP 1604 |

FILE: t:\oo\design\lp1604fm471-90\sow\phase1\ph*1b*st*b5.dgn 15 SEP 2000

LEVEL DISPLAYED 1 2 3 4 5 6 7 8 9 10 11 12 13 14 15 16 17 18 19 20 21 22 23 24 25 26 27 28 29 30 31 32 33 34 35 36 37 38 39 40 41 42 43 44 45 46 47 48 49 50 51 52 53 54 55 56 57 58 59 60 61 63

DRAINAGE & ROADWAY CONSTRUCTION

CONSTRUCTION DETOUR

TRANSITIONAL RAMPING

TRAFFIC FLOW DIRECTION

V.I.A. ASSEMBLY ( 14 BARRELS EACH LOCATION )

PORT. CONCRETE TRAFFIC BARRIER

PAVEMENT MARKING ESTIMATED QUANTITIES — 2452-01-037

| ITEM | | UNIT | QTY |
|---|---|---|---|
| WK ZN PAV MRK | | | |
| ~~REMOV (W) (SLD) (100 MM)~~ | | ~~M~~ | ~~380~~ |
| ~~REMOV (Y) (SLD) (100 MM)~~ | | ~~M~~ | ~~380~~ |
| REMOV (CL B) TY I-C | | EA | 124 |
| REMOV (CL B) TY II-A-A | | EA | ~~38~~ 162 |
| REMOV (CL C) TY W | (TRAF BTN) | EA | 370 |
| REMOV (CL C) TY Y | (TRAF BTN) | EA | 480 |
| NON-REMV (W) (SLD) (100 MM) | | M | ~~140~~ 190 |
| ~~NON-REMV (Y) (SLD) (100 MM)~~ | | ~~M~~ | ~~60~~ |

SEQUENCE OF WORK ESTIMATED QUANTITIES — 2452-01-037

| ITEM | UNIT | QTY |
|---|---|---|
| ~~CONSTRUCT DETOURS (CL 3)~~ | ~~M2~~ | ~~2116~~ 0 |
| PORT CONC TRF BAR (MOVE & RESET) | M | ~~81.9~~ 137.2 |
| ~~YELLOW VIA ASSEMBLY'S MOVE & RESET~~ | ~~U~~ | ~~14~~ |
| | | |
| | | |

PLACE AT TRANSITIONS STA. 18+080 TO 18+245

✳ DUE TO EXPECTED GRADE DIFFERENCES THE CONTRACTOR SHALL HAVE TRANSITIONAL RAMPING BETWEEN THE EXISTING & PROPOSED ROADWAY. ALL LABOR AND MATERIALS REQUIRED FOR THIS WORK SHALL BE SUBSIDIARY TO CONSTRUCT DETOUR AND NO DIRECT PAYMENT SHALL BE MADE.

SCALE 1:2000

**NOTE: SIGNS CALLED OUT ON THIS SHEET WILL BE PROVIDED BY TXDOT**

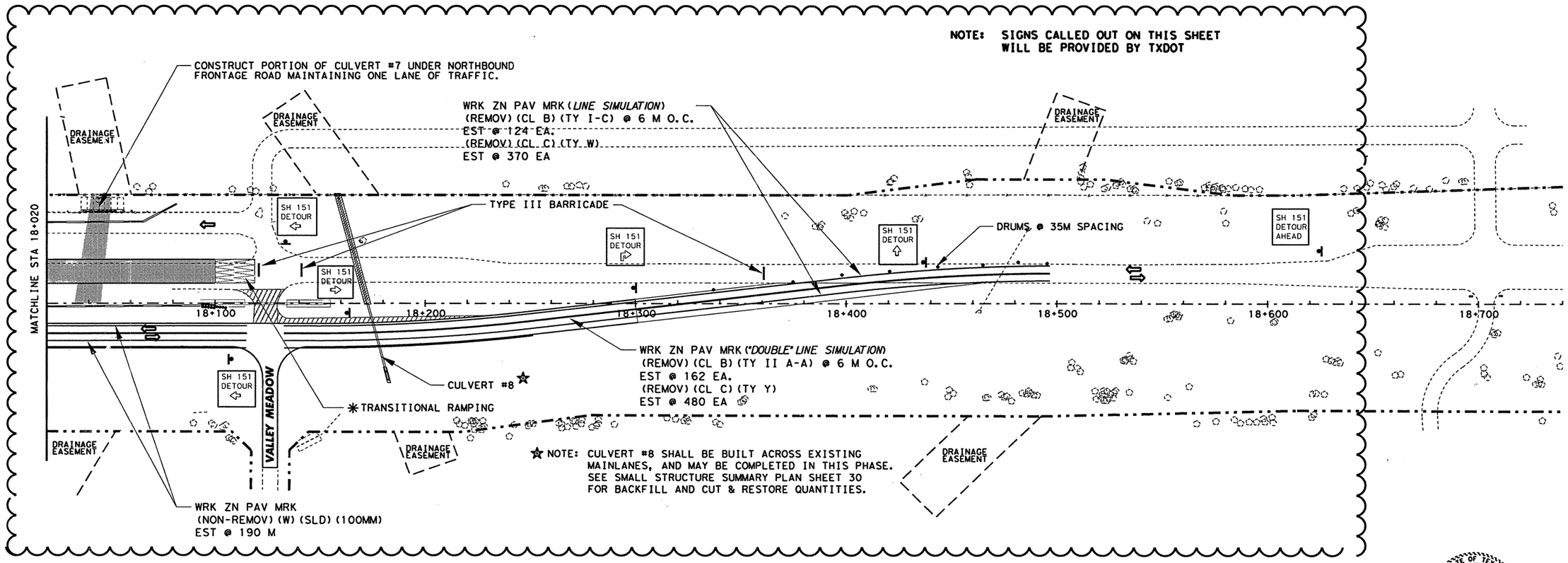


✡ NOTE: CULVERT #8 SHALL BE BUILT ACROSS EXISTING MAINLANES, AND MAY BE COMPLETED IN THIS PHASE. SEE SMALL STRUCTURE SUMMARY PLAN SHEET 30 FOR BACKFILL AND CUT & RESTORE QUANTITIES.

STATE OF TEXAS
TERRY G. McCOY
75016
REGISTERED PROFESSIONAL ENGINEER

Terry G. McCoy, P.E. — 3-22-02 Date

CHANGE ORDER 14

REVISED SHEET

©2000

Texas Department of Transportation

# SEQUENCE OF WORK
## PHASE IB STAGE B

SHEET 10 OF 10

| FED.RD. DIV.NO. | FEDERAL AID PROJECT NO. | | SHEET NO. |
|---|---|---|---|
| 6 | NH 2000(704), ETC. | | 76A |
| STATE | DIST. | COUNTY | |
| TEXAS | SAT | BEXAR | |
| CONT. | SECT. | JOB | HIGHWAY NO. |
| 2452 | 01 | 036, ETC | LP 1604 |

FILE: t:\AO\Design\lp1604fm471-90\sow\Phase1\ch*ph*1b*st*sb5.dgn 03/21/02

LEVEL 1 2 3 4 5 6 7 8 9 10 11 21 31 41 51 61 71 81 92 02 12 22 32 42 52 62 72 82 93 03 13

DISPLAYED 33 43 53 63 73 83 94 04 14 24 34 44 54 64 74 84 95 05 15 25 35 45 55 65 75 85 96 06 16 26 36 46 56 66 76 86 97 07 17 27 37 47 57 67 77 87 98 08 18 28 38 48 58 68 78 88 99 09 19 29 39 49 59 69 79 89 60 | 63

DRAINAGE & ROADWAY CONSTRUCTION

CONSTRUCTION DETOUR

TRANSITIONAL RAMPING

TRAFFIC FLOW DIRECTION

V.I.A. ASSEMBLY (14 BARRELS EACH LOCATION)

PORT. CONCRETE TRAFFIC BARRIER

| PAVEMENT MARKING ESTIMATED QUANTITES | | 2452-01-037 |
|---|---|---|
| ITEM | UNIT | QTY |
| WK ZN PAV MRK | | |
| ~~REMOV (W) (SLD) (100 MM)~~ | ~~M~~ | ~~380~~ |
| ~~REMOV (Y) (SLD) (100 MM)~~ | ~~M~~ | ~~380~~ |
| REMOV (CL B) TY I-C | EA | 124 |
| REMOV (CL B) TY II-A-A | EA | ~~38~~ 162 |
| REMOV (CL C) TY W (TRAF BTN) | EA | 370 |
| REMOV (CL C) TY Y (TRAF BTN) | EA | 480 |
| NON-REMV (W) (SLD) (100 MM) | M | ~~140~~ 282 |
| ~~NON-REMV (Y) (SLD) (100 MM)~~ | ~~M~~ | ~~60~~ |
| NON-REMV (W) ARROW | EA | 3 |
| NON-REMV (W) WORD | EA | 3 |
| NON-REMV (MED NOSE) | EA | 1 |
| NON-REMV (Y) ( (SLD) 600 MM | M | 20 |

| SEQUENCE OF WORK ESTIMATED QUANTITIES | | 2452-01-037 |
|---|---|---|
| ITEM | UNIT | QTY |
| ~~CONSTRUCT DETOURS (CL 3)~~ | ~~M2~~ | ~~2116~~ 0 |
| PORT CONC TRF BAR (MOVE & RESET) | M | ~~81.9~~ 137.2 |
| VEH IMP ATTN ASSEM BRLS (MOVE & RESET) | M | 14 |
| | | |
| | | |

⊕ PLACE AT TRANSITIONS STA. 18+080 TO 18+245

✳ DUE TO EXPECTED GRADE DIFFERENCES THE CONTRACTOR SHALL HAVE TRANSITIONAL RAMPING BETWEEN THE EXISTING & PROPOSED ROADWAY. ALL LABOR AND MATERIALS REQUIRED FOR THIS WORK SHALL BE SUBSIDIARY TO CONSTRUCT DETOUR AND NO DIRECT PAYMENT SHALL BE MADE.

SCALE 1:2000

CONSTRUCT PORTION OF CULVERT #7 UNDER NORTHBOUND FRONTAGE ROAD MAINTAINING ONE LANE OF TRAFFIC.

WRK ZN PAV MRK
(NON-REMOV) (W) (ARROW)
EST @ 3 EA.
WRK ZN PAV MRK
(NON-REMOV) (W) (WORD)
EST @ 3 EA.

WRK ZN PAV MRK (*LINE SIMULATION*)
(REMOV) (CL B) (TY I-C) @ 6 M O.C.
EST @ 124 EA.
(REMOV) (CL C) (TY W)
EST @ 370 EA

**NOTE: SIGNS CALLED OUT ON THIS SHEET WILL BE PROVIDED BY TXDOT**

DRAINAGE EASEMENT

SH 151 DETOUR

TYPE III BARRICADE

DRUMS @ 35M SPACING

SH 151 DETOUR AHEAD

MATCHLINE STA 18+020

18+100 18+200 18+300 18+400 18+500 18+600 18+700

VALLEY MEADOW

WRK ZN PAV MRK (*"DOUBLE" LINE SIMULATION*)
(REMOV) (CL B) (TY II A-A) @ 6 M O.C.
EST @ 162 EA.
(REMOV) (CL C) (TY Y)
EST @ 480 EA

CULVERT #8 ✡

✳ TRANSITIONAL RAMPING

✡ NOTE: CULVERT #8 SHALL BE BUILT ACROSS EXISTING MAINLANES, AND MAY BE COMPLETED IN THIS PHASE. SEE SMALL STRUCTURE SUMMARY PLAN SHEET 30 FOR BACKFILL AND CUT & RESTORE QUANTITIES.

WRK ZN PAV MRK
(NON-REMOV) (W) (SLD) (100MM)
EST @ 282 M

WRK ZN PAV MRK
(REMOV) (CL B) TY II A-A
WRK ZN PAV MRK
(REMOV) (CL C) TY Y

WRK ZN PAV MRK
(NON-REMOV) (Y) (MED NOSE)
EST @ 1
WRK ZN PAV MRK
(NON-REMOV) (Y) 600MM
EST @ 20 M

✡ ITEMS TO BE PLACED DURING CLOSURE OF EB SH 151 ONLY.

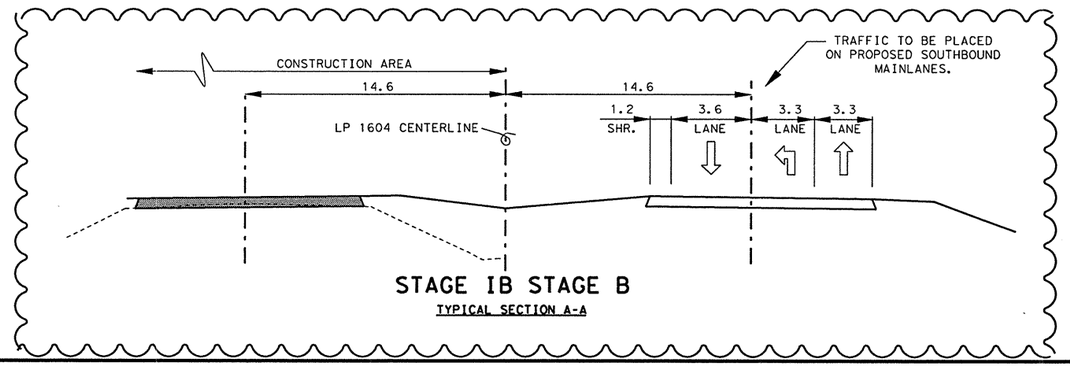


STAGE IB STAGE B

TYPICAL SECTION A-A

-REVISES QUANTITIES

REVISED SHEET

STATE OF TEXAS
JENNIFER L. MOCZYGEMBA
84734
REGISTERED
PROFESSIONAL ENGINEER

Jennifer L. Moczygemba, P.E. 84734 — P.E. 7-23-02 Date

For CO #24 only

CHANGE ORDER 24

Texas Department of Transportation

SEQUENCE OF WORK
PHASE IB STAGE B

SHEET 10 OF 10

| FED. RD. DIV. NO. | FEDERAL AID PROJECT NO. | | SHEET NO. |
|---|---|---|---|
| 6 | NH 2000(704), ETC. | | 76B |
| STATE | DIST. | COUNTY | |
| TEXAS | SAT | BEXAR | |
| CONT. | SECT. | JOB | HIGHWAY NO. |
| 2452 | 01 | 036, ETC | LP 1604 |

FILE: I:\AO\Design\lp1604fm471-90\sow\Phase1\ch*ph*1b*st*b5*c0.dgn 07/23/02

LEVEL DISPLAYED 1 2 3 4 5 6 7 8 9 10 11 12 13 14 15 16 17 18 19 20 21 22 23 24 25 26 27 28 29 30 31 32 33 34 35 36 37 38 39 40 41 42 43 44 45 46 47 48 49 50 51 52 53 54 55 56 57 58 59 60 61 62 63

DRAINAGE & ROADWAY CONSTRUCTION

CONSTRUCTION DETOUR

SPAN TYPE BRIDGE CONSTRUCTION

TRAFFIC FLOW DIRECTION

V.I.A. ASSEMBLY ( 14 BARRELS EACH LOCATION )

| SEQUENCE OF WORK ESTIMATED QUANTITIES | | 2452-01-038 |
|---|---|---|
| ITEM | UNIT | QTY |
| PCTB LOW PRF (TY I) (STKPL, INSTL & RETRN) | M | 48.8 |
| PCTB LOW PRF (TY II) (STKPL, INSTL & RETRN) | M | 12.2 |
| | | |
| | | |
| | | |

✳ FOR CONTRACTOR'S INFORMATION ONLY.
SUBSIDIARY TO CONSTRUCTION DETOURS

SCALE 1:1500

PI STA 10+446.96

S 66° 21' 19" E

S 70° 37' 05" E

10+400

LINE Y

PI STA 10+346.56

CONSTRUCT ISLANDS AFTER THE COMPLETION OF PHASE IC

10+300

LP 1604

21.91" W

800

15+900

16+000

16+100

16+200

LP 1604

S 66° 21' 19" E

LINE XA

LINE X

CULEBRA CREEK

10+200

POT 10+193.116

✳ CLOSE EXISTING LESLIE ROAD TO THRU TRAFFIC

CULVERT #5

CULEBRA ROAD

S 61° 45' 19.62" E

POT 10+093.412

10+100

CULEBRA CENTERLINE

17.2

CONSTRUCTION ZONE

0.6 SHR | 3.6 LANE | 3.6 LANE | 3.6 LANE | 3.6 LANE

VARIES

TYPICAL SECTION ON CULEBRA

✳ FOR CONTRACTOR'S INFORMATION ONLY.
SUBSIDIARY TO CONSTRUCTION DETOURS

THRU TRAFFIC ON LP 1604 SHALL CONTINUE ON IT'S CURRENT POSITION. TRAFFIC ON CULEBRA SHALL BE TEMPORARILY ALTERED TO ACCOMMODATED CONSTRUCTION.

STAGE A

STATE OF TEXAS
JOEL K. DAVENPORT, JR.
79276
REGISTERED
PROFESSIONAL ENGINEER

Joel K. Davenport, Jr. 9/19/00

Joel K. Davenport, Jr. P.E. 79276 — Date

FILE: t:\roa\design\lp1604fm471-90\sow\phase1\ph1cst*a.dgn 15 SEP 2000

LEVEL DISPLAYED 1 2 3 4 5 6 7 8 9 10 11 12 13 14 15 16 17 18 19 20 21 22 23 24 25 26 27 28 29 30 31 32 33 34 35 36 37 38 39 40 41 42 43 44 45 46 47 48 49 50 51 52 53 45 55 56 57 58 59 60 63

©2000 Texas Department of Transportation

# SEQUENCE OF WORK PHASE IC

SHEET 1 OF 6

| FED. RD. DIV. NO. | FEDERAL AID PROJECT NO. | | SHEET NO. |
|---|---|---|---|
| 6 | NH 2000(704), ETC. | | 77 |
| STATE | DIST. | COUNTY | |
| TEXAS | SAT | BEXAR | |
| CONT. | SECT. | JOB | HIGHWAY NO. |
| 2452 | 01 | 036, ETC | LP 1604 |

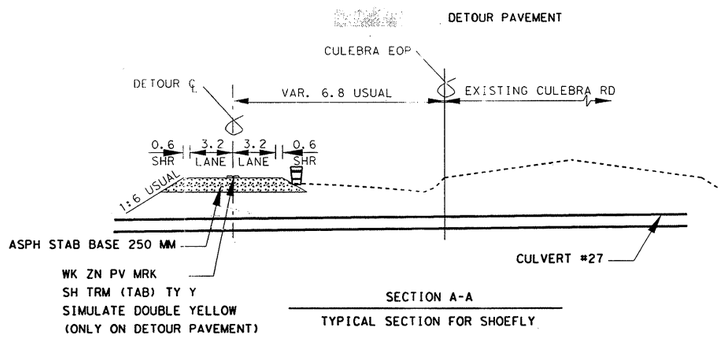


SECTION A-A

TYPICAL SECTION FOR SHOEFLY

| SEQUENCE OF WORK ESTIMATED QUANTITIES | | 2452-01-038 |
|---|---|---|
| ITEM | UNIT | QTY |
| WRK ZN PAV MRK | | |
| SH TRM (TAB) TY Y | EA | 24 |
| CONSTRUCT DETOURS (CL 3) | M2 | 529 |

TRAFFIC FLOW DIRECTION

V.I.A. ASSEMBLY (14 BARRELS EACH LOCATION)

BARRELS

TRAFFIC SIGNAL POLE

SCALE 1:1500

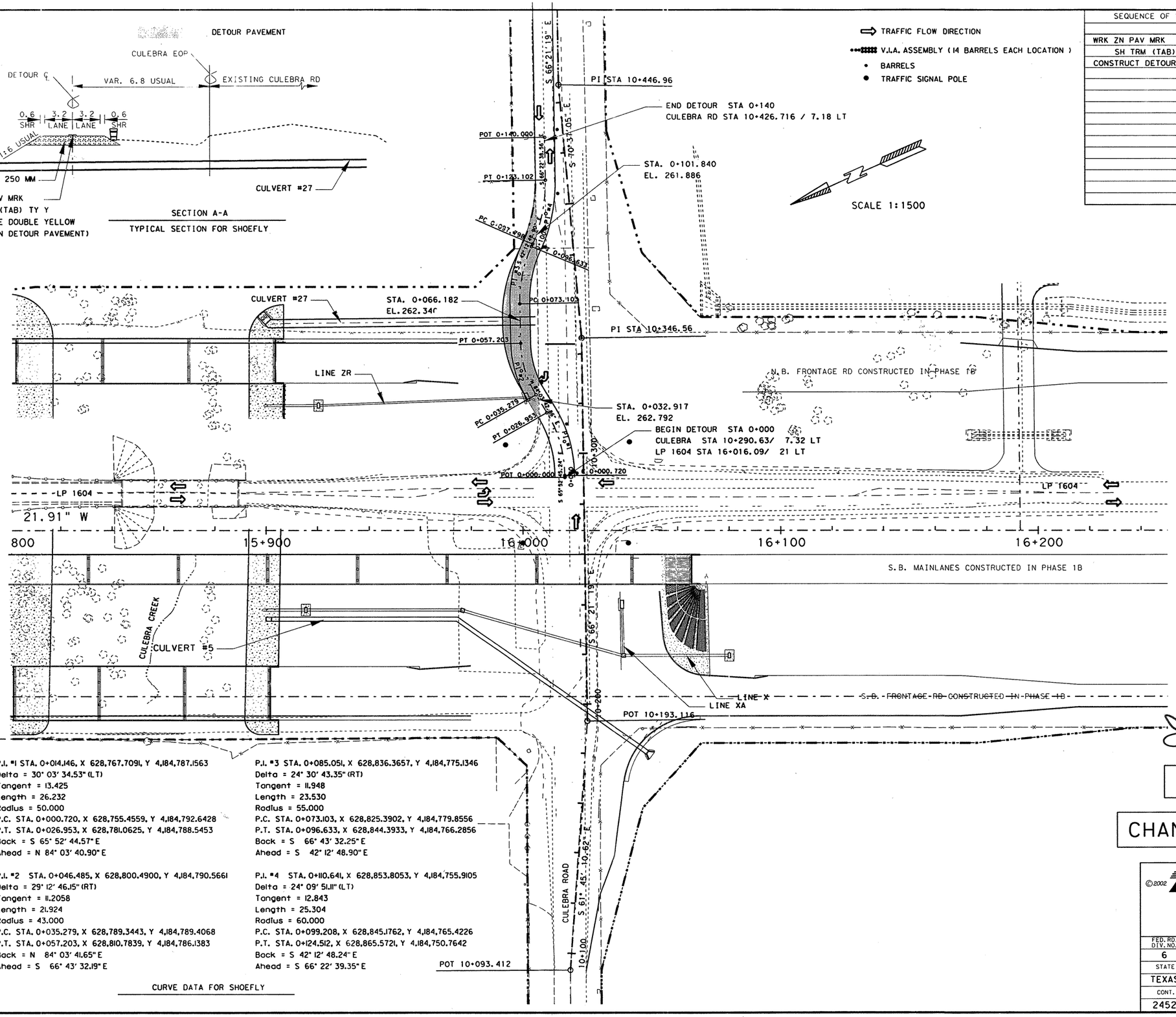


P.I. #1 STA. 0+014.146, X 628,767.7091, Y 4,184,787.1563
Delta = 30° 03' 34.53" (LT)
Tangent = 13.425
Length = 26.232
Radius = 50.000
P.C. STA. 0+000.720, X 628,755.4559, Y 4,184,792.6428
P.T. STA. 0+026.953, X 628,781.0625, Y 4,184,788.5453
Back = S 65° 52' 44.57" E
Ahead = N 84° 03' 40.90" E

P.I. #2 STA. 0+046.485, X 628,800.4900, Y 4,184,790.5661
Delta = 29° 12' 46.15" (RT)
Tangent = 11.2058
Length = 21.924
Radius = 43.000
P.C. STA. 0+035.279, X 628,789.3443, Y 4,184,789.4068
P.T. STA. 0+057.203, X 628,810.7839, Y 4,184,786.1383
Back = N 84° 03' 41.65" E
Ahead = S 66° 43' 32.19" E

P.I. #3 STA. 0+085.051, X 628,836.3657, Y 4,184,775.1346
Delta = 24° 30' 43.35" (RT)
Tangent = 11.948
Length = 23.530
Radius = 55.000
P.C. STA. 0+073.103, X 628,825.3902, Y 4,184,779.8556
P.T. STA. 0+096.633, X 628,844.3933, Y 4,184,766.2856
Back = S 66° 43' 32.25" E
Ahead = S 42° 12' 48.90" E

P.I. #4 STA. 0+110.641, X 628,853.8053, Y 4,184,755.9105
Delta = 24° 09' 51.11" (LT)
Tangent = 12.843
Length = 25.304
Radius = 60.000
P.C. STA. 0+099.208, X 628,845.1762, Y 4,184,765.4226
P.T. STA. 0+124.512, X 628,865.5721, Y 4,184,750.7642
Back = S 42° 12' 48.24" E
Ahead = S 66° 22' 39.35" E

CURVE DATA FOR SHOEFLY

NOTE:
CONTRACTOR SHALL CONSTRUCT SHOEFLY BEFORE CONSTRUCTION OF CULVERT #27 ACROSS CULEBRA.

PAVEMENT MARKINGS SHALL COMPLY TO T.M.U.T.C.D. OR AS DIRECTED BY THE ENGINEER.

USE WORK ZONE CHANNELING DEVICES TO DELINEATE TRAFFIC AS PER T.M.U.T.C.D. OR AS DIRECTED BY THE ENGINEER.

TRAFFIC AT INTERSECTION TO BE CONTROLLED BY OFF-DUTY POLICE OFFICER.

STATE OF TEXAS
JEROME D. PAVLISKA
76075
REGISTERED
PROFESSIONAL ENGINEER

Jerome D. Pavliska, P.E. 10/2/02
Jerome D. Pavliska, P.E. Date

REVISED SHEET

CHANGE ORDER #56

©2002
Texas Department of Transportation

# SEQUENCE OF WORK
# PHASE IC (STAGE B)

SHEET __ OF 10

| FED. RD. DIV. NO. | FEDERAL AID PROJECT NO. | | SHEET NO. |
|---|---|---|---|
| 6 | NH 2000(704), ETC. | | 77B |
| STATE | DIST. | COUNTY | |
| TEXAS | SAT | BEXAR | |
| CONT. | SECT. | JOB | HIGHWAY NO. |
| 2452 | 01 | 036, ETC | LP 1604 |

FILE: $FILE$ LEVEL: DISPLAYED $DATE$

| SEQUENCE OF WORK ESTIMATED QUANTITIES | | 2452-01-038 |
|---|---|---|
| ITEM | UNIT | QTY |
| CONSTRUCT DETOURS (CL 3) | M2 | 608 |
| PORT CONC TRF BAR LOW PRF (MOV & RESET) | M | 61 |
| | | |
| | | |
| | | |

DRAINAGE & ROADWAY CONSTRUCTION

TRANSITIONAL RAMPING

SPAN TYPE BRIDGE CONSTRUCTION

TRAFFIC FLOW DIRECTION

V.I.A. ASSEMBLY (14 BARRELS EACH LOCATION)

SCALE 1:1500

◊ DUE TO EXPECTED GRADE DIFFERENCES THE CONTRACTOR SHALL HAVE TRANSITIONAL RAMPING BETWEEN THE EXISTING & PROPOSED ROADWAY. ALL LABOR AND MATERIALS REQUIRED FOR THIS WORK SHALL BE SUBSIDIARY TO CONSTRUCT DETOUR AND NO DIRECT PAYMENT SHALL BE MADE.

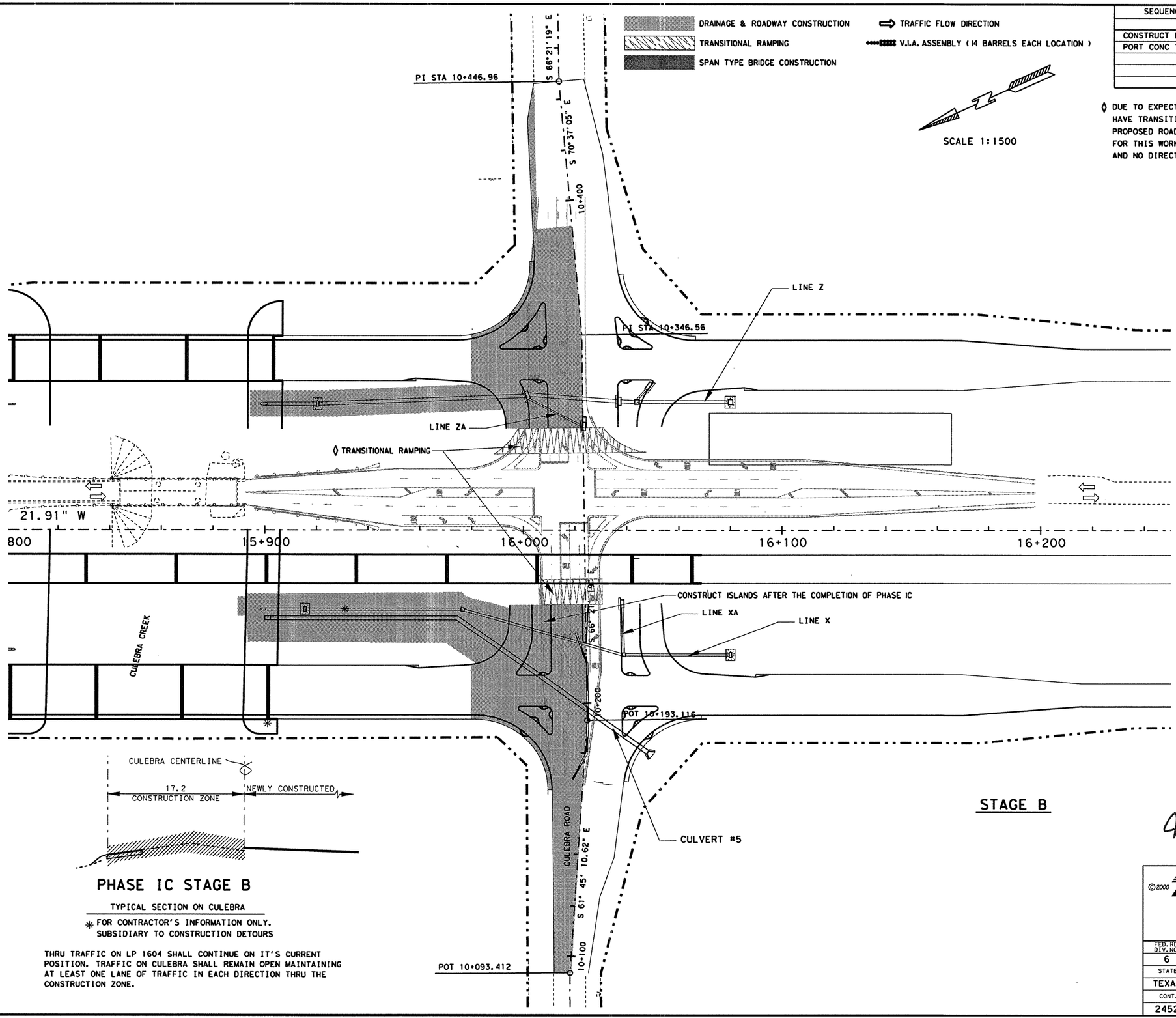





## PHASE IC STAGE B

TYPICAL SECTION ON CULEBRA

* FOR CONTRACTOR'S INFORMATION ONLY. SUBSIDIARY TO CONSTRUCTION DETOURS

THRU TRAFFIC ON LP 1604 SHALL CONTINUE ON IT'S CURRENT POSITION. TRAFFIC ON CULEBRA SHALL REMAIN OPEN MAINTAINING AT LEAST ONE LANE OF TRAFFIC IN EACH DIRECTION THRU THE CONSTRUCTION ZONE.

## STAGE B

STATE OF TEXAS
JOEL K. DAVENPORT, JR.
79276
REGISTERED
PROFESSIONAL ENGINEER

Joel K. Davenport, Jr. 9/19/00

Joel K. Davenport, Jr. P.E. 79276 — Date

©2000

Texas Department of Transportation

# SEQUENCE OF WORK PHASE IC

SHEET 2 OF 6

| FED. RD. DIV. NO. | FEDERAL AID PROJECT NO. | | SHEET NO. |
|---|---|---|---|
| 6 | NH 2000(704), ETC. | | 78 |
| STATE | DIST. | COUNTY | |
| TEXAS | SAT | BEXAR | |
| CONT. | SECT. | JOB | HIGHWAY NO. |
| 2452 | 01 | 036, ETC | LP 1604 |

FILE: t:\gov\design\lp1604fm471-90\sow\phase1\phase1b.dgn 15 SEP 2000
LEVEL DISPLAYED 1 2 3 4 5 6 7 8 9 10 11 12 21 31 41 51 61 71 81 91 92 102 122 324 425 627 728 929 3031 32 33 34 35 45 53 63 73 83 94 104 124 234 445 646 748 949 1516 2635 3645 4556 6576 8596 63

DRAINAGE & ROADWAY CONSTRUCTION

SPAN TYPE BRIDGE CONSTRUCTION

TRAFFIC FLOW DIRECTION

SCALE 1:2000

| ESTIMATED QUANTITIES | | 2452-01-037 | 2452-01-038 |
|---|---|---|---|
| ITEM | UNIT | QTY | QTY |
| | | | |
| | | | |
| | | | |
| | | | |
| | | | |
| | | | |

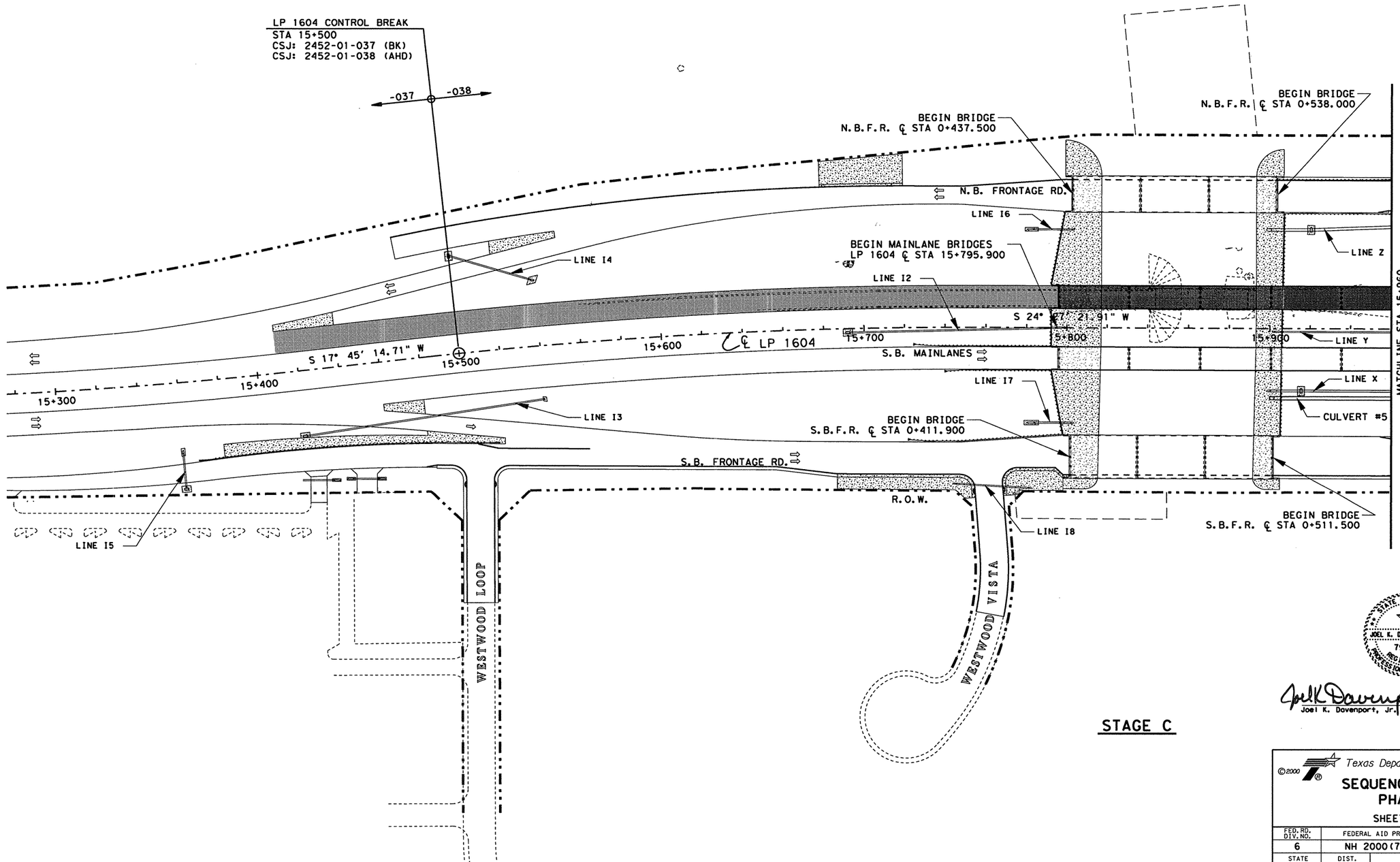


STAGE C

STATE OF TEXAS
JOEL K. DAVENPORT, JR.
79276
REGISTERED
PROFESSIONAL ENGINEER

Joel K Davenport, Jr. 9/19/00

Joel K. Davenport, Jr. P.E. 79276 — Date

©2000

Texas Department of Transportation

# SEQUENCE OF WORK
## PHASE IC

SHEET 3 OF 6

| FED. RD. DIV. NO. | FEDERAL AID PROJECT NO. | | SHEET NO. |
|---|---|---|---|
| 6 | NH 2000(704), ETC. | | 79 |
| STATE | DIST. | COUNTY | |
| TEXAS | SAT | BEXAR | |
| CONT. | SECT. | JOB | HIGHWAY NO. |
| 2452 | 01 | 036, ETC | LP 1604 |

FILE: t:\roadesign\lp1604fm471-90\sow\phase1\ph1c#st#01.dgn 15 SEP 2000

LEVEL DISPLAYED: 1 2 3 4 5 6 7 8 9 10 11 12 13 14 15 16 17 18 19 20 21 22 23 24 25 26 27 28 29 30 31 32 33 34 35 36 37 38 39 40 41 42 43 44 45 46 47 48 49 50 51 52 53 54 55 56 57 58 59 60 61 63

DRAINAGE & ROADWAY CONSTRUCTION

SPAN TYPE BRIDGE CONSTRUCTION

TRAFFIC FLOW DIRECTION

| ESTIMATED QUANTITIES | | 2452-01-037 |
|---|---|---|
| ITEM | UNIT | QTY |
| | | |
| | | |
| | | |
| | | |
| | | |

SCALE 1:2000

THRU TRAFFIC ON LP 1604 SHALL BE ON THE NEWLY CONSTRUCTED FRONTAGE ROADS. TRAFFIC ON CULEBRA SHALL BE TEMPORARILY ALTERED TO ACCOMMODATE CONSTRUCTION ON THE SOUTH HALF OF CULEBRA.

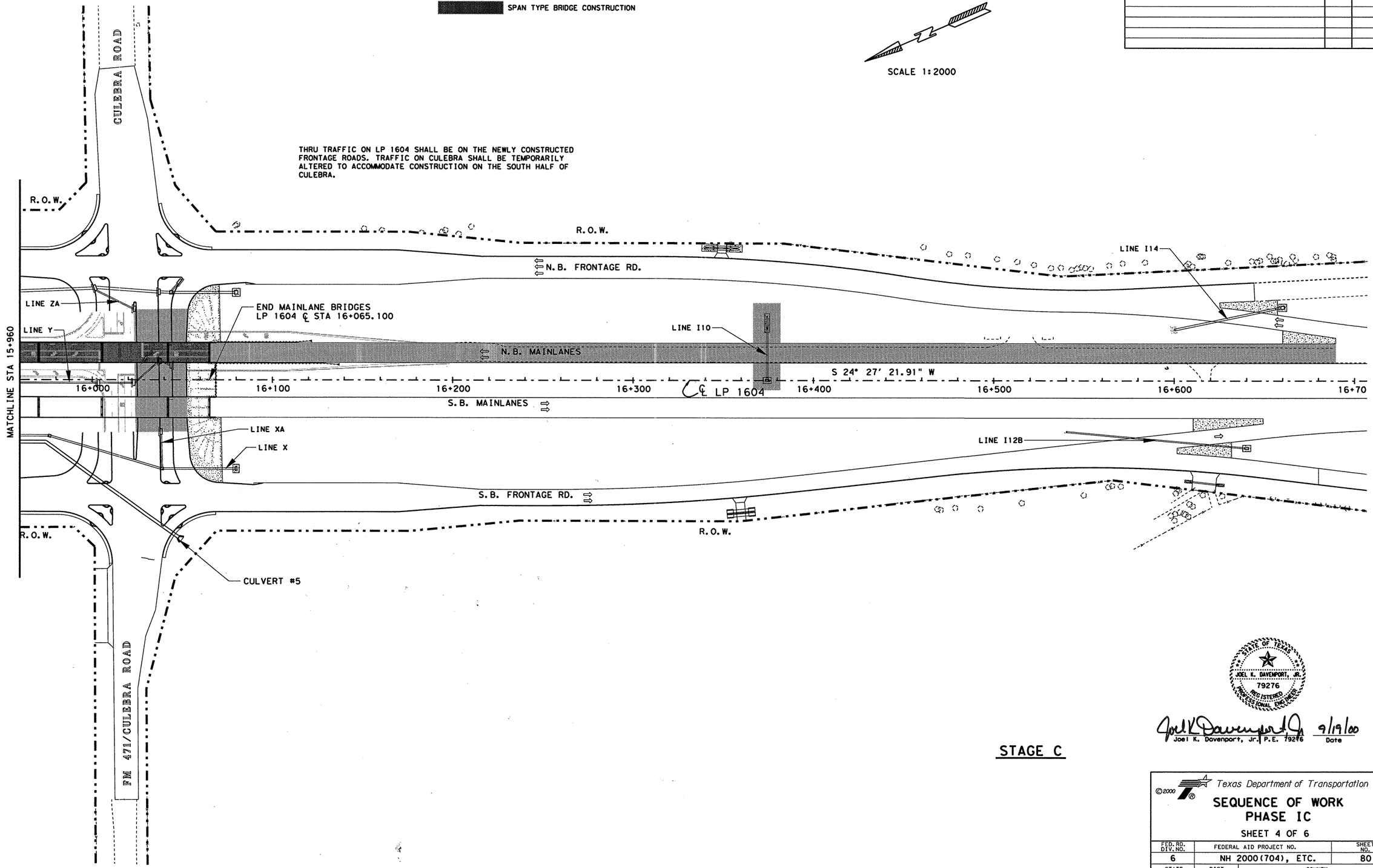


STAGE C

STATE OF TEXAS
JOEL K. DAVENPORT, JR.
79276
REGISTERED
PROFESSIONAL ENGINEER

Joel K Davenport Jr 9/19/00

Joel K. Davenport, Jr. P.E. 79276 — Date

©2000

Texas Department of Transportation

# SEQUENCE OF WORK PHASE IC

SHEET 4 OF 6

| FED. RD. DIV. NO. | FEDERAL AID PROJECT NO. | | SHEET NO. |
|---|---|---|---|
| 6 | NH 2000(704), ETC. | | 80 |
| STATE | DIST. | COUNTY | |
| TEXAS | SAT | BEXAR | |
| CONT. | SECT. | JOB | HIGHWAY NO. |
| 2452 | 01 | 036,ETC | LP 1604 |

FILE: t:\dgn\design\lp1604fm471-90\sow\phase1\dh*1c*st*c2.dgn 15 SEP 2000

LEVEL DISPLAYED

| 1 | 2 | 3 | 4 | 5 | 6 | 7 | 8 | 9 | 10 | 11 | 12 | 13 | 14 | 15 | 16 | 17 | 18 | 19 | 20 | 21 | 22 | 23 | 24 | 25 | 26 | 27 | 28 | 29 | 30 | 31 | 32 |
|---|---|---|---|---|---|---|---|---|---|---|---|---|---|---|---|---|---|---|---|---|---|---|---|---|---|---|---|---|---|---|---|
| 33 | 34 | 35 | 53 | 58 | 63 | 76 | 80 | 39 | 40 | 41 | 142 | 43 | 44 | 45 | 46 | 47 | 48 | 49 | 60 | 51 | 52 | 53 | 54 | 55 | 56 | 65 | 76 | 86 | 96 | 0 | 63 |

DRAINAGE & ROADWAY CONSTRUCTION

SPAN TYPE BRIDGE CONSTRUCTION

TRAFFIC FLOW DIRECTION

SCALE 1:2000

| ESTIMATED QUANTITIES | | 2452-01-037 | 2452-01-038 |
|---|---|---|---|
| ITEM | UNIT | QTY | QTY |
| | | | |
| | | | |
| | | | |
| | | | |
| | | | |

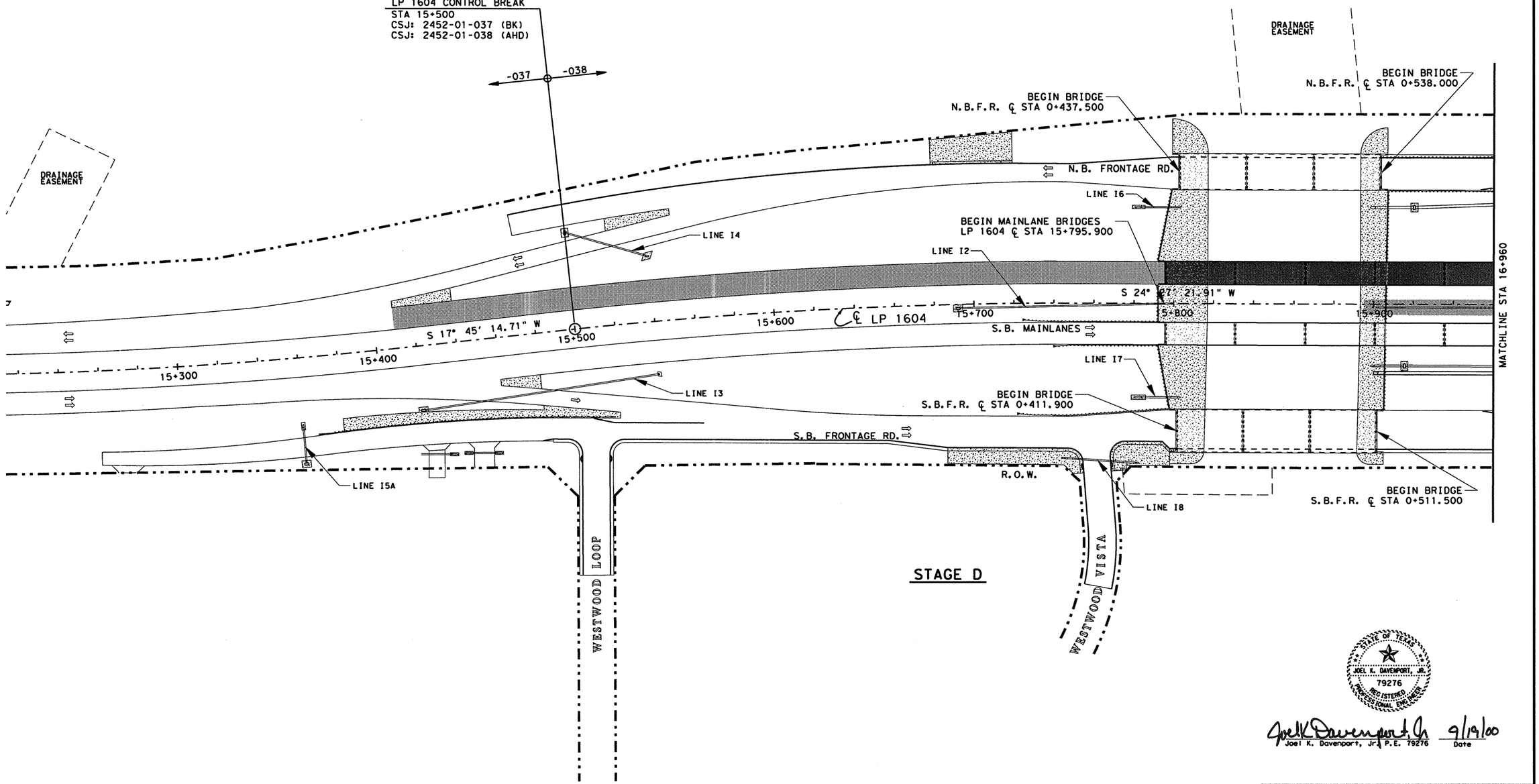


STATE OF TEXAS
JOEL K. DAVENPORT, JR.
79276
REGISTERED PROFESSIONAL ENGINEER

Joel K. Davenport, Jr. 9/19/00

Joel K. Davenport, Jr., P.E. 79276 — Date

FILE: t:\ao\design\lp1604fm471-90\sow\phase1\ph*ic*st*rdl.dgn — 15 SEP 2000

LEVEL DISPLAYED: 1 2 3 4 5 6 7 8 9 10 11 12 13 14 15 16 17 18 19 20 21 22 23 24 25 26 27 28 29 30 31 32 33 34 35 36 37 38 39 40 41 42 43 44 45 46 47 48 49 50 51 52 53 54 55 56 57 58 59 60 61 62 63

©2000

Texas Department of Transportation

# SEQUENCE OF WORK
# PHASE IC

SHEET 5 OF 6

| FED. RD. DIV. NO. | FEDERAL AID PROJECT NO. | | SHEET NO. |
|---|---|---|---|
| 6 | NH 2000(704), ETC. | | 81 |
| STATE | DIST. | COUNTY | |
| TEXAS | SAT | BEXAR | |
| CONT. | SECT. | JOB | HIGHWAY NO. |
| 2452 | 01 | 036,ETC | LP 1604 |

DRAINAGE & ROADWAY CONSTRUCTION

SPAN TYPE BRIDGE CONSTRUCTION

TRAFFIC FLOW DIRECTION

SCALE 1:2000

| ESTIMATED QUANTITIES | | 2452-01-037 |
|---|---|---|
| ITEM | UNIT | QTY |
| | | |
| | | |
| | | |
| | | |
| | | |

THRU TRAFFIC ON LP 1604 SHALL BE ON THE NEWLY CONSTRUCTED FRONTAGE ROADS. TRAFFIC ON CULEBRA SHALL BE TEMPORARILY ALTERED TO ACCOMMODATE CONSTRUCTION ON THE NORTH HALF OF CULEBRA.

CULEBRA ROAD

R.O.W.

LINE Z

R.O.W.

LINE I14

N.B. FRONTAGE RD.

LINE ZA

END MAINLANE BRIDGES
LP 1604 ℄ STA 16+065.100

LINE Y

LINE I10

N.B. MAINLANES

S 24° 27' 21.91" W

MATCHLINE STA 15+960

16+000 16+100 16+200 16+300 ℄ LP 1604 16+400 16+500 16+600 16+70

S.B. MAINLANES

LINE XA

LINE X

LINE I12B

S.B. FRONTAGE RD.

R.O.W.

R.O.W.

CULVERT #5

FM 471/CULEBRA ROAD

STAGE D

STATE OF TEXAS
JOEL K. DAVENPORT, JR.
79276
REGISTERED
PROFESSIONAL ENGINEER

Joel K. Davenport, Jr. 9/19/00

Joel K. Davenport, Jr. P.E. 79276 Date

FILE: t:\ao\design\lp1604fm471-90\sow\phase1\phase1sht2.dgn 15 SEP 2000

LEVEL DISPLAYED 1 2 3 4 5 6 7 8 9 10 11 12 13 14 15 16 17 18 19 20 21 22 23 24 25 26 27 28 29 30 31 32 33 34 35 36 37 38 39 40 41 42 43 44 45 46 47 48 49 50 51 52 53 54 55 56 57 58 59 60 61 62 63

© 2000 Texas Department of Transportation

# SEQUENCE OF WORK
# PHASE IC

SHEET 6 OF 6

| FED. RD. DIV. NO. | FEDERAL AID PROJECT NO. | | SHEET NO. |
|---|---|---|---|
| 6 | NH 2000(704), ETC. | | 82 |
| STATE | DIST. | COUNTY | |
| TEXAS | SAT | BEXAR | |
| CONT. | SECT. | JOB | HIGHWAY NO. |
| 2452 | 01 | 036, ETC | LP 1604 |

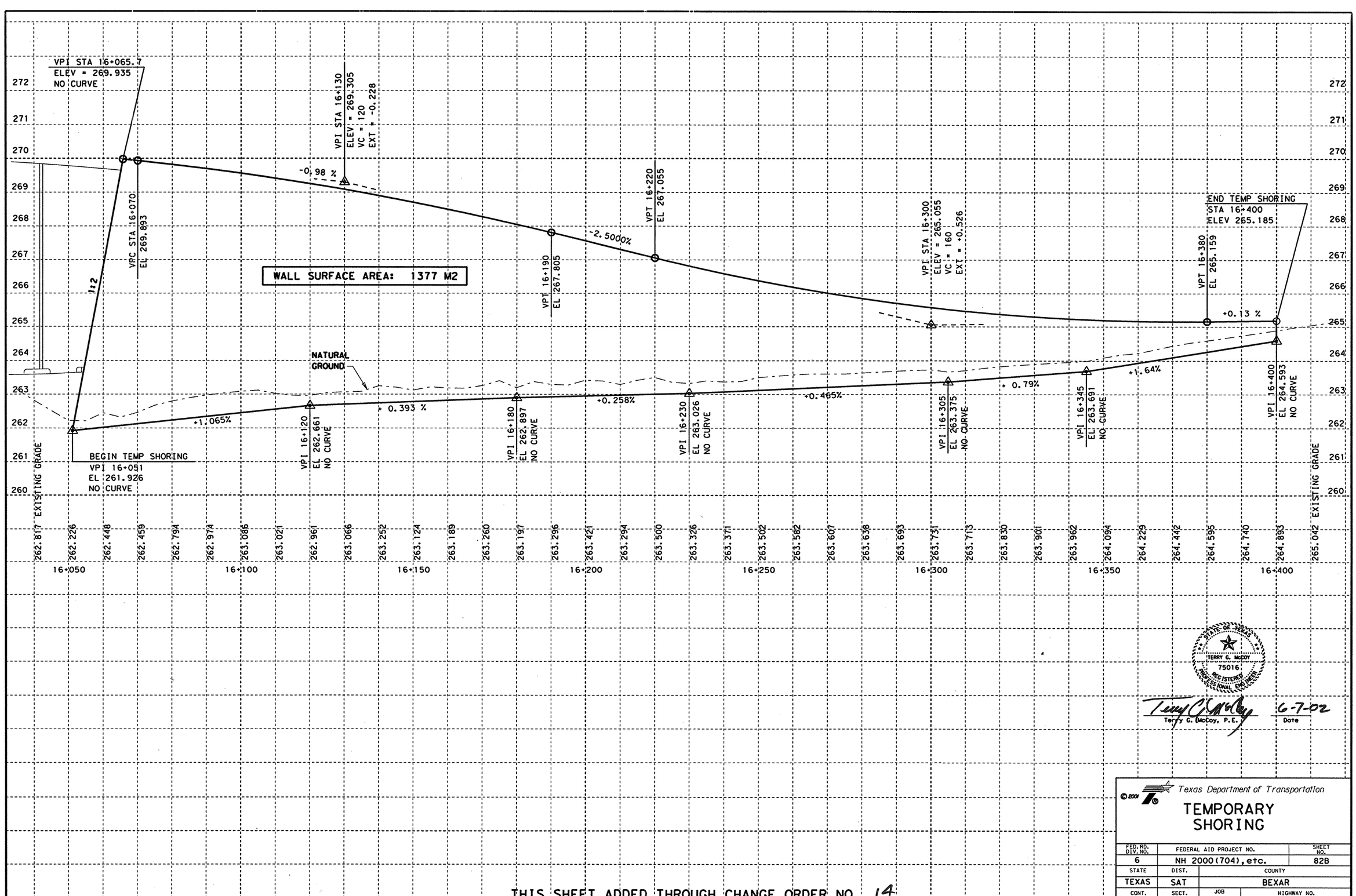


LEVELS DISPLAYED
1 2 3 4 5 6 7 8 9 10 11 12 13 14 15 16
17 18 19 20 21 22 23 24 25 26 27 28 29 30 31 32
33 34 35 36 37 38 39 40 41 42 43 44 45 46 47 48
49 50 51 52 53 54 55 56 57 58 59 60 61 62 63

ACC: ip1604fm471-90\sow\

FILE: tempshoring.dgn

STATE OF TEXAS
TERRY G. McCOY
75016
REGISTERED PROFESSIONAL ENGINEER

Terry G. McCoy, P.E.

6-7-02
Date

THIS SHEET ADDED THROUGH CHANGE ORDER NO. 14.

Texas Department of Transportation

# TEMPORARY SHORING

| FED.RD. DIV.NO. | FEDERAL AID PROJECT NO. | | SHEET NO. |
|---|---|---|---|
| 6 | NH 2000(704), etc. | | 82B |
| STATE | DIST. | COUNTY | |
| TEXAS | SAT | BEXAR | |
| CONT. | SECT. | JOB | HIGHWAY NO. |
| 2452 | 01 | 036, etc. | LP 1604 |

LONG TERM SPECIAL SIGNING ON LP 1604 & CULEBRA RD VICINITY

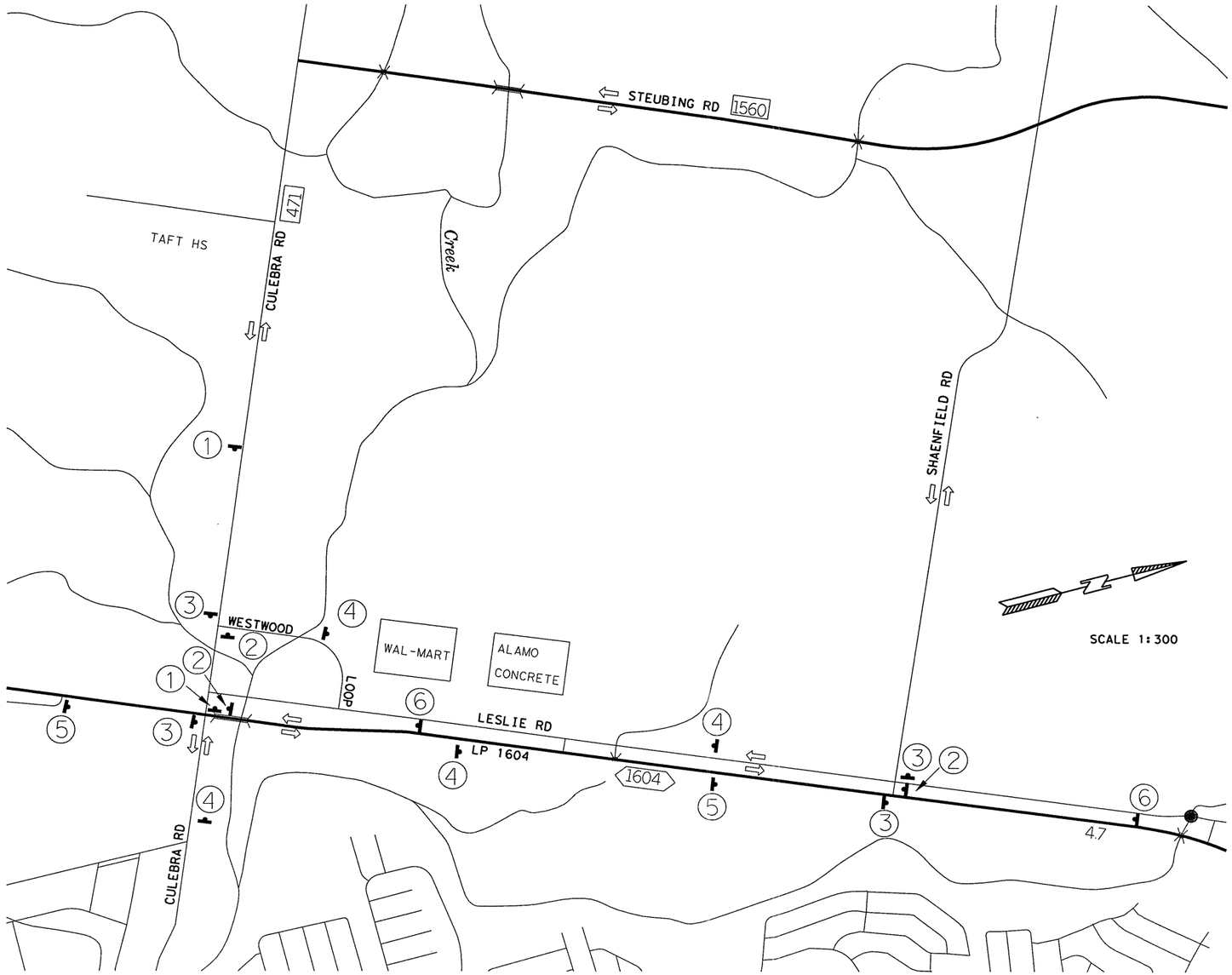


SCALE 1:300

1. LESLIE RD. CLOSED USE WESTWOOD LOOP
   BLACK ON ORANGE
2. WALMART & BUSINESS ACCESS ⇨
   WHITE ON BLUE
3. WALMART & BUSINESS ACCESS ⇦
   WHITE ON BLUE
4. WALMART & BUSINESS ACCESS ⇧
   WHITE ON BLUE
5. WALMART & BUSINESS ACCESS ⇦
   WHITE ON BLUE
6. WALMART & BUSINESS ACCESS ⇨
   WHITE ON BLUE

STATE OF TEXAS
TERRY G. McCOY
75016
REGISTERED PROFESSIONAL ENGINEER

Terry G. McCoy, P.E. — 9-26-01 Date

THIS SHEET ADDED THROUGH CHANGE ORDER NO. 14.

© 2001
Texas Department of Transportation

# LP1604 VICINITY SPECIAL SIGNS ALONG DETOUR RTE

SHEET 1 OF 4

| FED. RD. DIV. NO. | FEDERAL AID PROJECT NO. | | SHEET NO. |
|---|---|---|---|
| 6 | NH 2000(704), ETC. | | 82C |
| STATE | DIST. | COUNTY | |
| TEXAS | SAT | BEXAR | |
| CONT. | SECT. | JOB | HIGHWAY NO. |
| 2452 | 01 | 036,ETC | LP 1604 |

FILE: t:\AGV\Design\lp1604fm471-90\Road\sre\layout.dgn 09/14/01
LEVEL DISPLAYED
1 2 3 4 5 6 7 8 9 10 11 12 13 14 15 16 17 18 19 20 21 22 23 24 25 26 27 28 29 30 31 32 33 34 35 36 37 38 39 40 41 42 43 44 45 46 47 48 49 50 51 52 53 54 55 56 57 58 59 60 61 62 63

SHORT TERM ROAD CLOSURE OF FM 471 (CULEBRA RD)
DETOUR ROUTE FOR: PHASE 1A - 1B

CULEBRA RD WILL BE REQUIRED TO BE CLOSED DURING VARIOUS STAGES OF CONSTRUCTION. TRAFFIC TRAVELING NORTHBOUND AND SOUTHBOUND ON LP 1604 WILL NOT BE AFFECTED.

THESE CLOSURES WILL BE RESTRICTED TO WEEKENDS AS APPROVED BY THE ENGINEER. SEVEN DAYS ADVANCE NOTIFICATION WILL BE REQUIRED FOR APPROVAL.

THE CONTRACTOR SHALL SUBMIT TO THE ENGINEER A TRAFFIC CONTROL PLAN PRIOR TO ANY LANE CLOSURES.

DURING THE DETOUR OR AS DIRECTED BY THE ENGINEER, THE CONTRACTOR SHALL PROVIDE AT LEAST ONE (1) FULL TIME OFF DUTY UNIFORMED CERTIFIED PEACE OFFICER AND AT LEAST ONE (1) VEHICLE OF THE TYPE APPROVED BY THE ENGINEER AT ALL SIGNALIZED INTERSECTIONS AFFECTED BY THE DETOUR. THE CONTRACTOR SHALL BE REIMBURSED FOR THE COST OF THE PEACE OFFICER(S) AND VEHICLE(S) BY TXDOT.

THE DETOUR IS DESCRIBED AS FOLLOWS:

--AFFECTED TRAFFIC TRAVELING EASTBOUND FM 471 (CULEBRA RD)

TRAFFIC SHALL TURN NORTH ONTO WESTWOOD LOOP AND THEN CONTINUE TO LESLIE RD. ON LESLIE RD CONTINUE NORTH TO SHAENFIELD RD AND CROSS OVER LP 1604. HEAD SOUTH ON LP 1604 TO CULEBRA RD TO CONTINUE EASTBOUND ON CULEBRA RD.

--AFFECTED TRAFFIC TRAVELING WESTBOUND FM 471 (CULEBRA RD)

TRAFFIC SHALL TURN ONTO NORTHBOUND LP 1604 AND TRAVEL NORTH TO SHAENFIELD RD. AT SHAENFIELD RD, CROSS OVER LP 1604 TO LESLIE RD THEN HEAD SOUTH ON LESLIE RD TO WESTWOOD LP TO CONTINUE WESTBOUND ON CULEBRA RD.

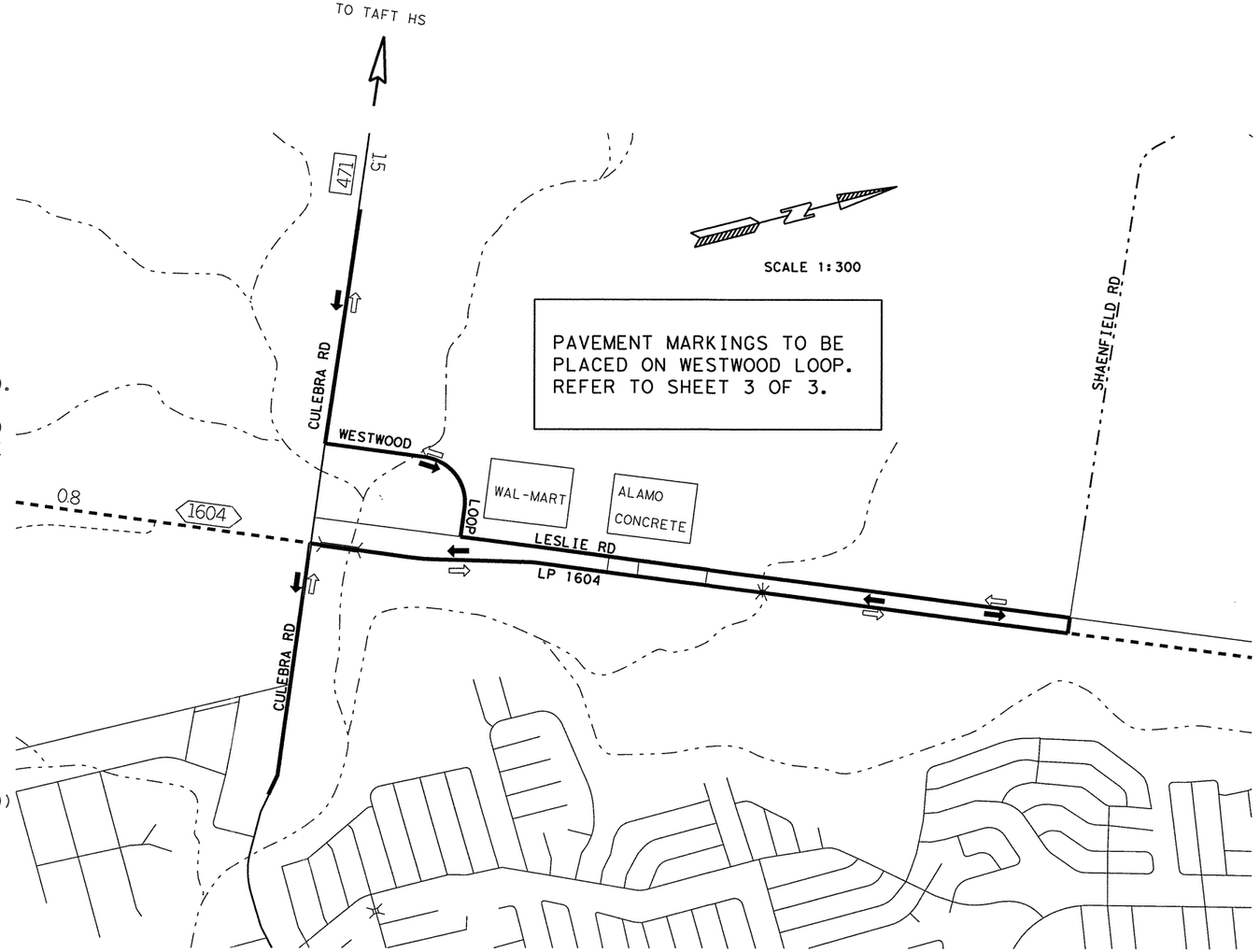


FILE: t:\MO\Design\lp1604fm471-90\Roadway\sreV1layout.dgn 09/14/01
LEVEL DISPLAYED
1 2 3 4 5 6 7 8 9 10 11 12 13 14 15 16 17 18 19 20 21 22 23 24 25 26 27 28 29 30 31 32
33 34 35 36 37 38 39 40 41 42 43 44 45 46 47 48 49 50 51 52 53 54 55 56 57 58 59 60 61 62 63

STATE OF TEXAS
TERRY G. McCOY
75016
REGISTERED PROFESSIONAL ENGINEER

Terry G. McCoy
Terry G. McCoy, P.E.

9-26-01
Date

THIS SHEET ADDED THROUGH CHANGE ORDER NO. 14.

© 2001
Texas Department of Transportation

CULEBRA RD
SHORT TERM ROAD CLOSURE
DETOUR ROUTE PHASE I A - I B
SHEET2 OF 4

| FED. RD. DIV. NO. | FEDERAL AID PROJECT NO. | | SHEET NO. |
|---|---|---|---|
| 6 | NH 2000(704), ETC. | | 82D |
| STATE | DIST. | COUNTY | |
| TEXAS | SAT | BEXAR | |
| CONT. | SECT. | JOB | HIGHWAY NO. |
| 2452 | 01 | 036,ETC | LP 1604 |

SHORT TERM ROAD CLOSURE OF FM 471 (CULEBRA RD)
DETOUR ROUTE FOR: PHASE IC

CULEBRA RD WILL BE REQUIRED TO BE CLOSED DURING VARIOUS STAGES OF CONSTRUCTION. TRAFFIC TRAVELING NORTHBOUND AND SOUTHBOUND ON LP 1604 WILL NOT BE AFFECTED.

THESE CLOSURES WILL BE RESTRICTED TO WEEKENDS AS APPROVED BY THE ENGINEER. SEVEN DAYS ADVANCE NOTIFICATION WILL BE REQUIRED FOR APPROVAL.

THE CONTRACTOR SHALL SUBMIT TO THE ENGINEER A TRAFFIC CONTROL PLAN PRIOR TO ANY LANE CLOSURES.

DURING THE DETOUR OR AS DIRECTED BY THE ENGINEER, THE CONTRACTOR SHALL PROVIDE AT LEAST ONE (1) FULL TIME OFF DUTY UNIFORMED CERTIFIED PEACE OFFICER AND AT LEAST ONE (1) VEHICLE OF THE TYPE APPROVED BY THE ENGINEER AT ALL SIGNALIZED INTERSECTIONS AFFECTED BY THE DETOUR. THE CONTRACTOR SHALL BE REIMBURSED FOR THE COST OF THE PEACE OFFICER(S) AND VEHICLE(S) BY TXDOT.

THE DETOUR IS DESCRIBED AS FOLLOWS:

--AFFECTED TRAFFIC TRAVELING WESTBOUND FM 471 (CULEBRA RD)

TRAFFIC SHALL TURN ONTO LP 1604. THEN PROCEED NORTH TO SHAENFIELD RD. CROSSOVER AT SHAENFIELD RD AND CONTINUE SOUTH ON LP 1604. EXIT CULEBRA RD TO CONTINUE WESTBOUND ON CULEBRA RD.

--AFFECTED TRAFFIC TRAVELING EASTBOUND FM 471 (CULEBRA RD)

DETOUR TRAFFIC ONTO SOUTHBOUND LP 1604 TO SH 151. TRAVEL EAST ON SH 151 AND CROSS OVER AT WISEMAN BLVD, HEAD WEST ON SH 151 TO LP 1604. ON LP 1604, HEAD NORTH TO CULEBRA RD TO CONTINUE EASTBOUND ON CULEBRA RD.

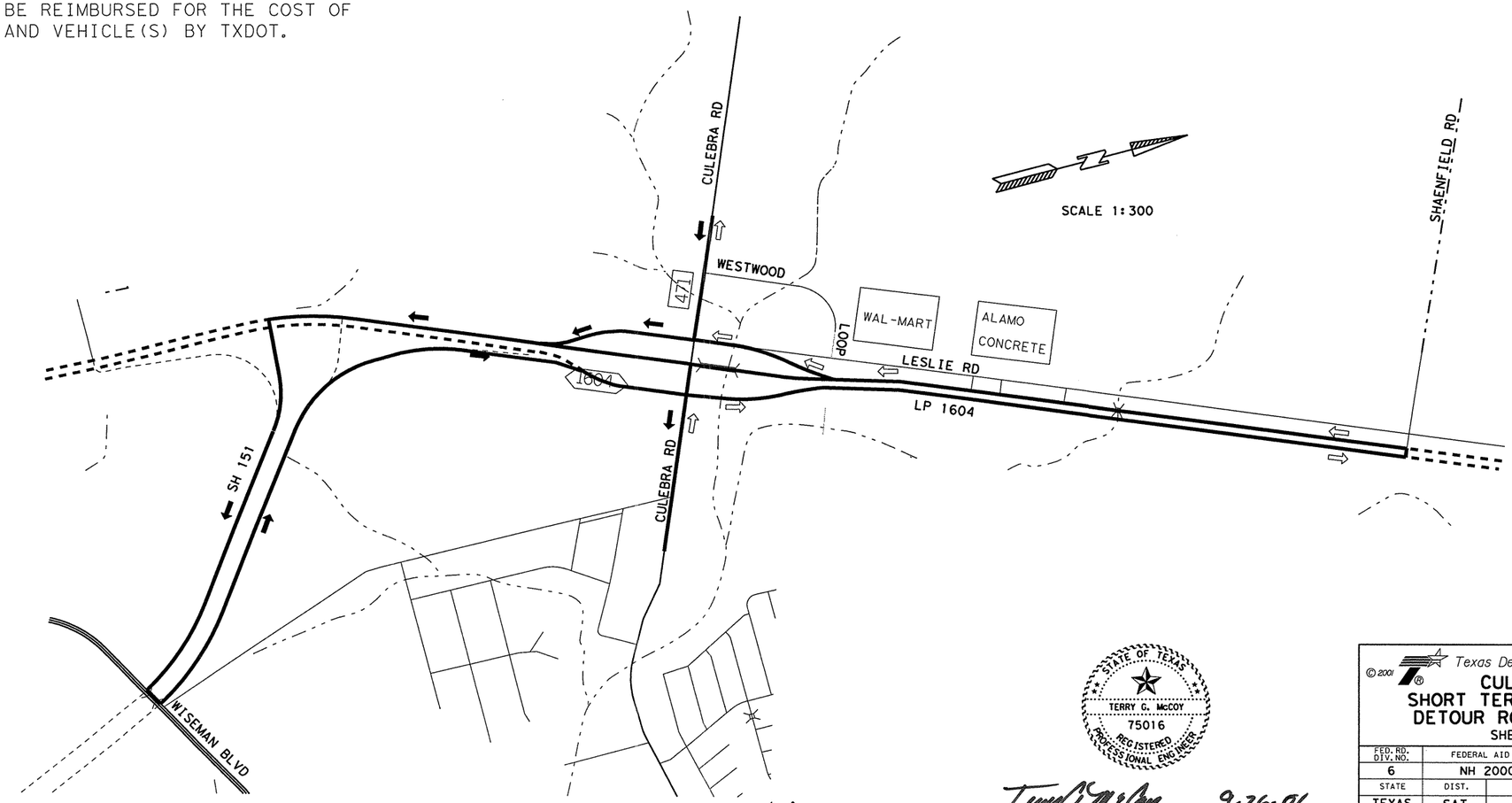


THIS SHEET ADDED THROUGH CHANGE ORDER NO. 14.

STATE OF TEXAS
TERRY G. McCOY
75016
REGISTERED PROFESSIONAL ENGINEER

Terry G. McCoy, P.E. — 9.26.01 Date

© 2001
Texas Department of Transportation

# CULEBRA RD
# SHORT TERM ROAD CLOSURE
# DETOUR ROUTE PHASE I C

SHEET 3 OF 4

| FED. RD. DIV. NO. | FEDERAL AID PROJECT NO. | | SHEET NO. |
|---|---|---|---|
| 6 | NH 2000(704), ETC. | | 82E |
| STATE | DIST. | COUNTY | |
| TEXAS | SAT | BEXAR | |
| CONT. | SECT. | JOB | HIGHWAY NO. |
| 2452 | 01 | 036,ETC | LP 1604 |

FILE I:\AO\Design\lp1604fm471-90\Road*clsre\layout.dgn 09/14/01
LEVEL DISPLAYED 1 2 3 4 5 6 7 8 9 10 11 12 13 14 15 16 17 18 19 20 21 22 23 24 25 26 27 28 29 30 31 32 33 34 35 36 37 38 39 40 41 42 43 44 45 46 47 48 49 50 51 52 53 54 55 56 57 58 59 60 61 63

| ESTIMATED QUANTITIES | | |
|---|---|---|
| ITEM | UNIT | QUANTITY |
| * REFL PAV MRK TY II (Y)(SLD)(100 MM) | M | 1482 |
| * REFL PAV MRK TY II (W)(SLD)(600 MM) | M | 12.2 |
| | | |
| | | |

*DONE BY OTHERS

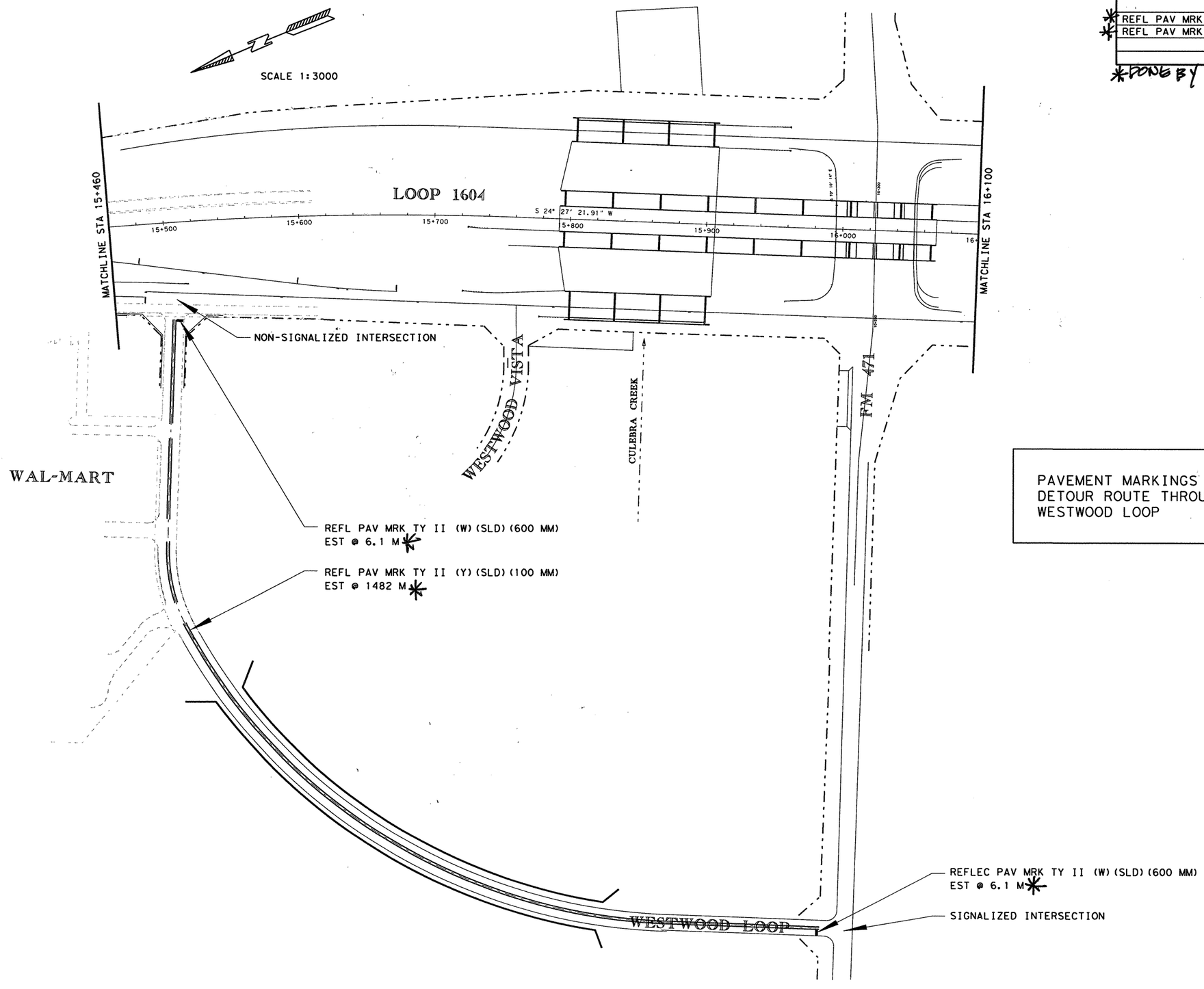


PAVEMENT MARKINGS PLACED FOR DETOUR ROUTE THROUGH WESTWOOD LOOP

THIS SHEET ADDED THROUGH CHANGE ORDER NO. 14.

STATE OF TEXAS
TERRY G. McCOY
75016
REGISTERED PROFESSIONAL ENGINEER

Terry G. McCoy
Terry G. McCoy, P.E.

9-26-01
Date

© 2001

Texas Department of Transportation

# DETOUR ROUTE: WESTWOOD LOOP PAVEMENT MRKINGS

SHEET 4 OF 4

| FED. RD. DIV. NO. | FEDERAL AID PROJECT NO. | | SHEET NO. |
|---|---|---|---|
| 6 | NH 2000(704), ETC. | | 82F |
| STATE | DIST. | COUNTY | |
| TEXAS | SAT | BEXAR | |
| CONT. | SECT. | JOB | HIGHWAY NO. |
| 2452 | 01 | 036,ETC | LP 1604 |

FILE: t:\AO\Design\lp1604fm471-90\Road+clsre\longterm+culebra.dgn 09/14/01
LEVEL DISPLAYED 1 2 3 4 5 6 7 8 9 10 11 12 13 14 15 16 17 18 19 20 21 22 23 24 25 26 27 28 29 30 31 32 33 34 35 36 37 38 39 40 41 42 43 44 45 46 47 48 49 50 51 52 53 54 55 56 57 58 59 60 61 62 63

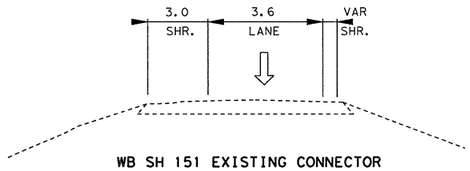


WB SH 151 EXISTING CONNECTOR

TYPICAL SECTION

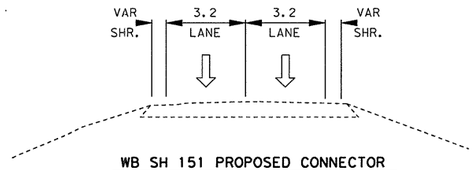


WB SH 151 PROPOSED CONNECTOR

TYPICAL SECTION A-A

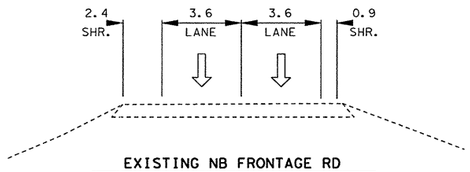


EXISTING NB FRONTAGE RD

TYPICAL SECTION B-B

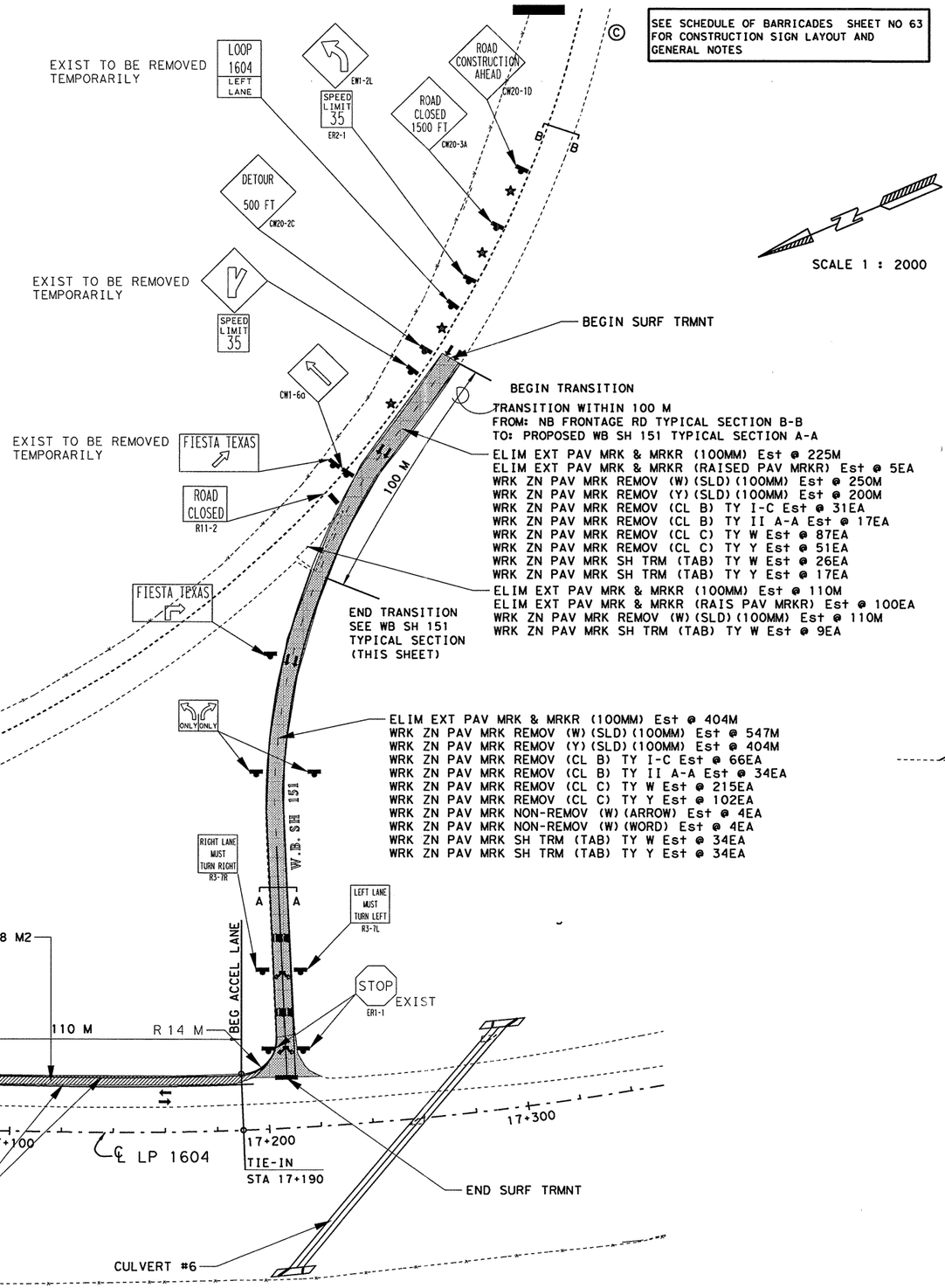


SEE SCHEDULE OF BARRICADES SHEET NO 63 FOR CONSTRUCTION SIGN LAYOUT AND GENERAL NOTES

SCALE 1 : 2000

BEGIN SURF TRMNT

BEGIN TRANSITION

TRANSITION WITHIN 100 M
FROM: NB FRONTAGE RD TYPICAL SECTION B-B
TO: PROPOSED WB SH 151 TYPICAL SECTION A-A

ELIM EXT PAV MRK & MRKR (100MM) Est @ 225M
ELIM EXT PAV MRK & MRKR (RAISED PAV MRKR) Est @ 5EA
WRK ZN PAV MRK REMOV (W)(SLD)(100MM) Est @ 250M
WRK ZN PAV MRK REMOV (Y)(SLD)(100MM) Est @ 200M
WRK ZN PAV MRK REMOV (CL B) TY I-C Est @ 31EA
WRK ZN PAV MRK REMOV (CL B) TY II A-A Est @ 17EA
WRK ZN PAV MRK REMOV (CL C) TY W Est @ 87EA
WRK ZN PAV MRK REMOV (CL C) TY Y Est @ 51EA
WRK ZN PAV MRK SH TRM (TAB) TY W Est @ 26EA
WRK ZN PAV MRK SH TRM (TAB) TY Y Est @ 17EA
ELIM EXT PAV MRK & MRKR (100MM) Est @ 110M
ELIM EXT PAV MRK & MRKR (RAIS PAV MRKR) Est @ 100EA
WRK ZN PAV MRK REMOV (W)(SLD)(100MM) Est @ 110M
WRK ZN PAV MRK SH TRM (TAB) TY W Est @ 9EA

END TRANSITION
SEE WB SH 151
TYPICAL SECTION
(THIS SHEET)

ELIM EXT PAV MRK & MRKR (100MM) Est @ 404M
WRK ZN PAV MRK REMOV (W)(SLD)(100MM) Est @ 547M
WRK ZN PAV MRK REMOV (Y)(SLD)(100MM) Est @ 404M
WRK ZN PAV MRK REMOV (CL B) TY I-C Est @ 66EA
WRK ZN PAV MRK REMOV (CL B) TY II A-A Est @ 34EA
WRK ZN PAV MRK REMOV (CL C) TY W Est @ 215EA
WRK ZN PAV MRK REMOV (CL C) TY Y Est @ 102EA
WRK ZN PAV MRK NON-REMOV (W)(ARROW) Est @ 4EA
WRK ZN PAV MRK NON-REMOV (W)(WORD) Est @ 4EA
WRK ZN PAV MRK SH TRM (TAB) TY W Est @ 34EA
WRK ZN PAV MRK SH TRM (TAB) TY Y Est @ 34EA

END SURF TRMNT

ELIM EXT PAV MRK & MRKR (100MM) Est @ 200M
WRK ZN PAV MRK NON-REMOV (W)(SLD)(100MM) Est @ 318M
WRK ZN PAV MRK SH TRM (TAB) TY W Est @ 53EA

| ESTIMATED QUANTITIES | | |
|---|---|---|
| ITEM | UNIT | QTY |
| AGGR (TY PB, GR 4) | M3 | 23 |
| ASPH (AC-15P, HFRS-2P OR CRS-2P) | L | 3351 |
| ELIM EXT PAV MRK & MRKR (100 MM) | M | 939 |
| ELIM EXT PAV MRK & MRKR (RAIS PAV MRKR) | EA | 105 |
| WRK ZN PAV MRK REMOV (W)(SLD)(100MM) | M | 907 |
| WRK ZN PAV MRK NON REMOV (W)(SLD)(100MM) | M | 318 |
| WRK ZN PAV MRK REMOV (Y)(SLD)(100MM) | M | 604 |
| WRK ZN PAV MRK NON-REMOV (W)(WORD) | EA | 4 |
| WRK ZN PAV MRK NON-REMOV (W)(ARROW) | EA | 4 |
| WRK ZN PAV MRK REMOV (CL B) TY I-C | EA | 97 |
| WRK ZN PAV MRK REMOV (CL B) TY II A-A | EA | 51 |
| WRK ZN PAV MRK REMOV (CL C) TY W | EA | 302 |
| WRK ZN PAV MRK REMOV (CL C) TY Y | EA | 153 |
| WRK ZN PAV SH TRM (TAB) TY W | EA | 122 |
| WRK ZN PAV SH TRM (TAB) TY Y | EA | 51 |
| CONSTRUCT DETOURS (CL 3) | M2 | 558 |

GENERAL NOTES:

AT THE TERMINATION OF THE DETOUR CONDITION, PLACE ONE CRSE SURF TRMNT BEFORE OPENING TRAFFIC TO THE EXISTING NB FRONTAGE RD AND WB SH 151

-SEE SCHEDULE OF BARRICADES SHEET NO 63 FOR NOTES

-IT SHALL BE THE RESPONSIBILITY OF THE CONTRACTOR TO ENSURE THE CORRECTNESS IN THE RE-ESTABLISHMENT OF PAVEMENT MARKINGS, MARKERS AND SIGNS

★ SIGNS WILL BE PLACED 180 M APART

CONSTRUCT DETOURS

CHANGEABLE MESSAGE BOARD
-IT SHALL BE PLACED 7 DAYS BEFORE CLOSING THE EXISTING NB FRONTAGE RD AND REMAIN IN PLACE DURING THE DURATION OF CONSTRUCTION
-MESSAGE SHALL READ:
LINE 1 LP 1604
LINE 2 NB FRNTGE RD CLSED
LINE 3 ON (DATE) THRU (DATE)
LINE 4 USE DETOUR

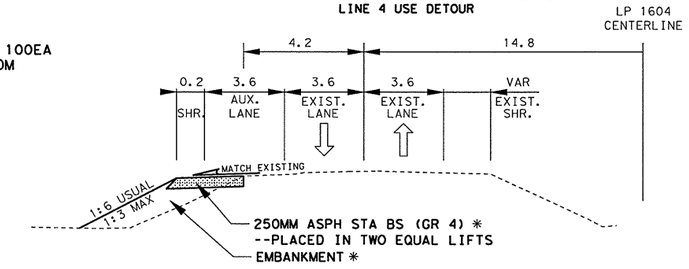


LP 1604 PROPOSED

ACCELERATION LANE TYPICAL SECTION
STA 16+990 TO STA 17+190

* WIDENING SHALL BE PAID FOR UNDER ITEM 508 CONSTRUCT DETOURS (CL 3)

STATE OF TEXAS
TERRY G. McCOY
75016
REGISTERED PROFESSIONAL ENGINEER

Terry G. McCoy, P.E.

1-17-02
Date

©2000 Texas Department of Transportation

# DETOUR ROUTE: WB SH 151

SHEET 1 OF 1

| FED. RD. DIV. NO. | FEDERAL AID PROJECT NO. | | SHEET NO. |
|---|---|---|---|
| 6 | NH 2000(704), ETC. | | 82G |
| STATE | DIST. | COUNTY | |
| TEXAS | SAT | BEXAR | |
| CONT. | SECT. | JOB | HIGHWAY NO. |
| 2452 | 01 | 036,ETC | LP 1604 |

FILE T:AO/DESIGN/LP1604FM471-90/ROAD*CLSRE/SH151*DETOUR.DGN 12/27/01

LEVEL DISPLAYED 1 2 3 4 5 6 7 8 9 10 11 12 13 14 15 16 17 18 19 20 21 22 23 24 25 26 27 28 29 30 31 32 33 34 35 36 37 38 39 40 41 42 43 44 45 46 47 48 49 50 51 52 53 54 55 56 57 58 59 60 61 62 63

DRAINAGE & ROADWAY CONSTRUCTION

TRAFFIC FLOW DIRECTION

V.I.A. ASSEMBLY (14 BARRELS EACH LOCATION)

BARRELS

TRAFFIC SIGNAL POLE

SCALE 1:1500

| SEQUENCE OF WORK ESTIMATED QUANTITIES | | 2452-01-038 |
|---|---|---|
| ITEM | UNIT | QTY |
| WRK ZN PAV MRK | | |
| REMOV (W) (SLD) (100MM) | M | 265 |
| REMOV (Y) (SLD) (100MM) | M | 200 |
| NON REMOV (Y) (SLD) (600MM) | M | 36 |
| NON REMOV (W) (ARROW) | EA | 2 |
| NON REMOV (W) (WORD) | EA | 2 |
| SH TRM (TAB) TY W | EA | 177 |
| SH TRM (TAB) TY Y | EA | 133 |

LEFT LANE CLOSED AHEAD CW9-5L

LEFT LANE CLOSED 500 FT CW9-5L

CW1-6G

120

120

S 46° 21' 19" E

PI STA 10+446.96

S 70° 31' 05" E

CULVERT #27

LINE ZR

PI STA 10+346.56

LINE ZT

N.B. FRONTAGE RD CONSTRUCTED IN PHASE IB

ROAD CLOSED

TY III BARRICADES W/ROAD CLOSED SIGN

TY III BARRICADES W/ROAD CLOSED SIGN

ROAD CLOSED

ROAD CLOSED

10+300

LP 1604

LP 1604

21.91" W

800

15+900

TYPE III BARRICADES W/ROAD CLOSED SIGN

16+000

ROAD CLOSED

16+100

16+200

S.B. MAINLANE BRIDGE CONSTRUCTED IN PHASE IB

S.B. MAINLANES TO BE CONSTRUCTED IN PHASE IC

CULEBRA CREEK

CULVERT #5

END FULL RECONSTRUCTION AT STA 10+240.00+/-
-ENDING STATION IS FLEXIBLE.
-CONTRACTOR MUST LEAVE ENOUGH ROOM TO HANDLE THE RIGHT TURN MOVEMENT OFF OF THE SBFR.

S 66° 21' 19" E

10+200

LINE X

LINE XA

S.B. FRONTAGE RD CONSTRUCTED IN PHASE IB

POT 10+193.116

BEGIN FULL RECONSTRUCTION AT STA 10+170

CULEBRA ROAD

S 61° 45' 10.62" E

10+100

ROAD CLOSED

POT 10+093.412

TYPE III BARRICADES W/ROAD CLOSED SIGN

NOTES:

1) CONTRACTOR SHALL CONSTRUCT CULEBRA ROAD (AS SHOWN ON THIS SHEET) THRU SECOND COURSE OF HOT MIX TYPE A. ALL WORK WILL BE DONE BEGINNING ON FRIDAY SEP 20 AT 11:00 PM THRU SUNDAY SEP 22 AT 5:00 PM OR AS DIRECTED BY THE ENGINEER.
2) COMPLETE CONSTRUCTION OF LINE X TO INLET DI-X1. THIS INCLUDES MANHOLE MH-X1.
3) CONSTRUCT LINE XA TO INLET CI-XA1.
4) BEGIN CONSTRUCTION OF CULVERT #27; LINE ZR & INLET DI-Z2; AND LINE ZT & INLET DI-Z1.

CONSTRUCTION OF CONCRETE CURBS, SIDEWALKS AND ISLANDS WILL BE COMPLETED AT A LATER DATE IF THEY INTERFERE WITH FUTURE TRAFFIC MOVEMENTS.

CONTRACTOR IS RESPONSIBLE FOR MAKING THE APPROPRIATE ADJUSTMENTS TO THE TEMPORARY TRAFFIC SIGNALS.

PAVEMENT MARKINGS SHALL COMPLY TO T.M.U.T.C.D. OR AS DIRECTED BY THE ENGINEER.

USE WORK ZONE CHANNELING DEVICES TO DELINEATE TRAFFIC AS PER T.M.U.T.C.D. OR AS DIRECTED BY THE ENGINEER.

TRAFFIC ON FM 471 WILL BE DETOURED AS DIRECTED AND APPROVED BY THE ENGINEER.

NEW SHEET

CHANGE ORDER NO. 32

STATE OF TEXAS
JEROME D. PAVLISKA
76075
REGISTERED PROFESSIONAL ENGINEER

Jerome D. Pavliska, P.E.

Date

©2003

Texas Department of Transportation

# SEQUENCE OF WORK PHASE IC (STAGE A)

SHEET 1 OF 1

| FED.RD. DIV.NO. | FEDERAL AID PROJECT NO. | | SHEET NO. |
|---|---|---|---|
| 6 | NH 2000(704), ETC. | | 82 H |
| STATE | DIST. | COUNTY | |
| TEXAS | SAT | BEXAR | |
| CONT. | SECT. | JOB | HIGHWAY NO. |
| 2452 | 01 | 036,ETC | LP 1604 |

FILE T:/Ao/Design/lp1604fm471-90/sow/Phase1/PhaseIC/StageA.dgn

LEVEL DISPLAYED 1 2 3 4 5 6 7 8 9 10 11 12 13 14 15 16 17 18 19 20 21 22 23 24 25 26 27 28 29 30 31 32 33 34 35 36 37 38 39 40 41 42 43 44 45 46 47 48 49 50 51 52 53 54 55 56 57 58 59 60 61 62 63

DRAINAGE & ROADWAY CONSTRUCTION

CONSTRUCT TEMPORARY SHOE-FLY DETOUR

TRAFFIC FLOW DIRECTION

V.I.A. ASSEMBLY ( 14 BARRELS EACH LOCATION )

BARRELS

TRAFFIC SIGNAL POLE

SCALE 1:1500

| SEQUENCE OF WORK ESTIMATED QUANTITIES | | 2452-01-038 |
|---|---|---|
| ITEM | UNIT | QTY |
| | | |
| | | |
| | | |
| | | |
| | | |
| | | |
| | | |
| | | |
| | | |
| | | |
| | | |
| | | |
| | | |
| | | |
| | | |

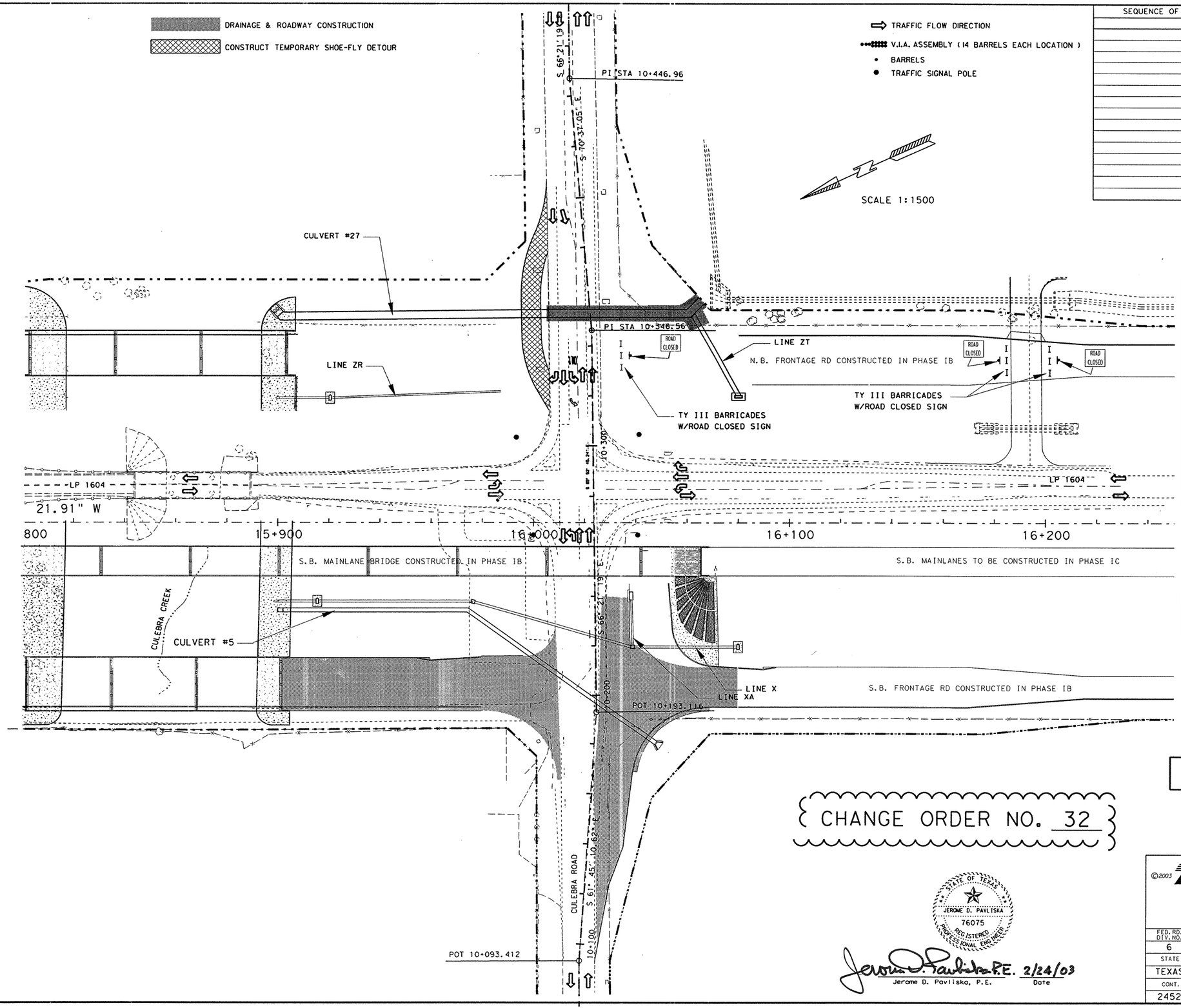


NOTES:

1) CONSTRUCT S.A.W.S. 925 MM WATER LINE ALONG WEST R.O.W. IN CULEBRA CREEK.
2) CONSTRUCT DETOUR FOR WB SH 151 BETWEEN NB & SB LP 1604 MAINLANES.
3) CONSTRUCT TEMPORARY SHOE-FLY TO DETOUR CULEBRA TRAFFIC DURING CONSTRUCTION OF CULVERT #27 ACROSS CULEBRA ROAD. (SEE C.O.# 56 FOR MORE DETAILS)
4) CONSTRUCT SBFR (AS SHOWN ON THIS SHEET) THRU HOT MIX TYPE C.
5) COMPLETE CONSTRUCTION OF CULVERT #27 AND LINE ZT.
6) INSTALL TEMPORARY SIGNAL AT SBFR & CULEBRA INTERSECTION.

CONSTRUCTION OF CONCRETE CURBS, SIDEWALKS AND ISLANDS WILL BE COMPLETED AT A LATER DATE IF THEY INTERFERE WITH FUTURE TRAFFIC MOVEMENTS.

CONTRACTOR IS RESPONSIBLE FOR MAKING THE APPROPRIATE ADJUSTMENTS TO THE TEMPORARY TRAFFIC SIGNALS.

PAVEMENT MARKINGS SHALL COMPLY TO T.M.U.T.C.D. OR AS DIRECTED BY THE ENGINEER.

USE WORK ZONE CHANNELING DEVICES TO DELINEATE TRAFFIC AS PER T.M.U.T.C.D. OR AS DIRECTED BY THE ENGINEER.

NEW SHEET

CHANGE ORDER NO. 32

STATE OF TEXAS
JEROME D. PAVLISKA
76075
REGISTERED PROFESSIONAL ENGINEER

Jerome D. Pavliska P.E. 2/24/03
Jerome D. Pavliska, P.E. Date

©2003

Texas Department of Transportation

SEQUENCE OF WORK
PHASE IC (STAGE B)

SHEET 1 OF 1

| FED. RD. DIV. NO. | FEDERAL AID PROJECT NO. | | SHEET NO. |
|---|---|---|---|
| 6 | NH 2000(704), ETC. | | 82 I |
| STATE | DIST. | COUNTY | |
| TEXAS | SAT | BEXAR | |
| CONT. | SECT. | JOB | HIGHWAY NO. |
| 2452 | 01 | 036, ETC | LP 1604 |

FILE: T:/Ao/Design/lp1604fm471-90/sow/Phase1/PhaseIC/StageA2.dgn

| LEVEL | 1 | 2 | 3 | 4 | 5 | 6 | 7 | 8 | 9 | 10 | 11 | 12 | 13 | 14 | 15 | 16 | 17 | 18 | 19 | 20 | 21 | 22 | 23 | 24 | 25 | 26 | 27 | 28 | 29 | 30 | 31 | 32 |
|---|---|---|---|---|---|---|---|---|---|---|---|---|---|---|---|---|---|---|---|---|---|---|---|---|---|---|---|---|---|---|---|---|
| DISPLAYED | 33 | 34 | 35 | 36 | 37 | 38 | 39 | 40 | 41 | 42 | 43 | 44 | 45 | 46 | 47 | 48 | 49 | 50 | 51 | 52 | 53 | 54 | 55 | 56 | 57 | 58 | 59 | 60 | 61 | 62 | 63 | |

| PAVEMENT MARKING ESTIMATED QUANTITES | | 2452-01-037 |
|---|---|---|
| ITEM | UNIT | QTY |
| | | |
| | | |
| | | |
| | | |
| | | |
| | | |

| SEQUENCE OF WORK ESTIMATED QUANTITIES | | 2452-01-037 |
|---|---|---|
| ITEM | UNIT | QTY |
| | | |
| | | |
| | | |
| | | |
| | | |
| | | |

SCALE 1:2000

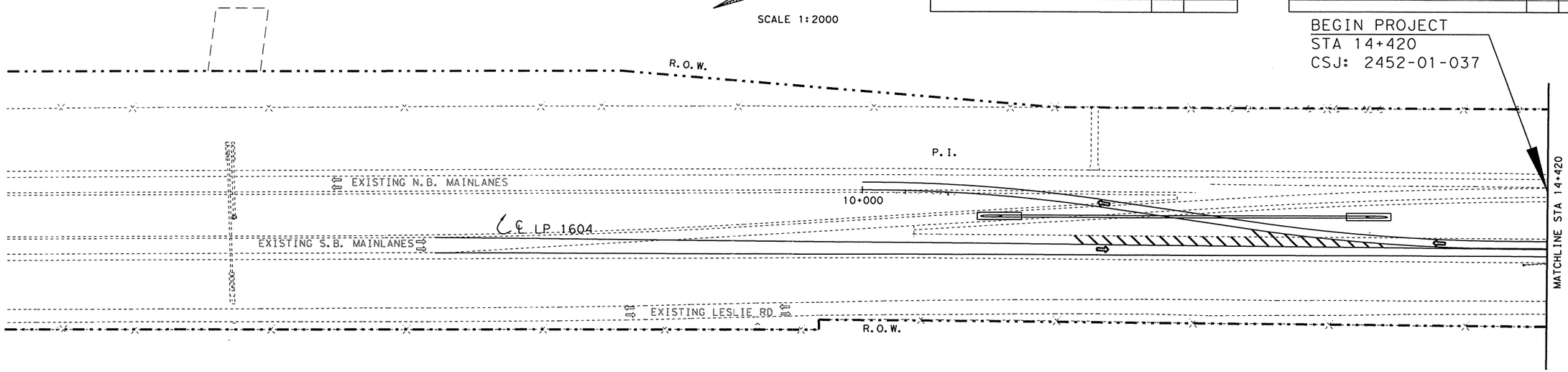


SCALE 1:2000

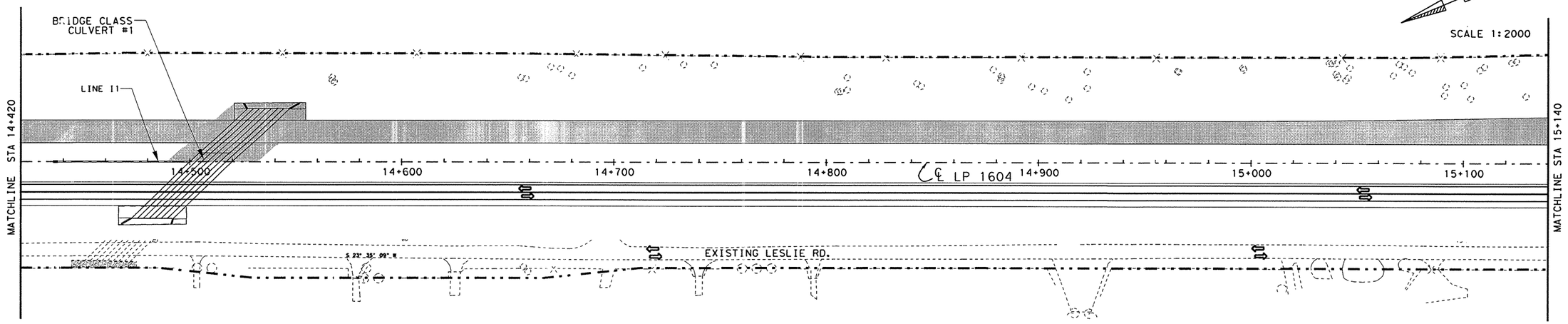


NOTES:
1) COMPLETE CONSTRUCTION OF NB LP 1604 MAINLANES THRU HOT MIX TYPE C.

PAYMENT FOR WORK ZONE PAVEMENT MARKING REMOVABLE LINE SIMULATIONS SHALL BE BY EACH TRAFFIC BUTTON OR REFLECTIVE MARKER

REFER TO TCP (2-4)98 FOR REQUIRED TEMPORARY SIGNING FOR LANE REDUCTION

PAVEMENT MARKINGS SHALL COMPLY TO T.M.U.T.C.D. OR AS DIRECTED BY THE ENGINEER

USE WORK ZONE CHANNELING DEVICES TO DELINEATE TRAFFIC AS PER T.M.U.T.C.D. OR AS DIRECTED BY THE ENGINEER

CONSTRUCTION DETOUR

DRAINAGE & ROADWAY CONSTRUCTION

PORT. CONCRETE TRAFFIC BARRIER

TRAFFIC FLOW DIRECTION

V.I.A. ASSEMBLY (14 BARRELS EACH LOCATION)

CHANGE ORDER NO. 32

NEW SHEET

STATE OF TEXAS
JEROME D. PAVLISKA
76075
REGISTERED PROFESSIONAL ENGINEER

Jerome D. Pavliska, P.E. 2/24/03
Jerome D. Pavliska, P.E. Date

©2003
Texas Department of Transportation

# SEQUENCE OF WORK
# PHASE IC (STAGE C)

SHEET 1 OF 5

| FED.RD. DIV.NO. | FEDERAL AID PROJECT NO. | | SHEET NO. |
|---|---|---|---|
| 6 | NH 2000(704), ETC. | | 82 J |
| STATE | DIST. | COUNTY | |
| TEXAS | SAT | BEXAR | |
| CONT. | SECT. | JOB | HIGHWAY NO. |
| 2452 | 01 | 036, ETC | LP 1604 |

T:/Ao/Design/lp1604fm471-90/sow/Phase1/PhaseIC/ghxphx1cxstxc1.dgn
LEVEL DISPLAYED

DRAINAGE & ROADWAY CONSTRUCTION

CONSTRUCTION DETOUR

SPAN TYPE BRIDGE CONSTRUCTION

TRAFFIC FLOW DIRECTION

V.I.A. ASSEMBLY (14 BARRELS EACH LOCATION)

PORT. CONCRETE TRAFFIC BARRIERS

| PAVEMENT MARKING ESTIMATED QUANTITES | | 2452-01-037 | 2452-01-038 |
|---|---|---|---|
| ITEM | UNIT | QTY | QTY |
| WK ZN PAV MRK | | | |
| REMOV (CL B) TY I-C | EA | 78 | 84 |
| REMOV (CL B) TY II-A-A | EA | 78 | 84 |
| REMOV (CL C) TY W (TRAF BTN) | EA | 236 | 240 |
| REMOV (CL C) TY Y (TRAF BTN) | EA | 236 | 240 |
| NON REMOV (Y) (SLD) (600MM) | M | | 25 |

| SEQUENCE OF WORK ESTIMATED QUANTITIES | | 2452-01-037 | 2452-01-038 |
|---|---|---|---|
| ITEM | UNIT | QTY | QTY |
| PORT CONC TRAF BAR (MOVE & RESET) | M | 36.4 | 309.4 |
| VEH IMP ATTN ASSEM BRLS (MOVE & RESET) | EA | 14 | |

SCALE 1:2000

LP 1604 CONTROL BREAK
STA 15+500
CSJ: 2452-01-037 (BK)
CSJ: 2452-01-038 (AHD)

-037 -038

BEGIN BRIDGE
N.B.F.R. ℄ STA 0+437.500

LINE I6

BEGIN MAINLANE BRIDGES
LP 1604 ℄ STA 15+795.900

LINE I4

LINE I2

S 24° 27' 21.91" W

℄ LP 1604

15+600 15+700 15+800

WRK ZN PAV MRK (*LINE SIMULATION*)
(REMOV) (CL B) (TY I-C) @ 6 M O.C.
EST @ 78 EA.
(REMOV) (CL C) (TY W)
EST @ 236 EA

DRAINAGE EASEMENT

RAMP 0+010.95
LP 1604 STA 15+340

CULVERT #2

MATCHLINE STA 15+140

15+200 15+300 15+400 15+500

S 17° 45' 14.71" W

TY III BARRICADES
ROAD CLOSED SIGN
BARRELS W/CHEVRONS
@ 10 M OC

0+100 0+200 0+300

LINE I3

PORT CONC TRAF
BAR @ 309.4 M

LINE I7

BEGIN BRIDGE
S.B.F.R. ℄ STA 0+411.900

MATCHLINE STA 15+860

MATCH EXIST WK ZN
PAV MARKINGS @
APPROX. STA 15+260

VEH IMP ATTN
ASSEM BRLS 14 EA.
PORT. CONC TRAF
BAR @ 36.4 M

WRK ZN PAV MRK (*"DOUBLE" LINE SIMULATION*)
(REMOV) (CL B) (TY II-A-A) @ 6 M O.C.
EST @ 78 EA.
(REMOV) (CL C) (TY Y)
EST @ 236 EA

RAMP 0+343.135
LP 1604 STA 15+672
S.B.F.R. STA. 0+284.363

R.O.W.

TY III BARRICADES
ROAD CLOSED SIGN

LINE I8

WRK ZN PAV MRK (*"DOUBLE" LINE SIMULATION*)
(REMOV) (CL B) (TY II-A-A) @ 6 M O.C.
EST @ 84 EA.
(REMOV) (CL C) (TY Y)
EST @ 240 EA

WESTWOOD LOOP

WESTWOOD VISTA

CULEBRA CREEK

WRK ZN PAV MRK (~~*LINE SIMULATION*~~)
(REMOV) (CL B) (TY I-C) @ 6 M O.C.
EST @ 84 EA.
(REMOV) (CL C) (TY W)
EST @ 240 EA

WRK ZN PAV MRK
(NON REMOV) (Y) (SLD) (600mm)
EST @ 25M

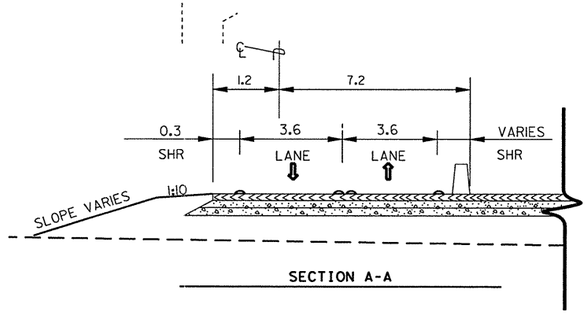


SECTION A-A

NOTES:
1) COMPLETE CONSTRUCTION OF NB LP 1604 MAINLANES, ENTRANCE RAMP AND NB FRONTAGE ROAD THRU HOT MIX TYPE C.
2) BEGIN CONSTRUCTION OF NB LP 1604 MAINLANE STRUCTURE.
3) CONSTRUCT THE WESTWOOD INTERSECTION WITH SB FRONTAGE ROAD (STA 0+260 TO STA 0+412) THRU HOT MIX TYPE C.

CONSTRUCTION OF CONCRETE CURBS, SIDEWALKS, AND ISLANDS WILL BE COMPLETED AT A LATER DATE IF THEY INTERFERE WITH FUTURE TRAFFIC MOVEMENTS.

PAYMENT FOR WORK ZONE PAVEMENT MARKING REMOVABLE LINE SIMULATIONS SHALL BE BY EACH TRAFFIC BUTTON OR REFLECTIVE MARKER.

PAVEMENT MARKINGS SHALL COMPLY TO T.M.U.T.C.D. OR AS DIRECTED BY THE ENGINEER.

USE WORK ZONE CHANNELING DEVICES TO DELINEATE TRAFFIC AS PER T.M.U.T.C.D. OR AS DIRECTED BY THE ENGINEER.

CHANGE ORDER NO. 32

NEW SHEET

STATE OF TEXAS
JEROME D. PAVLISKA
76075
REGISTERED PROFESSIONAL ENGINEER

Jerome D. Pavliska, P.E. 3/26/04
Jerome D. Pavliska, P.E. Date

©2003

Texas Department of Transportation

# SEQUENCE OF WORK
# PHASE IC (STAGE C)

SHEET 2 OF 5

| FED. RD. DIV. NO. | FEDERAL AID PROJECT NO. | | SHEET NO. |
|---|---|---|---|
| 6 | NH 2000(704), ETC. | | 82 K |
| STATE | DIST. | COUNTY | |
| TEXAS | SAT | BEXAR | |
| CONT. | SECT. | JOB | HIGHWAY NO. |
| 2452 | 01 | 036, ETC | LP 1604 |

FILE T:/Ao/Design/lp1604fm471-90/sow/Phase1/PhaseIC/ghxphlcxstxc2.dgn
LEVEL 1 2 3 4 5 6 7 8 9 10 11 12 31 41 51 61 71 81 92 02 12 23 24 25 26 27 28 29 30 31 32
DISPLAYED 33 43 53 63 73 83 94 04 14 24 34 44 54 64 74 84 95 05 15 25 35 45 55 65 75 85 96 06 63

| PAVEMENT MARKING ESTIMATED QUANTITIES | | 2452-01-038 |
|---|---|---|
| ITEM | UNIT | QTY |
| WK ZN PAV MRK | | |
| REMOV (CL B) TY I-C | EA | 527 |
| REMOV (CL B) TY II-A-A | EA | 501 |
| REMOV (CL C) TY W | EA | 1600 |
| REMOV (CL C) TY Y | EA | 1503 |
| NON REMV (W) (SLD) (600 MM) | M | 26 |
| NON REMV (Y) (SLD) (600 MM) | M | 108 |
| NON REMV (W) (ARROW) | EA | 24 |

| SEQUENCE OF WORK ESTIMATED QUANTITIES | | 2452-01-038 |
|---|---|---|
| ITEM | UNIT | QTY |
| PCTB LOW PRF (TY I) (STK, INSL & RETURN) | M | 250.1 |
| PCTB LOW PRF (TY II) (STK, INSL & RETURN) | M | 24.4 |
| CONSTRUCT DETOUR | M2 | 55.0 |
| PORT CONC TRAF BAR (MOVE & RESET) | M | 18.2 |
| VEH IMP ATTN ASSEM BRLS (MOVE & RESET) | EA | 14.0 |

DRAINAGE & ROADWAY CONSTRUCTION
SPAN TYPE BRIDGE CONSTRUCTION
CONSTRUCTION DETOUR
TRAFFIC FLOW DIRECTION
V.I.A. ASSEMBLY (14 BARRELS EACH LOCATION)
PORT. CONCRETE TRAFFIC BARRIER

SCALE 1:2000

CULEBRA ROAD
CULEBRA CREEK
R.O.W.
N.B. FRONTAGE RD.
S.B. MAINLANES
S.B. FRONTAGE RD.
MATCHLINE STA 15+860
MATCHLINE STA 16+580
CL LP 1604
STA 16+193.063
END MAINLANE BRIDGES
LP 1604 ℄ STA 16+065.100
END BRIDGE
S.B.F.R. ℄ STA 0+511.500
STORM DRAIN LINE I12B

WRK ZN PAV MRK (*BRK LINE SIMULATION*)
(REMOV) (CL B) (TY I-C) @ 12.2 M O.C.
EST @ 18 EA.
(REMOV) (CL C) (TY W)
EST @ 72 EA

PCTB (LOW PRF)
(TY I) EST @ 201.3 M
(TY II) EST @ 12.2 M

WRK ZN PAV MRK
(NON REMOV) (Y) (SLD) (600 MM)
EST @ 66 M

PCTB (LOW PRF)
(TY I) EST @ 48.8 M
(TY II) EST @ 12.2 M

WRK ZN PAV MRK
NON REMOV (W) (ARROW)
EST @ 6 EA

WRK ZN PAV MRK (STOP BAR)
NON-REMOV (W) (SLD) (600MM)
EST @ 26 M

VEH IMP ATTN ASSEM
BRLS @ 14 EA
PORT CONC TRAF
BAR @ 18.2 M

TY III BARRICADES
ROAD CLOSED SIGN

WRK ZN PAV MRK
NON REMOV (W) (ARROW)
EST @ 5 EA

WRK ZN PAV MRK
(NON REMOV) (Y) (SLD) (600 MM)
EST @ 27 M

WRK ZN PAV MRK
NON REMOV (W) (ARROW)
EST @ 13 EA

WRK ZN PAV MRK
(NON REMOV) (Y) (SLD) (600 MM)
EST @ 16 M

WRK ZN PAV MRK (*LINE SIMULATION*)
(REMOV) (CL B) (TY I-C) @ 6 M O.C.
EST @ 509 EA.
(REMOV) (CL C) (TY W)
EST @ 1528 EA

WRK ZN PAV MRK (*"DOUBLE" LINE SIMULATION*)
(REMOV) (CL B) (TY II-A-A) @ 6 M O.C.
EST @ 501 EA.
(REMOV) (CL C) (TY Y)
EST @ 1503 EA

SEE SHT 82 P FOR MORE
PAVEMENT MARKING DETAILS

TEMPORARY DRIVEWAY ACCESS TO HEB
AND WHATABURGER TO BE CLOSED AND
REMOVED BY CONTRACTOR AS DIRECTED
BY ENGINEER.

TY III BARRICADES
ROAD CLOSED SIGN
BARRELS @ 10 M O.C.

DO NOT ENTER
R5-1

CONSTRUCT DETOURS
EST @ 55 M2
RADIUS @ 15 M

FM 471 CULEBRA ROAD

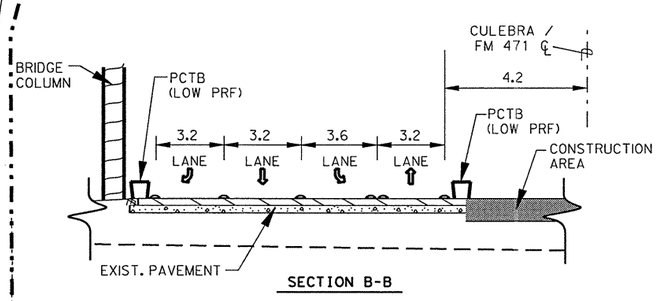


SECTION B-B

NOTES:
1) CONSTRUCT STORM DRAIN LINE I-27A AND CURB INLET I27A.
2) CONTRUCT SOUTHERN HALF OF CULEBRA ROAD AND THE NB FRONTAGE ROAD INTERSECTION AND THE SOUTH TURNAROUND (AS SHOWN ON THIS SHEET) THRU HOT MIX TYPE C.
3) BEGIN CONSTRUCTION OF NB LP 1604 MAINLANE STRUCTURE AND ROADWAY.
4) CONSTRUCT SB LP 1604 MAINLANES THRU HOT MIX TYPE C.

CONSTRUCTION OF CONCRETE CURBS, SIDEWALKS AND ISLANDS WILL BE COMPLETED AT A LATER DATE IF THEY INTERFERE WITH FUTURE TRAFFIC MOVEMENTS.

PAYMENT FOR WORK ZONE PAVEMENT MARKING REMOVABLE LINE SIMULATIONS SHALL BE BY EACH TRAFFIC BUTTON OR REFLECTIVE MARKER.

PAVEMENT MARKINGS SHALL COMPLY TO T.M.U.T.C.D. OR AS DIRECTED BY THE ENGINEER.

USE WORK ZONE CHANNELING DEVICES TO DELINEATE TRAFFIC AS PER T.M.U.T.C.D. OR AS DIRECTED BY THE ENGINEER.

CHANGE ORDER NO. 32

NEW SHEET

STATE OF TEXAS
JEROME D. PAVLISKA
76075
REGISTERED
PROFESSIONAL ENGINEER

Jerome D. Pavliska, P.E. 3/26/04
Jerome D. Pavliska, P.E. — Date

©2003 Texas Department of Transportation

# SEQUENCE OF WORK
## PHASE IC (STAGE C)

SHEET 3 OF 5

| FED. RD. DIV. NO. | FEDERAL AID PROJECT NO. | | SHEET NO. |
|---|---|---|---|
| 6 | NH 2000(704), ETC. | | 82 L |
| STATE | DIST. | COUNTY | |
| TEXAS | SAT | BEXAR | |
| CONT. | SECT. | JOB | HIGHWAY NO. |
| 2452 | 01 | 036, ETC | LP 1604 |

FILE T:\AO\Design\lp1604fm471-90\sow\Phase1\PhaseIC\ch+ph*1c*st*c3.dgn
LEVEL 1 2 3 4 5 6 7 8 9 10 11 12 31 41 51 61 71 81 92 102 122 324 252 262 728 293 303 132
DISPLAYED 33 34 35 53 63 71 83 94 04 14 24 34 44 54 64 74 84 95 05 15 25 35 45 55 65 75 85 96 0 63

TEMPORARY DRIVEWAY ACCESS TO HEB AND WHATABURGER TO BE CLOSED AND REMOVED BY CONTRACTOR AS DIRECTED BY ENGINEER. THE HEB/WHATABURGER SIGN WILL BE RELOCATED CLOSER TO CULEBRA ROAD AS DIRECTED BY THE ENGINEER.

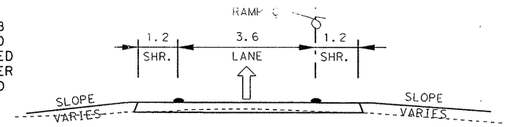


SECTION C-C

TAPER SH 151 FRONTAGE ROAD TO 1 LANE USING TCP(2-4)-98(M) PLACE TY III BARRICADES W/ROAD CLOSED SIGN ON SH 151 FRONTAGE RD TO DETOUR TRAFFIC TO WB SH 151 EXIT

| PAVEMENT MARKING ESTIMATED QUANTITES | | 2452-01-038 | 2452-01-037 |
|---|---|---|---|
| ITEM | UNIT | QTY | QTY |
| WK ZN PAV MRK | | | |
| REMOV (CL B) TY I-C | EA | 96 | 76 |
| REMOV (CL B) TY II-A-A | EA | 85 | 78 |
| REMOV (CL C) TY W (TRAF BTN) | EA | 288 | 252 |
| REMOV (CL C) TY Y (TRAF BTN) | EA | 255 | 256 |

| SEQUENCE OF WORK ESTIMATED QUANTITIES | | 2452-01-038 | 2452-01-037 |
|---|---|---|---|
| ITEM | UNIT | QTY | QTY |
| CONSTRUCT DETOUR | M2 | | 29 |

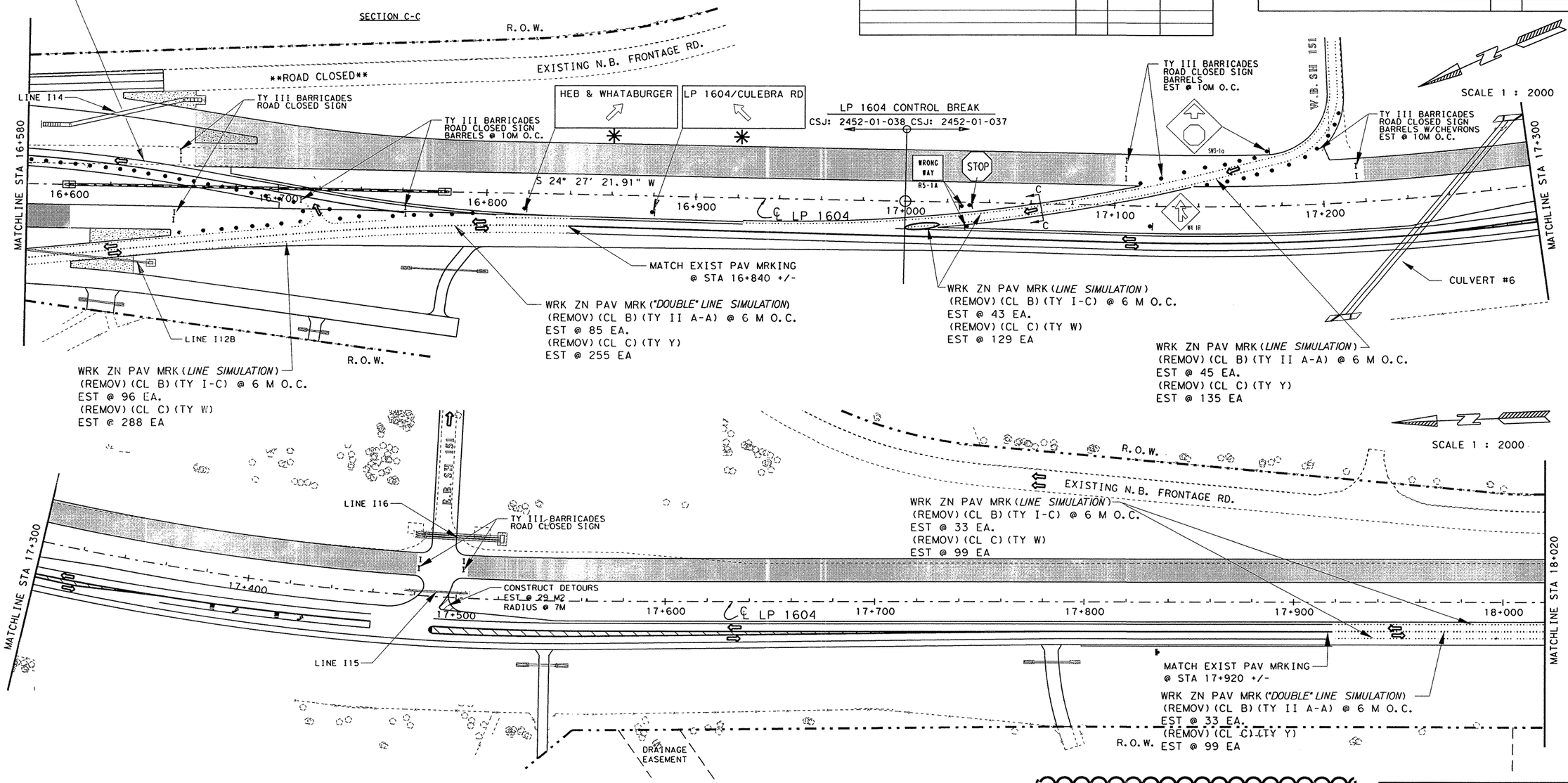


DRAINAGE & ROADWAY CONSTRUCTION

CONSTRUCTION DETOUR

TRAFFIC FLOW DIRECTION

V.I.A. ASSEMBLY (14 BARRELS EACH LOCATION )

PORT. CONCRETE TRAFFIC BARRIER

NOTES:
1) COMPLETE CONSTRUCTION OF NB LP 1604 MAINLANES THRU HOT MIX TYPE C.
2) INSTALL PERMANENT TRAFFIC SIGNAL AT NB LP 1604 AND EB SH 151.

PAVEMENT MARKINGS AND ARROWS SHALL COMPLY TO T.M.U.T.C.D. OR AS DIRECTED BY THE ENGINEER

PAYMENT FOR WORK ZONE PAVEMENT MARKING REMOVABLE LINE SIMULATIONS SHALL BE BY EACH TRAFFIC BUTTON OR REFLECTIVE MARKER

USE WORK ZONE CHANNELING DEVICES TO DELINEATE TRAFFIC AS PER T.M.U.T.C.D. OR AS DIRECTED BY THE ENGINEER

CONTRACTOR IS RESPONSIBLE FOR MOVING AND/OR RESETING ANY EXISTING SIGNS.

✳ SIGNS PROVIDED BY TXDOT TO BE PLACED BY CONTRACTOR. PAYMENT SHALL BE AN OVERRUN TO LINE 831 ADDED BY CO #5.

CHANGE ORDER NO. 32

NEW SHEET

STATE OF TEXAS
JEROME D. PAVLISKA
76075
REGISTERED PROFESSIONAL ENGINEER

Jerome D. Pavliska, P.E. 2/24/03
Jerome D. Pavliska, P.E. Date

©2003
Texas Department of Transportation

SEQUENCE OF WORK
PHASE IC (STAGE C)

SHEET 4 OF 5

| FED. RD. DIV. NO. | FEDERAL AID PROJECT NO. | | SHEET NO. |
|---|---|---|---|
| 6 | NH 2000(704), ETC. | | 82 M |
| STATE | DIST. | COUNTY | |
| TEXAS | SAT | BEXAR | |
| CONT. | SECT. | JOB | HIGHWAY NO. |
| 2452 | 01 | 036, ETC | LP 1604 |

FILE: I:\NAD\Design\lp1604fm471-90\sow\phase1\phase1C\cn\phase1cxsst4c4.dgn
LEVEL 1 2 3 4 5 6 7 8 9 10 11 12 13 14 15 16 17 18 19 20 21 22 23 24 25 26 27 28 29 30 31 32
DISPLAYED 33 34 35 36 37 38 39 40 41 42 43 44 45 46 47 48 49 50 51 52 53 54 55 56 57 58 59 60 61 63

DRAINAGE & ROADWAY CONSTRUCTION

CONSTRUCTION DETOUR

TRANSITIONAL RAMPING

TRAFFIC FLOW DIRECTION

V.I.A. ASSEMBLY ( 14 BARRELS EACH LOCATION )

PORT. CONCRETE TRAFFIC BARRIER

NOTES:
1) COMPLETE CONSTRUCTION OF NB LP 1604 MAINLANES THRU HOT MIX TYPE C.

PAVEMENT MARKINGS AND ARROWS SHALL COMPLY TO T.M.U.T.C.D. OR AS DIRECTED BY THE ENGINEER

PAYMENT FOR WORK ZONE PAVEMENT MARKING REMOVABLE LINE SIMULATIONS SHALL BE BY EACH TRAFFIC BUTTON OR REFLECTIVE MARKER

USE WORK ZONE CHANNELING DEVICES TO DELINEATE TRAFFIC AS PER T.M.U.T.C.D. OR AS DIRECTED BY THE ENGINEER

CONTRACTOR IS RESPONSIBLE FOR MOVING AND/OR RESETING ANY EXISTING SIGNS.

PAVEMENT MARKING ESTIMATED QUANTITES 2452-01-037

| ITEM | | UNIT | QTY |
|---|---|---|---|
| WK ZN PAV MRK | | | |
| REMOV (CL B) TY I-C | | EA | 78 |
| REMOV (CL B) TY II-A-A | | EA | 76 |
| REMOV (CL C) TY W | (TRAF BTN) | EA | 234 |
| REMOV (CL C) TY Y | (TRAF BTN) | EA | 228 |
| NON-REMOV (W) (ARROW) | | EA | 2 |

SEQUENCE OF WORK ESTIMATED QUANTITIES 2452-01-037

| ITEM | UNIT | QTY |
|---|---|---|

SCALE 1:2000

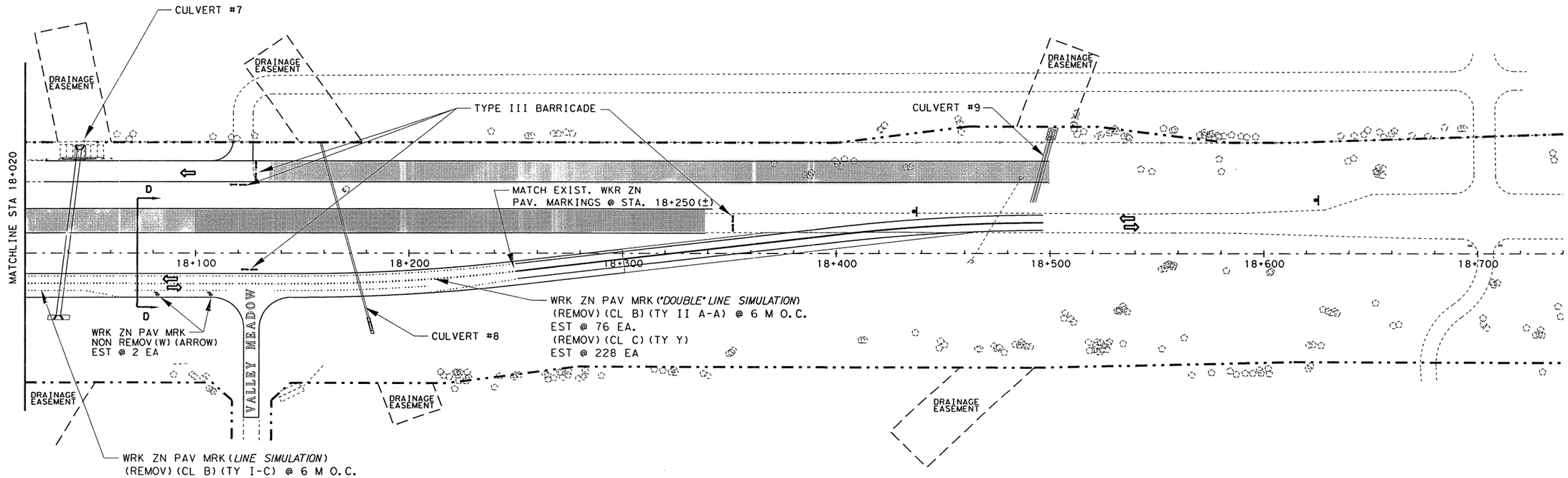


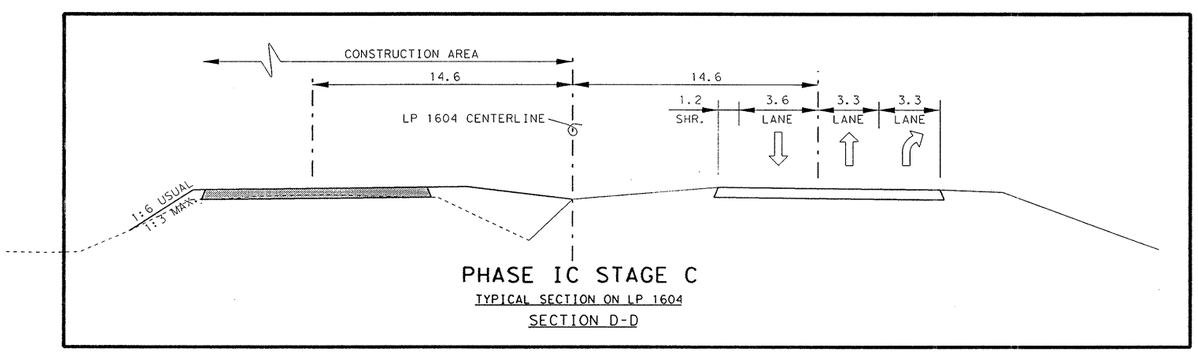


PHASE IC STAGE C

TYPICAL SECTION ON LP 1604

SECTION D-D

STATE OF TEXAS
JEROME D. PAVLISKA
76075
REGISTERED PROFESSIONAL ENGINEER

Jerome D. Pavliska, P.E. 2/24/03
Jerome D. Pavliska, P.E. Date

CHANGE ORDER NO. 32

NEW SHEET

©2003 Texas Department of Transportation

SEQUENCE OF WORK
PHASE IC (STAGE C)

SHEET 5 OF 5

| FED.RD. DIV.NO. | FEDERAL AID PROJECT NO. | | SHEET NO. |
|---|---|---|---|
| 6 | NH 2000(704), ETC. | | 82 N |
| STATE | DIST. | COUNTY | |
| TEXAS | SAT | BEXAR | |
| CONT. | SECT. | JOB | HIGHWAY NO. |
| 2452 | 01 | 036,ETC | LP 1604 |

FILE T:\AO\Design\lp1604fm471-90\sow\phase1c\gnphm1cwst*c5.dgn
LEVEL DISPLAYED
1 2 3 4 5 6 7 8 9 10 11 12 13 14 15 16 17 18 19 20 21 22 23 24 25 26 27 28 29 30 31 32
33 34 35 36 37 38 39 40 41 42 43 44 45 46 47 48 49 50 51 52 53 54 55 56 57 58 59 60 61 63

| PAVEMENT MARKING ESTIMATED QUANTITES | | 2452-01-038 |
|---|---|---|
| ITEM | UNIT | QTY |
| WK ZN PAV MRK | | |
| REMOV (CL B) TY I-C | EA | 227 |
| REMOV (CL B) TY II-A-A | EA | 196 |
| REMOV (CL C) TY W | EA | 699 |
| REMOV (CL C) TY Y | EA | 588 |
| NON REMV (W) (SLD) (600 MM) | M | 24 |
| NON REMV (Y) (SLD) (600 MM) | M | 46 |
| NON REMOV (W) (ARROW) | EA | 21 |

| SEQUENCE OF WORK ESTIMATED QUANTITIES | | 2452-01-038 |
|---|---|---|
| ITEM | UNIT | QTY |
| PORT CONC TRF BAR LOW PRF (MOV & RESET) | M | 274.5 |

SCALE 1:2000

WRK ZN PAV MRK (*BRK LINE SIMULATION*)
(REMOV) (CL B) (TY I-C) @ 12.2 M O.C.
EST @ 12 EA.
(REMOV) (CL C) (TY W)
EST @ 48 EA

WRK ZN PAV MRK
(NON REMOV) (Y) (SLD) (600 MM)
EST @ 32 M

WRK ZN PAV MRK (*"DOUBLE" LINE SIMULATION*)
(REMOV) (CL B) (TY II A-A) @ 6 M O.C.
EST @ 196 EA.
(REMOV) (CL C) (TY Y)
EST @ 588 EA

CULEBRA CREEK

CULEBRA ROAD

R.O.W.

PORT CONC TRF BAR
LOW PRF (MOV & RESET)
EST. @ 213.5

TY III BARRICADES
W/ROAD CLOSED SIGN

N.B. FRONTAGE RD.

R.O.W.

WRK ZN PAV MRK
NON REMOV (W) (ARROW)
EST @ 6 EA

END MAINLANE BRIDGES
LP 1604 ℄ STA 16+065.100

N.B. MAINLANES

MATCHLINE STA 15+860

15+900 16+100 16+200 16+300 ℄ LP 1604 16+400 16+500

S.B. MAINLANES

MATCHLINE STA 16+580

TY III BARRICADES
ROAD CLOSED SIGN

PORT CONC TRF BAR
LOW PRF (MOV & RESET)
EST. @ 61.0

WRK ZN PAV MRK (STOP BAR)
NON-REMOV (W) (SLD) (600MM)
EST @ 24 M

WRK ZN PAV MRK
NON REMOV (W) (ARROW)
EST @ 3 EA

S.B. FRONTAGE RD.

0+500 0+600 0+700 0+800 0+900 1+000 1+100 1+200

STORM DRAIN LINE I12B

R.O.W.

R.O.W.

END BRIDGE
S.B.F.R. ℄ STA 0+511.500

SEE SHT 82 Q FOR MORE
PAVEMENT MARKING DETAILS

WRK ZN PAV MRK
NON REMOV (W) (ARROW)
EST @ 12 EA

WRK ZN PAV MRK (*LINE SIMULATION*)
(REMOV) (CL B) (TY I-C) @ 6 M O.C.
EST @ 215 EA.
(REMOV) (CL C) (TY W)
EST @ 651 EA

WRK ZN PAV MRK
(NON REMOV) (Y) (SLD) (600 MM)
EST @ 14 M

FM 471
CULEBRA ROAD

DRAINAGE & ROADWAY CONSTRUCTION
SPAN TYPE BRIDGE CONSTRUCTION
CONSTRUCTION DETOUR
TRAFFIC FLOW DIRECTION
V.I.A. ASSEMBLY (14 BARRELS EACH LOCATION)
PORT. CONCRETE TRAFFIC BARRIER

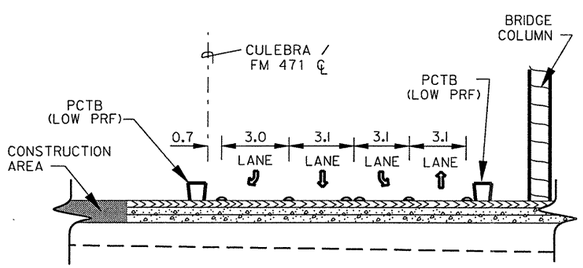


SECTION E-E

NOTES:
1) CONTRUCT NORTHERN HALF OF CULEBRA ROAD AND THE NB FRONTAGE ROAD INTERSECTION AND THE NORTH TURNAROUND (AS SHOWN ON THIS SHEET) THRU HOT MIX TYPE C.
2) COMPLETE CONSTRUCTION OF NB LP 1604 MAINLANE STRUCTURE AND ROADWAY.
3) COMPLETE CONSTRUCTION SB LP 1604 MAINLANES THRU HOT MIX TYPE C.
4) BEGIN INSTALLATION OF PERMANENT TRAFFIC SIGNALS AT THE LP 1604 FRONTAGE ROADS AND CULEBRA ROAD.

CONSTRUCTION OF CONCRETE CURBS, SIDEWALKS, AND ISLANDS WILL BE COMPLETED AT A LATER DATE IF THEY INTERFERE WITH FUTURE TRAFFIC MOVEMENTS.

PAYMENT FOR WORK ZONE PAVEMENT MARKING REMOVABLE LINE SIMULATIONS SHALL BE BY EACH TRAFFIC BUTTON OR REFLECTIVE MARKER.

PAVEMENT MARKINGS SHALL COMPLY TO T.M.U.T.C.D. OR AS DIRECTED BY THE ENGINEER.

USE WORK ZONE CHANNELING DEVICES TO DELINEATE TRAFFIC AS PER T.M.U.T.C.D. OR AS DIRECTED BY THE ENGINEER.

CHANGE ORDER NO. 32

NEW SHEET

STATE OF TEXAS
JEROME D. PAVLISKA
76075
REGISTERED PROFESSIONAL ENGINEER

Jerome D. Pavliska, P.E. 3/26/04
Jerome D. Pavliska, P.E. Date

©2003
Texas Department of Transportation

# SEQUENCE OF WORK
# PHASE IC (STAGE D)

SHEET 1 OF 1

| FED. RD. DIV. NO. | FEDERAL AID PROJECT NO. | | SHEET NO. |
|---|---|---|---|
| 6 | NH 2000(704), ETC. | | 82 O |
| STATE | DIST. | COUNTY | |
| TEXAS | SAT | BEXAR | |
| CONT. | SECT. | JOB | HIGHWAY NO. |
| 2452 | 01 | 036, ETC | LP 1604 |

FILE T:/Ao/Design/lp1604fm471-90/sow/Phase1/PhaseIC/ch*ph*1c*st*d1.dgn
LEVEL 1 2 3 4 5 6 7 8 9 10 11 12 13 14 15 16 17 18 19 20 21 22 23 24 25 26 27 28 29 30 31 32
DISPLAYED 33 34 35 36 37 38 39 40 41 42 43 44 45 46 47 48 49 50 51 52 53 54 55 56 57 58 59 60 63

| PAVEMENT MARKING ESTIMATED QUANTITIES | | 2452-01-037 | 2452-01-038 |
|---|---|---|---|
| ITEM | UNIT | QTY | QTY |
| WK ZN PAV MRK | | | |
| REMOV (CL B) TY I-C | EA | | 48 |
| REMOV (CL B) TY II-A-A | EA | | 44 |
| REMOV (CL C) TY W (TRAF BTN) | EA | | 224 |
| REMOV (CL C) TY Y (TRAF BTN) | EA | | 132 |
| NON REMOV (W) (ARROW) | EA | | 2 |
| | | | |
| | | | |

| SEQUENCE OF WORK ESTIMATED QUANTITIES | | 2452-01-037 | 2452-01-038 |
|---|---|---|---|
| ITEM | UNIT | QTY | QTY |
| PORT CONC TRAF BAR (MOVE & RESET) | M | | 9.1 |
| PORT CONC TRAF BAR (REMOVE) | M | | 136.5 |
| | | | |
| | | | |
| | | | |
| | | | |

DRAINAGE & ROADWAY CONSTRUCTION
CONSTRUCTION DETOUR
SPAN TYPE BRIDGE CONSTRUCTION
TRAFFIC FLOW DIRECTION
V.I.A. ASSEMBLY (14 BARRELS EACH LOCATION)
PORT. CONCRETE TRAFFIC BARRIERS

SCALE 1:2000

LP 1604 CONTROL BREAK
STA 15+500
CSJ: 2452-01-037 (BK)
CSJ: 2452-01-038 (AHD)

-037 -038

BEGIN BRIDGE
N.B.F.R. ℄ STA 0+437.500

LINE I6

BEGIN MAINLANE BRIDGES
LP 1604 ℄ STA 15+795.900

LINE I4

DRAINAGE EASEMENT

CULVERT #2

RAMP 0+010.95
LP 1604 STA 15+340

LINE I2

S 24° 27' 21.91" W

15+700

5+800

15+600

℄ LP 1604

15+500

S 17° 45' 14.71" W

15+400

TY III BARRICADES
ROAD CLOSED SIGN
BARRELS W/CHEVRONS
@ 10 M OC

15+300

15+200

MATCHLINE STA 15+140

0+100

LINE I3

RAMP 0+343.135
LP 1604 STA 15+672
S.B.F.R. STA. 0+284.363

0+200

0+300

PCTB (REMOVE) EST @ 136.5 M

PCTB (MOVE & RESET)
EST @ 9.1 M

LINE I7

BEGIN BRIDGE
S.B.F.R.
℄ STA 0+411.900

0+400

MATCHLINE STA 15+860

R.O.W.

LINE I8

CULEBRA CREEK

TY III BARRICADES
ROAD CLOSED SIGN

WESTWOOD LOOP

WRK ZN PAV MRK (NON REMOV)
(W) (ARROW) EST @ 2 EA

WRK ZN PAV MRK (*LINE SIMULATION*)
(REMOV) (CL B) (TY I-C) @ 6 M O.C. EST @ 48 EA.
(REMOV) (CL C) (TY W) EST @ 144 EA

WRK ZN PAV MRK (*600 MM LINE SIMULATION*)
(REMOV) (CL C) (TY W) EST @ 80 EA.

WRK ZN PAV MRK (*LINE SIMULATION*)
(REMOV) (CL B) (TY II-A-A) @ 1 M O.C. EST @ 11 EA.
(REMOV) (CL C) (TY Y) EST @ 33 EA

WRK ZN PAV MRK (*"DOUBLE" LINE SIMULATION*)
(REMOV) (CL B) (TY II-A-A) @ 6 M O.C.
EST @ 22 EA. (REMOV) (CL C) (TY Y) EST @ 66 EA

WESTWOOD VISTA

WRK ZN PAV MRK (*LINE SIMULATION*)
(REMOV) (CL B) (TY II-A-A) @
1 M O.C. EST @ 11 EA.
(REMOV) (CL C) (TY Y)
EST @ 33 EA

ER3-2

ONLY
R3-5R

CR1-4R

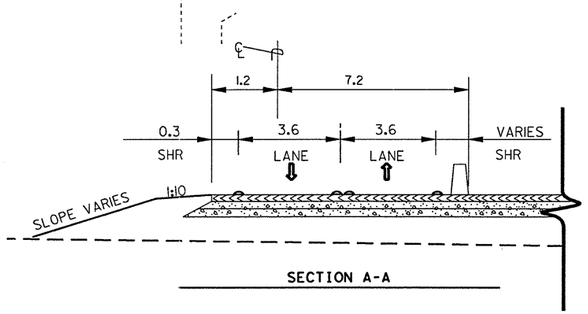


SECTION A-A

NOTES:
1) COMPLETE CONSTRUCTION OF NB LP 1604 MAINLANES, ENTRANCE RAMP AND NB FRONTAGE ROAD THRU HOT MIX TYPE C.
2) COMPLETE CONSTRUCTION OF NB LP 1604 MAINLANE STRUCTURE.
3) COMLETE CONSTRUCTION OF WESTWOOD VISTA INTERSECTION WITH SB FRONTAGE ROAD (STA 0+260 TO STA 0+412) THRU HOT MIX TYPE C AND OPEN TO TRAFFIC.
4) ONCE WESTWOOD VISTA INTERSECTION IS OPENED, CLOSE SB FRONTAGE ROAD/WESTWOOD LOOP TO CONSTRUCT THE SAWS 925 MM WATER LINE, THE RETAINING WALLS AND THE REMAINING SECTION OF SB FRONTAGE ROAD/LESLIE ROAD AND WESTWOOD LOOP.

PAYMENT FOR WORK ZONE PAVEMENT MARKING REMOVABLE LINE SIMULATIONS SHALL BE BY EACH TRAFFIC BUTTON OR REFLECTIVE MARKER.

PAVEMENT MARKINGS SHALL COMPLY TO T.M.U.T.C.D. OR AS DIRECTED BY THE ENGINEER.

USE WORK ZONE CHANNELING DEVICES TO DELINEATE TRAFFIC AS PER T.M.U.T.C.D. OR AS DIRECTED BY THE ENGINEER.

STATE OF TEXAS
JEROME D. PAVLISKA
76075
REGISTERED PROFESSIONAL ENGINEER

Jerome D. Pavliska, P.E. 3/26/04
Jerome D. Pavliska, P.E. Date

CHANGE ORDER NO. 32

NEW SHEET

©2003

Texas Department of Transportation

# SEQUENCE OF WORK
# PHASE IC (STAGE E)

SHEET 1 OF 2

| FED. RD. DIV. NO. | FEDERAL AID PROJECT NO. | | SHEET NO. |
|---|---|---|---|
| 6 | NH 2000(704), ETC. | | 82 P |
| STATE | DIST. | COUNTY | |
| TEXAS | SAT | BEXAR | |
| CONT. | SECT. | JOB | HIGHWAY NO. |
| 2452 | 01 | 036, ETC | LP 1604 |

FILE T:/ao/Design/lp1604fm471-90/sow/Phase1/PhaseIC/chrphr1c*st*ela.dgn
LEVEL 1 2 3 4 5 6 7 8 9 10 11 12 13 14 15 16 17 18 19 20 21 22 23 24 25 26 27 28 29 30 31 32
DISPLAYED 33 34 35 36 37 38 39 40 41 42 43 44 45 46 47 48 49 50 51 52 53 54 55 56 57 58 59 60 61 63

| PAVEMENT MARKING ESTIMATED QUANTITES | | 2452-01-038 |
|---|---|---|
| ITEM | UNIT | QTY |
| WK ZN PAV MRK | | |
| REMOV (CL B) TY I-C | EA | |
| REMOV (CL B) TY II-A-A | EA | |
| REMOV (CL C) TY W | EA | |
| REMOV (CL C) TY Y | EA | |
| NON REMV (W) (SLD) (600 MM) | M | 11.4 |
| NON REMV (Y) (SLD) (600 MM) | M | |
| NON REMOV (W) (ARROW) | EA | 9 |
| | | |

| SEQUENCE OF WORK ESTIMATED QUANTITIES | | 2452-01-038 |
|---|---|---|
| ITEM | UNIT | QTY |
| PORT CONC TRF BAR LOW PRF (MOV & RESET) | M | |
| | | |
| | | |
| | | |
| | | |

SCALE 1:2000

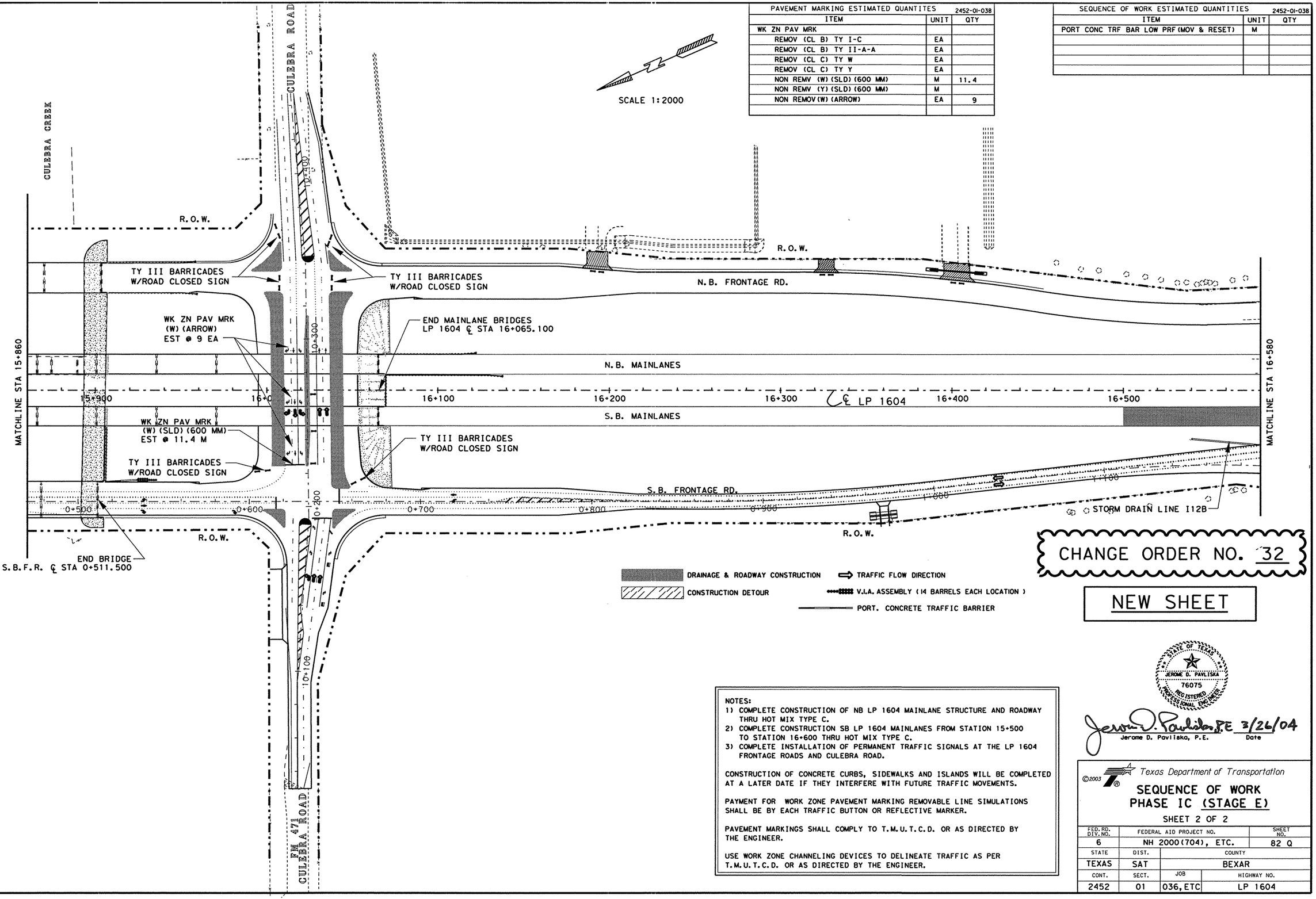


DRAINAGE & ROADWAY CONSTRUCTION

CONSTRUCTION DETOUR

TRAFFIC FLOW DIRECTION

V.I.A. ASSEMBLY (14 BARRELS EACH LOCATION)

PORT. CONCRETE TRAFFIC BARRIER

CHANGE ORDER NO. 32

NEW SHEET

NOTES:
1) COMPLETE CONSTRUCTION OF NB LP 1604 MAINLANE STRUCTURE AND ROADWAY THRU HOT MIX TYPE C.
2) COMPLETE CONSTRUCTION SB LP 1604 MAINLANES FROM STATION 15+500 TO STATION 16+600 THRU HOT MIX TYPE C.
3) COMPLETE INSTALLATION OF PERMANENT TRAFFIC SIGNALS AT THE LP 1604 FRONTAGE ROADS AND CULEBRA ROAD.

CONSTRUCTION OF CONCRETE CURBS, SIDEWALKS AND ISLANDS WILL BE COMPLETED AT A LATER DATE IF THEY INTERFERE WITH FUTURE TRAFFIC MOVEMENTS.

PAYMENT FOR WORK ZONE PAVEMENT MARKING REMOVABLE LINE SIMULATIONS SHALL BE BY EACH TRAFFIC BUTTON OR REFLECTIVE MARKER.

PAVEMENT MARKINGS SHALL COMPLY TO T.M.U.T.C.D. OR AS DIRECTED BY THE ENGINEER.

USE WORK ZONE CHANNELING DEVICES TO DELINEATE TRAFFIC AS PER T.M.U.T.C.D. OR AS DIRECTED BY THE ENGINEER.

STATE OF TEXAS
JEROME D. PAVLISKA
76075
REGISTERED PROFESSIONAL ENGINEER

Jerome D. Pavliska, P.E. 3/26/04
Jerome D. Pavliska, P.E. Date

©2003
Texas Department of Transportation

# SEQUENCE OF WORK
## PHASE IC (STAGE E)

SHEET 2 OF 2

| FED.RD. DIV.NO. | FEDERAL AID PROJECT NO. | | SHEET NO. |
|---|---|---|---|
| 6 | NH 2000(704), ETC. | | 82 Q |
| STATE | DIST. | COUNTY | |
| TEXAS | SAT | BEXAR | |
| CONT. | SECT. | JOB | HIGHWAY NO. |
| 2452 | 01 | 036,ETC | LP 1604 |

FILE T:/Ao/Design/lp1604fm471-90/sow/Phase1/PhaseIC/chnphw1c+st+e1b.dgn

| LEVEL | 1 | 2 | 3 | 4 | 5 | 6 | 7 | 8 | 9 | 10 | 11 | 12 | 13 | 14 | 15 | 16 | 17 | 18 | 19 | 20 | 21 | 22 | 23 | 24 | 25 | 26 | 27 | 28 | 29 | 30 | 31 | 32 |
|---|---|---|---|---|---|---|---|---|---|---|---|---|---|---|---|---|---|---|---|---|---|---|---|---|---|---|---|---|---|---|---|---|
| DISPLAYED | 33 | 34 | 35 | 36 | 37 | 38 | 39 | 40 | 41 | 42 | 43 | 44 | 45 | 46 | 47 | 48 | 49 | 50 | 51 | 52 | 53 | 54 | 55 | 56 | 57 | 58 | 59 | 60 | | 63 | | |

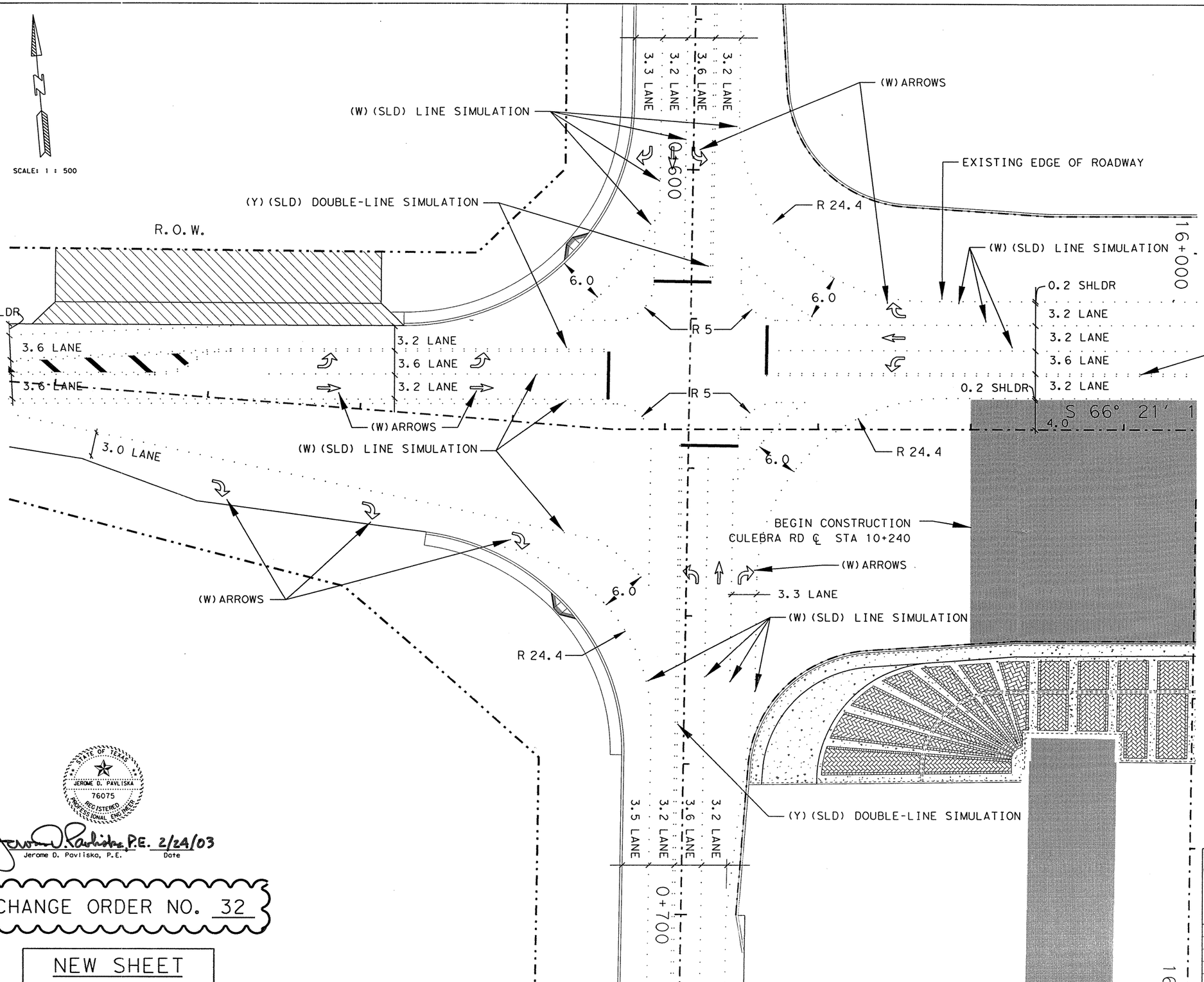


**NOTE:**

CONTRACTOR IS RESPONSIBLE FOR MAKING THE APPROPRIATE ADJUSTMENTS TO THE TEMPORARY TRAFFIC SIGNALS AND ALL SIGNS NECESSARY TO PROVIDE AND MAINTAIN DETOURS.

PAVEMENT MARKING SHALL COMPLY THE T.M.U.T.C.D OR AS DIRECTED BY THE ENGINEER.

USE WORK ZONE CHANNELING DEVICES TO DELINEATE TRAFFIC AS PER T.M.U.T.C.D. OR AS DIRECTED BY THE ENGINEER.

STATE OF TEXAS
JEROME D. PAVLISKA
76075
REGISTERED
PROFESSIONAL ENGINEER

Jerome D. Pavliska, P.E. 2/24/03
Jerome D. Pavliska, P.E. Date

CHANGE ORDER NO. 32

NEW SHEET

FILE: T:\AO\Design\lp1604fm471-90\sow\phase1\phaseIC\culebraxlarge1.dgn

| LEVEL | 1 | 2 | 3 | 4 | 5 | 6 | 7 | 8 | 9 | 10 | 11 | 12 | 13 | 14 | 15 | 16 | 17 | 18 | 19 | 20 | 21 | 22 | 23 | 24 | 25 | 26 | 27 | 28 | 29 | 30 | 31 | 32 |
|---|---|---|---|---|---|---|---|---|---|---|---|---|---|---|---|---|---|---|---|---|---|---|---|---|---|---|---|---|---|---|---|---|
| DISPLAYED | 33 | 34 | 35 | 36 | 37 | 38 | 39 | 40 | 41 | 42 | 43 | 44 | 45 | 46 | 47 | 48 | 49 | 50 | 51 | 52 | 53 | 54 | 55 | 56 | 57 | 58 | 59 | 60 | 61 | 62 | 63 | 64 |

**INTERSECTION LAYOUT**

**PHASE IC (STAGE C)**

© 2003 Texas Department of Transportation

**SEQUENCE OF WORK**
**AT THE VICINITY OF**
**CULEBRA RD. (WEST) & LP 1604**

| FED. RD. DIV. NO. | FEDERAL AID PROJECT NO. | | SHEET NO. |
|---|---|---|---|
| | NH 2000(704), etc. | | 82R |
| STATE | DIST. | COUNTY | |
| TEXAS | SAT | BEXAR | |
| CONT. | SECT. | JOB | HIGHWAY NO. |
| 2452 | 01 | 036, ETC | LP 1604 |

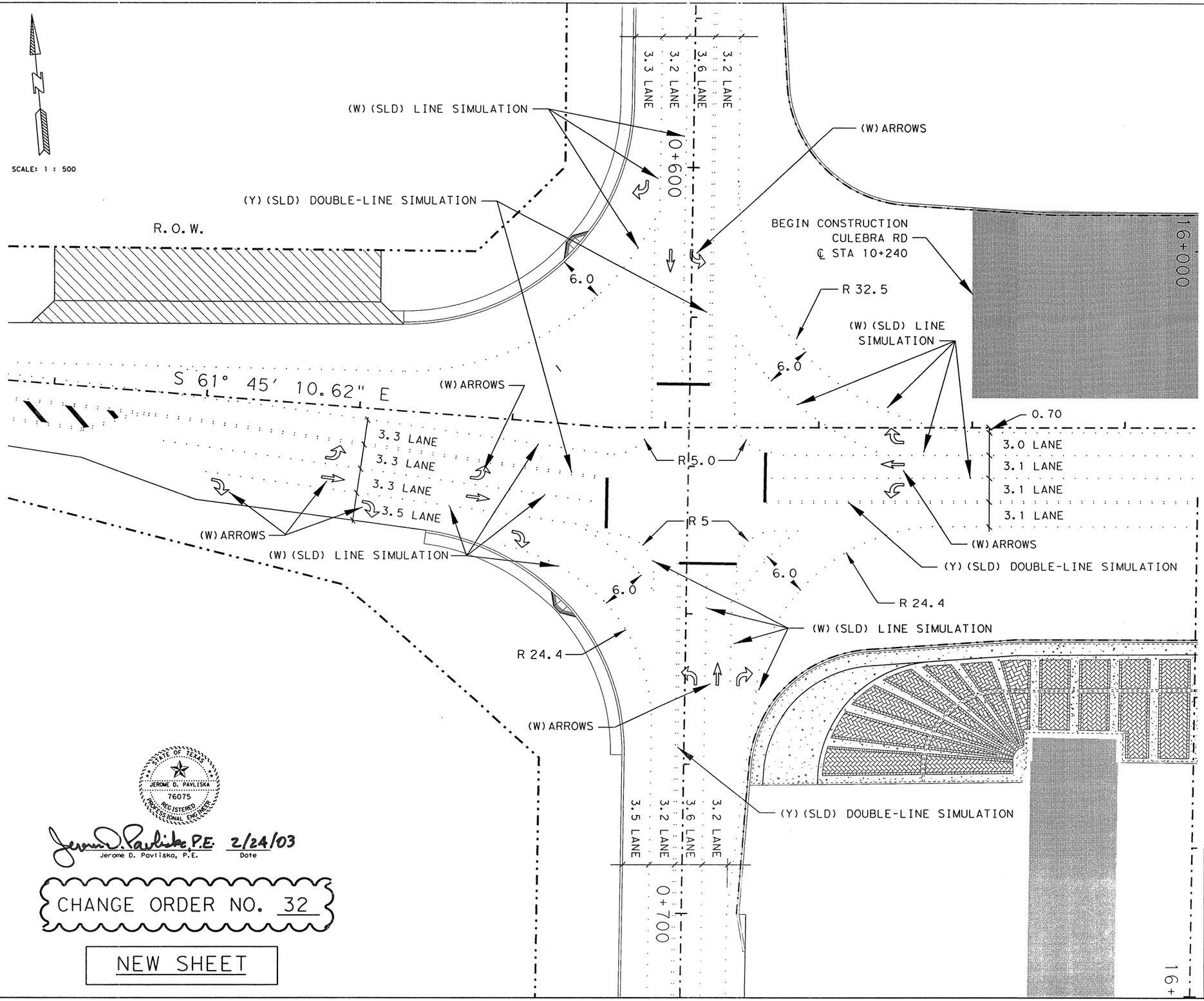


**NOTE:**

CONTRACTOR IS RESPONSIBLE FOR MAKING THE APPROPRIATE ADJUSTMENTS TO THE TEMPORARY TRAFFIC SIGNALS AND ALL SIGNS NECESSARY TO PROVIDE AND MAINTAIN DETOURS.

PAVEMENT MARKING SHALL COMPLY THE T.M.U.T.C.D OR AS DIRECTED BY THE ENGINEER.

USE WORK ZONE CHANNELING DEVICES TO DELINEATE TRAFFIC AS PER T.M.U.T.C.D. OR AS DIRECTED BY THE ENGINEER.

STATE OF TEXAS
JEROME D. PAVLISKA
76075
REGISTERED PROFESSIONAL ENGINEER

Jerome D. Pavliska P.E. 2/24/03
Jerome D. Pavliska, P.E. Date

CHANGE ORDER NO. 32

NEW SHEET

**INTERSECTION LAYOUT**

**PHASE IC (STAGE D)**

© 2003 Texas Department of Transportation

SEQUENCE OF WORK
AT THE VICINITY OF
CULEBRA RD. (WEST) & LP 1604

| FED. RD. DIV. NO. | FEDERAL AID PROJECT NO. | | SHEET NO. |
|---|---|---|---|
| | NH 2000(704), etc. | | 825 |
| STATE | DIST. | COUNTY | |
| TEXAS | SAT | BEXAR | |
| CONT. | SECT. | JOB | HIGHWAY NO. |
| 2452 | 01 | 036, ETC | LP 1604 |

FILE: I:\MON\Design\lp1604fm471-90\sow\phase1\culebra-large2.dgn
LEVEL DISPLAYED 1 2 3 4 5 6 7 8 9 10 11 12 13 14 15 16 17 18 19 20 21 22 23 24 25 26 27 28 29 30 31 32 33 34 35 36 37 38 39 40 41 42 43 44 45 46 47 48 49 50 51 52 53 54 55 56 57 58 59 60 61 62 63

12/12/02

Plotted on: 01/26/2004

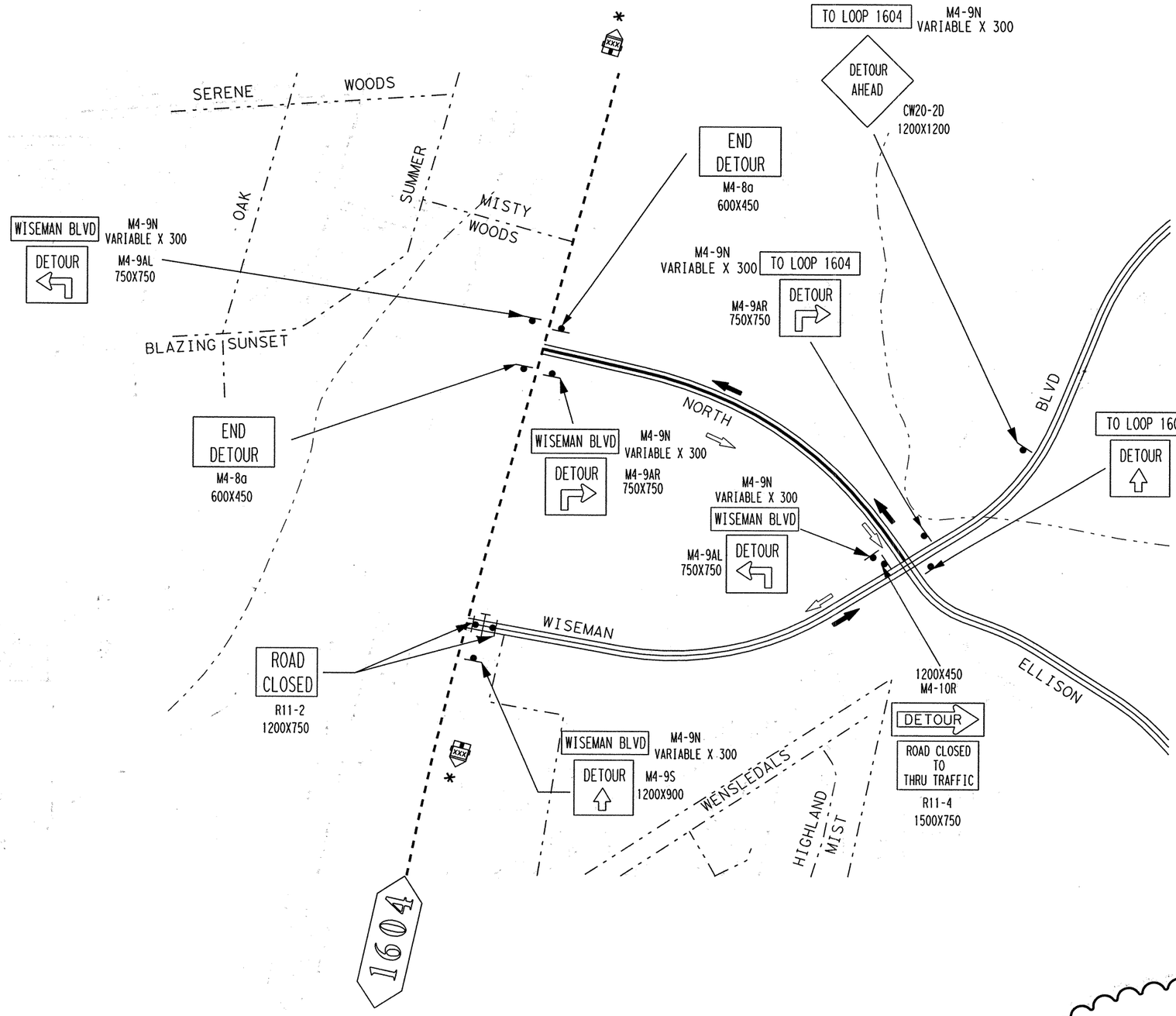


LEGEND

- DETOUR TO WISEMAN BLVD TRAFFIC FLOW
- DETOUR TO LOOP 1604 TRAFFIC FLOW
- TYPE III BARRICADES
- SIGN
- PORT. CHANGEABLE MESSAGE SIGN (WISEMAN CLOSED USE N. ELLISON)

NOTES

1.) SEE BARRICADE AND CONSTRUCTION STANDARDS FOR SIGN MOUNTING AND PLACEMENT DETAILS.

*2.) PORT CHANGEABLE MESSAGE SIGNS TO BE PLACED INTO CONTINUOUS USE A MINIMUM OF 7 DAYS PRIOR TO INTERSECTION CLOSURE, NOTIFYING PUBLIC OF PENDING INTERSECTION CLOSURE. WORDING SHALL BE AS APPROVED BY THE ENGINEER.

3.) DETOUR LAYOUT IS BEING PROVIDED FOR ROUTE AND SIGNS NEEDED ONLY. NO DETOUR CONSTRUCTION IS REQUIRED.

CHANGE ORDER NO. 63 - WISEMAN BLVD DETOUR ROUTE

CHANGE ORDER NO. 63 | NEW SHEET

NOT TO SCALE

555 EAST RAMSEY SAN ANTONIO TEXAS 78216 PHONE (210)375-9000 FAX (210)375-9010
PAPE-DAWSON ENGINEERS CIVIC & ENVIRONMENTAL
STATE OF TEXAS J. KENT O'BRIEN 64398 LICENSED PROFESSIONAL ENGINEER
J. KENT O'BRIEN P.E. 1/27/2004 DATE

©2000 Texas Department of Transportation

LOOP 1604
@ WISEMAN BLVD
DETOUR PLAN

| DN: | | PROJECT NO. | | SHEET NO. |
|---|---|---|---|---|
| CK DN: | | NH 2000(704),etc. | | 82T |
| DW: | | STATE | DIST. | COUNTY |
| CK DW: | | TEXAS | SAT | BEXAR |
| | CONT. | SECT. | JOB | HIGHWAY NO. |
| | 2452 | 01 | 036,etc. | LP 1604 |

Design Filename: e:\52\20\11\design\civil\plansheets\top\52201ltcpdt01.dgn

Plotted on: 01/26/2004

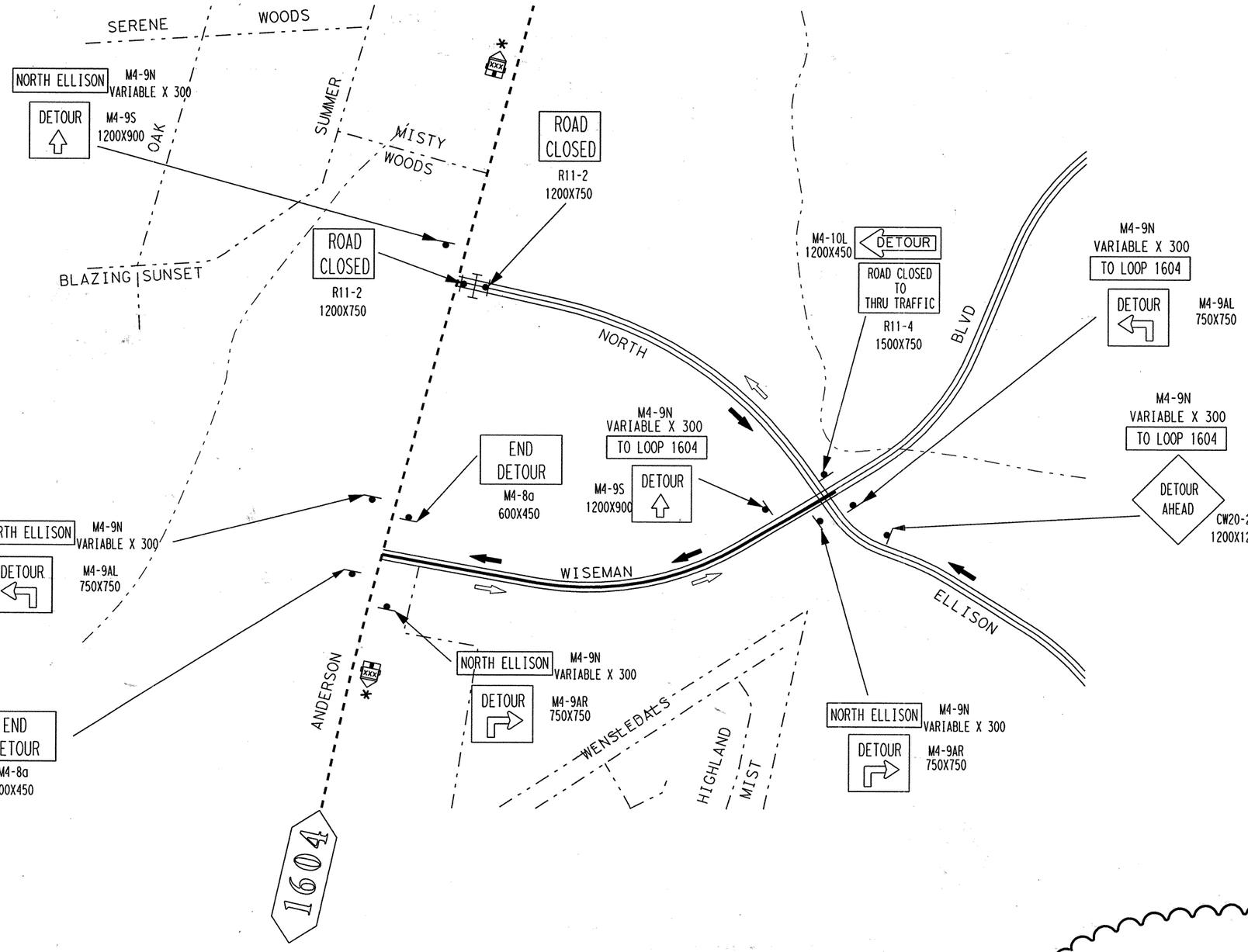


LEGEND

- DETOUR TO NORTH ELLISON TRAFFIC FLOW
- DETOUR TO LOOP 1604 TRAFFIC FLOW
- TYPE III BARRICADES
- SIGN
- PORT. CHANGEABLE MESSAGE SIGN (N. ELLISON DR CLOSED USE WISEMAN BLVD)

NOTES

1.) SEE BARRICADE AND CONSTRUCTION STANDARDS FOR SIGN MOUNTING AND PLACEMENT DETAILS.

* 2.) PORT CHANGEABLE MESSAGE SIGNS TO BE PLACED INTO CONTINUOUS USE A MINIMUM OF 7 DAYS PRIOR TO INTERSECTION CLOSURE, NOTIFYING PUBLIC OF PENDING INTERSECTION CLOSURE. WORDING SHALL BE AS APPROVED BY THE ENGINEER.

3.) DETOUR LAYOUT IS BEING PROVIDED FOR ROUTE AND SIGNS NEEDED ONLY. NO DETOUR CONSTRUCTION IS REQUIRED.

CHANGE ORDER NO. 63 — NEW SHEET

NOT TO SCALE

555 EAST RAMSEY SAN ANTONIO TEXAS 78216 PHONE (210)375-9000 FAX (210)375-9010
PAPE-DAWSON ENGINEERS CIVIL & ENVIRONMENTAL
STATE OF TEXAS J. KENT O'BRIEN 64398 LICENSED PROFESSIONAL ENGINEER
J. KENT O'BRIEN P.E. 1/27/2004 DATE

©2000 Texas Department of Transportation

LOOP 1604
@ NORTH ELLISON
DETOUR PLAN

| DN: | | PROJECT NO. | | SHEET NO. |
|---|---|---|---|---|
| CK DN: | | NH 2000(704),etc. | | 82U |
| DW: | | STATE | DIST. | COUNTY |
| CK DW: | | TEXAS | SAT | BEXAR |
| | CONT. | SECT. | JOB | HIGHWAY NO. |
| | 2452 | 01 | 036,etc. | LP 1604 |

CHANGE ORDER NO. 63
- NORTH ELLISON DETOUR ROUTE

Design Filename: p:\52\2011\design\civil\plansheets\top\52011tepdt02.dgn

Plotted on: 01/26/2004

REED ROAD
DETOUR
M4-9N VARIABLE X 300
M4-9S 1200X900

TO LOOP 1604
DETOUR
M4-9N VARIABLE X 300
M4-9AL 750X750

DETOUR AHEAD
CW20-2D 1200X1200

ROAD CLOSED AHEAD
CW20-3D 1200X1200

ROAD CLOSED
R11-2 1200X750

M4-10L 1200X450
DETOUR
ROAD CLOSED TO THRU TRAFFIC
R11-4 1500X750

REED ROAD
DETOUR
M4-9N VARIABLE X 300
M4-9AL 750X750

M4-9N VARIABLE X 300
REED ROAD
DETOUR
M4-9AL 750X750

M4-9N VARIABLE X 300
TO LOOP 1604
DETOUR
M4-9AR 750X750

TO LOOP 1604
M4-9N VARIABLE X 300
DETOUR
M4-9S 1200X900

END DETOUR
M4-8a 600X450

END DETOUR
M4-8a 600X450

M4-9N VARIABLE X 300
REED ROAD
DETOUR
M4-9AR 750X750

M4-9N VARIABLE X 300
REED ROAD
DETOUR
M4-9AL 750X750

TO LOOP 1604
M4-9N VARIABLE X 300
DETOUR
M4-9AL 750X750

TO LOOP 1604
M4-9N VARIABLE X 300
DETOUR AHEAD
CW20-2D 1200X1200

REED
DERBYSHIRE
CORK
HEATHERCREST
PICADILLY
COPPERFIELD
ROY
ROB
KILMARNOCH
LOCKINVER
BRITISH ARMS
BEN NEVIS
QUEENS-FERRY
MILITARY DRIVE
1604

N

LEGEND

- DETOUR TO REED RD TRAFFIC FLOW
- DETOUR TO LOOP 1604 TRAFFIC FLOW
- TYPE III BARRICADES
- SIGN
- PORT. CHANGEABLE MESSAGE SIGN (REED RD CLOSED, USE KILMARNOCH DR)

NOTES

1.) SEE BARRICADE AND CONSTRUCTION STANDARDS FOR SIGN MOUNTING AND PLACEMENT DETAILS.

* 2.) PORT CHANGEABLE MESSAGE SIGNS TO BE PLACED INTO CONTINUOUS USE A MINIMUM OF 7 DAYS PRIOR TO INTERSECTION CLOSURE, NOTIFYING PUBLIC OF PENDING INTERSECTION CLOSURE. WORDING SHALL BE AS APPROVED BY THE ENGINEER.

3.) DETOUR LAYOUT IS BEING PROVIDED FOR ROUTE AND SIGNS NEEDED ONLY. NO DETOUR CONSTRUCTION IS REQUIRED.

CHANGE ORDER NO. 63
- REED RD DETOUR ROUTE

CHANGE ORDER NO. 63 | NEW SHEET

NOT TO SCALE

555 EAST RAMSEY SAN ANTONIO TEXAS 78216 PHONE (210)375-9000 FAX (210)375-9010
PAPE-DAWSON ENGINEERS CIVIL & ENVIRONMENTAL
STATE OF TEXAS J. KENT O'BRIEN 64398 LICENSED PROFESSIONAL ENGINEER
J. KENT O'BRIEN P.E. 1/27/2004 DATE

©2000 Texas Department of Transportation

LOOP 1604
REED ROAD
DETOUR PLAN

| DN: | | PROJECT NO. | | SHEET NO. |
|---|---|---|---|---|
| CK: DN: | | NH 2000(704), etc. | | 82 V |
| DW: | | STATE | DIST. | COUNTY |
| | | TEXAS | SAT | BEXAR |
| CK DW: | CONT. | SECT. | JOB | HIGHWAY NO. |
| | 2452 | 01 | 036, etc. | LP 1604 |

Design Filename: p:\52\2011\design\civil\plansheets\tcp\522011tcpdt03.dgn

Plotted on: 01/26/2004

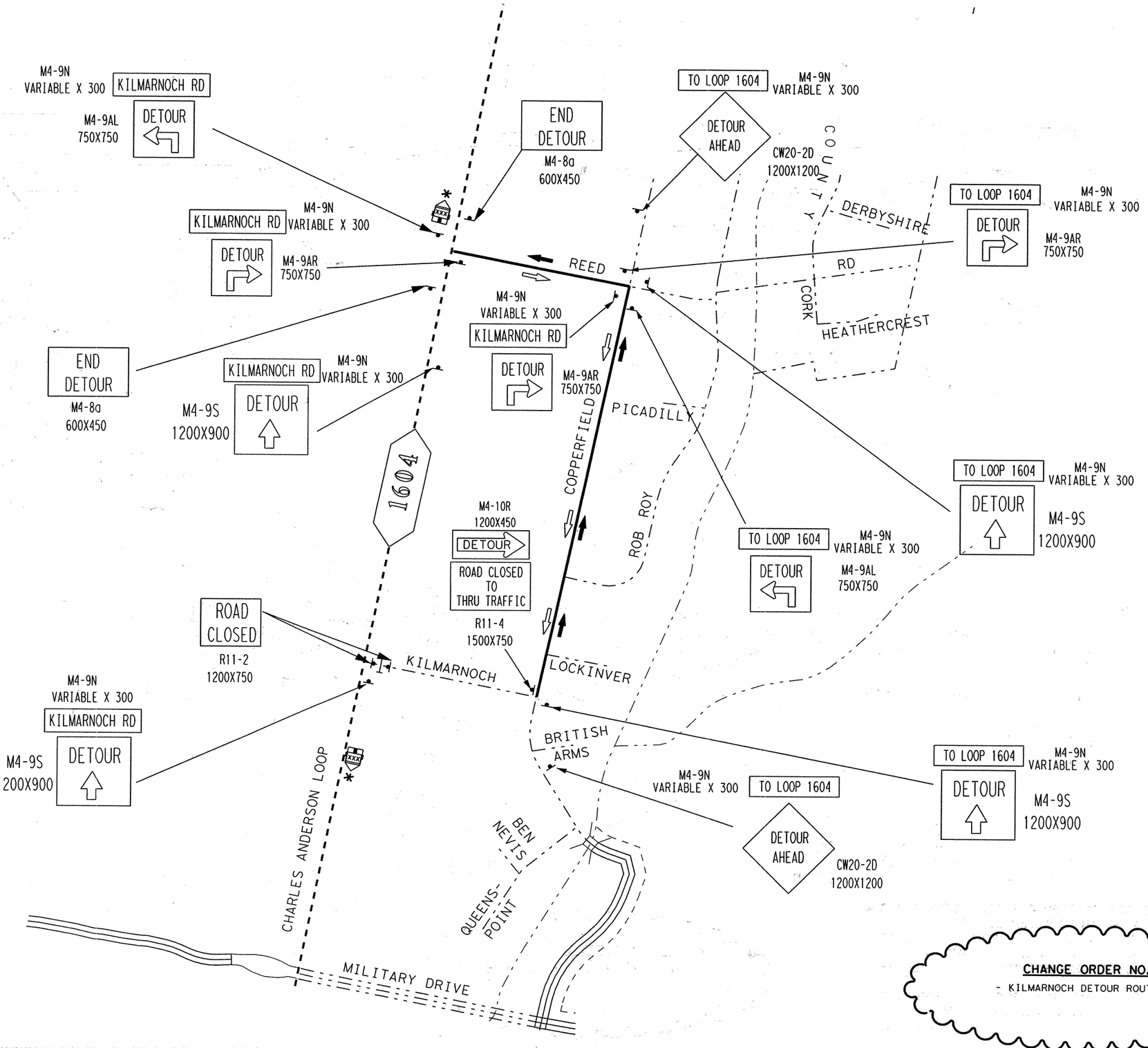


LEGEND

- DETOUR TO KILMARNOCH TRAFFIC FLOW
- DETOUR TO LOOP 1604 TRAFFIC FLOW
- TYPE III BARRICADES
- SIGN
- PORT. CHANGEABLE MESSAGE SIGN (KILMARNOCH DR CLOSED USE REED RD)

NOTES

1.) SEE BARRICADE AND CONSTRUCTION STANDARDS FOR SIGN MOUNTING AND PLACEMENT DETAILS.

* 2.) PORT CHANGEABLE MESSAGE SIGNS TO BE PLACED INTO CONTINUOUS USE A MINIMUM OF 7 DAYS PRIOR TO INTERSECTION CLOSURE, NOTIFYING PUBLIC OF PENDING INTERSECTION CLOSURE. WORDING SHALL BE AS APPROVED BY THE ENGINEER.

3.) DETOUR LAYOUT IS BEING PROVIDED FOR ROUTE AND SIGNS NEEDED ONLY. NO DETOUR CONSTRUCTION IS REQUIRED.

CHANGE ORDER NO. 63

- KILMARNOCH DETOUR ROUTE

CHANGE ORDER NO. 63 | NEW SHEET

NOT TO SCALE

555 EAST RAMSEY SAN ANTONIO TEXAS 78216
PHONE (210)375-9000
FAX (210)375-9010
PAPE-DAWSON ENGINEERS
CIVIL & ENVIRONMENTAL
STATE OF TEXAS
J. KENT O'BRIEN
64398
LICENSED
PROFESSIONAL ENGINEER
J. KENT O'BRIEN P.E.
1/27/2004
DATE

©2000 Texas Department of Transportation

# LOOP 1604
# KILMARNOCH ROAD
# DETOUR PLAN

| DN: | | PROJECT NO. | | SHEET NO. |
|---|---|---|---|---|
| CK DN: | | NH 2000(704), etc. | | 82 W |
| DW: | | STATE | DIST. | COUNTY |
| | | TEXAS | SAT | BEXAR |
| CK DW: | CONT. | SECT. | JOB | HIGHWAY NO. |
| | 2452 | 01 | 036, etc. | LP 1604 |

Design Filename: p:\52\2011\design\civil\plansheets\tcp\522011tcpdt04.dgn

Plotted on: 01/26/2004

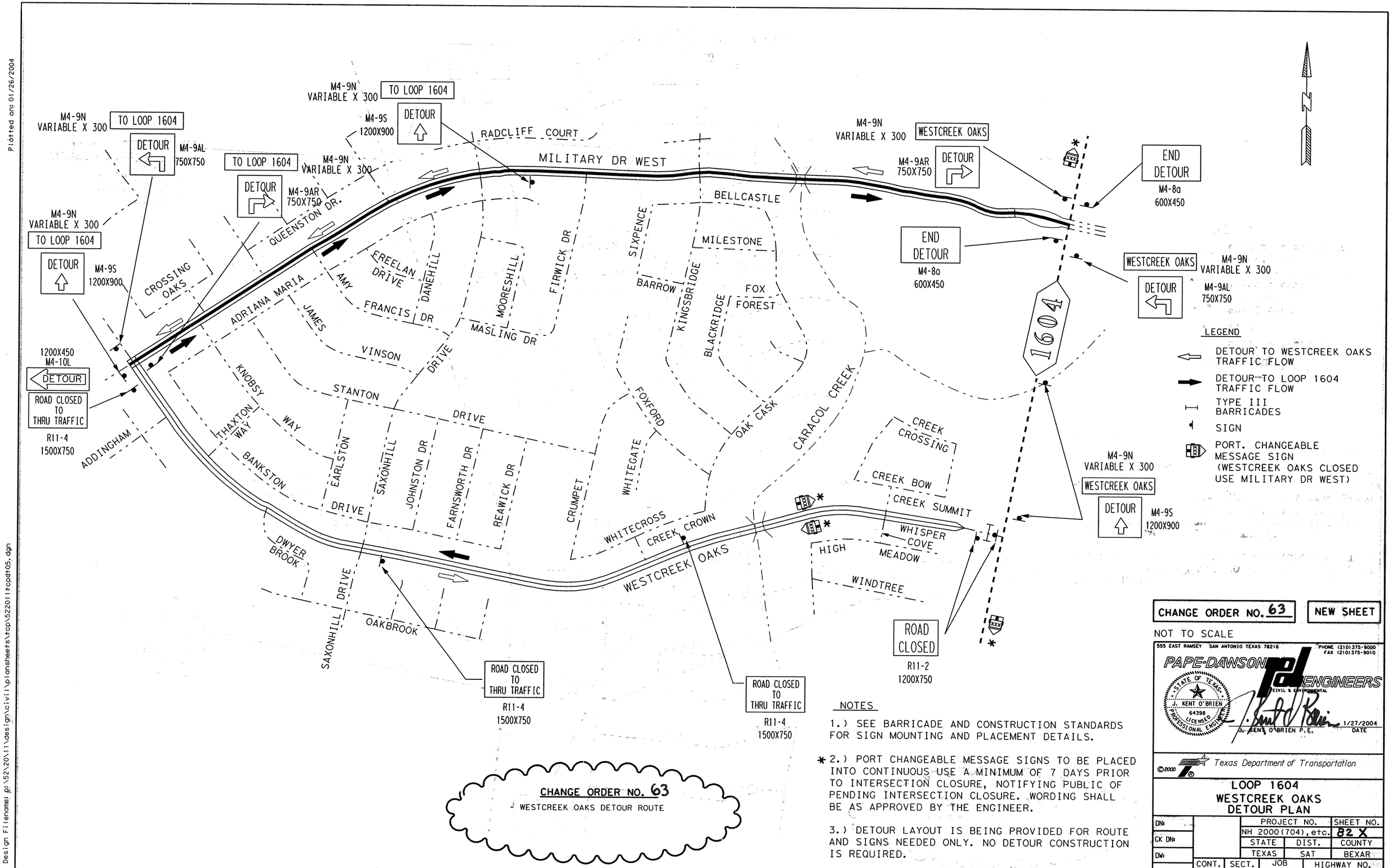


CHANGE ORDER NO. 63
WESTCREEK OAKS DETOUR ROUTE

NOTES

1.) SEE BARRICADE AND CONSTRUCTION STANDARDS FOR SIGN MOUNTING AND PLACEMENT DETAILS.

* 2.) PORT CHANGEABLE MESSAGE SIGNS TO BE PLACED INTO CONTINUOUS USE A MINIMUM OF 7 DAYS PRIOR TO INTERSECTION CLOSURE, NOTIFYING PUBLIC OF PENDING INTERSECTION CLOSURE. WORDING SHALL BE AS APPROVED BY THE ENGINEER.

3.) DETOUR LAYOUT IS BEING PROVIDED FOR ROUTE AND SIGNS NEEDED ONLY. NO DETOUR CONSTRUCTION IS REQUIRED.

CHANGE ORDER NO. 63 | NEW SHEET

NOT TO SCALE

555 EAST RAMSEY SAN ANTONIO TEXAS 78216 PHONE (210)375-9000 FAX (210)375-9010
PAPE-DAWSON ENGINEERS CIVIL & ENVIRONMENTAL
STATE OF TEXAS J. KENT O'BRIEN 64398 LICENSED PROFESSIONAL ENGINEER
J. KENT O'BRIEN P.E. 1/27/2004 DATE

©2000 Texas Department of Transportation

LOOP 1604
WESTCREEK OAKS
DETOUR PLAN

| DN: | | PROJECT NO. | | SHEET NO. |
|---|---|---|---|---|
| CK DN: | | NH 2000(704), etc. | | 82 X |
| DW: | | STATE | DIST. | COUNTY |
| | | TEXAS | SAT | BEXAR |
| CK DW: | CONT. / SECT. / JOB | | | HIGHWAY NO. |
| | 2452 / 01 / 036, etc. | | | LP 1604 |

Design Filename: p:\52\20\11\design\civil\plansheets\top\52011tcpdt05.dgn

Plotted on: 01/26/2004

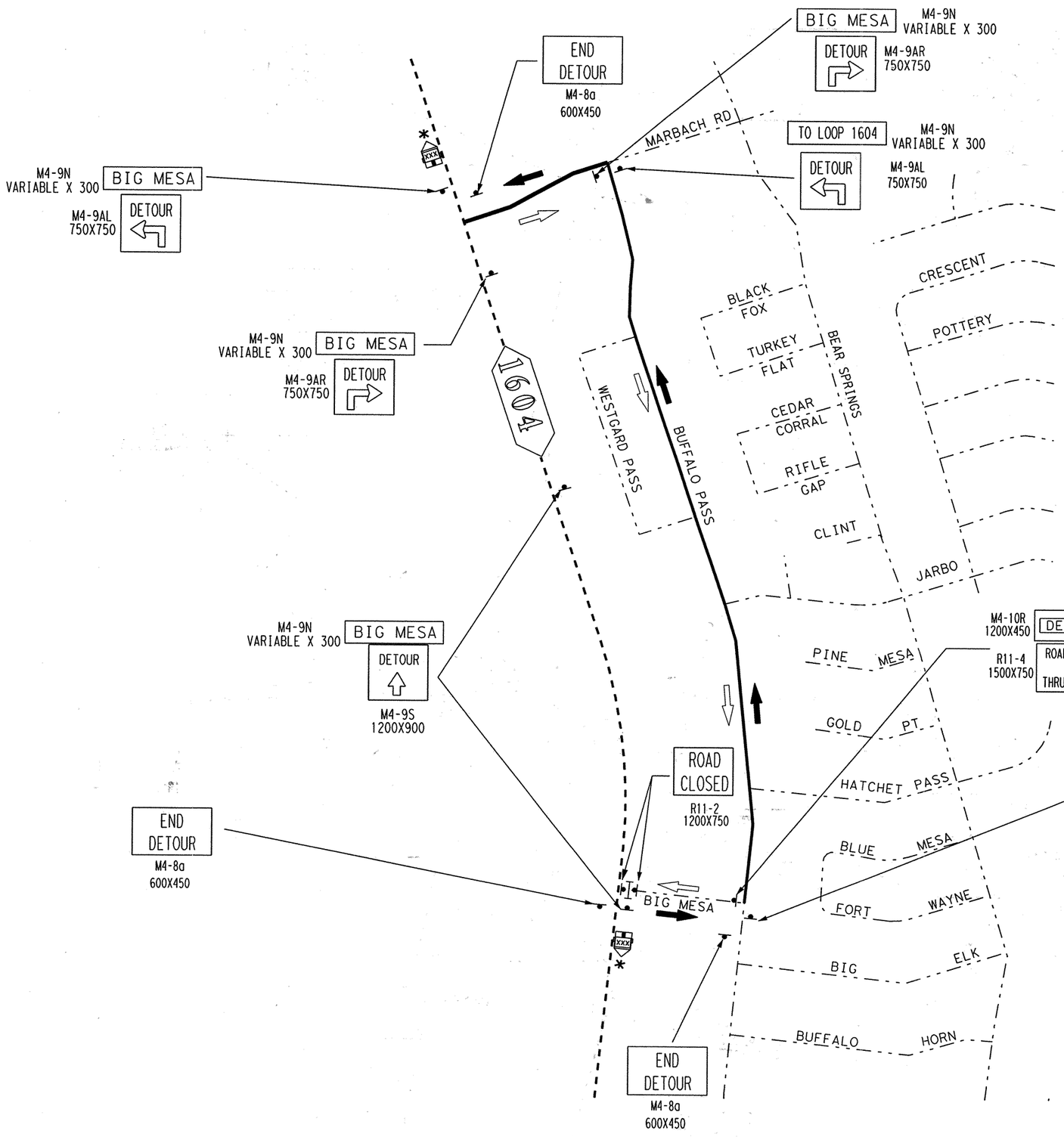


LEGEND

- DETOUR TO BIG MESA TRAFFIC FLOW
- DETOUR TO LOOP 1604 TRAFFIC FLOW
- TYPE III BARRICADES
- SIGN
- PORT. CHANGEABLE MESSAGE SIGN (BIG MESA CLOSED USE MARBACH RD)

NOTES

1.) SEE BARRICADE AND CONSTRUCTION STANDARDS FOR SIGN MOUNTING AND PLACEMENT DETAILS.

* 2.) PORT CHANGEABLE MESSAGE SIGNS TO BE PLACED INTO CONTINUOUS USE A MINIMUM OF 7 DAYS PRIOR TO INTERSECTION CLOSURE, NOTIFYING PUBLIC OF PENDING INTERSECTION CLOSURE. WORDING SHALL BE AS APPROVED BY THE ENGINEER.

3.) DETOUR LAYOUT IS BEING PROVIDED FOR ROUTE AND SIGNS NEEDED ONLY. NO DETOUR CONSTRUCTION IS REQUIRED.

CHANGE ORDER NO. 63 | NEW SHEET

NOT TO SCALE

CHANGE ORDER NO. 63
- BIG MESA DETOUR ROUTE

555 EAST RAMSEY SAN ANTONIO TEXAS 78216
PHONE (210)375-9000
FAX (210)375-9010
PAPE-DAWSON ENGINEERS
CIVIL & ENVIRONMENTAL
STATE OF TEXAS
J. KENT O'BRIEN
64398
LICENSED PROFESSIONAL ENGINEER
J. KENT O'BRIEN P.E.
1/27/2004
DATE

©2000 Texas Department of Transportation

# LOOP 1604
# BIG MESA
# DETOUR PLAN

| | | | | |
|---|---|---|---|---|
| DN: | | PROJECT NO. | | SHEET NO. |
| CK DN: | | NH 2000(704), etc. | | 82Y |
| DW: | | STATE | DIST. | COUNTY |
| CK DW: | | TEXAS | SAT | BEXAR |
| | CONT. | SECT. | JOB | HIGHWAY NO. |
| | 2452 | 01 | 036, etc. | LP 1604 |

Design Filename: p:\52\2011\design\civil\plansheets\tcp\52201tcpdt06.dgn

Plotted on: 01/26/2004

Design Filename: p:\52\20\11\design\civil\plansheets\tcp\522011tcpdt07.dgn

Cordi Mariam
Villa Convent

M4-9N
VARIABLE X 300
M4-9AL
750X750
MISTY WOODS DR
DETOUR

MISTY WOODS DR
END
DETOUR
M4-8a
600X450
M4-9N
VARIABLE X 300

CULEBRA

TO LOOP 1604
M4-9N
VARIABLE X 300
DETOUR
AHEAD
CW20-2D
1200X1200

CHARLES ANDERSON LOOP
1604

DETOUR
M4-9AL
750X750

M4-9N
VARIABLE X 300
MISTY WOODS DR
M4-9AL
750X750
DETOUR

M4-9N
VARIABLE X 300
TO LOOP 1604
M4-9AL
750X750
DETOUR

M4-9N
VARIABLE X 300
TO LOOP 1604
DETOUR
M4-9AR
750X750

ENCHANTED
BREEZE

VALLEY
MEADOW

M4-9N
VARIABLE X 300
MISTY WOODS DR
DETOUR
M4-9AR
750X750

151

M4-9N
VARIABLE X 300
MISTY WOODS DR
DETOUR
M4-9S
1200X900

END
DETOUR
M4-8a
600X450

1200X450
M4-10L
DETOUR
R11-4
1500X750
ROAD CLOSED
TO
THRU TRAFFIC

SERENE WOODS

SUMMER BREEZE

MISTY
WOODS DR

BLAZING SUNSET

NORTH ELLISON

M4-9N
VARIABLE X 300
TO LOOP 1604
M4-9S
1200X900
DETOUR

ROAD
CLOSED
R11-2
1200X750

CHANGE ORDER NO. 63
- MISTY WOODS DETOUR ROUTE

LEGEND

- DETOUR TO MISTY WOODS TRAFFIC FLOW
- DETOUR TO LOOP 1604 TRAFFIC FLOW
- TYPE III BARRICADES
- SIGN
- PORT. CHANGEABLE MESSAGE SIGN (MISTY WOODS CLOSED USE VALLEY MEADOW)

NOTES

1.) SEE BARRICADE AND CONSTRUCTION STANDARDS FOR SIGN MOUNTING AND PLACEMENT DETAILS.

2.) PORT CHANGEABLE MESSAGE SIGNS TO BE PLACED INTO CONTINUOUS USE A MINIMUM OF 7 DAYS PRIOR TO INTERSECTION CLOSURE, NOTIFYING PUBLIC OF PENDING INTERSECTION CLOSURE. WORDING SHALL BE AS APPROVED BY THE ENGINEER.

3.) DETOUR LAYOUT IS BEING PROVIDED FOR ROUTE AND SIGNS NEEDED ONLY. NO DETOUR CONSTRUCTION IS REQUIRED.

CHANGE ORDER NO. 63 | NEW SHEET

NOT TO SCALE

555 EAST RAMSEY SAN ANTONIO TEXAS 78216
PHONE (210)375-9000
FAX (210)375-9010
PAPE-DAWSON ENGINEERS
CIVIL & ENVIRONMENTAL

STATE OF TEXAS
J. KENT O'BRIEN
64398
LICENSED
PROFESSIONAL ENGINEER

J. KENT O'BRIEN P.E. — 1/27/2004 DATE

©2000 Texas Department of Transportation

# LOOP 1604
# MISTY WOODS DRIVE
# DETOUR PLAN

| | | PROJECT NO. | | SHEET NO. |
|---|---|---|---|---|
| DN: | | NH 2000(704), etc. | | 82Z |
| CK DN: | | STATE | DIST. | COUNTY |
| DW: | | TEXAS | SAT | BEXAR |
| CK DW: | CONT. | SECT. | JOB | HIGHWAY NO. |
| | 2452 | 01 | 036, etc. | LP 1604 |

DRAINAGE & ROADWAY CONSTRUCTION ⇨ TRAFFIC FLOW DIRECTION

V.I.A. ASSEMBLY (14 BARRELS EACH LOCATION)

| SEQUENCE OF WORK ESTIMATED QUANTITIES | | 2452-01-037 |
|---|---|---|
| ITEM | UNIT | QTY |
| PORT CONC TRAF BAR (STKPL, INSTL & RETRN) | M | 290 |
| VEH IMP ATTN ASSEM BRLS (MOVE & RESET) | EA | 56 |
| VEH IMP ATTN ASSEM BRLS (REMOVE) | EA | 28 |
| | | |

SCALE 1:2000

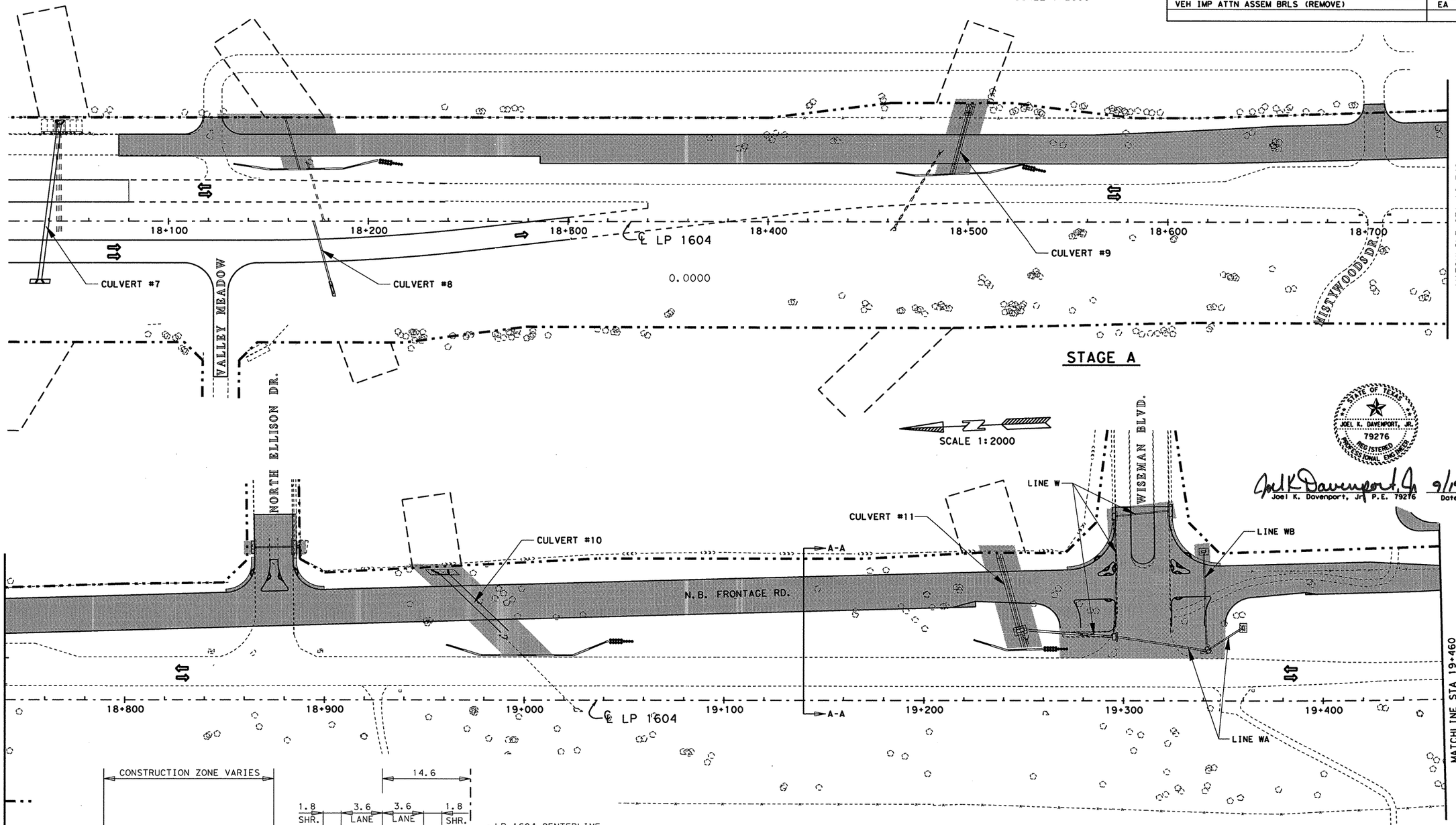


STAGE A

SCALE 1:2000

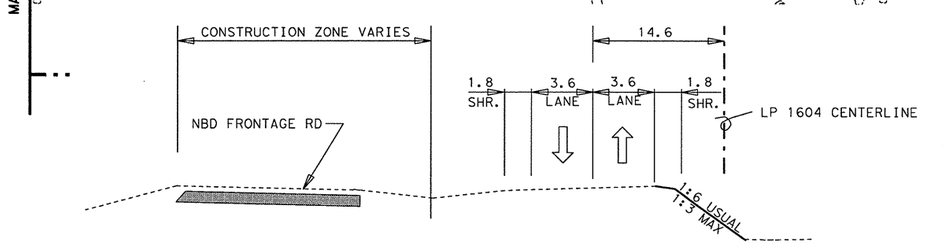


TYPICAL SECTION A-A
FROM STA 18+500 TO STA 27+900
NOT TO SCALE

STATE OF TEXAS
JOEL K. DAVENPORT, JR.
79276
REGISTERED PROFESSIONAL ENGINEER

Joel K. Davenport, Jr. 9/19/00
Joel K. Davenport, Jr. P.E. 79276 Date

©2000

Texas Department of Transportation

# SEQUENCE OF WORK PHASE 2A

SHEET 1 OF 9

| FED. RD. DIV. NO. | FEDERAL AID PROJECT NO. | | SHEET NO. |
|---|---|---|---|
| 6 | NH 2000(704), ETC. | | 83 |
| STATE | DIST. | COUNTY | |
| TEXAS | SAT | BEXAR | |
| CONT. | SECT. | JOB | HIGHWAY NO. |
| 2452 | 01 | 036, ETC | LP 1604 |

FILE: t:\ao\design\lp1604fm471-90\sow\phase1\phase2a01.dgn 15 SEP 2000
LEVEL DISPLAYED
1 2 3 4 5 6 7 8 9 10 11 12 13 14 15 16 17 18 19 20 21 22 23 24 25 26 27 28 29 30 31 32
33 34 35 36 37 38 39 40 41 42 43 44 45 46 47 48 49 50 51 52 53 54 55 56 57 58 59 60 61 63

Plotted on: 01/26/2004

Design Filename: p:\52\2011\design\civil\plansheets\tcp\phase2a01.dgn

FILE p:\52\2011\design\civil\plansheets\tcp\phase2a01.dgn 01/26/2004
LEVEL DISPLAYED

DRAINAGE & ROADWAY CONSTRUCTION
CONSTRUCTION DETOUR
TRAFFIC FLOW DIRECTION
V.I.A. ASSEMBLY ( 14 BARRELS EACH LOCATION )

SCALE 1:2000

| SEQUENCE OF WORK ESTIMATED QUANTITIES | | 2452-01-037 |
|---|---|---|
| ITEM | UNIT | QTY |
| PORT CONC TRAF BAR (STKPL, INSTL & RETRN) | M | 200.8 |
| VEH IMP ATTN ASSEM BRLS | EA | 42 |
| VEH IMP ATTN ASSEM BRLS (MOVE & RESET). | EA | 28 |
| VEH IMP ATTN ASSEM BRLS (REMOVE) | EA | 42 |
| TEMPORARY SPL SHORING | M2 | 39.6 |
| RC PIPE (CL III) (600 MM) | M | 26.100 |
| CONST DETOUR (CL 3) | M2 | 511 |
| CMP AR (DES 3) | M | 63.1 |
| SET (TY II) (DES 3) (CMP) (1:6) | EA | 4 |

PCTB AND VIA ASSEM INSTALLED DURING PHASE 1 CONSTRUCTION

(TEMPORARY CULVERT #9) (SEE TEMPORARY CULVERT LAYOUT FOR MORE DETAILS)

CONST DETOUR (CL 3) EST @ 156 M2

VIA (MOVE & RESET)

CMP AR (DES 3) EST @ 29.9 M W/ 1:6 SET'S (TEMP)

PCTB EST @ 54.8 M

CULVERT #9

CULVERT #7

CULVERT #8

18+100 18+200 18+300 18+400 18+500 18+600 18+700

℄ LP 1604

MISTYWOODS DR.

MATCHLINE STA 18+740

VALLEY MEADOW

NORTH ELLISON DR.

CONCRETE ISLAND SHALL BE RECONSTRUCTED AFTER PHASE 2B IS COMPLETED

CONST DETOUR (CL 3) EST @ 355 M2

DRAINAGE EASEMENT

CULVERT #10 (SEE STAGED CONSTRUCTION LAYOUTS FOR MORE DETAILS)

CMP AR (DES 3) EST @ 33.2 M W/ 1:6 SET'S (TEMP)

TEMP SHORING EST @ 39.6 M2

N.B. FRONTAGE RD.

18+800 18+900 19+000 19+100 19+200 19+300 19+400

℄ LP 1604

A-A

MATCHLINE STA 18+740

MATCHLINE STA 19+460

SCALE 1:2000

CULVERT #11 (SEE STAGED CONSTRUCTION LAYOUTS FOR MORE DETAILS)

DRAINAGE EASEMENT

LINE W

LINE WB

LINE WA

WISEMAN BLVD.

VIA (MOVE & RESET)

VIA (MOVE & RESET)

PCTB EST @ 63.7M

PCTB EST @ 82.3M TO BE INSTALLED WHEN CONSTRUCTING LINE WA AND TO BE REMOVED AFTER LINE WA IS COMPLETE. VIA'S SHALL BE RELOCATED ACCORDINGLY.

DRAINAGE EASEMENT

R.O.W.

CONSTRUCTION ZONE VARIES

14.6

1.8 SHR. | 3.6 LANE | 3.6 LANE | 1.8 SHR.

0.3 MAX

NBD FRONTAGE RD

LP 1604 CENTERLINE

PCTB (AT LOCATIONS SHOWN ON S.O.W. LAYOUTS)

1:6 USUAL MAX

TYPICAL SECTION A-A
FROM STA 18+500 TO STA 27+900
NOT TO SCALE

**CHANGE ORDER NO. 63**

-REVISED SEQUENCE OF WORK FOR INTERSECTIONS
-REVISED PCTB LOCATIONS AND LENGTHS
-ADDED TEMP SHORING
-ADDED TEMPORARY CULVERTS
-REVISED QUANTITIES

555 EAST RAMSEY SAN ANTONIO TEXAS 78216
PHONE (210)375-9000
FAX (210)375-9010
PAPE-DAWSON ENGINEERS
CIVIL & ENVIRONMENTAL
STATE OF TEXAS J. KENT O'BRIEN 64398 LICENSED PROFESSIONAL ENGINEER
J. KENT O'BRIEN P.E. 1/27/2004 DATE

CHANGE ORDER NO. 63 | REVISED SHEET

©2000
Texas Department of Transportation

# SEQUENCE OF WORK PHASE 2A

SHEET 1 OF 8

| FED. RD. DIV. NO. | FEDERAL AID PROJECT NO. | SHEET NO. |
|---|---|---|
| 6 | NH 2000(704), ETC. | 83A |
| STATE | DIST. | COUNTY |
| TEXAS | SAT | BEXAR |
| CONT. | SECT. | JOB | HIGHWAY NO. |
| 2452 | 01 | 036, ETC | LP 1604 |

DRAINAGE & ROADWAY CONSTRUCTION ⇨ TRAFFIC FLOW DIRECTION

V.I.A. ASSEMBLY ( 14 BARRELS EACH LOCATION )

SCALE 1:2000

| SEQUENCE OF WORK ESTIMATED QUANTITIES | | 2452-01-037 | 2452-01-036 |
|---|---|---|---|
| ITEM | UNIT | QTY | QTY |
| PORT CONC TRAF BAR (STKPL, INSTL & RETRN) | M | 180 | - |
| VEH IMP ATTN ASSEM BRLS (MOVE & RESET) | EA | 28 | - |
| | | | |

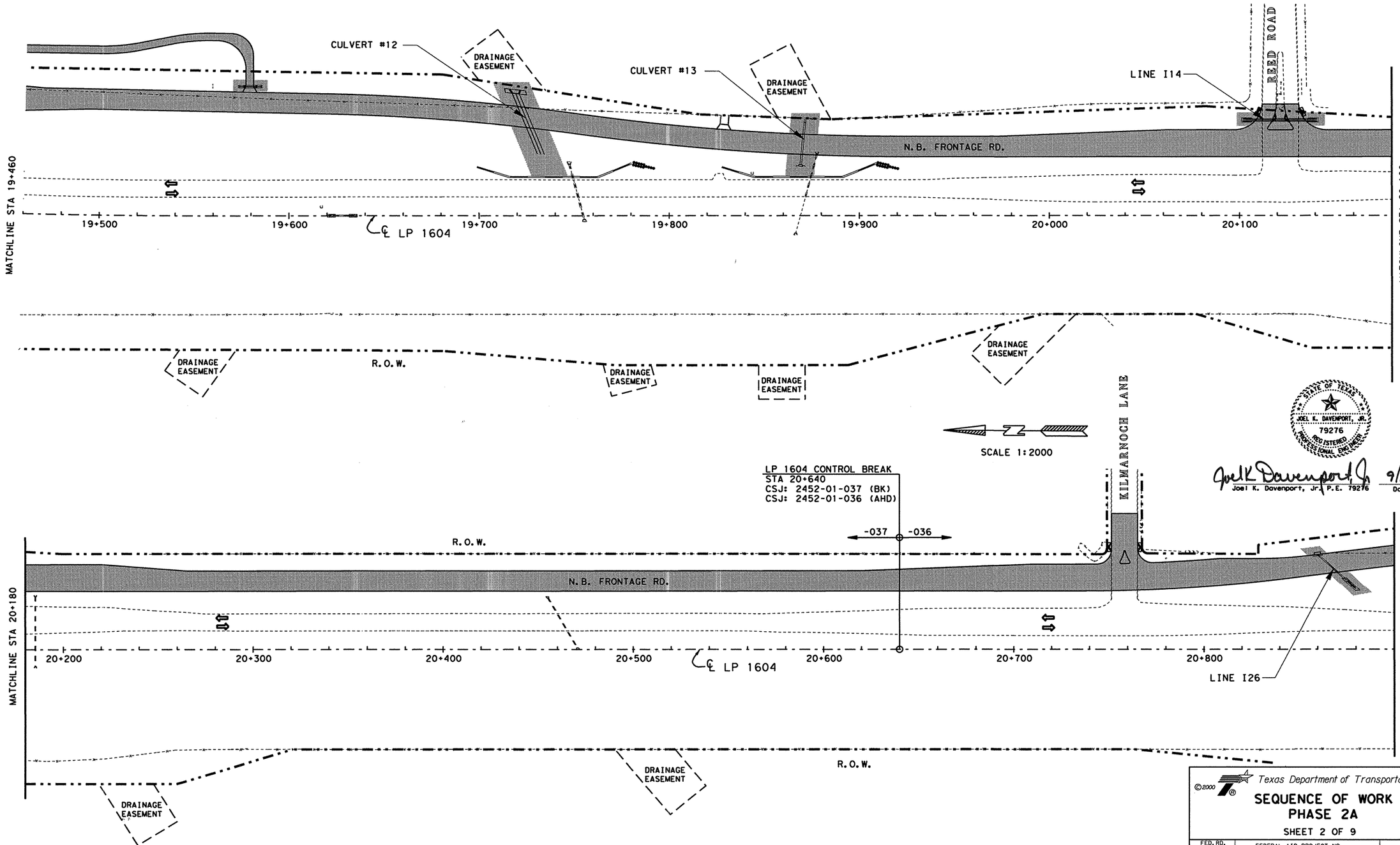


STATE OF TEXAS
JOEL K. DAVENPORT, JR.
79276
REGISTERED PROFESSIONAL ENGINEER

Joel K Davenport Jr 9/19/00
Joel K. Davenport, Jr. P.E. 79276 Date

FILE: t:\sa\design\lp1604fm471-90\sow\phase ii\phase2a02.dgn 15 SEP 2000
LEVEL DISPLAYED

©2000

Texas Department of Transportation

# SEQUENCE OF WORK PHASE 2A

SHEET 2 OF 9

| FED. RD. DIV. NO. | FEDERAL AID PROJECT NO. | | SHEET NO. |
|---|---|---|---|
| 6 | NH 2000(704), ETC. | | 84 |
| STATE | DIST. | COUNTY | |
| TEXAS | SAT | BEXAR | |
| CONT. | SECT. | JOB | HIGHWAY NO. |
| 2452 | 01 | 036, ETC | LP 1604 |

Plotted on: 01/26/2004

Design Filename: p:\52\2011\design\civil\plansheets\top\phase2a02.dgn

| FILE | p:\52\2011\design\civil\plansheets\top\phase2a02.dgn | 01/26/2004 |
|---|---|---|
| LEVEL | 1 2 3 4 5 6 7 8 9 10 11 12 13 14 15 61 71 81 92 101 112 122 132 142 152 162 172 182 193 203 213 223 233 243 253 263 273 283 293 303 313 323 333 343 353 363 373 383 393 403 413 423 433 443 453 463 473 483 493 503 513 523 533 543 553 563 573 583 593 603 613 623 633 | |
| DISPLAYED | 1 2 3 4 5 6 7 8 9 10 11 12 13 14 15 61 71 81 92 101 112 122 132 142 152 162 172 182 193 203 213 223 233 243 253 263 273 283 293 303 313 323 333 343 353 363 373 383 393 403 413 423 433 443 453 463 473 483 493 503 513 523 533 543 553 563 573 583 593 603 613 623 633 | |

DRAINAGE & ROADWAY CONSTRUCTION

CONSTRUCTION DETOUR

TRAFFIC FLOW DIRECTION

V.I.A. ASSEMBLY (14 BARRELS EACH LOCATION)

SCALE 1:2000

| SEQUENCE OF WORK ESTIMATED QUANTITIES | | 2452-01-037 | 2452-01-036 |
|---|---|---|---|
| ITEM | UNIT | QTY | QTY |
| PORT CONC TRAF BAR (STKPL, INSTL & RETRN) | M | 118.3 | - |
| VEH IMP ATTN ASSEM BRLS | EA | 28 | - |
| VEH IMP ATTN ASSEM BRLS (REMOVE) | EA | 28 | - |
| CONST DETOUR (CL 3) | M2 | 230 | 175 |
| TEMPORARY SPL SHORING | M2 | 38.4 | - |
| CMP AR (DES 3) | M | 18.8 | 22.9 |
| RC PIPE (CL III) (600 MM) | M | 20.177 | - |
| SET (TY II) (DES 3) (CMP) (1:6) | EA | 4 | 2 |

CULVERT #12
(SEE STAGED CONSTRUCTION LAYOUT FOR MORE DETAILS)

DRAINAGE EASEMENT

CULVERT #13

DRAINAGE EASEMENT

LINE I14

READ ROAD

CMP AR (DES 3)
EST @ 9.4 M
W/ 1:6 SET'S (TEMP)

CONST DETOUR (CL 3)
EST @ 152 M2

TEMP SHORING
EST @ 38.4 M2

N.B. FRONTAGE RD.

MATCHLINE STA 19+460

19+500 19+600 ℄ LP 1604 19+700 19+800 19+900 20+000 20+100

CONST DETOUR (CL 3)
EST @ 78 M2

CMP AR (DES 3)
EST @ 9.4 M
W/ 1:6 SET'S (TEMP)

PCTB EST @ 118.3M

CONCRETE ISLAND SHALL BE CONSTRUCTED AFTER PHASE 2B IS COMPLETED

MATCHLINE STA 20+180

DRAINAGE EASEMENT

R.O.W.

DRAINAGE EASEMENT

DRAINAGE EASEMENT

DRAINAGE EASEMENT

SCALE 1:2000

CONCRETE ISLAND SHALL BE CONSTRUCTED AFTER PHASE 2B IS COMPLETED

KILMARNOCH LANE

**CHANGE ORDER NO. 63**

-REVISED PCTB LOCATIONS AND LENGTHS
-ADDED TEMPORARY CULVERTS
-ADDED TEMP SHORING
-ADDED DETOUR & CMP FOR TEMP DRVWYS
-REVISED QUANTITIES

LP 1604 CONTROL BREAK
STA 20+640
CSJ: 2452-01-037 (BK)
CSJ: 2452-01-036 (AHD)

-037 -036

R.O.W.

N.B. FRONTAGE RD.

MATCHLINE STA 20+180

20+200 20+300 20+400 20+500 ℄ LP 1604 20+600 20+700 20+800

CONSTR DETOUR (CL III)
EST @ 175 M2

CMP AR (DES 3)
EST @ 22.9 M
W/ 1:6 SET'S (TEMP)

LINE I26

MATCHLINE SAT 20+900

R.O.W.

DRAINAGE EASEMENT

DRAINAGE EASEMENT

**CHANGE ORDER NO. 63** | **REVISED SHEET**

555 EAST RAMSEY SAN ANTONIO TEXAS 78216
PHONE (210) 375-9000
FAX (210) 375-9010
PAPE-DAWSON ENGINEERS
CIVIL & ENVIRONMENTAL

STATE OF TEXAS
J. KENT O'BRIEN
64398
LICENSED PROFESSIONAL ENGINEER

J. KENT O'BRIEN P.E. 1/27/2004 DATE

©2000 Texas Department of Transportation

# SEQUENCE OF WORK
## PHASE 2A

SHEET 2 OF 8

| FED. RD. DIV. NO. | FEDERAL AID PROJECT NO. | | SHEET NO. |
|---|---|---|---|
| 6 | NH 2000(704), ETC. | | 84A |
| STATE | DIST. | COUNTY | |
| TEXAS | SAT | BEXAR | |
| CONT. | SECT. | JOB | HIGHWAY NO. |
| 2452 | 01 | 036, ETC | LP 1604 |

DRAINAGE & ROADWAY CONSTRUCTION

TRAFFIC FLOW DIRECTION

V.I.A. ASSEMBLY ( 14 BARRELS EACH LOCATION )

SCALE 1:2000

| SEQUENCE OF WORK ESTIMATED QUANTITIES | | 2452-01-036 |
|---|---|---|
| ITEM | UNIT | QTY |
| PORT CONC TRAF BAR (STKPL, INSTL & RETRN) | M | 90 |
| VEH IMP ATTN ASSEM BRLS (MOVE & RESET) | EA | 14 |
| | | |

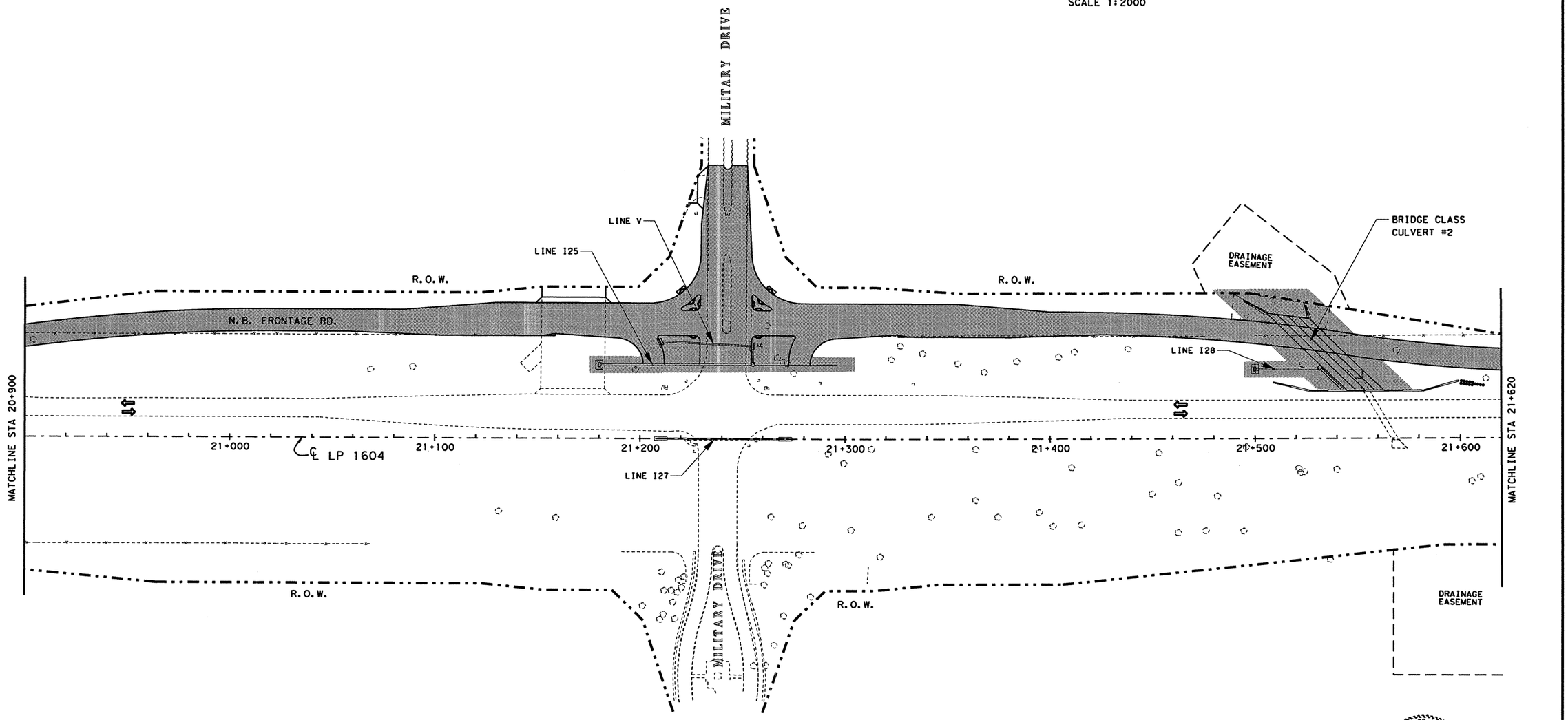


FILE: t:\ao\design\lp1604fm471-90\sow\phaseii\phase2a03.dgn 15 SEP 2000

| LEVEL | 1 | 2 | 3 | 4 | 5 | 6 | 7 | 8 | 9 | 10 | 11 | 12 | 21 | 31 | 41 | 51 | 61 | 71 | 81 | 92 | 02 | 12 | 22 | 32 | 42 | 52 | 62 | 72 | 82 | 93 | 03 | 153 |
|---|---|---|---|---|---|---|---|---|---|---|---|---|---|---|---|---|---|---|---|---|---|---|---|---|---|---|---|---|---|---|---|---|
| DISPLAYED | 33 | 34 | 35 | 35 | 63 | 73 | 83 | 94 | 04 | 14 | 24 | 34 | 44 | 54 | 64 | 74 | 84 | 95 | 05 | 15 | 25 | 35 | 45 | 55 | 56 | 65 | 75 | 85 | 96 | 0 | 1 | 63 |

STATE OF TEXAS
JOEL K. DAVENPORT, JR.
79276
REGISTERED
PROFESSIONAL ENGINEER

Joel K. Davenport, Jr. 9/19/00

Joel K. Davenport, Jr. P.E. 79276 Date

©2000

Texas Department of Transportation

# SEQUENCE OF WORK PHASE 2A

SHEET 3 OF 9

| FED. NO. DIV. NO. | FEDERAL AID PROJECT NO. | | SHEET NO. |
|---|---|---|---|
| 6 | NH 2000(704), ETC. | | 85 |
| STATE | DIST. | COUNTY | |
| TEXAS | SAT | BEXAR | |
| CONT. | SECT. | JOB | HIGHWAY NO. |
| 2452 | 01 | 036, ETC | LP 1604 |

DRAINAGE & ROADWAY CONSTRUCTION

CONSTRUCTION DETOUR

TRAFFIC FLOW DIRECTION

V.I.A. ASSEMBLY (14 BARRELS EACH LOCATION )

SCALE 1:2000

| SEQUENCE OF WORK ESTIMATED QUANTITIES | | 2452-01-036 |
|---|---|---|
| ITEM | UNIT | QTY |
| PORT CONC TRAF BAR (STKPL, INSTL & RETRN) | M | 1C2.2 |
| VEH IMP ATTN ASSEM BRLS | EA | 14 |
| VEH IMP ATTN ASSEM BRLS (REMOVE) | EA | 14 |
| TEMPORARY SPL SHORING | M2 | 75.1 |
| CONST DETOUR (CL 3) | M2 | 231 |
| CMP AR (GAL STL DES 3) | M | 13.0 |
| SET (TY II) (DES 3) (CMP) (1:6) | EA | 2 |

**CHANGE ORDER NO. 63**

-REVISED SEQUENCE OF WORK FOR INTERSECTIONS
-REVISED PCTB LOCATIONS AND LENGTHS
-ADDED TEMP SHORING
-REVISED QUANTITIES

MILITARY DRIVE

CONST DETOUR (CL 3)
(SEE INTERSECT S.O.W.
SHT 1 OF 7 FOR PAY)

SEE INTERSECTION S.O.W.
SHEETS FOR MORE DETAILS

LINE V

LINE I25

R.O.W.

N.B. FRONTAGE RD.

CONST DETOUR (CL 3)
EST @ 231 M2

CMP AR (DES 3)
EST @ 13.0 M
W/ 1:6 SET'S(TEMP)

LINE I27

MATCHLINE STA 20+900

21+000

℄ LP 1604

21+100

21+200

21+300

21+400

R.O.W.

LINE I28

DRAINAGE EASEMENT

BRIDGE CLASS CULVERT #2

TEMP SHORING
EST @ 75.1 M2

PCTB
EST @ 102.2M

20+500

21+600

MATCHLINE STA 21+620

DRAINAGE EASEMENT

STATE OF TEXAS
JEROME D. PAVLISKA
76075
REGISTERED
PROFESSIONAL ENGINEER

Jerome D. Pavliska P.E 8-30-04
Jerome D. Pavliska, P.E. Date

CHANGER ORDER NO. 63

REVISED SHEET

©2004

Texas Department of Transportation

# SEQUENCE OF WORK PHASE 2A

SHEET 3 OF 8

| FED.RD. DIV.NO. | FEDERAL AID PROJECT NO. | | SHEET NO. |
|---|---|---|---|
| 6 | NH 2000(704), ETC. | | 85A |
| STATE | DIST. | COUNTY | |
| TEXAS | SAT | BEXAR | |
| CONT. | SECT. | JOB | HIGHWAY NO. |
| 2452 | 01 | 036,ETC | LP 1604 |

FILE f:\AO\Design\lp1604fm471-90\PD+PH2+ChangeOrder\submittal\PlanSheets\TCP\phase2A03.dgn

| LEVEL | 1 | 2 | 3 | 4 | 5 | 6 | 7 | 8 | 9 | 10 | 11 | 12 | 13 | 14 | 15 | 16 | 17 | 18 | 19 | 20 | 21 | 22 | 23 | 24 | 25 | 26 | 27 | 28 | 29 | 30 | 31 | 32 |
|---|---|---|---|---|---|---|---|---|---|---|---|---|---|---|---|---|---|---|---|---|---|---|---|---|---|---|---|---|---|---|---|---|
| DISPLAYED | 1 | 3 | 4 | 3 | 5 | 6 | 3 | 7 | 6 | 8 | 3 | 9 | 4 | 10 | 4 | 11 | 12 | 4 | 13 | 4 | 14 | 5 | 4 | 15 | 6 | 4 | 16 | 7 | 4 | 18 | 4 | 19 |

| LEVEL | 33 | 34 | 35 | 36 | 37 | 38 | 39 | 40 | 41 | 42 | 43 | 44 | 45 | 46 | 47 | 48 | 49 | 50 | 51 | 52 | 53 | 54 | 55 | 56 | 57 | 58 | 59 | 60 | 61 | 62 | 63 |
|---|---|---|---|---|---|---|---|---|---|---|---|---|---|---|---|---|---|---|---|---|---|---|---|---|---|---|---|---|---|---|---|
| DISPLAYED | 5 | 4 | 5 | 6 | 3 | 7 | 6 | 3 | 8 | 4 | 9 | 5 | 10 | 5 | 11 | 5 | 12 | 5 | 13 | 5 | 14 | 5 | 15 | 5 | 16 | 5 | 17 | 5 | 18 | 5 | 19 |

DRAINAGE & ROADWAY CONSTRUCTION

TRAFFIC FLOW DIRECTION

| SEQUENCE OF WORK ESTIMATED QUANTITIES | | 2452-01-036 |
|---|---|---|
| ITEM | UNIT | QTY |
| PORT CONC TRAF BAR (STKPL, INSTL & RETRN) | M | 120 |
| VEH IMP ATTN ASSEM BRLS (MOVE & RESET) | EA | 28 |
| | | |

SCALE 1:2000

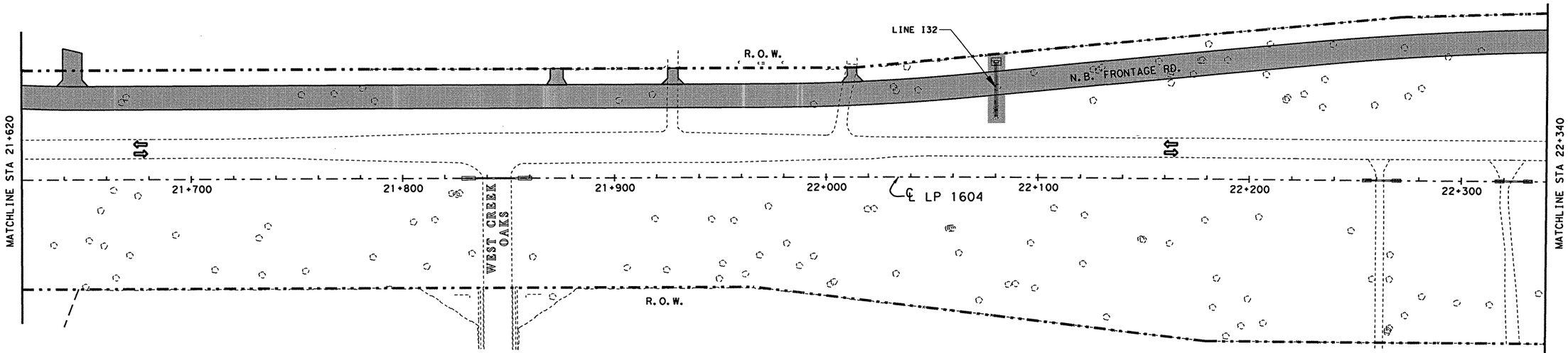


SCALE 1:2000

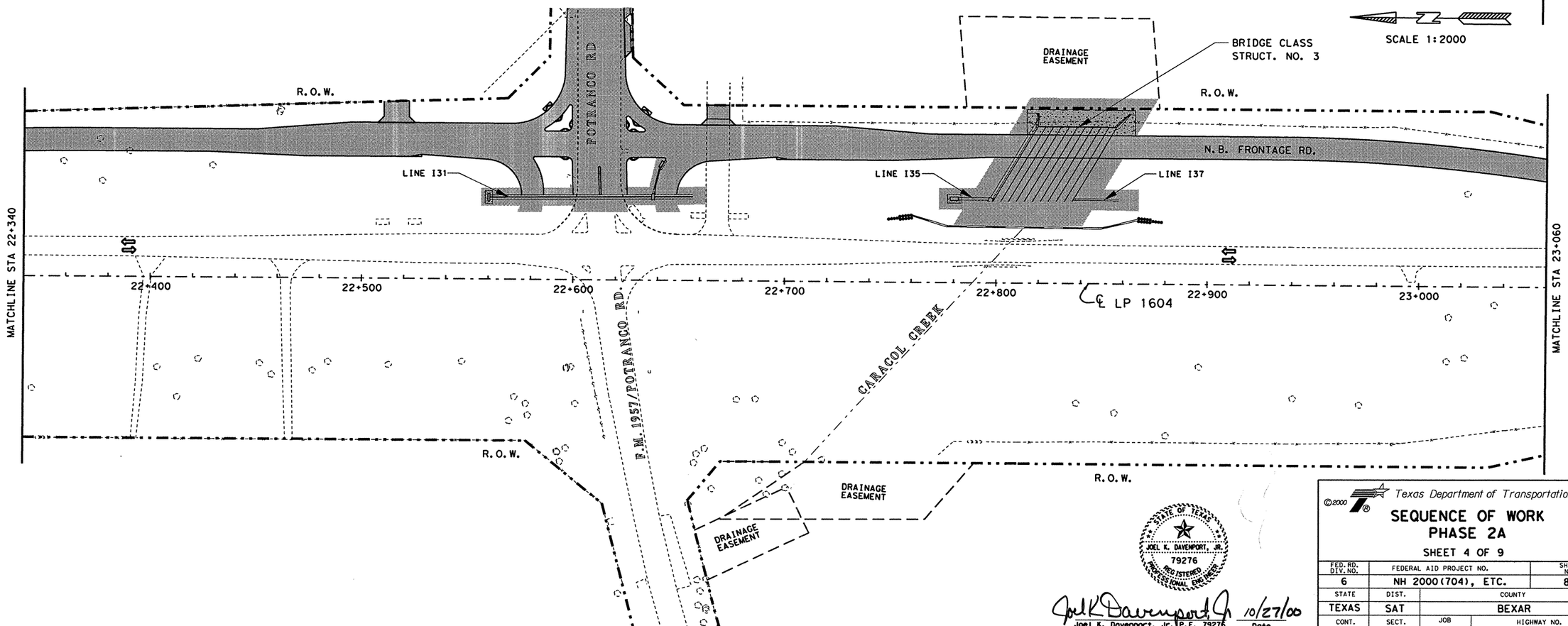


STATE OF TEXAS
JOEL K. DAVENPORT, JR.
79276
REGISTERED
PROFESSIONAL ENGINEER

Joel K Davenport Jr 10/27/00

Joel K. Davenport, Jr. P.E. 79276 — Date

FILE t:\roi\design\lp1604fm471-90\sow\phase2\ii\phase2d04.dgn 26 OCT 2000

LEVEL DISPLAYED 1 2 3 4 5 6 7 8 9 10 11 12 31 41 51 61 71 81 92 102 122 132 142 152 162 172 182 292 350 351 352 353 354 355 356 357 358 359 360 63

©2000

Texas Department of Transportation

# SEQUENCE OF WORK PHASE 2A

SHEET 4 OF 9

| FED.RD. DIV.NO. | FEDERAL AID PROJECT NO. | | SHEET NO. |
|---|---|---|---|
| 6 | NH 2000(704), ETC. | | 86 |
| STATE | DIST. | COUNTY | |
| TEXAS | SAT | BEXAR | |
| CONT. | SECT. | JOB | HIGHWAY NO. |
| 2452 | 01 | 036, ETC | LP 1604 |

DRAINAGE & ROADWAY CONSTRUCTION
CONSTRUCTION DETOUR
TRAFFIC FLOW DIRECTION
V.I.A. ASSEMBLY (14 BARRELS EACH LOCATION)
PORT. CONCRETE TRAFFIC BARRIERS

| SEQUENCE OF WORK ESTIMATED QUANTITIES | | 2452-01-036 |
|---|---|---|
| ITEM | UNIT | QTY |
| PORT CONC TRAF BAR (STKPL, INSTL & RETRN) | M | 144.00 |
| VEH IMP ATTN ASSEM BRLS | EA | 42 |
| VEH IMP ATTN ASSEM BRLS (REMOVE) | EA | 42 |
| CONST DETOUR (CL 3) | M2 | 2742 |
| CMP AR (GAL STL DES 3) | M | 292.7 |
| SET (TY II) (DES 3) (CMP) (1:6) | EA | 12 |

SCALE 1:2000

CONST DETOUR (CL 3) EST @ 207 M2
CONST DETOUR (CL 3) EST @ 51 M2
CONST DETOUR (CL 3) EST @ 63 M2
R.O.W.
LINE I32
DETOUR "G" PIPE CULVERT 2-CMP AR (DES 3) EST. @ 120 M EA. W/ 1:6 SET'S (TEMP)
N.B. FRONTAGE RD.
DETOUR "G"
CONSTR. DETOUR (CL 3) EST. @ 1973 M2 (FOR FUTHER DETAILS SEE DETOUR "G" PLAN/PROFILE & SUPPLEMENTAL SHEET.)
MATCHLINE STA 21+620
CMP AR (DES 3) EST @ 20.9 M W/ 1:6 SET'S(TEMP)
CMP AR (DES 3) EST @ 9.4 M W/ 1:6 SET'S(TEMP)
CMP AR (DES 3) EST @ 9.4 M W/ 1:6 SET'S(TEMP)
21+700
21+800
21+900
22+000
℄ LP 1604
22+100
22+200
22+300
MATCHLINE STA 22+340
PCTB EST @ 7.5 M
PCTB EST. @ 136.5 M
WEST CREEK OAKS
R.O.W.

SCALE 1:2000

SEE INTERSECTION S.O.W. FOR MORE DETAILS
POTRANCO RD
DRAINAGE EASEMENT
BRIDGE CLASS STRUCT. NO. 3
R.O.W.
N.B. FRONTAGE RD.
CONST DETOUR (CL 3) EST @ 293 M2
CMP AR (DES 3) EST @ 13.0 M W/ 1:6 SET'S(TEMP)
LINE I35
LINE I37
CONST DETOUR (CL 3) EST @ 155 M2
MATCHLINE STA 22+340
22+400
22+500
22+600
22+700
22+800
℄ LP 1604
22+900
23+000
MATCHLINE STA 23+060
F.M. 1957/POTRANCO RD.
CARACOL CREEK
R.O.W.
DRAINAGE EASEMENT
DRAINAGE EASEMENT

**CHANGE ORDER NO. 63**
-REVISED SEQUENCE OF WORK FOR INTERSECTIONS
-REVISED PCTB LOCATIONS AND LENGTHS
-ADDED DETOUR & CMP FOR TEMP DRVWYS
-ADDED DETOUR "G"
-REVISED QUANTITIES

STATE OF TEXAS
JEROME D. PAVLISKA
76075
REGISTERED PROFESSIONAL ENGINEER

Jerome D. Pavlisko, P.E. 6-30-04
Jerome D. Pavlisko, P.E. Date

CHANGE ORDER NO. 63 | REVISED SHEET

© 2000 Texas Department of Transportation

# SEQUENCE OF WORK
## PHASE 2A
SHEET 4 OF 9

| FED. RD. DIV. NO. | FEDERAL AID PROJECT NO. | | SHEET NO. |
|---|---|---|---|
| 6 | NH 2000(704), ETC. | | 86A |
| STATE | DIST. | COUNTY | |
| TEXAS | SAT | BEXAR | |
| CONT. | SECT. | JOB | HIGHWAY NO. |
| 2452 | 01 | 036, ETC | LP 1604 |

6-28-2004

FILE: PHASE2*CHANGE*ORDER*MYLARS\SUBMITTAL\PLANSHEETS\TCP\DETOURG.DGN 6/30/2004
LEVEL DISPLAYED: 1 2 3 4 5 6 7 8 9 10 11 12 13 14 15 16 17 18 19 20 21 22 23 24 25 26 27 28 29 30 31 32 33 34 35 36 37 38 39 40 41 42 43 44 45 46 47 48 49 50 51 52 53 54 55 56 57 58 59 60 62 63

Design Filename: I:\AO\Design\lp1604fm471-90\PD\Phase2*change*order*mylars\submittal\plansheets\TCP\detourg.dgn
Plotted on: 6/__/2004

DRAINAGE & ROADWAY CONSTRUCTION

SPAN TYPE BRIDGE CONSTRUCTION

TRAFFIC FLOW DIRECTION

SCALE 1:2000

| SEQUENCE OF WORK ESTIMATED QUANTITIES | | 2452-01-036 |
|---|---|---|
| ITEM | UNIT | QTY |
| | | |
| | | |

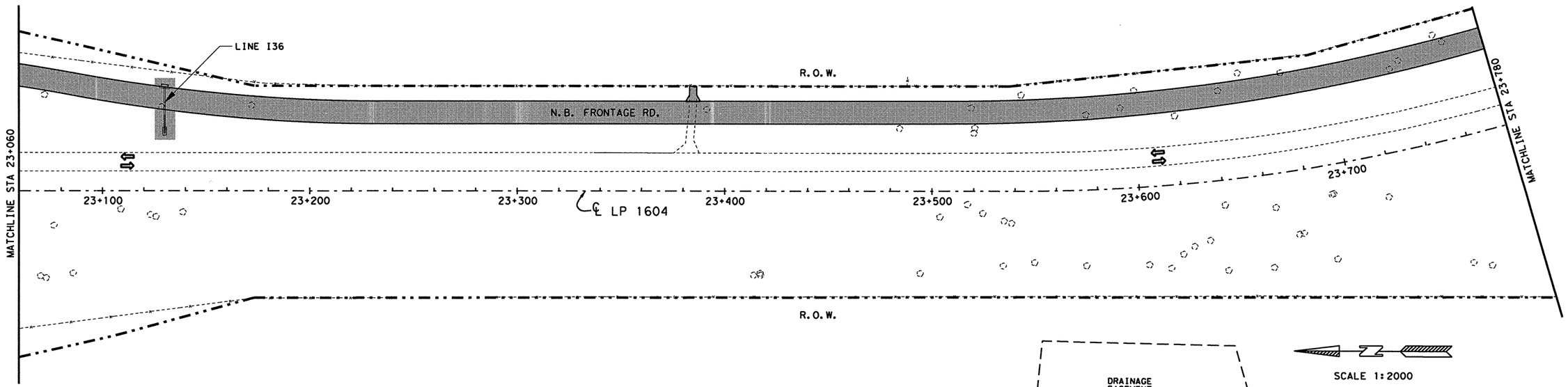


SCALE 1:2000

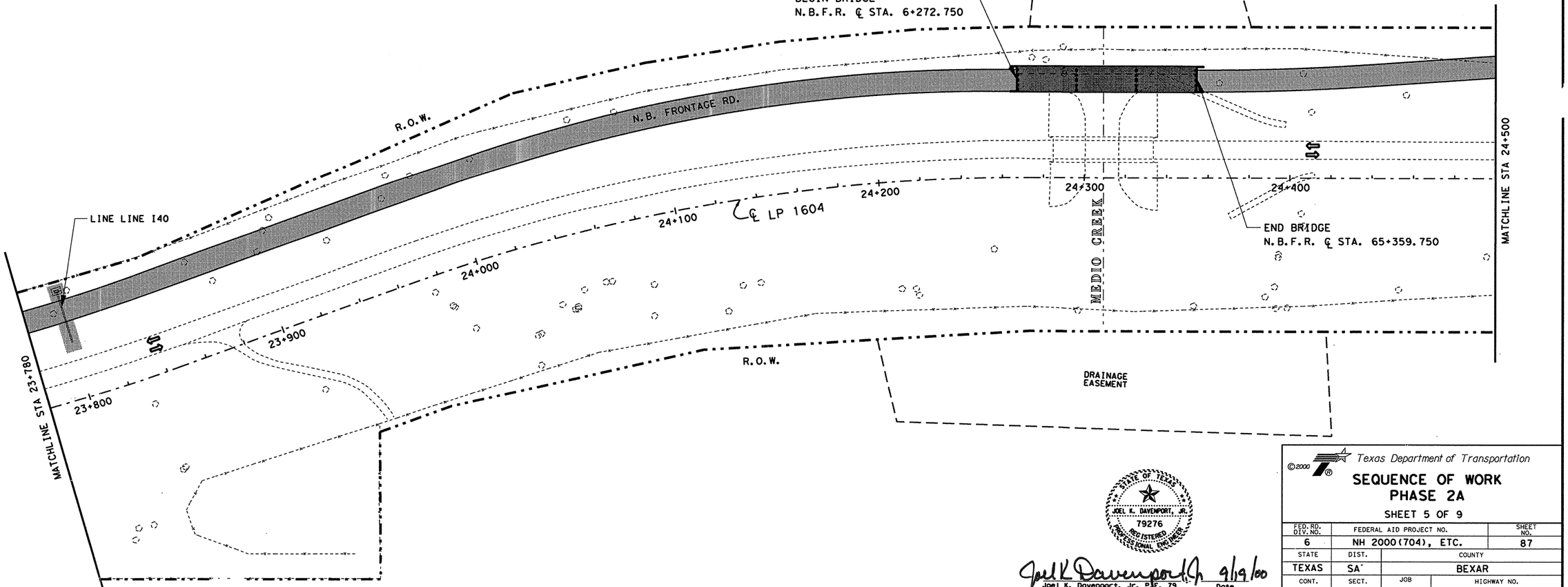


FILE: H:\co\design\lp1604fm471-90\sow\phase2\phase2a05.dgn 15 SEP 2000

LEVEL DISPLAYED 1 2 3 4 5 6 7 8 9 10 11 12 13 14 15 16 17 18 19 20 21 22 23 24 25 26 27 28 29 30 31 32 33 34 35 36 37 38 39 40 41 42 43 44 45 46 47 48 49 50 51 52 53 54 55 56 57 58 59 60 63

©2000

Texas Department of Transportation

# SEQUENCE OF WORK PHASE 2A

SHEET 5 OF 9

| FED.RD. DIV.NO. | FEDERAL AID PROJECT NO. | | SHEET NO. |
|---|---|---|---|
| 6 | NH 2000(704), ETC. | | 87 |
| STATE | DIST. | COUNTY | |
| TEXAS | SA | BEXAR | |
| CONT. | SECT. | JOB | HIGHWAY NO. |
| 2452 | 01 | 036, ETC | LP 1604 |

STATE OF TEXAS
JOEL K. DAVENPORT, JR.
79276
REGISTERED PROFESSIONAL ENGINEER

Joel K. Davenport Jr 9/9/00

Joel K. Davenport, Jr. P.E. 79276 Date

Plotted on: 01/26/2004

DRAINAGE & ROADWAY CONSTRUCTION
SPAN TYPE BRIDGE CONSTRUCTION
CONSTRUCTION DETOUR
PROPERTY ACCESS (TEMPORARY)
TRAFFIC FLOW DIRECTION
V.I.A. ASSEMBLY (14 BARRELS EACH LOCATION)

SCALE 1:2000

| SEQUENCE OF WORK ESTIMATED QUANTITIES | | 2452-01-036 |
|---|---|---|
| ITEM | UNIT | QTY |
| CONST DETOUR (CL 3) | M2 | 99 |
| CMP AR (GAL STL DES 3) | M | 9.4 |
| SET (TY II) (DES 3) (CMP) (1:6) | EA | 2 |

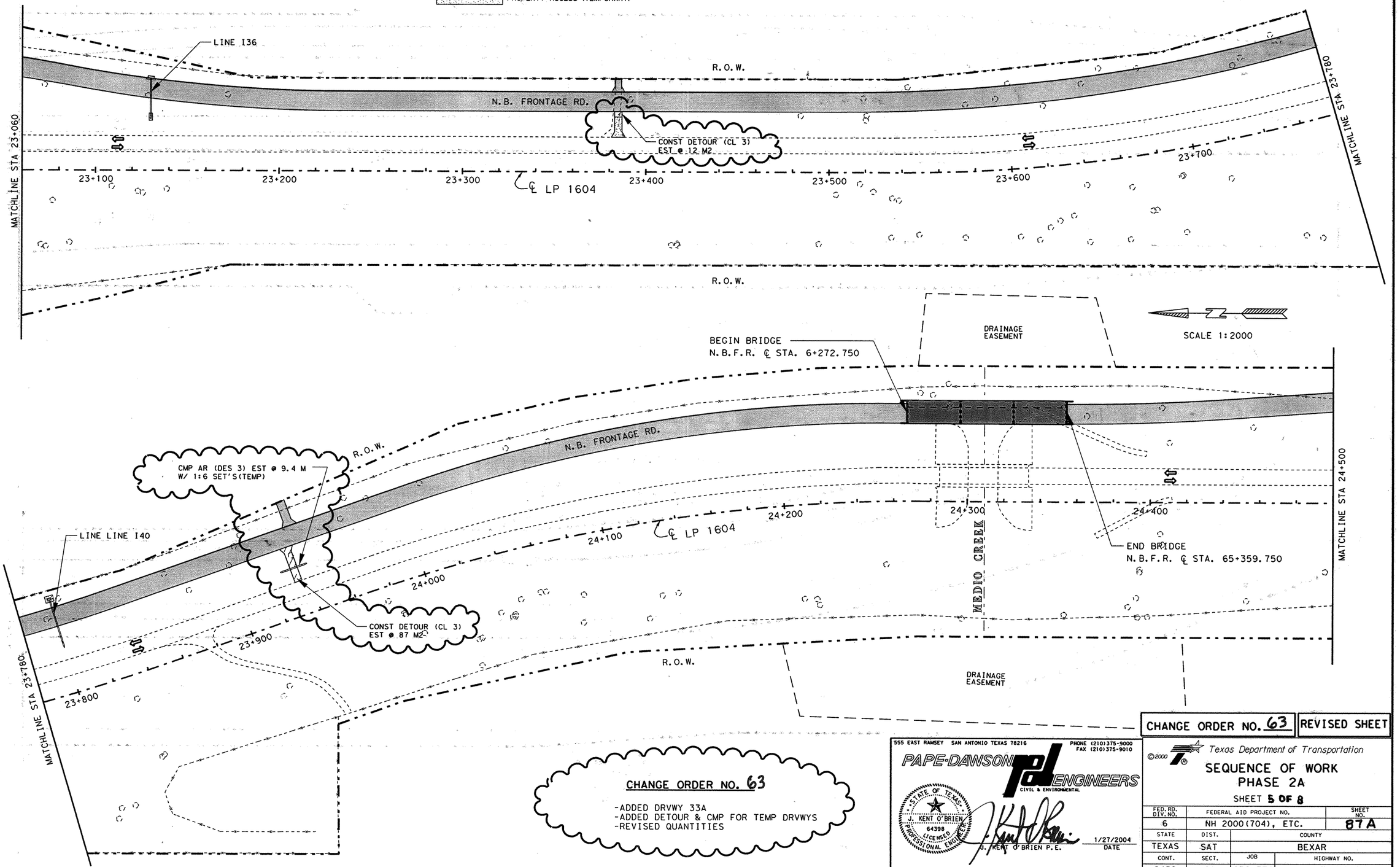


CHANGE ORDER NO. 63

-ADDED DRVWY 33A
-ADDED DETOUR & CMP FOR TEMP DRVWYS
-REVISED QUANTITIES

CHANGE ORDER NO. 63 | REVISED SHEET

555 EAST RAMSEY SAN ANTONIO TEXAS 78216
PHONE (210)375-9000
FAX (210)375-9010
PAPE-DAWSON ENGINEERS
CIVIL & ENVIRONMENTAL
STATE OF TEXAS
J. KENT O'BRIEN
64398
LICENSED PROFESSIONAL ENGINEER
J. KENT O'BRIEN P.E.
1/27/2004
DATE

©2000
Texas Department of Transportation

# SEQUENCE OF WORK
## PHASE 2A

SHEET 5 OF 8

| FED.RD. DIV.NO. | FEDERAL AID PROJECT NO. | | SHEET NO. |
|---|---|---|---|
| 6 | NH 2000(704), ETC. | | 87A |
| STATE | DIST. | COUNTY | |
| TEXAS | SAT | BEXAR | |
| CONT. | SECT. | JOB | HIGHWAY NO. |
| 2452 | 01 | 036, ETC | LP 1604 |

Design Filename: p:\52\2011\design\civil\plansheets\tcp\phase2a05.dgn
FILE p:\52\2011\design\civil\plansheets\tcp\phase2a05.dgn 01/26/2004
LEVEL DISPLAYED

Plotted on: 6/14/2005
Design Filename: t:\roi\design\lp1604fm471-90\pd*phase2*change*order*mylars\submittal\plansheets\tcp\phase2a05.dgn
FILE t:\roi\design\lp1604fm471-90\pd*phase2*change*order*mylars\submittal\plansheets\tcp\phase2a05.dgn
LEVEL DISPLAYED 1 2 3 4 5 6 7 8 9 10 11 12 13 14 15 16 17 18 19 20 21 22 23 24 25 26 27 28 29 30 31 32 33 34 35 36 37 38 39 40 41 42 43 44 45 46 47 48 49 50 51 52 53 54 55 56 57 58 59 60 61 62 63

DRAINAGE & ROADWAY CONSTRUCTION
SPAN TYPE BRIDGE CONSTRUCTION
CONSTRUCTION DETOUR
PROPERTY ACCESS (TEMPORARY)
TRAFFIC FLOW DIRECTION
V.I.A. ASSEMBLY ( 14 BARRELS EACH LOCATION )

SCALE 1:2000

| SEQUENCE OF WORK ESTIMATED QUANTITIES | | 2452-01-036 |
|---|---|---|
| ITEM | UNIT | QTY |
| CONST DETOUR (CL 3) (150MM) | M2 | 90 |
| CONST DETOUR (CL 3) (300MM) | M2 | 87 |
| CMP AR (GAL STL DES 3) | M | 21.3 |
| SET (TY II) (DES 3) (CMP) (1:6) | EA | 4 |
| EXCAVATION | M3 | 98 |
| EMBANK (DENS CONT) (TY B) (CL 2) | M3 | 98 |
| REMOV OLD STR (PIPE) | M | 21.3 |

LINE I36
R.O.W.
N.B. FRONTAGE RD.
CMP AR (DES 3) EST @ 10.9 M W/ 1:6 SET'S (TEMP)
CONST DETOUR (CL 3) (300MM) EST @ 90 M2
EXCAV (SPL) EST @ 36 M3
EMBANK (DENS CONT) (TY B) (CL 2) EST @ 36 M3
REMOV OLD STR (PIPE) EST. @ 10.9 M
MATCHLINE STA 23+060
23+100
23+200
℄ LP 1604
23+300
23+400
23+500
23+600
23+700
MATCHLINE STA 23+780
DRIVEWAY WIDTH 7.3 M
1:6
1:6
CMP
PROPOSED DRIVEWAY X-SECTION
R.O.W.

DRAINAGE EASEMENT
SCALE 1:2000
BEGIN BRIDGE
N.B.F.R. ℄ STA. 6+272.750
DRIVEWAY WIDTH 4.0 M
1:6
1:6
CMP
PROPOSED DRIVEWAY X-SECTION
R.O.W.
N.B. FRONTAGE RD.
24+300
24+400
END BRIDGE
N.B.F.R. ℄ STA. 65+359.750
MATCHLINE STA 24+500
LINE LINE I40
REMOV OLD STR (PIPE) EST. @ 10.4 M
CMP AR (DES 3) W/ 1:6 SET'S (TEMP) EST @ 10.4 M
CONST DETOUR (CL 3) (150MM) EST @ 87 M2
EXCAV (SPL) EST @ 62 M3
EMBANK (DENS CONT) (TY B) (CL 2) EST @ 62 M3
24+000
24+100
℄ LP 1604
24+200
23+900
23+800
MATCHLINE STA 23+780
MEDIO CREEK
R.O.W.
DRAINAGE EASEMENT

**CHANGE ORDER NO. 92**
- REVISED TEMP DRIVES
- ADDED / REVISED QUANTITIES

CHANGE ORDER NO. 92 | REVISED SHEET

©2000
Texas Department of Transportation

# SEQUENCE OF WORK PHASE 2A

SHEET 5 OF 8

| FED. RD. DIV. NO. | FEDERAL AID PROJECT NO. | SHEET NO. |
|---|---|---|
| 6 | NH 2000(704), ETC. | 87 AA |
| STATE | DIST. | COUNTY |
| TEXAS | SAT | BEXAR |
| CONT. | SECT. | JOB / HIGHWAY NO. |
| 2452 | 01 | 036, ETC / LP 1604 |

STATE OF TEXAS
FITZGERALDO G. SANCHEZ
76084
REGISTERED PROFESSIONAL ENGINEER

Fitzgeraldo G. Sanchez 06-14-05
Fitzgeraldo G. Sanchez, P.E. Date

5-31-05

DRAINAGE & ROADWAY CONSTRUCTION ⇨ TRAFFIC FLOW DIRECTION

V.I.A. ASSEMBLY ( 14 BARRELS EACH LOCATION )

SCALE 1:2000

| SEQUENCE OF WORK ESTIMATED QUANTITIES | | 2452-01-036 |
|---|---|---|
| ITEM | UNIT | QTY |
| PORT CONC TRAF BAR (STKPL, INSTL & RETRN) | M | 70 |
| VEH IMP ATTN ASSEM BRLS (MOVE & RESET) | EA | 14 |

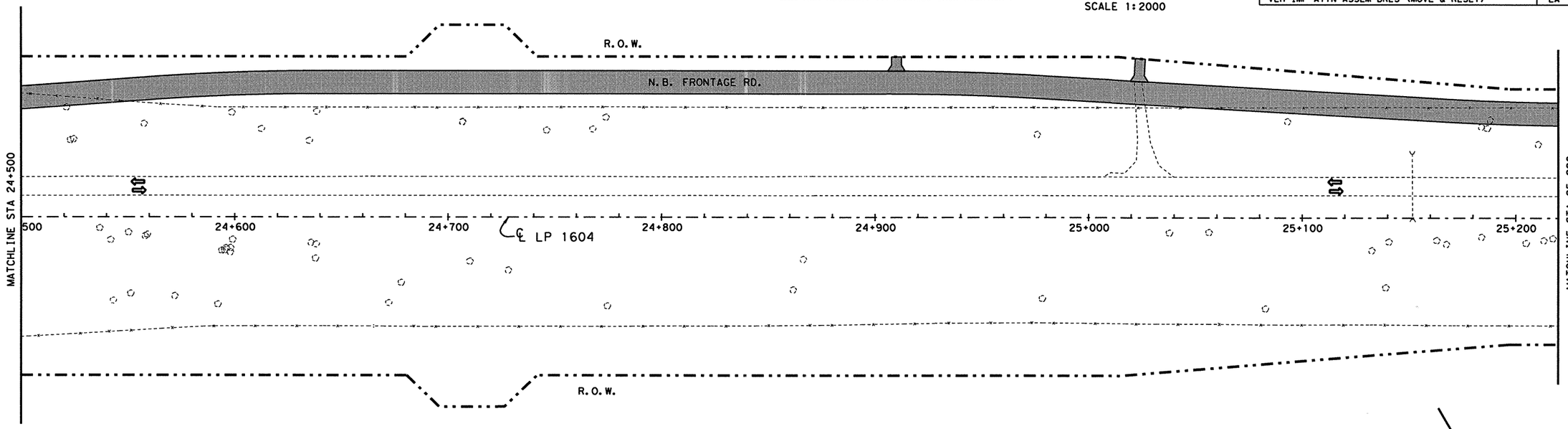


SCALE 1:2000

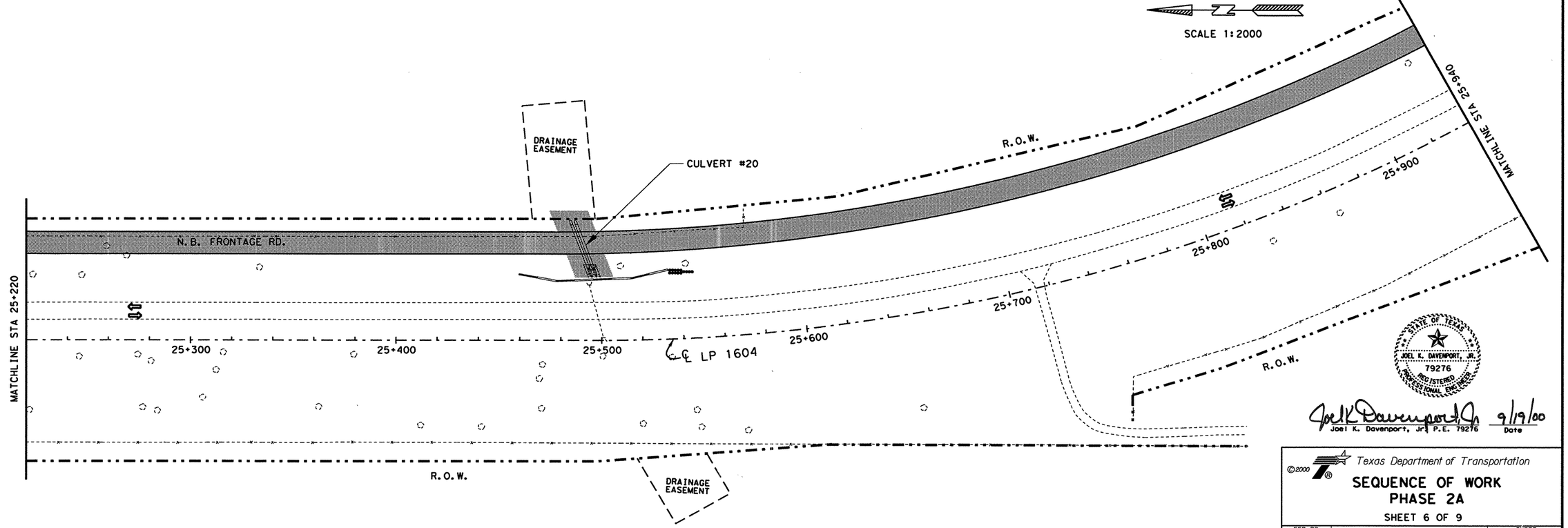


STATE OF TEXAS
JOEL K. DAVENPORT, JR.
79276
REGISTERED
PROFESSIONAL ENGINEER

Joel K. Davenport, Jr. 9/19/00
Joel K. Davenport, Jr. P.E. 79276 Date

©2000

Texas Department of Transportation

# SEQUENCE OF WORK
## PHASE 2A

SHEET 6 OF 9

| FED. RD. DIV. NO. | FEDERAL AID PROJECT NO. | | SHEET NO. |
|---|---|---|---|
| 6 | NH 2000(704), ETC. | | 88 |
| STATE | DIST. | COUNTY | |
| TEXAS | SAT | BEXAR | |
| CONT. | SECT. | JOB | HIGHWAY NO. |
| 2452 | 01 | 036, ETC | LP 1604 |

FILE: t:\ao\design\lp1604fm471-90\sow\phase1\phase2a06.dgn 15 SEP 2000

LEVEL DISPLAYED 1 2 3 4 5 6 7 8 9 10 11 12 13 14 15 16 17 18 19 20 21 22 23 24 25 26 27 28 29 30 31 32 33 34 35 36 37 38 39 40 41 42 43 44 45 46 47 48 49 50 51 52 53 54 55 56 57 58 59 60 63

Plotted on: 01/26/2004

DRAINAGE & ROADWAY CONSTRUCTION
CONSTRUCTION DETOUR
PROPERTY ACCESS (TEMPORARY)
TRAFFIC FLOW DIRECTION
V.I.A. ASSEMBLY ( 14 BARRELS EACH LOCATION )

SCALE 1:2000

| SEQUENCE OF WORK ESTIMATED QUANTITIES | | 2452-01-036 |
|---|---|---|
| ITEM | UNIT | QTY |
| CONST DETOUR (CL 3) | M2 | 24 |
| | | |
| | | |

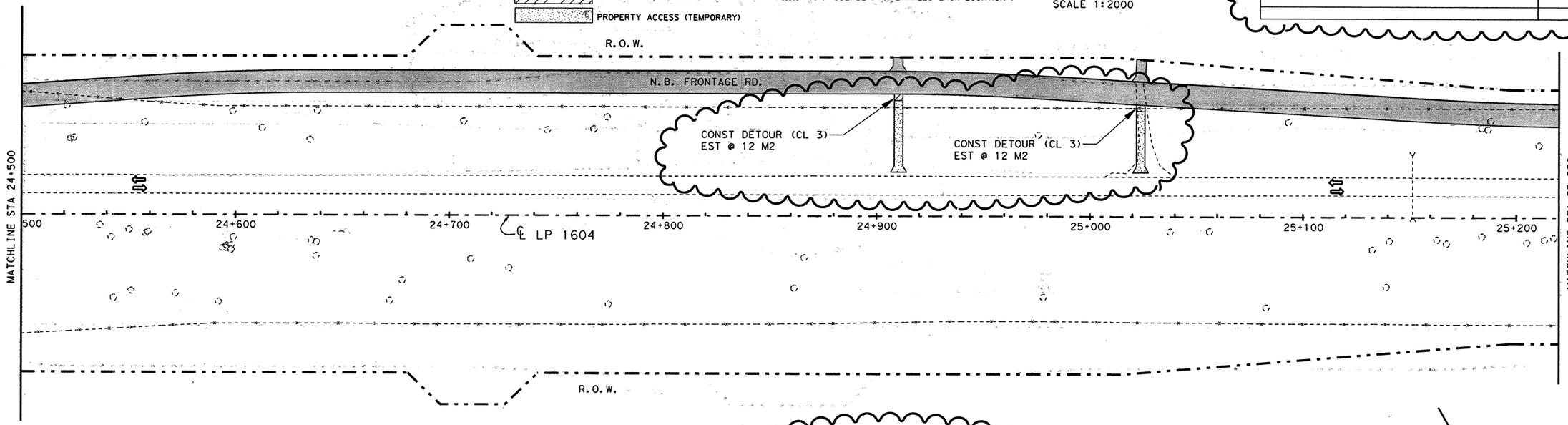


**CHANGE ORDER NO. 63**

-REVISED PCTB LOCATIONS AND LENGTHS
-ADDED STAGED CONSTRUCTION NOTE
-ADDED DETOUR FOR TEMP DRVWYS
-REVISED QUANTITIES

SCALE 1:2000

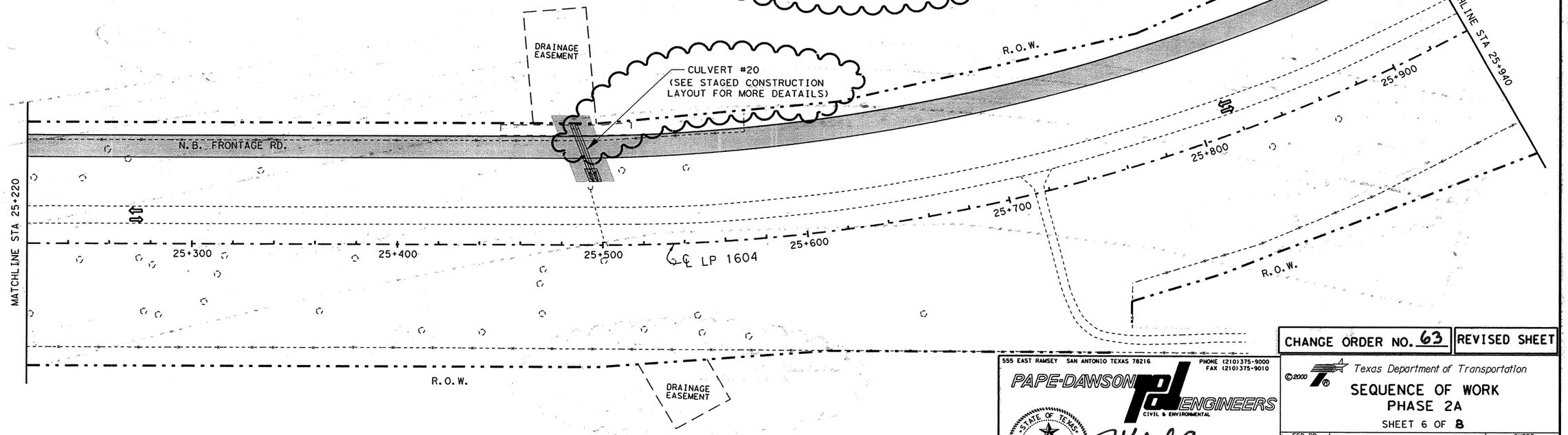


CHANGE ORDER NO. 63 | REVISED SHEET

555 EAST RAMSEY SAN ANTONIO TEXAS 78216
PHONE (210)375-9000
FAX (210)375-9010
PAPE-DAWSON ENGINEERS
CIVIL & ENVIRONMENTAL

STATE OF TEXAS
J. KENT O'BRIEN
64398
LICENSED
PROFESSIONAL ENGINEER

J. KENT O'BRIEN P.E. — 1/27/2004 DATE

©2000

Texas Department of Transportation

# SEQUENCE OF WORK
## PHASE 2A

SHEET 6 OF 8

| FED.RD. DIV.NO. | FEDERAL AID PROJECT NO. | | SHEET NO. |
|---|---|---|---|
| 6 | NH 2000(704), ETC. | | 88A |
| STATE | DIST. | COUNTY | |
| TEXAS | SAT | BEXAR | |
| CONT. | SECT. | JOB | HIGHWAY NO. |
| 2452 | 01 | 036, ETC | LP 1604 |

Design Filename: p:\52\2011\design\civil\plansheets\top\phase2a06.dgn

FILE p:\52\2011\design\civil\plansheets\top\phase2a06.dgn 01/26/2004
LEVEL 1 3 4 5 6 7 9 10 11 12 13 14 15 61 71 80 202 212 232 242 252 262 272 282 293 313 32
DISPLAYED 33 34 35 36 37 38 39 40 41 42 43 44 45 46 47 48 49 50 51 52 53 54 55 56 57 58 59 60 6263

DRAINAGE & ROADWAY CONSTRUCTION
CONSTRUCTION DETOUR
PROPERTY ACCESS (TEMPORARY)
TRAFFIC FLOW DIRECTION
V.I.A. ASSEMBLY ( 14 BARRELS EACH LOCATION )

SCALE 1:2000

| SEQUENCE OF WORK ESTIMATED QUANTITIES | | 2452-01-036 |
|---|---|---|
| ITEM | UNIT | QTY |
| EXCAV (SPL) | M3 | 1275 |
| REMOV OLD STR (PIPE) | M | 20 |

R.O.W.

N.B. FRONTAGE RD.

CONST DETOUR (CL 3) EST @ 12 M2 (OMIT)

(OMIT)

CONST DETOUR (CL 3) EST @ 12 M2 (OMIT)

(OMIT)

TEMP DRIVEWAY (BY OTHERS)

REMOV OLD STR (PIPE) EST. @ 20 M

EXCAV (SPL) EST. @ 1275 M3

MATCHLINE STA 24+500

24+500 24+600 24+700 ℄ LP 1604 24+800 24+900 25+000 25+100 25+200

MATCHLINE STA 25+220

R.O.W.

**CHANGE ORDER NO. 92**

- OMITTED TEMP DRIVES
- ADDED TEMP DRIVE (BUILT BY OTHERS)
- ADDED / REVISED QUANTITIES

SCALE 1:2000

MATCHLINE STA 25+940

DRAINAGE EASEMENT

CULVERT #20 63
(SEE STAGED CONSTRUCTION LAYOUT FOR MORE DEATAILS)

R.O.W.

N.B. FRONTAGE RD.

MATCHLINE STA 25+220

25+300 25+400 25+500 ℄ LP 1604 25+600 25+700 25+800 25+900

R.O.W.

R.O.W.

DRAINAGE EASEMENT

STATE OF TEXAS
FITZGERALDO G. SANCHEZ
76084
REGISTERED
PROFESSIONAL ENGINEER

Fitzgeraldo G. Sanchez 06-14-05
Fitzgeraldo G. Sanchez, P.E. Date

CHANGE ORDER NO. 92 | REVISED SHEET

# REFERS TO CHANGES MADE AS PART OF CHANGE ORDER

©2000

Texas Department of Transportation

## SEQUENCE OF WORK
## PHASE 2A

SHEET 6 OF 8

| FED.RD. DIV.NO. | FEDERAL AID PROJECT NO. | | SHEET NO. |
|---|---|---|---|
| 6 | NH 2000(704), ETC. | | 88 AA |
| STATE | DIST. | COUNTY | |
| TEXAS | SAT | BEXAR | |
| CONT. | SECT. | JOB | HIGHWAY NO. |
| 2452 | 01 | 036, ETC | LP 1604 |

5-31-05

Plotted on: 6/1-/2005
Design Filename: t:\ao\design\lp1604fm471-90\pdxphase2*change*order*mylars\submittal\plansheets\tcp\phase2a06.dgn
FILE t:\ao\design\lp1604fm471-90\pdxphase2*change*order*mylars\submittal\plansheets\tcp\phase2a06.dgn
LEVEL 1 2 3 4 5 6 7 8 9 10 11 12 13 14 15 16 17 18 19 20 21 22 23 24 25 26 27 28 29 30 31 32
DISPLAYED 33 34 35 55 58 75 89 94 04 14 24 34 44 45 46 47 48 49 56 61 62 63 64 65 66 75 86 96 0 6 263

DRAINAGE & ROADWAY CONSTRUCTION ⇨ TRAFFIC FLOW DIRECTION

V.I.A. ASSEMBLY (14 BARRELS EACH LOCATION)

| SEQUENCE OF WORK ESTIMATED QUANTITIES | | 2452-01-036 |
|---|---|---|
| ITEM | UNIT | QTY |
| PORT CONC TRAF BAR (STKPL, INSTL & RETRN) | M | 120 |
| VEH IMP ATTN ASSEM BRLS (MOVE & RESET) | EA | 42 |
| | | |
| | | |

SCALE 1:2000

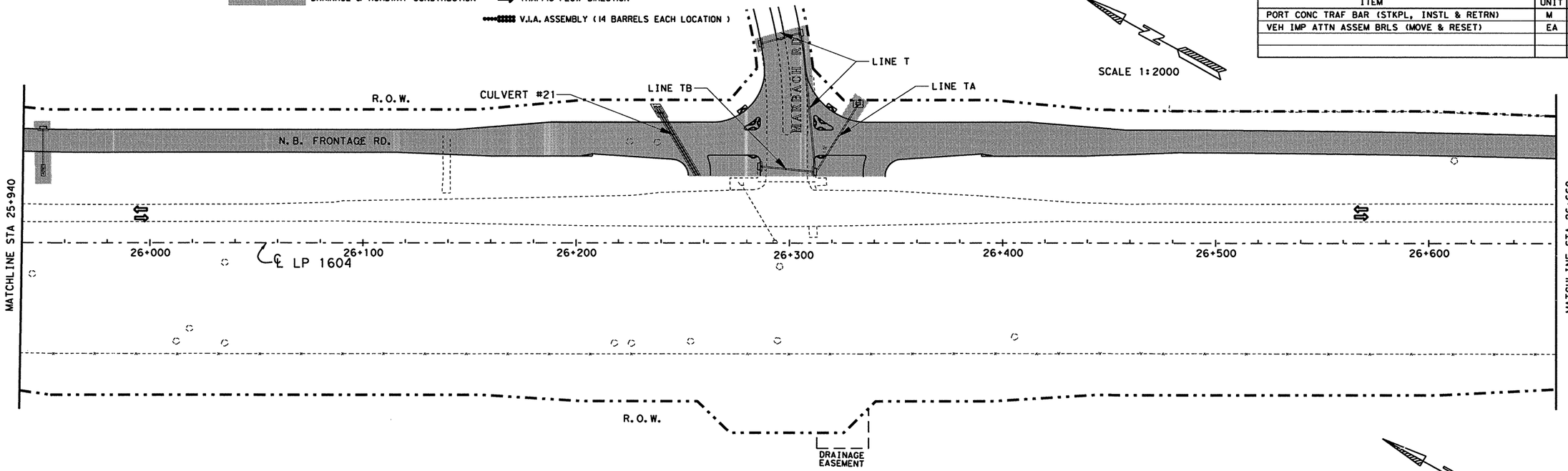


SCALE 1:2000

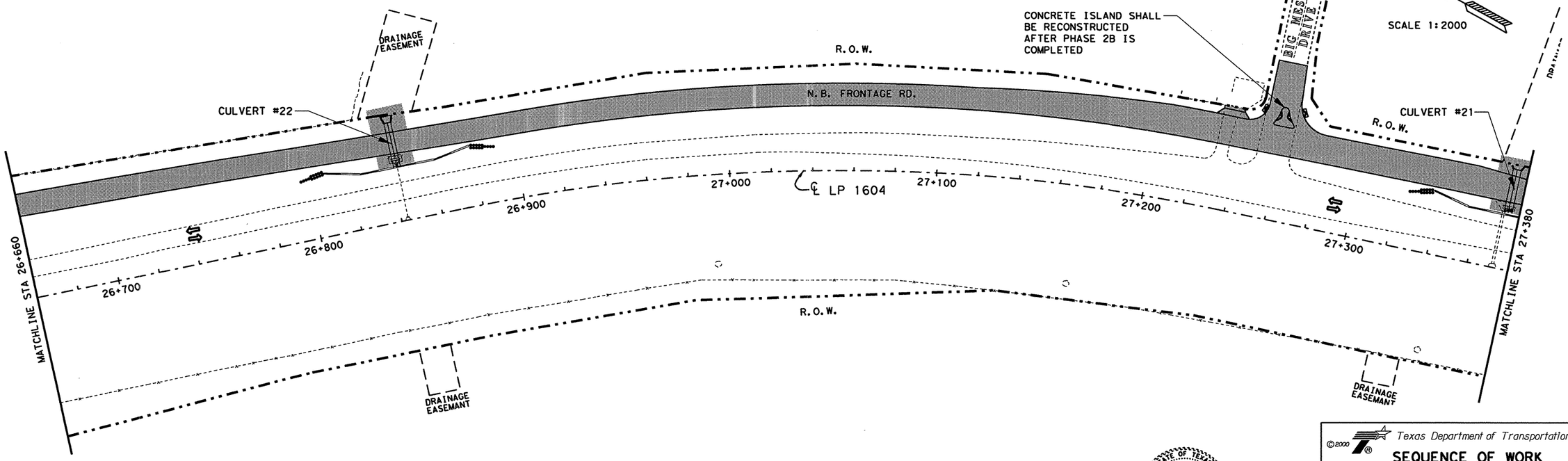


STATE OF TEXAS
JOEL K. DAVENPORT, JR.
79276
REGISTERED PROFESSIONAL ENGINEER

Joel K. Davenport, Jr. P.E. 79276 — 9/19/00
Date

©2000

Texas Department of Transportation

# SEQUENCE OF WORK PHASE 2A

SHEET 7 OF 9

| FED. RD. DIV. NO. | FEDERAL AID PROJECT NO. | | SHEET NO. |
|---|---|---|---|
| 6 | NH 2000(704), ETC. | | 89 |
| STATE | DIST. | COUNTY | |
| TEXAS | SAT | BEXAR | |
| CONT. | SECT. | JOB | HIGHWAY NO. |
| 2452 | 01 | 036,ETC | LP 1604 |

FILE: H:\ao\design\lp1604fm471-90\sow\phase ii\phase2a07.dgn 15 SEP 2000

LEVEL DISPLAYED 1 2 3 4 5 6 7 8 9 10 11 12 13 14 15 16 17 18 19 20 21 22 23 24 25 26 27 28 29 30 31 32 33 34 35 36 37 38 39 40 41 42 43 44 45 46 47 48 49 50 51 52 53 54 55 56 57 58 59 60 63

Plotted on: 01/26/2004

DRAINAGE & ROADWAY CONSTRUCTION ⇨ TRAFFIC FLOW DIRECTION

V.I.A. ASSEMBLY (14 BARRELS EACH LOCATION)

SEE INTERSECTION S.O.W. FOR MORE DETAILS

CULVERT #21 (SEE TEMPORARY CULVERT LAYOUT FOR MORE DETAILS)

LINE I48

LINE TB

LINE T

LINE TA

MARBACH RD.

R.O.W.

N.B. FRONTAGE RD.

SCALE 1:2000

MATCHLINE STA 25+940

26+000 26+100 26+200 26+300 26+400 26+500 26+600

℄ LP 1604

MATCHLINE STA 26+660

LINE T
THIS WORK TO BE COMPLETED
DURING RESTRICTED TIMES.

R.O.W.

| SEQUENCE OF WORK ESTIMATED QUANTITIES | | 2452-01-036 |
|---|---|---|
| ITEM | UNIT | QTY |
| PORT CONC TRAF BAR (STKPL, INSTL & RETRN) | M | 145.6 |
| VEH IMP ATTN ASSEM BRLS | EA | 42 |
| VEH IMP ATTN ASSEM BRLS (REMOVE) | EA | 42 |
| TEMPORARY SPL SHORING | M2 | 18.8 |
| RC PIPE (CL III) (600 MM) | M | 53.063 |

DRAINAGE EASEMENT

TEMP SHORING EST @ 18.8 M2

CULVERT #22 (SEE STAGED CONSTRUCTION LAYOUT FOR MORE DETAILS)

R.O.W.

CONCRETE ISLAND SHALL BE CONSTRUCTED AFTER PHASE 2B IS COMPLETED

BIG MESA DRIVE

SCALE 1:2000

CULVERT #23 (SEE STAGED CONSTRUCTION LAYOUT FOR MORE DETAILS)

R.O.W.

N.B. FRONTAGE RD.

MATCHLINE STA 26+660

26+700 26+800 26+900 27+000 27+100 27+200 27+300

℄ LP 1604

PCTB EST @ 118.3M

PCTB EST @ 27.3M

MATCHLINE STA 27+380

R.O.W.

DRAINAGE EASEMENT

DRAINAGE EASEMENT

**CHANGE ORDER NO. 63**

-REVISED SEQUENCE OF WORK FOR INTERSECTIONS
-REVISED PCTB LOCATIONS AND LENGTHS
-ADDED TEMP SHORING
-ADDED TEMPORARY CULVERTS
-REVISED QUANTITIES

CHANGE ORDER NO. 63

REVISED SHEET

555 EAST RAMSEY SAN ANTONIO TEXAS 78216
PHONE (210)375-9000
FAX (210)375-9010
PAPE-DAWSON ENGINEERS
CIVIL & ENVIRONMENTAL

STATE OF TEXAS
J. KENT O'BRIEN
64398
LICENSED
PROFESSIONAL ENGINEER

J. KENT O'BRIEN P.E. 1/27/2004 DATE

©2000 Texas Department of Transportation

SEQUENCE OF WORK
PHASE 2A

SHEET 7 OF 8

| FED.RD. DIV.NO. | FEDERAL AID PROJECT NO. | | SHEET NO. |
|---|---|---|---|
| 6 | NH 2000(704), ETC. | | 89A |
| STATE | DIST. | COUNTY | |
| TEXAS | SAT | BEXAR | |
| CONT. | SECT. | JOB | HIGHWAY NO. |
| 2452 | 01 | 036, ETC | LP 1604 |

FILE: p:\52\2011\design\civil\plansheets\tcp\phase2a07.dgn 01/26/2004
LEVEL 1 2 3 4 5 6 7 8 9 10 11 21 31 41 51 61 71 81 91 92 102 122 324 525 626 728 829 3031 32
DISPLAYED 33 34 35 36 37 38 39 40 41 42 43 44 45 46 47 48 49 95 105 16 26 36 46 56 66 76 85 96 1 626 3

Design Filename: p:\52\2011\design\civil\plansheets\tcp\phase2a07.dgn

DRAINAGE & ROADWAY CONSTRUCTION
CONSTRUCTION DETOUR
TRAFFIC FLOW DIRECTION
V.I.A. ASSEMBLY (14 BARRELS EACH LOCATION)

| SEQUENCE OF WORK ESTIMATED QUANTITIES | | 2452-01-036 |
|---|---|---|
| ITEM | UNIT | QTY |
| CONSTRUCT DETOURS (CL 3) | M2 | 3228 |
| PORT CONC TRAF BAR (STKPL, INSTL & RETRN) | M | 130 |
| PORT CTB LPRF (TY I) (STKPL, INSTL & RETRN) | M | 150 |
| PORT CTB LPRF (TY II) (STKPL, INSTL & RETRN) | M | 24 |
| VEH IMP ATTN ASSEM BRLS (MOVE & RESET) | EA | 42 |
| | | |
| | | |

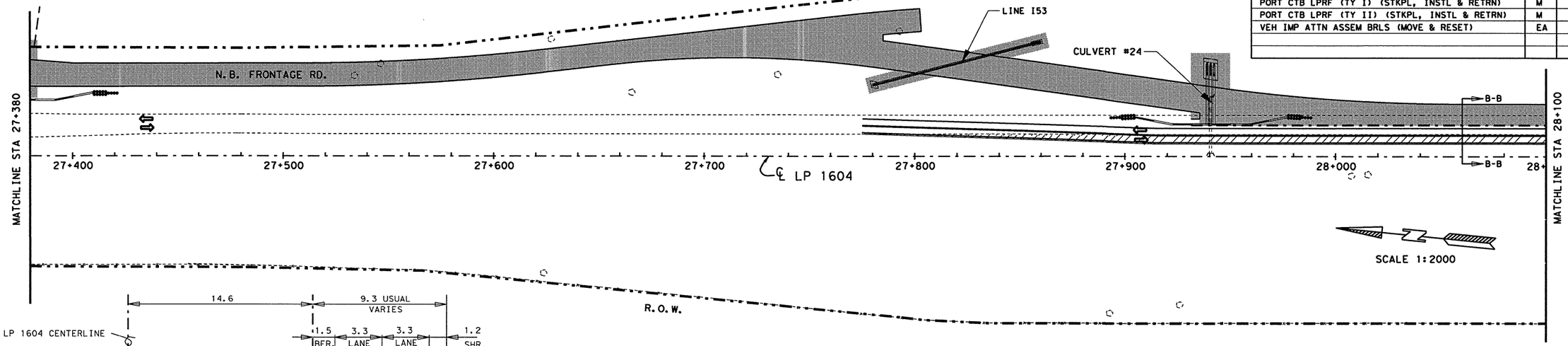


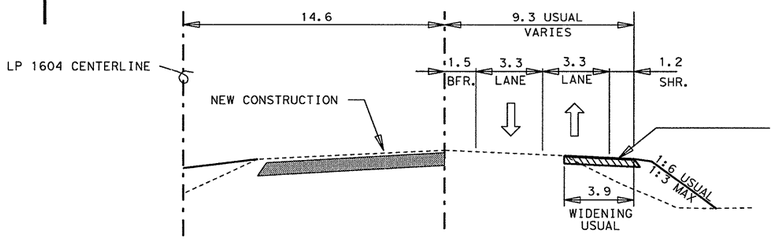


TYPICAL SECTION B-B
FROM STA 28+00 TO STA 28+551.5
NOT TO SCALE

| PAVEMENT MARKING ESTIMATED QUANTITIES | | 2452-01-037 |
|---|---|---|
| ITEM | UNIT | QTY |
| WK ZN PAV MARK | | |
| REMOV (CL B) TY I-C | EA | 18 |
| REMOV (CL B) TY II A-A | M | 260 |
| REMOV (CL C) TY W | M | 74 |
| NON-REMOV (W) (SLD) 100 MM | M | 1670 |
| NON-REMOV (W) (ARROW) | EA | 3 |
| NON-REMOV (W) (WORD) | EA | 3 |
| NON-REMOV (Y) (SLD) 100 MM | M | 1560 |
| ELM EXT PAV MRK & MRKR 100 MM | M | 880 |

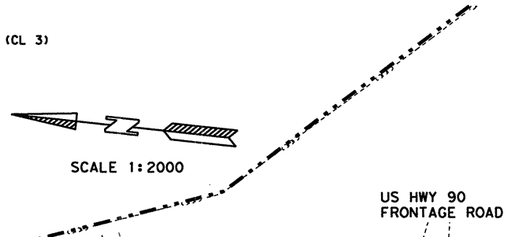





STATE OF TEXAS
JOEL K. DAVENPORT, JR.
79276
REGISTERED
PROFESSIONAL ENGINEER

Joel K. Davenport, Jr. 9/19/00
Joel K. Davenport, Jr. P.E. 79276 — Date

©2000
Texas Department of Transportation

# SEQUENCE OF WORK
# PHASE 2A

SHEET 8 OF 9

| FED. RD. DIV. NO. | FEDERAL AID PROJECT NO. | | SHEET NO. |
|---|---|---|---|
| 6 | NH 2000(704), ETC. | | 90 |
| STATE | DIST. | COUNTY | |
| TEXAS | SAT | BEXAR | |
| CONT. | SECT. | JOB | HIGHWAY NO. |
| 2452 | 01 | 036,ETC | LP 1604 |

FILE: t:\ao\design\lp1604fm471-90\sow\phase2\ph2a08.dgn — 15 SEP 2000
LEVEL DISPLAYED: 1 2 3 4 5 6 7 8 9 10 11 12 13 14 15 16 17 18 19 20 21 22 23 24 25 26 27 28 29 30 31 32 33 34 35 36 37 38 39 40 41 42 43 44 45 46 47 48 49 50 51 52 53 54 55 56 57 58 59 60 61 62 63

DRAINAGE & ROADWAY CONSTRUCTION ⇨ TRAFFIC FLOW DIRECTION

CONSTRUCTION DETOUR V.I.A. ASSEMBLY (14 BARRELS EACH LOCATION)

| SEQUENCE OF WORK ESTIMATED QUANTITIES | | 2452-01-036 |
|---|---|---|
| ITEM | UNIT | QTY |
| CONSTRUCT DETOURS (CL 3) | M2 | 3228 |
| PORT CONC TRAF BAR (STKPL, INSTL & RETRN) | M | 172.9 |
| PORT CTB LPRF (TY I) (STKPL, INSTL & RETRN) | M | 24.4 |
| PORT CTB LPRF (TY II) (STKPL, INSTL & RETRN) | M | 12.2 |
| VEH IMP ATTN ASSEM BRLS | EA | 42 |
| VEH IMP ATTN ASSEM BRLS (REMOVE) | EA | 42 |
| TEMPORARY SPL SHORING | M2 | 13.5 |

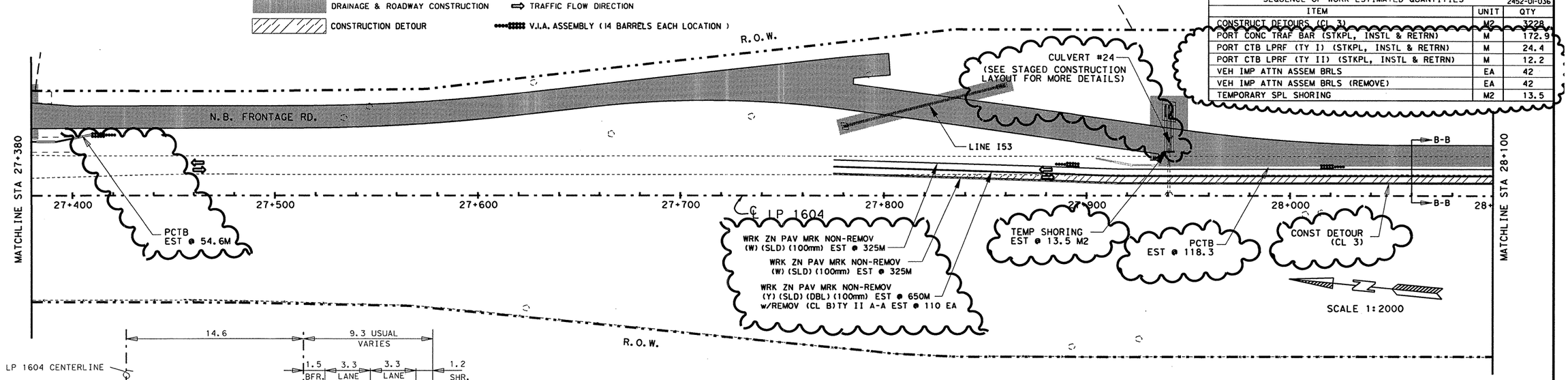


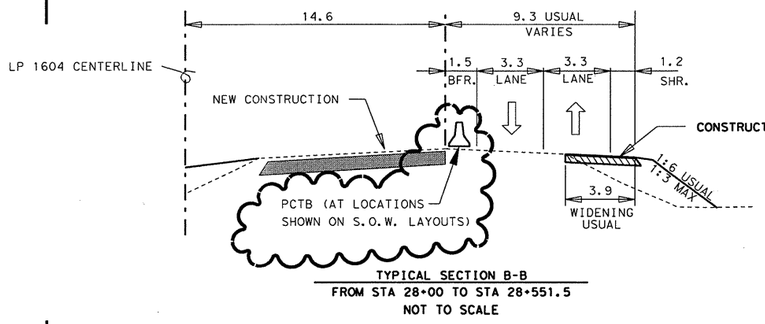


TYPICAL SECTION B-B
FROM STA 28+00 TO STA 28+551.5
NOT TO SCALE

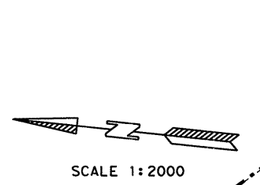


| PAVEMENT MARKING ESTIMATED QUANTITIES | | 2452-01-037 |
|---|---|---|
| ITEM | UNIT | QTY |
| WK ZN PAV MARK | | |
| REMOV (CL B) TY I-C | EA | 16 |
| REMOV (CL B) TY II A-A | EA | 260 |
| | | |
| NON-REMOV (W) (SLD) 100 MM | M | 1640 |
| NON-REMOV (W) (SLD) 600 MM | M | 7.2 |
| NON-REMOV (Y) (SLD) 100 MM | M | 1550 |
| | | |
| ELM EXT PAV MRK & MRKR 100 MM | M | 880 |

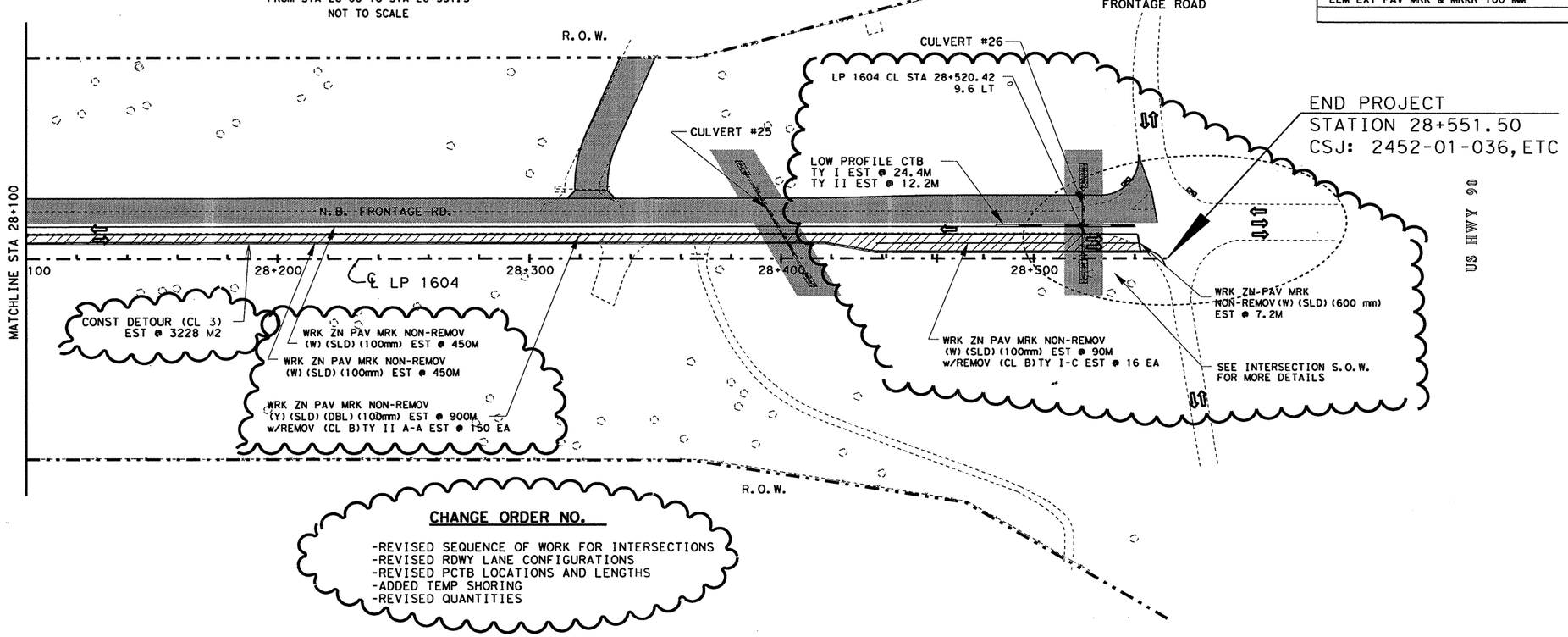


**CHANGE ORDER NO.**

-REVISED SEQUENCE OF WORK FOR INTERSECTIONS
-REVISED RDWY LANE CONFIGURATIONS
-REVISED PCTB LOCATIONS AND LENGTHS
-ADDED TEMP SHORING
-REVISED QUANTITIES

**CHANGE ORDER NO.____** **REVISED SHEET**

STATE OF TEXAS
JEROME D. PAVLISKA
76075
REGISTERED PROFESSIONAL ENGINEER

Jerome D. Pavliska P.E 9-9-04
Jerome D. Pavliska, P.E. Date

©2000
Texas Department of Transportation

# SEQUENCE OF WORK PHASE 2A

SHEET 8 OF 8

| FED. RD. DIV. NO. | FEDERAL AID PROJECT NO. | | SHEET NO. |
|---|---|---|---|
| 6 | NH 2000(704), ETC. | | 90A |
| STATE | DIST. | COUNTY | |
| TEXAS | SAT | BEXAR | |
| CONT. | SECT. | JOB | HIGHWAY NO. |
| 2452 | 01 | 036, ETC | LP 1604 |

FILE: T:\AO\Design\lp1604fm471-90\PD+Phase2*changeorder*my1ars\sheets\TCP\phase2A08.dgn
LEVEL DISPLAYED

DRAINAGE & ROADWAY CONSTRUCTION ⇨ TRAFFIC FLOW DIRECTION

V.I.A. ASSEMBLY (14 BARRELS EACH LOCATION)

| SEQUENCE OF WORK ESTIMATED QUANTITIES | | 2452-01-037 |
|---|---|---|
| ITEM | UNIT | QTY |
| CONSTRUCT DETOURS (CL 3) | M2 | 3306 |
| PORT CONC TRAF BAR (MOVE & RESET) | M | 280 |
| VEH IMP ATTN ASSEM BRLS (MOVE & RESET) | EA | 42 |
| | | |
| | | |

## STAGE A

SCALE 1:2000

18+100 18+200 18+300 18+400 18+500 18+600

S 2° 36' 44.37" W

℄ LP 1604

CULVERT #7 CULVERT #8 CULVERT #9

VALLEY MEADOW

| PAVEMENT MARKING ESTIMATED QUANTITIES | | 2452-01-037 |
|---|---|---|
| ITEM | UNIT | QTY |
| WK ZN PAV MARK | | |
| REMOV (CL B) TY II A-A | EA | 254 |
| NON-REMOV (W) (SLD) 100 MM | M | 760 |
| NON-REMOV (Y) (SLD) 100 MM | M | 1560 |
| ELM EXT PAV MRK & MRKR 100 MM | M | 300 |

## STAGE B

SCALE 1:2000

18+100 18+200 18+300 18+400 18+500 18+600

S 2° 36' 44.37" W

℄ LP 1604

CULVERT #7 CULVERT #8 CULVERT #9

VALLEY MEADOW

## STAGE C

SCALE 1:2000

18+100 18+200 18+300 18+400 18+500 18+600

S 2° 36' 44.37" W

℄ LP 1604

CULVERT #7 CULVERT #8 CULVERT #9

VALLEY MEADOW

R.O.W.

STATE OF TEXAS
JOEL K. DAVENPORT, JR.
79276
REGISTERED
PROFESSIONAL ENGINEER

Joel K. Davenport 9/19/00
Joel K. Davenport, Jr. P.E. 79276 Date

©2000

Texas Department of Transportation

# SEQUENCE OF WORK PHASE 2A

SHEET 9 OF 9

| FED. RD. DIV. NO. | FEDERAL AID PROJECT NO. | | SHEET NO. |
|---|---|---|---|
| 6 | NH 2000(704), ETC. | | 91 |
| STATE | DIST. | COUNTY | |
| TEXAS | SAT | BEXAR | |
| CONT. | SECT. | JOB | HIGHWAY NO. |
| 2452 | 01 | 036,ETC | LP 1604 |

FILE: t:\ao\design\lp1604fm471-90\sow\phase1i\phase2d09.dgn 15 SEP 2000

LEVEL DISPLAYED 1 2 3 4 5 6 7 8 9 10 11 12 13 14 15 16 17 18 19 20 21 22 23 24 25 26 27 28 29 30 31 32 33 34 35 36 37 38 39 40 41 42 43 44 45 46 47 48 49 50 51 52 53 54 55 56 57 58 59 60 61 62 63

Design Filename: ..\AO\Design\lp1604fm471-90\PD*Phase2*change*order*mylars\Submittal\plansheets\TCP_ph2a*sowmi101.dgn
Plotted on: 9/..._004
FILE T:\AO\Design\lp1604fm471-90\PD*Phase2*change*order*mylars\Submittal\plansheets\TCP_ph2a*sowmi101.dgn
LEVEL DISPLAYED 1 2 3 4 5 6 7 8 9 10 11 12 13 14 15 16 17 18 19 20 21 22 23 24 25 26 27 28 29 30 31 32 33 34 35 36 37 38 39 40 41 42 43 44 45 46 47 48 49 50 51 52 53 54 55 56 57 58 59 60 61 62 63

**CHANGE ORDER NO. 63**
-SEQUENCE OF WORK DETAILS

DRAINAGE & ROADWAY CONSTRUCTION
CONSTRUCTION DETOUR
TRAFFIC FLOW DIRECTION
V.I.A. ASSEMBLY (14 BARRELS EACH LOCATION)

SCALE 1:2000

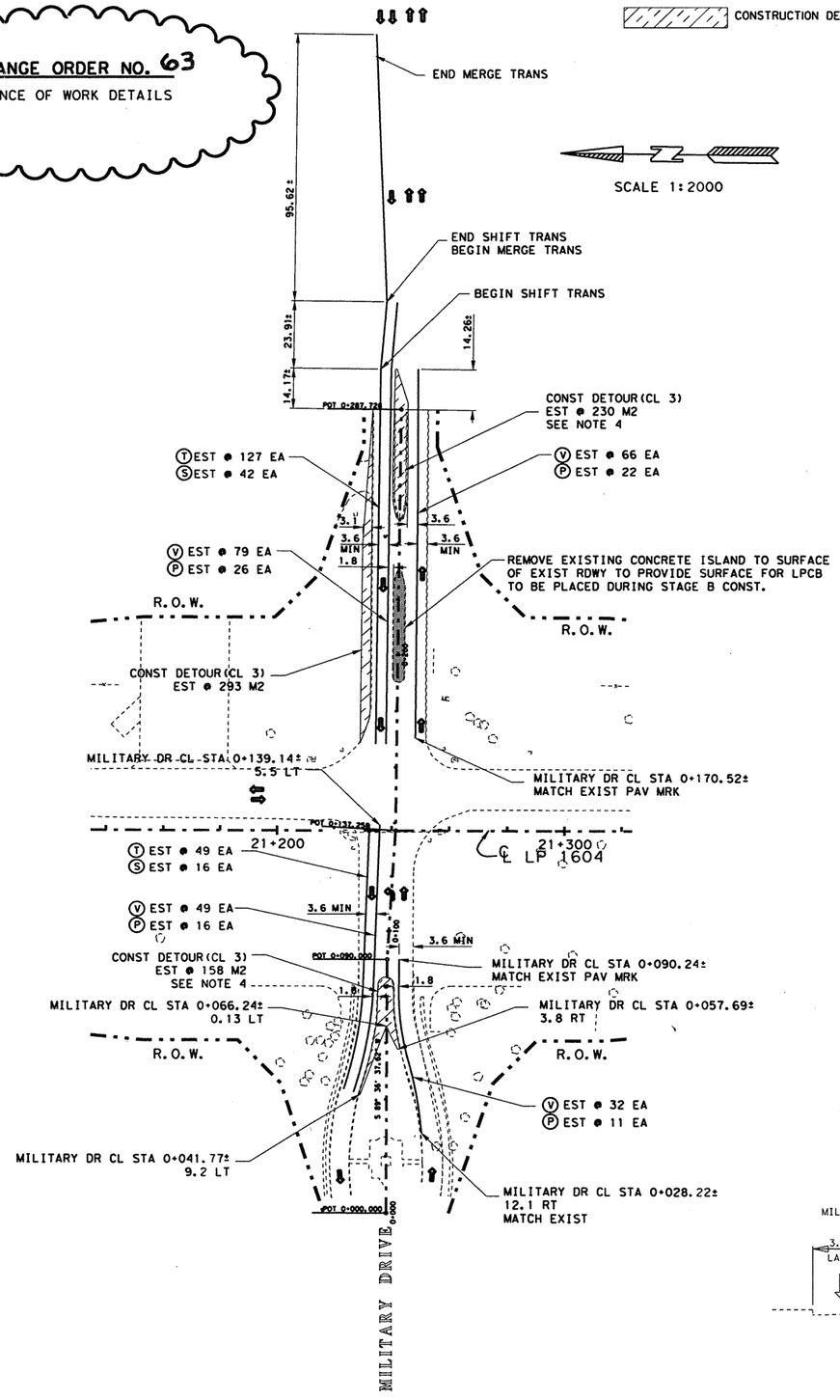


## STAGE A

| SEQUENCE OF WORK ESTIMATED QUANTITIES | | 2452-01-036 |
|---|---|---|
| ITEM | UNIT | QTY |
| PORT CTB LPRF (TY I)(STKPL, INSTL & RETRN) | M | 67.1 |
| PORT CTB LPRF (TY II)(STKPL, INSTL & RETRN) | M | 12.2 |
| WRK ZN PAV MRK REMOV (CL A) TY II-A-A | EA | 219 |
| WRK ZN PAV MRK REMOV (CL B) TY I-C | EA | 114 |
| WRK ZN PAV MRK REMOV (CL C) TY W | EA | 345 |
| WRK ZN PAV MRK REMOV (CL C) TY Y | EA | 657 |
| WRK ZN PAV MRK NON-REMOV (W)(SLD)(600mm) | M | 12 |
| WRK ZN PAV MRK NON-REMOV (ARROW) | EA | 3 |
| CONSTRUCT DETOURS(CL 3) | M2 | 451 |
| ELIM EXT PAV MRK & MRKR (100mm) | M | 47 |
| ELIM EXT PAV MRK & MRKR (600mm) | M | 93 |
| ELIM EXT PAV MRK & MRKR (WORD) | EA | 3 |
| ELIM EXT PAV MRK & MRKR (ARROW) | EA | 3 |
| ELIM EXT PAV MRK & MRKR (DBL ARROW) | EA | 3 |

SCALE 1:2000

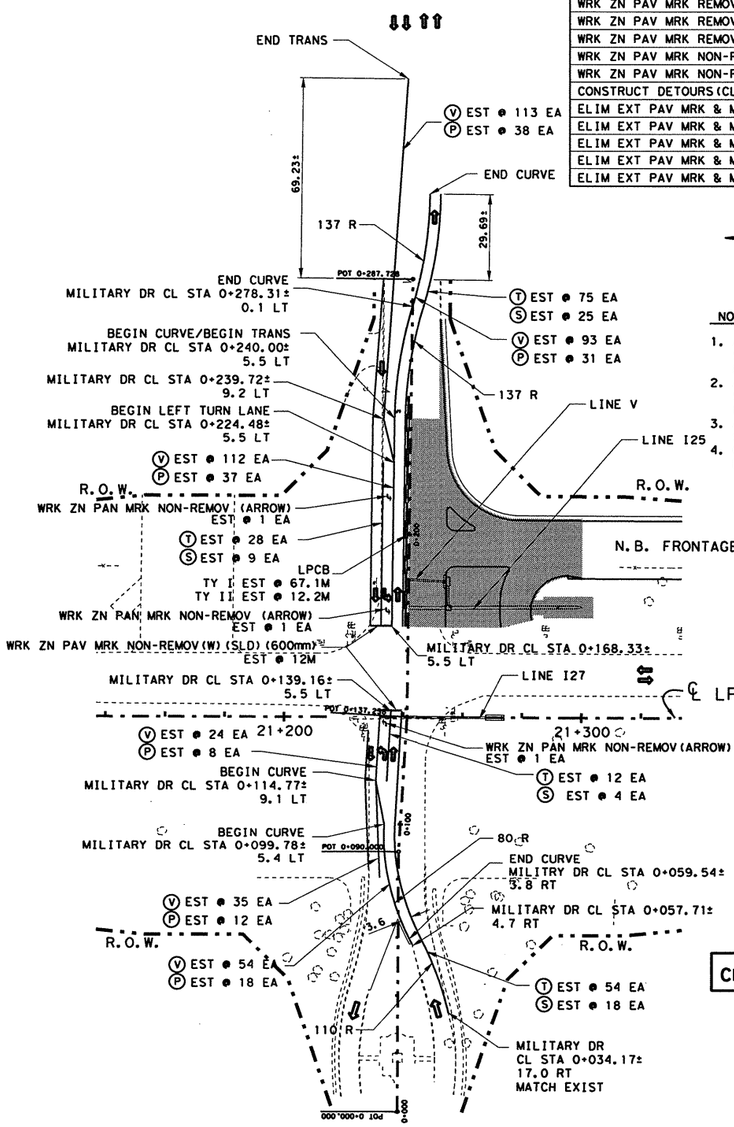


NOTES
1. ALL REMOVABLE WORK ZONE PAVEMENT MARKINGS SHALL COMPLY WITH THE T.M.U.T.C.D. OR BE AS DIRECTED BY THE ENGINEER.
2. ALL REMOVEABLE WORK ZONE PAVEMENT MARKINGS SHOWN ON SHEET SHALL CONSIST OF RAISED BUTTONS AND/OR REFLECTORS.
3. ALL REMOVEABLE WORK ZONE PAVEMENT MARKINGS SHALL BE PAID FOR BY THE EACH.
4. CONTRACTOR TO RESTORE ISLAND REMOVED DURING DETOUR CONSTRUCTION TO ORIGINAL LOCATION. SEE INTERSECTION S.O.W. PHASE 2B SHT 1 OF 5 FOR PAY.

WRK ZN PAV MRK LEGEND
(P) REMOV (TY II-A-A)
(S) REMOV (TY I-C)
(T) REMOV (TY W)
(V) REMOV (TY Y)

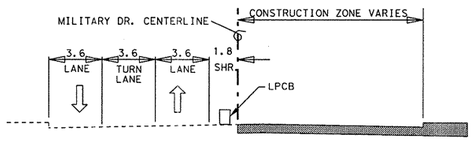


TYPICAL SECTION
MILITARY DRIVE - STAGE B
NOT TO SCALE

## STAGE B

**CHANGE ORDER NO. 63** | **NEW SHEET**

STATE OF TEXAS
JEROME D. PAVLISKA
76075
REGISTERED
PROFESSIONAL ENGINEER

Jerome D. Pavliska, P.E. 9-9-04
Jerome D. Pavliska, P.E. — Date

©2000 Texas Department of Transportation

# INTERSECTION SEQUENCE OF WORK PHASE 2A

SHEET 1 OF 7

| FED. RD. DIV. NO. | FEDERAL AID PROJECT NO. | | SHEET NO. |
|---|---|---|---|
| 6 | NH 2000(704), ETC. | | 91A |
| STATE | DIST. | COUNTY | |
| TEXAS | SAT | BEXAR | |
| CONT. | SECT. | JOB | HIGHWAY NO. |
| 2452 | 01 | 036, ETC | LP 1604 |

9-03-04

DRAINAGE & ROADWAY CONSTRUCTION ⇨ TRAFFIC FLOW DIRECTION

V.I.A. ASSEMBLY (14 BARRELS EACH LOCATION)

SCALE 1:2000

| SEQUENCE OF WORK ESTIMATED QUANTITIES | | 2452-01-036 |
|---|---|---|
| ITEM | UNIT | QTY |
| PORT CTB LPRF (TY I) (MOVE & RESET) | M | 61.0 |
| PORT CTB LPRF (TY II) (MOVE & RESET) | M | 12.2 |
| WRK ZN PAV MRK REMOV (CL A) TY II-A-A | EA | 81 |
| WRK ZN PAV MRK REMOV (CL B) TY I-C | EA | 55 |
| WRK ZN PAV MRK REMOV (CL C) TY W | EA | 165 |
| WRK ZN PAV MRK REMOV (CL C) TY Y | EA | 244 |
| WRK ZN PAV MRK NON-REMOV (W) (SLD) (600mm) | M | 14 |
| WRK ZN PAV MRK NON-REMOV (ARROW) | EA | 3 |

CHANGE ORDER NO. 63

-SEQUENCE OF WORK DETAILS

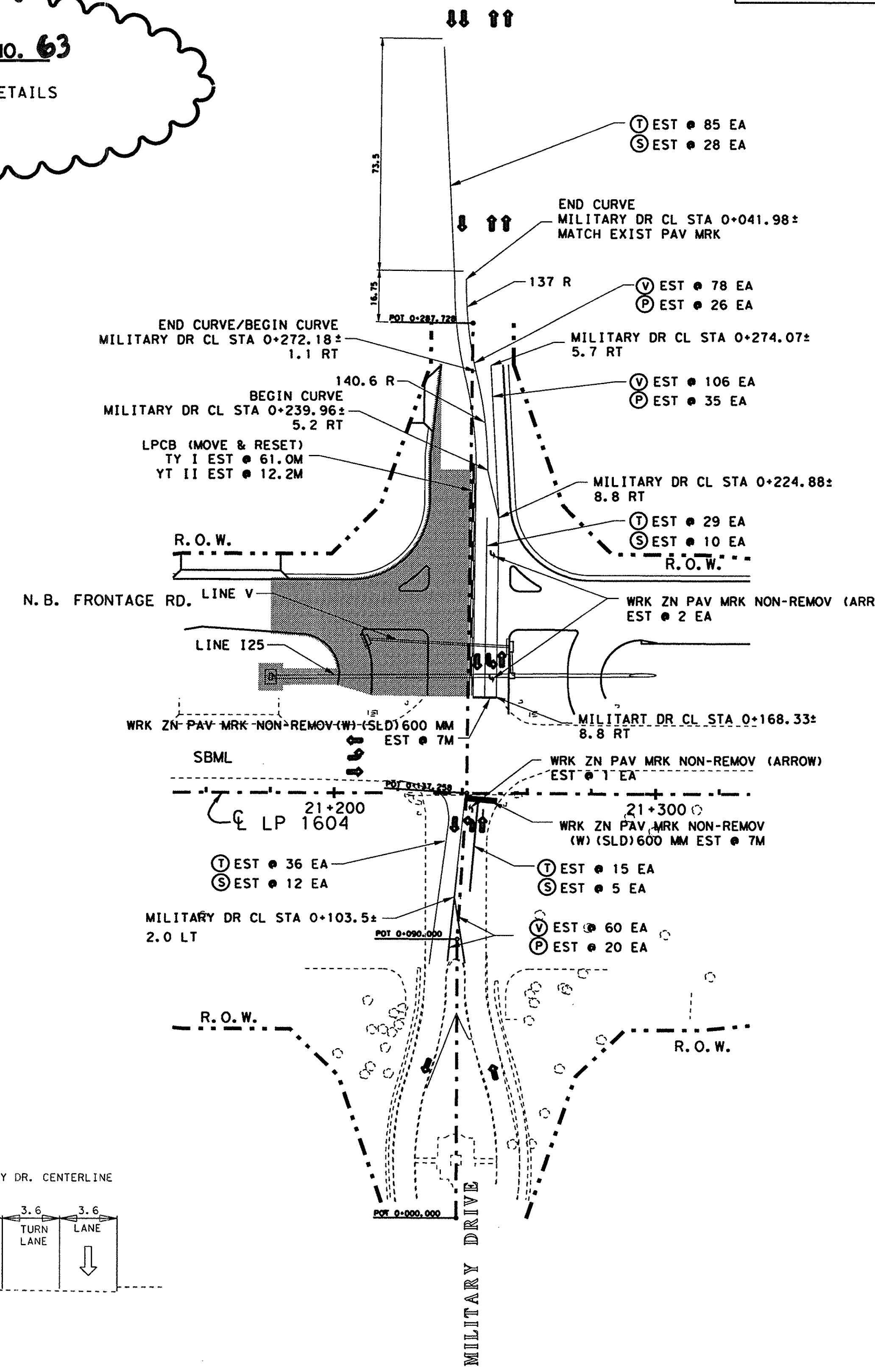


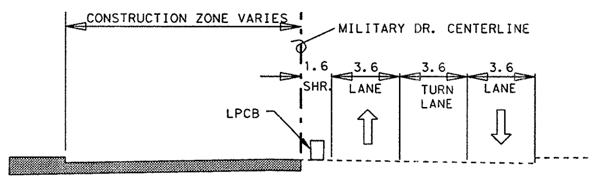


TYPICAL SECTION
MILITARY DRIVE - STAGE C
NOT TO SCALE

STAGE C

NOTES

1. ALL REMOVABLE WORK ZONE PAVEMENT MARKINGS SHALL COMPLY WITH THE T.M.U.T.C.D. OR BE AS DIRECTED BY THE ENGINEER.
2. ALL REMOVEABLE WORK ZONE PAVEMENT MARKINGS SHOWN ON SHEET SHALL CONSIST OF RAISED BUTTONS AND/OR REFLECTORS.
3. ALL REMOVEABLE WORK ZONE PAVEMENT MARKINGS SHALL BE PAID FOR BY THE EACH.

WRK ZN PAV MRK LEGEND

Ⓟ REMOV (TY II-A-A)
Ⓢ REMOV (TY I-C)
Ⓣ REMOV (TY W)
Ⓥ REMOV (TY Y)

CHANGE ORDER NO. 63 NEW SHEET

STATE OF TEXAS
JEROME D. PAVLISKA
76075
REGISTERED PROFESSIONAL ENGINEER

Jerome D. Pavliska, P.E. 9-9-04
Jerome D. Pavliska, P.E. Date

©2000 Texas Department of Transportation

INTERSECTION SEQUENCE OF WORK
PHASE 2A
SHEET 2 OF 7

| FED. RD. DIV. NO. | FEDERAL AID PROJECT NO. | | SHEET NO. |
|---|---|---|---|
| 6 | NH 2000(704), ETC. | | 91 B |
| STATE | DIST. | COUNTY | |
| TEXAS | SAT | BEXAR | |
| CONT. | SECT. | JOB | HIGHWAY NO. |
| 2452 | 01 | 036, ETC | LP 1604 |

9-03-04

Plotted on: 9/1?/2004

Design Filename: T:\AO\Design\lp1604fm471-90\PD*Phase2*change*order*mylars\submital\plansheets\TCP\ph2a*sow*mil02.dgn

Plotted on: 01/27/2004
Design Filename: p:\52\20\11\design\civil\plansheets\tcp\ph2a*sow*por01.dgn

DRAINAGE & ROADWAY CONSTRUCTION ⇨ TRAFFIC FLOW DIRECTION
V.I.A. ASSEMBLY (14 BARRELS EACH LOCATION)

| SEQUENCE OF WORK ESTIMATED QUANTITIES | | 2452-01-036 |
|---|---|---|
| ITEM | UNIT | QTY |
| PORT CTB LPRF (TY I)(STKPL, INSTL & RETRN) | M | 79.3 |
| PORT CTB LPRF (TY II)(STKPL, INSTL & RETRN) | M | 24.4 |
| PORT CTB LPRF (TY I)(MOVE & RESET) | M | 48.8 |
| PORT CTB LPRF (TY II)(MOVE & RESET) | M | 12.2 |
| WRK ZN PAV MRK REMOV (CL B) TY II-A-A | EA | 334 |
| WRK ZN PAV MRK REMOV (CL B) TY I-C | EA | 221 |
| WRK ZN PAV MRK REMOV (CL C) TY W | EA | 659 |
| WRK ZN PAV MRK REMOV (CL C) TY Y | EA | 999 |
| WRK ZN PAV MRK NON-REMOV (W)(SLD)(600mm) | M | 14 |
| WRK ZN PAV MRK NON-REMOV (W)(ARROW) | EA | 9 |
| ELIM EXT PAV MRK & MRKRS (100mm) | M | 138 |
| | | |

**CHANGE ORDER NO. 63**

-SEQUENCE OF WORK DETAILS

SCALE 1:2000

## STAGE A

POTRANCO ROAD

END TRANS MATCH EXIST

99.15±

PT 20+460.955

(T) EST @ 161 EA
(S) EST @ 54 EA

BEGIN TRANS POTRANCO RD CL STA 20+408.47± 5.6 LT±

LPCB
TY I EST @ 30.5M
TY II EST @ 12.2M

(V) EST @ 80 EA
(P) EST @ 27 EA

370 R

POTRANCO RD CL STA 20+320.00± 3.3 RT

(V) EST @ 23 EA
(P) EST @ 8 EA

LPCB
TY I EST @ 48.8M
TY II EST @ 12.2M

R.O.W.

(T) EST @ 34 EA
(S) EST @ 11 EA

WRK ZN PAV MRK NON-REMOV (ARROW) EST @ 2 EA

WRK ZN PAV MRK NON-REMOV (W)(SLD)(600mm) EST @ 7M

POTRANCO RD CL STA 20+408.58± MATCH EXIST

POTRANCO RD CL STA 20+402.74± MATCH EXIST

POTRANCO RD CL STA 20+364.38± 6.5 RT

(V) EST @ 74 EA
(P) EST @ 25 EA

POTRANCO RD CL STA 20+306.10± 6.6 RT

R.O.W.

(V) EST @ 90 EA
(P) EST @ 30 EA

POTRANCO RD CL STA 20+238.79± 3.3 RT

PT 20+280.133

22+600

22+700

℄ LP 1604

WRK ZN PAV MRK NON-REMOV (ARROW) EST @ 2 EA

(T) EST @ 38 EA
(S) EST @ 13 EA
(V) EST @ 75 EA
(P) EST @ 25 EA

POTRANCO RD CL STA 20+139.59± MATCH EXIST PAV MRK

POTRANCO RD CL STA 20+214.37± 1.8 RT

(T) EST @ 37 EA
(S) EST @ 12 EA

(V) EST @ 90 EA
(P) EST @ 30 EA

POTRANCO RD CL STA 20+124.63± 1.8 RT

POTRANCO RD CL STA 20+109.86± 5.0 RT

R.O.W.

(V) EST @ 70 EA
(P) EST @ 23 EA

POTRANCO RD CL STA 20+100.06± 4.8 RT

PT 20+054.441

POTRANCO RD CL STA 20+054.99± MATCH EXIST PAV MRK

CONSTRUCTION ZONE VARIES
POTRANCO RD. CENTERLINE
1.35 SHR. | LPCB | 3.3 LANE | 3.3 TURN LANE | 3.3 LANE

TYPICAL SECTION
POTRANCO ROAD - STAGE A
NOT TO SCALE

## STAGE B

SCALE 1:2000

POTRANCO ROAD

END TRANS MATCH EXIST

99.15±

PT 20+460.955

(T) EST @ 83 EA
(S) EST @ 28 EA

END CURVE
POTRANCO RD CL STA 20+423.92± MATCH EXIST PAV MRK

BEGIN TRANS POTRANCO RD CL STA 20+408.47± 5.6 LT±

(V) EST @ 35 EA
(P) EST @ 12 EA

(V) EST @ 47 EA
(P) EST @ 16 EA

370 R

END CURVE/BEGIN CURVE
POTRANCO RD CL STA 20+374.26± 2.0 LT

POTRANCO RD CL STA 20+357.20± 7.4 LT

POTRANCO RD CL STA 20+373.78± 1.3 RT

POTRANCO RD CL STA 20+347.15± 5.0 LT

(V) EST @ 155 EA
(P) EST @ 52 EA

370 R

(T) EST @ 81 EA
(S) EST @ 27 EA

(T) EST @ 68 EA
(S) EST @ 23 EA

BEGIN CURVE
POTRANCO RD CL STA 20+320.00± 6.0 LT

LPCB (MOVE & RESET)
TY I EST @ 48.8M
YT II EST @ 12.2M

WRK ZN PAV MRK NON-REMOV (ARROW) EST @ 1 EA

END CURVE
POTRANCO RD CL STA 20+262.68± 6.0 LT

PT 20+280.133

WRK ZN PAV MRK NON-REMOV (ARROW) EST @ 1 EA

WRK ZN PAV MRK NON-REMOV (W)(SLD)(600mm) EST @ 7M

273 R

BEGIN CURVE
POTRANCO RD CL STA 20+239.30± 5.3 LT

END CURVE
POTRANCO RD CL STA 20+214.36± 9.8 LT

WRK ZN PAV MRK NON-REMOV (ARROW) EST @ 1 EA

22+600

22+700

(T) EST @ 9 EA
(S) EST @ 3 EA

END CURVE/BEGIN CURVE
POTRANCO RD CL STA 20+191.28± 5.4 LT

273.6 R

806.1 R

END TRANS/MATCH EXIST PAV MRK
POTRANCO RD CL STA 20+169.56± 9.0 RT

(T) EST @ 30 EA
(S) EST @ 10 EA

WRK ZN PAV MRK NON-REMOV (ARROW) EST @ 1 EA

(T) EST @ 23 EA
(S) EST @ 8 EA

POTRANCO RD CL STA 20+139.53± 1.8 LT

BEGIN CURVE
POTRANCO RD CL STA 20+153.37± 5.4 LT

(T) EST @ 50 EA
(S) EST @ 17 EA

BEGIN TRANS
POTRANCO RD CL STA 20+124.21± 1.8 RT

WRK ZN PAV MRK NON-REMOV (ARROW) EST @ 1 EA

(V) EST @ 160 EA
(P) EST @ 53 EA
(V) EST @ 100 EA
(P) EST @ 33 EA

END TRANS
POTRANCO RD CL STA 20+112.89± 5.7 RT

(T) EST @ 45 EA
(S) EST @ 15 EA

PT 20+054.441

BEGIN TRANS
POTRANCO RD CL STA 20+0662.88± 3.4 RT

BEGIN CURVE
POTRANCO RD CL STA 20+054.70± MATCH EXIST PAV MRK

CONSTRUCTION ZONE VARIES
POTRANCO RD. CENTERLINE
3.3 LANE | 3.3 TURN LANE | 3.3 LANE | 1.35 SHR. | LPCB

TYPICAL SECTION
POTRANCO ROAD - STAGE B
NOT TO SCALE

NOTES

1. ALL REMOVABLE WORK ZONE PAVEMENT MARKINGS SHALL COMPLY WITH THE T.M.U.T.C.D. OR BE AS DIRECTED BY THE ENGINEER.
2. ALL REMOVEABLE WORK ZONE PAVEMENT MARKINGS SHOWN ON SHEET SHALL CONSIST OF RAISED BUTTONS AND/OR REFLECTORS.
3. ALL REMOVEABLE WORK ZONE PAVEMENT MARKINGS SHALL BE PAID FOR BY THE EACH.

WRK ZN PAV MRK LEGEND

(P) REMOV (TY II-A-A)
(S) REMOV (TY I-C)
(T) REMOV (TY W)
(V) REMOV (TY Y)

**CHANGE ORDER NO. 63** **NEW SHEET**

555 EAST RAMSEY SAN ANTONIO TEXAS 78216 PHONE (210)375-9000 FAX (210)375-9010
PAPE-DAWSON ENGINEERS CIVIL & ENVIRONMENTAL
STATE OF TEXAS J. KENT O'BRIEN 64398 LICENSED PROFESSIONAL ENGINEER
J. KENT O'BRIEN P.E. 1/27/2004 DATE

©2000 Texas Department of Transportation

# INTERSECTION SEQUENCE OF WORK
## PHASE 2A
SHEET 3 OF 7

| FED.RD. DIV.NO. | FEDERAL AID PROJECT NO. | | SHEET NO. |
|---|---|---|---|
| 6 | NH 2000(704), ETC. | | 91C |
| STATE | DIST. | COUNTY | |
| TEXAS | SAT | BEXAR | |
| CONT. | SECT. | JOB | HIGHWAY NO. |
| 2452 | 01 | 036,ETC | LP 1604 |

FILE p:\52\20\11\design\civil\plansheets\tcp\ph2a*sow*por01.dgn 01/27/2004
LEVEL 1 2 3 4 5 6 7 8 9 10 11 21 31 45 61 71 81 92 102 122 324 525 627 828 2903 3132
DISPLAYED 33 45 56 63 75 85 94 104 124 344 454 647 684 950 1525 2535 4555 6575 8595 1 63

Plotted on: 01/26/2004

Design Filename: p:\52\2011\design\civil\plansheets\tcp\ph2a*sow*pot02.dgn

FILE p:\52\2011\design\civil\plansheets\tcp\ph2a*sow*pot02.dgn 01/26/2004
LEVEL 1 2 3 4 5 6 7 8 9 10 11 12 13 14 15 16 17 18 19 20 21 22 23 24 25 26 27 28 29 30 31 32
DISPLAYED 33 34 35 36 37 38 39 40 41 42 43 44 45 46 47 48 49 50 51 52 53 54 55 56 57 58 59 60 63



DRAINAGE & ROADWAY CONSTRUCTION ⇨ TRAFFIC FLOW DIRECTION

V.I.A. ASSEMBLY (14 BARRELS EACH LOCATION)

SCALE 1:1200

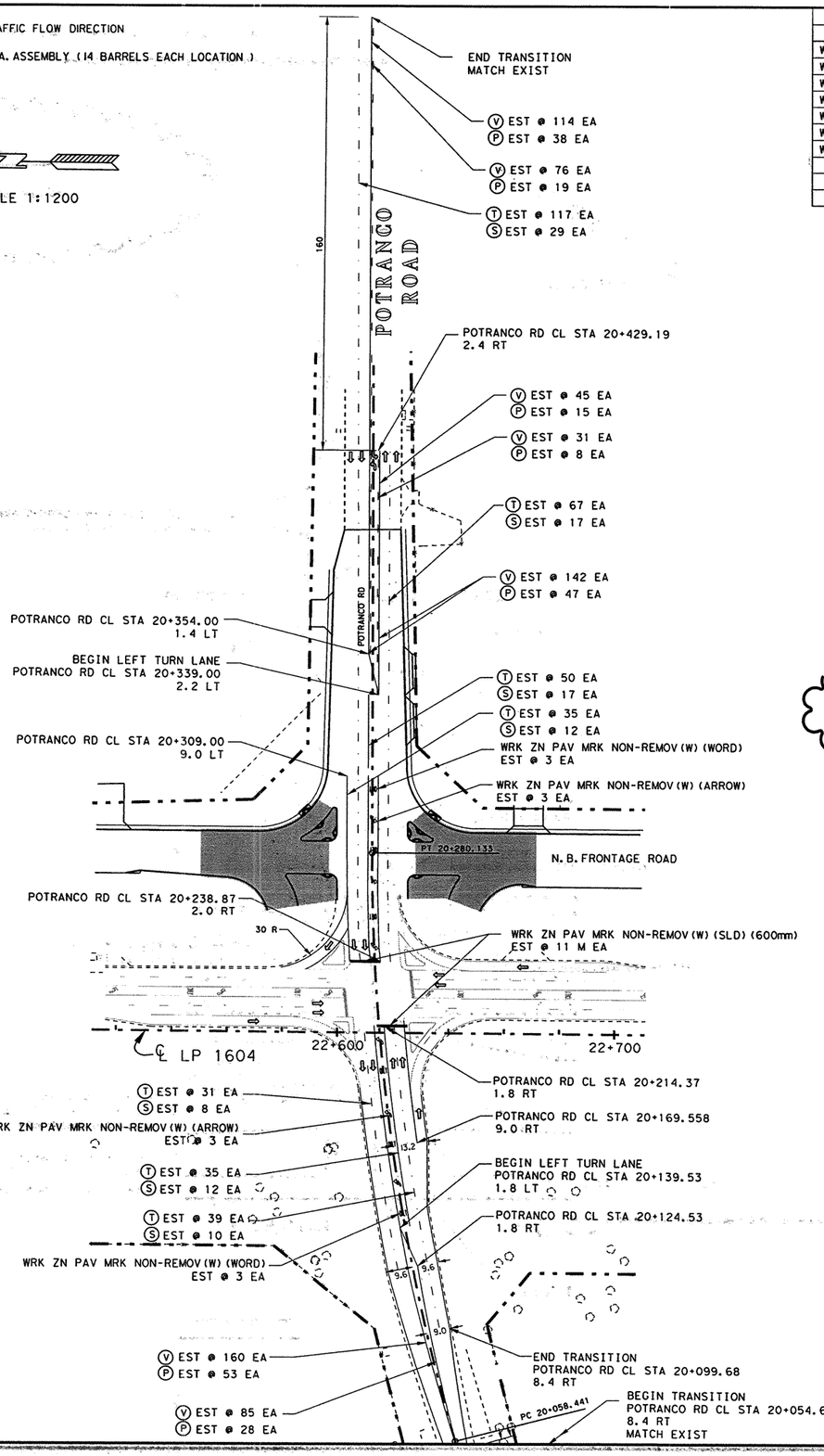


STAGE C

| SEQUENCE OF WORK ESTIMATED QUANTITIES | | 2452-01-036 |
|---|---|---|
| ITEM | UNIT | QTY |
| WRK ZN PAV MRK REMOV (CL B) TY II-A-A | EA | 208 |
| WRK ZN PAV MRK REMOV (CL B) TY I-C | EA | 105 |
| WRK ZN PAV MRK REMOV (CL C) TY W | EA | 374 |
| WRK ZN PAV MRK REMOV (CL C) TY Y | EA | 653 |
| WRK ZN PAV MRK NON-REMOV (W) (SLD) (600mm) | M | 22 |
| WRK ZN PAV MRK NON-REMOV (W) (WORD) | EA | 6 |
| WRK ZN PAV MRK NON-REMOV (W) (ARROW) | EA | 6 |

NOTES

1. ALL REMOVABLE WORK ZONE PAVEMENT MARKINGS SHALL COMPLY WITH THE T.M.U.T.C.D. OR BE AS DIRECTED BY THE ENGINEER.
2. ALL REMOVEABLE WORK ZONE PAVEMENT MARKINGS SHOWN ON SHEET SHALL CONSIST OF RAISED BUTTONS AND/OR REFLECTORS.
3. ALL REMOVEABLE WORK ZONE PAVEMENT MARKINGS SHALL BE PAID FOR BY THE EACH.

WRK ZN PAV MRK LEGEND

(P) REMOV (TY II-A-A)
(S) REMOV (TY I-C)
(T) REMOV (TY W)
(V) REMOV (TY Y)

CHANGE ORDER NO. 63

-SEQUENCE OF WORK DETAILS

CHANGE ORDER NO. 63 | NEW SHEET

555 EAST RAMSEY SAN ANTONIO TEXAS 78216 PHONE (210)375-9000 FAX (210)375-9010
PAPE-DAWSON ENGINEERS CIVIL & ENVIRONMENTAL
STATE OF TEXAS J. KENT O'BRIEN 64398 LICENSED PROFESSIONAL ENGINEER
J. KENT O'BRIEN P.E. 1/27/2004 DATE

©2000 Texas Department of Transportation

# INTERSECTION SEQUENCE OF WORK
## PHASE 2A
SHEET 4 OF 7

| FED. RD. DIV. NO. | FEDERAL AID PROJECT NO. | | SHEET NO. |
|---|---|---|---|
| 6 | NH 2000(704), ETC. | | 91 D |
| STATE | DIST. | COUNTY | |
| TEXAS | SAT | BEXAR | |
| CONT. | SECT. | JOB | HIGHWAY NO. |
| 2452 | 01 | 036, ETC | LP 1604 |

Plotted on: 01/26/2004

DRAINAGE & ROADWAY CONSTRUCTION

CONSTRUCTION DETOUR

TRAFFIC FLOW DIRECTION

V.I.A. ASSEMBLY ( 14 BARRELS EACH LOCATION )

**CHANGE ORDER NO. 63**

-SEQUENCE OF WORK DETAILS

| SEQUENCE OF WORK ESTIMATED QUANTITIES | | 2452-01-036 |
|---|---|---|
| ITEM | UNIT | QTY |
| PORT CTB LPRF (TY I) (STKPL, INSTL & RETRN) | M | 85.4 |
| PORT CTB LPRF (TY II) (STKPL, INSTL & RETRN) | M | 12.2 |
| WRK ZN PAV MRK REMOV (CL B) TY II-A-A | EA | 17.4 |
| WRK ZN PAV MRK REMOV (CL B) TY I-C | EA | 49 |
| WRK ZN PAV MRK REMOV (CL C) TY W | EA | 145 |
| WRK ZN PAV MRK REMOV (CL C) TY Y | EA | 520 |
| WRK ZN PAV MRK NON-REMOV (W) (SLD) (600mm) | M | 7 |
| CONSTRUCT DETOURS (CL 3) | M2 | 683 |
| | | |
| | | |

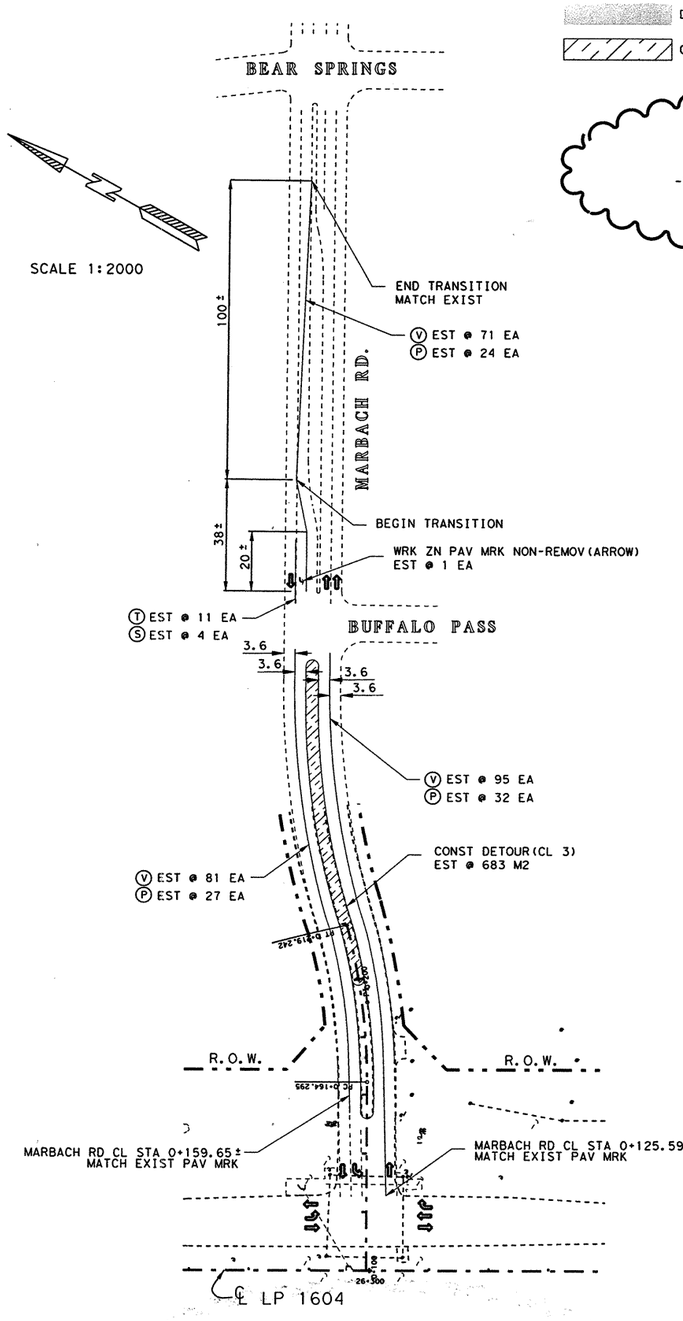


STAGE A

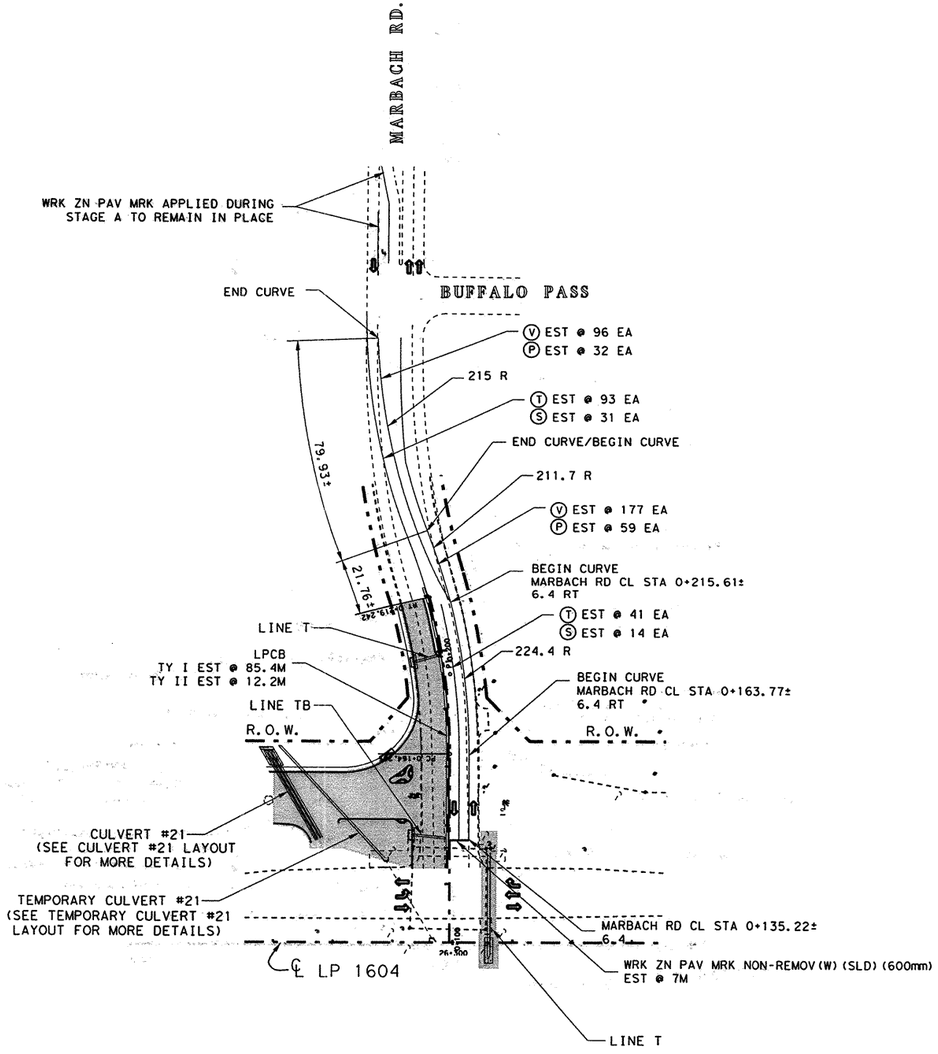


STAGE B

NOTES

1. ALL REMOVABLE WORK ZONE PAVEMENT MARKINGS SHALL COMPLY WITH THE T.M.U.T.C.D. OR BE AS DIRECTED BY THE ENGINEER.
2. ALL REMOVEABLE WORK ZONE PAVEMENT MARKINGS SHOWN ON SHEET SHALL CONSIST OF RAISED BUTTONS AND/OR REFLECTORS.
3. ALL REMOVEABLE WORK ZONE PAVEMENT MARKINGS SHALL BE PAID FOR BY THE EACH.

WRK ZN PAV MRK LEGEND

Ⓟ REMOV (TY II-A-A)
Ⓢ REMOV (TY I-C)
Ⓣ REMOV (TY W)
Ⓥ REMOV (TY Y)

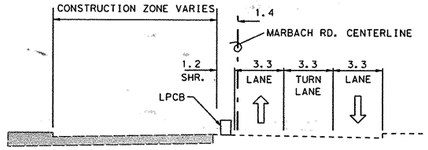


TYPICAL SECTION
MARBACH ROAD - STAGE B
NOT TO SCALE

**CHANGE ORDER NO. 63** | **NEW SHEET**

555 EAST RAMSEY SAN ANTONIO TEXAS 78216
PHONE (210) 375-9000
FAX (210) 375-9010
PAPE-DAWSON ENGINEERS
CIVIL & ENVIRONMENTAL
STATE OF TEXAS
J. KENT O'BRIEN
64398
LICENSED PROFESSIONAL ENGINEER
J. KENT O'BRIEN, P.E.
1/27/2004
DATE

©2000
Texas Department of Transportation

# INTERSECTION SEQUENCE OF WORK PHASE 2A

SHEET 5 OF 7

| FED.RD. DIV.NO. | FEDERAL AID PROJECT NO. | | SHEET NO. |
|---|---|---|---|
| 6 | NH 2000(704), ETC. | | 91E |
| STATE | DIST. | COUNTY | |
| TEXAS | SAT | BEXAR | |
| CONT. | SECT. | JOB | HIGHWAY NO. |
| 2452 | 01 | 036, ETC | LP 1604 |

Design Filename: p:\52\20\11\design\civil\plansheets\tcp\ph2a*sow*mar01.dgn

FILE: p:\52\20\11\design\civil\plansheets\tcp\ph2a*sow*mar01.dgn 01/26/2004
LEVEL DISPLAYED
1 2 3 4 5 6 7 8 9 10 11 12 13 14 15 16 17 18 19 20 21 22 23 24 25 26 27 28 29 30 31 32
33 34 35 36 37 38 39 40 41 42 43 44 45 46 47 48 49 50 51 52 53 54 55 56 57 58 59 60 61 62 63

Plotted on: 01/26/2004

Design Filename: p:\52\20\11\design\civil\plansheets\top\ph2a*sowmar02.dgn

FILE: p:\52\20\11\design\civil\plansheets\top\ph2a*sowmar02.dgn 01/26/2004
LEVEL 1 2 3 4 5 6 7 8 9 10 11 12 13 14 15 16 17 18 19 20 21 22 23 24 25 26 27 28 29 30 31 32
DISPLAYED 33 34 35 36 37 38 39 40 41 42 43 44 45 46 47 48 49 50 51 52 53 54 55 56 57 58 59 60 61 62 63

DRAINAGE & ROADWAY CONSTRUCTION ⇨ TRAFFIC FLOW DIRECTION

V.I.A. ASSEMBLY (14 BARRELS EACH LOCATION)

| SEQUENCE OF WORK ESTIMATED QUANTITIES | | 2452-01-036 |
|---|---|---|
| ITEM | UNIT | QTY |
| PORT CTB LPRF (TY I) (MOVE & RESET) | M | 85.4 |
| PORT CTB LPRF (TY II) (MOVE & RESET) | M | 12.2 |
| WRK ZN PAV MRK REMOV (CL B) TY II-A-A | EA | 88 |
| WRK ZN PAV MRK REMOV (CL B) TY I-C | EA | 36 |
| WRK ZN PAV MRK REMOV (CL C) TY W | EA | 108 |
| WRK ZN PAV MRK REMOV (CL C) TY Y | EA | 264 |
| WRK ZN PAV MRK NON-REMOV (W) (SLD) (600mm) | M | 7 |
| | | |

SCALE 1:2000

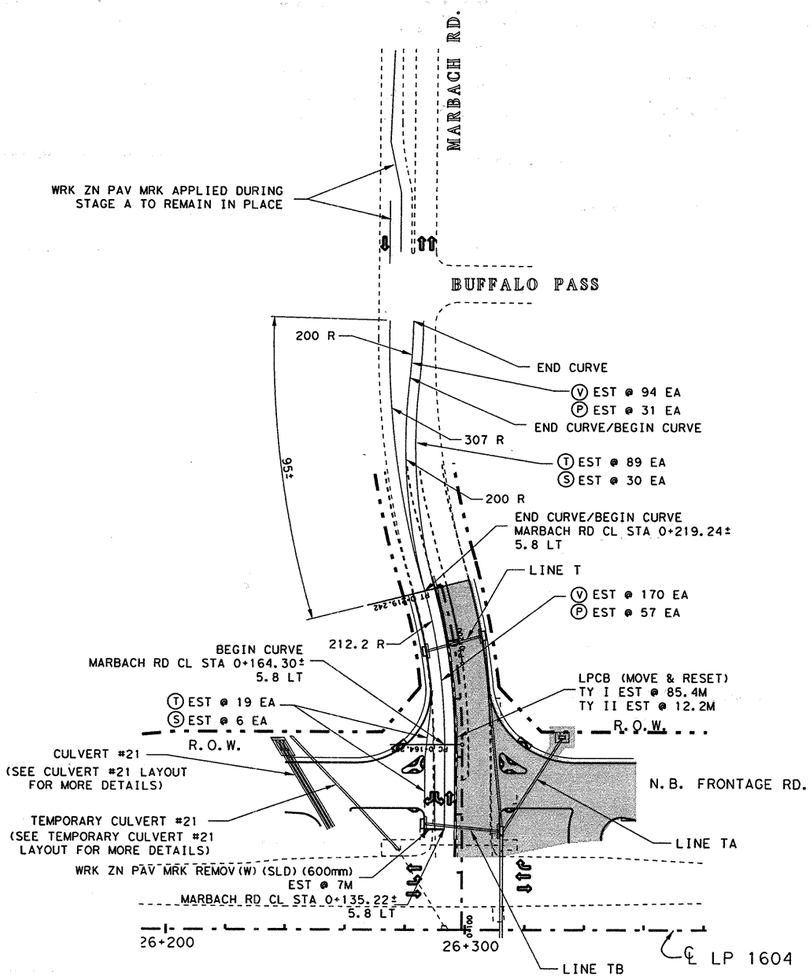


STAGE C

CHANGE ORDER NO. 63

-SEQUENCE OF WORK DETAILS

NOTES

1. ALL REMOVABLE WORK ZONE PAVEMENT MARKINGS SHALL COMPLY WITH THE T.M.U.T.C.D. OR BE AS DIRECTED BY THE ENGINEER.
2. ALL REMOVEABLE WORK ZONE PAVEMENT MARKINGS SHOWN ON SHEET SHALL CONSIST OF RAISED BUTTONS AND/OR REFLECTORS.
3. ALL REMOVEABLE WORK ZONE PAVEMENT MARKINGS SHALL BE PAID FOR BY THE EACH.

WRK ZN PAV MRK LEGEND

(P) REMOV (TY II-A-A)
(S) REMOV (TY I-C)
(T) REMOV (TY W)
(V) REMOV (TY Y)

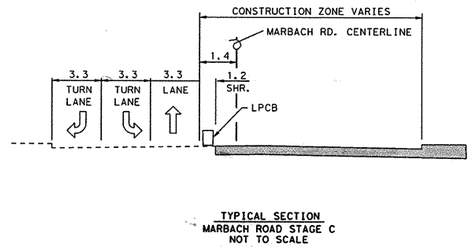


TYPICAL SECTION
MARBACH ROAD STAGE C
NOT TO SCALE

CHANGE ORDER NO. 63 | NEW SHEET

555 EAST RAMSEY SAN ANTONIO TEXAS 78216 PHONE (210)375-9000 FAX (210)375-9010
PAPE-DAWSON ENGINEERS
CIVIL & ENVIRONMENTAL
STATE OF TEXAS J. KENT O'BRIEN 64398 LICENSED PROFESSIONAL ENGINEER
J. KENT O'BRIEN P.E. 1/27/2004 DATE

©2000 Texas Department of Transportation

# INTERSECTION SEQUENCE OF WORK
## PHASE 2A
SHEET 6 OF 7

| FED. RD. DIV. NO. | FEDERAL AID PROJECT NO. | | SHEET NO. |
|---|---|---|---|
| 6 | NH 2000(704), ETC. | | 91F |
| STATE | DIST. | COUNTY | |
| TEXAS | SAT | BEXAR | |
| CONT. | SECT. | JOB | HIGHWAY NO. |
| 2452 | 01 | 036, ETC. | LP 1604 |

| SEQUENCE OF WORK ESTIMATED QUANTITIES | | 2452-01-036 |
|---|---|---|
| ITEM | UNIT | QTY |
| WRK ZN PAV MRK REMOV (CL A) TY II-A-A | EA | 25 |
| WRK ZN PAV MRK REMOV (CL B) TY I-C | EA | 58 |
| WRK ZN PAV MRK REMOV (CL C) TY W | EA | 173 |
| WRK ZN PAV MRK REMOV (CL C) TY Y | EA | 75 |
| WRK ZN PAV MRK NON-REMOV (W) (SLD) (600mm) | M | 7.2 |
| WRK ZN PAV MRK NON-REMOV (ARROW) | EA | 1 |
| CONSTRUCT DETOURS (CL 3) | M2 | 155 |
| | | |

DRAINAGE & ROADWAY CONSTRUCTION
CONSTRUCTION DETOUR
TRAFFIC FLOW DIRECTION
V.I.A. ASSEMBLY (14 BARRELS EACH LOCATION)

SCALE 1:1000

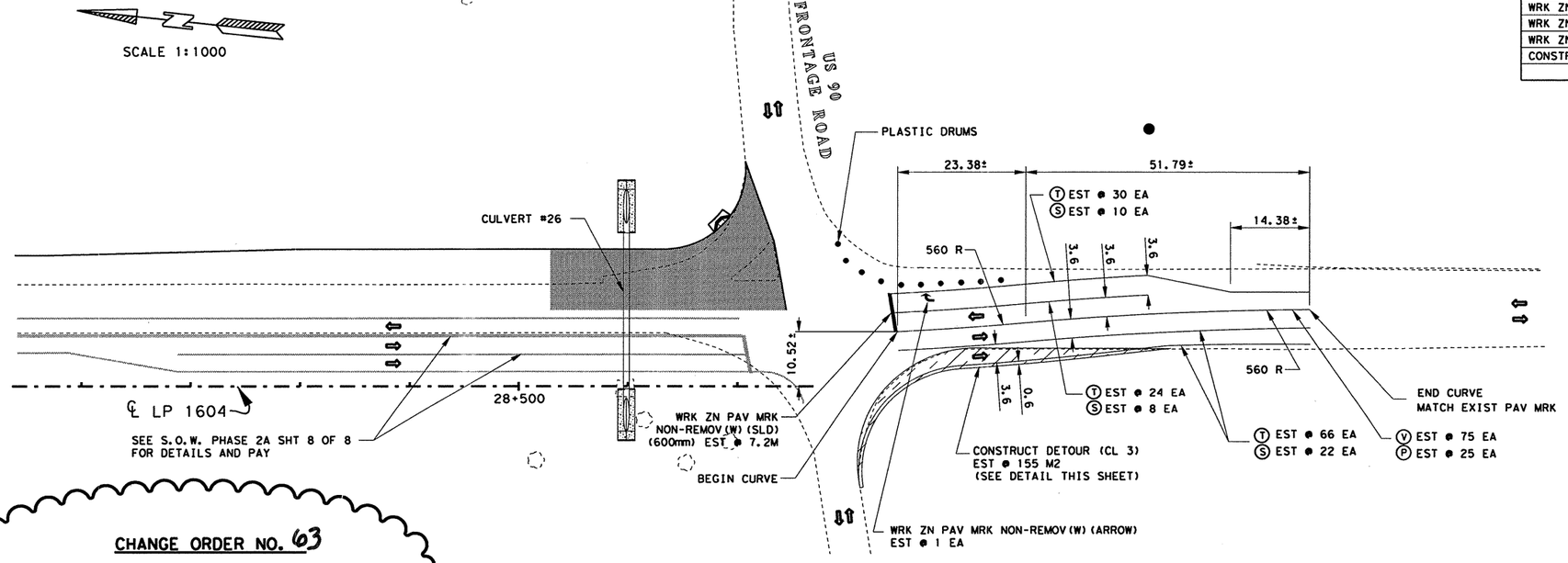


STAGE A

**CHANGE ORDER NO. 63**

-SEQUENCE OF WORK DETAILS

NOTES

1. ALL REMOVABLE WORK ZONE PAVEMENT MARKINGS SHALL COMPLY WITH THE T.M.U.T.C.D. OR BE AS DIRECTED BY THE ENGINEER.
2. ALL REMOVEABLE WORK ZONE PAVEMENT MARKINGS SHOWN ON SHEET SHALL CONSIST OF RAISED BUTTONS AND/OR REFLECTORS.
3. ALL REMOVEABLE WORK ZONE PAVEMENT MARKINGS SHALL BE PAID FOR BY THE EACH.

WRK ZN PAV MRK LEGEND

- (P) REMOV (TY II-A-A)
- (S) REMOV (TY I-C)
- (T) REMOV (TY W)
- (V) REMOV (TY Y)

SCALE 1:1000

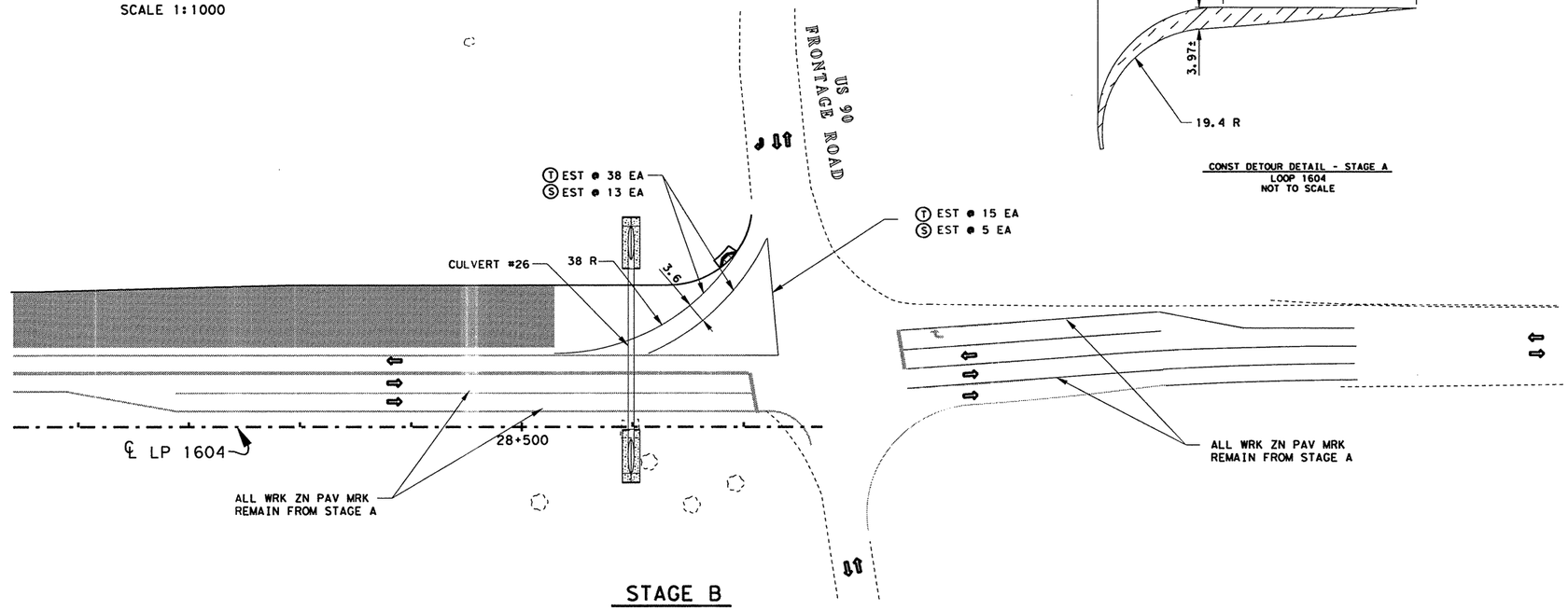


STAGE B

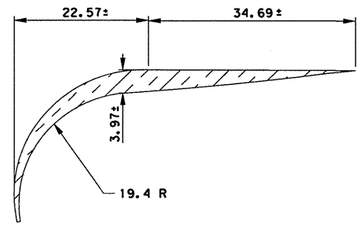


CONST DETOUR DETAIL - STAGE A
LOOP 1604
NOT TO SCALE

**CHANGE ORDER NO. 63** **NEW SHEET**

STATE OF TEXAS
JEROME D. PAVLISKA
76075
REGISTERED PROFESSIONAL ENGINEER

Jerome D. Pavliska, P.E. 9-9-04
Jerome D. Pavliska, P.E. — Date

©2000
Texas Department of Transportation

# INTERSECTION SEQUENCE OF WORK PHASE 2A

SHEET 7 OF 7

| FED.RD. DIV.NO. | FEDERAL AID PROJECT NO. | | SHEET NO. |
|---|---|---|---|
| 6 | NH 2000(704), ETC. | | 91G |
| STATE | DIST. | COUNTY | |
| TEXAS | SAT | BEXAR | |
| CONT. | SECT. | JOB | HIGHWAY NO. |
| 2452 | 01 | 036, ETC | LP 1604 |

Plotted on: 9/ ..2004
Design Filename: T:\AO\Design\lp1604fm471-90\PD*Phase2*change*order*mylars\submital\plansheets\TCP\ph2a*sow*US90*01.dgn
FILE T:\AO\Design\lp1604fm471-90\PD*Phase2*change*order*mylars\submital\plansheets\TCP\ph2a*sow*US90*01.dgn
LEVEL 1 2 3 4 5 6 7 8 9 10 11 12 13 14 15 16 17 18 19 20 21 22 23 24 25 26 27 28 29 30 31 32
DISPLAYED 33 34 35 36 37 38 39 40 41 42 43 44 45 46 47 48 49 50 51 52 53 54 55 56 57 58 59 60 61 63

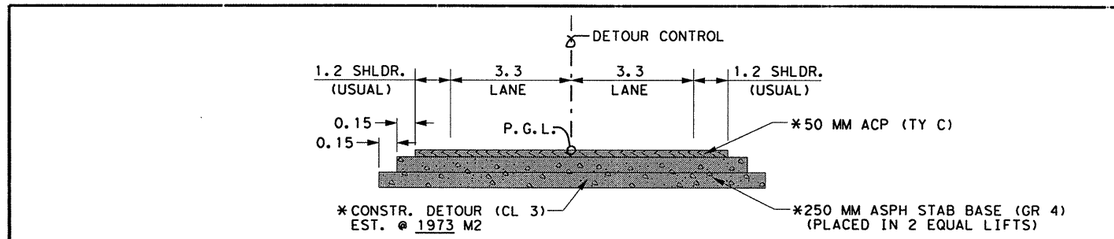


**DETOUR TYPICAL**

NOT TO SCALE

## LEGEND

- PROPOSED DETOUR
- UNDER CONSTRUCTION
- TRAFFIC FLOW DIRECTION
- TY III BARRICADES

SCALE 1:1500

## ESTIMATED QUANTITIES

| | ITEM | UNIT | QTY. |
|---|---|---|---|
| * | ASPH STAB BASE | MGR | 1258 |
| * | HOT MIX (TY C) | MGR | 232 |
| * | CONSTRUCT DETOUR (CL 3) | M2 | 1973 |
| * | CMP AR (GALV STL DES 3) | M | 240 |
| * | SET (TY II) (DES 3) (CMP) (1:6) | EA | 4 |
| | | | |
| | | | |

* FOR CONTRACTORS INFORMATION ONLY

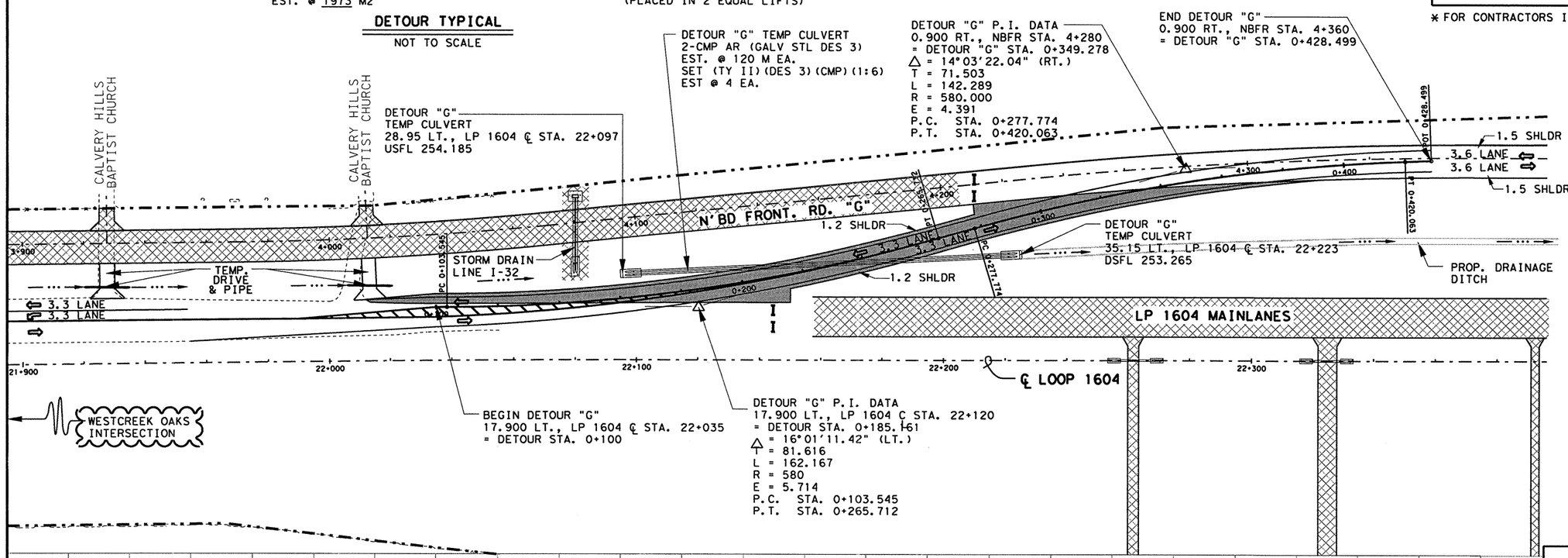


**NOTE(S):**

- ALL DIMENSION ARE IN METERS UNLESS OTHERWISE NOTED.
- FOR PAY ITEMS ASSOCIATED WITH THIS DETOUR SEE DETOUR "G" PLAN/PROFILE, DETOUR "G" SUPPLEMENTAL SHEET AND S.O.W. SHEETS FOR PHASE 2A.
- FOR MORE SPECIFIC DETAILS ON THE REQUIRED WORK ZONE PAVEMENT MARKING ASSOCIATED WITH THIS DETOUR SEE DETOUR "G" SUPPLEMENTAL SHEET.

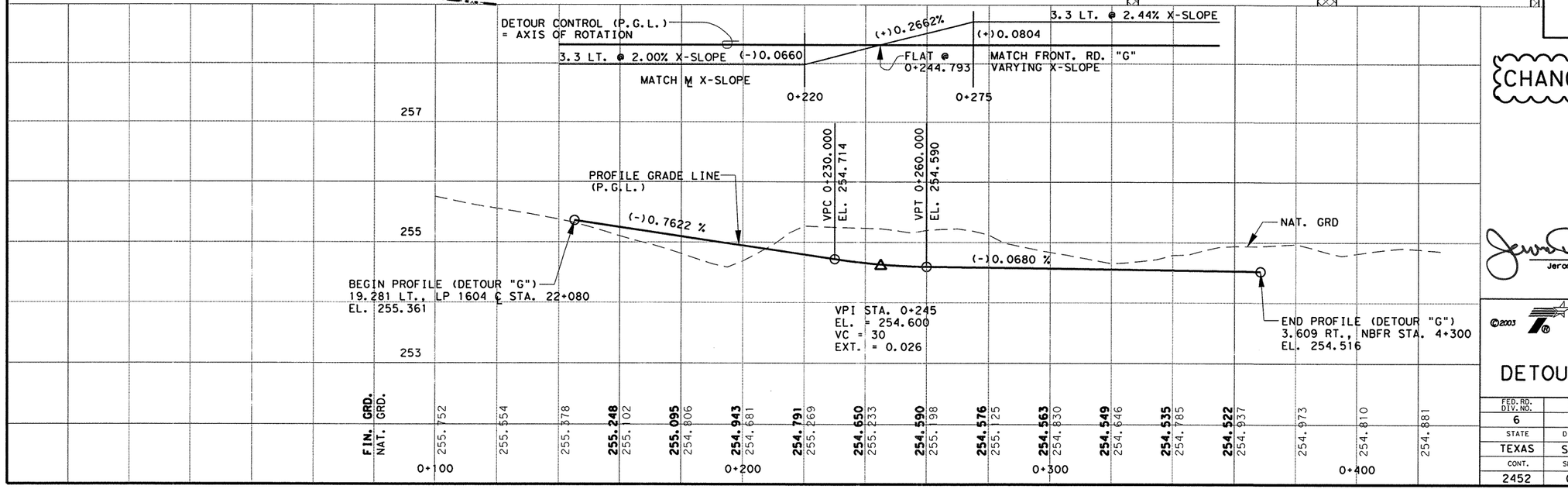


NEW SHEET

CHANGE ORDER NO. 63

STATE OF TEXAS — JEROME D. PAVLISKA — 76075 — REGISTERED PROFESSIONAL ENGINEER

Jerome D. Pavliska, P.E. 6-28-04

Jerome D. Pavliska, P.E. — Date

©2003 Texas Department of Transportation

# DETOUR "G" DETOUR PLAN & PROFILE

| FED.RD. DIV.NO. | FEDERAL AID PROJECT NO. | | SHEET NO. |
|---|---|---|---|
| 6 | NH 2000(704), etc. | | 91 H |
| STATE | DIST. | COUNTY | |
| TEXAS | SAT | BEXAR | |
| CONT. | SECT. | JOB | HIGHWAY NO. |
| 2452 | 01 | 036, etc | LP 1604 |

LEVELS DISPLAYED 1 2 3 4 5 6 7 8 9 10 11 12 13 14 15 16 17 18 19 20 21 22 23 24 25 26 27 28 29 30 31 32 33 34 35 36 37 38 39 40 41 42 43 44 45 46 47 48 49 50 51 52 53 54 55 56 57 58 59 60 | 63

ACC: t:\oo\design\lp1604fm471-90\sow

FILE: detour*g*sheet+.dgn

## LEGEND

- PROPOSED DETOUR
- UNDER CONSTRUCTION
- TRAFFIC FLOW DIRECTION
- TY III BARRICADES

SCALE 1:2000

| PAVEMENT MARKING ESTIMATED QUANTITES | | |
|---|---|---|
| ITEM | UNIT | QTY |
| WRK ZN PAV MRK | | |
| NON-REMV (W)(SLD)100 MM | M | 845 |
| NON-REMOV (W) (ARROW) | EA | 3 |
| NON-REMOV (W) (WORD) | EA | 3 |
| NON-REMV (Y)(SLD)100 MM | M | 1270 |
| NON-REMV (Y)(SLD)600 MM | M | 64 |
| ELIM EXT | | |
| PAV MRK & MRKR (100 MM) | M | 984 |
| PAV MRK & MRKR (600 MM) | M | 40 |

NOTE(S):

- ALL DIMENSIONS ARE IN METERS UNLESS OTHERWISE NOTED.
- FOR PAY ITEMS ASSOCIATED WITH THIS DETOUR SEE DETOUR "G" PLAN/PROFILE, DETOUR "G" SUPPLEMENTAL SHEET AND S.O.W. SHEETS FOR PHASE 2A.

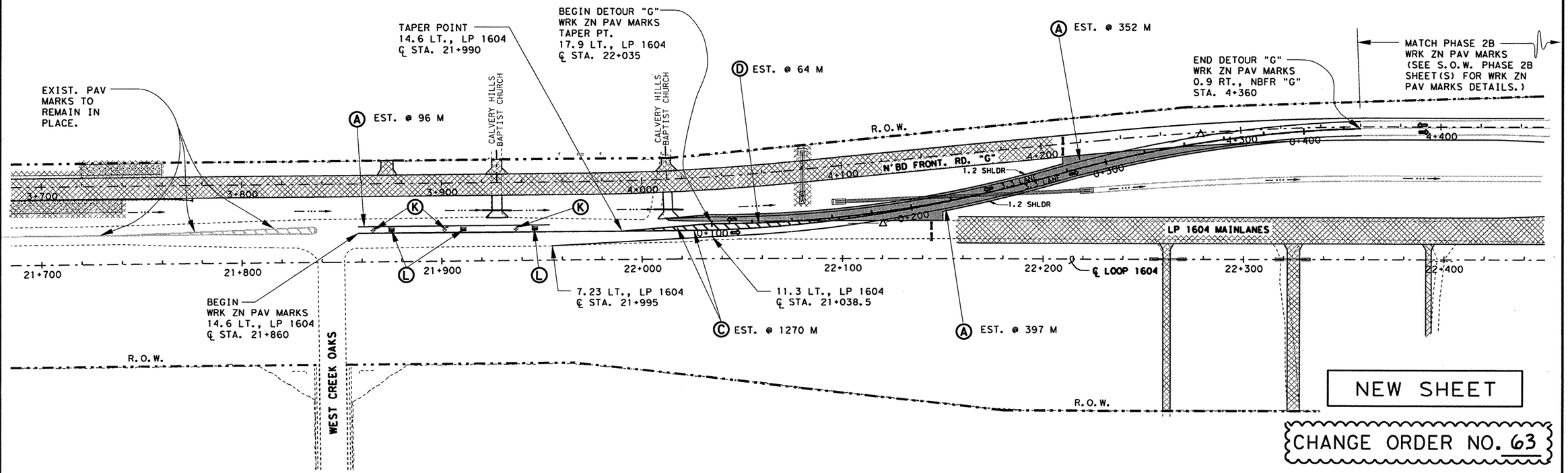


NEW SHEET

CHANGE ORDER NO. 63

### WRK ZN PAV MRK LEGEND

- Ⓐ NON-REMV (W)(SLD)100 MM
- Ⓑ NON-REMV (W)(SLD)600 MM
- Ⓒ NON-REMV (Y)(SLD)100 MM
- Ⓓ NON-REMV (Y)(SLD)600 MM
- Ⓚ NON-REMOV (W) (ARROW)
- Ⓛ NON-REMOV (W) (WORD)
- Ⓜ NON-REMV (Y) (MED NOSE)

STATE OF TEXAS — JEROME D. PAVLISKA — 76075 — REGISTERED PROFESSIONAL ENGINEER

Jerome D. Pavliska, P.E. 6-30-04

Jerome D. Pavliska, P.E. — Date

©2003

Texas Department of Transportation

# DETOUR "G" SUPPLEMENTAL

| FED. RD. DIV. NO. | FEDERAL AID PROJECT NO. | | SHEET NO. |
|---|---|---|---|
| 6 | NH 2000(704),etc. | | 91 I |
| STATE | DIST. | COUNTY | |
| TEXAS | SAT | BEXAR | |
| CONT. | SECT. | JOB | HIGHWAY NO. |
| 2452 | 01 | 036,etc | LP 1604 |

LEVELS DISPLAYED: 1 2 3 4 5 6 7 8 9 10 11 12 13 14 15 16 17 18 19 20 21 22 23 24 25 26 27 28 29 30 31 32 33 34 35 36 37 38 39 40 41 42 43 44 45 46 47 48 49 50 51 52 53 54 55 56 57 58 59 60 | 63

ACC: t:\ao\design\lp1604fm471-90\

FILE: detour*g*pav.dgn

DRAINAGE & ROADWAY CONSTRUCTION ⇨ TRAFFIC FLOW DIRECTION

V.I.A. ASSEMBLY ( 14 BARRELS EACH LOCATION )

SCALE 1:2000

| SEQUENCE OF WORK ESTIMATED QUANTITIES | | 2452-01-037 |
|---|---|---|
| ITEM | UNIT | QTY |
| PORT CONC TRAF BAR (MOVE & RESET) | M | 128 |
| VEH IMP ATTN ASSEM BRLS (MOVE & RESET) | EA | 28 |
| | | |
| | | |

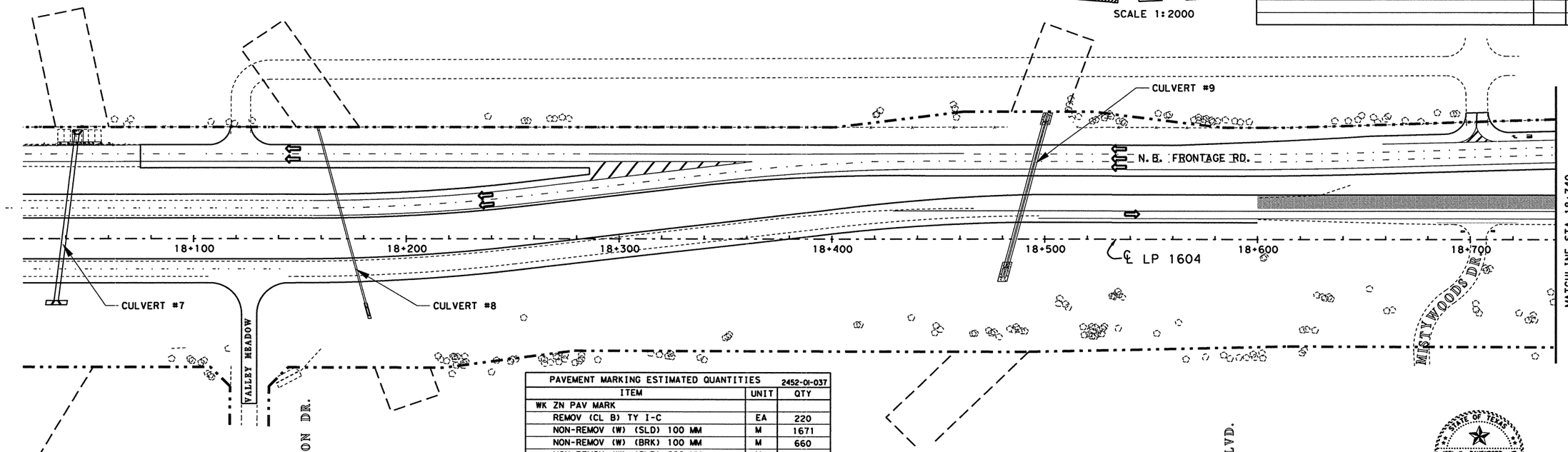


| PAVEMENT MARKING ESTIMATED QUANTITIES | | 2452-01-037 |
|---|---|---|
| ITEM | UNIT | QTY |
| WK ZN PAV MARK | | |
| REMOV (CL B) TY I-C | EA | 220 |
| NON-REMOV (W) (SLD) 100 MM | M | 1671 |
| NON-REMOV (W) (BRK) 100 MM | M | 660 |
| NON-REMOV (W) (SLD) 600 MM | M | 53 |
| NON-REMOV (W) (ARROW) | EA | 8 |
| NON-REMOV (W) (WORD) | EA | 8 |
| NON-REMOV (Y) (SLD) 100 MM | M | 2458 |
| NON-REMOV (Y) (SLD) 600 MM | M | 33 |
| ELM EXT PAV MRK & MRKR 100 MM | M | 963 |

SCALE 1:2000

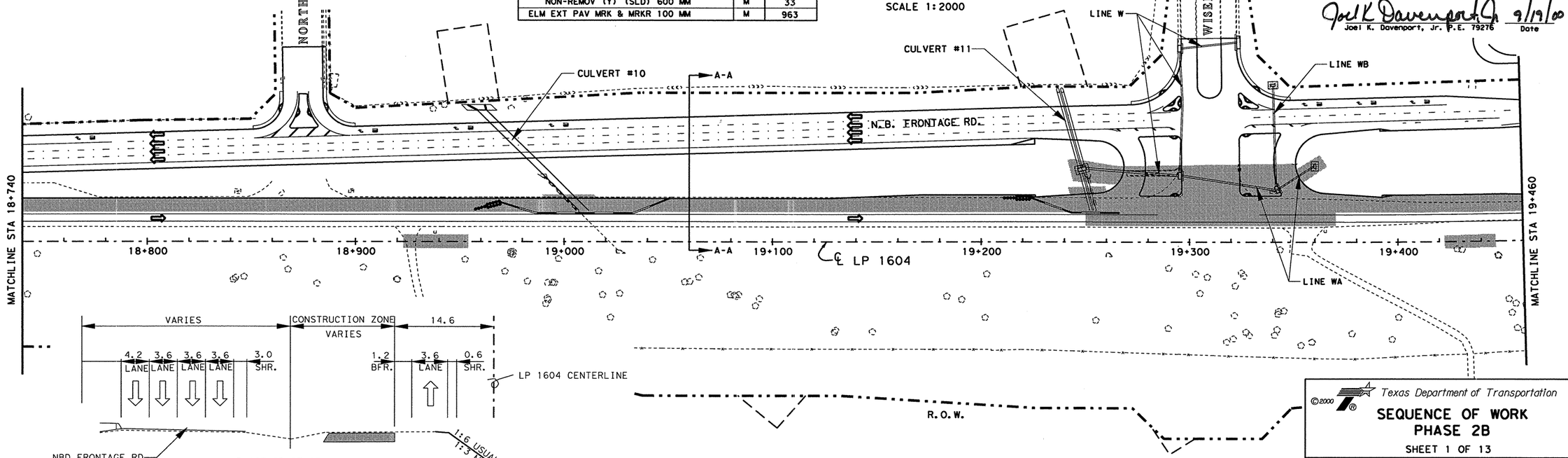


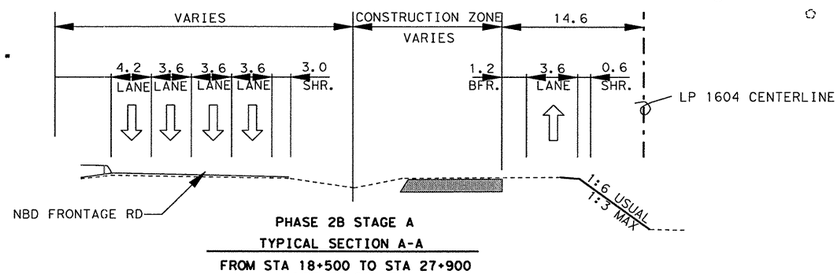


PHASE 2B STAGE A
TYPICAL SECTION A-A
FROM STA 18+500 TO STA 27+900
NOT TO SCALE

STATE OF TEXAS
JOEL K. DAVENPORT, JR.
79276
REGISTERED PROFESSIONAL ENGINEER

Joel K Davenport Jr 9/19/00
Joel K. Davenport, Jr. P.E. 79276 Date

©2000

Texas Department of Transportation

# SEQUENCE OF WORK PHASE 2B

SHEET 1 OF 13

| FED. RD. DIV. NO. | FEDERAL AID PROJECT NO. | | SHEET NO. |
|---|---|---|---|
| 6 | NH 2000(704), ETC. | | 92 |
| STATE | DIST. | COUNTY | |
| TEXAS | SAT | BEXAR | |
| CONT. | SECT. | JOB | HIGHWAY NO. |
| 2452 | 01 | 036, ETC | LP 1604 |

FILE: t:\roo\design\lp1604fm471-90\sow\phase2b01.dgn 15 SEP 2000
LEVEL DISPLAYED
1 2 3 4 5 6 7 8 9 10 11 12 13 14 15 16 17 18 19 20 21 22 23 24 25 26 27 28 29 30 31 32
33 34 35 55 56 57 58 59 60 61 62 63 64 65 66 67 68 69 70 71 72 73 74 75 76 77 78 79 80 81 82 83 84 85 86 87 88 89 90 91 92 93 94 95 96 97 98 99 100 101 102 103 104 105 106 107 108 109 110 111 112 113 114 115 116 117 118 119 120 121 122 123 124 125 126 127 128 129 130 131 132
6.3

Plotted on: 01/26/2004

Design Filename: p:\52\2011\design\civil\plansheets\tcp\phase2b01.dgn

p:\52\2011\design\civil\plansheets\tcp\phase2b01.dgn 01/26/2004

LEVEL SPLATED

1 2 3 4 5 6 7 8 9 10 11 12 13 14 15 16 17 18 19 20 21 22 23 24 25 26 27 28 29 30 31 32
33 34 35 36 37 38 39 40 41 42 43 44 45 46 47 48 49 50 51 52 53 54 55 56 57 58 59 60 61 62 63

DRAINAGE & ROADWAY CONSTRUCTION
CONSTRUCTION DETOUR
PROPERTY ACCESS (TEMPORARY)
TRAFFIC FLOW DIRECTION
V.I.A. ASSEMBLY (14 BARRELS EACH LOCATION)

SCALE 1:2000

| SEQUENCE OF WORK ESTIMATED QUANTITIES | | 2452-01-037 |
|---|---|---|
| ITEM | UNIT | QTY |
| PORT CONC TRAF BAR (STKPL, INSTL, & RETRN) | M | 154.7 |
| VEH IMP ATTN ASSEM BRLS | EA | 56 |
| VEH IMP ATTN ASSEM BRLS (REMOVE) | EA | 56 |
| CONSTRUCT DETOURS (CL 3) | M2 | 1602 |
| CMP AR (GAL STL DES 3) | M | 16.2 |
| SET (TY II) (DES 3) (CMP) (1:6) | EA | 2 |

CONST DETOUR (CL 3)
EST @ 1436 M2

R.O.W.

EST @ 255M (C)
EST @ 345M (C)
EST @ 364M (A)
NBFR CL STA 0+409.48 5.6
EST @ 485M (A)
PCTB EST @ 91.0M
CULVERT #9
NBFR CL STA 0+612.71 0.2 LT
NBFR CL STA 0+700.07 0.6 LT
EST @ 185 M (C)
EST @ 65 M (D)
EST @ 24M (C)
EST @ 4M (B)
EST @ 5M (B)
EST @ 69 M (A)
EST @ 581M (C)
EST @ 5M (B)
EST @ 59 M (A)
EST @ 27M (A)
EST @ 61M (C)
NBFR CL STA 0+736.44 3.0 RT

N.B. FRONTAGE RD.

0+100 0+200 0+300 0+400 0+500 0+600 0+700

EST @ 597M (A)

NBFR CL STA 0+565.23 4.6 RT
S.B. MAIN LANES

18+100 18+200 18+300 18+400 18+500 ℄ LP 1604 18+600 18+700

EST @ 90M (A)
EST @ 43M (A)
EST @ 47M (A)
EST @ 3M (B)
CONST DETOUR (CL 3) EST @ 19 M2
NBFR CL STA 0+709.27 3.0 RT
CONST DETOUR (CL 3) EST @ 18 M2

CULVERT #7
CULVERT #8
DETOUR "F" (SEE DETOUR "F" PLAN & PROFILE SHEET FOR MORE DETAILS)

VALLEY MEADOW
NORTH ELLISON DR.
DUSTY WOODS DR.
WISEMAN BLVD.
MATCHLINE STA 18+740

R.O.W.

| PAVEMENT MARKING ESTIMATED QUANTITIES | | 2452-01-037 |
|---|---|---|
| ITEM | UNIT | QTY |
| WK ZN PAV MARK | | |
| REMOV (CL B) TY I-C | EA | |
| NON-REMOV (W) (SLD) 100 MM | M | 3268 |
| NON-REMOV (W) (BRK) 100 MM | M | |
| NON-REMOV (W) (SLD) 600 MM | M | 53 |
| NON-REMOV (W) (ARROW) | EA | 18 |
| NON-REMOV (W) (WORD) | EA | 18 |
| NON-REMOV (Y) (MED NOSE) | EA | 2 |
| NON-REMOV (Y) (SLD) 100 MM | M | 3794 |
| NON-REMOV (Y) (SLD) 600 MM | M | 135 |
| | | |

SCALE 1:2000

NBFR STA 0+781.44 0.6 LT
EST @ 4M (B)
EST @ 263M (C)
EST @ 10M (B)
EST @ 263M (A)
EST @ 84M (C)
EST @ 152M (A)
EST @ 11M (B)
EST @ 22M (A)

A-A

NBFR CL STA 1+203.11 0.0 RT
NBFR CL STA 1+158.11 0.6 LT
EST @ 825M (C)
EST @ 212M (A)
LINE W
NBFR CL STA 1+293.11 0.0 RT
EST @ 131M (A)
EST @ 263 M (C)
EST @ 70M (D)
NBFR CL STA 1+327.03 0.0 RT
EST @ 11M (B)

R.O.W.

N.B. FRONTAGE RD.

0+800 0+900 1+000 1+100 1+200 1+300 1+400

NBFR CL STA 1+158.11 3.0 RT
EST @ 90M (A)
LINE WB
NBFR CL STA 1+342.01 3.6 RT
NBFR CL STA 1+327.03 3.6
EST @ 42M (A)
EST @ 444M (A)
EST @ 645M (C)
CMP AR (DES 3) EST @ 16.2 M W/ SET'S 1:6(TEMP)
CULVERT #10
NBFR STA 0+871.50 0.6 LT
S.B. MAIN LANES

18+800 18+900 19+000 19+100 ℄ LP 1604 19+200 19+300 19+400

NBFR STA 0+880.64 3.0 RT
CONST DETOUR (CL 3) EST @ 115 M
PCTB EST @ 63.7M
CULVERT #11
LINE WA
CONST DETOUR (CL 3) EST @ 14 M2
EST @ 263 M (C)
EST @ 131M (A)

MATCHLINE STA 18+740
MATCHLINE STA 19+460

VARIES CONSTRUCTION ZONE VARIES
VARIES 3.6 3.6 3.6 VARIES
SHR LANE LANE LANE SHR
0.3 MAX
R.O.W.
LP 1604 CENTERLINE
NB FRONTAGE RD

PHASE 2B
TYPICAL SECTION A-A
FROM STA 18+320 TO STA 27+935 +/-

WRK ZN PAV MRK LEGEND

(A) NON-REMOV (W) (SLD) (100mm)
(B) NON-REMOV (W) (SLD) (600mm)
(C) NON-REMOV (Y) (SLD) (100mm)
(D) NON-REMOV (Y) (SLD) (600mm)
(K) NON-REMOV (W) (ARROW)
(L) NON-REMOV (W) (WORD)
(M) NON-REMOV (Y) (MED NOSE)

**CHANGE ORDER NO. 63**

-SEQUENCE OF WORK DETAILS

**REPLACEMENT SHEET**

**CHANGE ORDER NO. 63**

555 EAST RAMSEY SAN ANTONIO TEXAS 78216
PHONE (210) 375-9000
FAX (210) 375-9010
PAPE-DAWSON ENGINEERS
CIVIL & ENVIRONMENTAL
STATE OF TEXAS J. KENT O'BRIEN 64398 LICENSED PROFESSIONAL ENGINEER
J. KENT O'BRIEN P.E. 1/27/2004 DATE

©2000 Texas Department of Transportation

# SEQUENCE OF WORK PHASE 2B

SHEET 1 OF 8

| FED.RD. DIV.NO. | FEDERAL AID PROJECT NO. | | SHEET NO. |
|---|---|---|---|
| 6 | NH 2000(704), ETC. | | 92 A |
| STATE | DIST. | COUNTY | |
| TEXAS | SAT | BEXAR | |
| CONT. | SECT. | JOB | HIGHWAY NO. |
| 2452 | 01 | 036, ETC | LP 1604 |

Plotted on: 6/14/2005

Design Filename: t:\ao\design\lp1604fm471-90\pdxphase2*change*order*mylars\submittalplansheets\top\phase2b01.dgn

FILE t:\ao\design\lp1604fm471-90\pdxphase2*change*order*mylars\submittalplansheets\top\phase2b01.dgn
LEVEL DISPLAYED
1 2 3 4 5 6 7 8 9 10 11 12 13 14 15 16 17 18 19 20 21 22 23 24 25 26 27 28 29 30 31 32
33 34 35 36 37 38 39 40 41 42 43 44 45 46 47 48 49 50 51 62 53 54 55 56 57 58 59 60 6263

DRAINAGE & ROADWAY CONSTRUCTION
CONSTRUCTION DETOUR
PROPERTY ACCESS (TEMPORARY)
TRAFFIC FLOW DIRECTION
V.I.A. ASSEMBLY (14 BARRELS EACH LOCATION)

SCALE 1:2000

| SEQUENCE OF WORK ESTIMATED QUANTITIES | | 2452-01-037 |
|---|---|---|
| ITEM | UNIT | QTY |
| PORT CONC TRAF BAR (STKPL, INSTL, & RETRN) | M | 154.7 |
| VEH IMP ATTN ASSEM BRLS | EA | 56 |
| VEH IMP ATTN ASSEM BRLS (REMOVE) | EA | 56 |
| CONSTRUCT DETOURS (CL 3) | M2 | 1586 |
| CONSTRUCT DETOURS (CL 3) (300MM) | M2 | 122 |
| CMP AR (GAL STL DES 3) | M | 42.8 |
| SET (TY II) (DES 3) (CMP) (1:6) | EA | 4 |
| EXCAV (SPL) | M3 | 383 |
| EMBANK (ORD COMP) (TY B) (CL 2) | M3 | 383 |
| REMOV OLD STR (PIPE) | M | 26.6 |

63

CONST DETOUR (CL 3) EST @ 1436 M2
R.O.W.
EST @ 255M (C)
EST @ 345M (C)
EST @ 364M (A)
NBFR CL STA 0+409.48 5.6
EST @ 485M (A)
PCTB EST @ 91.0M
CULVERT #9
NBFR CL STA 0+612.71 0.2 LT
NBFR CL STA 0+700.07 0.6 LT
EST @ 185 M (C)
EST @ 65 M (D)
EST @ 24M (C)
EST @ 4M (B)
EST @ 5M (B)
EST @ 69 M (A)
EST @ 581M (C)
EST @ 59 M (A)
EST @ 5M (B)
EST @ 27M (A)
EST @ 61M (C)
NBFR CL STA 0+736.44 3.0 RT
N.B. FRONTAGE RD.
0+100 0+200 0+300 0+400 0+500 0+600 0+700 0+800
EST @ 597M (A)
NBFR CL STA 0+565.23 4.6 RT
S.B. MAIN LANES
18+100 18+200 18+300 18+400 18+500 18+600 18+700 18+740
℄ LP 1604
EST @ 90M (A)
EST @ 43M (A)
CONST DETOUR (CL 3) EST @ 19 M2
NBFR CL STA 0+709.27 3.0 RT
CONST DETOUR (CL 3) EST @ 18 M2
EST @ 47M (A)
EST @ 3M (B)
MISTY WOODS DR.
MATCHLINE STA 18+740
CULVERT #7
CULVERT #8
DETOUR "F" (SEE DETOUR "F" PLAN & PROFILE SHEET FOR MORE DETAILS)
VALLEY MEADOW
NORTH ELLISON DR.

| PAVEMENT MARKING ESTIMATED QUANTITIES | | 2452-01-037 |
|---|---|---|
| ITEM | UNIT | QTY |
| WK ZN PAV MARK | | |
| REMOV (CL B) TY I-C | EA | |
| NON-REMOV (W) (SLD) 100 MM | M | 3268 |
| NON-REMOV (W) (BRK) 100 MM | M | |
| NON-REMOV (W) (SLD) 600 MM | M | 53 |
| NON-REMOV (W) (ARROW) | EA | 18 |
| NON-REMOV (W) (WORD) | EA | 18 |
| NON-REMOV (Y) (MED NOSE) | EA | 2 |
| NON-REMOV (Y) (SLD) 100 MM | M | 3794 |
| NON-REMOV (Y) (SLD) 600 MM | M | 135 |
| | | |

63

CHANGE ORDER NO. 92
- REVISED TEMP DRIVE
- ADDED / REVISED QUANTITIES

R.O.W.
DRIVEWAY WIDTH 5.0 M
1:6 1:6
CMP AR (DES 3)
PROPOSED DRIVEWAY X-SECTION

SCALE 1:2000

NBFR CL STA 1+293.11 0.0 RT
LINE W
NBFR CL STA 1+203.11 0.0 RT
NBFR CL STA 1+158.11 0.6 LT
NBFR CL STA 1+327.03 0.0 RT
EST @ 131M (A)
EST @ 263 M (C)
EST @ 70M (D)
WISEMAN BLVD.
EST @ 11M (B)
EST @ 263 M (C)
EST @ 131M (A)
NBFR STA 0+781.44 0.6 LT
EST @ 4M (B)
EST @ 263M (C)
EST @ 10M (B)
EST @ 263M (A)
EST @ 84M (C)
EST @ 152M (A)
EST @ 11M (B)
A-A
R.O.W.
EST @ 825M (C)
EST @ 212M (A)
N.B. FRONTAGE RD.
0+800 0+900 1+000 1+100 1+200 1+300 1+400
EST @ 22M (A)
EST @ 42M (A)
EST @ 444M (A)
EST @ 645M (C)
CMP AR (DES 3) EST @ 16.2 M W/ SET'S 1:6 (TEMP)
NBFR CL STA 1+158.11 3.0 RT
EST @ 90M (A)
CULVERT #10
LINE WB
NBFR CL STA 1+342.01 3.6 RT
NBFR CL STA 1+327.03 3.6 RT
CONST DETOUR (CL 3) (150MM) EST @ 122 M2
LINE WA
S.B. MAIN LANES
NBFR STA 0+871.50 0.6 LT
MATCHLINE STA 18+740
18+800 18+900 19+000 19+100 19+200 19+300 19+400 19+460
℄ LP 1604
NBFR CL STA 0+880.64 3.0 RT
CONST DETOUR (CL 3) EST @ 115 M
PCTB EST @ 63.7M
CULVERT #11
CMP AR (DES 3) W/1:6 SET (TEMP) EST @ 26.6 M
EMBANK (TY B) (CL ) EST @ 383 M3
EXCAV (SPL) EST @ 383 M3
REMOV OLD STR (PIPE) EST. @ 26.6 M
MATCHLINE STA 19+460

REFERS TO CHANGES MADE AS PART OF CHANGE ORDER

CHANGE ORDER NO. 92
REVISED SHEET

VARIES CONSTRUCTION ZONE VARIES
VARIES 3.6 3.6 3.6 VARIES
SHR LANE LANE LANE SHR
0.3 MAX
R.O.W.
LP 1604 CENTERLINE
NB FRONTAGE RD

PHASE 2B
TYPICAL SECTION A-A
FROM STA 18+320 TO STA 27+935 +/-

WRK ZN PAV MRK LEGEND
(A) NON-REMOV (W) (SLD) (100mm)
(B) NON-REMOV (W) (SLD) (600mm)
(C) NON-REMOV (Y) (SLD) (100mm)
(D) NON-REMOV (Y) (SLD) (600mm)
(K) NON-REMOV (W) (ARROW)
(L) NON-REMOV (W) (WORD)
(M) NON-REMOV (Y) (MED NOSE)

STATE OF TEXAS
FITZGERALDO G. SANCHEZ
76084
REGISTERED PROFESSIONAL ENGINEER

Fitzgeraldo G. Sanchez, P.E. 06-14-05 Date

©2000
Texas Department of Transportation

# SEQUENCE OF WORK PHASE 2B

SHEET 1 OF 8

| FED.RD. DIV.NO. | FEDERAL AID PROJECT NO. | | SHEET NO. |
|---|---|---|---|
| 6 | NH 2000(704), ETC. | | 92 AA |
| STATE | DIST. | COUNTY | |
| TEXAS | SAT | BEXAR | |
| CONT. | SECT. | JOB | HIGHWAY NO. |
| 2452 | 01 | 036,ETC | LP 1604 |

5-31-05

# NORTHWEST VISTA COLLEGE

SCALE 1:500

NOTE:
DIMENSIONS ARE IN METERS UNLESS OTHERWISE NOTED.

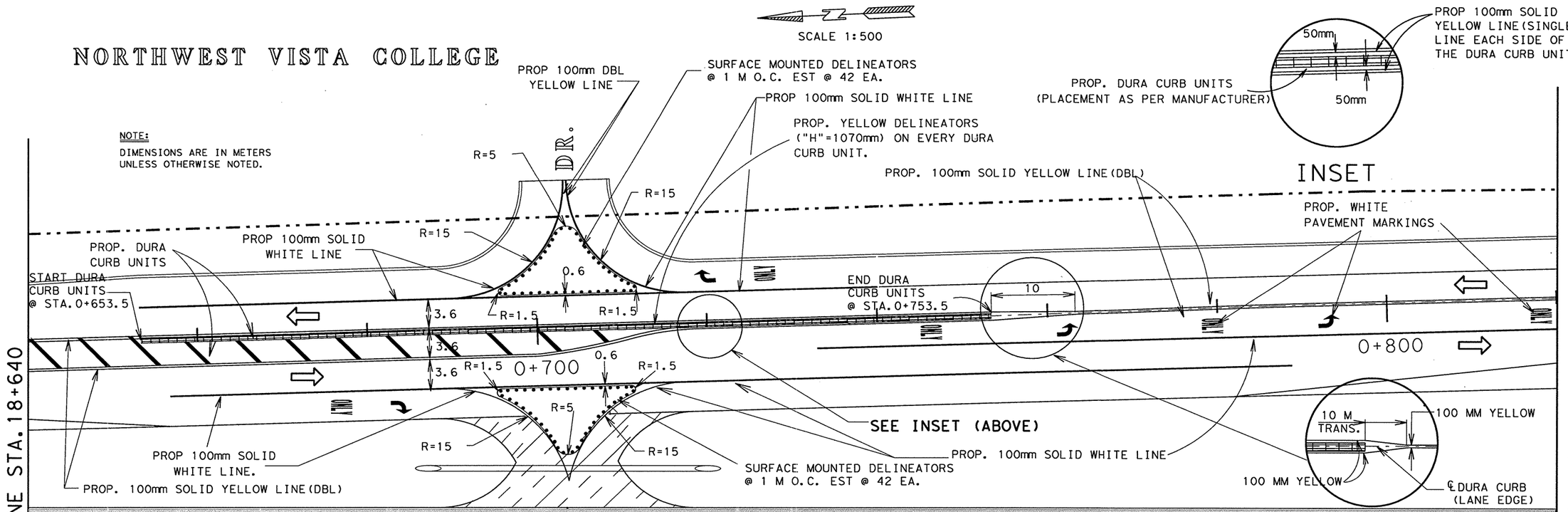


S.B. MAIN LANES CONSTRUCTION AREA

SEE APPROPRIATE S.O.W. FOR FURTHER DETAILS

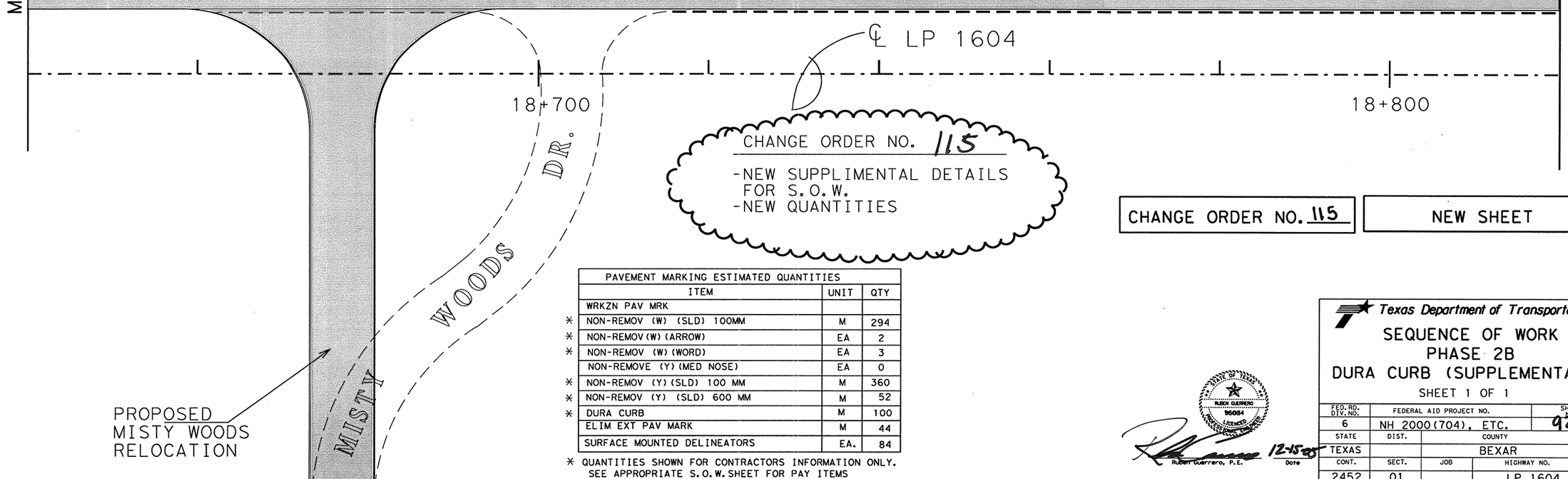


CHANGE ORDER NO. 115

-NEW SUPPLIMENTAL DETAILS FOR S.O.W.
-NEW QUANTITIES

| PAVEMENT MARKING ESTIMATED QUANTITIES | | |
|---|---|---|
| ITEM | UNIT | QTY |
| WRKZN PAV MRK | | |
| * NON-REMOV (W) (SLD) 100MM | M | 294 |
| * NON-REMOV (W) (ARROW) | EA | 2 |
| * NON-REMOV (W) (WORD) | EA | 3 |
| NON-REMOVE (Y) (MED NOSE) | EA | 0 |
| * NON-REMOV (Y) (SLD) 100 MM | M | 360 |
| * NON-REMOV (Y) (SLD) 600 MM | M | 52 |
| * DURA CURB | M | 100 |
| ELIM EXT PAV MARK | M | 44 |
| SURFACE MOUNTED DELINEATORS | EA. | 84 |

* QUANTITIES SHOWN FOR CONTRACTORS INFORMATION ONLY. SEE APPROPRIATE S.O.W. SHEET FOR PAY ITEMS

CHANGE ORDER NO. 115 | NEW SHEET

STATE OF TEXAS · RUBEN GUERRERO · 95084 · LICENSED PROFESSIONAL ENGINEER

Ruben Guerrero, P.E. 12-15-05 Date

Texas Department of Transportation

SEQUENCE OF WORK
PHASE 2B
DURA CURB (SUPPLEMENTAL)
SHEET 1 OF 1

| FED.RD. DIV.NO. | FEDERAL AID PROJECT NO. | | SHEET NO. |
|---|---|---|---|
| 6 | NH 2000(704), ETC. | | 92AA |
| STATE | DIST. | COUNTY | |
| TEXAS | | BEXAR | |
| CONT. | SECT. | JOB | HIGHWAY NO. |
| 2452 | 01 | | LP.1604 |

12-15-05

LEVELS DISPLAYED
1 2 3 4 5 6 7 8 9 10 11 12 13 14 15 16 17 18 19 20 21 22 23 24 25 26 27 28 29 30 31 32 33 34 35 36 37 38 39 40 41 42 43 44 45 46 47 48 49 50 51 52 53 54 55 56 57 58 59 60 61 62 63
ACC:
T:\AO\DESIGN\IP1604-90\misc\detail\DURA CURB

T:\AO\Des ...\p1604fm471-90\PD*Phase2*change*order*mylars\sub... ...dl\plansheets\TCP\phase2B-DET-F*REV01pvmtmrk.dgn

DRAINAGE & ROADWAY CONSTRUCTION

TRAFFIC FLOW DIRECTION

V.I.A. ASSEMBLY (14 BARRELS EACH LOCATION)

NOTE:
WRK ZN PAV MRKS ARE TO TIE INTO EXIST PAVEMENT MARKINGS AT POINTS REFERENCED (+/-).

116

WRK ZN PAVMENT MARKINGS SHOWN ON THIS SHEET ARE DUE TO THE RELOCATION OF DETOUR "F" AND SHOWN FOR CLARITY AND FOR CONTRACTORS INFORMATION ONLY. FOR PAYMENT OF THESE RELATED ITEMS SEE APPROPRIATE S.O.W. SHEET(S).

USE RAISED PAVEMENT MARKINGS TO SIMULATE STRIPING UNLESS SHOWN OTHERWISE

SCALE: 1:2000

(S) EST @ ~~88~~ 116 EA
(T) EST @ 177 EA

(P) EST @ ~~90~~ 180 EA
(V) EST @ 271 EA

GORE PT.
CL LP 1604 STA. 17+987.92
12.83 RT.

DRAINAGE EASEMENT

USE STRIPING

END DETOUR "F" STA. 0+239.264
=0.9 LT. TEMP "K" STA. 1+202.162
=17.83 LT. LP 1604 CL STA. 18+240.57.62

MATCH WRK ZN STRIPING PHASE 2B

CL LP 1604 STA. 18+249.36
21 LT.

(S) EST @ ~~13~~ 26 EA
(T) EST @ 37 EA

MATCH WRK ZN STRIPING PHASE 2B

DRAINAGE EASEMENT

USE STRIPING

CL LP 1604 STA. 17+880
11 LT.

CL LP 1604 STA. 17+980
18.2 LT.

0+100 N. BOUND FRONTAGE RD. 0+200

RADIUS = 870 M

0+300

0+400

500

NBML'S

RADIUS = 870 M

R=870M

17+900

18+000

DETOUR "F"

0+200

18+100 0+100

18+200

TEMP "J"

RADIUS = 870 M

S.B. MAINLANES

18+400

18+500

1

116

SEE SEQUENCE OF WORK SHEETS FOR FURTHER DETAILS

SBML'S

℄ LP 1604

CL LP 1604 STA. 17+680
18.2 RT.

(S) EST @ 77 EA
(T) EST @ 233 EA

USE RAISED

CL LP 1604 STA. 17+920
11 LT.

(N) USE STRIPING EST. @ 40 M

R=870M

PRC CL LP 1604
STA. 18+011.30
18.28 RT.

2-6 LANE

1-2 SHLDR

R=15M

R=19M

(T) EST @ 770 EA (DBL ROW @ 0.3 M CENTERS)

(V) EST @ 690 EA
(DBL ROW @ 0.3 M CENTERS)

(P) EST @ ~~88~~ 166 EA
(V) EST @ 252 EA

172
(S) EST @ 86 EA
(T) EST @ 260 EA

DRAINAGE EASEMENT

BEGIN DETOUR "F"
STA. 0+000.000
= 10.140 RT., LP 1604
C STA. 18+020.000
EL. 300.443

VALLEY MEADOW

END WRK ZN PAV MRKS (RAISED)

DRAINAGE EASEMENT

DRAINAGE EASEMENT

M1

CHANGE ORDER NO. 116

NEW SHEET 92AA

Change Order #120
- Add rrpm's

CO #120

STATE OF TEXAS
Fitzgeraldo G. Sanchez
76084
REGISTERED PROFESSIONAL ENGINEER
Fitzgeraldo G. Sanchez
02-28-06

116

CHANGE ORDER NO 116

- RELOCATED DETOUR "F"
- REVISED QUANTITIES
- NEW SHEET

STATE OF TEXAS
FITZGERALDO G. SANCHEZ
76084
LICENSED PROFESSIONAL ENGINEER
Fitzgeraldo G. Sanchez, P.E. 11-30-05
Date

WK ZN PAV MARKINGS ESTIMATED QUANTITIES 2452-01-038

| | ITEM | UNIT | QTY |
|---|---|---|---|
| | | | |
| * | WRK ZN PAV MRK REMOV (CL A) TY II-A-A | EA | 173 |
| * | WRK ZN PAV MRK REMOV (CL B) TY 1-C | EA | 234 |
| * | WRK ZN PAV MRK REMOV (CL C) TY W | EA | 1477 |
| * | WRK ZN PAV MRK REMOV (CL C) TY Y | EA | 1213 |
| * | WRK ZN PAV MARK REMOV (W) (SLD) (100mm) DOT | M | 40 |
| * | ELIM. EXT. PAV MRK & MARKS (100 MM) | M | 1200 |
| | | | |
| | | | |
| | | | |

* SUPPLIED FOR CONTRACTOR INFO ONLY.

WRK ZN PAV MRK LEGEND

(P) REMOV (TY II A-A)
(S) REMOV (TY 1-C)
(T) REMOV (TY W)
(V) REMOV (TY Y)
(N) REMOV (W) SLD (100mm) DOT

©2000 Texas Department of Transportation

SEQUENCE OF WORK
DETOUR F SUPPLEMENTAL
PHASE 2B STAGE 1
SHEET 1 OF 1

| DN: | | PROJECT NO. | SHEET NO. |
|---|---|---|---|
| CK DN: | | NH 2000(704), etc. | 92AA |
| DW: | | STATE / DIST. / COUNTY | |
| | | TEXAS / SAT / BEXAR | |
| CK DW: | CONT. / SECT. / JOB | HIGHWAY NO. | |
| | 2452 / 01 / 036 etc. | LP 1604 | |

Plotted on: 01/26/2004

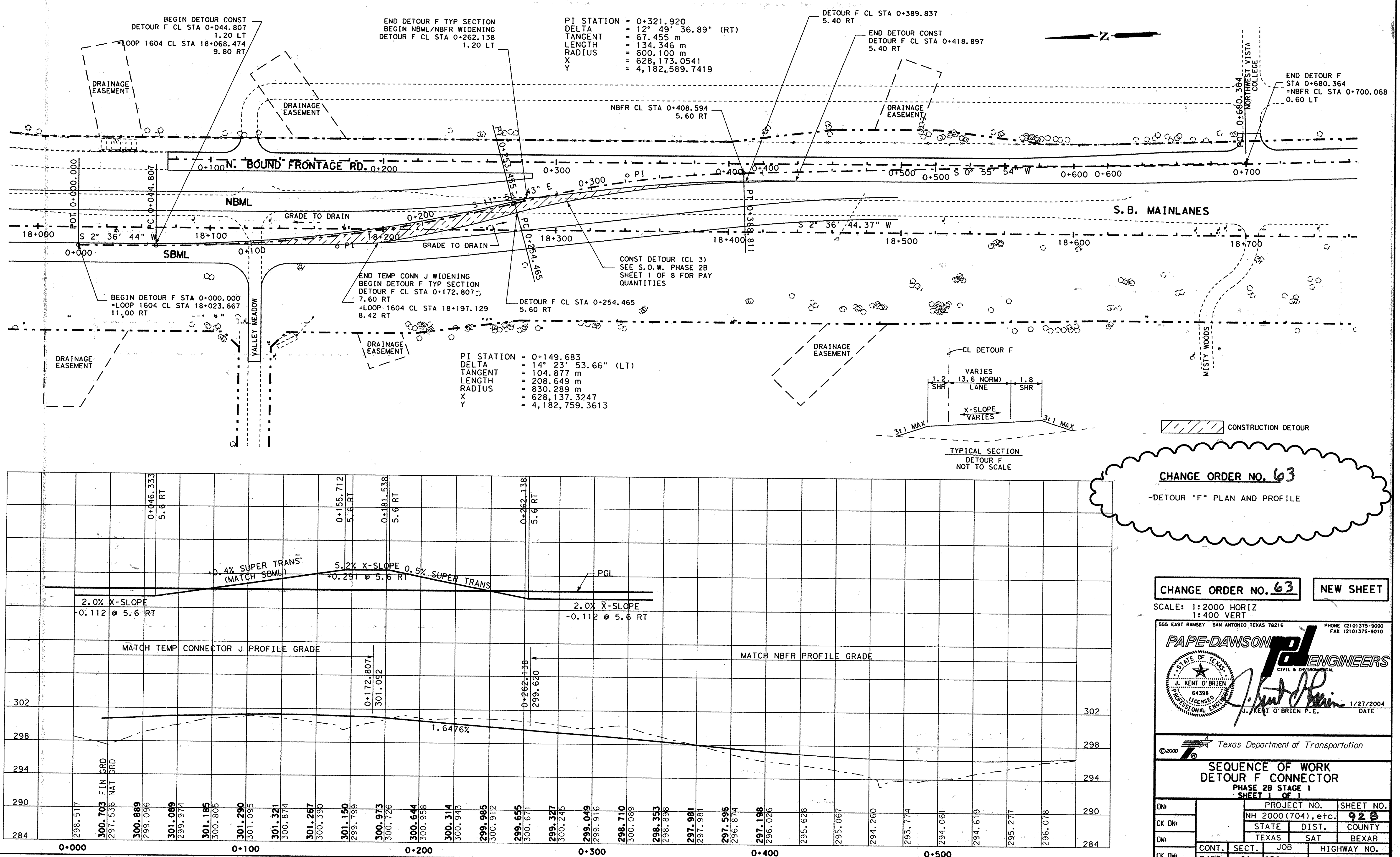


**CHANGE ORDER NO. 63**

-DETOUR "F" PLAN AND PROFILE

**CHANGE ORDER NO. 63** | **NEW SHEET**

SCALE: 1:2000 HORIZ
1:400 VERT

555 EAST RAMSEY SAN ANTONIO TEXAS 78216 PHONE (210)375-9000 FAX (210)375-9010
PAPE-DAWSON ENGINEERS
CIVIL & ENVIRONMENTAL
STATE OF TEXAS
J. KENT O'BRIEN
64398
LICENSED PROFESSIONAL ENGINEER
J. KENT O'BRIEN P.E. 1/27/2004 DATE

©2000 Texas Department of Transportation

# SEQUENCE OF WORK
# DETOUR F CONNECTOR

**PHASE 2B STAGE 1**
**SHEET 1 OF 1**

| | | | | |
|---|---|---|---|---|
| DN: | PROJECT NO. | | | SHEET NO. |
| CK DN: | NH 2000(704),etc. | | | 92 B |
| DW: | STATE | DIST. | | COUNTY |
| | TEXAS | SAT | | BEXAR |
| CK DW: | CONT. | SECT. | JOB | HIGHWAY NO. |
| | 2452 | 01 | 036,etc. | LP 1604 |

Design Filename: p:\52\20\11\design\civil\plansheets\tcp\phase2b-det-f.dgn

Plotted on: 10/7/2005

Design Filename: T:\AO\Design\p1604fm471-90\PD*Phase2*change*order*mylars\submittal\plansheets\TCP\phase2B-DET-F*REV01.dgn

CONSTRUCT DETOUR (CL 3)
SEE S.O.W. SHEET
PHASE 2B SHEET 2 OF 9
FOR PAYMENT

DETOUR "F"
FIN GRD 301.682
9.8 LT LP 1604
℄ STA. 18+120
=11.0 RT. TEMP "K" STA. 1+064.200

END DETOUR "F" STA. 0+239.264
= 0.9 LT. , TEMP "K" STA. 1+202.152
= 17.88 LT., LP 1604 ℄ STA. 18+240.57.62

SCALE: 1:2000 HORIZ
1:400 VERT

DETOURT "F"
FIN GRD 299.381
9.8 RT., LP 1604
℄ STA. 17+940

DRAINAGE EASEMENT

0+100 N. BOUND FRONTAGE RD. 0+200 0+300 0+400 0+500 N. BOUND FRONTAGE RD.

NBML'S

TEMP "K"

S.B. MAINLANES

GRADE TO DRAIN

S 4° 06' 50.25" E

0+200

17+900 18+000 DETOUR "F" 18+100 0+100 GRADE TO DRAIN 18+200 18+300 18+400 18+500

SBML'S

TEMP "J"

℄ LP 1604

END CONSTRUCT DETOUR "F"
1.2 RT., STA. 0+239.264
= 1.2 RT. TEMP "K" STA. 1+202.152
= 15.80 LT. LP 1604 ℄ STA. 18+240.57.86

VALLEY MEADOW

BEGIN DETOUR "F" STA. 0+000.000
= 10.140 RT., LP 1604
℄ STA. 18+020.000
EL. 300.443

DETOUR "F"
FIN GRD 300.911
9.8 RT., LP 1604
℄ STA.18+070

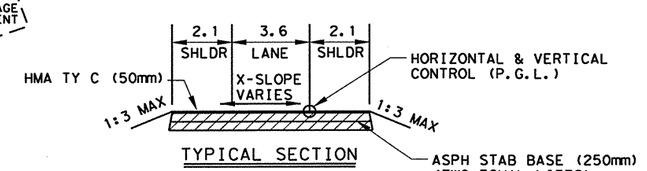


TYPICAL SECTION

DETOUR "F"

CONSTRUCTION DETOUR

CHANGE ORDER NO. 112

REVISED/RELOCATED DETOUR "F" PLAN AND PROFILE

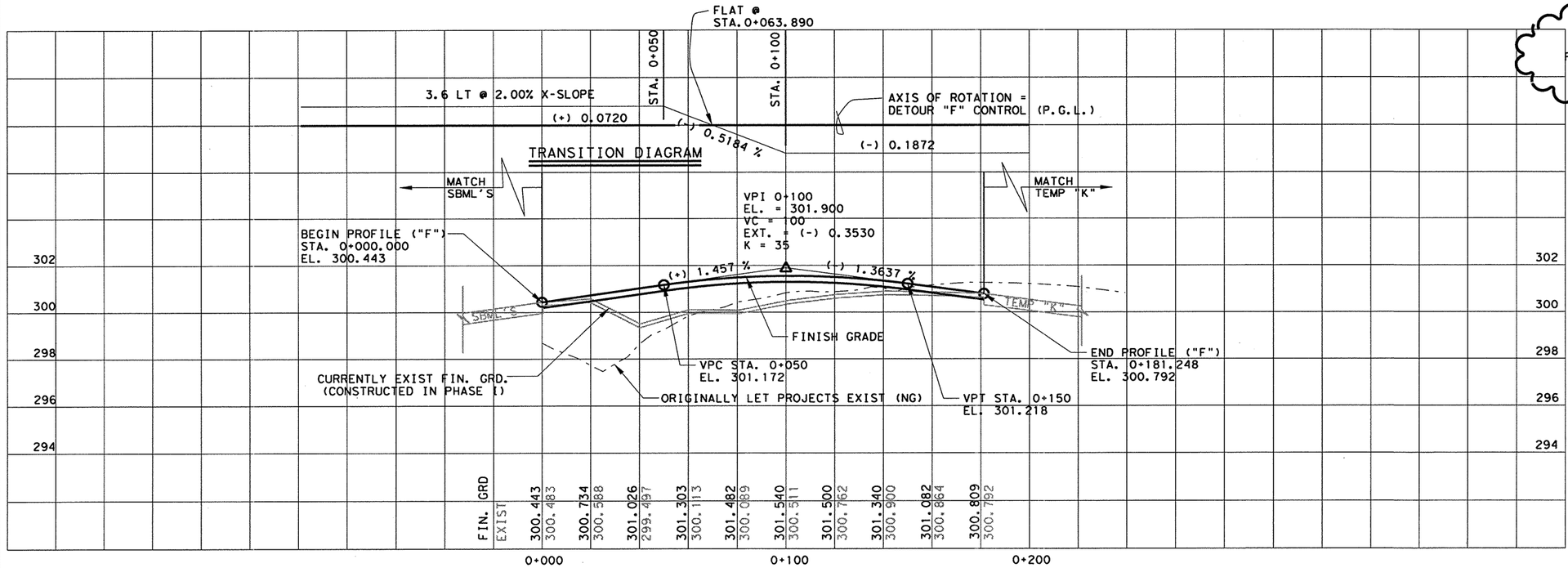


CHANGE ORDER NO. 112 | REVISED SHEET

STATE OF TEXAS
FITZGERALDO G. SANCHEZ
76084
LICENCED
PROFESSIONAL ENGINEER

Fitzgeraldo G. Sanchez 10-09-05
Fitzgeraldo G. Sanchez, P.E. Date

©2000 Texas Department of Transportation

# SEQUENCE OF WORK
# DETOUR F CONNECTOR
PHASE 2B STAGE 1
SHEET 1 OF 1

| DN: | | PROJECT NO. | | SHEET NO. |
|---|---|---|---|---|
| CK DN: | | NH 2000(704), etc. | | 92C |
| DW: | | STATE | DIST. | COUNTY |
| CK DW: | | TEXAS | SAT | BEXAR |
| | CONT. | SECT. | JOB | HIGHWAY NO. |
| | 2452 | 01 | 036, etc. | LP 1604 |

DRAINAGE & ROADWAY CONSTRUCTION

TRAFFIC FLOW DIRECTION

V.I.A. ASSEMBLY ( 14 BARRELS EACH LOCATION )

SCALE 1:2000

| SEQUENCE OF WORK ESTIMATED QUANTITIES | | 2452-01-037 | 2452-01-036 |
|---|---|---|---|
| ITEM | UNIT | QTY | QTY |
| PORT CONC TRAF BAR (MOVE & RESET) | M | 166 | - |
| VEH IMP ATTN ASSEM BRLS (MOVE & RESET) | EA | 28 | - |
| | | | |

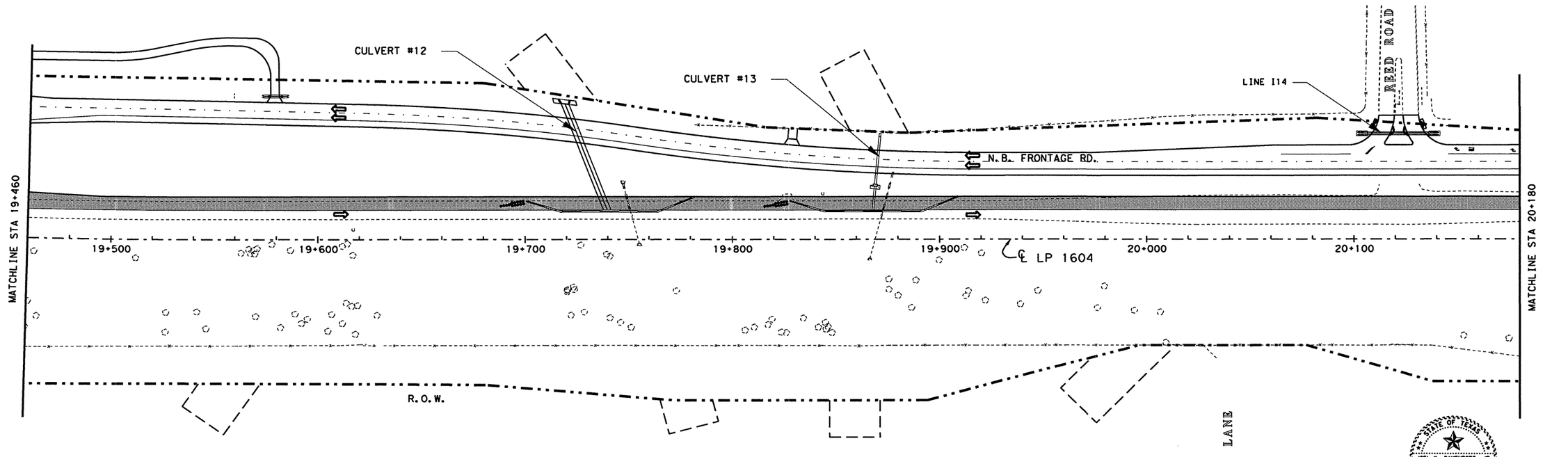


SCALE 1:2000

LP 1604 CONTROL BREAK
STA 20+640
CSJ: 2452-01-037 (BK)
CSJ: 2452-01-036 (AHD)

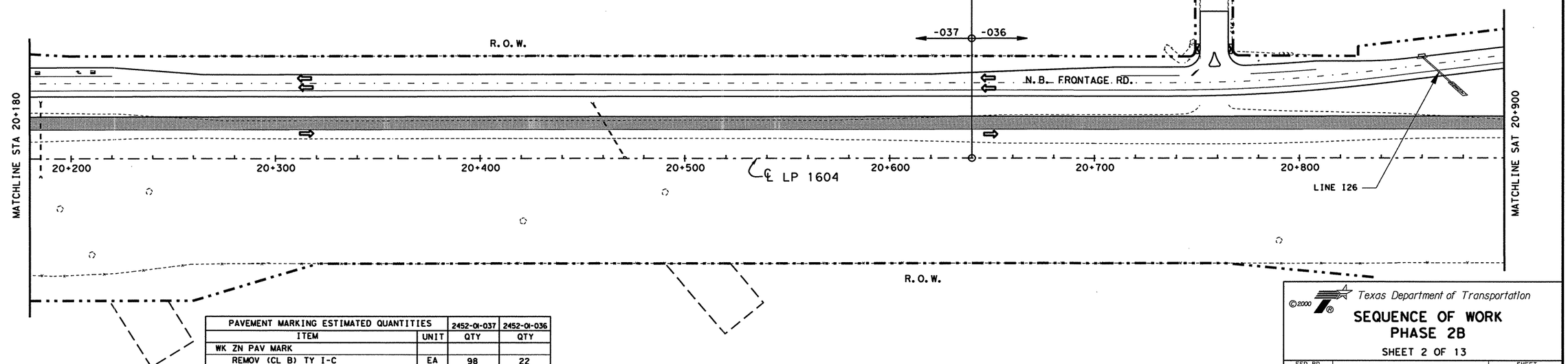


| PAVEMENT MARKING ESTIMATED QUANTITIES | | 2452-01-037 | 2452-01-036 |
|---|---|---|---|
| ITEM | UNIT | QTY | QTY |
| WK ZN PAV MARK | | | |
| REMOV (CL B) TY I-C | EA | 98 | 22 |
| NON-REMOV (W) (SLD) 100 MM | M | 1286 | 320 |
| NON-REMOV (W) (BRK) 100 MM | M | 294 | 66 |
| NON-REMOV (W) (ARROW) | EA | 3 | - |
| NON-REMOV (W) (WORD) | EA | 3 | - |
| NON-REMOV (Y) (SLD) 100 MM | M | 2323 | 509 |
| ELM EXT PAV MRK & MRKR 100 MM | M | 1180 | 260 |

STATE OF TEXAS
JOEL K. DAVENPORT, JR.
79276
REGISTERED PROFESSIONAL ENGINEER

Joel K Davenport Jr 9/19/00
Joel K. Davenport, Jr. P.E. 79276 Date

FILE: t:\so\design\pi604fm471-90\sow\phase1i\phase2b02.dgn 15 SEP 2000
LEVEL DISPLAYED

©2000

Texas Department of Transportation

# SEQUENCE OF WORK PHASE 2B

SHEET 2 OF 13

| FED. RD. DIV. NO. | FEDERAL AID PROJECT NO. | | SHEET NO. |
|---|---|---|---|
| 6 | NH 2000(704), ETC. | | 93 |
| STATE | DIST. | COUNTY | |
| TEXAS | SAT | BEXAR | |
| CONT. | SECT. | JOB | HIGHWAY NO. |
| 2452 | 01 | 036,ETC | LP 1604 |

Plotted on: 01/26/2004

Design Filename: p:\52\2011\design\civil\plansheets\tcp\phase2b02.dgn

| FILE | p:\52\2011\design\civil\plansheets\tcp\phase2b02.dgn | 01/26/2004 |
|---|---|---|
| LEVEL DISPLAYED | 11 3 14 15 16 17 8 9 10 11 12 13 1 41 51 61 71 81 92 02 12 22 32 42 52 62 72 82 93 03 13 23 33 43 53 63 73 83 93 04 14 24 34 44 54 64 74 84 94 05 15 25 35 45 55 65 75 85 96 06 16 26 36 | |

DRAINAGE & ROADWAY CONSTRUCTION

CONSTRUCTION DETOUR

PROPERTY ACCESS (TEMPORARY)

TRAFFIC FLOW DIRECTION

V.I.A. ASSEMBLY (14 BARRELS EACH LOCATION)

SCALE 1:2000

| SEQUENCE OF WORK ESTIMATED QUANTITIES | | 2452-01-037 | 2452-01-036 |
|---|---|---|---|
| ITEM | UNIT | QTY | QTY |
| PORT CONC TRAF BAR (STKPL, INSTL & RETRN) | M | 201.1 | - |
| VEH IMP ATTN ASSEM BRLS | EA | 14 | - |
| VEH IMP ATTN ASSEM BRLS (REMOVE) | EA | 14 | - |
| CONST DETOUR (CL 3) | M2 | 34 | - |

(86) MBGF TO BE LAPPED FOR DEPARTURE FOR THE DURATION OF PHASE 2B. THE CONTRACTOR SHALL RE-LAP THE MBGF FOR AN APPROACH BEFORE TRAFFIC IS SWITCHED TO ITS FINAL LOCATON. PAY ITEM TO BE HANDLED IN CHANGE ORDER # 86

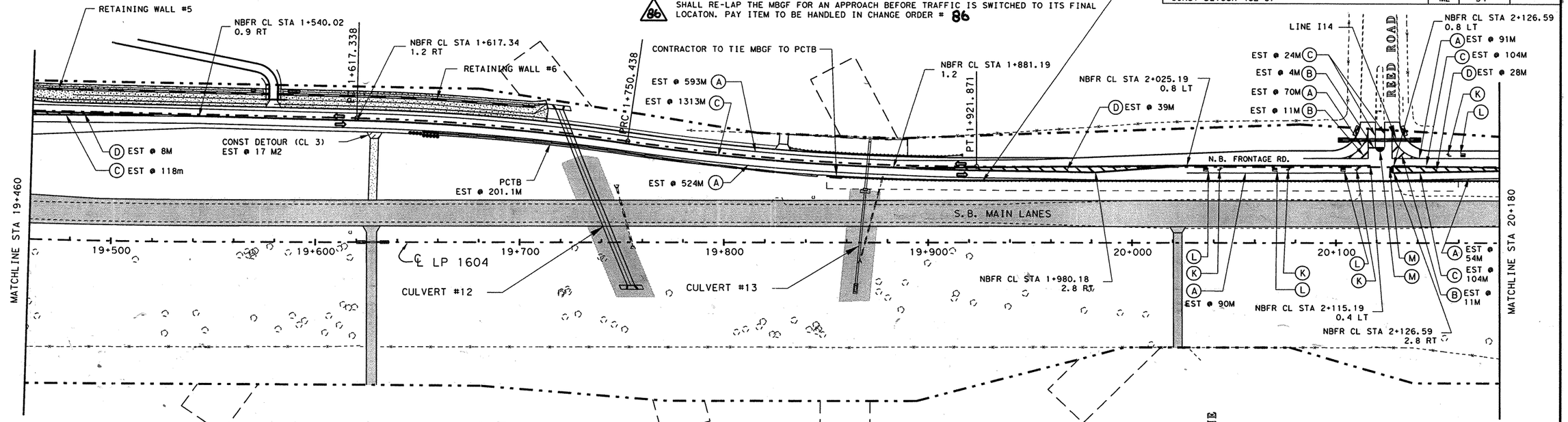


**CHANGE ORDER NO. 63**

-SEQUENCE OF WORK DETAILS

SCALE 1:2000

LP 1604 CONTROL BREAK
STA 20+640
END CSJ: 2452-01-037 (BK)
BEGIN CSJ: 2452-01-036 (AHD)

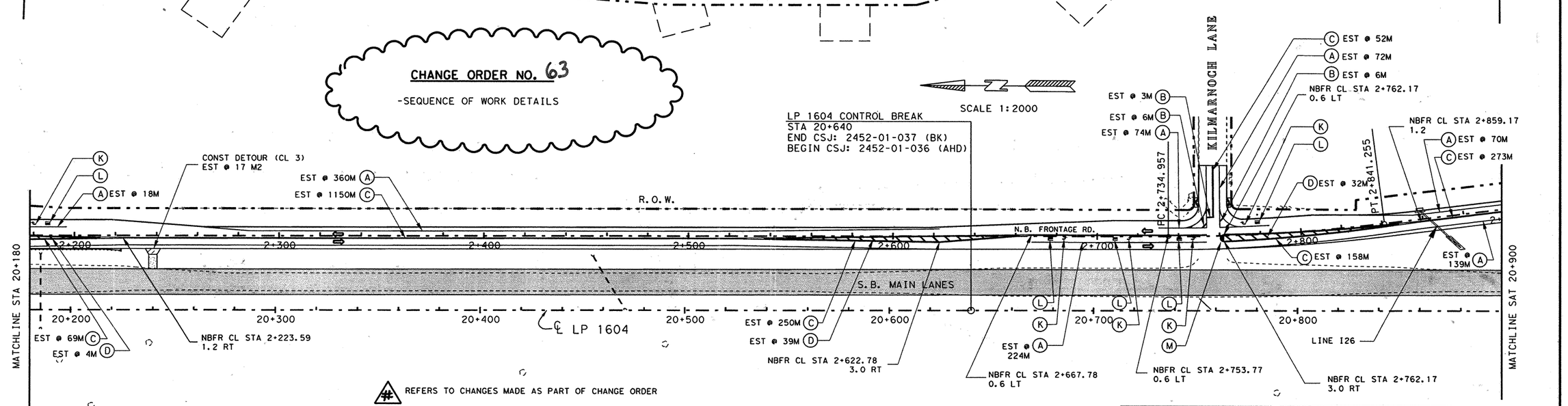


(#) REFERS TO CHANGES MADE AS PART OF CHANGE ORDER

| PAVEMENT MARKING ESTIMATED QUANTITIES | | 2452-01-037 | 2452-01-036 |
|---|---|---|---|
| ITEM | UNIT | QTY | QTY |
| WK ZN PAV MARK | | | |
| REMOV (CL B) TY I-C | EA | | |
| NON-REMOV (W) (SLD) 100 MM | M | 1800 | 579 |
| NON-REMOV (W) (BRK) 100 MM | M | | |
| NON-REMOV (W) (SLD) 600 MM | M | 26 | 15 |
| NON-REMOV (W) (ARROW) | EA | 5 | 4 |
| NON-REMOV (W) (WORD) | EA | 5 | 4 |
| NON-REMOV (Y) (MED NOSE) | EA | 2 | 1 |
| NON-REMOV (Y) (SLD) 100 MM | M | 3132 | 483 |
| NON-REMOV (Y) (SLD) 600 MM | M | 118 | 32 |

WRK ZN PAV MRK LEGEND

- (A) NON-REMOV (W) (SLD) (100mm)
- (B) NON-REMOV (W) (SLD) (600mm)
- (C) NON-REMOV (Y) (SLD) (100mm)
- (D) NON-REMOV (Y) (SLD) (600mm)
- (K) NON-REMOV (W) (ARROW)
- (L) NON-REMOV (W) (WORD)
- (M) NON-REMOV (Y) (MED NOSE)

**REPLACEMENT SHEET** | **CHANGE ORDER NO. 63**


555 EAST RAMSEY SAN ANTONIO TEXAS 78216 PHONE (210)375-9000 FAX (210)375-9010

PAPE-DAWSON ENGINEERS CIVIL & ENVIRONMENTAL

STATE OF TEXAS J. KENT O'BRIEN 64398 LICENSED PROFESSIONAL ENGINEER

J. KENT O'BRIEN P.E. 01/27/2004 DATE


©2000

Texas Department of Transportation

# SEQUENCE OF WORK PHASE 2B

SHEET 2 OF 8

| FED.RD. DIV.NO. | FEDERAL AID PROJECT NO. | | SHEET NO. |
|---|---|---|---|
| 6 | NH 2000(704), ETC. | | 93A |
| STATE | DIST. | COUNTY | |
| TEXAS | SAT | BEXAR | |
| CONT. | SECT. | JOB | HIGHWAY NO. |
| 2452 | 01 | 036, ETC | LP 1604 |

Plotted on: 6/14/2005
Design Filename: t:\ao\design\p1604fm471-90\pd+phase2+change+order+my1ars\submittal\plansheets\tcp\phase2b02.dgn
FILE t:\ao\design\p1604fm471-90\pd+phase2+change+order+my1ars\submittal\plansheets\tcp\phase2b02.dgn
LEVEL 11 13 14 15 16 17 18 91 101 111 121 131 141 151 161 171 181 192 202 212 222 232 242 252 262 272 282 293 303 152
DISPLAYED 33034355367538394041424344454647484956515253545556575859606163

DRAINAGE & ROADWAY CONSTRUCTION
CONSTRUCTION DETOUR
PROPERTY ACCESS (TEMPORARY)
TRAFFIC FLOW DIRECTION
V.I.A. ASSEMBLY (14 BARRELS EACH LOCATION)

SCALE 1:2000

| SEQUENCE OF WORK ESTIMATED QUANTITIES | | 2452-01-037 | 2452-01-036 |
|---|---|---|---|
| ITEM | UNIT | QTY | QTY |
| PORT CONC TRAF BAR (STKPL, INSTL & RETRN) | M | 201.1 | - |
| VEH IMP ATTN ASSEM BRLS | EA | 14 | - |
| VEH IMP ATTN ASSEM BRLS (REMOVE) | EA | 14 | - |
| CONST DETOUR (CL 3) (150MM) | M2 | 162 | - |
| CMP AR (GAL STL DES 3) | M | 47 | - |
| SET (TY II) (DES 3) (CMP) (1:6) | EA | 6 | - |
| EXCAV (SPL) | M3 | 411 | - |
| EMBANK (ORD COMP) (TY B) (CL 2) | M3 | 411 | - |
| REMOV OLD STR (PIPE) | M | 47 | - |

63 MBGF TO BE LAPPED FOR DEPARTURE FOR THE DURATION OF PHASE 2B. THE CONTRACTOR SHALL RE-LAP THE MBGF FOR AN APPROACH BEFORE TRAFFIC IS SWITCHED TO ITS FINAL LOCATON. PAY ITEM TO BE HANDLED IN CHANGE ORDER # 86

RETAINING WALL #5
NBFR CL STA 1+540.02
0.9 RT
1+617.338
NBFR CL STA 1+617.34
1.2 RT
RETAINING WALL #6
PRC 1+750.438
CONTRACTOR TO TIE MBGF TO PCTB
EST @ 593M (A)
EST @ 1313M (C)
NBFR CL STA 1+881.19
1.2
PT 1+921.871
D EST @ 39M
NBFR CL STA 2+025.19
0.8 LT
NBFR CL STA 1+980.18
2.8 RT
LINE I14
EST @ 24M (C)
EST @ 4M (B)
EST @ 70M (A)
EST @ 11M (B)
REED ROAD
NBFR CL STA 2+126.59
0.8 LT
EST @ 91M (A)
EST @ 104M (C)
EST @ 28M (D)
K
L
D EST @ 8M
C EST @ 118m
CONST DETOUR (CL 3) (150MM)
EST @ 128 M2
REMOV OLD STR (PIPE)
EST. @ 24.2 M
EMBANK (TY B) (CL 2)
EST. @ 327 M3
CMP AR (DES 3)
W/ 1:6 SETS (TEMP)
EST. @ 24.2 M
EXCAV (SPL)
EST. @ 327 M3
PCTB
EST @ 201.1M
EST @ 524M (A)
N.B. FRONTAGE RD.
CONST DETOUR (CL 3) (150MM)
EST @ 17 M2
EMBANK (TY B) (CL 2)
EST @ 68 M3
S.B. MAIN LANES
MATCHLINE STA 19+460
19+500
19+600
19+700
19+800
19+900
20+000
20+100
20+180
℄ LP 1604
CULVERT #12
CULVERT #13
DRIVEWAY
WIDTH
5.0 M
1:6
1:6
CMP AR (DES 3)
PROPOSED DRIVEWAY X-SECTION
DRIVEWAY
WIDTH
4.0 M
1:6
1:6
CMP AR (DES 3)
PROPOSED DRIVEWAY X-SECTION
EXCAV (SPL)
EST @ 68 M3
CMP AR (DES 3)
W/1:6 SETS (TEMP)
EST. @ 15.2 M
REMOV OLD STR (PIPE)
EST. @ 15.2 M
A EST @ 90M
NBFR CL STA 2+115.19
0.4 LT
NBFR CL STA 2+126.59
2.8 RT
A EST @ 54M
C EST @ 104M
B EST @ 11M
MATCHLINE STA 20+180

SCALE 1:2000

LP 1604 CONTROL BREAK
STA 20+640
END CSJ: 2452-01-037 (BK)
BEGIN CSJ: 2452-01-036 (AHD)

C EST @ 52M
A EST @ 72M
B EST @ 6M
NBFR CL STA 2+762.17
0.6 LT
EST @ 3M (B)
EST @ 6M (B)
EST @ 74M (A)
KILMARNOCH LANE
PC 2+734.957
PT 2+841.255
K
L
NBFR CL STA 2+859.17
1.2
A EST @ 70M
C EST @ 273M
D EST @ 32M
R.O.W.
N.B. FRONTAGE RD.
MATCHLINE STA 20+180
2+200
2+300
2+400
2+500
2+600
2+700
2+800
2+900
CONST DETOUR (CL 3) (150MM)
EST @ 17 M2
EMBANK (TY B) (CL 2)
EST @ 16 M3
EXCAV (SPL)
EST @ 16 M3
REMOV OLD STR (PIPE)
EST. @ 7.6 M
CMP AR (DES 3)
W/1:6 SETS (TEMP)
EST. @ 7.6 M
DRIVEWAY
WIDTH
4.0 M
1:6
1:6
CMP AR (DES 3)
PROPOSED DRIVEWAY X-SECTION
S.B. MAIN LANES
℄ LP 1604
EST @ 69M (C)
EST @ 4M (D)
K
L
A EST @ 18M
NBFR CL STA 2+223.59
1.2 RT
EST @ 360M (A)
EST @ 1150M (C)
EST @ 250M (C)
EST @ 39M (D)
NBFR CL STA 2+622.78
3.0 RT
EST @ (A) 224M
NBFR CL STA 2+667.78
0.6 LT
NBFR CL STA 2+753.77
0.6 LT
EST @ 158M (C)
EST @ (A) 139M
LINE I26
NBFR CL STA 2+762.17
3.0 RT

CHANGE ORDER NO. 92
- REVISED TEMP DRIVES
- ADDED / REVISED QUANTITIES

# CHANGE ORDER NO. 92 — REVISED SHEET

| PAVEMENT MARKING ESTIMATED QUANTITIES | | 2452-01-037 | 2452-01-036 |
|---|---|---|---|
| ITEM | UNIT | QTY | QTY |
| WK ZN PAV MARK | | | |
| REMOV (CL B) TY I-C | EA | | |
| NON-REMOV (W) (SLD) 100 MM | M | 1800 | 579 |
| NON-REMOV (W) (BRK) 100 MM | M | | |
| NON-REMOV (W) (SLD) 600 MM | M | 26 | 15 |
| NON-REMOV (W) (ARROW) | EA | 5 | 4 |
| NON-REMOV (W) (WORD) | EA | 5 | 4 |
| NON-REMOV (Y) (MED NOSE) | EA | 2 | 1 |
| NON-REMOV (Y) (SLD) 100 MM | M | 3132 | 483 |
| NON-REMOV (Y) (SLD) 600 MM | M | 118 | 32 |

63

# REFERS TO CHANGES MADE AS PART OF CHANGE ORDER

WRK ZN PAV MRK LEGEND

- (A) NON-REMOV (W) (SLD) (100mm)
- (B) NON-REMOV (W) (SLD) (600mm)
- (C) NON-REMOV (Y) (SLD) (100mm)
- (D) NON-REMOV (Y) (SLD) (600mm)
- (K) NON-REMOV (W) (ARROW)
- (L) NON-REMOV (W) (WORD)
- (M) NON-REMOV (Y) (MED NOSE)

STATE OF TEXAS
FITZGERALDO G. SANCHEZ
76084
REGISTERED
PROFESSIONAL ENGINEER

Fitzgeraldo G. Sanchez, P.E. 06-14-05
Date

©2000
Texas Department of Transportation

# SEQUENCE OF WORK PHASE 2B

SHEET 2 OF 8

| FED. RD. DIV. NO. | FEDERAL AID PROJECT NO. | | SHEET NO. |
|---|---|---|---|
| 6 | NH 2000(704), ETC. | | 93 AA |
| STATE | DIST. | COUNTY | |
| TEXAS | SAT | BEXAR | |
| CONT. | SECT. | JOB | HIGHWAY NO. |
| 2452 | 01 | 036, ETC | LP 1604 |

5-31-05

DRAINAGE & ROADWAY CONSTRUCTION

TRAFFIC FLOW DIRECTION

V.I.A. ASSEMBLY ( 14 BARRELS EACH LOCATION )

SCALE 1: 2000

| SEQUENCE OF WORK ESTIMATED QUANTITIES | | 2452-01-036 |
|---|---|---|
| ITEM | UNIT | QTY |
| PORT CONC TRAF BAR (STKPL, INSTL & RETRN) | M | 92 |
| VEH IMP ATTN ASSEM BRLS (MOVE & RESET) | EA | 14 |
| | | |

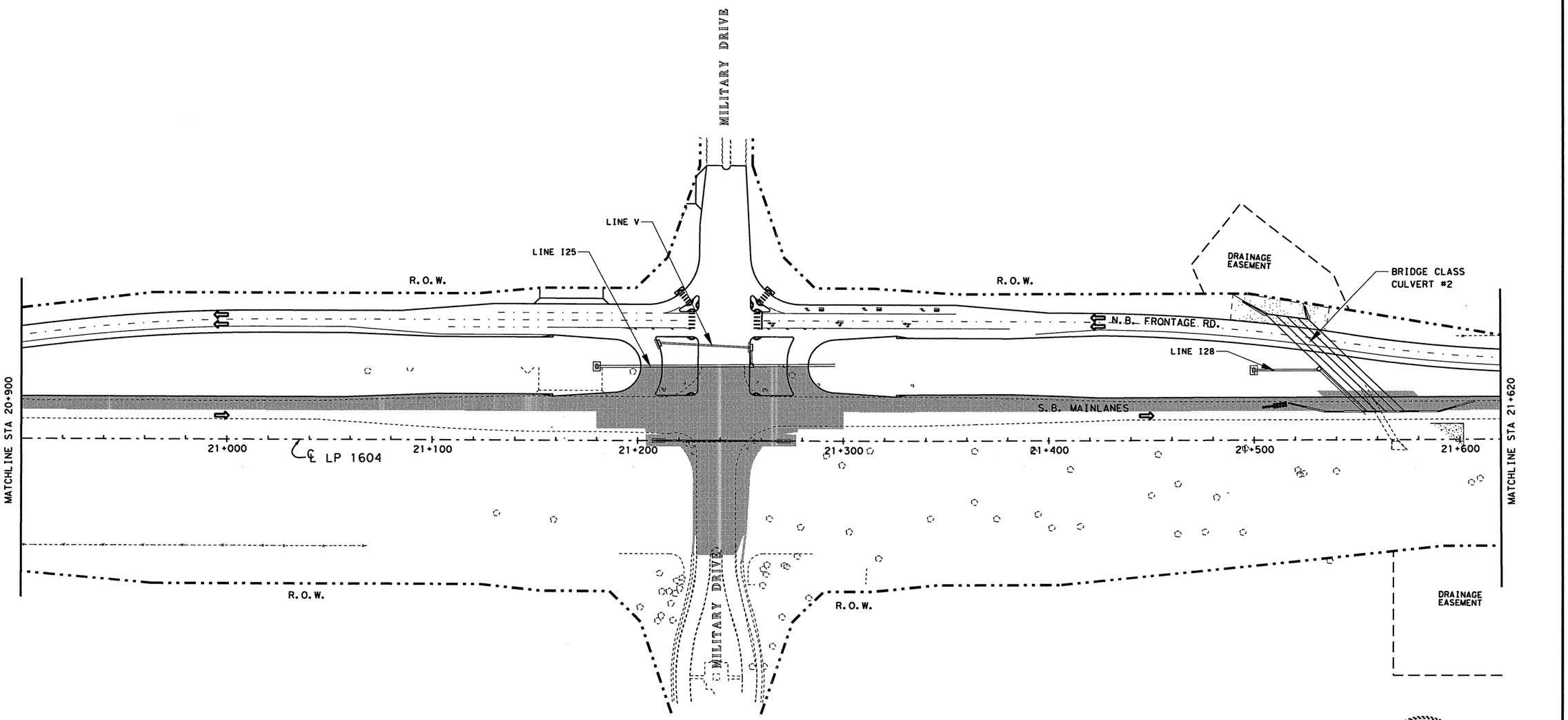


| PAVEMENT MARKING ESTIMATED QUANTITIES | | 2452-01-036 |
|---|---|---|
| ITEM | UNIT | QTY |
| WK ZN PAV MARK | | |
| REMOV (CL B) TY I-C | EA | 56 |
| NON-REMOV (W) (SLD) 100 MM | M | 812 |
| NON-REMOV (W) (BRK) 100 MM | M | 167 |
| NON-REMOV (W) (SLD) 600 MM | M | 78 |
| NON-REMOV (W) (ARROW) | EA | 3 |
| NON-REMOV (W) (WORD) | EA | 3 |
| NON-REMOV (Y) (SLD) 100 MM | M | 1410 |
| ELM EXT PAV MRK & MRKR 100 MM | M | 700 |

FILE: H:\oo\design\lp1604fm471-90\sow\phaseii\phase2b03.dgn 15 SEP 2000

LEVEL DISPLAYED 1 2 3 4 5 6 7 8 9 10 11 12 21 31 41 51 61 71 81 92 02 12 22 32 42 52 62 72 82 93 03 13 23 33 43 53 63 73 83 94 04 14 24 34 44 54 64 74 84 95 05 15 25 35 45 55 65 75 85 96 0 63

STATE OF TEXAS
JOEL K. DAVENPORT, JR.
79276
REGISTERED PROFESSIONAL ENGINEER

Joel K Davenport Jr 9/19/00
Joel K. Davenport, Jr. P.E. 79276 Date

©2000
Texas Department of Transportation

# SEQUENCE OF WORK PHASE 2B

SHEET 3 OF 13

| FED. RD. DIV. NO. | FEDERAL AID PROJECT NO. | | SHEET NO. |
|---|---|---|---|
| 6 | NH 2000(704), ETC. | | 94 |
| STATE | DIST. | COUNTY | |
| TEXAS | SAT | BEXAR | |
| CONT. | SECT. | JOB | HIGHWAY NO. |
| 2452 | 01 | 036,ETC | LP 1604 |

Plotted on: 9/13/2004
Design Filename: T:\AO\Design\lp1604fm471-90\PD*Phase2*change*order*mylars\submittal\plansheets\TCP\phase2B03.dgn
FILE T:\AO\Design\lp1604fm471-90\PD*Phase2*change*order*mylars\submittal\plansheets\TCP\phase2B03.dgn
LEVEL DISPLAYED 1 3 4 5 6 7 8 9 10 11 12 13 14 15 16 17 18 19 20 21 22 23 24 25 26 27 28 29 30 31 32 33 34 35 36 37 38 39 40 41 42 43 44 45 46 47 48 49 50 51 52 53 55 56 57 58 59 60 62 63

DRAINAGE & ROADWAY CONSTRUCTION
CONSTRUCTION DETOUR
TRAFFIC FLOW DIRECTION
V.I.A. ASSEMBLY (14 BARRELS EACH LOCATION)

SCALE 1:2000

| SEQUENCE OF WORK ESTIMATED QUANTITIES | | 2452-01-036 |
|---|---|---|
| ITEM | UNIT | QTY |
| PORT CONC TRAF BAR (STKPL, INSTL & RETRN) | M | 100.1 |
| VEH IMP ATTN ASSEM BRLS | EA | 14 |
| VEH IMP ATTN ASSEM BRLS (REMOVE) | EA | 14 |
| CONST DETOURS (CL 3) | M2 | 224 |
| CMP AR (GAL STL DES 3) | M | 13.0 |
| SET (TY II) (DES 3) (CMP) (1:6) | EA | 2 |

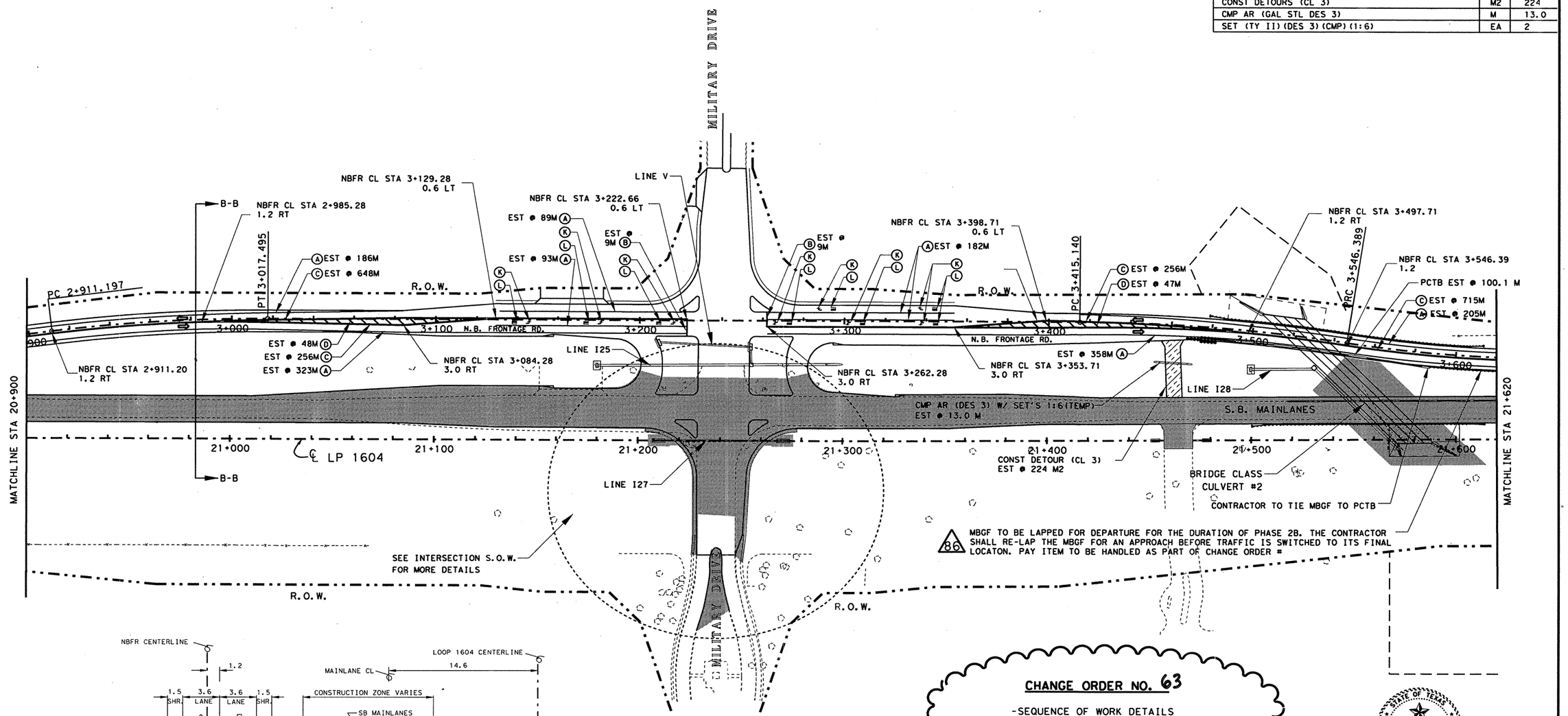


86 MBGF TO BE LAPPED FOR DEPARTURE FOR THE DURATION OF PHASE 2B. THE CONTRACTOR SHALL RE-LAP THE MBGF FOR AN APPROACH BEFORE TRAFFIC IS SWITCHED TO ITS FINAL LOCATON. PAY ITEM TO BE HANDLED AS PART OF CHANGE ORDER #

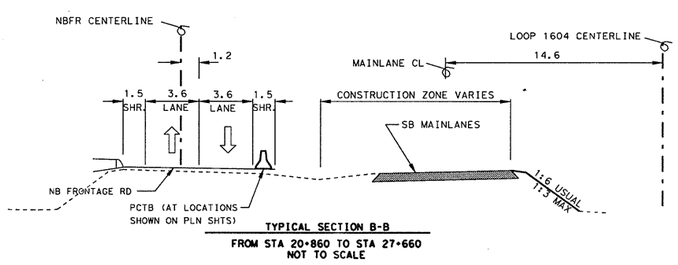


TYPICAL SECTION B-B
FROM STA 20+860 TO STA 27+660
NOT TO SCALE

WRK ZN PAV MRK LEGEND

(A) NON-REMOV (W) (SLD) (100mm)
(B) NON-REMOV (W) (SLD) (600mm)
(C) NON-REMOV (Y) (SLD) (100mm)
(D) NON-REMOV (Y) (SLD) (600mm)
(K) NON-REMOV (W) (ARROW)
(L) NON-REMOV (W) (WORD)
NON-REMOV (Y) (MED NOSE)

| PAVEMENT MARKING ESTIMATED QUANTITIES | | 2452-01-036 |
|---|---|---|
| ITEM | UNIT | QTY |
| WK ZN PAV MARK | | |
| REMOV (CL B) TY I-C | EA | |
| NON-REMOV (W) (SLD) 100 MM | M | 1436 |
| NON-REMOV (W) (BRK) 100 MM | M | |
| NON-REMOV (W) (SLD) 600 MM | M | 18 |
| NON-REMOV (W) (ARROW) | EA | 8 |
| NON-REMOV (W) (WORD) | EA | 8 |
| NON-REMOV (Y) (SLD) 100 MM | M | 1875 |
| NON-REMOV (Y) (SLD) 600 MM | M | 95 |

# REFERS TO CHANGES MADE AS PART OF CHANGE ORDER

**CHANGE ORDER NO. 63**

-SEQUENCE OF WORK DETAILS

STATE OF TEXAS
JEROME D. PAVLISKA
76075
REGISTERED PROFESSIONAL ENGINEER

Jerome D. Pavliska, P.E. 9-9-04
Jerome D. Pavliska, P.E. — Date

REPLACEMENT SHEET

CHANGE ORDER NO. 63

©2000 Texas Department of Transportation

# SEQUENCE OF WORK PHASE 2B

SHEET 3 OF 8

| FED. RD. DIV. NO. | FEDERAL AID PROJECT NO. | | SHEET NO. |
|---|---|---|---|
| 6 | NH 2000(704), ETC. | | 94A |
| STATE | DIST. | COUNTY | |
| TEXAS | SAT | BEXAR | |
| CONT. | SECT. | JOB | HIGHWAY NO. |
| 2452 | 01 | 036, ETC | LP 1604 |

Plotted on: 6/14/2005

Design Filename: t:\oo\design\lp1604fm471-90\pd\phase2\change*order*mylars\submittal\plansheets\tcp\phase2b03.dgn

FILE t:\oo\design\lp1604fm471-90\pd\phase2*change*order*mylars\submittal\plansheets\tcp\phase2b03.dgn
LEVEL 1 1 3 4 5 6 7 8 9 10 11 12 31 41 51 61 71 81 92 102 122 132 142 152 162 172 182 192 202 212 222 232 242 252 262 272 282 293 303 313 2
DISPLAYED 33 34 55 56 63 73 83 89 94 04 14 24 34 44 54 64 74 84 95 05 15 25 35 45 55 65 75 85 96 06 16 26 3

DRAINAGE & ROADWAY CONSTRUCTION

CONSTRUCTION DETOUR

TRAFFIC FLOW DIRECTION

V.I.A. ASSEMBLY ( 14 BARRELS EACH LOCATION )

SCALE 1:2000

| SEQUENCE OF WORK ESTIMATED QUANTITIES | | 2452-01-036 |
|---|---|---|
| ITEM | UNIT | QTY |
| PORT CONC TRAF BAR (STKPL, INSTL & RETRN) | M | 100.1 |
| VEH IMP ATTN ASSEM BRLS | EA | 14 |
| VEH IMP ATTN ASSEM BRLS (REMOVE) | EA | 14 |
| CONST DETOURS (CL 3) (300MM) | M2 | 293 |
| CMP AR (GAL STL DES 3) | M | 31.6 |
| SET (TY II) (DES 3) (CMP) (1:6) | EA | 2 |
| EXCAV (SPL) | M3 | 556 |
| EMBANK (ORD DENS) (TY B) (CL 2) | M3 | 556 |
| REMOV OLD STR (PIPE) | M | 31.6 |

63

MILITARY DRIVE

LINE V

NBFR CL STA 3+129.28 0.6 LT

NBFR CL STA 3+222.66 0.6 LT

NBFR CL STA 3+398.71 0.6 LT

B-B

NBFR CL STA 2+985.28 1.2 RT

PT 3+017.495

PC 3+415.140

PC 3+546.389

EST @ 89M (A) (K) (L)

EST @ 9M (B) (K) (L)

EST @ 93M (A) (K) (L)

EST @ 9M (B) (K) (L)

EST @ 182M (A) (K) (L)

EST @ 186M (A)

EST @ 648M (C)

EST @ 48M (D)

EST @ 256M (C)

EST @ 323M (A)

EST @ 256M (C)

EST @ 47M (D)

EST @ 358M (A)

EST @ 715M (C)

EST @ 205M (A)

PC 2+911.197

R.O.W.

3+000

3+100

N.B. FRONTAGE RD.

3+200

3+300

3+400

3+500

3+600

NBFR CL STA 2+911.20 1.2 RT

NBFR CL STA 3+084.28 3.0 RT

NBFR CL STA 3+262.28 3.0 RT

NBFR CL STA 3+353.71 3.0 RT

NBFR CL STA 3+497.71 1.2 RT

NBFR CL STA 3+546.39 1.2

PCTB EST @ 100.1 M

LINE I25

LINE I28

S.B. MAINLANES

MATCHLINE STA 20+900

MATCHLINE STA 21+620

21+000

21+100

21+200

21+300

21+400

21+500

21+600

℄ LP 1604

LINE I27

B-B

CMP AR (DES 3) W/ SET'S 1:6 (TEMP) EST @ 31.6 M

CONST DETOUR (CL 3) (300MM) EST @ 293 M2

EMBANK (TY B) (CL 2) EST. @ 556 M3

BRIDGE CLASS CULVERT #2

CONTRACTOR TO TIE MBGF TO PCTB

86 MBGF TO BE LAPPED FOR DEPARTURE FOR THE DURATION OF PHASE 2B. THE CONTRACTOR SHALL RE-LAP THE MBGF FOR AN APPROACH BEFORE TRAFFIC IS SWITCHED TO ITS FINAL LOCATON. PAY ITEM TO BE HANDLED AS PART OF CHANGE ORDER #

SEE INTERSECTION S.O.W. FOR MORE DETAILS

R.O.W.

R.O.W.

MILITARY DRIVE

PROPOSED DRIVEWAY X-SECTION

DRIVEWAY WIDTH 9.75 M

1:6

1:6

CMP AR (DES 3)

REMOV OLD STR (PIPE) EST. @ 31.6 M

EXCAV (SPL) EST. @ 556 M3

CHANGE ORDER NO. 92

- REVISED TEMP DRIVE
- ADDED / REVISED QUANTITIES

NBFR CENTERLINE

1.2

1.5 SHR.

3.6 LANE

3.6 LANE

1.5 SHR.

MAINLANE CL

LOOP 1604 CENTERLINE

14.6

CONSTRUCTION ZONE VARIES

SB MAINLANES

NB FRONTAGE RD

PCTB (AT LOCATIONS SHOWN ON PLN SHTS)

1:6 USUAL 1:3 MAX

TYPICAL SECTION B-B

FROM STA 20+860 TO STA 27+660

NOT TO SCALE

WRK ZN PAV MRK LEGEND

(A) NON-REMOV (W) (SLD) (100mm)
(B) NON-REMOV (W) (SLD) (600mm)
(C) NON-REMOV (Y) (SLD) (100mm)
(D) NON-REMOV (Y) (SLD) (600mm)
(K) NON-REMOV (W) (ARROW)
(L) NON-REMOV (W) (WORD)
NON-REMOV (Y) (MED NOSE)

| PAVEMENT MARKING ESTIMATED QUANTITIES | | 2452-01-036 |
|---|---|---|
| ITEM | UNIT | QTY |
| WK ZN PAV MARK | | |
| REMOV (CL B) TY I-C | EA | |
| NON-REMOV (W) (SLD) 100 MM | M | 1436 |
| NON-REMOV (W) (BRK) 100 MM | M | |
| NON-REMOV (W) (SLD) 600 MM | M | 18 |
| NON-REMOV (W) (ARROW) | EA | 8 |
| NON-REMOV (W) (WORD) | EA | 8 |
| NON-REMOV (Y) (SLD) 100 MM | M | 1875 |
| NON-REMOV (Y) (SLD) 600 MM | M | 95 |

63

# REFERS TO CHANGES MADE AS PART OF CHANGE ORDER

CHANGE ORDER NO. 92 | REVISED SHEET

STATE OF TEXAS FITZGERALDO G. SANCHEZ 76084 REGISTERED PROFESSIONAL ENGINEER

Fitzgeraldo G. Sanchez, P.E. 06-19-05 Date

©2000

Texas Department of Transportation

# SEQUENCE OF WORK PHASE 2B

SHEET 3 OF 8

| FED. RD. DIV. NO. | FEDERAL AID PROJECT NO. | | SHEET NO. |
|---|---|---|---|
| 6 | NH 2000(704), ETC. | | 94 AA |
| STATE | DIST. | COUNTY | |
| TEXAS | SAT | BEXAR | |
| CONT. | SECT. | JOB | HIGHWAY NO. |
| 2452 | 01 | 036, ETC | LP 1604 |

5-31-05

DRAINAGE & ROADWAY CONSTRUCTION

CONSTRUCTION DETOUR

TRAFFIC FLOW DIRECTION

V.I.A. ASSEMBLY ( 14 BARRELS EACH LOCATION )

SCALE 1:2000

| SEQUENCE OF WORK ESTIMATED QUANTITIES | | 2452-01-036 |
|---|---|---|
| ITEM | UNIT | QTY |
| PORT CONC TRAF BAR (STKPL, INSTL & RETRN) | M | 109 |
| VEH IMP ATTN ASSEM BRLS (MOVE & RESET) | EA | 14 |
| | | |

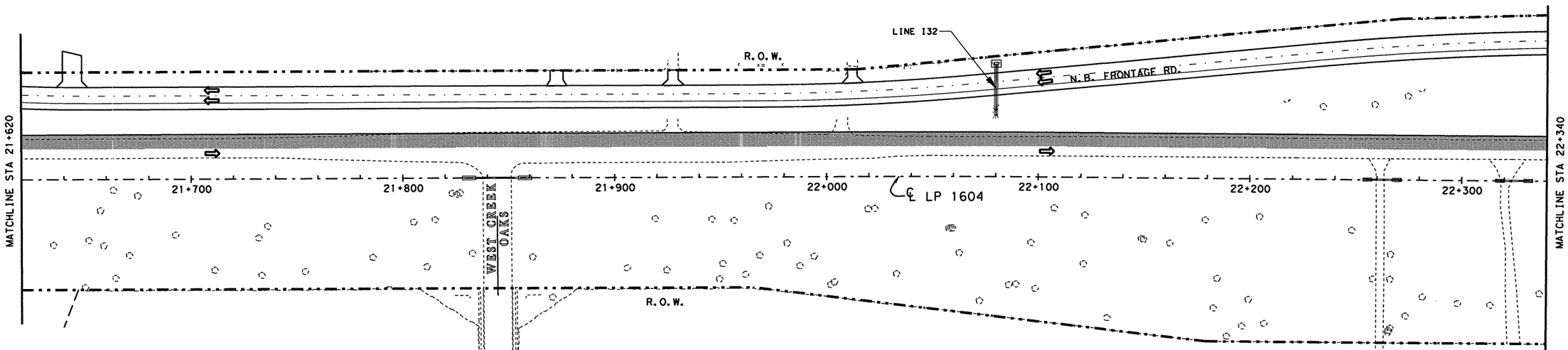


SCALE 1:2000

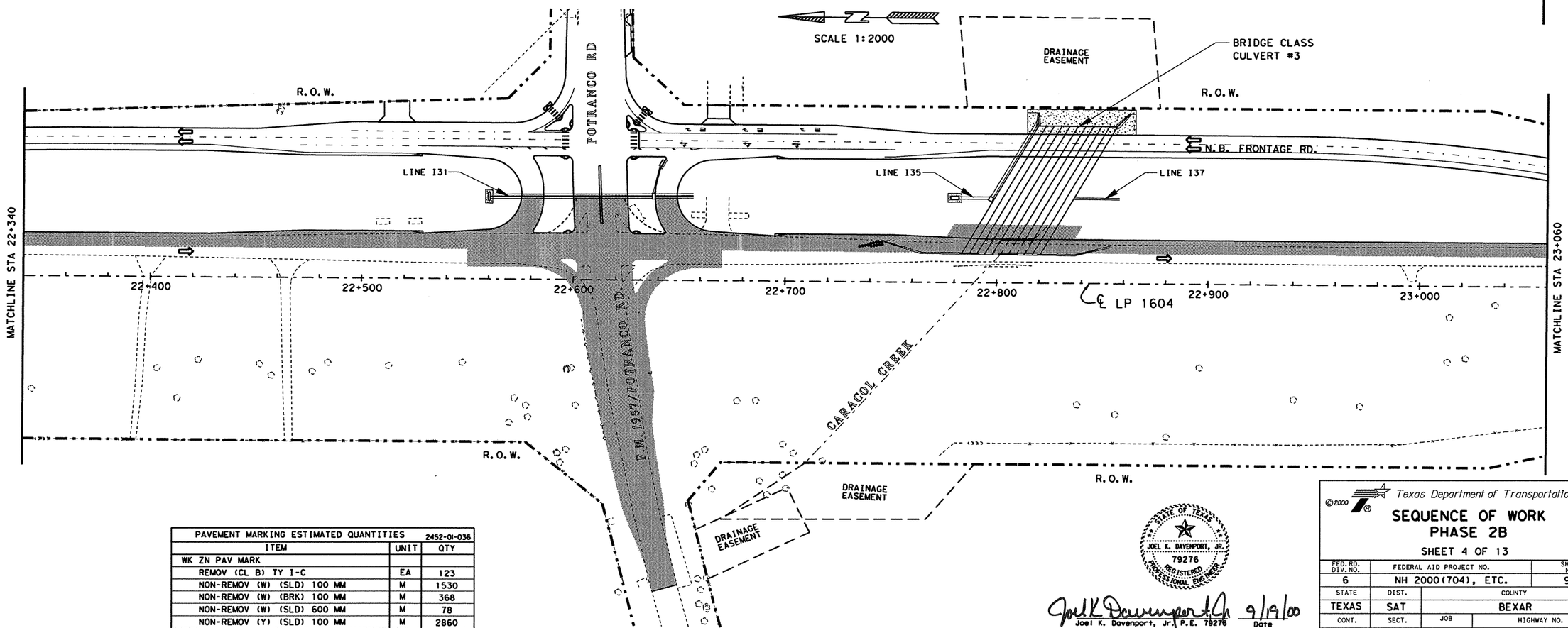


| PAVEMENT MARKING ESTIMATED QUANTITIES | | 2452-01-036 |
|---|---|---|
| ITEM | UNIT | QTY |
| WK ZN PAV MARK | | |
| REMOV (CL B) TY I-C | EA | 123 |
| NON-REMOV (W) (SLD) 100 MM | M | 1530 |
| NON-REMOV (W) (BRK) 100 MM | M | 368 |
| NON-REMOV (W) (SLD) 600 MM | M | 78 |
| NON-REMOV (Y) (SLD) 100 MM | M | 2860 |
| ELM EXT PAV MRK & MRKR 100 MM | M | 700 |

STATE OF TEXAS
JOEL K. DAVENPORT, JR.
79276
REGISTERED PROFESSIONAL ENGINEER

Joel K Davenport Jr 9/19/00
Joel K. Davenport, Jr., P.E. 79276 Date

©2000

Texas Department of Transportation

# SEQUENCE OF WORK PHASE 2B

SHEET 4 OF 13

| FED. RD. DIV. NO. | FEDERAL AID PROJECT NO. | | SHEET NO. |
|---|---|---|---|
| 6 | NH 2000(704), ETC. | | 95 |
| STATE | DIST. | COUNTY | |
| TEXAS | SAT | BEXAR | |
| CONT. | SECT. | JOB | HIGHWAY NO. |
| 2452 | 01 | 036, ETC | LP 1604 |

FILE: h:\cad\design\lp1604fm471-90\sow\phase2\ph2b04.dgn 15 SEP 2000
LEVEL DISPLAYED 1 2 3 4 5 6 7 8 9 10 11 12 13 14 15 16 17 18 19 20 21 22 23 24 25 26 27 28 29 30 31 32 33 34 35 36 37 38 39 40 41 42 43 44 45 46 47 48 49 50 51 52 53 54 55 56 57 58 59 60 61 62 63

Plotted on: 01/26/2004

DRAINAGE & ROADWAY CONSTRUCTION
CONSTRUCTION DETOUR
PROPERTY ACCESS (TEMPORARY)
TRAFFIC FLOW DIRECTION
V.I.A. ASSEMBLY (14 BARRELS EACH LOCATION)

SCALE 1:2000

| SEQUENCE OF WORK ESTIMATED QUANTITIES | | 2452-01-036 |
|---|---|---|
| ITEM | UNIT | QTY |
| CONST DETOURS (CL 3) | M2 | 68 |
| CMP AR (GAL STL DES 3) | M | 9.4 |
| SET (TY II) (DES 3) (CMP) (1:6) | EA | 2 |

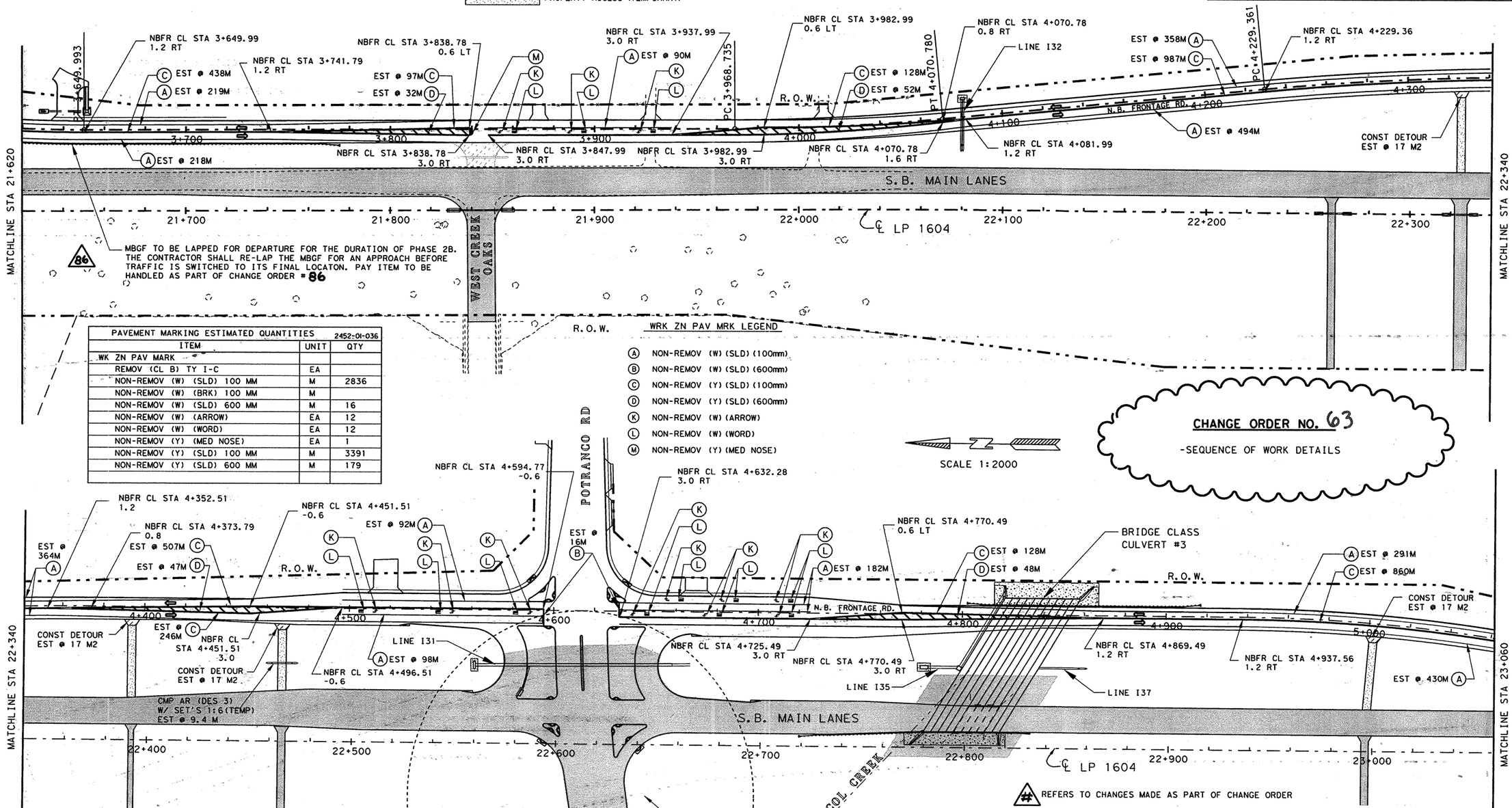


| PAVEMENT MARKING ESTIMATED QUANTITIES | | 2452-01-036 |
|---|---|---|
| ITEM | UNIT | QTY |
| WK ZN PAV MARK | | |
| REMOV (CL B) TY I-C | EA | |
| NON-REMOV (W) (SLD) 100 MM | M | 2836 |
| NON-REMOV (W) (BRK) 100 MM | M | |
| NON-REMOV (W) (SLD) 600 MM | M | 16 |
| NON-REMOV (W) (ARROW) | EA | 12 |
| NON-REMOV (W) (WORD) | EA | 12 |
| NON-REMOV (Y) (MED NOSE) | EA | 1 |
| NON-REMOV (Y) (SLD) 100 MM | M | 3391 |
| NON-REMOV (Y) (SLD) 600 MM | M | 179 |
| | | |

WRK ZN PAV MRK LEGEND

- (A) NON-REMOV (W) (SLD) (100mm)
- (B) NON-REMOV (W) (SLD) (600mm)
- (C) NON-REMOV (Y) (SLD) (100mm)
- (D) NON-REMOV (Y) (SLD) (600mm)
- (K) NON-REMOV (W) (ARROW)
- (L) NON-REMOV (W) (WORD)
- (M) NON-REMOV (Y) (MED NOSE)

SCALE 1:2000

**CHANGE ORDER NO. 63**

-SEQUENCE OF WORK DETAILS




# REFERS TO CHANGES MADE AS PART OF CHANGE ORDER

**REPLACEMENT SHEET** | **CHANGE ORDER NO. 63**

555 EAST RAMSEY SAN ANTONIO TEXAS 78216
PHONE (210)375-9000
FAX (210)375-9010
PAPE-DAWSON ENGINEERS
CIVIL & ENVIRONMENTAL

STATE OF TEXAS — J. KENT O'BRIEN — 64398 — LICENSED PROFESSIONAL ENGINEER

J. KENT O'BRIEN P.E. — 1/27/2004 DATE

©2000

Texas Department of Transportation

## SEQUENCE OF WORK PHASE 2B

SHEET 4 OF 8

| FED.RD. DIV.NO. | FEDERAL AID PROJECT NO. | | SHEET NO. |
|---|---|---|---|
| 6 | NH 2000(704), ETC. | | 95A |
| STATE | DIST. | COUNTY | |
| TEXAS | SAT | BEXAR | |
| CONT. | SECT. | JOB | HIGHWAY NO. |
| 2452 | 01 | 036, ETC | LP 1604 |

FILE: p:\52\20\11\design\civil\plansheets\tcp\phase2b04.dgn 01/26/2004
LEVEL DISPLAYED

Design Filename: p:\52\20\11\design\civil\plansheets\tcp\phase2b04.dgn

Plotted on: 6/14/2005
Design Filename: t:\oa\design\lp1604fm471-90\pdxphase2b\change*order*mylars\submittal\plansheets\top\phase2b04.dgn

DRAINAGE & ROADWAY CONSTRUCTION
CONSTRUCTION DETOUR
PROPERTY ACCESS (TEMPORARY)
TRAFFIC FLOW DIRECTION
V.I.A. ASSEMBLY ( 14 BARRELS EACH LOCATION )

SCALE 1:2000

| SEQUENCE OF WORK ESTIMATED QUANTITIES | | 2452-01-036 |
|---|---|---|
| ITEM | UNIT | QTY |
| CONST DETOURS (CL 3) | M2 | 17 |
| CONST DETOURS (CL 3)(150MM) | M2 | 160 |
| CONST DETOURS (CL 3)(300MM) | M2 | 156 |
| CMP AR (GAL STL DES 3) | M | 72.1 |
| SET (TY II)(DES 3)(CMP)(1:6) | EA | 8 |
| EXCAV (SPL) | M3 | 882 |
| EMBANK (ORD DENS)(TY B)(CL 2) | M3 | 882 |
| REMOV OLD STR (PIPE) | M | 62.7 |

MATCHLINE STA 21+620
NBFR CL STA 3+649.99 1.2 RT
3+649.993
EST @ 438M C
EST @ 219M A
NBFR CL STA 3+741.79 1.2 RT
NBFR CL STA 3+838.78 0.6 LT
EST @ 97M C
EST @ 32M D
NBFR CL STA 3+937.99 3.0 RT
EST @ 90M A
PC 3+968.735
R.O.W.
NBFR CL STA 3+982.99 0.6 LT
EST @ 128M C
EST @ 52M D
PT 4+070.780
NBFR CL STA 4+070.78 0.8 RT
LINE I32
EST @ 358M A
EST @ 987M C
PC
NBFR CL STA 4+229.36 1.2 RT
EST @ 494M A
NBFR CL STA 4+081.99 1.2 RT
N.B. FRONTAGE RD.
3+700
3+800
3+900
4+000
4+100
4+200
4+300
EST @ 218M A
NBFR CL STA 3+838.78 3.0 RT
NBFR CL STA 3+847.99 3.0 RT
NBFR CL STA 3+982.99 3.0 RT
NBFR CL STA 4+070.78 1.6 RT
(OMIT)
CONST DETOUR EST @ 17 M2
S.B. MAIN LANES
21+700
21+800
21+900
22+000
℄ LP 1604
22+100
22+200
22+300
MATCHLINE STA 22+340
WEST CREEK OAKS
MBGF TO BE LAPPED FOR DEPARTURE FOR THE DURATION OF PHASE 2B. THE CONTRACTOR SHALL RE-LAP THE MBGF FOR AN APPROACH BEFORE TRAFFIC IS SWITCHED TO ITS FINAL LOCATON. PAY ITEM TO BE HANDLED AS PART OF CHANGE ORDER # 86
86
63
R.O.W.

| PAVEMENT MARKING ESTIMATED QUANTITIES | | 2452-01-036 |
|---|---|---|
| ITEM | UNIT | QTY |
| WK ZN PAV MARK | | |
| REMOV (CL B) TY I-C | EA | |
| NON-REMOV (W) (SLD) 100 MM | M | 2836 |
| NON-REMOV (W) (BRK) 100 MM | M | |
| NON-REMOV (W) (SLD) 600 MM | M | 16 |
| NON-REMOV (W) (ARROW) | EA | 12 |
| NON-REMOV (W) (WORD) | EA | 12 |
| NON-REMOV (Y) (MED NOSE) | EA | 1 |
| NON-REMOV (Y) (SLD) 100 MM | M | 3391 |
| NON-REMOV (Y) (SLD) 600 MM | M | 179 |

WRK ZN PAV MRK LEGEND
- (A) NON-REMOV (W) (SLD) (100mm)
- (B) NON-REMOV (W) (SLD) (600mm)
- (C) NON-REMOV (Y) (SLD) (100mm)
- (D) NON-REMOV (Y) (SLD) (600mm)
- (K) NON-REMOV (W) (ARROW)
- (L) NON-REMOV (W) (WORD)
- (M) NON-REMOV (Y) (MED NOSE)

**CHANGE ORDER NO. 92**
- REVISED / OMITTED TEMP DRIVES
- ADDED / REVISED QUANTITIES
- OMITTED PERM. DRIVES

SCALE 1:2000

DRIVEWAY WIDTH 4.0 M
1:6
CMP AR (DES 3)
PROPOSED DRIVEWAY X-SECTION

NBFR CL STA 4+594.77 -0.6
POTRANCO RD
NBFR CL STA 4+632.28 3.0 RT
EST @ 16M B
NBFR CL STA 4+352.51 1.2
NBFR CL STA 4+373.79 0.8
EST @ 507M C
EST @ 47M D
EST @ 364M A
NBFR CL STA 4+451.51 -0.6
EST @ 92M A
NBFR CL STA 4+770.49 0.6 LT
EST @ 128M C
EST @ 48M D
EST @ 182M A
BRIDGE CLASS CULVERT #3
EST @ 860M C
EST @ 291M A
R.O.W.
4+400
4+500
4+600
4+700
4+800
4+900
5+000
EST @ 430M A
CONST DETOUR EST @ 160 M2
EST @ 246M C
NBFR CL STA 4+451.51 3.0
CONST DETOUR EST @ 17 M2
LINE I31
EST @ 98M A
NBFR CL STA 4+496.51 -0.6
NBFR CL STA 4+725.49 3.0 RT
NBFR CL STA 4+770.49 3.0 RT
LINE I35
NBFR CL STA 4+869.49 1.2 RT
LINE I37
NBFR CL STA 4+937.56 1.2 RT
CONST DETOUR EST @ 156 M2
EXCAV (SPL) EST @ 446 M3
EMBANK (TY B)(CL B) EST @ 446 M3
2-CMP AR (DES 3) W/1:6 SETS (TEMP) EST. @ 18.4 M EA.
MATCHLINE STA 23+060
CMP AR (DES 3) W/ SET'S 1:6 (TEMP) EST @ 25.9 M
REMOV OLD STR (PIPE) EST. @ 25.9 M
EXCAV (SPL) EST. @ 436 M3
EMBANK (TY B)(CL 2) EST. @ 436 M3
CMP AR (DES 3) W/ SET'S 1:6 (TEMP) EST @ 9.4 M
S.B. MAIN LANES
22+400
22+500
22+600
22+700
22+800
22+900
23+000
℄ LP 1604
REMOV OLD STR (PIPE) EST. @ 36.8 M
DRIVEWAY WIDTH 4.0 M
1:6
CMP AR (DES 3)
PROPOSED DRIVEWAY X-SECTION
F.M. 1957/POTRANCO RD.
CARACOL CREEK
SEE INTERSECTION S.O.W. FOR MORE DETAILS
R.O.W.

# REFERS TO CHANGES MADE AS PART OF CHANGE ORDER

**CHANGE ORDER NO. 92** | **REVISED SHEET**

STATE OF TEXAS · FITZGERALDO G. SANCHEZ · 76084 · REGISTERED PROFESSIONAL ENGINEER

Fitzgeraldo G. Sanchez 06-19-05
Fitzgeraldo G. Sanchez, P.E. Date

©2000
Texas Department of Transportation

# SEQUENCE OF WORK PHASE 2B

SHEET 4 OF 8

| FED.RD. DIV.NO. | FEDERAL AID PROJECT NO. | | SHEET NO. |
|---|---|---|---|
| 6 | NH 2000(704), ETC. | | 95 AA |
| STATE | DIST. | COUNTY | |
| TEXAS | SAT | BEXAR | |
| CONT. | SECT. | JOB | HIGHWAY NO. |
| 2452 | 01 | 036,ETC | LP 1604 |

5-31-05

FILE t:\oa\design\lp1604fm471-90\pdxphase2\change*order*mylars\submittal\plansheets\top\phase2b04.dgn
LEVEL 11 3 4 5 16 7 8 9 10 11 12 13 14 15 16 17 18 19 20 21 22 23 24 25 26 27 28 29 30 31 32
DISPLAYED 33 34 35 59 60 61 62 63 64 65 66 67 68 69 70 71 72 73 74 75 76 77 78 79 80 81 82 83 84 85 86 87 88 89 90 91 92 93 94 95 96 97 98 99 100 101 102 103 104 105 106 107 108 109 110 111 112 113 114 115 116 117 118 119 120 121 122 123 124 125 126 127 128 129 130 131 132 133 134 135 136 137 138 139 140 141 142 143 144 145 146 147 148 149 150 151 152 153 154 155 156 157 158 159 160 161 162 163

DRAINAGE & ROADWAY CONSTRUCTION

CONSTRUCTION DETOUR

SPAN TYPE BRIDGE CONSTRUCTION

TRAFFIC FLOW DIRECTION

V.I.A. ASSEMBLY ( 14 BARRELS EACH LOCATION )

| SEQUENCE OF WORK ESTIMATED QUANTITIES | | 2452-01-036 |
|---|---|---|
| ITEM | UNIT | QTY |
| CONSTRUCT DETOURS (CL 3) | M2 | 865 |
| VEH IMP ATTN ASSEM BRLS (MOVE & RESET) | EA | 14 |
| VEH IMP ATTN ASSEM BRLS (REMOVE) | EA | 14 |
| | | |

SCALE 1:2000

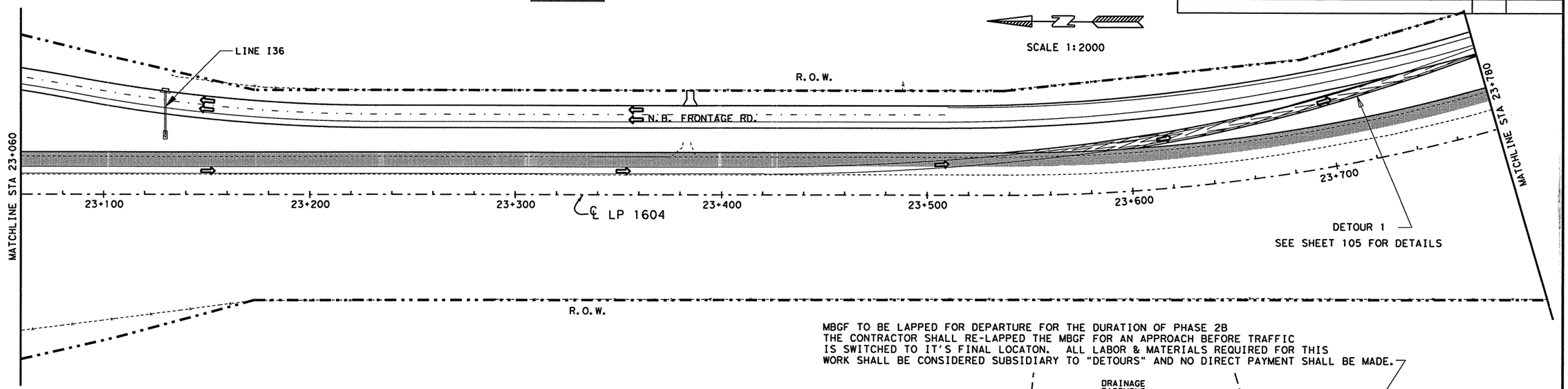


MBGF TO BE LAPPED FOR DEPARTURE FOR THE DURATION OF PHASE 2B
THE CONTRACTOR SHALL RE-LAPPED THE MBGF FOR AN APPROACH BEFORE TRAFFIC
IS SWITCHED TO IT'S FINAL LOCATON. ALL LABOR & MATERIALS REQUIRED FOR THIS
WORK SHALL BE CONSIDERED SUBSIDIARY TO "DETOURS" AND NO DIRECT PAYMENT SHALL BE MADE.

| WK ZN PAV MARKINGS ESTIMATED QUANTITIES | | 2452-01-038 |
|---|---|---|
| ITEM | UNIT | QTY |
| WK ZN PAV MARK | | |
| REMOV (CL B) TY I-C | EA | 37 |
| REMOV (CL B) TY II A-A | EA | 322 |
| NON-REMOV (W) (SLD) 100 MM | M | 2920 |
| NON-REMOV (W) (BRK) 100 MM | M | 112 |
| NON-REMOV (Y) (SLD) 100 MM | M | 3368 |
| ELM EXT PAV MRK & MRKR 100 MM | M | 530 |

SCALE 1:2000

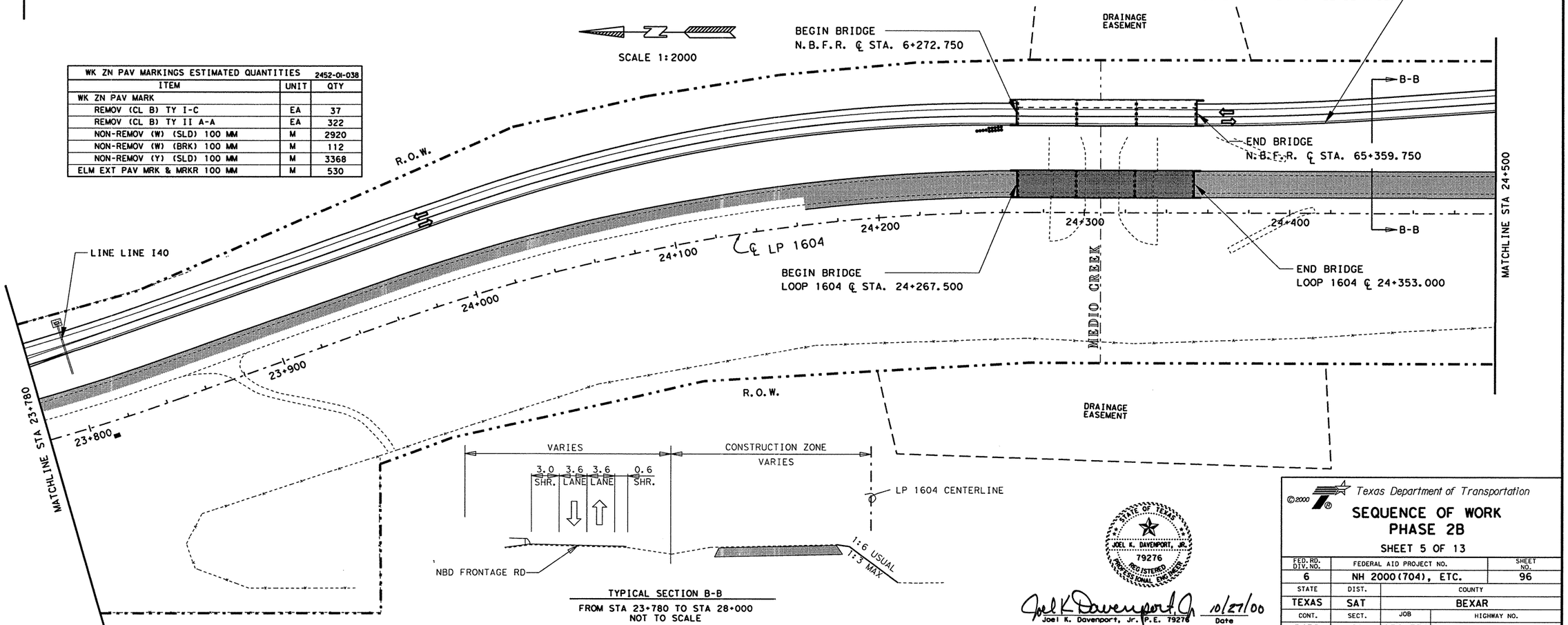





TYPICAL SECTION B-B
FROM STA 23+780 TO STA 28+000
NOT TO SCALE

JOEL K. DAVENPORT, JR. 79276 REGISTERED PROFESSIONAL ENGINEER

Joel K Davenport Jr. 10/27/00
Joel K. Davenport, Jr. P.E. 79276 Date

©2000

Texas Department of Transportation

# SEQUENCE OF WORK PHASE 2B

SHEET 5 OF 13

| FED. RD. DIV. NO. | FEDERAL AID PROJECT NO. | | SHEET NO. |
|---|---|---|---|
| 6 | NH 2000(704), ETC. | | 96 |
| STATE | DIST. | COUNTY | |
| TEXAS | SAT | BEXAR | |
| CONT. | SECT. | JOB | HIGHWAY NO. |
| 2452 | 01 | 036, ETC | LP 1604 |

FILE: t:\roo\design\lp1604fm471-90\sow\phase1i\phase2b05.dgn 26 OCT 2000
LEVEL 1 2 3 4 5 6 7 8 9 10 11 12 13 14 15 16 17 18 19 20 21 22 23 24 25 26 27 28 29 30 31 32
DISPLAYED 33 34 35 36 37 38 39 40 41 42 43 44 45 46 47 48 49 50 51 52 53 54 55 56 57 58 59 60 61 63

Plotted on: 01/27/2004

Design Filename: p:\52\20\11\design\civil\plansheets\tcp\phase2b05.dgn

| FILE | p:\52\20\11\design\civil\plansheets\tcp\phase2b05.dgn | 01/27/2004 |
|---|---|---|
| LEVEL | 1 2 3 4 5 6 7 8 9 10 11 12 13 14 15 16 17 18 19 20 21 22 23 24 25 26 27 28 29 30 31 32 33 34 35 36 37 38 39 40 41 42 43 44 45 46 47 48 49 50 51 52 53 54 55 56 57 58 59 60 61 62 63 | |
| DISPLAYED | 3 3 3 4 3 5 3 6 3 7 3 8 3 9 4 0 4 1 4 2 4 3 4 4 4 5 4 6 4 7 4 8 4 9 5 0 5 1 5 2 5 3 5 4 5 5 5 6 5 7 5 8 5 9 6 0 6 2 6 3 | |

DRAINAGE & ROADWAY CONSTRUCTION
CONSTRUCTION DETOUR
SPAN TYPE BRIDGE CONSTRUCTION
TRAFFIC FLOW DIRECTION
V.I.A. ASSEMBLY (14 BARRELS EACH LOCATION)

SCALE 1:2000

| SEQUENCE OF WORK ESTIMATED QUANTITIES | | 2452-01-036 |
|---|---|---|
| ITEM | UNIT | QTY |
| | | |
| | | |
| | | |
| | | |
| | | |
| | | |
| | | |

PRC 5+087.550
NBFR CL STA 5+087.55
1.2 RT
LINE I36
PT 5+236.980
NBFR CL STA 5+236.98
1.2 RT
(A) EST @ 710M
(C) EST @ 1420M
PC 5+513.232
NBFR CL STA 5+513.23
1.2 RT
R.O.W.
5+100
5+200
5+300
5+400
N.B. FRONTAGE RD.
5+500
5+600
5+700
EST @ 710M (A)
S.B. MAIN LANES
MATCHLINE STA 23+060
23+100
23+200
23+300
℄ LP 1604
23+400
23+500
23+600
23+700
MATCHLINE STA 23+780
R.O.W.

WRK ZN PAV MRK LEGEND

(A) NON-REMOV (W) (SLD) (100mm)
(B) NON-REMOV (W) (SLD) (600mm)
(C) NON-REMOV (Y) (SLD) (100mm)
(D) NON-REMOV (Y) (SLD) (600mm)
(K) NON-REMOV (W) (ARROW)
(L) NON-REMOV (W) (WORD)
(M) NON-REMOV (Y) (MED NOSE)

SCALE 1:2000

| WK ZN PAV MARKINGS ESTIMATED QUANTITIES | | 2452-01-036 |
|---|---|---|
| ITEM | UNIT | QTY |
| WK ZN PAV MARK | | |
| REMOV (CL B) TY I-C | EA | |
| REMOV (CL B) TY II A-A | EA | |
| NON-REMOV (W) (SLD) 100 MM | M | 2888 |
| NON-REMOV (W) (BRK) 100 MM | M | |
| NON-REMOV (Y) (SLD) 100 MM | M | 2888 |
| | | |

NBFR CL STA 5+994.31
1.2 RT
(A) EST @ 734M
(C) EST @ 1468M
PC 5+994.308
R.O.W.
6+000
6+100
6+200
6+300
6+400
6+500
S.B. MAIN LANES
EST @ 734M (A)
NBFR CL STA 5+827.63
1.2 RT
LINE I40
PT 5+827.627
5+800
5+900
N.B. FRONTAGE RD.
24+000
24+100
24+200
24+300
24+400
℄ LP 1604
CMP AR (DES 3) W/ SET'S 1:6 (TEMP)
REMAIN FROM PHASE 2A
CONST DETOUR (CL 3)
REMAIN FROM PHASE 2A
MATCHLINE STA 23+780
23+800
23+900
R.O.W.

MBGF TO BE LAPPED FOR DEPARTURE FOR THE DURATION OF PHASE 2B. THE CONTRACTOR SHALL RE-LAP THE MBGF FOR AN APPROACH BEFORE TRAFFIC IS SWITCHED TO ITS FINAL LOCATON. PAY ITEM TO BE HANDLED AS PART OF CHANGE ORDER # 86

NBFR CL STA 6+260.25
1.2
PT 6+260.250
BEGIN BRIDGE
N.B.F.R. ℄ STA. 6+272.750
EASEMENT
PC 6+363.765
NBFR CL STA 6+363.76
1.2 RT
PT 6+447.325
NBFR CL STA 6+447.33
1.2 RT
6+200
6+300
6+400
6+500
END BRIDGE
N.B.F.R. ℄ STA. 65+359.750
S.B. MAIN LANES
MATCHLINE STA 24+500
BEGIN BRIDGE
LOOP 1604 ℄ STA. 24+267.500
MEDIO CREEK
END BRIDGE
LOOP 1604 ℄ 24+353.000
DRAINAGE EASEMENT

REPLACEMENT SHEET

CHANGE ORDER NO. 63

CHANGE ORDER NO. 63

-SEQUENCE OF WORK DETAILS
-ELIMINATED ORIGINAL PLANS DETOUR 1
-ADDED DRIVEWAY #33A

# REFERS TO CHANGES MADE AS PART OF CHANGE ORDER

555 EAST RAMSEY SAN ANTONIO TEXAS 78216
PHONE (210)375-9000
FAX (210)375-9010
PAPE-DAWSON ENGINEERS
CIVIL & ENVIRONMENTAL

STATE OF TEXAS
J. KENT O'BRIEN
64398
LICENSED
PROFESSIONAL ENGINEER

J. KENT O'BRIEN P.E. 1/27/2004 DATE

©2000
Texas Department of Transportation

SEQUENCE OF WORK
PHASE 2B

SHEET 5 OF 8

| FED.RD. DIV.NO. | FEDERAL AID PROJECT NO. | | SHEET NO. |
|---|---|---|---|
| 6 | NH 2000(704), ETC. | | 96A |
| STATE | DIST. | COUNTY | |
| TEXAS | SAT | BEXAR | |
| CONT. | SECT. | JOB | HIGHWAY NO. |
| 2452 | 01 | 036,ETC | LP 1604 |

DRAINAGE & ROADWAY CONSTRUCTION

TRAFFIC FLOW DIRECTION

V.I.A. ASSEMBLY (14 BARRELS EACH LOCATION )

SCALE 1:2000

| SEQUENCE OF WORK ESTIMATED QUANTITIES | | 2452-01-036 |
|---|---|---|
| ITEM | UNIT | QTY |
| PORT CONC TRAF BAR (STKPL, INSTL & RETRN) | M | 73 |
| VEH IMP ATTN ASSEM BRLS (MOVE & RESET) | EA | 14 |
| VEH IMP ATTN ASSEM BRLS (REMOVE) | EA | 14 |
| | | |

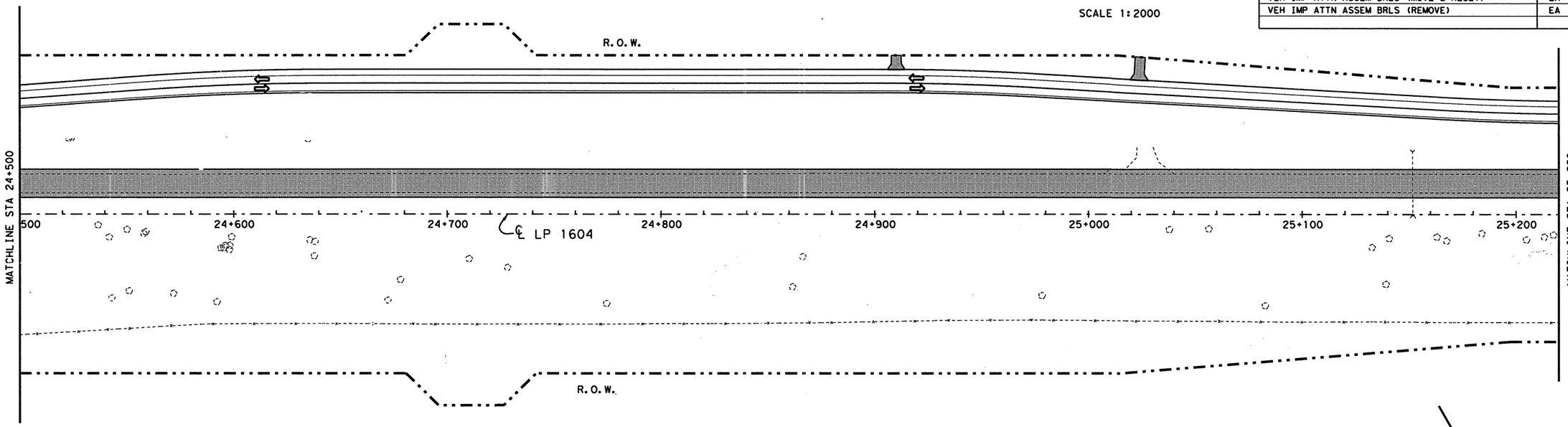


SCALE 1:2000

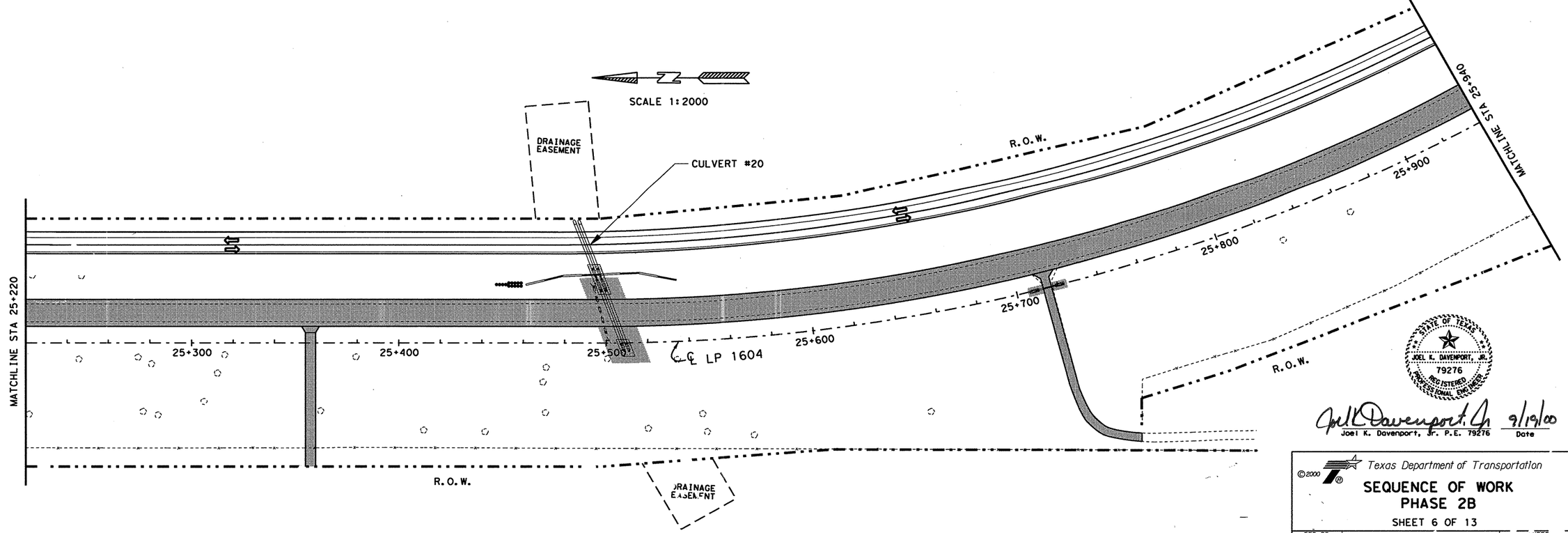


| PAVEMENT MARKING ESTIMATED QUANTITIES | | 2452-01-036 |
|---|---|---|
| ITEM | UNIT | QTY |
| WK ZN PAV MARK | | |
| REMOV (CL C) TY I A-A | EA | 480 |
| NON-REMOV (W) (SLD) 100 MM | M | 2580 |
| NON-REMOV (Y) (SLD) 100 MM | M | 2880 |

STATE OF TEXAS
JOEL K. DAVENPORT, JR.
79276
REGISTERED
PROFESSIONAL ENGINEER

Joel K. Davenport, Jr. 9/19/00

Joel K. Davenport, Jr. P.E. 79276 — Date

©2000

Texas Department of Transportation

# SEQUENCE OF WORK PHASE 2B

SHEET 6 OF 13

| FED. RD. DIV. NO. | FEDERAL AID PROJECT NO. | | SHEET NO. |
|---|---|---|---|
| 6 | NH 2CO( 704), ETC. | | 97 |
| STATE | DIST. | COUNTY | |
| TEXAS | 15 | BEXAR | |
| CONT. | SECT. | JOB | HIGHWAY NO. |
| 2452 | 01 | 036, ETC | 1604 |

FILE: t:\roadesign\ip1604fm471-90\sow\phase2\sow2b06.dgn 15 SEP 2000
LEVEL DISPLAYED
1 2 3 4 5 6 7 8 9 10 11 12 13 14 15 16 17 18 19 20 21 22 23 24 25 26 27 28 29 30 31 32
32 45 55 63 70 85 94 04 12 24 34 44 54 64 74 84 94 05 15 25 35 45 55 65 75 85 95 60 63

Plotted on: 8/25/2005
Design Filename: T:\AO\Design\lp1604fm471-90\PD_Phase2B06det.dgn
FILE T:\AO\Design\lp1604fm471-90\PD_Phase2_change_order_mylars\submittal\plansheets\TCP\dove\phase2B06det.dgn
LEVEL DISPLAYED

DRAINAGE & ROADWAY CONSTRUCTION
CONSTRUCTION DETOUR
TRAFFIC FLOW DIRECTION
V.I.A. ASSEMBLY ( 14 BARRELS EACH LOCATION )

SCALE 1:2000

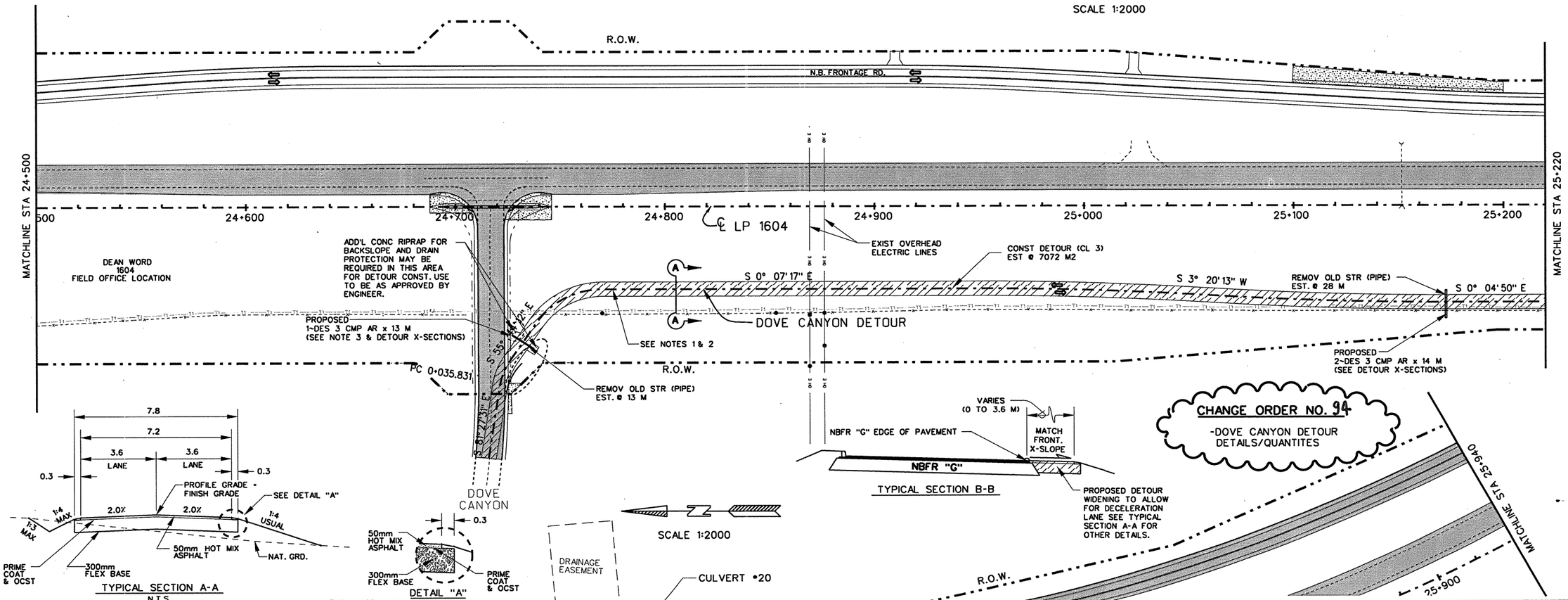





TYPICAL SECTION A-A
N.T.S.
(SEE DETOUR PROFILE AND X-SECTIONS FOR FURTHER DETAILS)




DETAIL "A"




TYPICAL SECTION B-B

SCALE 1:2000

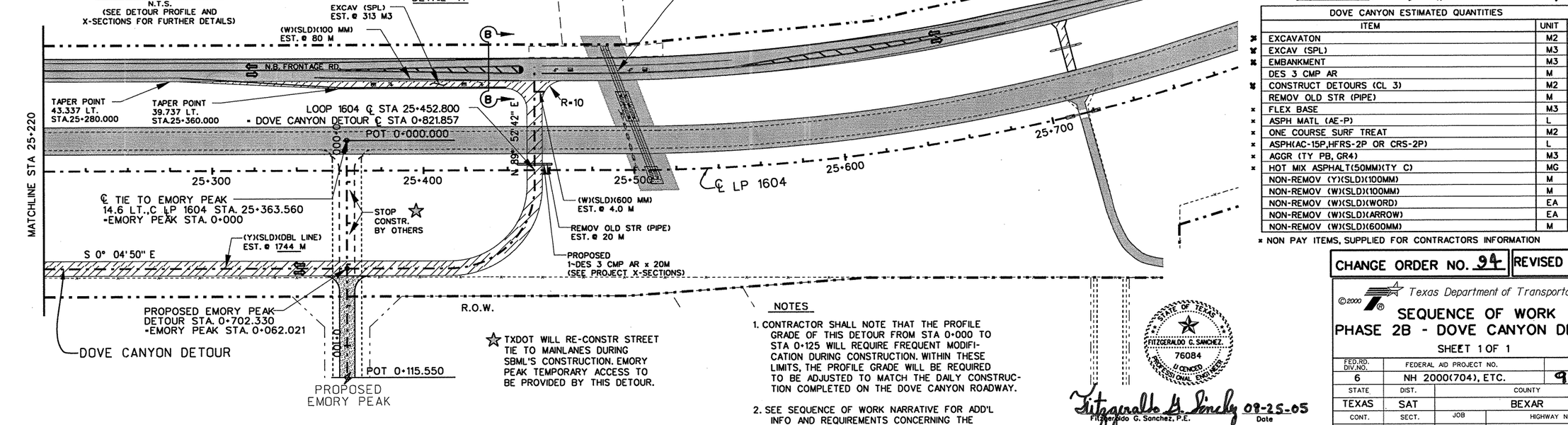


☆ TXDOT WILL RE-CONSTR STREET TIE TO MAINLANES DURING SBML'S CONSTRUCTION. EMORY PEAK TEMPORARY ACCESS TO BE PROVIDED BY THIS DETOUR.

NOTES

1. CONTRACTOR SHALL NOTE THAT THE PROFILE GRADE OF THIS DETOUR FROM STA 0+000 TO STA 0+125 WILL REQUIRE FREQUENT MODIFICATION DURING CONSTRUCTION. WITHIN THESE LIMITS, THE PROFILE GRADE WILL BE REQUIRED TO BE ADJUSTED TO MATCH THE DAILY CONSTRUCTION COMPLETED ON THE DOVE CANYON ROADWAY.
2. SEE SEQUENCE OF WORK NARRATIVE FOR ADD'L INFO AND REQUIREMENTS CONCERNING THE CONSTRUCTION OF THIS DETOUR.

**CHANGE ORDER NO. 94**
-DOVE CANYON DETOUR DETAILS/QUANTITES




| DOVE CANYON ESTIMATED QUANTITIES | | | 2452-01-036 |
|---|---|---|---|
| | ITEM | UNIT | QTY |
| ✖ | EXCAVATON | M2 | 7357 |
| ✖ | EXCAV (SPL) | M3 | 313 |
| ✖ | EMBANKMENT | M3 | 995 |
| | DES 3 CMP AR | M | 61 |
| ✖ | CONSTRUCT DETOURS (CL 3) | M2 | 7072 |
| | REMOV OLD STR (PIPE) | M | 61 |
| × | FLEX BASE | M3 | 2122 |
| × | ASPH MATL (AE-P) | L | 6365 |
| × | ONE COURSE SURF TREAT | M2 | 7072 |
| × | ASPH(AC-15P,HFRS-2P OR CRS-2P) | L | 9618 |
| × | AGGR (TY PB, GR4) | M3 | 64 |
| × | HOT MIX ASPHALT(50MM)(TY C) | MG | 831 |
| | NON-REMOV (Y)(SLD)(100MM) | M | 1744 |
| | NON-REMOV (W)(SLD)(100MM) | M | 80 |
| | NON-REMOV (W)(SLD)(WORD) | EA | 2 |
| | NON-REMOV (W)(SLD)(ARROW) | EA | 2 |
| | NON-REMOV (W)(SLD)(600MM) | M | 4.0 |

× NON PAY ITEMS, SUPPLIED FOR CONTRACTORS INFORMATION

CHANGE ORDER NO. 94 | REVISED SHEET

©2000
Texas Department of Transportation

# SEQUENCE OF WORK
# PHASE 2B - DOVE CANYON DETOUR

SHEET 1 OF 1

| FED.RD. DIV.NO. | FEDERAL AID PROJECT NO. | | SHEET NO. |
|---|---|---|---|
| 6 | NH 2000(704), ETC. | | 97A |
| STATE | DIST. | COUNTY | |
| TEXAS | SAT | BEXAR | |
| CONT. | SECT. | JOB | HIGHWAY NO. |
| 2452 | 01 | 036,ETC | LP 1604 |

STATE OF TEXAS
FITZGERALDO G. SANCHEZ
76084
LICENSED PROFESSIONAL ENGINEER

Fitzgeraldo G. Sanchez 08-25-05
Fitzgeraldo G. Sanchez, P.E. Date

8-25-05

Plotted on: 01/26/2004

Design Filename: p:\52\2011\design\civil\plansheets\tcp\phase2b06.dgn

| FILE | p:\52\2011\design\civil\plansheets\tcp\phase2b06.dgn | 01/26/2004 |
|---|---|---|
| LEVEL | 1 2 3 4 5 6 7 8 9 10 11 12 13 14 15 16 17 18 19 20 21 22 23 24 25 26 27 28 29 30 31 32 | |
| DISPLAYED | 33 34 35 36 37 38 39 40 41 42 43 44 45 46 47 48 49 50 51 52 53 54 55 56 57 58 59 60 61 62 63 | |

DRAINAGE & ROADWAY CONSTRUCTION
CONSTRUCTION DETOUR
PROPERTY ACCESS (TEMPORARY)
TRAFFIC FLOW DIRECTION
V.I.A. ASSEMBLY (14 BARRELS EACH LOCATION)

SCALE 1:2000

| SEQUENCE OF WORK ESTIMATED QUANTITIES | | 2452-01-036 |
|---|---|---|
| ITEM | UNIT | QTY |
| CONST DETOURS (CL ) | M2 | 105 |
| CMP AR (GAL STL DES 3) | M | 9.4 |
| SET (TY II) (DES 3) (CMP) (1:6) | EA | 2 |
| | | |

PC 6+564.265
PT 6+647.825
R.O.W.
Ⓐ EST @ 721M
Ⓒ EST @ 1442M
PC 6+911.409
PT 6+980.621
NBFR CL STA 6+980.62
1.2 RT
PC 7+171.823
NBFR CL STA 7+171.82
1.2
NBFR CL STA 6+564.26
1.2 RT
NBFR CL STA 6+647.82
1.2 RT
EST @ 721M Ⓐ
N.B. FRONTAGE RD.
NBFR CL STA 6+911.41
1.2 RT
6+600 6+700 6+800 6+900 7+000 7+100 7+200
S.B. MAIN LANES
MATCHLINE STA 24+500
MATCHLINE STA 25+220
24+500 24+600 24+700 24+800 24+900 25+000 25+100 25+200
℄ LP 1604
DOVE CANYON RD
PT 0+083.645
DOVE CANYON RD DETOUR
(SEE DOVE CANYON DETOUR SHEETS FOR
MORE DETAILS AND RELATED PAY ITEMS)
PC 0+364.566
PRC 0+461.372
0+100 0+200 0+300 0+400 0+500
S 44° 55' 46" E
S 0° 07' 58" E
R.O.W.
PC 0+032.179
PT 0+051.905
PC 0+060.190
POT 0+000.000
S 81° 27' 30" E
0+000 0+100

**CHANGE ORDER NO. 63**

-SEQUENCE OF WORK DETAILS
-ADDED DOVE CANYON RD DETOUR

SCALE 1:2000

EST @ 321M Ⓐ
EST @ 917M Ⓒ
7+900
EST @ 370M Ⓐ
MATCHLINE STA 25+940
25+900
25+800
25+700
25+600
R.O.W.
DRAINAGE EASEMENT
NBFR CL STA 7+483.26
1.2 RT
PC 7+483.260
EST @ 253M Ⓒ
EST @ 31M Ⓓ
EST @ 90M Ⓚ
CMP AR (DES 3)
W/ SET'S 1:6 (TEMP)
EST @ 9.4 M
7+700 7+600 7+500
NBFR CL STA 7+241.04
1.2 RT
PT 7+241.035
Ⓐ EST @ 226M
Ⓒ EST @ 452M
N.B. FRONTAGE RD.
7+300 7+400
EST @ 226M Ⓐ
EST @ 185M Ⓒ
EST @ 26M Ⓓ
POT 0+854.403
S 89° 52' 43" W
0+800
CONST DETOUR (CL 3)
EST @ 105 M2
S.B. MAIN LANES
MATCHLINE STA 25+220
25+300 25+400 25+500
℄ LP 1604
PT 0+803.610
DOVE CANYON RD DETOUR
(SEE DOVE CANYON DETOUR SHEETS FOR
MORE DETAILS AND RELATED PAY ITEMS)
PROPERTY ACCESS (TEMP)
CULVERT #20
S 0° 06' 59" E
0+600 0+700
PT 0+558.808
PC 0+740.774
R.O.W.
DRAINAGE EASEMENT

| PAVEMENT MARKING ESTIMATED QUANTITIES | | 2452-01-036 |
|---|---|---|
| ITEM | UNIT | QTY |
| WK ZN PAV MARK | | |
| REMOV (CL B) TY I-C | EA | |
| NON-REMOV (W) (SLD) 100 MM | M | 2675 |
| NON-REMOV (W) (ARROW) | EA | 2 |
| NON-REMOV (W) (WORD) | EA | 2 |
| NON-REMOV (Y) (MED NOSE) | EA | 1 |
| NON-REMOV (Y) (SLD) 100 MM | M | 3249 |
| NON-REMOV (Y) (SLD) 600 MM | M | 57 |

WRK ZN PAV MRK LEGEND

Ⓐ NON-REMOV (W) (SLD) (100mm)
Ⓑ NON-REMOV (W) (SLD) (600mm)
Ⓒ NON-REMOV (Y) (SLD) (100mm)
Ⓓ NON-REMOV (Y) (SLD) (600mm)
Ⓚ NON-REMOV (W) (ARROW)
Ⓛ NON-REMOV (W) (WORD)
Ⓜ NON-REMOV (Y) (MED NOSE)

REPLACEMENT SHEET

CHANGE ORDER NO. 63

555 EAST RAMSEY SAN ANTONIO TEXAS 78216
PHONE (210)375-9000
FAX (210)375-9010
PAPE-DAWSON ENGINEERS
CIVIL & ENVIRONMENTAL
STATE OF TEXAS
J. KENT O'BRIEN
64398
LICENSED
PROFESSIONAL ENGINEER
J. KENT O'BRIEN P.E.
1/27/2004
DATE

©2000
Texas Department of Transportation

# SEQUENCE OF WORK
## PHASE 2B

SHEET 6 OF 8

| FED. RD. DIV. NO. | FEDERAL AID PROJECT NO. | | SHEET NO. |
|---|---|---|---|
| 6 | NH 2000(704), ETC. | | 97A |
| STATE | DIST. | COUNTY | |
| TEXAS | SAT | BEXAR | |
| CONT. | SECT. | JOB | HIGHWAY NO. |
| 2452 | 01 | 036, ETC | LP 1604 |

Plotted on: 6/14/2005

Design Filename: t:\ao\design\lp1604fm471-90\pd*phase2*change*order*mylars\submittal\plansheets\tcp\phase2b06.dgn

FILE t:\ao\design\lp1604fm471-90\pd*phase2*change*order*mylars\submittal\plansheets\tcp\phase2b06.dgn
LEVEL DISPLAYED
1 2 3 4 5 6 7 8 9 10 11 12 13 14 15 16 17 18 19 20 21 22 23 24 25 26 27 28 29 30 31 32
33 34 35 55 63 73 83 94 04 14 24 34 44 54 64 74 84 95 05 15 25 35 45 55 65 75 85 96 06 63

DRAINAGE & ROADWAY CONSTRUCTION
CONSTRUCTION DETOUR
PROPERTY ACCESS (TEMPORARY)
TRAFFIC FLOW DIRECTION
V.I.A. ASSEMBLY (14 BARRELS EACH LOCATION)

SCALE 1:2000

| SEQUENCE OF WORK ESTIMATED QUANTITIES | | 2452-01-036 |
|---|---|---|
| ITEM | UNIT | QTY |
| CONST DETOURS (CL 3) (300MM) | M2 | 214 |
| CMP AR (GAL STL DES 3) | M | 33.9 |
| SET (TY II) (DES 3) (CMP) (1:6) | EA | 2 |
| EXCAV (SPL) | M3 | 747 |
| EMBANK (ORD DENS) (TY B) (CL 2) | M3 | 747 |
| REMOV OLD STR (PIPE) | M | 33.9 |

PC 6+564.265
PT 6+647.825
R.O.W.
EST @ 721M (A)
EST @ 1442M (C)
PC 6+911.409
PT 6+980.621
NBFR CL STA 6+980.62 1.2 RT
PC 7+171.82
NBFR CL STA 7+171.82 1.2
NBFR CL STA 6+564.26 1.2 RT
NBFR CL STA 6+647.82 1.2 RT
EST @ 721M (A)
N.B. FRONTAGE RD.
NBFR CL STA 6+911.41 1.2 RT
6+600
6+700
6+800
6+900
7+000
7+100
7+200
S.B. MAIN LANES
MATCHLINE STA 24+500
MATCHLINE STA 25+220
24+500
24+600
24+700
24+800
℄ LP 1604
24+900
25+000
25+100
25+200
DOVE CANYON RD
63
R.O.W.

**CHANGE ORDER NO. 92**
- REVISED TEMP DRIVE
- ADDED / REVISED QUANTITIES

SCALE 1:2000

EST @ 321M (A)
EST @ 917M (C)
7+900
MATCHLINE STA 25+940
EST @ 370M (A)
7+800
R.O.W.
25+900
DRAINAGE EASEMENT
NBFR CL STA 7+483.26 1.2 RT
EST @ 253M (C)
EST @ 31M (D)
NBFR CL STA 7+241.04 1.2 RT
PT 7+241.035
PC 7+483.260
EST @ 226M (A)
EST @ 452M (C)
EST @ 90M (A)
7+700
CMP AR (DES 3) W/ SET'S 1:6 (TEMP) EST @ 33.9 M
EXCAV (SPL) EST @ 747 M3
7+600
EMBANK (TY B) (CL 2) EST @ 747 M3
7+500
7+400
7+300
N.B. FRONTAGE RD.
25+800
REMOV OLD STR (PIPE) EST @ 214 M2
25+700
CONST DETOUR (CL 3) (300MM) EST @ 214 M2
EST @ 226M (A)
EST @ 185M (C)
EST @ 26M (D)
S.B. MAIN LANES
MATCHLINE STA 25+220
25+300
25+400
25+500
25+600
℄ LP 1604
PT 0+803.610
DRIVEWAY WIDTH 9.75 M
1:6
1:6
CMP AR (DES 3)
PROPOSED DRIVEWAY X-SECTION
CULVERT #20
R.O.W.
DRAINAGE EASEMENT

| PAVEMENT MARKING ESTIMATED QUANTITIES | | 2452-01-036 |
|---|---|---|
| ITEM | UNIT | QTY |
| WK ZN PAV MARK | | |
| REMOV (CL B) TY I-C | EA | |
| NON-REMOV (W) (SLD) 100 MM | M | 2675 |
| NON-REMOV (W) (ARROW) | EA | 2 |
| NON-REMOV (W) (WORD) | EA | 2 |
| NON-REMOV (Y) (MED NOSE) | EA | 1 |
| NON-REMOV (Y) (SLD) 100 MM | M | 3249 |
| NON-REMOV (Y) (SLD) 600 MM | M | 57 |

63

WRK ZN PAV MRK LEGEND
- (A) NON-REMOV (W) (SLD) (100mm)
- (B) NON-REMOV (W) (SLD) (600mm)
- (C) NON-REMOV (Y) (SLD) (100mm)
- (D) NON-REMOV (Y) (SLD) (600mm)
- (K) NON-REMOV (W) (ARROW)
- (L) NON-REMOV (W) (WORD)
- (M) NON-REMOV (Y) (MED NOSE)

REFERS TO CHANGES MADE AS PART OF CHANGE ORDER

STATE OF TEXAS
FITZGERALDO G. SANCHEZ
76084
REGISTERED PROFESSIONAL ENGINEER

Fitzgeraldo G. Sanchez 06-14-05
Fitzgeraldo G. Sanchez, P.E. Date

CHANGE ORDER NO. 92 | REVISED SHEET

©2000 Texas Department of Transportation

# SEQUENCE OF WORK PHASE 2B

SHEET 6 OF 8

| FED. RD. DIV. NO. | FEDERAL AID PROJECT NO. | | SHEET NO. |
|---|---|---|---|
| 6 | NH 2000(704), ETC. | | 97 AA |
| STATE | DIST. | COUNTY | |
| TEXAS | SAT | BEXAR | |
| CONT. | SECT. | JOB | HIGHWAY NO. |
| 2452 | 01 | 036, ETC | LP 1604 |

5-31-05

DRAINAGE & ROADWAY CONSTRUCTION

TRAFFIC FLOW DIRECTION

V.I.A. ASSEMBLY ( 14 BARRELS EACH LOCATION )

| SEQUENCE OF WORK ESTIMATED QUANTITIES | | 2452-01-036 |
|---|---|---|
| ITEM | UNIT | QTY |
| PORT CONC TRAF BAR (STKPL, INSTL & RETRN) | M | 114 |
| VEH IMP ATTN ASSEM BRLS (MOVE & RESET) | EA | 42 |
| VEH IMP ATTN ASSEM BRLS (REMOVE) | EA | 42 |
| | | |

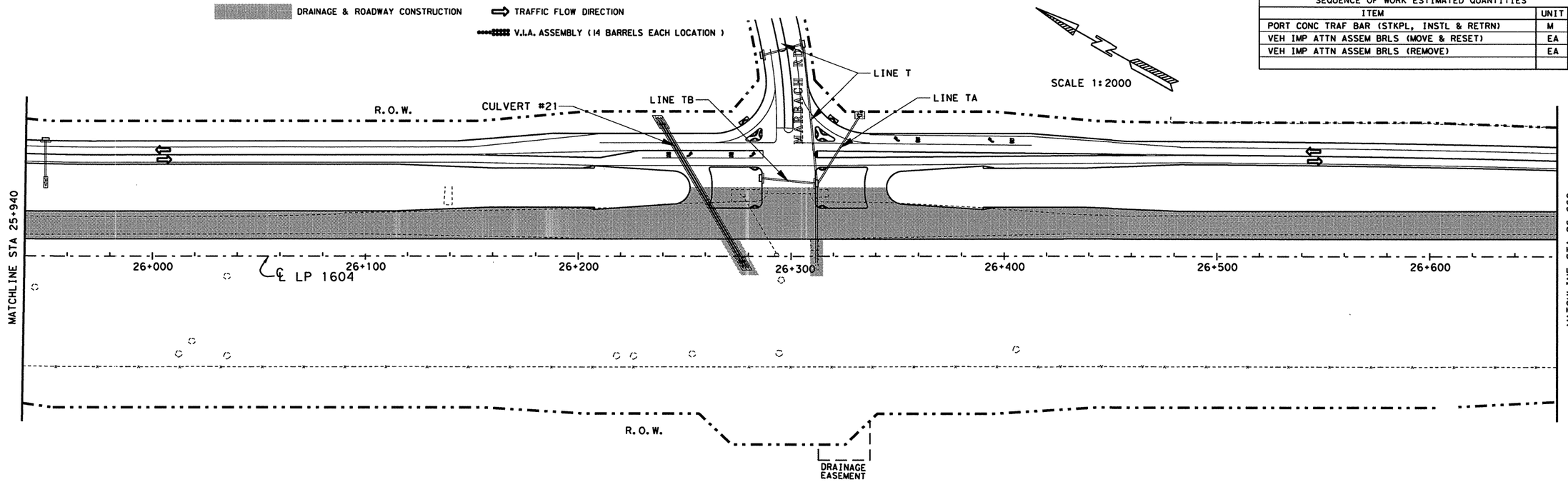


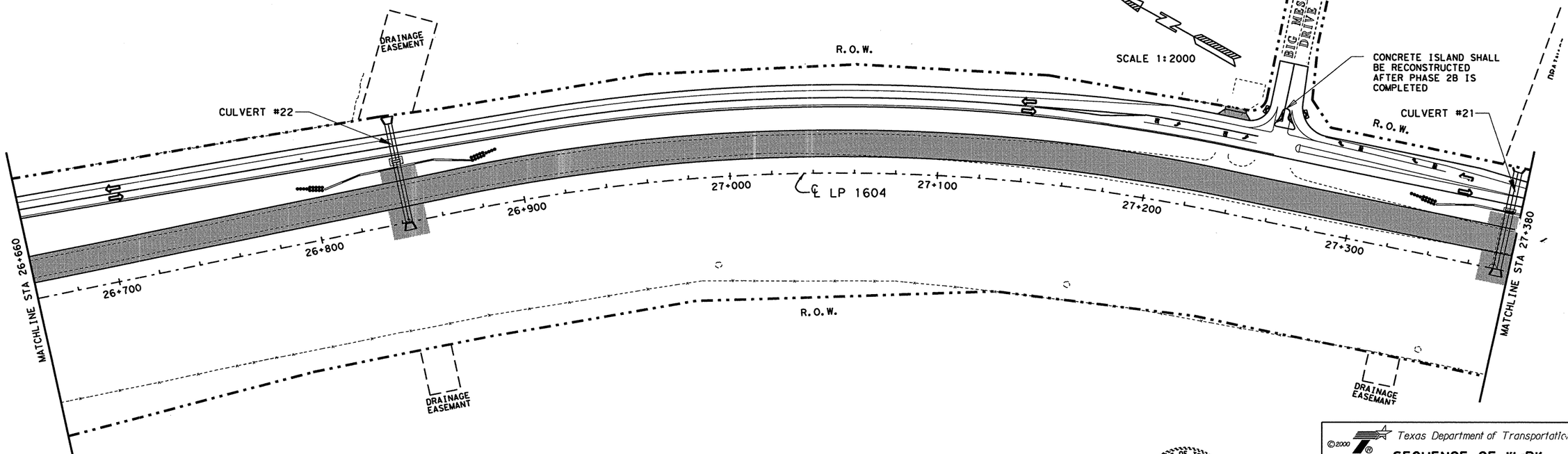


| WK ZN PAV MARKINGS ESTIMATED QUANTITIES | | 2452-01-038 |
|---|---|---|
| ITEM | UNIT | QTY |
| WK ZN PAV [illegible] | | |
| REMOV [illegible] B) TY II A-A | EA | 977 |
| NON-REMOV (W) (SLD) 100 MM | M | 3039 |
| NON-REMOV (W) (ARROW) | EA | 8 |
| [illegible]-REMOV (W) (WORD) | EA | - |
| [illegible]ON-REMOV (Y) (SLD) 100 MM | M | 2031 |

STATE OF TEXAS
JOEL K. DAVENPORT, JR.
79276
REGISTERED PROFESSIONAL ENGINEER

Joel K. Davenport, Jr. P.E. 79276 — 9/19/00 Date

©2000

Texas Department of Transportation

# SEQUENCE OF WORK PHASE 2B

SHEET 7 OF 13

| FED. RD. DIV. NO. | FEDERAL AID PROJECT NO. | | SHEET NO. |
|---|---|---|---|
| 6 | NH 2000(704), ETC. | | 98 |
| STATE | DIST. | COUNTY | |
| TEXAS | SAT | BEXAR | |
| CONT. | SECT. | JOB | HIGHWAY NO. |
| 2452 | 01 | 036,ETC | LP 1604 |

FILE: I:\roi\design\lp1604fm471-90\sow\phase ii\phase2b07.dgn 15 SEP 2000

LEVEL DISPLAYED 1 2 3 4 5 6 7 8 9 10 11 12 13 14 15 16 17 18 19 20 21 22 23 24 25 26 27 28 29 30 31 32 33 34 35 36 37 38 39 40 41 42 43 44 45 46 47 48 49 50 51 52 53 54 55 56 57 58 59 60 61 62 63

Plotted on: 01/26/2004

Design Filename: p:\52\2011\1\design\civil\plansheets\tcp\phase2b07.dgn

| FILE | p:\52\2011\1\design\civil\plansheets\tcp\phase2b07.dgn | 01/26/2004 |
|---|---|---|
| LEVEL | 1 2 3 4 5 6 7 8 9 10 11 12 13 14 15 16 17 18 19 20 21 22 23 24 25 26 27 28 29 30 31 32 | |
| DISPLAYED | 5 53 48 45 56 63 73 83 94 04 14 24 34 44 54 64 74 84 94 05 15 25 35 45 55 65 75 85 96 06 16 26 3 | |

DRAINAGE & ROADWAY CONSTRUCTION

TRAFFIC FLOW DIRECTION

V.I.A. ASSEMBLY (14 BARRELS EACH LOCATION)

| SEQUENCE OF WORK ESTIMATED QUANTITIES | | 2452-01-036 |
|---|---|---|
| ITEM | UNIT | QTY |
| PORT CONC TRAF BAR (STKPL, INSTL & RETRN) | M | 191.1 |
| VEH IMP ATTN ASSEM BRLS | EA | 42 |
| VEH IMP ATTN ASSEM BRLS (REMOVE) | EA | 42 |
| | | |

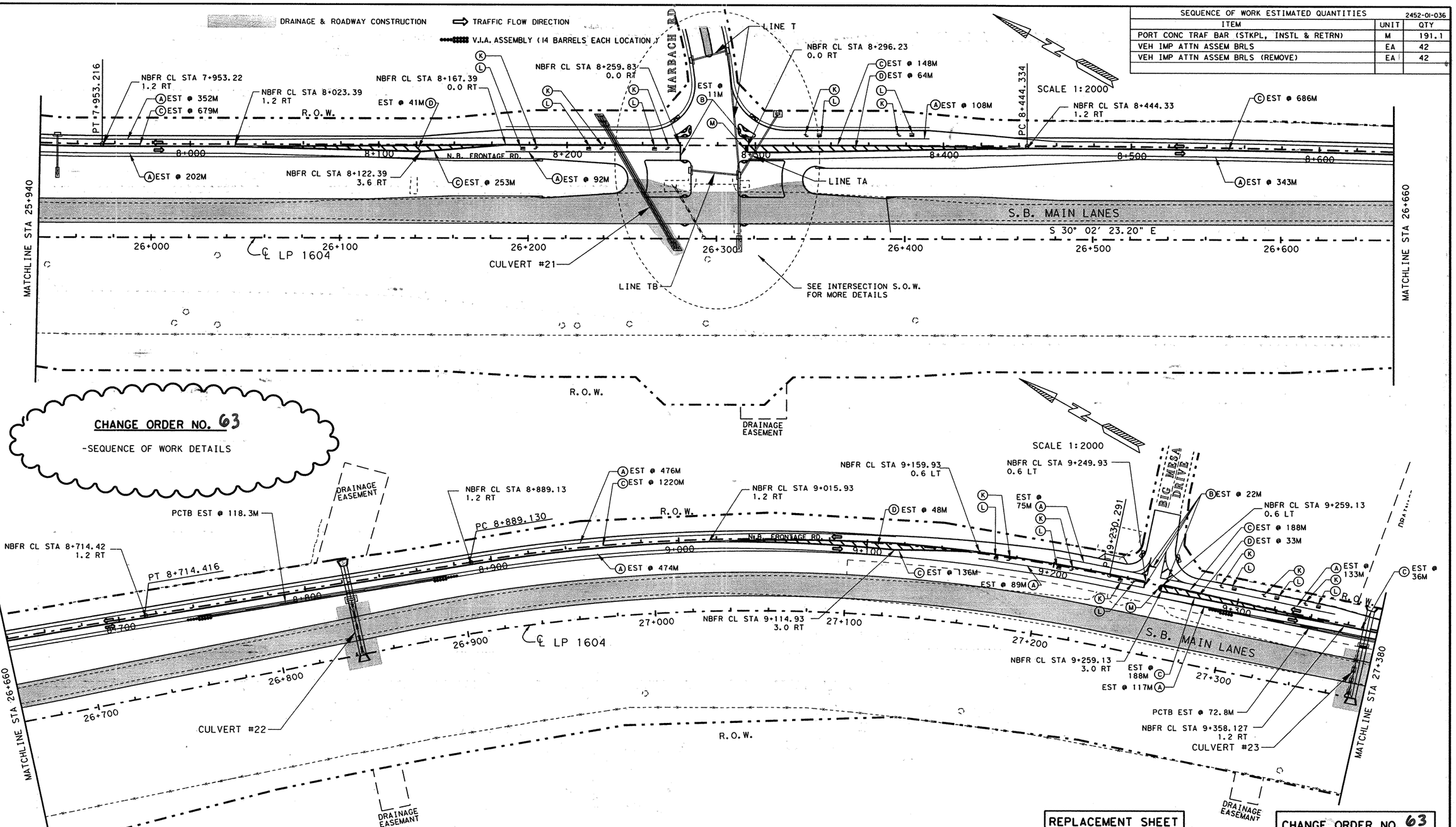


**CHANGE ORDER NO. 63**

-SEQUENCE OF WORK DETAILS

| WK ZN PAV MARKINGS ESTIMATED QUANTITIES | | 2452-01-038 |
|---|---|---|
| ITEM | UNIT | QTY |
| WK ZN PAV MARK | | |
| REMOV (CL B) TY I-C | EA | |
| NON-REMOV (W) (SLD) 100 MM | M | 2461 |
| NON-REMOV (W) (SLD) 600 MM | M | 33 |
| NON-REMOV (W) (ARROW) | EA | 11 |
| NON-REMOV (W) (WORD) | EA | 11 |
| NON-REMOV (Y) (MED NOSE) | EA | 2 |
| NON-REMOV (Y) (SLD) 100 MM | M | 3534 |
| NON-REMOV (Y) (SLD) 600 MM | M | 186 |
| | | |

WRK ZN PAV MRK LEGEND

- (A) NON-REMOV (W) (SLD) (100mm)
- (B) NON-REMOV (W) (SLD) (600mm)
- (C) NON-REMOV (Y) (SLD) (100mm)
- (D) NON-REMOV (Y) (SLD) (600mm)
- (K) NON-REMOV (W) (ARROW)
- (L) NON-REMOV (W) (WORD)
- (M) NON-REMOV (Y) (MED NOSE)

**REPLACEMENT SHEET**

**CHANGE ORDER NO. 63**

555 EAST RAMSEY SAN ANTONIO TEXAS 78216
PHONE (210)375-9000
FAX (210)375-9010
PAPE-DAWSON ENGINEERS
CIVIL & ENVIRONMENTAL
STATE OF TEXAS
J. KENT O'BRIEN
64398
LICENSED
PROFESSIONAL ENGINEER
J. KENT O'BRIEN P.E. 1/27/2004
DATE

©2000 Texas Department of Transportation

# SEQUENCE OF WORK PHASE 2B

SHEET 7 OF 8

| FED.RD. DIV.NO. | FEDERAL AID PROJECT NO. | SHEET NO. |
|---|---|---|
| 6 | NH 2000(704), ETC. | 98A |
| STATE | DIST. | COUNTY |
| TEXAS | SAT | BEXAR |
| CONT. | SECT. | JOB / HIGHWAY NO. |
| 2452 | 01 | 036, ETC / LP 1604 |

DRAINAGE & ROADWAY CONSTRUCTION ⇨ TRAFFIC FLOW DIRECTION

V.I.A. ASSEMBLY ( 14 BARRELS EACH LOCATION )

| SEQUENCE OF WORK ESTIMATED QUANTITIES | | 2452-01-036 |
|---|---|---|
| ITEM | UNIT | QTY |
| PORT CONC TRAF BAR (MOVE & RESET) | M | 130 |
| PORT CTB LPRF (MOVE & RESET) | M | 174 |
| VEH IMP ATTN ASSEM BRLS (MOVE & RESET) | EA | 42 |
| VEH IMP ATTN ASSEM BRLS (REMOVE) | EA | 42 |

SCALE 1:2000

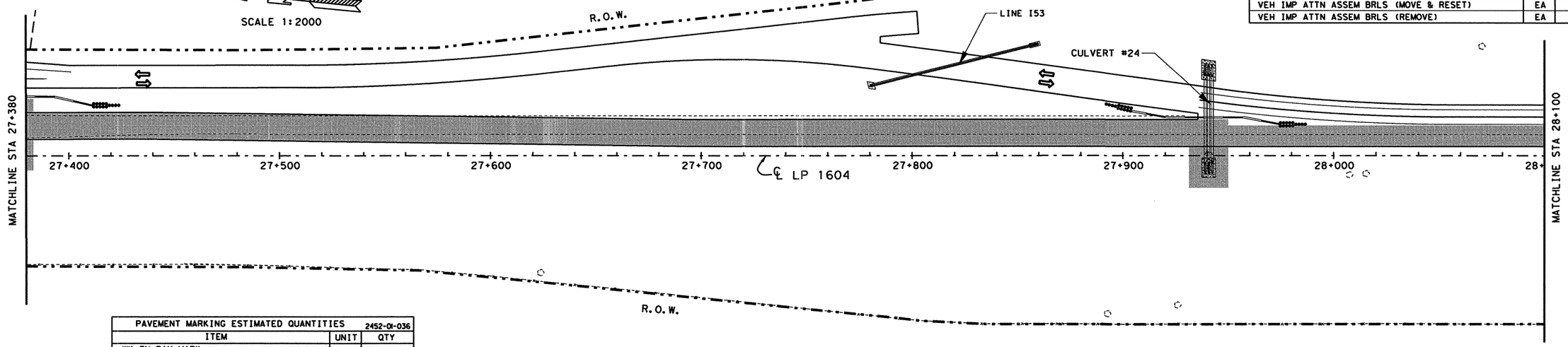


| PAVEMENT MARKING ESTIMATED QUANTITIES | | 2452-01-036 |
|---|---|---|
| ITEM | UNIT | QTY |
| WK ZN PAV MARK | | |
| REMOV (CL B) TY II A-A | EA | 391 |
| NON-REMOV (W) (SLD) 100 MM | M | 2424 |
| NON-REMOV (Y) (SLD) 100 MM | M | 2344 |

SCALE 1:2000

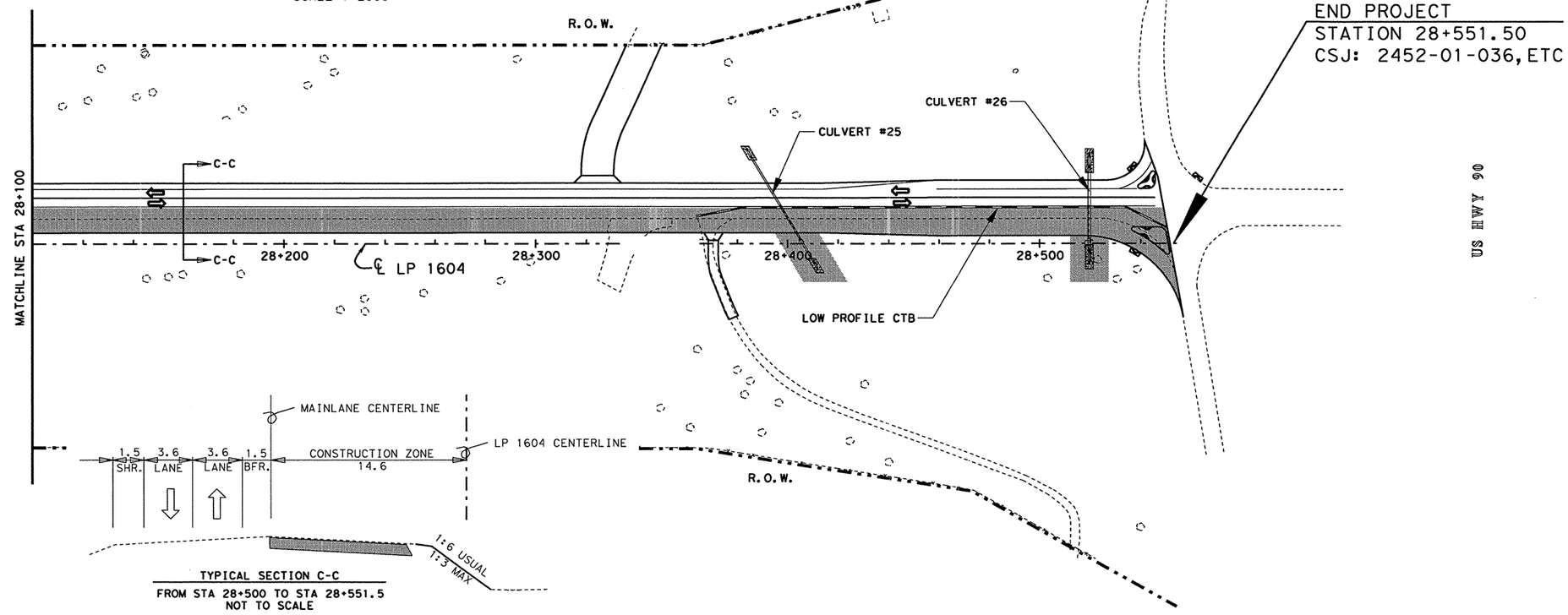


TYPICAL SECTION C-C
FROM STA 28+500 TO STA 28+551.5
NOT TO SCALE

STATE OF TEXAS
JOEL K. DAVENPORT, JR.
79276
REGISTERED
PROFESSIONAL ENGINEER

Joel K. Davenport, Jr. P.E. 79276 — 9/19/00 Date

©2000

Texas Department of Transportation

# SEQUENCE OF WORK
# PHASE 2B

SHEET 8 OF 13

| FED. RD. DIV. NO. | FEDERAL AID PROJECT NO. | | SHEET NO. |
|---|---|---|---|
| 6 | NH 2000(704), ETC. | | 99 |
| STATE | DIST. | COUNTY | |
| TEXAS | SAT | BEXAR | |
| CONT. | SECT. | JOB | HIGHWAY NO. |
| 2452 | 01 | 036, ETC | LP 1604 |

FILE: t:\govdesign\lp1604fm471-90\sow\phase2b08.dgn 15 SEP 2000
LEVEL DISPLAYED
1 2 3 4 5 6 7 8 9 10 11 12 13 14 15 16 17 18 19 20 21 22 23 24 25 26 27 28 29 30 31 32
33 34 35 55 63 70 88 94 04 14 24 34 44 54 64 74 84 94 05 15 25 35 45 55 65 75 85 96 1 8.3

Plotted on: 9/13/2004
Design Filename: T:\AO\Design\lp1604fm471-90\PD*Phase2*change*order*mylars\submittal\plansheets\VTCP\phase2B08.dgn

DRAINAGE & ROADWAY CONSTRUCTION ⇨ TRAFFIC FLOW DIRECTION

V.I.A. ASSEMBLY (14 BARRELS EACH LOCATION)

SCALE 1:2000

| SEQUENCE OF WORK ESTIMATED QUANTITIES | | 2452-01-036 |
|---|---|---|
| ITEM | UNIT | QTY |
| PORT CONC TRAF BAR (STKPL, INSTL & RETRN) | M | 145.6 |
| VEH IMP ATTN ASSEM BRLS | EA | 42 |
| VEH IMP ATTN ASSEM BRLS (REMOVE) | EA | 42 |
| | | |

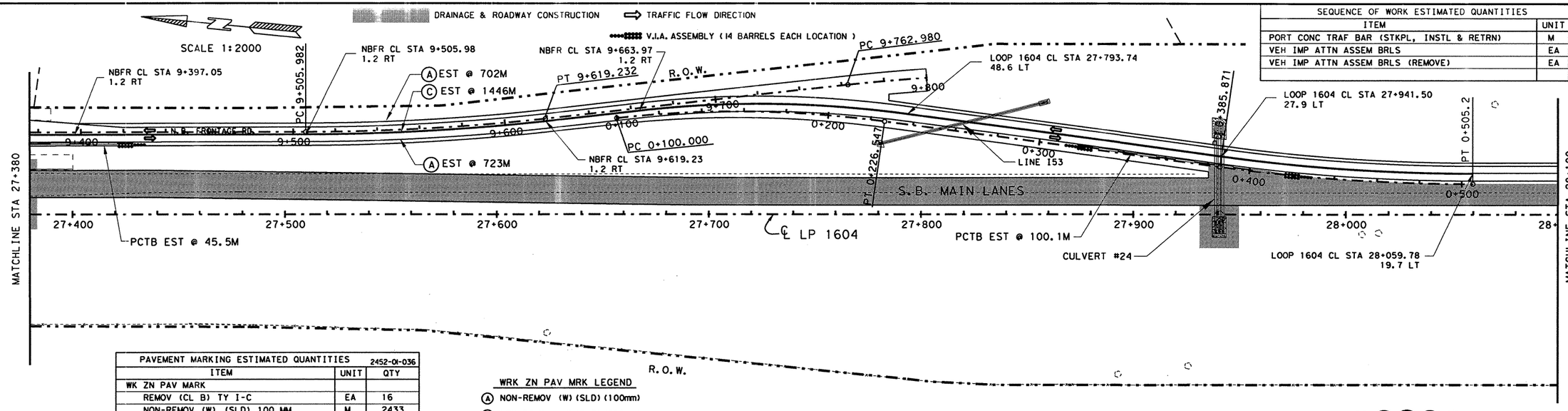


| PAVEMENT MARKING ESTIMATED QUANTITIES | | 2452-01-036 |
|---|---|---|
| ITEM | UNIT | QTY |
| WK ZN PAV MARK | | |
| REMOV (CL B) TY I-C | EA | 16 |
| NON-REMOV (W) (SLD) 100 MM | M | 2433 |
| NON-REMOV (W) (BRK) 100 MM | M | |
| NON-REMOV (W) (SLD) 600 MM | M | 7 |
| NON-REMOV (W) (ARROW) | EA | |
| NON-REMOV (W) (WORD) | EA | |
| NON-REMOV (Y) (SLD) 100 MM | M | 2326 |
| NON-REMOV (Y) (SLD) 600 MM | M | |
| | | |

WRK ZN PAV MRK LEGEND

- (A) NON-REMOV (W) (SLD) (100mm)
- (B) NON-REMOV (W) (SLD) (600mm)
- (C) NON-REMOV (Y) (SLD) (100mm)
- (D) NON-REMOV (Y) (SLD) (600mm)
- (K) NON-REMOV (W) (ARROW)
- (L) NON-REMOV (W) (WORD)
- (M) NON-REMOV (Y) (MED NOSE)
- (S) REMOV (CL B) TY I-C

**CHANGE ORDER NO. 63**

-SEQUENCE OF WORK DETAILS

SCALE 1:2000

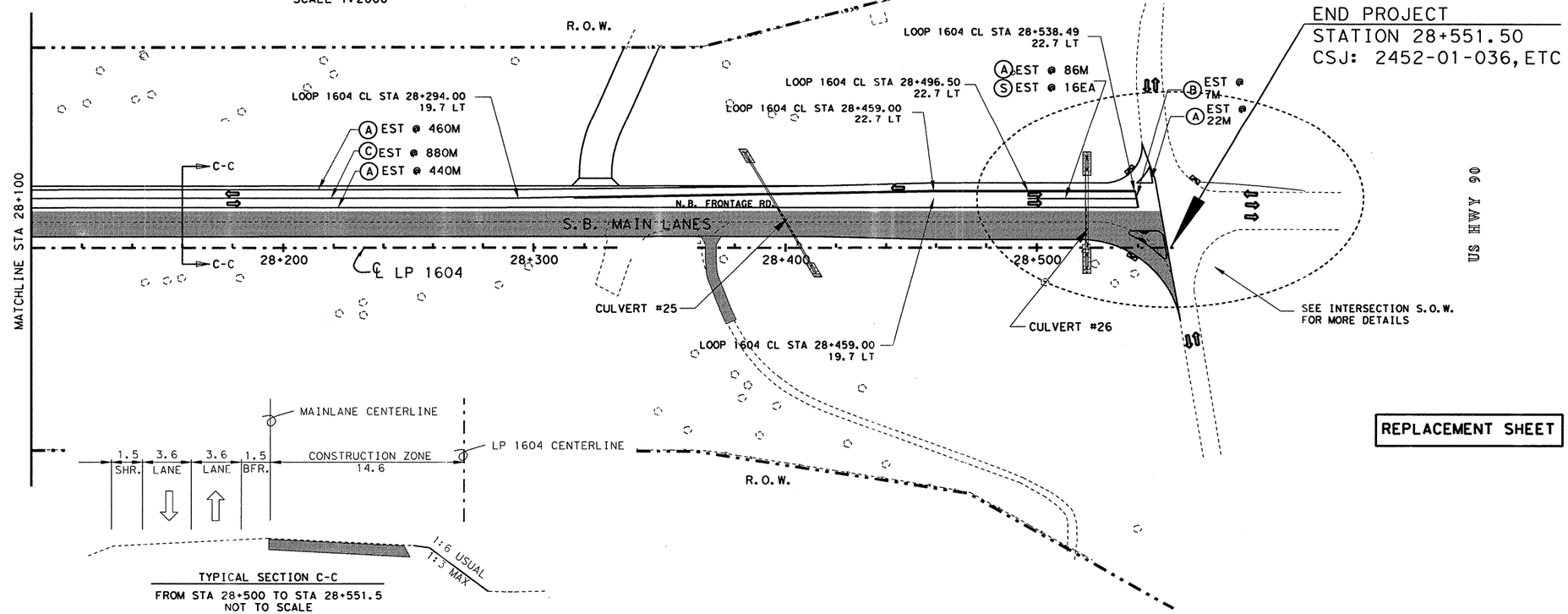


TYPICAL SECTION C-C
FROM STA 28+500 TO STA 28+551.5
NOT TO SCALE

STATE OF TEXAS
JEROME D. PAVLISKA
76075
REGISTERED PROFESSIONAL ENGINEER

Jerome D. Pavlisko, P.E. 9-9-04
Jerome D. Pavlisko, P.E. — Date

**REPLACEMENT SHEET** | **CHANGE ORDER NO. 63**

Texas Department of Transportation

# SEQUENCE OF WORK PHASE 2B

SHEET 8 OF 8

| FED. RD. DIV. NO. | FEDERAL AID PROJECT NO. | | SHEET NO. |
|---|---|---|---|
| 6 | NH 2000(704), ETC. | | 99 A |
| STATE | DIST. | COUNTY | |
| TEXAS | SAT | BEXAR | |
| CONT. | SECT. | JOB | HIGHWAY NO. |
| 2452 | 01 | 036, ETC | LP 1604 |

9-03-04

FILE T:\AO\Design\lp1604fm471-90\PD*Phase2*change*order*mylars\submittal\plansheets\VTCP\phase2B08.dgn
LEVEL DISPLAYED
1 2 3 4 5 6 7 8 9 10 11 20 21 30 31 40 51 60 71 80 90 202 222 242 252 262 272 282 303 313 32
33 34 35 36 37 38 39 40 41 42 43 44 45 46 47 48 49 50 51 52 53 54 55 56 57 58 59 60 61 62 63

Plotted on: 9/14/2004
Design Filename: T:\AO\Design\lp1604fm471-90\PD*Phase2*change*order*mylars\submitol\plansheets\TCP\ph2b*sowmi101.dgn
FILE T:\AO\Design\lp1604fm471-90\PD*Phase2*change*order*mylars\submitol\plansheets\TCP\ph2b*sowmi101.dgn
LEVEL DISPLAYED
1 2 3 4 5 6 7 8 9 10 11 12 13 14 15 16 17 18 19 20 21 22 23 24 25 26 27 28 29 30 31 32
33 34 35 36 37 38 39 40 41 42 43 44 45 46 47 48 49 50 51 62 53 54 55 56 57 58 59 60 61 62 63

DRAINAGE & ROADWAY CONSTRUCTION ⇨ TRAFFIC FLOW DIRECTION

V.I.A. ASSEMBLY (14 BARRELS EACH LOCATION)

| SEQUENCE OF WORK ESTIMATED QUANTITIES | | 2452-01-036 |
|---|---|---|
| ITEM | UNIT | QTY |
| FURN AND PLAC TPSL (CL 2) (150mm) | M2 | 398 |
| BRDCST SEED (PERM) (URBAN) (CLAY) | M2 | 398 |
| VEGETATIVE WATERING | KL | 115 |
| CONC CURB (TY A) | M | 122 |
| PORT CTB LPRF (TY I) (STKPL, INSTL & RETRN) | M | 61.0 |
| PORT CTB LPRF (TY II) (STKPL, INSTL & RETRN) | M | 12.2 |
| PORT CTB LPRF (TY I) (MOVE & RESET) | M | 61.0 |
| PORT CTB LPRF (TY II) (MOVE & RESET) | M | 12.2 |
| WRK ZN PAV MRK REMOV (CL A) TY II-A-A | EA | 294 |
| WRK ZN PAV MRK REMOV (CL B) TY I-C | EA | 178 |
| WRK ZN PAV MRK REMOV (CL C) TY W | EA | 531 |
| WRK ZN PAV MRK REMOV (CL C) TY Y | EA | 882 |
| WRK ZN PAV MRK NON-REMOV (W) (SLD) (600mm) | M | 32 |
| WRK ZN PAV MRK NON-REMOV (W) (ARROW) | EA | 5 |

SCALE 1:2000

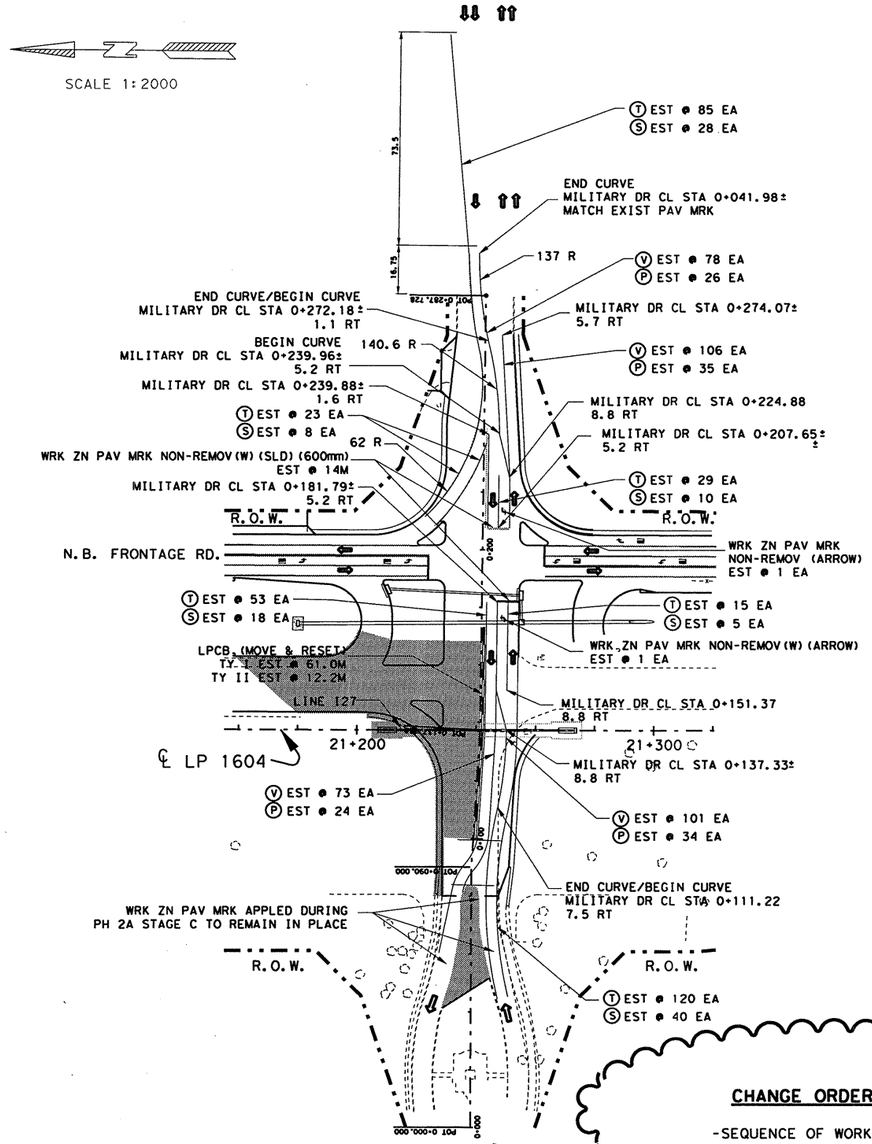


**CHANGE ORDER NO.**

-SEQUENCE OF WORK DETAILS

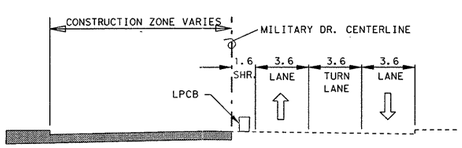


TYPICAL SECTION
MILITARY DRIVE - STAGE B
NOT TO SCALE

## STAGE B

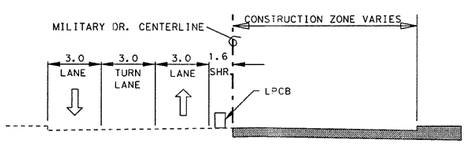


TYPICAL SECTION
MILITARY DRIVE - STAGE A
NOT TO SCALE

SCALE 1:2000

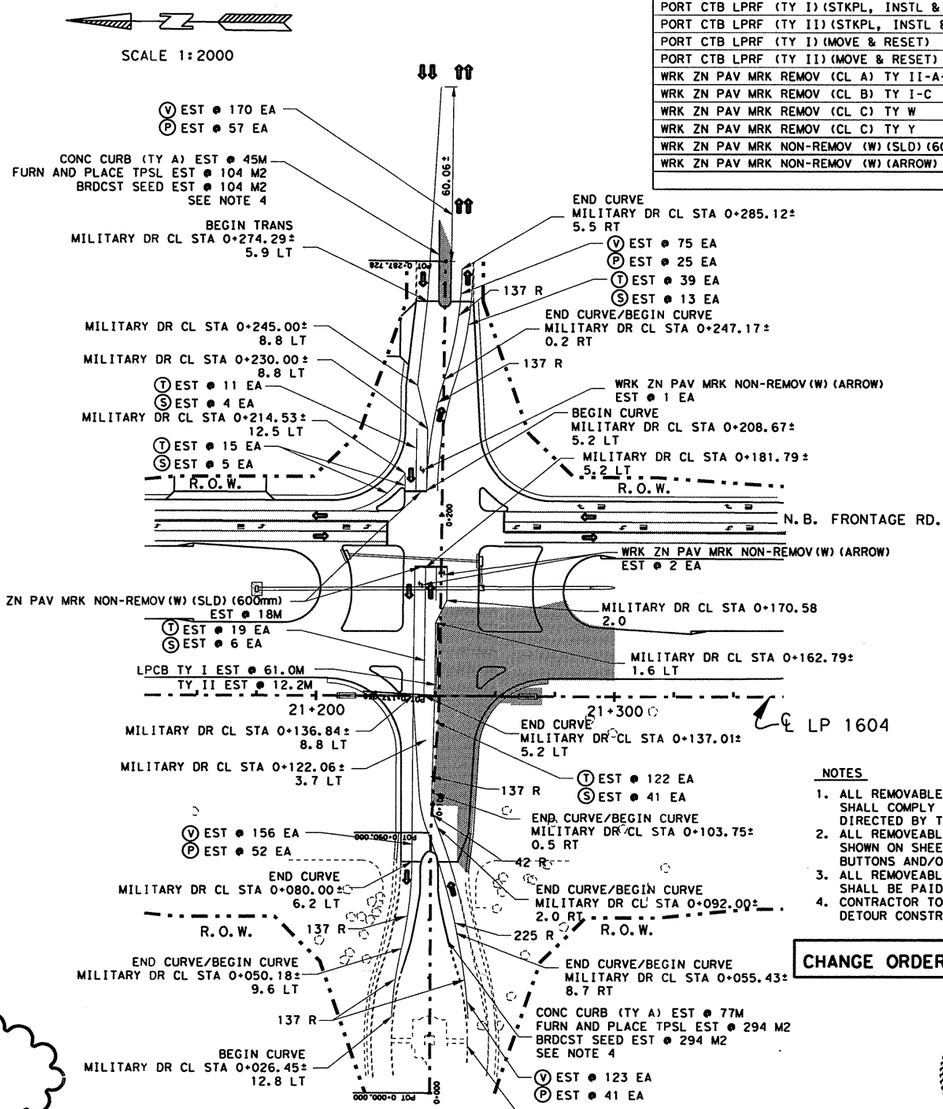


## STAGE A

**WRK ZN PAV MRK LEGEND**

(P) REMOV (TY II-A-A)
(S) REMOV (TY I-C)
(T) REMOV (TY W)
(V) REMOV (TY Y)

**NOTES**

1. ALL REMOVABLE WORK ZONE PAVEMENT MARKINGS SHALL COMPLY WITH THE T.M.U.T.C.D. OR BE AS DIRECTED BY THE ENGINEER.
2. ALL REMOVEABLE WORK ZONE PAVEMENT MARKINGS SHOWN ON SHEET SHALL CONSIST OF RAISED BUTTONS AND/OR REFLECTORS.
3. ALL REMOVEABLE WORK ZONE PAVEMENT MARKINGS SHALL BE PAID FOR BY THE EACH.
4. CONTRACTOR TO RESTORE ISLAND REMOVED DURING DETOUR CONSTRUCTION TO ORIGINAL LOCATION.

**CHANGE ORDER NO.____** **NEW SHEET**

STATE OF TEXAS
JEROME D. PAVLISKA
76075
REGISTERED PROFESSIONAL ENGINEER

Jerome D. Pavliska, P.E. 9-9-04
Jerome D. Pavliska, P.E. Date

©2000 Texas Department of Transportation

# INTERSECTION SEQUENCE OF WORK
## PHASE 2B
SHEET 1 OF 5

| FED.RD. DIV.NO. | FEDERAL AID PROJECT NO. | | SHEET NO. |
|---|---|---|---|
| 6 | NH 2000(704), ETC. | | 998 |
| STATE | DIST. | COUNTY | |
| TEXAS | SAT | BEXAR | |
| CONT. | SECT. | JOB | HIGHWAY NO. |
| 2452 | 01 | 036, ETC | LP 1604 |

9-03-04

Plotted on: 01/26/2004

Design Filename: p:\52\2011\design\civil\plansheets\tcp\ph2b#sow#pot01.dgn

DRAINAGE & ROADWAY CONSTRUCTION ⇨ TRAFFIC FLOW DIRECTION

V.I.A. ASSEMBLY (14 BARRELS EACH LOCATION)

| SEQUENCE OF WORK ESTIMATED QUANTITIES | | 2452-01-036 |
|---|---|---|
| ITEM | UNIT | QTY |
| PORT CTB LPRF (TY I) (STKPL, INSTL & RETRN) | M | 103.7 |
| PORT CTB LPRF (TY II) (STKPL, INSTL & RETRN) | M | 12.2 |
| PORT CTB LPRF (TY I) (MOVE & RESET) | M | 103.7 |
| PORT CTB LPRF (TY II) (MOVE & RESET) | M | 12.2 |
| WRK ZN PAV MRK REMOV (CL B) TY II-A-A | EA | 324 |
| WRK ZN PAV MRK REMOV (CL B) TY I-C | EA | 345 |
| WRK ZN PAV MRK REMOV (CL C) TY W | EA | 1038 |
| WRK ZN PAV MRK REMOV (CL C) TY Y | EA | 972 |
| WRK ZN PAV MRK NON-REMOV (W) (SLD) (600mm) | M | 28 |
| WRK ZN PAV MRK NON-REMOV (W) (ARROW) | EA | 7 |
| | | |
| | | |

CHANGE ORDER NO. 63

-SEQUENCE OF WORK DETAILS

SCALE 1:2000

POTRANCO RD. CENTERLINE — CONSTRUCTION ZONE VARIES

3.6 LANE | 3.6 TURN LANE | 3.6 LANE | 1.5 SHR. | LPCB

TYPICAL SECTION
POTRANCO ROAD - STAGE A
NOT TO SCALE

128.14±

POTRANCO ROAD

END TRANSITION MATCH EXIST PVMT MARKINGS

PCT 20+460.955

END CURVE
POTRANCO RD CL STA 20+424.14±
5.6 LT

(T) EST @ 152 EA
(S) EST @ 51 EA

266.4 R

END CURVE
POTRANCO RD CL STA 20+426.58±
2.0 RT

(V) EST @ 130 EA
(P) EST @ 43 EA
(T) EST @ 65 EA
(S) EST @ 22 EA

BEGIN CURVE
POTRANCO RD CL STA 20+385.80±
8.4 LT

(V) EST @ 79 EA
(P) EST @ 26 EA

POTRANCO RD CL STA 20+357.90±
7.8 LT

END CURVE/BEGIN CURVE
POTRANCO RD CL STA 20+386.47±
1.0 LT

(T) EST @ 59 EA
(S) EST @ 20 EA

POTRANCO RD CL STA 20+346.03±
8.4 LT

370 R

BEGIN CURVE
POTRANCO RD CL STA 20+331.51±
5.1 LT

WRK ZN PAV MRK NON-REMOV (W) (ARROW)
EST @ 1 EA

POTRANCO RD CL STA 20+319.22±
12.3 LT

POTRANCO RD CL STA 20+324.04±
2.1 RT

WRK ZN PAV MRK NON-REMOV (W) (ARROW)
EST @ 1 EA

35 R

POTRANCO RD CL STA 20+297.05±
5.1 LT

WRK ZN PAV MRK NON-REMOV (W) (SLD) (600mm)
EST @ 7M

(T) EST @ 14 EA
(S) EST @ 5 EA

(T) EST @ 31 EA
(S) EST @ 10 EA

R.O.W.

R.O.W.

PT 20+280.133

N.B. FRONTAGE ROAD

WRK ZN PAV MRK NON-REMOV (W) (SLD) (600mm)
EST @ 7M

WRK ZN PAV MRK NON-REMOV (W) (ARROW)
EST @ 1 EA

END CURVE
POTRANCO RD CL STA 20+260.84±
8.7 LT

(T) EST @ 7 EA
(S) EST @ 2 EA

POTRANCO RD CL STA 20+246.60±
8.7 LT

POTRANCO RD CL STA 20+234.78±
5.1 LT

℄ LP 1604

266.4 R

22+500 — 22+600 — 22+700

END CURVE/BEGIN CURVE
POTRANCO RD CL STA 20+203.65±
6.3 LT

(V) EST @ 92 EA
(P) EST @ 31 EA

273.6 R

BEGIN CURVE
POTRANCO RD CL STA 20+181.47±
5.1 LT

LPCB
TY I EST @ 103.7M
TY II EST @ 12.2M

(T) EST @ 102 EA
(S) EST @ 34 EA

END CURVE/BEGIN CURVE
POTRANCO RD CL STA 20+155.72±
5.1 LT

(V) EST @ 204 EA
(P) EST @ 68 EA

370 R

R.O.W.

R.O.W.

(T) EST @ 90 EA
(S) EST @ 30 EA

STAGE A

END CURVE/BEGIN CURVE
POTRANCO RD CL STA 20+084.81±
1.4 LT

BEGIN CURVE
POTRANCO RD CL STA 20+058.44±
MATCH EXIST PAV MRK

PT 20+099.441

SCALE 1:2000

126.31±

POTRANCO ROAD

END TRANSITION MATCH EXIST PVMT MARKINGS

PCT 20+460.955

(T) EST @ 148 EA
(S) EST @ 49 EA

END CURVE
POTRANCO RD CL STA 20+422.26±
MATCH EXIST PAV MRK

(V) EST @ 68 EA
(P) EST @ 23 EA

366.4 R

(V) EST @ 126 EA
(P) EST @ 42 EA

POTRANCO RD CL STA 20+371.13±
1.6 RT

(T) EST @ 68 EA
(S) EST @ 23 EA

POTRANCO RD CL STA 20+355.25±
3.4 RT

END CURVE/BEGIN CURVE
POTRANCO RD CL STA 20+371.63±
5.1 RT

WRK ZN PAV MRK NON-REMOV (ARROW)
EST @ 1 EA

(T) EST @ 29 EA
(S) EST @ 10 EA

POTRANCO RD CL STA 20+338.90±
1.0 RT

BEGIN CURVE
POTRANCO RD CL STA 20+320.00±
8.7 RT

373.6 R

(T) EST @ 54 EA
(S) EST @ 18 EA

WRK ZN PAV MRK NON-REMOV (ARROW)
EST @ 1 EA

79 R

WRK ZN PAV MRK NON-REMOV (W) (SLD) (600mm)
EST @ 7M

POTRANCO RD CL STA 20+296.20±
21.9 LT

POTRANCO RD CL STA 20+297.12±
8.7 RT

R.O.W.

R.O.W.

PT 20+280.133

N.B. FRONTAGE ROAD

END CURVE
POTRANCO RD CL STA 20+260.78±
5.1 RT

WRK ZN PAV MRK NON-REMOV (W) (SLD) (600mm)
EST @ 7M

WRK ZN PAV MRK NON-REMOV (ARROW)
EST @ 1 EA

(T) EST @ 33 EA
(S) EST @ 11 EA

22+500 — ℄ LP 1604 — 22+600 — 22+700

795.6 R

(T) EST @ 38 EA
(S) EST @ 13 EA

POTRANCO RD CL STA 20+183.00±
8.7 RT

(V) EST @ 134 EA
(P) EST @ 45 EA

370 R

POTRANCO RD CL STA 20+152.89±
5.1 RT

LPCB (MOVE & RESET)
TY I EST @ 103.7M
TY II EST @ 12.2M

END CURVE/BEGIN CURVE
POTRANCO RD CL STA 20+148.37±
6.4 RT

POTRANCO RD CL STA 20+152.89±
5.1 RT

(V) EST @ 139 EA
(P) EST @ 46 EA

370 R

R.O.W.

R.O.W.

BEGIN CURVE/END CURVE
POTRANCO RD CL STA 20+126.44±
3.7 RT

370 R

(T) EST @ 102 EA
(S) EST @ 34 EA

(T) EST @ 46 EA
(S) EST @ 15 EA

STAGE B

BEGIN CURVE
POTRANCO RD CL STA 20+056.47±
MATCH EXIST PAV MRK

PT 20+099.441

TYPICAL SECTION
POTRANCO ROAD - STAGE B
NOT TO SCALE

CONSTRUCTION ZONE VARIES — POTRANCO RD. CENTERLINE

1.5 SHR. | LPCB | 3.6 LANE | 3.6 TURN LANE | 3.6 LANE

NOTES

1. ALL REMOVABLE WORK ZONE PAVEMENT MARKINGS SHALL COMPLY WITH THE T.M.U.T.C.D. OR BE AS DIRECTED BY THE ENGINEER.
2. ALL REMOVEABLE WORK ZONE PAVEMENT MARKINGS SHOWN ON SHEET SHALL CONSIST OF RAISED BUTTONS AND/OR REFLECTORS.
3. ALL REMOVEABLE WORK ZONE PAVEMENT MARKINGS SHALL BE PAID FOR BY THE EACH.

WRK ZN PAV MRK LEGEND

(P) REMOV (TY II-A-A)
(S) REMOV (TY I-C)
(T) REMOV (TY W)
(V) REMOV (TY Y)

CHANGE ORDER NO. 63

NEW SHEET

555 EAST RAMSEY SAN ANTONIO TEXAS 78216
PHONE (210)375-9000
FAX (210)375-9010
PAPE-DAWSON ENGINEERS
CIVIL & ENVIRONMENTAL
STATE OF TEXAS — J. KENT O'BRIEN — 64398 — LICENSED — PROFESSIONAL ENGINEER
J. KENT O'BRIEN P.E. — 1/27/2004 — DATE

©2000 Texas Department of Transportation

# INTERSECTION SEQUENCE OF WORK
## PHASE 2B
SHEET 2 OF 5

| FED.RD. DIV.NO. | FEDERAL AID PROJECT NO. | | SHEET NO. |
|---|---|---|---|
| 6 | NH 2000(704), ETC. | | 99 C |
| STATE | DIST. | COUNTY | |
| TEXAS | SAT | BEXAR | |
| CONT. | SECT. | JOB | HIGHWAY NO. |
| 2452 | 01 | 036, ETC | LP 1604 |

FILE: p:\52\2011\design\civil\plansheets\tcp\ph2b#sow#pot01.dgn 01/26/2004

LEVEL DISPLAYED: 1 2 3 4 5 6 7 8 9 10 11 12 13 14 15 16 17 18 19 20 21 22 23 24 25 26 27 28 29 30 31 32 33 34 35 36 37 38 39 40 41 42 43 44 45 46 47 48 49 50 51 52 53 54 55 56 57 58 59 60 61 62 63

Plotted on: 01/26/2004

Design Filename: pr\52\20\11\design\civil\plansheets\top\ph2b*sow*pot02.dgn

| FILE | pr\52\20\11\design\civil\plansheets\top\ph2b*sow*pot02.dgn | 01/26/2004 |
|---|---|---|
| LEVEL | 1 2 3 4 5 6 7 8 9 10 11 12 31 41 51 61 71 81 92 102 122 132 252 262 282 303 313 323 | |
| DISPLAYED | 3334353637383940414243444546474849505152535455565758596061 | 63 |

DRAINAGE & ROADWAY CONSTRUCTION ⇨ TRAFFIC FLOW DIRECTION

V.I.A. ASSEMBLY ( 14 BARRELS EACH LOCATION )

SCALE 1:2000

**CHANGE ORDER NO. 63**

-SEQUENCE OF WORK DETAILS

| SEQUENCE OF WORK ESTIMATED QUANTITIES | | 2452-01-036 |
|---|---|---|
| ITEM | UNIT | QTY |
| PORT CTB LPRF (TY I) (MOVE & RESET) | M | 79.3 |
| PORT CTB LPRF (TY II) (MOVE & RESET) | M | 24.4 |
| WRK ZN PAV MRK REMOV (CL B) TY II-A-A | EA | 208 |
| WRK ZN PAV MRK REMOV (CL B) TY I-C | EA | 170 |
| WRK ZN PAV MRK REMOV (CL C) TY W | EA | 560 |
| WRK ZN PAV MRK REMOV (CL C) TY Y | EA | 641 |
| WRK ZN PAV MRK NON-REMOV (W) (SLD) (600mm) | M | 22 |
| WRK ZN PAV MRK NON-REMOV (W) (ARROW) | EA | 3 |
| WRK ZN PAV MRK NON-REMOV (Y) (MED NOSE) | EA | 1 |
| | | |
| | | |

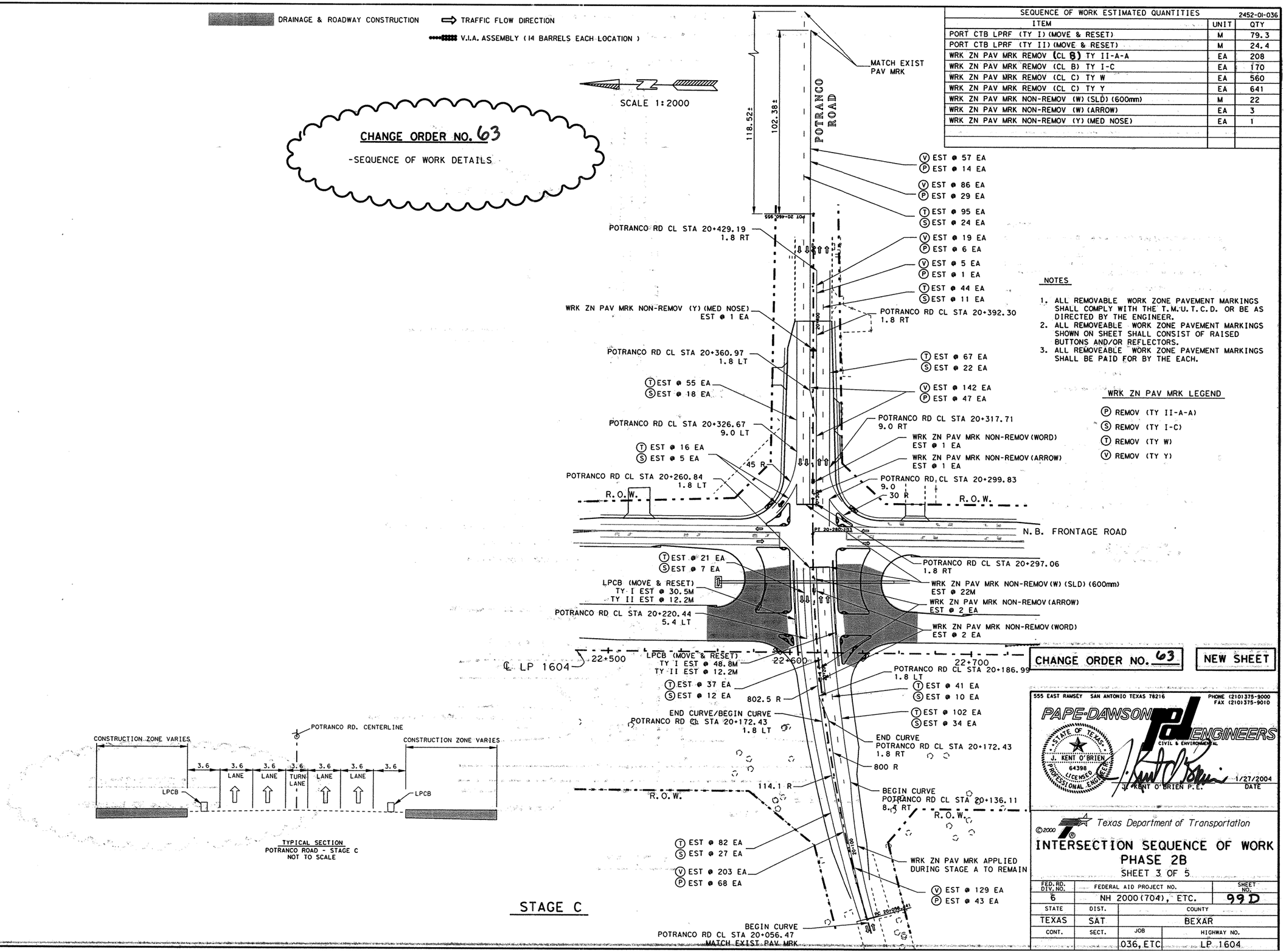


NOTES

1. ALL REMOVABLE WORK ZONE PAVEMENT MARKINGS SHALL COMPLY WITH THE T.M.U.T.C.D. OR BE AS DIRECTED BY THE ENGINEER.
2. ALL REMOVEABLE WORK ZONE PAVEMENT MARKINGS SHOWN ON SHEET SHALL CONSIST OF RAISED BUTTONS AND/OR REFLECTORS.
3. ALL REMOVEABLE WORK ZONE PAVEMENT MARKINGS SHALL BE PAID FOR BY THE EACH.

WRK ZN PAV MRK LEGEND

- P REMOV (TY II-A-A)
- S REMOV (TY I-C)
- T REMOV (TY W)
- V REMOV (TY Y)




TYPICAL SECTION
POTRANCO ROAD - STAGE C
NOT TO SCALE

STAGE C

CHANGE ORDER NO. 63 | NEW SHEET

555 EAST RAMSEY SAN ANTONIO TEXAS 78216 PHONE (210)375-9000 FAX (210)375-9010
PAPE-DAWSON ENGINEERS CIVIL & ENVIRONMENTAL
STATE OF TEXAS J. KENT O'BRIEN 64398 LICENSED PROFESSIONAL ENGINEER
J. KENT O'BRIEN P.E. 1/27/2004 DATE

©2000 Texas Department of Transportation

# INTERSECTION SEQUENCE OF WORK PHASE 2B

SHEET 3 OF 5

| FED.RD. DIV.NO. | FEDERAL AID PROJECT NO. | | SHEET NO. |
|---|---|---|---|
| 6 | NH 2000(704), ETC. | | 99D |
| STATE | DIST. | COUNTY | |
| TEXAS | SAT | BEXAR | |
| CONT. | SECT. | JOB | HIGHWAY NO. |
| | | 036, ETC | LP 1604 |

Plotted on: 01/26/2004

Design Filename: p:\52\20\11\design\civil\plansheets\tcp\ph2b*sowmar01.dgn

FILE p:\52\20\11\design\civil\plansheets\tcp\ph2b*sowmar01.dgn 01/26/2004
LEVEL 1 2 3 4 5 6 7 8 9 10 11 12 13 14 15 16 17 18 19 20 21 22 23 24 25 26 27 28 29 30 31 32
DISPLAYED 33 34 35 36 37 38 39 40 41 42 43 44 45 46 47 48 49 50 51 52 53 54 55 56 57 58 59 60 61 62 63

DRAINAGE & ROADWAY CONSTRUCTION ⇨ TRAFFIC FLOW DIRECTION

V.I.A. ASSEMBLY (14 BARRELS EACH LOCATION)

SCALE 1:2000

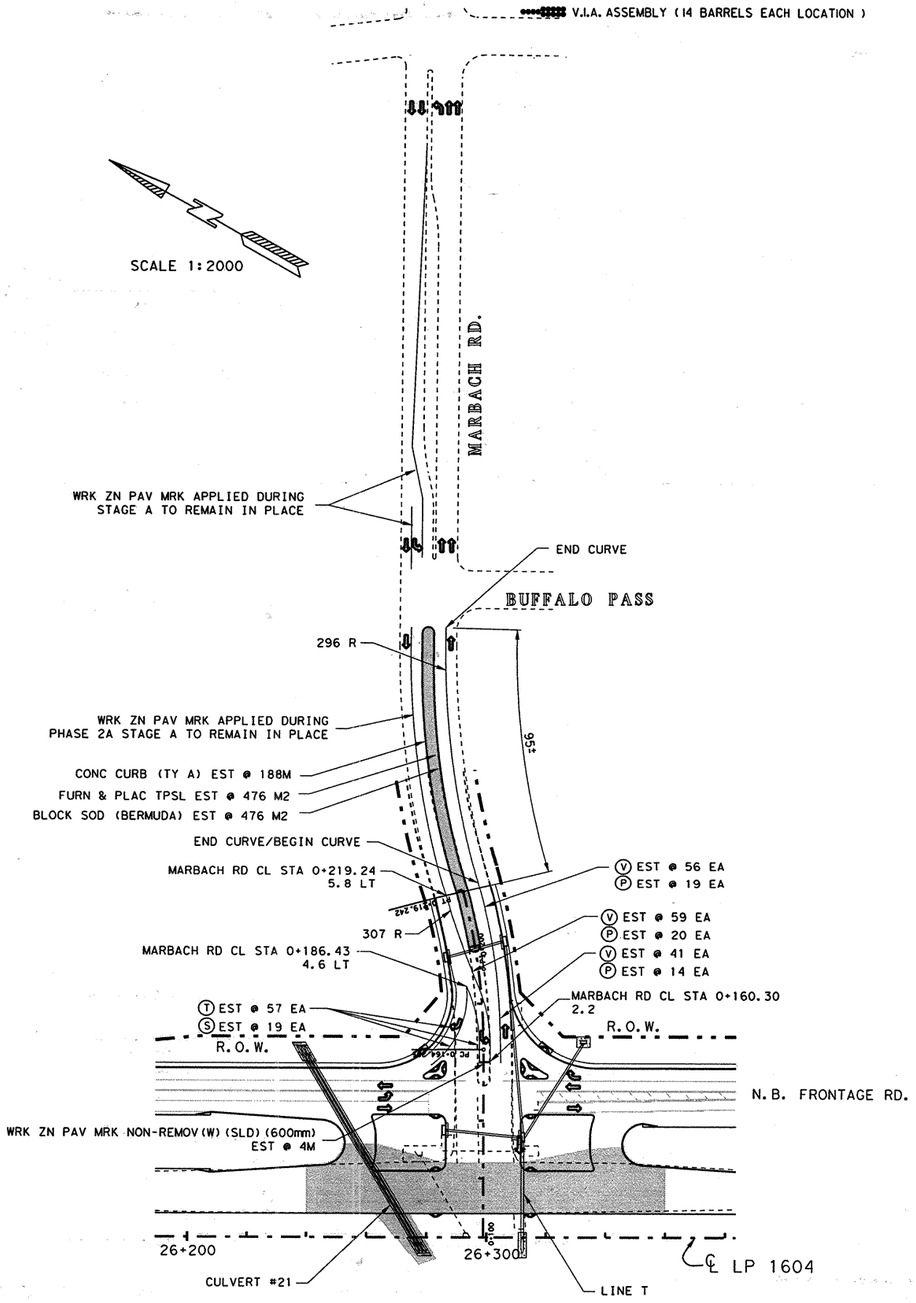


STAGE A

| SEQUENCE OF WORK ESTIMATED QUANTITIES | | 2452-01-036 |
|---|---|---|
| ITEM | UNIT | QTY |
| FURN AND PLAC TPSL (CL 2) (150 MM) | M2 | 476 |
| BLOCK SOD (BERMUDA) | M2 | 476 |
| VEGETATIVE WATERING | KL | 137 |
| CONC CURB (TY A) | M | 188 |
| WRK ZN PAV MRK REMOV (CL B) TY II-A-A | EA | 53 |
| WRK ZN PAV MRK REMOV (CL B) TY I-C | EA | 19 |
| WRK ZN PAV MRK REMOV (CL C) TY W | EA | 57 |
| WRK ZN PAV MRK REMOV (CL C) TY Y | EA | 156 |
| WRK ZN PAV MRK NON-REMOV (W) (SLD) (600mm) | M | 4 |
| | | |

NOTES

1. ALL REMOVABLE WORK ZONE PAVEMENT MARKINGS SHALL COMPLY WITH THE T.M.U.T.C.D. OR BE AS DIRECTED BY THE ENGINEER.
2. ALL REMOVEABLE WORK ZONE PAVEMENT MARKINGS SHOWN ON SHEET SHALL CONSIST OF RAISED BUTTONS AND/OR REFLECTORS.
3. ALL REMOVEABLE WORK ZONE PAVEMENT MARKINGS SHALL BE PAID FOR BY THE EACH.
4. CONSTRUCTION DETOUR TO BE REMOVED.

WRK ZN PAV MRK LEGEND

(P) REMOV (TY II-A-A)
(S) REMOV (TY I-C)
(T) REMOV (TY W)
(V) REMOV (TY Y)

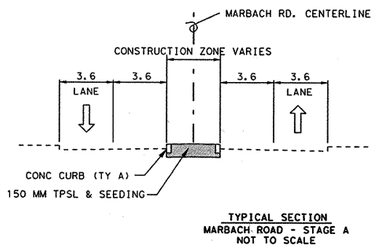


TYPICAL SECTION
MARBACH ROAD - STAGE A
NOT TO SCALE

CHANGE ORDER NO. 63

-SEQUENCE OF WORK DETAILS

CHANGE ORDER NO. 63 | NEW SHEET

555 EAST RAMSEY SAN ANTONIO TEXAS 78216 PHONE (210)375-9000 FAX (210)375-9010
PAPE-DAWSON ENGINEERS CIVIL & ENVIRONMENTAL
STATE OF TEXAS J. KENT O'BRIEN 64398 LICENSED PROFESSIONAL ENGINEER
J. KENT O'BRIEN P.E. 1/27/2004 DATE

©2000 Texas Department of Transportation

# INTERSECTION SEQUENCE OF WORK PHASE 2B

SHEET 4 OF 5

| FED.RD. DIV.NO. | FEDERAL AID PROJECT NO. | | SHEET NO. |
|---|---|---|---|
| 6 | NH 2000(704), ETC. | | 99E |
| STATE | DIST. | COUNTY | |
| TEXAS | SAT | BEXAR | |
| CONT. | SECT. | JOB | HIGHWAY NO. |
| 2452 | 01 | 036, ETC | LP 1604 |

Plotted on: 9/14/2004
Design Filename: T:\AO\Design\lp1604fm471-90\PD*Phase2*changeorder*mylars\submittal\plansheets\TCP\ph2b*sow*US90*02.dgn

DRAINAGE & ROADWAY CONSTRUCTION
CONSTRUCTION DETOUR
TRAFFIC FLOW DIRECTION
V.I.A. ASSEMBLY ( 14 BARRELS EACH LOCATION )

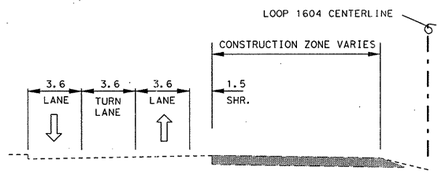


TYPICAL SECTION - STAGE A
LOOP 1604
NOT TO SCALE

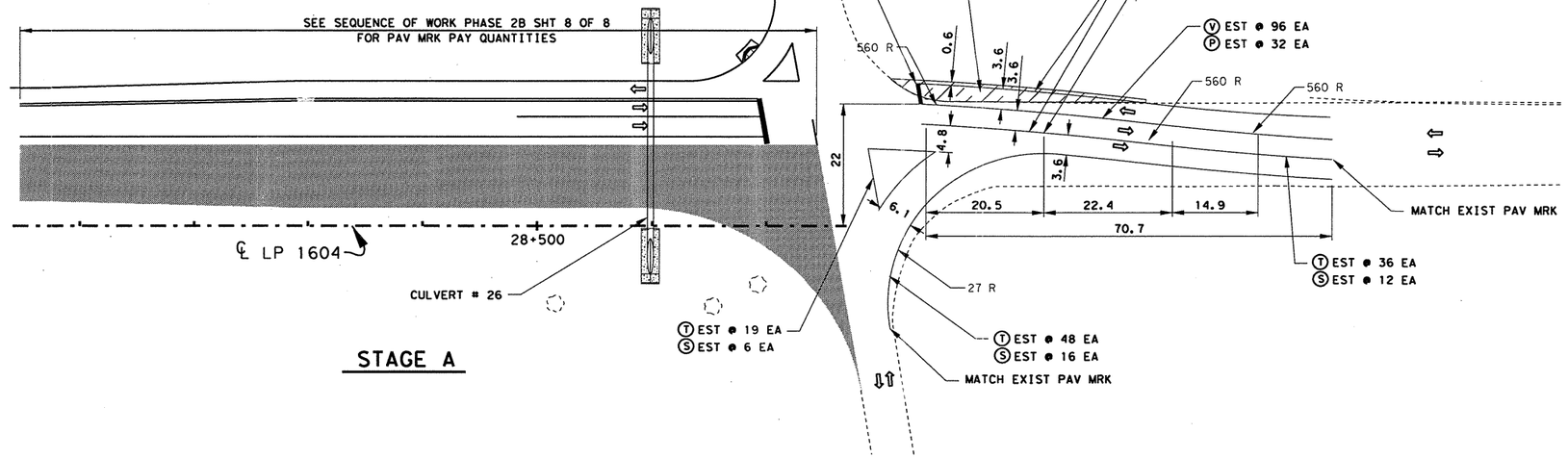


## STAGE A

SCALE 1:1000

| SEQUENCE OF WORK ESTIMATED QUANTITIES | | 2452-01-036 |
|---|---|---|
| ITEM | UNIT | QTY |
| CONST DETOUR (CL 3) | M2 | 99 |
| WRK ZN PAV MRK REMOV (CL A) TY II-A-A | EA | 124 |
| WRK ZN PAV MRK REMOV (CL B) TY I-C | EA | 164 |
| WRK ZN PAV MRK REMOV (CL C) TY W | EA | 497 |
| WRK ZN PAV MRK REMOV (CL C) TY Y | EA | 371 |
| WRK ZN PAV MRK REMOV (W) (SLD) (600mm) | M | 24 |
| WRK ZN PAV MRK REMOV (W) (ARROW) | EA | 1 |
| | | |

NOTES

1. ALL REMOVABLE WORK ZONE PAVEMENT MARKINGS SHALL COMPLY WITH THE T.M.U.T.C.D. OR BE AS DIRECTED BY THE ENGINEER.
2. ALL REMOVEABLE WORK ZONE PAVEMENT MARKINGS SHOWN ON SHEET SHALL CONSIST OF RAISED BUTTONS AND/OR REFLECTORS.
3. ALL REMOVEABLE WORK ZONE PAVEMENT MARKINGS SHALL BE PAID FOR BY THE EACH.

WRK ZN PAV MRK LEGEND

(P) REMOV (TY II-A-A)
(S) REMOV (TY I-C)
(T) REMOV (TY W)
(V) REMOV (TY Y)

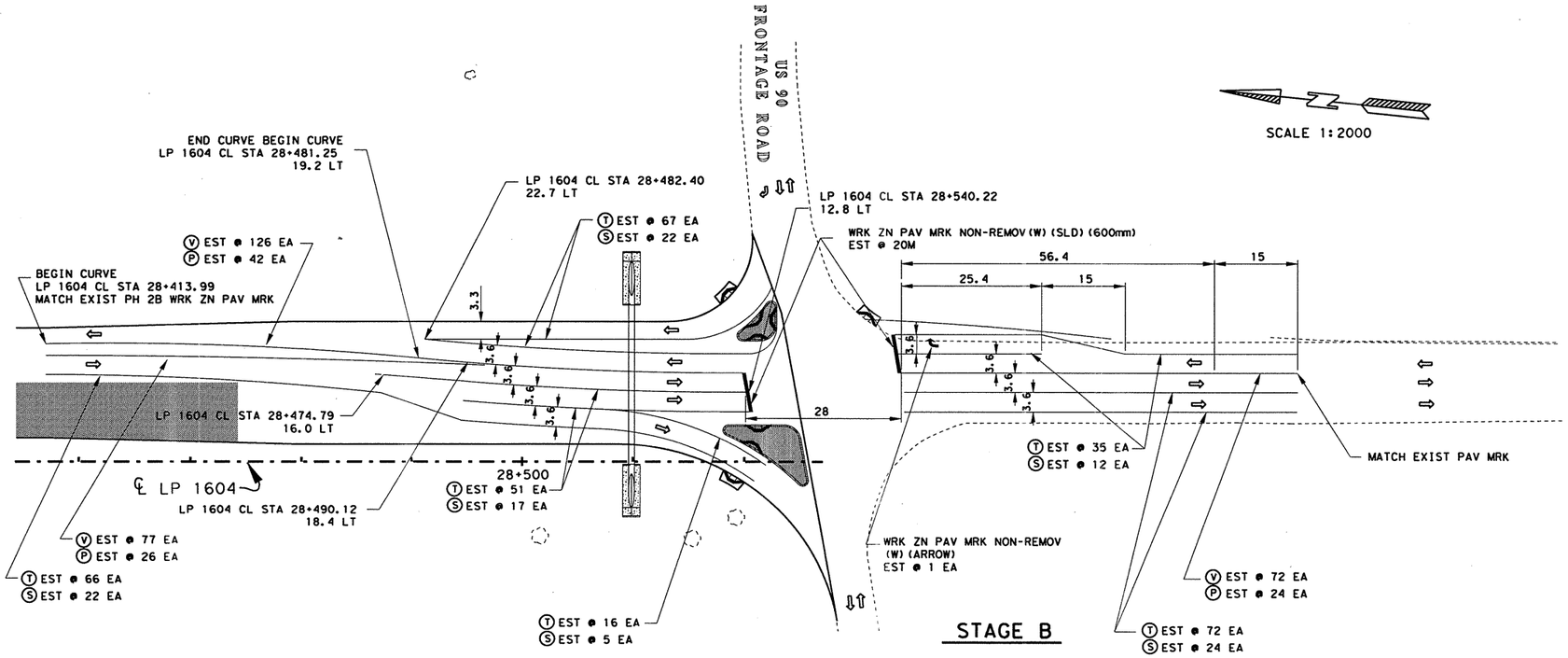


## STAGE B

SCALE 1:2000

CHANGE ORDER NO.

-SEQUENCE OF WORK DETAILS

CHANGE ORDER NO.____ NEW SHEET

STATE OF TEXAS
JEROME D. PAVLISKA
76075
REGISTERED
PROFESSIONAL ENGINEER

Jerome D. Pavliska, P.E. 9-9-04
Jerome D. Pavliska, P.E. Date

©2000
Texas Department of Transportation

# INTERSECTION SEQUENCE OF WORK PHASE 2B

SHEET 5 OF 5

| FED. RD. DIV. NO. | FEDERAL AID PROJECT NO. | | SHEET NO. |
|---|---|---|---|
| 6 | NH 2000(704), ETC. | | 99F |
| STATE | DIST. | COUNTY | |
| TEXAS | SAT | BEXAR | |
| CONT. | SECT. | JOB | HIGHWAY NO. |
| 2452 | 01 | 036, ETC | LP 1604 |

FILE: T:\AO\Design\lp1604fm471-90\PD*Phase2*changeorder*mylars\submittal\plansheets\TCP\ph2b*sow*US90*02.dgn
LEVEL DISPLAYED 1 2 3 4 5 6 7 8 9 10 11 12 13 14 15 16 17 18 19 20 21 22 23 24 25 26 27 28 29 30 31 32 33 34 35 36 37 38 39 40 41 42 43 44 45 46 47 48 49 50 51 52 53 54 55 56 57 58 59 60 61 62 63
8-03-04

DRAINAGE & ROADWAY CONSTRUCTION
CONSTRUCTION DETOUR
TRAFFIC FLOW DIRECTION
V.I.A. ASSEMBLY ( 14 BARRELS EACH LOCATION )

SCALE 1:2000

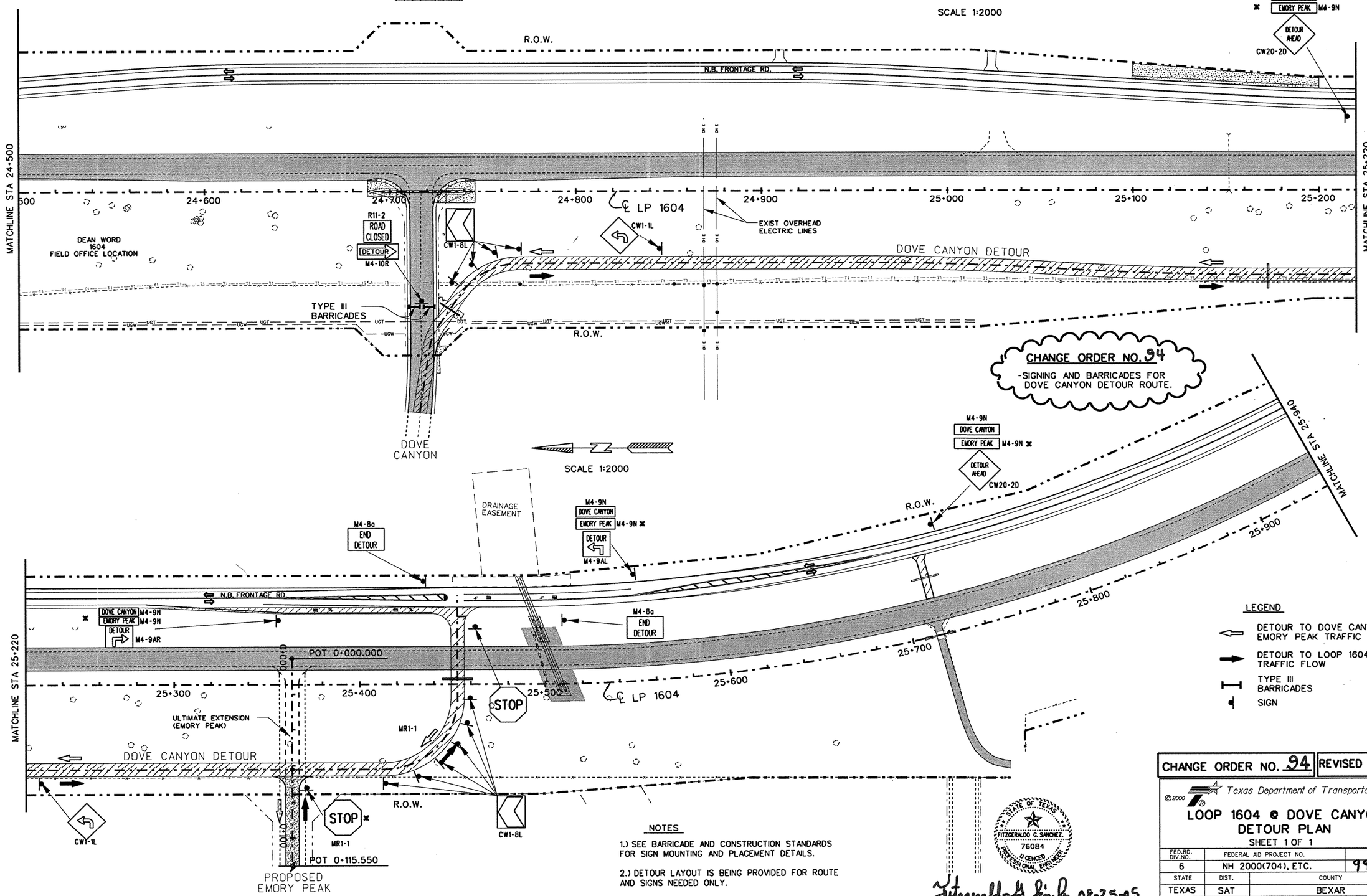


CHANGE ORDER NO. 94
-SIGNING AND BARRICADES FOR DOVE CANYON DETOUR ROUTE.

LEGEND

- DETOUR TO DOVE CANYON / EMORY PEAK TRAFFIC FLOW
- DETOUR TO LOOP 1604 TRAFFIC FLOW
- TYPE III BARRICADES
- SIGN

NOTES

1.) SEE BARRICADE AND CONSTRUCTION STANDARDS FOR SIGN MOUNTING AND PLACEMENT DETAILS.

2.) DETOUR LAYOUT IS BEING PROVIDED FOR ROUTE AND SIGNS NEEDED ONLY.

✖ REQUIRED AS BECOMES NECCESARY (EMORY PEAK).

STATE OF TEXAS
FITZGERALDO G. SANCHEZ
76084
LICENSED
PROFESSIONAL ENGINEER

Fitzgeraldo G. Sanchez, P.E. 08-25-05 Date

CHANGE ORDER NO. 94 | REVISED SHEET

©2000 Texas Department of Transportation

# LOOP 1604 @ DOVE CANYON DETOUR PLAN

SHEET 1 OF 1

| FED.RD. DIV.NO. | FEDERAL AID PROJECT NO. | | SHEET NO. |
|---|---|---|---|
| 6 | NH 2000(704), ETC. | | 99G |
| STATE | DIST. | COUNTY | |
| TEXAS | SAT | BEXAR | |
| CONT. | SECT. | JOB | HIGHWAY NO. |
| 2452 | 01 | 036,ETC | LP 1604 |

8-25-05

Plotted on: 8/25/2005
Design Filename: T:\AO\Design\lp1604fm471-90\PD_Phase2_change_order_mylars\submittal\plansheets\TCP\dove\phase2B06tcpdt.dgn
FILE T:\AO\Design\lp1604fm471-90\PD_Phase2_change_order_mylars\submittal\plansheets\TCP\dove\phase2B06tcpdt.dgn
LEVEL DISPLAYED

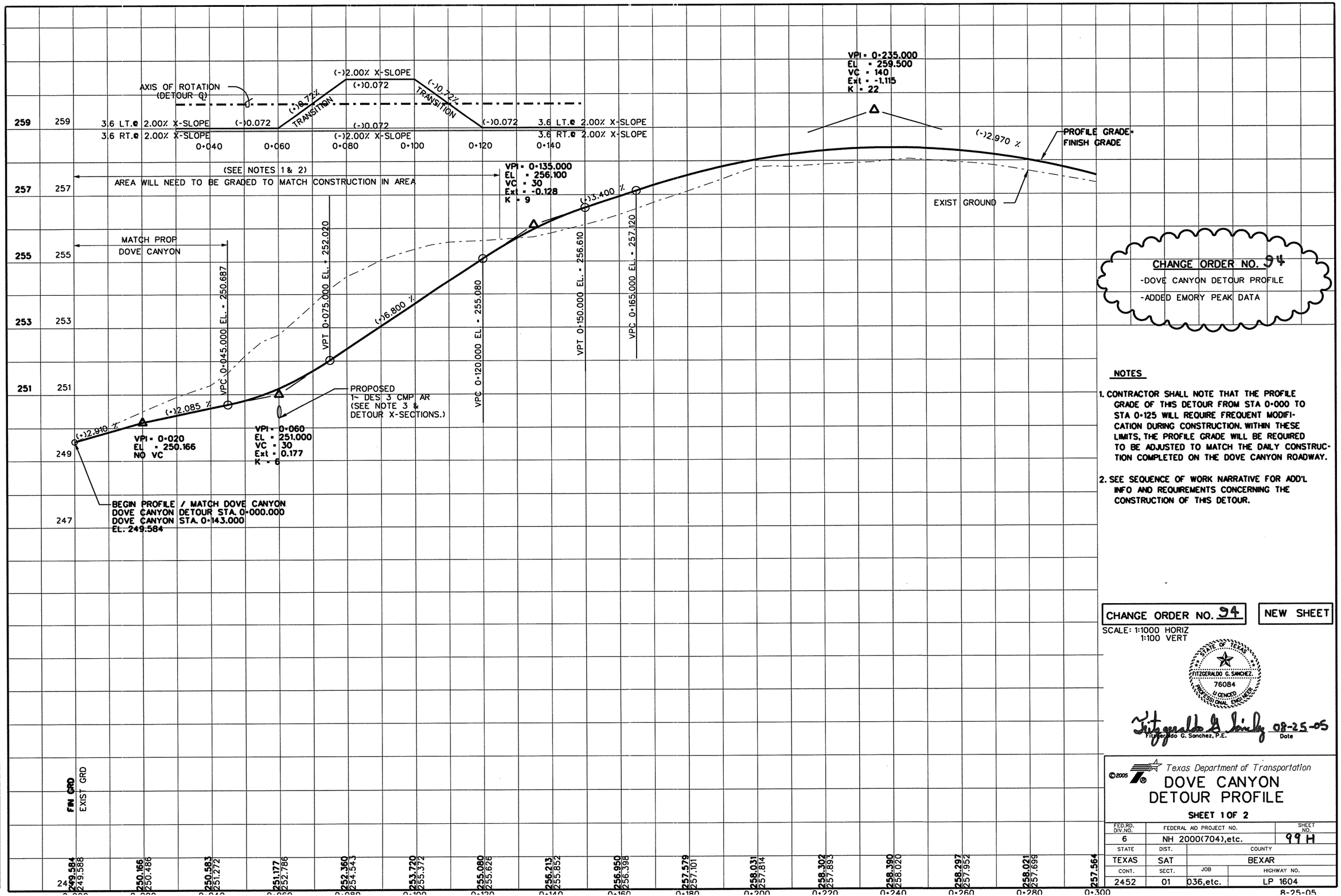


CHANGE ORDER NO. 94

-DOVE CANYON DETOUR PROFILE

-ADDED EMORY PEAK DATA

**NOTES**

1. CONTRACTOR SHALL NOTE THAT THE PROFILE GRADE OF THIS DETOUR FROM STA 0+000 TO STA 0+125 WILL REQUIRE FREQUENT MODIFICATION DURING CONSTRUCTION. WITHIN THESE LIMITS, THE PROFILE GRADE WILL BE REQUIRED TO BE ADJUSTED TO MATCH THE DAILY CONSTRUCTION COMPLETED ON THE DOVE CANYON ROADWAY.
2. SEE SEQUENCE OF WORK NARRATIVE FOR ADD'L INFO AND REQUIREMENTS CONCERNING THE CONSTRUCTION OF THIS DETOUR.

CHANGE ORDER NO. 94 | NEW SHEET

SCALE: 1:1000 HORIZ
1:100 VERT

STATE OF TEXAS
FITZGERALDO G. SANCHEZ
76084
LICENSED
PROFESSIONAL ENGINEER

Fitzgeraldo G. Sanchez 08-25-05
Fitzgeraldo G. Sanchez, P.E. Date

©2005

Texas Department of Transportation

# DOVE CANYON DETOUR PROFILE

SHEET 1 OF 2

| FED.RD. DIV.NO. | FEDERAL AID PROJECT NO. | | SHEET NO. |
|---|---|---|---|
| 6 | NH 2000(704),etc. | | 99 H |
| STATE | DIST. | COUNTY | |
| TEXAS | SAT | BEXAR | |
| CONT. | SECT. | JOB | HIGHWAY NO. |
| 2452 | 01 | 036,etc. | LP 1604 |

8-25-05

Plotted on: 8/25/2005
Design Filename: T:\AO\Design\lp1604fm471-90\PD_Phase2_change_order_mylars\submittal\plansheets\TCP\dove\prof_dove\prof_detdov.dgn
LEVELS DISPLAYED 1 2 3 4 5 6 7 8 9 10 11 12 13 14 15 16 17 18 19 20 21 22 23 24 25 26 27 28 29 30 31 32 33 34 35 36 37 38 39 40 41 42 43 44 45 46 47 48 49 50 51 52 53 54 55 56 57 58 59 60 61 62 63
ACC: lp1604fm471-90\
FILE: prof01.dgn

Plotted on: 8/25/2005
Design Filename: T:\AO\Design\lp1604fm471-90\PD_Phase2_change_order_mylars\submittal\plansheets\TCP\dove\prof_deldov.dgn

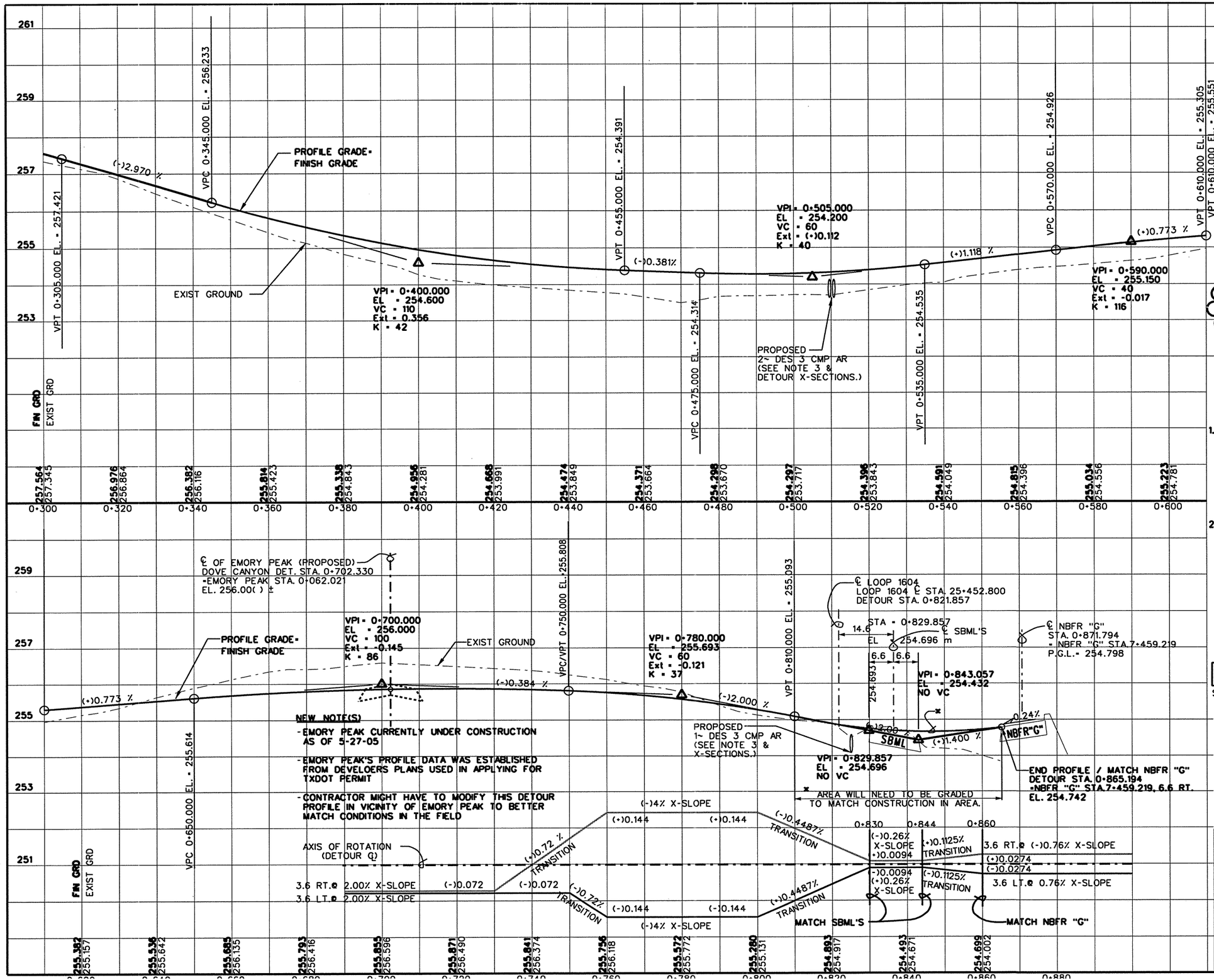


CHANGE ORDER NO. 94
-DOVE CANYON DETOUR PROFILE
-ADDED EMORY PEAK DATA

NOTES

1. CONTRACTOR SHALL NOTE THAT THE PROFILE GRADE OF THIS DETOUR FROM STA 0+000 TO STA 0+125 WILL REQUIRE FREQUENT MODIFICATION DURING CONSTRUCTION. WITHIN THESE LIMITS, THE PROFILE GRADE WILL BE REQUIRED TO BE ADJUSTED TO MATCH THE DAILY CONSTRUCTION COMPLETED ON THE DOVE CANYON ROADWAY.
2. SEE SEQUENCE OF WORK NARRATIVE FOR ADD'L INFO AND REQUIREMENTS CONCERNING THE CONSTRUCTION OF THIS DETOUR.

CHANGE ORDER NO. 94 | NEW SHEET

SCALE: 1:1000 HORIZ
1:100 VERT

STATE OF TEXAS
FITZGERALDO G. SANCHEZ
76084
LICENCED
PROFESSIONAL ENGINEER

Fitzgeraldo G. Sanchez 08-26-05
Fitzgeraldo G. Sanchez, P.E. Date

©2005 Texas Department of Transportation

# DOVE CANYON DETOUR PROFILE

SHEET 2 OF 2

| FED.RD. DIV.NO. | FEDERAL AID PROJECT NO. | | SHEET NO. |
|---|---|---|---|
| 6 | NH 2000(704),etc. | | 99 I |
| STATE | DIST. | COUNTY | |
| TEXAS | SAT | BEXAR | |
| CONT. | SECT. | JOB | HIGHWAY NO. |
| 2452 | 01 | 036,etc. | LP 1604 |

8-25-05

LEVELS DISPLAYED
1 2 3 4 5 6 7 8 9 10 11 12 13 14 15 16
17 18 19 20 21 22 23 24 25 26 27 28 29 30 31 32
33 34 35 36 37 38 39 40 41 42 43 44 45 46 47 48
49 50 51 52 53 54 55 56 57 58 59 60 61 62 63

ACC: lp1604fm471-90\
FILE: prof01.dgn

QUANTITIES THIS SHEET
CSJ 2452-01-036

SCALE 1:1000

| ESTIMATED QUANTITIES | | |
|---|---|---|
| ITEM | UNIT | QUANTITY |
| | | 2452-01-036 |
| WZPM REMOV (CL B) TY I-C | EA | 55 |
| WZPM REMOV (CL B) TY II-A-A | EA | 56 |
| WZPM REMOV (CL C) TY W | EA | 163 |
| WZPM REMOV (CL C) TY Y | EA | 168 |
| PORT CONC TRAF BAR (MOV & RESET) | M | 155 |
| VEH IMP ATTN ASSEM BRLS (MOVE & RESET) | EA | 1 |
| | | |
| | | |
| | | |
| | | |

NOTE(S):

1.) ALL DIMENSIONS ARE IN METERS UNLESS OTHERWISE NOTED.

2.) SEE STD "BC(8)-98(M)" & DIST STD "TYPICAL CROSSWALK DETAILS (M)" FOR LANE MARKING DETAILS

3.) SEE SIGNING AND CONSTRUCTION STANDARDS FOR SIGN MOUNTING AND PLACEMENT DETAILS

4.) DETOUR LAYOUT IS BEING PROVIDED FOR ROUTE AND SIGNING NEEDED ONLY.

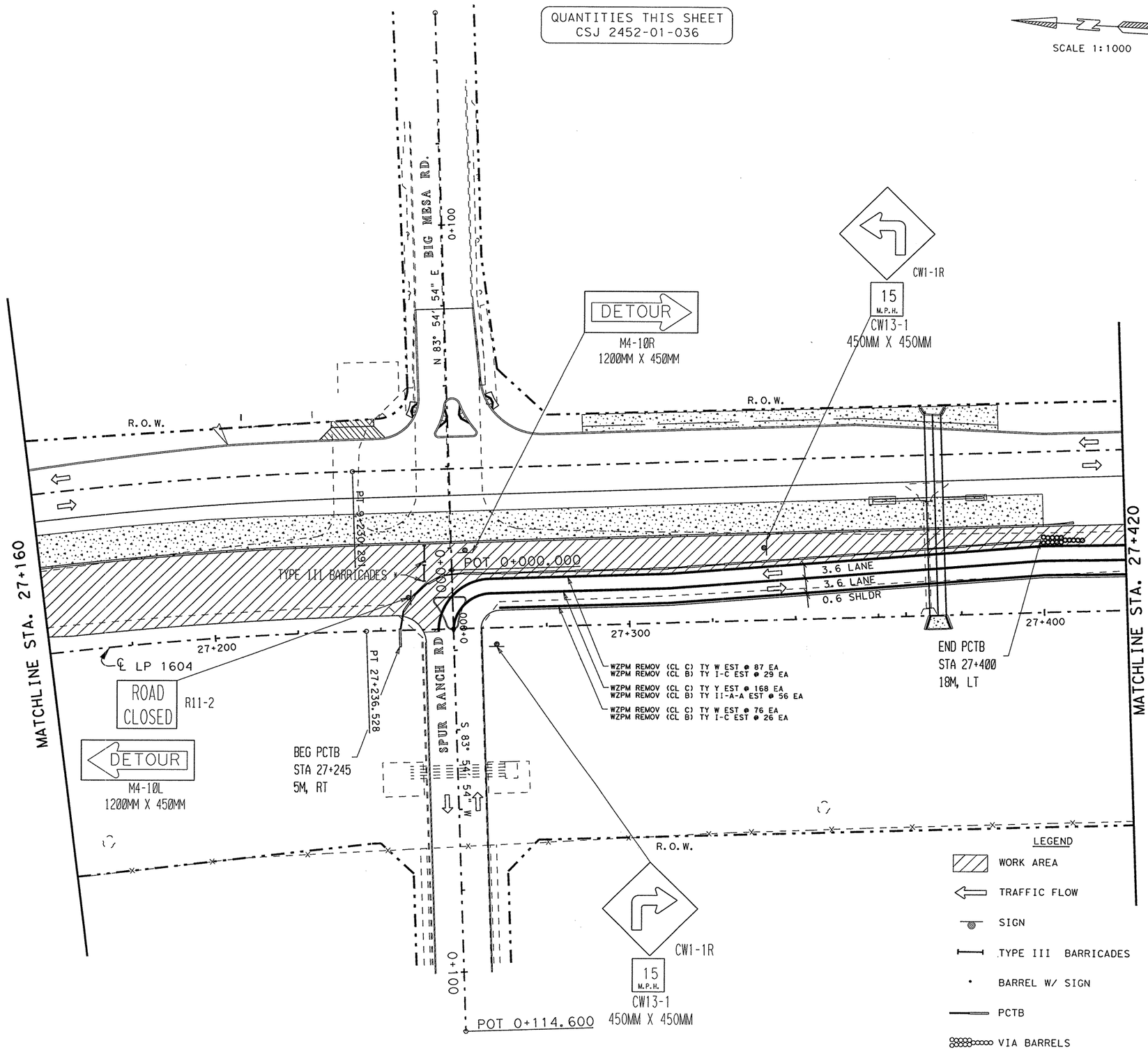


CHANGE ORDER #147
NEW DETOUR ROUTE
(SIGNING & PVMT MARK)
NEW SHEET

CHANGE ORDER 147

NEW SHEET

STATE OF TEXAS
MIGUEL G. ROGERIO
96620
LICENSED PROFESSIONAL ENGINEER

Miguel G. Rogerio, P.E. 9/13/06
MIGUEL G. ROGERIO DATE

©2006
Texas Department of Transportation

# SEQUENCE OF WORK
# PHASE 2 DETOUR LAYOUT
# SPUR RANCH RD

SHEET 1 OF 3

| FED. RD. DIV. NO. | FEDERAL AID PROJECT NO. | | SHEET NO. |
|---|---|---|---|
| 6 | NH 2000(704), etc. | | 99AA |
| STATE | DIST. | COUNTY | |
| TEXAS | SAT | BEXAR | |
| CONT. | SECT. | JOB | HIGHWAY NO. |
| 2452 | 01 | 036, etc. | LP 1604 |

LEVELS DISPLAYED
1 2 3 4 5 6 7 8 9 10 11 12 13 14 15 16
1 9 2 10 23 42 52 62 72 82 93 03 13 23
33 43 53 63 73 83 94 04 14 24 34 44 54 64 74 84
95 05 15 25 35 45 55 65 75 85 96 06 16 26 36
$FILE$
$DATE$
$TIME$

QUANTITIES THIS SHEET
CSJ 2452-01-036

SCALE 1:1000

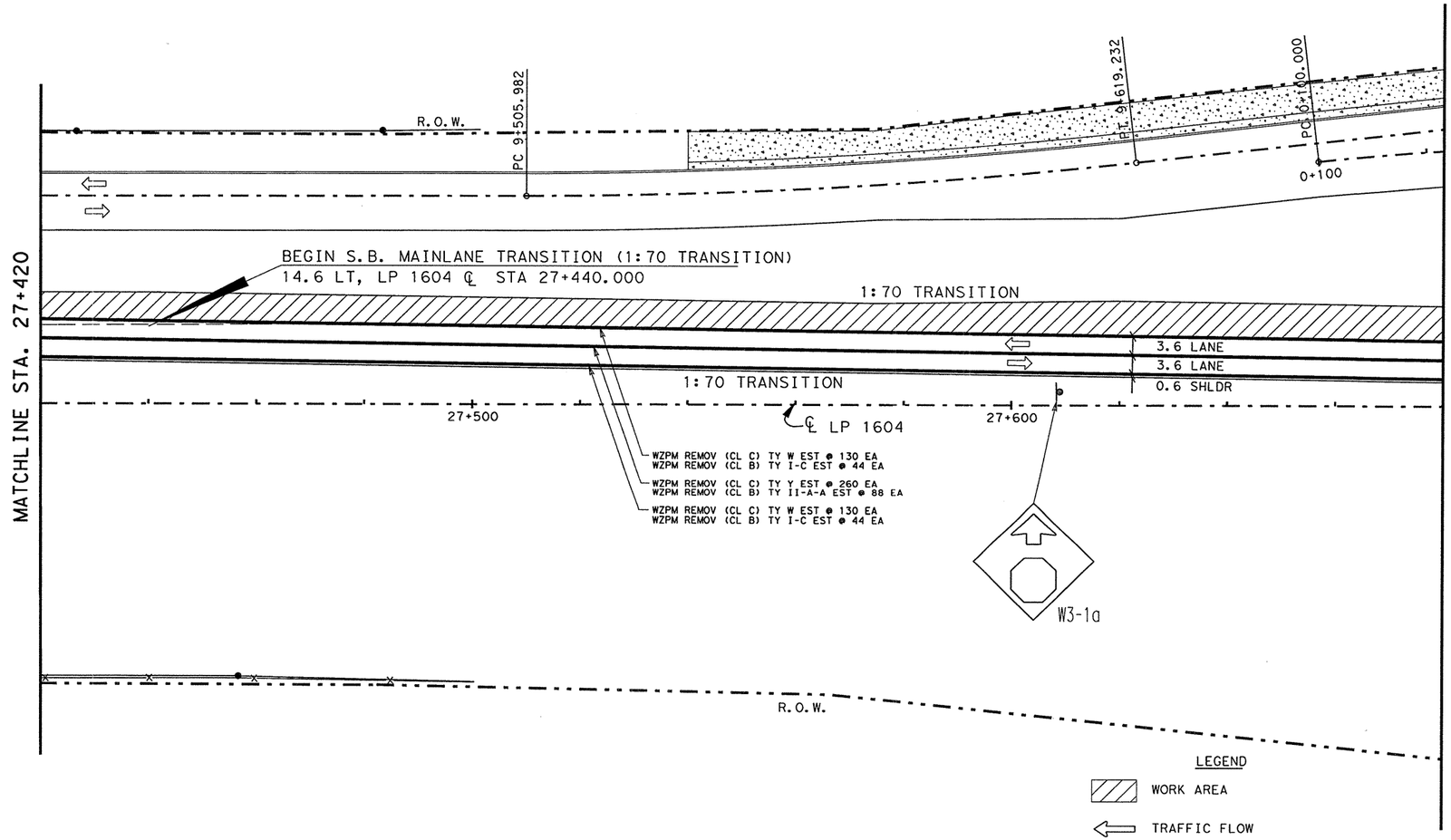


LEGEND

- WORK AREA
- TRAFFIC FLOW
- SIGN
- TYPE III BARRICADES
- BARREL W/ SIGN
- PCTB
- VIA BARRELS

## ESTIMATED QUANTITIES

| ITEM | UNIT | QUANTITY |
|---|---|---|
| | | 2452-01-036 |
| WZPM REMOV (CL B) TY I-C | EA | 88 |
| WZPM REMOV (CL B) TY II-A-A | EA | 88 |
| WZPM REMOV (CL C) TY W | EA | 260 |
| WZPM REMOV (CL C) TY Y | EA | 260 |
| PORT CONC TRAF BAR (MOV & RESET) | M | 0 |
| VEH IMP ATTN ASSEM BRLS (MOVE & RESET) | EA | 0 |
| | | |
| | | |
| | | |
| | | |

NOTE(S):

1.) ALL DIMENSIONS ARE IN METERS UNLESS OTHERWISE NOTED.

2.) SEE STD "BC(8)-98(M)" & DIST STD "TYPICAL CROSSWALK DETAILS (M)" FOR LANE MARKING DETAILS

3.) SEE SIGNING AND CONSTRUCTION STANDARDS FOR SIGN MOUNTING AND PLACEMENT DETAILS

4.) DETOUR LAYOUT IS BEING PROVIDED FOR ROUTE AND SIGNING NEEDED ONLY.

CHANGE ORDER #147
NEW DETOUR ROUTE
(SIGNING & PVMT MARK)
NEW SHEET

CHANGE ORDER 147

NEW SHEET

STATE OF TEXAS
MIGUEL G. ROGERIO
96620
LICENSED PROFESSIONAL ENGINEER

Miguel G. Rogerio P.E. 9/13/06
MIGUEL G. ROGERIO DATE

LEVELS DISPLAYED
1 2 3 4 5 6 7 8 9 10 11 12 13 14 15 16 17
- 2 12 22 32 42 52 62 72 82 92 102 112 122 132
33 34 35 36 37 38 39 40 41 42 43 44 45 46 47 48 49
43 50 51 52 53 54 55 56 57 58 59 60 61 62 63

$FILE$
$DATE$
$TIME$

©2006

Texas Department of Transportation

# SEQUENCE OF WORK
# PHASE 2 DETOUR LAYOUT
# SPUR RANCH RD

SHEET 2 OF 3

| FED.RD. DIV.NO. | FEDERAL AID PROJECT NO. | | SHEET NO. |
|---|---|---|---|
| 6 | NH 2000(704), etc. | | 99BB |
| STATE | DIST. | COUNTY | |
| TEXAS | SAT | BEXAR | |
| CONT. | SECT. | JOB | HIGHWAY NO. |
| 2452 | 01 | 036, etc. | LP 1604 |

QUANTITIES THIS SHEET
CSJ 2452-01-036

SCALE 1:1000

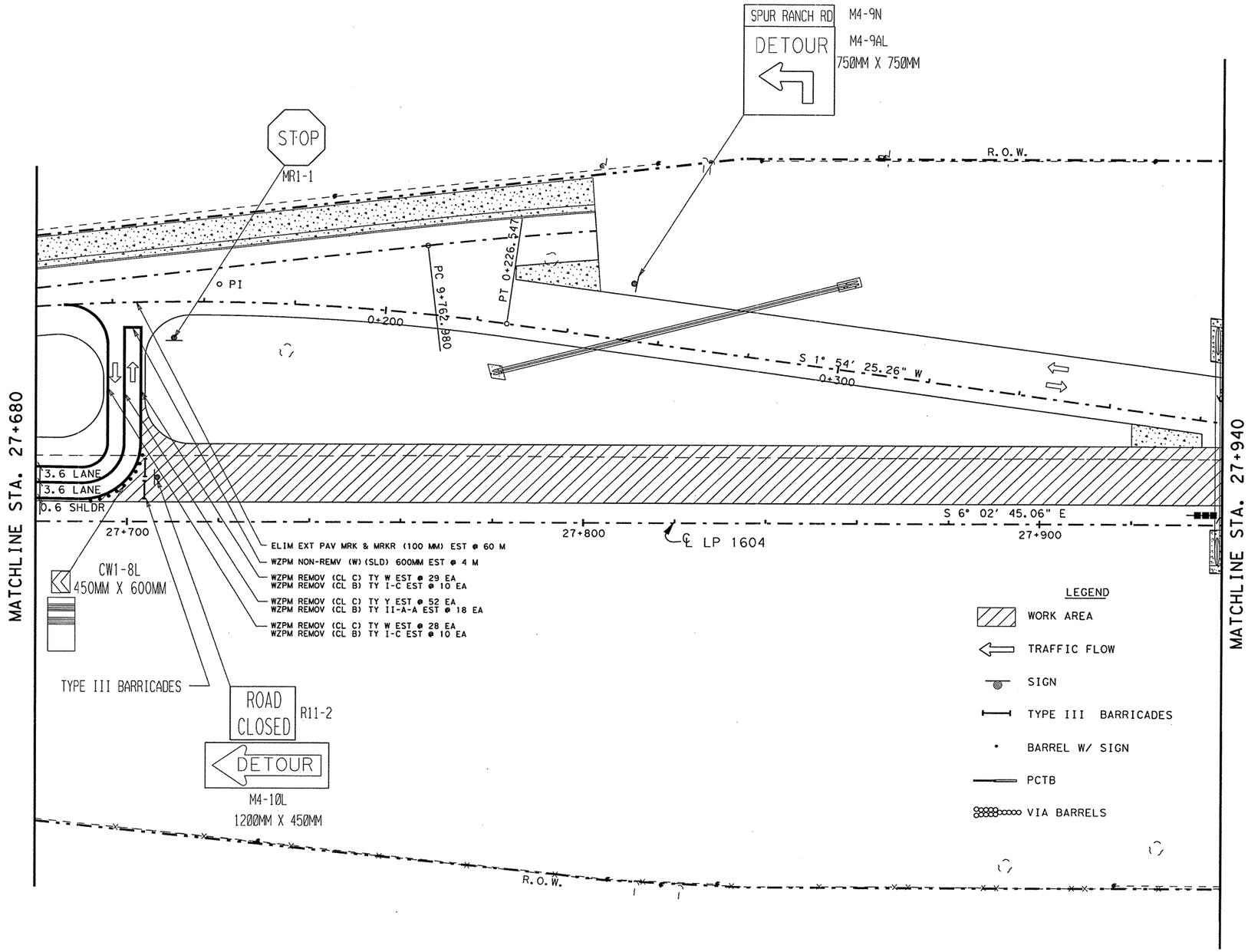


## ESTIMATED QUANTITIES

| ITEM | UNIT | QUANTITY |
|---|---|---|
| | | 2452-01-036 |
| WZPM REMOV (CL B) TY I-C | EA | 20 |
| WZPM REMOV (CL B) TY II-A-A | EA | 18 |
| WZPM REMOV (CL C) TY W | EA | 57 |
| WZPM REMOV (CL C) TY Y | EA | 52 |
| WZPM NON-REMV (W)(SLD) 600MM | M | 4 |
| ELIM EXT PAV MRK & MRKR (100 MM) | M | 60 |
| PORT CONC TRAF BAR (MOV & RESET) | M | 0 |
| VEH IMP ATTN ASSEM BRLS (MOVE & RESET) | EA | 0 |
| | | |

NOTE(S):

1.) ALL DIMENSIONS ARE IN METERS UNLESS OTHERWISE NOTED.

2.) SEE STD "BC(8)-98(M)" & DIST STD "TYPICAL CROSSWALK DETAILS (M)" FOR LANE MARKING DETAILS

3.) SEE SIGNING AND CONSTRUCTION STANDARDS FOR SIGN MOUNTING AND PLACEMENT DETAILS

4.) DETOUR LAYOUT IS BEING PROVIDED FOR ROUTE AND SIGNING NEEDED ONLY.

CHANGE ORDER #147
NEW DETOUR ROUTE
(SIGNING & PVMT MARK)
NEW SHEET

CHANGE ORDER 147

NEW SHEET

STATE OF TEXAS
MIGUEL G. ROGERIO
96620
LICENSED PROFESSIONAL ENGINEER

Miguel G. Rogerio P.E. 9/13/06
MIGUEL G. ROGERIO DATE

LEVELS DISPLAYED
1 2 3 4 15 16 17 18 19 20 21 22 23 24 25 26 27 28 29 30 31 32 33 34 35 36 37 38 39 40 41 42 43 44 45 46 47 48 49 50 51 52 53 54 55 56 57 58 59 60 61 62 63
$FILE$
$DATE$
$TIME$

©2006

Texas Department of Transportation
SEQUENCE OF WORK
PHASE 2 DETOUR LAYOUT
SPUR RANCH RD

SHEET 3 OF 3

| FED.RD. DIV.NO. | FEDERAL AID PROJECT NO. | | SHEET NO. |
|---|---|---|---|
| 6 | NH 2000(704), etc. | | 99CC |
| STATE | DIST. | COUNTY | |
| TEXAS | SAT | BEXAR | |
| CONT. | SECT. | JOB | HIGHWAY NO. |
| 2452 | 01 | 036, etc. | LP 1604 |

NOTE(S):

1.) ALL DIMENSIONS ARE IN METERS UNLESS OTHERWISE NOTED.

2.) SEE STD "BC(8)-98(M)" FOR LANE MARKING DETAILS

3.) SEE SIGNING AND CONSTRUCTION STANDARDS FOR SIGN MOUNTING AND PLACEMENT DETAILS

4.) THE PORTABLE CTB SHOWN ON THIS SHEET MAY BE VARIED TO BETTER FIT FIELD CONDITIONS AS APPROVED BY THE ENGINEER

SCALE: 1:600

## ESTIMATED QUANTITIES

| ITEM | UNIT | QTY. |
|---|---|---|
| PORT CTB LPRF (TY I) (STKPL, INSTL & RETRN) | M | 306 |
| PORT CTB LPRF (TY II) (STKPL, INSTL & RETRN) | M | 12.2 |
| WRK ZN PAV MRK REMOV (CL C) TY II-A-A | EA | 54 |
| WRK ZN PAV MRK REMOV (CL B) TY I-C | EA | 54 |
| WRK ZN PAV MRK REMOV (CL C) TY W | EA | 160 |
| WRK ZN PAV MRK REMOV (CL C) TY Y | EA | 160 |
| | | |
| CONSTRUCT DETOURS (CL III) | M2 | 138 |
| REMOV CONC (CURB) | M | 13 |
| REMOV & RELOC FLAG POLE | EA | 1 |

REMOV CONC (CURB) EST @ 13 M

PORT CTB LPRF(TY II)(STKPL, INSTL & RETRN) EST @ 6.1 M
PORT CTB LPRF(TY I) (STKPL, INSTL & RETRN) EST @ 153 M

WZPM REMOV (CL C) TY W EST @ 80 EA
WZPM REMOV (CL B) TY I-C EST @ 27 EA

WZPM REMOV (CL C) TY Y EST @ 160 EA
WZPM REMOV (CL B) TY II-A-A EST @ 54 EA

WZPM REMOV (CL C) TY W EST @ 80 EA
WZPM REMOV (CL B) TY I-C EST @ 27 EA

PORT CTB LPRF(TY II)(STKPL, INSTL & RETRN) EST @ 6.1 M
PORT CTB LPRF(TY I) (STKPL, INSTL & RETRN) EST @ 153 M

SW5-1
960mm X 960mm
ROAD NARROWS
℄ LP 1604

STA 0+110

DOVE CANYON DETOUR CONSTRUCTED PREVIOUSLY TO REMAIN THIS STAGE

PI 0+108.866
(DOVE CANYON DETOUR)

0+100

R.O.W.

TIE RAISED WORK ZONE PAV MARKS TO THE STRIPING ON THE PREVIOUSLY CONSTRUCTED DOVE CANYON DETOUR

PROP LP 1604

CW6-3
760mm X 760mm
CW13-1
(460mm X 460mm)
15 M.P.H.

STA 0+080

PT 0+049.299
(DOVE CANYON DETOUR)
PC 0+035.831
PC 0+100.172

REMOV & RELOC FLAG POLE
EST @ 1 EA
TO 8.9 LT STA 0+143

0+157.163

CW6-3
760mm X 760mm
15 M.P.H.
CW13-1
460mm X 460mm
STA 0+180

SW5-1
760mm X 760mm
STA 0+200
ROAD NARROWS

STA 0+245
SW1-4R
760mm X 760mm
CW13-1
460mm X 460mm
15 M.P.H.

STAGE 1 DETOUR

S 89° 38' 49" W
DOVE CANYON ℄ DOVE CANYON
(REFERENCE ALIGNMENT)

S 82°36'49" E
0+200

Φ 0+000

0+100

DOVE CANYON ℄ STA. 0+020 =
℄ LOOP 1604 STA. 24+716.81

24+700

GW PP GW PP

CONSTRUCT DETOUR (CL III)
EST. @ 138 M2

END FULL CONSTRUCTION
MATCH EXIST
STA. 0+143 (DOVE CANYON)

CW1-8L
450mm X 600mm

DETOUR ℄

8.2
0.3 BUFFER | 3.2 LANE | 3.2 LANE | 0.3 BUFFER
DOVE CANYON CONSTRUCTION AREA

* EDGE LINE
** DOUBLE NO-PASSING LINE

EXIST PVMT
LPCTB
LPCTB

DOVE CANYON DETOUR CONSTRUCTED PREVIOUSLY TO REMAIN THIS STAGE

DOVE CANYON DETOUR CONSTRUCTED THIS STAGE

SECTION A-A
(STAGE 1)

LPCTB
REMOVE AND RELOCATE EXISTING FLAG POLE
EXIST CURB TO BE REMOVED
SAWCUT EXIST PAVEMENT MATCH EXIST X-SLOPE
CONSTRUCT DETOUR 'CL III' (VARIES 0 TO 4.4 M) 152MM ASPH CONC (TY A) PLACE IN TWO EQUAL LIFTS

## LEGEND

CONSTRUCTION AREA

DIRECTION OF TRAFFIC

CONSTRUCT DETOUR (CL III)

LPCTB

SIGN SYMBOL

**DETOUR LAYOUT DATA**
**(REF DOVE CANYON ℄ STA & OFFSET)**

| | | | |
|---|---|---|---|
| PC | 11.318 LT 0+091.590 | T | 7.085 |
| PI | 5.393 LT 0+100.172 | L | 14.012 |
| | DEL 30°23'15"LT | R | 38.400 |
| | T 10.429 | E | 0.648 |
| | L 100.172 | PCC | 1.760 LT 0+156.866 |
| | R 38.400 | PI | 0.000 LT 0+162.449 |
| | E 1.391 | | DEL 17°23'46"LT |
| PT | 4.647 LT 0+110.573 | T | 5.875 |
| | L 32.993 | L | 11.659 |
| PC | 3.852 LT 0+143.182 | R | 38.400 |
| PI | 4.020 LT 0+150.198 | E | 0.447 |
| | DEL 20°54'22"RT | PT | 0.000 LT 0+168.323 |

CHANGE ORDER NO. 147

-DOVE CANYON SEQUENCE OF WORK DETOUR (PHASE 2 STAGE 1)

-NEW QUANTITIES

CHANGE ORDER NO. 147 | NEW SHEET

STATE OF TEXAS
MIGUEL G. ROGERIO
96620
LICENSED
PROFESSIONAL ENGINEER

Miguel G. Rogerio, P.E. 12/7/2006
Miguel G. Rogerio, P.E. Date

©2006

Texas Department of Transportation

# INTERSECTION SEQUENCE OF WORK
# PHASE 2 STAGE 1
# DOVE CANYON

SHEET 1 OF 2

| FED.RD. DIV.NO. | FEDERAL AID PROJECT NO. | | SHEET NO. |
|---|---|---|---|
| 6 | NH 2000(704), ETC | | 99 DD |
| STATE | DIST. | COUNTY | |
| TEXAS | SAT | BEXAR | |
| CONT. | SECT. | JOB | HIGHWAY NO. |
| 2452 | 01 | 036, ETC | LP 1604 |

T:\AO\Design\plot604fm471-90\changeorder*files\Dove*Canyon\int15-D(dove).dgn
12/7/2006
1:02:55 PM

## LEGEND

- CONSTRUCTION AREA
- DIRECTION OF TRAFFIC
- CONSTRUCT DETOUR (CL III)
- LPCTB
- SIGN SYMBOL

NOTE(S):

1.) ALL DIMENSIONS ARE IN METERS UNLESS OTHERWISE NOTED.

2.) SEE STD "BC(8)-98(M)" FOR LANE MARKING DETAILS

3.) SEE SIGNING AND CONSTRUCTION STANDARDS FOR SIGN MOUNTING AND PLACEMENT DETAILS

4.) THE PORTABLE CTB SHOWN ON THIS SHEET MAY BE VARIED TO BETTER FIT FIELD CONDITIONS AS APPROVED BY THE ENGINEER

5.) DOVE CANYON DETOUR TO BE REMOVED DURING THIS STAGE

SCALE: 1:600

| ESTIMATED QUANTITIES | | |
|---|---|---|
| ITEM | UNIT | QTY. |
| PORT CTB LPRF (TY I) (STKPL, INSTL & RETRN) | M | 212 |
| PORT CTB LPRF (TY II) (STKPL, INSTL & RETRN) | M | 12.2 |
| WRK ZN PAV MRK REMOV (CL C) TY II-A-A | EA | 56 |
| WRK ZN PAV MRK REMOV (CL B) TY I-C | EA | 56 |
| WRK ZN PAV MRK REMOV (CL C) TY W | EA | 168 |
| WRK ZN PAV MRK REMOV (CL C) TY Y | EA | 168 |
| | | |
| CONSTRUCT DETOURS (CL III) | M2 | 107 |
| REMOV CONC (CURB) | M | 12 |
| | | |
| | | |

PROPOSED LP 1604 SBML

R.O.W.

CW1-1L 760mm X 760mm

15 M.P.H.

CW13-1 460mm X 460mm

STA 0+040

CW1-1R 760mm X 760mm

CW13-1 460mm X 460mm

15 M.P.H.

STA 0+040

DOVE CANYON ℄ STA. 0+020 = ℄ LOOP 1604 STA. 24+716.81

℄ DOVE CANYON (REFERENCE ALIGNMENT)

PC 0+106.243

END FULL CONSTRUCTION MATCH EXIST STA. 0+143 (DOVE CANYON)

FLAG POLE

PT 0+157.163

CW6-3 760mm X 760mm

15 M.P.H.

CW13-1 460mm X 460mm STA 0+180

CW1-8L 450mm X 600mm

STA 0+245 SW1-4R 760mm X 760mm

15 M.P.H.

CW13-1 460mm X 460mm

ROAD NARROWS

STA 0+200 SW5-1 760mm X 760mm

3.6 LANE S 89° 38' 49" W

3.6 LANE DOVE CANYON

0+000

0+100 STAGE 2 DETOUR

S 88° 35' 58" W

S 82° 36' 49" E

0+200

3.6 LANE

3.6 LANE

24+700

CW1-8L 450mmX600mm

ROAD NARROWS

STA 0+040

CW5-1 (960mm X 960mm)

STA 0+060

SW1-4R (760mm X 760mm)

15 M.P.H.

CW13-1 460mm X 460mm

GW PP GW PP

CONSTRUCT DETOUR (CL III) EST. @ 107 M2

REMOV CONC (CURB) EST @ 12 M

PORT CTB LPRF(TY II)(STKPL, INSTL & RETRN) EST @ 6.1 M
PORT CTB LPRF(TY I) (STKPL, INSTL & RETRN) EST @ 106 M

WZPM REMOV (CL C) TY W EST @ 84 EA
WZPM REMOV (CL B) TY I-C EST @ 28 EA

WZPM REMOV (CL C) TY Y EST @ 168 EA
WZPM REMOV (CL B) TY II-A-A EST @ 56 EA

WZPM REMOV (CL C) TY W EST @ 84 EA
WZPM REMOV (CL B) TY I-C EST @ 28 EA

PORT CTB LPRF(TY II)(STKPL, INSTL & RETRN) EST @ 6.1 M
PORT CTB LPRF(TY I) (STKPL, INSTL & RETRN) EST @ 106 M

TYPE III BARRICADES

ROAD CLOSED R11-2

DETOUR M4-10L 1200MM X 450MM

**CHANGE ORDER NO. 147**

-DOVE CANYON SEQUENCE OF WORK DETOUR SUPPLEMENTAL DETAILS (PHASE 2 STAGE 2)

-NEW QUANTITIES

**CHANGE ORDER NO. 147** **NEW SHEET**

DETOUR LAYOUT DATA
(REF DOVE CANYON ℄ STA & OFFSET)

| | | | | | |
|---|---|---|---|---|---|
| PC | 9.166 LT 0+005.667 | | DEL 04°13'44"RT | | L 11.371 |
| PI | 0.000 RT 0+005.645 | | T 1.418 | | R 38.400 |
| | DEL 89°46'06"LT | | L 2.834 | | E 0.425 |
| | T 9.166 | | R 38.400 | PCC | 2.375 RT 0+153.953 |
| | L 14.386 | | E 0.026 | PI | 0.000 RT 0+160.498 |
| | R 9.144 | PT | 0.105 RT 0+063.328 | | DEL 20°28'36"RT |
| | E 3.803 | | L 79.165 | | T 6.936 |
| PT | 0.000 RT 0+014.811 | PC | 4.356 RT 0+142.707 | | L 13.724 |
| | L 45.685 | PI | 4.235 RT 0+148.493 | | R 38.400 |
| PC | 0.000 RT 0+060.496 | | DEL 16°57'58"LT | | E 0.621 |
| PI | 0.000 RT 0+061.914 | | T 5.727 | PT | 0.000 RT 0+167.434 |

DETOUR ℄

DOVE CANYON CONSTRUCTION AREA

8.2

0.3 BUFFER | 3.2 LANE | 3.2 LANE | 0.3 BUFFER

* EDGE LINE
** DOUBLE NO-PASSING LINE

LPCTB LPCTB

DOVE CANYON RD USED FOR DETOUR THIS STAGE

CONSTRUCT DETOUR (CL III) (VARIES 0 TO 2.4 M) 152MM ASPH CONC (TY A) PLACE IN TWO EQUAL LIFTS

SECTION B-B
(STAGE 2)

STATE OF TEXAS
MIGUEL G. ROGERIO
96620
LICENSED PROFESSIONAL ENGINEER

Miguel G. Rogerio, P.E. 12/1/2006
Miguel G. Rogerio, P.E. Date

©2006

Texas Department of Transportation

# INTERSECTION SEQUENCE OF WORK PHASE 2 STAGE 2 DOVE CANYON

SHEET 2 OF 2

| FED. RD. DIV. NO. | FEDERAL AID PROJECT NO. | | SHEET NO. |
|---|---|---|---|
| 6 | NH 2000(704), ETC | | 99EE |
| STATE | DIST. | COUNTY | |
| TEXAS | SAT | BEXAR | |
| CONT. | SECT. | JOB | HIGHWAY NO. |
| 2452 | 01 | 036, ETC | LP 1604 |

1:03:31 PM
12/7/2006
T:\AO\Design\lp1604fm471-90\chngorder\files\DoveCanyon\int15-01dove1(st 2).dgn

| ESTIMATED QUANTITIES | | |
|---|---|---|
| ITEM | UNIT | QTY. |
| PORT CTB LPRF (TY II) (STKPL, INSTL & RETRN) | M | - |
| PORT CTB LPRF (TY I) (STKPL, INSTL & RETRN) | M | - |
| WRK ZN PAV MRK REMOV (CL B) TY II-A-A | EA | 190 |
| WRK ZN PAV MRK REMOV (CL B) TY I-C | EA | 26 |
| WRK ZN PAV MRK REMOV (CL C) TY W | EA | 74 |
| WRK ZN PAV MRK REMOV (CL C) TY Y | EA | 276 |
| WRK ZN PAV MRK (NON REMOV)(Y) (MED NOSE) | EA | 1 |
| WRK ZN PAV MRK (NON REMOV)(W)(SLD)(600mm) | M | 16 |
| WRK ZN PAV MRK (NON REMOV)(W) ARROW | EA | 1 |
| WRK ZN PAV MRK (NON REMOV)(W) WORD | EA | 1 |
| ELIM EXT PAV MRK & MARKS (100MM) | M | 45 |

* FOR CONTRACTORS INFORMATION ONLY (NON PAY ITEM).

RADIUS PT.
℄ MARBACH RD
STA. 0+161.5
4.34 RT.

R=1.3

RAISED PAV MRK TY II-A-A
PLACED @ 0.6 M CENTERS
EST. @ 6 EA ON YELLOW MEDIAN
NOSE

(INSERT)
NOSE DETAIL
N.T.S.

SCALE: 1=600

N.B. FRONTAGE RD.

EXIST S.O.W. (PHASE 2B)
PAV MRKS (TO REMAIN IN
PLACE)

R.O.W.

ONLY

8+300

R11-2
ROAD CLOSED

STAR

S.B. MAINLANES

℄ LP 1604

NOTE(S):

-ALL DIMENSIONS SHOWN ARE IN METERS UNLESS OTHERWISE SHOWN.

-ALL REMOVEABLE WORK ZONE PAVEMENT MARKINGS SHALL COMPLY WITH THE T.M.U.T.C.D. OR BE AS DIRECTED BY THE ENGINEER.

-ALL REMOVEABLE WORK ZONE PAVEMENT MARKINGS SHOWN ON THE SHEET SHALL CONSIST OF RAISED BUTTONS AND/OR REFLECTORS, UNLESS SHOWN OTHERWISE.

-ALL REMOVEABLE WORK ZONE PAVEMENT MARKINGS SHALL BE PAID FOR BY THE EACH.

-THE PORTABLE CTB SHOWN ON THIS SHEET MAY BE VARIED TO BETTER FIT FIELD CONDITIONS AS APPROVED BY THE ENGINEER.

REMOV EXIST PAV MRKS
EST. @ 15 M

DIAGONALS

(S) EST @ 14 EA

(T) EST @ 42 EA

(V) EST @ 276 EA
DBL. APPLICATION
@ 0.3 M CENTERS

R=35

MATCH EXIST
PAV MRKS20 0+220

R=6.5

R=1.3

SEE INSERT

3.6 LANE

MARBACH ROAD

002+00

TEMPORARY SIGNAL

ONLY

001+00

0+100

0+300

26

SEE SHEET 2 OF 4
FOR FURTHER DETAILS

MARBACH RD
(CONSTRUCTED BY OTHERS)

TXDOT CONSTRUCTION AREA

R= 10

CW4-2R

CW6-3

ROAD CLOSED
R11-2
DETOUR M4-1(R)

R=30

(S) EST @ 12 EA

(T) EST @ 32 EA

WK ZN PAV MRKS
TAPER PT
5.6 LT., STA. 0+218

REMOV EXIST PAV MRKS
EST @ 30 M

LANE ENDS MERGE RIGHT
CW9-2R

(P) EST @ 184 EA

(V) EST @ 184 EA

BEGIN WRK ZN PAV MRKS
2.0 LT., STA 0+265

EXIST S.O.W. (PHASE 2B)
PAV MRKS (TO REMAIN IN
PLACE)

NTAR

R11-2
ROAD CLOSED

CONSTRUCTION TO BE
DONE BY OTHERS

LEGEND

- PROP TXDOT CONSTRUCTION AREA
- PROP CONSTRUCTION BY OTHERS
- DIRECTION OF TRAFFIC
- CONSTRUCT DETOUR (CL III)
- LPCTB
- SIGN SYMBOL
- TYPE III BARRICADES

WRK ZN PAV MRK LEGEND

- (P) REMOV (TY II-A-A)
- (S) REMOV (TY I-C)
- (T) REMOV (TY W)
- (V) REMOV (TY Y)

CHANGE ORDER NO. 137

-MARBACH RD SEQUENCE OF WORK
NEW SUPPLEMENTAL DETAILS (PHASE 2B)
(STAGE A)

-NEW QUANTITIES

CHANGE ORDER NO. 137 | NEW SHEET

STATE OF TEXAS
FITZGERALDO G. SANCHEZ
76084
LICENCED
PROFESSIONAL ENGINEER

Fitzgeraldo G. Sanchez, P.E. 08-02-06
Date

T:\AO\Design\lp1604fm471-90\chg*order*files\CO. *08-20-05\INTER SOW marbach*rdB.dgn
8/3/2006

LEVELS DISPLAYED
1 2 3 4 5 | 7 | 9 10 11 12 13 14 | 16
17 18 19 20 21 22 23 24 25 26 | 28 29 30 31 32
33 34 35 | 37 38 | 40 41 42 43 44 45 46 47 48
49 50 51 52 53 54 55 56 57 58 59 60 61 62 63

ACC: 481&1A1:/usr/d481303

FILE: .DGN

©2000 Texas Department of Transportation

# INTERSECTION SEQUENCE OF WORK

PHASE 2B (SUPPLEMENTAL)
MARBACH ROAD

SHEET 1 OF 4

| FED.RD. DIV.NO. | FEDERAL AID PROJECT NO. | | SHEET NO. |
|---|---|---|---|
| 6 | NH 2000(704), etc | | 99Ea |
| STATE | DIST. | COUNTY | |
| TEXAS | SAT | BEXAR | |
| CONT. | SECT. | JOB | HIGHWAY NO. |
| 2452 | 01 | 036, ETC | LP 1604 |

7-01-06

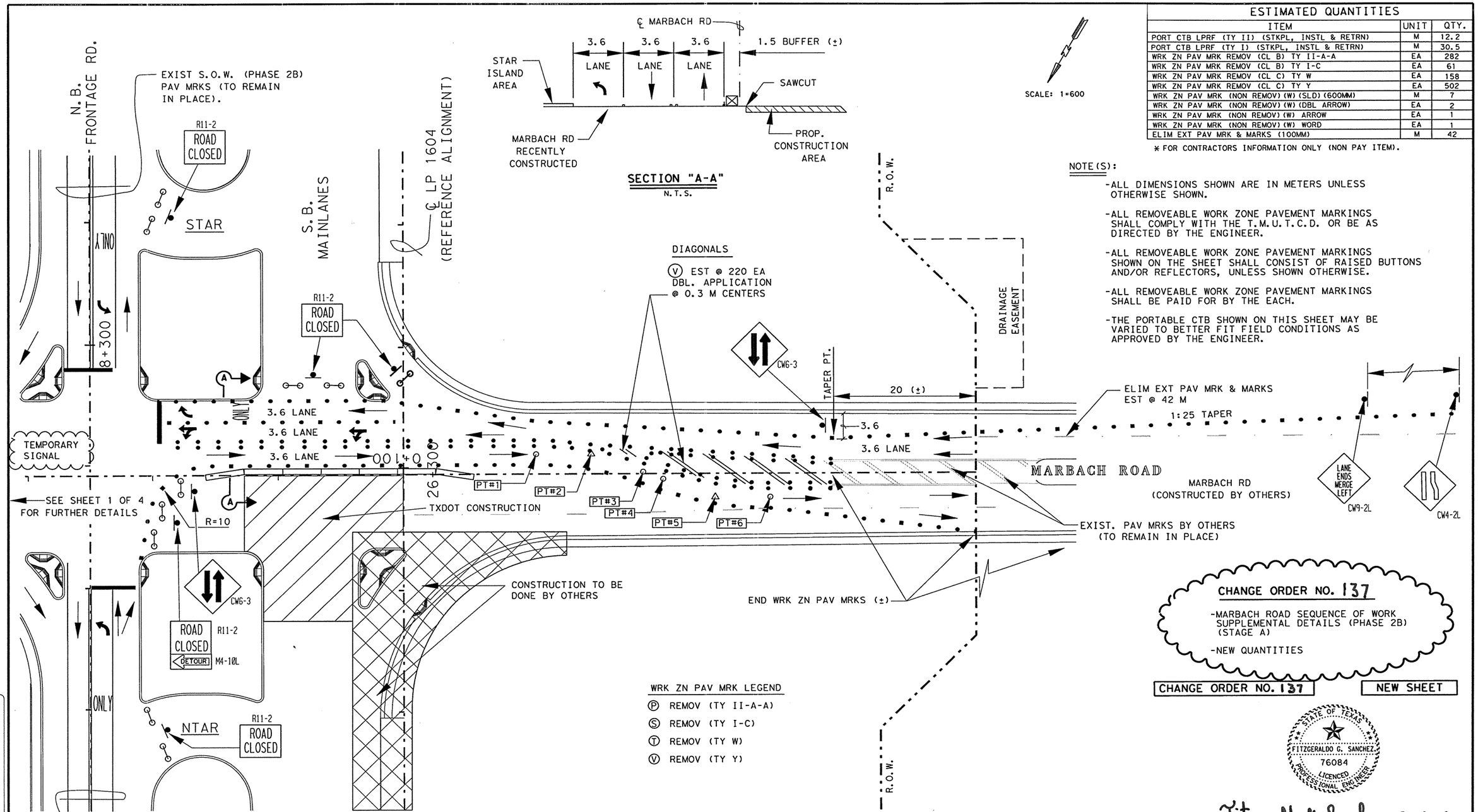


## ESTIMATED QUANTITIES

| ITEM | UNIT | QTY. |
|---|---|---|
| PORT CTB LPRF (TY II) (STKPL, INSTL & RETRN) | M | 12.2 |
| PORT CTB LPRF (TY I) (STKPL, INSTL & RETRN) | M | 30.5 |
| WRK ZN PAV MRK REMOV (CL B) TY II-A-A | EA | 282 |
| WRK ZN PAV MRK REMOV (CL B) TY I-C | EA | 61 |
| WRK ZN PAV MRK REMOV (CL C) TY W | EA | 158 |
| WRK ZN PAV MRK REMOV (CL C) TY Y | EA | 502 |
| WRK ZN PAV MRK (NON REMOV) (W) (SLD) (600MM) | M | 7 |
| WRK ZN PAV MRK (NON REMOV) (W) (DBL ARROW) | EA | 2 |
| WRK ZN PAV MRK (NON REMOV) (W) ARROW | EA | 1 |
| WRK ZN PAV MRK (NON REMOV) (W) WORD | EA | 1 |
| ELIM EXT PAV MRK & MARKS (100MM) | M | 42 |

* FOR CONTRACTORS INFORMATION ONLY (NON PAY ITEM).

NOTE(S):

-ALL DIMENSIONS SHOWN ARE IN METERS UNLESS OTHERWISE SHOWN.

-ALL REMOVEABLE WORK ZONE PAVEMENT MARKINGS SHALL COMPLY WITH THE T.M.U.T.C.D. OR BE AS DIRECTED BY THE ENGINEER.

-ALL REMOVEABLE WORK ZONE PAVEMENT MARKINGS SHOWN ON THE SHEET SHALL CONSIST OF RAISED BUTTONS AND/OR REFLECTORS, UNLESS SHOWN OTHERWISE.

-ALL REMOVEABLE WORK ZONE PAVEMENT MARKINGS SHALL BE PAID FOR BY THE EACH.

-THE PORTABLE CTB SHOWN ON THIS SHEET MAY BE VARIED TO BETTER FIT FIELD CONDITIONS AS APPROVED BY THE ENGINEER.

CHANGE ORDER NO. 137

-MARBACH ROAD SEQUENCE OF WORK SUPPLEMENTAL DETAILS (PHASE 2B) (STAGE A)

-NEW QUANTITIES

CHANGE ORDER NO. 137 | NEW SHEET

WRK ZN PAV MRK LEGEND

(P) REMOV (TY II-A-A)
(S) REMOV (TY I-C)
(T) REMOV (TY W)
(V) REMOV (TY Y)

DETOUR CONTROL POINTS
REFERENCE ℄ LP 1604 STA'S & OFFSETS

MARBACH RD.

| PT#'S | STATION'S | OFFSET'S | |
|---|---|---|---|
| PT#1 | STA. 26+302.24 | 21.20 RT | |
| PT#2 | STA. 26+302.24 | 30.00 RT | ASSOCIATED CURVE DATA |
| PT#3 | STA. 26+299.23 | 38.27 RT | |
| PT#4 | STA. 26+298.06 | 41.48 RT | |
| PT#5 | STA. 26+295.05 | 49.75 RT | ASSOCIATED CURVE DATA |
| PT#6 | STA. 26+295.05 | 58.55 RT | |

Δ= 19°50'22"RT
T= 8.744
L= 17.313
R= 50.000
E= 0.759

Δ= 19°58'17" LT
T= 8.803
L= 17.428
R= 50.000
E= 0.769

LEGEND

- PROP TXDOT CONSTRUCTION AREA
- PROP CONSTRUCTION BY OTHERS
- DIRECTION OF TRAFFIC
- CONSTRUCT DETOUR (CL III)
- LPCTB
- SIGN SYMBOL
- TYPE III BARRICADES

STATE OF TEXAS
FITZGERALDO G. SANCHEZ
76084
LICENCED PROFESSIONAL ENGINEER

Fitzgeraldo G Sanchez 08-02-06
Fitzgeraldo G. Sanchez, P.E. Date

©2000 Texas Department of Transportation

# INTERSECTION SEQUENCE OF WORK

PHASE 2B (SUPPLEMENTAL)
MARBACH ROAD

SHEET 2 OF 4

| FED.RD. DIV.NO. | FEDERAL AID PROJECT NO. | | SHEET NO. |
|---|---|---|---|
| 6 | NH 2000(704), etc | | |
| STATE | DIST. | COUNTY | |
| TEXAS | SAT | BEXAR | |
| CONT. | SECT. | JOB | HIGHWAY NO. |
| 2452 | 01 | 036, ETC | LP 1604 |

7-01-06

8/3/2006
I:\AO\Design\lp1604fm471-90\chgorder*files\CO.*08-20-05\INTER SOW marbach*rda.dgn

LEVELS DISPLAYED
1 2 3 4 5 | 7 | 9 10 11 12 13 14 15 16
17 18 19 20 21 22 23 24 25 26 | 28 29 30 31 32
33 34 35 | 37 38 | 40 41 42 43 44 45 46 47 48
49 50 51 52 53 54 55 56 57 58 59 60 61 62 63

ACC: A/DESIGN/LP1604FM471-90
FILE: INTSOWMARBACH RDA.DGN

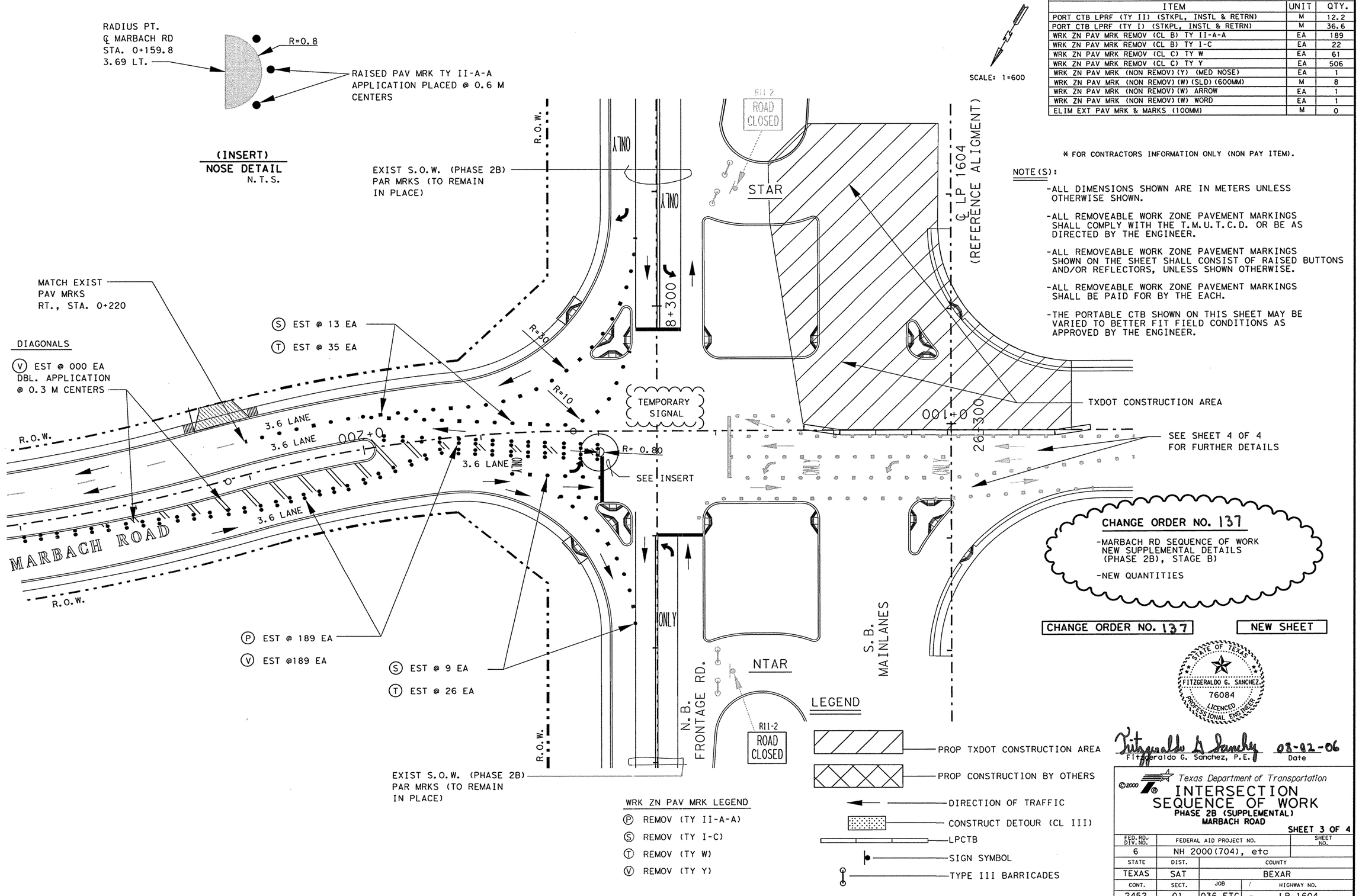


## ESTIMATED QUANTITIES

| ITEM | UNIT | QTY. |
|---|---|---|
| PORT CTB LPRF (TY II) (STKPL, INSTL & RETRN) | M | 12.2 |
| PORT CTB LPRF (TY I) (STKPL, INSTL & RETRN) | M | 36.6 |
| WRK ZN PAV MRK REMOV (CL B) TY II-A-A | EA | 189 |
| WRK ZN PAV MRK REMOV (CL B) TY I-C | EA | 22 |
| WRK ZN PAV MRK REMOV (CL C) TY W | EA | 61 |
| WRK ZN PAV MRK REMOV (CL C) TY Y | EA | 506 |
| WRK ZN PAV MRK (NON REMOV) (Y) (MED NOSE) | EA | 1 |
| WRK ZN PAV MRK (NON REMOV) (W) (SLD) (600MM) | M | 8 |
| WRK ZN PAV MRK (NON REMOV) (W) ARROW | EA | 1 |
| WRK ZN PAV MRK (NON REMOV) (W) WORD | EA | 1 |
| ELIM EXT PAV MRK & MARKS (100MM) | M | 0 |

* FOR CONTRACTORS INFORMATION ONLY (NON PAY ITEM).

NOTE(S):

- ALL DIMENSIONS SHOWN ARE IN METERS UNLESS OTHERWISE SHOWN.
- ALL REMOVEABLE WORK ZONE PAVEMENT MARKINGS SHALL COMPLY WITH THE T.M.U.T.C.D. OR BE AS DIRECTED BY THE ENGINEER.
- ALL REMOVEABLE WORK ZONE PAVEMENT MARKINGS SHOWN ON THE SHEET SHALL CONSIST OF RAISED BUTTONS AND/OR REFLECTORS, UNLESS SHOWN OTHERWISE.
- ALL REMOVEABLE WORK ZONE PAVEMENT MARKINGS SHALL BE PAID FOR BY THE EACH.
- THE PORTABLE CTB SHOWN ON THIS SHEET MAY BE VARIED TO BETTER FIT FIELD CONDITIONS AS APPROVED BY THE ENGINEER.

**CHANGE ORDER NO. 137**

-MARBACH RD SEQUENCE OF WORK
NEW SUPPLEMENTAL DETAILS
(PHASE 2B), STAGE B)

-NEW QUANTITIES

**CHANGE ORDER NO. 137** **NEW SHEET**

STATE OF TEXAS
FITZGERALDO G. SANCHEZ
76084
LICENCED
PROFESSIONAL ENGINEER

Fitzgeraldo G. Sanchez, P.E. — 08-02-06 Date

Texas Department of Transportation
©2000

# INTERSECTION SEQUENCE OF WORK

**PHASE 2B (SUPPLEMENTAL)**
**MARBACH ROAD**

SHEET 3 OF 4

| FED.RD. DIV.NO. | FEDERAL AID PROJECT NO. | | SHEET NO. |
|---|---|---|---|
| 6 | NH 2000(704), etc | | |
| STATE | DIST. | COUNTY | |
| TEXAS | SAT | BEXAR | |
| CONT. | SECT. | JOB / HIGHWAY NO. | |
| 2452 | 01 | 036,ETC - LP 1604 | |

7-01-06

T:\AO\Design\lp1604fm471-90\chg*order*files\CO. *08-20-05\INTER SOW marbach*rd0.dgn
8/3/2006

LEVELS DISPLAYED
1 2 3 4 5 7 9 10 11 12 13 14 15 16
17 18 19 20 21 22 23 24 25 26 28 29 30 31 32
33 34 35 37 38 40 41 42 43 44 45 46 47 48
49 50 51 52 53 54 55 56 57 58 59 60 61 62 63

ACC: 481&1A:/usr/d481303

FILE: .DGN

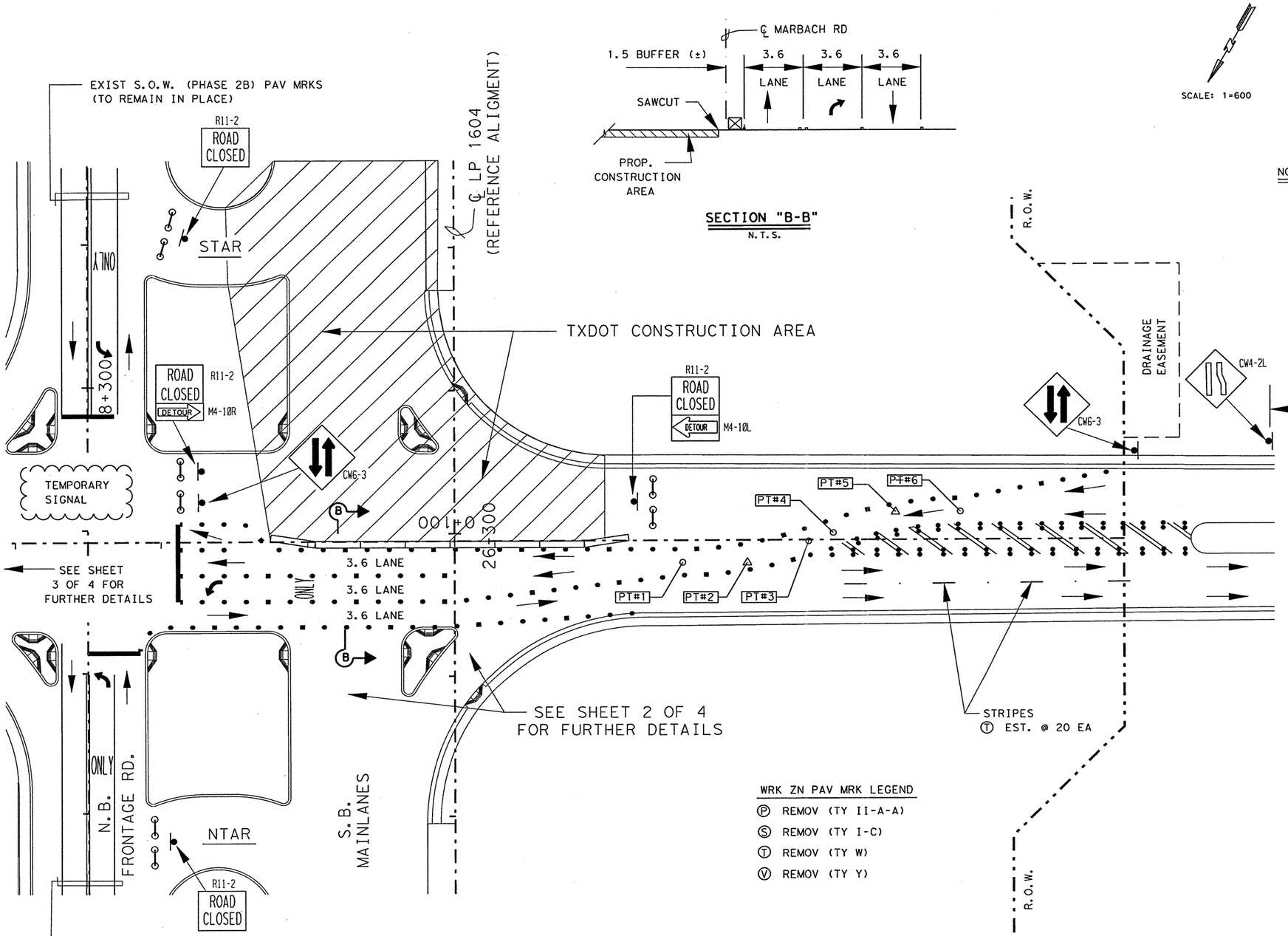





**SECTION "B-B"**
N.T.S.

SCALE: 1=600

## ESTIMATED QUANTITIES

| ITEM | UNIT | QTY. |
|---|---|---|
| PORT CTB LPRF (TY II) (STKPL, INSTL & RETRN) | M | 12.2 |
| PORT CTB LPRF (TY I) (STKPL, INSTL & RETRN) | M | 36.6 |
| WRK ZN PAV MRK REMOV (CL B) TY II-A-A | EA | 142 |
| WRK ZN PAV MRK REMOV (CL B) TY I-C | EA | 46 |
| WRK ZN PAV MRK REMOV (CL C) TY W | EA | 150 |
| WRK ZN PAV MRK REMOV (CL C) TY Y | EA | 467 |
| WRK ZN PAV MRK (NON REMOV) (W) (SLD) (600MM) | M | 10.8 |
| WRK ZN PAV MRK (NON REMOV) (W) ARROW | EA | 1 |
| WRK ZN PAV MRK (NON REMOV) (W) WORD | EA | 1 |
| ELIM EXT PAV MRK & MARKS (100MM) | M | 0 |

* FOR CONTRACTORS INFORMATION ONLY (NON PAY ITEM).

NOTE(S):

-ALL DIMENSIONS SHOWN ARE IN METERS UNLESS OTHERWISE SHOWN.

-ALL REMOVEABLE WORK ZONE PAVEMENT MARKINGS SHALL COMPLY WITH THE T.M.U.T.C.D. OR BE AS DIRECTED BY THE ENGINEER.

-ALL REMOVEABLE WORK ZONE PAVEMENT MARKINGS SHOWN ON THE SHEET SHALL CONSIST OF RAISED BUTTONS AND/OR REFLECTORS, UNLESS SHOWN OTHERWISE.

-ALL REMOVEABLE WORK ZONE PAVEMENT MARKINGS SHALL BE PAID FOR BY THE EACH.

-THE PORTABLE CTB SHOWN ON THIS SHEET MAY BE VARIED TO BETTER FIT FIELD CONDITIONS AS APPROVED BY THE ENGINEER.

**WRK ZN PAV MRK LEGEND**

Ⓟ REMOV (TY II-A-A)
Ⓢ REMOV (TY I-C)
Ⓣ REMOV (TY W)
Ⓥ REMOV (TY Y)

**DETOUR CONTROL POINTS**
**REFERENCE ℄ LP 1604 STA'S & OFFSETS**

MARBACH RD.

| PT#'S | STATION'S | OFFSET'S | |
|---|---|---|---|
| PT#1 | STA. 26+295.98 | 31.18 RT | |
| PT#2 | STA. 26+295.98 | 40.00 RT | ASSOCIATED CURVE DATA |
| PT#3 | STA. 26+298.89 | 48.33 RT | |
| PT#4 | STA. 26+300.06 | 51.67 RT | |
| PT#5 | STA. 26+303.04 | 60.18 RT | ASSOCIATED CURVE DATA |
| PT#6 | STA. 26+303.06 | 69.00 RT | |

Δ= 19°16'33" LT
T= 8.490
L= 16.821
R= 50.000
E= 0.716

Δ= 19°06'27" RT
T= 8.415
L= 16.674
R= 50.000
E= 0.703

**LEGEND**

PROP TXDOT CONSTRUCTION AREA
PROP CONSTRUCTION BY OTHERS
DIRECTION OF TRAFFIC
CONSTRUCT DETOUR (CL III)
LPCTB
SIGN SYMBOL
TYPE III BARRICADES

**CHANGE ORDER NO. 137**

-MARBACH RD SEQUENCE OF WORK SUPPLEMENTAL DETAILS (PHASE 2B) (STAGE B)

-NEW QUANTITIES

CHANGE ORDER NO. 137 | NEW SHEET

STATE OF TEXAS
FITZGERALDO G. SANCHEZ
76084
LICENCED
PROFESSIONAL ENGINEER

Fitzgeraldo G. Sanchez, P.E. — 08-02-06
Fitzgeraldo G. Sanchez, P.E. — Date

©2000 Texas Department of Transportation

# INTERSECTION SEQUENCE OF WORK
**PHASE 2B (SUPPLEMENTAL)**
**MARBACH ROAD**

SHEET 4 OF 4

| FED. RD. DIV. NO. | FEDERAL AID PROJECT NO. | | SHEET NO. |
|---|---|---|---|
| 6 | NH 2000(704), etc | | |
| STATE | DIST. | COUNTY | |
| TEXAS | SAT | BEXAR | |
| CONT. | SECT. | JOB | HIGHWAY NO. |
| 2452 | 01 | 036,ETC | LP 1604 |

7-01-06

8/3/2006
T:\AO\Design\lp1604fm471-90\chg*order*files\CO.#08-20-05\INTER SOW marbach*rdc.dgn

| LEVELS DISPLAYED | | | | | | | | | | | | | | | | ACC: A/DESIGN/LP1604FM471-90 |
|---|---|---|---|---|---|---|---|---|---|---|---|---|---|---|---|---|
| 1 | 2 | 3 | 4 | 5 | 6 | 7 | 8 | 9 | 10 | 11 | 12 | 13 | 14 | 15 | 16 | |
| 17 | 18 | 19 | 20 | 21 | 22 | 23 | 24 | 25 | 26 | 27 | 28 | 29 | 30 | 31 | 32 | |
| 33 | 34 | 35 | 36 | 37 | 38 | 39 | 40 | 41 | 42 | 43 | 44 | 45 | 46 | 47 | 48 | FILE: INTSOWMARBACH RDA.DGN |
| 49 | 50 | 51 | 52 | 53 | 54 | 55 | 56 | 57 | 58 | 59 | 60 | 61 | 62 | 63 | | |

Plotted on: 2/6/2007
Design Filename: T:\AO\Design\lp1604fm471-90\PD*Phase2*change*order*mylars\submittal\plansheets\TCP\dove\phase2C05DET.dgn
FILE T:\AO\Design\lp1604fm471-90\PD*Phase2*change*order*mylars\submittal\plansheets\TCP\dove\phase2C05DET.dgn
LEVEL 1 2 3 4 5 6 7 8 9 10 11 12 13 14 15 16 17 18 19 20 21 22 23 24 25 26 27 28 29 30 31 32
DISPLAYED 33 34 35 36 37 38 39 40 41 42 43 44 45 46 47 48 49 50 51 52 53 54 55 56 57 58 59 60 61 62 63

SCALE 1:2000

R.O.W.

N.B. FRONTAGE RD.

M4-9N
DOVE CANYON
EMORY PEAK M4-9N
DETOUR AHEAD
CW20-2D

* SIGNS FOR DOVE CANYON ARE SHOWN IN THE SEQUENCE OF WORK FOR DOVE CANYON PHASE 2 STAGE 2. SEE SHEET 99EE.

M4-9N
DOVE CANYON
DETOUR
M4-9AL

MATCHLINE STA 24+500

24+500 24+600 24+700 24+800 24+900 25+000 25+100 25+200

℄ LP 1604

EXIST OVERHEAD ELECTRIC LINES

WRK ZN PAV MRK SH TRM (TAB) TY Y AT 6.1M O.C. . EST. @ 206 EA.

MATCHLINE STA 25+220

DEAN WORD
1604
FIELD OFFICE LOCATION

S 89° 32' 49" W

PC 0+106.243

R.O.W.

DOVE CANYON

PT 0+157.163

CHANGE ORDER NO. 153

-SIGNING AND BARRICADES FOR DOVE CANYON DETOUR ROUTE.

SCALE 1:2000

M4-9N
DOVE CANYON
EMORY PEAK M4-9N
DETOUR AHEAD
CW20-2D

MATCHLINE STA 25+940

R.O.W.

25+900 25+800 25+700 25+600 25+500 25+400 25+300

DRAINAGE EASEMENT

M4-8a
END DETOUR

MR1-1
STOP

M4-9N
DOVE CANYON
EMORY PEAK M4-9N
DETOUR
M4-9AL

N.B. FRONTAGE RD.

DOVE CANYON M4-9N
EMORY PEAK M4-9N
DETOUR
M4-9AR

EMORY PEAK M4-9N
DETOUR
M4-9AL

M4-8a
END DETOUR

MATCHLINE STA 25+220

WRK ZN PAV MRK SH TRM (TAB) TY Y AT 6.1M O.C. . EST. @ 118 EA.

R11-2
ROAD CLOSED

STOP MR1-1
HAS BEEN MOVED AND RESET

CW1-8L
460mm X 460mm

R11-2
ROAD CLOSED
DETOUR
M4-10L

TYPE III BARRICADES

TYPE III BARRICADES

℄ LP 1604

R.O.W.

POT 0+115.550

PROPOSED EMORY PEAK

LEGEND

- TRAFFIC FLOW DIRECTION
- CHANNELIZING DEVICES
- DRAINAGE & ROADWAY CONSTRUCTION
- TYPE III BARRICADES
- SIGN

NOTES

1.) SEE BARRICADE AND CONSTRUCTION STANDARDS FOR SIGN MOUNTING AND PLACEMENT DETAILS.

2.) DETOUR LAYOUT IS BEING PROVIDED FOR ROUTE AND SIGNS NEEDED ONLY.

* SIGNS FROM PREVIOUS PHASING TO REMAIN DURING THIS PHASE

STATE OF TEXAS
MIGUEL G. ROGERIO
96620
LICENSED
PROFESSIONAL ENGINEER

Miguel G. Rogerio, P.E. 2/6/2007
Miguel G. Rogerio, P.E. Date

CHANGE ORDER NO. 153 | REVISED SHEET

© 2000 Texas Department of Transportation

# INTERSECTION SEQUENCE OF WORK PHASE 2 STAGE 2 DOVE CANYON

SHEET 3

| FED.RD. DIV.NO. | FEDERAL AID PROJECT NO. | | SHEET NO. |
|---|---|---|---|
| 6 | NH 2000(704), ETC. | | 99FF |
| STATE | DIST. | COUNTY | |
| TEXAS | SAT | BEXAR | |
| CONT. | SECT. | JOB | HIGHWAY NO. |
| 2452 | 01 | 036,ETC | LP 1604 |

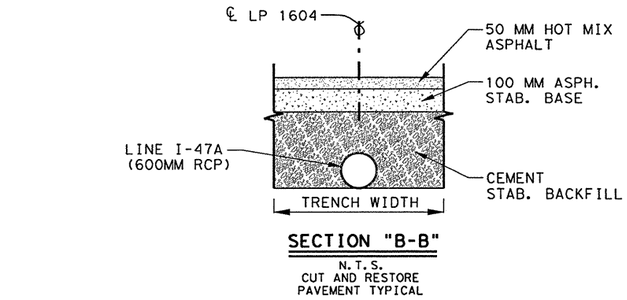


**SECTION "B-B"**

N.T.S.
CUT AND RESTORE PAVEMENT TYPICAL

WRK ZN PAV MRK LEGEND

- (P) REMOV (TY II-A-A)
- (S) REMOV (TY I-C)
- (T) REMOV (TY W)
- (V) REMOV (TY Y)

LEGEND

- PROPOSED CONSTRUCTION AREA
- DIRECTION OF TRAFFIC
- CONSTRUCT DETOUR (CL III)
- LPCTB
- SIGN SYMBOL
- I — TYPE III BARRICADES

SCALE: 1=600

| ESTIMATED QUANTITIES | | |
|---|---|---|
| ITEM | UNIT | QTY. |
| PORT CTB LPRF (TY II) (STKPL, INSTL & RETRN) | M | 12.2 |
| PORT CTB LPRF (TY I) (STKPL, INSTL & RETRN) | M | 67.1 |
| WRK ZN PAV MRK REMOV (CL C) TY II-A-A | EA | 60 |
| WRK ZN PAV MRK REMOV (CL B) TY I-C | EA | 60 |
| WRK ZN PAV MRK REMOV (CL C) TY W | EA | 236 |
| WRK ZN PAV MRK REMOV (CL C) TY Y | | 236 |
| WRK ZN PAV MRK (NON REMOV) (W) (SLD) (600mm) | M | 5 |
| CONSTRUCT DETOURS (CL III) | M2 | 347 |
| EMBANK (TY B) (CL 2) | M3 | 790 |
| EXCAV (SPL) | M3 | 790 |
| CUT & RESTORING PAV | M2 | 7 |
| CEMENT STABILIZED BACKFILL | M3 | 6 |
| CMP AR (GAL STL DES 3) | M | 18 |
| SET (TY II) (DES 3) (CMP) (1:6) | EA | 1 |
| REMOV. EXIST. S.E.T. | EA | 1 |

*FOR CONTRACTORS INFORMATION ONLY (NON PAY ITEM).

S.E.T. REMOVAL TO BE PAID FOR UNDER ~~THIS~~ ITEM 496-5004

NOTE(S):

-ALL DIMENSIONS SHOWN ARE IN METERS UNLESS OTHERWISE SHOWN.

-ALL REMOVEABLE WORK ZONE PAVEMENT MARKINGS SHALL COMPLY WITH THE T.M.U.T.C.D. OR BE AS DIRECTED BY THE ENGINEER.

-ALL REMOVEABLE WORK ZONE PAVEMENT MARKINGS SHOWN ON THE SHEET SHALL CONSIST OF RAISED BUTTONS AND/OR REFLECTORS, UNLESS SHOWN OTHERWISE.

-ALL REMOVEABLE WORK ZONE PAVEMENT MARKINGS SHALL BE PAID FOR BY THE EACH.

-THE PORTABLE CTB SHOWN ON THIS SHEET MAY BE VARIED TO BETTER FIT FIELD CONDITIONS AS APPROVED BY THE ENGINEER.

(#) = PROPOSED DRIVEWAY, SEE PLAN/ PROFILES FOR MORE DETAILS.

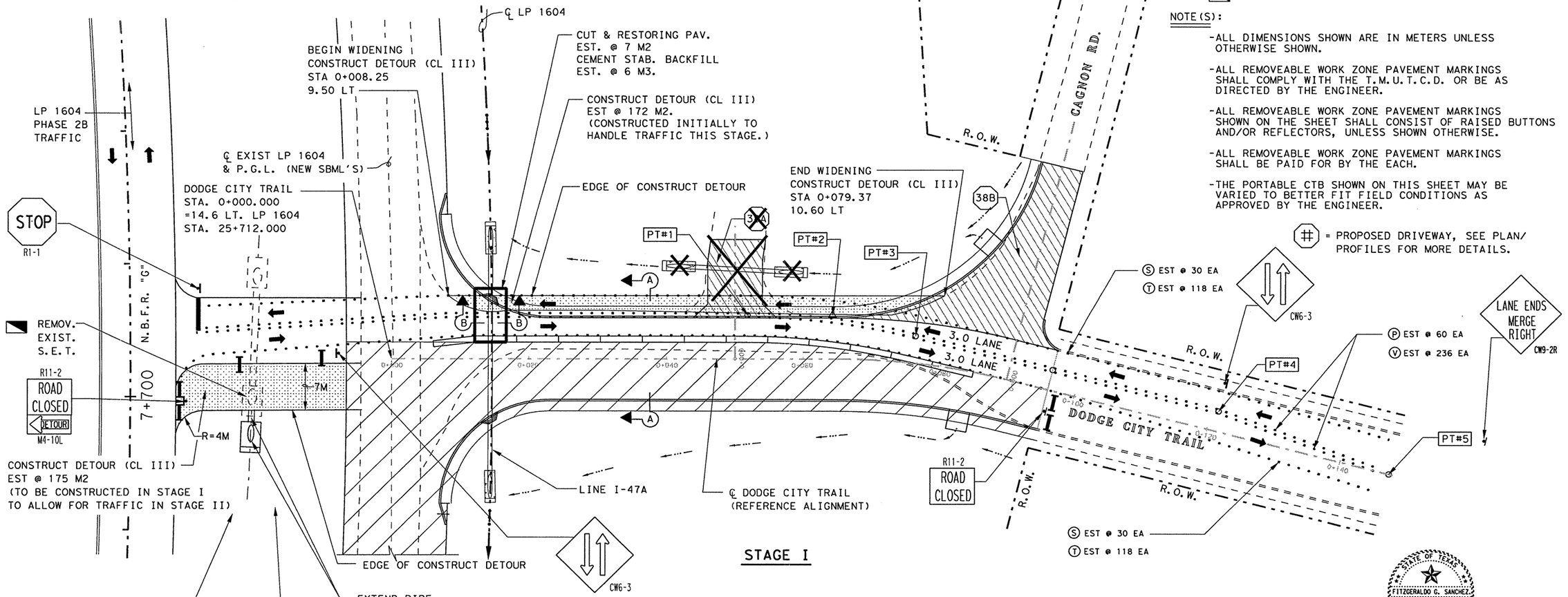


**STAGE I**

DETOUR CONTROL POINTS

DODGE CITY TRAIL

| PT#'S | STATION'S | OFFSET'S |
|---|---|---|
| PT#1 | STA. 0+051.82 | 6.50 LT |
| PT#2 | STA. 0+064.26 | 6.50 LT |
| PT#3 | STA. 0+076.01 | 4.06 LT |
| PT#4 | STA. 0+127.00 | 3.05 LT |
| PT#5 | STA. 0+147.34 | 0 |

ASSOCIATED CURVE DATA

- Δ= 14°13'39" RT
- T= 12.480
- L= 24.832
- R= 100
- E= 0.776

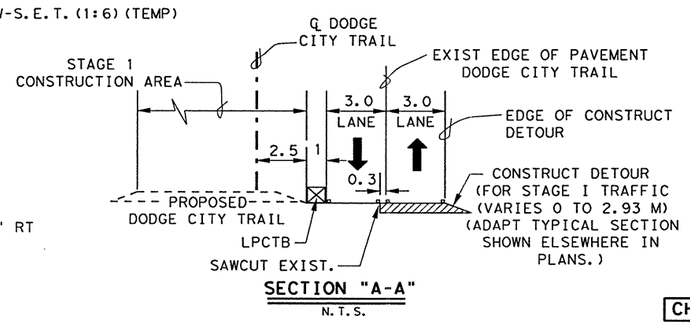


**SECTION "A-A"**

N.T.S.

CHANGE ORDER NO. 129

-DODGE CITY TRAIL SEQUENCE OF WORK SUPPLEMENTAL DETAILS (PHASE 2B) (STAGE I)

-NEW QUANTITIES

CHANGE ORDER NO. 129 | NEW SHEET

STATE OF TEXAS — FITZGERALDO G. SANCHEZ — 76084 — LICENCED PROFESSIONAL ENGINEER

Fitzgeraldo G. Sanchez, P.E. — Date 06-15-06

Texas Department of Transportation

# INTERSECTION SEQUENCE OF WORK

PHASE 2B (SUPPLEMENTAL)
DODGE CITY TRAIL

SHEET 1 OF 2

| FED.RD. DIV.NO. | FEDERAL AID PROJECT NO. | | SHEET NO. |
|---|---|---|---|
| 6 | NH 2000(704), etc | | 995 |
| STATE | DIST. | COUNTY | |
| TEXAS | SAT | BEXAR | |
| CONT. | SECT. | JOB | HIGHWAY NO. |
| 2452 | 01 | 036, ETC | LP 1604 |

6-07-06

T:\NO\Design\lp1604fm471-90\INTER SOW dodgecity+troll.dgn
6/15/2006

SCALE: 1=600

WRK ZN PAV MRK LEGEND

- (P) REMOV (TY II-A-A)
- (S) REMOV (TY I-C)
- (T) REMOV (TY W)
- (V) REMOV (TY Y)

LEGEND

- PROPOSED CONSTRUCTION AREA
- DIRECTION OF TRAFFIC
- CONSTRUCT DETOUR (CL III)
- LPCTB
- SIGN SYMBOL
- TYPE III BARRICADES

| ESTIMATED QUANTITIES | | |
|---|---|---|
| ITEM | UNIT | QTY. |
| PORT CTB LPRF (TY II) (STKPL, INSTL & RETRN) | M | 12.2 |
| PORT CTB LPRF (TY I) (STKPL, INSTL & RETRN) | M | 67.1 |
| WRK ZN PAV MRK REMOV (CL C) TY II-A-A | EA | 60 |
| WRK ZN PAV MRK REMOV (CL B) TY I-C | EA | 60 |
| WRK ZN PAV MRK REMOV (CL C) TY W | EA | 236 |
| WRK ZN PAV MRK REMOV (CL C) TY Y | EA | 236 |
| WRK ZN RAV MRK (NON REMOV)(W)(SLD)(600 mm) | M | 4 |
| | | |
| | | |
| | | |

* FOR CONTRACTORS INFORMATION ONLY (NON PAY ITEM).

NOTE(S):

- ALL DIMENSIONS SHOWN ARE IN METERS UNLESS OTHERWISE SHOWN.
- ALL REMOVEABLE WORK ZONE PAVEMENT MARKINGS SHALL COMPLY WITH THE T.M.U.T.C.D. OR BE AS DIRECTED BY THE ENGINEER.
- ALL REMOVEABLE WORK ZONE PAVEMENT MARKINGS SHOWN ON THE SHEET SHALL CONSIST OF RAISED BUTTONS AND/OR REFLECTORS, UNLESS SHOWN OTHERWISE
- ALL REMOVEABLE WORK ZONE PAVEMENT MARKINGS SHALL BE PAID FOR BY THE EACH..
- THE PORTABLE CTB SHOWN ON THIS SHEET MAY BE VARIED TO BETTER FIT FIELD CONDITIONS AS APPROVED BY THE ENGINEER.

(#) = PROPOSED DRIVEWAY, SEE PLAN/PROFILES FOR MORE DETAILS.

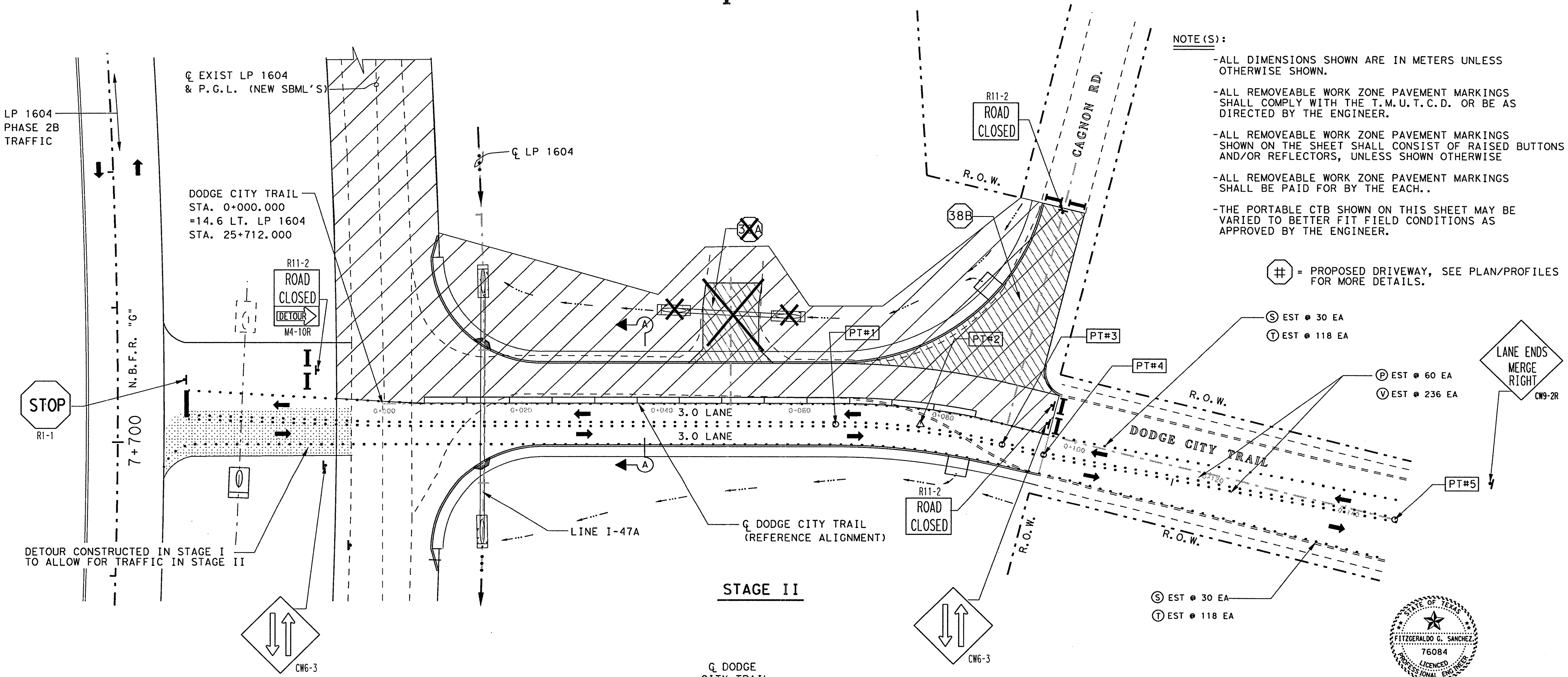


STAGE II

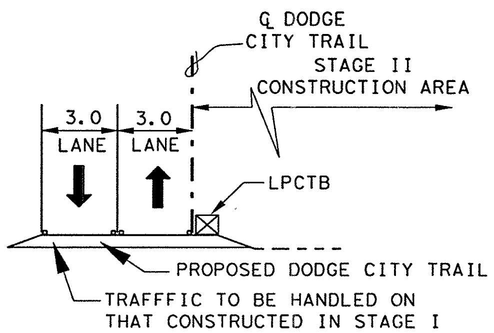


SECTION "A-A"

N.T.S.

DETOUR CONTROL POINTS

| PT#'S | DODGE CITY TRAIL STATION'S | OFFSET'S |
|---|---|---|
| PT#1 | STA. 0+065.01 | 3.00 RT |
| PT#2 | STA. 0+077.40 | 2.25 LT |
| PT#3 | STA. 0+089.73 | 3.00 RT |
| PT#4 | STA. 0+095.85 | 3.00 RT |
| PT#5 | STA. 0+147.34 | 0 |

ASSOCIATED CURVE DATA

$\Delta$= 14° 13' 40" RT
T= 12.00
L= 23.80
R= 96
E= 0.75

CHANGE ORDER NO. 129

- DODGE CITY TRAIL SEQUENCE OF WORK SUPPLEMENTAL DETAILS (PHASE 2B) (STAGE II)
- NEW QUANTITIES

CHANGE ORDER NO. 129

NEW SHEET

STATE OF TEXAS
FITZGERALDO G. SANCHEZ
76084
LICENCED
PROFESSIONAL ENGINEER

Fitzgeraldo G. Sanchez 06-15-06
Fitzgeraldo G. Sanchez, P.E. Date

©2000 Texas Department of Transportation

# INTERSECTION SEQUENCE OF WORK

**PHASE 2B (SUPPLEMENTAL)**
**DODGE CITY TRAIL**

**SHEET 2 OF 2**

| FED. RD. DIV. NO. | FEDERAL AID PROJECT NO. | | SHEET NO. |
|---|---|---|---|
| 6 | NH 2000(704), etc | | 99K |
| STATE | DIST. | COUNTY | |
| TEXAS | SAT | BEXAR | |
| CONT. | SECT. | JOB | HIGHWAY NO. |
| 2452 | 01 | 036, ETC | LP 1604 |

6-07-06

t:\oo\design\lp1604fm471-90\inter sow dodge*city*trailb.dgn
6/15/2006

| SEQUENCE OF WORK ESTIMATED QUANTITIES | | 2452-01-037 |
|---|---|---|
| ITEM | UNIT | QTY |
| PORT CONC TRAF BAR (STKPL, INSTL & RETRN) | M | 128 |
| VEH IMP ATTN ASSEM BRLS (MOVE & RESET) | EA | 28 |
| VEH IMP ATTN ASSEM BRLS (REMOVE) | EA | 28 |
| | | |

SCALE 1:2000

DRAINAGE & ROADWAY CONSTRUCTION

TRAFFIC FLOW DIRECTION

V.I.A. ASSEMBLY (14 BARRELS EACH LOCATION)

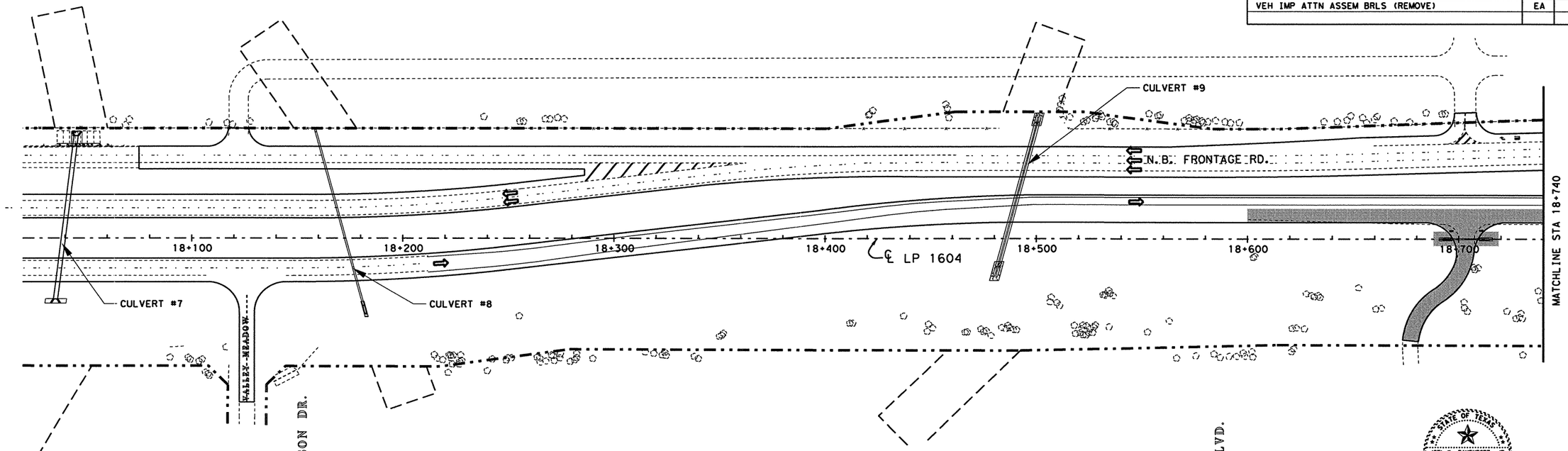


SCALE 1:2000

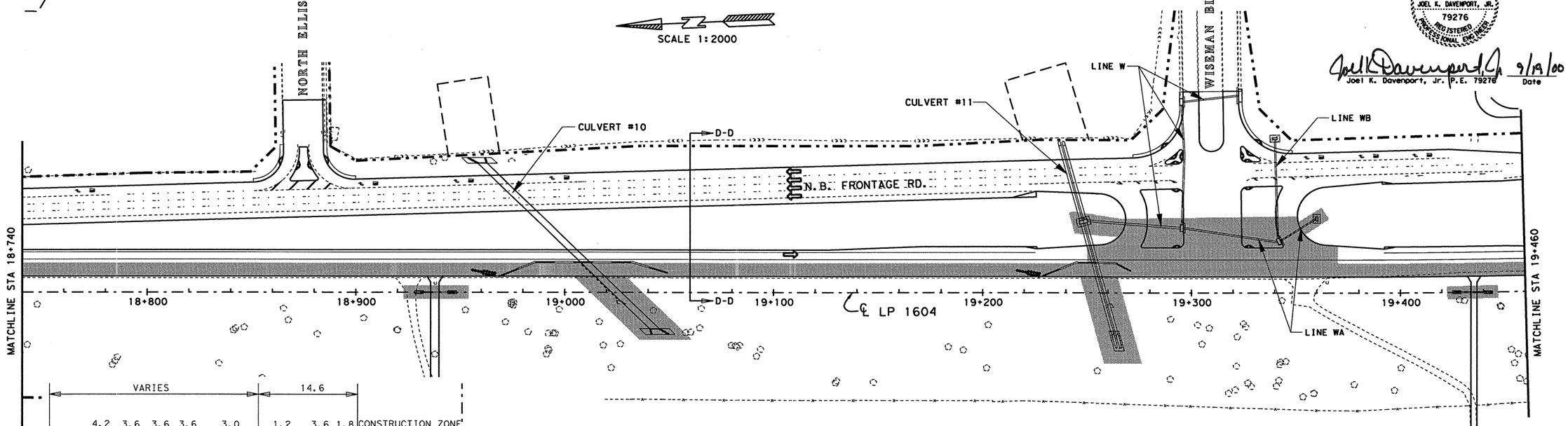


PHASE 2B STAGE B
TYPICAL SECTION D-D
FROM STA 18+500 TO STA 27+900
NOT TO SCALE

| PAVEMENT MARKING ESTIMATED QUANTITIES | | 2452-01-037 |
|---|---|---|
| ITEM | UNIT | QTY |
| WK ZN PAV MARK | | |
| NON-REMOV (W) (SLD) 100 MM | M | 1250 |
| NON-REMOV (Y) (SLD) 100 MM | M | 1084 |
| ELM EXT PAV MRK & MRKR 100MM | M | 1084 |

STATE OF TEXAS
JOEL K. DAVENPORT, JR.
79276
REGISTERED
PROFESSIONAL ENGINEER

Joel K. Davenport, Jr. 9/19/00
Joel K. Davenport, Jr. P.E. 79276 Date

©2000

Texas Department of Transportation

# SEQUENCE OF WORK
# PHASE 2B

SHEET 9 OF 13

| FED. RD. DIV. NO. | FEDERAL AID PROJECT NO. | | SHEET NO. |
|---|---|---|---|
| 6 | NH 2000(704), ETC. | | 100 |
| STATE | DIST. | COUNTY | |
| TEXAS | SAT | BEXAR | |
| CONT. | SECT. | JOB | HIGHWAY NO. |
| 2452 | 01 | 036, ETC | LP 1604 |

FILE: t:\gov\design\lp1604fm471-90\sow\phase1\phase2b09.dgn 15 SEP 2000
LEVEL DISPLAYED
1 2 3 4 5 6 7 8 9 10 11 21 31 41 51 61 71 81 91 02 12 22 32 42 52 62 72 82 92 03 13 2
33 43 53 63 73 83 93 04 14 24 34 44 54 64 74 84 94 05 15 25 35 45 55 65 75 85 95 06 16 96 63

DRAINAGE & ROADWAY CONSTRUCTION ⇨ TRAFFIC FLOW DIRECTION

V.I.A. ASSEMBLY (14 BARRELS EACH LOCATION)

| SEQUENCE OF WORK ESTIMATED QUANTITIES | | 2452-01-037 | 2452-01-036 |
|---|---|---|---|
| ITEM | UNIT | QTY | QTY |
| PORT CONC TRAF BAR (STKPL, INSTL & RETRN) | M | - | 166 |
| VEH IMP ATTN ASSEM BRLS (MOVE & RESET) | EA | - | 28 |
| VEH IMP ATTN ASSEM BRLS (REMOVE) | EA | - | 28 |
| | | | |

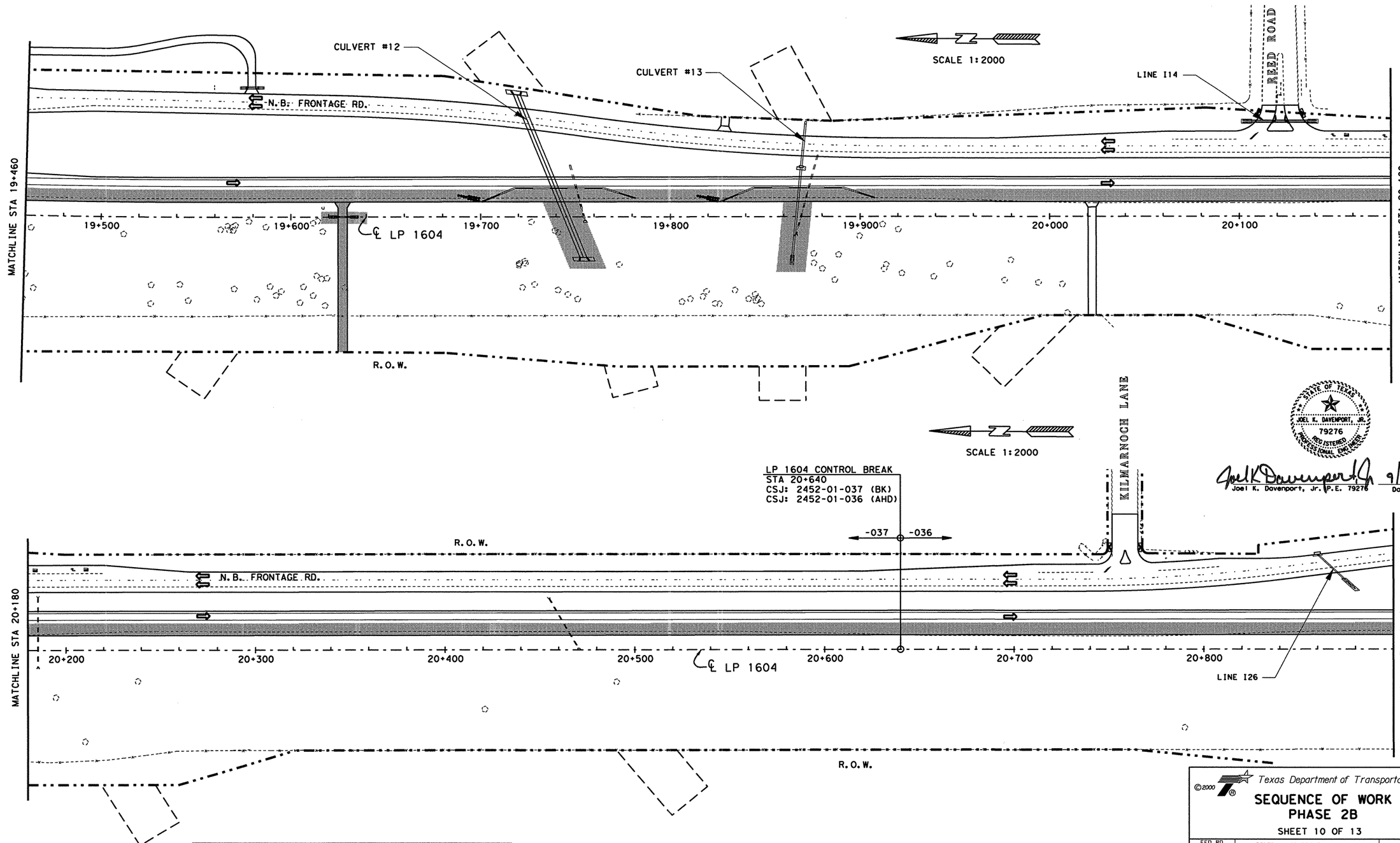


STATE OF TEXAS
JOEL K. DAVENPORT, JR.
79276
REGISTERED PROFESSIONAL ENGINEER

Joel K Davenport Jr 9/19/00
Joel K. Davenport, Jr. P.E. 79276 Date

| PAVEMENT MARKING ESTIMATED QUANTITIES | | 2452-01-037 | 2452-01-036 |
|---|---|---|---|
| ITEM | UNIT | QTY | QTY |
| WK ZN PAV MARK | | | |
| NON-REMOV (W) (SLD) 100 MM | M | 1180 | 260 |
| NON-REMOV (Y) (SLD) 100 MM | M | 1180 | 260 |
| ELM EXT PAV MRK & MRKR 100MM | M | 1180 | 260 |

FILE f:\ao\design\lp1604fm471-90\sow\phase11\phase2b10.dgn 15 SEP 2000
LEVEL DISPLAYED 1 2 3 4 5 6 7 8 9 10 11 12 13 14 15 16 17 18 19 20 21 22 23 24 25 26 27 28 29 30 31 32 33 34 35 55 63 76 83 94 04 14 24 34 44 54 64 74 84 95 05 15 25 36 45 55 66 76 85 96 0 63

©2000

Texas Department of Transportation

# SEQUENCE OF WORK PHASE 2B

SHEET 10 OF 13

| FED.RD. DIV.NO. | FEDERAL AID PROJECT NO. | | SHEET NO. |
|---|---|---|---|
| 6 | NH 2000(704), ETC. | | 101 |
| STATE | DIST. | COUNTY | |
| TEXAS | SAT | BEXAR | |
| CONT. | SECT. | JOB | HIGHWAY NO. |
| 2452 | 01 | 036,ETC | LP 1604 |

| SEQUENCE OF WORK ESTIMATED QUANTITIES | | 2452-01-036 |
|---|---|---|
| ITEM | UNIT | QTY |
| PORT CONC TRAF BAR (STKPL, INSTL & RETRN) | M | 92 |
| VEH IMP ATTN ASSEM BRLS | EA | 14 |
| VEH IMP ATTN ASSEM BRLS (MOVE & RESET) | EA | 14 |
| | | |

DRAINAGE & ROADWAY CONSTRUCTION

TRAFFIC FLOW DIRECTION

V.I.A. ASSEMBLY ( 14 BARRELS EACH LOCATION )

SCALE 1:2000

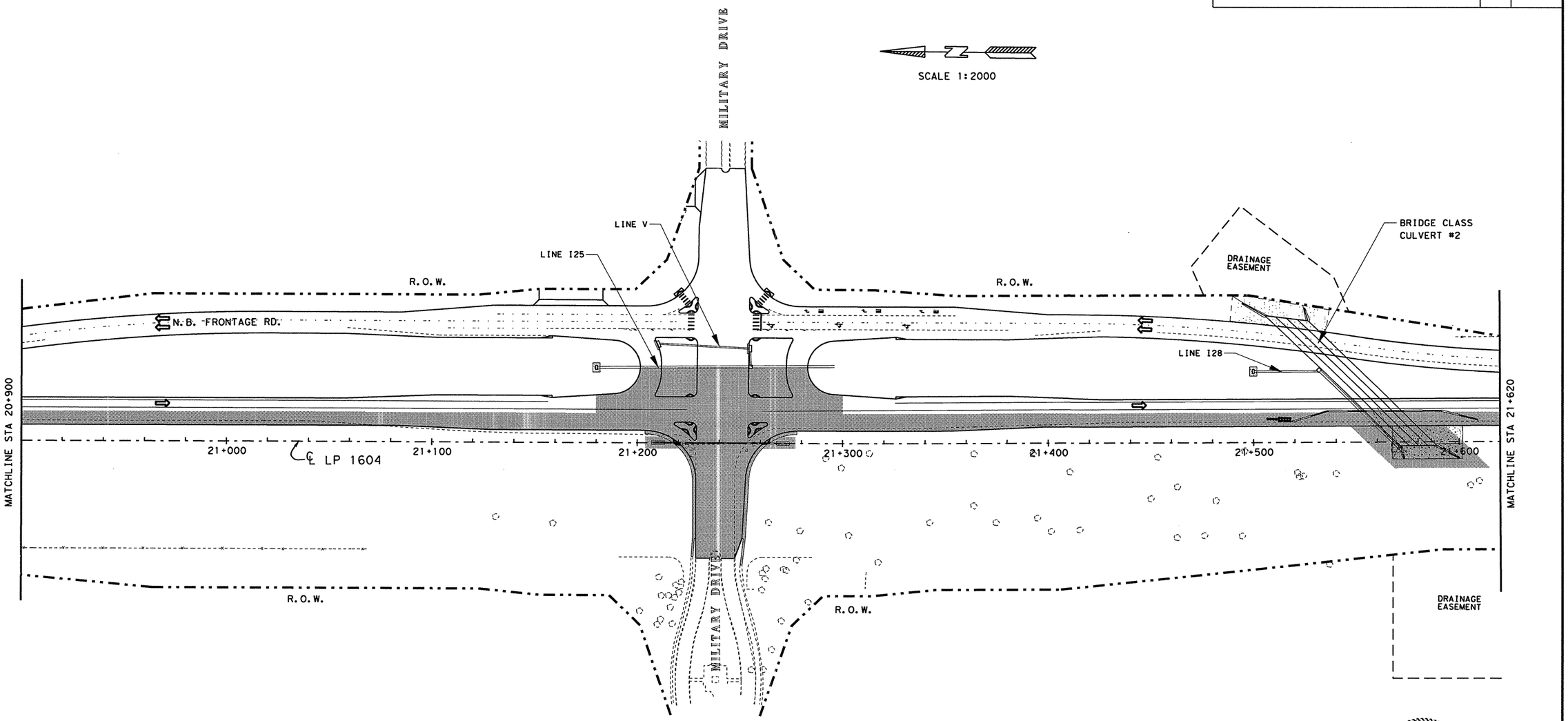


| PAVEMENT MARKING ESTIMATED QUANTITIES | | 2452-01-036 |
|---|---|---|
| ITEM | UNIT | QTY |
| WK ZN PAV MARK | | |
| NON-REMOV (W) (SLD) 100 MM | M | 684 |
| NON-REMOV (Y) (SLD) 100 MM | M | 550 |
| ELM EXT PAV MRK & MRKR 100MM | M | 550 |

FILE $FILE$ LEVEL DISPLAYED $DATE$

1 2 3 4 5 6 7 8 9 10 11 21 31 41 51 61 71 81 92 02 12 22 32 42 52 62 72 82 93 03 13 23 33 43 53 56 37 58 39 40 41 42 43 44 45 46 47 48 49 50 51 52 53 54 55 56 57 58 59 60 63

STATE OF TEXAS
JOEL K. DAVENPORT, JR.
79276
REGISTERED PROFESSIONAL ENGINEER

Joel K Davenport, Jr. 9/19/00
Joel K. Davenport, Jr. P.E. 79276 Date

©2000

Texas Department of Transportation

# SEQUENCE OF WORK PHASE 2B

SHEET 11 OF 13

| FED. RD. DIV. NO. | FEDERAL AID PROJECT NO. | | SHEET NO. |
|---|---|---|---|
| 6 | NH 2000(704), ETC. | | 102 |
| STATE | DIST. | COUNTY | |
| TEXAS | SAT | BEXAR | |
| CONT. | SECT. | JOB | HIGHWAY NO. |
| 2452 | 01 | 036,ETC | LP 1604 |

DRAINAGE & ROADWAY CONSTRUCTION ⇨ TRAFFIC FLOW DIRECTION

V.I.A. ASSEMBLY (14 BARRELS EACH LOCATION)

| SEQUENCE OF WORK ESTIMATED QUANTITIES | | 2452-01-036 |
|---|---|---|
| ITEM | UNIT | QTY |
| PORT CONC TRAF BAR (STKPL, INSTL & RETRN) | M | 109 |
| VEH IMP ATTN ASSEM BRLS (MOVE & RESET) | EA | 14 |
| VEH IMP ATTN ASSEM BRLS (REMOVE) | EA | 14 |
| | | |

SCALE 1:2000

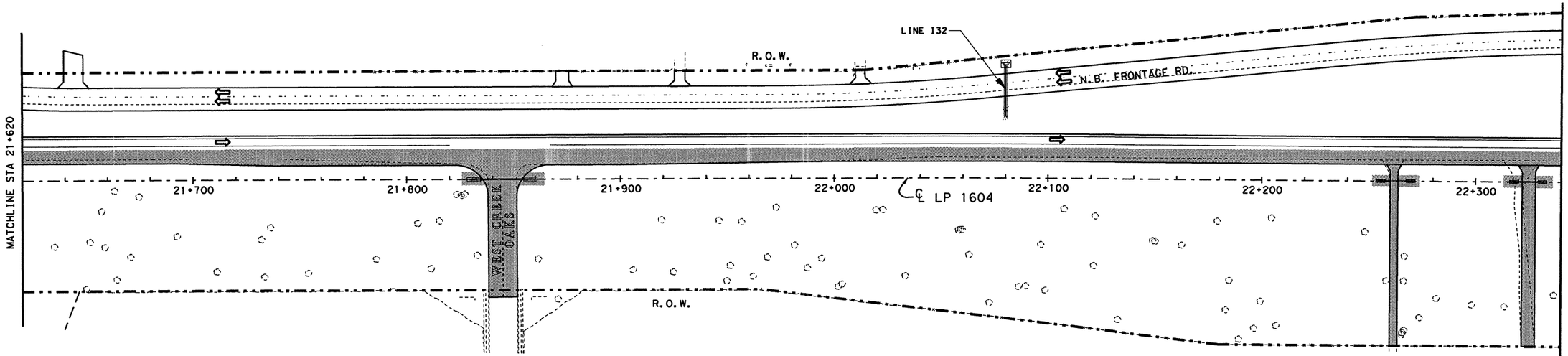


SCALE 1:2000

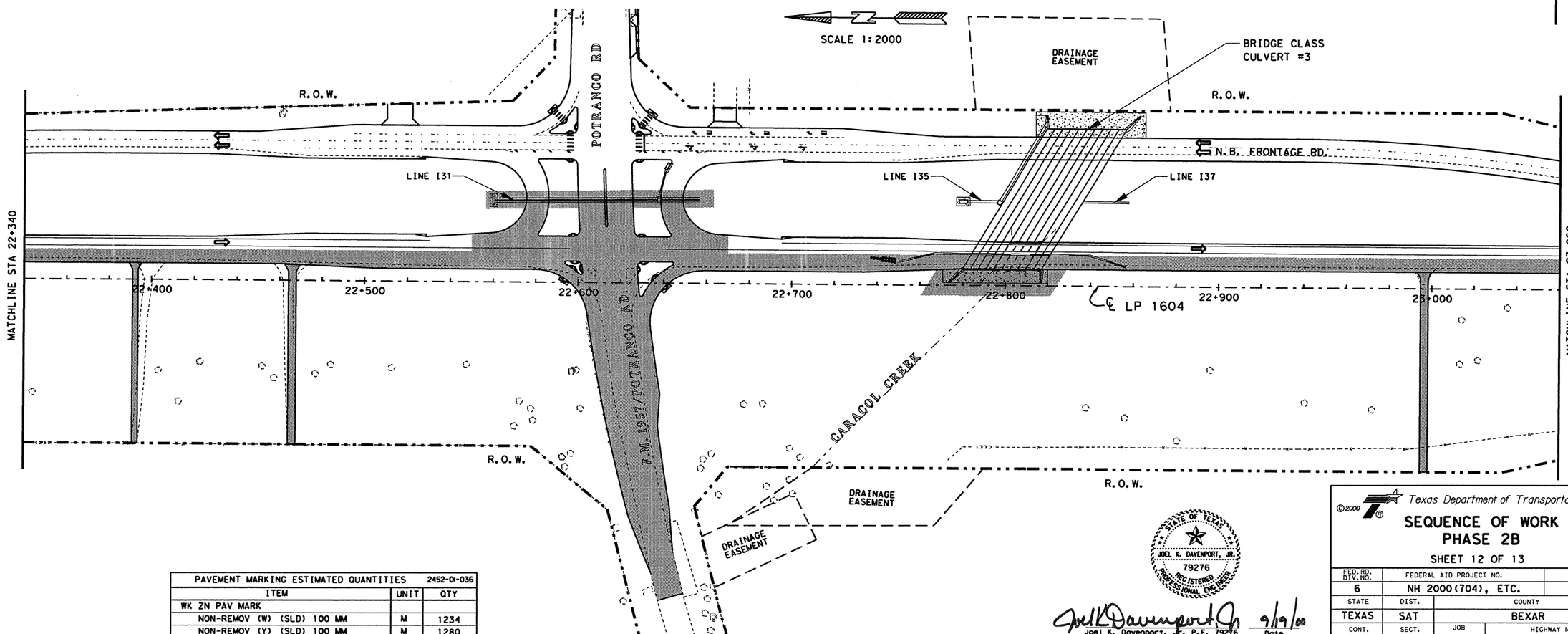


| PAVEMENT MARKING ESTIMATED QUANTITIES | | 2452-01-036 |
|---|---|---|
| ITEM | UNIT | QTY |
| WK ZN PAV MARK | | |
| NON-REMOV (W) (SLD) 100 MM | M | 1234 |
| NON-REMOV (Y) (SLD) 100 MM | M | 1280 |
| ELM EXT PAV MRK & MRKR 100MM | M | 1280 |

STATE OF TEXAS
JOEL K. DAVENPORT, JR.
79276
REGISTERED PROFESSIONAL ENGINEER

Joel K. Davenport, Jr. P.E. 79276 — 9/9/00 Date

©2000

Texas Department of Transportation

# SEQUENCE OF WORK PHASE 2B

SHEET 12 OF 13

| FED. RD. DIV. NO. | FEDERAL AID PROJECT NO. | | SHEET NO. |
|---|---|---|---|
| 6 | NH 2000(704), ETC. | | 103 |
| STATE | DIST. | COUNTY | |
| TEXAS | SAT | BEXAR | |
| CONT. | SECT. | JOB | HIGHWAY NO. |
| 2452 | 01 | 036,ETC | LP 1604 |

FILE: t:\ool\design\lp1604fm471-90\sow\phase2b12.dgn 15 SEP 2000

LEVEL DISPLAYED: 1 2 3 4 5 6 7 8 9 10 11 12 13 14 15 16 17 18 19 20 21 22 23 24 25 26 27 28 29 30 31 32 33 34 35 36 37 38 39 40 41 42 43 44 45 46 47 48 49 50 51 52 53 54 55 56 57 58 59 60 | 63

| SEQUENCE OF WORK ESTIMATED QUANTITIES | | 2452-01-036 |
|---|---|---|
| ITEM | UNIT | QTY |
| | | |
| | | |

DRAINAGE & ROADWAY CONSTRUCTION

SPAN TYPE BRIDGE CONSTRUCTION

TRAFFIC FLOW DIRECTION

SCALE 1:2000

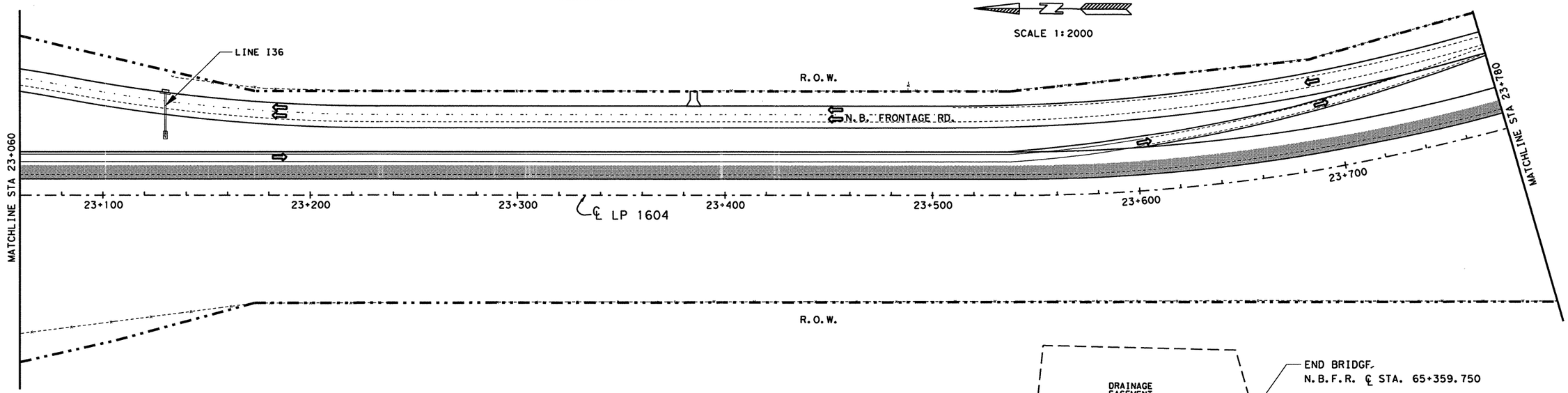


| PAVEMENT MARKING ESTIMATED QUANTITIES | | 2452-01-036 |
|---|---|---|
| ITEM | UNIT | QTY |
| WK ZN PAV MARK | | |
| NON-REMOV (W) (SLD) 100 MM | M | 710 |
| NON-REMOV (Y) (SLD) 100 MM | M | 710 |
| ELM EXT PAV MRK & MRKR 100MM | M | 710 |

SCALE 1:2000

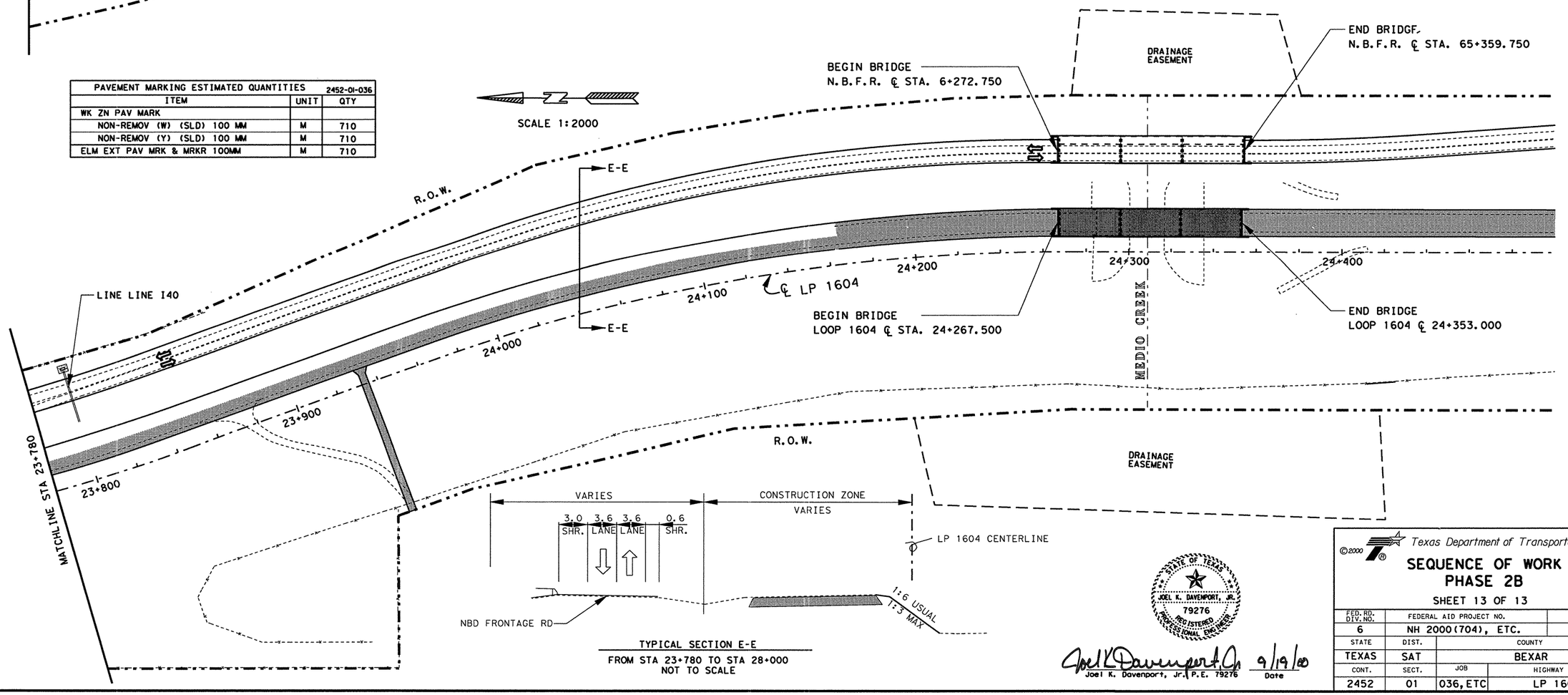





TYPICAL SECTION E-E
FROM STA 23+780 TO STA 28+000
NOT TO SCALE

STATE OF TEXAS
JOEL K. DAVENPORT, JR.
79276
REGISTERED PROFESSIONAL ENGINEER

Joel K Davenport Jr. 9/19/00

Joel K. Davenport, Jr., P.E. 79276 — Date

©2000

Texas Department of Transportation

# SEQUENCE OF WORK
# PHASE 2B

SHEET 13 OF 13

| FED. RD. DIV. NO. | FEDERAL AID PROJECT NO. | | SHEET NO. |
|---|---|---|---|
| 6 | NH 2000(704), ETC. | | 104 |
| STATE | DIST. | COUNTY | |
| TEXAS | SAT | BEXAR | |
| CONT. | SECT. | JOB | HIGHWAY NO. |
| 2452 | 01 | 036,ETC | LP 1604 |

FILE: t:\roa\design\lp1604fm471-90\sow\phase11\phase2b13.dgn — 15 SEP 2000

LEVEL DISPLAYED: 1 2 3 4 5 6 7 8 9 10 11 12 31 41 51 61 71 81 92 02 12 23 24 25 26 27 28 29 30 31 32 33 34 35 53 63 73 83 94 04 14 24 34 44 54 64 74 84 95 05 15 25 35 45 55 65 75 85 96 d 63

TYPICAL SECTION
DETOUR 1

✳ FOR CONTRACTOR' INFORMATION ONLY. ALL LABOR & MATERIALS REQUIRED FOR THE INSTALLATION OF THE DETOUR SHALL NOT BE PAID FOR DIRECTLY AND SHALL BE CONSIDERED SUBSIDIARY TO CONSTRUCT DETOURS

SCALE 1:1500

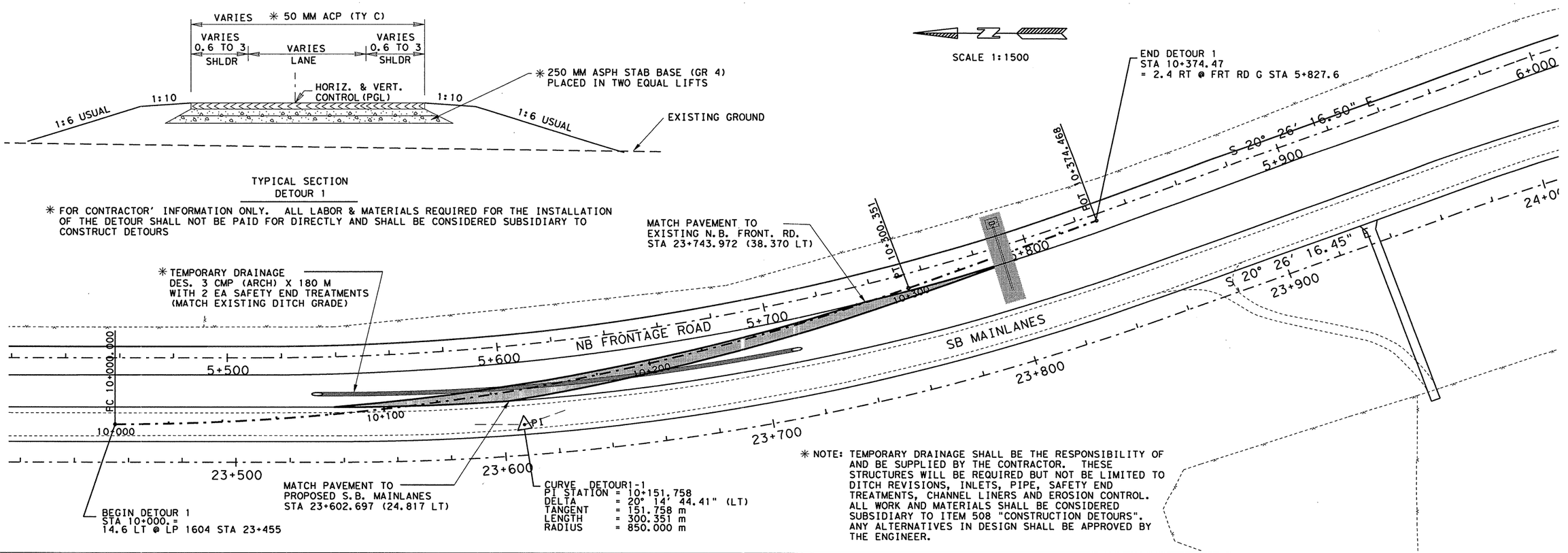


✳ NOTE: TEMPORARY DRAINAGE SHALL BE THE RESPONSIBILITY OF AND BE SUPPLIED BY THE CONTRACTOR. THESE STRUCTURES WILL BE REQUIRED BUT NOT BE LIMITED TO DITCH REVISIONS, INLETS, PIPE, SAFETY END TREATMENTS, CHANNEL LINERS AND EROSION CONTROL. ALL WORK AND MATERIALS SHALL BE CONSIDERED SUBSIDIARY TO ITEM 508 "CONSTRUCTION DETOURS". ANY ALTERNATIVES IN DESIGN SHALL BE APPROVED BY THE ENGINEER.

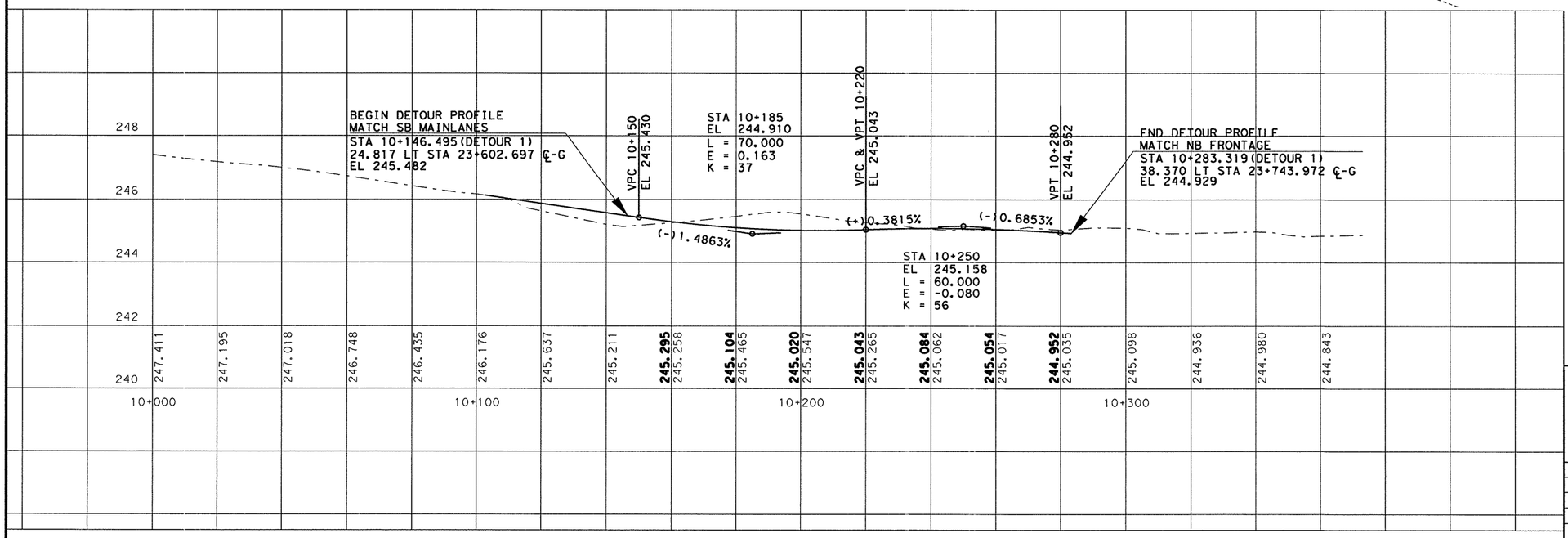


LEVELS DISPLAYED
1 2 3 4 5 6 7 8 9 10 11 12 13 14 15 16
17 18 19 20 21 22 23 24 25 26 27 28 29 30 31 32
33 34 35 36 37 38 39 40 41 42 43 44 45 46 47 48
49 50 51 52 63 54 55 56 57 58 59 60 63
ACC: t:\ao\design\lp1604fm471-90\
FILE: sow/phaseii/ph2conn.dgn

STATE OF TEXAS
JOEL K. DAVENPORT, JR.
79276
REGISTERED PROFESSIONAL ENGINEER

Joel K. Davenport, Jr. 9/21/00
Joel K. Davenport, Jr. P.E. 79276 Date

©2000 Texas Department of Transportation

# DETOUR LAYOUT

| FED.RD. DIV.NO. | FEDERAL AID PROJECT NO. | | SHEET NO. |
|---|---|---|---|
| 6 | NH 2000(704),etc. | | 105 |
| STATE | DIST. | COUNTY | |
| TEXAS | SAT | BEXAR | |
| CONT. | SECT. | JOB | HIGHWAY NO. |
| 2452 | 01 | 036,etc | LP 1604 |

PROPOSED DETOUR

UNDER CONSTRUCTION

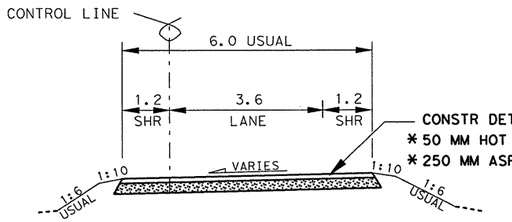


CONSTR DETOUR (CL 3) EST @ 886 M2
* 50 MM HOT MIX (TY C)
* 250 MM ASPHALT STAB BASE (GR 4) (PLACED IN 2 EQUAL LIFTS)

SECTION A-A

DETOUR TYPICAL SECTION

## ESTIMATED QUANTITIES

| | ITEM | UNIT | CSJ 2452 01-038 QTY. | CSJ 2452 01-037 QTY. |
|---|---|---|---|---|
| * | ASPH STAB BASE | MGR | 83 | 439 |
| * | HOT MIX (TY C) | MGR | 17 | 88 |
| | CONSTRUCT DETOUR (CL 3) | M2 | 140 | 746 |
| | CMP AR (GALV STL DES 3) | M | | 51 |
| | SET (TY II) (DES 3) (CMP) (1:6) | EA | | 2 |
| | REMOV OLD STR (PIPE) | M | | 53 |

* FOR CONTRACTORS INFORMATION ONLY

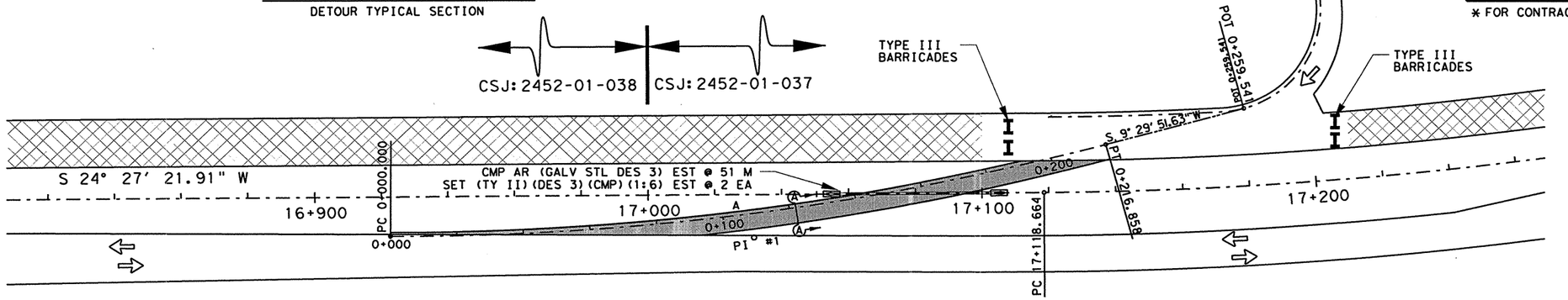


P.I. #1 STA. 0+109.098, X 628,303.0704, Y 4,183,882.6354
Delta = 15° 31' 52.81" (LT)
Tangent = 109.098
Length = 216.858
Radius = 800.000
P.C. STA. 0+000.000, X 628,349.2273, Y 4,183,981.4885
P.T. STA. 0+216.858, X 628,285.0684, Y 4,183,775.0328
BacK = S 25° 01' 44.42" W
Ahead = S 9° 29' 51.61" W

DETOUR CURVE DATA

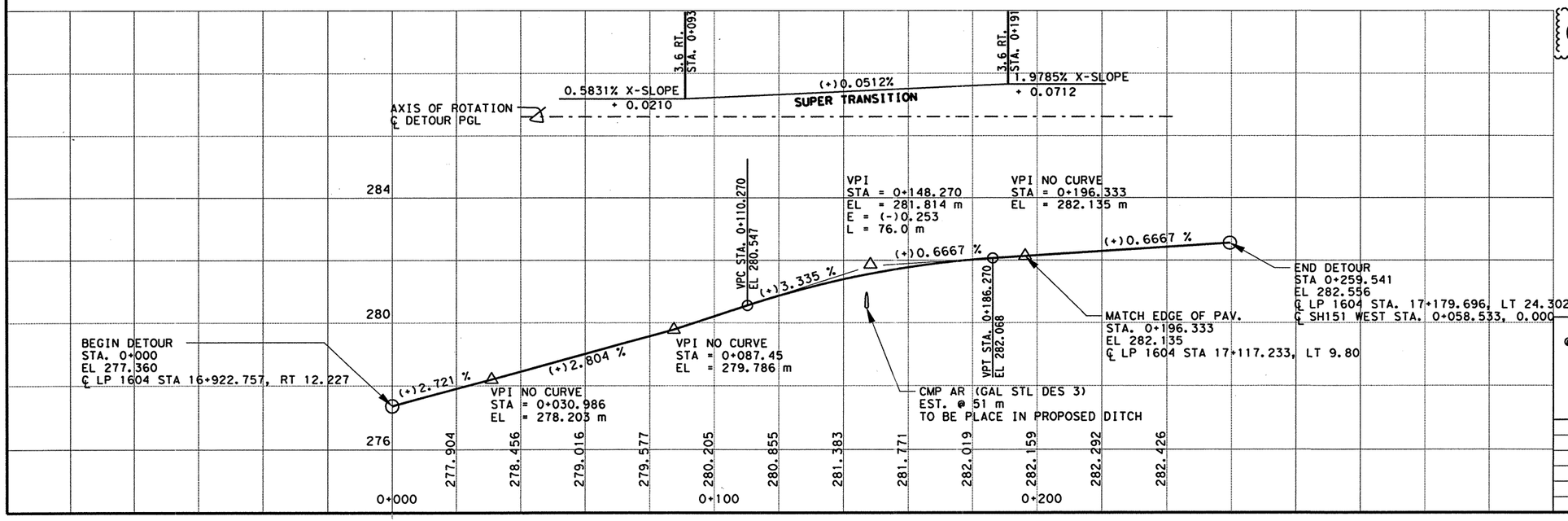


NEW SHEET

CHANGE ORDER NO. 32

STATE OF TEXAS
JEROME D. PAVLISKA
76075
REGISTERED PROFESSIONAL ENGINEER

Jerome D. Pavliska, P.E. 3/26/04

Jerome D. Pavliska, P.E. — Date

©2003

Texas Department of Transportation

# SEQUENCE OF WORK DETOUR LAYOUT PHASE IC (STAGE B)

| FED.RD. DIV.NO. | FEDERAL AID PROJECT NO. | | SHEET NO. |
|---|---|---|---|
| 6 | NH 2000(704), etc. | | 105 A |
| STATE | DIST. | COUNTY | |
| TEXAS | SAT | BEXAR | |
| CONT. | SECT. | JOB | HIGHWAY NO. |
| 2452 | 01 | 036, etc | LP 1604 |

LEVELS DISPLAYED
1 2 3 4 5 6 7 8 9 10 11 12 13 14 15 16
17 18 19 20 21 22 23 24 25 26 27 28 29 30 31 32
33 34 35 36 37 38 39 40 41 42 43 44 45 46 47 48
49 50 51 52 63 53 54 55 56 57 58 59 60 63

ACC: t:\ao\design\lp1604fm471-90\sow

FILE: /phase1/phase1c/profsh151*detour.dgn

Plotted on: 01/26/2004

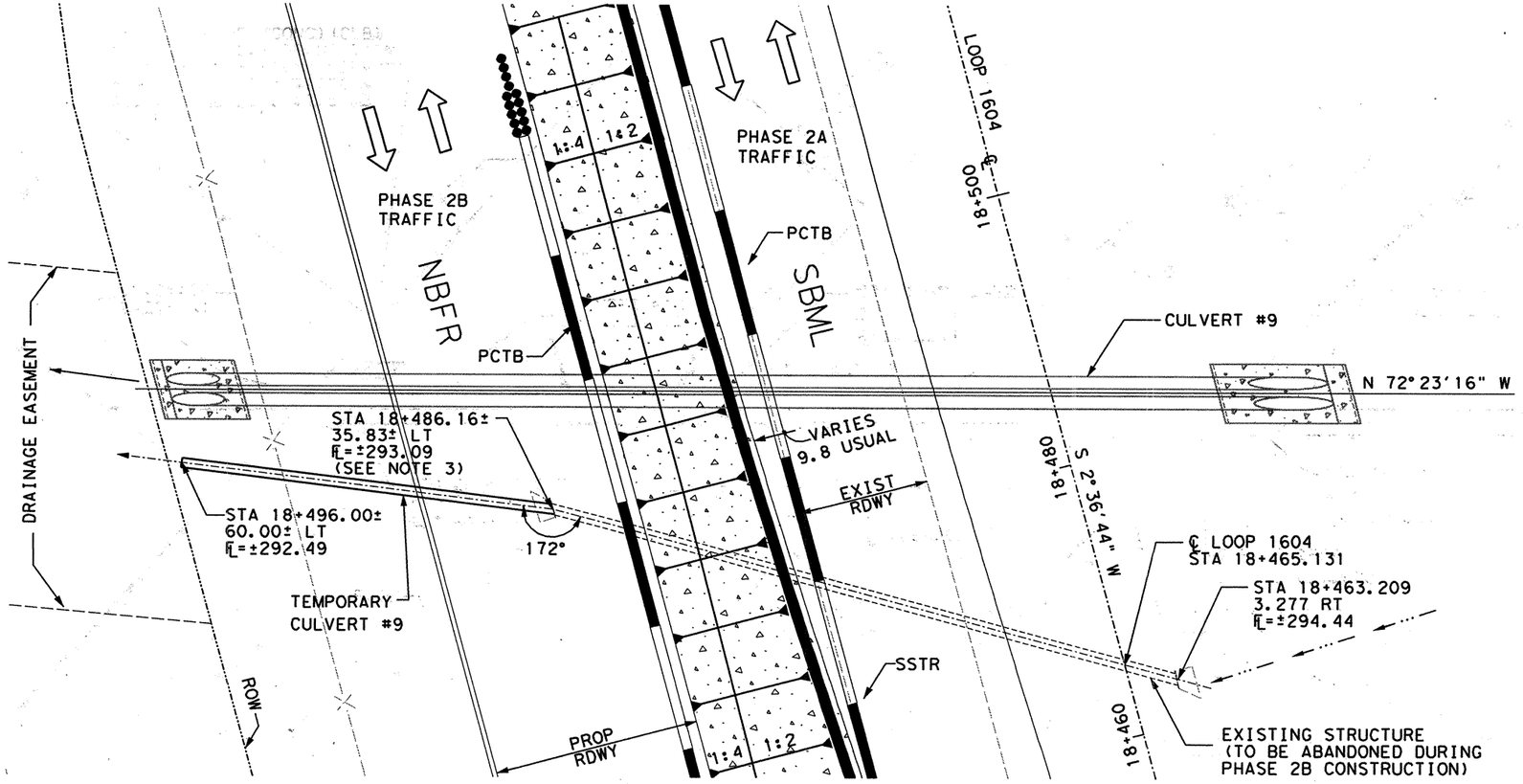


| ESTIMATED QUANTITIES | | | |
|---|---|---|---|
| DESCRIPTION | UNIT | EST. | FINAL |
| * RC PIPE (CL III) (600MM) | M | 26.100 | |

* SUPPLIED FOR CONTRACTOR'S INFORMATION ONLY

## QUANTITIES THIS SHEET
## CSJ 2452-01-037

NOTES:
1.) ALL DIMENSIONS ARE IN METERS UNLESS NOTED OTHERWISE.

2.) TEMPORARY CULVERT LAYOUT PLAN SHEETS SHALL BE USED ONLY FOR CONSTRUCTION OF TEMPORARY DRAINAGE IMPROVEMENTS.

3.) CONTRACTOR TO REMOVE DOWNSTREAM HEADWALL OF EXISTING STRUCTURE, PLACE TEMPORARY CULVERT END-TO-END W/ EXISTING STRUCTURE, POUR CONCRETE AROUND TEMPORARY- TO-EXISTING STRUCTURE CONNECTION, AND BACKFILL W/ PROPOSED EMBANKMENT.

4.) TEMPORARY STRUCTURE TO BE PLUGGED & ABANDONED BY FILLING W/ LOW STRENGTH CONCRETE AFTER COMPLETION OF CONSTRUCTION OF PROPOSED DRAINAGE STRUCTURE. THIS WORK SHALL NOT BE PAID FOR DIRECTLY BUT SHALL BE CONSIDERED SUBSIDIARY TO ITEM 464 (RC PIPE).

†5.) UPON COMPLETION OF PROPOSED DRAINAGE STRUCTURE, APPROXIMATELY 5M OF DOWNSTREAM END OF TEMPORARY CULVERT SHALL BE REMOVED PRIOR TO ABANDONMENT. LENGTH OF REMOVAL SHALL BE SUFFICIENT ENOUGH TO ALLOW FINAL ROADWAY CONSTRUCTION AND GRADING AS APPROVED BY THE ENGINEER.

6.) FOR PAY ITEMS ASSOCIATED WITH TEMPORARY CULVERT SEE S.O.W. PLAN SHEETS.

CHANGE ORDER NO. 63
-TEMPORARY CULVERT NO. 9 DETAILS

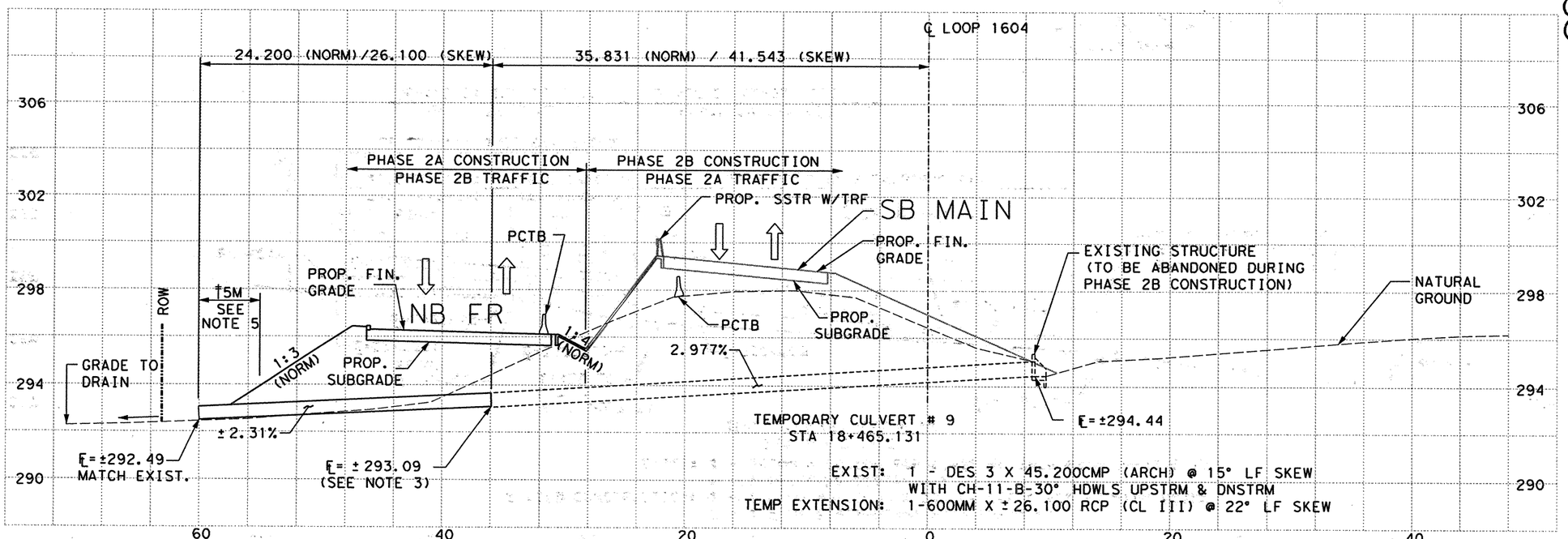


CHANGE ORDER NO. 63 | NEW SHEET

SCALE: 1:400 HORIZ
1:200 VERT

555 EAST RAMSEY SAN ANTONIO TEXAS 78216 PHONE (210)375-9000 FAX (210)375-9010
PAPE-DAWSON ENGINEERS CIVIL & ENVIRONMENTAL
STATE OF TEXAS J. KENT O'BRIEN 64398 REGISTERED PROFESSIONAL ENGINEER
J. KENT O'BRIEN, P.E. 1/27/2004 DATE

© 2000 Texas Department of Transportation

# LOOP 1604
# TEMPORARY CULVERT LAYOUT
## CULVERT # 9 STA 18+465.131

| DN: | | | | | PROJECT NO. | | |
|---|---|---|---|---|---|---|---|
| CK DN: | | | | | NH 2000 (704), etc. | | |
| DW: | CONTROL | SECTION | JOB | DIST. | COUNTY | HIGHWAY NO. | SHEET NO. |
| CK DW: | 2452 | 01 | 036 | SAT | BEXAR | LOOP 1604 | 105 B |

Design Filename: ...\52\20\11\design\civil\plansheets\tcp\drain\522011tc109.dgn

Plotted on: 01/27/2004

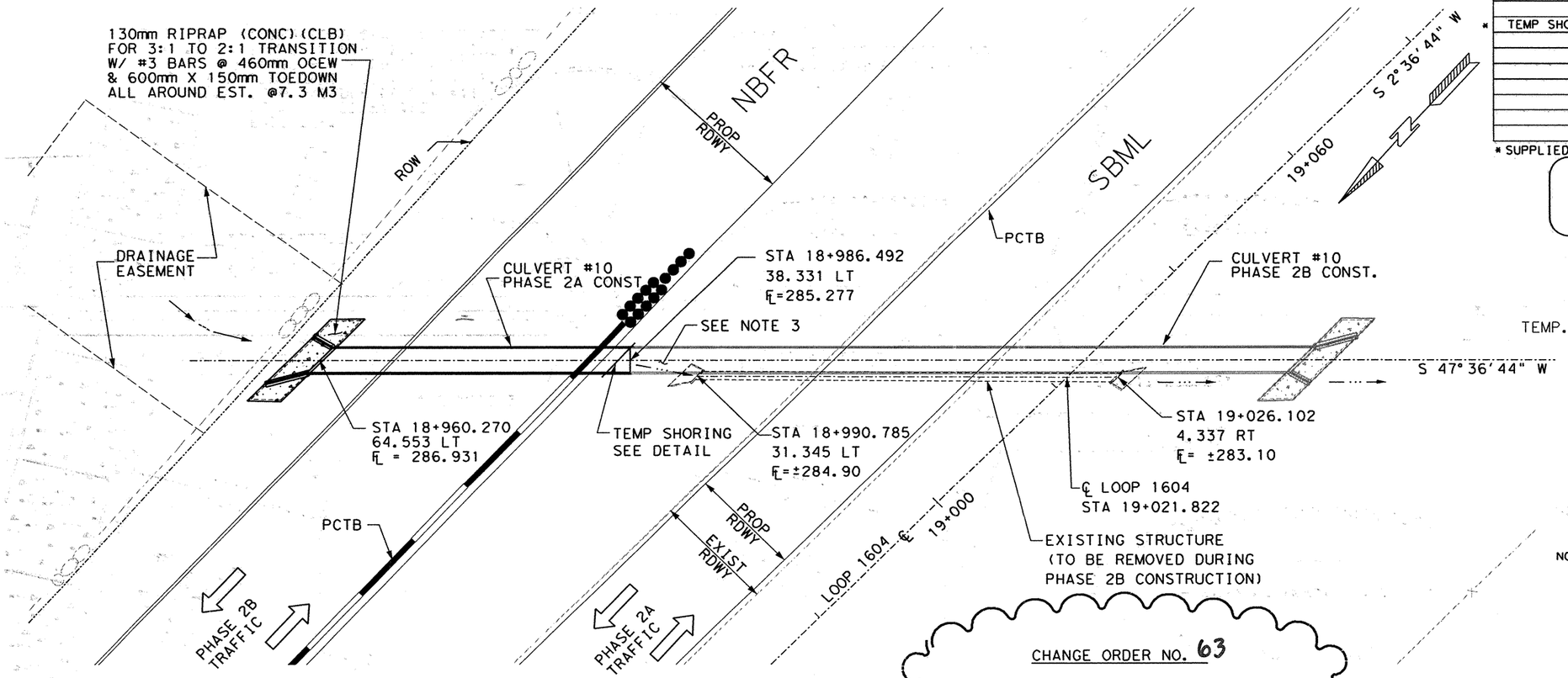


CHANGE ORDER NO. 63

-CULVERT NO. 10 STAGED CONSTRUCTION

| ESTIMATED QUANTITIES | | | |
|---|---|---|---|
| DESCRIPTION | UNIT | EST. | FINAL |
| * TEMP SHORING | M2 | 39.6 | |

* SUPPLIED FOR CONTRACTOR'S INFORMATION ONLY

QUANTITIES THIS SHEET
CSJ 2452-01-037

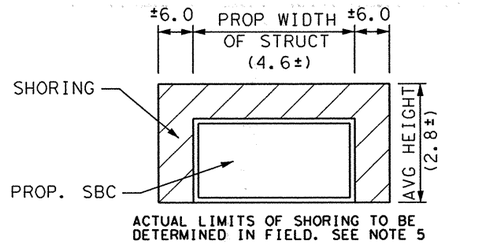


ACTUAL LIMITS OF SHORING TO BE DETERMINED IN FIELD. SEE NOTE 5

## TEMP. SHORING DETAIL

NTS

NOTES:
1.) ALL DIMENSIONS ARE IN METERS UNLESS NOTED OTHERWISE.
2.) FOR PHASE 2B CULVERT CONSTRUCTION SEE CULVERT LAYOUT.
3.) CONTRACTOR SHALL PROVIDE FOR POSITIVE DRAINAGE BETWEEN THE STAGED CONST. STRUCTURE AND THE EXISTING DRAINAGE STRUCTURE.
4.) CULVERT CONSTRUCTED DURING PHASE 2A SHALL REMAIN IN PLACE AS A PORTION OF THE ULTIMATE PROPOSED DRAINAGE STRUCTURE.
5.) TEMPORARY SHORING SHALL BE UTILIZED ONLY WITH APPROVAL OF THE ENGINEER.
6.) FOR PAY ITEMS ASSOCIATED WITH STAGED CONST. OF CULVERT SEE CULVERT LAYOUT AND S.O.W. PLAN SHEETS.

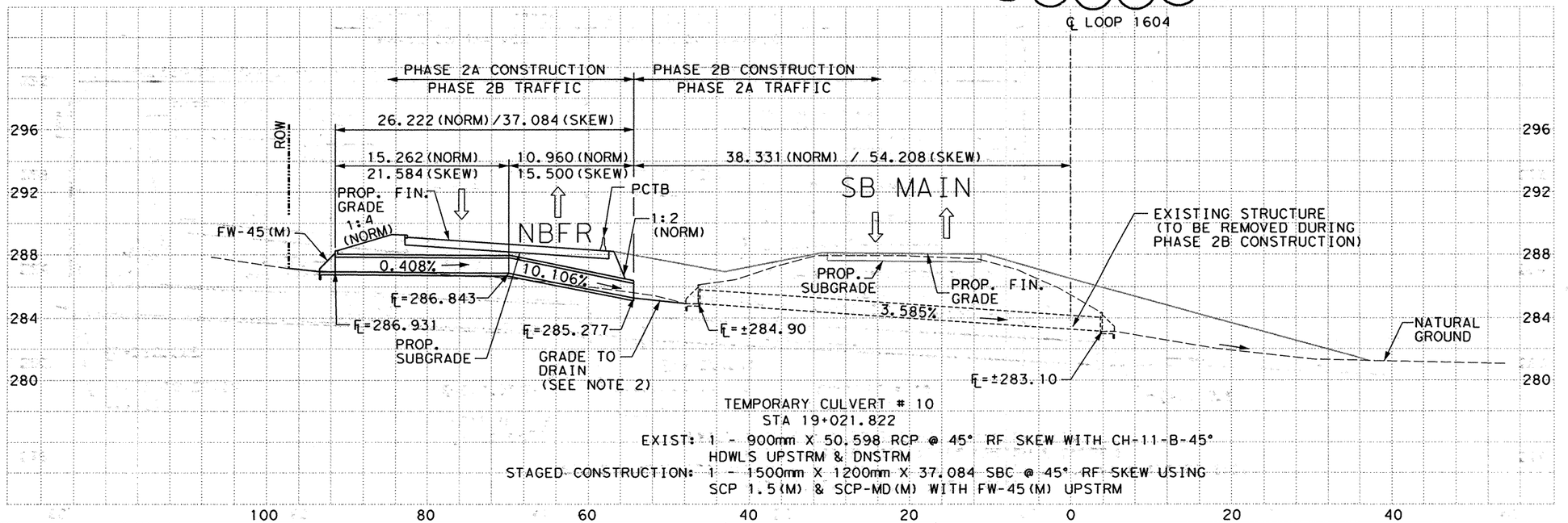


TEMPORARY CULVERT # 10
STA 19+021.822
EXIST: 1 - 900mm X 50.598 RCP @ 45° RF SKEW WITH CH-11-B-45° HDWLS UPSTRM & DNSTRM
STAGED CONSTRUCTION: 1 - 1500mm X 1200mm X 37.084 SBC @ 45° RF SKEW USING SCP 1.5(M) & SCP-MD(M) WITH FW-45(M) UPSTRM

CHANGE ORDER NO. 63 | NEW SHEET

SCALE: 1:600 HORIZ
1:300 VERT

555 EAST RAMSEY SAN ANTONIO TEXAS 78216 PHONE (210)375-9000 FAX (210)375-9010
PAPE-DAWSON ENGINEERS CIVIL & ENVIRONMENTAL
STATE OF TEXAS J. KENT O'BRIEN 64398 REGISTERED PROFESSIONAL ENGINEER
J. KENT O'BRIEN, P.E. 1/27/2004 DATE

© 2000 Texas Department of Transportation

LOOP 1604
STAGED CONSTRUCTION LAYOUT

CULVERT # 10 STA 19+021.822

| DN: | | | | | PROJECT NO. | | |
|---|---|---|---|---|---|---|---|
| CK DN: | | | | | NH 2000 (704), etc. | | |
| DW: | CONTROL | SECTION | JOB | DIST. | STATE | COUNTY | HIGHWAY NO. | SHEET NO. |
| CK DW: | 2452 | 01 | 036 etc. | SAT | TX | BEXAR | LOOP 1604 | 105 C |

Design Filename: r:\52\2011\design\civil\plonsheets\tcp\drain\52201111tcl10.dgn

Plotted on: 01/27/2004

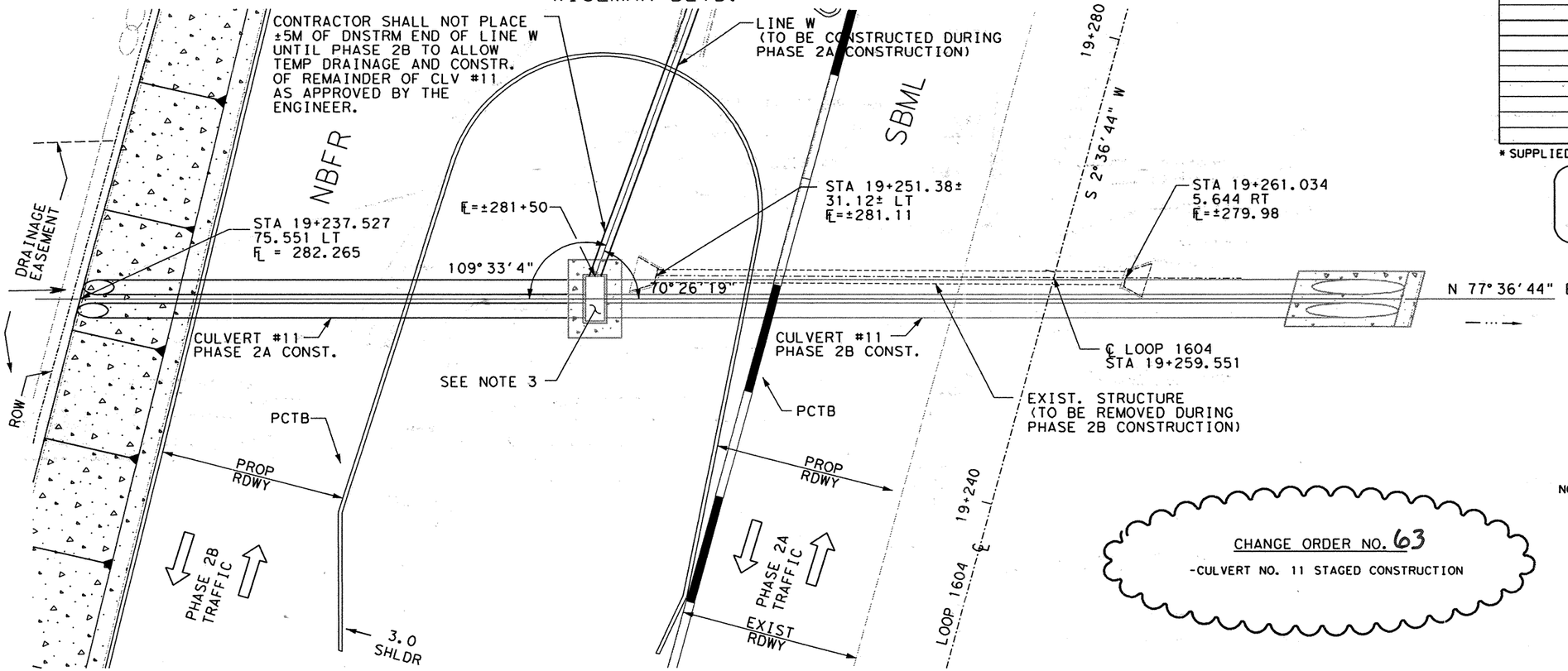


ESTIMATED QUANTITIES

| DESCRIPTION | UNIT | EST. | FINAL |
|---|---|---|---|
| | | | |
| | | | |
| | | | |
| | | | |
| | | | |
| | | | |
| | | | |
| | | | |

* SUPPLIED FOR CONTRACTOR'S INFORMATION ONLY

QUANTITIES THIS SHEET
CSJ 2452-01-037

CHANGE ORDER NO. 63
-CULVERT NO. 11 STAGED CONSTRUCTION

NOTES:
1.) ALL DIMENSIONS ARE IN METERS UNLESS NOTED OTHERWISE.
2.) FOR PHASE 2B CULVERT CONSTRUCTION SEE CULVERT LAYOUT.
3.) CONTRACTOR SHALL PROVIDE FOR POSITIVE DRAINAGE BETWEEN THE STAGED CONST. STRUCTURE AND THE EXISTING DRAINAGE STRUCTURE.
4.) CULVERT CONSTRUCTED DURING PHASE 2A SHALL REMAIN IN PLACE AS A PORTION OF THE ULTIMATE PROPOSED DRAINAGE STRUCTURE.
5.) TEMPORARY SHORING SHALL BE UTILIZED ONLY WITH APPROVAL OF THE ENGINEER.
6.) FOR PAY ITEMS ASSOCIATED WITH STAGED CONST. OF CULVERT SEE CULVERT LAYOUT AND S.O.W. PLAN SHEETS.

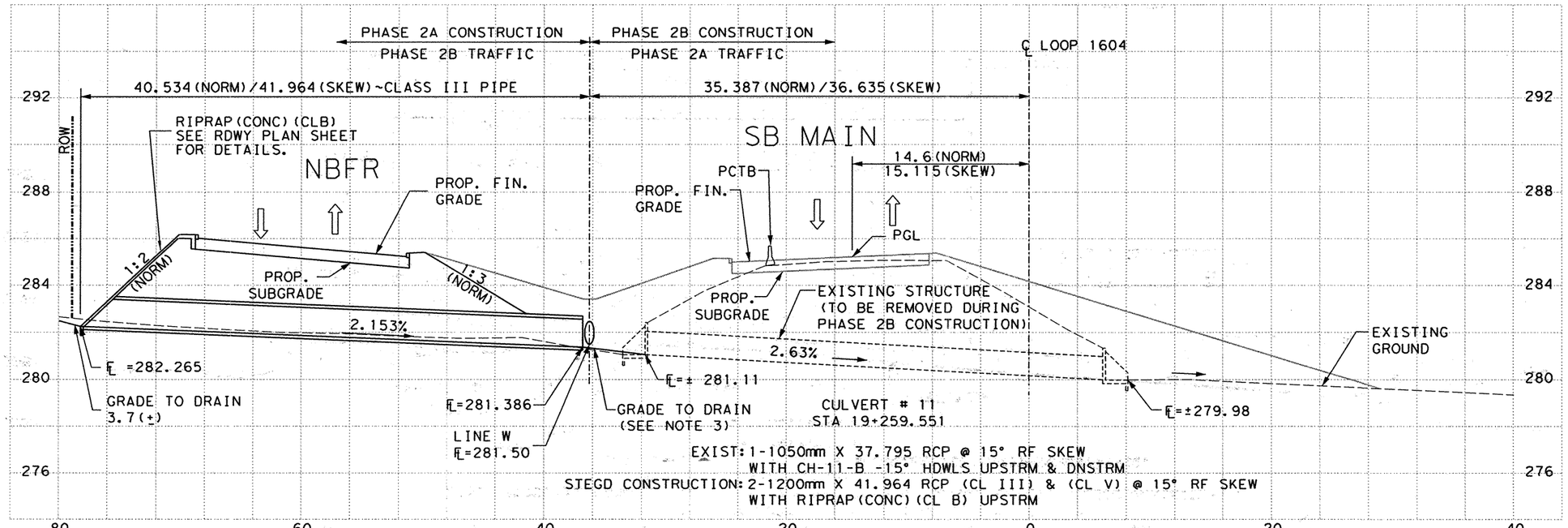


CHANGE ORDER NO. 63 | NEW SHEET

SCALE: 1:400 HORIZ
1:200 VERT

555 EAST RAMSEY SAN ANTONIO TEXAS 78216
PHONE (210)375-9000
FAX (210)375-9010
PAPE-DAWSON ENGINEERS
CIVIL & ENVIRONMENTAL
STATE OF TEXAS J. KENT O'BRIEN 64398 REGISTERED PROFESSIONAL ENGINEER
J. KENT O'BRIEN, P.E. 1/27/2004 DATE

© 2000 Texas Department of Transportation

LOOP 1604
STAGED CONSTRUCTION LAYOUT

CULVERT # 11 STA 19+259.551

| DN: | | | | | PROJECT NO. | | | |
|---|---|---|---|---|---|---|---|---|
| CK DN: | | | | | NH 2000 (704), etc. | | | |
| DW: | CONTROL | SECTION | JOB | DIST. | STATE | COUNTY | HIGHWAY NO. | SHEET NO. |
| CK DW: | 2452 | 01 | 036 | SAT | TX | BEXAR | LOOP 1604 | 105 D |

etc.

Design Filename: d:\52\20\11\design\civil\plansheets\top\drain\522011tc111.dgn

Plotted on: 01/26/2004

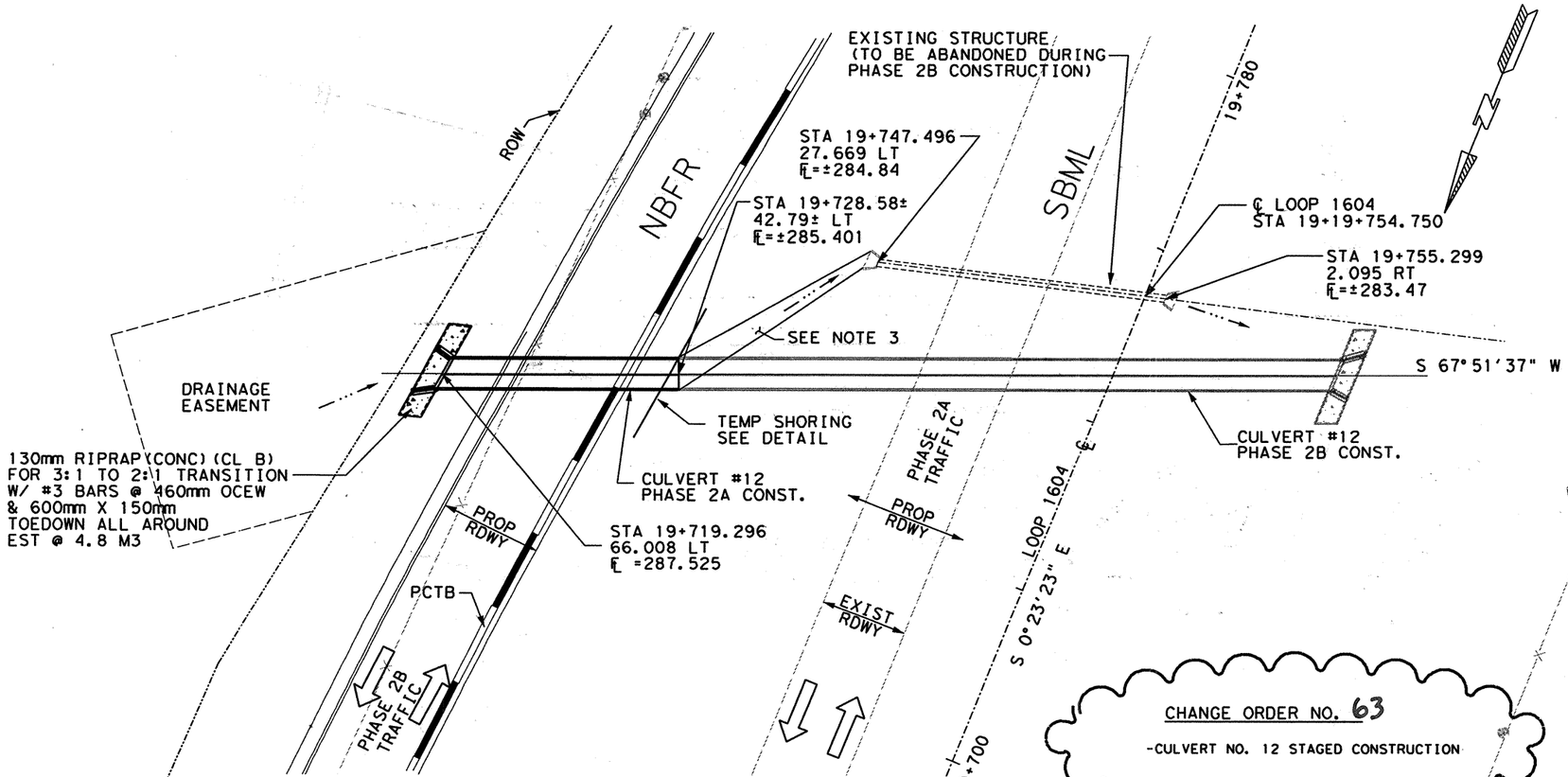


CHANGE ORDER NO. 63

-CULVERT NO. 12 STAGED CONSTRUCTION

| ESTIMATED QUANTITIES | | | |
|---|---|---|---|
| DESCRIPTION | UNIT | EST. | FINAL |
| * TEMP. SHORING | M2 | 38.4 | |

* SUPPLIED FOR CONTRACTOR'S INFORMATION ONLY

QUANTITIES THIS SHEET
CSJ 2452-01-037

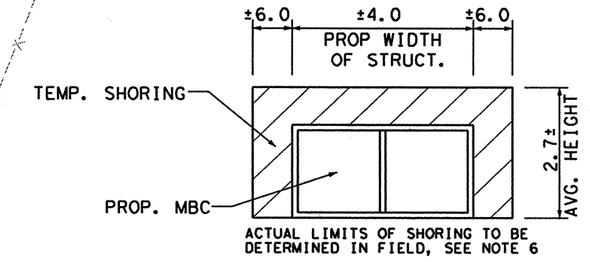


ACTUAL LIMITS OF SHORING TO BE DETERMINED IN FIELD, SEE NOTE 6

## TEMP. SHORING DETAIL

NTS

NOTES:
1.) ALL DIMENSIONS ARE IN METERS UNLESS NOTED OTHERWISE.
2.) FOR PHASE 2B CULVERT CONSTRUCTION SEE CULVERT LAYOUT.
3.) CONTRACTOR SHALL PROVIDE FOR POSITIVE DRAINAGE BETWEEN THE STAGED CONST. STRUCTURE AND THE EXISTING DRAINAGE STRUCTURE.
4.) CULVERT CONSTRUCTED DURING PHASE 2A SHALL REMAIN IN PLACE AS A PORTION OF THE ULTIMATE PROPOSED DRAINAGE STRUCTURE.
5.) TEMPORARY SHORING SHALL BE UTILIZED ONLY WITH APPROVAL OF THE ENGINEER.
6.) FOR PAY ITEMS ASSOCIATED WITH STAGED CONST. OF CULVERT SEE CULVERT LAYOUT AND SOW PLAN SHEETS.

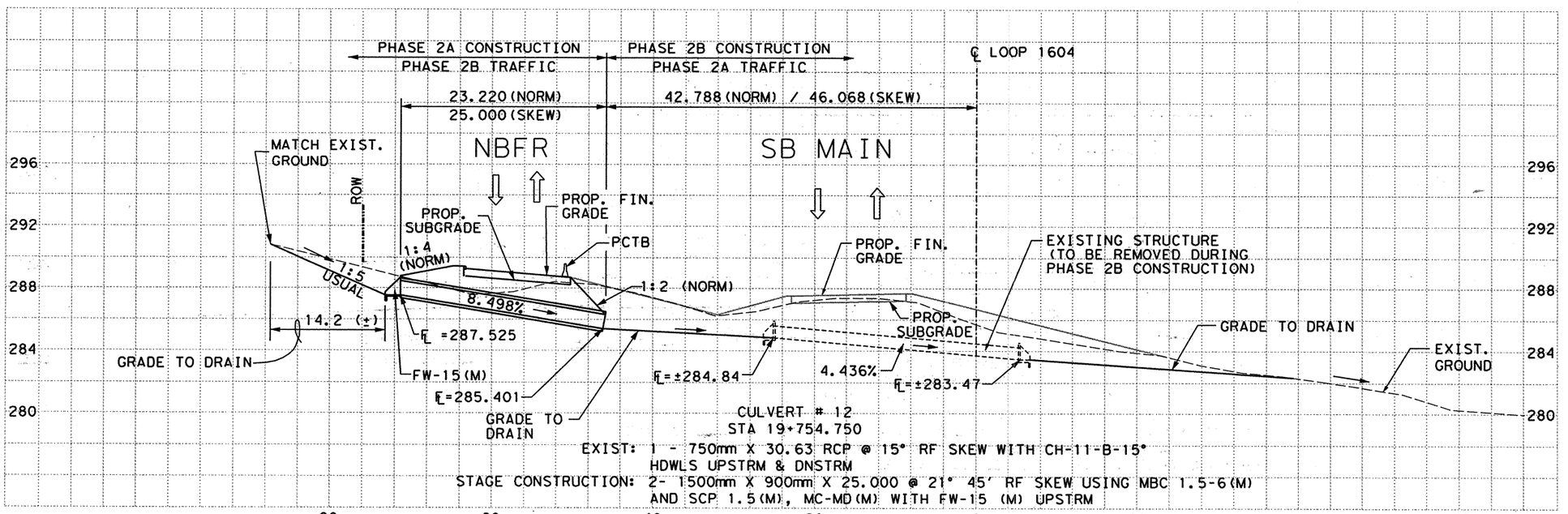


CULVERT # 12
STA 19+754.750

EXIST: 1 - 750mm X 30.63 RCP @ 15° RF SKEW WITH CH-11-B-15° HDWLS UPSTRM & DNSTRM

STAGE CONSTRUCTION: 2- 1500mm X 900mm X 25.000 @ 21° 45' RF SKEW USING MBC 1.5-6(M) AND SCP 1.5(M), MC-MD(M) WITH FW-15 (M) UPSTRM

CHANGE ORDER NO. 63 | NEW SHEET

SCALE: 1:600 HORIZ
1:300 VERT

555 EAST RAMSEY SAN ANTONIO TEXAS 78216 PHONE (210)375-9000 FAX (210)375-9010
PAPE-DAWSON ENGINEERS
CIVIL & ENVIRONMENTAL
STATE OF TEXAS · KENT O'BRIEN · 64398 · REGISTERED PROFESSIONAL ENGINEER
J. KENT O'BRIEN, P.E. 1/27/2004 DATE

© 2000 Texas Department of Transportation

LOOP 1604
STAGED CONSTRUCTION LAYOUT
CULVERT # 12 STA 19+754.750

| ON: | | | | | PROJECT NO. | | |
|---|---|---|---|---|---|---|---|
| CK DN: | | | | | NH 2000 (704), etc. | | |
| DN: | CONTROL | SECTION | JOB | DIST. | COUNTY | HIGHWAY NO. | SHEET NO. |
| CK DN: | 2452 | 01 | 036 | SAT | BEXAR | LOOP 1604 | 105 E |

Design Filename: ...\52\2011\design\civil\plansheets\top\drain\52011tc112.dgn

Plotted on: 01/26/2004

Design Filename: p:\52\20\11\design\civil\plansheets\tcp\dgn\n5220111tc120.dgn

| ESTIMATED QUANTITIES | | | |
|---|---|---|---|
| DESCRIPTION | UNIT | EST. | FINAL |
| | | | |
| | | | |
| | | | |
| | | | |
| | | | |
| | | | |
| | | | |
| | | | |

QUANTITIES THIS SHEET
CSJ 2452-01-036

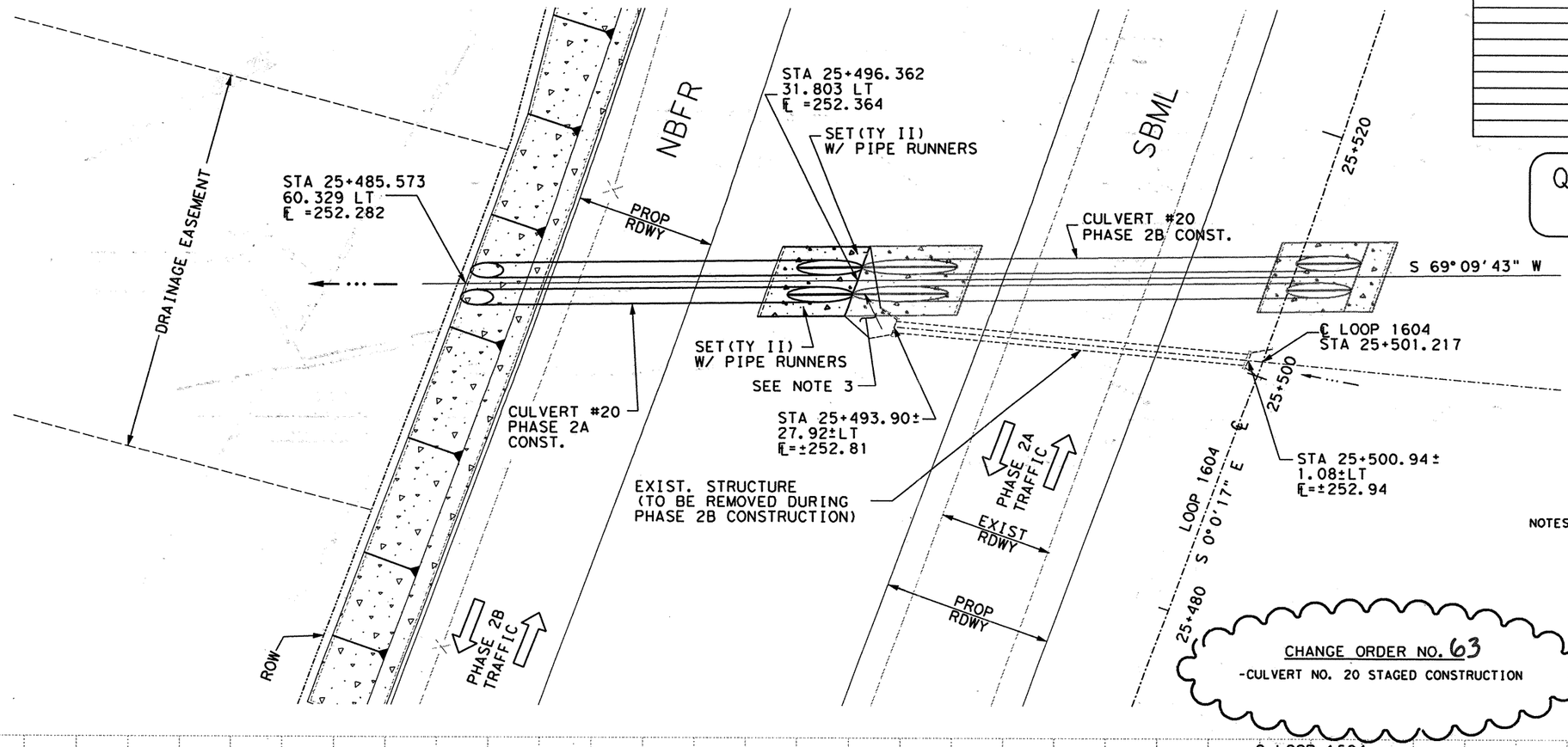


NOTES:
1.) ALL DIMENSIONS ARE IN METERS UNLESS NOTED OTHERWISE.
2.) FOR PHASE 2B CULVERT CONSTRUCTION SEE CULVERT LAYOUT.
3.) CONTRACTOR SHALL PROVIDE FOR POSITIVE DRAINAGE BETWEEN THE EXISTING DRAINAGE STRUCTURE AND THE STAGED CONSTRUCTION DRAINAGE STRUCTURE.
4.) CULVERT CONSTRUCTED DURING PHASE 2A SHALL REMAIN IN PLACE AS A PORTION OF THE ULTIMATE PROPOSED DRAINAGE STRUCTURE.
5.) TEMPORARY SHORING SHALL BE UTILIZED ONLY WITH APPROVAL OF THE ENGINEER.
6.) FOR PAY ITEMS ASSOCIATED WITH STAGED CONST. OF CULVERT SEE CULVERT LAYOUT AND SOW PLAN SHEETS.

CHANGE ORDER NO. 63
-CULVERT NO. 20 STAGED CONSTRUCTION

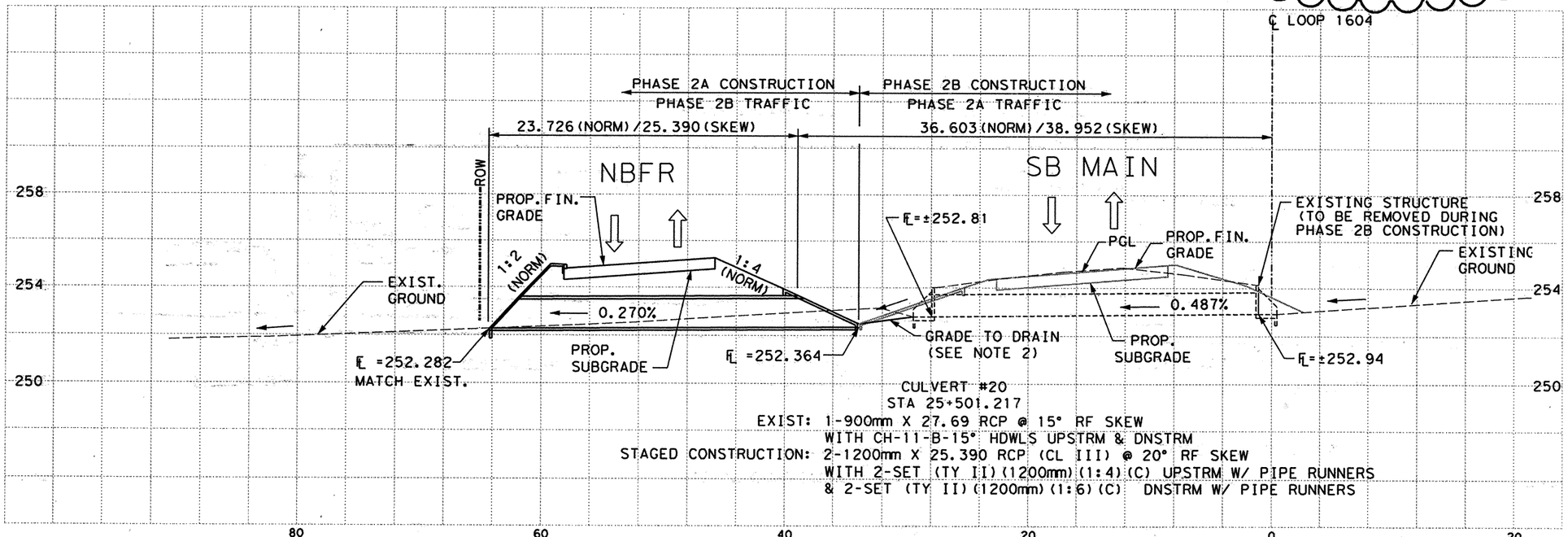


CULVERT #20
STA 25+501.217
EXIST: 1-900mm X 27.69 RCP @ 15° RF SKEW
WITH CH-11-B-15° HDWLS UPSTRM & DNSTRM
STAGED CONSTRUCTION: 2-1200mm X 25.390 RCP (CL III) @ 20° RF SKEW
WITH 2-SET (TY II) (1200mm) (1:4) (C) UPSTRM W/ PIPE RUNNERS
& 2-SET (TY II) (1200mm) (1:6) (C) DNSTRM W/ PIPE RUNNERS

CHANGE ORDER NO. 63 | NEW SHEET

SCALE: 1:400 HORIZ
1:200 VERT

555 EAST RAMSEY SAN ANTONIO TEXAS 78216 PHONE (210)375-9000 FAX (210)375-9010
PAPE-DAWSON ENGINEERS
CIVIL & ENVIRONMENTAL
STATE OF TEXAS J. KENT O'BRIEN 64398 REGISTERED PROFESSIONAL ENGINEER
J. KENT O'BRIEN, P.E. 1/27/2004 DATE

© 2000 Texas Department of Transportation

# LOOP 1604
# STAGED CONSTRUCTION LAYOUT

CULVERT #20 STA 25+501.217

| DN= | | | | | PROJECT NO. | | |
|---|---|---|---|---|---|---|---|
| CK DN= | | | | | NH 2000 (704), etc. | | |
| DW= | CONTROL | SECTION | JOB | DIST. | STATE | COUNTY | HIGHWAY NO. | SHEET NO. |
| CK DW= | 2452 | 01 | 036 | SAT | TX | BEXAR | LOOP 1604 | 105 F |

Plotted on: 01/26/2004

Design Filename: p:\52\2011\design\civil\plansheets\top\drain\52011tc121.dgn

| ESTIMATED QUANTITIES | | | |
|---|---|---|---|
| DESCRIPTION | UNIT | EST. | FINAL |
| * RC PIPE (CL III) (600MM) | M | 53.063 | |

* SUPPLIED FOR CONTRACTOR'S INFORMATION ONLY

QUANTITIES THIS SHEET
CSJ 2452-01-036

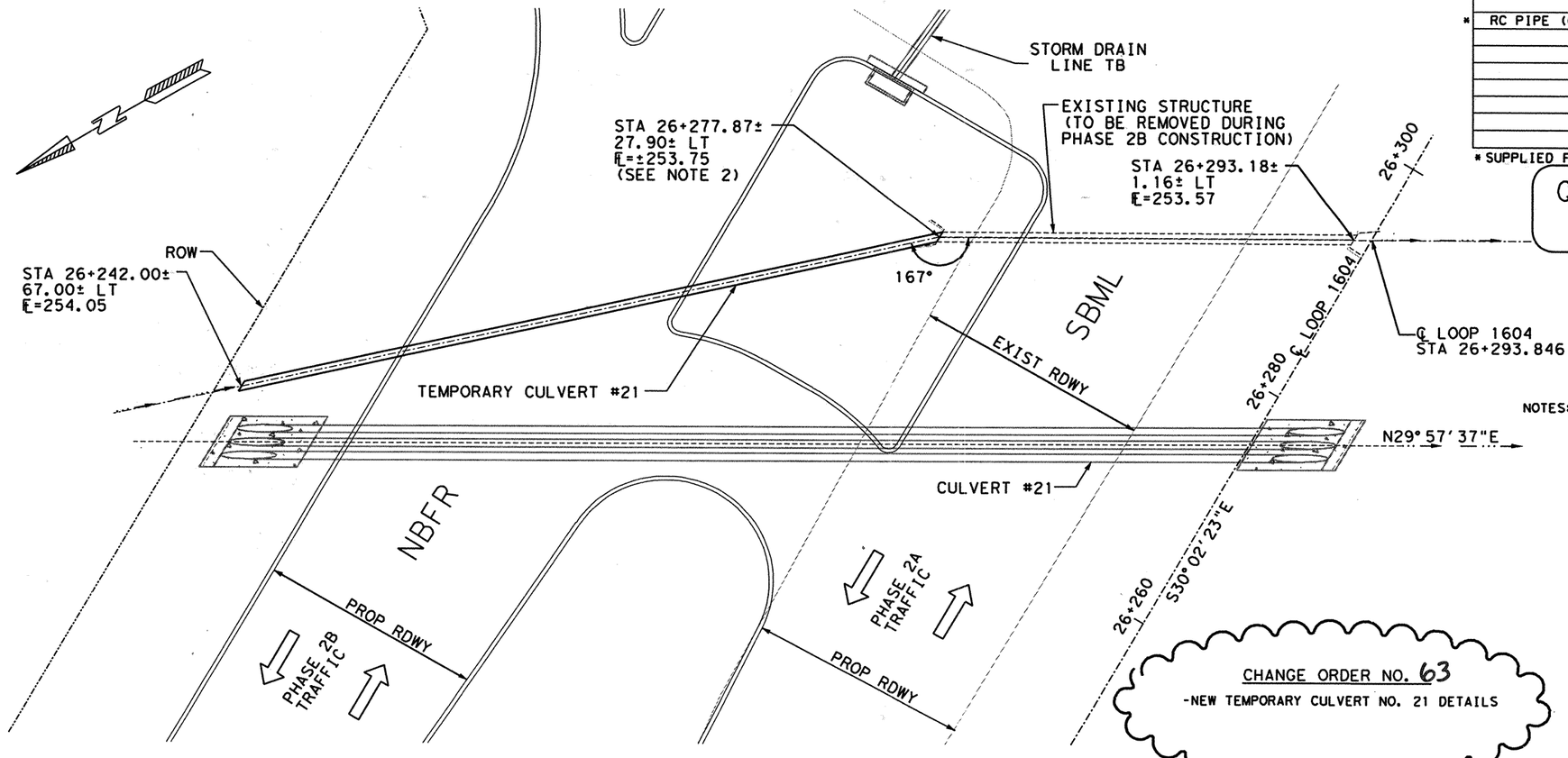


CHANGE ORDER NO. 63
-NEW TEMPORARY CULVERT NO. 21 DETAILS

NOTES:

1.) ALL DIMENSIONS ARE IN METERS UNLESS NOTED OTHERWISE.

2.) CONTRACTOR TO REMOVE UPSTREAM HEADWALL OF EXISTING STRUCTURE, PLACE TEMPORARY CULVERT END-TO-END W/ EXISTING STRUCTURE, POUR CONCRETE AROUND TEMPORARY-TO-EXISTING STRUCTURE CONNECTION, AND BACKFILL W/ PROPOSED EMBANKMENT.

3.) UPON COMPLETION OF CULVERT #21 THE CONTRACTOR SHALL CAP BOTH ENDS OF THE TEMPORARY DRAINAGE STRUCTURE PLACE IN PHASE 2A W/ CONCRETE AND ABANDON AND REMOVE EXISTING DRAINAGE SRUCTURE IN PHASE 2B. THIS WORK SHALL NOT BE PAID FOR DIRECTLY BUT SHALL BE CONSIDERED SUBSIDIARY TO ITEM 464 (RC PIPE).

4.) CONTRACTOR TO PROVIDE POSITIVE DRAINAGE TO UPSTREAM END OF TEMPORARY DRAINAGE STRUCTURE.

†5.) UPON COMPLETION OF THE ULTIMATE PROPOSED DRAINAGE STRUCTURE, SUFFICIENT LENGTH OF THE TEMPORARY DRAINAGE STRUCTURE SHALL BE REMOVED. LENGTH OF REMOVAL SHALL BE SUFFICIENT ENOUGH TO ALLOW FOR FINAL ROADWAY CONSTRUCTION AND GRADING AS APPROVED BY THE ENGINEER.

6.) FOR PAY ITEMS ASSOCIATED WITH STAGED CONST. OF CULVERT SEE CULVERT LAYOUT AND S.O.W. PLAN SHEETS.

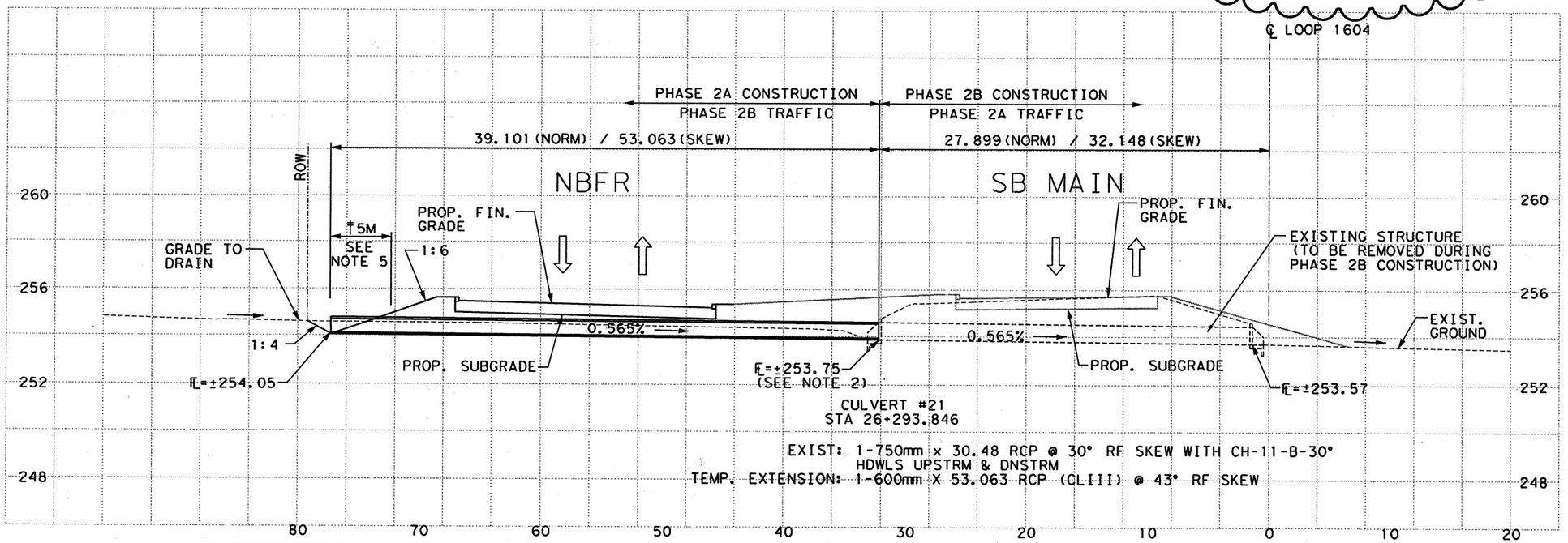


EXIST: 1-750mm x 30.48 RCP @ 30° RF SKEW WITH CH-11-B-30° HDWLS UPSTRM & DNSTRM
TEMP. EXTENSION: 1-600mm X 53.063 RCP (CLIII) @ 43° RF SKEW

CHANGE ORDER NO. 63 | NEW SHEET

SCALE: 1:400 HORIZ
1:200 VERT

555 EAST RAMSEY SAN ANTONIO TEXAS 78216 PHONE (210)375-9000 FAX (210)375-9010
PAPE-DAWSON ENGINEERS
CIVIL & ENVIRONMENTAL
STATE OF TEXAS J. KENT O'BRIEN 64398 REGISTERED PROFESSIONAL ENGINEER
J. KENT O'BRIEN, P.E. 1/27/2004 DATE

© 2000 Texas Department of Transportation

# LOOP 1604
# TEMPORARY CULVERT LAYOUT
## CULVERT # 21 STA 26+293+846

| DN: | | | | | PROJECT NO. | | |
|---|---|---|---|---|---|---|---|
| CK DN: | | | | | NH 2000 (704), etc. | | |
| DW: | CONTROL | SECTION | JOB | DIST. | COUNTY | HIGHWAY NO. | SHEET NO. |
| CK DW: | 2452 | 01 | 036 etc. | SAT | BEXAR | LOOP 1604 | 105G |

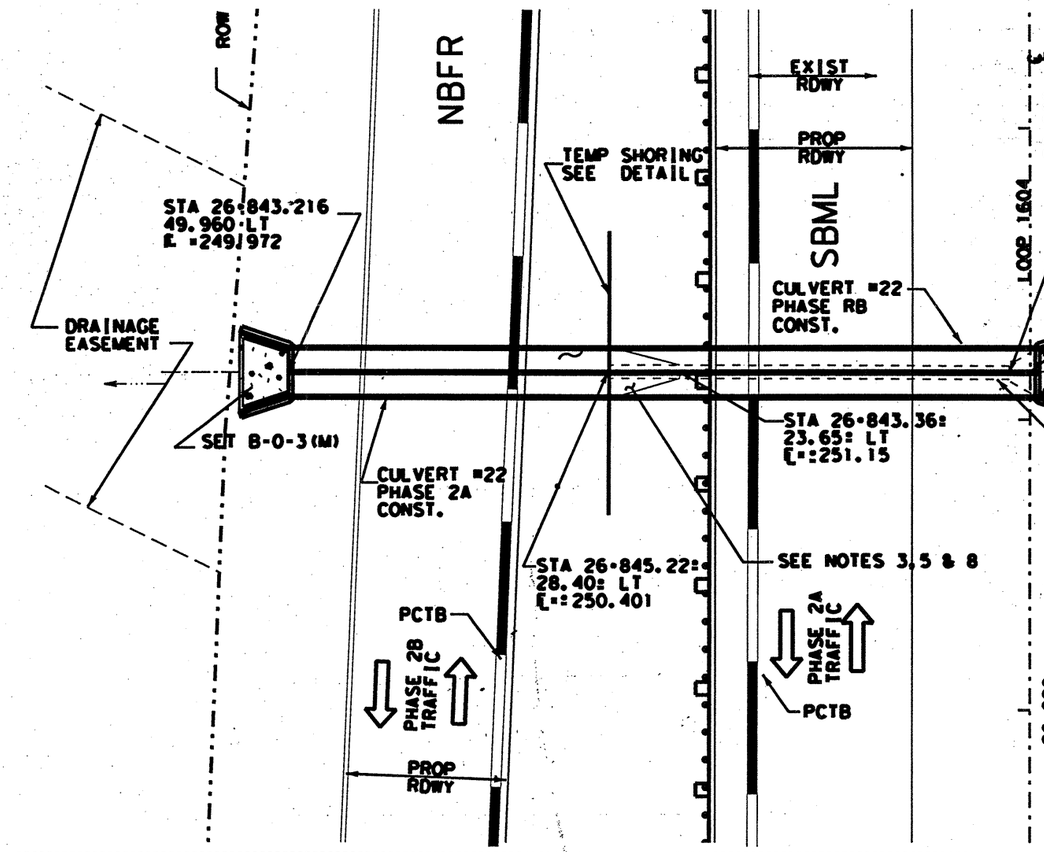


CHANGE ORDER NO. 63

-CULVERT NO. 22 STAGED CONSTRUCTION

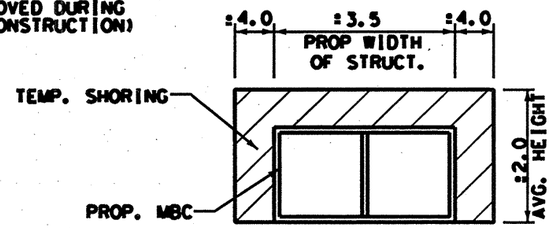


ACTUAL LIMITS OF SHORING TO BE DETERMINED IN FIELD, SEE NOTE 4.

## TEMP. SHORING DETAIL

NTS

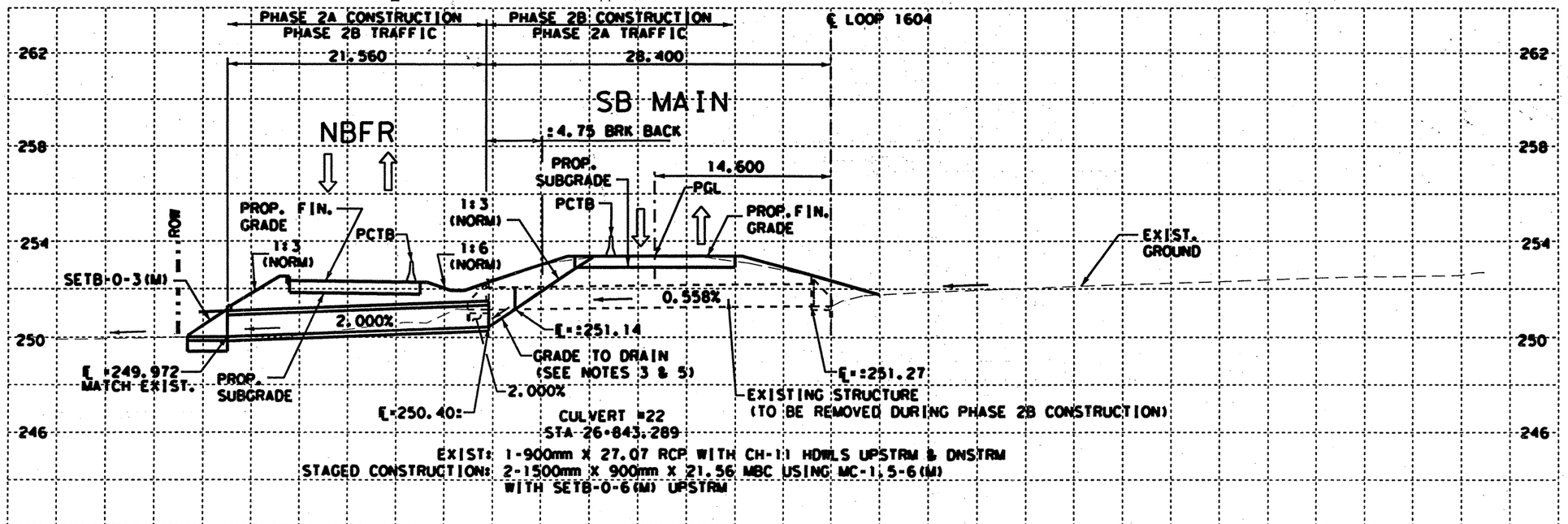


| ESTIMATED QUANTITIES | | | |
|---|---|---|---|
| DESCRIPTION | UNIT | EST. | FINAL |
| * TEMP SHORING | M2 | 18.8 | |

* SUPPLIED FOR CONTRACTOR'S INFORMATION ONLY

## QUANTITIES THIS SHEET
## CSJ 2452-01-036

NOTES:

1. ALL DIMENTSIONS ARE IN METERS UNLESS NOTED OTHERWISE.
2. TEMPORARY CULVERT LAYOUT PLAN SHEETS SHALL BE USED ONLY FOR CONSTRUCTION OF TEMPORARY DRAINAGE IMPROVEMENTS.
3. CONTRACTOR SHALL PROVIDE FOR POSITIVE DRAINAGE BETWEEN THE EXISTING DRAIANGE STRUCTURE AND THE TEMPORARY DRAINAGE STRUCTURE.
4. TEMPORARY SHORING SHALL BE UTILIZED ONLY W/ APPROVAL BY THE ENGINEER.
5. CONTRACTOR TO REMOVE BOX FLARED WINGS ALONG W/ :4.75M OF BOX CULVERT FROM THE UPSTREAM END OF THE EXISTING DRAIN STRUCTURE.
6. ~~TEMPORARY CULVERT CONSTRUCTED UNDER PHASE 2A SHALL REMAIN IN PLACE AS A PORTION OF THE ULTIMATE PROPOSED DRAINAGE STRUCTURE.~~
7. CONTRACTOR MAY DELAY COMPLETION OF INLET TOP AND FINISH GRADE UNTIL PHASE 2B AS APPROVED BY THE ENGINEER, BUT SHALL CONSTRUCT SUFFICIENT PORTION TO PROVIDE TEMP DRAINAGE.
8. FOR PAY ITEMS ASSOCIATED WITH STAGED CONST. OF CULVERT SEE CULVERT LAYOUT AND S.O.W. PLAN SHEETS.

SCALE: 1:400 HORIZ
1:200 VERT

CHANGE ORDER NO. 63 | NEW SHEET

STATE OF TEXAS
JEROME D. PAVLISKA
76075
REGISTERED PROFESSIONAL ENGINEER

Jerome D. Pavliska, P.E. 9-3-04
Jerome D. Pavliska, P.E. — Date

© 2000 Texas Department of Transportation

# LOOP 1604
# STAGED CONSTRUCTION LAYOUT

CULVERT #22 STA 26+843.289

| DN: | | | | | PROJECT NO. | | |
|---|---|---|---|---|---|---|---|
| CK DN: | | | | | NH 2000 (704), etc. | | |
| DW: | CONTROL | SECTION | JOB | DIST. | STATE | COUNTY | HIGHWAY NO. | SHEET NO. |
| CK DW: | 2452 | 01 | 036 | SAT | TX | BEXAR | LOOP 1604 | 105 N |

Plotted on: 2004
Design Filename: O:\Design\lp1604fm471-90\PD+Phase2+change+order+mylars\submittal\plansheets\1 ain\522011TCL22.dgn

Plotted on: 9/2/2004
Design Filename: ...\AO\Design\0160 4fm471-90\PD4\Phase2\change*order*mylars\submittal\plansheets\...dgn

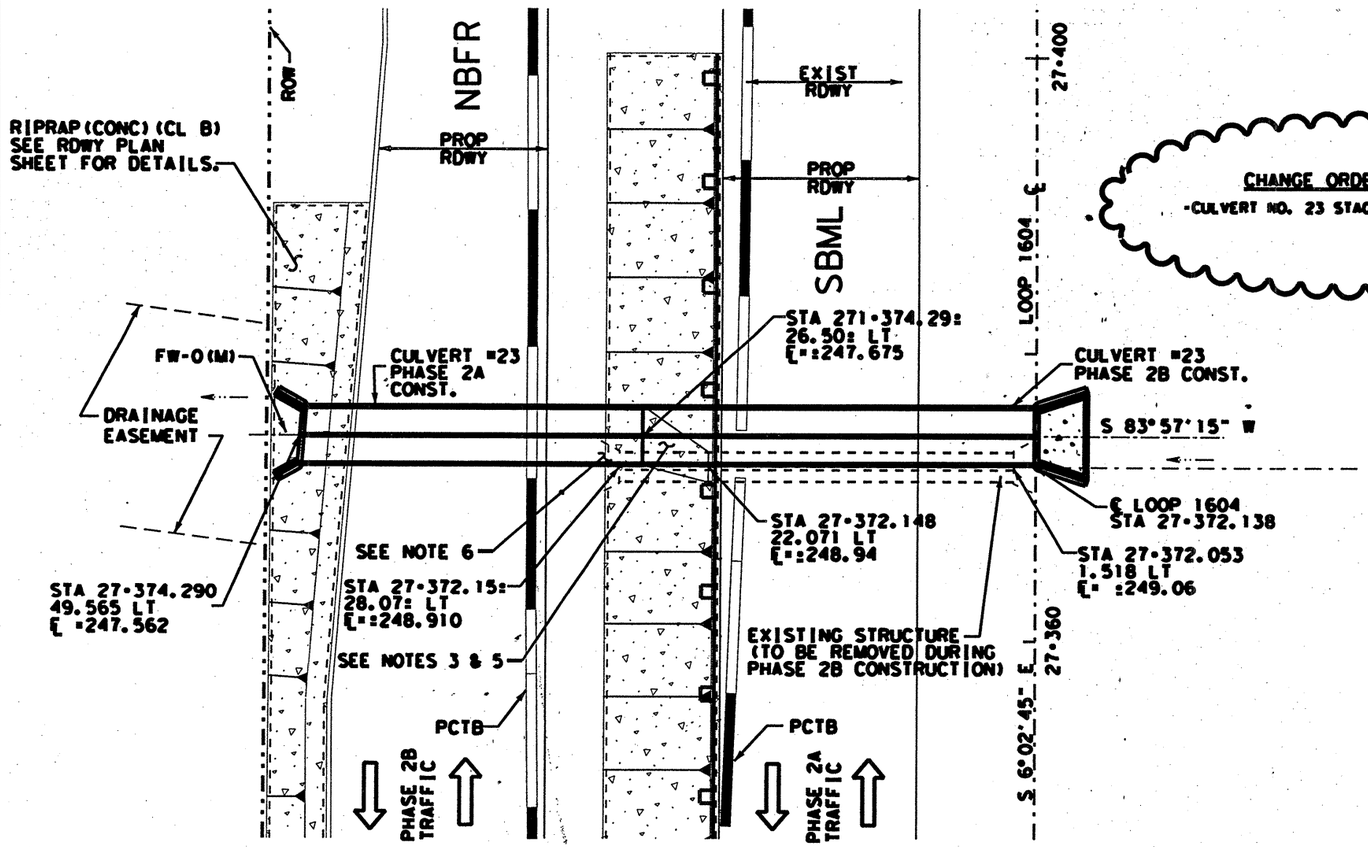


CHANGE ORDER NO. 63
-CULVERT NO. 23 STAGED CONSTRUCTION

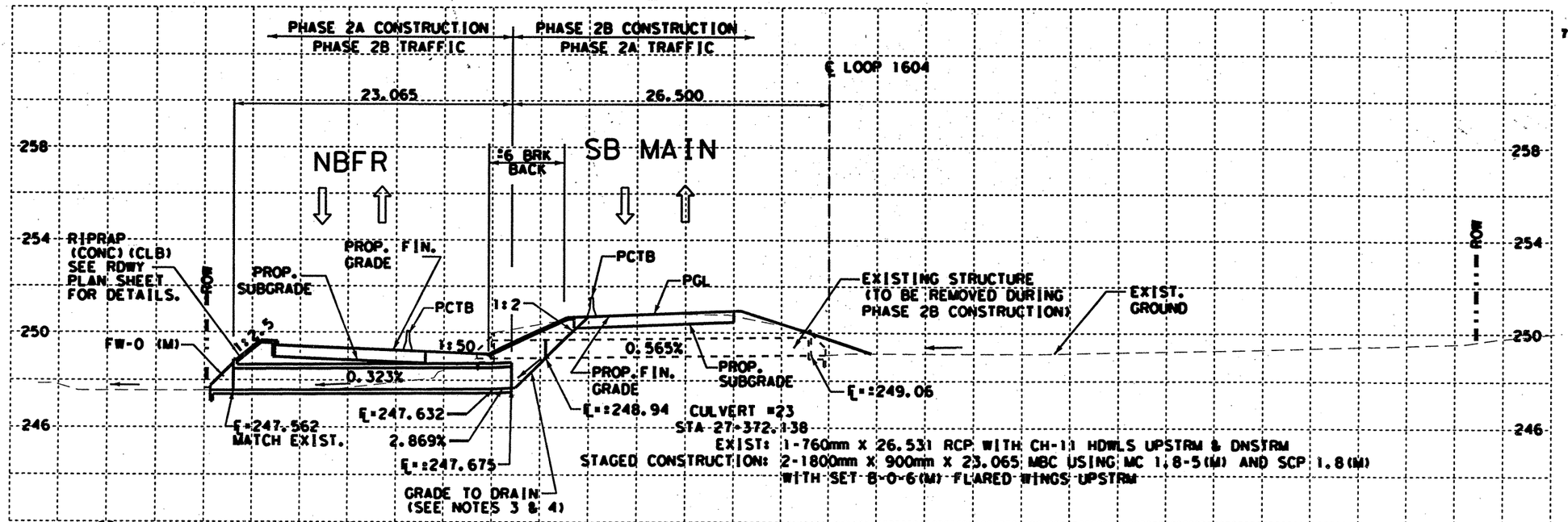


## ESTIMATED QUANTITIES

| DESCRIPTION | UNIT | EST. | FINAL |
|---|---|---|---|
| | | | |
| | | | |
| | | | |
| | | | |
| | | | |
| | | | |
| | | | |
| | | | |

*SUPPLIED FOR CONTRACTOR'S INFORMATION ONLY

## QUANTITIES THIS SHEET
CSJ 2452-01-036

NOTES:
1.) ALL DIMENTSIONS ARE IN METERS UNLESS NOTED OTHERWISE.
2.) TEMPORARY CULVERT LAYOUT PLAN SHEETS SHALL BE USED ONLY FOR CONSTRUCTION OF TEMPORARY DRAINAGE IMPROVEMENTS.
3.) CONTRACTOR SHALL PROVIDE FOR POSITIVE DRAINAGE BETWEEN THE EXISTING DRAINAGE STRUCTURE AND THE TEMPORARY DRAINAGE STRUCTURE.
4.) CONTRACTOR TO REMOVE BOX FLARED WINGS ALONG W/ :6M OF BOX CULVERT FROM THE DOWNSTREAM END OF THE EXISTING DRAIN STRUCTURE.
5.) TEMPORARY CULVERT CONSTRUCTED UNDER PHASE 2A SHALL REMAIN IN PLACE AS A PORTION OF THE ULTIMATE PROPOSED DRAINAGE STRUCTURE.
6.) CONTRACTOR MAY DELAY COMPLETION OF INLET TOP AND FINISH GRADE UNTILL PHASE 2B AS APPROVED BY THE ENGINEER, BUT SHALL CONSTRUCT SUFFICIENT PORTION TO PROVIDE TEMP DRAINAGE.
7.) FOR PAY ITEMS ASSOCIATED WITH STAGED CONST OF CULVERT SEE CULVERT LAYOUT AND S.O.W. PLAN SHEETS.

SCALE: 1:400 HORIZ
1:200 VERT

CHANGE ORDER NO. 63 | NEW SHEET

STATE OF TEXAS
JEROME D. PAVLISKA
76075
REGISTERED PROFESSIONAL ENGINEER

Jerome D. Pavliska, P.E. 9-3-04
Jerome D. Pavliska, P.E. Date

© 2000 Texas Department of Transportation

# LOOP 1604
# STAGED CONSTRUCTION LAYOUT
## CULVERT =23 STA 27+372.138

| DN: | | | | | PROJECT NO. | | |
|---|---|---|---|---|---|---|---|
| CK DN: | | | | | NH 2000 (704), etc. | | |
| DW: | CONTROL | SECTION | JOB | DIST. | STATE | COUNTY | HIGHWAY NO. | SHEET NO. |
| CK DW: | 2452 | 01 | 036 | SAT | TX | BEXAR | LOOP 1604 | 105 |

Plotted on: 01/26/2004

CHANGE ORDER NO. 63

-CULVERT NO. 24 STAGED CONSTRUCTION

DRAINAGE EASEMENT

ROW

NBFR

SBML

EXIST RDWY

PCTB

LOOP 1604

27+960

STA 27+940.51±
20.72± LT
℄=±246.83

TEMP SHORING
SEE DETAIL

STA 27+940.509
44.612 LT
℄ =246.734

STA 27+940.55±
28.56± LT
℄=±247.040

STA 27+940.51±
17.51± LT
℄=±247.05

STA 27+940.56±
2.12± LT
℄=±247.06

STA 27+940.509

S 87°57'15" W

SEE NOTE 3

SET (TY II)
W/ PIPE RUNNERS
SEE SHEET#
RIPRAP HEADWALL (MOD) (M)
FOR MORE DETAILS

CULVERT #24
PHASE 2A CONST

EXISTING STRUCTURE
(TO BE REMOVED DURING
PHASE 2B CONSTRUCTION)

CULVERT #24
PHASE 2B CONST

PROP RDWY

1.5 BFR | 3.3 LANE | 3.3 LANE | 1.2 SHLDR

PHASE 2B TRAFFIC

1.5 SHLDR | 3.6 LANE | 3.6 LANE | 1.5 BFR

PCTB

PHASE 2A TRAFFIC

PROP RDWY

S 6°02'45" W

27+920

## TEMP. SHORING DETAIL

±4.0 | ±4.3 | ±4.0

PROP WIDTH OF STRUCT.

TEMP. SHORING

PROP. STRUCTURE

±2.0

ACTUAL LIMITS OF SHORING TO BE DETERMINED IN FIELD, SEE NOTE 4.

NTS

℄ LOOP 1604

PHASE 2A CONSTRUCTION
PHASE 2B TRAFFIC
±19.9

PHASE 2B CONSTRUCTION
PHASE 2A TRAFFIC
±19.4

±9.8 BRK BACK

14.6

NBFR

SB MAIN

PCTB

PCTB

CONST DETOUR

2:1

1:5

1:6

6.3 (NORM)
SET (TYII)

ROW

246.53

0.392%

0.076%

EXIST. GROUND

℄ =246.734
MATCH EXIST.

PROP. SUBGRADE

℄=±247.00

GRADE TO DRAIN
(SEE NOTES 3 & 5)

℄=±247.06

EXISTING STRUTURE
(TO BE REMOVED DURING
PHASE 2A CONSTRUCTION)

℄=±246.83

CULVERT #24
STA 27+940.509

REMAINDER OF EXISTING STRUCTURE
(TO BE REMOVED DURING PHASE 2B
CONSTRUCTION)

EXIST: 1 -750mm X 26.00 RCP
WITH CH-11 HDWLS UPSTRM & DNSTRM (TO BE REMOVED)

STAGED CONSTRUCTION: 3-1050mm X 17.750 RCP (CL III) WITH 3-SET(TY II)
(1050mm) (RCP) (1:6) (C) W/PIPE RUNNERS DNSTRM

254 | 250 | 246 | 242

80 | 60 | 40 | 20 | 0 | 20

ESTIMATED QUANTITIES

| | DESCRIPTION | UNIT | EST. | FINAL |
|---|---|---|---|---|
| * | TEMP SHORING | M2 | 13.5 | |

* SUPPLIED FOR CONTRACTOR'S INFORMATION ONLY

QUANTITIES THIS SHEET
CSJ 2452-01-036

LEGEND

TEMPORARY WIDENING

NOTES:

1.) ALL DIMENTSIONS ARE IN METERS UNLESS NOTED OTHERWISE.

2.) TEMPORARY CULVERT LAYOUT PLAN SHEETS SHALL BE USED ONLY FOR CONSTRUCTION OF TEMPORARY DRAINAGE IMPROVEMENTS.

3.) CONTRACTOR SHALL PROVIDE FOR POSITIVE DRAINAGE BETWEEN THE EXISTING DRAIANGE STRUCTURE AND THE TEMPORARY DRAINAGE STRUCTURE.

4.) TEMPORARY SHORING SHALL BE UTILIZED ONLY W/ APPROVAL BY THE ENGINEER.

5.) CONTRACTOR TO REMOVE BOX FLARED WINGS ALONG W/ ±9.8M OF BOX CULVERT FROM THE DOWNSTREAM END OF THE EXISTING DRAIN STRUCTURE.

6.) TEMPORARY CULVERT CONSTRUCTED UNDER PHASE 2A SHALL REMAIN IN PLACE AS A PORTION OF THE ULTIMATE PROPOSED DRAINAGE STRUCTURE.

7.) QTYS. FOR TEMPORARY CULVERT #24 ARE ACCOUNTED FOR ON THE CULVERT #24 LAYOUT SHEET.

CHANGE ORDER NO. 63 | NEW SHEET

SCALE: 1:400 HORIZ
1:200 VERT

555 EAST RAMSEY SAN ANTONIO TEXAS 78216
PHONE (210)375-9000
FAX (210)375-9010
PAPE-DAWSON ENGINEERS
CIVIL & ENVIRONMENTAL
STATE OF TEXAS · J. KENT O'BRIEN · 64398 · REGISTERED PROFESSIONAL ENGINEER
J. KENT O'BRIEN, P.E. 1/27/2004 DATE

© 2000 Texas Department of Transportation

# LOOP 1604
# STAGED CONSTRUCTION LAYOUT

CULVERT #24 STA 27+940.509

| | | | | | | | | |
|---|---|---|---|---|---|---|---|---|
| DN: | | | | | | PROJECT NO. | | |
| CK: DN: | | | | | | NH 2000 (704), etc. | | |
| DW: | CONTROL | SECTION | JOB | DIST. | STATE | COUNTY | HIGHWAY NO. | SHEET NO. |
| CK: DW: | 2452 | 01 | 036 etc. | SAT | TX | BEXAR | LOOP 1604 | 105 J |

Design Filename: ...\52\20\11\design\civil\plansheets\tcp\drain\52201ltc124.dgn

## SITE CONDITIONS AND PLACEMENT GUIDELINES

| CONDITION | RECOMMENDATIONS | ILLUSTRATION |
|---|---|---|
| 1. Angle of array in relation to center line of obstacle | Not recommended for more than 10° | 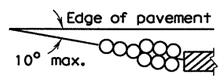  |
| 2. Bi-directional traffic | Offset array to avoid rear corner module snagging potential by traffic in the upstream direction of flow | 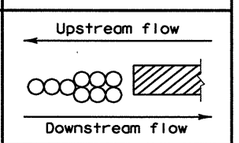  |
| 3. Module spacing: Module to Module / Module to fixed object | 150 mm usual / 355 mm | 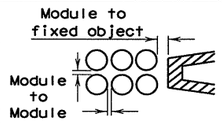  |
| 4. "Coffin" corner | Shield 760 mm outside of fixed object | 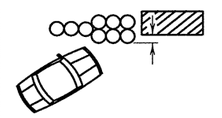 |
| 5. Sloping sites (lateral and longitudinal) (See Gen. Note 6) | 1:10 Maximum (V:H) | 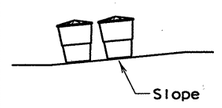  |
| 6. Curbs and raised islands (See Gen. Note 4) | No more than 100 mm high (remove if possible) | |
| 7. Foundation pads (See Gen. Note 7) | Flat surface; concrete or asphalt | 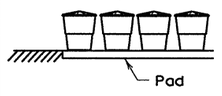  |
| 8. Maintenance | Keep site clear of debris and snow | 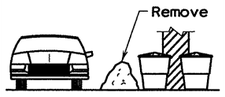  |
| 9. Sand densities | 1600 kg/cubic meter | 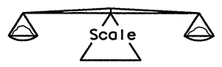  |
| 10. Vandalism, impact and or maintenance | Check periodically for damages | |

DISCLAIMER:
The use of these guidelines are governed by the "Texas Engineering Practice Act". No warranty of any kind is made by TxDOT for any purpose whatsoever. TxDOT assumes no responsibility for the conversion of these guidelines to other formats or for incorrect results or damages resulting from its use.

LEVELS DIS. 26

1 2 3 4 5 6 7 8 9 10 11 12 13 14 15 16
17 18 19 20 21 22 23 24 25 26 27 28 29 30 31 32
33 34 35 36 37 38 39 40 41 42 43 44 45 46 47 48
49 50 51 52 53 54 55 56 57 58 59 60 61 62 63

## TYPICAL MODULE ARRAYS WITH CORRESPONDING DESIGN SPEED AND SAND WEIGHT (kg) shown in circles.

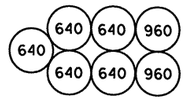


50 km/h

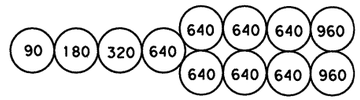


80 km/h

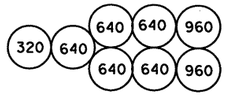


60 km/h

90 km/h

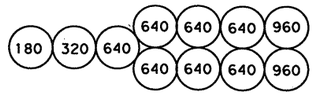


70 km/h

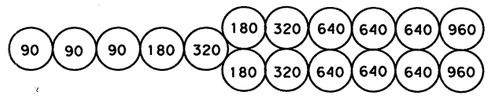


100 km/h

## GENERAL NOTES

1. Rear modules should overlap (in width) the fixed object on each side by a minimum of 760 mm.
2. Modification of array: When proximity of traffic lanes exclude the use of a wider barrier. The front of the barrier may retain the standard width but the rear can be widened by spacing as shown in this diagram.

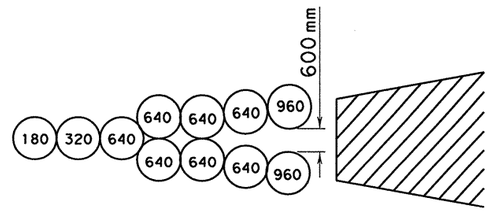


3. Barrier can be placed at any distance from the shoulder both at roadside and in median sites from 0 to 9 meters depending on the location of the fixed object. Angling of the barrier toward oncoming traffic is suggested from 3 to 10 degres depending on space available.
4. Whenever possible, curbs 100 mm and higher should be removed from installation area. However, when removal is not possible, modules can be seperated along the barrier axis to fit the situation.
5. Longitudinal spacing of modules may be increased where space permits for example, 600 mm or even 900 mm spacing of some of the modules may permit the design Engineer to exploit all the space allocated for an energy-absorbing barrier.
6. The entire area of the crash cushion installation and approaches shall be graded so that the maximum slope does not exceed 1:10 (vertical : horizontal) in any direction.
7. Where required, support pads will be measured and paid for in accordance with pertinent bid items.

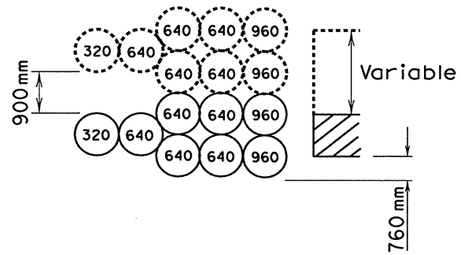


BARRIER ARRAYS FOR FIXED OBJECT OF VARIABLE WIDTH (60 km/h)

# DESIGN GUIDELINES AND TYPICAL MODULE ARRAYS

## VEHICLE IMPACT ATTENUATOR (SAND FILLED PLASTIC MODULES)

## VIA(SFPM) (M)

STATE OF TEXAS
JOEL K. DAVENPORT, JR.
79276
REGISTERED
PROFESSIONAL ENGINEER

Joel K. Davenport, Jr. P.E. 79276

9/19/00
Date

©2000 Texas Department of Transportation

VIA (SFPM) (M)

| FED. RD. DIV. NO. | FEDERAL AID PROJECT NO. | | SHEET NO. |
|---|---|---|---|
| 6 | NH 2000(704), etc. | | 106 |
| STATE | DIST. | COUNTY | |
| TEXAS | SAT | BEXAR | |
| CONT. | SECT. | JOB | HIGHWAY NO. |
| 2452 | 01 | 036, etc. | LP 1604 |

NOTE(S):

SIGNS SHOWN ON THESE LAYOUTS REPRESENT ADDITIONAL TEMPORARY SIGNS NEEDED FOR PHASE 2B OPERATIONS. ALL PERMANENT SIGNS ORIGINALLY CALLED OUT IN THE PLANS OR SIGNS LISTED AS PART OF C.O.#65 MAY BE PLACED IN THEIR PERMANENT LOCATIONS ALONG THE N'BD. FRONTAGE RD. ANY PERMANENT SIGNS PLACED THAT ARE IN CONFLICT WITH PHASE 2B OPERATIONS ARE TO BE COVERED OR HANDLED AS DIRECTED BY THE ENGINEER.

ALL SIGNS SHOWN ON THESE LAYOUTS ARE TEMPORARY, NOT TO BE CONFUSED WITH PERMANENT SIGNS.

ALL TEMPORARY SIGNS ARE FOR LONG TERM STATIONARY DURATION AND ARE TO BE MOUNTED TO PORTABLE SKID MOUNTED SIGN SUPPORTS UNLESS DIRECTED OTHERWISE BY THE ENGINEER.

ACTUAL LOCATIONS FOR THE TEMPORARY SIGNS SHOWN ON THESE LAYOUTS MAY BE VARIED TO BETTER FIT FIELD CONDITIONS AS APPROVED BY THE ENGINEER.

CHANGE ORDER NO. 114
-NEW TEMPORARY SIGNING SHEET

CHANGE ORDER NO. 114 | NEW SHEET

LEGEND
- CHANNELIZATION DEVICES
- TYPE III BARRICADES
- SIGN

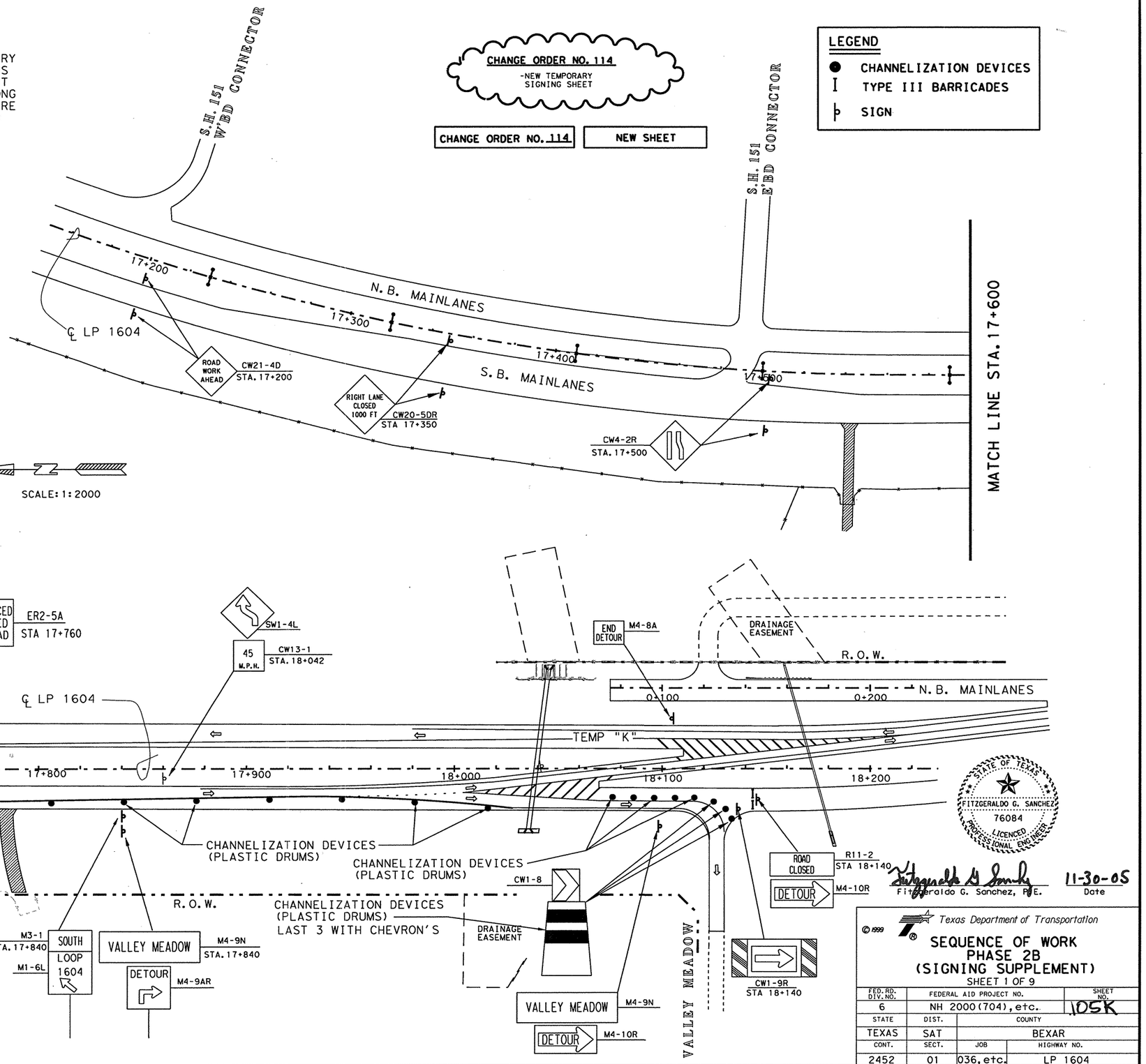


STATE OF TEXAS
FITZGERALDO G. SANCHEZ
76084
LICENCED PROFESSIONAL ENGINEER

Fitzgeraldo G. Sanchez, P.E. — 11-30-05 Date

© 1999 Texas Department of Transportation

# SEQUENCE OF WORK PHASE 2B (SIGNING SUPPLEMENT)

SHEET 1 OF 9

| FED.RD. DIV.NO. | FEDERAL AID PROJECT NO. | SHEET NO. |
|---|---|---|
| 6 | NH 2000(704), etc. | 105K |
| STATE | DIST. | COUNTY |
| TEXAS | SAT | BEXAR |
| CONT. | SECT. | JOB / HIGHWAY NO. |
| 2452 | 01 | 036, etc. / LP 1604 |

11-21-05

$files
$dates

T:\AO\DESIGN\lp1604-90\PD#PHASE2B change*order*mylars\submittal\plansheets\tcp\phase2b01sign01.dgn

LEVELS DISPLAYED
1 2 3 4 5 6 7 8 9 10 11 12 13 14 15 16
17 18 19 20 21 22 23 24 25 26 27 28 29 30 31 32
33 34 35 36 37 38 39 40 41 42 43 44 45 46 47 48
49 50 51 52 53 54 55 56 57 58 59 60 61 62 63

ACC:

FILE: .DGN

Plotted on: 11/29/2005

Design Filename: T:\AO\Design\lp1604fm471-90\PD#Phase2#change#order#mylars\submittal\plansheets\TCP\phase2B01sign01.dgn

SCALE 1:2000

TO 151 — M4-5 STA 18+280 — M1-6T — M6-3

M3-1 STA 18+280 — M1-6L — M6-2 — NORTH LOOP 1604

SW6-3 STA 18+400

SR1-4 STA 18+500 (SEE DURA CURB SUPPLEMENTAL SHEET FOR FURTHER DETAILS.)

SPEED LIMIT 55 — R2-1 STA 18+560

NORTH WEST VISTA COLLEGE / MISTYWOODS — D1-2 STA 18+620

STOP — R1-1

R.O.W.

CULVERT #9

N. BOUND FRONTAGE RD.

0+100 0+200 0+300 0+400 0+500 0+600 0+700

MATCHLINE STA 18+740

S.B. MAIN LANES

DETOUR "F" 0+200

DETOUR "E" 18+100 0+100 18+200 18+300 18+400 18+500 ℄ LP 1604 18+600 18+700

CULVERT #7 CULVERT #8

SEE PRIOR SHEET FOR ADDITIONAL DETAILS

VALLEY MEADOW

MISTY WOODS DR.

ROAD CLOSED — R11-2

END DETOUR — M4-8a

R5-1 DO NOT ENTER

M6-3 TO LOOP 1604 — M4-9N

M4-9N STA. 18+760 VALLEY MEADOW

M4-9AL DETOUR

SUMMER BREEZE

NORTH ELLISON DR.

VALLEY MEADOW — M4-9N STA. 18+840

DETOUR — M4-9S

STOP — R1-1

SPEED LIMIT 55 — R2-1 STA 19+000

SCALE 1:2000

* PORT. CHANGEABLE MESSAGE SIGN (SEE NOTE BELOW)

D1-1 STA 19+220 WISEMAN BLVD

R.O.W.

N.B. FRONTAGE RD.

0+800 0+900 1+000 1+100 1+200 1+300 1+400

CULVERT #10

S.B. MAIN LANES

MATCHLINE STA 18+740

18+800 18+900 19+000 19+100 ℄ LP 1604 19+200 19+300

LINE WA

MATCHLINE STA 19+460

D1-1 STA 18+780 NORTH ELLISION

SW3-3 STA 18+960

CULVERT #11

R.O.W.

M4-9N VALLEY MEADOW

M4-9AL DETOUR

ROAD CLOSED — R11-2

WISEMAN BLVD.

M5-1R TO LOOP 1604 — M4-9N

SUMMER BREEZE

M5-1L TO LOOP 1604 — M4-9N

END DETOUR — M4-8a

**LEGEND**

- CHANNELIZATION DEVICES
- TYPE III BARRICADES
- SIGN

**CHANGE ORDER NO. 114**

- NEW TEMPORARY SIGNING SHEET

* PORTABLE CHANGEABLE MESSAGE SIGN TO BE PLACED INTO CONTINUOUS USE A MINIMUM OF 7 DAYS PRIOR TO INTERSECTION CLOSURE, NOTIFYING PUBLIC OF PENDING INTERSECTION CLOSURE. WORDING SHALL BE AS APPROVED BY THE ENGINEER.

**CHANGE ORDER NO. 114** | **NEW SHEET**

STATE OF TEXAS — FITZGERALDO G. SANCHEZ — 76084 — LICENCED PROFESSIONAL ENGINEER

Fitzgeraldo G. Sanchez, P.E. — 11-30-05 Date

©2000

Texas Department of Transportation

# SEQUENCE OF WORK PHASE 2B (SIGNING SUPPLEMENT)

SHEET 2 OF 9

| FED.RD. DIV.NO. | FEDERAL AID PROJECT NO. | | SHEET NO. |
|---|---|---|---|
| 6 | NH 2000(704), ETC. | | 105L |
| STATE | DIST. | COUNTY | |
| TEXAS | SAT | BEXAR | |
| CONT. | SECT. | JOB | HIGHWAY NO. |
| 2452 | 01 | 036, ETC | LP 1604 |

11-21-05

Plotted on: 11/23/2005

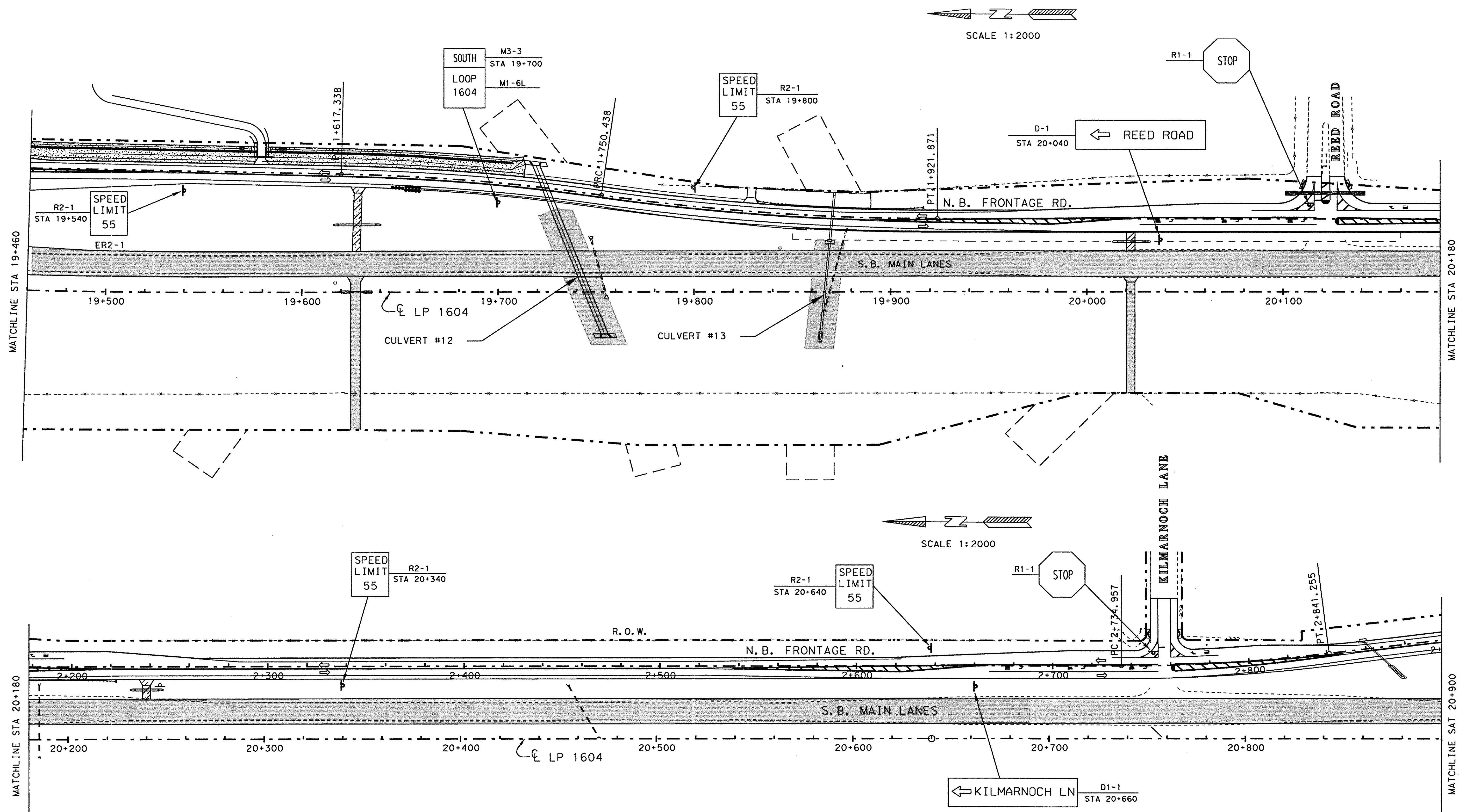


**LEGEND**

- ● CHANNELIZATION DEVICES
- I TYPE III BARRICADES
- Sign symbol: SIGN

CHANGE ORDER NO. 114
- NEW TEMPORARY SIGNING SHEET

| CHANGE ORDER NO. 114 | NEW SHEET |
|---|---|

STATE OF TEXAS
FITZGERALDO G. SANCHEZ
76084
LICENCED PROFESSIONAL ENGINEER

Fitzgeraldo G. Sanchez, P.E. 11-23-05
Date

©2000 Texas Department of Transportation

**SEQUENCE OF WORK**
**PHASE 2B**
**(SIGNING SUPPLEMENT)**
SHEET 3 OF 9

| FED. RD. DIV. NO. | FEDERAL AID PROJECT NO. | | SHEET NO. |
|---|---|---|---|
| 6 | NH 2000(704), ETC. | | 105M |
| STATE | DIST. | COUNTY | |
| TEXAS | SAT | BEXAR | |
| CONT. | SECT. | JOB | HIGHWAY NO. |
| 2452 | 01 | 036, ETC | LP 1604 |

11-21-05

Design Filename: T:\AO\Design\lp1604fm471-90\PD*Phase2*change*order*mylars\submital\planshsheets\TCP\phase2B02sign.dgn

FILE T:\AO\Design\lp1604fm471-90\PD*Phase2*change*order*mylars\submital\planshsheets\TCP\phase2B02sign.dgn
LEVEL 1 3 4 5 6 7 8 9 10 11 12 13 14 15 16 17 18 19 20 21 22 23 24 25 26 27 28 29 30 31 32
DISPLAYED 33 34 35 36 37 38 39 40 41 42 43 44 45 46 47 48 49 50 51 52 53 54 55 56 57 58 59 60 62 63

Plotted on: $DATE$

**LEGEND**

- ● CHANNELIZATION DEVICES
- I TYPE III BARRICADES
- þ SIGN

SCALE 1:2000

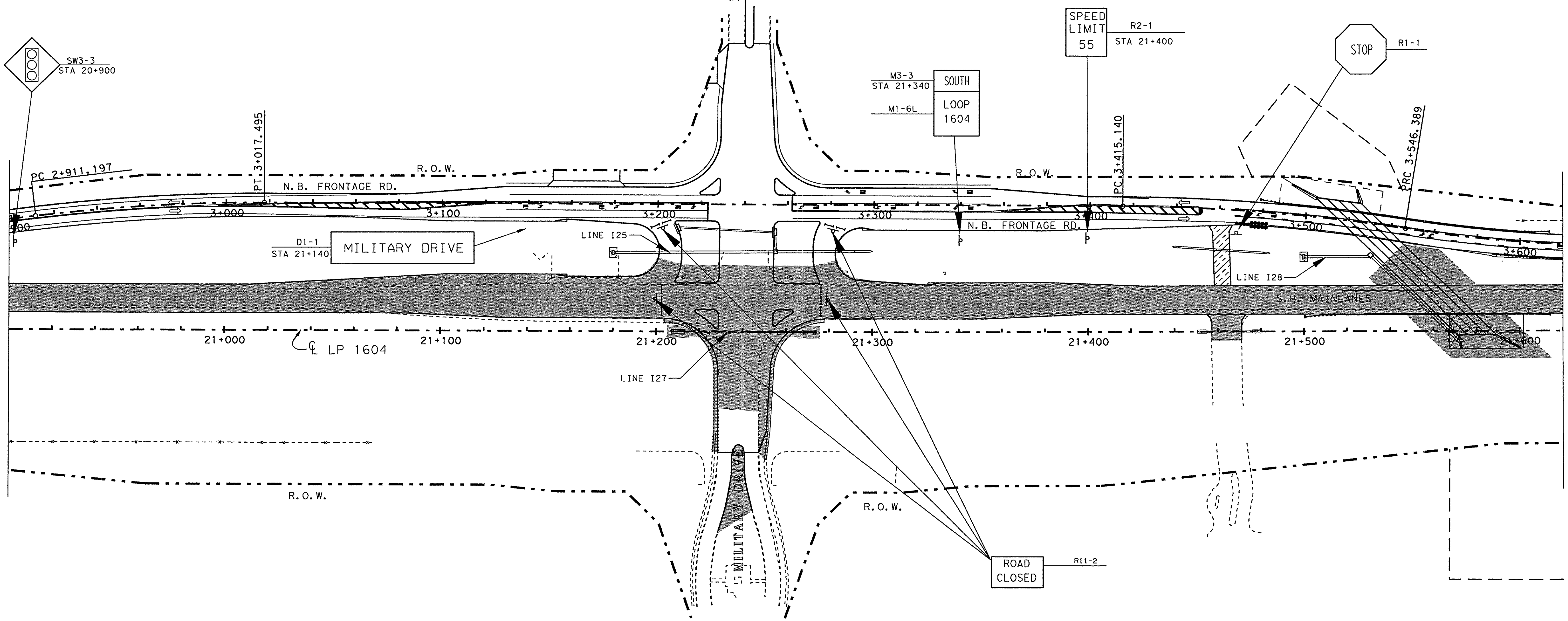


CHANGE ORDER NO. 114
- NEW TEMPORARY SIGNING SHEET

| CHANGE ORDER NO. 114 | NEW SHEET |
|---|---|

STATE OF TEXAS — FITZGERALDO G. SANCHEZ — 76084 — LICENCED PROFESSIONAL ENGINEER

Fitzgeraldo G. Sanchez, P.E. — 11-30-05 — Date

©2000 Texas Department of Transportation

**SEQUENCE OF WORK**
**PHASE 2B**
**(SIGNING SUPPLEMENT)**
SHEET 4 OF 9

| FED. RD. DIV. NO. | FEDERAL AID PROJECT NO. | | SHEET NO. |
|---|---|---|---|
| 6 | NH 2000(704), ETC. | | 105N |
| STATE | DIST. | COUNTY | |
| TEXAS | SAT | BEXAR | |
| CONT. | SECT. | JOB | HIGHWAY NO. |
| 2452 | 01 | 036, ETC | LP 1604 |

11-21-05

| FILE | $FILE$ | | $DATE$ |
|---|---|---|---|
| LEVEL | 1 3 4 5 6 7 8 9 10 11 12 13 14 15 16 17 18 19 20 21 22 23 24 25 26 27 28 29 30 31 32 | | |
| DISPLAYED | 33 34 35 36 37 38 39 40 41 42 43 44 45 46 47 48 49 50 51 52 53 54 55 56 57 58 59 60 62 63 | | |

Design Filename: $FILE$

Plotted on: $DATE$

SCALE 1:2000

WEST CREEK OAKS ⇨ STA 21+760

STOP R1-1

SPEED LIMIT 55 R2-1 STA 22+200

SW3-3 STA 22+280

3+649.993

PC 3+968.735

R.O.W.

PT 4+070.780

LINE I32

N.B. FRONTAGE RD.

MATCHLINE STA 21+620

3+700 3+800 3+900 4+000 4+100 4+200 4+300

S.B. MAIN LANES

21+700 21+800 21+900 22+000 22+100 22+200 22+300

℄ LP 1604

R11-2 ROAD CLOSED

R11-2 ROAD CLOSED

WEST CREEK OAKS

R.O.W.

MATCHLINE STA 21+620

MATCHLINE STA 22+340

SCALE 1:2000

D9-3A D9-3A STA 22+380

M6-1BL M6-1BR

SW6-3 STA 22+340

M3-2 EAST M1-6F M6-1L

WEST M3-4 STA 22+580 M1-6F M6-1R

1957

POTRANCO

M3-3 STA 22+720 SOUTH M1-6L LOOP 1604

D1-1 POTRANCO ROAD

R.O.W.

N.B. FRONTAGE RD.

4+400 4+500 4+600 4+700 4+800 4+900 5+000

LINE I35

LINE I37

SPEED LIMIT 55 R2-1 STA 22+980

S.B. MAIN LANES

22+400 22+500 22+600 22+700 22+800 22+900 23+000

℄ LP 1604

CARACOL CREEK

ROAD CLOSED R11-2

F.M. 1957/POTRANCO RD.

R.O.W.

R.O.W.

MATCHLINE STA 22+340

MATCHLINE STA 23+060

**LEGEND**

- ● CHANNELIZATION DEVICES
- I TYPE III BARRICADES
- ⊧ SIGN

**CHANGE ORDER NO. 114**

- NEW TEMPORARY SIGNING SHEET

**CHANGE ORDER NO. 114** | **NEW SHEET**

STATE OF TEXAS
FITZGERALDO G. SANCHEZ
76084
LICENCED PROFESSIONAL ENGINEER

Fitzgeraldo G. Sanchez, P.E. 11-30-05 Date

©2000

Texas Department of Transportation

# SEQUENCE OF WORK PHASE 2B (SIGNING SUPPLEMENT)

SHEET 5 OF 9

| FED.RD. DIV.NO. | FEDERAL AID PROJECT NO. | | SHEET NO. |
|---|---|---|---|
| 6 | NH 2000(704), ETC. | | 1050 |
| STATE | DIST. | COUNTY | |
| TEXAS | SAT | BEXAR | |
| CONT. | SECT. | JOB | HIGHWAY NO. |
| 2452 | 01 | 036, ETC | LP 1604 |

11-21-05

Design Filename: $FILE$

FILE $FILE$ $DATE$
LEVEL 1 3 4 5 6 7 8 9 10 11 12 13 14 15 16 17 18 19 20 21 22 23 24 25 26 27 28 29 30 31 32
DISPLAYED 33 34 35 36 37 38 39 40 41 42 43 44 45 46 47 48 49 50 51 52 53 54 55 56 57 58 59 60 61 62 63

Plotted on: 11/23/2005

Design Filename: T:\AO\Design\lp1604fm471-90\PD*Phase2*change*order*mylars\submittal\plansheets\TCP\phase2B05sign.dgn

FILE T:\AO\Design\lp1604fm471-90\PD*Phase2*change*order*mylars\submittal\plansheets\TCP\phase2B05sign.dgn
LEVEL DISPLAYED 1 2 3 4 5 6 7 8 9 10 11 12 13 14 15 16 17 18 19 20 21 22 23 24 25 26 27 28 29 30 31 32
33 34 35 36 37 38 39 40 41 42 43 44 45 46 47 48 49 50 51 52 53 54 55 56 57 58 59 60 61 62 63

## LEGEND

- CHANNELIZATION DEVICES
- TYPE III BARRICADES
- SIGN

SCALE 1:2000

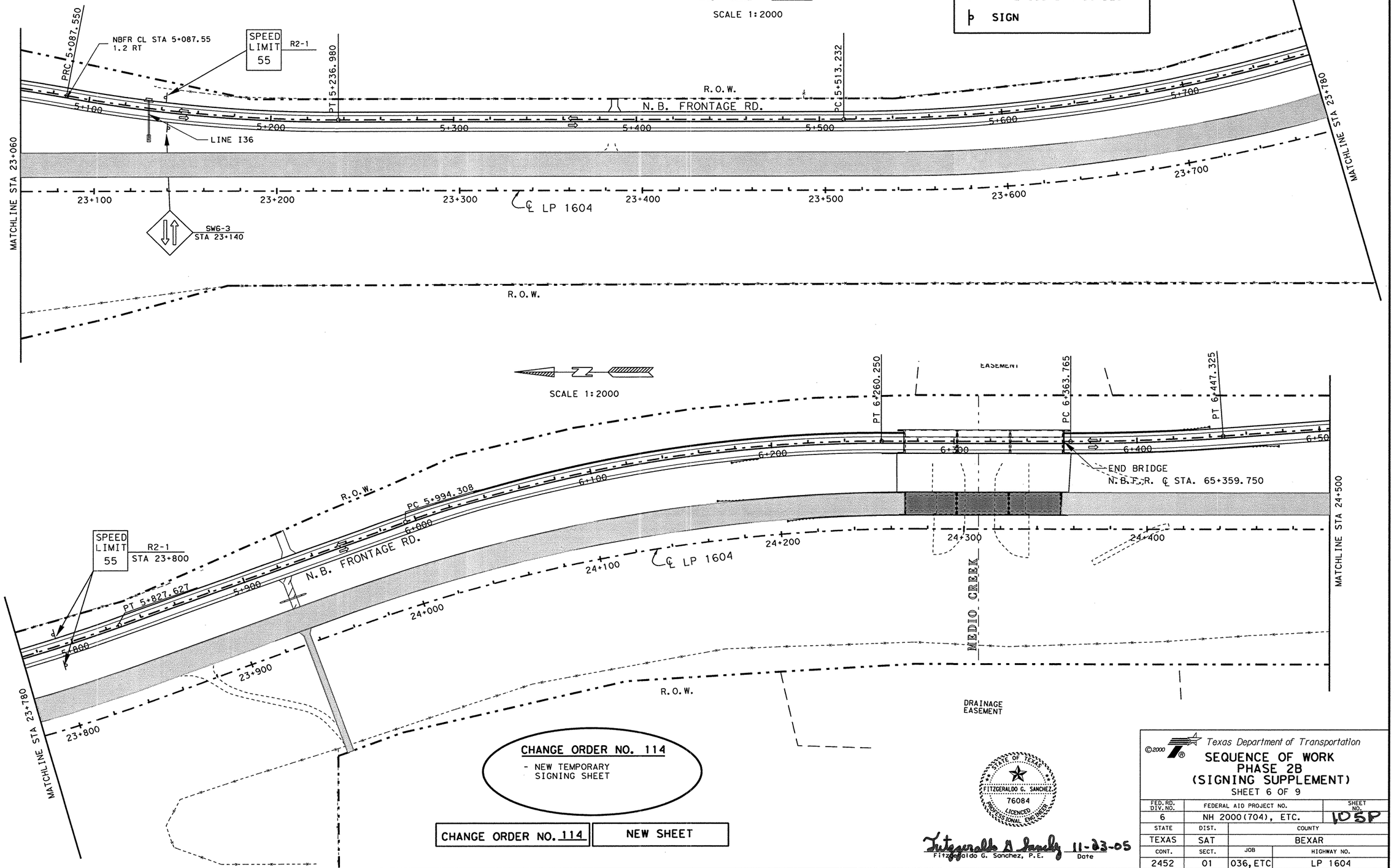


**CHANGE ORDER NO. 114**

- NEW TEMPORARY SIGNING SHEET

| CHANGE ORDER NO. 114 | NEW SHEET |
|---|---|

STATE OF TEXAS
FITZGERALDO G. SANCHEZ
76084
LICENCED PROFESSIONAL ENGINEER

Fitzgeraldo G. Sanchez, P.E. 11-23-05 Date

©2000

Texas Department of Transportation

# SEQUENCE OF WORK PHASE 2B (SIGNING SUPPLEMENT)

SHEET 6 OF 9

| FED.RD. DIV.NO. | FEDERAL AID PROJECT NO. | | SHEET NO. |
|---|---|---|---|
| 6 | NH 2000(704), ETC. | | 105P |
| STATE | DIST. | COUNTY | |
| TEXAS | SAT | BEXAR | |
| CONT. | SECT. | JOB | HIGHWAY NO. |
| 2452 | 01 | 036,ETC | LP 1604 |

11-21-05

DRAINAGE & ROADWAY CONSTRUCTION
CONSTRUCTION DETOUR
PROPERTY ACCESS (TEMPORARY)
TRAFFIC FLOW DIRECTION
V.I.A. ASSEMBLY ( 14 BARRELS EACH LOCATION )

SCALE 1:2000

SPEED LIMIT 55 R2-1 STA 24+560
PC 6+564.265
PT 6+647.825
STOP R1-1
FALCON WOLF
R.O.W.
FALCON WOLF D1-1 STA 24+820
PC 6+911.409
PT 6+980.621
DESERT WOLF
STOP R1-1
DESERT WOLF
PC 7+171.823
6+600
6+700
6+800
6+900
7+000
7+100
7+200
N.B. FRONTAGE RD.
DESERT WOLF D1-1 STA 24+980
MATCHLINE STA 24+500
S.B. MAIN LANES
24+600
24+700
24+800
24+900
25+000
25+100
25+200
℄ LP 1604
MATCHLINE STA 25+220
FALCON WOLF D1-1 STA 24+620
DOVE CANYON RD
DOVE CANYON DETOUR
(SEE DOVE CANYON DETOUR SHEETS FOR MORE DETAILS AND RELATED PAY ITEMS)
R.O.W.

LEGEND
- CHANNELIZATION DEVICES
- TYPE III BARRICADES
- SIGN

DODGE CITY TRAIL D1-1 STA 25+820
+900
25+940
MATCHLINE STA 25+940

SCALE 1:2000

DRAINAGE EASEMENT
SWG-3 STA 25+540
DODGE CITY TRAIL D1-1 STA 25+600
R.O.W.
7+700
7+800
25+800
25+900
SPEED LIMIT 55 R2-1 STA 25+320
PT 7+241.035
PC 7+483.260
7+300
7+400
7+500
N.B. FRONTAGE RD.
MATCHLINE STA 25+220
S.B. MAIN LANES
25+300
25+400
PT STA 0+803.610
0+800
25+500
℄ LP 1604
25+600
25+70
STOP R1-1
ROAD CLOSED R11-2
CULVERT #20
DOVE CANYON DETOUR
(SEE NOTE ABOVE)
0+600
S 0° 66' 59" E
0+700
EMORY PEAK
PT STA 0+558.408
PC STA 0+740.774
R.O.W.
DRAINAGE EASEMENT
R11-2 ROAD CLOSED
M4-10R DETOUR
R11-2 ROAD CLOSED
CAGNON RD.
DODGE CITY TRAIL
R.O.W.

**CHANGE ORDER NO. 114**
- NEW TEMPORARY SIGNING SHEET

STATE OF TEXAS
FITZGERALDO G. SANCHEZ
76084
LICENCED PROFESSIONAL ENGINEER

Fitzgeraldo G. Sanchez 11-23-05
Fitzgeraldo G. Sanchez, P.E. Date

**CHANGE ORDER NO. 114** | **NEW SHEET**

©2000
Texas Department of Transportation

# SEQUENCE OF WORK
# PHASE 2B
# (SIGNING SUPPLEMENT)

SHEET 7 OF 9

| FED.RD. DIV.NO. | FEDERAL AID PROJECT NO. | | SHEET NO. |
|---|---|---|---|
| 6 | NH 2000(704), ETC. | | 1058 |
| STATE | DIST. | COUNTY | |
| TEXAS | SAT | BEXAR | |
| CONT. | SECT. | JOB | HIGHWAY NO. |
| 2452 | 01 | 036,ETC | LP 1604 |

11-21-05

FILE: $FILE$ LEVEL: 1 2 3 4 5 6 7 8 9 10 11 12 13 14 15 16 17 18 19 20 21 22 23 24 25 26 27 28 29 30 31 32
DISPLAYED: 3 35 45 56 57 58 59 60 41 42 43 44 45 46 47 48 49 50 51 52 53 54 55 56 57 58 59 60 61 62 63

$DATE$

DRAINAGE & ROADWAY CONSTRUCTION

TRAFFIC FLOW DIRECTION

V.I.A. ASSEMBLY (14 BARRELS EACH LOCATION)

SW3-3
STA 25+980

SPEED LIMIT 55 R2-1
STA 26+120

R.O.W.

N. B. FRONTAGE RD.

8+000 8+100 8+200 8+300 8+400 8+500 8+600

MARBACH RD.

LINE T

LINE TA

PC 8+444.334

SCALE 1:2000

MATCHLINE STA 25+940

S.B. MAIN LANES

26+000 26+100 26+200 26+300 26+400 26+500 26+600

℄ LP 1604

D1-1
STA. 76+190

MARBACH RD.

ROAD CLOSED R11-2

SEE INTERSECTION S.O.W. FOR MORE DETAILS

SPEED LIMIT 55 R2-1
STA 26+400

MATCHLINE STA 26+660

MARBACH RD. EXTENSION (BY OTHERS)

R.O.W.

DRAINAGE EASEMENT

R2-1
STA 27+040

SPEED LIMIT 55

SCALE 1:2000

STOP
R1-1

BIG MESA DRIVE

PT 9+230.291

CULVERT #23

R.O.W.

N. B. FRONTAGE RD.

9+000 9+100 9+200 9+300

PC 8+889.130

PT 8+714.416

S 27° 49' 27.74" E

8+700 8+800 8+900

S.B. MAIN LANES

26+700 26+800 26+900 27+000 27+100 27+200 27+300

℄ LP 1604

D1-2
STA 27+170

⇦ BIG MESA DRIVE

SPURS RANCH RD. ⇨

ROAD CLOSED R11-2

CULVERT #22

R.O.W.

MATCHLINE STA 26+660

MATCHLINE STA 27+380

SPURS RANCH RD. (BY OTHERS)

**LEGEND**

- ● CHANNELIZATION DEVICES
- I TYPE III BARRICADES
- ⊦ SIGN

**CHANGE ORDER NO. 114**

- NEW TEMPORARY SIGNING SHEET

| CHANGE ORDER NO. 114 | NEW SHEET |
|---|---|

STATE OF TEXAS
FITZGERALDO G. SANCHEZ
76084
LICENCED
PROFESSIONAL ENGINEER

Fitzgeraldo G. Sanchez, P.E. 11-23-05
Date

©2000

Texas Department of Transportation

# SEQUENCE OF WORK PHASE 2B (SIGNING SUPPLEMENT)

SHEET 8 OF 9

| FED. RD. DIV. NO. | FEDERAL AID PROJECT NO. | | SHEET NO. |
|---|---|---|---|
| 6 | NH 2000(704), ETC. | | 105R |
| STATE | DIST. | COUNTY | |
| TEXAS | SAT | BEXAR | |
| CONT. | SECT. | JOB | HIGHWAY NO. |
| 2452 | 01 | 036, ETC | LP 1604 |

11-21-05

$FILE$ | FILE $FILE$ | $DATE$
LEVEL DISPLAYED
1 2 3 4 5 6 7 8 9 10 11 12 13 14 15 16 17 18 19 20 21 22 23 24 25 26 27 28 29 30 31 32
33 34 35 55 65 75 58 59 60 14 24 34 44 54 64 74 94 95 55 15 25 35 45 55 65 75 58 59 60 6 263

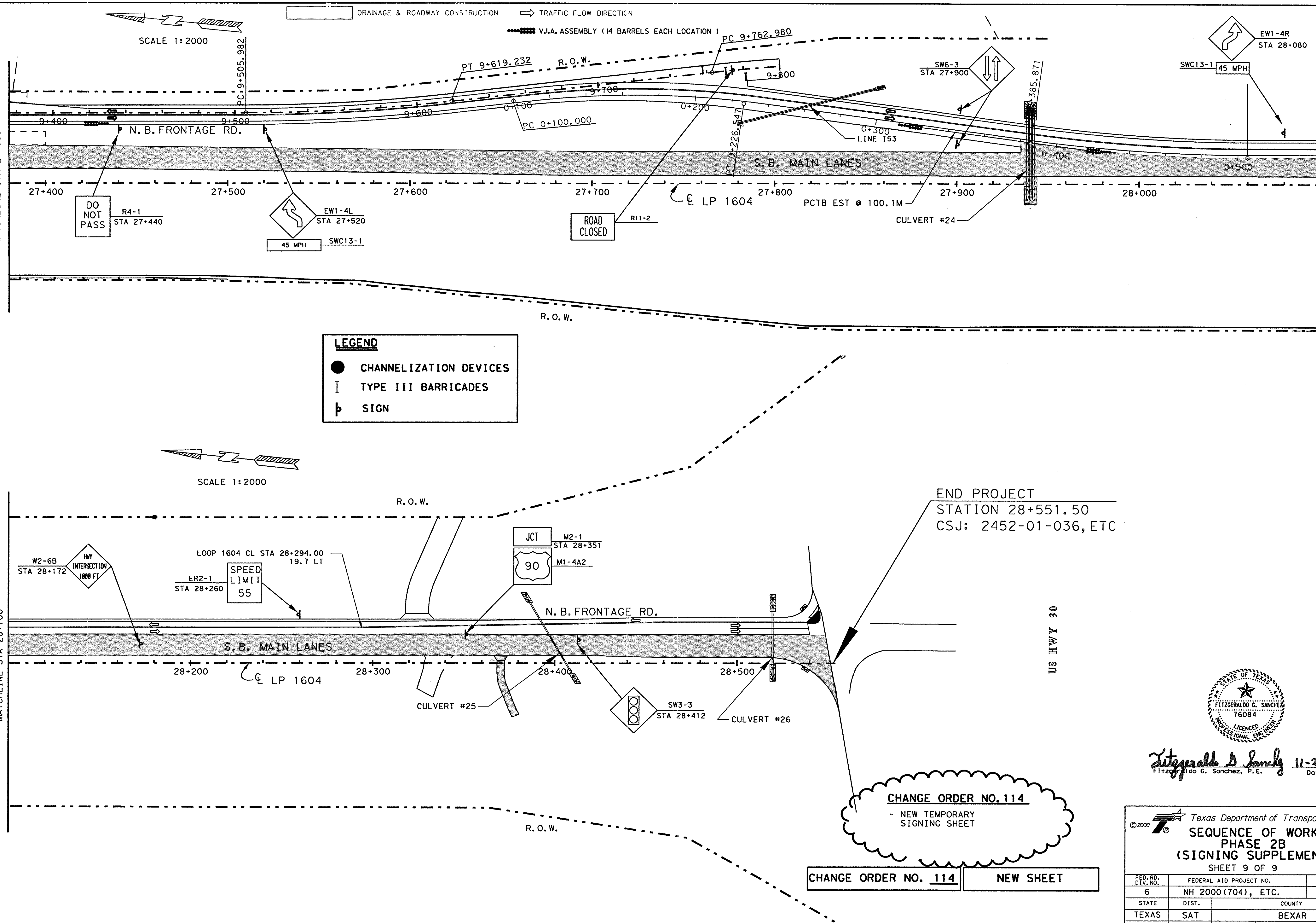


Plotted on: $DATE$

Design Filename: $FILE$

| FILE | $FILE$ | | | | | | | | | | | | | | | | | | | | | | | | | | | | | | | | $DATE$ |
|---|---|---|---|---|---|---|---|---|---|---|---|---|---|---|---|---|---|---|---|---|---|---|---|---|---|---|---|---|---|---|---|---|---|
| LEVEL DISPLAYED | | 1 | 2 | 3 | 4 | 5 | 6 | 7 | 8 | 9 | 10 | 11 | 12 | 13 | 14 | 15 | 16 | 17 | 18 | 19 | 20 | 21 | 22 | 23 | 24 | 25 | 26 | 27 | 28 | 29 | 30 | 31 | 32 |
| | | 33 | 34 | 35 | 36 | 37 | 38 | 39 | 40 | 41 | 42 | 43 | 44 | 45 | 46 | 47 | 48 | 49 | 50 | 51 | 52 | 53 | 54 | 55 | 56 | 57 | 58 | 59 | 60 | 61 | 62 | 63 | |

©2000 Texas Department of Transportation

# SEQUENCE OF WORK PHASE 2B (SIGNING SUPPLEMENT)

SHEET 9 OF 9

| FED. RD. DIV. NO. | FEDERAL AID PROJECT NO. | | SHEET NO. |
|---|---|---|---|
| 6 | NH 2000(704), ETC. | | 1055 |
| STATE | DIST. | COUNTY | |
| TEXAS | SAT | BEXAR | |
| CONT. | SECT. | JOB | HIGHWAY NO. |
| 2452 | 01 | 036, ETC | LP 1604 |

11-21-05

DISCLAIMER
The use of this standard is governed by the "Texas Engineering Practice Act". No warranty of any kind is made by TxDOT for any purpose whatsoever. TxDOT assumes no responsibility for the conversion of this standard to other formats or for incorrect results or damages resulting from its use.

# PROJECT LIMIT TRAFFIC CONTROL DEVICES

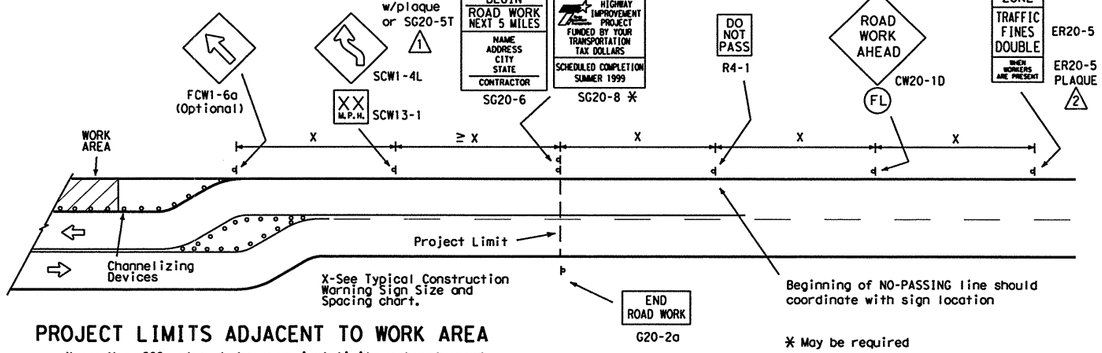


## PROJECT LIMITS ADJACENT TO WORK AREA

(Less than 600 meters between project limits and work area)

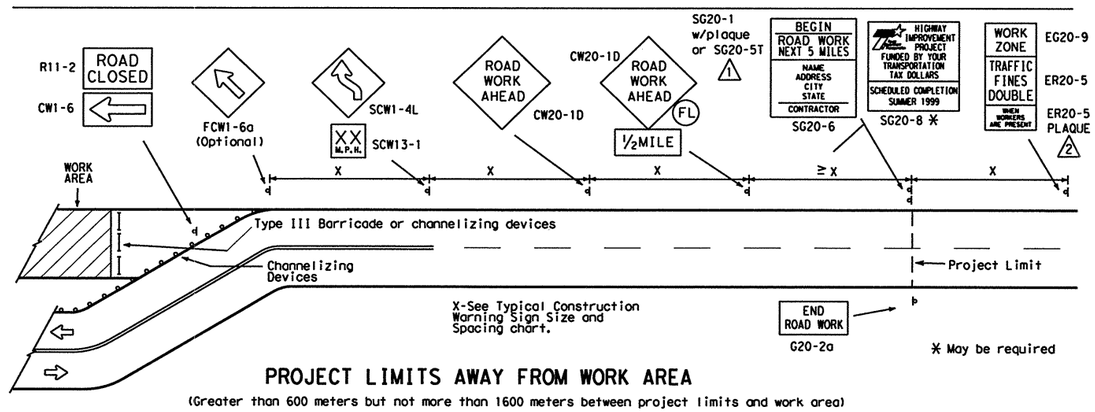


## PROJECT LIMITS AWAY FROM WORK AREA

(Greater than 600 meters but not more than 1600 meters between project limits and work area)

### PROJECT LIMIT GENERAL NOTES

SIGNS AND WARNING LIGHTS

1. When specified on this sheet or other sheets in the plans, warning lights for a sign shall be installed and maintained by the contractor. Warning lights shall be attached to the sign support using a 1/2" bolt (minimum) of sufficient length for three washers, lock washer and a nut.
2. Warning lights shall be maintained as directed by the Engineer.
3. Appropriate standard traffic control devices shall be used as required by the plans. Any variation in the plans shall be documented by written agreement between the Engineer and the contractor's responsible person.
4. As a general rule, additional traffic control devices in advance of the project limits should only be used in those cases where a work area, a detour, or a potentially hazardous location is less than 600 meters inside the project limits.
5. The traffic control devices used in the above illustrations are examples only. Field conditions and engineering judgement should dictate the most appropriate traffic control devices to be used. Any variation in the plans shall be documented by written agreement between the Engineer and the contractor's responsible person.
6. As detailed above, the ROAD WORK NEXT X MILES, CONTRACTOR and END ROAD WORK signs shall be erected at or near the project limits and the WORK ZONE TRAFFIC FINES DOUBLE sign shall be erected in advance of the project limits. These signs should be adjusted to provide adequate spacing to other signs. The OBSERVE WARNING SIGNS STATE LAW sign shall be installed when required elsewhere in the plans.
7. With the agreement of an adjacent project Engineer, the Engineer(s) may allow the omission of END ROAD WORK, TRAFFIC FINES DOUBLE, and other advance warning signs if the signing would be redundant and the work areas appear continuous to the motorists. If the adjacent project is completed first, the contractor will erect the necessary warning signs as shown on these sheets, the TCP sheets or as directed by the Engineer. The ROAD WORK NEXT X MILES sign shall be revised to show appropriate work zone distance.
8. Duplicate construction warning signs should be erected on the median side of divided highways where median width will permit and traffic volumes justifies the signing.
9. Except for devices required by Note 6, traffic control devices should be in place only while work is actually in progress or a definite need exists.
10. Sign size should be based on the "Texas Manual on Uniform Traffic Control Devices for Streets and Highways" (TMUTCD).
11. The Special Public Information sign (G20-8 shall be installed at the project limits when required elsewhere in the plans. Refer to SMD Standards for approved mounting details.

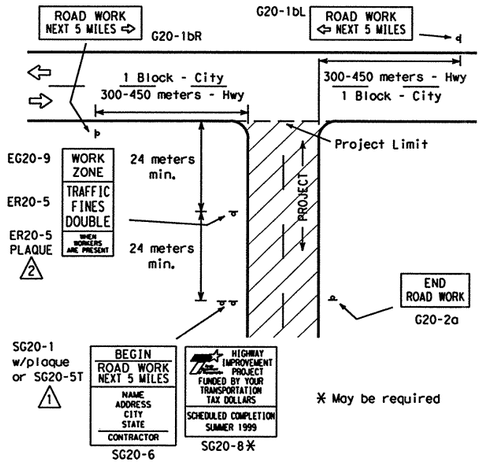


## PROJECT LIMITS AT T-INTERSECTION

1. The ROAD WORK NEXT X MILES sign should be erected on the intersected highway as detailed above.
2. On the intersected roadway, additional traffic control devices, such as a flagger and accompanying signs or other signs, should be used when work is being performed at or near the intersection.

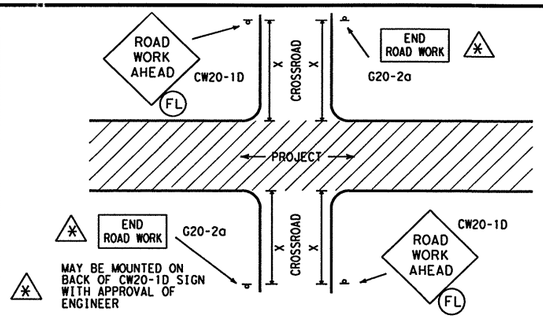


## CROSSROAD SIGNING AND BARRICADING

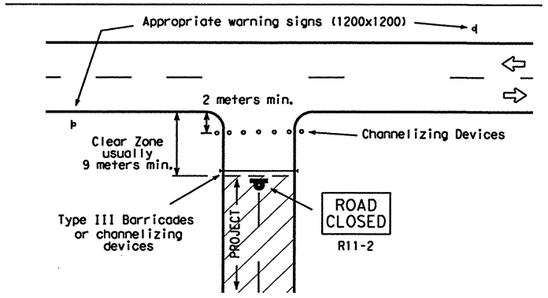


## PROJECT LIMITS FOR CLOSED ROADWAY

Barricades shall be erected completely across roadway. Channelizing Devices may be drums, vertical panels or cones as specified in the plans.

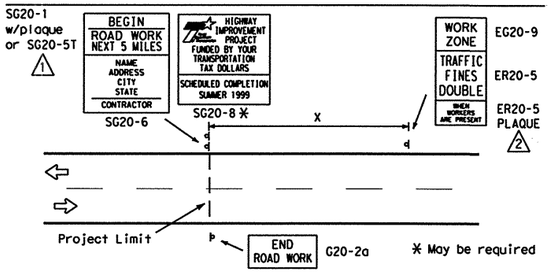


## PROJECT LIMITS AWAY FROM WORK AREA

(Greater than 1.6 kilometers between project limits and work area)

## CULVERT WIDENING OR OTHER ISOLATED WORK WITHIN THE PROJECT LIMITS

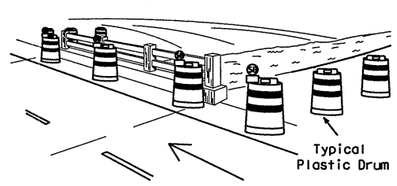


1). Where positive redirectional capability is provided, drums may be omitted.
2). Plastic construction fencing may be used with drums for safety as required in the plans.
3). Vertical Panel on flexible support may be substituted for drums when shoulder width is less than 1.2 m.
4). When shoulder width is greater than 3.6 m, steady-burn lights may be omitted, if drums are used.

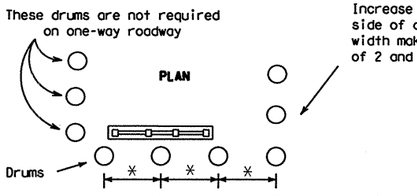


Increase number of plastic drums on side of approaching traffic if crown width makes it necessary. (minimum of 2 and maximum of 4 drums)

10/99 Revision

1 Added "BEGIN" to "ROADWORK NEXT XX MILES" sign

2 Added "WHEN WORKERS ARE PRESENT" plaque

### CROSSROAD SIGNING AND BARRICADING

1. Except as noted elsewhere in plans, the usual minimum signing on a cross-road approach should be one CW20-1D ROAD WORK AHEAD sign and G20-2a END ROAD WORK sign. Where speeds and volumes are relatively low, a smaller ROAD WORK AHEAD sign may be used.

When approved by the Engineer, on low volume crossroads, advance warning signs may be the reduced size 900 mm x 900 mm ROAD WORK AHEAD (CW20-1D) sign mounted back to back with the reduced size 900 mm x 450 mm END ROAD WORK (SG20-2a) sign. See the "STANDARD HIGHWAY SIGN DESIGNS for TEXAS" manual and BC(9) thru BC(9C) for sign design details. On low volume crossroads, advance signing may be omitted if approved by the Engineer.

Additional signs such as FLAGGER AHEAD, LOOSE GRAVEL, or other appropriate signs may be required. When additional signs are required, such signs will be considered part of the minimum requirements.

2. The G20-1a sign shall be required on major crossroads to advise motorists of the length of construction in either direction from the intersection.
3. On higher volume crossroads additional traffic control devices may be noted elsewhere in the plans.
4. When work occurs in the intersection area, appropriate traffic control devices shall be in place.

WARNING LIGHTS

Warning lights shall meet the requirements of the "Texas Manual on Uniform Traffic Control Devices for Streets and Highways."

Flashing and Steady-Burn Warning Lights shall NOT be installed on barricades.

Type A-Low Intensity Flashing Warning Lights are commonly used with signs. They are intended to warn of an approaching potentially hazardous area. Their use shall be as indicated on this sheet and/or other sheets of the plans by the designation "(FL)".

Type-C Steady Burn Lights are intended to be used in a series for delineation to supplement other traffic control devices. Their use shall be as indicated on this sheet and/or other sheets of the plans by the designation "(SB)".

## TYPICAL CONSTRUCTION WARNING SIGN SIZE [4,5,6] AND SPACING

| Roadway Classification | Posted Speed | Sign Spacing "X" Δ | Long-term Or Intermediate-term Stationary Approach Warning Signs CW20 Series And CW22-1 Sign | | Short-term Stationary Or Short Duration Approach Warning Signs CW21 Series | | Other Warning Signs |
|---|---|---|---|---|---|---|---|
| | MPH | Meters (Approx.) | Standard mm | Minimum[4] mm | Standard mm ↑ | Minimum[4] mm ↑ | Standard mm ↑ |
| Conven. | 30 | 40 | 1200x1200 | 900x900 | 750x750 or 900x900 | 600x600 or 750x750 | 750x750 or 900x900 |
| | 35 | 50 | | | | | |
| | 40 | 75 | | | | | |
| | 45 | 100 | | Use Standard Size | | Use Standard Size | |
| | 50 | 120 | | | | | |
| | 55 | 150[2] | | | 1200x1200 | | 1200x1200 |
| | 60 | 180[2] | | | | | |
| | 65 | 210[2] | | | | | |
| | 70 | 240[2] | | | | | |
| Exp or Frwy | * | * [3] | | | ** | ** | ** |

* For typical sign spacings on expressways and freeways, see TMUTCD typical application diagrams or TCP Standard Sheets.

Δ Minimum distance from work area to 1st Advance Warning sign and/or distance between each additional sign.

** Smaller sign sizes may be used where sign designs have not been included in the "Standard Highway Sign Designs for Texas" manual.

General Notes:
1. Special or larger size signs may be used as may be necessary.
2. Distance between signs should be increased as required to have 460 meters advance warning.
3. Distance between signs should be increased as required to have 810 meters or more advance warning.
4. For use only on secondary roads or city streets where speeds are low.
5. Only diamond shaped warning sign sizes are indicated.
6. See sign size listing in TMUTCD, Appendix A for complete list of all available sign design sizes.
7. Where two sizes are listed, see sign size listing in TMUTCD, Appendix A for proper size.

**Only pre-qualified products shall be used. A list of compliant products and their sources may be obtained by writing or faxing:**
**Standards Engineer**
**Traffic Operations Division - TE**
**Texas Department of Transportation**
**125 East 11th Street**
**Austin, Texas 78701-2483**
**Phone (512) 416-3335**
**Fax (512) 416-3161**
**E-mail TRF-STANDARDS@ilgw.dot.state.tx.us**

All dimensions are in millimeters unless otherwise noted.

©2000

STANDARD PLANS
TEXAS DEPARTMENT OF TRANSPORTATION
*Traffic Operations Division*

# BARRICADE AND CONSTRUCTION STANDARDS

ADVANCE SIGNING
CROSSROAD SIGNING
WARNING LIGHTS

**BC(1)-99(M)**

©TxDOT February 1998

| DN: LR | CK: DTN | DW: DN | CK: GB | NEG NO.: |
|---|---|---|---|---|

| REVISIONS 10-99 | STATE DISTRICT | FEDERAL REGION | FEDERAL AID PROJECT | | | | SHEET |
|---|---|---|---|---|---|---|---|
| | SAT | 6 | NH 2000(704),etc. | | | | 107 |
| | COUNTY | | CONTROL | SECTION | JOB | | HIGHWAY |
| | BEXAR | | 2452 | 01 | 036,etc. | | LP 1604 |

Metric 101

LEVELS
1 2 3 4 5 6 7 8 9 10 11 12 13 14 15 16 17 18 19 20 21 22 23 24 25 26 27 28 29 30 31 32 33 34 35 36 37 38 39 40 41 42 43 44 45 46 47 48 49 50 51 52 53 54 55 56 57 58 59 60 61 62 63 64 65 66 67 68 69 70 71 72 73 74 75 76 77 78 79 80 81 82 83 84 85 86 87 88 89 90 91 92 93 94 95 96

DATE:
ACC:
FILE:
DN:
CK:
DW:
CK:

# TYPE III BARRICADE (SKID)

## GENERAL NOTES

### FOR TYPE III BARRICADES

Type III Barricades are to be used at each end of construction projects closed to all traffic.
Barricades extending across a roadway should have stripes that slope downward in the direction toward which traffic must turn in detouring. When both right and left turns are provided for, the chevron striping may slope downward in both directions from the center of the barricade.
Striping of rails, for the right side of the roadway, should slope downward to the left. For the left side of the roadway, striping should slope to the right.
Identification markings may be shown only on back side of barricade rails. Maximum height of letters shall be 25mm.
Barricades shall not be placed parallel to traffic unless an adequate clear zone is provided (see BC(1)).

**Barricades shall be made using pre-qualified materials. A list of compliant products and their sources may be obtained by writing or faxing:**

**Standards Engineer**
**Traffic Operations Division - TE**
**Texas Department of Transportation**
**125 East 11th Street**
**Austin, Texas 78701-2483**
**Phone (512) 416-3335**
**Fax (512) 416-3161**
**E-mail TRF-STANDARD@mailgw.dot.state.tx.us**

Barricades shall NOT be used as a sign support.

### TYPICAL STRIPING DETAIL FOR BARRICADE RAIL

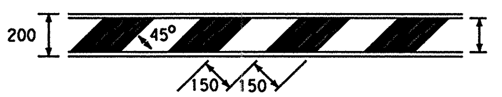


### TYPICAL PANEL DETAIL FOR SKID OR POST TYPE BARRICADES

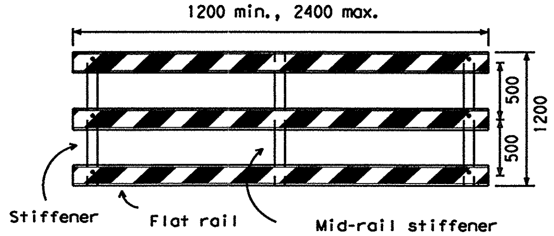


Stiffner may be inside or outside of support.

* For dimensions of components refer to TxDOT approved products list.

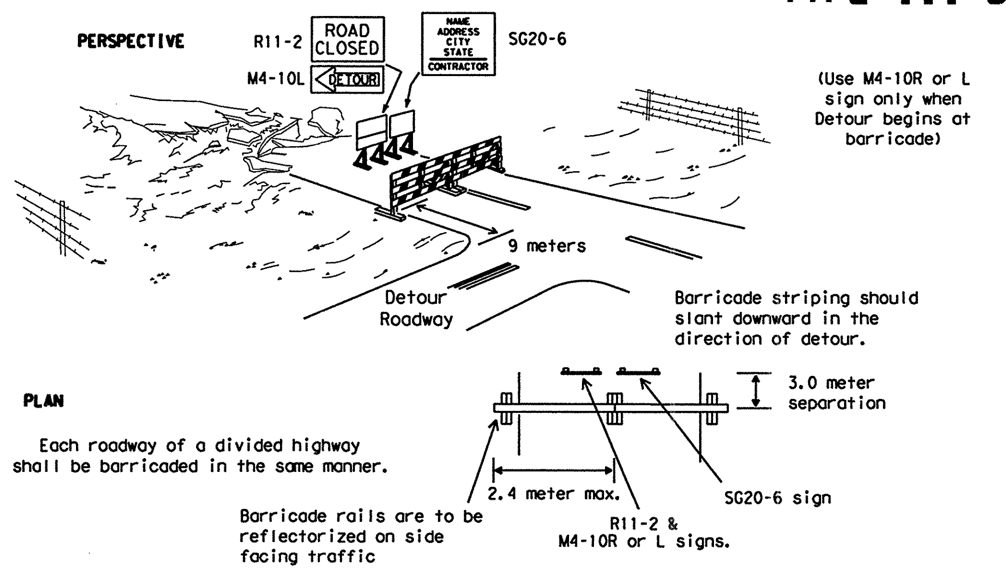


1). R11-2 and M4-10 signs should be mounted on independent supports at 2100 millimeter mounting height in center of roadway.

2). Advance signing, including construction warning signs, and detour signing shall be as specified elsewhere in the plans.

### PLASTIC/FIBERGLASS TYPE III BARRICADE OPTION

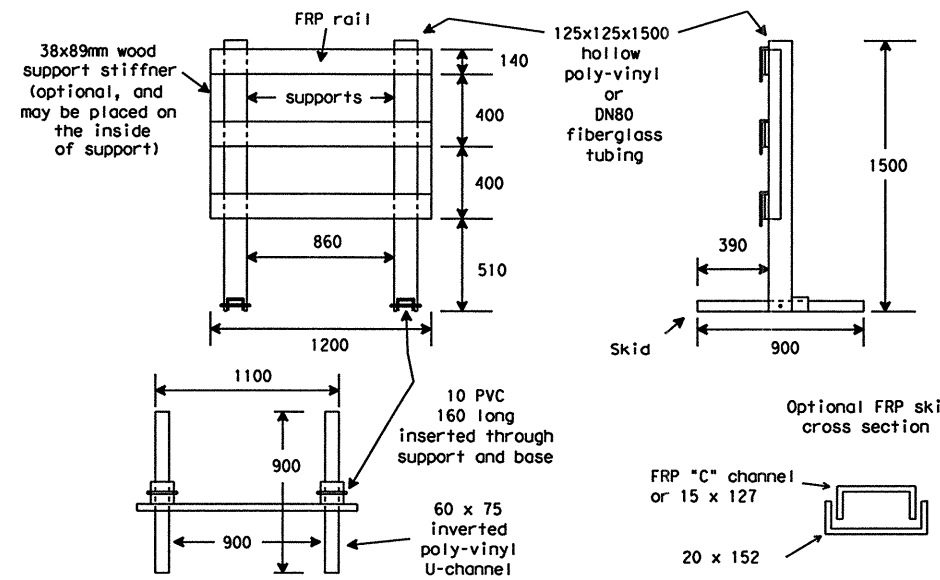


### PERFORATED STEEL/WOOD/PLASTIC TYPE III BARRICADE OPTION

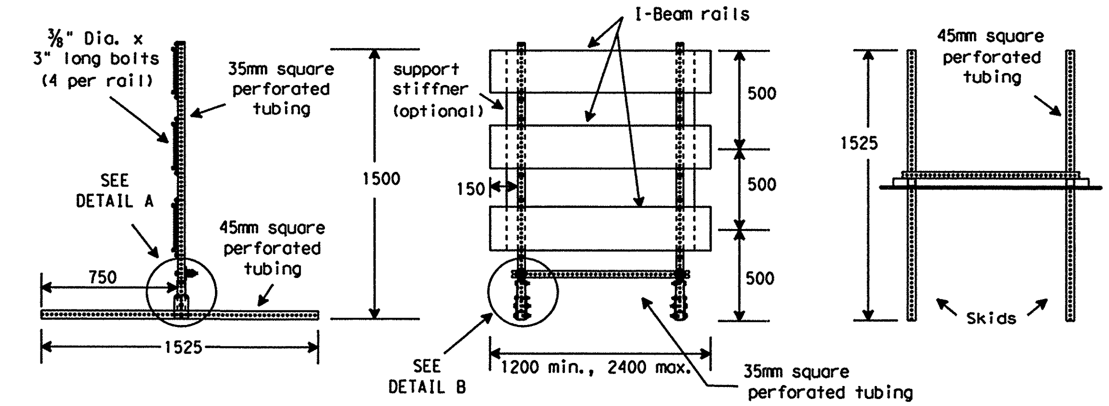


NOTE: If flat rails are used, refer to Wood/Plastic Option for vertical placement of rails

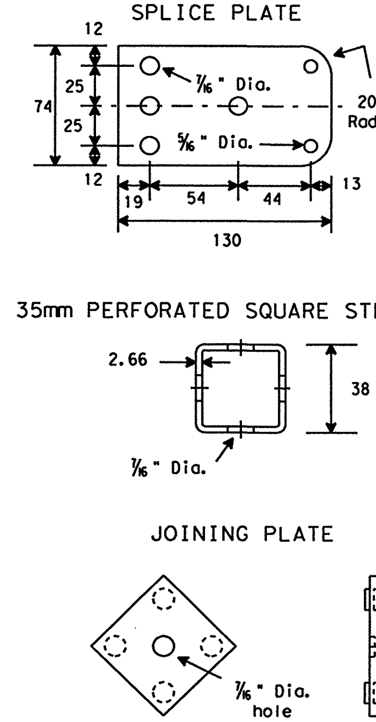


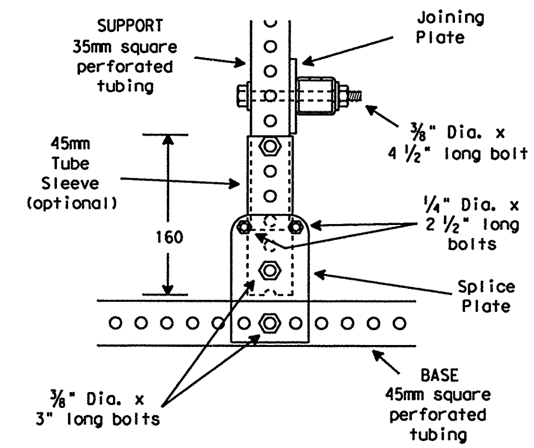


(Option: tube sleeve and base may be welded)

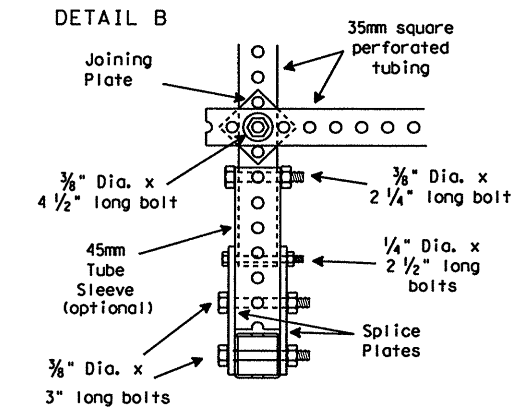


### WOOD/PLASTIC TYPE III BARRICADE OPTION

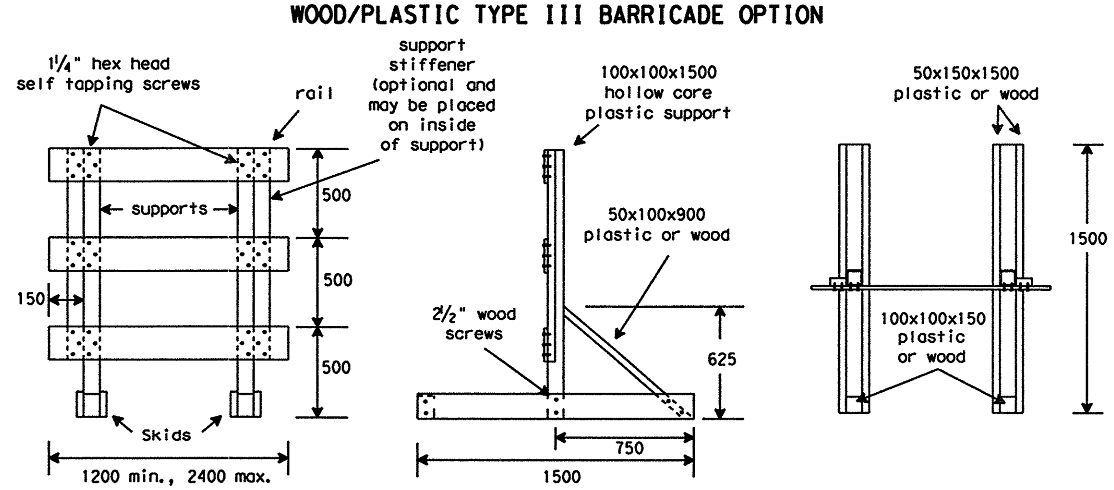


### WOOD/PLASTIC/FIBERGLASS TYPE III BARRICADE OPTION

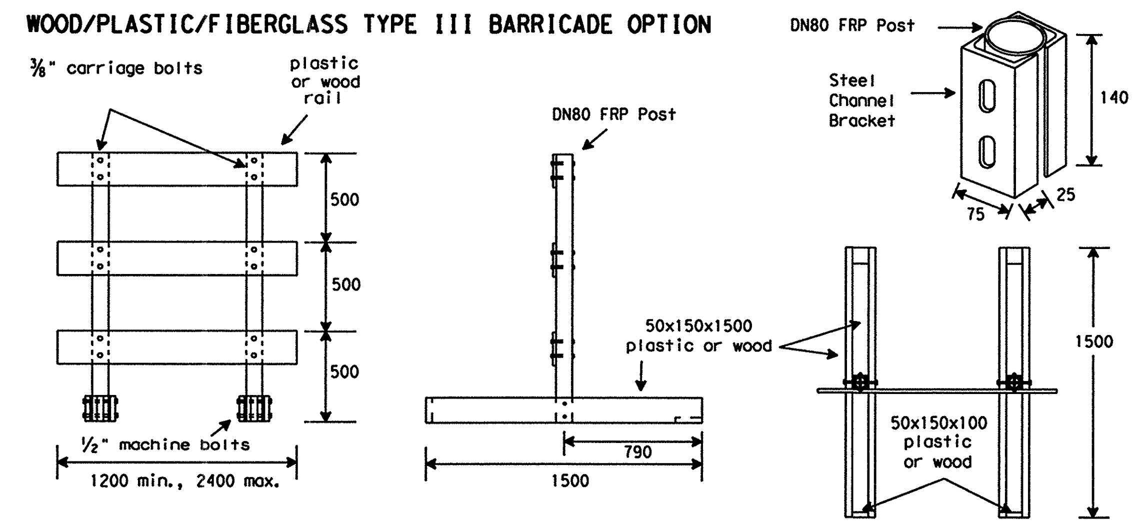


All dimensions are in millimeters unless otherwise noted.

**STANDARD PLANS**
**TEXAS DEPARTMENT OF TRANSPORTATION**
*Traffic Operations Division*

©2000

## BARRICADE AND CONSTRUCTION STANDARDS

BARRICADES (SKID MOUNT TYPE)

BC(2)-98(M)

| ©TxDOT February 1998 | DN: LR | CK: DTN | DW: DN | CK: GB | MEG NO. |
|---|---|---|---|---|---|
| REVISIONS | STATE DISTRICT: SAT | FEDERAL REGION: 6 | FEDERAL AID PROJECT: NH 2000(704),etc. | | SHEET: 108 |
| | COUNTY: BEXAR | CONTROL: 2452 | SECTION: 01 | JOB: 036,etc. | HIGHWAY: LP 1604 |

DISCLAIMER
The use of this standard is governed by the "Texas Engineering Practice Act". No warranty of any kind is made by TxDOT for any purpose whatsoever. TxDOT assumes no responsibility for the conversion of this standard to other formats or for incorrect results or damages resulting from its use.

DN:
CK:
DW:
CK:

DATE:
ACC:
FILE:

DISCLAIMER
The use of this standard is governed by the "Texas Engineering Practice Act". No warranty of any kind is made by TxDOT for any purpose whatsoever. TxDOT assumes no responsibility for the conversion of this standard to other formats or for incorrect results or damages resulting from its use.

# TYPE III BARRICADE (POST TYPE)

## POZ-LOC
(Driveable)

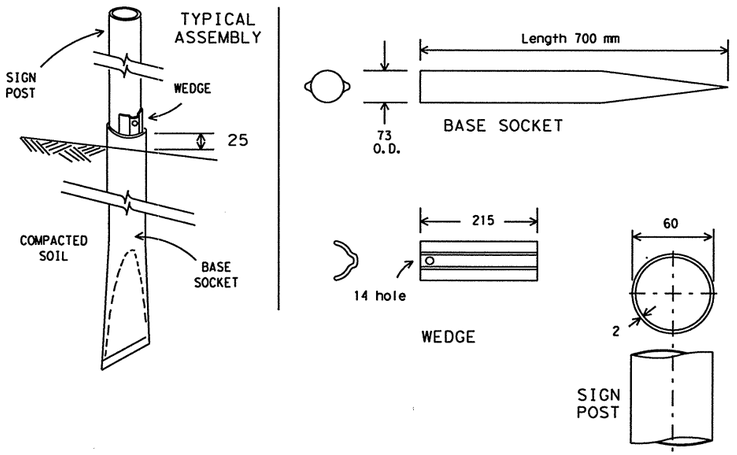


GENERAL NOTES FOR THIN WALL TUBE TYPE SIGN SUPPORT:

1. The BASE SOCKET is formed from 73 mm O.D. x 12 gauge galvanized pipe.
2. The WEDGE is formed from 11 gauge steel galvanized per ASTM A525.
3. The SIGN POST is 60 mm O.D. x 2 mm thin wall steel tubing.
4. Steel Supports shall be made from new material and shall be corrosion resistant. Steel supports shall be galvanized in accordance with ASTM Designations A123 or A525 (G-90 or better).
5. Supports shall be straight within 4 mm per meter of length and shall have a smooth, uniform finish free from defects affecting strength or appearance. Any bolt holes and sheared ends shall be free from burrs. Bases of multisection supports shall not extend more than 125 mm above ground when installed.
6. Bolts, nuts, screws, washers and other miscellaneous hardware shall be galvanized in accordance to ASTM Designation: A153 Class C or D, or B695 Class 50.
7. Barricade supports systems used on this sheet may be suitable for only certain soil types. The contractor is responsible for selecting the appropriate support system for soil conditions on each project.

## UNIVERSAL ANCHOR SYSTEM

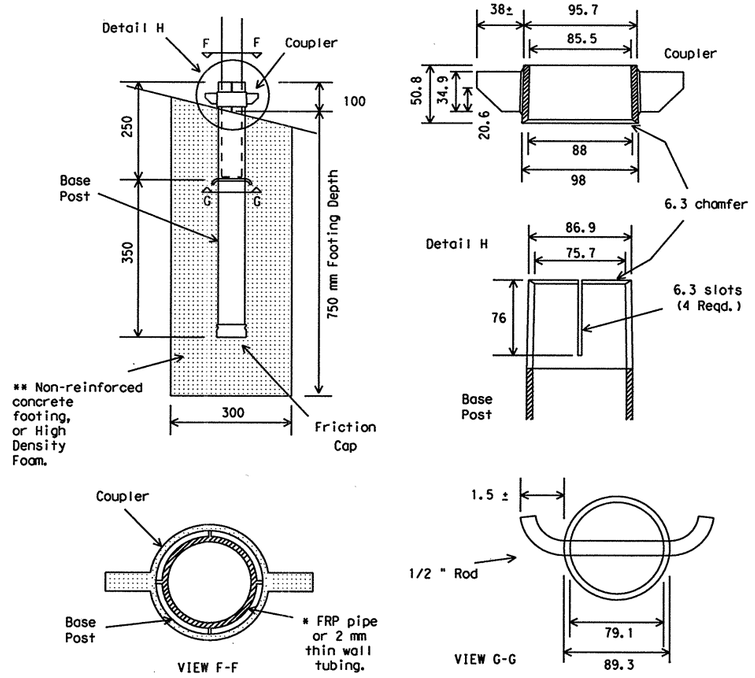


* Plastic insert must be used with 2mm thin wall tubing.

** Footing shall be removed and backfilled when barricade is removed.

## SQUARE TUBING

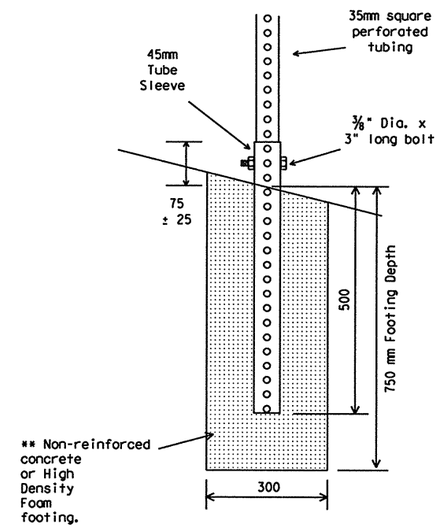


## TYPE III BARRICADE (POST TYPE) TYPICAL APPLICATION

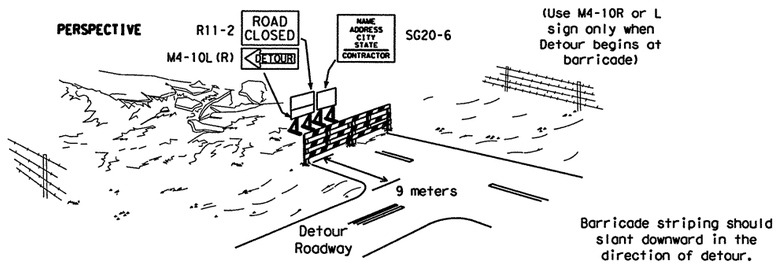


PLAN

Each roadway of a divided highway shall be barricaded in the same manner.

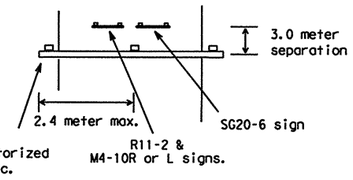


Barricades rails are to be reflectorized on all sides that face traffic.

1). R11-2 and M4-10 signs should be mounted on independent supports at 2100 millimeter mounting height in center of roadway.

2). Advance signing, including construction warning signs, and detour signing shall be as specified elsewhere in the plans.

## TYPE III BARRICADE (POST)

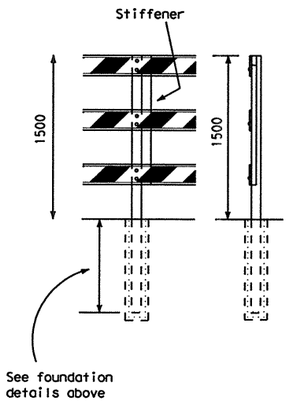


## TYPICAL STRIPING DETAIL FOR BARRICADE RAIL

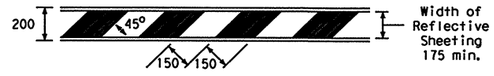


## TYPICAL PANEL DETAIL FOR SKID OR POST TYPE BARRICADES

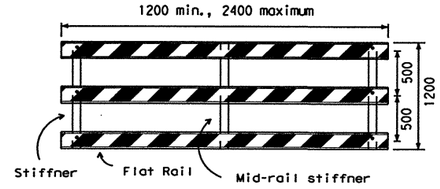


Stiffner may be inside or outside of support.

* For dimensions of components refer to TxDOT approved products list.

Barricades shall NOT be used as a sign support.

Barricades shall be made using pre-qualified materials. A list of compliant products and their sources may be obtained by writing or faxing:

Standards Engineer
Traffic Operations Division - TE
Texas Department of Transportation
125 East 11th Street
Austin, Texas 78701-2483
Phone (512) 416-3335
Fax (512) 416-3161
E-mail TRF-STANDARD@mailgw.dot.state.tx.us

All dimensions are in millimeters unless otherwise noted.

© 2000

STANDARD PLANS
TEXAS DEPARTMENT OF TRANSPORTATION
*Traffic Operations Division*

# BARRICADE AND CONSTRUCTION STANDARDS

BARRICADES (POST TYPE)

**BC(3)-98(M)**

| © TxDOT February 1998 | DN: LR | CK: DTN | DW: DN | CK: GB | NEG NO.: |
|---|---|---|---|---|---|
| REVISIONS 3-98 | STATE DISTRICT: SAT | FEDERAL REGION: 6 | FEDERAL AID PROJECT: NH 2000(704), etc. | | SHEET: 109 |
| | COUNTY: BEXAR | CONTROL: 2452 | SECTION: 01 | JOB: 036, etc. | HIGHWAY: LP 1604 |

DN: CK: DW: CK:
DATE: ACC: FILE:
LEVELS

DISCLAIMER
The use of this standard is governed by the "Texas Engineering Practice Act". No warranty of any kind is made by TxDOT for any purpose whatsoever. TxDOT assumes no responsibility for the conversion of this standard to other formats or for incorrect results or damages resulting from its use.

DN: CK: DW: CK:

DATE: ACC: FILE:

**GENERAL NOTES:**

1. Sign Supports detailed on this sheet have been crash tested and are approved breakaway systems. TxDOT acceptance of these breakaway systems does not cover the structural features of the sign support systems.
2. Sign support systems approved by FHWA may be used as approved fixed sign supports. The contractor shall provide documentation from FHWA approving sign support systems not shown on this sheet.
3. Sign support systems listed on this sheet may be suitable for only certain soil types. The contractor is responsible for selecting appropriate sign support systems for soil conditions on each project.
4. Barricades shall NOT be used as sign supports.

**WORK ZONE SIGNS**

**GENERAL**

Standard signs shall be used as required by the BC Standard sheets, the plans, or as directed by the Engineer to regulate, warn, and guide traffic. All sign usage and erection shall be in strict accordance with the "Texas Manual on Uniform Traffic Control Devices for Streets and Highways" (TMUTCD). The Contractor shall maintain each sign as directed by the Engineer.

The Contractor may use either the sign designs shown on the BC Standard Sheets, or those sign designs shown in the "Standard Highway Sign Designs for Texas" (SHSD). All work zone signs provided for in the TMUTCD but not detailed in the plans may be used when directed by the Engineer.

**SIZE OF SIGNS**

On secondary roads or city streets where speeds are low, smaller size construction warning signs may be used with the written approval of the Engineer and if the sign size is in accordance with the "Typical Construction Warning Sign Size and Spacing Chart" shown on page 6C-11 of the TMUTCD, Part VI.

**SPLICES**

All wooden sign panels fabricated from 2 or more pieces shall have one or more plywood cleats, 13 millimeters thick by 150 millimeters wide, fastened to the back of the sign and extending fully across the sign.

Wood Sign posts shall not be spliced.

**REFLECTIVE SHEETING**

Reflectorized signs shall be constructed of retroreflective sheeting meeting the color and reflectivity requirements of Material Specification D-9-8300 or D-9-8310. Day only is defined as a device that is used only during daylight hours.

Type A, B or C sheeting may be used for all day only applications. Type A sheeting should be used for all white background regulatory signs. Type C sheeting shall be used for all other applications.

The above applications of sheeting grades to different type signs will apply unless otherwise specified in the plans.

TYPE A = Engineer Grade, TYPE B = Super Engineer Grade, TYPE C = High Specific Intensity

**SIGN LETTERS**

All sign lettering shall be clear, open rounded type capital letters as approved by and as published by the Federal Highway Administration (FHWA). Signs and lettering shall be of first class workmanship equivalent to that of the Department standard signs.

**WORK DURATION TERMINOLOGY**-(as defined by the "Texas Manual on Uniform Traffic Control Devices")

Long-term Stationary = occupies a location 3 or more days;
Intermediate-term Stationary = occupies a location from overnight to 3 days;
Short-term Stationary = daylight work that occupies a location from 1 to 12 hours;
Short Duration = occupies a location up to 1 hour.

**SUPPORTS AND MOUNTING HEIGHT**

The bottom of Long-term / Intermediate-term signs shall be at least 2100 mm above the paved surface. The bottom of any supplementary plaques shall be at least 1800 mm above the paved surface.

The bottom of Short-term / Short Duration signs shall be a minimum of 300 mm above the pavement surface but no more than 600 mm above the ground. Long-term / Intermediate-term Signs may be used in lieu of Short-term / Short Duration signing. Short-term / Short Durations signs shall be used only during daylight and removed at the end of the workday.

Regulatory signs shall be mounted at least 2100 mm above the paved surface regardless of work duration.

Wood sign supports shall be painted white.

**SIGN SUPPORT WEIGHTS**

Where sign supports require the use of weights to keep from turning over, the use of some type of sandbag is recommended. The use of pieces of rock, concrete, iron, steel or other solid objects will not be permitted.

Sandbags shall only be placed along or upon the base supports of the device and shall not be suspended above ground level or hung with rope, wire, chains or other fasteners.

**REMOVING OR COVERING**

When sign messages may be confusing or no longer apply, the signs shall be removed or completely covered. When signs are covered the material used shall be opaque, such as heavy mil black plastic. Burlap shall not be used to cover signs. Signs shall be removed upon completion of the work.

Duct tape or other adhesive material shall not be affixed to sign face.

**Only pre-qualified products shall be used. A list of compliant products and their sources may be obtained by writing or faxing:**

**Standards Engineer**
**Traffic Operations Division - TE**
**Texas Department of Transportation**
**125 East 11th Street**
**Austin, Texas 78701-2483**
**Phone (512) 416-3335**
**Fax (512) 416-3161**
**E-mail TRF-STANDARD@mailgw.dot.state.tx.us**

## LONG/INTERMEDIATE TERM STATIONARY PORTABLE SIGN SUPPORTS

2100 millimeter Mounting Height

**(SKID MOUNTED)**

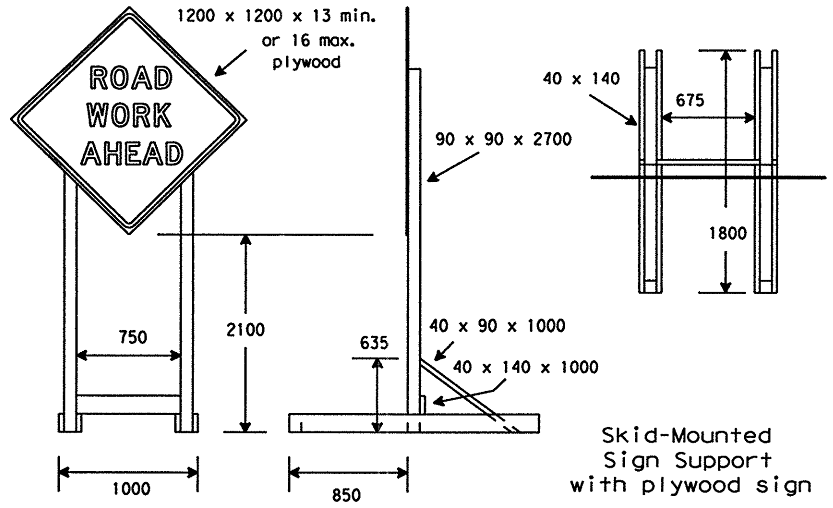


Skid-Mounted Sign Support with plywood sign

**(POST TYPE)**

Refer to acceptable products list.

## WHEELED PORTABLE SIGN SUPPORT

with plywood sign
(Minimum thickness 13 mm)
TxDOT Design

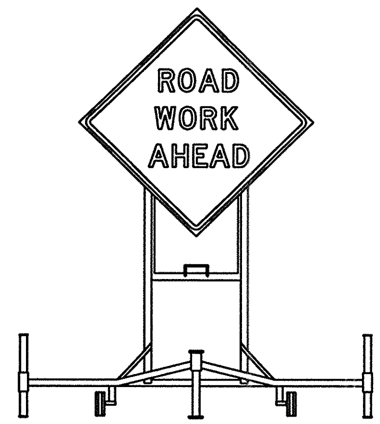


## SHORT TERM STATIONARY/SHORT DURATION PORTABLE SIGN SUPPORTS

300 millimeter Mounting Height

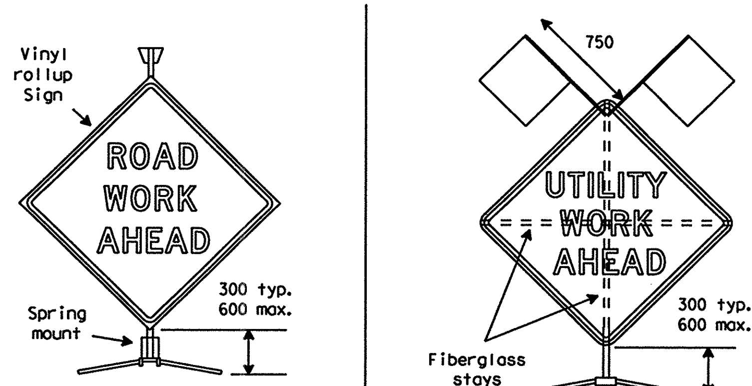


## TYPICAL FLASHING ARROW PANEL

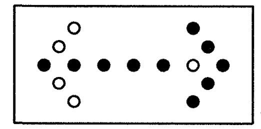

For traffic to move right.

ATTENTION: Arrow panels shall be equipped with automatic dimming devices.

1. The Advance Warning Flashing Arrow Panel should be used for all lane closures (multilane roadway), or slow moving maintenance or construction activities on the traveled way. Arrow panels should not be used on two-lane roadways, detours, diversions or work on shoulders unless the CAUTION mode is used.
2. Necessary signs, barricades or other traffic control devices should be used in conjunction with the Advance Warning Arrow Panel.
3. The Arrow panel should have the capability of the following display selections: LEFT ARROW, RIGHT ARROW, LEFT and RIGHT ARROW and CAUTION. The CAUTION mode consists of four corner lamps flashing simultaneously.
4. The Arrow panel shall be capable of minimum 50 percent dimming from rated lamp voltage. The flashing rate of the lamps shall not be less than 25 times per minute nor more than 40 flashes per minute. The Advance Warning Flashing Arrow Panel shall be mounted on a vehicle, trailer or other suitable support.
5. Minimum lamp "on time" shall be approximately 50 percent for the flashing arrow and 25 percent for the sequential chevron.
6. The TxDOT standard is the flashing arrow, however, the sequential chevron may be used during daylight operations. The sequential arrow should NOT be used.

| REQUIREMENTS TYPE | MINIMUM SIZE | MIN. NUMBER OF PANEL LAMPS | MIN. VISIBILITY DISTANCE |
|---|---|---|---|
| B | 750 x 1500 | 13 | 1.2 km |
| C | 1200 x 2400 | 15 | 1.6 km |

## TYPICAL MINIMUM CLEARANCES FOR LONG/INTERMEDIATE TERM SIGNS

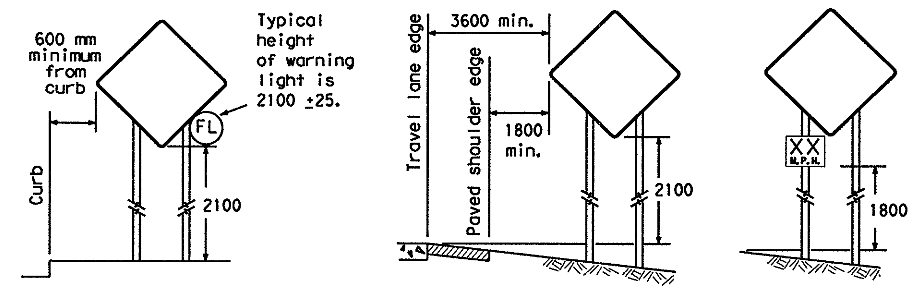


It is the intent of these plans to provide positive guidance to motorists throughout the project limits by the use of signs, pavement markings, delineation devices and/or channelizing devices. All traffic control devices shall conform with the "Texas Manual on Uniform Traffic Control Devices for Streets and Highways."

## WOOD POST SYSTEM FOR FIXED SIGN SUPPORTS

| | Nominal Post Size | No. of Posts | Maximum Sq. meters of Sign Face | Minimum Soil Embedment | Drilled Hole(s) Required |
|---|---|---|---|---|---|
| | 90 x 90 | 1 | 1.1 | 900 | no |
| | 90 x 90 | 2 | 2.0 | 900 | no |
| | 90 x 140 | 1 | 2.0 | 900 | yes |
| △1 | 90 x 140 | 2 | 3.3 | 900 | yes |

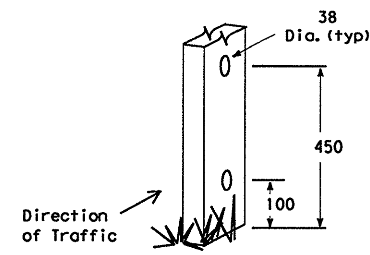


The sign dimensions shown on this sheet have been rounded, and should be considered equivalent to the English dimensions in the "1980 Standard Highway Sign Designs for Texas" manual. All dimensions are in millimeters unless otherwise noted.

10/99 Revision

△1 Added 2 post 90 x 140 sign support

**STANDARD PLANS**
**TEXAS DEPARTMENT OF TRANSPORTATION**
*Traffic Operations Division*

©2000

# BARRICADE AND CONSTRUCTION STANDARDS

SIGN SUPPORTS

**BC(4)-99(M)**

| ©TxDOT February 1998 | DN:-LR | CK:-DTN | DW:-DN | CK:-GB | NEG NO.: |
|---|---|---|---|---|---|
| REVISIONS | STATE DISTRICT | FEDERAL REGION | FEDERAL AID PROJECT | | SHEET |
| 3-98 10-99 | SAT | 6 | NH 2000(704),etc. | | 110 |
| | COUNTY | CONTROL | SECTION | JOB | HIGHWAY |
| | BEXAR | 2452 | 01 | 036,etc. | LP 1604 |

DISCLAIMER
The use of this standard is governed by the "Texas Engineering Practice Act". No warranty of any kind is made by TxDOT for any purpose whatsoever. TxDOT assumes no responsibility for the conversion of this standard to other formats or for incorrect results or damages resulting from its use.

**GENERAL NOTES**

Drums and all related items shall comply with the requirements of the current version of the "Texas Manual on Uniform Traffic Control Devices" (TMUTCD).

**Only pre-qualified products shall be used. A list of compliant products and their sources may be obtained by writing or faxing:**

**Standards Engineer**
**Traffic Operations Division - TE**
**Texas Department of Transportation**
**125 East 11th Street**
**Austin, Texas 78701-2483**
**Phone (512) 416-3335**
**Fax (512) 416-3161**
**E-mail TRF-STANDARD@mailgw.dot.state.tx.us**

Drums, bases, and related materials shall exhibit good workmanship and shall be free from objectionable marks or defects which would adversely affect their appearance or serviceability.

After drums and other traffic control devices are placed, the work zone should be driven through both during the day and after dark to be certain that these devices are functioning as intended.

**PLASTIC DRUM** - Prequalified plastic drums shall meet the following requirements.

**GENERAL DESIGN REQUIREMENTS**

Plastic drums shall be of a two-piece design; the "body" of the drum shall be the top portion of the drum and the "base" shall be the bottom of the drum.

The body and base shall lock together in such a manner that the body separates from the base when impacted by a vehicle traveling at a speed of 35 km/h or greater but prevents accidental separation due to normal handling and/or air turbulence created by passing vehicles. Plastic drums that have been in use for more than two years generally do not have enough locking strength to prevent accidental separation. Plastic drums identified for replacement by the project engineer, inspector or their designee shall be replaced within 24 hours with an approved device.

Plastic drums shall be constructed of lightweight flexible, and deformable materials. Use of metal drums or single piece plastic drums as channelization devices or sign supports shall not be allowed.

Drums shall present a profile that is a minimum of 450mm in width at the 900mm height when viewed from any direction. The height of drum unit (body installed on base) shall be a minimum of 900mm and a maximum of 1100mm.

Drums shall be tapered to allow nesting of a minimum of 5 drum bodies for ease in transport.

The top of drum shall have a built-in handle for easy pickup and shall be designed to drain water and not collect debris. The handle shall have a minimum of two widely spaced 14mm diameter holes to allow attachment of a warning light, delineator reflector unit or sign.

The exterior of the drum body shall have a minimum of four alternating orange and white retroreflective circumferential stripes not less than 100mm in width nor greater than 200mm. Any non-reflectorized space between any two adjacent stripes shall not exceed 50mm in width.

Bases shall have a maximum width of 900 mm, a maximum height of 100mm, and a minimum of two footholds of sufficient size to allow base to be held down while separating the drum body from the base.

Plastic drums shall be constructed of ultra-violet stabilized, orange, high-density polyethylene (HDPE) or other approved material.

Drum body shall have a minimum unballasted weight of 3.5 kg and maximum unballasted weight of 5.0 kg. The wall of the drum body shall be a minimum of 1.75mm in thickness. Weight of any drum supplied shall not vary more than 0.25 kg from that of the prequalified sample.

Drum and base shall be marked with manufacture's name, model number, and year and month of construction.

**RETROREFLECTIVE SHEETING**

The retroreflective stripes used on drums shall be constructed of retroreflective sheeting meeting the color and reflectivity requirements of Departmental Materials Specification D-9-8300: Flat Surface Reflective Sheeting, Type C unless otherwise specified in the plans.

Drums used only during daylight hours may use any type of sheeting meeting the color and retroreflective color requirements of Departmental Materials Specification D-9-8300.

The sheeting shall be suitable for use on and shall adhere to the drum surface such that, upon vehicular impact, the sheeting shall remain adhered in-place and exhibit no delaminating, checking, cracking, or loss of reflectivity other than that loss due to abrasion of the sheeting surface.

**BALLAST**

Unballasted bases shall be large enough to hold up to 22.5 kg of sand. Bases with built-in ballast shall weigh between 18.0 and 22.5 kg.

The ballasted base should weigh between 16 kg (minimum) and 34 kg (maximum). The ballast may be sand in one to three sand bags separate from the base, sand in a sand-filled plastic base, a integral crumb rubber base and ballast or other ballasting devices as approved by the Engineer. Stacking of sand bags will be allowed, however height of sand bags above pavement surface may not exceed 300mm.

The ballasts shall not be heavy objects, water, or any material that would become hazardous to motorists, pedestrians, or workers when the drum is struck by a vehicle. When used in regions susceptible to freezing, drums shall have drainage holes in the bottoms so that water will not collect and freeze becoming a hazard when struck by a vehicle. Ballast shall not be placed on top of drums

Adhesives may be used to secure base of drums to pavement.

**SIGNS, CHEVRONS, AND VERTICAL PANELS**

Signs used on plastic drums shall be manufactured using substrates listed on the Compliant Products List.

Chevrons and other work zone signs with an orange background shall be manufactured with Type C (high intensity grade) retroreflective sheeting meeting the color and reflectivity requirements of "Departmental Materials Specification D-9-8300: Flat Surface Reflective Sheeting, Type C" unless otherwise specified in the plans.

Signs with white backgrounds, such as the KEEP RIGHT sign (R4-8 series), shall be manufactured with Type A (engineer grade) sheeting.

Approved sign messages for signs mounted on plastic drums are the Chevron (CW1-8), the KEEP RIGHT/LEFT sign (R4-7 or R4-8 series), the Vertical Panel, and the Opposing Lane Divider. Other sign messages (text or symbolic) may be used as approved by the Engineer. Sign dimensions shall not exceed 450 mm in width or 600 mm in height. Refer to acceptable materials list for approved substrate materials. Diagonal stripes on Vertical Panels shall slope down toward the intended traveled way.

Signs shall be installed using one 1/2 inch bolt (nominal) and nut, two washers, and one locking washer for each connection. Mounting bolts and nuts shall be fully engaged and adequately torqued. Bolts should not extend more than 13mm beyond nuts. The hardware used for the mounting of signs onto plastic drums shall be of adequate quality for this use.

**WARNING LIGHTS, WARNING REFLECTORS, AND DELINEATORS**

Type A flashing warning lights are intended to warn drivers that they are approaching or are in a potentially hazardous area. Type A flashing warning lights are not intended for delineation and shall not be used in a series.

Type B warning lights shall not be attached to a drum.

Type C steady-burn warning lights are intended to be used in a series to delineate the edge of the traveled way on detours, on lane changes, on lane closures, and on other similar conditions. Type A and Type C warning lights shall be installed at locations as detailed on other sheets in the plans.

A warning reflector or approved substitute may be mounted on a plastic drum as a substitute for a Type C, Steady Burn Warning Light at the discretion of the contractor unless otherwise noted in the plans. The warning reflector shall be manufactured from a sign substrate from the approved list for use on plastic drums. The warning reflector shall have a retroreflective surface area (one-side) no less than 20,000 sq. mm.

The side of the warning reflector facing approaching traffic shall be fully reflectorized using retroreflective sheeting meeting the color and reflectivity requirements for ASTM Type 4 retroreflective sheeting as described in ASTM Design Standard 4956-93B. When used near two-way traffic, both sides of the warning reflector shall be fully reflectorized. The warning reflector should be mounted on the side of the handle that faces approaching traffic so that the maximum amount of reflective sheeting is visible to traffic approaching in the adjacent lane. Delineators may be used as directed by the Engineer. Delineators may not be used to substitute for warning lights. Warning lights shall not be installed on a drum that has a sign, chevron or vertical panel.

Type(A) Class(1), Type(A) Class(2), or Type(B) Reflector Units (D & OM Standard) may be attached to drums to delineate the intended vehicular path. The color of the reflector unit shall correspond to the marking it is supplementing or for which it is substituting. The reflective unit shall be attached to the handle of the drum using the mounting hole nearest the traveled way and shall be aligned perpendicular to approaching traffic.

Contractor shall provide, on request from project engineer, a letter from the drum manfacturer certifying the plastic drum model number, the year and month of construction and that it meets the specifications on this standard sheet.

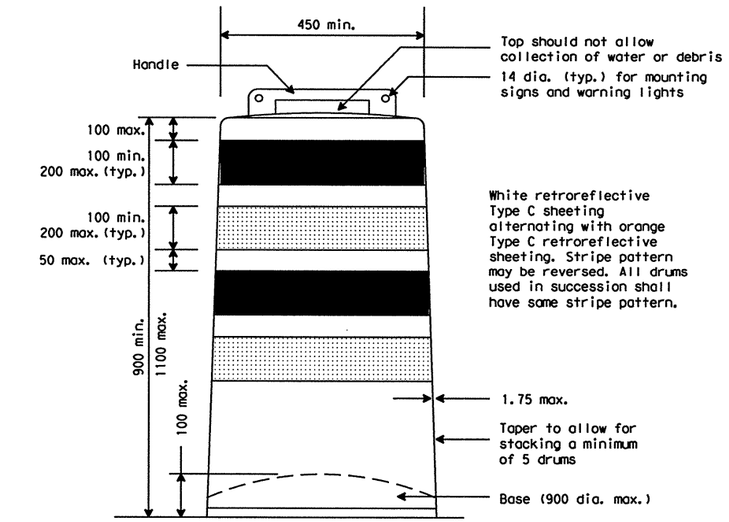


Color sequence of reflective sheeting may be reversed.

## TYPICAL LANE CLOSURE

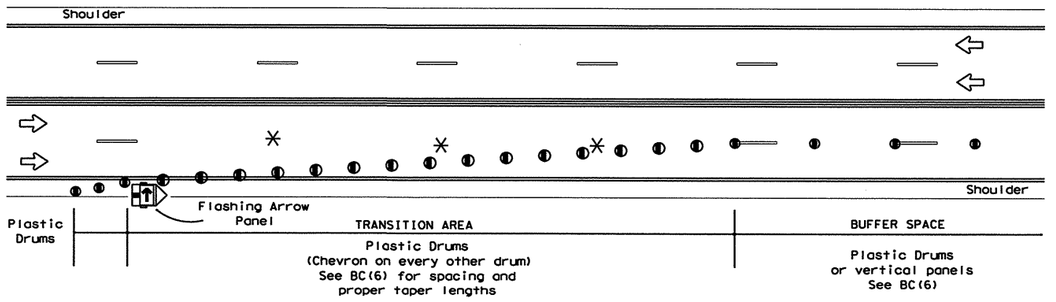


✳ NOTE: For Long Term Stationary Duration - Lane lines shall be removed.

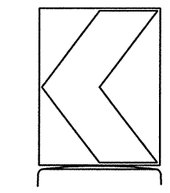

450mm x 600mm Sign
(Maximum Sign Dimension)
Chevron CW1-8,
Driveway sign D70a,
Keep Right R4 series
or other sign as approved
by Engineer

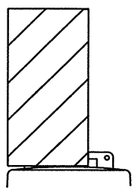

300mm x 600mm Vertical Panel
mount with diagonals
sloping down towards
travel way

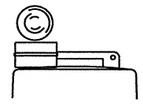

Warning Light or approved substitute
mount towards travel way

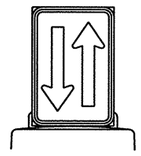

300mm x 450mm Sign
Opposing Lane Divider

The metric dimensions shown on this sheet have been rounded, and should be considered equivalent to the English dimensions in the "1980 Standard Highway Sign Designs for Texas" manual. All dimensions are in millimeters unless otherwise noted.

**STANDARD PLANS**
**TEXAS DEPARTMENT OF TRANSPORTATION**
*Traffic Operations Division*

©2000

# BARRICADE AND CONSTRUCTION STANDARDS

PLASTIC DRUMS **BC(5)-98(M)**

| ©TxDOT February 1998 | DN: LR | CK: DTN | DW: DN | CK: DM | REC NO.: |
|---|---|---|---|---|---|
| REVISIONS 3-98 4-98 | STATE DISTRICT: SAT | FEDERAL REGION: 6 | FEDERAL AID PROJECT: NH 2000(704),etc. | | SHEET: 111 |
| COUNTY: BEXAR | CONTROL: 2452 | SECTION: 01 | JOB: 036,etc. | HIGHWAY: LP 1604 | |

Metric 105

| LEVELS | EF | DATE: |
|---|---|---|
| 1 2 3 4 5 6 7 8 | 01 15 16 | |
| 17 18 19 20 21 22 23 24 | 25 26 27 28 29 30 31 32 | ACC: |
| 33 34 35 36 37 38 39 40 41 42 43 44 45 46 47 48 | 49 50 51 52 53 54 55 56 57 58 59 60 61 62 63 | FILE: |

DN:
CK:
DW:
CK:

DISCLAIMER
The use of this standard is governed by the "Texas Engineering Practice Act". No warranty of any kind is made by TxDOT for any purpose whatsoever. TxDOT assumes no responsibility for the conversion of this standard to other formats or for incorrect results or damages resulting from its use.

## GENERAL NOTES:

**SELF-RIGHTING SUPPORTS**

1. Channelizing devices on self-righting supports may be a vertical panel, opposing lane divider or chevron.
2. Channelizing devices on self-righting supports shall be used at locations detailed elsewhere in the plans. These devices shall conform to the "Texas Manual on Uniform Traffic Control Devices". Type of base will be as directed by the Engineer.
3. Channelizing devices on self-righting supports should be used in work zone areas where channelizing devices are frequently impacted by errant vehicles. Work Zone channelizing devices illustrated on this sheet may be installed in close proximity to traffic and are suitable for use on high or low speed roadways. Devices should not be placed within 300 mm of the traveled way. Spacing and placement shall be uniform and in accordance with the "Texas MUTCD".
4. The contractor shall maintain devices in a clean condition and replace damaged, non-reflective, faded, or broken devices and bases as necessary.
5. Devices shall be erected by method shown on this sheet and as approved by the Engineer.
6. Portable bases shall be fabricated from virgin and/or recycled rubber. Approximate weight of portable bases shall be 15.8 kg.
7. Pavement surfaces shall be prepared in a manner that will ensure proper bonding of adhesives and fixed mount bases to the pavement surfaces when required. Adhesives shall be prepared and applied as per manufacturers recommendations.
8. Application and removal of devices shall not cause detrimental effects to the final pavement surfaces, including pavement surface discoloration or surface intregity. Driveable bases shall not be permitted on final pavement surfaces. All application and removal procedures of fixed bases shall be approved by the Engineer.
9. These devices shall not be paid for directly but shall be considered subsidiary to the Item "Barricades, Signs, and Traffic Handling."

**CONES**

1. Traffic cones and tubular markers shall be a minimum of 700 mm in height when used on freeways or used at nighttime. Orange shall be the predominant color of cones and tubular markers. They should be kept clean and bright for maximum visibility. Cones shall have a minimum weight of 4.3 kg.
2. For nighttime use, cones shall be reflectorized. Reflectorization material shall have a smooth, sealed outer surface which will display the same approximate color day and night. When used at night, appropriate personnel shall be present at all times to ensure cones and tubular markers remain in their proper location and in an upright position.
3. Reflectorization of cones shall be a minimum 150 mm band placed at least 75 mm but not more than 100 mm from the top, supplemented by a minimum 100 mm band spaced a minimum of 50 mm below the 150 mm band. Reflectorization of tubular markers shall be a minimum of two 75 mm bands placed a maximum of 50 mm from the top with a maximum of 150 mm between bands.
4. One-piece cones or tubular markers are generally suitable for temporary usage (up to 8 hours) with other channelization devices such as vertical panels, drums or two-piece cones for long term usage. Care should be taken to ensure that they remain in their proper location and in an upright position.
5. *-SPRAF (stacking/placement/removal assistance feature) may be designed as a handle, hook or other shape, fabricated from non-rigid materials similar to the cone material, and may extend up to a maximum of 200 mm above the top of cone. The length of the SPRAF shall not be considered with regard to the 700 mm minimum height.

**DRUMS**

Refer to BC(5).

SPECIFICATION REFERENCE TABLE
MATERIALS AND TEST SPECIFICATIONS (D-9)

| | |
|---|---|
| FLAT SURFACE REFLECTIVE SHEETING, TYPE C (HIGH SPECIFIC INTENSITY) | D-9-8300 |

**Only pre-qualified products shall be used. A List of compliant products and their sources may be obtained by writing, calling or faxing:**

**Standards Engineer**
**Traffic Operations Division - TE**
**Texas Department of Transportation (TxDOT)**
**125 East 11th Street**
**Austin, Texas 78701-2483**
**Phone (512) 416-3335**
**Fax (512) 416-3161**
**E-mail TRF-STANDARD @ mailgw.dot.state.tx.us**

| Posted Speed | Formula | Minimum Desirable Taper Lengths ** 3.0 m Offset (meters) | 3.3 m Offset (meters) | 3.6 m Offset (meters) | Suggested Maximum Spacing of Device: On a Taper (meters) | On a Tangent (meters) | Minimum Sign Spacing X Distance (meters) |
|---|---|---|---|---|---|---|---|
| 30 | $L=\frac{WS^2}{60}$ | 45 | 50 | 55 | 9 | 15-20 | 40 |
| 35 | | 65 | 70 | 75 | 10 | 20-25 | 50 |
| 40 | | 80 | 90 | 100 | 12 | 25-30 | 75 |
| 45 | L=WS | 135 | 150 | 165 | 13 | 25-30 | 100 |
| 50 | | 150 | 165 | 180 | 15 | 30-35 | 120 |
| 55 | | 165 | 185 | 200 | 16 | 35-40 | 150 |
| 60 | | 180 | 200 | 220 | 18 | 40-45 | * 180 |
| 65 | | 195 | 215 | 235 | 19 | 40-50 | * 210 |
| 70 | | 210 | 235 | 255 | 20 | 40-50 | * 240 |

* Conventional Roads Only

**Taper lengths have been rounded off.
L=Length of Taper (m) W=Width of Offset (m) S=Posted Speed (MPH)

## DRIVEABLE RIGID VERTICAL PANEL

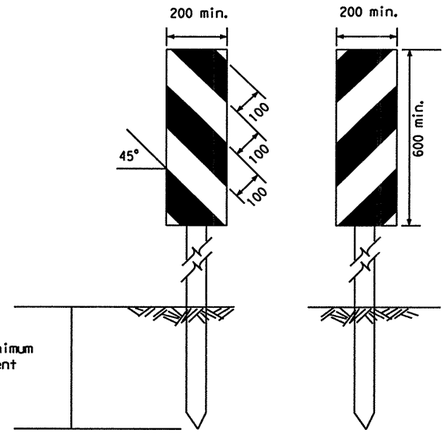


See Compliant Products List for supports and panel substrates

## CONES

Cones shall have a minimum weight of 4.3 kg.

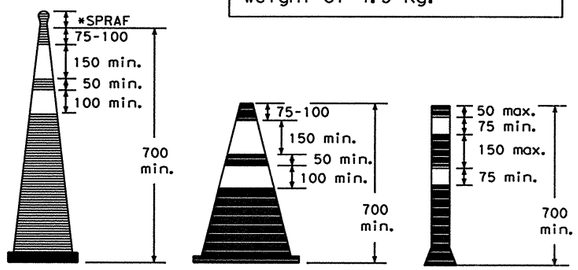


## SELF-RIGHTING SUPPORTS

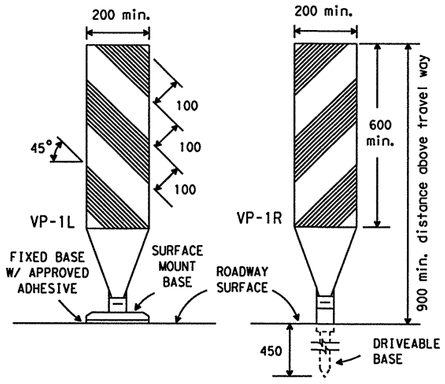


### VERTICAL PANELS

Vertical Panels are normally used as channelizing devices to indicate tangent or nearly tangent roadway alignment where good target value of a device is needed in daytime as well as nighttime. In addition, vertical panels should be used at the edge of shoulder drop-offs and other areas such as lane transitions where positive daytime and nighttime delineation may be required. Vertical panels should be mounted back to back if used at the edge of cuts adjacent to two-way two lane roadways. Stripes are to be reflective orange and reflective white and should always slope downward toward the traveled way. Vertical Panels used on expressways, freeways, and other high speed roadways shall have a minimum of 0.18 square meters of retroreflective area facing traffic.

Self-righting supports are available with portable base. See Compliant Products List.

### OPPOSING LANE DIVIDER

with Portable or Fixed Base Support

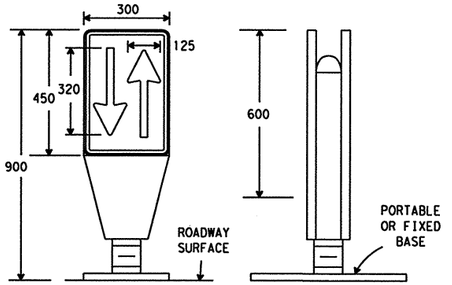


REFLECTIVE ORANGE BACKGROUND WITH BLACK ARROWS AND BORDER.

### CHEVRON

with Flexible Support

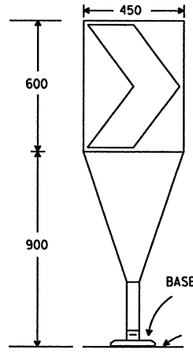


### DRIVEABLE BASE

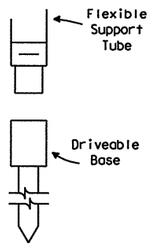


Driveable Support for Vertical Panel VP(F)-1 or Chevron CW1-8(F).

## PORTABLE RIGID VERTICAL PANEL

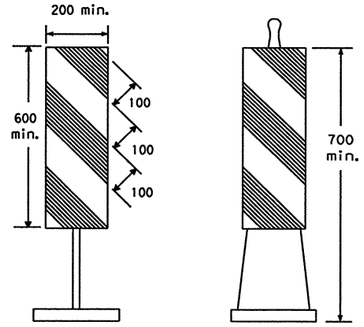


See Compliant Products List for alternate designs.

The sign dimensions shown on this sheet have been rounded, and should be considered equivalent to the English dimensions in the "1980 Standard Highway Sign Designs for Texas" manual. All dimensions are in millimeters unless otherwise noted.

© 2000

**STANDARD PLANS**
**TEXAS DEPARTMENT OF TRANSPORTATION**
*Traffic Operations Division*

# BARRICADE AND CONSTRUCTION STANDARDS

CHANNELIZING DEVICES
CONES

**BC(6)-98(M)**

| ©TxDOT February 1998 | DN: LR | CK: DTN | DW: DN | CK: GB | REQ NO.: |
|---|---|---|---|---|---|
| REVISIONS 3-98 | STATE DISTRICT: SAT | FEDERAL REGION: 6 | FEDERAL AID PROJECT: NH 2000(704),etc. | | SHEET: 112 |
| | COUNTY: BEXAR | CONTROL: 2452 | SECTION: 01 | JOB: 036,etc. | HIGHWAY: LP 1604 |

| LEVELS | DATE: |
|---|---|
| 1 2 3 4 5 6 7 8 9 10 11 12 13 14 15 16 17 18 19 20 21 22 23 24 25 26 27 28 29 30 31 32 33 34 35 36 37 38 39 40 41 42 43 44 45 46 47 48 49 50 51 52 53 54 55 56 57 58 59 60 61 62 63 64 65 66 | ACC: |
| | FILE: |

DN:
CK:
DW:
CK:

DISCLAIMER
The use of this standard is governed by the "Texas Engineering Practice Act". No warranty of any kind is made by TxDOT for any purpose whatsoever. TxDOT assumes no responsibility for the conversion of this standard to other formats or for incorrect results or damages resulting from its use.

# WORK ZONE PAVEMENT MARKINGS

## GENERAL

The Contractor shall be responsible for maintaining work zone and existing pavement markings on all roadways open to traffic within the projects limits unless otherwise stated in the plans. Color, patterns, and dimensions shall be in conformance with the Texas Manual on Uniform Traffic Control Devices (TMUTCD). Additional supplemental pavement marking details may be found in the plans or specifications.

Work zone pavement markings shall consist of guidemarks, short term markings and/or standard pavement markings. Unless otherwise shown in the plans, materials used for work zone pavement markings shall be thermoplastic, raised pavement markers, prefabricated pavement marking material, temporary flexible-reflective roadway marker tabs or other materials approved by the Engineer. Thermoplastic shall not be used for removable markings.

All roadways to be opened to traffic shall be marked with short term markings or standard markings as shown in the plans, at the end of each day's operation. Unless otherwise shown in the plans or approved in writing by the Engineer, all concrete surfaces shall have standard markings in place prior to opening to traffic.

Standard pavement markings shall be installed in accordance with the Texas Manual on Uniform Traffic Control Devices (TMUTCD) and as shown on the plans. When short term markings are required on the plans, short term markings shall conform with the TMUTCD, the plans and details as shown on the Standard WZ(STPM).

All asphaltic surfaces which are to be opened to traffic shall be marked with guidemarks immediately following placement and final rolling of any course. Guidemarks shall consist of a single temporary flexible-reflective roadway marker tab or a single temporary construction raised pavement marker at 40 foot spacing.

Guidemarks shall be placed in proper alignment with the final location of future pavement markings. Any guidemarks not in alignment with pavement markings shall be removed by the Contractor at the Contractor's expense. Guidemarks shall not be used to simulate edgelines.

When inclement weather prohibits the application of short term markings or standard markings as called for on the plans, upon approval of the Engineer, guidemarks may be considered as temporary short term markings for asphaltic surfaces. The placement of pavement markings as shown on the plans may be delayed until such time that weather permits application of pavement markings.

When standard pavement markings are not in place and the roadway is opened to traffic, DO NOT PASS signs shall be erected to mark the beginning of the sections where passing is prohibited and PASS WITH CARE signs shall be erected to mark the beginning of the sections where passing is permitted.

## RAISED PAVEMENT MARKERS

Raised pavement markers are to be placed according to the patterns on BC(8). Raised pavement markers used as standard pavement markings or to supplement removable markings shall meet the requirements of Item "RAISED PAVEMENT MARKERS".

Unless otherwise shown on the plans, raised pavement markers will not be allowed for words, symbols, and shapes, diagonal or transverse lines.

## PREFABRICATED PAVEMENT MARKINGS

Removable prefabricated pavement markings shall be a material of manufacture and product code or designation shown on the list of approved materials covered by the Department Materials Specification D-9-8241.

Non-removable prefabricated pavement markings (foil back) shall be a material of manufacture and product code or designation shown on the list of approved materials covered by the Specification TxDOT 550-74-01.

The lists of approved prefabricated work zone pavement marking materials may be obtained from TxDOT General Services Division.

## MAINTENANCE

The Contractor will be responsible for maintaining work zone pavement markings within the project limits. Work Zone Pavement Markings shall be inspected in accordance with the frequency and reporting requirements of work zone traffic control device inspections. The markings should provide a visible reference for a minimum distance of 90 meters during normal daylight hours and 50 meters when illuminated by automobile low-beam headlights at night, unless sight distance is restricted by roadway geometrics. Markings failing to meet this criteria shall be replaced as required by the Engineer.

## REMOVAL OF PAVEMENT MARKINGS

Removal of pavement markings includes centerline, channelizing lines, lane lines, edge lines, words, arrows, symbols and raised pavement markers.

Pavement markings that are no longer applicable and which may create confusion or direct a motorist toward or into the closed portion of the roadway, shall be removed or obliterated before the roadway is open to traffic. The above shall not apply to detours of a short duration of a few hours, where flaggers and/or sufficient channelizing devices are used in lieu of markings to outline the detour route and the detour is not to be maintained during nighttime.

Pavement markings shall be removed to the fullest extent possible, so as not to leave a discernible marking, by any method that does not materially damage the surface or texture of the pavement. The removal of pavement markings may require resurfacing or seal coating portions of the roadway, normally full lane widths. Subject to the approval of the Engineer, any method that proves to be successful on a particular type pavement may be used. Blast cleaning may be used but will not be required unless specifically shown in the plans. Over-painting of the markings SHALL NOT BE permitted. Removal of raised pavement markers shall be as directed by the Engineer.

Removal of existing pavement markings and markers will be paid for directly in accordance with the Item "ELIMINATING EXISTING PAVEMENT MARKINGS AND MARKERS" unless otherwise stated elsewhere in the plans.

SPECIFICATION REFERENCE TABLE

| MATERIALS AND TESTS DIVISION SPECIFICATIONS | |
|---|---|
| JIGGLE BAR TILE | D-9-4100 |
| PAVEMENT MARKERS (REFLECTORIZED) | D-9-4200 |
| TRAFFIC BUTTONS | D-9-4300 |
| EPOXY | D-9-6100 |
| BITUMINOUS ADHESIVE FOR PAVEMENT MARKERS | D-9-6130 |
| PREFABRICATED PAVEMENT MARKINGS - REMOVABLE | D-9-8241 |
| TEMPORARY FLEXIBLE-REFLECTIVE ROADWAY MARKER TABS | D-9-8242 |

PREQUALIFICATION PROCEDURES MAY BE OBTAINED BY WRITING:

GENERAL SERVICES DIVISION
TEXAS DEPARTMENT OF TRANSPORTATION (TxDOT)
125 EAST 11th STREET
AUSTIN, TX 78701-2483

## Temporary Construction Raised Pavement Markers used as Guidemarks:

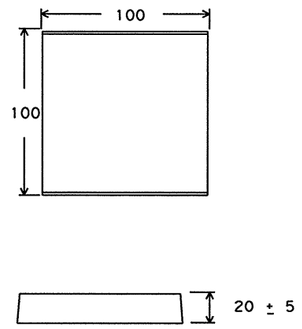


The above temporary construction raised pavement marker is shown for illustration purposes only and not intended to specify any particular product.

Temporary construction raised pavement markers used as guidemarks shall be of design and manufacture approved by the Engineer.

All temporary construction raised pavement markers provided on a project shall be of the same manufacturer.

Adhesive for guidemarks shall be bituminous material hot applied or butyl rubber pad for all surfaces, or thermoplastic for concrete surfaces.

## Temporary Flexible-Reflective Roadway Marker Tabs

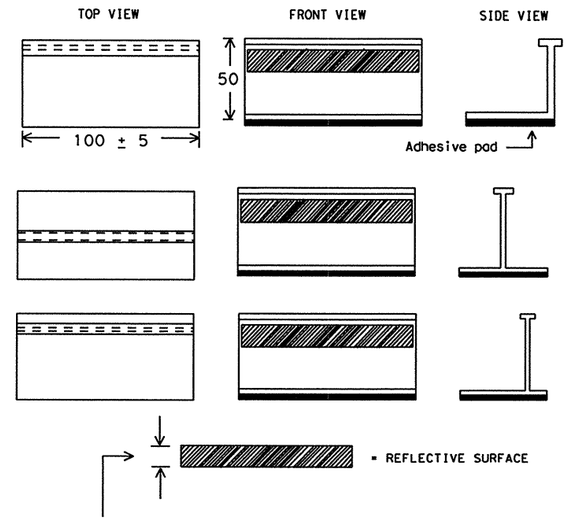


Height of sheeting will be determined by notes under MAINTENANCE.
(Usually more than 5 millimeters and less than 25 millimeters.)

STAPLES OR NAILS SHALL NOT BE USED TO SECURE TEMPORARY FLEXIBLE-REFLECTIVE ROADWAY MARKERS TABS TO THE PAVEMENT SURFACE

Temporary flexible-reflective roadway marker tabs used as guidemarks shall meet the requirements of Departmental Material Specification D-9-8242.

Tabs detailed on this sheet are to be inspected and accepted by the Engineer or designated representative. Sampling and testing is not normally required, however at the option of the Engineer, either "A" or "B" below may be imposed to assure quality before placement on the roadway.

A) Select five (5) or more tabs at random from each lot or shipment and submit to the Construction Division, Materials and Tests section to determine specification compliance.
B) Select five (5) tabs and submit to the following test. Affix five (5) tabs at 600 mm intervals on an asphaltic pavement in a straight line. Using a medium size passenger vehicle or pickup, run over the markers with front and rear wheels at a speed of 35 to 40 miles per hour, four times in each direction. No more than one (1) out of five reflective surfaces shall be lost or displaced as a result of this test.

Guidemarks shall be designated as:
YELLOW - (two amber reflective surfaces with yellow body).
WHITE - (one silver reflective surface with white body).

Dimensions indicated on this sheet are typical and approximate. Variations in size and height may occur between markers or devices made by manufacturers, by as much as 5 millimeters, unless otherwise noted.

All dimensions are in millimeters unless otherwise noted.

© 2000

STANDARD PLANS
TEXAS DEPARTMENT OF TRANSPORTATION
*Traffic Operations Division*

# BARRICADE AND CONSTRUCTION STANDARDS

PAVEMENT MARKINGS — BC(7)-98(M)

| ©TxDOT April 1992 | DN: LR | CK: DTN | DW: DN | CK: GB | NEG NO.: |
|---|---|---|---|---|---|
| REVISIONS 2-94 1-97 2-98 3-98 | STATE DISTRICT: SAT | FEDERAL REGION: 6 | FEDERAL AID PROJECT: NH 2000(704),etc. | | SHEET: 113 |
| | COUNTY: BEXAR | | CONTROL: 2452 | SECTION: 01 | JOB: 036,etc. | HIGHWAY: LP 1604 |

DN:
CK:
DW:
CK:

DATE:
ACC:
FILE:

LEVELS
FT

DISCLAIMER
The use of this standard is governed by the "Texas Engineering Practice Act". No warranty of any kind is made by TxDOT for any purpose whatsoever. TxDOT assumes no responsibility for the conversion of this standard to other formats or for incorrect results or damages resulting from its use.

# PAVEMENT MARKING PATTERNS

## CENTER LINE & NO-PASSING ZONE BARRIER LINES FOR TWO LANE TWO-WAY HIGHWAYS

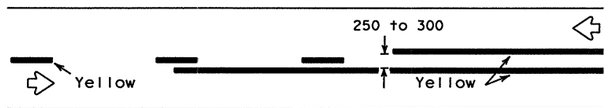


REFLECTORIZED PAVEMENT MARKINGS - PATTERN A

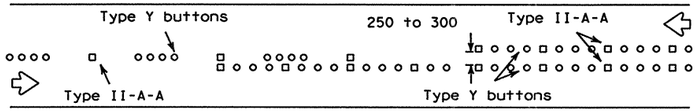


RAISED MARKERS - PATTERN A

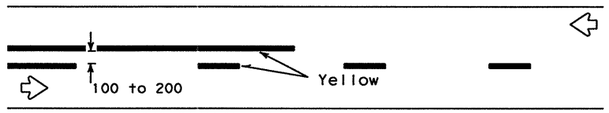


REFLECTORIZED PAVEMENT MARKINGS - PATTERN B

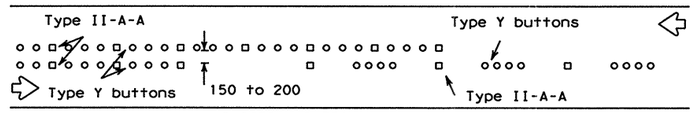


RAISED MARKERS - PATTERN B

## EDGE & LANE LINES FOR DIVIDED HIGHWAY

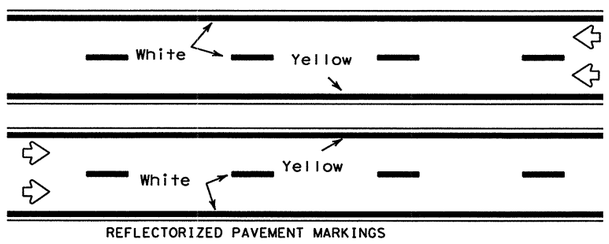


REFLECTORIZED PAVEMENT MARKINGS

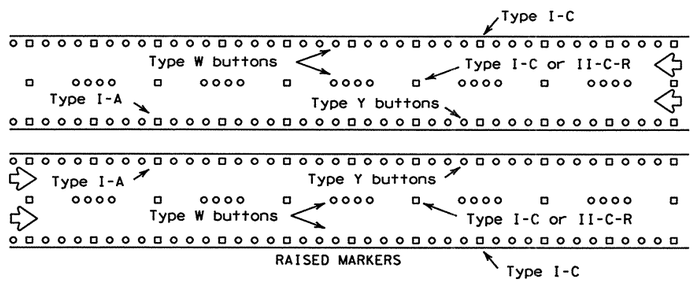


RAISED MARKERS

## LANE & CENTER LINES FOR MULTILANE UNDIVIDED HIGHWAYS

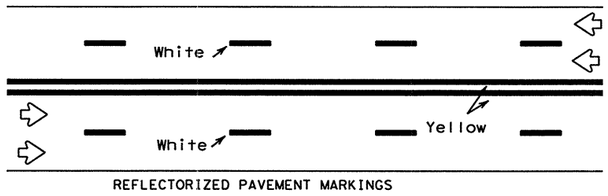


REFLECTORIZED PAVEMENT MARKINGS

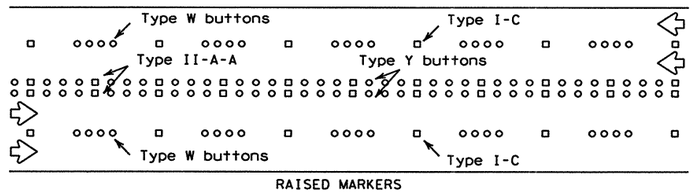


RAISED MARKERS

## TWO-WAY LEFT TURN LANE

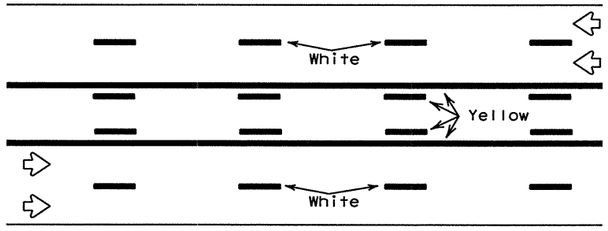


REFLECTORIZED PAVEMENT MARKINGS

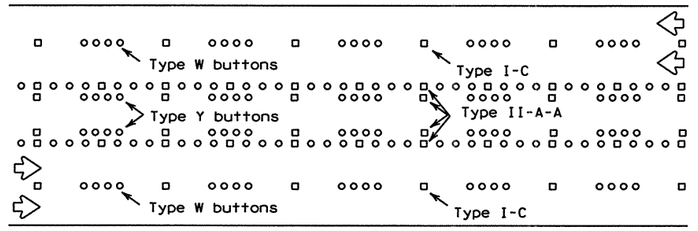


RAISED MARKERS

# STANDARD WORK ZONE PAVEMENT MARKINGS DETAILS

## SOLID LINES

### DOUBLE NO-PASSING LINE

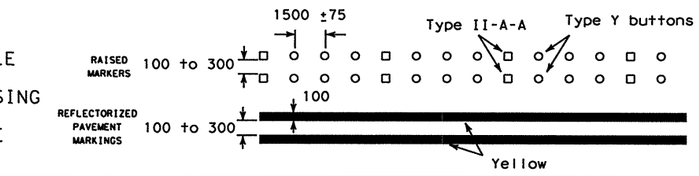


### EDGE LINE OR SINGLE NO-PASSING LINE

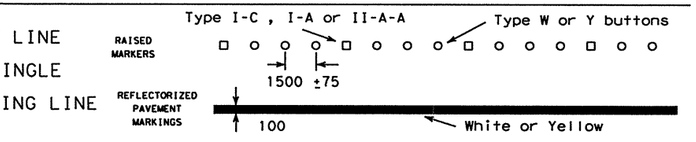


### WIDE LINE

(FOR LEFT TURN CHANNELIZING LINE OR CHANNELIZING LINE USED TO DISCOURAGE LANE CHANGING.)

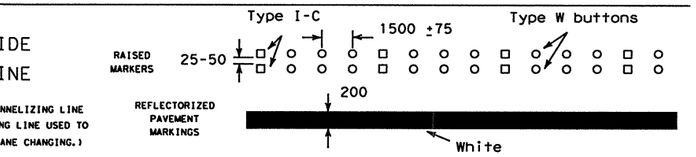


## BROKEN LINE

(FOR CENTER LINE OR LANE LINE.)

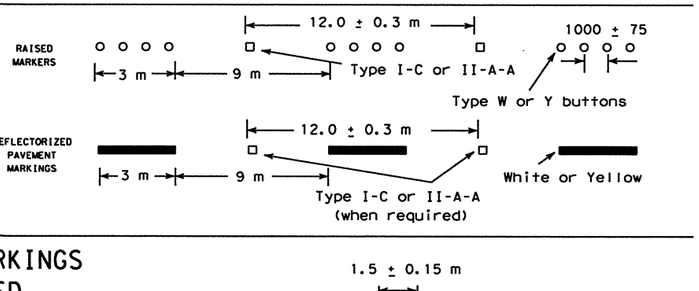


## REMOVABLE MARKINGS WITH RAISED PAVEMENT MARKERS

If raised pavement markers are used to supplement REMOVABLE markings, the markers shall be applied to the top of the tape at the approximate mid length of tape used for broken lines and at approximately 6 meters spacing for solid lines. This allows an easier removal of raised markers and tape.

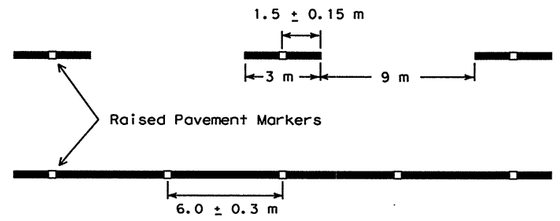


NOTES:
Pattern A is the Department Standard, however Pattern B may be used if approved by the Engineer.
Prefabricated markings may be subsitituted for reflectorized pavement markings.

Raised pavement markers used as standard pavement markings shall meet the requirements of items "RAISED PAVEMENT MARKERS" and "EPOXY AND ADHESIVES."

All dimensions are in millimeters unless otherwise noted.

© 2000

STANDARD PLANS
TEXAS DEPARTMENT OF TRANSPORTATION
*Traffic Operations Division*

# BARRICADE AND CONSTRUCTION STANDARDS

PAVEMENT MARKINGS — **BC(8)-98(M)**

| © TxDOT April 1992 | | | DN: LR | CK: DTN | DW: DN | CK: GB | MSG NO.: |
|---|---|---|---|---|---|---|---|
| REVISIONS | STATE DISTRICT | FEDERAL REGION | FEDERAL AID PROJECT | | | | SHEET |
| 2-94 | SAT | 6 | NH 2000(704), etc. | | | | 114 |
| 1-97 | COUNTY | | CONTROL | SECTION | JOB | | HIGHWAY |
| 2-98 | BEXAR | | 2452 | 01 | 036, etc. | | LP 1604 |

DN:
CK:
DW:
CK:
DATE:
ACC:
FILE:
LEVELS

DISCLAIMER
The use of this standard is governed by the "Texas Engineering Practice Act". No warranty of any kind is made by TxDOT for any purpose whatsoever. TxDOT assumes no responsibility for the conversion of this standard to other formats or for incorrect results or damages resulting from its use.

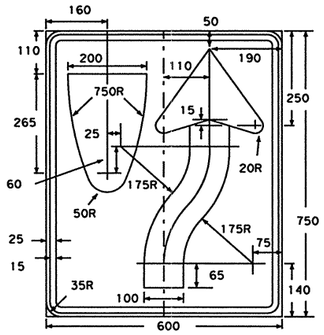


**R4-7 (R4-8) 600x750**
Symbol - Black
Border - Black
Background - White Refl.

**R11-2 1200x750**
Letters - Black
Border - Black
Background - White Refl.

Alternate 1st line legend

STREET 200D **R11-2S**
RAMP 200D **R11-2R**
BRIDGE 200D **R11-2B**

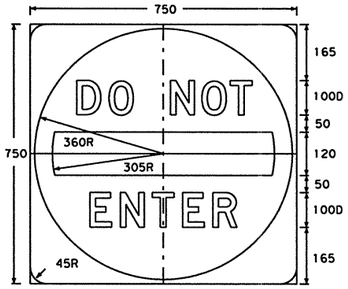


**R5-1 750x750**
Letters - White Refl.
Bar - White Refl.
Border - White Refl.
Background - Red Refl.

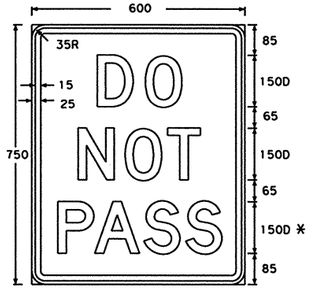


* reduce spacing 40%

**R4-1 600x750**
Letters - Black
Border - Black
Background - White Refl.

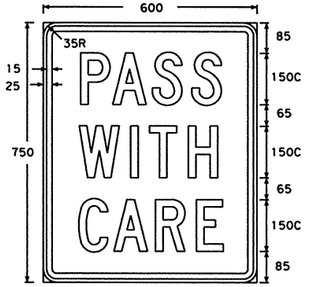


**R4-2 600x750**
Letters - Black
Border - Black
Background - White Refl.

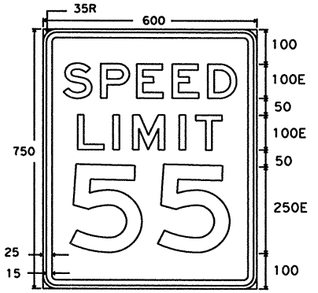


**R2-1 600x750**
Letters - Black
Border - Black
Background - White Refl.

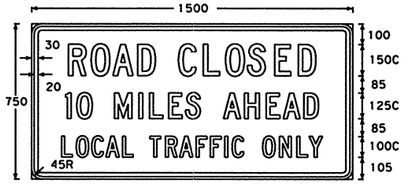


**R11-3a 1500x750**
Letters - Black
Numerals - Black
Border - Black
Background - White Refl.

Alternate 1st line legend

BRIDGE OUT 150C **R11-3b**

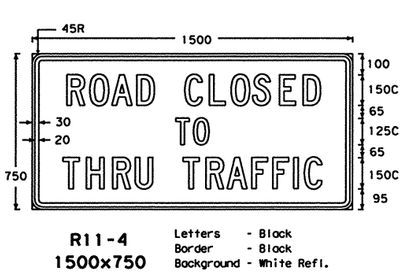


**R11-4 1500x750**
Letters - Black
Border - Black
Background - White Refl.

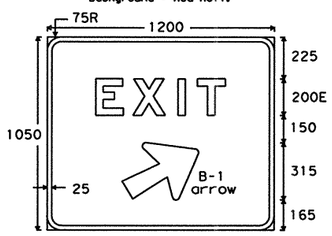


**E5-1a 1200x1050**
Letters - White Refl.
Numerals - White Refl.
Symbol - White Refl.
Background - Green Refl.

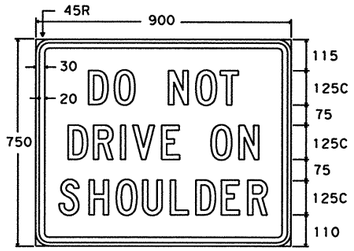


**R4-3a 900x750**
Letters - Black
Border - Black
Background - White Refl.

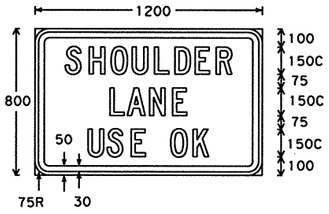


**R4-3d 1200x800**
Letters - Black
Border - Black
Background - White Refl.

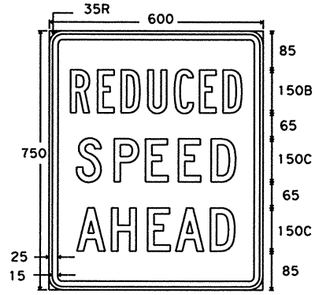


**R2-5a 600x750**
Letters - Black
Border - Black
Background - White Refl.

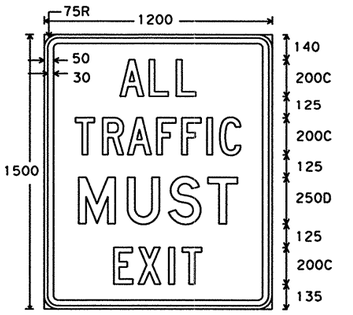


**R3-22 1200x1500**
Letters - Black
Border - Black
Background - White Refl.

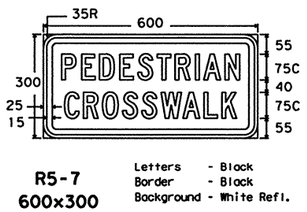


**R5-7 600x300**
Letters - Black
Border - Black
Background - White Refl.

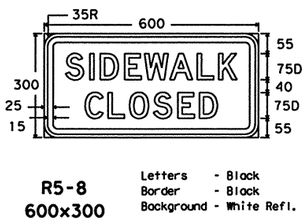


**R5-8 600x300**
Letters - Black
Border - Black
Background - White Refl.

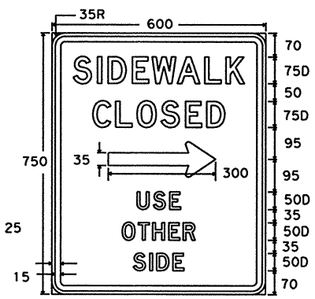


**ER20-5 900x900**
Letters - Black
Border - Black
Background - White Refl.

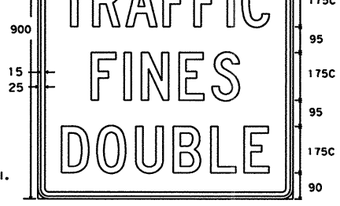


**R20-5 600x750**
Letters - Black
Border - Black
Background - White Refl.

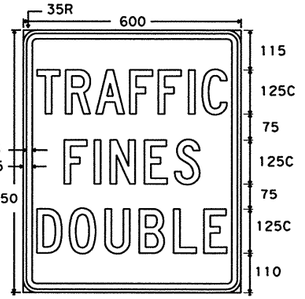


**R5-8T 600x750**
Letters - Black
Symbol - Black
Border - Black
Background - White Refl.

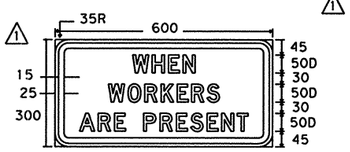


**R20-5 Plaque 600 x 300**
Letters - Black
Border - Black
Background - White Refl.

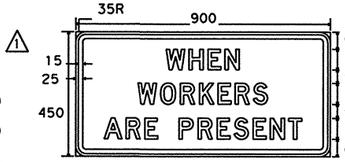


**ER20-5 Plaque 900 x 450**
Letters - Black
Border - Black
Background - White Refl.

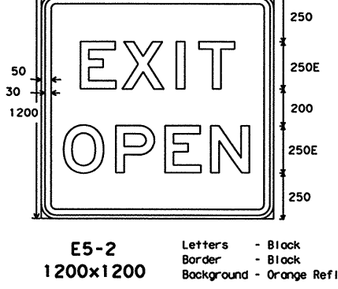


**E5-2 1200x1200**
Letters - Black
Border - Black
Background - Orange Refl.

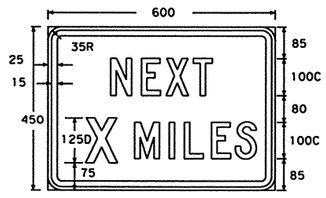


**R20-1 600x450**
Letters - Black
Border - Black
Background - White Refl.

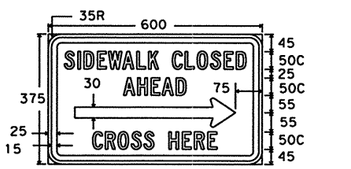


**R5-9a 600x375**
Letters - Black
Symbol - Black
Border - Black
Background - White Refl.

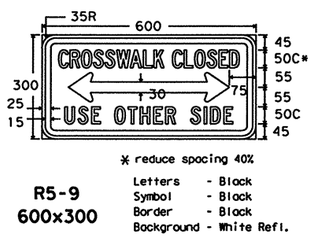


* reduce spacing 40%

**R5-9 600x300**
Letters - Black
Symbol - Black
Border - Black
Background - White Refl.

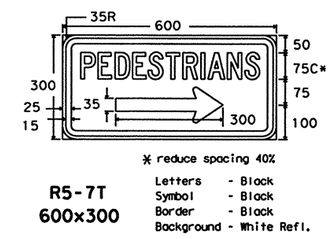


* reduce spacing 40%

**R5-7T 600x300**
Letters - Black
Symbol - Black
Border - Black
Background - White Refl.

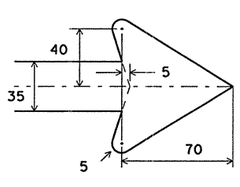


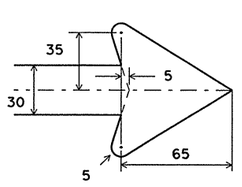


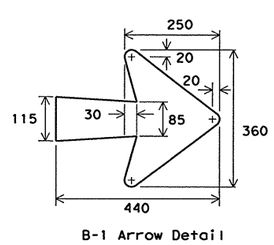


B-1 Arrow Detail

10/99 Revision ⚠ Added new sign

The sign dimensions shown on this sheet have been rounded, and should be considered equivalent to the English dimensions in the "1980 Standard Highway Sign Designs for Texas" manual. All dimensions are in millimeters unless otherwise noted.

STANDARD PLANS
TEXAS DEPARTMENT OF TRANSPORTATION
*Traffic Operations Division*

©2000

# BARRICADE AND CONSTRUCTION STANDARDS

REGULATORY AND GUIDE SIGNS **BC(9)-99(M)**

| ©TxDOT February 1998 | DN: GB | CK: DTN | DW: DN | CK: GB | FED. NO. |
|---|---|---|---|---|---|
| REVISIONS 10-99 | STATE DISTRICT | FEDERAL REGION | FEDERAL AID PROJECT | | SHEET |
| | SAT | 6 | NH 2000(704), etc. | | 115 |
| | COUNTY | | CONTROL | SECTION | JOB | HIGHWAY |
| | BEXAR | | 2452 | 01 | 036, etc. | LP 1604 |

Metric 109

LEVELS: 1 2 3 4 5 6 7 8 9 10 11 12 13 14 15 16 17 18 19 20 21 22 23 24 25 26 27 28 29 30 31 32 33 34 35 36 37 38 39 40 41 42 43 44 45 46 47 48 49 50 51 52 53 54 55 56 57 58 59 60 61 62 63 64 65 66 67 68 69 70 71 72 73 74 75 76 77 78 79 80 81 82 83 84 85 86 87 88 89 90 91 92 93 94 95 96 97 98 99

E: DATE: 4 6 15 16 ACC: FILE:

DN: CK: DW: CK:

DISCLAIMER
The use of this standard is governed by the "Texas Engineering Practice Act". No warranty of any kind is made by TxDOT for any purpose whatsoever. TxDOT assumes no responsibility for the conversion of this standard to other formats or for incorrect results or damages resulting from its use.

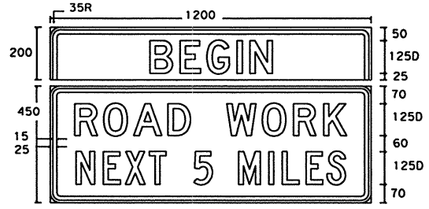


**SG20-1 w/plaque**
**1200 X 650**

Letters - Black
Numbers - Black
Border - Black
Background - Orange Refl.

⚠1

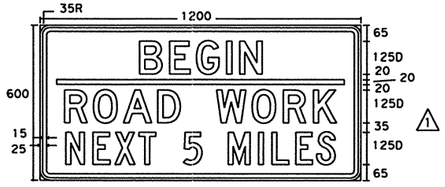


**SG20-5T**
**1200 X 600**

Letters - Black
Numbers - Black
Border - Black
Background - Orange Refl.

⚠1

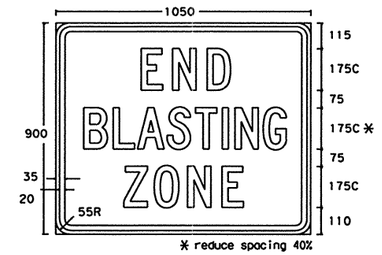


**CW22-3**
**1050x900**

Letters - Black
Border - Black
Background - Orange Refl.

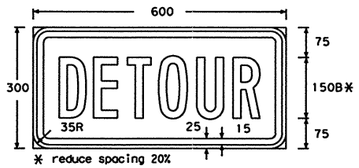


**M4-8**
**600x300**

Letters - Black
Border - Black
Background - Orange Refl.

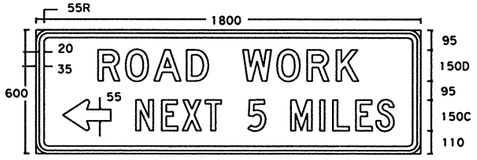


**G20-1bL (R)**
**1800x600**

Letters - Black
Numbers - Black
Border - Black
Background - Orange Refl.

**NOTE:**
G20-1 Series signs shall show distances rounded to nearest whole mile. Fractions and decimal miles will not be used.

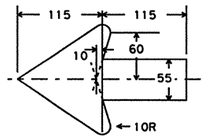


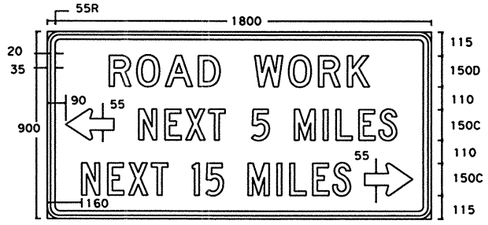


**G20-1a**
**1800x900**

Letters - Black
Numbers - Black
Border - Black
Background - Orange Refl.

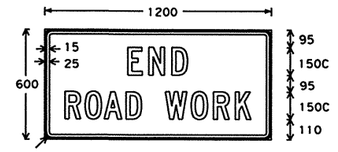


**G20-2a**
**1200x600**

Letters - Black
Border - Black
Background - Orange Refl.

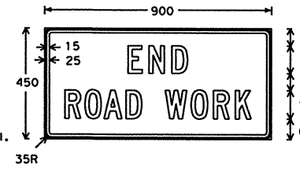


**SG20-2a**
**900x450**

Letters - Black
Border - Black
Background - Orange Refl.

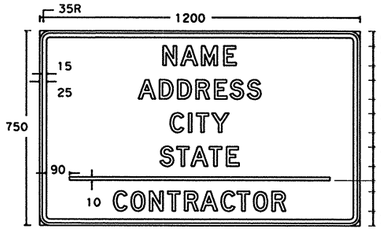


**SG20-6**
**1200x750**

Letters - Black
Border - Black
Background - Orange Refl. or White Refl. (optional)

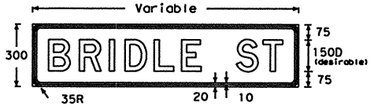


**M4-9N**
**Variable X 300**

Letters - Black
Border - Black
Background - Orange Refl.

The M4-9R,L or S sign is to be used to detour local streets or roads that are not a State or Federal numbered highway; however, it should not be used in lieu of the M4-10 sign at the beginning of the detour or to detour State or Federal numbered routes.

Also, when the M4-9R,L or S sign is used, a sign (M4-9N) with the name of the street being detoured may be mounted above it.

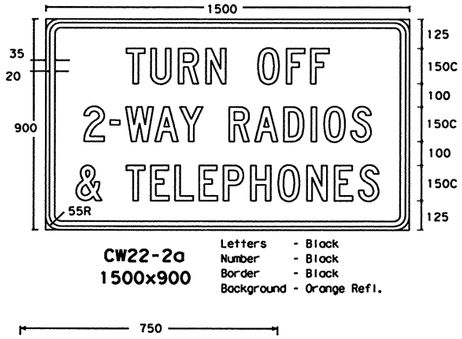


**CW22-2a**
**1500x900**

Letters - Black
Number - Black
Border - Black
Background - Orange Refl.

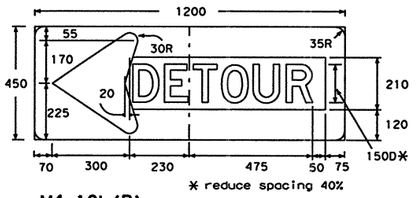


**M4-10L (R)**
**1200x450**

Letters - Black
Arrow - Orange Refl.
Background - Black

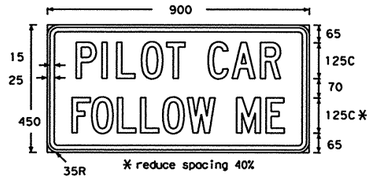


**G20-4**
**900x450**

Letters - Black
Border - Black
Background - Orange (Refl. Optional)

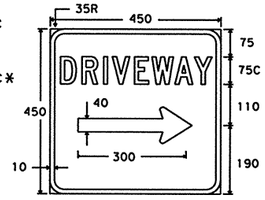


**D-70a**
**450x450**

Letters - White Refl.
Symbol - White Refl.
Border - White Refl.
Background - Blue Refl.

* Alternate first line legend for D-70S

RESTAURANT | D70R 100C
BUSINESS | D70B 100C
MOTEL | D70M 100C
GAS | D70G 100C

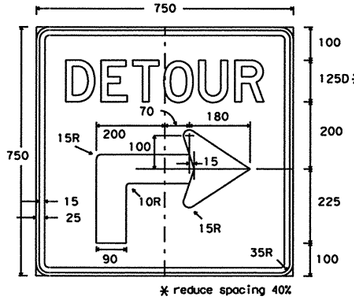


**M4-9AR(L)**
**750x750**

Letters - Black
Symbol - Black
Border - Black
Background - Orange Refl.




**M4-8**
**600x300**

Letters - Black
Border - Black
Background - Orange Refl.

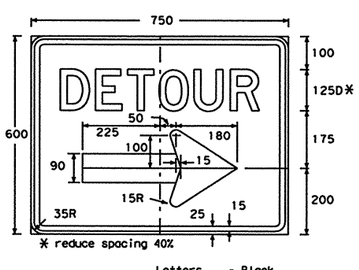


**M4-9R(L)**
**750x600**

Letters - Black
Symbol - Black
Border - Black
Background - Orange Refl.

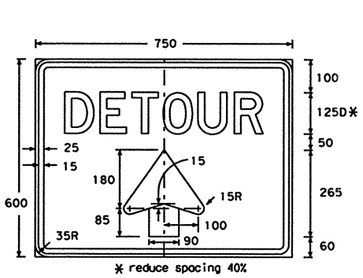


**M4-9S**
**750x600**

Letters - Black
Symbol - Black
Border - Black
Background - Orange Refl.

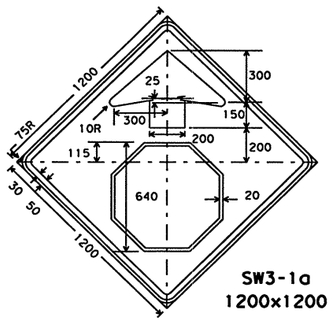


Border and Arrow - Black
Symbol - White Border on Red Background (Refl)
Background - Yellow Reflective

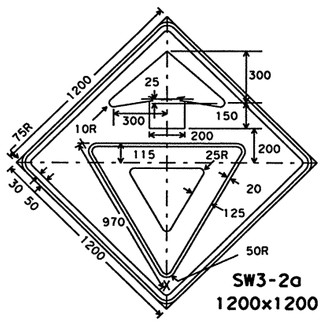


Border and Arrow - Black
Symbol - Red Border Band on White Background (Refl)
Background - Yellow Reflective

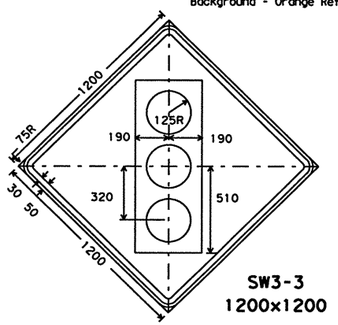


Symbol and Border - Black
Top Circle - Red Reflective
Bottom Circle - Green Reflective
Background - Yellow Reflective

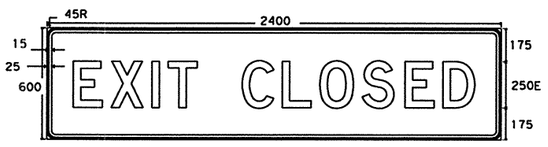


**CW26-1T**
**2400x600**

Letters - Black
Border - Black
Background - Orange Refl.

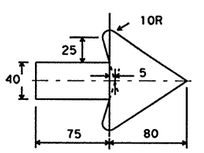


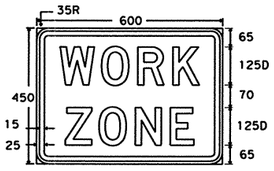


**G20-9**
**600x450**

Letters - Black
Border - Black
Background - Orange Refl.

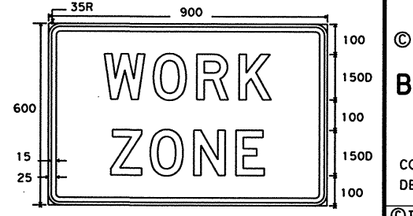


**EG20-9**
**900x600**

Letters - Black
Border - Black
Background - Orange Refl.

**D-70S**
**1050x350**

Letters - White Refl.
Symbol - White Refl.
Border - White Refl.
Background - Blue Refl.

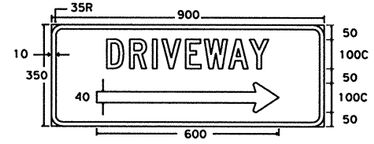


**D-70**
**900x350**

Letters - White Refl.
Symbol - White Refl.
Border - White Refl.
Background - Blue Refl.

| 10/99 Revision | ⚠1 Added new sign |
|---|---|

The sign dimensions shown on this sheet have been rounded, and should be considered equivalent to the English dimensions in the "1980 Standard Highway Sign Designs for Texas" manual. All dimensions are in millimeters unless otherwise noted.

STANDARD PLANS
TEXAS DEPARTMENT OF TRANSPORTATION
*Traffic Operations Division*

© 2000

# BARRICADE AND CONSTRUCTION STANDARDS

CONTRACTOR INFORMATION, DETOURS & WARNING SIGNS

**BC(9A)-99(M)**

| © TxDOT February 1998 | DN: GB | CK: DTN | DW: DN | CK: GB | MEG NO.: |
|---|---|---|---|---|---|
| REVISIONS 10-99 | STATE DISTRICT | FEDERAL REGION | FEDERAL AID PROJECT | | SHEET |
| | SAT | 6 | NH 2000(704),etc. | | 116 |
| | COUNTY | | CONTROL | SECTION | JOB | HIGHWAY |
| | BEXAR | | 2452 | 01 | 036,etc. | LP 1604 |

Metric 109A

DN:
CK:
DW:
CK:

DATE:
ACC:
FILE:

LEVELS
1 2 3 4 5 6 7 8 9 10 11 12 13 14 15 16 17 18 19 20 21 22 23 24 25 26 27 28 29 30 31 32 33 34 35 36 37 38 39 40 41 42 43 44 45 46 47 48 49 50 51 52 53 54 55 56 57 58 59 60 61 62 63

DISCLAIMER
The use of this standard is governed by the "Texas Engineering Practice Act". No warranty of any kind is made by TxDOT for any purpose whatsoever. TxDOT assumes no responsibility for the conversion of this standard to other formats or for incorrect results or damages resulting from its use.

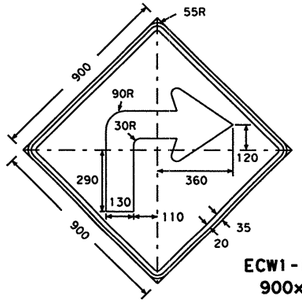


ECW1-1R(L)
900x900

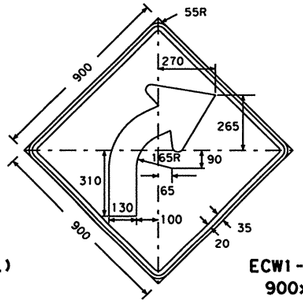


ECW1-2R(L)
900x900

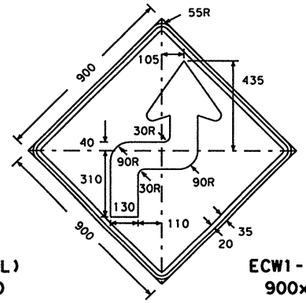


ECW1-3R(L)
900x900

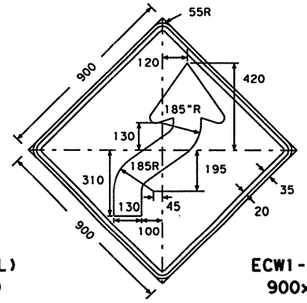


ECW1-4R(L)
900x900

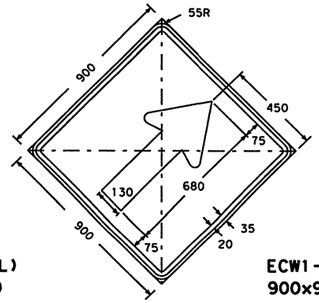


ECW1-6a
900x900

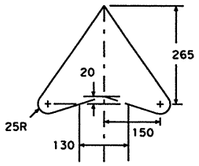


ARROW DETAIL FOR
ECW1-1, ECW1-2, ECW1-3,
ECW1-4 AND ECW1-6a.

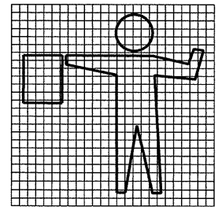

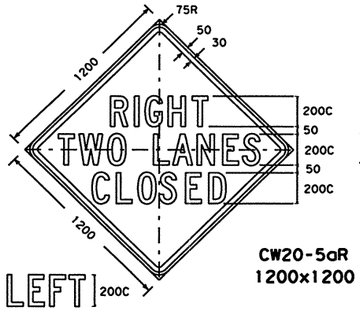


CW20-5aR
1200x1200

CW20-5aL

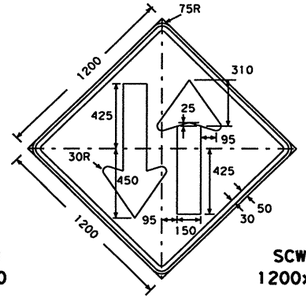


SCW6-3
1200x1200

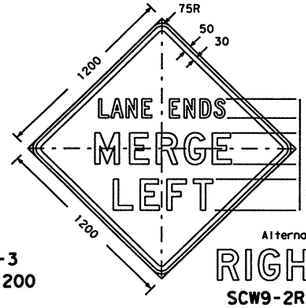


SCW9-2R

SCW9-2L
1200x1200

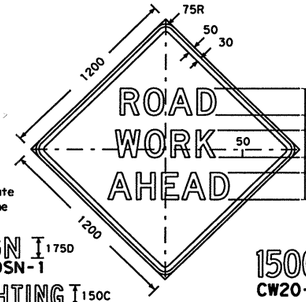


Alternate
1st line
legend
SIGN 175D
CW20SN-1
LIGHTING 150C
CW20LT-1
BRIDGE 175C
CW20BR-1
RAMP 175D
CW20RP-1
STREET 175C
CW20ST-1

CW20-1D
1200x1200

SIGNAL 175C
CW20SG-1

1500FT 175C
CW20-1A
1000FT 175C
CW20-1B
500FT 175D
CW20-1C

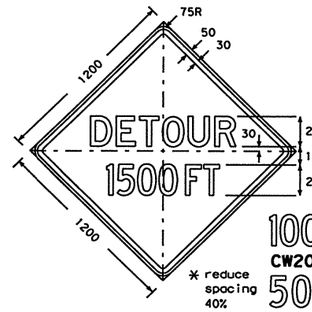


CW20-2A
1200x1200

1000FT 200C
CW20-2B
500FT 200D
CW20-2C
AHEAD 200D
CW20-2D

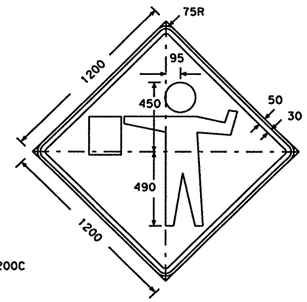


FCW20-7a
1200x1200

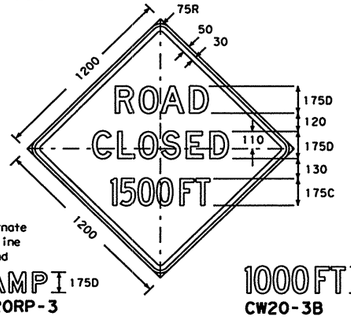


Alternate
1st line
legend
RAMP 175D
CW20RP-3
FRWY 175D
CW20FY-3
STREET 175C
CW20ST-3

CW20-3A
1200x1200

1000FT 175C
CW20-3B
500FT 175D
CW20-3C
AHEAD 175D
CW20-3D

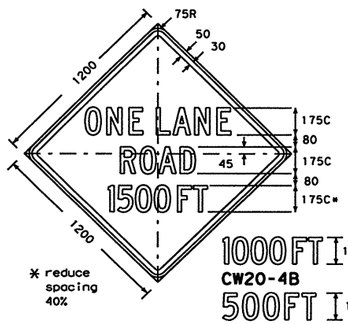


CW20-4A
1200x1200

1000FT 175C*
CW20-4B
500FT 175C
CW20-4C
AHEAD 175C
CW20-4D

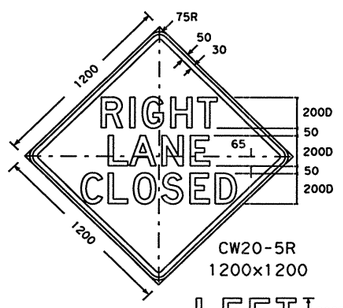


CW20-5R
1200x1200

LEFT 200D
CW20-5L

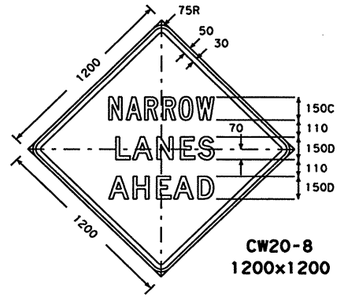


CW20-8
1200x1200

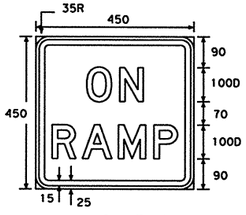


CW13-4
450x450

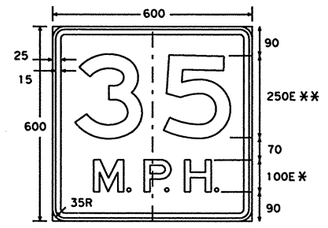


* increase spacing 100%
** optically space numerals about vert. centerline

SCW13-1
600x600

Speed value to be determined at the site by the Engineer.

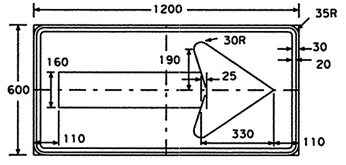


CW1-6
1200x600

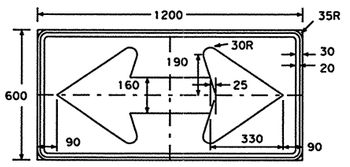


CW1-7
1200x600

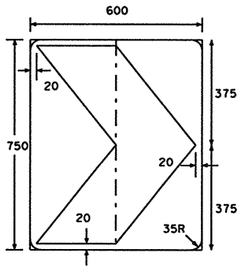


SCW1-8
600x750

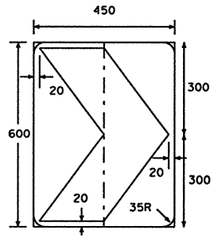


CW1-8
450x600

**GENERAL NOTES:**
All signs detailed on this sheet shall have Black border, legend and/or symbol on an orange Type C reflective background.

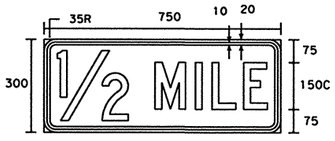


Distance Plaque
750x300

Alternate legends
1 MILE 150C
1000 FT 150C
1500 FT 150C
500 FT 150C

The sign dimensions shown on this sheet have been rounded, and should be considered equivalent to the English dimensions in the "1980 Standard Highway Sign Designs for Texas" manual. All dimensions are in millimeters unless otherwise noted.

©2000

STANDARD PLANS
TEXAS DEPARTMENT OF TRANSPORTATION
*Traffic Operations Division*

# BARRICADE AND CONSTRUCTION STANDARDS

CONSTRUCTION WARNING SIGNS **BC(9B)-98(M)**

| ©TxDOT February 1998 | DN: GB | CK: DTN | DW: DN | CK: GB | REQ NO.: |
|---|---|---|---|---|---|
| REVISIONS | STATE DISTRICT | FEDERAL REGION | FEDERAL AID PROJECT | | SHEET |
| | SAT | 6 | NH 2000(704),etc. | | 117 |
| | COUNTY | | CONTROL | SECTION | JOB | HIGHWAY |
| | BEXAR | | 2452 | 01 | 036,etc. | LP 1604 |

LEVELS
1 2 3 4 5 6 7 8 9 10 11 12 13 14 15 16 17 18 19 20 21 22 23 24 25 26 27 28 29 30 31 32 33 34 35 36 37 38 39 40 41 42 43 44 45 46 47 48 49 50 51 52 53 54 55 56 57 58 59 60 61 62 63

DATE:
ACC:
FILE:
DN:
CK:
DW:
CK:

DISCLAIMER
The use of this standard is governed by the "Texas Engineering Practice Act". No warranty of any kind is made by TxDOT for any purpose whatsoever. TxDOT assumes no responsibility for the conversion of this standard to other formats or for incorrect results or damages resulting from its use.

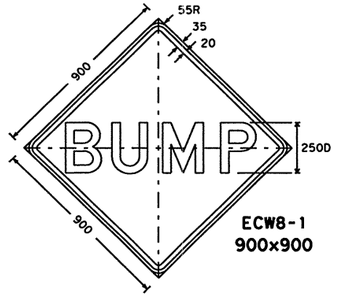


ECW8-1
900x900

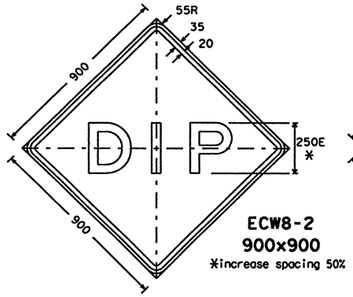


ECW8-2
900x900
*increase spacing 50%

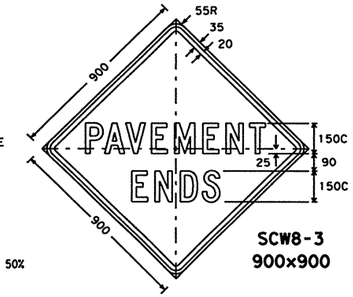


SCW8-3
900x900

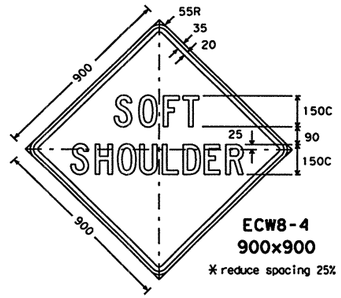


ECW8-4
900x900
* reduce spacing 25%

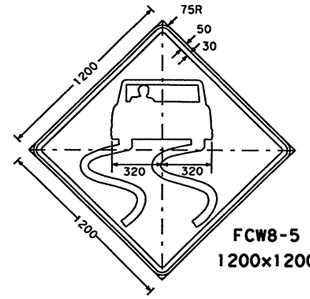


FCW8-5
1200x1200

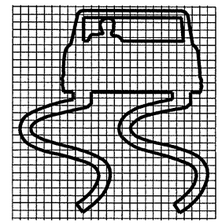

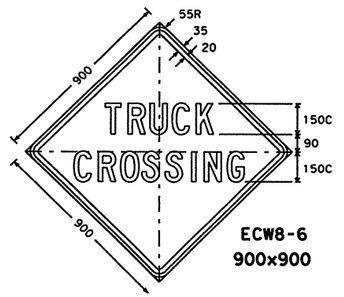


ECW8-6
900x900

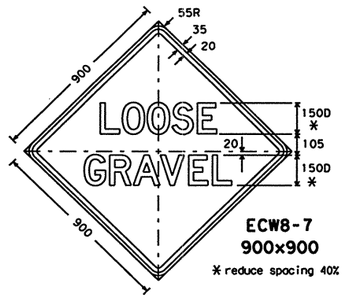


ECW8-7
900x900
* reduce spacing 40%

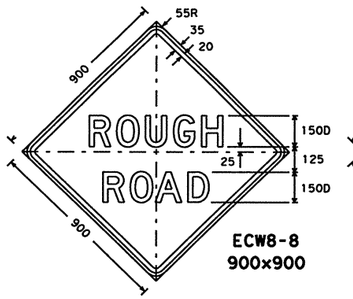


ECW8-8
900x900

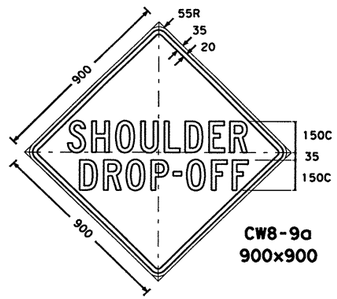


CW8-9a
900x900

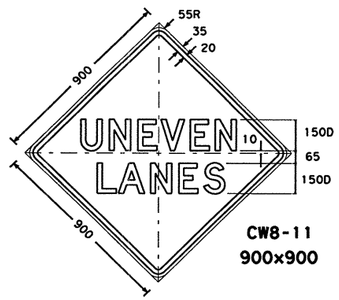


CW8-11
900x900

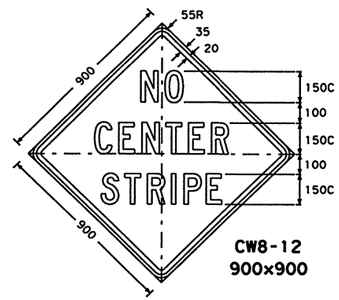


CW8-12
900x900

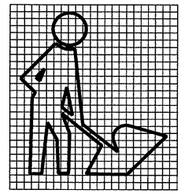

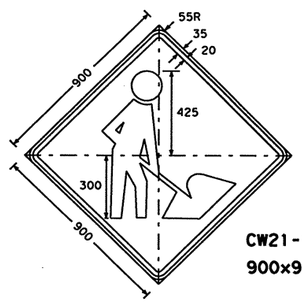


CW21-1a
900x900

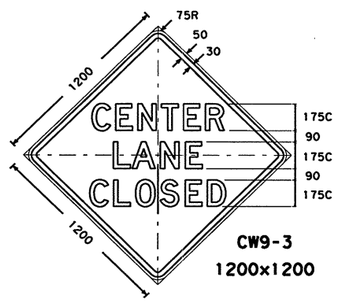


CW9-3
1200x1200

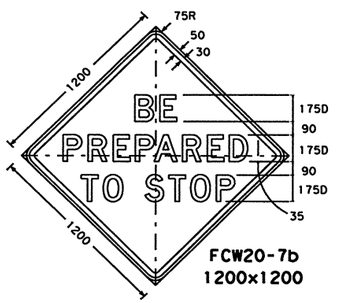


FCW20-7b
1200x1200

SCW21-2a
TARI 175D **
Alternate 2nd line legend

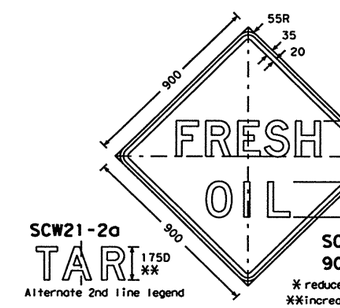


SCW21-2
900x900
* reduce spacing 20%
**increase spacing 50%

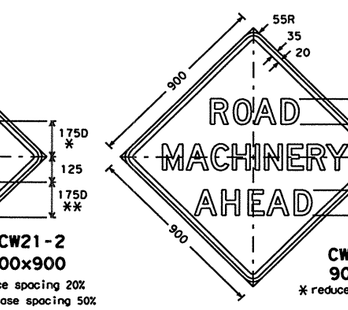


CW21-3D
900x900
* reduce spacing 40%

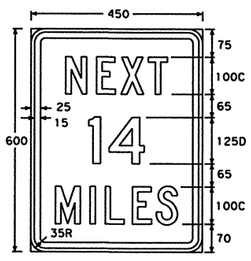


CW21-16
450x600

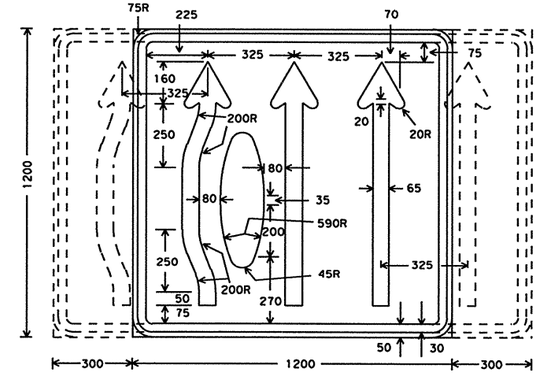


CW24-2
Var. X 1200
A mirror image may be used to show proper lane alignment.

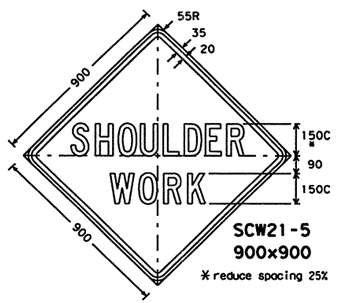


SCW21-5
900x900
* reduce spacing 25%

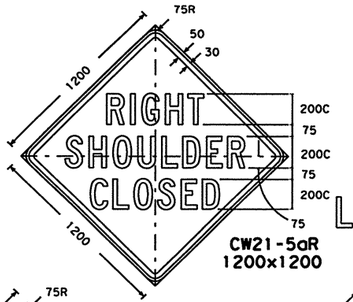


CW21-5aR
1200x1200

LEFT 200C
CW21-5aL

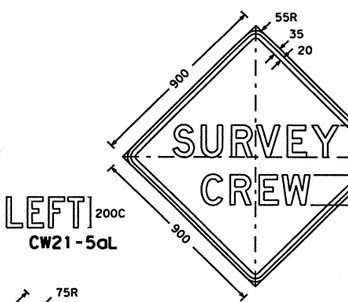


SCW21-6
900x900

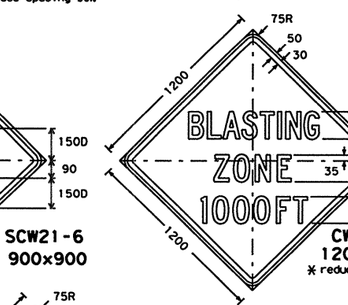


CW22-1B
1200x1200
* reduce spacing 40%

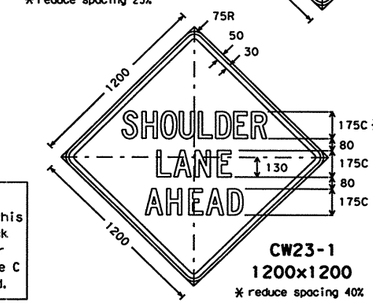


CW23-1
1200x1200
* reduce spacing 40%

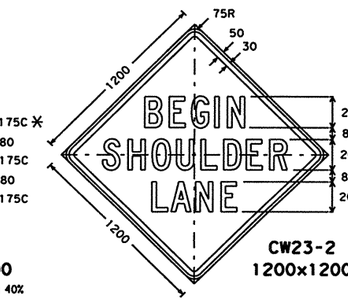


CW23-2
1200x1200

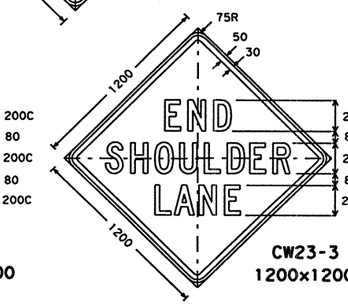


CW23-3
1200x1200

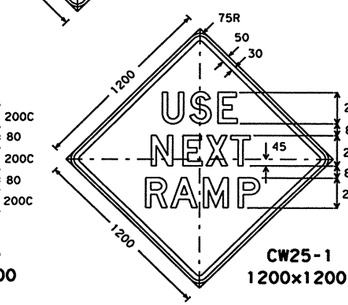


CW25-1
1200x1200

**GENERAL NOTES:**
All signs detailed on this sheet shall have Black border, legend and/or symbol on an orange Type C reflective background.

The sign dimensions shown on this sheet have been rounded, and should be considered equivalent to the English dimensions in the "1980 Standard Highway Sign Designs for Texas" manual. All dimensions are in millimeters unless otherwise noted.

STANDARD PLANS
TEXAS DEPARTMENT OF TRANSPORTATION
*Traffic Operations Division*

©2000

# BARRICADE AND CONSTRUCTION STANDARDS

CONSTRUCTION WARNING SIGNS **BC(9C)-98(M)**

| ©TxDOT February 1998 | DN: GB | CK: DTN | DW: DN | CK: GB | NEG NO.: |
|---|---|---|---|---|---|
| REVISIONS | STATE DISTRICT | FEDERAL REGION | FEDERAL AID PROJECT | | SHEET |
| | SAT | 6 | NH 2000(704),etc. | | 118 |
| | COUNTY | | CONTROL | SECTION | JOB | HIGHWAY |
| | BEXAR | | 2452 | 01 | 036,etc. | LP 1604 |

Metric 109C

| LEVELS | E | DATE: | DN: |
|---|---|---|---|
| 1 2 3 4 5 6 7 8 9 10 11 12 13 14 15 16 17 18 19 20 21 22 23 24 25 26 27 28 29 30 31 32 33 34 35 36 37 38 39 40 41 42 43 44 45 46 47 48 49 50 51 52 53 54 55 56 57 58 59 60 61 62 63 | | ACC: | CK: |
| | | FILE: | DW: |
| | | | CK: |

DISCLAIMER
The use of this standard is governed by the "Texas Engineering Practice Act". No warranty of any kind is made by TxDOT for any purpose whatsoever. TxDOT assumes no responsibility for the conversion of this standard to other formats or for incorrect results or damages resulting from its use.

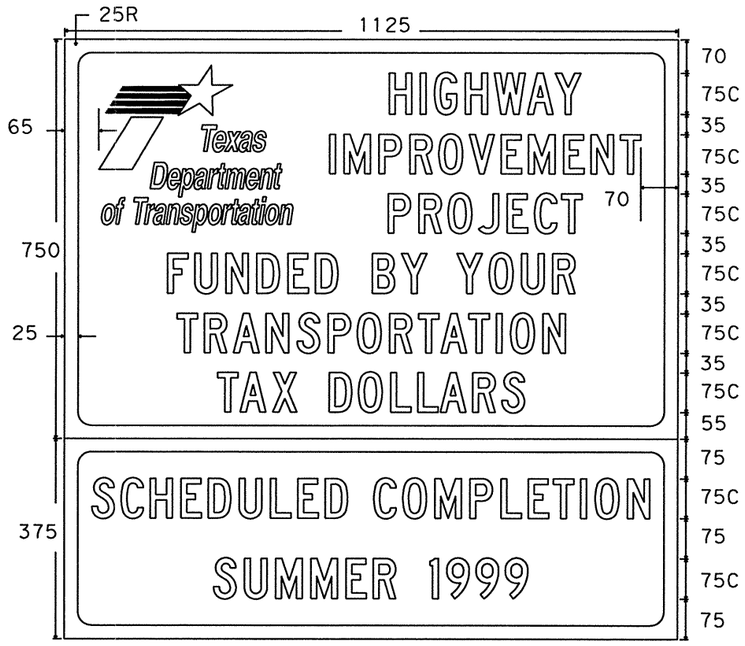


**SG20-8**

1125 x 750 sign

TxDOT logo - standard red & blue (auto decal)
Background - white
Legend & border - blue

1125 x 375 plaque
Background - blue
Legend & border - white

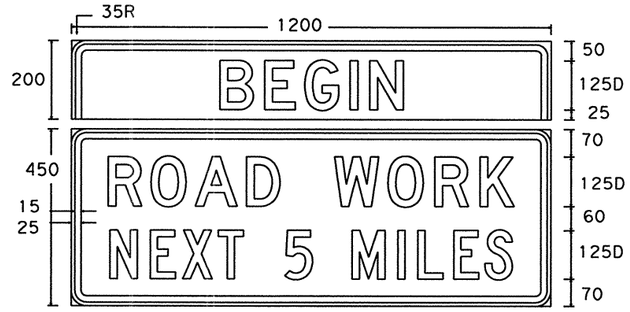


SG20-1 w/plaque
1200 X 650

Letters - Black
Numbers - Black
Border - Black
Background - Orange Refl.

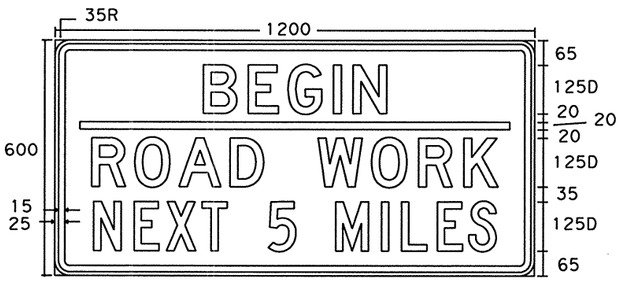


SG20-5T
1200 X 600

Letters - Black
Numbers - Black
Border - Black
Background - Orange Refl.

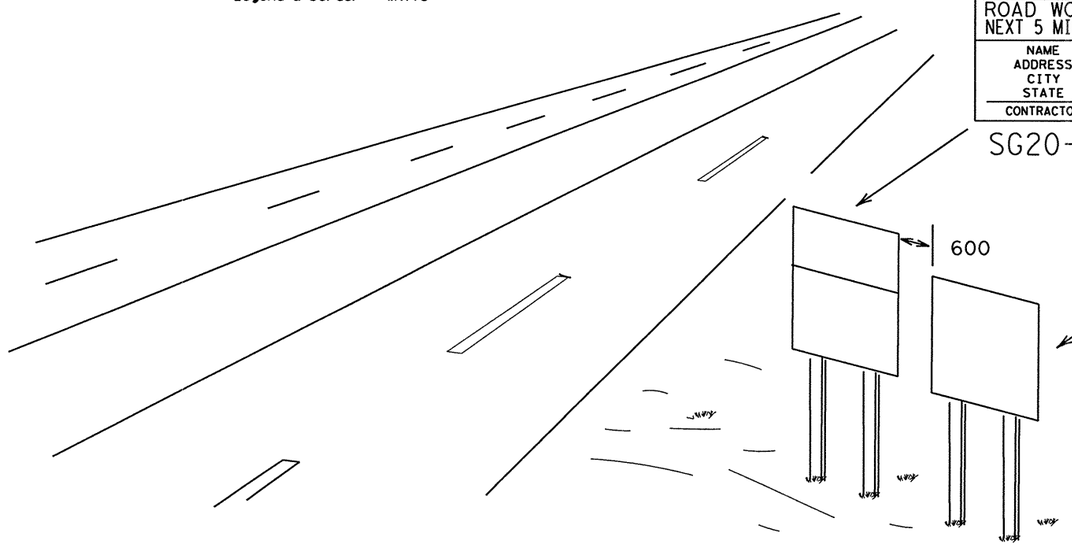


1 SG20-1 w/plaque or SG20-5T

BEGIN
ROAD WORK
NEXT 5 MILES
NAME
ADDRESS
CITY
STATE
CONTRACTOR

SG20-6

HIGHWAY IMPROVEMENT PROJECT
FUNDED BY YOUR TRANSPORTATION TAX DOLLARS
SCHEDULED COMPLETION
SUMMER 1999

SG20-8

The sign dimensions shown on this sheet have been rounded, and should be considered equivalent to the English dimensions in the "1980 Standard Highway Sign Designs for Texas" manual.

| SPECIFICATION REFERENCE TABLE | |
|---|---|
| MATERIALS AND TESTS DIVISION SPECIFICATIONS | |
| PLYWOOD SIGN BLANKS | DMS 7100 |
| ALUMINUM SIGN BLANKS | DMS 7110 |
| REFLECTIVE SHEETING, TYPE A (ENGINEER GRADE) | DMS 8300 |
| REFLECTIVE SHEETING, TYPE C (HIGH SPECIFIC INTENSITY) | DMS 8300 |
| SIGN HARDWARE | DMS 7120 |

| COLOR | USAGE | REFLECTIVE SHEETING OR OTHER MATERIAL |
|---|---|---|
| BLUE | BACKGROUND | TYPE C (HIGH SPECIFIC INTENSITY) |
| WHITE | BACKGROUND | TYPE A (ENGINEER GRADE) |
| BLUE | LEGEND & BORDER | TYPE C (HIGH SPECIFIC INTENSITY) |
| WHITE | LEGEND & BORDER | TYPE A (ENGINEER GRADE) |

GENERAL NOTES:

The alphabets and lateral spacing between letters and numerals shall conform with the "Texas Manual on Uniform Traffic Control Devices for Streets and Highways", latest edition, and any approved changes thereto. Lateral spacing of text shall provide a balanced appearance. All materials shall conform to Department Specifications.

Legend and border may be applied by reverse screening process with transparent colored ink, cut-out white reflective sheeting applied to colored background or combination thereof. Background shall be reflective sheeting (Type A).

Sign blanks for roadside mounted guide signs shall be 16 mm thick plywood (Type A) or extruded aluminum, unless otherwise noted elsewhere in the plans. Dimensions shown for borders and corner radii are nominal. Borders may vary in width as much as 10 mm. Borders and corner radii must be of matching widths. The sign area outside the corner radius need not be trimmed or rounded. Panels attached below the parent sign shall be made of the same material as the parent sign, or as specified on the sign tabulation sheet.

Mounting details are shown on Standard Plan Sheets SMD series.

The TxDOT logo is a registered trademark of the Texas Department of Transportation.

SIGN AND SUPPORTS SHALL BE CONSIDERED SUBSIDIARY TO ITEM 502, "BARRICADES, SIGNS AND TRAFFIC HANDLING."

## WOOD POST SYSTEM FOR FIXED SIGN SUPPORTS

| Nominal Post Size | No. of Posts | Maximum Sq. meters of Sign Face | Minimum Soil Embedment | Drilled Hole(s) Required |
|---|---|---|---|---|
| 90 x 90 | 1 | 1.1 | 900 | no |
| 90 x 90 | 2 | 2.0 | 900 | no |
| 90 x 140 | 1 | 2.0 | 900 | yes |
| 2 90 x 140 | 2 | 3.3 | 900 | yes |

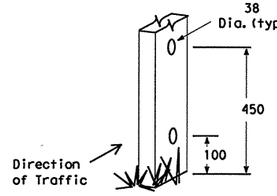


All dimensions are in millimeters unless otherwise noted.

10/99 Revision

1 Added "BEGIN" to "ROADWORK NEXT XX MILES" sign

2 Added 2 post-90 x 140 sign support

©2000

STANDARD PLANS
TEXAS DEPARTMENT OF TRANSPORTATION
*Traffic Operations Division*

# SPECIAL PUBLIC INFORMATION SIGN

## WZ(SPIS)-99(M)

| ©TxDOT May 1996 | | | DN: GRB | CK: GRB | DW: FDN | CK: CAL |
|---|---|---|---|---|---|---|
| REVISIONS | STATE DISTRICT | FEDERAL REGION | FEDERAL AID PROJECT | | | SHEET |
| 4-98 | SAT | 6 | NH 2000(704), etc. | | | 119 |
| 5-98 | COUNTY | | CONTROL | SECTION | JOB | HIGHWAY |
| 10-99 | BEXAR | | 2452 | 01 | 036, etc. | LP 1604 |

LEVELS
1 2 3 4 5 6 7 8 9 10 11 12 13 14 15 16 17 18 19 20 21 22 23 24 25 26 27 28 29 30 31 32 33 34 35 36 37 38 39 40 41 42 43 44 45 46 47 48 49 50 51 52 53 54 55 56 57 58 59 60 61 62 63
DATE:
ACC: d58hp1c/usr/d580504
FILE:
DN: LR
CK: CW
DW: DN
CK: MT

DISCLAIMER
The use of this standard is governed by the "Texas Engineering Practice Act". No warranty of any kind is made by TxDOT for any purpose whatsoever. TxDOT assumes no responsibility for the conversion of this standard to other formats or for incorrect results or damages resulting from its use.

# WORK ZONE SHORT TERM PAVEMENT MARKINGS DETAILS

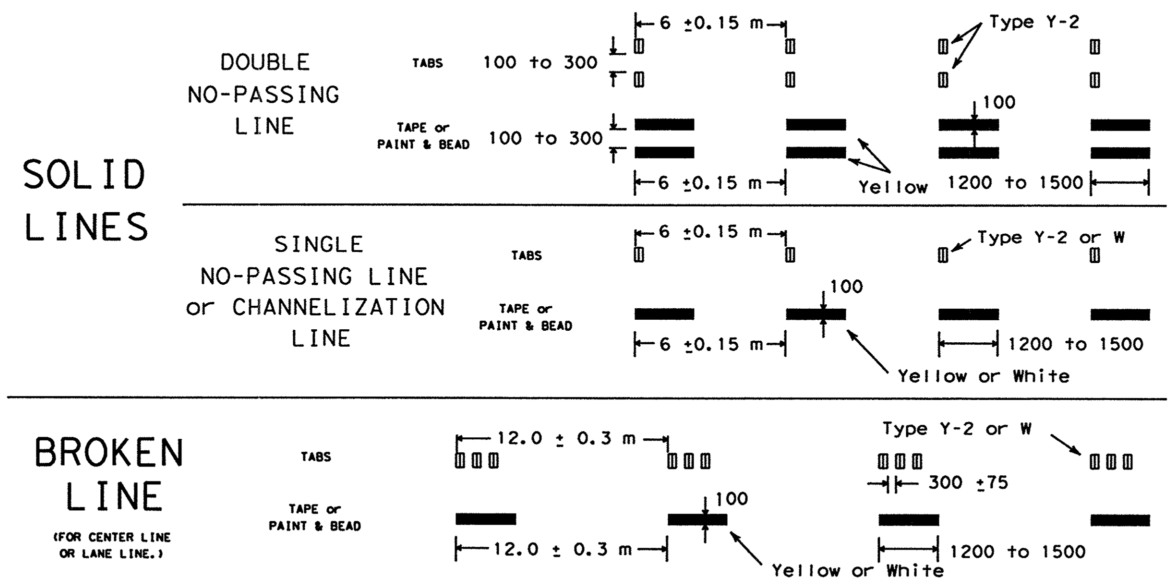


NOTES:

1. Short term pavement markings may be paint and beads, prefabricated markings (stick down tape) or temporary flexible-reflective roadway marker tabs unless otherwise specified elsewhere in plans. Paint and beads shall not be used as removable short term pavement markings.
2. Short term pavement markings shall NOT be used to simulate edge lines.
3. Dimensions indicated on this sheet are typical and approximate. Variations in size and height may occur between markers or devices made by manufacturers, by as much as 6 mm, unless otherwise noted.
4. Temporary flexible-reflective roadway marker tabs will require normal maintenance replacement when used on roadways with an ADT per lane of up to 7500 vehicles with no more than 10% truck mix. When roadways exceed these values, additional maintenance replacement of devices should be planned.
5. No segment of roadway open to traffic shall remain without standard pavement markings for a period greater than 14 calendar days. The Contractor will be responsible for maintaining short term pavement markings until standard pavement markings are in place. When the Contractor is responsible for placement of standard pavement markings, no segment of roadway shall remain without standard pavement markings for a period greater than 14 calendar days unless weather conditions prohibit placement. Standard pavement markings shall be placed as soon as weather permits.
6. For two lane, two-way roadways, DO NOT PASS signs shall be erected to mark the beginning of sections where passing is prohibited and PASS WITH CARE signs shall be erected to mark the beginning of sections where passing is permitted. Signs shall be in accordance with the TMUTCD and may be used to indicate the limits of no-passing zones for up to 14 calendar days. Standard pavement markings should then be placed.
7. For low volume two lane, two-way roadways of 4000 ADT or less, no-passing lines may be omitted when approved by the Engineer. DO NOT PASS and PASS WITH CARE signs shall be erected (see note 6).

TEMPORARY FLEXIBLE-REFLECTIVE ROADWAY MARKER TABS (TABS)

1. Temporary flexible-reflective roadway marker tabs detailed on this sheet will be designated Type Y-2 (two amber reflective surfaces with yellow body); Type Y (one amber reflective surface with yellow body); and Type W (one silver reflective surface with white body). Additional details may be found on BC(8).
2. Tabs shall meet requirements of Department Material Specification D-9-8242.
3. The body of Tabs shall consist of a base and vertical wall made of polyurethane, polyester elastomer or other material approved by the Materials and Tests Division.
4. The reflective material shall be protected with an easily removable heat resistant transparent cover capable of withstanding and protecting reflective material from application of 205 degree Celsius asphalt. Stapling or clipping devices used to retain the protective cover shall not protrude through reflective material.
5. Tabs detailed on this sheet are to be inspected and accepted by the Engineer or designated representative. Sampling and testing is not normally required, however at the option of the Engineer, either "A" or "B" below may be imposed to assure quality before placement on the roadway.
   A) Select five (5) or more tabs at random from each lot or shipment and submit to the Materials and Tests Division to determine specification compliance.
   B) Select five (5) tabs and submit to the following test. Affix five (5) tabs at 600 millimeter intervals on an asphaltic pavement in a straight line. Using a medium size passenger vehicle or pickup, run over the markers with front and rear wheels at a speed of 35 to 40 miles per hour, four times in each direction. No more than one (1) out of five reflective surfaces shall be lost or displaced as a result of this test.
6. When dry, tabs shall be visible for a minimum distance of 60 meters during normal daylight hours and when illuminated by automobile low-beam headlight at night, unless sight distance is restricted by roadway geometrics.
7. No two consecutive tabs nor four tabs per 300 meters of line shall be missing or fail to meet the visual performance requirements of note 6.

REMOVABLE - PREFABRICATED PAVEMENT MARKINGS

1. Prefabricated Pavement Markings shall be a material of manufacture and product code or designation shown on list of approved materials covered by Materials and Tests Divisions Specification: D-9-8241.

NON REMOVABLE - PREFABRICATED PAVEMENT MARKINGS (FOIL BACK)

1. Prefabricated Pavement Markings shall be a material of manufacture and product code or designation shown on list of approved material covered by Specification TxDOT- 550-74-01.

RAISED PAVEMENT MARKERS

1. Raised pavement markers used to supplement short term removable pavement markings shall meet the requirements of Item "RAISED PAVEMENT MARKERS".

# WORK ZONE SHORT TERM PAVEMENT MARKINGS PATTERNS

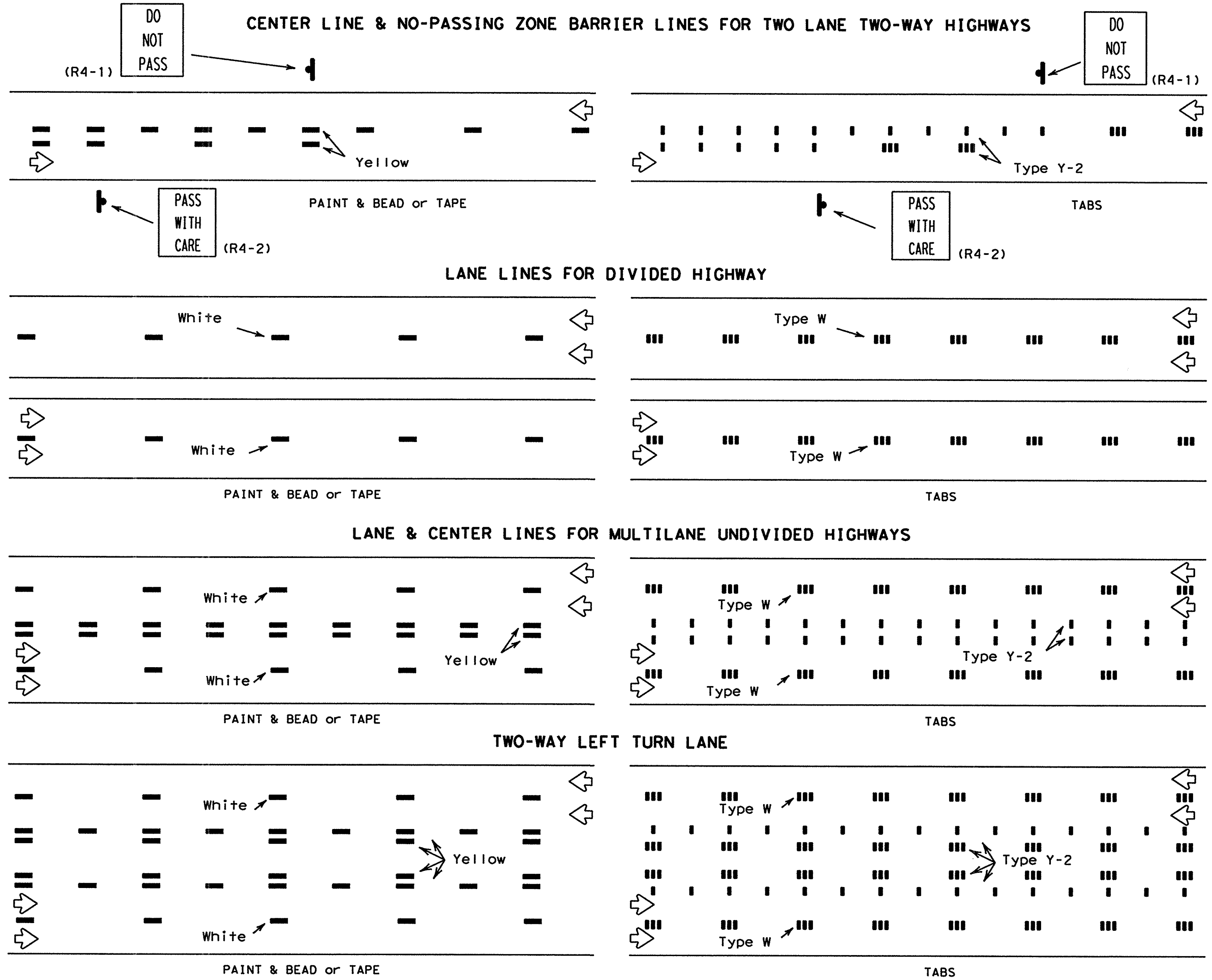


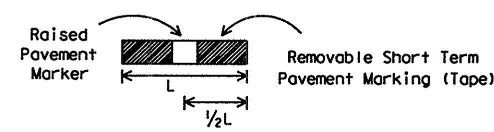


If raised pavement markers are used to supplement REMOVABLE short term markings, the markers shall be applied to the top of the tape at the approximate mid length of the tape. This allows an easier removal of raised markers and tape.

| SPECIFICATION REFERENCE TABLE | |
|---|---|
| MATERIALS AND TESTS DIVISION SPECIFICATIONS | |
| PREFABRICATED PAVEMENT MARKINGS-REMOVABLE | D-9-8241 |
| TEMPORARY FLEXIBLE-REFLECTIVE ROADWAY MARKER TABS | D-9-8242 |
| PAVEMENT MARKERS (REFLECTORIZED) | D-9-4200 |

All dimensions are in millimeters unless otherwise noted.

STANDARD PLANS
TEXAS DEPARTMENT OF TRANSPORTATION
*Traffic Operations Division*

© 2000

# WORK ZONE SHORT TERM PAVEMENT MARKINGS

WZ(STPM)-97(M)

| ©TxDOT April 1992 | DN: LR | CK: | DW: DN | CK: MT | NEG NO.: |
|---|---|---|---|---|---|
| REVISIONS | STATE DISTRICT | FEDERAL REGION | FEDERAL AID PROJECT | | SHEET |
| 1-97 | SAT | 6 | NH 2000(704),etc. | | 120 |
| | COUNTY | CONTROL | SECTION | JOB | HIGHWAY |
| | BEXAR | 2452 | 01 | 036,etc. | LP 1604 |

| DN: | CK: | DW: | CK: |
|---|---|---|---|
| DATE: | ACC: | FILE: | |

DISCLAIMER
The use of this standard is governed by the "Texas Engineering Practice Act". No warranty of any kind is made by TxDOT for any purpose whatsoever. TxDOT assumes no responsibility for the conversion of this standard to other formats or for incorrect results or damages resulting from its use.

## CONCRETE TRAFFIC BARRIER (CTB)

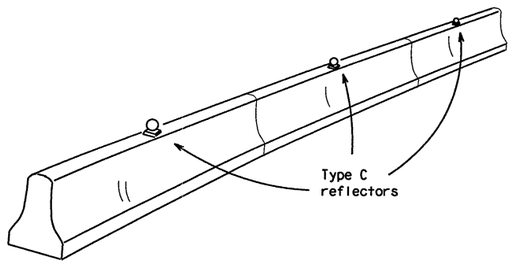


NOTE:
Pavement markers or temporary flexible-reflective roadway marker tabs shall NOT be used as barrier delineation.

## LOW PROFILE CONCRETE BARRIER (LPCB)

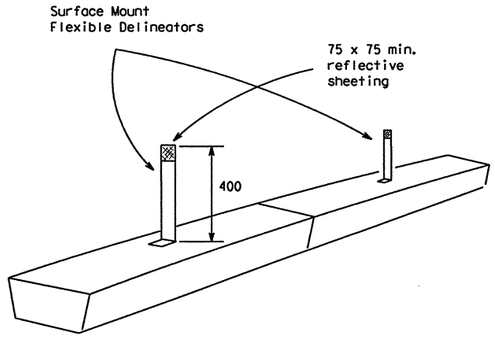


Barrier reflectors will be installed only on barriers designated for reflectorization as required elsewhere in the plans.

Reflectors should be mounted one reflector per section of barrier, preferably in the center.

Maximum spacing of reflectors is 12 meters for CTB and 6 meters for LPCB. Mount reflectors to barrier with construction adhesive or butyl rubber adhesive.

Color of barrier reflectors will conform to the Texas "Manual on Uniform Traffic Control Devices", (TMUTCD).

## BARRIER DELINEATION WITH SAFETY GLARE FENCE

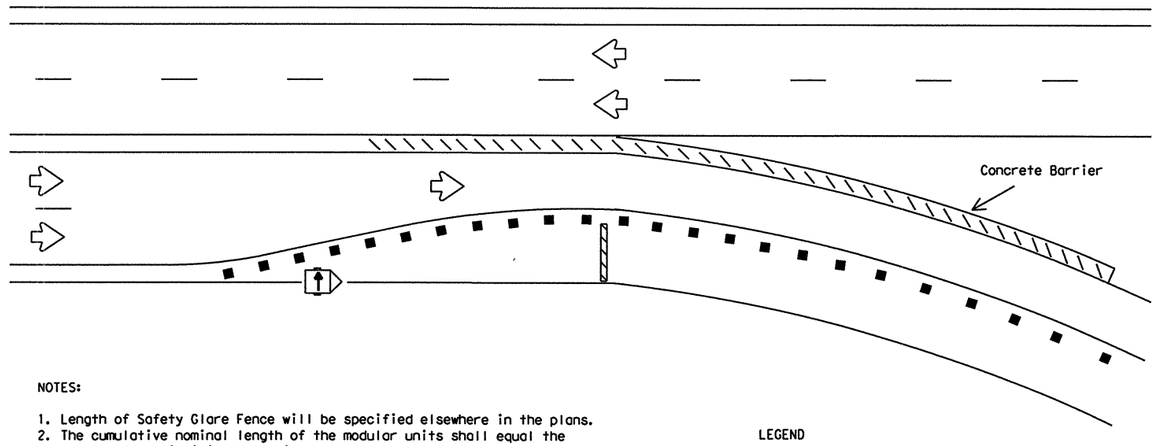


NOTES:

1. Length of Safety Glare Fence will be specified elsewhere in the plans.
2. The cumulative nominal length of the modular units shall equal the length of the individual sections of temporary concrete traffic barrier on which they are installed so the joint between barrier sections will not be spanned by any one unit.
3. Panel/blades will be designed such that reflective sheeting conforming with Departmental Specification D-9-8300, Type C, minimum size of 50 by 300 mm can be attached to the edge of the panel/blade. The sheeting shall be attached to one panel/blade per section of concrete barrier not to exceed a spacing of 9 meters. Barrier reflectors are not necessary when panel/blades are installed.

LEGEND

- Barricade
- Channelizing devices
- Trailer mounted flashing arrow panel
- Safety glare fence

## DELINEATION OF SAFETY END TREATMENTS

⚠1

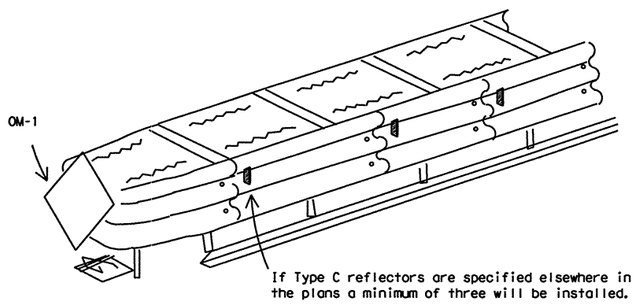


| | APPROACHING TRAFFIC | |
|---|---|---|
| | BOTH SIDES | ONE SIDE |
| DELINEATION | OM-1 | OM-3 or Vertical Panel |

## REFLECTORS FOR CONCRETE TRAFFIC BARRIER, AND ATTENUATORS

Type C reflectors may be installed using pop rivets, nuts and bolts, construction adhesive or butyl rubber adhesive.

Type C reflectors shall be prequalified and shall conform to the color and reflectivity requirements of Specification D-9-8600.

Color of Type C reflector will be the same as the nearest edge line, gore pavement marking or as directed by the Engineer.

Unless stated elsewhere in the plans, delineation and reflectors shown on this standard shall be considered subsidiary to the various bid items.

PREQUALIFICATION PROCEDURES ARE OBTAINED FROM:

MATERIALS AND TESTS DIVISION
TEXAS DEPARTMENT OF TRANSPORTATION (TxDOT)
125 EAST 11th STREET
AUSTIN, TX 78701-2483

SPECIFICATION REFERENCE TABLE
MATERIALS AND TESTS DIVISION SPECIFICATIONS

| | |
|---|---|
| EPOXY | D-9-6100 |
| BITUMINOUS ADHESIVE | D-9-6130 |
| ALUMINUM SIGN BLANKS | D-9-7110 |
| FLAT SURFACE REFLECTIVE SHEETING, TYPE C (HIGH SPECIFIC INTENSITY) | D-9-8300 |
| DELINEATOR AND OBJECT MARKER | D-9-8600 |

All dimensions are in millimeters unless otherwise noted.

10/99 Revision

⚠1 Remove drum mounted guard fence

©2000

STANDARD PLANS
*Texas Department of Transportation*
*Traffic Operations Division*

# WORK ZONE BARRIER DELINEATION

## WZ(BD)-99(M)

| ©TxDOT April 1992 | DN: GRB | CK: GRB | DW: FDN | CK: CAL |
|---|---|---|---|---|
| REVISIONS 8-95 1-97 10-99 | STATE DISTRICT: SAT | FEDERAL REGION: 6 | FEDERAL AID PROJECT: NH 2000(704), etc. | SHEET: 121 |
| COUNTY: BEXAR | CONTROL: 2452 | SECTION: 01 | JOB: 036, etc. | HIGHWAY: LP 1604 |

LEVELS
1 2 3 4 5 6 7 8
9 10 11 12 13 14 15 16
17 18 19 20 21 22 23 24
25 26 27 28 29 30 31 32
33 34 35 36 37 38 39 40
41 42 43 44 45 46 47 48
49 50 51 52 53 54 55 56
57 58 59 60 61 62 63
SET
DATE:
ACC:
FILE:
DN:
CK:
DW:
CK:

DISCLAIMER
The use of this standard is governed by the "Texas Engineering Practice Act". No warranty of any kind is made by TxDOT for any purpose whatsoever. TxDOT assumes no responsibility for the conversion of this standard to other formats or for incorrect results or damages resulting from its use.

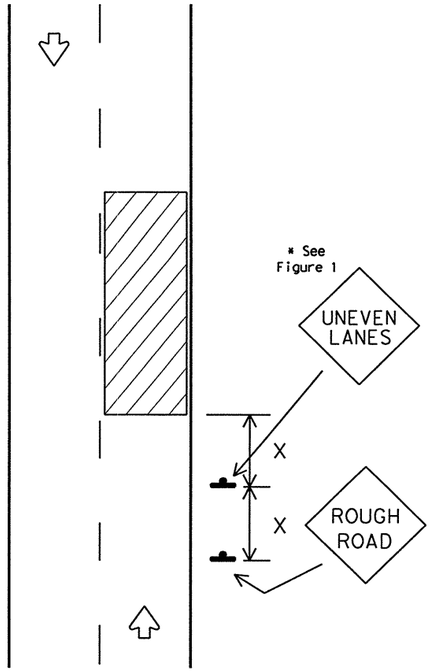


Signing shown for one direction.

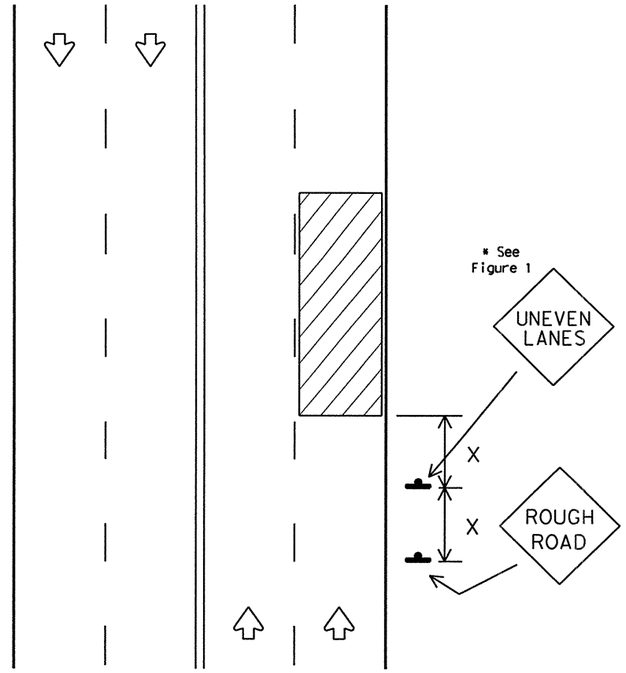


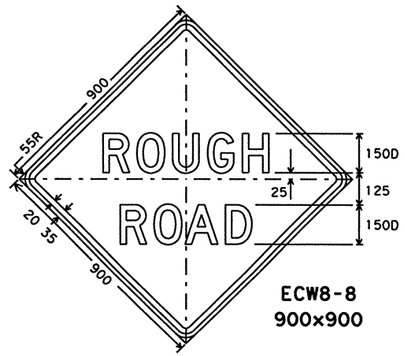


ECW8-8
900x900

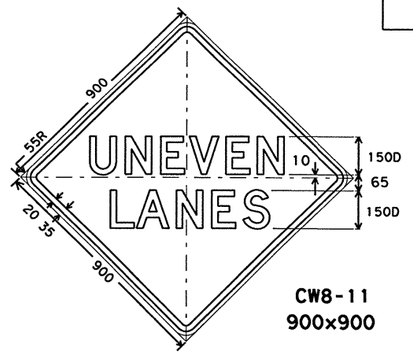


CW8-11
900x900

# TRAFFIC CONTROL DURING PLANING, OVERLAY AND LEVELING OPERATIONS ARE SHOWN ELSEWHERE IN THE PLANS.

FIGURE 1

| Edge Condition | Edge Height (D) | Warning Devices |
|---|---|---|
| 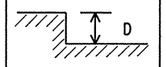 | less than or equal to 25 mm<br><br>greater than 25 to:<br>30 mm (maximum-planing)<br>35 mm (typical-overlay) | Signs: ECW8-8<br><br>Signs: CW8-11, ECW8-8 |

Distance "D" may be a maximum of 30 mm for planing operations and 50 mm for overlay operations if uneven lanes are open to traffic after work operations cease.

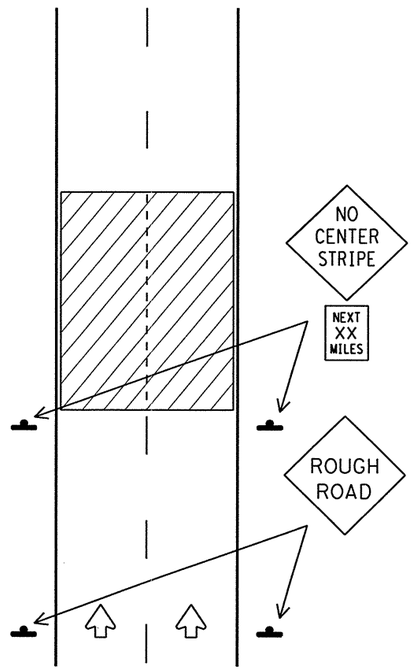


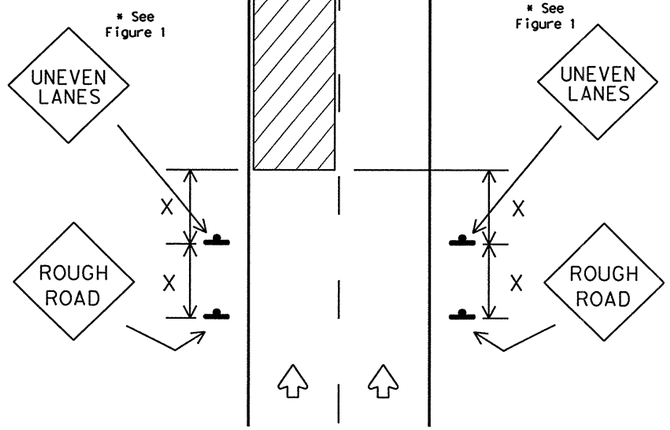


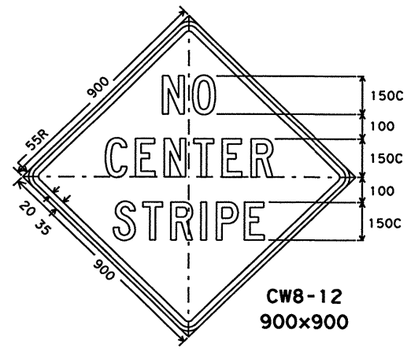


CW8-12
900x900

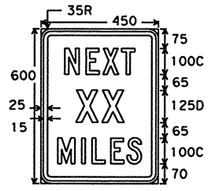


CW21-16
450x600

SPECIFICATION REFERENCE TABLE

| MATERIALS AND TESTS DIVISION SPECIFICATIONS | |
|---|---|
| PLYWOOD SIGN BLANKS | D-9-7100 |
| ALUMINUM SIGN BLANKS | D-9-7110 |
| SIGN HARDWARE | D-9-7120 |
| PREFABRICATED PAVEMENT MARKINGS-PERMANENT | D-9-8240 |
| PREFABRICATED PAVEMENT MARKINGS-REMOVABLE | D-9-8241 |
| REFLECTIVE SHEETING, TYPE A (ENGINEER GRADE) (FOR WHITE SERIES SIGNS ON THIS SHEET) | D-9-8300 |
| REFLECTIVE SHEETING, TYPE C (HIGH SPECIFIC INTENSITY) (FOR ORANGE SERIES SIGNS ON THIS SHEET) | D-9-8300 |

GENERAL NOTES:

1. If spalling or holes occur, ROUGH ROAD signs should be placed in advance of the condition and may be repeated throughout the project.
2. UNEVEN LANES sign (CW8-11) should be installed in advance of the condition and repeated every 1.6 km. Signs installed along the uneven lane condition may be supplemented with the NEXT XX MILES sign (CW21-16) or Advisory Speed sign (CW13-1).
3. NO CENTER STRIPE signs (CW8-12) should be installed if centerlines or lane lines are obscured or obliterated. The signs should remain in place until standard pavement markings are installed.
4. Signs shall be spaced at the distances recommended as per BC standards.
5. When operations are completed and final surface treatment will not be applied as part of this project, advance signs shall be left in place and become the property of the State. These signs shall be installed on driveable sign supports as per Department standards. Additional signs may be required as directed by the Engineer. Minimum mounting height of signs is 2.1 meters minimum. Signs shall remain in place until final surface is applied. Signs shall be considered subsidiary to the Item "BARRICADES, SIGNS AND TRAFFIC HANDLING."
6. Pavement markings shall be replaced as operations proceed. Raised reflective pavement markers or prefabricated foil backed tape should be used.
7. Short term markings shall not be used to simulate edge lines.

All dimensions are in millimeters unless otherwise noted.

**GENERAL NOTES:**
All signs detailed on this sheet shall have black border, legend and/or symbol on an orange reflective background.

© 2000

STANDARD PLANS
TEXAS DEPARTMENT OF TRANSPORTATION
*Traffic Operations Division*

# SIGNING FOR UNEVEN LANES

## WZ(UL)-98(M)

| © TxDOT April 1992 | DN-MT | CK- | DW-DN | CK-MT | REG NO.- |
|---|---|---|---|---|---|
| REVISIONS 8-95 1-97 2-98 | STATE DISTRICT: SAT | FEDERAL REGION: 6 | FEDERAL AID PROJECT: NH 2000(704),etc. | | SHEET: 122 |
| COUNTY: BEXAR | CONTROL: 2452 | SECTION: 01 | JOB: 036,etc. | | HIGHWAY: LP 1604 |

LEVELS 1 2 3 4 5 6 7 8 | 1 9 17 25 33 41 49 57 65 | 2 10 18 26 34 42 50 58 66 | 3 11 19 27 35 43 51 59 67 | 4 12 20 28 36 44 52 60 68 | 5 13 21 29 37 45 53 61 69 | 6 14 22 30 38 46 54 62 70 | 7 15 23 31 39 47 55 63 71 | 8 16 24 32 40 48 56 64 72

SHT 1: 1 4 15 16 | DATE: | ACC: | FILE: | DN: | CK: | DW: | CK:

DISCLAIMER
The use of this standard is governed by the "Texas Engineering Practice Act". No warranty of any kind is made by TxDOT for any purpose whatsoever. TxDOT assumes no responsibility for the conversion of this standard to other formats or for incorrect results or damages resulting from its use.

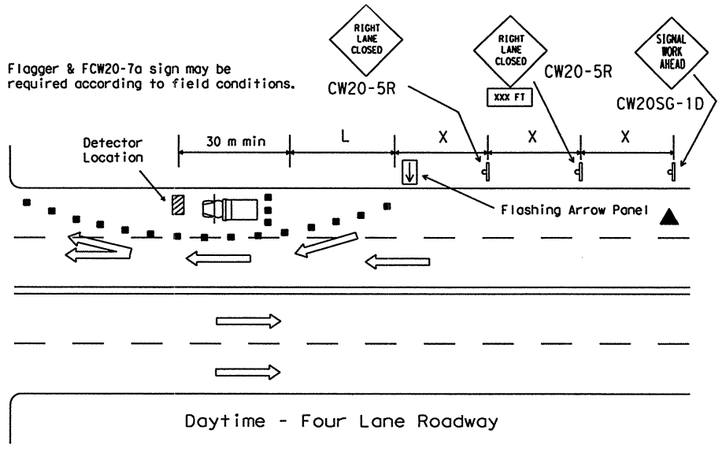


| Posted Speed | Formula | Minimum Desirable Taper Lengths ** 3.0 m Offset (meters) | 3.3 m Offset (meters) | 3.6 m Offset (meters) | Suggested Maximum Spacing of Device On a Taper (meters) | On a Tangent (meters) | Minimum Sign Spacing X Distance (meters) |
|---|---|---|---|---|---|---|---|
| 30 | $L=\frac{WS^2}{60}$ | 45 | 50 | 55 | 9 | 15-20 | 40 |
| 35 | | 65 | 70 | 75 | 10 | 20-25 | 50 |
| 40 | | 80 | 90 | 100 | 12 | 25-30 | 75 |
| 45 | L=WS | 135 | 150 | 165 | 13 | 25-30 | 100 |
| 50 | | 150 | 165 | 180 | 15 | 30-35 | 120 |
| 55 | | 165 | 185 | 200 | 16 | 35-40 | 150 |
| 60 | | 180 | 200 | 220 | 18 | 40-45 | * 180 |
| 65 | | 195 | 215 | 235 | 19 | 40-50 | * 210 |
| 70 | | 210 | 235 | 255 | 20 | 40-50 | * 240 |

* Conventional Roads Only

** Taper lengths have been rounded off.
L=Length of Taper (m) W=Width of Offset (m) S=Posted Speed (MPH)

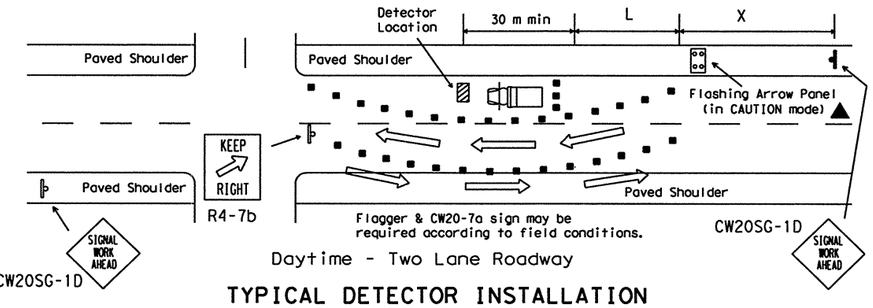


## TYPICAL DETECTOR INSTALLATION

OR OTHER WORK OPERATIONS THAT ARE SHORT TERM OR SHORT DURATION

Nighttime Channelizing Devices shall be reflectorized.

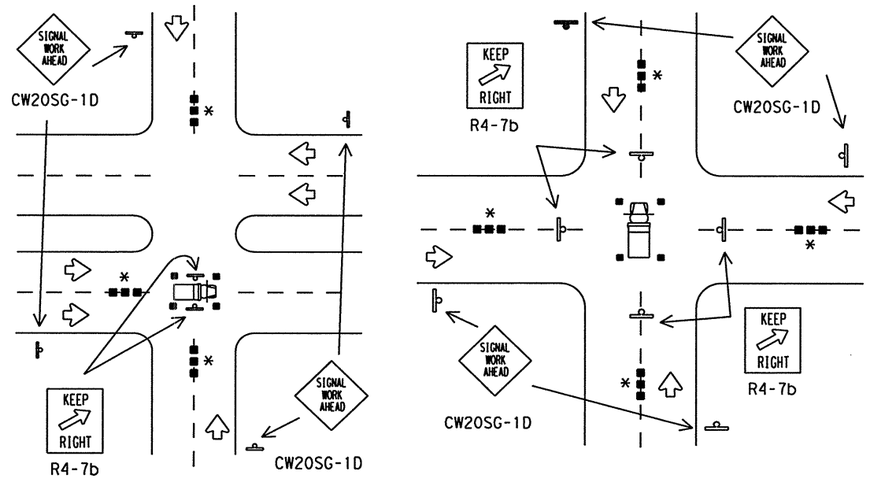


## TYPICAL HANGING SIGNAL INSTALLATIONS

OR OTHER WORK OPERATIONS THAT ARE SHORT TERM OR SHORT DURATION

* Advance warning channelizing devices are optional.

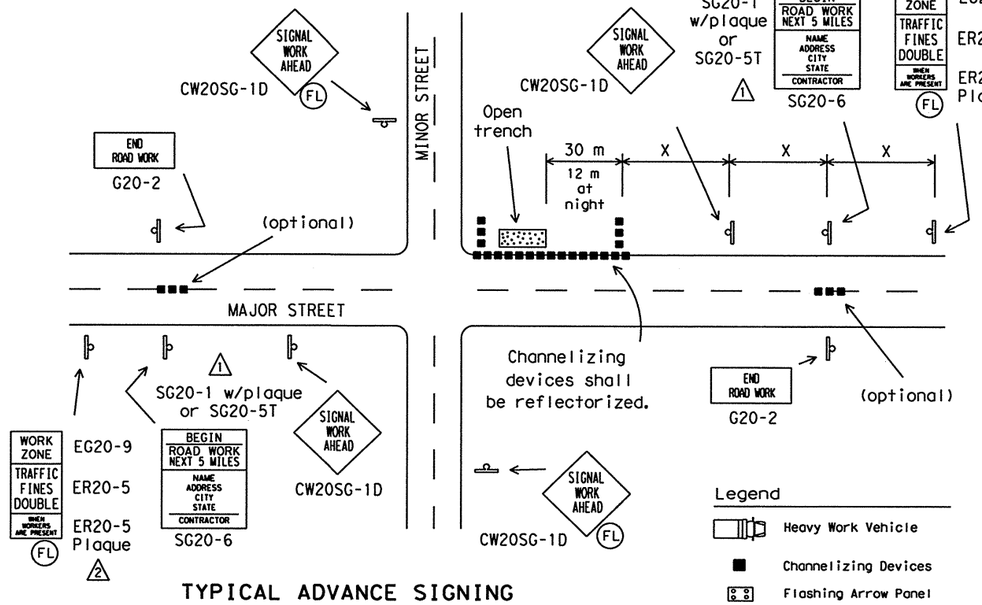


## TYPICAL ADVANCE SIGNING

FOR LONG TERM and INTERMEDIATE-TERM STATIONARY WORK OPERATIONS

Observe Warning Signs State Law (R20-3) may be required if called for elsewhere in the plans.
Location will be as directed by the Engineer.

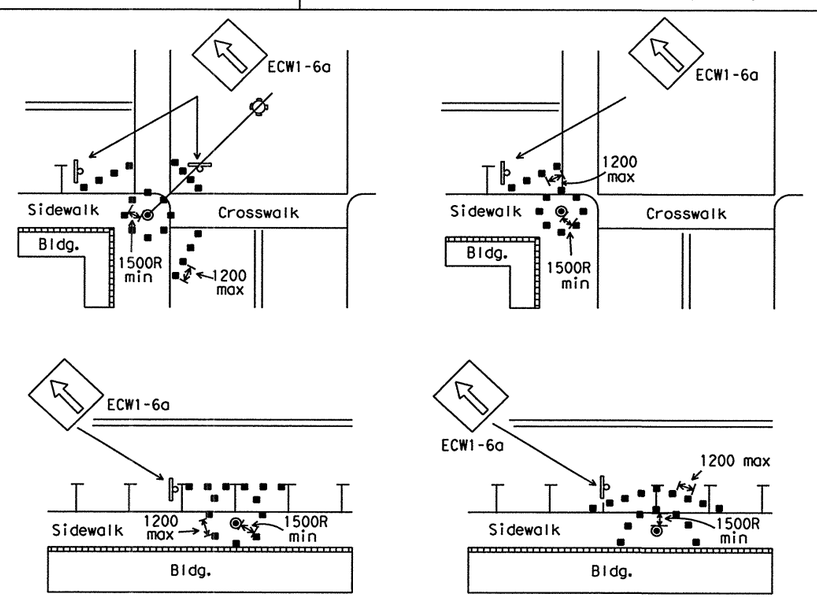


Channelizing devices should not be placed closer than 1500 mm radius (minimum) to signal poles.
Parking may be eliminated by placing channelizing devices in spaces.
If pedestrian walkways are blocked, refer to TMUTCD.

## TYPICAL RESTRICTED PEDESTRIAN MOVEMENTS

FOR ALL WORK OPERATIONS REGARLESS OF WORK DURATION

▲ The arrow panel may be omitted when stated elsewhere in the plans.

Typical channelizing device is the 700 mm cone. Plastic drums or vertical panels may be used if approved by the Engineer. Metal drums shall NOT be used as a channelizing device or sign support.

For several closely adjoining projects, advance signing may not be required in advance of each intersection, but only in advance of the intersections at the project limits. See details elsewhere in the plans for advance signing requirements.

Advance signs shall be in place when signal construction operations are in progress. The contractor shall remove advance signs when no construction operations are underway. Obstructions or hazards at the work area shall be clearly marked and delineated at all times.

All holes, trenches or other hazardous areas shall be adequately protected by lights or other protective devices. Trenches shall be covered or surrounded with orange plastic construction fence as directed by the Engineer.

Flagger and FCW20-7a sign may be required according to field conditions. Vehicles parked in roadway shall be equipped with two strobes. High level flags at corners of vehicle may also be used. Work operations that require work vehicle in traveled way 20 minutes or less may use cones, high level flags and strobes as advance warning devices. Cones should only be placed around vehicle. Flaggers may be used on high speed rural intersections.

All dimensions are in millimeters unless otherwise noted.

10/99 Revision

1 Added "BEGIN" to "ROADWORK NEXT XX MILES" sign

2 Added "WHEN WORKERS ARE PRESENT" plaque

© 2000

STANDARD PLANS
Texas Department of Transportation
Traffic Operations Division

# TRAFFIC SIGNAL INSTALLATION TYPICAL DETAILS

SHEET 1 OF 2

WZ(BTS-1)-99(M)

| © TxDOT April 1992 | DN: - GRB | CK: - GRB | DW: - FDN | CK: - CAL |
|---|---|---|---|---|

| REVISIONS | STATE DISTRICT | FEDERAL REGION | FEDERAL AID PROJECT | SHEET |
|---|---|---|---|---|
| 1-97 | SAT | 6 | NH 2000(704),etc. | 123 |
| 2-98 | COUNTY | | CONTROL SECTION JOB | HIGHWAY |
| 4-98 | BEXAR | | 2452 01 036,etc. | LP 1604 |
| 10-99 | | | | |

DN: LR CK: CW DW: DN CK: MT

LEVELS 1 2 3 4 5 6 7 8 9 10 11 12 13 14 15 16 17 18 19 20 21 22 23 24 25 26 27 28 29 30 31 32 33 34 35 36 37 38 39 40 41 42 43 44 45 46 47 48 49 50 51 52 53 54 55 56 57 58 59 60 61 62 63

DATE: FILE:

# TYPICAL SIGNS USED IN TRAFFIC SIGNAL CONSTRUCTION AREAS

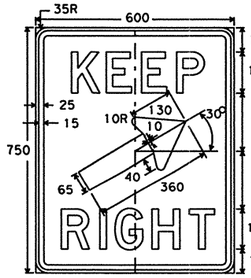


**R4-7b**
**600 x 750**

Letters - Black
Symbol - Black
Border - Black
Background - White Refl.

R4-8b

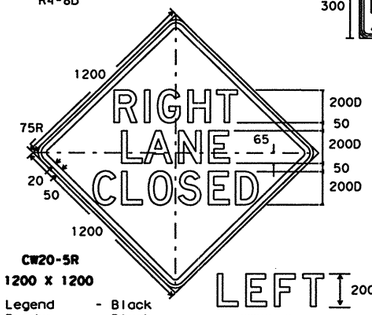


**CW20-5R**
**1200 x 1200**

CW20-5L

Legend - Black
Border - Black
Background - Orange Refl.

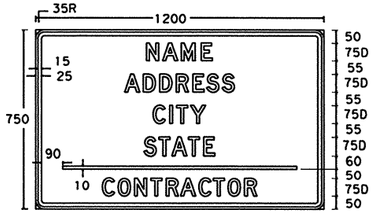


**SG20-6**
**1200 x 750**

Letters - Black
Border - Black
Background - Orange or White Refl.

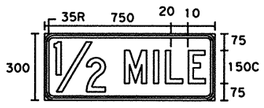


**Distance Plaque**
**750 x 300**

Alternate legends

1500 FT 150C
1000 FT 150C
500 FT 150C
1 MILE 150C

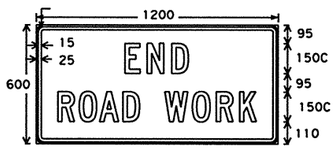


**G20-2a**
**1200 x 600**

Letters - Black
Border - Black
Background - Orange Refl.

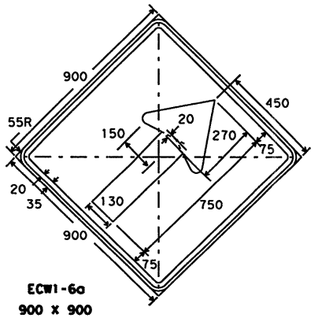


**ECW1-6a**
**900 x 900**

Legend - Black
Border - Black
Background - Orange Refl.

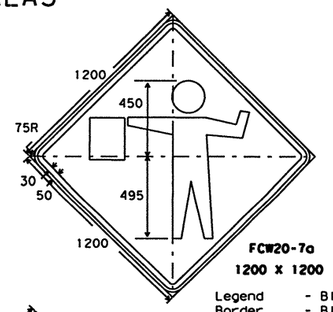


**FCW20-7a**
**1200 x 1200**

Legend - Black
Border - Black
Background - Orange Refl.

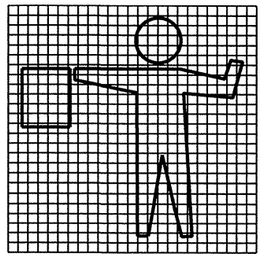

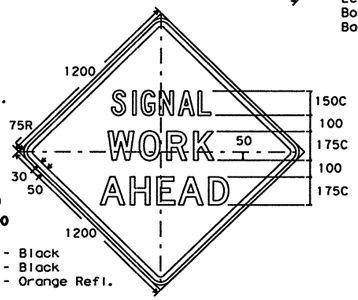


**CW20SG-1D**
**1200 x 1200**

Letters - Black
Border - Black
Background - Orange Refl.

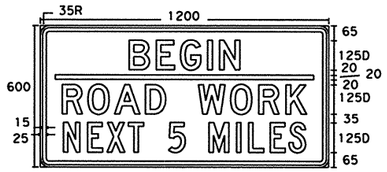


⚠1

**SG20-5T**
**1200 x 600**

Letters - Black
Border - Black
Background - Orange Refl.

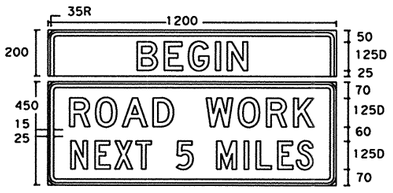


⚠1

**SG20-1 w/plaque**
**1200 x 650**

Letters - Black
Border - Black
Background - Orange Refl.

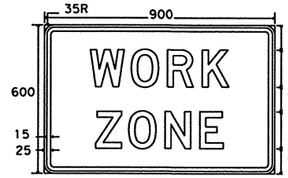


**EG20-9**
**900 x 600**

Letters - Black
Border - Black
Background - Orange Refl.

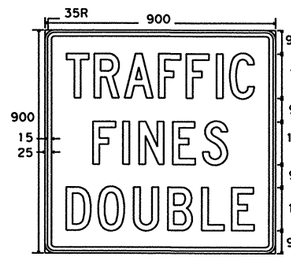


**ER20-5**
**900 x 900**

Letters - Black
Border - Black
Background - White Refl.

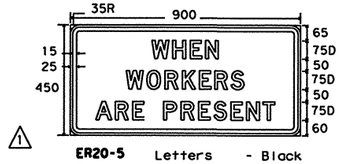


⚠1

**ER20-5**
**Plaque**
**900 x 450**

Letters - Black
Border - Black
Background - White Refl.

All dimensions are in millimeters unless otherwise noted.

# TYPICAL SIGN SUPPORTS

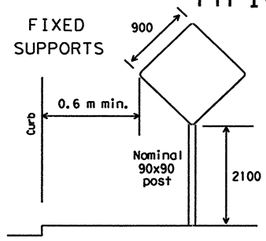


WOOD POST SIGN SUPPORT: for 900 x 900 and smaller warning signs, and other signs having an area not exceeding 0.9 sq.m.

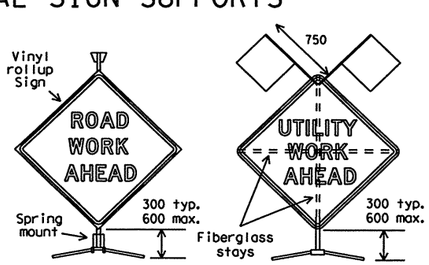


⚠2 PORTABLE SUPPORTS
Short Term Stationary/Short Duration

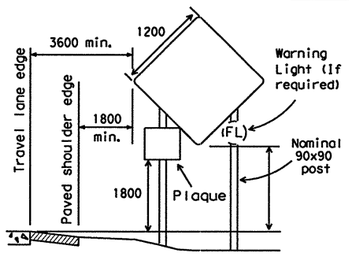


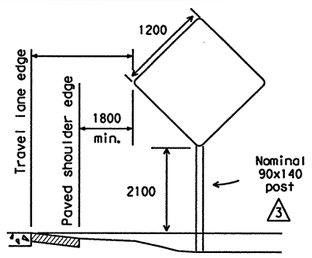


WOOD POST SIGN SUPPORT: for 1200 x 1200 warning signs.

Signs erected on fixed supports shall be at a minimum height of 2100 mm.
Embedment depth for wood sign supports and post type barricades should be 900 mm minimum, unless specified elsewhere in the plans.
Driveable sign supports may be used and shall be installed in accordance with the manufacturer's recommendations.

# WOOD POST SYSTEM FOR FIXED SIGN SUPPORTS

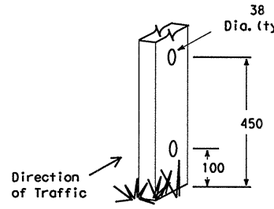


| Nominal Post Size | No. of Posts | Maximum Sq. meters of Sign Face | Minimum Soil Embedment | Drilled Hole(s) Required |
|---|---|---|---|---|
| 90 x 90 | 1 | 1.1 | 900 | no |
| 90 x 90 | 2 | 2.0 | 900 | no |
| 90 x 140 | 1 | 2.0 | 900 | yes |
| 90 x 140 | 2 | 3.3 | 900 | yes |

⚠4

| SPECIFICATION REFERENCE TABLE | |
|---|---|
| MATERIALS AND TESTS DIVISION SPECIFICATIONS | |
| PLYWOOD SIGN BLANKS | DMS 7100 |
| ALUMINUM SIGN BLANKS | DMS 7110 |
| FLAT SURFACE REFLECTIVE SHEETING, TYPE A (ENGINEER GRADE) | DMS 8300 |
| FLAT SURFACE REFLECTIVE SHEETING, TYPE B (SUPER ENGINEER GRADE) | DMS 8300 |
| FLAT SURFACE REFLECTIVE SHEETING, TYPE C (HIGH SPECIFIC INTENSITY) | DMS 8300 |

**GENERAL**

Standard signs shall be used as required by the BC Standard sheets, the plans, or as directed by the Engineer to regulate, warn, and guide traffic. All sign usage and erection shall be in strict accordance with the "Texas Manual on Uniform Traffic Control Devices for Streets and Highways" (TMUTCD). The Contractor shall maintain each sign as directed by the Engineer.

The Contractor may use either the sign designs shown on the BC Standard Sheets, or those sign designs shown in the "Standard Highway Sign Designs for Texas " (SHSD). All work zone signs provided for in the TMUTCD but not detailed in the plans may be used when directed by the Engineer.

**REFLECTIVE SHEETING**

Reflectorized signs shall be constructed of retroreflective sheeting meeting the color and reflectivity requirements of Material Specification, DMS 8300 or DMS 8310. Day only is defined as a device that is used only during daylight hours.

Type A, B or C sheeting may be used for all, day only, applications. Type A sheeting should be used for all, white background, regulatory signs. Type C sheeting shall be used for all other applications.

The above applications of sheeting grades to different type signs will apply unless otherwise specified in the plans.

TYPE A = Engineer Grade
TYPE B = Super Engineer Grade
TYPE C = High Specific Intensity

**WORK DURATION TERMINOLOGY**-(as defined by the "Texas Manual on Uniform Traffic Control Devices" Part VI)

Long-term Stationary = occupies a location 3 or more days;
Intermediate-term Stationary = occupies a location from overnight to 3 days;
Short-term Stationary = daylight work that occupies a location from 1 to 12 hours;
Short Duration = occupies a location up to 1 hour.

**SUPPORTS AND MOUNTING HEIGHT**

The bottom of Long-term / Intermediate-term signs shall be at least 2.1 meters above the paved surface. The bottom of any supplementary plaques shall be at least 1.8 meters above the paved surface.

The bottom of Short-term / Short Duration signs shall be a minimum of 300 mm above the pavement surface but no more than 600 mm above the ground. Long-term / Intermediate-term Signs may be used in lieu of Short-term / Short Duration signing. Short-term / Short Durations signs shall be used only during daylight and removed at the end of the workday.

Regulatory signs shall be mounted at least 2.1 meters above the paved surface regardless of work duration.

**SIGN SUPPORT WEIGHTS**

Where sign supports require the use of weights to keep from turning over, the use of some type of sandbag is recommended. The use of pieces of rock, concrete, iron, steel or other solid objects will not be permitted. Sandbags shall only be placed along or upon the base supports of the device and shall not be suspended above ground level or hung with rope, wire, chains or other fasteners.

**REMOVING OR COVERING**

When sign messages may be confusing or no longer apply, the signs and supports shall be removed from roadway and shoulder, or the signs shall be completely covered. Turning signs from motorists view will not be allowed. When signs are covered the material used shall be opaque, such as heavy mil black plastic. Burlap shall not be used to cover signs. Signs shall be removed upon completion of the work.

Duct tape or other adhesive material shall not be affixed to sign face.

10/99 Revision
⚠1 Added new signs
⚠2 Added details of Short Term sign supports
⚠3 Added detail for use of 1 - 90x140 post
⚠4 Added chart to page

**Only pre-qualified products shall be used. A list of compliant products and their sources may be obtained by writing, calling or faxing:**

**Standards Engineer**
**Traffic Operations Division - TE**
**Texas Department of Transportation**
**125 East 11th Street**
**Austin, Texas 78701-2483**
**Phone (512) 416-3120**
**Fax (512) 416-3161**
**E-mail TRF-STANDARD@mailgw.dot.state.tx.us**

DISCLAIMER
The use of this standard is governed by the "Texas Engineering Practice Act". No warranty of any kind is made by TxDOT for any purpose whatsoever. TxDOT assumes no responsibility for the conversion of this standard to other formats or for incorrect results or damages resulting from its use.

DN: LR
CK: CW
DW: DN
CK: MT

DATE:
FILE:

LEVELS
1 2 3 4 5 6 7 8
17 18 19 20 21 22 23 24 25 26 27 28 29 30 31 32
33 34 35 36 37 38 39 40 41 42 43 44 45 46 47 48
49 50 51 52 53 54 55 56 57 58 59 60 61 62 63

© 2000

**STANDARD PLANS**
**TEXAS DEPARTMENT OF TRANSPORTATION**
*Traffic Operations Division*

# TRAFFIC SIGNAL INSTALLATION BARRICADES AND SIGNS

SHEET 2 OF 2 **WZ(BTS-2)-99(M)**

© TxDOT April 1992

| DN: GRB | CK: GRB | DW: FDN | CK: CAL |
|---|---|---|---|

| REVISIONS | STATE DISTRICT | FEDERAL REGION | FEDERAL AID PROJECT | SHEET |
|---|---|---|---|---|
| 1-97 | SAT | 6 | NH 2000(704),etc. | 124 |
| 2-98 | | | | |
| 4-98 | | | | |
| 10-99 | | | | |

| COUNTY | CONTROL | SECTION | JOB | HIGHWAY |
|---|---|---|---|---|
| BEXAR | 2452 | 01 | 036,etc. | LP 1604 |

DISCLAIMER
The use of this standard is governed by the "Texas Engineering Practice Act". No warranty of any kind is made by TxDOT for any purpose whatsoever. TxDOT assumes no responsibility for the conversion of this standard to other formats or for incorrect results or damages resulting from its use.

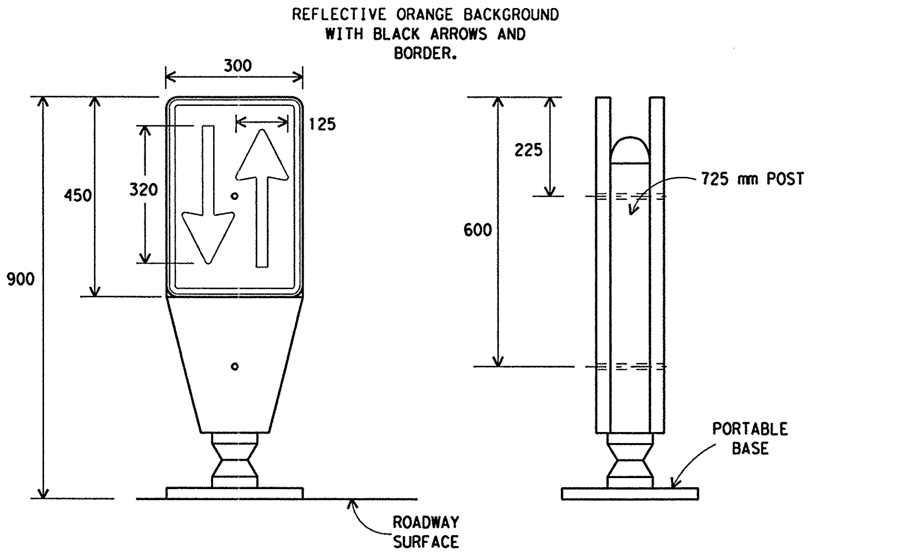


## PORTABLE BASE SUPPORT
for Opposing Lane Divider

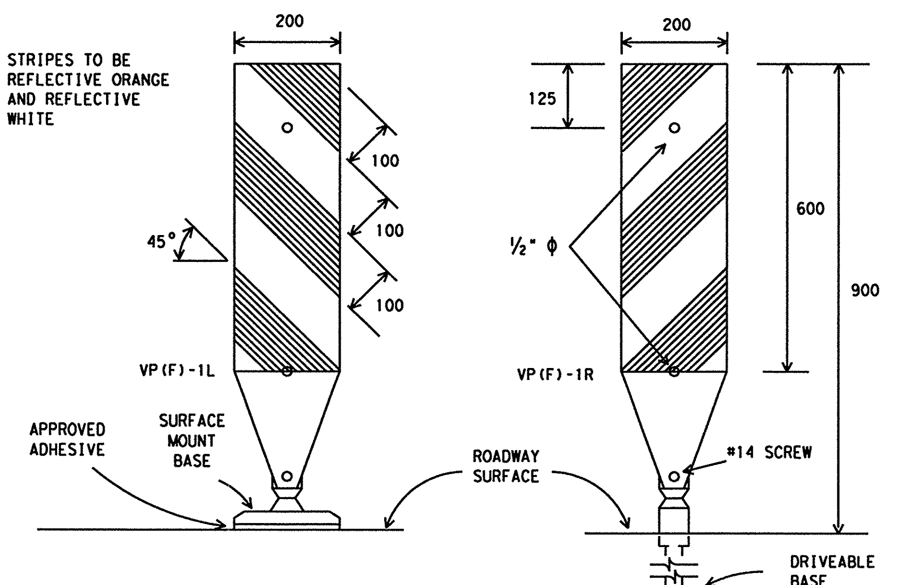


## FIXED BASE SUPPORT
for Vertical Panels VP(F)-1

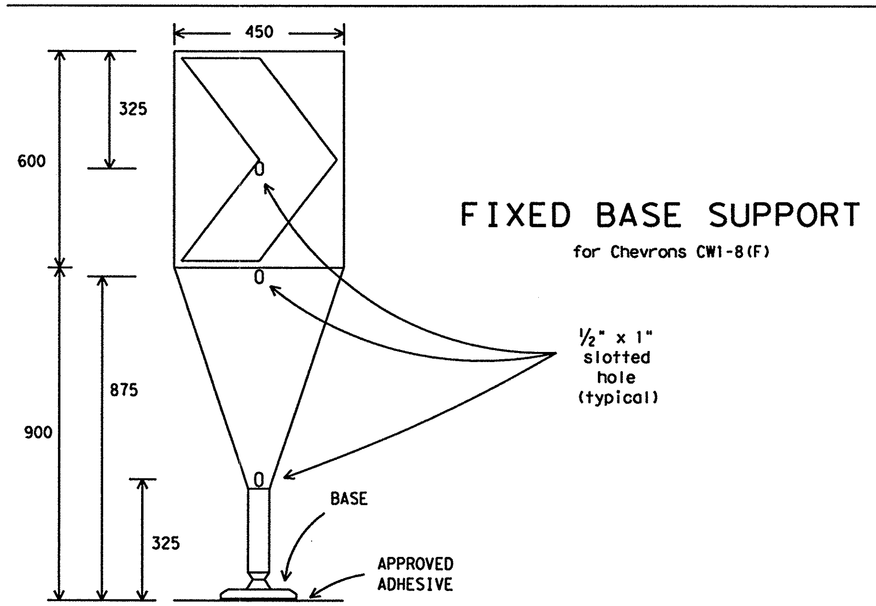


## FIXED BASE SUPPORT
for Chevrons CW1-8(F)

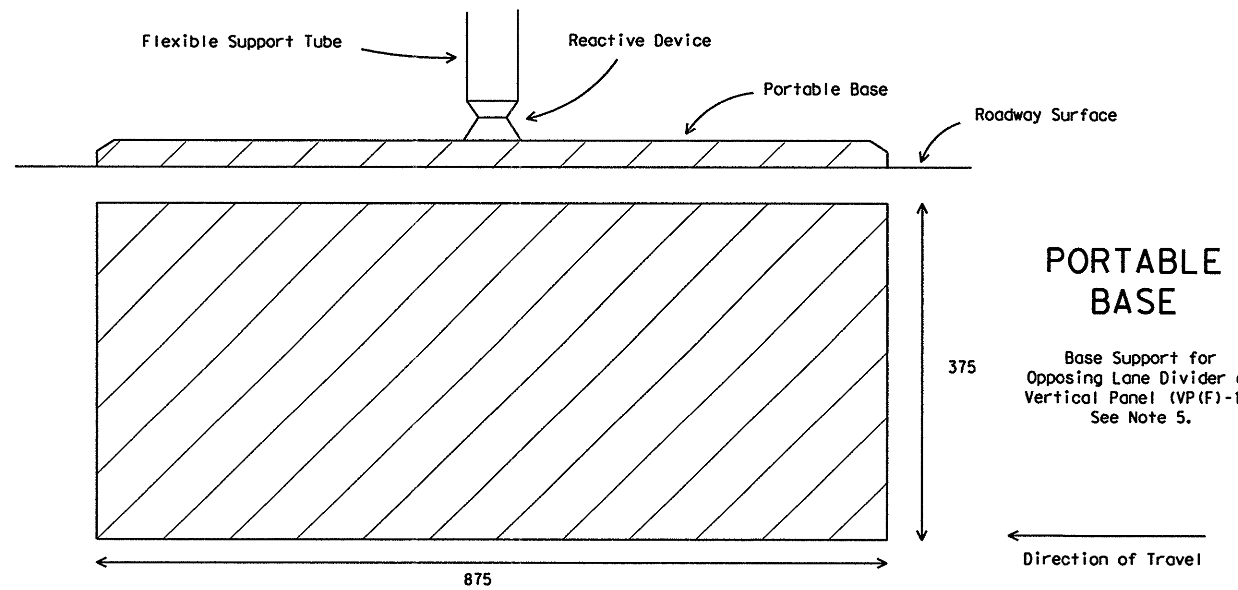


## PORTABLE BASE

Base Support for Opposing Lane Divider or Vertical Panel (VP(F)-1). See Note 5.

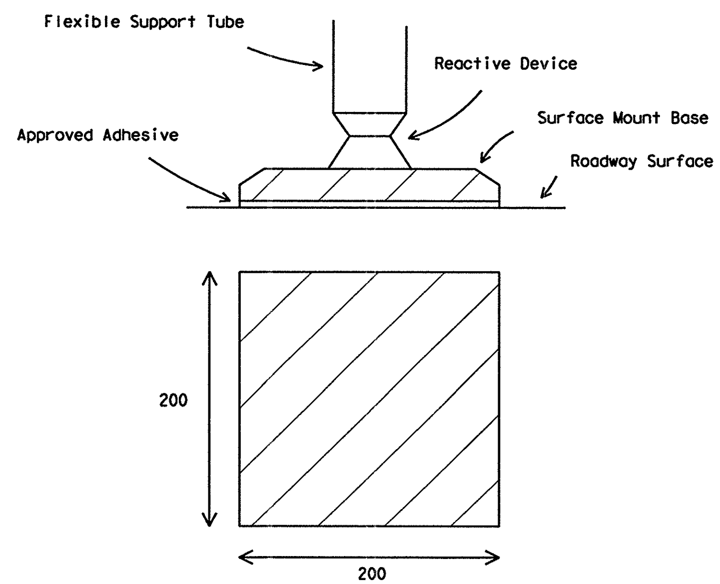


## SURFACE MOUNT BASE

Fixed Base Support for Chevron CW1-8(F), Vertical Panels VP(F)-1 or Opposing Lane Divider.

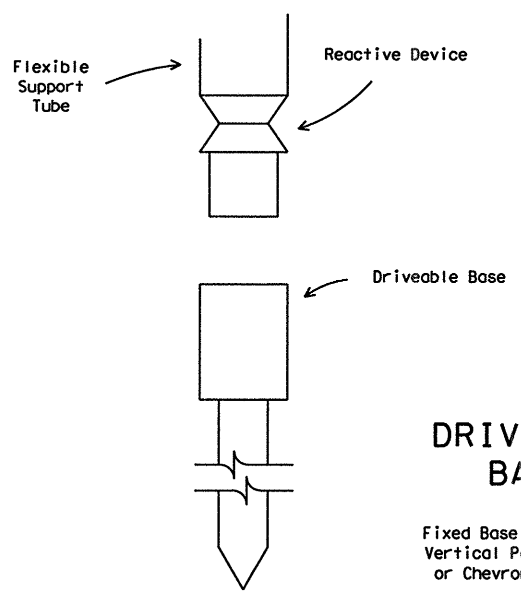


## DRIVEABLE BASE

Fixed Base Support for Vertical Panel VP(F)-1 or Chevron CW1-8(F).

GENERAL NOTES:

1. Channelizing devices on flexible supports shall be used at locations detailed elsewhere in the plans. These devices shall conform to the Texas MUTCD.
2. Channelizing devices on flexible supports may be used in work zone areas where channelizing devices are frequently impacted by errant vehicles. Work zone channelizing devices illustrated on this sheet may be installed in close proximity to traffic and are suitable for use on high or low speed roadways. Spacing and placement shall be uniform and in accordance with the Texas MUTCD.
3. The contractor shall maintain devices in a clean condition and replace damaged, non-reflective, faded, or broken devices and bases as necessary.
4. Devices shall be fabricated to withstand repeated impacts with minimal maintenance to devices and damage to vehicles. When devices are impacted, they should not adversely affect worker or vehicle safety.
5. Devices shall be erected on a fixed, portable, or driveable base as approved by the Engineer.
6. Portable bases shall be fabricated from a flexible material such as virgin and/or recycled rubber. Approximate weight of portable bases should be 16 kg.
7. Fixed bases may be surface mount or driveable type.
8. Pavement surfaces shall be prepared in a manner that will insure proper bonding of adhesives and surface mount bases to the pavement surfaces. Adhesives shall be prepared and applied as per manufacturer's recommendations.
9. Application and removal of devices shall not cause detrimental effects to the final pavement surfaces, including pavement surface discoloration or surface intregity. Driveable bases shall not be permitted on final pavement surfaces. All application and removal procedures of fixed bases shall be approved by the Engineer.
10. These devices shall not be paid for directly but shall be considered subsidiary to the Item "Barricades, Signs, and Traffic Handling."

PREQUALIFICATION PROCEDURES MAY BE OBTAINED BY WRITING:

TRAFFIC OPERATIONS DIVISION
TEXAS DEPARTMENT OF TRANSPORTATION (TxDOT)
125 EAST 11th STREET
AUSTIN, TX 78701-2483

SPECIFICATION REFERENCE TABLE
MATERIALS AND TEST DIVISION SPECIFICATIONS

| | |
|---|---|
| FLAT SURFACE REFLECTIVE SHEETING, TYPE C (HIGH SPECIFIC INTENSITY) | D-9-8300 |

All dimensions are in millimeters unless otherwise noted.

STANDARD PLANS
TEXAS DEPARTMENT OF TRANSPORTATION
*Traffic Operations Division*

©2000

# WORK ZONE CHANNELIZING DEVICES ON FLEXIBLE SUPPORTS

# WZ(CD)-94(M)

©TxDOT January 1992

| DN: LR | CK: - | DW: DN | CK: - | NEG NO.: |
|---|---|---|---|---|

| REVISIONS | STATE DISTRICT | FEDERAL REGION | FEDERAL AID PROJECT | SHEET |
|---|---|---|---|---|
| 9-94 | SAT | 6 | NH 2000(704), etc. | 125 |

| COUNTY | CONTROL | SECTION | JOB | HIGHWAY |
|---|---|---|---|---|
| BEXAR | 2452 | 01 | 036, etc. | LP 1604 |

| DN: | CK: | DW: | CK: |
|---|---|---|---|
| DATE: | ACC: | FILE: | |

LEVELS: 1 2 3 4 5 6 7 8 ... 49 50 ... 63

DISCLAIMER
The use of this standard is governed by the "Texas Engineering Practice Act". No warranty of any kind is made by TxDOT for any purpose whatsoever. TxDOT assumes no responsibility for the conversion of this standard to other formats or for incorrect results or damages resulting from its use.

## CHANNELIZING DEVICES FOR URBAN ROADWAY TYPE PROJECT

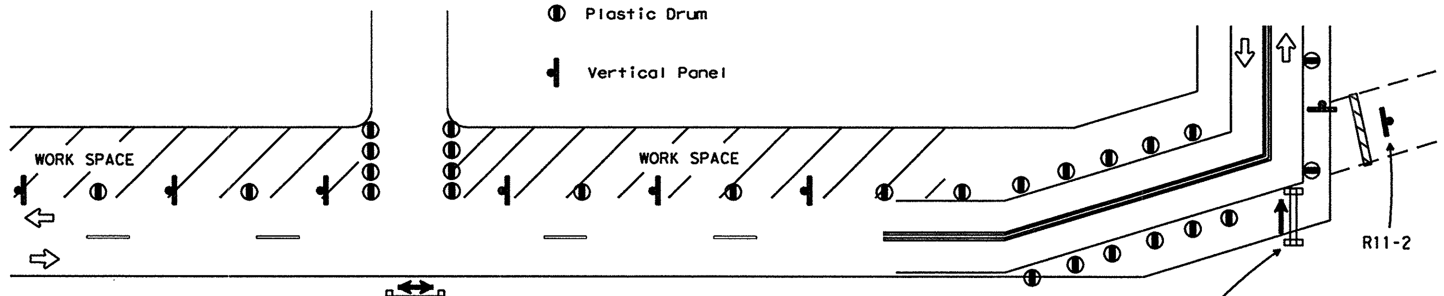


For spacing between devices, see BC(6)(M).
Use self-righting supports in areas where there is a higher than normal potential for channelizing devices to be sruck.

## MULTI-DIRECTIONAL BARRICADE

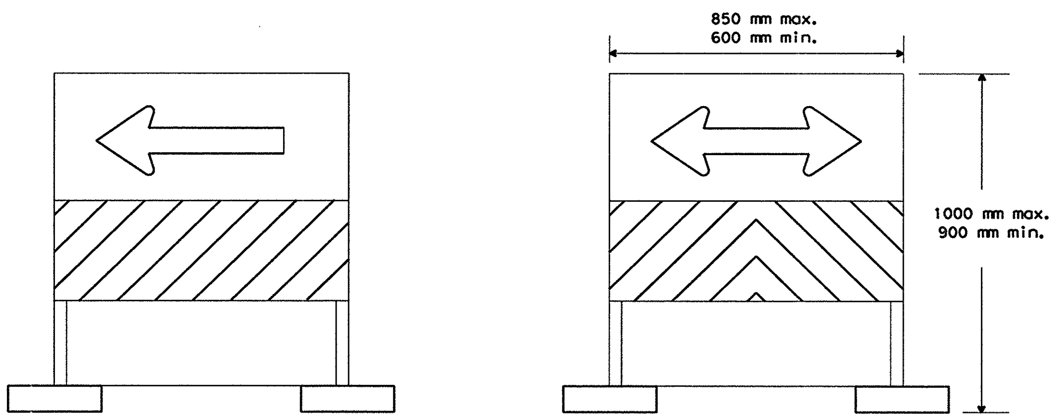


1. Multi-directional barricade shall not be used for lane closures.
2. May be used for sharp changes in alignment, or across roadway from stem of "T" intersection.
3. Typically used for Intermediate Term Stationary, Short Term Stationary or Short Duration work zone operations.

## CHANNELIZING DEVICES FOR LANE CLOSURE

### Multi-lane Undivided or Divided Highway

(Should be used for Long-term and Intermediate-term Stationary)
(May be used for Short-term Stationary)

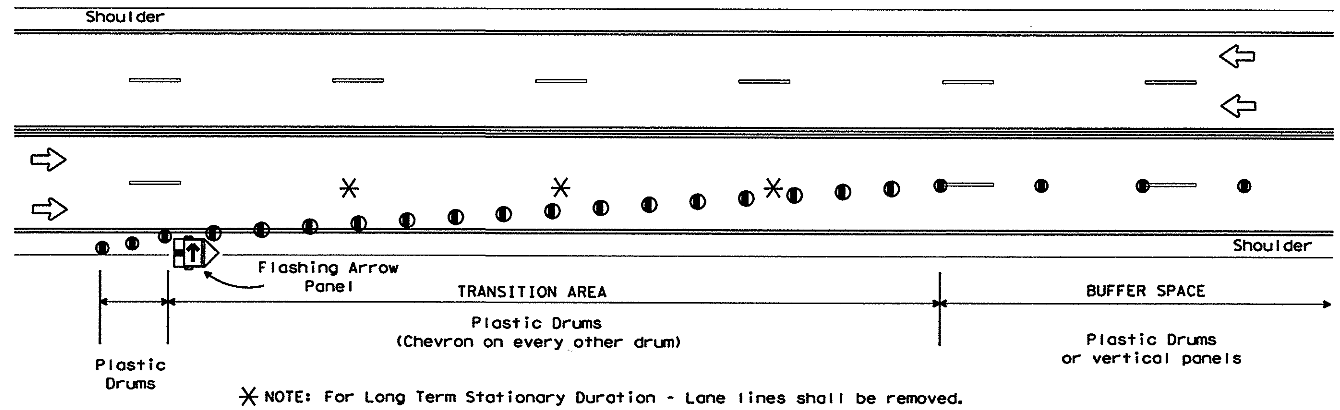


✳ NOTE: For Long Term Stationary Duration - Lane lines shall be removed.

## USAGE OF CW1-6, ECW1-6a AND CW1-8 SIGNS

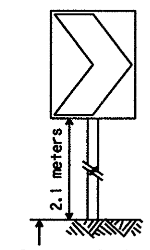


**CW1-8**

The CHEVRON sign (CW1-8) may be used to replace roadside delineation on curves or used in transitions or tapers.

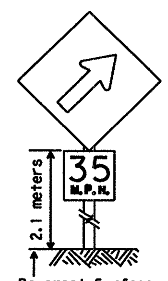


**ECW1-6a**

An UPWARD SLOPING ARROW sign (ECW1-6a) is intended to be used to indicate the beginning of a curve or transition. It should be preceded with an appropriate curve sign when needed, and should not be used throughout the curve or transition. Advisory speed plaque is optional.

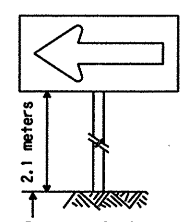


**CW1-6**

A LARGE ARROW sign (CW1-6) is intended to be used to give notice of a sharp change in alignment (turn) in the direction of travel. It should be preceded with an appropriate advance construction warning turn sign.

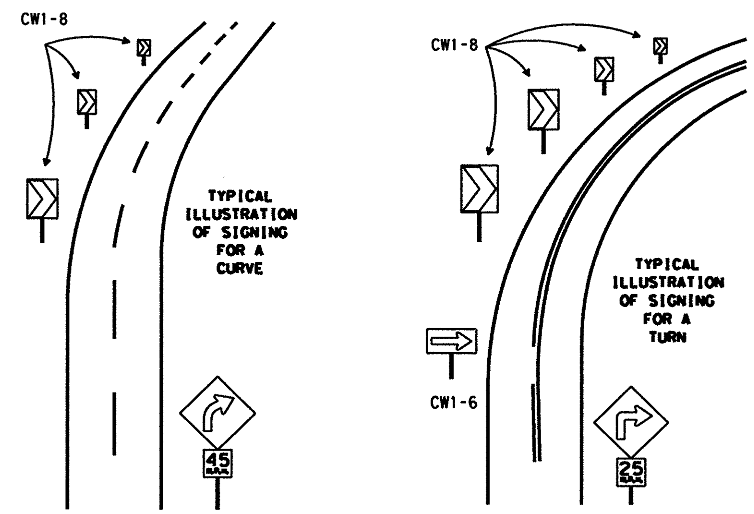


NOTES:

1. CW1-6, ECW1-6a & CW1-8 Signs shall be mounted on fixed supports.
2. CHEVRON alignment signs, when used, are erected on the outside of a curve, sharp turn or on the far side of an intersection, in line with and at right angles to approaching traffic. Spacing of the signs should be such that three are visible throughout the change in horizontal alignment.
3. For two-way traffic, use same arrangement of signs on outside of curve for each direction of travel.
4. Appropriate advance warning CURVE or TURN sign with Advisory Speed plaque should be used when needed.

**Only pre-qualified products shall be used. A list of compliant products and their sources may be obtained by writing, calling or faxing:**

**Standards Engineer**
**Traffic Operations Division - TE**
**Texas Department of Transportation**
**125 East 11th Street**
**Austin, Texas 78701-2483**
**Phone (512) 416-3335**
**Fax (512) 416-3161**
**E-mail TRF-STANDARD@mailgw.dot.state.tx.us**

WORK DURATION TERMINOLOGY

Long Term = More than 3 Days
Intermediate Term = 12 hours to 3 days
Short Term = 1 to 12 hours
Short Duration = Less than 1 hour

All dimensions are in millimeters unless otherwise noted.

**STANDARD PLANS**
**TEXAS DEPARTMENT OF TRANSPORTATION**
*Traffic Operations Division*

© 2000

# TRAFFIC CONTROL PLAN TYPICAL DETAILS

## WZ(TD)-98(M)

| ©TxDOT February 1998 | DN:-LR | CK:-DTN | DW:-DN | CK:-GB | NEG NO.: |
|---|---|---|---|---|---|
| REVISIONS | STATE DISTRICT | FEDERAL REGION | FEDERAL AID PROJECT | | SHEET |
| 4-98 | SAT | 6 | NH 2000(704),etc. | | 126 |
| | COUNTY | | CONTROL | SECTION | JOB | HIGHWAY |
| | BEXAR | | 2452 | 01 | 036,etc. | LP 1604 |

DN: CK: DW: CK:
DATE: ACC: FILE:

DISCLAIMER
The use of this standard is governed by the "Texas Engineering Practice Act". No warranty of any kind is made by TxDOT for any purpose whatsoever. TxDOT assumes no responsibility for the conversion of this standard to other formats or for incorrect results or damages resulting from its use.

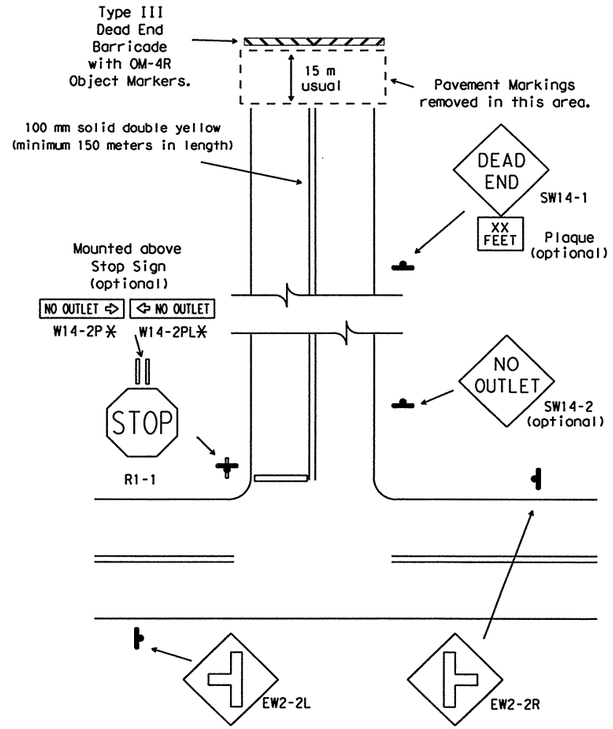


* W14-1P DEAD END plaque may be used as an alternate.

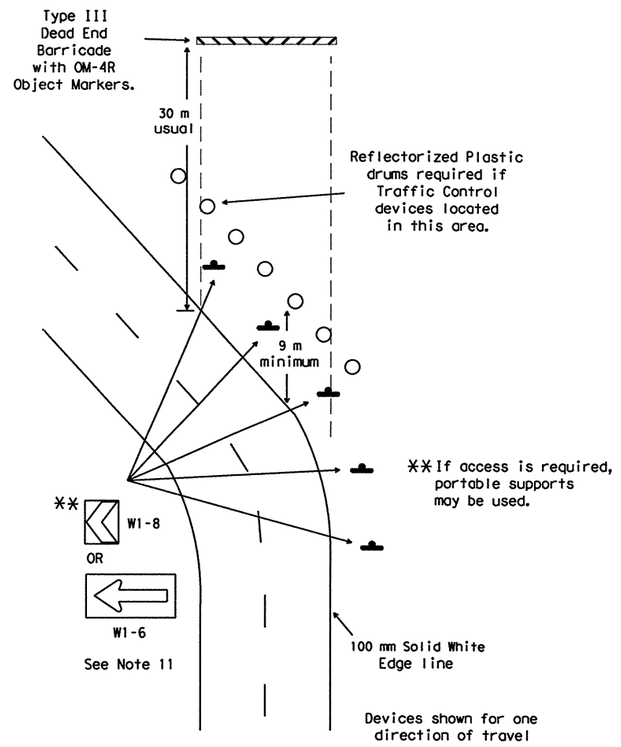


## TYPICAL INSTALLATION

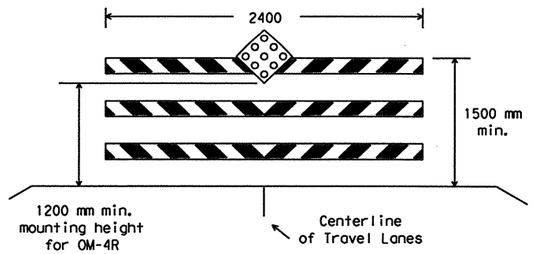


Barricade striping is red and white sloping toward the center of the roadway.

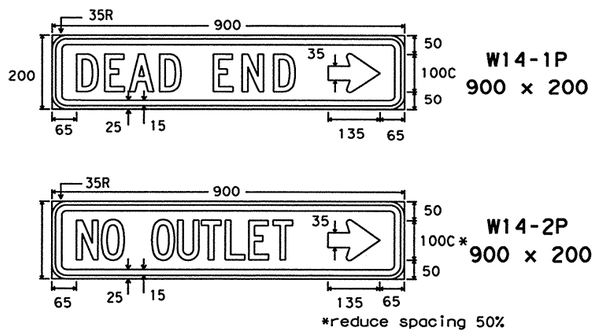


Letters - Black
Border - Black
Background - Yellow Refl.

See BC sheets for Barricade and Plastic Drum details.

All dimensions are in millimeters unless otherwise noted.

The metric dimensions shown on this sheet have been rounded, and should be considered equivalent to the English dimensions in the "1980 Standard Highway Sign Designs for Texas" manual.

| SPECIFICATION REFERENCE TABLE<br>MATERIALS AND TESTS DIVISION SPECIFICATIONS | |
|---|---|
| PLYWOOD SIGN BLANKS | D-9-7100 |
| ALUMINUM SIGN BLANKS | D-9-7110 |
| SIGN HARDWARE | D-9-7120 |
| WINGED CHANNEL POSTS | D-9-7130 |
| FLAT SURFACE REFLECTIVE SHEETING, TYPE C (HIGH SPECIFIC INTENSITY) | D-9-8300 |
| DELINEATOR AND OBJECT MARKER | D-9-8600 |

GENERAL NOTES:

1. Barricade striping shall be red and white reflective sheeting for all permanent road closures. Orange and white reflective sheeting may be substituted for locations where duration of road closure is expected to be 18 months or less, or when approved by the Engineer. Red and orange reflective sheeting shall not be combined on barricades or locations.
2. Barricades shall be designed and constructed to BC Standards in a first-class workmanship manner of clean sound material. Components made of lumber shall be painted with a minimum of two coats of an approved brand of white paint to insure thorough coverage and a uniform white color. Striping material shall meet the color and reflective requirements of Material Specification D-9-8300.
3. Post Type breakaway supports shall be used as barricade supports. Barricades may be fabricated with "skid" supports if approved by the Engineer. Skid supports should be anchored to prevent movement.
4. Barricades shall not be placed parallel to traffic unless a minimum adequate clear zone of 9 meters is provided.
5. Minimum one 2400 mm wide barricade and one OM-4R or OM-4P object marker shall be required for all locations. Barricades should extend across all travel lanes and shoulders if shoulders are present. Barricades may be extended to the ROW if necessary.
6. Stockpiled materials shall not be placed on traffic side of barricades.
7. OM-4 object markers may be mounted independently or attached to barricades.
8. Plastic drums shall meet the requirements as listed on BC Standards. Plastic drums may be anchored with adhesive to prevent movement.
9. All signs, object markers and chevrons shall be installed with hardware and support at the minimum mounting height in accordance with the D&OM, SMD and BC Standards. Signs shall be mounted at a 2100 mm minimum height. Signs shall not be attached to barricades.
10. Motorists should be able to see at least three chevron signs as they approach the curve and as they drive through the curve from either directions.
11. Delineation devices such as the chevron or large arrow signs shall only be placed on the outside portion of a curve.

GENERAL SIGN NOTES:

The alphabets and lateral spacing between letters and numerals shall conform with the Texas "Manual on Uniform Traffic Control Devices for Streets and Highways", latest edition, and any approved changes thereto. Lateral spacing of text shall provide a balanced appearance. All materials shall conform to Department Specifications.

Legend for W14-1P and W14-2P, shall be black and applied by screening process, cut-out vinyl non-reflective decal sheeting or combination thereof. Background shall be yellow reflective sheeting (Type C).

Sign blanks shall be one piece 2.0mm thick sheet aluminum alloy (Type A) or one piece 16mm thick plywood (Type A), unless otherwise noted elsewhere in the plans.

© 2000

STANDARD PLANS
TEXAS DEPARTMENT OF TRANSPORTATION
*Traffic Operations Division*

# WORK ZONE
# DEAD END
# ROADWAY DETAILS

## WZ(DERD)-98(M)

| ©TxDOT August 1995 | DN: - LR/MT | CK: - | DW: - DN | CK: - GB | NEG NO.: |
|---|---|---|---|---|---|
| REVISIONS | STATE DISTRICT | FEDERAL REGION | FEDERAL AID PROJECT | | SHEET |
| 1-97 | SAT | 6 | NH 2000(704), etc. | | 127 |
| 2-98 | COUNTY | | CONTROL | SECTION | JOB | HIGHWAY |
| 4-98 | BEXAR | | 2452 | 01 | 036, etc. | LP 1604 |

Metric 118

LEVELS 1 4 5 16 17 18 17 18 19 20 21 22 23 24 25 26 27 28 29 30 31 33 34 35 36 37 38 39 40 41 42 43 44 45 46 47 48 49 50 51 52 53 54 55 56 57 58 59 60 61 62 63
DATE:
ACC:
FILE:
DN:
CK:
DW:
CK:

DISCLAIMER
The use of this standard is governed by the "Texas Engineering Practice Act". No warranty of any kind is made by TxDOT for any purpose whatsoever. TxDOT assumes no responsibility for the conversion of this standard to other formats or for incorrect results or damages resulting from its use.

## Divided Highway

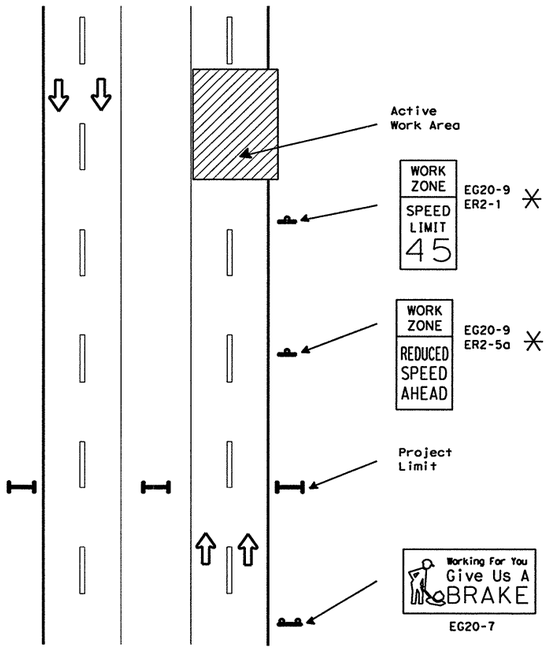


## Undivided Highway

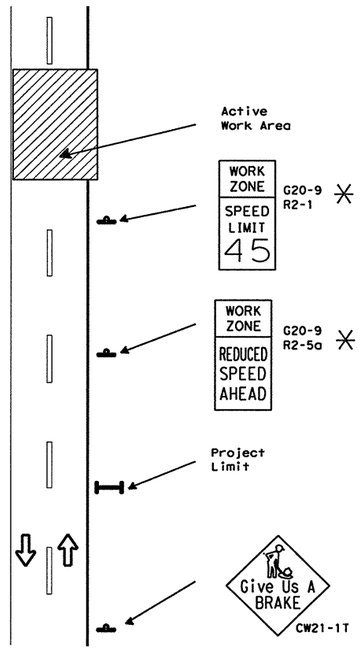


✳ Posted only when reduced speed is directed by the Engineer

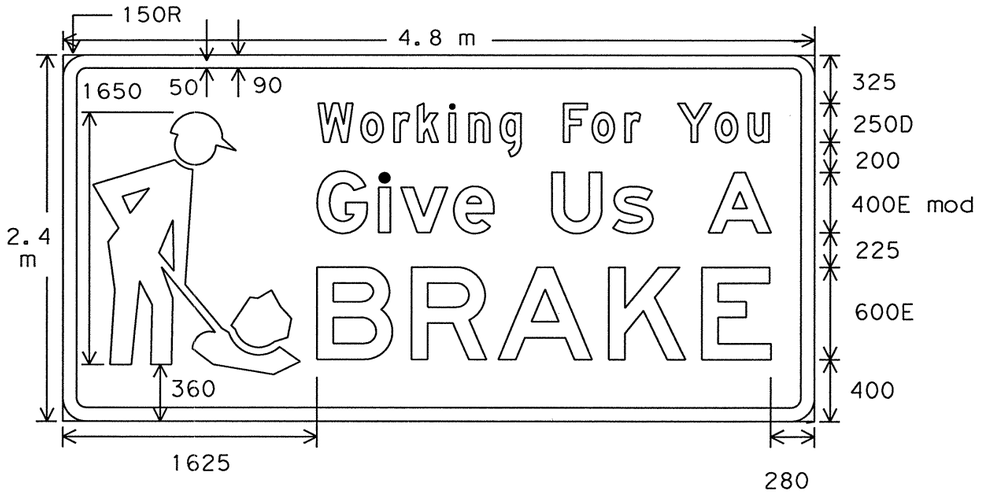


Letters - Black
Symbol - Black
Border - Black
Background - Orange Refl.

EG20-7

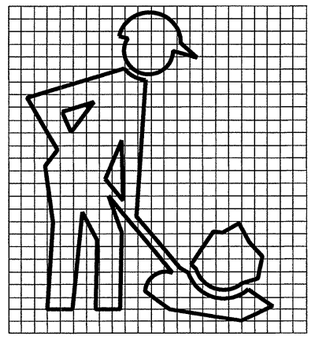

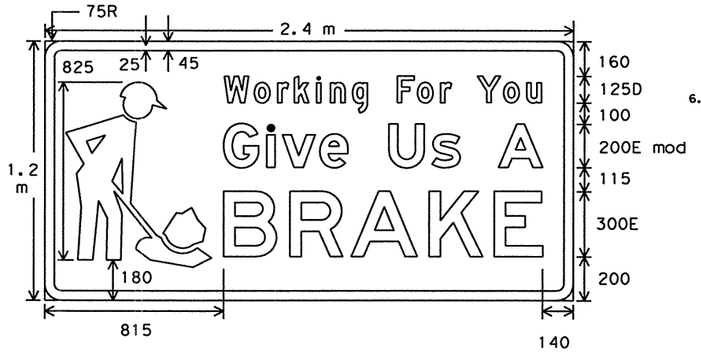


Letters - Black
Symbol - Black
Border - Black
Background - Orange Refl.

G20-7

### SUMMARY OF LARGE SIGNS

| BACKGROUND COLOR | SIGN DESIGNATION | SIGN TEXT | SIGN DIMENSIONS | REFLECTIVE SHEETING | PLY TY A (SQ. METERS) | GALVANIZED STRUCT STEEL Size | (METERS) ① | (METERS) ② | DRILLED SHAFT 600 DIA (METERS) |
|---|---|---|---|---|---|---|---|---|---|
| Orange | EG20-7 | Give Us A BRAKE | 4.8 x 2.4 m | Type C | 11.9 | W8x18 | 4.8 | 5.2 | 3.6 |
| Orange | G20-7 | Give Us A BRAKE | 2.4 x 1.2 m | Type C | 3.0 | S4x7.7 | 3.6 | 4.0 | 2.1 ✳ |

✳300 mm depth Non-reinforced Concrete Footing

### SUMMARY OF SMALL SIGNS

| BACKGROUND COLOR | SIGN DESIGNATION | SIGN TEXT | SIGN DIMENSIONS | REFLECTIVE SHEETING | PLY TY A (SQ M) |
|---|---|---|---|---|---|
| Orange | EG20-9 | WORK ZONE | 900 x 600 | Type C | 0.5 |
| Orange | G20-9 | WORK ZONE | 600 x 450 | Type C | 0.3 |
| White | ER2-1 | SPEED LIMIT | 900 x 1200 | Type A | 1.1 |
| White | ER2-5a | REDUCED SPEED AHEAD | 900 x 1200 | Type A | 1.1 |
| Orange | CW21-1T | GIVE US A BRAKE | 1200 x 1200 | Type C | 1.5 |

SPECIFICATION REFERENCE TABLE
MATERIALS AND TESTS DIVISION SPECIFICATIONS

| | |
|---|---|
| PLYWOOD SIGN BLANKS | D-9-7100 |
| ALUMINUM SIGN BLANKS | D-9-7110 |
| FLAT SURFACE REFLECTIVE SHEETING, TYPE A (ENGINEER GRADE) | D-9-8300 |
| FLAT SURFACE REFLECTIVE SHEETING, TYPE C (HIGH SPECIFIC INTENSITY) | D-9-8300 |
| VINYL NON-REFLECTIVE DECAL SHEETING | D-9-8320 |

GENERAL NOTES:

1. See BC(M) sheets, SMD(2-1)(M), (2-2)(M) and (2-3)(M) for additional sign support details.
2. Sign locations shall be approved by the Engineer.
3. For projects more than two miles in length, Give Us A BRAKE and WORK ZONE SPEED LIMIT signs should be repeated halfway through the project. Projects less than two miles generally do not require repeated Give Us A BRAKE signs.
4. Signs are illustrated for one direction of travel.
5. G20-7 and EG20-7 signs detailed on this sheet shall be paid for under the following bid items:

   Item 634 Plywood Signs Type A
   Item 647 Large Roadside Sign Supports
   Item 656 Foundations for Signs, Traffic Signals and Roadway Illumination Assemblies

6. EG20-9, G20-9, ER2-1, R2-1, ER2-5a, R2-5a and CW21-1T signs and sign supports shall be considered subsidiary to Item 502, "Barricades, Signs and Traffic Handling."

All dimensions are in millimeters unless otherwise noted.

©2000

STANDARD PLANS
TEXAS DEPARTMENT OF TRANSPORTATION
*Traffic Operations Division*

# WORK ZONE "GIVE US A BRAKE" SIGNS

## SHEET 1 OF 2 WZ(BRK-1)-98(M)

©TxDOT August 1995

| DN: LR | CK: - | DW: DN | CK: - | REG NO.: |
|---|---|---|---|---|

| REVISIONS | STATE DISTRICT | FEDERAL REGION | FEDERAL AID PROJECT | SHEET |
|---|---|---|---|---|
| 12-95 | SAT | 6 | NH 2000(704), etc. | 128 |
| 6-96 | COUNTY | CONTROL | SECTION | JOB | HIGHWAY |
| 8-96 | BEXAR | 2452 | 01 | 036, etc. | LP 1604 |
| 5-98 | | | | | |

LEVELS
1 2 3 4 5 6 7 8
7 8 1 9 2 0 2 1 2 2 2 3 2 4 2 5 2 6 2 7 2 8 2 9 3 0 3 1 3 2
3 3 4 3 5 3 6 3 7 3 8 3 9 4 0 4 1 4 2 4 3 4 4 4 5 4 6 4 7 4 8
4 9 5 0 5 1 5 2 5 3 5 4 5 5 5 6 5 7 5 8 5 9 6 0 6 1 6 2 6 3
SED 11
DATE:
ACC: d58hp1c/usr/d580504
FILE:
DN: LR
CK: CW
DW: DN
CK: MT

DISCLAIMER
The use of this standard is governed by the "Texas Engineering Practice Act". No warranty of any kind is made by TxDOT for any purpose whatsoever. TxDOT assumes no responsibility for the conversion of this standard to other formats or for incorrect results or damages resulting from its use.

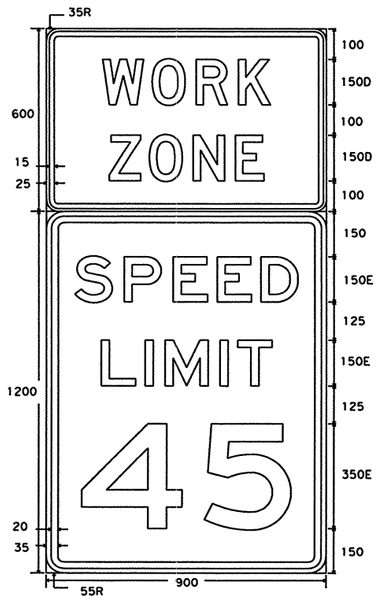


Letters - Black
Background - Orange Refl.

EG20-9

Letters - Black
Background - White Refl.

ER2-1

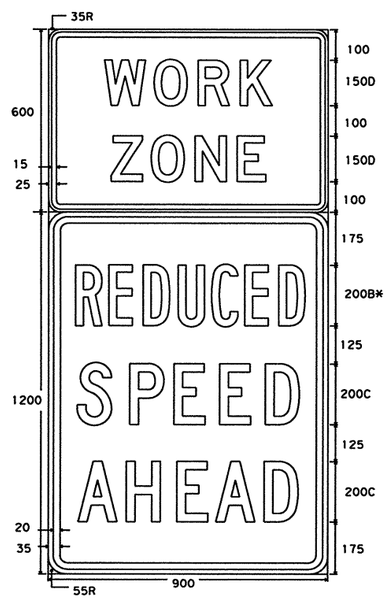


Letters - Black
Background - Orange Refl.

EG20-9

Letters - Black
Background - White Refl.

ER2-5a

*spacing reduced 40%

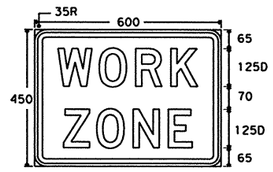


Letters - Black
Background - Orange Refl.

G20-9

## SUMMARY OF SMALL SIGNS

| BACKGROUND COLOR | SIGN DESIGNATION | SIGN TEXT | SIGN DIMENSIONS | REFLECTIVE SHEETING | PLY TY A (SQ M) |
|---|---|---|---|---|---|
| Orange | EG20-9 | WORK ZONE | 900 x 600 | Type C | 0.5 |
| Orange | G20-9 | WORK ZONE | 600 x 450 | Type C | 0.3 |
| White | ER2-1 | SPEED LIMIT | 900 x 1200 | Type A | 1.1 |
| White | ER2-5a | REDUCED SPEED AHEAD | 900 x 1200 | Type A | 1.1 |
| Orange | CW21-1T | GIVE US A BRAKE | 1200 x 1200 | Type C | 1.5 |

## FIXED SUPPORTS REQUIRED FOR ER2-1 AND ER2-5a

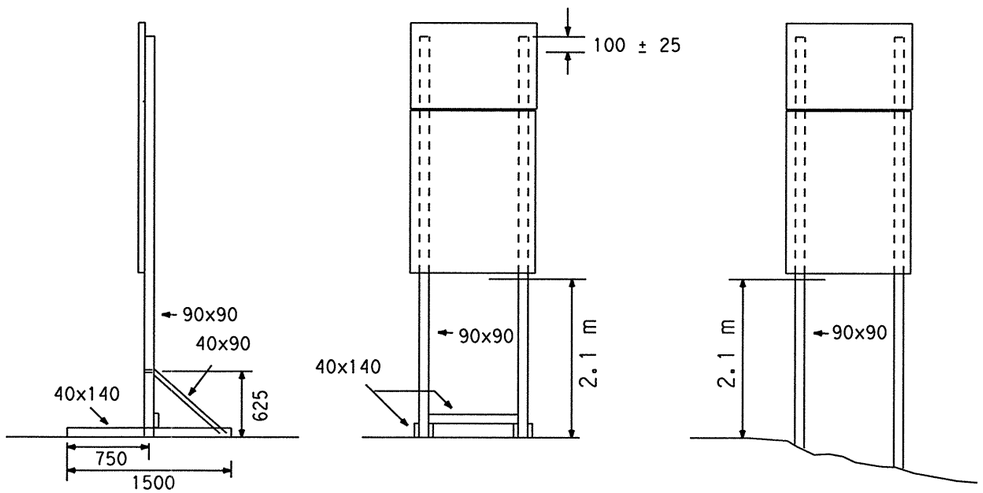


SKID MOUNT

GROUND MOUNT

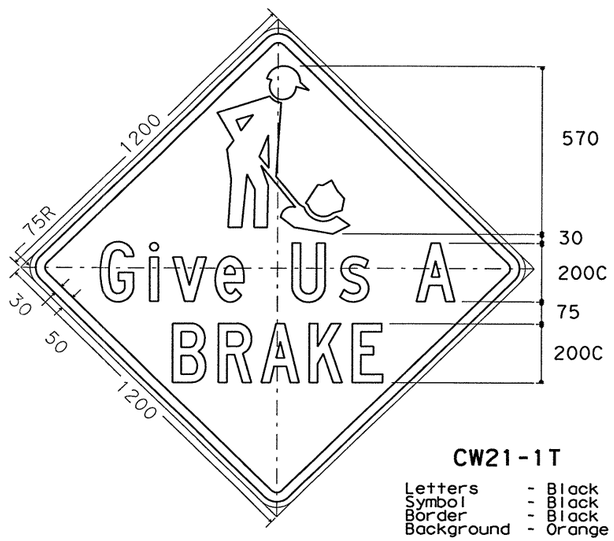


CW21-1T

Letters - Black
Symbol - Black
Border - Black
Background - Orange Refl.

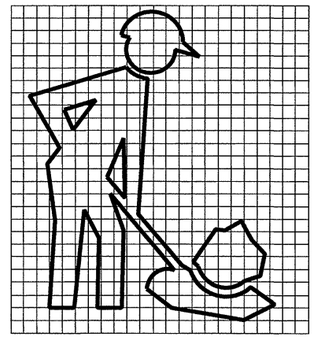

SPECIFICATION REFERENCE TABLE
MATERIALS AND TESTS DIVISION SPECIFICATIONS

| | |
|---|---|
| PLYWOOD SIGN BLANKS | D-9-7100 |
| FLAT SURFACE REFLECTIVE SHEETING, TYPE A (ENGINEER GRADE) | D-9-8300 |
| FLAT SURFACE REFLECTIVE SHEETING, TYPE C (HIGH SPECIFIC INTENSITY) | D-9-8300 |
| VINYL NON-REFLECTIVE DECAL SHEETING | D-9-8320 |

GENERAL NOTES:

1. See BC(M) sheets for additional sign support details.
2. The WORK ZONE (EG20-9) sign is to be installed in combination with a SPEED LIMIT (ER2-1) sign or REDUCED SPEED AHEAD (ER2-5a) sign.
3. Signs shall be placed at the minimum advance distances listed below:

MINIMUM ADVANCE DISTANCE

| SIGNS | DIVIDED HIGHWAY | UNDIVIDED HIGHWAY | FROM |
|---|---|---|---|
| WORK ZONE SPEED LIMIT | 335 m | 240 m | active work area |
| WORK ZONE REDUCED SPEED AHEAD | 490 m | 300 m | WORK ZONE SPEED LIMIT sign(s) |

4. The WORK ZONE REDUCED SPEED AHEAD and WORK ZONE SPEED LIMIT signs should only be visible to motorists when workers are actually present in the work area.
5. Speed limits shall be regulatory and approved by the Texas Transportation Commission.
6. EG20-9, G20-9, ER2-1, R2-1, ER2-5a, R2-5a and CW21-1T signs and sign supports shall be considered subsidiary to Item 502, "Barricades, Signs and Traffic Handling."

All dimensions are in millimeters unless otherwise noted.

© 2000

STANDARD PLANS
TEXAS DEPARTMENT OF TRANSPORTATION
*Traffic Operations Division*

# WORK ZONE "GIVE US A BRAKE" SIGNS

SHEET 2 OF 2 WZ(BRK-2)-98(M)

| ©TxDOT August 1995 | DN-LR | CK:- | DW-DN | CK:- | REC NO.: |
|---|---|---|---|---|---|
| REVISIONS | STATE DISTRICT | FEDERAL REGION | FEDERAL AID PROJECT | | SHEET |
| 12-95 | SAT | 6 | NH 2000(704),etc. | | 129 |
| 6-96 | COUNTY | | CONTROL | SECTION | JOB | HIGHWAY |
| 8-96 | BEXAR | | 2452 | 01 | 036,etc. | LP 1604 |
| 5-98 | | | | | | |

Metric 1198

LEVELS
1 2 3 4 5 6 7 8
9 10 11 12 13 14 15 16
17 18 19 20 21 22 23 24 25 26 27 28 29 30 31 32
33 34 35 36 37 38 39 40 41 42 43 44 45 46 47 48
49 50 51 52 53 54 55 56 57 58 59 60 61 62 63

FILE: DATE:
ACC: d58hp1c/usr/d580504
DW:DN CK:MT
DN:LR CK:CW

DISCLAIMER
The use of this standard is governed by the "Texas Engineering Practice Act". No warranty of any kind is made by TxDOT for any purpose whatsoever. TxDOT assumes no responsibility for the conversion of this standard to other formats or for incorrect results or damages resulting from its use.

## GENERAL NOTES

1. Additional details may be provided in the plans concerning sign size, type of channelization devices, sequence of work details, and required measures needed to control traffic during changes in the sequence of work.
2. All traffic control devices shall conform with the Texas "Manual on Uniform Traffic Control Devices for Streets and Highways" (TMUTCD), and shall be maintained as directed by the Engineer. Additional guidelines for traffic control devices may be found in the TMUTCD.
3. All distance and spacing shown on the TCP Standards are approximate.
4. All traffic control devices used during nighttime shall be reflectorized, illuminated from within or externally illuminated.
5. Additional information for fabrication, erection and usage of the following traffic control devices is found in the (TMUTCD) and Barricade and Construction (BC) Standards:

| | |
|---|---|
| BARRICADES | BC(2) and BC(3) |
| CONES | BC(6) |
| BARRIER DELINEATION | WZ(BD) |
| DRUMS | BC(5) |
| PAVEMENT MARKINGS | BC(5), BC(7) and BC(8)<br>WZ(STPM) or TCP(7-1) if applicable |
| SIGNS | BC(1), BC(2), BC(3), BC(4), BC(9), BC(9A), BC(9B) and BC(9C) |

6. Work area operations are defined as follows:
Long-term stationary - Work that occupies a location more than 3 days.
Intermediate-term stationary - Work that occupies a location overnight to 3 days.
Short-term stationary - Daytime work that occupies a location from 1 to 12 hours.
Short Duration - Work that occupies a location up to 1 hour.
Mobile - Work that moves intermittently or continuously.

## SIGNS

1. Selection of sign size should be based on Table 1.
2. Flashing warning lights, channelizing devices and/or flags may be required to call attention to the advance warning signs.
3. The words UTILITY, SIGNAL, BRIDGE, LIGHTING, SIGN, STREET or RAMP may be substituted for ROAD in all signs where applicable.
4. Advisory speed plaques, if used in conjunction with warning signs, speeds shall be determined in the field by the Engineer.
5. Regulatory signs shall be mounted at 2.1 meter minimum mounting height.
6. Warning signs may be mounted on the approved types of supports at the minimum mounting heights as stated on BC(4):

## CHANNELIZING DEVICES

1. The maximum spacing between channelizing devices in a taper should be approximately equal in meters to the speed limit (S) x 0.3.
2. For intermediate term situations, when it is not feasible to remove and restore pavement markings, the channelization must be made dominant by using a very close spacing. This is especially important in locations of conflicting information, such as where traffic is directed over a double yellow centerline. In such locations a maximum channelizing device spacing of 3 meters is recommended. The 3 meter channelizing device spacing recommendation is intended for the area of conflicting information and not the entire work zone.
3. Channelizing device spacing should be reduced when placed on curves, hills or next to potential hazards. At least three channelizing devices should be in view at all times.
4. MERGING taper (lane closure with merging traffic) =L
SHIFTING taper (traffic diverted to adjacent lane) =1/2 L
SHOULDER taper (shoulder closed to traffic) =1/3 L
5. DOWNSTREAM taper usage is optional. When used it should be 30 meter minimum length per lane. Devices should be spaced at approximately 6 meter intervals.
6. ONE LANE, TWO-WAY taper is intended for a portion of the road controlled by STOP, YIELD traffic signals or flagger and used alternately by traffic in each direction. It should be 15-30 meter length with devices spaced at approximately 6 meter intervals.
7. Arrow panels used on two-way, two-lane roadways should flash in the four corner CAUTION display.

## WORKER SAFETY

1. Workers exposed to traffic should wear orange safety vests.
2. Work vehicles within 9 meters of the traveled way should have strobe lights or rotating beacons in use.
3. When work vehicles are used to shadow the work area, the vehicle should be parked 9 meters or more from the work area, transmission in gear (or set in PARK), emergency brake set on, and front wheels turned away from work area. Shadow vehicles shall be equipped with truck mounted atteauators.
4. Inactive work vehicles, including workers' private vehicles, should be parked away from the work area and as close to the right-of-way line as possible.

## FLAGGER CONTROL

1. Flagger shall wear orange safety vests. Flaggers should wear saftey hats to provide a professional image to the motorist and to protect the head from flying objects.
2. STOP/SLOW paddles shall be used as the primary method to control traffic by flaggers. The STOP/SLOW paddle minimum size is 450x450 mm. Paddles may be attached to a 1500 mm staff for easier handling. The larger size (600x600 mm) should be attached to a 1500 mm staff.
3. The 600 mm paddle should be used when the posted speed is 45 MPH or greater.
4. Flags are only used to control traffic for emergency situations and the STOP/SLOW paddles are not available. Flags shall be 600 mm square and securely fastened to a staff approximately 900 mm long.
5. Flaggers may carry hand held air horns to alert workers of an emergency condition.
6. For one lane two-way traffic control, one or more flaggers should be used where traffic density, road conditions or motorists' sight distance justify their use. If flaggers are used, the taper should be reduced to 15-30 meters. When flaggers are used to control traffic, the FLAGGER symbol sign (FCW20-7a) shall be used. When flaggers are used, the BE PREPARED TO STOP sign (CW20-7b) should be used. Proper spacing between signs should be maintained.
7. When flaggers are used to draw attention to traffic control devices, the FLAGGER symbol sign should be used. Proper spacing should be maintained.
8. When more than one flagger is used, a chief flagger should be assigned the responsibility of making decisions concerning traffic control.
9. The contractor has the option to use a flashing Stop/Slow Paddle conforming to Departmental Materials Specification D-9-8620.

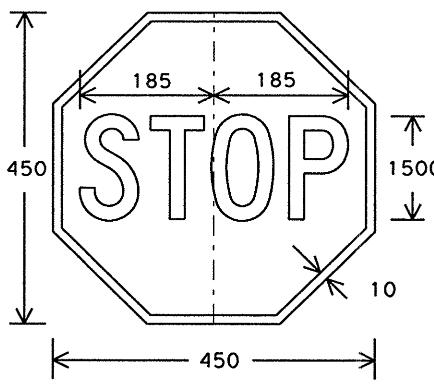


Background - Red
Legend & Border - White

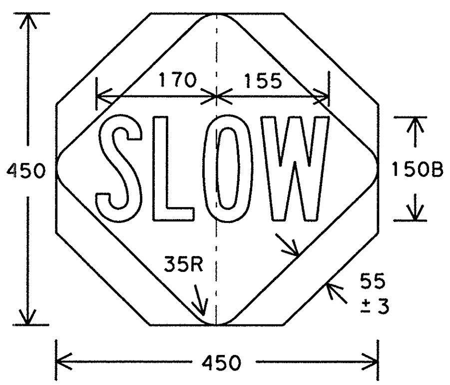


Background - Orange
Legend & Border - Black

450 STOP-SLOW PADDLE

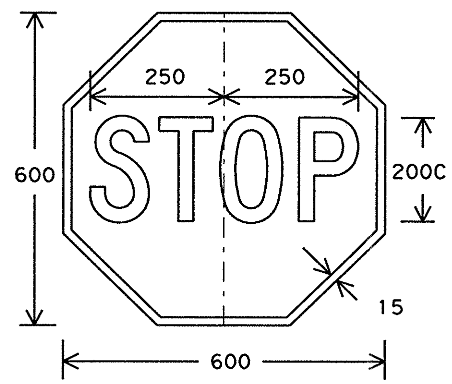


Background - Red
Legend & Border - White

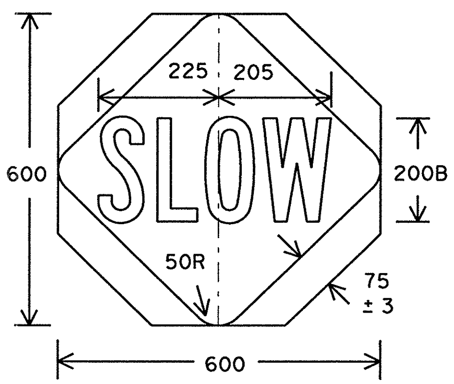


Background - Orange
Legend & Border - Black

600 STOP-SLOW PADDLE

**Only pre-qualified products shall be used. A list of compliant products and their sources may be obtained by writing or faxing:**

**Standards Engineer**
**Traffic Operations Division - TE**
**Texas Department of Transportation**
**125 East 11th Street**
**Austin, Texas 78701-2483**
**Phone (512) 416-3335**
**Fax (512) 416-3161**
**E-mail TRF-STANDARD@mailgw.dot.state.tx.us**

## Table I

### TYPICAL CONSTRUCTION WARNING SIGN SIZE [1,5,6] AND SPACING

| Roadway Classi-fication | Posted Speed | Sign Spacing "X" ▲ | Long-term Stationary Or Intermediate-term Stationary Approach Warning Signs CW20 Series And CW22-1 Sign | | Short-term Stationary Or Short Duration Approach Warning Signs CW21 Series | | Other Warning Signs |
|---|---|---|---|---|---|---|---|
| | MPH | Meters (Apprx.) | Standard mm | Minimum[4] mm | Standard mm [7] | Minimum[4] mm [7] | Standard mm [7] |
| Conven. | 30 | 40 | 1200x1200 | 900x900 | 750x750 or 900x900 | 600x600 or 750x750 | 750x750 or 900x900 |
| ↓ | 35 | 50 | ↓ | ↓ | ↓ | ↓ | ↓ |
| ↓ | 40 | 75 | ↓ | ↓ | ↓ | ↓ | ↓ |
| ↓ | 45 | 100 | ↓ | Use Standard Size | ↓ | Use Standard Size | ↓ |
| ↓ | 50 | 120 | ↓ | | ↓ | | ↓ |
| ↓ | 55 | 150[2] | ↓ | | ↓ | | ↓ |
| ↓ | 60 | 180[2] | ↓ | | 1200x1200 | | 1200x1200 |
| ↓ | 65 | 210[2] | ↓ | | ↓ | | ↓ |
| ↓ | 70 | 240[2] | ↓ | | ↓ | | ↓ |
| Exp or Frwy | * | * [3] | ↓ | | ** | ** | ** |

* For typical sign spacings on expressways and freeways, see TMUTCD typical application diagrams or TCP(M) Standard Sheets.

▲ Minimum distance from work area to 1st Advance Warning sign and/or distance between each additional sign.

** Smaller sign sizes may be used where sign designs have not been included in the "Standard Highway Sign Design for Texas" manual.

General Notes:

1. Special or larger size signs may be used as may be necessary.
2. Distance between signs should be increased as required to have 460 meters advance warning.
3. Distance between signs should be increased as required to have 800 meters or more advance warning.
4. For use only on secondary roads or city streets where speeds are low.
5. Only diamond shaped warning sign sizes are indicated.
6. See sign size listing in TMUTCD, Appendix A for complete list of all available sign design sizes.
7. Where two sizes are listed, see sign size listing in TMUTCD, Appendix A for proper size.

All dimensions are in millimeters unless otherwise noted.

**STANDARD PLANS**
**TEXAS DEPARTMENT OF TRANSPORTATION**
*Traffic Operations Division*

©2000

# TRAFFIC CONTROL PLAN

# TCP NOTES-98(M)

| ©TxDOT Feburary 1994 | DN: - MT | CK: - | DW: - DN | CK: - DM | NEG NO.: |
|---|---|---|---|---|---|
| REVISIONS | STATE DISTRICT | FEDERAL REGION | FEDERAL AID PROJECT | | SHEET |
| 8-95 | SAT | 6 | NH 2000(704),etc. | | 130 |
| 1-97 | COUNTY | CONTROL | SECTION | JOB | HIGHWAY |
| 4-98 | BEXAR | 2452 | 01 | 036,etc. | LP 1604 |

Metric 150

| DN: | CK: | DW: | CK: |
|---|---|---|---|
| DATE: | ACC: | FILE: | |

LEVELS
1 2 3 4 5 6 7 8 ... 14 15 16
17 18 19 20 21 22 23 24 25 26 27 28 29 30 31 32
33 34 35 36 37 38 39 40 41 42 43 44 45 46 47 48
49 50 51 52 53 54 55 56 57 58 59 60 61 62 63

DISCLAIMER
The use of this standard is governed by the "Texas Engineering Practice Act". No warranty of any kind is made by TxDOT for any purpose whatsoever. TxDOT assumes no responsibility for the conversion of this standard to other formats or for incorrect results or damages resulting from its use.

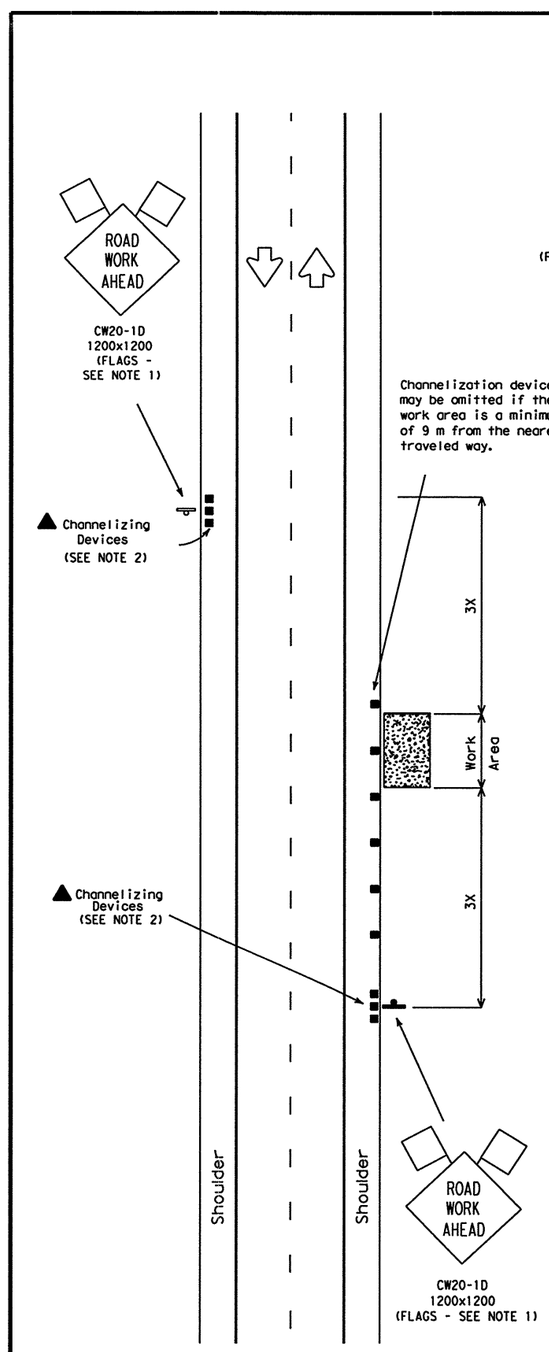


TCP (1-1a) (M)

Work Area Near Shoulder

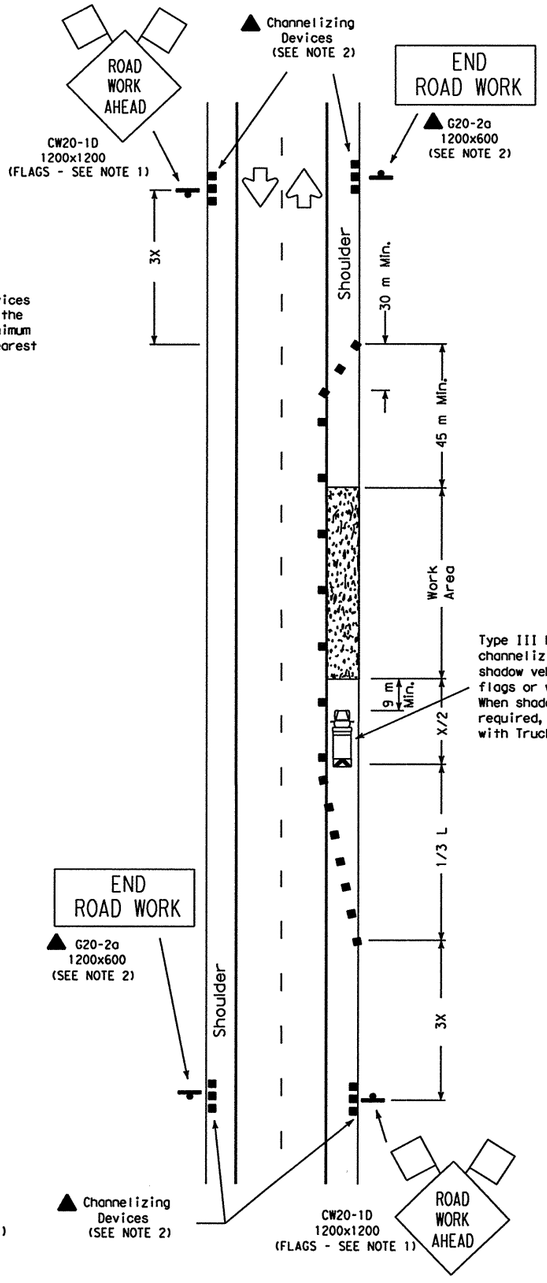


TCP (1-1b) (M)

Work Area on Shoulder

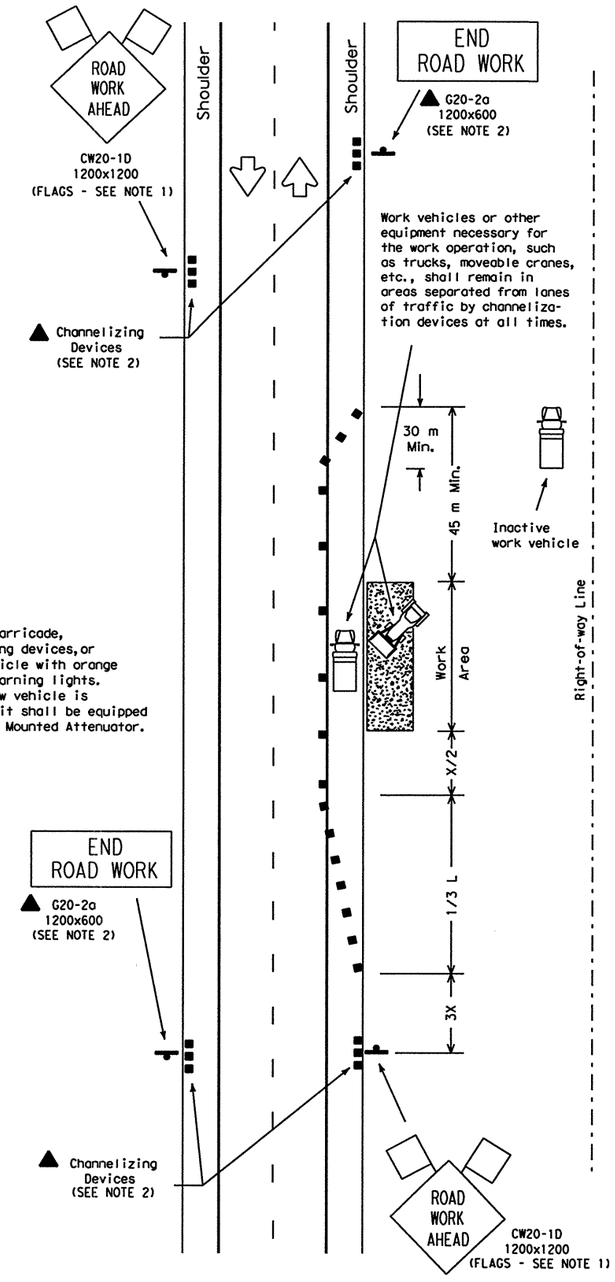


TCP (1-1c) (M)

Work Vehicles on Shoulder

LEGEND

Type III Barricade ■ ■ Channelizing Devices Flag

Heavy Work Vehicle Truck Mounted Attenuator

Trailer Mounted Flashing Arrow Panel (M) Portable Changeable Message Sign

Flagger Sign Post

| Posted Speed ✳ | Formula | Minimum Desirable Taper Lengths ✳✳ 3.0 m Offset (meters) | 3.3 m Offset (meters) | 3.6 m Offset (meters) | Suggested Maximum Spacing of Device On a Taper (meters) | On a Tangent (meters) | Minimum Sign Spacing X Distance (meters) |
|---|---|---|---|---|---|---|---|
| 30 | $L=\frac{WS^2}{60}$ | 45 | 50 | 55 | 9 | 15-20 | 40 |
| 35 | | 65 | 70 | 75 | 10 | 20-25 | 50 |
| 40 | | 80 | 90 | 100 | 12 | 25-30 | 75 |
| 45 | L=WS | 135 | 150 | 165 | 13 | 25-30 | 100 |
| 50 | | 150 | 165 | 180 | 15 | 30-35 | 120 |
| 55 | | 165 | 185 | 200 | 16 | 35-40 | 150 |
| 60 | | 180 | 200 | 220 | 18 | 40-45 | ✳ 180 |
| 65 | | 195 | 215 | 235 | 19 | 40-50 | ✳ 210 |
| 70 | | 210 | 235 | 255 | 20 | 40-50 | ✳ 240 |

✳ Conventional Roads Only

✳✳ Taper lengths have been rounded off.

L=Length of Taper (m) W=Width of Offset (m) S=Posted Speed (MPH)

| TYPICAL USAGE: | | | | |
|---|---|---|---|---|
| MOBILE | SHORT DURATION | SHORT TERM STATIONARY | INTERMEDIATE TERM STATIONARY | LONG TERM STATIONARY |
| | ✓ | ✓ | | |

GENERAL NOTES:

1. Unless otherwise stated in the plans, flags attached to signs are REQUIRED.
2. All traffic control devices illustrated are REQUIRED, except those denoted with the triangle symbol may be omitted when stated elsewhere in the plans.
3. On high speed facilities advance warning signs should be installed approximately 3X from the work area or from the beginning of a lane or shoulder taper. On low speed facilities the advance warning signs should be placed based on the "X" minimum distance.
4. Inactive work vehicles or other equipment should be parked near the right-of-way line and not parked on the paved shoulder.

**Only pre-qualified products shall be used. A list of compliant products and their sources may be obtained by writing or faxing:**

**Standards Engineer**
**Traffic Operations Division - TE**
**Texas Department of Transportation**
**125 East 11th Street**
**Austin, Texas 78701-2483**
**Phone (512) 416-3335**
**Fax (512) 416-3161**
**E-mail TRF-STANDARD@mailgw.dot.state.tx.us**

The requirement for shadow vehicles will be listed in the project GENERAL NOTES, Item 502, Barricades, Signs and Traffic Handling.

All dimensions are in millimeters unless otherwise noted.

© 2000

STANDARD PLANS
TEXAS DEPARTMENT OF TRANSPORTATION
*Traffic Operations Division*

# TRAFFIC CONTROL PLAN

## TCP(1-1)-98(M)

| ©TxDOT December 1985 | DN: - LR | CK: - MT | DW: - DN | CK: - MT | MEG NO.: |
|---|---|---|---|---|---|

| REVISIONS | STATE DISTRICT | FEDERAL REGION | FEDERAL AID PROJECT | SHEET |
|---|---|---|---|---|
| 2-94 | SAT | 6 | NH 2000(704),etc. | 131 |
| 8-95 | COUNTY | | CONTROL / SECTION / JOB | HIGHWAY |
| 1-97 | BEXAR | | 2452 / 01 / 036,etc. | LP 1604 |
| 4-98 | | | | |

Material 151

LEVELS 1 2 3 4 5 6 7 8 9 10 11 12 13 14 15 16 17 18 19 20 21 22 23 24 25 26 27 28 29 30 31 32 33 34 35 36 37 38 39 40 41 42 43 44 45 46 47 48 49 50 51 52 53 54 55 56 57 58 59 60 61 62 63

DN: CK: DW: CK: DATE: ACC: FILE:

DISCLAIMER
The use of this standard is governed by the "Texas Engineering Practice Act". No warranty of any kind is made by TxDOT for any purpose whatsoever. TxDOT assumes no responsibility for the conversion of this standard to other formats or for incorrect results or damages resulting from its use.

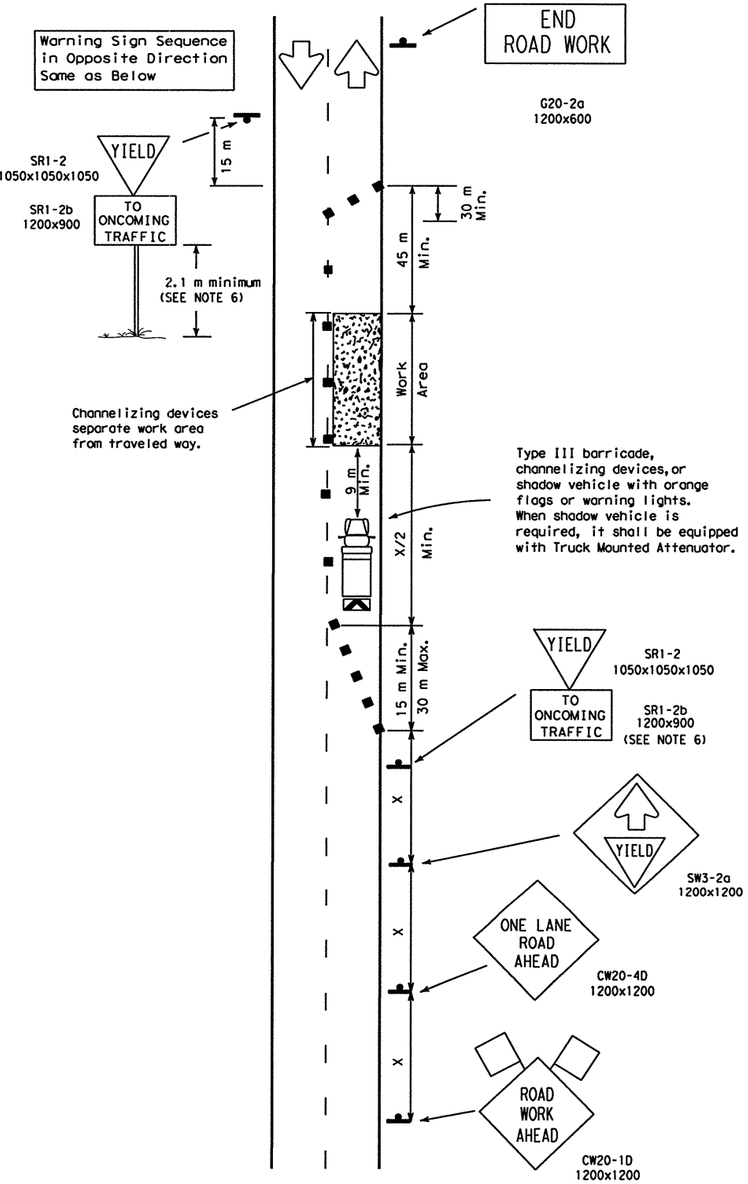


TCP (1-2a) (M)

One Lane Closed
Adequate Field of View

The requirement for shadow vehicles will be listed in the project GENERAL NOTES, Item 502, Barricades, Signs and Traffic Handling.

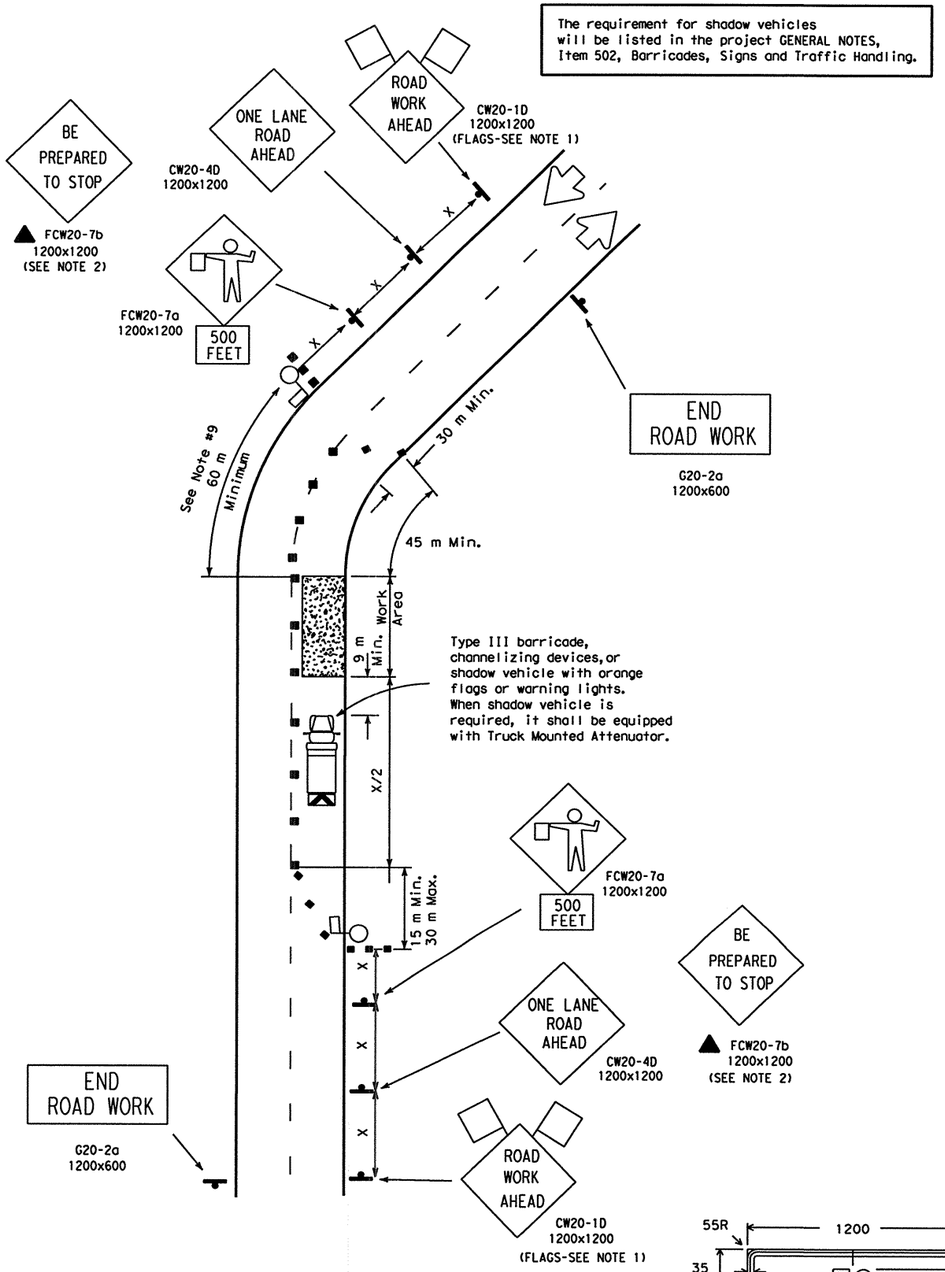


TCP (1-2b) (M)

One Lane Closed
Inadequate Field of View

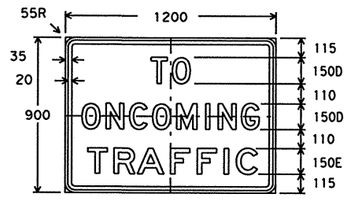


SR1-2b
1200x900

Letters - Black
Background - White
Reflective

LEGEND

Type III Barricade ■ ■ Channelizing Devices Flag
Heavy Work Vehicle Truck Mounted Attenuator
Trailer Mounted Flashing Arrow Panel (M) Portable Changeable Message Sign
Flagger Sign Post

| Posted Speed* | Formula | Minimum Desirable Taper Lengths ** 3.0 m Offset (meters) | 3.3 m Offset (meters) | 3.6 m Offset (meters) | Suggested Maximum Spacing of Device On a Taper (meters) | On a Tangent (meters) | Minimum Sign Spacing X Distance (meters) |
|---|---|---|---|---|---|---|---|
| 30 | $L=\frac{WS^2}{60}$ | 45 | 50 | 55 | 9 | 15-20 | 40 |
| 35 | | 65 | 70 | 75 | 10 | 20-25 | 50 |
| 40 | | 80 | 90 | 100 | 12 | 25-30 | 75 |
| 45 | L=WS | 135 | 150 | 165 | 13 | 25-30 | 100 |
| 50 | | 150 | 165 | 180 | 15 | 30-35 | 120 |
| 55 | | 165 | 185 | 200 | 16 | 35-40 | 150 |
| 60 | | 180 | 200 | 220 | 18 | 40-45 | * 180 |
| 65 | | 195 | 215 | 235 | 19 | 40-50 | * 210 |
| 70 | | 210 | 235 | 255 | 20 | 40-50 | * 240 |

* Conventional Roads Only

** Taper lengths have been rounded off.
L=Length of Taper (m) W=Width of Offset (m) S=Posted Speed (MPH)

| TYPICAL USAGE: | | | | |
|---|---|---|---|---|
| MOBILE | SHORT DURATION | SHORT TERM STATIONARY | INTERMEDIATE TERM STATIONARY | LONG TERM STATIONARY |
| | ✓ | ✓ | | |

GENERAL NOTES:

1. Flags attached to signs are REQUIRED.
2. All traffic control devices illustrated are REQUIRED, except those denoted with the triangle symbol may be omitted when stated elsewhere in the plans.
3. The BE PREPARED TO STOP sign may be installed after the ONE LANE ROAD AHEAD sign, but proper sign spacing shall be maintained.
4. ROAD WORK AHEAD sign may be repeated if the visibility of the work zone is less than 450 meters.

TCP(1-2a)(M)

5. YIELD sign traffic control may be used on projects with approaches that have adequate sight distance. For projects in urban areas, work zones should be no longer than one half city block. In rural areas on roadways with less than 4000 ADT, work areas should be no longer than 120 meters.
6. YIELD TO ONCOMING TRAFFIC sign shall be placed on a support at a 2.1 m minimum mounting height.

TCP(1-2b)(M)

7. Flaggers should use two-way radios or other methods of communication to control traffic.
8. Length of work area should be based on the ability of flaggers to communicate.
9. Distance along curve of work area should be adequate length for motorists to identify and react to flagger signals.

Only pre-qualified products shall be used. A list of compliant products and their sources may be obtained by writing or faxing:

Standards Engineer
Traffic Operations Division - TE
Texas Department of Transportation
125 East 11th Street
Austin, Texas 78701-2483
Phone (512) 416-3335
Fax (512) 416-3161
E-mail TRF-STANDARD@mailgw.dot.state.tx.us

All dimensions are in millimeters unless otherwise noted.

STANDARD PLANS
TEXAS DEPARTMENT OF TRANSPORTATION
*Traffic Operations Division*

© 2000

# TRAFFIC CONTROL PLAN

## TCP(1-2)-98(M)

| ©TxDOT December 1985 | DN: LR | CK: MT | DW: DN | CK: MT | NEG NO.: |
|---|---|---|---|---|---|
| REVISIONS 4-90 2-94 1-97 4-98 | STATE DISTRICT: SAT | FEDERAL REGION: 6 | FEDERAL AID PROJECT: NH 2000(704), etc. | | SHEET: 132 |
| | COUNTY: BEXAR | | CONTROL: 2452 | SECTION: 01 | JOB: 036, etc. | HIGHWAY: LP 1604 |

DN:
CK:
DW:
CK:

DATE:
ACC:
FILE:

LEVELS
1 2 3 4 5 6 7 8 9 10 11 12 13 14 15 16 17 18 19 20 21 22 23 24 25 26 27 28 29 30 31 32 33 34 35 36 37 38 39 40 41 42 43 44 45 46 47 48 49 50 51 52 53 54 55 56 57 58 59 60 61 62 63

DISCLAIMER
The use of this standard is governed by the "Texas Engineering Practice Act". No warranty of any kind is made by TxDOT for any purpose whatsoever. TxDOT assumes no responsibility for the conversion of this standard to other formats or for incorrect results or damages resulting from its use.

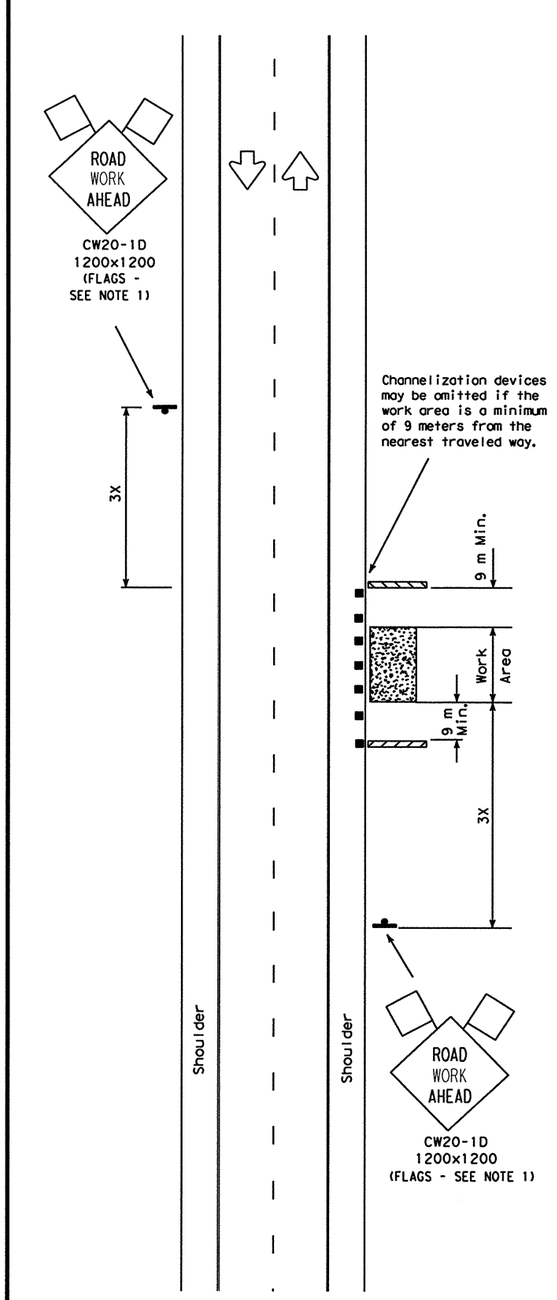


TCP (2-1a) (M)

Work Area Near Shoulder

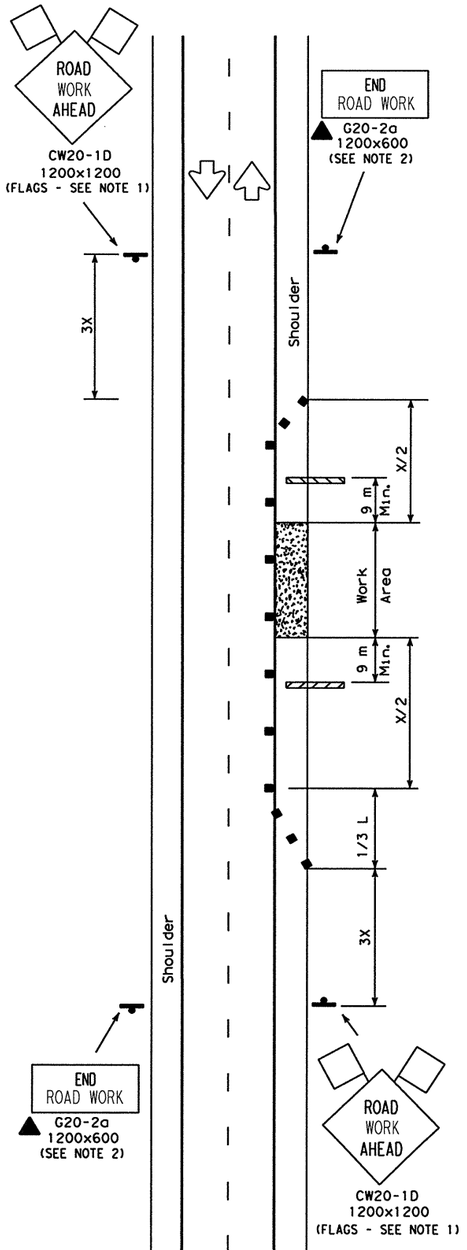


TCP (2-1b) (M)

Work Area on Shoulder

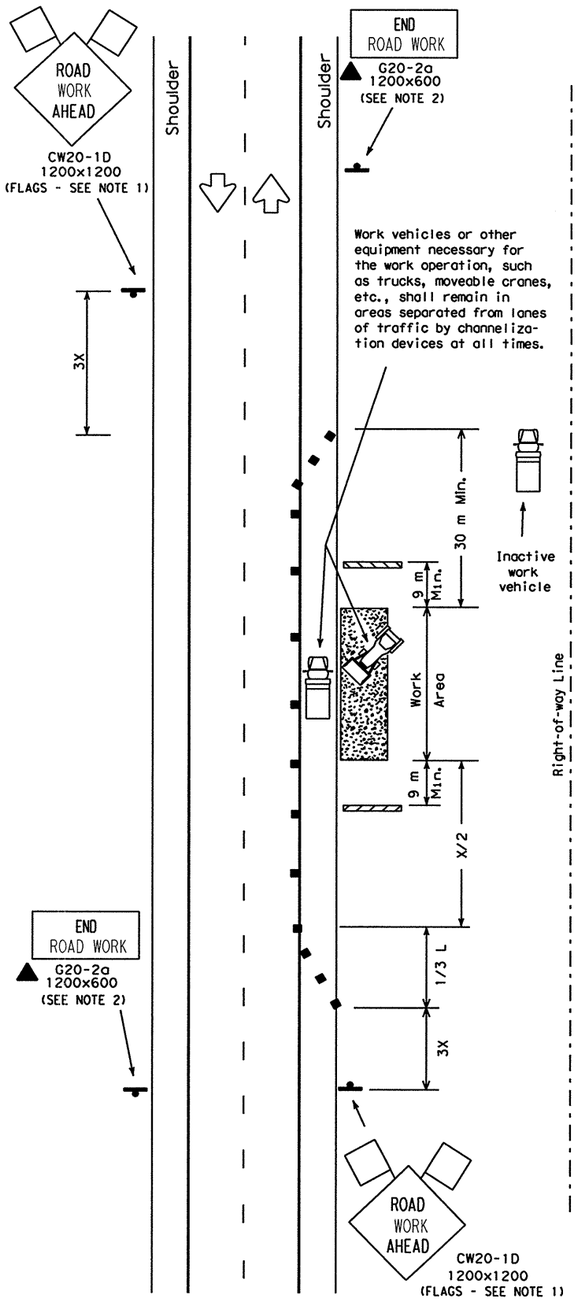


TCP (2-1c) (M)

Work Vehicles on Shoulder

LEGEND

Type III Barricade ■ ■ Channelizing Devices Flag
Heavy Work Vehicle Truck Mounted Attenuator
Trailer Mounted Flashing Arrow Panel Portable Changeable Message Sign
Flagger Sign Post

| Posted Speed ✻ | Formula | Minimum Desirable Taper Lengths ✻✻ 3.0 m Offset (meters) | 3.3 m Offset (meters) | 3.6 m Offset (meters) | Suggested Maximum Spacing of Device On a Taper (meters) | On a Tangent (meters) | Minimum Sign Spacing X Distance (meters) |
|---|---|---|---|---|---|---|---|
| 30 | $L=\frac{WS^2}{60}$ | 45 | 50 | 55 | 9 | 15-20 | 40 |
| 35 | | 65 | 70 | 75 | 10 | 20-25 | 50 |
| 40 | | 80 | 90 | 100 | 12 | 25-30 | 75 |
| 45 | L=WS | 135 | 150 | 165 | 13 | 25-30 | 100 |
| 50 | | 150 | 165 | 180 | 15 | 30-35 | 120 |
| 55 | | 165 | 185 | 200 | 16 | 35-40 | 150 |
| 60 | | 180 | 200 | 220 | 18 | 40-45 | ✻ 180 |
| 65 | | 195 | 215 | 235 | 19 | 40-50 | ✻ 210 |
| 70 | | 210 | 235 | 255 | 20 | 40-50 | ✻ 240 |

✻ Conventional Roads Only

✻✻ Taper lengths have been rounded off.
L=Length of Taper (m) W=Width of Offset (m) S=Posted Speed (MPH)

| TYPICAL USAGE: MOBILE | SHORT DURATION | SHORT TERM STATIONARY | INTERMEDIATE TERM STATIONARY | LONG TERM STATIONARY |
|---|---|---|---|---|
| | ✓ | ✓ | ✓ | ✓ |

GENERAL NOTES:

1. Unless otherwise stated in the plans, flags attached to signs are REQUIRED.
2. All traffic control devices illustrated are REQUIRED, except those denoted with the triangle symbol may be omitted when stated elsewhere in the plans.
3. Type III barricades are required on both sides of work area at all times. (See BC Standards for barricade details.)
4. Stockpiled material should be placed a minimum 9 m from nearest traveled way.
5. On high speed facilities advance warning signs should be installed approximately 3X from the work area or from the beginning of a lane or shoulder taper. On low speed facilities the advance warning sign should be placed on the "X" minimum distance.

**Only pre-qualified products shall be used. A list of compliant products and their sources may be obtained by writing or faxing:**

**Standards Engineer**
**Traffic Operations Division - TE**
**Texas Department of Transportation**
**125 East 11th Street**
**Austin, Texas 78701-2483**
**Phone (512) 416-3335**
**Fax (512) 416-3161**
**E-mail TRF-STANDARD@mailgw.dot.state.tx.us**

All dimensions are in millimeters unless otherwise noted.

©2000

STANDARD PLANS
TEXAS DEPARTMENT OF TRANSPORTATION
*Traffic Operations Division*

# TRAFFIC CONTROL PLAN

## TCP(2-1)-98(M)

| ©TxDOT December 1985 | DN: LR | CK: MT | DW: DN | CK: MT | REQ NO.: |
|---|---|---|---|---|---|
| REVISIONS 2-94 8-95 1-97 4-98 | STATE DISTRICT: SAT | FEDERAL REGION: 6 | FEDERAL AID PROJECT: NH 2000(704),etc. | | SHEET: 133 |
| | COUNTY: BEXAR | CONTROL: 2452 | SECTION: 01 | JOB: 036,etc. | HIGHWAY: LP 1604 |

LEVELS
1 2 3 4 5 6 7 8
9 10 11 12 13 14 15 16 17 18 19 20 21 22 23 24 25 26 27 28 29 30 31 32
33 34 35 36 37 38 39 40 41 42 43 44 45 46 47 48
49 50 51 52 53 54 55 56 57 58 59 60 61 62 63
ET: 41 56
DATE:
ACC:
FILE:
DN:
CK:
DW:
CK:

DISCLAIMER
The use of this standard is governed by the "Texas Engineering Practice Act". No warranty of any kind is made by TxDOT for any purpose whatsoever. TxDOT assumes no responsibility for the conversion of this standard to other formats or for incorrect results or damages resulting from its use.

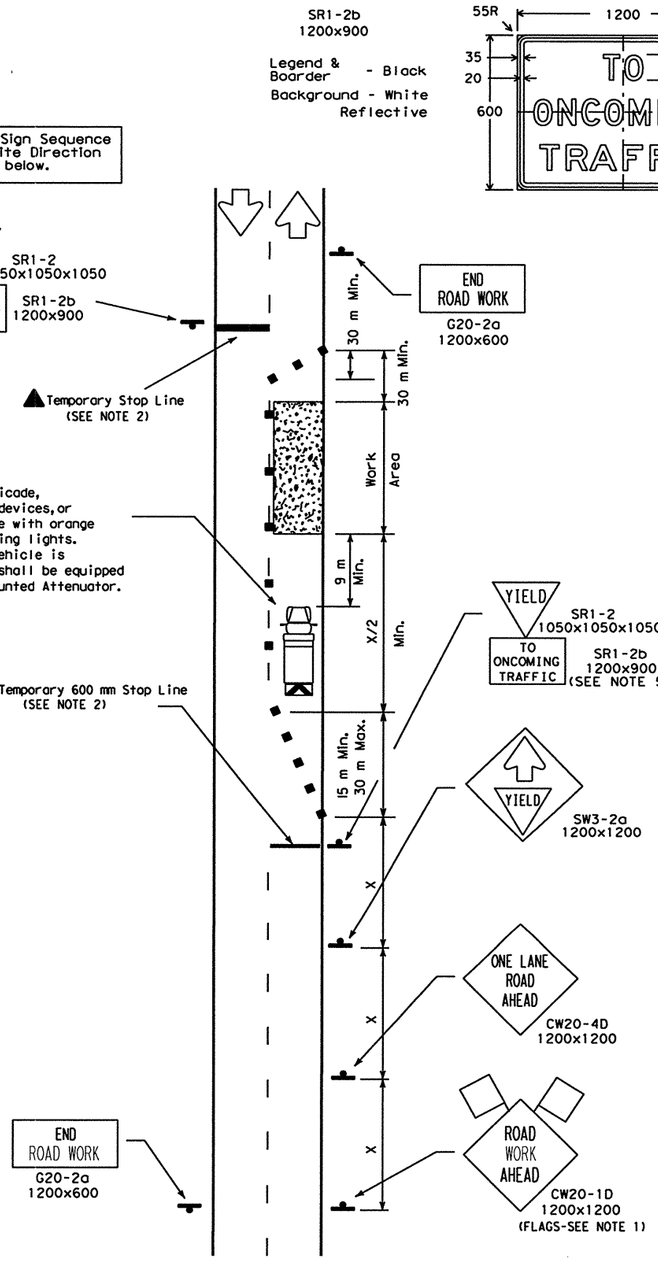


TCP (2-2a) (M)

2-Lane Roadway Without Paved Shoulders
One Lane Closed
Adequate Field of View

The requirement for shadow vehicles will be listed in the project GENERAL NOTES, Item 502, Barricades, Signs and Traffic Handling.

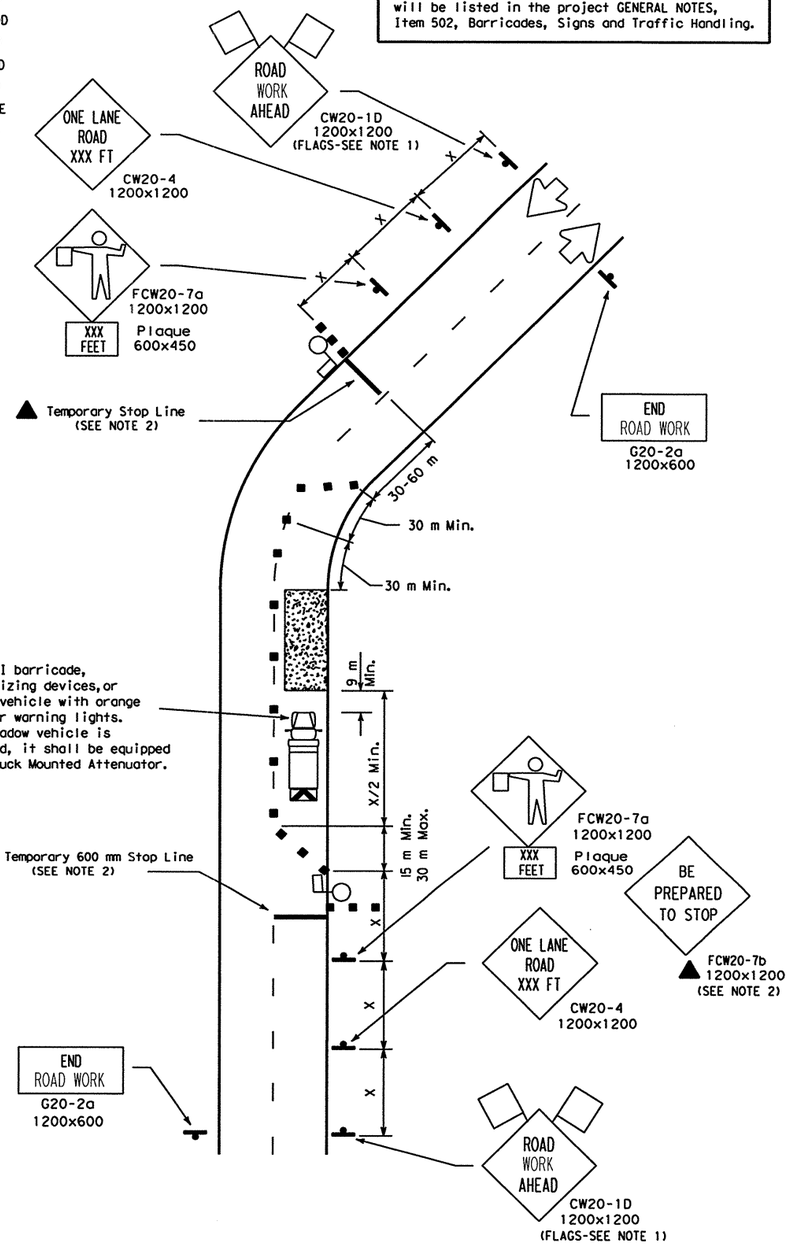


TCP (2-2b) (M)

2-Lane Roadway Without Paved Shoulders
One Lane Closed
Inadequate Field of View

LEGEND

Type III Barricade ■ ■ Channelizing Devices Flag
Heavy Work Vehicle Truck Mounted Attenuator
Trailer Mounted Flashing Arrow Panel (M) Portable Changeable Message Sign
Flagger Sign Post

| Posted Speed * | Formula | Minimum Desirable Taper Lengths ** 3.0 m Offset (meters) | 3.3 m Offset (meters) | 3.6 m Offset (meters) | Suggested Maximum Spacing of Device On a Taper (meters) | On a Tangent (meters) | Minimum Sign Spacing X Distance (meters) |
|---|---|---|---|---|---|---|---|
| 30 | $L=\frac{WS^2}{60}$ | 45 | 50 | 55 | 9 | 15-20 | 40 |
| 35 | | 65 | 70 | 75 | 10 | 20-25 | 50 |
| 40 | | 80 | 90 | 100 | 12 | 25-30 | 75 |
| 45 | L=WS | 135 | 150 | 165 | 13 | 25-30 | 100 |
| 50 | | 150 | 165 | 180 | 15 | 30-35 | 120 |
| 55 | | 165 | 185 | 200 | 16 | 35-40 | 150 |
| 60 | | 180 | 200 | 220 | 18 | 40-45 | * 180 |
| 65 | | 195 | 215 | 235 | 19 | 40-50 | * 210 |
| 70 | | 210 | 235 | 255 | 20 | 40-50 | * 240 |

* Conventional Roads Only

** Taper lengths have been rounded off.
L=Length of Taper (m) W=Width of Offset (m) S=Posted Speed (MPH)

| TYPICAL USAGE: MOBILE | SHORT DURATION | SHORT TERM STATIONARY | INTERMEDIATE TERM STATIONARY | LONG TERM STATIONARY |
|---|---|---|---|---|
| | ✓ | ✓ | ✓ | |

GENERAL NOTES:

1. Flags attached to signs are REQUIRED.
2. All traffic control devices illustrated are REQUIRED, except those denoted with the triangle symbol may be omitted when stated elsewhere in the plans.
3. The BE PREPARED TO STOP sign may be installed after the ONE LANE ROAD XXX FT sign, but proper sign spacing shall be maintained.
4. YIELD sign traffic control may be used on projects with approaches that have adequate sight distance. For projects in urban areas, work zones should be no longer than one half city block. In rural areas on roadways with less than 4000 ADT and work areas should be no longer than 120 meters.
5. YIELD TO ONCOMING TRAFFIC sign shall be placed on a support at a 2.1 m minimum mounting height.
6. Flaggers should use two-way radios or other methods of communication to control traffic.
7. Length of work area should be based on the ability of flaggers to communicate.
8. See TCP(NOTES)(M), CHANNELIZING DEVICES, note #2 for recommended 3 meter channelizing device spacing.

**Only pre-qualified products shall be used. A list of compliant products and their sources may be obtained by writing or faxing:**

**Standards Engineer**
**Traffic Operations Division - TE**
**Texas Department of Transportation**
**125 East 11th Street**
**Austin, Texas 78701-2483**
**Phone (512) 416-3335**
**Fax (512) 416-3161**
**E-mail TRF-STANDARD@mailgw.dot.state.tx.us**

All dimensions are in millimeters unless otherwise noted.

STANDARD PLANS
TEXAS DEPARTMENT OF TRANSPORTATION
*Traffic Operations Division*

© 2000

# TRAFFIC CONTROL PLAN

## TCP(2-2)-98(M)

©TxDOT December 1985

| DN-LR | CK-MT | DW-DN | CK-MT | MEG NO.: |
|---|---|---|---|---|

| REVISIONS | STATE DISTRICT | FEDERAL REGION | FEDERAL AID PROJECT | SHEET |
|---|---|---|---|---|
| 2-94 | SAT | 6 | NH 2000(704), etc. | 134 |
| 8-95 | | | | |
| 1-97 | COUNTY | | CONTROL / SECTION / JOB | HIGHWAY |
| 4-98 | BEXAR | | 2452 / 01 / 036, etc. | LP 1604 |

DN: CK: DW: CK:
DATE: ACC: FILE:
LEVELS ET RT

DISCLAIMER
The use of this standard is governed by the "Texas Engineering Practice Act". No warranty of any kind is made by TxDOT for any purpose whatsoever. TxDOT assumes no responsibility for the conversion of this standard to other formats or for incorrect results or damages resulting from its use.

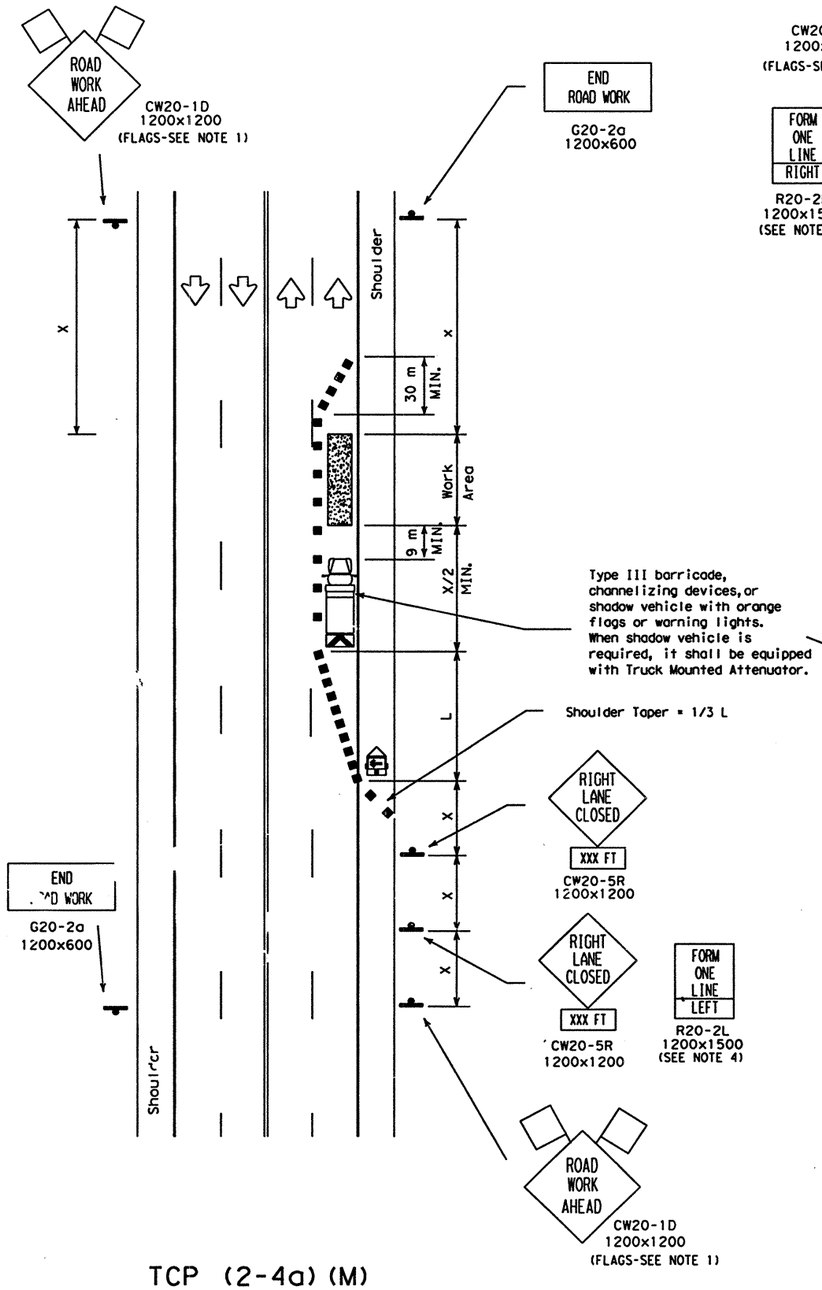


TCP (2-4a) (M)

One Lane Closed
Less Than Two Weeks

The requirement for shadow vehicles will be listed in the project GENERAL NOTES, Item 502, Barricades, Signs and Traffic Handling.

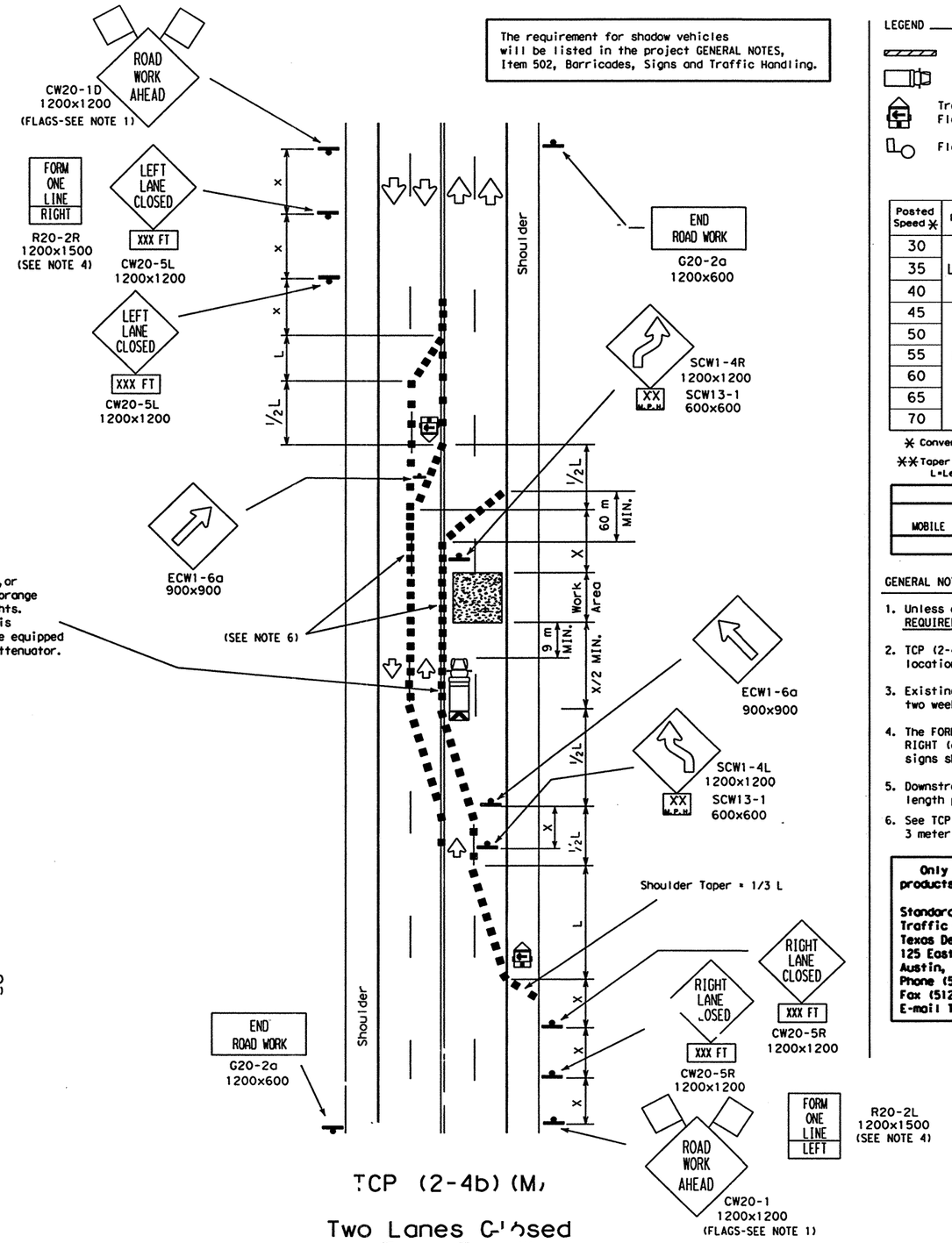


TCP (2-4b) (M)

Two Lanes Closed
Less Than Two Weeks

LEGEND

Type III Barricade ■ ■ Channelizing Devices Flag
Heavy Work Vehicle Truck Mounted Attenuator
Trailer Mounted Flashing Arrow Panel (M) Portable Changeable Message Sign
Flagger Sign Post

| Posted Speed ✳ | Formula | Minimum Desirable Taper Lengths ✳ 3.0 m Offset (meters) | 3.3 m Offset (meters) | 3.6 m Offset (meters) | Suggested Maximum Spacing of Device On a Taper (meters) | On a Tangent (meters) | Minimum Sign Spacing X Distance (meters) |
|---|---|---|---|---|---|---|---|
| 30 | $L=\frac{WS^2}{60}$ | 45 | 50 | 55 | 9 | 15-20 | 40 |
| 35 | | 65 | 70 | 75 | 10 | 20-25 | 50 |
| 40 | | 80 | 90 | 100 | 12 | 25-30 | 75 |
| 45 | L=WS | 135 | 150 | 165 | 13 | 25-30 | 100 |
| 50 | | 150 | 165 | 180 | 15 | 30-35 | 120 |
| 55 | | 165 | 185 | 200 | 16 | 35-40 | 150 |
| 60 | | 180 | 200 | 220 | 18 | 40-45 | ✳ 180 |
| 65 | | 195 | 215 | 235 | 19 | 40-50 | ✳ 210 |
| 70 | | 210 | 235 | 255 | 20 | 40-50 | ✳ 240 |

✳ Conventional Roads Only

✳✳ Taper lengths have been rounded off.
L=Length of Taper (m) W=Width of Offset (m) S=Posted Speed (MPH)

| TYPICAL USAGE: MOBILE | SHORT DURATION | SHORT TERM STATIONARY | INTERMEDIATE TERM STATIONARY | LONG TERM STATIONARY |
|---|---|---|---|---|
| | | ✓ | ✓ | |

GENERAL NOTES:

1. Unless otherwise stated in the plans flags attached to signs are REQUIRED.
2. TCP (2-4b) (M) shall be used only on projects that will be at a location for less than two weeks.
3. Existing pavement markings may remain in place for projects less than two weeks in duration.
4. The FORM ONE LINE LEFT (or RIGHT) sign may be used following the RIGHT (or LEFT) LANE CLOSED XXX FT sign. Spacing distance between signs should be the minimum distance indicated.
5. Downstream taper is optional. When used, it should be 30 m minimum length per lane.
6. See TCP (NOTES) (M), CHANNELIZING DEVICES, note #2 for recommended 3 meter channelizing device spacing.

**Only pre-qualified products shall be used. A list of compliant products and their sources may be obtained by writing or faxing:**

**Standards Engineer**
**Traffic Operations Division - TE**
**Texas Department of Transportation**
**125 East 11th Street**
**Austin, Texas 78701-2483**
**Phone (512) 416-3335**
**Fax (512) 416-3161**
**E-mail TRF-STANDARD@mailgw.dot.state.tx.us**

All dimensions are in millimeters unless otherwise noted.

STANDARD PLANS
TEXAS DEPARTMENT OF TRANSPORTATION
*Traffic Operations Division*

# TRAFFIC CONTROL PLAN

## TCP (2-4)-98 (M)

© TxDOT December 1985

| DN: LR | CK: MT | DW: DN | CK: DM | MEG NO.: |
|---|---|---|---|---|

| REVISIONS | STATE DISTRICT | FEDERAL REGION | FEDERAL AID PROJECT | SHEET |
|---|---|---|---|---|
| 2-94 | SAT | 6 | NH 2000(704), etc. | 134A |
| 8-95 | | | | |
| 1-97 | | | | |
| 4-98 | | | | |

| COUNTY | CONTROL | SECTION | JOB | HIGHWAY |
|---|---|---|---|---|
| BEXAR | 2452 | 01 | 036, etc. | LP 1604 |

Metric 164

LEVELS
1 2 3 4 5 6 7 8
17 18 19 20 21 22 23 24 25 26 27 28 29 30 31 32
33 34 35 36 37 38 39 40 41 42 43 44 45 46 47 48
49 50 51 52 53 54 55 56 57 58 59 60 61 62 63

ED
1 1 2 3 3 4 1 5 1 6

DATE:
ACC:
FILE:

DN:
CK:
DW:
CK:

DISCLAIMER
The use of this standard is governed by the "Texas Engineering Practice Act". No warranty of any kind is made by TxDOT for any purpose whatsoever. TxDOT assumes no responsibility for the conversion of this standard to other formats or for incorrect results or damages resulting from its use.

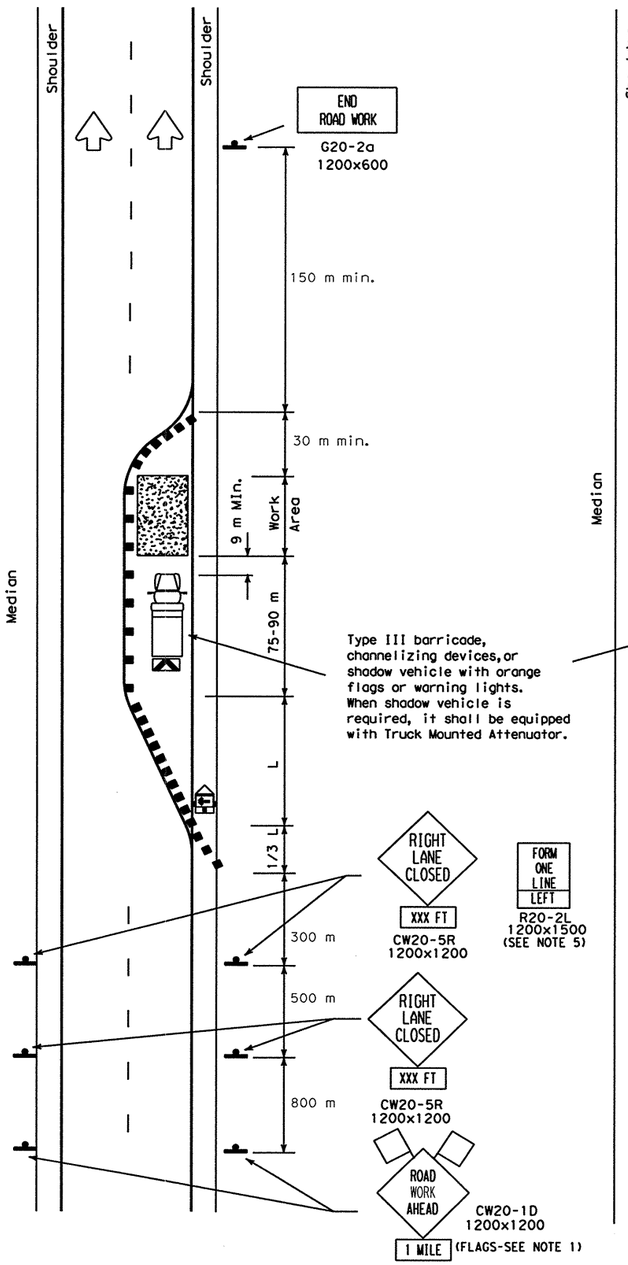


TCP (2-6a) (M)
One Lane Closure

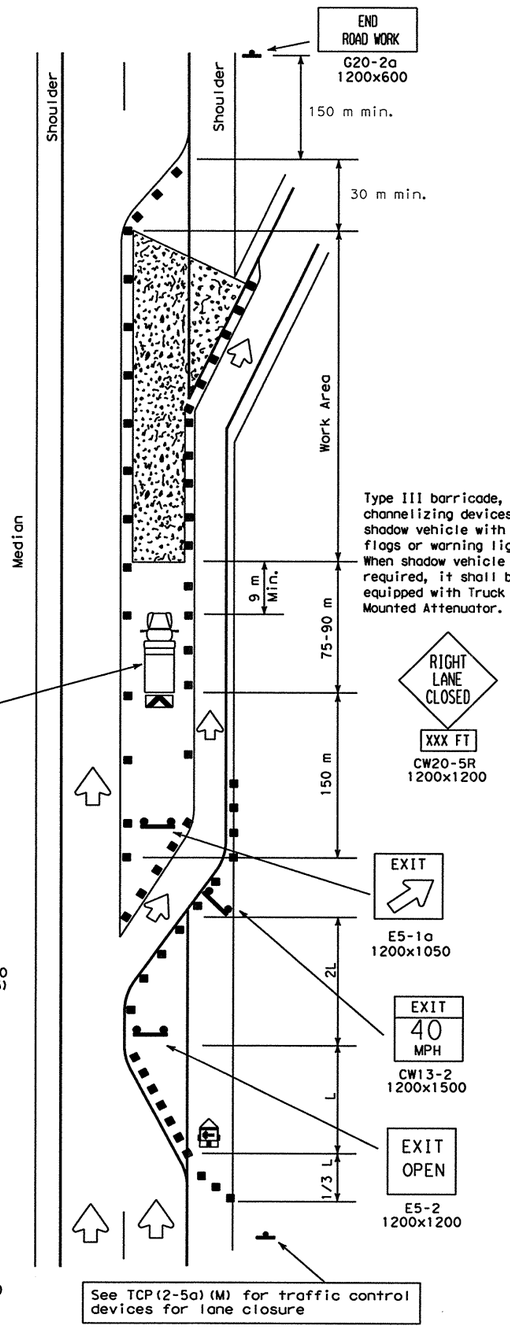


TCP (2-6b) (M)
Lane Closure Near Exit Ramps

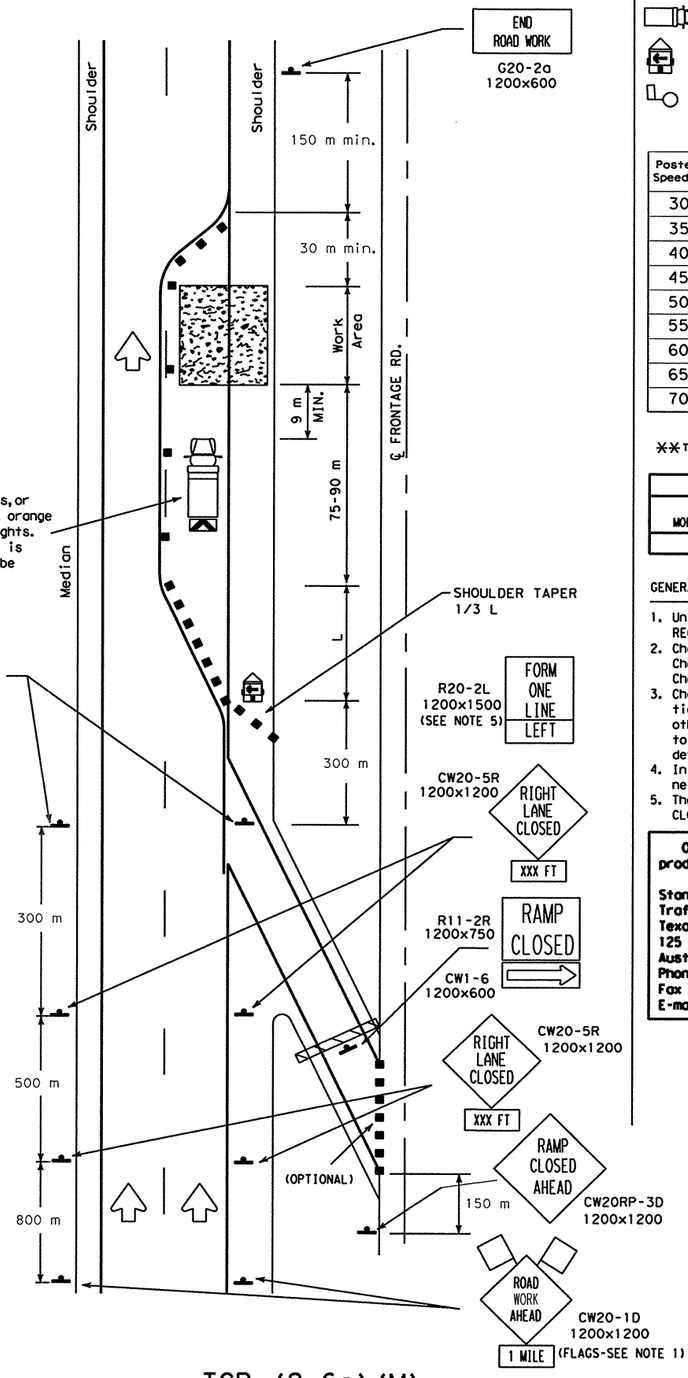


TCP (2-6c) (M)
Lane Closure Near Entrance Ramps

LEGEND

Type III Barricade ■ ■ Channelizing Devices Flag
Heavy Work Vehicle Truck Mounted Attenuator
Trailer Mounted Flashing Arrow Panel (M) Portable Changeable Message Sign
Flagger Sign Post

| Posted Speed | Formula | Minimum Desirable Taper Lengths ✻✻ 3.0 m Offset (meters) | 3.3 m Offset (meters) | 3.6 m Offset (meters) | Suggested Maximum Spacing of Device On a Taper (meters) | On a Tangent (meters) |
|---|---|---|---|---|---|---|
| 30 | $L=\frac{WS^2}{60}$ | 45 | 50 | 55 | 9 | 15-20 |
| 35 | | 65 | 70 | 75 | 10 | 20-25 |
| 40 | | 80 | 90 | 100 | 12 | 25-30 |
| 45 | L=WS | 135 | 150 | 165 | 13 | 25-30 |
| 50 | | 150 | 165 | 180 | 15 | 30-35 |
| 55 | | 165 | 185 | 200 | 16 | 35-40 |
| 60 | | 180 | 200 | 220 | 18 | 40-45 |
| 65 | | 195 | 215 | 235 | 19 | 40-50 |
| 70 | | 210 | 235 | 255 | 20 | 40-50 |

✻✻Taper lengths have been rounded off.
L=Length of Taper (m) W=Width of Offset (m) S=Posted Speed (MPH)

| TYPICAL USAGE: MOBILE | SHORT DURATION | SHORT TERM STATIONARY | INTERMEDIATE TERM STATIONARY | LONG TERM STATIONARY |
|---|---|---|---|---|
| | | | ✓ | ✓ |

GENERAL NOTES:

1. Unless otherwise stated in the plans, flags attached to signs are REQUIRED.
2. Channelizing devices used to close lanes may be supplemented with the Chevron Alignment Sign placed on every other channelizing device. Chevrons may be attached to plastic drums as per BC Standards.
3. Channelizing devices used along the work area or along tangent sections may be supplemented with vertical panels (VP) placed on every other channelizing device. If night time conditions make it difficult to see at least two VP's, the VP's may be placed on each channelizing device.
4. In areas with safety lighting or continuous illumination the channelizing devices can be supplemented with delineators.
5. The FORM ONE LINE LEFT sign may be used following the RIGHT LANE CLOSED sign.

**Only pre-qualified products shall be used. A list of compliant products and their sources may be obtained by writing or faxing:**

**Standards Engineer**
**Traffic Operations Division - TE**
**Texas Department of Transportation**
**125 East 11th Street**
**Austin, Texas 78701-2483**
**Phone (512) 416-3335**
**Fax (512) 416-3161**
**E-mail TRF-STANDARD@mailgw.dot.state.tx.us**

The requirement for shadow vehicles will be listed in the project GENERAL NOTES, Item 502, Barricades, Signs and Traffic Handling.

All dimensions are in millimeters unless otherwise noted.

©2000

STANDARD PLANS
TEXAS DEPARTMENT OF TRANSPORTATION
*Traffic Operations Division*

# TRAFFIC CONTROL PLAN

## TCP(2-6)-98(M)

| ©TxDOT December 1985 | DN: LR | CK: MT | DW: DN | CK: DW | MSG NO.: |
|---|---|---|---|---|---|
| REVISIONS 2-94 8-95 1-97 4-98 | STATE DISTRICT: SAT | FEDERAL REGION: 6 | FEDERAL AID PROJECT: NH 2000(704), etc. | | SHEET: 135 |
| | COUNTY: BEXAR | CONTROL: 2452 | SECTION: 01 | JOB: 036, etc. | HIGHWAY: LP 1604 |

DN: CK: DW: CK:
DATE: FILE:
LEVELS

DISCLAIMER
The use of this standard is governed by the "Texas Engineering Practice Act". No warranty of any kind is made by TxDOT for any purpose whatsoever. TxDOT assumes no responsibility for the conversion of this standard to other formats or for incorrect results or damages resulting from its use.

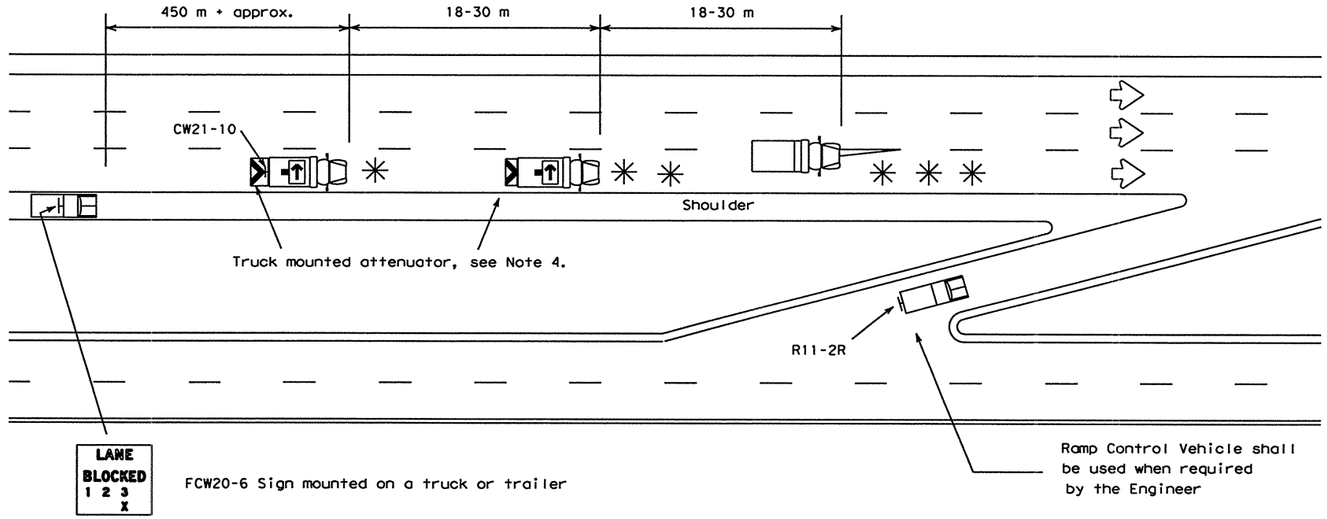


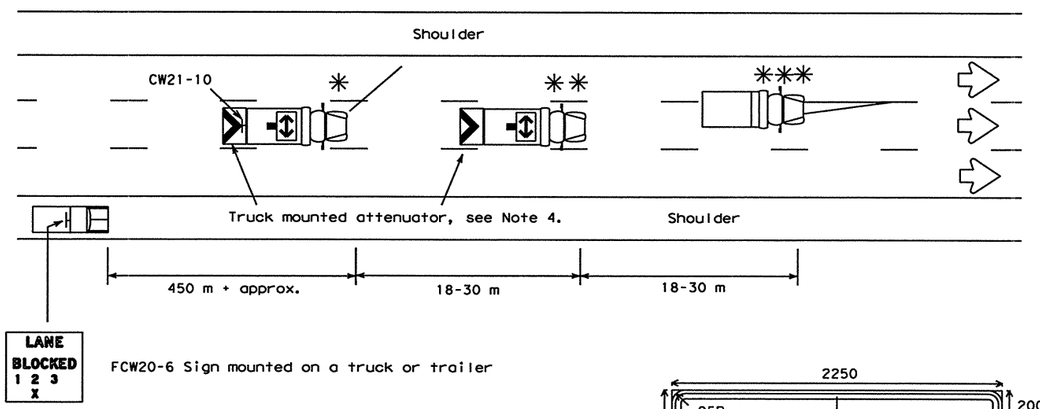


Shadow and trail vehicle shall be equipped with Truck Mounted Attenuator.

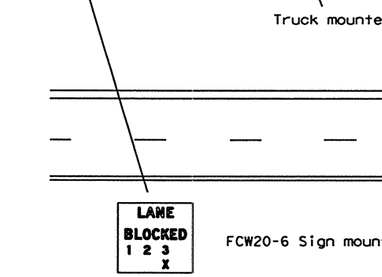


Typical Trail Vehicle with LEFT Directional display Flashing Arrow Panel




Typical Advance Warning Vehicle




FCW20-6

LETTERS = BLACK
BORDER = BLACK
BACKGROUND = ORANGE

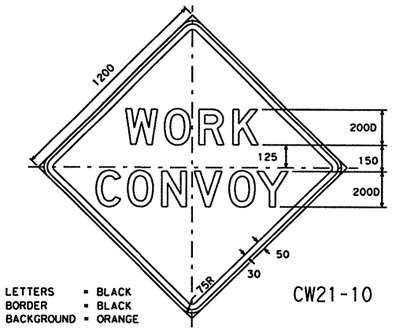


CW21-10

LETTERS = BLACK
BORDER = BLACK
BACKGROUND = ORANGE

*Legend:*

- ✱ TRAIL VEHICLE
- ✱✱ SHADOW VEHICLE
- ✱✱✱ WORK VEHICLE
- Truck mounted attenuator
- HEAVY WORK VEHICLE

Arrow Panel Displays

- RIGHT Directional
- LEFT Directional
- RIGHT or LEFT Directional
- CAUTION mode

GENERAL NOTES:

1. TRAIL, SHADOW, LEAD, and work vehicles shall be equipped with arrow panels as illustrated. The Engineer will determine if the LEAD VEHICLE and/or TRAIL VEHICLE are required based on prevailing roadway conditions, traffic volume, and sight distance restrictions.
2. All traffic control devices shall be in accordance with the "Texas Manual on Uniform Traffic Control Devices" (TMUTCD), latest edition.
3. The use of yellow rotating beacons or strobe lights on vehicles are required unless otherwise stated elsewhere in the plans.
4. The use of truck mounted attenuators (TMA) on the SHADOW VEHICLE and the TRAIL VEHICLE are required.
5. Optional striping on the back panel of all truck mounted attenuators shall be 200 mm red and white reflective sheeting placed in an inverted "V" design. Reflective sheeting shall meet or exceed the reflectivity and color requirements of DEPARTMENTAL MATERIAL SPECIFICATION D-9-8300, TYPE C.
6. Flashing Arrow Panels shall be Type B or Type C as per BC Standards. The panel operation shall be controlled from inside the vehicle.
7. Each vehicle shall have two-way radio communication capability.
8. When work convoys must change lanes, the TRAIL VEHICLE should change lanes first to shadow the other convoy vehicles.
9. Vehicle spacing between TRAIL VEHICLE and SHADOW VEHICLE will vary depending on sight distance restrictions. Motorists approaching the work convoy should be able to see the TRAIL VEHICLE in time to slow down and/or change lanes as they approach the TRAIL VEHICLE.
10. The LANE BLOCKED sign (FCW20-6) shall be used on divided highways and may be mounted on a truck or trailer. For divided highways with two lanes in each direction, the RIGHT or LEFT LANE CLOSED sign (CW20-5, 1200x1200) may be substituted for the LANE BLOCKED sign (FCW20-6).

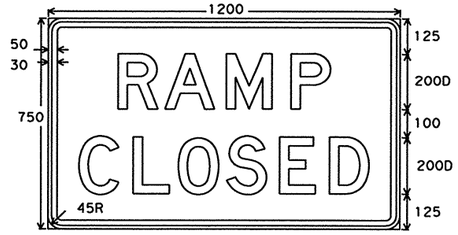


R11-2R

LETTERS = BLACK
BORDER = BLACK
BACKGROUND = WHITE

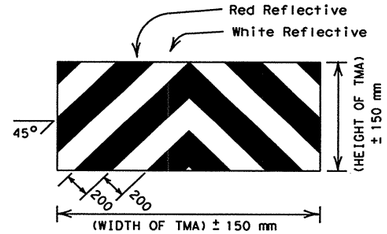


OPTIONAL STRIPING FOR TMA

STRIPING FOR TMA WILL BE REQUIRED ON ALL PROJECTS AWARDED AFTER JANUARY 1, 2000

All dimensions are in millimeters unless otherwise noted.

**Only pre-qualified products shall be used. A list of compliant products and their sources may be obtained by writing or faxing:**

**Standards Engineer**
**Traffic Operations Division - TE**
**Texas Department of Transportation**
**125 East 11th Street**
**Austin, Texas 78701-2483**
**Phone (512) 416-3335**
**Fax (512) 416-3161**
**E-mail TRF-STANDARD@mailgw.dot.state.tx.us**

STANDARD PLANS
TEXAS DEPARTMENT OF TRANSPORTATION
*Traffic Operations Division*

©2000

# TRAFFIC CONTROL PLAN MOBILE OPERATIONS DIVIDED HIGHWAYS

## TCP(3-2)-98(M)

| ©TxDOT December 1985 | DN: LR | CK: - | DW: DN | CK: DW | MEG NO.: |
|---|---|---|---|---|---|
| REVISIONS | STATE DISTRICT | FEDERAL REGION | FEDERAL AID PROJECT | | SHEET |
| 2-94 | SAT | 6 | NH 2000(704), etc. | | 136 |
| 8-95 | COUNTY | | CONTROL | SECTION | JOB | HIGHWAY |
| 1-97 | BEXAR | | 2452 | 01 | 036, etc. | LP 1604 |
| 4-98 | | | | | | |

DN:
CK:
DW:
CK:

DATE:
ACC:
FILE:

LEVELS
1 2 3 4 5 6 7 8
9 10 11 12 13 14 15 16
17 18 19 20 21 22 23 24
25 26 27 28 29 30 31 32
33 34 35 36 37 38 39 40
41 42 43 44 45 46 47 48
49 50 51 52 53 54 55 56
57 58 59 60 61 62 63

SET

DISCLAIMER
The use of this standard is governed by the "Texas Engineering Practice Act". No warranty of any kind is made by TxDOT for any purpose whatsoever. TxDOT assumes no responsibility for the conversion of this standard to other formats or for incorrect results or damages resulting from its use.

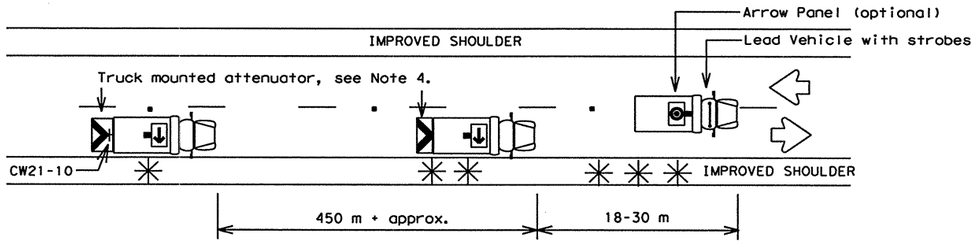


Two Lane Highway With Paved Shoulders (work on travel lane)

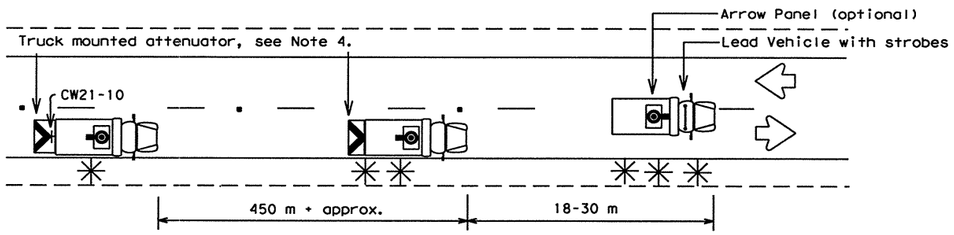


Two Lane Highway Without Paved Shoulders (work on travel lane)

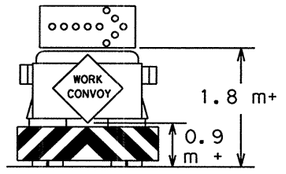


TYPICAL TRAIL VEHICLE
RIGHT Directional display
Flashing Arrow Panel

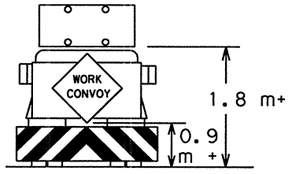


TYPICAL TRAIL VEHICLE
with (four corner flash)
CAUTION display
Flashing Arrow Panel

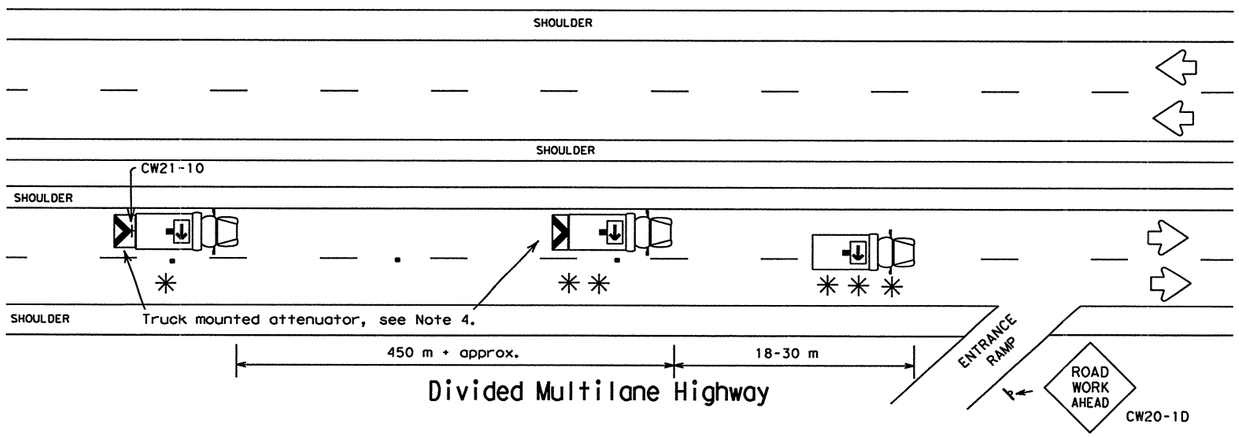


Divided Multilane Highway

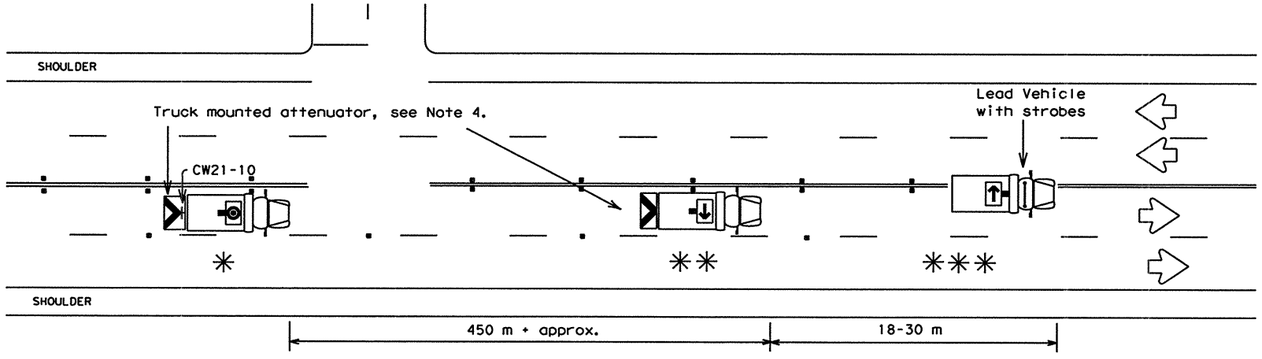


Undivided Multilane Highway

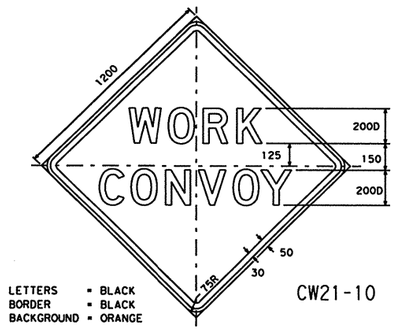


CW21-10

*Legend:*

- ✱ TRAIL VEHICLE
- ✱ ✱ SHADOW VEHICLE
- ✱ ✱ ✱ WORK VEHICLE
- Truck mounted attenuator
- HEAVY WORK VEHICLE

Arrow Panel Displays

- RIGHT Directional
- LEFT Directional
- RIGHT or LEFT Directional
- CAUTION mode

GENERAL NOTES:

1. TRAIL, SHADOW, LEAD, and work vehicles shall be equipped with arrow panels as illustrated. The Engineer will determine if the LEAD VEHICLE and/or TRAIL VEHICLE are required based on prevailing roadway conditions, traffic volume, and sight distance restrictions.
2. All traffic control devices shall be in accordance with the "Texas Manual on Uniform Traffic Control Devices" (TMUTCD), latest edition.
3. The use of yellow rotating beacons or strobe lights on vehicles are required unless otherwise stated elsewhere in the plans.
4. The use of truck mounted attenuators (TMA) on the SHADOW VEHICLE and the TRAIL VEHICLE are required.
5. Optional striping on the back panel of all truck mounted attenuators shall be 200 mm red and white reflective sheeting placed in an inverted "V" design. Reflective sheeting shall meet or exceed the reflectivity and color requirements of DEPARTMENTAL MATERIAL SPECIFICATION D-9-8300, TYPE C.
6. Flashing Arrow Panels shall be Type B or Type C as per BC Standards. The panel operation shall be controlled from inside the vehicle.
7. Each vehicle shall have two-way radio communication capability.
8. When work convoys must change lanes, the TRAIL VEHICLE should change lanes first to shadow the other convoy vehicles.
9. Vehicle spacing between TRAIL VEHICLE and SHADOW VEHICLE will vary depending on sight distance restrictions. Motorists approaching the work convoy should be able to see the TRAIL VEHICLE in time to slow down and/or change lanes as they approach the TRAIL VEHICLE.

**Only pre-qualified products shall be used. A list of compliant products and their sources may be obtained by writing or faxing:**

**Standards Engineer**
**Traffic Operations Division - TE**
**Texas Department of Transportation**
**125 East 11th Street**
**Austin, Texas 78701-2483**
**Phone (512) 416-3335**
**Fax (512) 416-3161**
**E-mail TRF-STANDARD@mailgw.dot.state.tx.us**

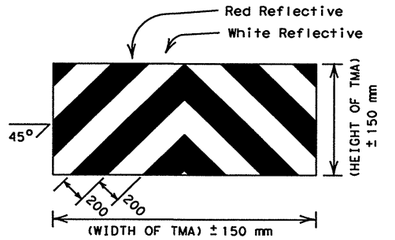


OPTIONAL STRIPING FOR TMA

STRIPING FOR TMA WILL BE REQUIRED ON ALL PROJECTS AWARDED AFTER JANUARY 1, 2000

Shadow and trail vehicle shall be equipped with Truck Mounted Attenuator.

All dimensions are in millimeters unless otherwise noted.

©2000

**STANDARD PLANS**
**TEXAS DEPARTMENT OF TRANSPORTATION**
*Traffic Operations Division*

# TRAFFIC CONTROL PLAN MOBILE OPERATIONS RAISED PAVEMENT MARKER INSTALLATION TCP(3-3)-98(M)

| ©TxDOT September 1987 | DN: LR | CK: - | DW: DN | CK: DM | REQ NO.: |
|---|---|---|---|---|---|
| REVISIONS 2-94 8-95 1-97 4-98 | STATE DISTRICT: SAT | FEDERAL REGION: 6 | FEDERAL AID PROJECT: NH 2000(704),etc. | | SHEET: 137 |
| | COUNTY: BEXAR | CONTROL: 2452 | SECTION: 01 | JOB: 036,etc. | HIGHWAY: LP 1604 |

DN: CK: DW: CK:

DATE: ACC: FILE:

LEVELS
1 2 3 4 5 6 7 8
7 8 9 20 21 22 32 42 >>
33 43 53 63 73 83 94 04 14 24 34 44 54 64 74 84
95 05 15 25 35 45 55 65 75 85 96 06 16 26 36

DISCLAIMER
The use of this standard is governed by the "Texas Engineering Practice Act". No warranty of any kind is made by TxDOT for any purpose whatsoever. TxDOT assumes no responsibility for the conversion of this standard to other formats or for incorrect results or damages resulting from its use.

A shadow vehicle equipped with a Truck Mounted Attenuator is typically required. A shadow vehicle equipped with a TMA shall be used if it can be positioned approximately 30 meters or less in advance of the area of crew exposure without adversely effecting the work performance.

Shadow vehicles are required unless otherwise noted in the GENERAL NOTES, Item 502, Barricades, Signs and Traffic Handling.

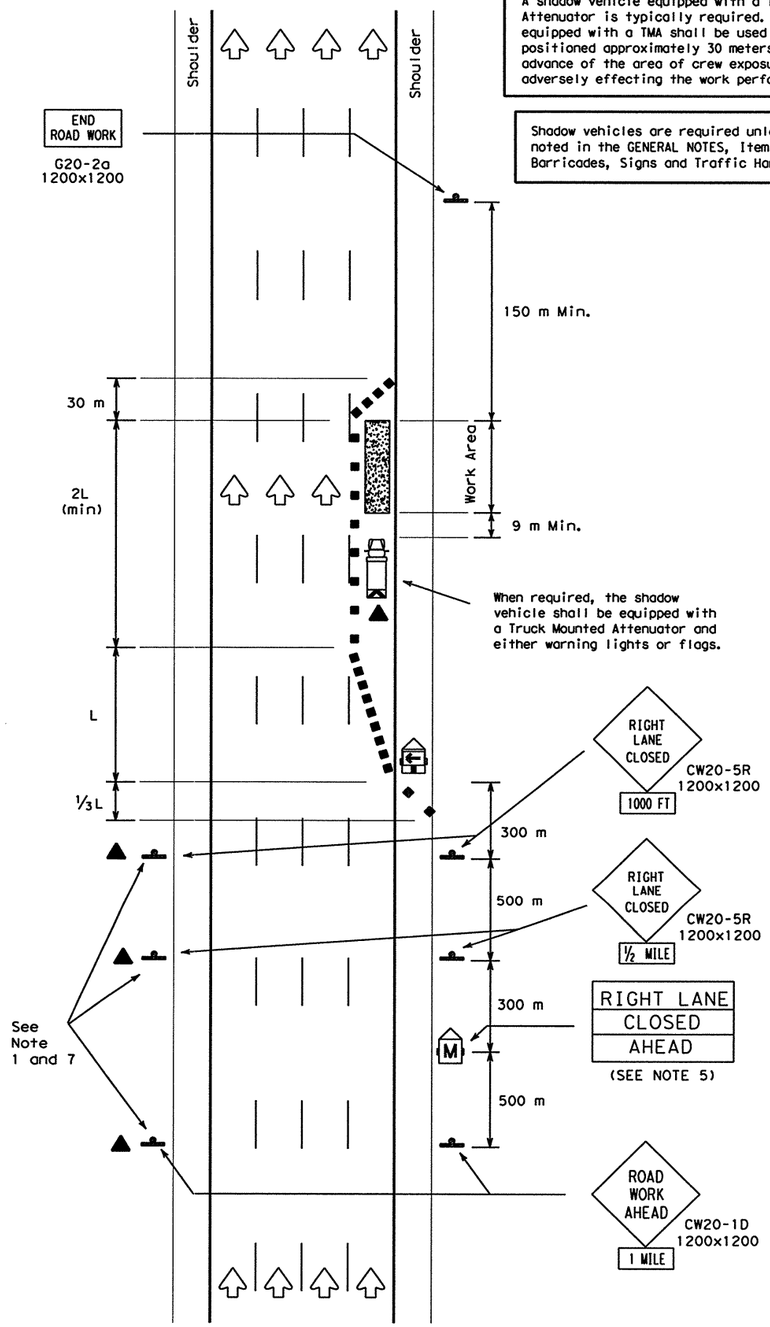


TCP (6-1a) (M)
Typical Freeway
One Lane Closure

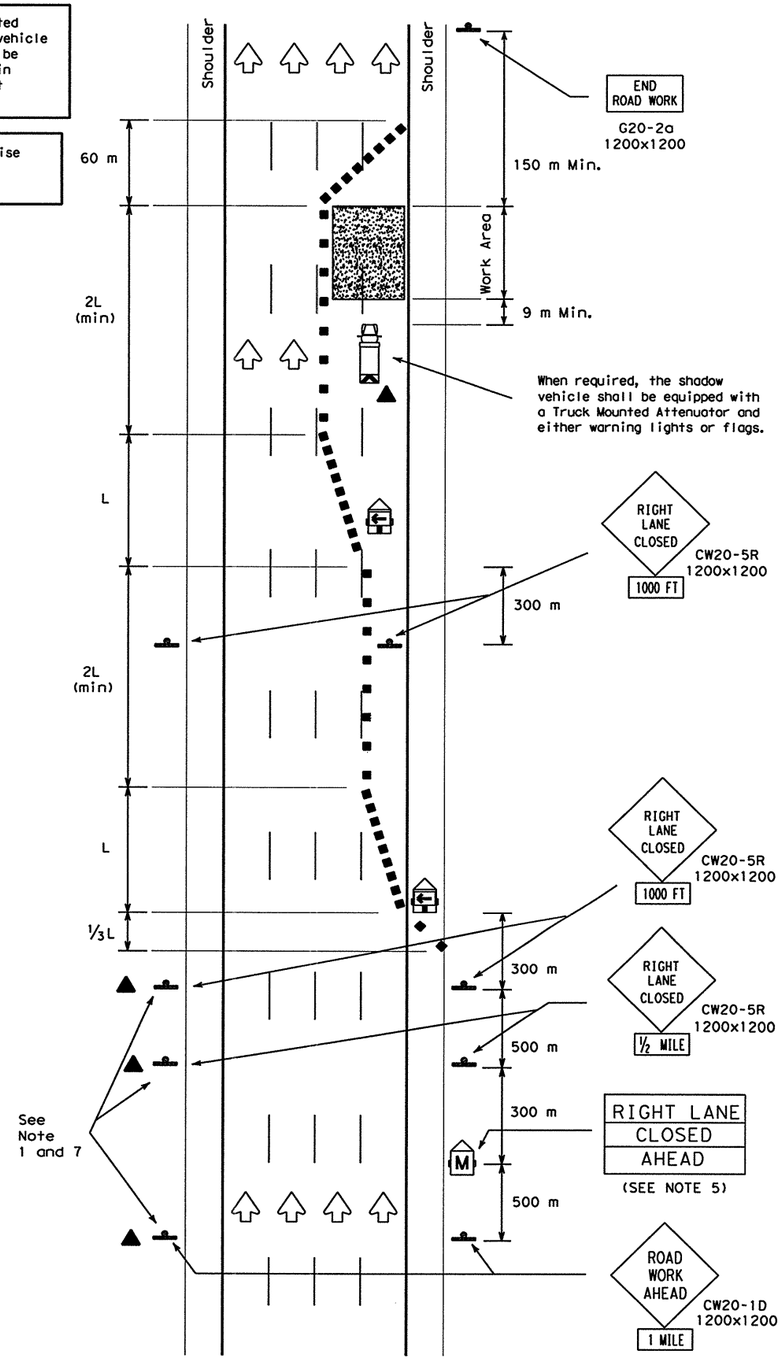


TCP (6-1b) (M)
Typical Freeway
Two Lane Closure

| TYPICAL USAGE: | | | | |
|---|---|---|---|---|
| MOBILE | SHORT DURATION | SHORT TERM STATIONARY | INTERMEDIATE TERM STATIONARY | LONG TERM STATIONARY |
| | ✓ | ✓ | | |

LEGEND

Type III Barricade ■ ■ Channelizing Devices Flag
Heavy Work Vehicle Truck Mounted Attenuator
Trailer Mounted Flashing Arrow Panel (M) Portable Changeable Message Sign
Flagger Sign Post

| Posted Speed | Formula | Minimum Desirable Taper Lengths ** 3.0 m Offset (meters) | 3.3 m Offset (meters) | 3.6 m Offset (meters) | Suggested Maximum Spacing of Device On a Taper (meters) | On a Tangent (meters) |
|---|---|---|---|---|---|---|
| 30 | $L=\frac{WS^2}{60}$ | 45 | 50 | 55 | 9 | 15-20 |
| 35 | | 65 | 70 | 75 | 10 | 20-25 |
| 40 | | 80 | 90 | 100 | 12 | 25-30 |
| 45 | L=WS | 135 | 150 | 165 | 13 | 25-30 |
| 50 | | 150 | 165 | 180 | 15 | 30-35 |
| 55 | | 165 | 185 | 200 | 16 | 35-40 |
| 60 | | 180 | 200 | 220 | 18 | 40-45 |
| 65 | | 195 | 215 | 235 | 19 | 40-50 |
| 70 | | 210 | 235 | 255 | 20 | 40-50 |

** Taper lengths have been rounded off.
L=Length of Taper (m) W=Width of Offset (m) S=Posted Speed (MPH)

GENERAL NOTES:

1. All traffic control devices illustrated are REQUIRED, except those denoted with the triangle symbol may be omitted when stated elsewhere in the plans.
2. Drums are the typical channelizing device. Cones or other devices may be used if approved by the Engineer. Drums shall be used during nighttime operations.
3. All construction signs and barricades placed during any phase of work shall remain in place until removal is approved by the Engineer.
4. The Engineer may direct the Contractor to furnish additional signs and barricades as required to maintain traffic flow and motorist safety during construction.
5. Static message board or changeable message signs stating the date and duration of ramp or freeway closure shall be placed a minimum of seven (7) calendar days in advance of actual closure.
6. High level warning flags should be used on advance warning signs during daytime operations. Warning lights may be used to add emphasis to advance warning signs during nighttime operations.
7. Duplicate construction warning signs should be erected on the median side of freeways where median width will permit and traffic volume justifies the signing.
8. The number of closed lanes may be increased provided the spacings of traffic control devices, taper lengths and tangent lengths meet the requirements of the TMUTCD.
9. Warning signs shown shall be appropriately altered for left lane closures.
10. The TCP details may require additional and/or relocation of route shields, guide signs, etc. to guide motorists along entire length of detour due to ramp and freeway closures.
11. See BC Standards for additional sign details.
12. When possible, changeable message signs should be located 150 meters in advance of the last available exit ramp prior to the lane closure to allow motorists an alternate route.

**Only pre-qualified products shall be used. A list of compliant products and their sources may be obtained by writing or faxing:**

**Standards Engineer**
**Traffic Operations Division - TE**
**Texas Department of Transportation**
**125 East 11th Street**
**Austin, Texas 78701-2483**
**Phone (512) 416-3335**
**Fax (512) 416-3161**
**E-mail TRF-STANDARD@mailgw.dot.state.tx.us**

All dimensions are in millimeters unless otherwise noted.

© 2000

STANDARD PLANS
TEXAS DEPARTMENT OF TRANSPORTATION
*Traffic Operations Division*

# TRAFFIC CONTROL PLAN
# FREEWAY LANE CLOSURE

## TCP (6-1)-98A (M)

©TxDOT Feburary 1994

| DN-LR | CK-CW | DN-DN | CK-MT | REG NO.s |
|---|---|---|---|---|
| | | | | |

| REVISIONS | STATE DISTRICT | FEDERAL REGION | FEDERAL AID PROJECT | SHEET |
|---|---|---|---|---|
| 1-97 | | 6 | NH 2000(704), ETC. | 138 |
| 4-98 | COUNTY | | CONTROL / SECTION / JOB | HIGHWAY |
| 8-98 | BEXAR | | 2452 / 01 / 036, ETC. | LP 1604 |

LEVELS: 1 2 3 4 5 6 7 8 9 10 11 12 13 14 15 16 17 18 19 20 21 22 23 24 25 26 27 28 29 30 31 32 33 34 35 36 37 38 39 40 41 42 43 44 45 46 47 48 49 50 51 52 53 54 55 56 57 58 59 60 61 62 63 64 65 66 67 68

DATE: ACC: FILE:
DN: CK: DW: CK:

DISCLAIMER
The use of this standard is governed by the "Texas Engineering Practice Act". No warranty of any kind is made by TxDOT for any purpose whatsoever. TxDOT assumes no responsibility for the conversion of this standard to other formats or for incorrect results or damages resulting from its use.

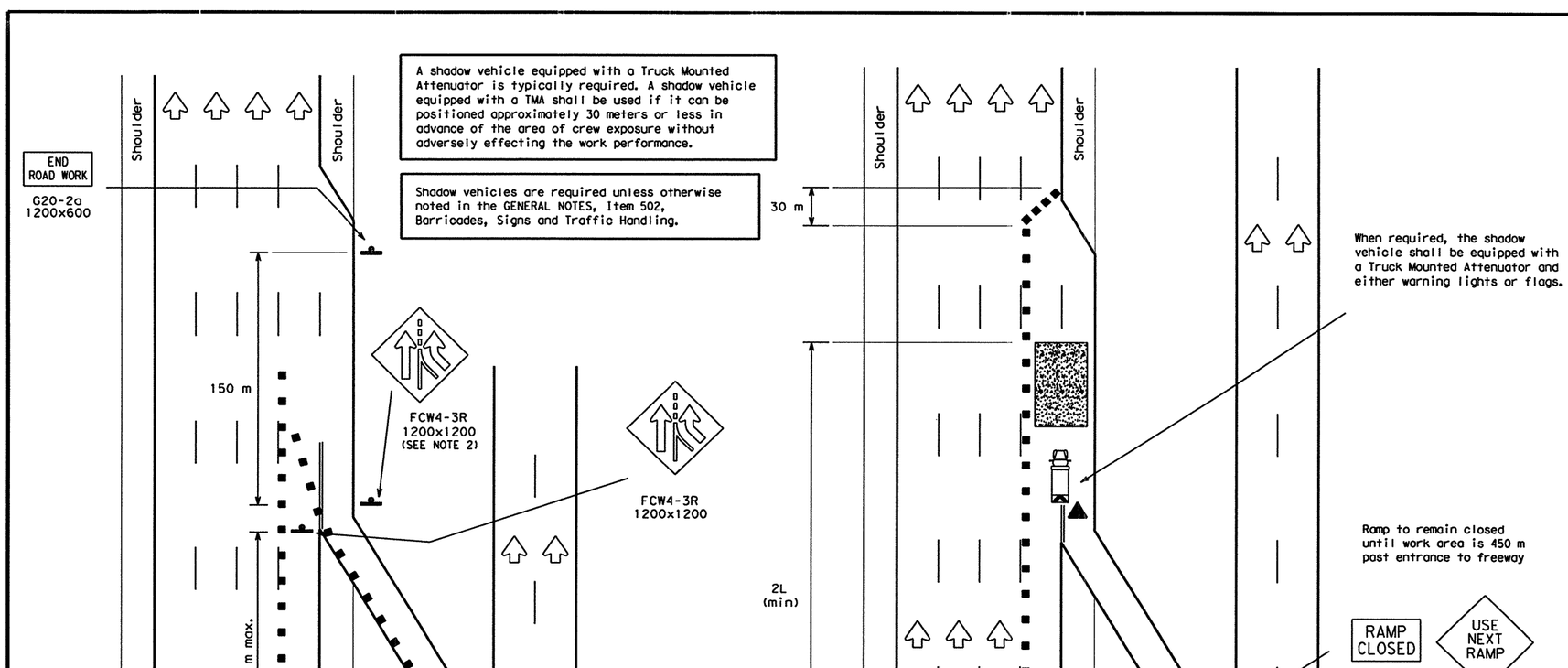


TCP (6-2a)(M)
Entrance Ramp Open
Work Within 150 Meters of Ramp




TCP (6-2b)(M)
Entrance Ramp Closed

LEGEND

Type III Barricade ■ ■ Channelizing Devices Flag
Heavy Work Vehicle Truck Mounted Attenuator
Trailer Mounted Flashing Arrow Panel (M) Portable Changeable Message Sign
Flagger Sign Post

| Posted Speed | Formula | Minimum Desirable Taper Lengths ✻✻ 3.0 m Offset (meters) | 3.3 m Offset (meters) | 3.6 m Offset (meters) | Suggested Maximum Spacing of Device On a Taper (meters) | On a Tangent (meters) |
|---|---|---|---|---|---|---|
| 30 | $L=\frac{WS^2}{60}$ | 45 | 50 | 55 | 9 | 15-20 |
| 35 | | 65 | 70 | 75 | 10 | 20-25 |
| 40 | | 80 | 90 | 100 | 12 | 25-30 |
| 45 | L=WS | 135 | 150 | 165 | 13 | 25-30 |
| 50 | | 150 | 165 | 180 | 15 | 30-35 |
| 55 | | 165 | 185 | 200 | 16 | 35-40 |
| 60 | | 180 | 200 | 220 | 18 | 40-45 |
| 65 | | 195 | 215 | 235 | 19 | 40-50 |
| 70 | | 210 | 235 | 255 | 20 | 40-50 |

✻✻Taper lengths have been rounded off.
L=Length of Taper (m) W=Width of Offset (m) S=Posted Speed (MPH)

| TYPICAL USAGE: | | | | |
|---|---|---|---|---|
| MOBILE | SHORT DURATION | SHORT TERM STATIONARY | INTERMEDIATE TERM STATIONARY | LONG TERM STATIONARY |
| | ✓ | ✓ | | |

GENERAL NOTES:

1. All traffic control devices illustrated are REQUIRED, except those denoted with the triangle symbol may be omitted when stated elsewhere in the plans.
2. ADDED LANE Symbol (FCW4-3R) sign may be omitted when sign between ramp and mainlane can be seen from both roadways.

**Only pre-qualified products shall be used. A list of compliant products and their sources may be obtained by writing or faxing:**

**Standards Engineer**
**Traffic Operations Division - TE**
**Texas Department of Transportation**
**125 East 11th Street**
**Austin, Texas 78701-2483**
**Phone (512) 416-3335**
**Fax (512) 416-3161**
**E-mail TRF-STANDARD@mailgw.dot.state.tx.us**

ADDITIONAL REQUIREMENTS FOR LANE CLOSURES AND ADVANCE SIGNING SHALL BE AS SHOWN ON TCP (6-1)(M) OR AS DIRECTED BY THE ENGINEER.

All dimensions are in millimeters unless otherwise noted.

© 2000

STANDARD PLANS
TEXAS DEPARTMENT OF TRANSPORTATION
*Traffic Operations Division*

# TRAFFIC CONTROL PLAN
# WORK AREA NEAR RAMP

## TCP(6-2)-98A(M)

© TxDOT Feburary 1994

| DN-LR | CK-CW | DW-DN | CK-MT | MEG NO.: |
|---|---|---|---|---|

| REVISIONS | STATE DISTRICT | FEDERAL REGION | FEDERAL AID PROJECT | SHEET |
|---|---|---|---|---|
| 1-97 | | 6 | NH 2000(704), ETC. | 139 |
| 4-98 | COUNTY | | CONTROL / SECTION / JOB | HIGHWAY |
| 8-98 | BEXAR | | 2452 / 01 / 036, ETC. | LP 1604 |

LEVELS 0 1 2 3 4 5 6 7 8 | DATE: | DN:
01 11 4 5 6 | ACC: | CK:
27 28 29 30 31 32 | DW:
33 34 35 36 37 38 39 40 41 42 43 44 45 46 47 48 | FILE: | CK:
49 50 51 52 53 54 55 56 57 58 59 60 61 62 63

DISCLAIMER
The use of this standard is governed by the "Texas Engineering Practice Act". No warranty of any kind is made by TxDOT for any purpose whatsoever. TxDOT assumes no responsibility for the conversion of this standard to other formats or for incorrect results or damages resulting from its use.

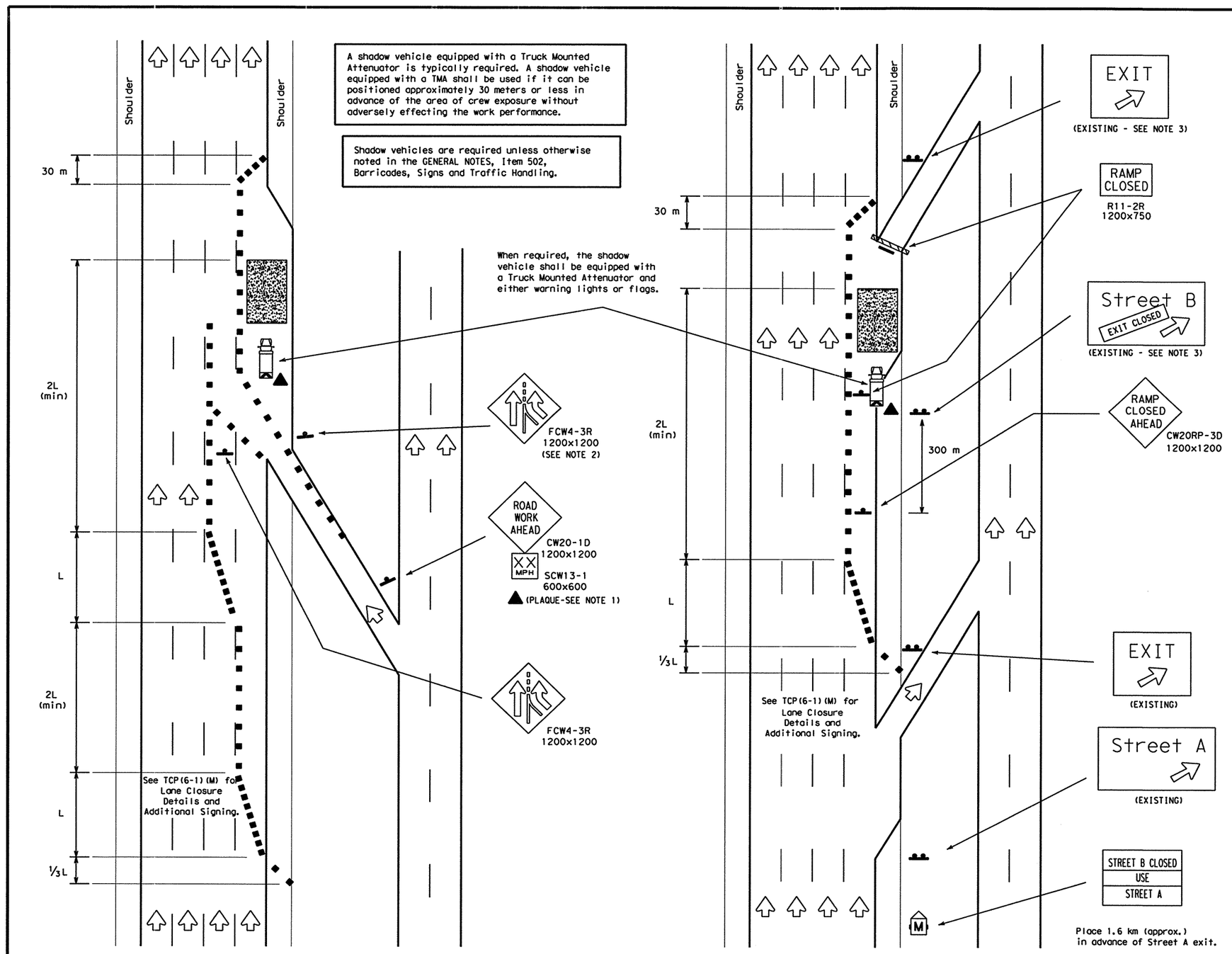


TCP (6-3a)(M)
Entrance Ramp Open

TCP (6-3b)(M)
Exit Ramp Closed
Traffic Exits Prior to Closed Ramp

LEGEND

Type III Barricade ■ ■ Channelizing Devices Flag
Heavy Work Vehicle Truck Mounted Attenuator
Trailer Mounted Flashing Arrow Panel (M) Portable Changeable Message Sign
Flagger Sign Post

| Posted Speed | Formula | Minimum Desirable Taper Lengths ** 3.0 m Offset (meters) | 3.3 m Offset (meters) | 3.6 m Offset (meters) | Suggested Maximum Spacing of Device On a Taper (meters) | On a Tangent (meters) |
|---|---|---|---|---|---|---|
| 30 | $L=\frac{WS^2}{60}$ | 45 | 50 | 55 | 9 | 15-20 |
| 35 | | 65 | 70 | 75 | 10 | 20-25 |
| 40 | | 80 | 90 | 100 | 12 | 25-30 |
| 45 | L=WS | 135 | 150 | 165 | 13 | 25-30 |
| 50 | | 150 | 165 | 180 | 15 | 30-35 |
| 55 | | 165 | 185 | 200 | 16 | 35-40 |
| 60 | | 180 | 200 | 220 | 18 | 40-45 |
| 65 | | 195 | 215 | 235 | 19 | 40-50 |
| 70 | | 210 | 235 | 255 | 20 | 40-50 |

** Taper lengths have been rounded off.
L=Length of Taper (m) W=Width of Offset (m) S=Posted Speed (MPH)

| TYPICAL USAGE: | | | | |
|---|---|---|---|---|
| MOBILE | SHORT DURATION | SHORT TERM STATIONARY | INTERMEDIATE TERM STATIONARY | LONG TERM STATIONARY |
| | ✓ | ✓ | | |

GENERAL NOTES:

1. All traffic control devices illustrated are REQUIRED, except those denoted with the triangle symbol may be omitted when stated elsewhere in the plans.
2. ADDED LANE (FCW4-3R) sign may be omitted when sign between ramp and mainlane can be seen from both roadways.
3. Existing exit gore, exit direction, and advance guide signs not in use should be covered, removed or EXIT CLOSED (CW26-1T) sign attached. See BC Standards for sign details.

**Only pre-qualified products shall be used. A list of compliant products and their sources may be obtained by writing or faxing:**

**Standards Engineer**
**Traffic Operations Division - TE**
**Texas Department of Transportation**
**125 East 11th Street**
**Austin, Texas 78701-2483**
**Phone (512) 416-3335**
**Fax (512) 416-3161**
**E-mail TRF-STANDARD@mailgw.dot.state.tx.us**

ADDITIONAL REQUIREMENTS FOR LANE CLOSURES AND ADVANCE SIGNING SHALL BE AS SHOWN ON TCP (6-1)(M) OR AS DIRECTED BY THE ENGINEER.

All dimensions are in millimeters unless otherwise noted.

© 2000

STANDARD PLANS
TEXAS DEPARTMENT OF TRANSPORTATION
*Traffic Operations Division*

# TRAFFIC CONTROL PLAN

## TCP(6-3)-98A(M)

| ©TxDOT Feburary 1994 | DN:-LR | CK:-CW | DW:-DN | CK:-MT | MSG NO.: |
|---|---|---|---|---|---|
| REVISIONS 1-97 4-98 8-98 | STATE DISTRICT | FEDERAL REGION | FEDERAL AID PROJECT | | SHEET |
| | | 6 | NH 2000(704),ETC. | | 140 |
| | COUNTY | | CONTROL | SECTION | JOB | HIGHWAY |
| | BEXAR | | 2452 | 01 | 036,ETC. | LP 1604 |

DN: CK: DW: CK:
DATE: ACC: FILE:
LEVELS

DISCLAIMER
The use of this standard is governed by the "Texas Engineering Practice Act". No warranty of any kind is made by TxDOT for any purpose whatsoever. TxDOT assumes no responsibility for the conversion of this standard to other formats or for incorrect results or damages resulting from its use.

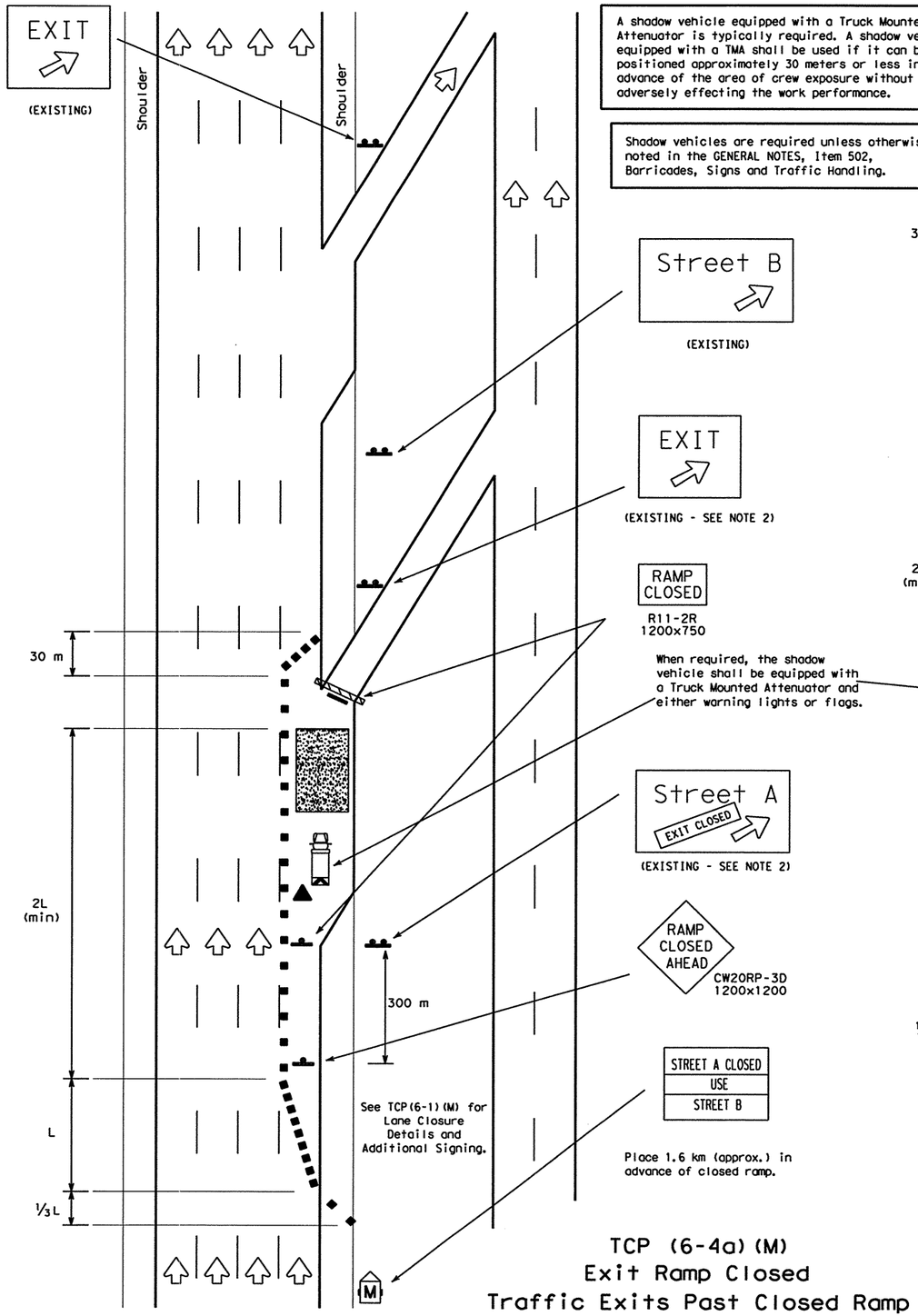


TCP (6-4a) (M)
Exit Ramp Closed
Traffic Exits Past Closed Ramp

A shadow vehicle equipped with a Truck Mounted Attenuator is typically required. A shadow vehicle equipped with a TMA shall be used if it can be positioned approximately 30 meters or less in advance of the area of crew exposure without adversely effecting the work performance.

Shadow vehicles are required unless otherwise noted in the GENERAL NOTES, Item 502, Barricades, Signs and Traffic Handling.

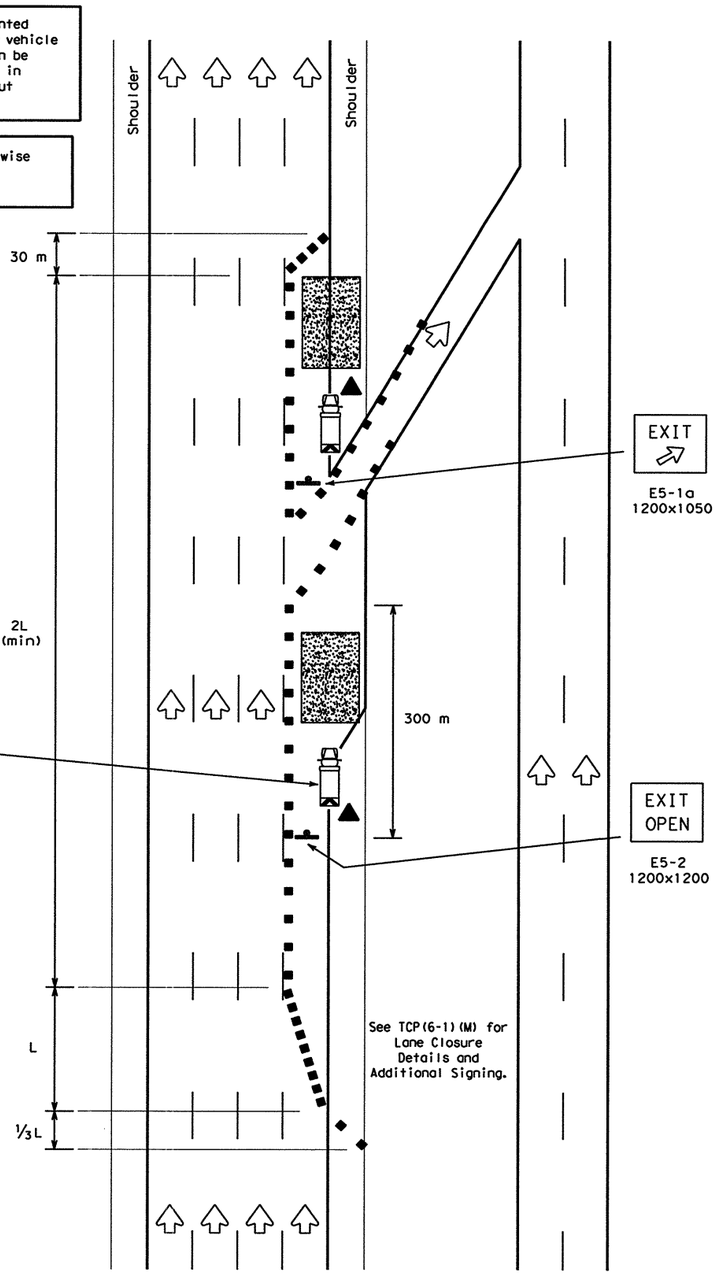


TCP (6-4b) (M)
Exit Ramp Open

LEGEND

Type III Barricade ■ ■ Channelizing Devices Flag
Heavy Work Vehicle Truck Mounted Attenuator
Trailer Mounted Flashing Arrow Panel (M) Portable Changeable Message Sign
Flagger Sign Post

| Posted Speed | Formula | Minimum Desirable Taper Lengths ✻✻ 3.0 m Offset (meters) | 3.3 m Offset (meters) | 3.6 m Offset (meters) | Suggested Maximum Spacing of Device On a Taper (meters) | On a Tangent (meters) |
|---|---|---|---|---|---|---|
| 30 | $L=\frac{WS^2}{60}$ | 45 | 50 | 55 | 9 | 15-20 |
| 35 | | 65 | 70 | 75 | 10 | 20-25 |
| 40 | | 80 | 90 | 100 | 12 | 25-30 |
| 45 | L=WS | 135 | 150 | 165 | 13 | 25-30 |
| 50 | | 150 | 165 | 180 | 15 | 30-35 |
| 55 | | 165 | 185 | 200 | 16 | 35-40 |
| 60 | | 180 | 200 | 220 | 18 | 40-45 |
| 65 | | 195 | 215 | 235 | 19 | 40-50 |
| 70 | | 210 | 235 | 255 | 20 | 40-50 |

✻✻Taper lengths have been rounded off.
L=Length of Taper (m) W=Width of Offset (m) S=Posted Speed (MPH)

| TYPICAL USAGE: MOBILE | SHORT DURATION | SHORT TERM STATIONARY | INTERMEDIATE TERM STATIONARY | LONG TERM STATIONARY |
|---|---|---|---|---|
| | ✓ | ✓ | | |

GENERAL NOTES:

1. All traffic control devices illustrated are REQUIRED, except those denoted with the triangle symbol may be omitted when stated elsewhere in the plans.
2. Existing exit gore, exit direction, and advance guide signs not in use should be covered, removed or EXIT CLOSED (CW26-1T) sign attached.
3. See BC Standards for sign details.

**Only pre-qualified products shall be used. A list of compliant products and their sources may be obtained by writing or faxing:**

**Standards Engineer**
**Traffic Operations Division - TE**
**Texas Department of Transportation**
**125 East 11th Street**
**Austin, Texas 78701-2483**
**Phone (512) 416-3335**
**Fax (512) 416-3161**
**E-mail TRF-STANDARD@mailgw.dot.state.tx.us**

ADDITIONAL REQUIREMENTS FOR LANE CLOSURES AND ADVANCE SIGNING SHALL BE AS SHOWN ON TCP (6-1)(M) OR AS DIRECTED BY THE ENGINEER.

All dimensions are in millimeters unless otherwise noted.

STANDARD PLANS
TEXAS DEPARTMENT OF TRANSPORTATION
*Traffic Operations Division*

©2000

# TRAFFIC CONTROL PLAN

## TCP(6-4)-98A(M)

©TxDOT Feburary 1994 DN-LR CK-CW DW-DN CK-MT NEG NO.:

| REVISIONS | STATE DISTRICT | FEDERAL REGION | FEDERAL AID PROJECT | | | SHEET |
|---|---|---|---|---|---|---|
| 1-97 | | 6 | NH 2000(704),ETC. | | | 141 |
| 4-98 | COUNTY | | CONTROL | SECTION | JOB | HIGHWAY |
| 8-98 | BEXAR | | 2452 | 01 | 036,ETC. | LP 1604 |

DN: CK: DW: CK:
DATE: ACC: FILE:
LEVELS
FILE:
REF

DISCLAIMER
The use of this standard is governed by the "Texas Engineering Practice Act". No warranty of any kind is made by TxDOT for any purpose whatsoever. TxDOT assumes no responsibility for the conversion of this standard to other formats or for incorrect results or damages resulting from its use.

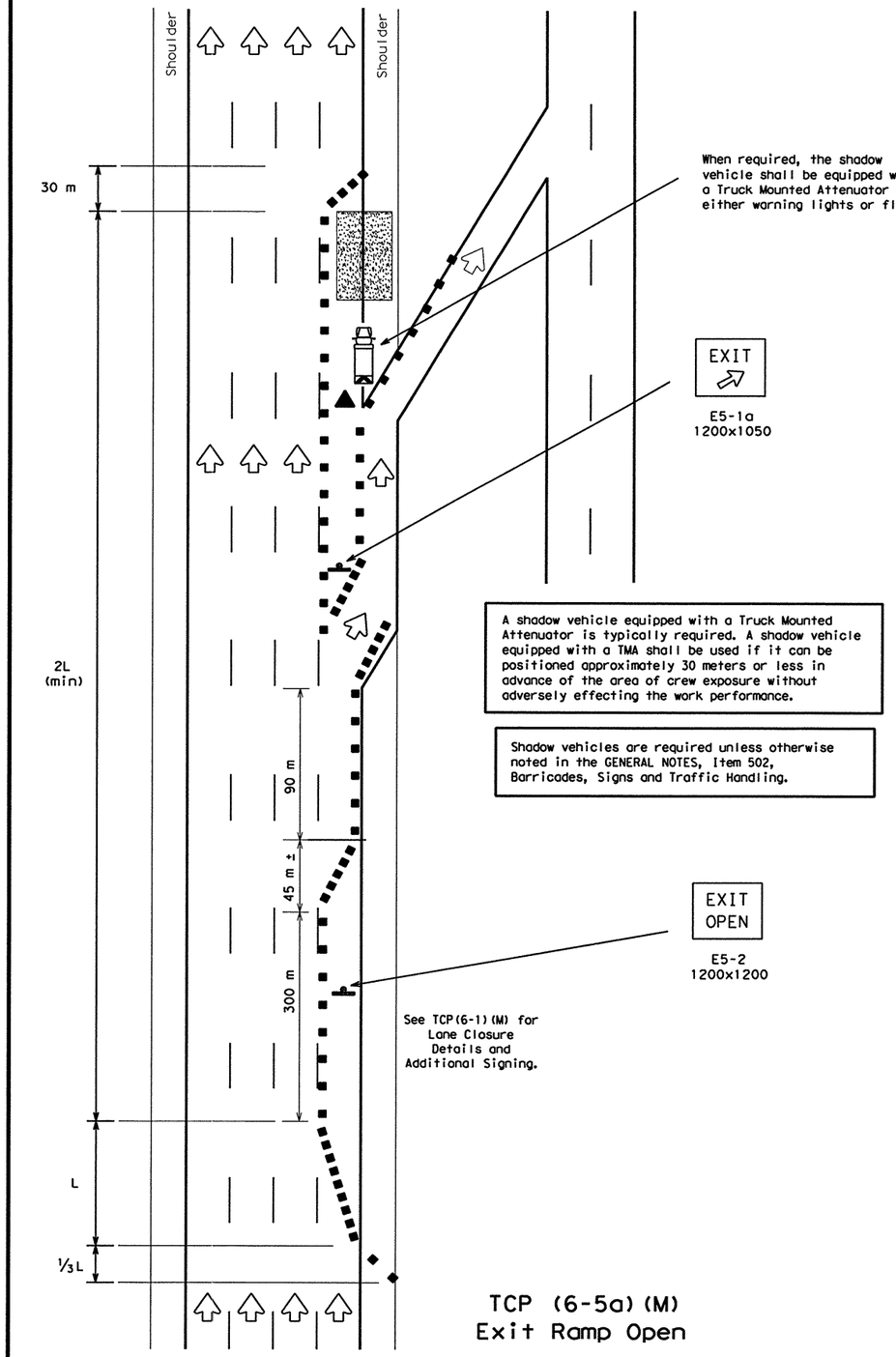


A shadow vehicle equipped with a Truck Mounted Attenuator is typically required. A shadow vehicle equipped with a TMA shall be used if it can be positioned approximately 30 meters or less in advance of the area of crew exposure without adversely effecting the work performance.

Shadow vehicles are required unless otherwise noted in the GENERAL NOTES, Item 502, Barricades, Signs and Traffic Handling.

TCP (6-5a)(M)
Exit Ramp Open

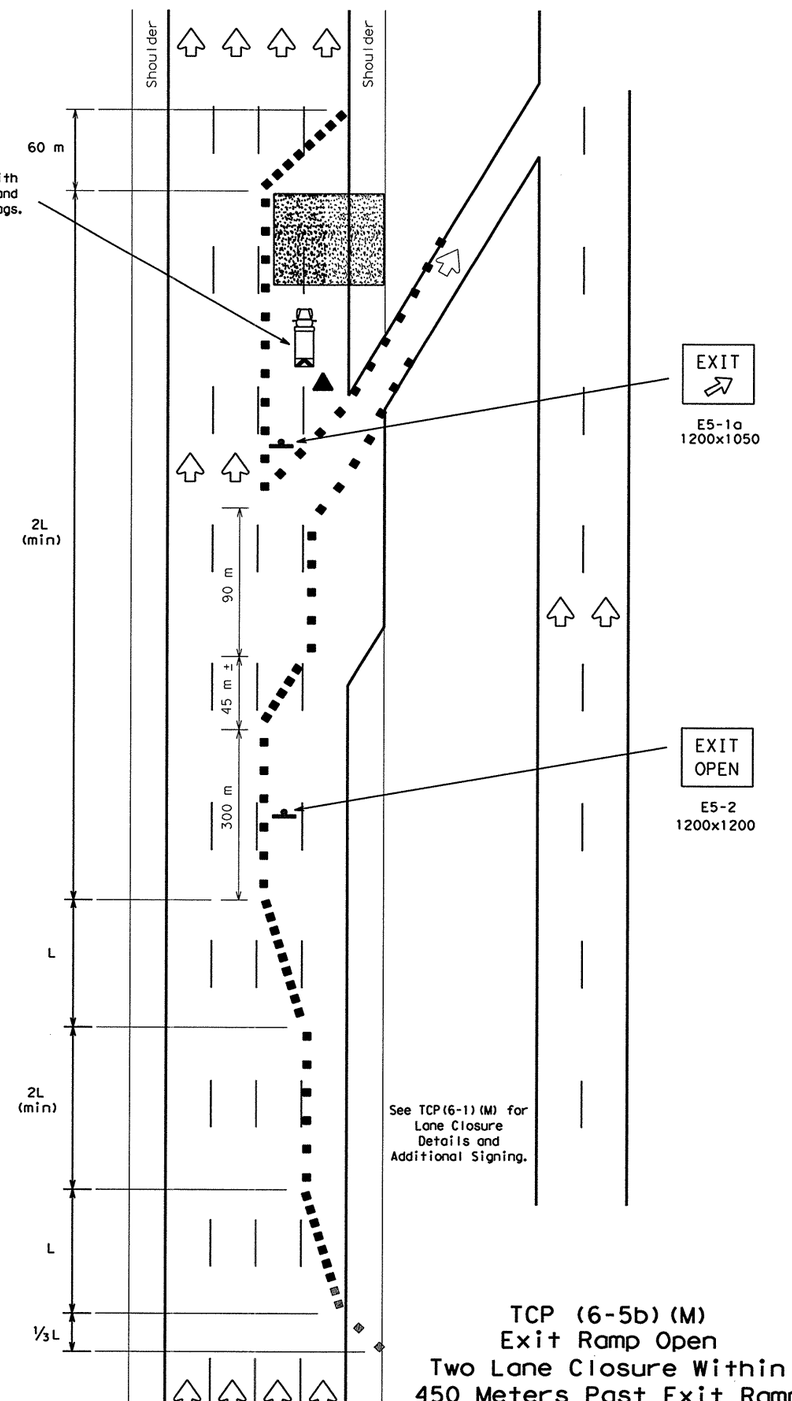


TCP (6-5b)(M)
Exit Ramp Open
Two Lane Closure Within
450 Meters Past Exit Ramp

LEGEND

Type III Barricade ■ ■ Channelizing Devices Flag
Heavy Work Vehicle Truck Mounted Attenuator
Trailer Mounted Flashing Arrow Panel (M) Portable Changeable Message Sign
Flagger Sign Post

| Posted Speed | Formula | Minimum Desirable Taper Lengths ** 3.0 m Offset (meters) | 3.3 m Offset (meters) | 3.6 m Offset (meters) | Suggested Maximum Spacing of Device On a Taper (meters) | On a Tangent (meters) |
|---|---|---|---|---|---|---|
| 30 | $L=\frac{WS^2}{60}$ | 45 | 50 | 55 | 9 | 15-20 |
| 35 | | 65 | 70 | 75 | 10 | 20-25 |
| 40 | | 80 | 90 | 100 | 12 | 25-30 |
| 45 | L=WS | 135 | 150 | 165 | 13 | 25-30 |
| 50 | | 150 | 165 | 180 | 15 | 30-35 |
| 55 | | 165 | 185 | 200 | 16 | 35-40 |
| 60 | | 180 | 200 | 220 | 18 | 40-45 |
| 65 | | 195 | 215 | 235 | 19 | 40-50 |
| 70 | | 210 | 235 | 255 | 20 | 40-50 |

** Taper lengths have been rounded off.
L=Length of Taper (m) W=Width of Offset (m) S=Posted Speed (MPH)

| TYPICAL USAGE: | | | | |
|---|---|---|---|---|
| MOBILE | SHORT DURATION | SHORT TERM STATIONARY | INTERMEDIATE TERM STATIONARY | LONG TERM STATIONARY |
| | ✓ | ✓ | | |

GENERAL NOTES

1. All traffic control devices illustrated are REQUIRED, except those denoted with the triangle symbol may be omitted when stated elsewhere in the plans.
2. See BC standards for sign details.

**Only pre-qualified products shall be used. A list of compliant products and their sources may be obtained by writing or faxing:**

**Standards Engineer**
**Traffic Operations Division - TE**
**Texas Department of Transportation**
**125 East 11th Street**
**Austin, Texas 78701-2483**
**Phone (512) 416-3335**
**Fax (512) 416-3161**
**E-mail TRF-STANDARD@mailgw.dot.state.tx.us**

ADDITIONAL REQUIREMENTS FOR LANE CLOSURES AND ADVANCE SIGNING SHALL BE AS SHOWN ON TCP (6-1)(M) OR AS DIRECTED BY THE ENGINEER.

All dimensions are in millimeters unless otherwise noted.

© 2000

STANDARD PLANS
TEXAS DEPARTMENT OF TRANSPORTATION
*Traffic Operations Division*

# TRAFFIC CONTROL PLAN

## TCP(6-5)-98A(M)

| © TxDOT Feburary 1994 | DN: LR | CK: CW | DW: DN | CK: MT | MEG NO.: |
|---|---|---|---|---|---|
| REVISIONS 1-97 4-98 8-98 | STATE DISTRICT | FEDERAL REGION | FEDERAL AID PROJECT | | SHEET |
| | | 6 | NH 2000(704),ETC. | | 142 |
| | COUNTY | | CONTROL | SECTION | JOB | HIGHWAY |
| | BEXAR | | 2452 | 01 | 036,ETC. | LP 1604 |

Module 305

LEVELS 1 2 3 4 5 6 7 8 / 9 10 11 12 13 14 15 16 17 18 19 20 21 22 23 24 25 26 27 28 29 30 31 32 33 34 35 36 37 38 39 40 41 42 43 44 45 46 47 48 49 50 51 52 53 54 55 56 57 58 59 60 61 62 63

DATE:
ACC:
FILE:
DN:
CK:
DW:
CK:

DISCLAIMER
The use of this standard is governed by the "Texas Engineering Practice Act". No warranty of any kind is made by TxDOT for any purpose whatsoever. TxDOT assumes no responsibility for the conversion of this standard to other formats or for incorrect results or damages resulting from its use.

## 1 STARTING POSITIONS

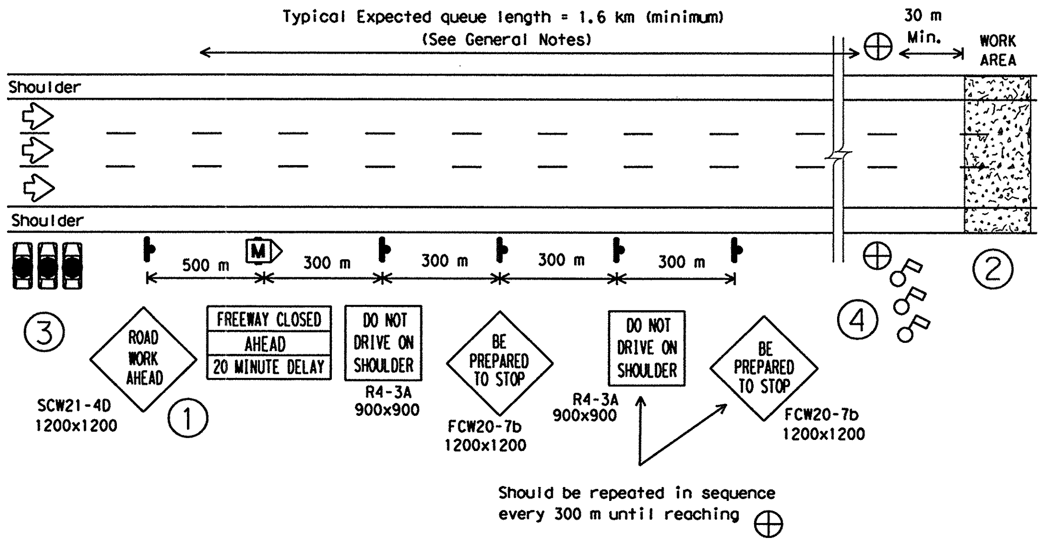


### STARTING POSITION

(1) Traffic control devices should be installed or located near their intended position prior to beginning temporary roadway closure sequence. Duplicate signs should be erected on the median side of the roadway when median width permits and traffic density justifies the signing. To allow movement of workers, equipment, and law enforcement officer vehicles (LEOV), warning signs should not be placed on the shoulders.

(2) Prior to beginning the roadway closure sequence, all equipment, materials, personnel, and other items necessary to complete the work should be gathered near the work area. Entrance ramps located in area where queue is expected to build should be closed.

(3) A minimum number of uniformed law enforcement officers and vehicles (LEOV) should be present:

| Number of Lanes | Minimum LEOV |
|---|---|
| 2 | 2 |
| 3 | 2 |
| 4 | 3 |
| 5 | 4 |
| 6 | 5 |

(4) A minimum of one (1) flagger per lane is typically required for each lane of roadway to be closed. Flaggers should be placed at the CONTROL POSITION (CP) approximately 30 meters or more in advance of the work area. Use of the SLOW/STOP paddle is recommended. Flaggers should typically be at the CP as shown before the LEOV proceeds onto the roadway.

## 2 REDUCING SPEED OPERATIONS

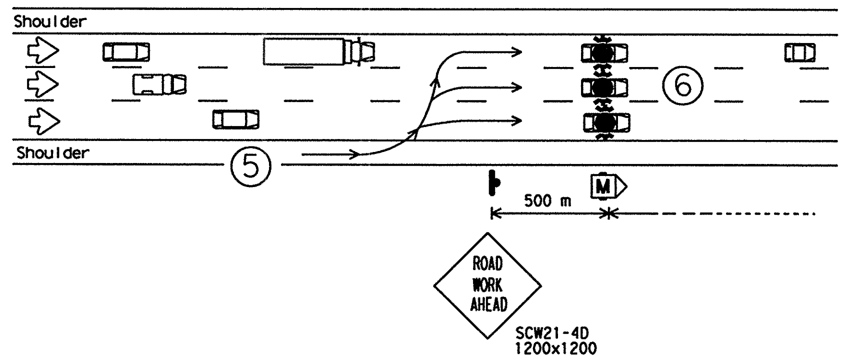


### REDUCING SPEED OPERATION

(5) Starting position of the LEOV should be in advance of the most distant warning sign(s).

(6) Once the LEOV has achieved an abreast blocking formation while traveling toward the CP, emergency lights and headlights should be turned "ON". LEOV should maintain formation, not allow any traffic to pass, and begin to decelerate. LEOV should continue forward, gradually decelerating until all traffic is stopped at the CP as indicated by the flaggers.

## 3 ALL TRAFFIC STOPPED AT CP

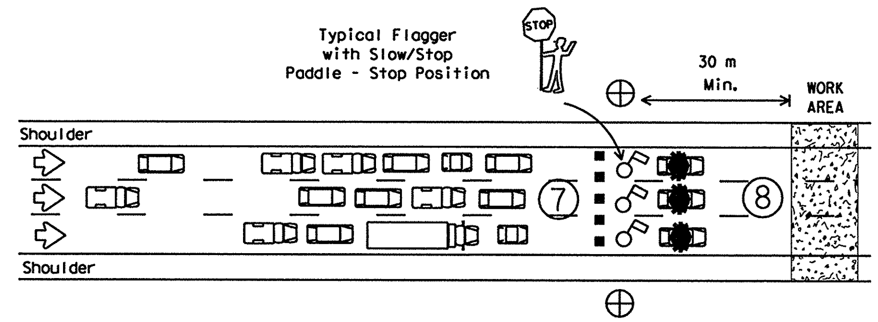


### ALL TRAFFIC STOPPED AT THE CONTROL POSITION

(7) Once the lead vehicles of traffic have stopped, CP flaggers may enter the roadway behind the LEOV and instruct traffic to remain stopped until further notice. Channelization devices may be placed in the travel lanes to prevent forward movement of traffic. Flaggers should face traffic and use the STOP paddle.

(8) One LEOV should remain in the roadway at the CP, with emergency lights and headlights "ON", and maintain radio contact with WARNING LEOV.

### LEGEND

- ■ ■ Channelization Device
- Flagger
- ⊕ Control Position (CP)
- (M) Portable Changeable Message Sign
- Law Enforcement Officer's Vehicle (LEOV)

**Only pre-qualified products shall be used. A list of compliant products and their sources may be obtained by writing or faxing:**

**Standards Engineer**
**Traffic Operations Division - TE**
**Texas Department of Transportation**
**125 East 11th Street**
**Austin, Texas 78701-2483**
**Phone (512) 416-3335**
**Fax (512) 416-3161**
**E-mail TRF-STANDARD@mailgw.dot.state.tx.us**

| TYPICAL USAGE: | | | | |
|---|---|---|---|---|
| MOBILE | SHORT DURATION | SHORT TERM STATIONARY | INTERMEDIATE TERM STATIONARY | LONG TERM STATIONARY |
| | ✓ | ✓ | | |

### GENERAL NOTES

All traffic control devices shall conform with the Texas "Manual on Uniform Traffic Control Devices for Streets and Highways" (TMUTCD), latest edition, and any approved changes thereto. Additional guidelines for traffic control devices may be found in the TMUTCD. Signs conflicting with the roadway closure sequence should be completely covered or removed. Additional traffic control devices may be required for closure of access roads, cross streets, exit and entrance ramps as directed by the Engineer.

Flaggers, law enforcement officers, and workers should review and understand all procedures before roadway closure sequence begins. Local emergency services and media should have advance notification of roadway closure, expected dates and approximate times of closure(s).

Law enforcement officers shall be in uniform and have jurisdiction in the locale of the work area. An additional WARNING LEOV may be used on the median side of the roadway when median shoulder width permits (see (9)).

Work should be limited to 20 minutes maximum duration. Roadway closure should be during off-peak hours, as shown in the plans, or as directed by the Engineer. If work is not complete within 20 minutes, or if the end of the traffic queue extends past the most distant advance warning sign, the work area should be cleared of all equipment, materials, personnel, and other items, and the roadway reopened. When the queue has dissipated and traffic flow appears normal, the roadway closure sequence may be repeated.

For traffic volumes greater than 1000 Passenger Car Per Hour Per Lane (PCPHPL), or for roadway closures that exceed the 20 minute maximum, see detail elsewhere in the plans.

When possible, changeable message signs should be located in advance of the last available exit prior to the lane closure to allow motorists the choice of an alternate route.

## 4 WARNING THE TRAFFIC QUEUE

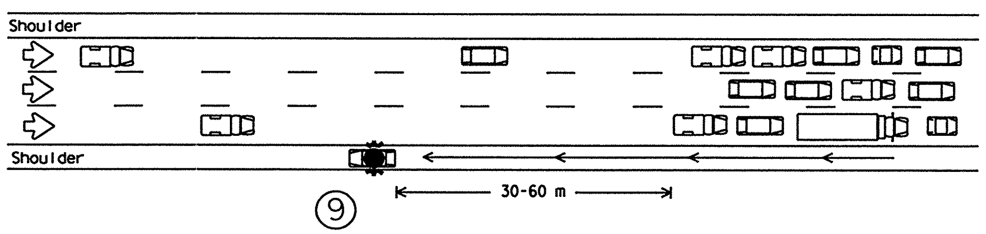


### WARNING THE TRAFFIC QUEUE

(9) The WARNING LEOV should proceed to the right shoulder of the roadway, with emergency lights and headlights "ON", and proceed 30-60 meters in advance of the traffic queue (stopped traffic) as the queue develops. When determined that limited sight distance situations may occur to motorists approaching the queue (crest of hills, sharp roadway curvatures, etc.), the WARNING LEOV may proceed 150-300 meters in advance of the queue.

## 5 RELEASING STOPPED TRAFFIC

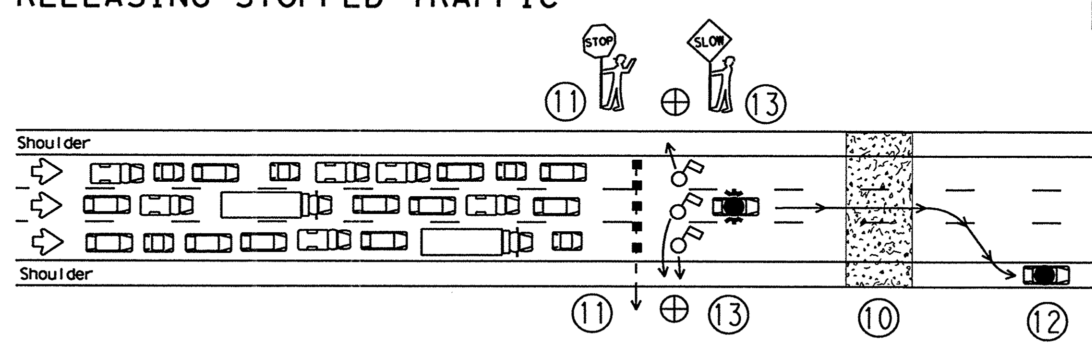


### RELEASING THE STOPPED TRAFFIC

(10) All equipment, materials, personnel, and other items should be removed from the roadway and maintain an adequate clear zone.

(11) CP flaggers should remove channelization devices from the roadway, and remain on the shoulders with the STOP paddle facing traffic.

(12) CP LEOV should move to the shoulder with emergency light and headlights "OFF".

(13) CP flaggers should motion the traffic to proceed with the SLOW paddle facing traffic.

(14) LEOV and flaggers should re-group at starting positions if necessary.

All dimensions are in millimeters unless otherwise noted.

**STANDARD PLANS**
**TEXAS DEPARTMENT OF TRANSPORTATION**
*Traffic Operations Division*

©2000

# TRAFFIC CONTROL PLAN FREEWAY (DAYTIME ONLY) CLOSURE SEQUENCE

# TCP(6-8)-98(M)

| ©TxDOT Feburary 1994 | DN: LR | CK: CW | DW: DN | CK: MT | NEG NO.: |
|---|---|---|---|---|---|
| REVISIONS | STATE DISTRICT | FEDERAL REGION | FEDERAL AID PROJECT | | SHEET |
| 1-97 4-98 | | 6 | NH 2000(704),ETC. | | 143 |
| | COUNTY | CONTROL | SECTION | JOB | HIGHWAY |
| | BEXAR | 2452 | 01 | 036,ETC. | LP 1604 |

DN: CK: DW: CK: DATE: ACC: FILE: LEVELS

DISCLAIMER
The use of this standard is governed by the "Texas Engineering Practice Act". No warranty of any kind is made by TxDOT for any purpose whatsoever. TxDOT assumes no responsibility for the conversion of this standard to other formats or for incorrect results or damages resulting from its use.

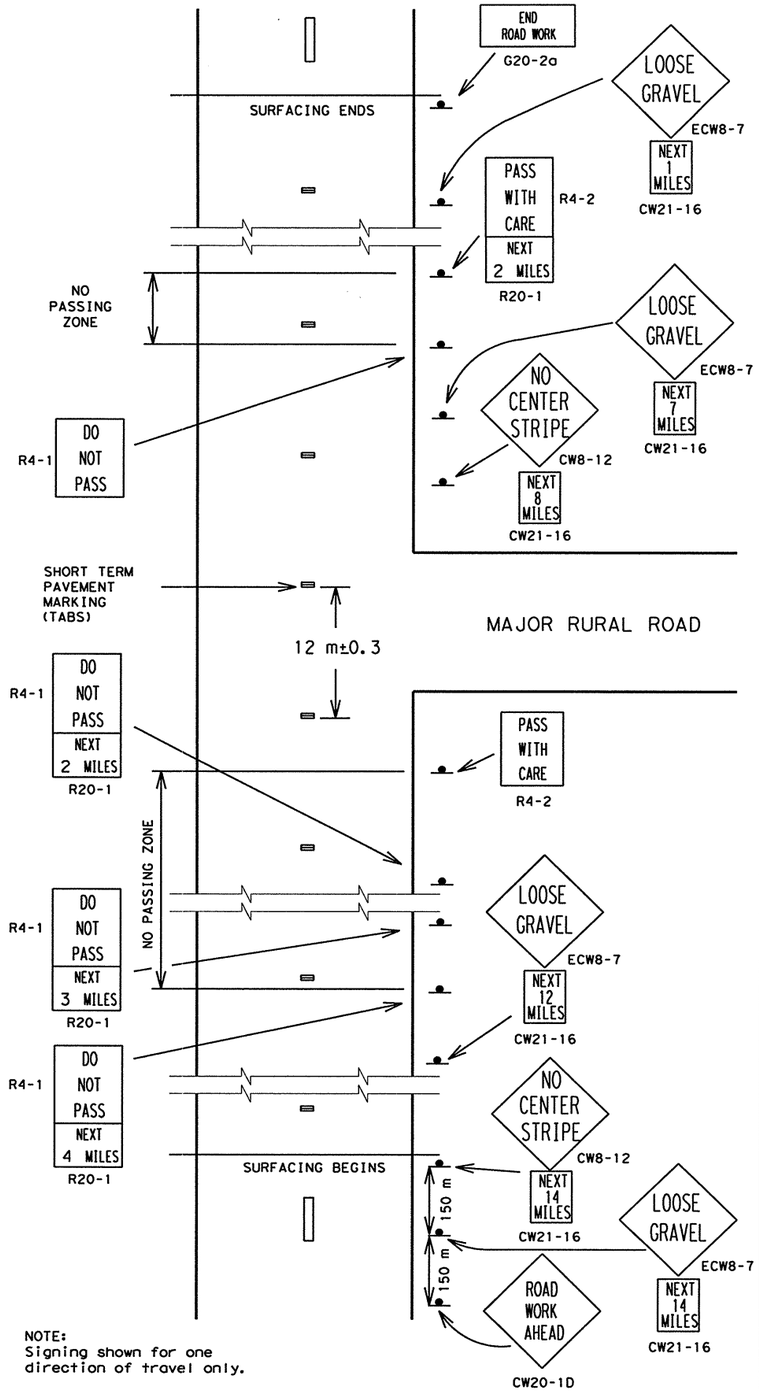


NOTE:
Signing shown for one direction of travel only.

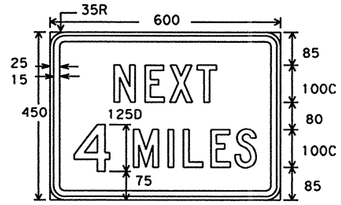


**R20-1**
**600x450**

Legend - Black
Border - Black
Background - White Refl.

**FOR USE WITH REGULATORY SIGNS ONLY**

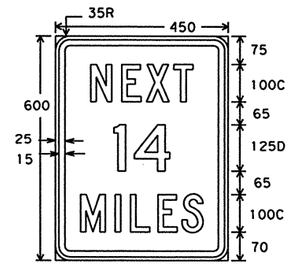


**CW21-16**
**450x600**

Legend - Black
Border - Black
Background - Orange Refl.

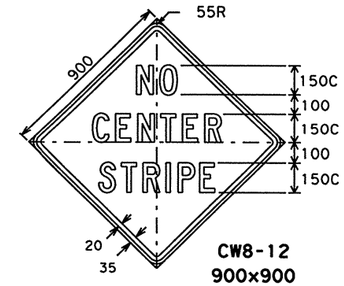


**CW8-12**
**900x900**

Legend - Black
Border - Black
Background - Orange Refl.

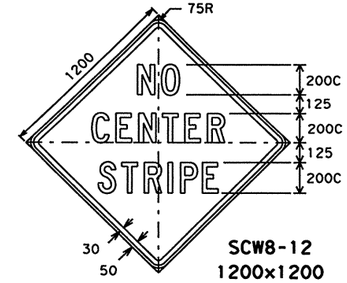


**SCW8-12**
**1200x1200**

Legend - Black
Border - Black
Background - Orange Refl.

**FOR USE WITH CONSTRUCTION WARNING SIGNS ONLY**

TEMPORARY FLEXIBLE-REFLECTIVE ROADWAY MARKER TABS

for surfacing projects only

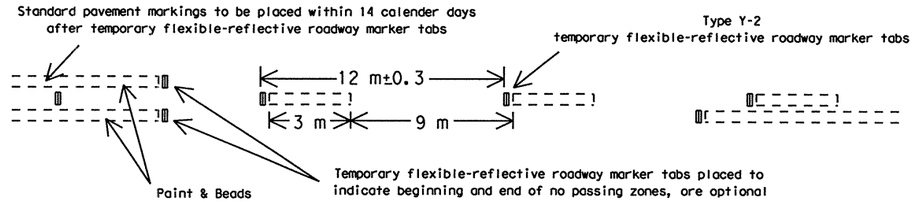


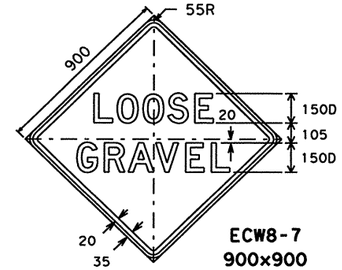


**ECW8-7**
**900x900**

Legend - Black
Border - Black
Background - Orange Refl.

## GENERAL NOTES

The traffic control devices detailed on this sheet will be furnished and erected as directed by the Engineer on sections of roadway where the surfacing operation has covered or obliterated existing pavement markings. These traffic control devices are to be used to supplement those required by BC Standards.

## "DO NOT PASS" SIGN (R4-1) and NO-PASSING ZONES

Prior to the beginning of construction, all currently striped no-passing zones should be signed with the DO NOT PASS sign (R4-1) and PASS WITH CARE sign (R4-2) placed at the beginning and end of each zone for each direction of travel except as otherwise provided herein. Signs marking these individual no-passing zones need not be covered prior to construction if the signs supplement the existing pavement markings.

At the discretion of the Engineer, in areas of numerous no-passing zones, several zones may be combined and signed as a single zone. If passing is to be prohibited over one or more lengthy sections, a DO NOT PASS sign and a NEXT XX MILES sign (R20-1) may be used at the beginning of such zones. The DO NOT PASS and NEXT XX MILES signs should be repeated every 1.6 km to the end of the no-passing zone. In areas where there is considerable distance between no-passing zones, the end of a no-passing zone may be signed with a PASS WITH CARE and NEXT XX MILES sign.

Depending on traffic volumes and length of sections, it may be desirable to prohibit passing throughout the project to prevent damage to windshields and lights. The DO NOT PASS and NEXT XX MILES sign should be used and repeated as often as necessary for this purpose. Where several existing zones are to be combined into one individual no-passing zone, the sign at the beginning of the zone should be covered until the surfacing operation has passed this location so as not to have the DO NOT PASS sign conflict with existing pavement markings. Also, unless one days operation completes the entire length of such combined zones, care must be taken to place DO NOT PASS and PASS WITH CARE signs in order to sign the beginning and end of the no-passing zones in the area where the surfacing operation has stopped for the day.

R4-1 and R4-2 signs should be mounted on fixed supports as detailed on BC Standards. These signs are to remain in place until standard pavement markings are placed.

## "NO CENTER STRIPE" SIGN (CW21-15)

At the time construction activity obliterates the existing centerline (low volume roads may not have an existing centerline), a NO CENTER STRIPE sign (CW8-12) should be erected at each end of the work area and just beyond major rural intersections and other location deemed necessary by the Engineer. Where possible, the signs erected at each end of the work area should be located in such a manner that drivers can read the sign and immediately see the change to no centerline. The NO CENTER STRIPE sign should be supplemented with the NEXT XX MILES sign (CW21-16) mounted below it.

The NO CENTER STRIPE sign should be erected as detailed on BC Standards. These signs are to remain in place until standard pavement markings are placed.

## "LOOSE GRAVEL" SIGN (ECW8-7)

When construction begins, a LOOSE GRAVEL sign (ECW8-7) should be erected at each end of the work area and repeated at intervals of approximately 3.2 km in rural areas and closer in urban areas. The LOOSE GRAVEL sign should be supplemented with the NEXT XX MILES sign (CW21-16) mounted below it.

The LOOSE GRAVEL sign should be erected as detailed on BC Standards. They should remain in place until the loose gravel condition no longer exists.

## PAVEMENT MARKINGS

Short term pavement markings for surfacing projects shall use Temporary Flexible-reflective Roadway Marker Tabs. Tabs are to be installed to provide true alignment for striping crews or as directed by the Engineer. Tabs will be placed at the spacing indicated. Tabs should be applied to the pavement no more than two (2) days before the surfacing is applied. After the surfacing is rolled and swept the cover over the reflective strip shall be removed. Tabs shall NOT be used to simulate edge lines.

**Only pre-qualified products shall be used. A list of compliant products and their sources may be obtained by writing or faxing:**

**Standards Engineer**
**Traffic Operations Division - TE**
**Texas Department of Transportation**
**125 East 11th Street**
**Austin, Texas 78701-2483**
**Phone (512) 416-3335**
**Fax (512) 416-3161**
**E-mail TRF-STANDARD@mailgw.dot.state.tx.us**

| TYPICAL USAGE: | | | | |
|---|---|---|---|---|
| MOBILE | SHORT DURATION | SHORT TERM STATIONARY | INTERMEDIATE TERM STATIONARY | LONG TERM STATIONARY |
| | ✓ | ✓ | ✓ | ✓ |

All dimensions are in millimeters unless otherwise noted.

©2000

**STANDARD PLANS**
**TEXAS DEPARTMENT OF TRANSPORTATION**
*Traffic Operations Division*

# TRAFFIC CONTROL DETAILS for SURFACING OPERATIONS

# TCP(7-1)-98(M)

| ©TxDOT March 1991 | | DN: LR | CK: MT | DW: DN | CK: | NEC NO.: |
|---|---|---|---|---|---|---|
| REVISIONS | STATE DISTRICT | FEDERAL REGION | FEDERAL AID PROJECT | | | SHEET |
| 4-92 | SAT | 6 | NH 2000(704), etc. | | | 144 |
| 1-97 | COUNTY | | CONTROL | SECTION | JOB | HIGHWAY |
| 4-98 | BEXAR | | 2452 | 01 | 036, etc. | LP 1604 |

LEVELS
1 2 3 4 5 6 7 8
17 18 19 20 21 22 23 24 25 26 27 28 29 30 31 32
33 34 35 36 37 38 39 40 41 42 43 44 45 46 47 48
49 50 51 52 53 54 55 56 57 58 59 60 61 62 63

DN: Ck: DW: CK:
DATE: ACC: FILE:
41 51 61

BEGIN INCIDENTAL WORK ( PLAN SHEETS, SW3P )
CSJ: 2452-01-037
STATION 13+800

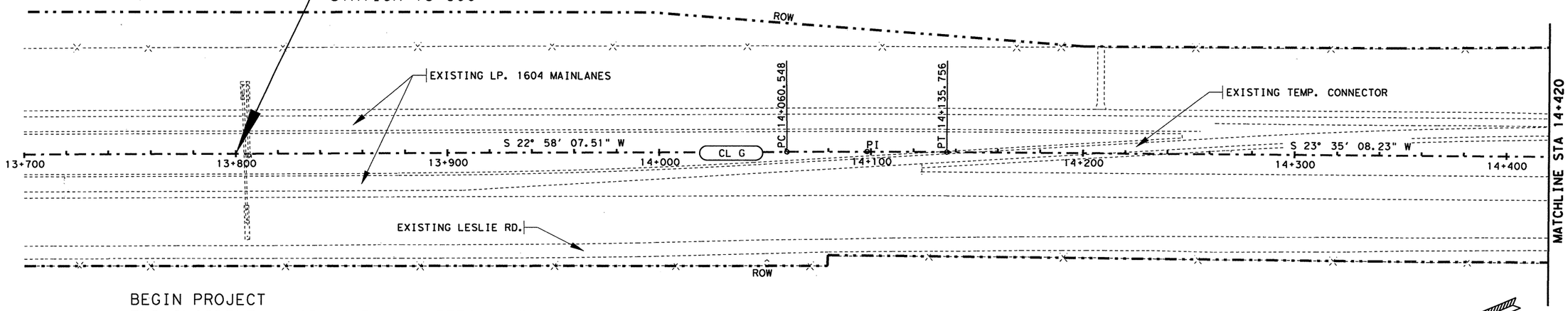


SCALE 1:2000

BEGIN PROJECT
END INCIDENTAL WORK ( PLAN SHEETS, SW3P )
BEGIN MAINLANE CONSTRUCTION
PROJECT NO. NH 2000(704), etc.
CSJ: 2452-01-036, etc.
STATION 14+420

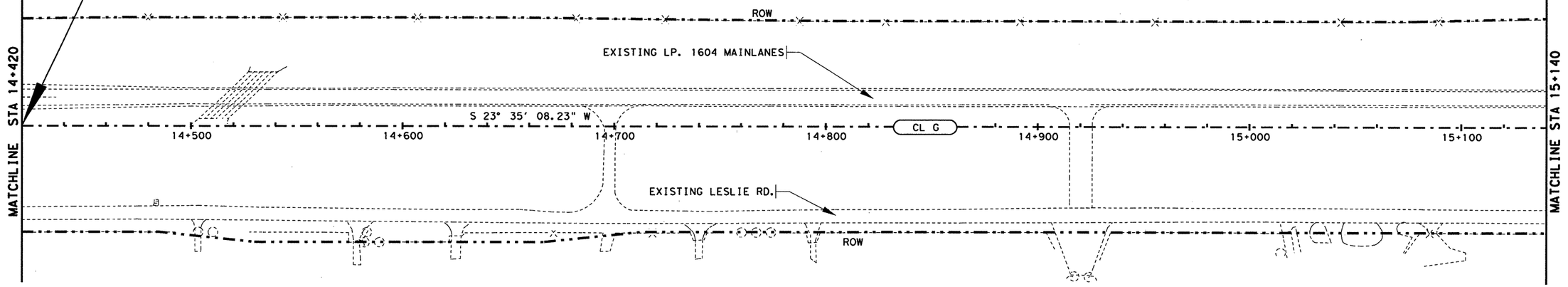


SCALE 1:2000

LEGEND

CL G ℄ LP. 1604

FOR HORIZONTAL ALIGNMENT DATA SEE SHEETS 164-171

STATE OF TEXAS
JOEL K. DAVENPORT, JR.
79276
REGISTERED
PROFESSIONAL ENGINEER

Joel K. Davenport Jr. 9/19/00
Joel K. Davenport, Jr. P.E. 79276 Date

Texas Department of Transportation

# GEOMETRIC LAYOUT

SHEET 1 OF 19

| FED. RD. DIV. NO. | FEDERAL AID PROJECT NO. | | SHEET NO. |
|---|---|---|---|
| 6 | NH 2000(704), etc. | | 145 |
| STATE | DIST. | COUNTY | |
| TEXAS | SAT | BEXAR | |
| CONT. | SECT. | JOB | HIGHWAY NO. |
| 2452 | 01 | 036, etc. | LP 1604 |

lp1604fm471-90\align01.dgn

SCALE 1:2000

MATCHLINE STA 15+140

MATCHLINE STA 15+860

EXISTING LP 1604 MAINLANES

EXISTING LESLIE RD.

ROW

PC 0+100.00

PT 0+212.167

S 12° 12' 22.02" W

S 9° 26' 56.59" W

PC 0+322.868

NBEN1

S 24° 27' 21.99" W

PT 0+356.56

PT 0+506.21

S 24° 27' 21.09" W

FR-D

PT 15+758.165

S 24° 27' 21.91" W

PC 0+035.634

PC 15+184.953

S 21° 20' 54.97" W

PT 15+421.948

PC 15+485.795

S 17° 45' 14.71" W

CL G

PT 0+270.096

PT 0+343.135

S 24° 22' 41.23" W

S 23° 35' 08.23" W

PT 0+152.345

S 29° 18' 05.20" W

SBEX1

PC 0+010.951

PC 0+000.000

PC 0+010.025

S 17° 27' 20.19" W

TCLE

S 24° 27' 19.30" W

POT 0+000.000

89° 34' 32.07"

FR-B

POT 0+000.000

S 24° 27' 22.01" W

85° 34' 29.00"

S 24° 00' 05.02" W

PT 0+109.418

PC 0+120.205

PT 0+226.491

PC 0+047.885

WESTWOOD LOOP

PT 0+112.630

PC 0+192.161

PT 0+269.090

WESTWOOD VISTA

## LEGEND

| | |
|---|---|
| CL G | ℄ LP 1604 |
| NBEN1 | N.B. ENTRANCE RAMP N. OF FM 471 |
| SBEX1 | S.B. EXIT RAMP N. OF FM 471 |
| FR-B | S.B. FRONTAGE ROAD |
| FR-D | N.B. FRONTAGE ROAD |
| TCLE | TEMP. CONNECTOR LESLIE RD. N. OF FM 471 |

FOR HORIZONTAL ALIGNMENT DATA SEE SHEETS 164-171

STATE OF TEXAS
JOEL K. DAVENPORT, JR.
79276
REGISTERED
PROFESSIONAL ENGINEER

Joel K. Davenport, Jr. 9/9/00

Joel K. Davenport, Jr. P.E. 79276 Date

©2000

Texas Department of Transportation

# GEOMETRIC LAYOUT

SHEET 2 OF 19

| FED. RD. DIV. NO. | FEDERAL AID PROJECT NO. | | SHEET NO. |
|---|---|---|---|
| 6 | NH 2000(704), etc. | | 146 |
| STATE | DIST. | COUNTY | |
| TEXAS | SAT | BEXAR | |
| CONT. | SECT. | JOB | HIGHWAY NO. |
| 2452 | 01 | 036, etc. | LP 1604 |

lp1604fm471-90\allgn02.dgn

SCALE 1:2000

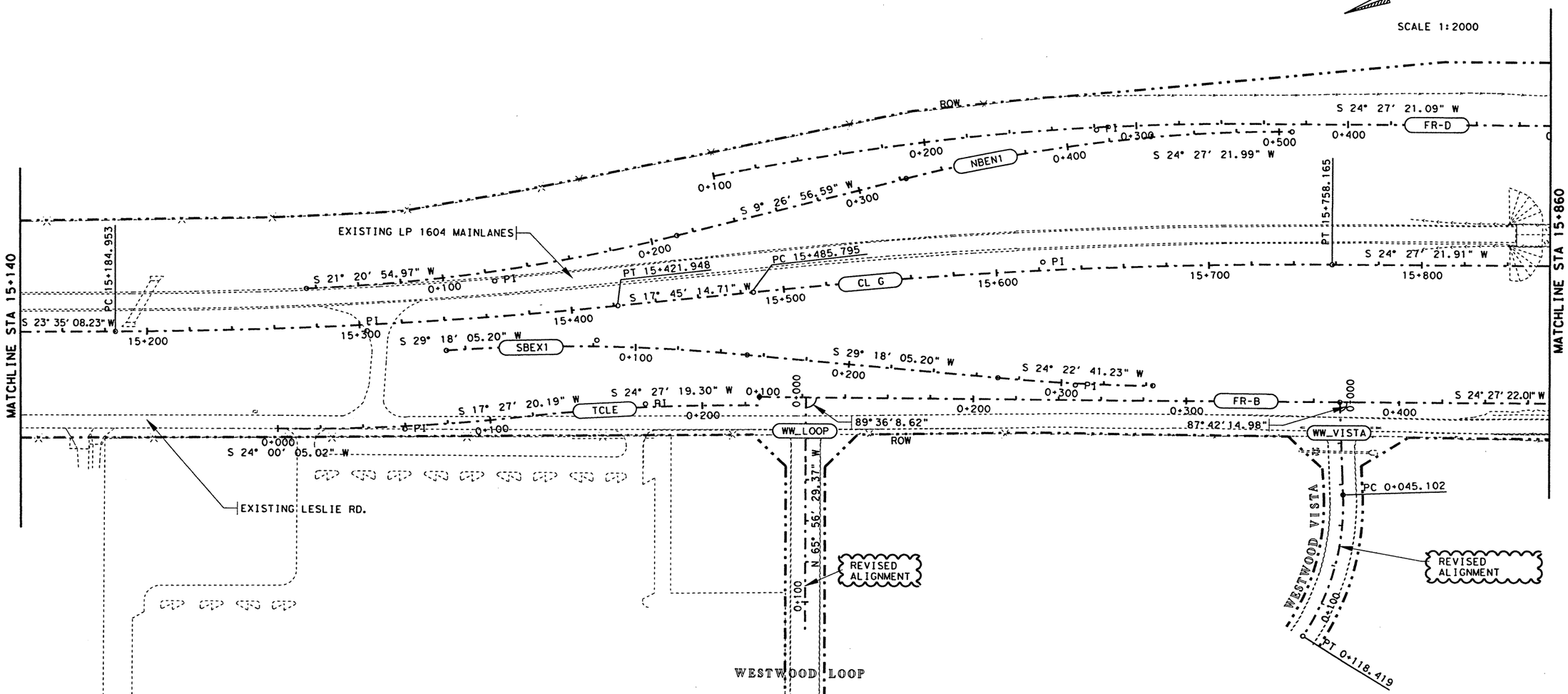


LEGEND

| | |
|---|---|
| CL G | ℄ LP 1604 |
| NBEN1 | N.B. ENTRANCE RAMP N. OF FM 471 |
| SBEX1 | S.B. EXIT RAMP N. OF FM 471 |
| FR-B | S.B. FRONTAGE ROAD |
| FR-D | N.B. FRONTAGE ROAD |
| TCLE | TEMP. CONNECTOR LESLIE RD. N. OF FM 471 |
| WW_LOOP | WESTWOOD LOOP |
| WW_VISTA | WESTWOOD VISTA |

CHANGE ORDER NO. 28
REVISED ALIGNMENTS TO
WESTWOOD LP. & WESTWOOD VISTA.

CHANGE ORDER 28

FOR REVISED HORIZONTAL ALIGNMENT DATA SEE SHEETS 166B.

STATE OF TEXAS
JEROME D. PAVLISKA
76075
REGISTERED
PROFESSIONAL ENGINEER

Jerome D. Pavlisko, P.E. 2-7-03
Jerome D. Pavlisko, P.E. Date

© 2001
Texas Department of Transportation

# GEOMETRIC LAYOUT

SHEET 2 OF 19

| FED. RD. DIV. NO. | FEDERAL AID PROJECT NO. | | SHEET NO. |
|---|---|---|---|
| 6 | NH 2000(704), etc. | | 146A |
| STATE | DIST. | COUNTY | |
| TEXAS | SAT | BEXAR | |
| CONT. | SECT. | JOB | HIGHWAY NO. |
| 2452 | 01 | 036, etc. | LP 1604 |

1-23-03

lp1604fm471-90\align02.dgn

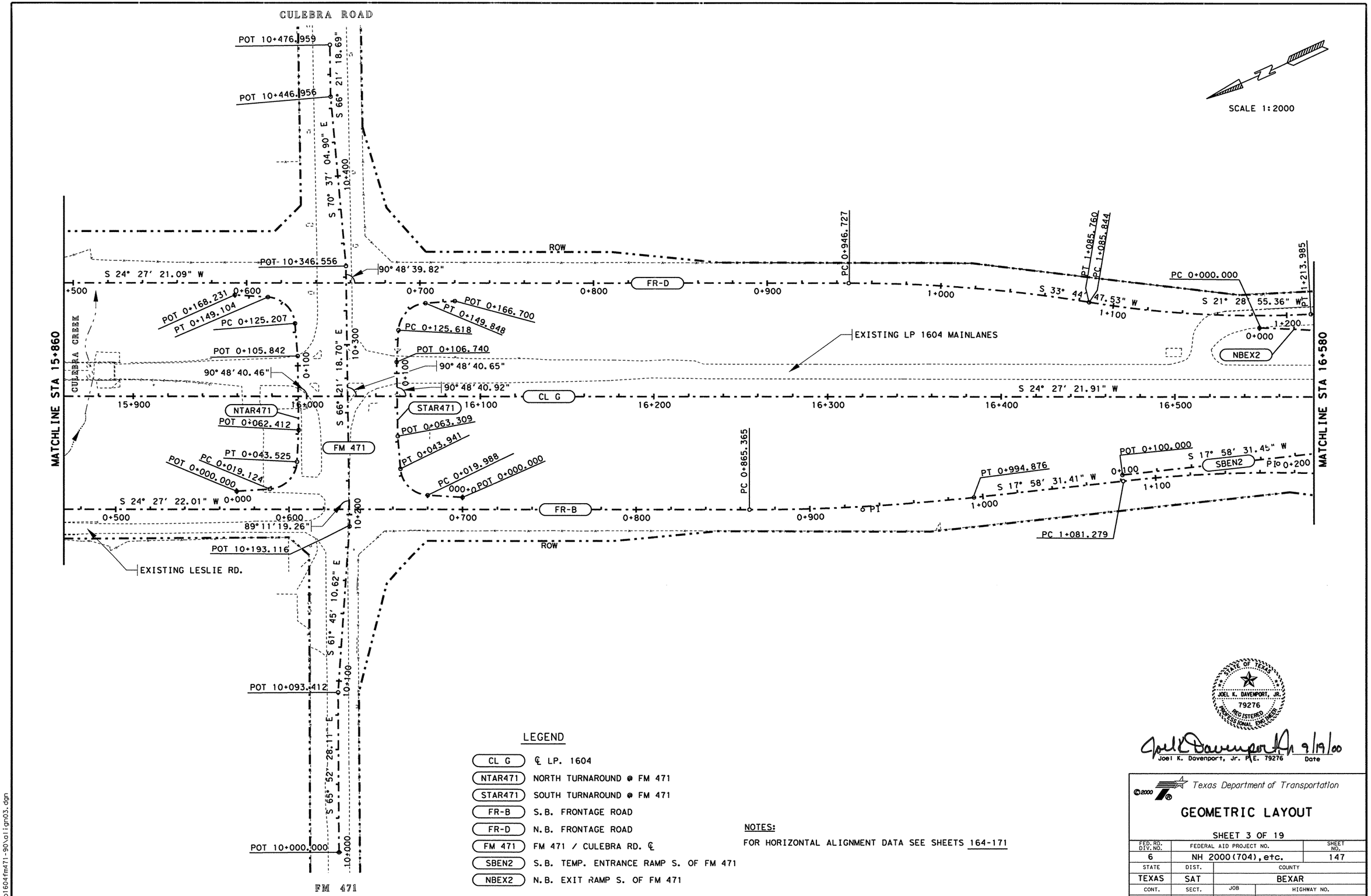


## LEGEND

| | |
|---|---|
| CL G | ℄ LP. 1604 |
| NTAR471 | NORTH TURNAROUND @ FM 471 |
| STAR471 | SOUTH TURNAROUND @ FM 471 |
| FR-B | S.B. FRONTAGE ROAD |
| FR-D | N.B. FRONTAGE ROAD |
| FM 471 | FM 471 / CULEBRA RD. ℄ |
| SBEN2 | S.B. TEMP. ENTRANCE RAMP S. OF FM 471 |
| NBEX2 | N.B. EXIT RAMP S. OF FM 471 |

**NOTES:**

FOR HORIZONTAL ALIGNMENT DATA SEE SHEETS 164-171

STATE OF TEXAS
JOEL K. DAVENPORT, JR.
79276
REGISTERED PROFESSIONAL ENGINEER

Joel K. Davenport, Jr. P.E. 79276 — Date 9/19/00

Texas Department of Transportation

# GEOMETRIC LAYOUT

SHEET 3 OF 19

| FED. RD. DIV. NO. | FEDERAL AID PROJECT NO. | | SHEET NO. |
|---|---|---|---|
| 6 | NH 2000(704), etc. | | 147 |
| STATE | DIST. | COUNTY | |
| TEXAS | SAT | BEXAR | |
| CONT. | SECT. | JOB | HIGHWAY NO. |
| 2452 | 01 | 036, etc. | LP 1604 |

lp1604fm471-90\align03.dgn

SCALE 1 : 2000

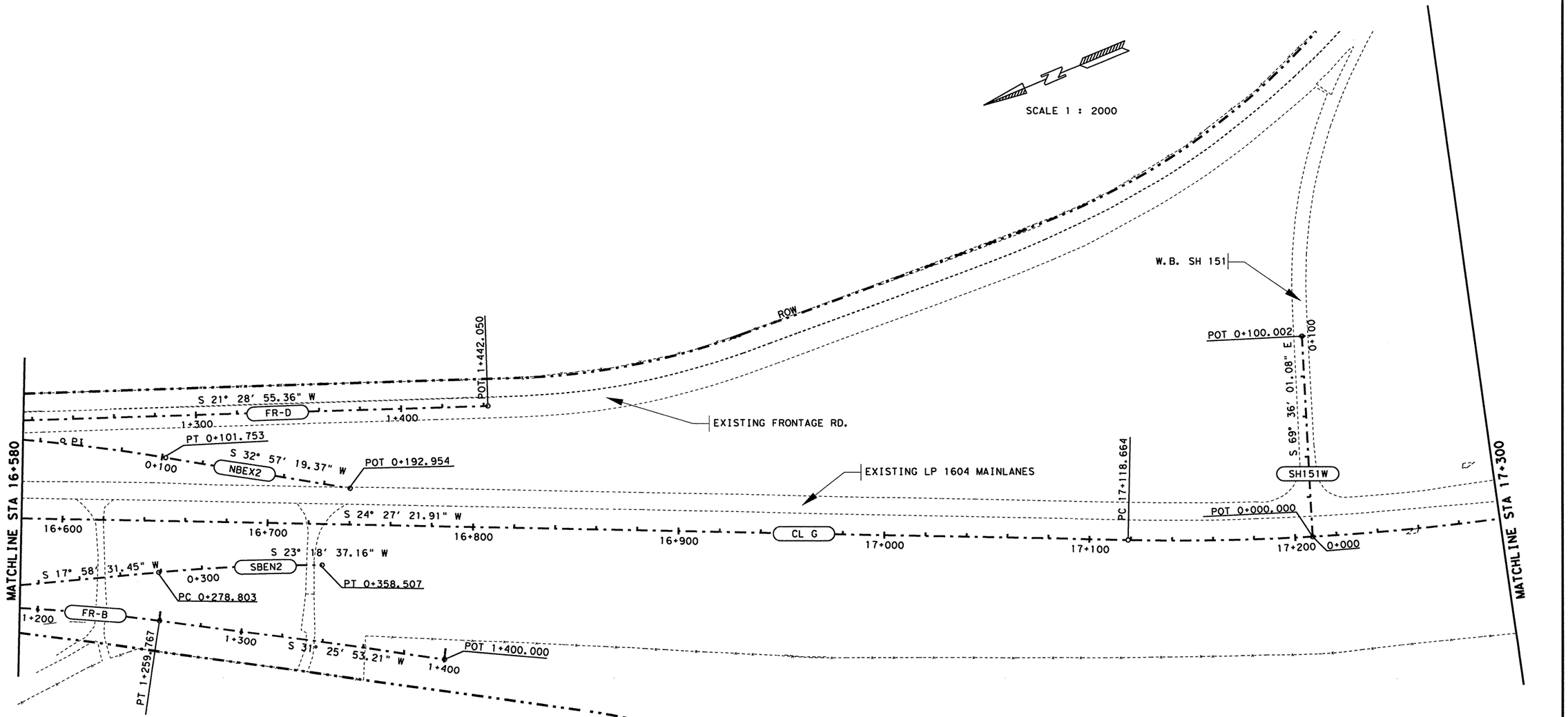


## LEGEND

| | |
|---|---|
| CL G | ℄ LP. 1604 |
| FR-B | N.B. FRONTAGE ROAD |
| FR-D | S.B. FRONTAGE ROAD |
| NBEX2 | N.B. TEMP. EXIT RAMP S. OF FM 471 |
| SBEN2 | S.B. TEMP. ENTRANCE RAMP S. OF FM 471 |
| SH151W | W.B. SH 151 |

FOR HORIZONTAL ALIGNMENT DATA SEE SHEETS 164-171

STATE OF TEXAS
JOEL K. DAVENPORT, JR.
79276
REGISTERED PROFESSIONAL ENGINEER

Joel K. Davenport Jr. 9/19/00
Joel K. Davenport, Jr. P.E. 79276 Date

Texas Department of Transportation

# GEOMETRIC LAYOUT

SHEET 4 OF 19

| FED. RD. DIV. NO. | FEDERAL AID PROJECT NO. | | SHEET NO. |
|---|---|---|---|
| 6 | NH 2000(704), etc. | | 148 |
| STATE | DIST. | COUNTY | |
| TEXAS | SAT | BEXAR | |
| CONT. | SECT. | JOB | HIGHWAY NO. |
| 2452 | 01 | 036, etc. | LP 1604 |

tp1604fm471-90\align04.dgn

SCALE 1 : 2000

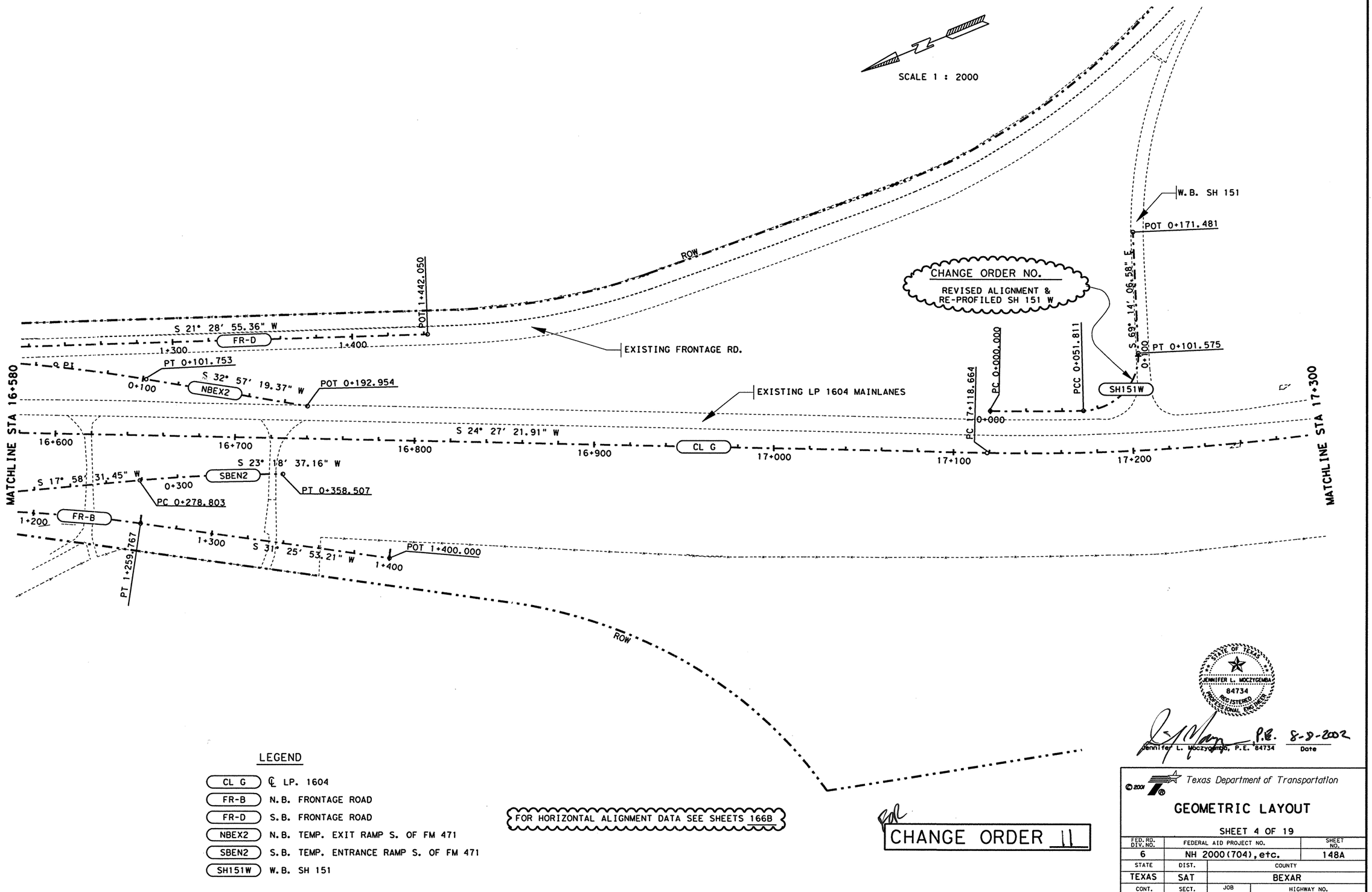


LEGEND

| | |
|---|---|
| CL G | ℄ LP. 1604 |
| FR-B | N.B. FRONTAGE ROAD |
| FR-D | S.B. FRONTAGE ROAD |
| NBEX2 | N.B. TEMP. EXIT RAMP S. OF FM 471 |
| SBEN2 | S.B. TEMP. ENTRANCE RAMP S. OF FM 471 |
| SH151W | W.B. SH 151 |

FOR HORIZONTAL ALIGNMENT DATA SEE SHEETS 166B

CHANGE ORDER 11

STATE OF TEXAS
JENNIFER L. MOCZYGEMBA
84734
REGISTERED
PROFESSIONAL ENGINEER

Jennifer L. Moczygemba, P.E. 84734 — P.E. — 8-9-2002 Date

© 2001

Texas Department of Transportation

# GEOMETRIC LAYOUT

SHEET 4 OF 19

| FED. RD. DIV. NO. | FEDERAL AID PROJECT NO. | SHEET NO. |
|---|---|---|
| 6 | NH 2000(704), etc. | 148A |

| STATE | DIST. | COUNTY |
|---|---|---|
| TEXAS | SAT | BEXAR |

| CONT. | SECT. | JOB | HIGHWAY NO. |
|---|---|---|---|
| 2452 | 01 | 036, etc. | LP 1604 |

lp1604fm471-90\plign04.dgn

SCALE 1:2000

LEGEND

CL G ℄ LP. 1604

SH151E E.B. SH 151

FOR HORIZONTAL ALIGNMENT DATA SEE SHEETS 164-171

POT 0+521.184

S 52° 32' 55" E

0+500

PT 0+501.184

0+400

0+300

PC 0+301.962

SH151E

E.B. SH 151

S 84° 15' 21" E

0+200

0+100

ROW

EXISTING FRONTAGE RD.

EXISTING LP 1604 MAINLANES

PT 17+562.530

S 2° 36' 44.37" W

CL G

17+400

POT 0+100.000

17+500

17+600

17+700

17+800

17+900

18+000

MATCHLINE STA 17+300

MATCHLINE STA 18+020

PI

ROW

STATE OF TEXAS
JOEL K. DAVENPORT, JR.
79276
REGISTERED
PROFESSIONAL ENGINEER

Joel K Davenport, Jr 9/19/00

Joel K. Davenport, Jr. P.E. 79276 Date

Texas Department of Transportation

# GEOMETRIC LAYOUT

SHEET 5 OF 19

| FED.RD. DIV.NO. | FEDERAL AID PROJECT NO. | | SHEET NO. |
|---|---|---|---|
| 6 | NH 2000(704), etc. | | 149 |
| STATE | DIST. | COUNTY | |
| TEXAS | SAT | BEXAR | |
| CONT. | SECT. | JOB | HIGHWAY NO. |
| 2452 | 01 | 036, etc. | LP 1604 |

lp1604fm471-90align05.dgn

SCALE 1: 2000

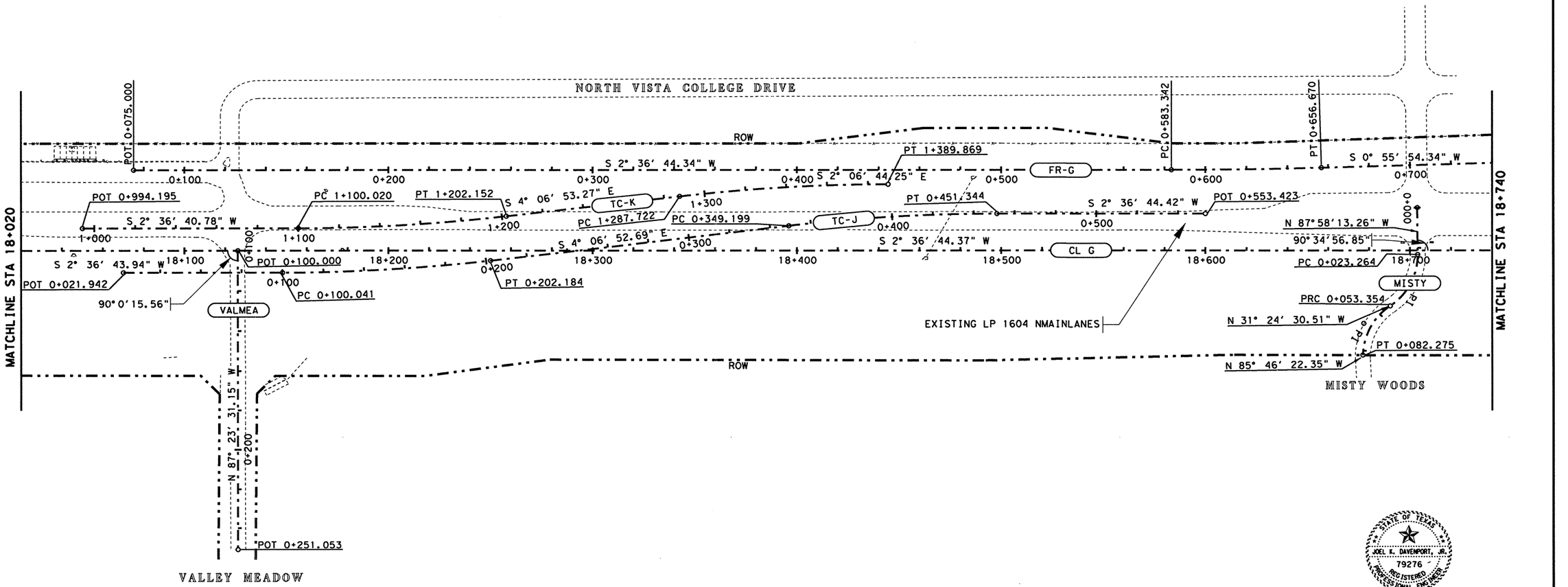


LEGEND

| | |
|---|---|
| CL G | ℄ LP 1604 |
| FR-G | N.B. FRONTAGE ROAD |
| VALMEA | VALLEY MEADOW ℄ |
| TC-K | N.B. TEMP. CONNECTOR |
| TC-J | S.B. TEMP. CONNECTOR |
| MISTY | MISTY WOODS ℄ |

FOR HORIZONTAL ALIGNMENT DATA SEE SHEETS 164-171

STATE OF TEXAS
JOEL K. DAVENPORT, JR.
79276
REGISTERED
PROFESSIONAL ENGINEER

Joel K. Davenport, Jr. 9/19/00
Joel K. Davenport, Jr. P.E. 79276 Date

Texas Department of Transportation

# GEOMETRIC LAYOUT

SHEET 6 OF 19

| FED.RD. DIV.NO. | FEDERAL AID PROJECT NO. | | SHEET NO. |
|---|---|---|---|
| 6 | NH 2000(704), etc. | | 150 |
| STATE | DIST. | COUNTY | |
| TEXAS | SAT | BEXAR | |
| CONT. | SECT. | JOB | HIGHWAY NO. |
| 2452 | 01 | 036, etc. | LP 1604 |

lp1604fm471-90\align06.dgn

SCALE 1:2000

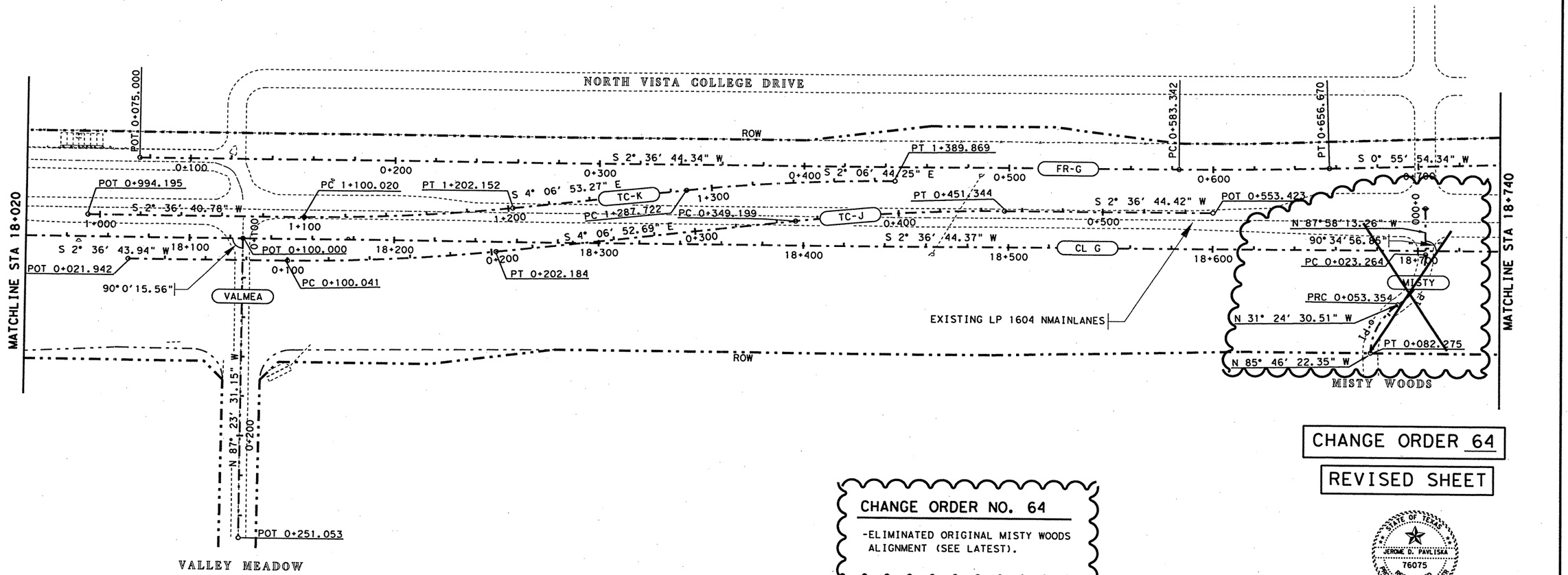


## CHANGE ORDER NO. 64

-ELIMINATED ORIGINAL MISTY WOODS ALIGNMENT (SEE LATEST).

CHANGE ORDER 64

REVISED SHEET

STATE OF TEXAS
JEROME D. PAVLISKA
76075
REGISTERED PROFESSIONAL ENGINEER

Jerome D. Pavliska, P.E. 2/06/04
Jerome D. Pavliska, P.E. Date

LEGEND

| | |
|---|---|
| CL G | ℄ LP 1604 |
| FR-G | N.B. FRONTAGE ROAD |
| VALMEA | VALLEY MEADOW ℄ |
| TC-K | N.B. TEMP. CONNECTOR |
| TC-J | S.B. TEMP. CONNECTOR |
| MISTY | MISTY WOODS ℄ |

FOR HORIZONTAL ALIGNMENT DATA SEE SHEETS 164-171

Texas Department of Transportation

GEOMETRIC LAYOUT

SHEET 6 OF 19

| FED. RD. DIV. NO. | FEDERAL AID PROJECT NO. | | SHEET NO. |
|---|---|---|---|
| 6 | NH 2000(704), etc. | | 150A |
| STATE | DIST. | COUNTY | |
| TEXAS | SAT | BEXAR | |
| CONT. | SECT. | JOB | HIGHWAY NO. |
| 2452 | 01 | 036, etc. | LP 1604 |

02-05-04

lp1604fm471-90\align06.dgn

SCALE 1:2000

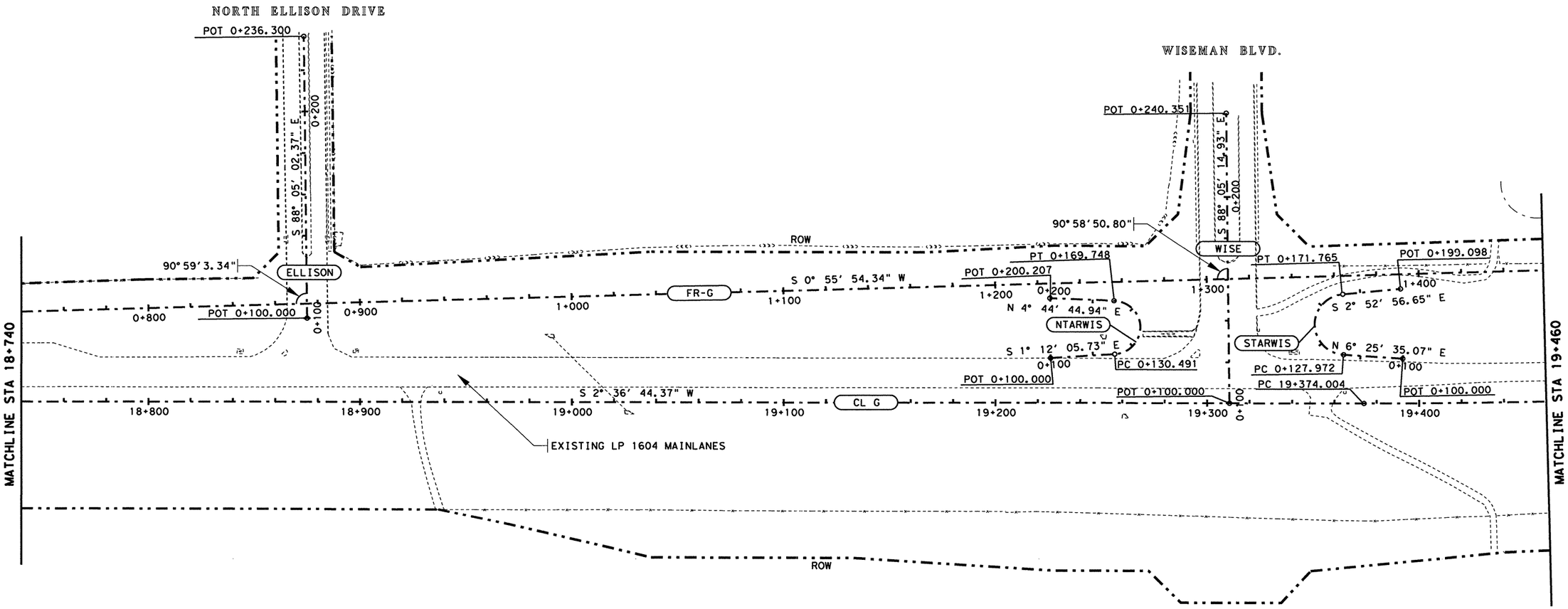


LEGEND

| | |
|---|---|
| CL G | ℄ LP 1604 |
| FR-G | N.B. FRONTAGE ROAD |
| ELLISON | NORTH ELLISON DRIVE ℄ |
| NTARWIS | N. TURNAROUND @ WISEMAN BLVD. |
| WISE | WISEMAN BLVD. ℄ |
| STARWIS | S. TURNAROUND @ WISEMAN BLVD. |

NOTES:

FOR HORIZONTAL ALIGNMENT DATA SEE SHEETS 164-171

STATE OF TEXAS
JOEL K. DAVENPORT, JR.
79276
REGISTERED PROFESSIONAL ENGINEER

Joel K Davenport Jr 9/19/00

Joel K. Davenport, Jr. P.E. 79276 Date

Texas Department of Transportation

# GEOMETRIC LAYOUT

SHEET 7 OF 19

| FED. RD. DIV. NO. | FEDERAL AID PROJECT NO. | | SHEET NO. |
|---|---|---|---|
| 6 | NH 2000(704),etc. | | 151 |
| STATE | DIST. | COUNTY | |
| TEXAS | SAT | BEXAR | |
| CONT. | SECT. | JOB | HIGHWAY NO. |
| 2452 | 01 | 036,etc. | LP 1604 |

lp1604fm471-90\align07.dgn

Plotted on: 01/26/2004

SCALE 1:2000

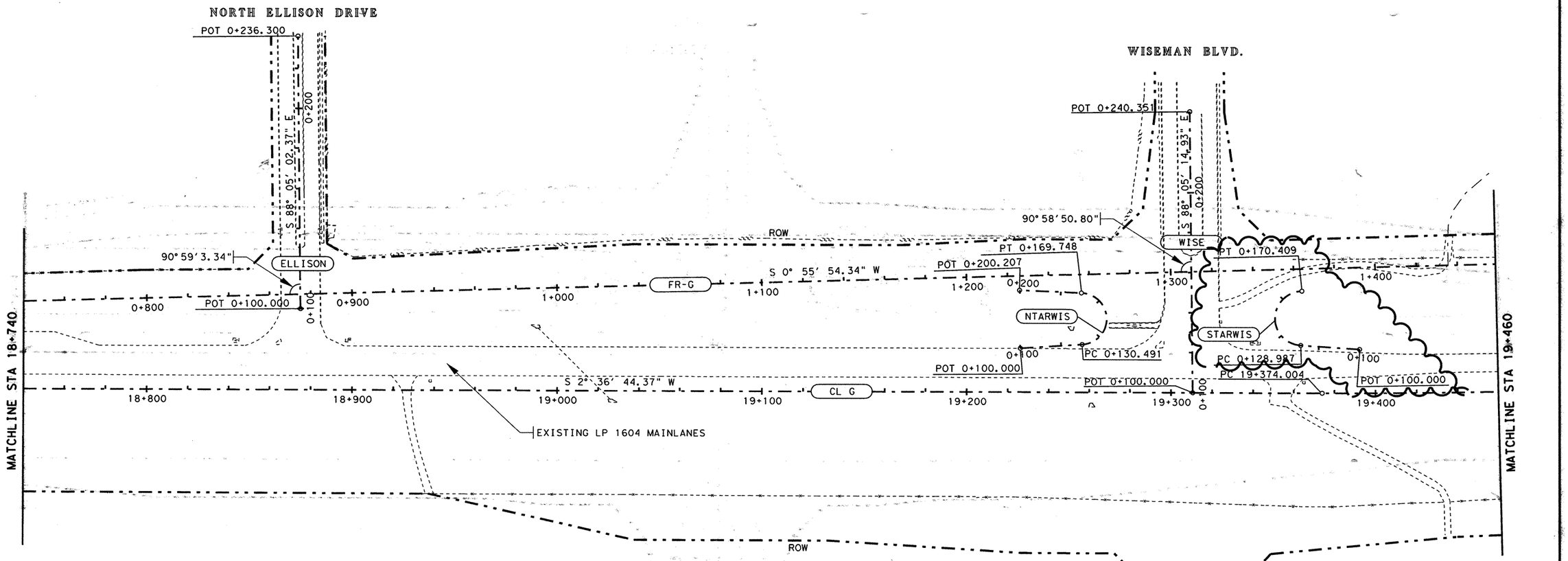


CHANGE ORDER NO. 64 | REVISED SHEET

CHANGE ORDER NO. 64

-REVISED RDWY GEOMETRICS

LEGEND

| | |
|---|---|
| CL G | ℄ LP 1604 |
| FR-G | N.B. FRONTAGE ROAD |
| ELLISON | NORTH ELLISON DRIVE ℄ |
| NTARWIS | N. TURNAROUND @ WISEMAN BLVD. |
| WISE | WISEMAN BLVD. ℄ |
| STARWIS | S. TURNAROUND @ WISEMAN BLVD. |

NOTES:

FOR HORIZONTAL ALIGNMENT DATA SEE SHEETS 164-171


555 EAST RAMSEY SAN ANTONIO TEXAS 78216 PHONE (210)375-9000 FAX (210)375-9010

PAPE-DAWSON ENGINEERS CIVIL & ENVIRONMENTAL

STATE OF TEXAS J. KENT O'BRIEN 64398 LICENSED PROFESSIONAL ENGINEER

J. KENT O'BRIEN P.E. 1/27/2004 DATE


©2000 Texas Department of Transportation

# GEOMETRIC LAYOUT

SHEET 7 OF 19

| FED.RD. DIV.NO. | FEDERAL AID PROJECT NO. | SHEET NO. |
|---|---|---|
| 6 | NH 2000(704), etc. | 151A |

| STATE | DIST. | COUNTY |
|---|---|---|
| TEXAS | SAT | BEXAR |

| CONT. | SECT. | JOB | HIGHWAY NO. |
|---|---|---|---|
| 2452 | 01 | 036, etc. | LP 1604 |

Design Filename: p:\52\20V11\design\civil\plansheets\roadway\alignment\align07.dgn

lp1604fm471-90\align07.dgn

SCALE 1:2000

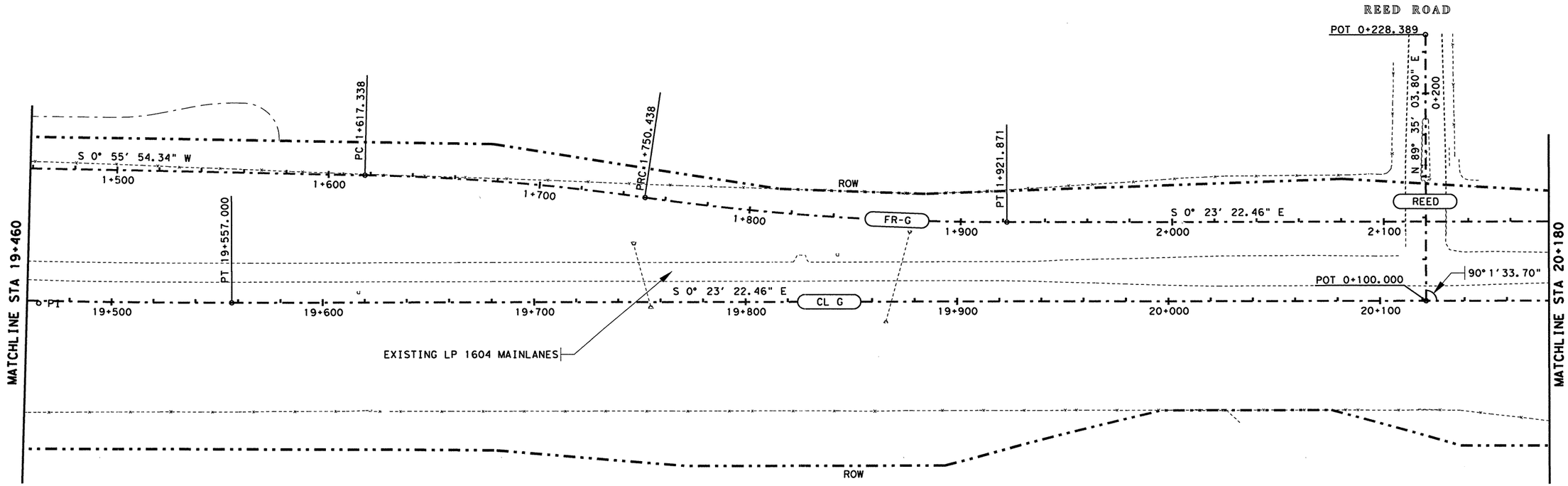


LEGEND

| | |
|---|---|
| CL G | ℄ LP 1604 |
| FR-G | N.B. FRONTAGE ROAD |
| REED | REED ROAD ℄ |

FOR HORIZONTAL ALIGNMENT DATA SEE SHEETS 164-171

STATE OF TEXAS
JOEL K. DAVENPORT, JR.
79276
REGISTERED PROFESSIONAL ENGINEER

Joel K Davenport Jr 9/19/00
Joel K. Davenport, Jr. P.E. 79276 Date

Texas Department of Transportation

# GEOMETRIC LAYOUT

SHEET 8 OF 19

| FED. RD. DIV. NO. | FEDERAL AID PROJECT NO. | | SHEET NO. |
|---|---|---|---|
| 6 | NH 2000(704),etc. | | 152 |
| STATE | DIST. | COUNTY | |
| TEXAS | SAT | BEXAR | |
| CONT. | SECT. | JOB | HIGHWAY NO. |
| 2452 | 01 | 036,etc. | LP 1604 |

lp1604fm471-90\align08.dgn

SCALE 1:2000

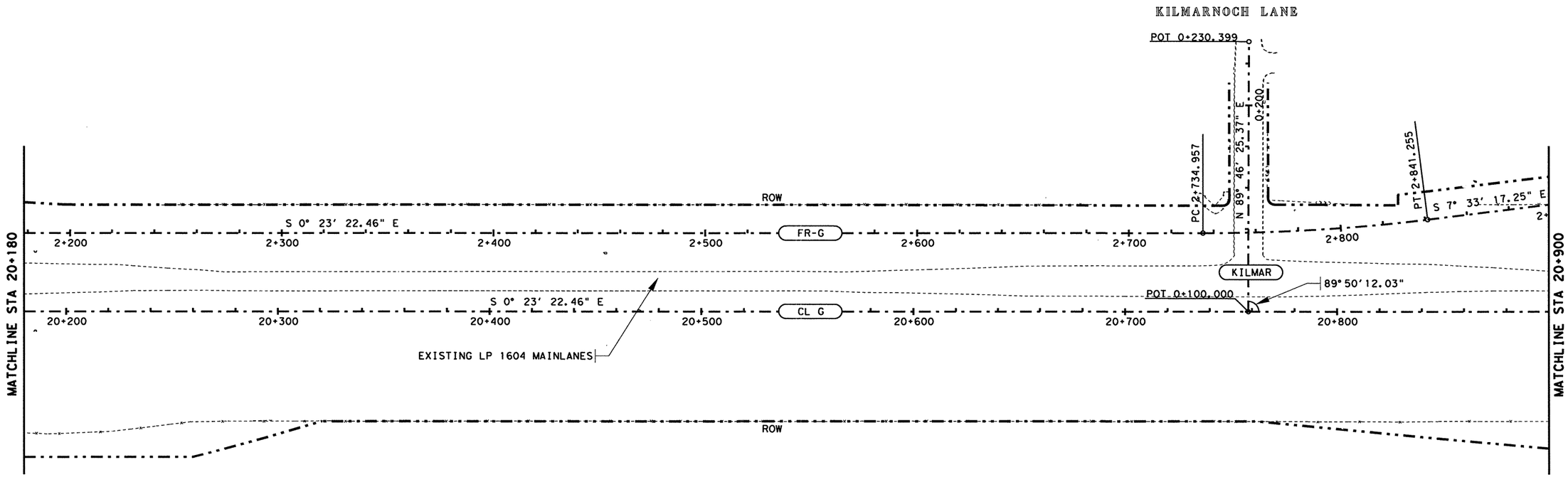


STATE OF TEXAS
JOEL K. DAVENPORT, JR.
79276
REGISTERED
PROFESSIONAL ENGINEER

Joel K. Davenport Jr. 9/19/00
Joel K. Davenport, Jr. P.E. 79276 Date

LEGEND

| | |
|---|---|
| CL G | ℄ LP 1604 |
| FR-G | N.B. FRONTAGE ROAD |
| KILMAR | KILMARNOCH LANE ℄ |

FOR HORIZONTAL CURVE DATA SEE SHEETS 164-171

©2000 Texas Department of Transportation

# GEOMETRIC LAYOUT

SHEET 9 OF 19

| FED. RD. DIV. NO. | FEDERAL AID PROJECT NO. | | SHEET NO. |
|---|---|---|---|
| 6 | NH 2000(704), etc. | | 153 |
| STATE | DIST. | COUNTY | |
| TEXAS | SAT | BEXAR | |
| CONT. | SECT. | JOB | HIGHWAY NO. |
| 2452 | 01 | 036, etc. | LP 1604 |

lp1604fm471-90\align09.dgn

SCALE 1:2000

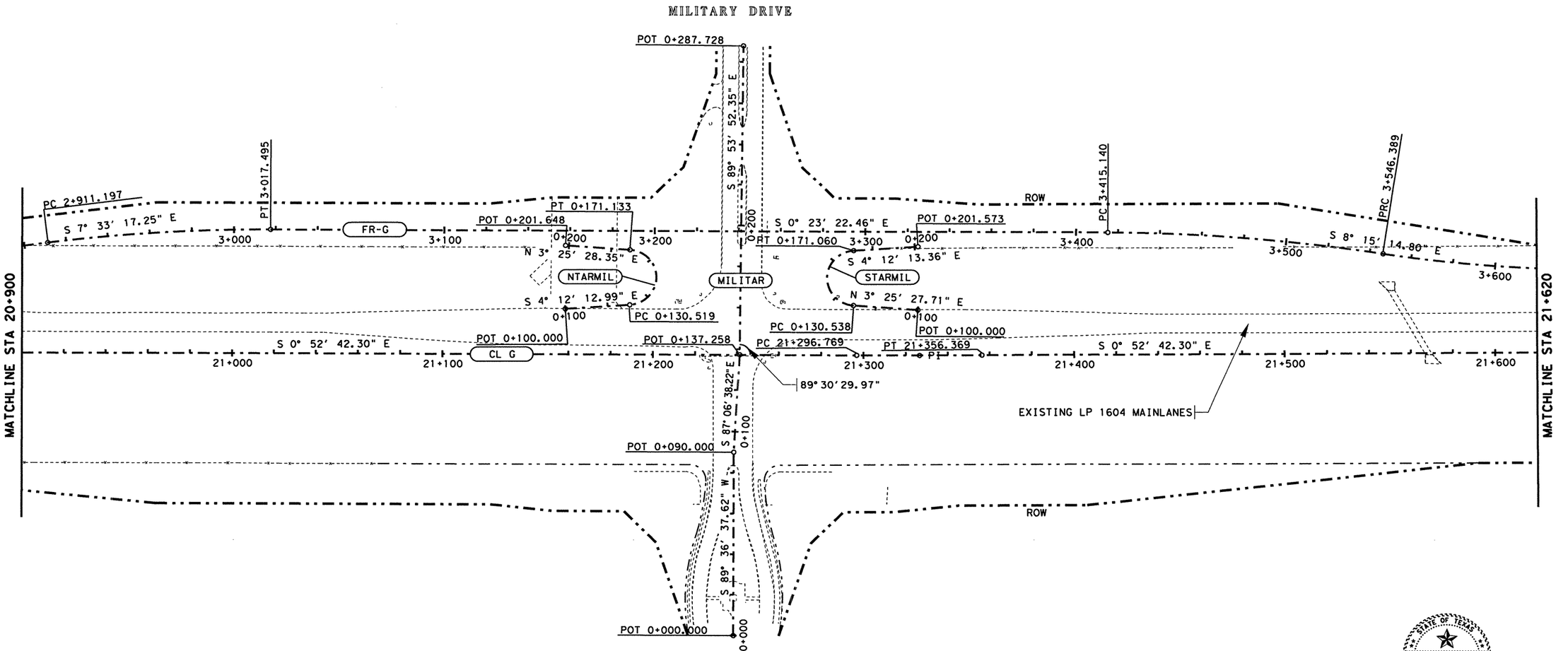


LEGEND

| | |
|---|---|
| CL G | ℄ LP 1604 |
| FR-G | N.B. FRONTAGE ROAD |
| NTARMIL | N. TURNAROUND @ MILITARY DR. |
| MILITAR | MILITARY DRIVE ℄ |
| STARMIL | S. TURNAROUND @ MILITARY DR. |

NOTES:

FOR HORIZONTAL ALIGNMENT DATA SEE SHEETS 164-171

STATE OF TEXAS
JOEL K. DAVENPORT, JR.
79276
REGISTERED PROFESSIONAL ENGINEER

Joel K. Davenport, Jr. 9/19/00
Joel K. Davenport, Jr., P.E. 79276 Date

Texas Department of Transportation

# GEOMETRIC LAYOUT

SHEET 10 OF 19

| FED. RD. DIV. NO. | FEDERAL AID PROJECT NO. | | SHEET NO. |
|---|---|---|---|
| 6 | NH 2000(704), etc. | | 154 |
| STATE | DIST. | COUNTY | |
| TEXAS | SAT | BEXAR | |
| CONT. | SECT. | JOB | HIGHWAY NO. |
| 2452 | 01 | 036, etc. | LP 1604 |

lp1604fm471-90\align10.dgn

Plotted on: 01/26/2004

SCALE 1:2000

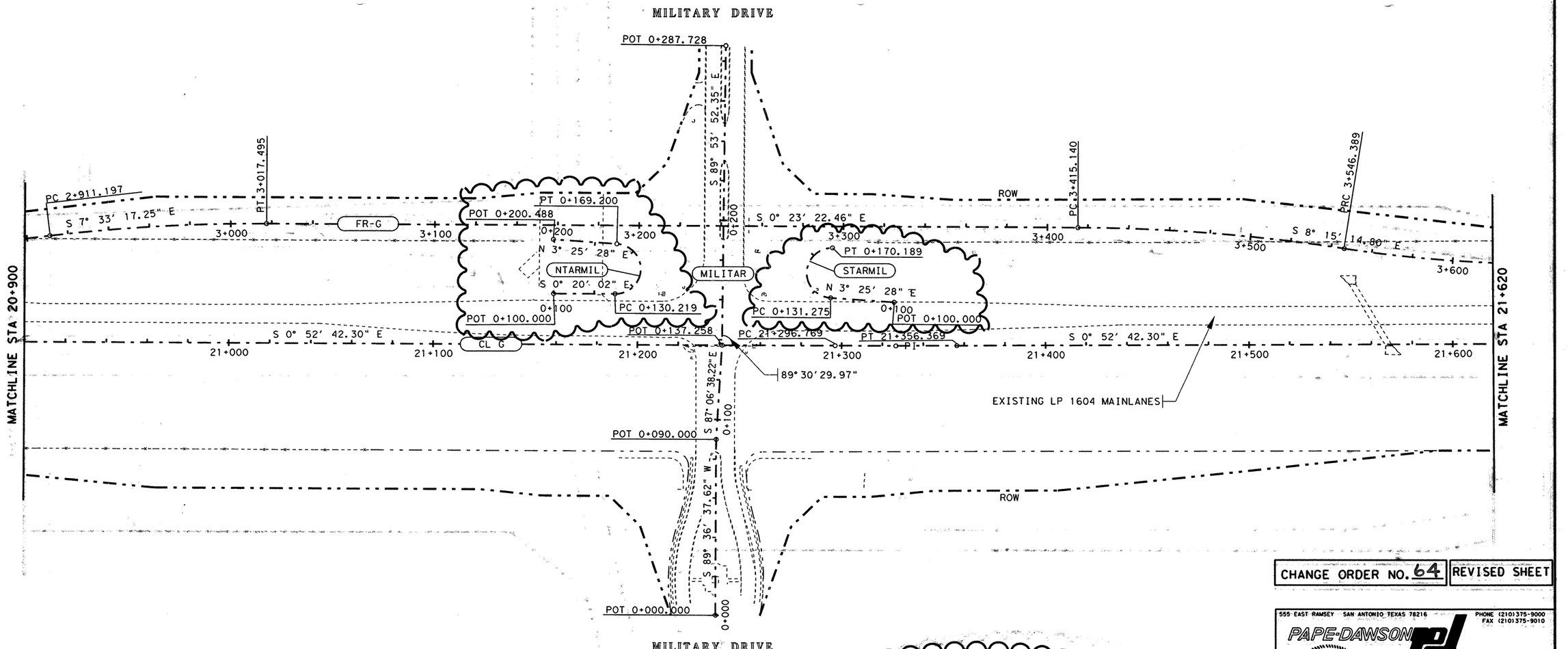


CHANGE ORDER NO. 64

-REVISED RDWY GEOMETRICS

LEGEND

| | |
|---|---|
| CL G | ℄ LP 1604 |
| FR-G | N.B. FRONTAGE ROAD |
| NTARMIL | N. TURNAROUND @ MILITARY DR. |
| MILITAR | MILITARY DRIVE ℄ |
| STARMIL | S. TURNAROUND @ MILITARY DR. |

NOTES:

FOR HORIZONTAL ALIGNMENT DATA SEE SHEETS 164-171

CHANGE ORDER NO. 64 | REVISED SHEET


555 EAST RAMSEY SAN ANTONIO TEXAS 78216 PHONE (210)375-9000 FAX (210)375-9010

PAPE-DAWSON ENGINEERS CIVIL & ENVIRONMENTAL

STATE OF TEXAS J. KENT O'BRIEN 64398 LICENSED PROFESSIONAL ENGINEER

J. KENT O'BRIEN P.E. 1/27/2004 DATE


©2000 Texas Department of Transportation

# GEOMETRIC LAYOUT

SHEET 10 OF 19

| FED.RD. DIV.NO. | FEDERAL AID PROJECT NO. | | SHEET NO. |
|---|---|---|---|
| 6 | NH 2000(704), etc. | | 154A |
| STATE | DIST. | COUNTY | |
| TEXAS | SAT | BEXAR | |
| CONT. | SECT. | JOB | HIGHWAY NO. |
| 2452 | 01 | 036, etc. | LP 1604 |

Design Filename: p:\52\20\11\design\civil\plansheets\roadalignment\align10.dgn

lp1604fm471-90\align10.dgn

SCALE 1:2000

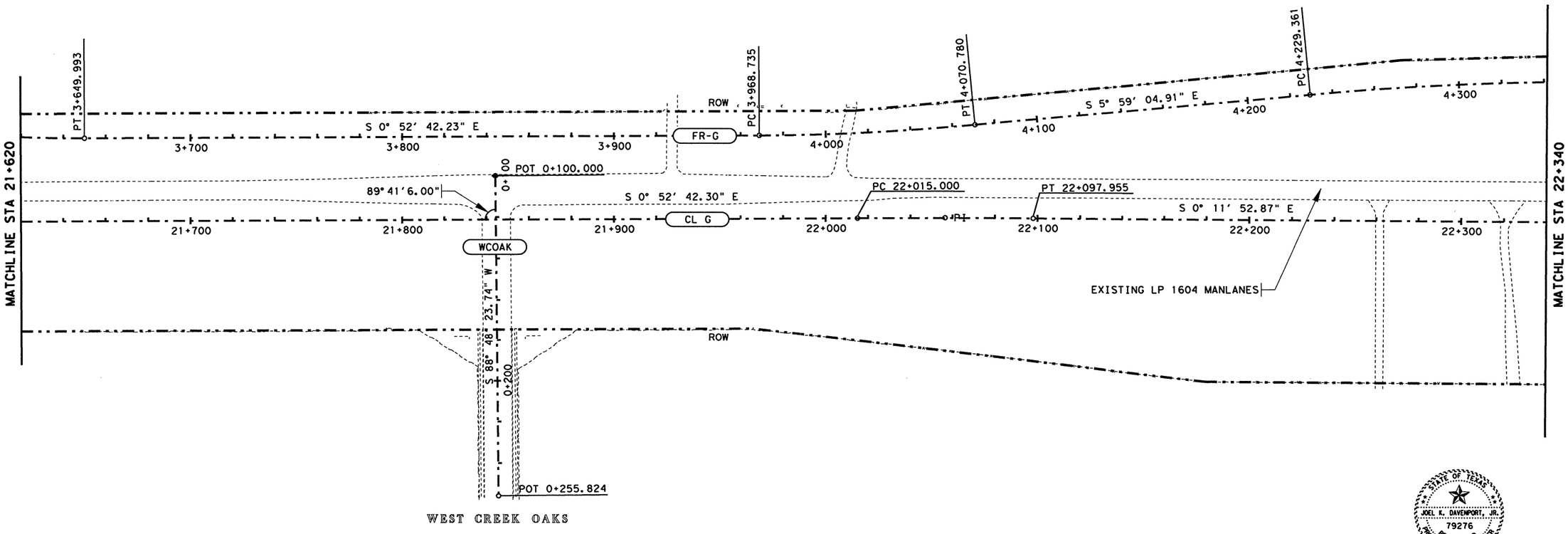


STATE OF TEXAS
JOEL K. DAVENPORT, JR.
79276
REGISTERED PROFESSIONAL ENGINEER

Joel K Davenport Jr 9/19/00
Joel K. Davenport, Jr. P.E. 79276 Date

LEGEND

| | |
|---|---|
| CL G | ℄ LP 1604 |
| FR-G | N.B. FRONTAGE ROAD |
| WCOAK | WEST CREEK OAKS ℄ |

FOR HORIZONTAL ALIGNMENT DATA SEE SHEETS 164-171

Texas Department of Transportation

# GEOMETRIC LAYOUT

SHEET 11 OF 19

| FED. RD. DIV. NO. | FEDERAL AID PROJECT NO. | | SHEET NO. |
|---|---|---|---|
| 6 | NH 2000(704), etc. | | 155 |
| STATE | DIST. | COUNTY | |
| TEXAS | SAT | BEXAR | |
| CONT. | SECT. | JOB | HIGHWAY NO. |
| 2452 | 01 | 036, etc. | LP 1604 |

lp1604fm471-90\align11.dgn

POTRANCO ROAD

SCALE 1:2000

POT 20+460.955

N 89° 23' 07.22" E

20+400

20+300

PT 4+373.786

89° 35' 0.26"

ROW

PC 4+937.557

POT 0+214.470

PT 0+183.219

PT 20+280.133

POT 0+213.926

S 0° 11' 52.93" E

FR-G

4+400

4+500

0+200

4+600

PT 0+182.895

0+200

4+700

4+800

4+900

5+000

N 3° 36' 57.83" E

S 4° 00' 43.78" E

NTARPOT

FM 1957

STARPOT

CARACOL CREEK

S 4° 00' 43.49" E

N 3° 36' 57.68" E

0+100

0+100

PC 0+130.265

POT 0+100.000

POT 0+100.000

PC 0+130.650

S 0° 11' 52.87" E

CL G

22+400

22+500

22+600

22+700

22+800

22+900

23+000

MATCHLINE STA 22+340

MATCHLINE STA 23+060

20+200

EXISTING LP 1604 MAINLANES

CARACOL CREEK

ROW

20+100

PC 20+058.441

N 13° 36' 16.13" E

20+000

POT 20+000.000

FM 1957

LEGEND

| | |
|---|---|
| CL G | ℄ LP 1604 |
| FR-G | N.B. FRONTAGE ROAD |
| NTARPOT | N. TURNAROUND @ FM 1957 |
| FM 1957 | FM 1957 / POTRANCO ROAD ℄ |
| STARPOT | S. TURNAROUND @ FM 1957 |

NOTES:

FOR HORIZONTAL ALIGNMENT DATA SEE SHEETS 164-171

STATE OF TEXAS
JOEL K. DAVENPORT, JR.
79276
REGISTERED
PROFESSIONAL ENGINEER

Joel K Davenport Jr 9/19/00

Joel K. Davenport, Jr. P.E. 79276 — Date

©2000 Texas Department of Transportation

# GEOMETRIC LAYOUT

SHEET 12 OF 19

| FED. RD. DIV. NO. | FEDERAL AID PROJECT NO. | | SHEET NO. |
|---|---|---|---|
| 6 | NH 2000(704),etc. | | 156 |
| STATE | DIST. | COUNTY | |
| TEXAS | SAT | BEXAR | |
| CONT. | SECT. | JOB | HIGHWAY NO. |
| 2452 | 01 | 036,etc. | LP 1604 |

lp1604fm471-90\align12.dgn

Plotted on:01/26/2004

Design Filename: p:\52\2011\design\civil\plansheets\roadway\alignment\align12.dgn

lp1604fm471-90\align12.dgn

POTRANCO ROAD

POT 20+460.955

SCALE 1:2000

N 89° 23' 07.22" E

20+400

20+300

20+200

20+100

20+000

PT 4+373.786

PC 4+937.557

ROW

89°35'0.26"

POT 0+181.640

PT 0+150.346

PT 20+280.133

PT 0+181.098

S 0° 11' 52.93" E

FR-G

4+400

4+500

4+600

4+700

4+800

4+900

5+000

N 3° 36' 57" E

NTARPOT

FM 1957

STARPOT

N 3° 06' 21" E

0+100

PC 0+130.039

0+100

PC 0+100.000

POT 0+100.000

S 0° 11' 52.87" E

CARACOL CREEK

MATCHLINE STA 22+340

CL G

22+400

22+500

22+600

22+700

22+800

22+900

23+000

MATCHLINE STA 23+060

EXISTING LP 1604 MAINLANES

CARACOL CREEK

ROW

PC 20+058.441

N 16° 36' 31" E

POT 20+000.000

N 13° 20' 00" E

FM 1957

LEGEND

| | |
|---|---|
| CL G | ℄ LP 1604 |
| FR-G | N.B. FRONTAGE ROAD |
| NTARPOT | N. TURNAROUND @ FM 1957 |
| FM 1957 | FM 1957 / POTRANCO ROAD ℄ |
| STARPOT | S. TURNAROUND @ FM 1957 |

CHANGE ORDER NO. 64

-REVISED RDWY GEOMETRICS

NOTES:

FOR HORIZONTAL ALIGNMENT DATA SEE SHEETS 164-171

CHANGE ORDER NO. 64 | REVISED SHEET

555 EAST RAMSEY SAN ANTONIO TEXAS 78216 PHONE (210)375-9000 FAX (210)375-9010

PAPE-DAWSON ENGINEERS CIVIL & ENVIRONMENTAL

STATE OF TEXAS J. KENT O'BRIEN 64398 LICENSED PROFESSIONAL ENGINEER

J. KENT O'BRIEN P.E. 1/27/2004 DATE

©2000 Texas Department of Transportation

# GEOMETRIC LAYOUT

SHEET 12 OF 19

| FED.RD. DIV.NO. | FEDERAL AID PROJECT NO. | | SHEET NO. |
|---|---|---|---|
| 6 | NH 2000(704),etc. | | 156A |
| STATE | DIST. | COUNTY | |
| TEXAS | SAT | BEXAR | |
| CONT. | SECT. | JOB | HIGHWAY NO. |
| 2452 | 01 | 036,etc. | LP 1604 |

SCALE 1:2000

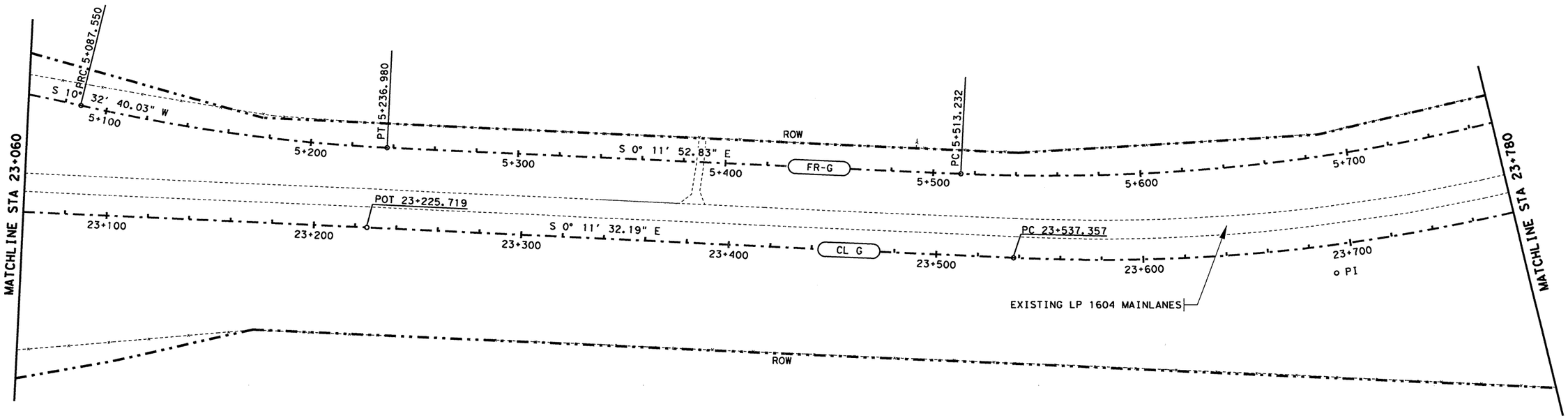


LEGEND

CL G ℄ LP 1604

FR-G N.B. FRONTAGE ROAD

FOR HORIZONTAL ALIGNMENT DATA SEE SHEETS 164-171

STATE OF TEXAS
JOEL K. DAVENPORT, JR.
79276
REGISTERED
PROFESSIONAL ENGINEER

Joel K. Davenport, Jr. 9/19/00

Joel K. Davenport, Jr. P.E. 79276 Date

©2000 Texas Department of Transportation

# GEOMETRIC LAYOUT

SHEET 13 OF 19

| FED. RD. DIV. NO. | FEDERAL AID PROJECT NO. | | SHEET NO. |
|---|---|---|---|
| 6 | NH 2000(704), etc. | | 157 |
| STATE | DIST. | COUNTY | |
| TEXAS | SAT | BEXAR | |
| CONT. | SECT. | JOB | HIGHWAY NO. |
| 2452 | 01 | 036, etc. | LP 1604 |

lp1604fm471-90\align13.dgn

SCALE 1:2000

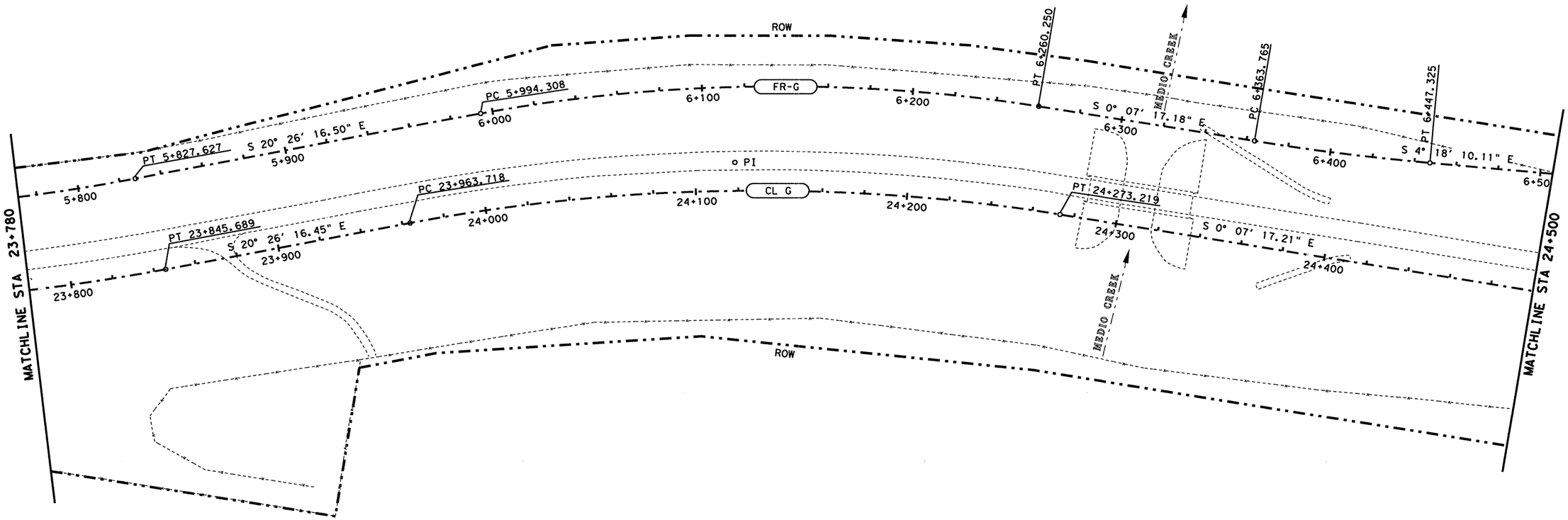


LEGEND

CL G — ℄ LP 1604

FR-G — N.B. FRONTAGE ROAD

FOR HORIZONTAL ALIGNMENT DATA SEE SHEETS 164-171

STATE OF TEXAS
JOEL K. DAVENPORT, JR.
79276
REGISTERED PROFESSIONAL ENGINEER

Joel K. Davenport, Jr. 9/19/00
Joel K. Davenport, Jr. P.E. 79276 — Date

Texas Department of Transportation

# GEOMETRIC LAYOUT

SHEET 14 OF 19

| FED. RD. DIV. NO. | FEDERAL AID PROJECT NO. | | SHEET NO. |
|---|---|---|---|
| 6 | NH 2000(704), etc. | | 158 |
| STATE | DIST. | COUNTY | |
| TEXAS | SAT | BEXAR | |
| CONT. | SECT. | JOB | HIGHWAY NO. |
| 2452 | 01 | 036, etc. | LP 1604 |

lp1604fm471-90\align14.dgn

SCALE 1:2000

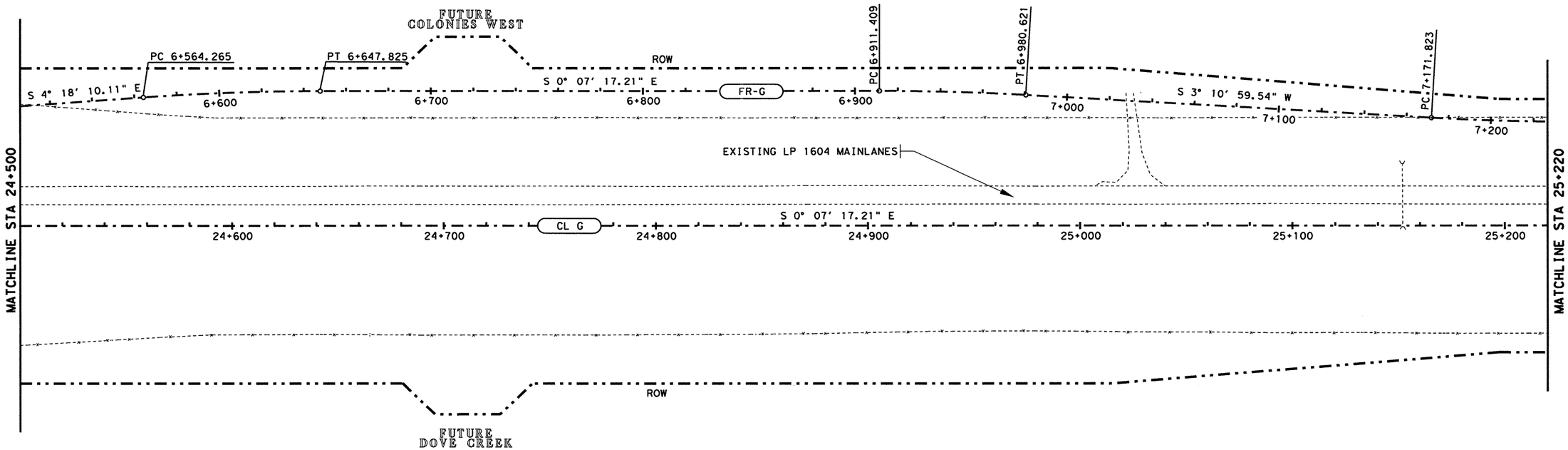


LEGEND

(CL G) ℄ LP 1604

(FR-G) N.B. FRONTAGE ROAD

FOR HORIZONTAL ALIGNMENT DATA SEE SHEETS 164-171

STATE OF TEXAS
JOEL K. DAVENPORT, JR.
79276
REGISTERED PROFESSIONAL ENGINEER

Joel K. Davenport 9/19/00
Joel K. Davenport, Jr. P.E. 79276 Date

Texas Department of Transportation

# GEOMETRIC LAYOUT

SHEET 15 OF 19

| FED. RD. DIV. NO. | FEDERAL AID PROJECT NO. | | SHEET NO. |
|---|---|---|---|
| 6 | NH 2000(704), etc. | | 159 |
| STATE | DIST. | COUNTY | |
| TEXAS | SAT | BEXAR | |
| CONT. | SECT. | JOB | HIGHWAY NO. |
| 2452 | 01 | 036, etc. | LP 1604 |

D1604fm471-90\align15.dgn

Plotted on: 8/25/2005

Design Filename: T:\AO\Design\lp1604fm471-90\PD_Phase2_change_order_mylars\submittal\plansheets\road\alignment\valign15.dgn

T:\AO\Design\lp1604fm471-90\PD_Phase2_change_order_mylars\submittal\plansheets\road\alignment\valign15.dgn

SCALE 1:2000

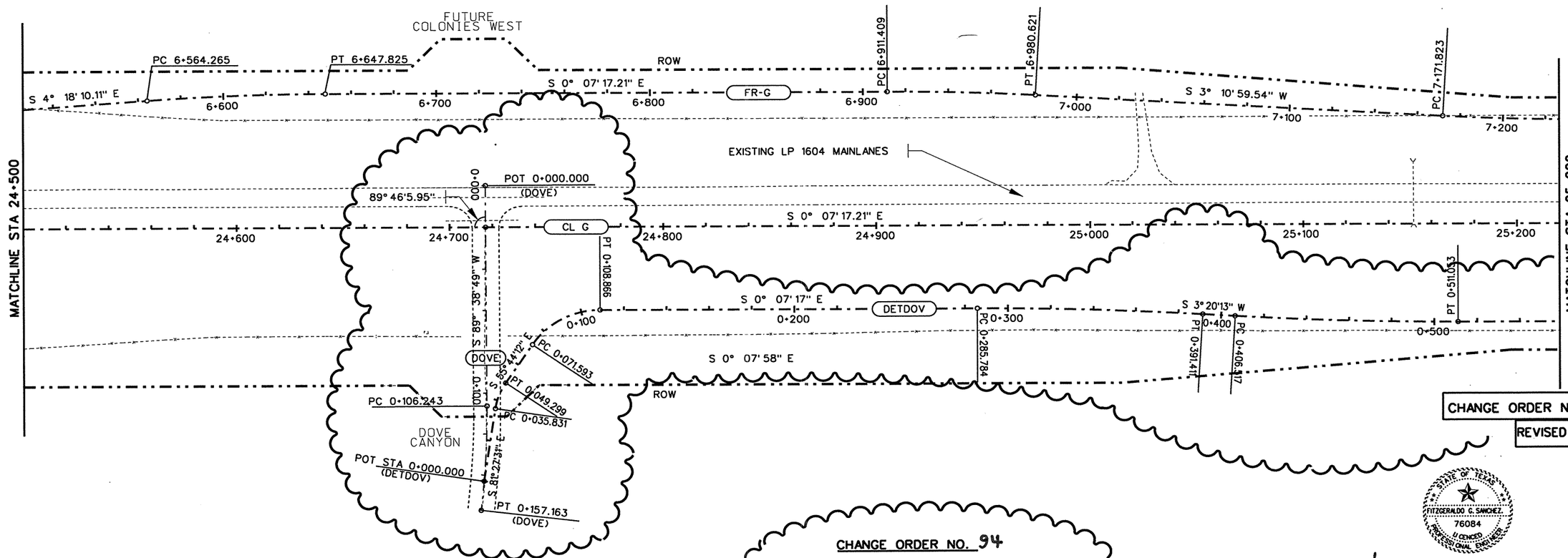


CHANGE ORDER NO. 94

-ADDED DOVE CANYON
-ADDED DOVE CANYON DETOUR

LEGEND

| | |
|---|---|
| CL G | ℄ LP 1604 |
| FR-G | N.B. FRONTAGE ROAD |
| DOVE | DOVE CANYON |
| DETDOV | DOVE CANYON DETOUR |

FOR HORIZONTAL ALIGNMENT DATA SEE SHEETS 164-171

CHANGE ORDER NO. 94

REVISED SHEET

STATE OF TEXAS
FITZGERALDO G. SANCHEZ
76084
LICENSED
PROFESSIONAL ENGINEER

Fitzgeraldo G. Sanchez 08-25-05
Fitzgeraldo G. Sanchez, P.E. Date

Texas Department of Transportation

GEOMETRIC LAYOUT

SHEET 15 OF 19

| FED.RD. DIV.NO. | FEDERAL AID PROJECT NO. | | SHEET NO. |
|---|---|---|---|
| 6 | NH 2000(704),etc. | | 159A |
| STATE | DIST. | COUNTY | |
| TEXAS | SAT | BEXAR | |
| CONT. | SECT. | JOB | HIGHWAY NO. |
| 2452 | 01 | 036,etc. | LP 1604 |

8-25-05

Plotted on: 01/26/2004

SCALE 1: 2000

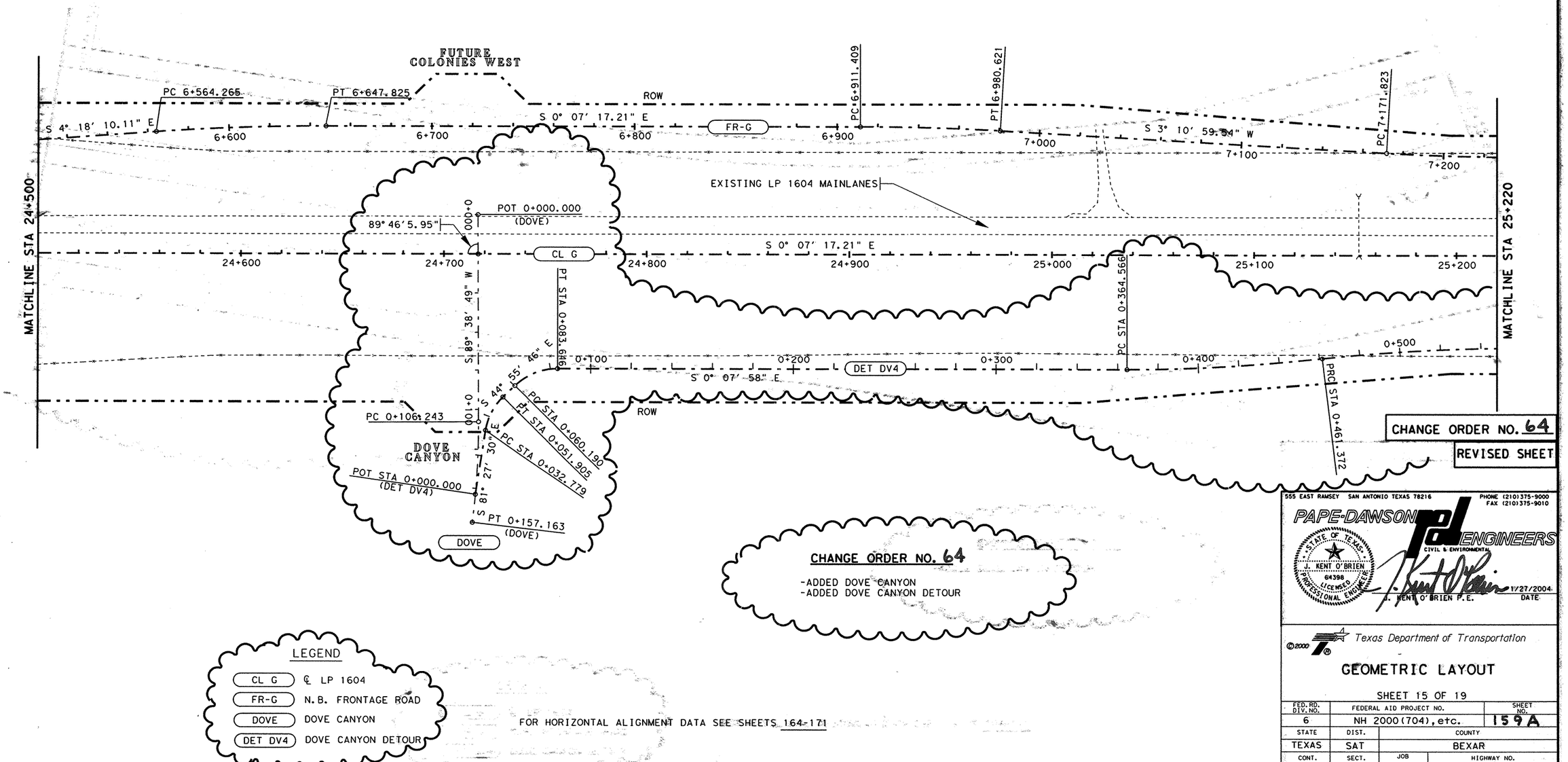


CHANGE ORDER NO. 64

REVISED SHEET

CHANGE ORDER NO. 64

-ADDED DOVE CANYON
-ADDED DOVE CANYON DETOUR

LEGEND

| | |
|---|---|
| CL G | ℄ LP 1604 |
| FR-G | N.B. FRONTAGE ROAD |
| DOVE | DOVE CANYON |
| DET DV4 | DOVE CANYON DETOUR |

FOR HORIZONTAL ALIGNMENT DATA SEE SHEETS 164-171

555 EAST RAMSEY SAN ANTONIO TEXAS 78216
PHONE (210)375-9000
FAX (210)375-9010
PAPE-DAWSON ENGINEERS
CIVIL & ENVIRONMENTAL
STATE OF TEXAS
J. KENT O'BRIEN
64398
LICENSED PROFESSIONAL ENGINEER
1/27/2004
J. KENT O'BRIEN P.E. DATE

©2000 Texas Department of Transportation

GEOMETRIC LAYOUT

SHEET 15 OF 19

| FED. RD. DIV. NO. | FEDERAL AID PROJECT NO. | | SHEET NO. |
|---|---|---|---|
| 6 | NH 2000(704), etc. | | 159A |
| STATE | DIST. | COUNTY | |
| TEXAS | SAT | BEXAR | |
| CONT. | SECT. | JOB | HIGHWAY NO. |
| 2452 | 01 | 036, etc. | LP 1604 |

Design Filename: p:\52\2011\design\civil\plansheets\road\alignment\align15.dgn
lp1604fm471-90\align15.dgn

SCALE 1:2000

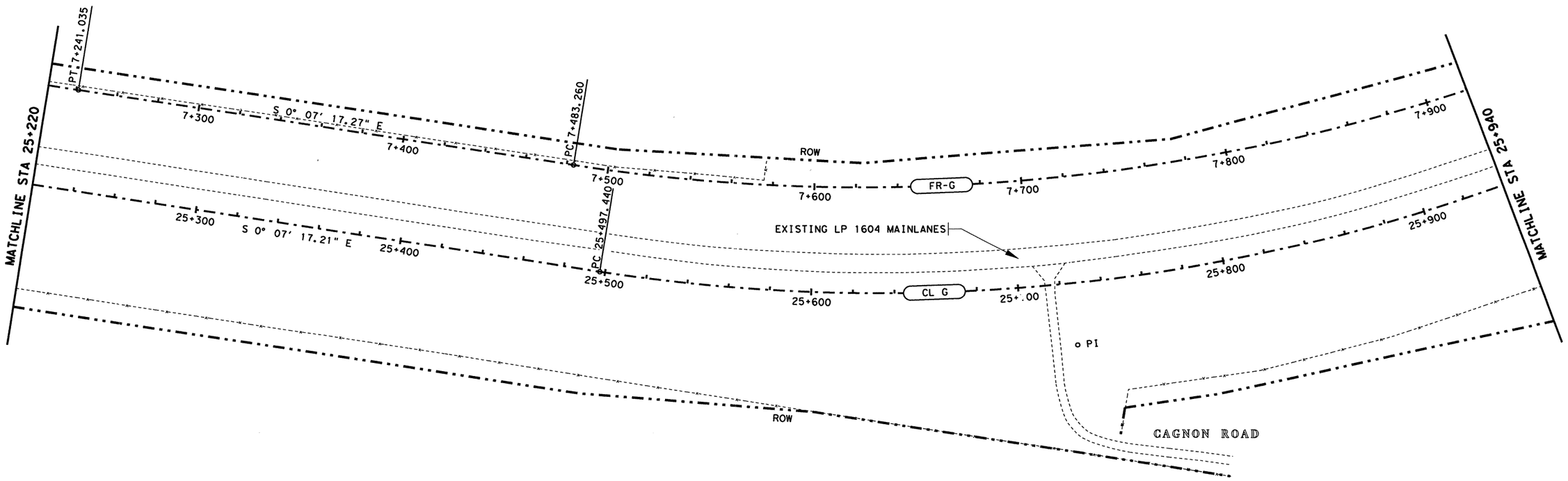


LEGEND

CL G ℄ LP 1604

FR-G N.B. FRONTAGE ROAD

FOR HORIZONTAL ALIGNMENT DATA SEE SHEETS 164-171

STATE OF TEXAS
JOEL K. DAVENPORT, JR.
79276
REGISTERED PROFESSIONAL ENGINEER

Joel K Davenport, Jr 9/19/00
Joel K. Davenport, Jr. P.E. 79276 Date

©2000 Texas Department of Transportation

# GEOMETRIC LAYOUT

SHEET 16 OF 19

| FED. RD. DIV. NO. | FEDERAL AID PROJECT NO. | | SHEET NO. |
|---|---|---|---|
| 6 | NH 2000(704), etc. | | 160 |
| STATE | DIST. | COUNTY | |
| TEXAS | SAT | BEXAR | |
| CONT. | SECT. | JOB | HIGHWAY NO. |
| 2452 | 01 | 036, etc. | LP 1604 |

lp1604fm471-90\align16.dgn

Plotted on: 8/25/2005
Design Filename: T:\AO\Design\lp1604fm471-90\PD_Phase2_change_order_mylars\submittal\plansheets\road\alignment\align16.dgn

SCALE 1:2000

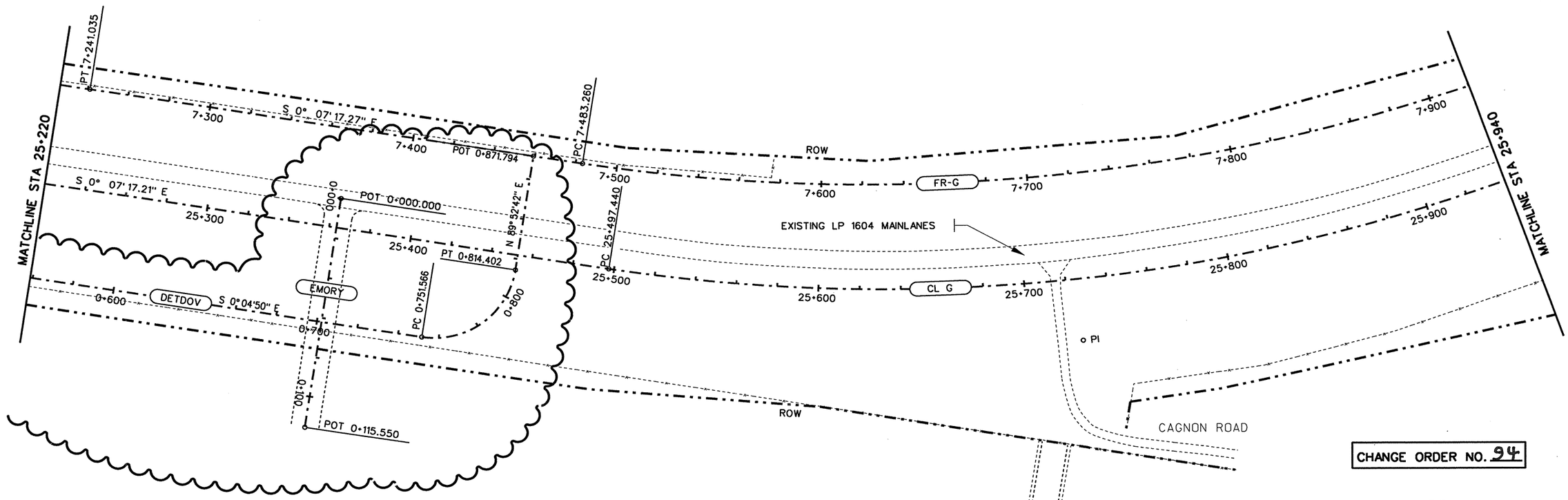


CHANGE ORDER NO. 94

CHANGE ORDER NO. 94
-ADDED DOVE CANYON DETOUR
-ADDED EMORY PEAK

LEGEND

| | |
|---|---|
| CL G | ℄ LP 1604 |
| FR-G | N.B. FRONTAGE ROAD |
| DETDOV | DOVE CANYON DETOUR |
| EMORY | EMORY PEAK |

FOR HORIZONTAL ALIGNMENT DATA SEE SHEETS 164-171

STATE OF TEXAS
FITZGERALDO G. SANCHEZ
76084
LICENCED
PROFESSIONAL ENGINEER

Fitzgeraldo G. Sanchez 08-25-05
Fitzgeraldo G. Sanchez, P.E. Date

©2000
Texas Department of Transportation

# GEOMETRIC LAYOUT

SHEET 16 OF 19

| FED.RD. DIV.NO. | FEDERAL AID PROJECT NO. | | SHEET NO. |
|---|---|---|---|
| 6 | NH 2000(704),etc. | | 160 A |
| STATE | DIST. | COUNTY | |
| TEXAS | SAT | BEXAR | |
| CONT. | SECT. | JOB | HIGHWAY NO. |
| 2452 | 01 | 036,etc. | LP 1604 |

Plotted on: 01/26/2004

Design Filename: p:\52\2011\design\civil\plansheets\road\alignment\align16.dgn

lp1604fm471-90\align16.dgn

SCALE 1:2000

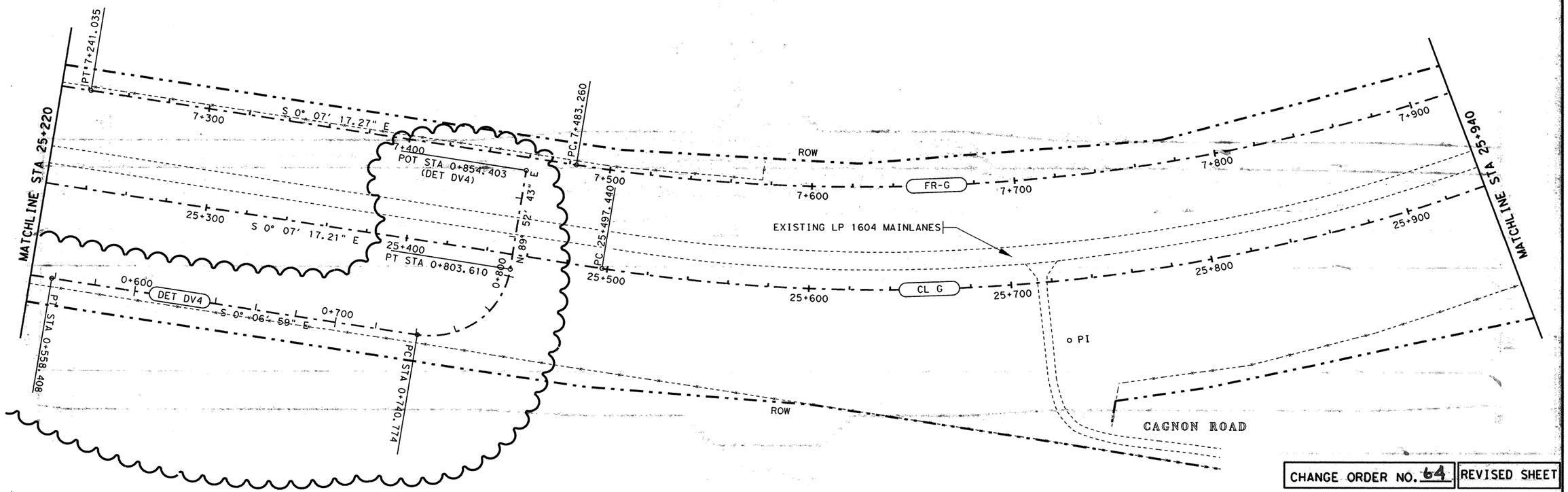


CHANGE ORDER NO. 64

-ADDED DOVE CANYON DETOUR

LEGEND

| | |
|---|---|
| CL G | ℄ LP 1604 |
| FR-G | N.B. FRONTAGE ROAD |
| DET DV4 | DOVE CANYON DETOUR |

FOR HORIZONTAL ALIGNMENT DATA SEE SHEETS 164-171

CHANGE ORDER NO. 64 | REVISED SHEET

SCALE: 1:400 HORIZ
SCALE: 1:200 VERT

555 EAST RAMSEY SAN ANTONIO TEXAS 78216
PHONE (210)375-9000
FAX (210)375-9010
PAPE-DAWSON ENGINEERS
CIVIL & ENVIRONMENTAL

STATE OF TEXAS
J. KENT O'BRIEN
64398
LICENSED
PROFESSIONAL ENGINEER

J. KENT O'BRIEN P.E. 1/27/2004 DATE

©2000

Texas Department of Transportation

# GEOMETRIC LAYOUT

SHEET 16 OF 19

| FED.RD. DIV.NO. | FEDERAL AID PROJECT NO. | | SHEET NO. |
|---|---|---|---|
| 6 | NH 2000(704), etc. | | 160 A |
| STATE | DIST. | COUNTY | |
| TEXAS | SAT | BEXAR | |
| CONT. | SECT. | JOB | HIGHWAY NO. |
| 2452 | 01 | 036, etc. | LP 1604 |

SCALE 1:2000

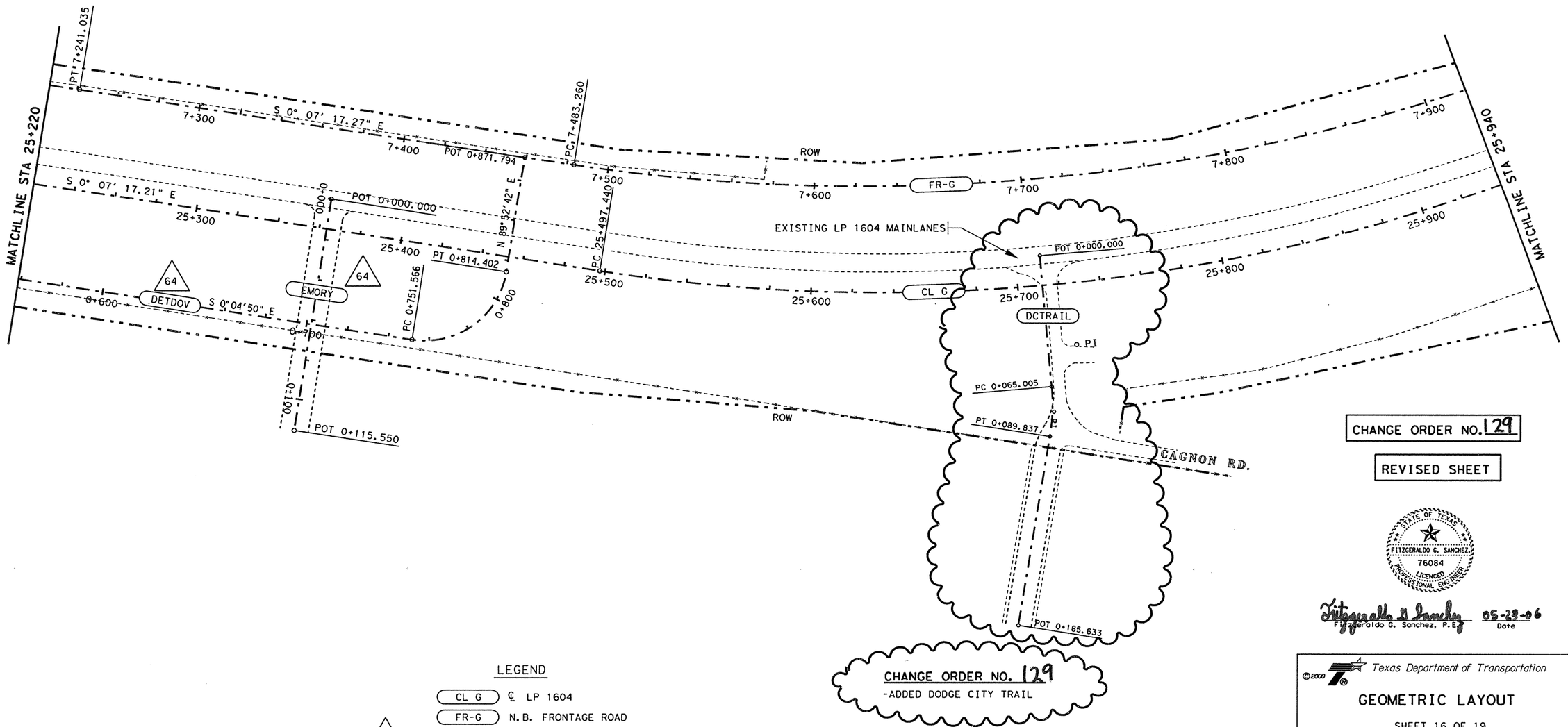


CHANGE ORDER NO. 129
-ADDED DODGE CITY TRAIL

LEGEND

| | |
|---|---|
| CL G | ℄ LP 1604 |
| FR-G | N.B. FRONTAGE ROAD |
| DETDOV | DOVE CANYON DETOUR |
| EMORY | EMORY PEAK |
| DCTRAIL | DODGE CITY TRAIL |

64 — refers to EMORY PEAK

# — REFERS TO CHANGES MADE AS PART OF CHANGE ORDER.

FOR HORIZONTAL ALIGNMENT DATA SEE SHEETS 164-171

CHANGE ORDER NO. 129

REVISED SHEET

STATE OF TEXAS
FITZGERALDO G. SANCHEZ
76084
LICENCED PROFESSIONAL ENGINEER

Fitzgeraldo G. Sanchez 05-23-06
Fitzgeraldo G. Sanchez, P.E. Date

©2000 Texas Department of Transportation

# GEOMETRIC LAYOUT

SHEET 16 OF 19

| FED.RD. DIV.NO. | FEDERAL AID PROJECT NO. | | SHEET NO. |
|---|---|---|---|
| 6 | NH 2000(704), etc. | | 160AA |
| STATE | DIST. | COUNTY | |
| TEXAS | SAT | BEXAR | |
| CONT. | SECT. | JOB | HIGHWAY NO. |
| 2452 | 01 | 036, etc. | LP 1604 |

1-24-06

t:\gov\design\lp1604fm471-90\pd*phase2*change*order*mylars\submittal\plansheets\vroad\alignment\align16.dgn
3/31/2006

SCALE 1:2000

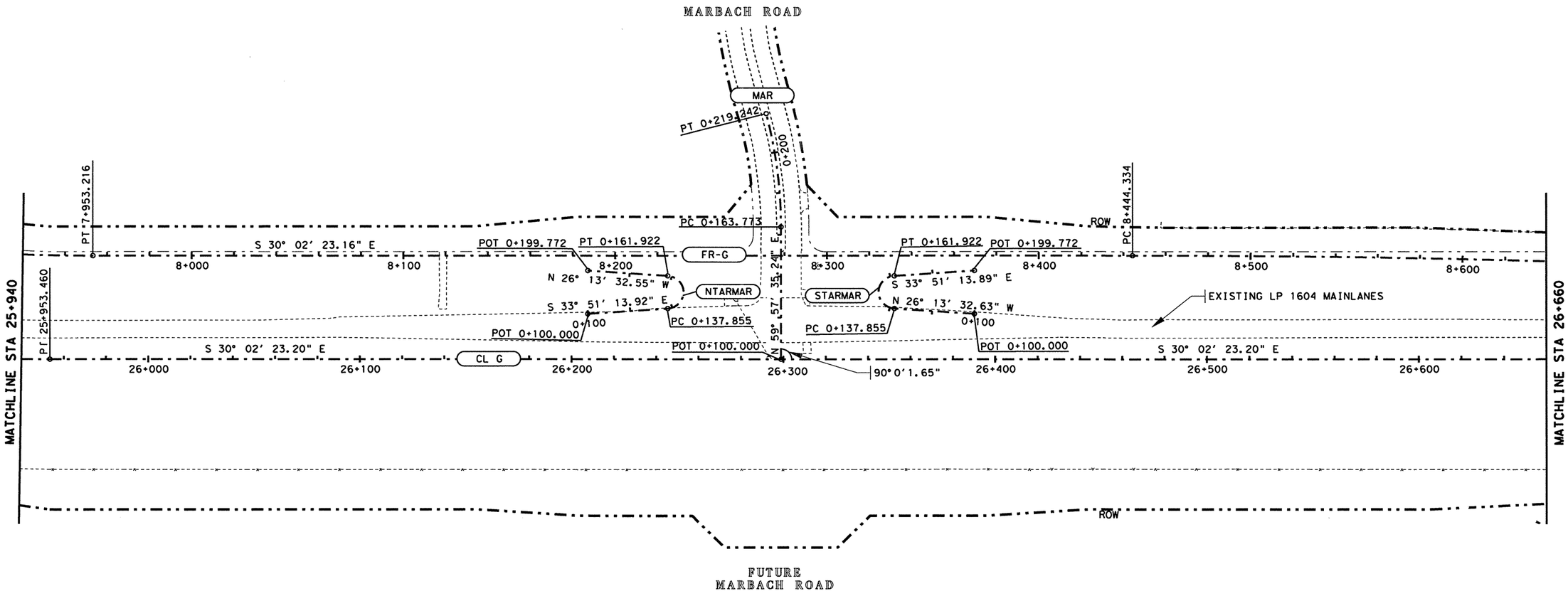


LEGEND

| | |
|---|---|
| CL G | ℄ LP 1604 |
| FR-G | N. B. FRONTAGE ROAD |
| NTARMAR | NORTH TURNAROUND @ MARBACH RL. |
| MAR | MARBACH ROAD ℄ |
| STARMAR | SOUTH TURNAROUND @ MARBACH RD. |

NOTES:

FOR HORIZONTAL ALIGNMENT DATA SEE SHEETS 164-171

STATE OF TEXAS
JOEL K. DAVENPORT, JR.
79276
REGISTERED
PROFESSIONAL ENGINEER

Joel K. Davenport, Jr. 9/19/00
Joel K. Davenport, Jr. P.E. 79276 Date

Texas Department of Transportation

# GEOMETRIC LAYOUT

SHEET 17 OF 19

| FED. RD. DIV. NO. | FEDERAL AID PROJECT NO. | | SHEET NO. |
|---|---|---|---|
| 6 | NH 2000(704), etc. | | 161 |
| STATE | DIST. | COUNTY | |
| TEXAS | SAT | BEXAR | |
| CONT. | SECT. | JOB | HIGHWAY NO. |
| 2452 | 01 | 036, etc. | LP 1604 |

lp1604fm471-90\align17.dgn

Plotted on: 01/26/2004

SCALE 1:2000

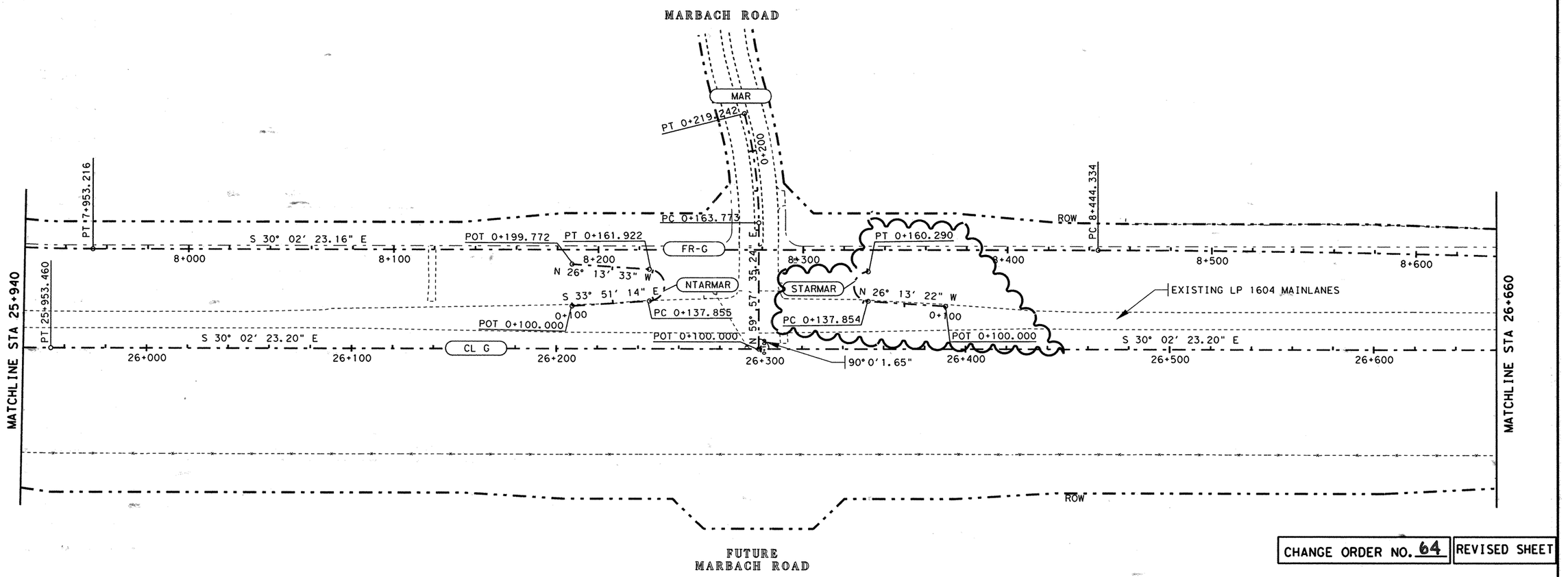


CHANGE ORDER NO. 64 | REVISED SHEET

CHANGE ORDER NO. 64

-REVISED RDWY GEOMETRICS

LEGEND

| | |
|---|---|
| CL G | ℄ LP 1604 |
| FR-G | N.B. FRONTAGE ROAD |
| NTARMAR | NORTH TURNAROUND @ MARBACH RD. |
| MAR | MARBACH ROAD ℄ |
| STARMAR | SOUTH TURNAROUND @ MARBACH RD. |

NOTES:

FOR HORIZONTAL ALIGNMENT DATA SEE SHEETS 164-171

555 EAST RAMSEY SAN ANTONIO TEXAS 78216
PHONE (210)375-9000
FAX (210)375-9010
PAPE-DAWSON ENGINEERS
CIVIL & ENVIRONMENTAL
STATE OF TEXAS J. KENT O'BRIEN 64398 LICENSED PROFESSIONAL ENGINEER
J. KENT O'BRIEN P.E. 1/27/2004 DATE

©2000 Texas Department of Transportation

# GEOMETRIC LAYOUT

SHEET 17 OF 19

| FED. RD. DIV. NO. | FEDERAL AID PROJECT NO. | | SHEET NO. |
|---|---|---|---|
| 6 | NH 2000(704), etc. | | 161A |
| STATE | DIST. | COUNTY | |
| TEXAS | SAT | BEXAR | |
| CONT. | SECT. | JOB | HIGHWAY NO. |
| 2452 | 01 | 036, etc. | LP 1604 |

Design Filename: p:\52\2011\design\civil\plansheets\road\alignment\align17.dgn
lp1604fm471-90\align17.dgn

SCALE 1:2000

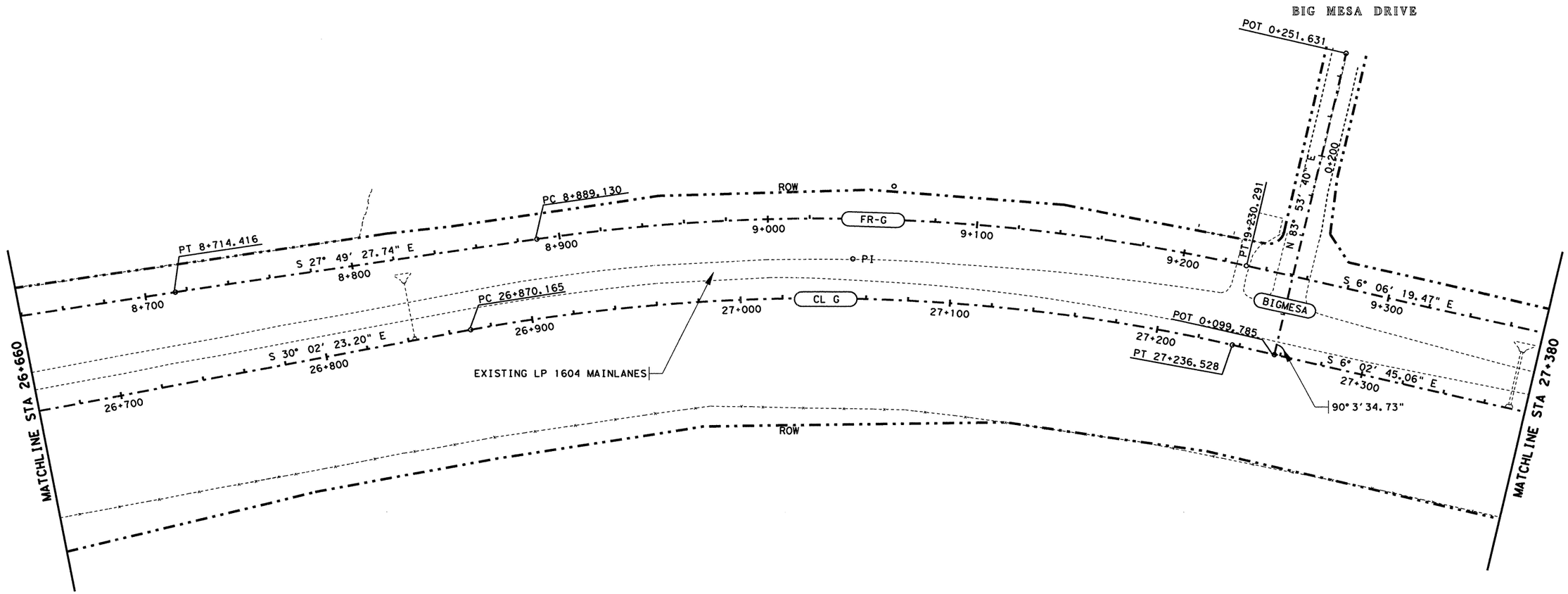


STATE OF TEXAS
JOEL K. DAVENPORT, JR.
79276
REGISTERED PROFESSIONAL ENGINEER

Joel K Davenport Jr. 9/19/00
Joel K. Davenport, Jr. P.E. 79276 Date

LEGEND

| | |
|---|---|
| CL G | ℄ LP 1604 |
| FR-G | N.B. FRONTAGE ROAD |
| BIGMESA | BIG MESA DRIVE ℄ |

FOR HORIZONTAL ALIGNMENT DATA SEE SHEETS 164-171

Texas Department of Transportation

# GEOMETRIC LAYOUT

SHEET 18 OF 19

| FED. RD. DIV. NO. | FEDERAL AID PROJECT NO. | | SHEET NO. |
|---|---|---|---|
| 6 | NH 2000(704),etc. | | 162 |
| STATE | DIST. | COUNTY | |
| TEXAS | SAT | BEXAR | |
| CONT. | SECT. | JOB | HIGHWAY NO. |
| 2452 | 01 | 036,etc. | LP 1604 |

lp1604fm471-90\allgn18.dgn

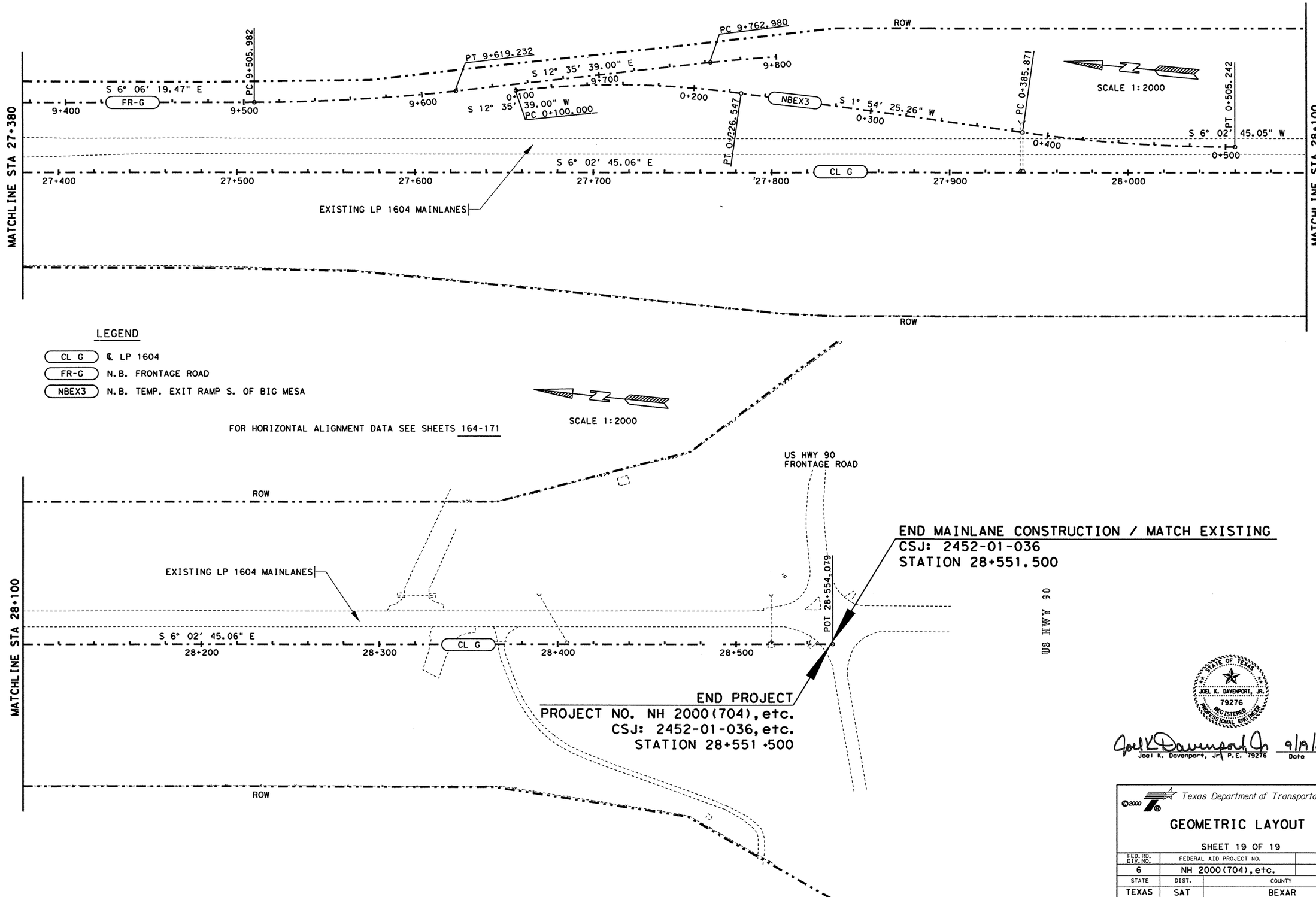


STATE OF TEXAS
JOEL K. DAVENPORT, JR.
79276
REGISTERED
PROFESSIONAL ENGINEER

Joel K Davenport Jr 9/19/00

Joel K. Davenport, Jr. P.E. 79276 — Date

lp1604fm471-90\align19.dgn

© 2000 Texas Department of Transportation

# GEOMETRIC LAYOUT

SHEET 19 OF 19

| FED. RD. DIV. NO. | FEDERAL AID PROJECT NO. | | SHEET NO. |
|---|---|---|---|
| 6 | NH 2000(704), etc. | | 163 |
| STATE | DIST. | COUNTY | |
| TEXAS | SAT | BEXAR | |
| CONT. | SECT. | JOB | HIGHWAY NO. |
| 2452 | 01 | 036, etc. | LP 1604 |

CL G

℄ LP 1604

Chain CL*G contains:
1 CUR CL*G-1 CUR CL*G-2 CUR CL*G-3 CUR CL*G-4 CUR CL*G-5 CUR CL*G-6 CUR CL*G-7-
CUR CL*G-8 CUR CL*G-9 CUR CL*G-10 CUR CL*G-11 2 CUR CL*G-12 CUR CL*G-13 CUR CL-
*G-14 CUR CL*G-15 3

Beginning chain CL*G description

Point 1 X 633,245.8353 Y 4,192,306.1852 Sta 7+138.180

Course from 1 to PC CL*G-1 S 45° 15' 40.23" W Dist 1,021.2010

Curve Data

| | | | | | |
|---|---|---|---|---|---|
| Curve CL*G-1 | | | | | |
| P.I. Station | 8+340.663 | X | 632,391.6843 | Y | 4,191,459.7859 |
| Delta = | 5° 56' 32.03" | (LT) | | | |
| Tangent = | 181.2822 | | | | |
| Length = | 362.2393 | | | | |
| Radius = | 3,492.7600 | | | | |
| External = | 4.7013 | | | | |
| Long Chord = | 362.0770 | | | | |
| Mid. Ord. = | 4.6950 | | | | |
| P.C. Station | 8+159.381 | X | 632,520.4531 | Y | 4,191,587.3861 |
| P.T. Station | 8+521.620 | X | 632,276.8172 | Y | 4,191,319.5405 |
| C.C. | | X | 634,978.9238 | Y | 4,189,106.3996 |
| Back = S | 45° 15' 40.23" W | | | | |
| Ahead = S | 39° 19' 08.20" W | | | | |
| Chord Bear = S | 42° 17' 24.21" W | | | | |

Course from PT CL*G-1 to PC CL*G-2 S 39° 19' 08.20" W Dist 1,775.3920

Curve Data

| | | | | | |
|---|---|---|---|---|---|
| Curve CL*G-2 | | | | | |
| P.I. Station | 10+504.490 | X | 631,020.3982 | Y | 4,189,785.5315 |
| Delta = | 20° 12' 32.02" | (LT) | | | |
| Tangent = | 207.4777 | | | | |
| Length = | 410.6446 | | | | |
| Radius = | 1,164.2500 | | | | |
| External = | 18.3425 | | | | |
| Long Chord = | 408.5193 | | | | |
| Mid. Ord. = | 18.0580 | | | | |
| P.C. Station | 10+297.012 | X | 631,151.8637 | Y | 4,189,946.0427 |
| P.T. Station | 10+707.657 | X | 630,952.4734 | Y | 4,189,589.4876 |
| C.C. | | X | 632,052.5633 | Y | 4,189,208.3311 |
| Back = S | 39° 19' 08.20" W | | | | |
| Ahead = S | 19° 06' 36.18" W | | | | |
| Chord Bear = S | 29° 12' 52.19" W | | | | |

Course from PT CL*G-2 to PC CL*G-3 S 19° 06' 36.18" W Dist 760.1675

Curve Data

| | | | | | |
|---|---|---|---|---|---|
| Curve CL*G-3 | | | | | |
| P.I. Station | 11+643.188 | X | 630,646.1959 | Y | 4,188,705.5125 |
| Delta = | 22° 42' 40.95" | (RT) | | | |
| Tangent = | 175.3633 | | | | |
| Length = | 346.1223 | | | | |
| Radius = | 873.1900 | | | | |
| External = | 17.4351 | | | | |
| Long Chord = | 343.8607 | | | | |
| Mid. Ord. = | 17.0938 | | | | |
| P.C. Station | 11+467.824 | X | 630,703.6070 | Y | 4,188,871.2118 |
| P.T. Station | 11+813.947 | X | 630,529.2617 | Y | 4,188,574.8271 |
| C.C. | | X | 629,878.5372 | Y | 4,189,157.0799 |
| Back = S | 19° 06' 36.18" W | | | | |
| Ahead = S | 41° 49' 17.13" W | | | | |
| Chord Bear = S | 30° 27' 56.66" W | | | | |

Course from PT CL*G-3 to PC CL*G-4 S 41° 49' 17.13" W Dist 378.4587

Curve Data

| | | | | | |
|---|---|---|---|---|---|
| Curve CL*G-4 | | | | | |
| P.I. Station | 12+385.695 | X | 630,148.0131 | Y | 4,188,148.7445 |
| Delta = | 18° 51' 09.62" | (LT) | | | |
| Tangent = | 193.2902 | | | | |
| Length = | 383.0862 | | | | |
| Radius = | 1,164.2500 | | | | |
| External = | 15.9361 | | | | |
| Long Chord = | 381.3604 | | | | |
| Mid. Ord. = | 15.7209 | | | | |
| P.C. Station | 12+192.405 | X | 630,276.9012 | Y | 4,188,292.7895 |
| P.T. Station | 12+575.492 | X | 630,072.5857 | Y | 4,187,970.7788 |
| C.C. | | X | 631,144.5314 | Y | 4,187,516.4546 |
| Back = S | 41° 49' 17.13" W | | | | |
| Ahead = S | 22° 58' 07.51" W | | | | |
| Chord Bear = S | 32° 23' 42.32" W | | | | |

Course from PT CL*G-4 to PC CL*G-5 S 22° 58' 07.51" W Dist 1,485.0562

Curve Data

| | | | | | |
|---|---|---|---|---|---|
| Curve CL*G-5 | | | | | |
| P.I. Station | 14+098.152 | X | 629,478.3991 | Y | 4,186,568.8378 |
| Delta = | 0° 37' 00.72" | (RT) | | | |
| Tangent = | 37.6047 | | | | |
| Length = | 75.2086 | | | | |
| Radius = | 6,985.5200 | | | | |
| External = | 0.1012 | | | | |
| Long Chord = | 75.2083 | | | | |
| Mid. Ord. = | 0.1012 | | | | |
| P.C. Station | 14+060.548 | X | 629,493.0736 | Y | 4,186,603.4611 |
| P.T. Station | 14+135.756 | X | 629,463.3528 | Y | 4,186,534.3745 |
| C.C. | | X | 623,061.3809 | Y | 4,189,329.4139 |
| Back = S | 22° 58' 07.51" W | | | | |
| Ahead = S | 23° 35' 08.23" W | | | | |
| Chord Bear = S | 23° 16' 37.87" W | | | | |

Course from PT CL*G-5 to PC CL*G-6 S 23° 35' 08.23" W Dist 1,049.1969

CONTINUED

Curve Data

| | | | | | |
|---|---|---|---|---|---|
| Curve CL*G-6 | | | | | |
| P.I. Station | 15+303.553 | X | 628,996.0952 | Y | 4,185,464.1320 |
| Delta = | 5° 49' 53.52" | (LT) | | | |
| Tangent = | 118.5997 | | | | |
| Length = | 236.9945 | | | | |
| Radius = | 2,328.5100 | | | | |
| External = | 3.0184 | | | | |
| Long Chord = | 236.8923 | | | | |
| Mid. Ord. = | 3.0145 | | | | |
| P.C. Station | 15+184.953 | X | 629,043.5492 | Y | 4,185,572.8242 |
| P.T. Station | 15+421.948 | X | 628,959.9303 | Y | 4,185,351.1807 |
| C.C. | | X | 631,177.5428 | Y | 4,184,641.1430 |
| Back = S | 23° 35' 08.23" W | | | | |
| Ahead = S | 17° 45' 14.71" W | | | | |
| Chord Bear = S | 20° 40' 11.47" W | | | | |

Course from PT CL*G-6 to PC CL*G-7 S 17° 45' 14.71" W Dist 63.8471

Curve Data

| | | | | | |
|---|---|---|---|---|---|
| Curve CL*G-7 | | | | | |
| P.I. Station | 15+622.136 | X | 628,898.8866 | Y | 4,185,160.5270 |
| Delta = | 6° 42' 07.21" | (RT) | | | |
| Tangent = | 136.3407 | | | | |
| Length = | 272.3705 | | | | |
| Radius = | 2,328.5100 | | | | |
| External = | 3.9881 | | | | |
| Long Chord = | 272.2152 | | | | |
| Mid. Ord. = | 3.9813 | | | | |
| P.C. Station | 15+485.795 | X | 628,940.4613 | Y | 4,185,290.3744 |
| P.T. Station | 15+758.165 | X | 628,842.4421 | Y | 4,185,036.4189 |
| C.C. | | X | 626,722.8488 | Y | 4,186,000.4121 |
| Back = S | 17° 45' 14.71" W | | | | |
| Ahead = S | 24° 27' 21.91" W | | | | |
| Chord Bear = S | 21° 06' 18.31" W | | | | |

Course from PT CL*G-7 to PC CL*G-8 S 24° 27' 21.91" W Dist 1,360.4985

Curve Data

| | | | | | |
|---|---|---|---|---|---|
| Curve CL*G-8 | | | | | |
| P.I. Station | 17+343.325 | X | 628,186.1930 | Y | 4,183,593.4820 |
| Delta = | 21° 50' 37.54" | (LT) | | | |
| Tangent = | 224.6607 | | | | |
| Length = | 443.8659 | | | | |
| Radius = | 1,164.2520 | | | | |
| External = | 21.4778 | | | | |
| Long Chord = | 441.1826 | | | | |
| Mid. Ord. = | 21.0888 | | | | |
| P.C. Station | 17+118.664 | X | 628,279.2016 | Y | 4,183,797.9859 |
| P.T. Station | 17+562.530 | X | 628,175.9534 | Y | 4,183,369.0547 |
| C.C. | | X | 629,338.9955 | Y | 4,183,315.9906 |
| Back = S | 24° 27' 21.91" W | | | | |
| Ahead = S | 2° 36' 44.37" W | | | | |
| Chord Bear = S | 13° 32' 03.14" W | | | | |

Course from PT CL*G-8 to PC CL*G-9 S 2° 36' 44.37" W Dist 1,811.4745

Curve Data

| | | | | | |
|---|---|---|---|---|---|
| Curve CL*G-9 | | | | | |
| P.I. Station | 19+465.523 | X | 628,089.2190 | Y | 4,181,468.0389 |
| Delta = | 3° 00' 06.83" | (LT) | | | |
| Tangent = | 91.5190 | | | | |
| Length = | 182.9961 | | | | |
| Radius = | 3,492.7580 | | | | |
| External = | 1.1988 | | | | |
| Long Chord = | 182.9751 | | | | |
| Mid. Ord. = | 1.1984 | | | | |
| P.C. Station | 19+374.004 | X | 628,093.3902 | Y | 4,181,559.4628 |
| P.T. Station | 19+557.000 | X | 628,089.8413 | Y | 4,181,376.5221 |
| C.C. | | X | 631,582.5185 | Y | 4,181,400.2702 |
| Back = S | 2° 36' 44.37" W | | | | |
| Ahead = S | 0° 23' 22.46" E | | | | |
| Chord Bear = S | 1° 06' 40.96" W | | | | |

Course from PT CL*G-9 to PC CL*G-10 S 0° 23' 22.46" E Dist 1,739.7682

Curve Data

| | | | | | |
|---|---|---|---|---|---|
| Curve CL*G-10 | | | | | |
| P.I. Station | 21+326.569 | X | 628,101.8730 | Y | 4,179,606.9945 |
| Delta = | 0° 29' 19.84" | (LT) | | | |
| Tangent = | 29.8002 | | | | |
| Length = | 59.6001 | | | | |
| Radius = | 6,985.5160 | | | | |
| External = | 0.0636 | | | | |
| Long Chord = | 59.5999 | | | | |
| Mid. Ord. = | 0.0636 | | | | |
| P.C. Station | 21+296.769 | X | 628,101.6704 | Y | 4,179,636.7940 |
| P.T. Station | 21+356.369 | X | 628,102.3299 | Y | 4,179,577.1977 |
| C.C. | | X | 635,087.0249 | Y | 4,179,684.2903 |
| Back = S | 0° 23' 22.46" E | | | | |
| Ahead = S | 0° 52' 42.30" E | | | | |
| Chord Bear = S | 0° 38' 02.38" E | | | | |

Course from PT CL*G-10 to PC CL*G-11 S 0° 52' 42.30" E Dist 658.6318

Curve Data

| | | | | | |
|---|---|---|---|---|---|
| Curve CL*G-11 | | | | | |
| P.I. Station | 22+056.478 | X | 628,113.0630 | Y | 4,178,877.1706 |
| Delta = | 0° 40' 49.43" | (RT) | | | |
| Tangent = | 41.4776 | | | | |
| Length = | 82.9542 | | | | |
| Radius = | 6,985.5160 | | | | |
| External = | 0.1231 | | | | |
| Long Chord = | 82.9537 | | | | |
| Mid. Ord. = | 0.1231 | | | | |
| P.C. Station | 22+015.000 | X | 628,112.4271 | Y | 4,178,918.6433 |
| P.T. Station | 22+097.955 | X | 628,113.2064 | Y | 4,178,835.6933 |
| C.C. | | X | 621,127.7321 | Y | 4,178,811.5507 |
| Back = S | 0° 52' 42.30" E | | | | |
| Ahead = S | 0° 11' 52.87" E | | | | |
| Chord Bear = S | 0° 32' 17.58" E | | | | |

Course from PT CL*G-11 to 2 S 0° 11' 52.87" E Dist 1,127.7640

CONTINUED

Point 2 X 628,117.1040 Y 4,177,707.9360 Sta 23+225.719

Course from 2 to PC CL*G-12 S 0° 11' 32.19" E Dist 311.6380

Curve Data

| | | | | | |
|---|---|---|---|---|---|
| Curve CL*G-12 | | | | | |
| P.I. Station | 23+693.147 | X | 628,118.6726 | Y | 4,177,240.5103 |
| Delta = | 20° 14' 44.26" | (LT) | | | |
| Tangent = | 155.7904 | | | | |
| Length = | 308.3320 | | | | |
| Radius = | 872.5895 | | | | |
| External = | 13.7982 | | | | |
| Long Chord = | 306.7304 | | | | |
| Mid. Ord. = | 13.5834 | | | | |
| P.C. Station | 23+537.357 | X | 628,118.1498 | Y | 4,177,396.2998 |
| P.T. Station | 23+845.689 | X | 628,173.0733 | Y | 4,177,094.5268 |
| C.C. | | X | 628,990.7344 | Y | 4,177,399.2280 |
| Back = S | 0° 11' 32.19" E | | | | |
| Ahead = S | 20° 26' 16.45" E | | | | |
| Chord Bear = S | 10° 18' 54.32" E | | | | |

Course from PT CL*G-12 to PC CL*G-13 S 20° 26' 16.45" E Dist 118.0291

Curve Data

| | | | | | |
|---|---|---|---|---|---|
| Curve CL*G-13 | | | | | |
| P.I. Station | 24+120.111 | X | 628,268.8993 | Y | 4,176,837.3793 |
| Delta = | 20° 18' 59.24" | (RT) | | | |
| Tangent = | 156.3929 | | | | |
| Length = | 309.5016 | | | | |
| Radius = | 872.8459 | | | | |
| External = | 13.9002 | | | | |
| Long Chord = | 307.8827 | | | | |
| Mid. Ord. = | 13.6823 | | | | |
| P.C. Station | 23+963.718 | X | 628,214.2882 | Y | 4,176,983.9274 |
| P.T. Station | 24+273.219 | X | 628,269.2308 | Y | 4,176,680.9868 |
| C.C. | | X | 627,396.3869 | Y | 4,176,679.1367 |
| Back = S | 20° 26' 16.45" E | | | | |
| Ahead = S | 0° 07' 17.21" E | | | | |
| Chord Bear = S | 10° 16' 46.83" E | | | | |

Course from PT CL*G-13 to PC CL*G-14 S 0° 07' 17.21" E Dist 1,224.2205

Curve Data

| | | | | | |
|---|---|---|---|---|---|
| Curve CL*G-14 | | | | | |
| P.I. Station | 25+730.776 | X | 628,272.3203 | Y | 4,175,223.4331 |
| Delta = | 29° 55' 05.99" | (LT) | | | |
| Tangent = | 233.3365 | | | | |
| Length = | 456.0207 | | | | |
| Radius = | 873.3128 | | | | |
| External = | 30.6347 | | | | |
| Long Chord = | 450.8574 | | | | |
| Mid. Ord. = | 29.5965 | | | | |
| P.C. Station | 25+497.440 | X | 628,271.8257 | Y | 4,175,456.7691 |
| P.T. Station | 25+953.460 | X | 628,389.1288 | Y | 4,175,021.4388 |
| C.C. | | X | 629,145.1365 | Y | 4,175,458.6202 |
| Back = S | 0° 07' 17.21" E | | | | |
| Ahead = S | 30° 02' 23.20" E | | | | |
| Chord Bear = S | 15° 04' 50.20" E | | | | |

Course from PT CL*G-14 to PC CL*G-15 S 30° 02' 23.20" E Dist 916.7045

Curve Data

| | | | | | |
|---|---|---|---|---|---|
| Curve CL*G-15 | | | | | |
| P.I. Station | 27+056.071 | X | 628,941.0970 | Y | 4,174,066.9328 |
| Delta = | 23° 59' 38.14" | (RT) | | | |
| Tangent = | 185.9063 | | | | |
| Length = | 366.3628 | | | | |
| Radius = | 874.8482 | | | | |
| External = | 19.5346 | | | | |
| Long Chord = | 363.6916 | | | | |
| Mid. Ord. = | 19.1079 | | | | |
| P.C. Station | 26+870.165 | X | 628,848.0321 | Y | 4,174,227.8678 |
| P.T. Station | 27+236.528 | X | 628,960.6774 | Y | 4,173,882.0606 |
| C.C. | | X | 628,090.6952 | Y | 4,173,789.9178 |
| Back = S | 30° 02' 23.20" E | | | | |
| Ahead = S | 6° 02' 45.06" E | | | | |
| Chord Bear = S | 18° 02' 34.13" E | | | | |

Course from PT CL*G-15 to 3 S 6° 02' 45.06" E Dist 1,317.5508

Point 3 X 629,099.4475 Y 4,172,571.8381 Sta 28+554.079

Ending chain CL*G description

STATE OF TEXAS
JOEL K. DAVENPORT, JR.
79276
REGISTERED
PROFESSIONAL ENGINEER

Joel K Davenport, Jr. 9/19/00
Joel K. Davenport, Jr. P.E. 79276 Date

©2000 Texas Department of Transportation

# HORIZONTAL ALIGNMENT DATA

SHEET 1 OF 8

| FED. RD. DIV. NO. | FEDERAL AID PROJECT NO. | | SHEET NO. |
|---|---|---|---|
| 6 | NH 2000(704), etc. | | 164 |
| STATE | DIST. | COUNTY | |
| TEXAS | SAT | BEXAR | |
| CONT. | SECT. | JOB | HIGHWAY NO. |
| 2452 | 01 | 036, etc. | LP 1604 |

lp1604fm471-90\alignCURVDATA.dgn

## NBEN1
## N.B. ENTRANCE RAMP N. OF FM 471

Chain NBEN1 contains:
CUR NBEN1-1 CUR NBEN1-2

Beginning chain NBEN1 description

| | | | | | |
|---|---|---|---|---|---|
| | | Curve Data | | | |
| Curve NBEN1-1 | | | | | |
| P.I. Station | 0+124.219 | X | 628,994.2563 | Y | 4,185,399.3935 |
| Delta = | 11° 53' 58.38" (LT) | | | | |
| Tangent = | 88.5853 | | | | |
| Length = | 176.5334 | | | | |
| Radius = | 850.0000 | | | | |
| External = | 4.6036 | | | | |
| Long Chord = | 176.2163 | | | | |
| Mid. Ord. = | 4.5788 | | | | |
| P.C. Station | 0+035.634 | X | 629,026.5051 | Y | 4,185,481.9003 |
| P.T. Station | 0+212.167 | X | 628,979.7132 | Y | 4,185,312.0101 |
| C.C. | | X | 629,818.1804 | Y | 4,185,172.4651 |
| Back = S | 21° 20' 54.97" W | | | | |
| Ahead = S | 9° 26' 56.59" W | | | | |
| Chord Bear = S | 15° 23' 55.78" W | | | | |

Course from PT NBEN1-1 to PC NBEN1-2 S 9° 26' 56.59" W Dist 110.7008

| | | | | | |
|---|---|---|---|---|---|
| | | Curve Data | | | |
| Curve NBEN1-2 | | | | | |
| P.I. Station | 0+415.069 | X | 628,946.4028 | Y | 4,185,111.8616 |
| Delta = | 15° 00' 25.40" (RT) | | | | |
| Tangent = | 92.2006 | | | | |
| Length = | 183.3458 | | | | |
| Radius = | 700.0000 | | | | |
| External = | 6.0460 | | | | |
| Long Chord = | 182.8221 | | | | |
| Mid. Ord. = | 5.9942 | | | | |
| P.C. Station | 0+322.868 | X | 628,961.5394 | Y | 4,185,202.8112 |
| P.T. Station | 0+506.214 | X | 628,908.2321 | Y | 4,185,027.9333 |
| C.C. | | X | 628,271.0370 | Y | 4,185,317.7306 |
| Back = S | 9° 26' 56.59" W | | | | |
| Ahead = S | 24° 27' 21.99" W | | | | |
| Chord Bear = S | 16° 57' 09.29" W | | | | |

Ending chain NBEN1 description

## TCLE
## TEMP. CONNECTOR FROM LESLIE RD. TO S.B. FRONTAGE ROAD

Chain TCLE contains:
622 CUR TCLE-1 CUR TCLE-2

Beginning chain TCLE description

Point 622 X 628,969.7147 Y 4,185,521.4861 Sta 0+000.000

Course from 622 to PC TCLE-1 S 24° 00' 05.02" W Dist 10.0248

| | | | | | |
|---|---|---|---|---|---|
| | | Curve Data | | | |
| Curve TCLE-1 | | | | | |
| P.I. Station | 0+059.776 | X | 628,945.4004 | Y | 4,185,466.8788 |
| Delta = | 6° 32' 44.84" (LT) | | | | |
| Tangent = | 49.7509 | | | | |
| Length = | 99.3936 | | | | |
| Radius = | 870.0000 | | | | |
| External = | 1.4213 | | | | |
| Long Chord = | 99.3396 | | | | |
| Mid. Ord. = | 1.4190 | | | | |
| P.C. Station | 0+010.025 | X | 628,965.6370 | Y | 4,185,512.3281 |
| P.T. Station | 0+109.418 | X | 628,930.4767 | Y | 4,185,419.4189 |
| C.C. | | X | 629,760.4129 | Y | 4,185,158.4478 |
| Back = S | 24° 00' 05.02" W | | | | |
| Ahead = S | 17° 27' 20.19" W | | | | |
| Chord Bear = S | 20° 43' 42.61" W | | | | |

Course from PT TCLE-1 to PC TCLE-2 S 17° 27' 20.19" W Dist 10.7862

| | | | | | |
|---|---|---|---|---|---|
| | | Curve Data | | | |
| Curve TCLE-2 | | | | | |
| P.I. Station | 0+173.414 | X | 628,911.2801 | Y | 4,185,358.3702 |
| Delta = | 6° 59' 59.11" (RT) | | | | |
| Tangent = | 53.2096 | | | | |
| Length = | 106.2868 | | | | |
| Radius = | 870.0000 | | | | |
| External = | 1.6256 | | | | |
| Long Chord = | 106.2207 | | | | |
| Mid. Ord. = | 1.6226 | | | | |
| P.C. Station | 0+120.205 | X | 628,927.2413 | Y | 4,185,409.1294 |
| P.T. Station | 0+226.491 | X | 628,889.2522 | Y | 4,185,309.9343 |
| C.C. | | X | 628,097.3051 | Y | 4,185,670.1005 |
| Back = S | 17° 27' 20.19" W | | | | |
| Ahead = S | 24° 27' 19.30" W | | | | |
| Chord Bear = S | 20° 57' 19.74" W | | | | |

Ending chain TCLE description

## SBEX1
## S.B. EXIT RAMP N. OF FM 471

Chain SBEX1 contains:
CUR SBEX1-1 CUR SBEX1-2

Beginning chain SBEX1 description

| | | | | | |
|---|---|---|---|---|---|
| | | Curve Data | | | |
| Curve SBEX1-1 | | | | | |
| P.I. Station | 0+081.811 | X | 628,948.5786 | Y | 4,185,367.0246 |
| Delta = | 9° 31' 51.37" (RT) | | | | |
| Tangent = | 70.8606 | | | | |
| Length = | 141.3943 | | | | |
| Radius = | 850.0000 | | | | |
| External = | 2.9485 | | | | |
| Long Chord = | 141.2313 | | | | |
| Mid. Ord. = | 2.9384 | | | | |
| P.C. Station | 0+010.951 | X | 628,972.5474 | Y | 4,185,433.7083 |
| P.T. Station | 0+152.345 | X | 628,913.8991 | Y | 4,185,305.2301 |
| C.C. | | X | 628,172.6507 | Y | 4,185,721.2239 |
| Back = S | 19° 46' 13.83" W | | | | |
| Ahead = S | 29° 18' 05.20" W | | | | |
| Chord Bear = S | 24° 32' 09.51" W | | | | |

Course from PT SBEX1-1 to PC SBEX1-2 S 29° 18' 05.20" W Dist 117.7512

| | | | | | |
|---|---|---|---|---|---|
| | | Curve Data | | | |
| Curve SBEX1-2 | | | | | |
| P.I. Station | 0+306.638 | X | 628,838.3873 | Y | 4,185,170.6777 |
| Delta = | 4° 55' 23.97" (LT) | | | | |
| Tangent = | 36.5420 | | | | |
| Length = | 73.0390 | | | | |
| Radius = | 850.0000 | | | | |
| External = | 0.7851 | | | | |
| Long Chord = | 73.0165 | | | | |
| Mid. Ord. = | 0.7844 | | | | |
| P.C. Station | 0+270.096 | X | 628,856.2711 | Y | 4,185,202.5444 |
| P.T. Station | 0+343.135 | X | 628,823.3044 | Y | 4,185,137.3937 |
| C.C. | | X | 629,597.5195 | Y | 4,184,786.5506 |
| Back = S | 29° 18' 05.20" W | | | | |
| Ahead = S | 24° 22' 41.23" W | | | | |
| Chord Bear = S | 26° 50' 23.21" W | | | | |

Ending chain SBEX1 description

## FR-B
## S.B. FRONTAGE ROAD

Chain FR-B contains:
B1 CUR FR-B-1 CUR FR-B-2 B2

Beginning chain FR-B description

Point B1 X 628,893.0755 Y 4,185,308.1960 Sta 0+100.000

Course from B1 to PC FR-B-1 S 24° 27' 22.01" W Dist 765.3651

| | | | | | |
|---|---|---|---|---|---|
| | | Curve Data | | | |
| Curve FR-B-1 | | | | | |
| P.I. Station | 0+930.190 | X | 628,549.3802 | Y | 4,184,552.4921 |
| Delta = | 6° 28' 50.59" (LT) | | | | |
| Tangent = | 64.8246 | | | | |
| Length = | 129.5108 | | | | |
| Radius = | 1,145.0000 | | | | |
| External = | 1.8336 | | | | |
| Long Chord = | 129.4418 | | | | |
| Mid. Ord. = | 1.8306 | | | | |
| P.C. Station | 0+865.365 | X | 628,576.2173 | Y | 4,184,611.5005 |
| P.T. Station | 0+994.876 | X | 628,529.3748 | Y | 4,184,490.8317 |
| C.C. | | X | 629,618.4864 | Y | 4,184,137.4749 |
| Back = S | 24° 27' 22.01" W | | | | |
| Ahead = S | 17° 58' 31.41" W | | | | |
| Chord Bear = S | 21° 12' 56.71" W | | | | |

Course from PT FR-B-1 to PC FR-B-2 S 17° 58' 31.41" W Dist 86.4034

| | | | | | |
|---|---|---|---|---|---|
| | | Curve Data | | | |
| Curve FR-B-2 | | | | | |
| P.I. Station | 1+170.936 | X | 628,475.0412 | Y | 4,184,323.3655 |
| Delta = | 13° 27' 21.79" (RT) | | | | |
| Tangent = | 89.6564 | | | | |
| Length = | 178.4879 | | | | |
| Radius = | 760.0000 | | | | |
| External = | 5.2701 | | | | |
| Long Chord = | 178.0779 | | | | |
| Mid. Ord. = | 5.2338 | | | | |
| P.C. Station | 1+081.279 | X | 628,502.7100 | Y | 4,184,408.6457 |
| P.T. Station | 1+259.767 | X | 628,428.2874 | Y | 4,184,246.8649 |
| C.C. | | X | 627,779.8062 | Y | 4,184,643.1882 |
| Back = S | 17° 58' 31.41" W | | | | |
| Ahead = S | 31° 25' 53.21" W | | | | |
| Chord Bear = S | 24° 42' 12.31" W | | | | |

Course from PT FR-B-2 to B2 S 31° 25' 53.21" W Dist 140.2328

Point B2 X 628,355.1591 Y 4,184,127.2092 Sta 1+400.000

Ending chain FR-B description

✳ NOTE: BASED UPON ⌭LATTED DATA, CONTRACTOR SHALL CONFIRM.

## WW_LOOP
## ✳ WESTWOOD LOOP ℄

Chain WW*LOOP contains:
15 CUR WW*LOOP-1

Beginning chain WW*LOOP description
Feature: DEFAULT*CHAIN

Point 15 X 628,884.1722 Y 4,185,288.6198 Sta 0+000.000

Course from 15 to PC WW*LOOP-1 N 65° 58' 05.89" W Dist 192.1612

| | | | | | |
|---|---|---|---|---|---|
| | | Curve Data | | | |
| Curve WW*LOOP-1 | | | | | |
| Feature: DEFAULT*CHAIN | | | | | |
| P.I. Station | 0+231.743 | X | 628,672.5167 | Y | 4,185,382.9952 |
| Delta = | 33° 14' 59.06" (LT) | | | | |
| Tangent = | 39.5817 | | | | |
| Length = | 76.9293 | | | | |
| Radius = | 132.5641 | | | | |
| External = | 5.7831 | | | | |
| Long Chord = | 75.8543 | | | | |
| Mid. Ord. = | 5.5414 | | | | |
| P.C. Station | 0+192.161 | X | 628,708.6675 | Y | 4,185,366.8759 |
| P.T. Station | 0+269.090 | X | 628,633.4461 | Y | 4,185,376.6546 |
| C.C. | | X | 628,654.6819 | Y | 4,185,245.8024 |
| Back = N | 65° 58' 05.89" W | | | | |
| Ahead = S | 80° 46' 55.05" W | | | | |
| Chord Bear = N | 82° 35' 35.42" W | | | | |

Ending chain WW*LOOP description

## WW_VISTA
## ✳ WESTWOOD VISTA ℄

Chain WW*VISTA contains:
22 CUR WW*VISTA-1

Beginning chain WW*VISTA description
Feature: DEFAULT*CHAIN

Point 22 X 628,781.0291 Y 4,185,061.8328 Sta 0+000.000

Course from 22 to PC WW*VISTA-1 N 69° 58' 09.25" W Dist 47.8851

| | | | | | |
|---|---|---|---|---|---|
| | | Curve Data | | | |
| Curve WW*VISTA-1 | | | | | |
| Feature: DEFAULT*CHAIN | | | | | |
| P.I. Station | 0+081.040 | X | 628,704.8911 | Y | 4,185,089.5911 |
| Delta = | 30° 25' 34.27" (RT) | | | | |
| Tangent = | 33.1551 | | | | |
| Length = | 64.7446 | | | | |
| Radius = | 121.9211 | | | | |
| External = | 4.4277 | | | | |
| Long Chord = | 63.9866 | | | | |
| Mid. Ord. = | 4.2725 | | | | |
| P.C. Station | 0+047.885 | X | 628,736.0406 | Y | 4,185,078.2346 |
| P.T. Station | 0+112.630 | X | 628,683.7826 | Y | 4,185,115.1586 |
| C.C. | | X | 628,777.8016 | Y | 4,185,192.7806 |
| Back = N | 69° 58' 09.25" W | | | | |
| Ahead = N | 39° 32' 34.98" W | | | | |
| Chord Bear = N | 54° 45' 22.11" W | | | | |

Ending chain WW*VISTA description

## FM471
## FM 471 / CULBERA RD ℄

Chain FM471 contains:
101 102 103 104 105 106

Beginning chain FM471 description

| | | | |
|---|---|---|---|
| Point 101 | X 628,489.4118 | Y 4,184,910.7281 | Sta 10+000.000 |
| Course from 101 to 102 | S 65° 52' 28.11" E | Dist 93.4124 | |
| Point 102 | X 628,574.6648 | Y 4,184,872.5470 | Sta 10+093.412 |
| Course from 102 to 103 | S 61° 45' 10.62" E | Dist 99.7037 | |
| Point 103 | X 628,662.4953 | Y 4,184,825.3598 | Sta 10+193.116 |
| Course from 103 to 104 | S 66° 21' 18.70" E | Dist 153.4398 | |
| Point 104 | X 628,803.0537 | Y 4,184,763.8204 | Sta 10+346.556 |
| Course from 104 to 105 | S 70° 37' 04.90" E | Dist 100.4001 | |
| Point 105 | X 628,897.7638 | Y 4,184,730.5012 | Sta 10+446.956 |
| Course from 105 to 106 | S 66° 21' 18.69" E | Dist 169.8226 | |
| Point 106 | X 629,053.3297 | Y 4,184,662.3912 | Sta 10+616.779 |

Ending chain FM471 description

STATE OF TEXAS
JOEL K. DAVENPORT, JR.
79276
REGISTERED PROFESSIONAL ENGINEER

Joel K. Davenport, Jr. 9/19/00
Joel K. Davenport, Jr. P.E. 79276 Date

©2000 Texas Department of Transportation

# HORIZONTAL ALIGNMENT DATA

SHEET 2 OF 8

| FED. RD. DIV. NO. | FEDERAL AID PROJECT NO. | | SHEET NO. |
|---|---|---|---|
| 6 | NH 2000(704),etc. | | 165 |
| STATE | DIST. | COUNTY | |
| TEXAS | SAT | BEXAR | |
| CONT. | SECT. | JOB | HIGHWAY NO. |
| 2452 | 01 | 036,etc. | LP 1604 |

lp1604fm471-90\alignCURVDATA019.dgn

## NBEN1
## N.B. ENTRANCE RAMP N. OF FM 471

Chain NBEN1 contains:
CUR NBEN1-1 CUR NBEN1-2

Beginning chain NBEN1 description

Curve Data

| | | | | | |
|---|---|---|---|---|---|
| Curve NBEN1-1 | | | | | |
| P.I. Station | 0+124.219 | X | 628,994.2563 | Y | 4,185,399.3935 |
| Delta = | 11° 53' 58.38" (LT) | | | | |
| Tangent = | 88.5853 | | | | |
| Length = | 176.5334 | | | | |
| Radius = | 850.0000 | | | | |
| External = | 4.6036 | | | | |
| Long Chord = | 176.2163 | | | | |
| Mid. Ord. = | 4.5788 | | | | |
| P.C. Station | 0+035.634 | X | 629,026.5051 | Y | 4,185,481.9003 |
| P.T. Station | 0+212.167 | X | 628,979.7132 | Y | 4,185,312.0101 |
| C.C. | | X | 629,818.1804 | Y | 4,185,172.4651 |
| Back = S | 21° 20' 54.97" W | | | | |
| Ahead = S | 9° 26' 56.59" W | | | | |
| Chord Bear = S | 15° 23' 55.78" W | | | | |

Course from PT NBEN1-1 to PC NBEN1-2 S 9° 26' 56.59" W Dist 110.7008

Curve Data

| | | | | | |
|---|---|---|---|---|---|
| Curve NBEN1-2 | | | | | |
| P.I. Station | 0+415.069 | X | 628,946.4028 | Y | 4,185,111.8616 |
| Delta = | 15° 00' 25.40" (RT) | | | | |
| Tangent = | 92.2006 | | | | |
| Length = | 183.3458 | | | | |
| Radius = | 700.0000 | | | | |
| External = | 6.0460 | | | | |
| Long Chord = | 182.8221 | | | | |
| Mid. Ord. = | 5.9942 | | | | |
| P.C. Station | 0+322.868 | X | 628,961.5394 | Y | 4,185,202.8112 |
| P.T. Station | 0+506.214 | X | 628,908.2321 | Y | 4,185,027.9333 |
| C.C. | | X | 628,271.0370 | Y | 4,185,317.7306 |
| Back = S | 9° 26' 56.59" W | | | | |
| Ahead = S | 24° 27' 21.99" W | | | | |
| Chord Bear = S | 16° 57' 09.29" W | | | | |

Ending chain NBEN1 description

## TCLE
## TEMP. CONNECTOR FROM LESLIE RD. TO S.B. FRONTAGE ROAD

Chain TCLE contains:
622 CUR TCLE-1 CUR TCLE-2

Beginning chain TCLE description

Point 622 X 628,969.7147 Y 4,185,521.4861 Sta 0+000.000

Course from 622 to PC TCLE-1 S 24° 00' 05.02" W Dist 10.0248

Curve Data

| | | | | | |
|---|---|---|---|---|---|
| Curve TCLE-1 | | | | | |
| P.I. Station | 0+059.776 | X | 628,945.4004 | Y | 4,185,466.8788 |
| Delta = | 6° 32' 44.84" (LT) | | | | |
| Tangent = | 49.7509 | | | | |
| Length = | 99.3936 | | | | |
| Radius = | 870.0000 | | | | |
| External = | 1.4213 | | | | |
| Long Chord = | 99.3396 | | | | |
| Mid. Ord. = | 1.4190 | | | | |
| P.C. Station | 0+010.025 | X | 628,965.6370 | Y | 4,185,512.3281 |
| P.T. Station | 0+109.418 | X | 628,930.4767 | Y | 4,185,419.4189 |
| C.C. | | X | 629,760.4129 | Y | 4,185,158.4478 |
| Back = S | 24° 00' 05.02" W | | | | |
| Ahead = S | 17° 27' 20.19" W | | | | |
| Chord Bear = S | 20° 43' 42.61" W | | | | |

Course from PT TCLE-1 to PC TCLE-2 S 17° 27' 20.19" W Dist 10.7862

Curve Data

| | | | | | |
|---|---|---|---|---|---|
| Curve TCLE-2 | | | | | |
| P.I. Station | 0+173.414 | X | 628,911.2801 | Y | 4,185,358.3702 |
| Delta = | 6° 59' 59.11" (RT) | | | | |
| Tangent = | 53.2096 | | | | |
| Length = | 106.2868 | | | | |
| Radius = | 870.0000 | | | | |
| External = | 1.6256 | | | | |
| Long Chord = | 106.2207 | | | | |
| Mid. Ord. = | 1.6226 | | | | |
| P.C. Station | 0+120.205 | X | 628,927.2413 | Y | 4,185,409.1294 |
| P.T. Station | 0+226.491 | X | 628,889.2522 | Y | 4,185,309.9343 |
| C.C. | | X | 628,097.3051 | Y | 4,185,670.1005 |
| Back = S | 17° 27' 20.19" W | | | | |
| Ahead = S | 24° 27' 19.30" W | | | | |
| Chord Bear = S | 20° 57' 19.74" W | | | | |

Ending chain TCLE description

CHANGE ORDER NO. 28
ELIMINATED ORIGINAL ALIGNMENT DATA

## SBEX1
## S.B. EXIT RAMP N. OF FM 471

Chain SBEX1 contains:
CUR SBEX1-1 CUR SBEX1-2

Beginning chain SBEX1 description

Curve Data

| | | | | | |
|---|---|---|---|---|---|
| Curve SBEX1-1 | | | | | |
| P.I. Station | 0+081.811 | X | 628,948.5786 | Y | 4,185,367.0246 |
| Delta = | 9° 31' 51.37" (RT) | | | | |
| Tangent = | 70.8606 | | | | |
| Length = | 141.3943 | | | | |
| Radius = | 850.0000 | | | | |
| External = | 2.9485 | | | | |
| Long Chord = | 141.2313 | | | | |
| Mid. Ord. = | 2.9384 | | | | |
| P.C. Station | 0+010.951 | X | 628,972.5474 | Y | 4,185,433.7083 |
| P.T. Station | 0+152.345 | X | 628,913.8991 | Y | 4,185,305.2301 |
| C.C. | | X | 628,172.6507 | Y | 4,185,721.2239 |
| Back = S | 19° 46' 13.83" W | | | | |
| Ahead = S | 29° 18' 05.20" W | | | | |
| Chord Bear = S | 24° 32' 09.51" W | | | | |

Course from PT SBEX1-1 to PC SBEX1-2 S 29° 18' 05.20" W Dist 117.7512

Curve Data

| | | | | | |
|---|---|---|---|---|---|
| Curve SBEX1-2 | | | | | |
| P.I. Station | 0+306.638 | X | 628,838.3873 | Y | 4,185,170.6777 |
| Delta = | 4° 55' 23.97" (LT) | | | | |
| Tangent = | 36.5420 | | | | |
| Length = | 73.0390 | | | | |
| Radius = | 850.0000 | | | | |
| External = | 0.7851 | | | | |
| Long Chord = | 73.0165 | | | | |
| Mid. Ord. = | 0.7844 | | | | |
| P.C. Station | 0+270.096 | X | 628,856.2711 | Y | 4,185,202.5444 |
| P.T. Station | 0+343.135 | X | 628,823.3044 | Y | 4,185,137.3937 |
| C.C. | | X | 629,597.5195 | Y | 4,184,786.5506 |
| Back = S | 29° 18' 05.20" W | | | | |
| Ahead = S | 24° 22' 41.23" W | | | | |
| Chord Bear = S | 26° 50' 23.21" W | | | | |

Ending chain SBEX1 description

## FR-B
## S.B. FRONTAGE ROAD

Chain FR-B contains:
B1 CUR FR-B-1 CUR FR-B-2 B2

Beginning chain FR-B description

Point B1 X 628,893.0755 Y 4,185,308.1960 Sta 0+100.000

Course from B1 to PC FR-B-1 S 24° 27' 22.01" W Dist 765.3651

Curve Data

| | | | | | |
|---|---|---|---|---|---|
| Curve FR-B-1 | | | | | |
| P.I. Station | 0+930.190 | X | 628,549.3802 | Y | 4,184,552.4921 |
| Delta = | 6° 28' 50.59" (LT) | | | | |
| Tangent = | 64.8246 | | | | |
| Length = | 129.5108 | | | | |
| Radius = | 1,145.0000 | | | | |
| External = | 1.8336 | | | | |
| Long Chord = | 129.4418 | | | | |
| Mid. Ord. = | 1.8306 | | | | |
| P.C. Station | 0+865.365 | X | 628,576.2173 | Y | 4,184,611.5005 |
| P.T. Station | 0+994.876 | X | 628,529.3748 | Y | 4,184,490.8317 |
| C.C. | | X | 629,618.4864 | Y | 4,184,137.4749 |
| Back = S | 24° 27' 22.01" W | | | | |
| Ahead = S | 17° 58' 31.41" W | | | | |
| Chord Bear = S | 21° 12' 56.71" W | | | | |

Course from PT FR-B-1 to PC FR-B-2 S 17° 58' 31.41" W Dist 86.4034

Curve Data

| | | | | | |
|---|---|---|---|---|---|
| Curve FR-B-2 | | | | | |
| P.I. Station | 1+170.936 | X | 628,475.0412 | Y | 4,184,323.3655 |
| Delta = | 13° 27' 21.79" (RT) | | | | |
| Tangent = | 89.6564 | | | | |
| Length = | 178.4879 | | | | |
| Radius = | 760.0000 | | | | |
| External = | 5.2701 | | | | |
| Long Chord = | 178.0779 | | | | |
| Mid. Ord. = | 5.2338 | | | | |
| P.C. Station | 1+081.279 | X | 628,502.7100 | Y | 4,184,408.6457 |
| P.T. Station | 1+259.767 | X | 628,428.2874 | Y | 4,184,246.8649 |
| C.C. | | X | 627,779.8062 | Y | 4,184,643.1882 |
| Back = S | 17° 58' 31.41" W | | | | |
| Ahead = S | 31° 25' 53.21" W | | | | |
| Chord Bear = S | 24° 42' 12.31" W | | | | |

Course from PT FR-B-2 to B2 S 31° 25' 53.21" W Dist 140.2328

Point B2 X 628,355.1591 Y 4,184,127.2092 Sta 1+400.000

Ending chain FR-B description

CHANGE ORDER 28

## WW_LOOP
## WESTWOOD LOOP ℄

Chain WW*LOOP contains:
15 CUR WW*LOOP-1

Beginning chain WW*LOOP description
Feature: DEFAULT*CHAIN

Point 15 X 628,884.1722 Y 4,185,288.6198 Sta 0+000.000

Course from 15 to PC WW*LOOP-1 N 65° 58' 05.89" W Dist 192.1612

Curve Data

| | | | | | |
|---|---|---|---|---|---|
| Curve WW*LOOP-1 | | | | | |
| Feature: DEFAULT*CHAIN | | | | | |
| P.I. Station | 0+231.743 | X | 628,672.5167 | Y | 4,185,382.9952 |
| Delta = | 33° 14' 59.06" (LT) | | | | |
| Tangent = | 39.5817 | | | | |
| Length = | 76.9293 | | | | |
| Radius = | 132.5611 | | | | |
| External = | 5.7831 | | | | |
| Long Chord = | 75.8543 | | | | |
| Mid. Ord. = | 5.5414 | | | | |
| P.C. Station | 0+192.161 | X | 628,708.6675 | Y | 4,185,366.8759 |
| P.T. Station | 0+269.090 | X | 628,633.4461 | Y | 4,185,376.6546 |
| C.C. | | X | 628,654.6819 | Y | 4,185,245.8024 |
| Back = N | 65° 58' 05.89" W | | | | |
| Ahead = S | 80° 46' 55.05" W | | | | |
| Chord Bear = N | 82° 35' 35.42" W | | | | |

Ending chain WW*LOOP description

See Revised

## WW_VISTA
## ✳ WESTWOOD VISTA ℄

Chain WW*VISTA contains:
22 CUR WW*VISTA-1

Beginning chain WW*VISTA description
Feature: DEFAULT*CHAIN

Point 22 X 628,781.0291 Y 4,185,061.8428 Sta 0+000.000

Course from 22 to PC WW*VISTA-1 N 69° 58' 09.25" W Dist 47.8851

Curve Data

| | | | | | |
|---|---|---|---|---|---|
| Curve WW*VISTA-1 | | | | | |
| Feature: DEFAULT*CHAIN | | | | | |
| P.I. Station | 0+081.040 | X | 628,704.8911 | Y | 4,185,089.5911 |
| Delta = | 30° 25' 34.27" (RT) | | | | |
| Tangent = | 33.1551 | | | | |
| Length = | 64.7446 | | | | |
| Radius = | 121.9211 | | | | |
| External = | 4.4277 | | | | |
| Long Chord = | 63.9866 | | | | |
| Mid. Ord. = | 4.2725 | | | | |
| P.C. Station | 0+047.885 | X | 628,736.0406 | Y | 4,185,078.2346 |
| P.T. Station | 0+112.630 | X | 628,683.7826 | Y | 4,185,115.1586 |
| C.C. | | X | 628,777.8016 | Y | 4,185,192.7806 |
| Back = N | 69° 58' 09.25" W | | | | |
| Ahead = N | 39° 32' 34.98" W | | | | |
| Chord Bear = N | 54° 45' 22.11" W | | | | |

Ending chain WW*VISTA description

See Revised

## FM471
## FM 471 / CULBERA RD ℄

Chain FM471 contains:
101 102 103 104 105 106

Beginning chain FM471 description

| | | | | | |
|---|---|---|---|---|---|
| Point 101 | X | 628,489.4118 | Y | 4,184,910.7281 | Sta 10+000.000 |
| Course from 101 to 102 | | S 65° 52' 28.11" E | | Dist 93.4124 | |
| Point 102 | X | 628,574.6648 | Y | 4,184,872.5470 | Sta 10+093.412 |
| Course from 102 to 103 | | S 61° 45' 10.62" E | | Dist 99.7037 | |
| Point 103 | X | 628,662.4953 | Y | 4,184,825.3598 | Sta 10+193.116 |
| Course from 103 to 104 | | S 66° 21' 18.70" E | | Dist 153.4398 | |
| Point 104 | X | 628,803.0537 | Y | 4,184,763.8204 | Sta 10+346.556 |
| Course from 104 to 105 | | S 70° 37' 04.90" E | | Dist 100.4001 | |
| Point 105 | X | 628,897.7638 | Y | 4,184,730.5012 | Sta 10+446.956 |
| Course from 105 to 106 | | S 66° 21' 18.69" E | | Dist 169.8226 | |
| Point 106 | X | 629,053.3297 | Y | 4,184,662.3912 | Sta 10+616.779 |

Ending chain FM471 description

STATE OF TEXAS
JEROME D. PAVLISKA
76075
REGISTERED PROFESSIONAL ENGINEER

Jerome D. Pavlisko P.E. 2-7-03
Jerome D. Pavlisko, P.E. Date

© 2001

Texas Department of Transportation

# HORIZONTAL ALIGNMENT DATA

SHEET 2 OF 8

| FED. RD. DIV. NO. | FEDERAL AID PROJECT NO. | SHEET NO. |
|---|---|---|
| 6 | NH 2000(704), etc. | 165A |
| STATE | DIST. | COUNTY |
| TEXAS | SAT | BEXAR |
| CONT. | SECT. | JOB | HIGHWAY NO. |
| 2452 | 01 | 036, etc. | LP 1604 |

01-23-03

I:\p1604fm471-90\alignCURVDATA019.dgn

## FR-D
## N. B. FRONTAGE ROAD

Chain FR-D contains:
CUR FRD10 CUR FRD11 CUR FRD12 1009

Beginning chain FR-D description

| | | | |
|---|---|---|---|
| **Curve FRD10** | | | |
| P.I. Station | 0+228.773 | X 628,971.7711 | Y 4,185,158.9449 |
| Delta = | 12° 14' 59.07" (RT) | | |
| Tangent = | 128.7699 | | |
| Length = | 256.5580 | | |
| Radius = | 1,200.0000 | | |
| External = | 6.8893 | | |
| Long Chord = | 256.0696 | | |
| Mid. Ord. = | 6.8499 | | |
| P.C. Station | 0+100.003 | X 628,998.9968 | Y 4,185,284.8037 |
| P.T. Station | 0+356.561 | X 628,918.4614 | Y 4,185,041.7282 |
| C.C. | | X 627,826.1248 | Y 4,185,538.5187 |
| Back = S | 12° 12' 22.02" W | | |
| Ahead = S | 24° 27' 21.09" W | | |
| Chord Bear = S | 18° 19' 51.55" W | | |

Course from PT FRD10 to PC FRD11 S 24° 27' 21.09" W Dist 590.1661

| | | | |
|---|---|---|---|
| **Curve FRD11** | | | |
| P.I. Station | 1+016.395 | X 628,645.2952 | Y 4,184,441.0940 |
| Delta = | 9° 15' 45.97" (RT) | | |
| Tangent = | 69.6681 | | |
| Length = | 139.0326 | | |
| Radius = | 860.0000 | | |
| External = | 2.8173 | | |
| Long Chord = | 138.8813 | | |
| Mid. Ord. = | 2.8081 | | |
| P.C. Station | 0+946.727 | X 628,674.1373 | Y 4,184,504.5115 |
| P.T. Station | 1+085.760 | X 628,606.6214 | Y 4,184,383.1459 |
| C.C. | | X 627,891.2962 | Y 4,184,860.5450 |
| Back = S | 24° 27' 21.17" W | | |
| Ahead = S | 33° 43' 07.14" W | | |
| Chord Bear = S | 29° 05' 14.16" W | | |

Course from PT FRD11 to PC FRD12 S 33° 44' 47.53" W Dist 0.0844

| | | | |
|---|---|---|---|
| **Curve FRD12** | | | |
| P.I. Station | 1+150.159 | X 628,570.8722 | Y 4,184,329.5800 |
| Delta = | 12° 14' 11.68" (LT) | | |
| Tangent = | 64.3152 | | |
| Length = | 128.1412 | | |
| Radius = | 600.0000 | | |
| External = | 3.4372 | | |
| Long Chord = | 127.8978 | | |
| Mid. Ord. = | 3.4176 | | |
| P.C. Station | 1+085.844 | X 628,606.5745 | Y 4,184,383.0757 |
| P.T. Station | 1+213.985 | X 628,547.3193 | Y 4,184,269.7326 |
| C.C. | | X 629,105.6387 | Y 4,184,050.0067 |
| Back = S | 33° 43' 07.07" W | | |
| Ahead = S | 21° 28' 55.39" W | | |
| Chord Bear = S | 27° 36' 01.23" W | | |

Course from PT FRD12 to 1009 S 21° 28' 55.36" W Dist 228.0647

Point 1009 X 628,463.7998 Y 4,184,057.5110 Sta 1+442.050

Ending chain FR-D description

## NBEX2
## N.B. EXIT RAMP S. OF FM 471

Chain NBEX2 contains:
CUR NBEX2-1 5

Beginning chain NBEX2 description

| | | | |
|---|---|---|---|
| **Curve NBEX2-1** | | | |
| Feature: "NBEX2" | | | |
| P.I. Station | 0+050.937 | X 628,529.8549 | Y 4,184,254.4081 |
| Delta = | 6° 51' 31.87" (RT) | | |
| Tangent = | 50.9374 | | |
| Length = | 101.7531 | | |
| Radius = | 850.0000 | | |
| External = | 1.5249 | | |
| Long Chord = | 101.6924 | | |
| Mid. Ord. = | 1.5221 | | |
| P.C. Station | 0+000.000 | X 628,552.2614 | Y 4,184,300.1526 |
| P.T. Station | 0+101.753 | X 628,502.1456 | Y 4,184,211.6668 |
| C.C. | | X 627,788.9153 | Y 4,184,674.0547 |
| Back = S | 26° 05' 47.50" W | | |
| Ahead = S | 32° 57' 19.37" W | | |
| Chord Bear = S | 29° 31' 33.44" W | | |

Course from PT NBEX2-1 to 5 S 32° 57' 19.37" W Dist 91.2004

Point 5 X 628,452.5339 Y 4,184,135.1410 Sta 0+192.954

Ending chain NBEX2 description

## NTAR471
## NORTH TURNAROUND @ CULEBRA / FM 471

Chain NTAR471 contains:
69 CUR NTAR471-1 70 71 CUR NTAR471-2 72

Beginning chain NTAR471 description

Point 69 X 628,708.4028 Y 4,184,876.0573 Sta 0+000.000

Course from 69 to PC NTAR471-1 S 20° 41' 09.79" W Dist 19.1240

| | | | |
|---|---|---|---|
| **Curve NTAR471-1** | | | |
| P.I. Station | 0+034.045 | X 628,696.3767 | Y 4,184,844.2076 |
| Delta = | 83° 13' 06.01" (LT) | | |
| Tangent = | 14.9205 | | |
| Length = | 24.4009 | | |
| Radius = | 16.8000 | | |
| External = | 5.6691 | | |
| Long Chord = | 22.3119 | | |
| Mid. Ord. = | 4.2388 | | |
| P.C. Station | 0+019.124 | X 628,701.6473 | Y 4,184,858.1662 |
| P.T. Station | 0+043.525 | X 628,709.6152 | Y 4,184,837.3255 |
| C.C. | | X 628,717.3642 | Y 4,184,852.2317 |
| Back = S | 20° 41' 09.79" W | | |
| Ahead = S | 62° 31' 56.22" E | | |
| Chord Bear = S | 20° 55' 23.21" E | | |

Course from PT NTAR471-1 to 70 S 62° 31' 56.22" E Dist 18.8870

Point 70 X 628,726.3731 Y 4,184,828.6139 Sta 0+062.412

Course from 70 to 71 S 66° 21' 18.93" E Dist 43.4302

Point 71 X 628,766.1573 Y 4,184,811.1956 Sta 0+105.842

Course from 71 to PC NTAR471-2 S 70° 10' 14.29" E Dist 19.3646

| | | | |
|---|---|---|---|
| **Curve NTAR471-2** | | | |
| P.I. Station | 0+139.683 | X 628,797.9918 | Y 4,184,799.7160 |
| Delta = | 81° 30' 09.57" (LT) | | |
| Tangent = | 14.4765 | | |
| Length = | 23.8978 | | |
| Radius = | 16.8000 | | |
| External = | 5.3768 | | |
| Long Chord = | 21.9333 | | |
| Mid. Ord. = | 4.0732 | | |
| P.C. Station | 0+125.207 | X 628,784.3737 | Y 4,184,804.6268 |
| P.T. Station | 0+149.104 | X 628,804.8609 | Y 4,184,812.4591 |
| C.C. | | X 628,790.0726 | Y 4,184,820.4306 |
| Back = S | 70° 10' 14.29" E | | |
| Ahead = N | 28° 19' 36.14" E | | |
| Chord Bear = N | 69° 04' 40.92" E | | |

Course from PT NTAR471-2 to 72 N 28° 19' 36.14" E Dist 19.1270

Point 72 X 628,813.9366 Y 4,184,829.2957 Sta 0+168.231

Ending chain NTAR471 description

## SBEN2
## S.B. TEMP ENTRANCE RAMP S. OF FM 471

Chain SBEN2 contains:
1777 CUR SBEN2A-1

Beginning chain SBEN2 description

Point 1777 X 628,506.1343 Y 4,184,407.5348 Sta 0+100.000

Course from 1777 to PC SBEN2A-1 S 17° 58' 31.45" W Dist 178.8028

| | | | |
|---|---|---|---|
| **Curve SBEN2A-1** | | | |
| P.I. Station | 0+318.684 | X 628,438.6467 | Y 4,184,199.5254 |
| Delta = | 5° 20' 05.71" (RT) | | |
| Tangent = | 39.8807 | | |
| Length = | 79.7038 | | |
| Radius = | 856.0000 | | |
| External = | 0.9285 | | |
| Long Chord = | 79.6750 | | |
| Mid. Ord. = | 0.9275 | | |
| P.C. Station | 0+278.803 | X 628,450.9542 | Y 4,184,237.4595 |
| P.T. Station | 0+358.507 | X 628,422.8654 | Y 4,184,162.9000 |
| C.C. | | X 627,636.7363 | Y 4,184,501.6285 |
| Back = S | 17° 58' 31.45" W | | |
| Ahead = S | 23° 18' 37.16" W | | |
| Chord Bear = S | 20° 38' 34.30" W | | |

Ending chain SBEN2 description

## STAR471
## SOUTH TURNAROUND @ CULEBRA / FM 471

Chain STAR471 contains:
50 CUR STAR471-1 51 52 CUR STAR471-2 53

Beginning chain STAR471 description

Point 50 X 628,651.2320 Y 4,184,759.0483 Sta 0+000.000

Course from 50 to PC STAR471-1 N 28° 08' 11.56" E Dist 19.9876

| | | | |
|---|---|---|---|
| **Curve STAR471-1** | | | |
| P.I. Station | 0+034.513 | X 628,667.5074 | Y 4,184,789.4827 |
| Delta = | 81° 41' 36.42" (RT) | | |
| Tangent = | 14.5253 | | |
| Length = | 23.9538 | | |
| Radius = | 16.8000 | | |
| External = | 5.4087 | | |
| Long Chord = | 21.9757 | | |
| Mid. Ord. = | 4.0914 | | |
| P.C. Station | 0+019.988 | X 628,660.6576 | Y 4,184,776.6739 |
| P.T. Station | 0+043.941 | X 628,681.1714 | Y 4,184,784.5553 |
| C.C. | | X 628,675.4723 | Y 4,184,768.7514 |
| Back = N | 28° 08' 11.57" E | | |
| Ahead = S | 70° 10' 12.02" E | | |
| Chord Bear = N | 68° 58' 59.77" E | | |

Course from PT STAR471-1 to 51 S 70° 10' 12.02" E Dist 19.3679

Point 51 X 628,699.3908 Y 4,184,777.9851 Sta 0+063.309

Course from 51 to 52 S 66° 21' 19.06" E Dist 43.4305

Point 52 X 628,739.1753 Y 4,184,760.5667 Sta 0+106.740

Course from 52 to PC STAR471-2 S 62° 31' 59.23" E Dist 18.8781

| | | | |
|---|---|---|---|
| **Curve STAR471-2** | | | |
| P.I. Station | 0+140.387 | X 628,769.0294 | Y 4,184,745.0476 |
| Delta = | 82° 38' 12.59" (RT) | | |
| Tangent = | 14.7687 | | |
| Length = | 24.2304 | | |
| Radius = | 16.8000 | | |
| External = | 5.5686 | | |
| Long Chord = | 22.1842 | | |
| Mid. Ord. = | 4.1823 | | |
| P.C. Station | 0+125.618 | X 628,755.9254 | Y 4,184,751.8594 |
| P.T. Station | 0+149.848 | X 628,763.9531 | Y 4,184,731.1787 |
| C.C. | | X 628,748.1766 | Y 4,184,736.9532 |
| Back = S | 62° 31' 59.23" E | | |
| Ahead = S | 20° 06' 13.36" W | | |
| Chord Bear = S | 21° 12' 52.93" E | | |

Course from PT STAR471-2 to 53 S 20° 06' 13.36" W Dist 16.8519

Point 53 X 628,758.1607 Y 4,184,715.3535 Sta 0+166.700

Ending chain STAR471 description

## SH151W
## W.B. SH 151

Chain SH151W contains:
570 572

Beginning chain SH151W description

Point 570 X 628,245.2312 Y 4,183,714.9423 Sta 0+000.000

Course from 570 to 572 S 69° 36' 01.08" E Dist 100.0023

Point 572 X 628,338.9617 Y 4,183,680.0848 Sta 0+100.002

Ending chain SH151W description

STATE OF TEXAS
JOEL K. DAVENPORT, JR.
79276
REGISTERED
PROFESSIONAL ENGINEER

Joel K. Davenport, Jr. P.E. 79276

9/19/00
Date

Texas Department of Transportation

# HORIZONTAL ALIGNMENT DATA

SHEET 3 OF 8

| FED. RD. DIV. NO. | FEDERAL AID PROJECT NO. | | SHEET NO. |
|---|---|---|---|
| 6 | NH 2000(704),etc. | | 166 |
| STATE | DIST. | COUNTY | |
| TEXAS | SAT | BEXAR | |
| CONT. | SECT. | JOB | HIGHWAY NO. |
| 2452 | 01 | 036,etc. | LP 1604 |

lp1604fm471-90\alignCURVDATA019.dgn

## FR-D
## N.B. FRONTAGE ROAD

Chain FR-D contains:
CUR FRD10 CUR FRD11 CUR FRD12 1009

Beginning chain FR-D description

| | | | | | | |
|---|---|---|---|---|---|---|
| | | Curve Data | | | | |
| Curve FRD10 | | | | | | |
| P.I. Station | | 0+228.773 | X | 628,971.7711 | Y | 4,185,158.9449 |
| Delta | = | 12° 14' 59.07" (RT) | | | | |
| Tangent | = | 128.7699 | | | | |
| Length | = | 256.5580 | | | | |
| Radius | = | 1,200.0000 | | | | |
| External | = | 6.8893 | | | | |
| Long Chord | = | 256.0696 | | | | |
| Mid. Ord. | = | 6.8499 | | | | |
| P.C. Station | | 0+100.003 | X | 628,998.9968 | Y | 4,185,284.8037 |
| P.T. Station | | 0+356.561 | X | 628,918.4614 | Y | 4,185,041.7282 |
| C.C. | | | X | 627,826.1248 | Y | 4,185,538.5187 |
| Back | = S 12° 12' 22.02" W | | | | | |
| Ahead | = S 24° 27' 21.09" W | | | | | |
| Chord Bear | = S 18° 19' 51.55" W | | | | | |

Course from PT FRD10 to PC FRD11 S 24° 27' 21.09" W Dist 590.1661

| | | | | | | |
|---|---|---|---|---|---|---|
| | | Curve Data | | | | |
| Curve FRD11 | | | | | | |
| P.I. Station | | 1+016.395 | X | 628,645.2952 | Y | 4,184,441.0940 |
| Delta | = | 9° 15' 45.97" (RT) | | | | |
| Tangent | = | 69.6681 | | | | |
| Length | = | 139.0326 | | | | |
| Radius | = | 860.0000 | | | | |
| External | = | 2.8173 | | | | |
| Long Chord | = | 138.8813 | | | | |
| Mid. Ord. | = | 2.8081 | | | | |
| P.C. Station | | 0+946.727 | X | 628,674.1373 | Y | 4,184,504.5115 |
| P.T. Station | | 1+085.760 | X | 628,606.6214 | Y | 4,184,383.1459 |
| C.C. | | | X | 627,891.2962 | Y | 4,184,860.5450 |
| Back | = S 24° 27' 21.17" W | | | | | |
| Ahead | = S 33° 43' 07.14" W | | | | | |
| Chord Bear | = S 29° 05' 14.16" W | | | | | |

Course from PT FRD11 to PC FRD12 S 33° 44' 47.53" W Dist 0.0844

| | | | | | | |
|---|---|---|---|---|---|---|
| | | Curve Data | | | | |
| Curve FRD12 | | | | | | |
| P.I. Station | | 1+150.159 | X | 628,570.8722 | Y | 4,184,329.5800 |
| Delta | = | 12° 14' 11.68" (LT) | | | | |
| Tangent | = | 64.3152 | | | | |
| Length | = | 128.1412 | | | | |
| Radius | = | 600.0000 | | | | |
| External | = | 3.4372 | | | | |
| Long Chord | = | 127.8978 | | | | |
| Mid. Ord. | = | 3.4176 | | | | |
| P.C. Station | | 1+085.844 | X | 628,606.5745 | Y | 4,184,383.0757 |
| P.T. Station | | 1+213.985 | X | 628,547.3193 | Y | 4,184,269.7326 |
| C.C. | | | X | 629,105.6387 | Y | 4,184,050.0067 |
| Back | = S 33° 43' 07.07" W | | | | | |
| Ahead | = S 21° 28' 55.39" W | | | | | |
| Chord Bear | = S 27° 36' 01.23" W | | | | | |

Course from PT FRD12 to 1009 S 21° 28' 55.36" W Dist 228.0647

Point 1009 X 628,463.7998 Y 4,184,057.5110 Sta 1+442.050

Ending chain FR-D description

## NBEX2
## N.B. EXIT RAMP S. OF FM 471

Chain NBEX2 contains:
CUR NBEX2-1 5

Beginning chain NBEX2 description

| | | | | | | |
|---|---|---|---|---|---|---|
| | | Curve Data | | | | |
| Curve NBEX2-1 | | | | | | |
| Feature: "NBEX2" | | | | | | |
| P.I. Station | | 0+050.937 | X | 628,529.8549 | Y | 4,184,254.4081 |
| Delta | = | 6° 51' 31.87" (RT) | | | | |
| Tangent | = | 50.9374 | | | | |
| Length | = | 101.7531 | | | | |
| Radius | = | 850.0000 | | | | |
| External | = | 1.5249 | | | | |
| Long Chord | = | 101.6924 | | | | |
| Mid. Ord. | = | 1.5221 | | | | |
| P.C. Station | | 0+000.000 | X | 628,552.2614 | Y | 4,184,300.1526 |
| P.T. Station | | 0+101.753 | X | 628,502.1456 | Y | 4,184,211.6668 |
| C.C. | | | X | 627,788.9153 | Y | 4,184,674.0547 |
| Back | = S 26° 05' 47.50" W | | | | | |
| Ahead | = S 32° 57' 19.37" W | | | | | |
| Chord Bear | = S 29° 31' 33.44" W | | | | | |

Course from PT NBEX2-1 to 5 S 32° 57' 19.37" W Dist 91.2004

Point 5 X 628,452.5339 Y 4,184,135.1410 Sta 0+192.954

Ending chain NBEX2 description

## NTAR471
## NORTH TURNAROUND ● CULEBRA / FM 471

Chain NTAR471 contains:
69 CUR NTAR471-1 70 71 CUR NTAR471-2 72

Beginning chain NTAR471 description

Point 69 X 628,708.4028 Y 4,184,876.0573 Sta 0+000.000

Course from 69 to PC NTAR471-1 S 20° 41' 09.79" W Dist 19.1240

| | | | | | | |
|---|---|---|---|---|---|---|
| | | Curve Data | | | | |
| Curve NTAR471-1 | | | | | | |
| P.I. Station | | 0+034.045 | X | 628,696.3767 | Y | 4,184,844.2076 |
| Delta | = | 83° 13' 06.01" (LT) | | | | |
| Tangent | = | 14.9205 | | | | |
| Length | = | 24.4009 | | | | |
| Radius | = | 16.8000 | | | | |
| External | = | 5.6691 | | | | |
| Long Chord | = | 22.3119 | | | | |
| Mid. Ord. | = | 4.2388 | | | | |
| P.C. Station | | 0+019.124 | X | 628,701.6473 | Y | 4,184,858.1662 |
| P.T. Station | | 0+043.525 | X | 628,709.6152 | Y | 4,184,837.3255 |
| C.C. | | | X | 628,717.3642 | Y | 4,184,852.2317 |
| Back | = S 20° 41' 09.79" W | | | | | |
| Ahead | = S 62° 31' 56.22" E | | | | | |
| Chord Bear | = S 20° 55' 23.21" E | | | | | |

Course from PT NTAR471-1 to 70 S 62° 31' 56.22" E Dist 18.8870

Point 70 X 628,726.3731 Y 4,184,828.6139 Sta 0+062.412

Course from 70 to 71 S 66° 21' 18.93" E Dist 43.4302

Point 71 X 628,766.1573 Y 4,184,811.1956 Sta 0+105.842

Course from 71 to PC NTAR471-2 S 70° 10' 14.29" E Dist 19.3646

| | | | | | | |
|---|---|---|---|---|---|---|
| | | Curve Data | | | | |
| Curve NTAR471-2 | | | | | | |
| P.I. Station | | 0+139.683 | X | 628,797.9918 | Y | 4,184,799.7160 |
| Delta | = | 81° 30' 09.57" (LT) | | | | |
| Tangent | = | 14.4765 | | | | |
| Length | = | 23.8978 | | | | |
| Radius | = | 16.8000 | | | | |
| External | = | 5.3768 | | | | |
| Long Chord | = | 21.9333 | | | | |
| Mid. Ord. | = | 4.0732 | | | | |
| P.C. Station | | 0+125.207 | X | 628,784.3737 | Y | 4,184,804.6268 |
| P.T. Station | | 0+149.104 | X | 628,804.8609 | Y | 4,184,812.4591 |
| C.C. | | | X | 628,790.0726 | Y | 4,184,820.4306 |
| Back | = S 70° 10' 14.29" E | | | | | |
| Ahead | = N 28° 19' 36.14" E | | | | | |
| Chord Bear | = N 69° 04' 40.92" E | | | | | |

Course from PT NTAR471-2 to 72 N 28° 19' 36.14" E Dist 19.1270

Point 72 X 628,813.9366 Y 4,184,829.2957 Sta 0+168.231

Ending chain NTAR471 description

## SBEN2
## S.B. TEMP ENTRANCE RAMP S. OF FM 471

Chain SBEN2 contains:
1777 CUR SBEN2A-1

Beginning chain SBEN2 description

Point 1777 X 628,506.1343 Y 4,184,407.5348 Sta 0+100.000

Course from 1777 to PC SBEN2A-1 S 17° 58' 31.45" W Dist 178.8028

| | | | | | | |
|---|---|---|---|---|---|---|
| | | Curve Data | | | | |
| Curve SBEN2A-1 | | | | | | |
| P.I. Station | | 0+318.684 | X | 628,438.6467 | Y | 4,184,199.5254 |
| Delta | = | 5° 20' 05.71" (RT) | | | | |
| Tangent | = | 39.8807 | | | | |
| Length | = | 79.7038 | | | | |
| Radius | = | 856.0000 | | | | |
| External | = | 0.9285 | | | | |
| Long Chord | = | 79.6750 | | | | |
| Mid. Ord. | = | 0.9275 | | | | |
| P.C. Station | | 0+278.803 | X | 628,450.9542 | Y | 4,184,237.4595 |
| P.T. Station | | 0+358.507 | X | 628,422.8654 | Y | 4,184,162.9000 |
| C.C. | | | X | 627,636.7363 | Y | 4,184,501.6285 |
| Back | = S 17° 58' 31.45" W | | | | | |
| Ahead | = S 23° 18' 37.16" W | | | | | |
| Chord Bear | = S 20° 38' 34.30" W | | | | | |

Ending chain SBEN2 description

CHANGE ORDER NO. 11
DELETED ORIGINAL ALIGNMENT DATA FOR SH 151 W

## STAR471
## SOUTH TURNAROUND ● CULEBRA / FM 471

Chain STAR471 contains:
50 CUR STAR471-1 51 52 CUR STAR471-2 53

Beginning chain STAR471 description

Point 50 X 628,651.2320 Y 4,184,759.0483 Sta 0+000.000

Course from 50 to PC STAR471-1 N 28° 08' 11.56" E Dist 19.9876

| | | | | | | |
|---|---|---|---|---|---|---|
| | | Curve Data | | | | |
| Curve STAR471-1 | | | | | | |
| P.I. Station | | 0+034.513 | X | 628,667.5074 | Y | 4,184,789.4827 |
| Delta | = | 81° 41' 36.42" (RT) | | | | |
| Tangent | = | 14.5253 | | | | |
| Length | = | 23.9538 | | | | |
| Radius | = | 16.8000 | | | | |
| External | = | 5.4087 | | | | |
| Long Chord | = | 21.9757 | | | | |
| Mid. Ord. | = | 4.0914 | | | | |
| P.C. Station | | 0+019.988 | X | 628,660.6576 | Y | 4,184,776.6739 |
| P.T. Station | | 0+043.941 | X | 628,681.1714 | Y | 4,184,784.5553 |
| C.C. | | | X | 628,675.4723 | Y | 4,184,768.7514 |
| Back | = N 28° 08' 11.57" E | | | | | |
| Ahead | = S 70° 10' 12.02" E | | | | | |
| Chord Bear | = N 68° 58' 59.77" E | | | | | |

Course from PT STAR471-1 to 51 S 70° 10' 12.02" E Dist 19.3679

Point 51 X 628,699.3908 Y 4,184,777.9851 Sta 0+063.309

Course from 51 to 52 S 66° 21' 19.06" E Dist 43.4305

Point 52 X 628,739.1753 Y 4,184,760.5667 Sta 0+106.740

Course from 52 to PC STAR471-2 S 62° 31' 59.23" E Dist 18.8781

| | | | | | | |
|---|---|---|---|---|---|---|
| | | Curve Data | | | | |
| Curve STAR471-2 | | | | | | |
| P.I. Station | | 0+140.387 | X | 628,769.0294 | Y | 4,184,745.0476 |
| Delta | = | 82° 38' 12.59" (RT) | | | | |
| Tangent | = | 14.7687 | | | | |
| Length | = | 24.2304 | | | | |
| Radius | = | 16.8000 | | | | |
| External | = | 5.5686 | | | | |
| Long Chord | = | 22.1842 | | | | |
| Mid. Ord. | = | 4.1823 | | | | |
| P.C. Station | | 0+125.618 | X | 628,755.9254 | Y | 4,184,751.8594 |
| P.T. Station | | 0+149.848 | X | 628,763.9531 | Y | 4,184,731.1787 |
| C.C. | | | X | 628,748.1766 | Y | 4,184,736.9532 |
| Back | = S 62° 31' 59.23" E | | | | | |
| Ahead | = S 20° 06' 13.36" W | | | | | |
| Chord Bear | = S 21° 12' 52.93" E | | | | | |

Course from PT STAR471-2 to 53 S 20° 06' 13.36" W Dist 16.8519

Point 53 X 628,758.1607 Y 4,184,715.3535 Sta 0+166.700

Ending chain STAR471 description

## SH151W
## W.B. SH 151

Chain SH151W contains:
570 572

Beginning chain SH151W description

Point 570 X 628,245.2312 Y 4,184,714.9423 Sta 0+000.000

Course from 570 to 572 S 69° 36' 01.08" E Dist 100.0023

Point 572 X 628,338.9617 Y 4,183,680.0848 Sta 0+100.002

Ending chain SH151W description

SEE REVISED SHEET 166B

FOR CHANGE ORDER 11

STATE OF TEXAS
JENNIFER L. MOCZYGEMBA
84734
REGISTERED
PROFESSIONAL ENGINEER

Jennifer L. Moczygemba, P.E. 84734

8-6-2012
Date

© 2004 Texas Department of Transportation

# HORIZONTAL ALIGNMENT DATA

SHEET 3 OF 8

| FED. RD. DIV. NO. | FEDERAL AID PROJECT NO. | | SHEET NO. |
|---|---|---|---|
| 6 | NH 2000(704), etc. | | 166#a |
| STATE | DIST. | COUNTY | |
| TEXAS | SAT | BEXAR | |
| CONT. | SECT. | JOB | HIGHWAY NO. |
| 2452 | 01 | 036, etc. | LP 1604 |

lp1604fm471-90alignCURVDATA019.dgn

CHANGE ORDER NO. 11
REVISED ALIGNMENT

## SH151W
## W.B. SH 151

Chain SH151W contains:
CUR SH151W-1 CUR SH151W-2 4001

Beginning chain SH151W description
Feature: DEFAULT

| | | | | | | |
|---|---|---|---|---|---|---|
| | | | Curve Data | | | |
| Curve SH151W-1 | | | | | | |
| P.I. Station | | 0+025.910 | X | 628,289.4434 | Y | 4,183,763.4263 |
| Delta | = | 2° 36' 08.95" | (LT) | | | |
| Tangent | = | 25.9098 | | | | |
| Length | = | 51.8106 | | | | |
| Radius | = | 1,140.6520 | | | | |
| External | = | 0.2942 | | | | |
| Long Chord | = | 51.8062 | | | | |
| Mid. Ord. | = | 0.2942 | | | | |
| P.C. Station | | 0+000.000 | X | 628,300.1429 | Y | 4,183,787.0237 |
| P.T. Station | | 0+051.811 | X | 628,279.8265 | Y | 4,183,739.3674 |
| C.C. | | | X | 629,338.9955 | Y | 4,183,315.9906 |
| Back | = S | 24° 23' 25.20" W | | | | |
| Ahead | = S | 21° 47' 16.25" W | | | | |
| Chord Bear | = S | 23° 05' 20.73" W | | | | |
| | | | Curve Data | | | |
| Curve SH151W-2 | | | | | | |
| P.I. Station | | 0+083.776 | X | 628,267.9619 | Y | 4,183,709.6856 |
| Delta | = | 91° 23' 17.11" | (LT) | | | |
| Tangent | = | 31.9652 | | | | |
| Length | = | 49.7648 | | | | |
| Radius | = | 31.2000 | | | | |
| External | = | 13.4678 | | | | |
| Long Chord | = | 44.6547 | | | | |
| Mid. Ord. | = | 9.4071 | | | | |
| P.C. Station | | 0+051.811 | X | 628,279.8265 | Y | 4,183,739.3674 |
| P.T. Station | | 0+101.575 | X | 628,297.9224 | Y | 4,183,698.5436 |
| C.C. | | | X | 628,308.7977 | Y | 4,183,727.7869 |
| Back | = S | 21° 47' 16.25" W | | | | |
| Ahead | = S | 69° 36' 00.86" E | | | | |
| Chord Bear | = S | 23° 54' 22.30" E | | | | |

Course from PT SH151W-2 to 4001 S 69° 14' 06.58" E Dist 69.9054

Point 4001 X 628,363.2870 Y 4,183,673.7598 Sta 0+171.481

Ending chain SH151W description

CHANGE ORDER NO. 11
REVISED ALIGNMENT DATA
TO SH151W

CHANGE ORDER 11

NEW SHEET

STATE OF TEXAS
JENNIFER L. MOCZYGEMBA
84734
REGISTERED
PROFESSIONAL ENGINEER

Jennifer L. Moczygemba, P.E. 84734 — P.E. 8-7-2002 Date

© 2001 Texas Department of Transportation

HORIZONTAL ALIGNMENT DATA

SHEET 3 OF 8

| FED. RD. DIV. NO. | FEDERAL AID PROJECT NO. | | SHEET NO. |
|---|---|---|---|
| 6 | NH 2000(704), etc. | | 166B |
| STATE | DIST. | COUNTY | |
| TEXAS | SAT | BEXAR | |
| CONT. | SECT. | JOB | HIGHWAY NO. |
| 2452 | 01 | 036, etc. | LP 1604 |

lp1604fm471-90\alignCURVDATA019.dgn

CHANGE ORDER NO. 28
REVISED ALIGNMENT DATA.

CHANGE ORDER NO. 28
REVISED ALIGNMENT DATA.

11

## WW_LOOP
## WESTWOOD LOOP ℄

Chain WWLOOP1 contains:
WWLP1 WWLP2

Beginning chain WWLOOP1 description

Point WWLP1 X 628,884.1098 Y 4,185,288.4825 Sta 0+000.000

Course from WWLP1 to WWLP2 N 65° 56' 29.37" W Dist 114.0422

Point WWLP2 X 628,779.9745 Y 4,185,334.9740 Sta 0+114.042

Ending chain WWLOOP1 description

## WW_VISTA
## WESTWOOD VISTA ℄

Beginning chain WW*VISTA description
Feature: DEFAULT*CHAIN
Description: NO NAME TRIB

Point 22 X 628,780.2859 Y 4,185,060.1986 Sta 0+000.000

Course from 22 to PC WW*VISTA-1 N 67° 50' 22.55" W Dist 45.1021

Curve Data

Curve WW*VISTA-1
Feature: DEFAULT*CHAIN
Description: NO NAME TRIB

| | | | | | | |
|---|---|---|---|---|---|---|
| P.I. Station | | 0+082.907 | X | 628,703.5036 | Y | 4,185,091.4710 |
| Delta | = | 34° 27' 17.28" (RT) | | | | |
| Tangent | = | 37.8044 | | | | |
| Length | = | 73.3166 | | | | |
| Radius | = | 121.9200 | | | | |
| External | = | 5.7266 | | | | |
| Long Chord | = | 72.2168 | | | | |
| Mid. Ord. | = | 5.4697 | | | | |
| P.C. Station | | 0+045.102 | X | 628,738.5154 | Y | 4,185,077.2111 |
| P.T. Station | | 0+118.419 | X | 628,682.7013 | Y | 4,185,123.0375 |
| C.C. | | | X | 628,784.5038 | Y | 4,185,190.1251 |

Back = N 67° 50' 22.55" W
Ahead = N 33° 23' 05.27" W
Chord Bear = N 50° 36' 43.91" W

Ending chain WW*VISTA description

## SH151W
## W.B. SH 151

11

Chain SH151W contains:
CUR SH151W-1 CUR SH151W-2 4001

Beginning chain SH151W description
Feature: DEFAULT

Curve Data

| | | | | | | |
|---|---|---|---|---|---|---|
| Curve SH151W-1 | | | | | | |
| P.I. Station | | 0+025.910 | X | 628,289.4434 | Y | 4,183,763.4263 |
| Delta | = | 2° 36' 08.95" (LT) | | | | |
| Tangent | = | 25.9098 | | | | |
| Length | = | 51.8106 | | | | |
| Radius | = | 1,140.6520 | | | | |
| External | = | 0.2942 | | | | |
| Long Chord | = | 51.8062 | | | | |
| Mid. Ord. | = | 0.2942 | | | | |
| P.C. Station | | 0+000.000 | X | 628,300.1429 | Y | 4,183,787.0237 |
| P.T. Station | | 0+051.811 | X | 628,279.8265 | Y | 4,183,739.3674 |
| C.C. | | | X | 629,338.9955 | Y | 4,183,315.9906 |

Back = S 24° 23' 25.20" W
Ahead = S 21° 47' 16.25" W
Chord Bear = S 23° 05' 20.73" W

Curve Data

| | | | | | | |
|---|---|---|---|---|---|---|
| Curve SH151W-2 | | | | | | |
| P.I. Station | | 0+083.776 | X | 628,267.9619 | Y | 4,183,709.6856 |
| Delta | = | 91° 23' 17.11" (LT) | | | | |
| Tangent | = | 31.9652 | | | | |
| Length | = | 49.7648 | | | | |
| Radius | = | 31.2000 | | | | |
| External | = | 13.4678 | | | | |
| Long Chord | = | 44.6547 | | | | |
| Mid. Ord. | = | 9.4071 | | | | |
| P.C. Station | | 0+051.811 | X | 628,279.8265 | Y | 4,183,739.3674 |
| P.T. Station | | 0+101.575 | X | 628,297.9224 | Y | 4,183,698.5436 |
| C.C. | | | X | 628,308.7977 | Y | 4,183,727.7869 |

Back = S 21° 47' 16.25" W
Ahead = S 69° 36' 00.86" E
Chord Bear = S 23° 54' 22.30" E

Course from PT SH151W-2 to 4001 S 69° 14' 06.58" E Dist 69.9054

Point 4001 X 628,363.2870 Y 4,183,673.7598 Sta 0+171.481

Ending chain SH151W description

CHANGE ORDER NO. 28
REVISED
ALIGNMENT DATA

△# NOTE(S):

REFERS TO CHANGES MADE AS PART OF CHANGE ORDER.

CHANGE ORDER 28

NEW SHEET

STATE OF TEXAS
JEROME D. PAVLISKA
76075
REGISTERED PROFESSIONAL ENGINEER

Jerome D. Pavliska, P.E. 2-7-03
Jerome D. Pavliska, P.E. Date

© 2001
Texas Department of Transportation

HORIZONTAL ALIGNMENT DATA

SHEET 3 OF 8

| FED.RD. DIV.NO. | FEDERAL AID PROJECT NO. | | SHEET NO. |
|---|---|---|---|
| 6 | NH 2000(704),etc. | | 166 C |
| STATE | DIST. | COUNTY | |
| TEXAS | SAT | BEXAR | |
| CONT. | SECT. | JOB | HIGHWAY NO. |
| 2452 | 01 | 036,etc. | LP 1604 |

Ip160\fm471-90\alignCURVDATA019.dgn

## SH151E
## E.B. SH 151

Chain SH151E contains:
1500 CUR SH151EA-1 1501

Beginning chain SH151E description

Point 1500 X 628,181.3049 Y 4,183,439.4213 Sta 0+100.000

Course from 1500 to PC SH151EA-1 S 84° 15' 20.99" E Dist 201.9622

| Curve SH151EA-1 | | Curve Data | | | | |
|---|---|---|---|---|---|---|
| P.I. Station | | 0+404.196 | X | 628,483.9732 | Y | 4,183,408.9753 |
| Delta | = | 31° 42' 25.92" (RT) | | | | |
| Tangent | = | 102.2336 | | | | |
| Length | = | 199.2222 | | | | |
| Radius | = | 360.0000 | | | | |
| External | = | 14.2348 | | | | |
| Long Chord | = | 196.6898 | | | | |
| Mid. Ord. | = | 13.6934 | | | | |
| P.C. Station | | 0+301.962 | X | 628,382.2530 | Y | 4,183,419.2075 |
| P.T. Station | | 0+501.184 | X | 628,565.1334 | Y | 4,183,346.8083 |
| C.C. | | | X | 628,346.2217 | Y | 4,183,061.0152 |
| Back | = S 84° 15' 20.99" E | | | | | |
| Ahead | = S 52° 32' 55.08" E | | | | | |
| Chord Bear | = S 68° 24' 08.03" E | | | | | |

Course from PT SH151EA-1 to 1501 S 52° 32' 55.08" E Dist 20.0001

Point 1501 X 628,581.0108 Y 4,183,334.6465 Sta 0+521.184

Ending chain SH151E description

## VALMEA
## VALLEY MEADOW ℄

Chain VALMEA contains:
VM1 VM2

Beginning chain VALMEA description

Point VM1 X 628,150.2623 Y 4,182,805.9645 Sta 0+100.000

Course from VM1 to VM2 N 87° 23' 31.15" W Dist 151.0526

Point VM2 X 627,999.3662 Y 4,182,812.8378 Sta 0+251.053

Ending chain VALMEA description

## TC-K
## N.B. TEMP. CONNECTOR

Chain TC-K contains:
610 CUR TC*K-1 CUR TC*K-2

Beginning chain TC-K description

Point 610 X 628,164.7229 Y 4,182,881.5898 Sta 0+994.195

Course from 610 to PC TC*K-1 S 2° 36' 40.78" W Dist 105.8251

| Curve TC*K-1 | | Curve Data | | | | |
|---|---|---|---|---|---|---|
| P.I. Station | | 1+151.145 | X | 628,157.5722 | Y | 4,182,724.8030 |
| Delta | = | 6° 43' 34.05" (LT) | | | | |
| Tangent | = | 51.1247 | | | | |
| Length | = | 102.1319 | | | | |
| Radius | = | 870.0000 | | | | |
| External | = | 1.5009 | | | | |
| Long Chord | = | 102.0733 | | | | |
| Mid. Ord. | = | 1.4983 | | | | |
| P.C. Station | | 1+100.020 | X | 628,159.9015 | Y | 4,182,775.8746 |
| P.T. Station | | 1+202.152 | X | 628,161.2406 | Y | 4,182,673.8101 |
| C.C. | | | X | 629,028.9980 | Y | 4,182,736.2370 |
| Back | = S 2° 36' 40.78" W | | | | | |
| Ahead | = S 4° 06' 53.27" E | | | | | |
| Chord Bear | = S 0° 45' 06.25" E | | | | | |

Course from PT TC*K-1 to PC TC*K-2 S 4° 06' 53.27" E Dist 85.5698

| Curve TC*K-2 | | Curve Data | | | | |
|---|---|---|---|---|---|---|
| P.I. Station | | 1+338.854 | X | 628,171.0497 | Y | 4,182,537.4607 |
| Delta | = | 6° 43' 37.52" (RT) | | | | |
| Tangent | = | 51.1320 | | | | |
| Length | = | 102.1466 | | | | |
| Radius | = | 870.0000 | | | | |
| External | = | 1.5013 | | | | |
| Long Chord | = | 102.0879 | | | | |
| Mid. Ord. | = | 1.4987 | | | | |
| P.C. Station | | 1+287.722 | X | 628,167.3807 | Y | 4,182,588.4609 |
| P.T. Station | | 1+389.869 | X | 628,168.7192 | Y | 4,182,486.3818 |
| C.C. | | | X | 627,299.6233 | Y | 4,182,526.0340 |
| Back | = S 4° 06' 53.27" E | | | | | |
| Ahead | = S 2° 36' 44.25" W | | | | | |
| Chord Bear | = S 0° 45' 04.51" E | | | | | |

Ending chain TC-K description

## TC-J
## S.B. TEMP. CONNECTOR

Chain TC-J contains:
550 CUR TC-J-1 CUR TC-J-2 551

Beginning chain TC-J description

Point 550 X 628,141.8355 Y 4,182,862.6133 Sta 0+021.942

Course from 550 to PC TC-J-1 S 2° 36' 43.94" W Dist 78.0992

| Curve TC-J-1 | | Curve Data | | | | |
|---|---|---|---|---|---|---|
| P.I. Station | | 0+151.171 | X | 628,135.9458 | Y | 4,182,733.5182 |
| Delta | = | 6° 43' 36.63" (LT) | | | | |
| Tangent | = | 51.1302 | | | | |
| Length | = | 102.1428 | | | | |
| Radius | = | 870.0000 | | | | |
| External | = | 1.5012 | | | | |
| Long Chord | = | 102.0842 | | | | |
| Mid. Ord. | = | 1.4986 | | | | |
| P.C. Station | | 0+100.041 | X | 628,138.2761 | Y | 4,182,784.5952 |
| P.T. Station | | 0+202.184 | X | 628,139.6145 | Y | 4,182,682.5198 |
| C.C. | | | X | 629,007.3720 | Y | 4,182,744.9443 |
| Back | = S 2° 36' 43.94" W | | | | | |
| Ahead | = S 4° 06' 52.69" E | | | | | |
| Chord Bear | = S 0° 45' 04.37" E | | | | | |

Course from PT TC-J-1 to PC TC-J-2 S 4° 06' 52.69" E Dist 147.0154

| Curve TC-J-2 | | Curve Data | | | | |
|---|---|---|---|---|---|---|
| P.I. Station | | 0+400.331 | X | 628,153.8319 | Y | 4,182,484.8840 |
| Delta | = | 6° 43' 37.11" (RT) | | | | |
| Tangent | = | 51.1312 | | | | |
| Length | = | 102.1448 | | | | |
| Radius | = | 870.0000 | | | | |
| External | = | 1.5012 | | | | |
| Long Chord | = | 102.0862 | | | | |
| Mid. Ord. | = | 1.4986 | | | | |
| P.C. Station | | 0+349.199 | X | 628,150.1632 | Y | 4,182,535.8834 |
| P.T. Station | | 0+451.344 | X | 628,151.5015 | Y | 4,182,433.8060 |
| C.C. | | | X | 627,282.4056 | Y | 4,182,473.4590 |
| Back | = S 4° 06' 52.69" E | | | | | |
| Ahead | = S 2° 36' 44.42" W | | | | | |
| Chord Bear | = S 0° 45' 04.14" E | | | | | |

Course from PT TC-J-2 to 551 S 2° 36' 44.42" W Dist 102.0789

Point 551 X 628,146.8489 Y 4,182,331.8332 Sta 0+553.423

Ending chain TC-J description

## FR-G
## N.B. FRONTAGE ROAD S. OF SH 151

Chain FR-G contains:
CHA FR-G-1 CHA FR-G-2

Beginning chain FR-G description

Chain FR-G-1 found within chain FR-G, contains:
530 CUR FR-G-1 CUR FR-G-2 CUR FR-G-3 CUR FR-G-4 CUR FR-G-5 CUR FR-G-6 CUR FR-G--7 CUR FR-G-8 CUR FR-G-9 CUR FR-G-10 CUR FR-G-11 CUR FR-G-12 CUR FR-G-13 CUR FR--G-14 CUR FR-G-15 CUR FR-G-16 CUR FR-G-17 CUR FR-G-18 CUR FR-G-19

Beginning subchain FR-G-1 description

Point 530 X 628,192.7583 Y 4,182,855.2877 Sta 0+075.000

Course from 530 to PC FR-G-1 S 2° 36' 44.34" W Dist 508.3420

| Curve FR-G-1 | | Curve Data | | | | |
|---|---|---|---|---|---|---|
| P.I. Station | | 0+620.009 | X | 628,167.9180 | Y | 4,182,310.8454 |
| Delta | = | 1° 40' 50.00" (LT) | | | | |
| Tangent | = | 36.6667 | | | | |
| Length | = | 73.3281 | | | | |
| Radius | = | 2,500.0000 | | | | |
| External | = | 0.2689 | | | | |
| Long Chord | = | 73.3255 | | | | |
| Mid. Ord. | = | 0.2688 | | | | |
| P.C. Station | | 0+583.342 | X | 628,169.5892 | Y | 4,182,347.4739 |
| P.T. Station | | 0+656.670 | X | 628,167.3218 | Y | 4,182,274.1835 |
| C.C. | | | X | 630,666.9912 | Y | 4,182,233.5296 |
| Back | = S 2° 36' 44.34" W | | | | | |
| Ahead | = S 0° 55' 54.34" W | | | | | |
| Chord Bear | = S 1° 46' 19.34" W | | | | | |

Course from PT FR-G-1 to PC FR-G-2 S 0° 55' 54.34" W Dist 960.6675

| Curve FR-G-2 | | Curve Data | | | | |
|---|---|---|---|---|---|---|
| P.I. Station | | 1+683.969 | X | 628,150.6163 | Y | 4,181,247.0204 |
| Delta | = | 6° 55' 58.09" (RT) | | | | |
| Tangent | = | 66.6314 | | | | |
| Length | = | 133.1003 | | | | |
| Radius | = | 1,100.0000 | | | | |
| External | = | 2.0162 | | | | |
| Long Chord | = | 133.0191 | | | | |
| Mid. Ord. | = | 2.0125 | | | | |
| P.C. Station | | 1+617.338 | X | 628,151.6998 | Y | 4,181,313.6431 |
| P.T. Station | | 1+750.438 | X | 628,141.4990 | Y | 4,181,181.0157 |
| C.C. | | | X | 627,051.8453 | Y | 4,181,331.5308 |
| Back | = S 0° 55' 54.34" W | | | | | |
| Ahead | = S 7° 51' 52.43" W | | | | | |
| Chord Bear | = S 4° 23' 53.39" W | | | | | |

| Curve FR-G-3 | | Curve Data | | | | |
|---|---|---|---|---|---|---|
| P.I. Station | | 1+836.303 | X | 628,129.7499 | Y | 4,181,095.9583 |
| Delta | = | 8° 15' 14.89" (LT) | | | | |
| Tangent | = | 85.8651 | | | | |
| Length | = | 171.4330 | | | | |
| Radius | = | 1,189.9957 | | | | |
| External | = | 3.0938 | | | | |
| Long Chord | = | 171.2848 | | | | |
| Mid. Ord. | = | 3.0858 | | | | |
| P.C. Station | | 1+750.438 | X | 628,141.4990 | Y | 4,181,181.0157 |
| P.T. Station | | 1+921.871 | X | 628,130.3337 | Y | 4,181,010.0952 |
| C.C. | | | X | 629,320.3019 | Y | 4,181,018.1863 |
| Back | = S 7° 51' 52.43" W | | | | | |
| Ahead | = S 0° 23' 22.46" E | | | | | |
| Chord Bear | = S 3° 44' 14.98" W | | | | | |

Course from PT FR-G-3 to PC FR-G-4 S 0° 23' 22.46" E Dist 813.0859

| Curve FR-G-4 | | Curve Data | | | | |
|---|---|---|---|---|---|---|
| P.I. Station | | 2+788.175 | X | 628,136.2239 | Y | 4,180,143.8109 |
| Delta | = | 7° 09' 54.79" (LT) | | | | |
| Tangent | = | 53.2185 | | | | |
| Length | = | 106.2982 | | | | |
| Radius | = | 850.0000 | | | | |
| External | = | 1.6644 | | | | |
| Long Chord | = | 106.2289 | | | | |
| Mid. Ord. | = | 1.6611 | | | | |
| P.C. Station | | 2+734.957 | X | 628,135.8621 | Y | 4,180,197.0281 |
| P.T. Station | | 2+841.255 | X | 628,143.2208 | Y | 4,180,091.0544 |
| C.C. | | | X | 628,985.8425 | Y | 4,180,202.8075 |
| Back | = S 0° 23' 22.46" E | | | | | |
| Ahead | = S 7° 33' 17.25" E | | | | | |
| Chord Bear | = S 3° 58' 19.86" E | | | | | |

Course from PT FR-G-4 to PC FR-G-5 S 7° 33' 17.25" E Dist 69.9421

| Curve FR-G-5 | | Curve Data | | | | |
|---|---|---|---|---|---|---|
| P.I. Station | | 2+964.416 | X | 628,159.4133 | Y | 4,179,968.9629 |
| Delta | = | 7° 09' 54.79" (RT) | | | | |
| Tangent | = | 53.2185 | | | | |
| Length | = | 106.2982 | | | | |
| Radius | = | 850.0000 | | | | |
| External | = | 1.6644 | | | | |
| Long Chord | = | 106.2289 | | | | |
| Mid. Ord. | = | 1.6611 | | | | |
| P.C. Station | | 2+911.197 | X | 628,152.4164 | Y | 4,180,021.7194 |
| P.T. Station | | 3+017.495 | X | 628,159.7751 | Y | 4,179,915.7457 |
| C.C. | | | X | 627,309.7947 | Y | 4,179,909.9663 |
| Back | = S 7° 33' 17.25" E | | | | | |
| Ahead | = S 0° 23' 22.46" E | | | | | |
| Chord Bear | = S 3° 58' 19.86" E | | | | | |

Course from PT FR-G-5 to PC FR-G-6 S 0° 23' 22.46" E Dist 397.6448

| Curve FR-G-6 | | Curve Data | | | | |
|---|---|---|---|---|---|---|
| P.I. Station | | 3+480.889 | X | 628,162.9258 | Y | 4,179,452.3624 |
| Delta | = | 8° 38' 37.26" (RT) | | | | |
| Tangent | = | 65.7492 | | | | |
| Length | = | 131.2489 | | | | |
| Radius | = | 870.0000 | | | | |
| External | = | 2.4809 | | | | |
| Long Chord | = | 131.1244 | | | | |
| Mid. Ord. | = | 2.4739 | | | | |
| P.C. Station | | 3+415.140 | X | 628,162.4788 | Y | 4,179,518.1100 |
| P.T. Station | | 3+546.389 | X | 628,153.4867 | Y | 4,179,387.2943 |
| C.C. | | | X | 627,292.4989 | Y | 4,179,512.1947 |
| Back | = S 0° 23' 22.46" E | | | | | |
| Ahead | = S 8° 15' 14.80" W | | | | | |
| Chord Bear | = S 3° 55' 56.17" W | | | | | |

ALIGNMENT DATA CONTINUED ON THE NEXT SHEET

STATE OF TEXAS
JOEL K. DAVENPORT, JR.
79276
REGISTERED
PROFESSIONAL ENGINEER

Joel K. Davenport Jr. 9/19/00
Joel K. Davenport, Jr., P.E. 79276 Date

Texas Department of Transportation

# HORIZONTAL ALIGNMENT DATA

SHEET 4 OF 8

| FED. RD. DIV. NO. | FEDERAL AID PROJECT NO. | | SHEET NO. |
|---|---|---|---|
| 6 | NH 2000(704), etc. | | 167 |
| STATE | DIST. | COUNTY | |
| TEXAS | SAT | BEXAR | |
| CONT. | SECT. | JOB | HIGHWAY NO. |
| 2452 | 01 | 036, etc. | LP 1604 |

lp1604fm471-90\ca1ignCURVDATA019.dgn

## SH151E
## E.B. SH 151

Chain SH151E contains:
1500 CUR SH151EA-1 1501

Beginning chain SH151E description

Point 1500 X 628,181.3049 Y 4,183,439.4213 Sta 0+100.000

Course from 1500 to PC SH151EA-1 S 84° 15' 20.99" E Dist 201.9622

Curve Data

| Curve SH151EA-1 | | | | | |
|---|---|---|---|---|---|
| P.I. Station | 0+404.196 | X | 628,483.9732 | Y | 4,183,408.9753 |
| Delta = | 31° 42' 25.92" (RT) | | | | |
| Tangent = | 102.2336 | | | | |
| Length = | 199.2222 | | | | |
| Radius = | 360.0000 | | | | |
| External = | 14.2348 | | | | |
| Long Chord = | 196.6898 | | | | |
| Mid. Ord. = | 13.6934 | | | | |
| P.C. Station | 0+301.962 | X | 628,382.2530 | Y | 4,183,419.2075 |
| P.T. Station | 0+501.184 | X | 628,565.1334 | Y | 4,183,346.8083 |
| C.C. | | X | 628,346.2217 | Y | 4,183,061.0152 |
| Back = S | 84° 15' 20.99" E | | | | |
| Ahead = S | 52° 32' 55.08" E | | | | |
| Chord Bear = S | 68° 24' 08.03" E | | | | |

Course from PT SH151EA-1 to 1501 S 52° 32' 55.08" E Dist 20.0001

Point 1501 X 628,581.0108 Y 4,183,334.6465 Sta 0+521.184

Ending chain SH151E description

## VALMEA
## VALLEY MEADOW ℄

Chain VALMEA contains:
VM1 VM2

Beginning chain VALMEA description

Point VM1 X 628,150.2623 Y 4,182,805.9645 Sta 0+100.000

Course from VM1 to VM2 N 87° 23' 31.15" W Dist 151.0526

Point VM2 X 627,999.3662 Y 4,182,812.8378 Sta 0+251.053

Ending chain VALMEA description

## MISTY
## MISTY WOODS ℄

Chain MISTY*N contains:
MISTY10 MISTY11

Beginning chain MISTY*N description

Point MISTY10 X 628,146.3398 Y 4,182,254.8551 Sta 0+000.000

Course from MISTY10 to MISTY11 N 87° 23' 15.63" W Dist 73.1898

Point MISTY11 X 628,073.2260 Y 4,182,258.1909 Sta 0+073.190

Ending chain MISTY*N description

## TC-K
## N.B. TEMP. CONNECTOR

Chain TC-K contains:
610 CUR TC*K-1 CUR TC*K-2

Beginning chain TC-K description

Point 610 X 628,164.7229 Y 4,182,881.5898 Sta 0+994.195

Course from 610 to PC TC*K-1 S 2° 36' 40.78" W Dist 105.8251

Curve Data

| Curve TC*K-1 | | | | | |
|---|---|---|---|---|---|
| P.I. Station | 1+151.145 | X | 628,157.5722 | Y | 4,182,724.8030 |
| Delta = | 6° 43' 34.05" (LT) | | | | |
| Tangent = | 51.1247 | | | | |
| Length = | 102.1319 | | | | |
| Radius = | 870.0000 | | | | |
| External = | 1.5009 | | | | |
| Long Chord = | 102.0733 | | | | |
| Mid. Ord. = | 1.4983 | | | | |
| P.C. Station | 1+100.020 | X | 628,159.9015 | Y | 4,182,775.8746 |
| P.T. Station | 1+202.152 | X | 628,161.2406 | Y | 4,182,673.8101 |
| C.C. | | X | 629,028.9980 | Y | 4,182,736.2370 |
| Back = S | 2° 36' 40.78" W | | | | |
| Ahead = S | 4° 06' 53.27" E | | | | |
| Chord Bear = S | 0° 45' 06.25" E | | | | |

Course from PT TC*K-1 to PC TC*K-2 S 4° 06' 53.27" E Dist 85.5698

Curve Data

| Curve TC*K-2 | | | | | |
|---|---|---|---|---|---|
| P.I. Station | 1+338.854 | X | 628,171.0497 | Y | 4,182,537.4607 |
| Delta = | 6° 43' 37.52" (RT) | | | | |
| Tangent = | 51.1320 | | | | |
| Length = | 102.1466 | | | | |
| Radius = | 870.0000 | | | | |
| External = | 1.5013 | | | | |
| Long Chord = | 102.0879 | | | | |
| Mid. Ord. = | 1.4987 | | | | |
| P.C. Station | 1+287.722 | X | 628,167.3807 | Y | 4,182,588.4609 |
| P.T. Station | 1+389.869 | X | 628,168.7192 | Y | 4,182,486.3818 |
| C.C. | | X | 627,299.6233 | Y | 4,182,526.0340 |
| Back = S | 4° 06' 53.27" E | | | | |
| Ahead = S | 2° 36' 44.25" W | | | | |
| Chord Bear = S | 0° 45' 04.51" E | | | | |

Ending chain TC-K description

## TC-J
## S.B. TEMP. CONNECTOR

Chain TC-J contains:
550 CUR TC-J-1 CUR TC-J-2 551

Beginning chain TC-J description

Point 550 X 628,141.8355 Y 4,182,862.6133 Sta 0+021.942

Course from 550 to PC TC-J-1 S 2° 36' 43.94" W Dist 78.0992

Curve Data

| Curve TC-J-1 | | | | | |
|---|---|---|---|---|---|
| P.I. Station | 0+151.171 | X | 628,135.9458 | Y | 4,182,733.5182 |
| Delta = | 6° 43' 36.63" (LT) | | | | |
| Tangent = | 51.1302 | | | | |
| Length = | 102.1428 | | | | |
| Radius = | 870.0000 | | | | |
| External = | 1.5012 | | | | |
| Long Chord = | 102.0842 | | | | |
| Mid. Ord. = | 1.4986 | | | | |
| P.C. Station | 0+100.041 | X | 628,138.2761 | Y | 4,182,784.5952 |
| P.T. Station | 0+202.184 | X | 628,139.6145 | Y | 4,182,682.5198 |
| C.C. | | X | 629,007.3720 | Y | 4,182,744.9443 |
| Back = S | 2° 36' 43.94" W | | | | |
| Ahead = S | 4° 06' 52.69" E | | | | |
| Chord Bear = S | 0° 45' 04.37" E | | | | |

Course from PT TC-J-1 to PC TC-J-2 S 4° 06' 52.69" E Dist 147.0154

Curve Data

| Curve TC-J-2 | | | | | |
|---|---|---|---|---|---|
| P.I. Station | 0+400.331 | X | 628,153.8319 | Y | 4,182,484.8840 |
| Delta = | 6° 43' 37.11" (RT) | | | | |
| Tangent = | 51.1312 | | | | |
| Length = | 102.1448 | | | | |
| Radius = | 870.0000 | | | | |
| External = | 1.5012 | | | | |
| Long Chord = | 102.0862 | | | | |
| Mid. Ord. = | 1.4986 | | | | |
| P.C. Station | 0+349.199 | X | 628,150.1632 | Y | 4,182,535.8834 |
| P.T. Station | 0+451.344 | X | 628,151.5015 | Y | 4,182,433.8060 |
| C.C. | | X | 627,282.4056 | Y | 4,182,473.4590 |
| Back = S | 4° 06' 52.69" E | | | | |
| Ahead = S | 2° 36' 44.42" W | | | | |
| Chord Bear = S | 0° 45' 04.14" E | | | | |

Course from PT TC-J-2 to 551 S 2° 36' 44.42" W Dist 102.0789

Point 551 X 628,146.8489 Y 4,182,331.8332 Sta 0+553.423

Ending chain TC-J description

## FR-G
## N.B. FRONTAGE ROAD S. OF SH 151

Chain FR-G contains:
CHA FR-G-1 CHA FR-G-2

Beginning chain FR-G description

Chain FR-G-1 found within chain FR-G, contains:
530 CUR FR-G-1 CUR FR-G-2 CUR FR-G-3 CUR FR-G-4 CUR FR-G-5 CUR FR-G-6 CUR FR-G-7 CUR FR-G-8 CUR FR-G-9 CUR FR-G-10 CUR FR-G-11 CUR FR-G-12 CUR FR-G-13 CUR FR-G-14 CUR FR-G-15 CUR FR-G-16 CUR FR-G-17 CUR FR-G-18 CUR FR-G-19

Beginning subchain FR-G-1 description

Point 530 X 628,192.7583 Y 4,182,855.2877 Sta 0+075.000

Course from 530 to PC FR-G-1 S 2° 36' 44.34" W Dist 508.3420

Curve Data

| Curve FR-G-1 | | | | | |
|---|---|---|---|---|---|
| P.I. Station | 0+620.009 | X | 628,167.9180 | Y | 4,182,310.8454 |
| Delta = | 1° 40' 50.00" (LT) | | | | |
| Tangent = | 36.6667 | | | | |
| Length = | 73.3281 | | | | |
| Radius = | 2,500.0000 | | | | |
| External = | 0.2689 | | | | |
| Long Chord = | 73.3255 | | | | |
| Mid. Ord. = | 0.2688 | | | | |
| P.C. Station | 0+583.342 | X | 628,169.5892 | Y | 4,182,347.4739 |
| P.T. Station | 0+656.670 | X | 628,167.3218 | Y | 4,182,274.1835 |
| C.C. | | X | 630,666.9912 | Y | 4,182,233.5296 |
| Back = S | 2° 36' 44.34" W | | | | |
| Ahead = S | 0° 55' 54.34" W | | | | |
| Chord Bear = S | 1° 46' 19.34" W | | | | |

Course from PT FR-G-1 to PC FR-G-2 S 0° 55' 54.34" W Dist 960.6675

Curve Data

| Curve FR-G-2 | | | | | |
|---|---|---|---|---|---|
| P.I. Station | 1+683.969 | X | 628,150.6163 | Y | 4,181,247.0204 |
| Delta = | 6° 55' 58.09" (RT) | | | | |
| Tangent = | 66.6314 | | | | |
| Length = | 133.1003 | | | | |
| Radius = | 1,100.0000 | | | | |
| External = | 2.0162 | | | | |
| Long Chord = | 133.0191 | | | | |
| Mid. Ord. = | 2.0125 | | | | |
| P.C. Station | 1+617.338 | X | 628,151.6998 | Y | 4,181,313.6431 |
| P.T. Station | 1+750.438 | X | 628,141.4990 | Y | 4,181,181.0157 |
| C.C. | | X | 627,051.8453 | Y | 4,181,331.5308 |
| Back = S | 0° 55' 54.34" W | | | | |
| Ahead = S | 7° 51' 52.43" W | | | | |
| Chord Bear = S | 4° 23' 53.39" W | | | | |

Curve Data

| Curve FR-G-3 | | | | | |
|---|---|---|---|---|---|
| P.I. Station | 1+836.303 | X | 628,129.7499 | Y | 4,181,095.9583 |
| Delta = | 8° 15' 14.89" (LT) | | | | |
| Tangent = | 85.8651 | | | | |
| Length = | 171.4330 | | | | |
| Radius = | 1,189.9957 | | | | |
| External = | 3.0938 | | | | |
| Long Chord = | 171.2848 | | | | |
| Mid. Ord. = | 3.0858 | | | | |
| P.C. Station | 1+750.438 | X | 628,141.4990 | Y | 4,181,181.0157 |
| P.T. Station | 1+921.871 | X | 628,130.3337 | Y | 4,181,010.0952 |
| C.C. | | X | 629,320.3019 | Y | 4,181,018.1863 |
| Back = S | 7° 51' 52.43" W | | | | |
| Ahead = S | 0° 23' 22.46" E | | | | |
| Chord Bear = S | 3° 44' 14.98" W | | | | |

Course from PT FR-G-3 to PC FR-G-4 S 0° 23' 22.46" E Dist 813.0859

Curve Data

| Curve FR-G-4 | | | | | |
|---|---|---|---|---|---|
| P.I. Station | 2+788.175 | X | 628,136.2239 | Y | 4,180,143.8109 |
| Delta = | 7° 09' 54.79" (LT) | | | | |
| Tangent = | 53.2185 | | | | |
| Length = | 106.2982 | | | | |
| Radius = | 850.0000 | | | | |
| External = | 1.6644 | | | | |
| Long Chord = | 106.2289 | | | | |
| Mid. Ord. = | 1.6611 | | | | |
| P.C. Station | 2+734.957 | X | 628,135.8621 | Y | 4,180,197.0281 |
| P.T. Station | 2+841.255 | X | 628,143.2208 | Y | 4,180,091.0544 |
| C.C. | | X | 628,985.8425 | Y | 4,180,202.8075 |
| Back = S | 0° 23' 22.46" E | | | | |
| Ahead = S | 7° 33' 17.25" E | | | | |
| Chord Bear = S | 3° 58' 19.86" E | | | | |

Course from PT FR-G-4 to PC FR-G-5 S 7° 33' 17.25" E Dist 69.9421

Curve Data

| Curve FR-G-5 | | | | | |
|---|---|---|---|---|---|
| P.I. Station | 2+964.416 | X | 628,159.4133 | Y | 4,179,968.9629 |
| Delta = | 7° 09' 54.79" (RT) | | | | |
| Tangent = | 53.2185 | | | | |
| Length = | 106.2982 | | | | |
| Radius = | 850.0000 | | | | |
| External = | 1.6644 | | | | |
| Long Chord = | 106.2289 | | | | |
| Mid. Ord. = | 1.6611 | | | | |
| P.C. Station | 2+911.197 | X | 628,152.4164 | Y | 4,180,021.7194 |
| P.T. Station | 3+017.495 | X | 628,159.7751 | Y | 4,179,915.7457 |
| C.C. | | X | 627,309.7947 | Y | 4,179,909.9663 |
| Back = S | 7° 33' 17.25" E | | | | |
| Ahead = S | 0° 23' 22.46" E | | | | |
| Chord Bear = S | 3° 58' 19.86" E | | | | |

Course from PT FR-G-5 to PC FR-G-6 S 0° 23' 22.46" E Dist 397.6448

Curve Data

| Curve FR-G-6 | | | | | |
|---|---|---|---|---|---|
| P.I. Station | 3+480.889 | X | 628,162.9258 | Y | 4,179,452.3624 |
| Delta = | 8° 38' 37.26" (RT) | | | | |
| Tangent = | 65.7492 | | | | |
| Length = | 131.2489 | | | | |
| Radius = | 870.0000 | | | | |
| External = | 2.4809 | | | | |
| Long Chord = | 131.1244 | | | | |
| Mid. Ord. = | 2.4739 | | | | |
| P.C. Station | 3+415.140 | X | 628,162.4788 | Y | 4,179,518.1100 |
| P.T. Station | 3+546.389 | X | 628,153.4867 | Y | 4,179,387.2943 |
| C.C. | | X | 627,292.4989 | Y | 4,179,512.1947 |
| Back = S | 0° 23' 22.46" E | | | | |
| Ahead = S | 8° 15' 14.80" W | | | | |
| Chord Bear = S | 3° 55' 56.17" W | | | | |

ALIGNMENT DATA CONTINUED ON THE NEXT SHEET

CHANGE ORDER NO. 64
-ADDED NEW MISTY WOODS ALIGNMENT DATA.

STATE OF TEXAS
JEROME D. PAVLISKA
76075
REGISTERED PROFESSIONAL ENGINEER

Jerome D. Pavliska, P.E. 2/06/04
Jerome D. Pavliska, P.E. Date

CHANGE ORDER 64

REVISED SHEET

© 2000 Texas Department of Transportation

# HORIZONTAL ALIGNMENT DATA

SHEET 4 OF 8

| FED. RD. DIV. NO. | FEDERAL AID PROJECT NO. | | SHEET NO. |
|---|---|---|---|
| 6 | NH 2000(704), etc. | | 167A |
| STATE | DIST. | COUNTY | |
| TEXAS | SAT | BEXAR | |
| CONT. | SECT. | JOB | HIGHWAY NO. |
| 2452 | 01 | 036, etc. | LP 1604 |

lp1604fm471-90alignCURVDATA019.dgn

02-05-04

FR-G

## N.B. FRONTAGE ROAD S. OF SH 151 ( CONT. )

Curve Data

| | | | | | |
|---|---|---|---|---|---|
| Curve FR-G-7 | | | | | |
| P.I. Station | 3+598.301 | X | 628,146.0339 | Y | 4,179,335.9198 |
| Delta = | 9° 07' 57.03" (LT) | | | | |
| Tangent = | 51.9122 | | | | |
| Length = | 103.6045 | | | | |
| Radius = | 649.9970 | | | | |
| External = | 2.0697 | | | | |
| Long Chord = | 103.4949 | | | | |
| Mid. Ord. = | 2.0631 | | | | |
| P.C. Station | 3+546.389 | X | 628,153.4867 | Y | 4,179,387.2943 |
| P.T. Station | 3+649.993 | X | 628,146.8298 | Y | 4,179,284.0137 |
| C.C. | | X | 628,796.7504 | Y | 4,179,293.9784 |
| Back = S | 8° 15' 14.80" W | | | | |
| Ahead = S | 0° 52' 42.23" E | | | | |
| Chord Bear = S | 3° 41' 16.29" W | | | | |

Course from PT FR-G-7 to PC FR-G-8 S 0° 52' 42.23" E Dist 318.7418

Curve Data

| | | | | | |
|---|---|---|---|---|---|
| Curve FR-G-8 | | | | | |
| P.I. Station | 4+019.791 | X | 628,152.4989 | Y | 4,178,914.2594 |
| Delta = | 5° 06' 22.68" (LT) | | | | |
| Tangent = | 51.0560 | | | | |
| Length = | 102.0444 | | | | |
| Radius = | 1,145.0000 | | | | |
| External = | 1.1377 | | | | |
| Long Chord = | 102.0106 | | | | |
| Mid. Ord. = | 1.1366 | | | | |
| P.C. Station | 3+968.735 | X | 628,151.7162 | Y | 4,178,965.3094 |
| P.T. Station | 4+070.780 | X | 628,157.8221 | Y | 4,178,863.4817 |
| C.C. | | X | 629,296.5816 | Y | 4,178,982.8626 |
| Back = S | 0° 52' 42.23" E | | | | |
| Ahead = S | 5° 59' 04.91" E | | | | |
| Chord Bear = S | 3° 25' 53.57" E | | | | |

Course from PT FR-G-8 to PC FR-G-9 S 5° 59' 04.91" E Dist 158.5818

Curve Data

| | | | | | |
|---|---|---|---|---|---|
| Curve FR-G-9 | | | | | |
| P.I. Station | 4+301.635 | X | 628,181.8918 | Y | 4,178,633.8843 |
| Delta = | 5° 47' 11.98" (RT) | | | | |
| Tangent = | 72.2738 | | | | |
| Length = | 144.4247 | | | | |
| Radius = | 1,430.0000 | | | | |
| External = | 1.8252 | | | | |
| Long Chord = | 144.3633 | | | | |
| Mid. Ord. = | 1.8229 | | | | |
| P.C. Station | 4+229.361 | X | 628,174.3563 | Y | 4,178,705.7642 |
| P.T. Station | 4+373.786 | X | 628,182.1416 | Y | 4,178,561.6109 |
| C.C. | | X | 626,752.1501 | Y | 4,178,556.6683 |
| Back = S | 5° 59' 04.91" E | | | | |
| Ahead = S | 0° 11' 52.93" E | | | | |
| Chord Bear = S | 3° 05' 28.92" E | | | | |

Course from PT FR-G-9 to PC FR-G-10 S 0° 11' 52.93" E Dist 563.7704

Curve Data

| | | | | | |
|---|---|---|---|---|---|
| Curve FR-G-10 | | | | | |
| P.I. Station | 5+012.774 | X | 628,184.3502 | Y | 4,177,922.6271 |
| Delta = | 10° 44' 32.96" (RT) | | | | |
| Tangent = | 75.2172 | | | | |
| Length = | 149.9934 | | | | |
| Radius = | 800.0000 | | | | |
| External = | 3.5282 | | | | |
| Long Chord = | 149.7738 | | | | |
| Mid. Ord. = | 3.5127 | | | | |
| P.C. Station | 4+937.557 | X | 628,184.0902 | Y | 4,177,997.8439 |
| P.T. Station | 5+087.550 | X | 628,170.5856 | Y | 4,177,848.6801 |
| C.C. | | X | 627,384.0950 | Y | 4,177,995.0788 |
| Back = S | 0° 11' 52.93" E | | | | |
| Ahead = S | 10° 32' 40.03" W | | | | |
| Chord Bear = S | 5° 10' 23.55" W | | | | |

Curve Data

| | | | | | |
|---|---|---|---|---|---|
| Curve FR-G-11 | | | | | |
| P.I. Station | 5+162.485 | X | 628,156.8726 | Y | 4,177,775.0108 |
| Delta = | 10° 44' 32.86" (LT) | | | | |
| Tangent = | 74.9347 | | | | |
| Length = | 149.4301 | | | | |
| Radius = | 796.9975 | | | | |
| External = | 3.5150 | | | | |
| Long Chord = | 149.2113 | | | | |
| Mid. Ord. = | 3.4995 | | | | |
| P.C. Station | 5+087.550 | X | 628,170.5856 | Y | 4,177,848.6801 |
| P.T. Station | 5+236.980 | X | 628,157.1316 | Y | 4,177,700.0766 |
| C.C. | | X | 628,954.1244 | Y | 4,177,702.8309 |
| Back = S | 10° 32' 40.03" W | | | | |
| Ahead = S | 0° 11' 52.83" E | | | | |
| Chord Bear = S | 5° 10' 23.60" W | | | | |

Course from PT FR-G-11 to PC FR-G-12 S 0° 11' 52.83" E Dist 276.2518

Curve Data

| | | | | | |
|---|---|---|---|---|---|
| Curve FR-G-12 | | | | | |
| P.I. Station | 5+672.085 | X | 628,158.6353 | Y | 4,177,264.9744 |
| Delta = | 20° 14' 23.66" (LT) | | | | |
| Tangent = | 158.8529 | | | | |
| Length = | 314.3952 | | | | |
| Radius = | 890.0000 | | | | |
| External = | 14.0654 | | | | |
| Long Chord = | 312.7630 | | | | |
| Mid. Ord. = | 13.8466 | | | | |
| P.C. Station | 5+513.232 | X | 628,158.0863 | Y | 4,177,423.8264 |
| P.T. Station | 5+827.627 | X | 628,214.1055 | Y | 4,177,116.1210 |
| C.C. | | X | 629,048.0810 | Y | 4,177,426.9021 |
| Back = S | 0° 11' 52.83" E | | | | |
| Ahead = S | 20° 26' 16.50" E | | | | |
| Chord Bear = S | 10° 19' 04.67" E | | | | |

Course from PT FR-G-12 to PC FR-G-13 S 20° 26' 16.50" E Dist 166.6813

CONTINUED

Curve Data

| | | | | | |
|---|---|---|---|---|---|
| Curve FR-G-13 | | | | | |
| P.I. Station | 6+128.690 | X | 628,319.2345 | Y | 4,176,834.0093 |
| Delta = | 20° 18' 59.32" (RT) | | | | |
| Tangent = | 134.3820 | | | | |
| Length = | 265.9421 | | | | |
| Radius = | 750.0000 | | | | |
| External = | 11.9439 | | | | |
| Long Chord = | 264.5510 | | | | |
| Mid. Ord. = | 11.7567 | | | | |
| P.C. Station | 5+994.308 | X | 628,272.3093 | Y | 4,176,959.9321 |
| P.T. Station | 6+260.250 | X | 628,319.5193 | Y | 4,176,699.6276 |
| C.C. | | X | 627,569.5210 | Y | 4,176,698.0379 |
| Back = S | 20° 26' 16.50" E | | | | |
| Ahead = S | 0° 07' 17.18" E | | | | |
| Chord Bear = S | 10° 16' 46.84" E | | | | |

Course from PT FR-G-13 to PC FR-G-14 S 0° 07' 17.18" E Dist 103.5142

Curve Data

| | | | | | |
|---|---|---|---|---|---|
| Curve FR-G-14 | | | | | |
| P.I. Station | 6+405.563 | X | 628,319.8273 | Y | 4,176,554.3149 |
| Delta = | 4° 10' 52.93" (LT) | | | | |
| Tangent = | 41.7988 | | | | |
| Length = | 83.5606 | | | | |
| Radius = | 1,145.0000 | | | | |
| External = | 0.7627 | | | | |
| Long Chord = | 83.5420 | | | | |
| Mid. Ord. = | 0.7622 | | | | |
| P.C. Station | 6+363.765 | X | 628,319.7387 | Y | 4,176,596.1136 |
| P.T. Station | 6+447.325 | X | 628,322.9634 | Y | 4,176,512.6339 |
| C.C. | | X | 629,464.7361 | Y | 4,176,598.5405 |
| Back = S | 0° 07' 17.18" E | | | | |
| Ahead = S | 4° 18' 10.11" E | | | | |
| Chord Bear = S | 2° 12' 43.65" E | | | | |

Course from PT FR-G-14 to PC FR-G-15 S 4° 18' 10.11" E Dist 116.9394

Curve Data

| | | | | | |
|---|---|---|---|---|---|
| Curve FR-G-15 | | | | | |
| P.I. Station | 6+606.063 | X | 628,334.8731 | Y | 4,176,354.3432 |
| Delta = | 4° 10' 52.90" (RT) | | | | |
| Tangent = | 41.7988 | | | | |
| Length = | 83.5604 | | | | |
| Radius = | 1,145.0000 | | | | |
| External = | 0.7627 | | | | |
| Long Chord = | 83.5419 | | | | |
| Mid. Ord. = | 0.7622 | | | | |
| P.C. Station | 6+564.265 | X | 628,331.7370 | Y | 4,176,396.0241 |
| P.T. Station | 6+647.825 | X | 628,334.9617 | Y | 4,176,312.5445 |
| C.C. | | X | 627,189.9643 | Y | 4,176,310.1175 |
| Back = S | 4° 18' 10.11" E | | | | |
| Ahead = S | 0° 07' 17.21" E | | | | |
| Chord Bear = S | 2° 12' 43.66" E | | | | |

Course from PT FR-G-15 to PC FR-G-16 S 0° 07' 17.21" E Dist 263.5837

Curve Data

| | | | | | |
|---|---|---|---|---|---|
| Curve FR-G-16 | | | | | |
| P.I. Station | 6+946.025 | X | 628,335.5938 | Y | 4,176,014.3456 |
| Delta = | 3° 18' 16.75" (RT) | | | | |
| Tangent = | 34.6158 | | | | |
| Length = | 69.2125 | | | | |
| Radius = | 1,200.0000 | | | | |
| External = | 0.4992 | | | | |
| Long Chord = | 69.2029 | | | | |
| Mid. Ord. = | 0.4990 | | | | |
| P.C. Station | 6+911.409 | X | 628,335.5204 | Y | 4,176,048.9613 |
| P.T. Station | 6+980.621 | X | 628,333.6716 | Y | 4,175,979.7832 |
| C.C. | | X | 627,135.5231 | Y | 4,176,046.4178 |
| Back = S | 0° 07' 17.21" E | | | | |
| Ahead = S | 3° 10' 59.54" W | | | | |
| Chord Bear = S | 1° 31' 51.17" W | | | | |

Course from PT FR-G-16 to PC FR-G-17 S 3° 10' 59.54" W Dist 191.2014

Curve Data

| | | | | | |
|---|---|---|---|---|---|
| Curve FR-G-17 | | | | | |
| P.I. Station | 7+206.439 | X | 628,321.1322 | Y | 4,175,754.3142 |
| Delta = | 3° 18' 16.81" (LT) | | | | |
| Tangent = | 34.6160 | | | | |
| Length = | 69.2128 | | | | |
| Radius = | 1,200.0000 | | | | |
| External = | 0.4992 | | | | |
| Long Chord = | 69.2032 | | | | |
| Mid. Ord. = | 0.4990 | | | | |
| P.C. Station | 7+171.823 | X | 628,323.0544 | Y | 4,175,788.8768 |
| P.T. Station | 7+241.035 | X | 628,321.2056 | Y | 4,175,719.6983 |
| C.C. | | X | 629,521.2029 | Y | 4,175,722.2422 |
| Back = S | 3° 10' 59.54" W | | | | |
| Ahead = S | 0° 07' 17.27" E | | | | |
| Chord Bear = S | 1° 31' 51.14" W | | | | |

Course from PT FR-G-17 to PC FR-G-18 S 0° 07' 17.27" E Dist 242.2246

Curve Data

| | | | | | |
|---|---|---|---|---|---|
| Curve FR-G-18 | | | | | |
| P.I. Station | 7+723.727 | X | 628,322.2289 | Y | 4,175,237.0081 |
| Delta = | 29° 55' 05.90" (LT) | | | | |
| Tangent = | 240.4667 | | | | |
| Length = | 469.9556 | | | | |
| Radius = | 900.0000 | | | | |
| External = | 31.5708 | | | | |
| Long Chord = | 464.6346 | | | | |
| Mid. Ord. = | 30.5009 | | | | |
| P.C. Station | 7+483.260 | X | 628,321.7191 | Y | 4,175,477.4742 |
| P.T. Station | 7+953.216 | X | 628,442.6067 | Y | 4,175,028.8413 |
| C.C. | | X | 629,221.7171 | Y | 4,175,479.3822 |
| Back = S | 0° 07' 17.27" E | | | | |
| Ahead = S | 30° 02' 23.16" E | | | | |
| Chord Bear = S | 15° 04' 50.22" E | | | | |

Course from PT FR-G-18 to PC FR-G-19 S 30° 02' 23.16" E Dist 491.1186

CONTINUED

Curve Data

| | | | | | |
|---|---|---|---|---|---|
| Curve FR-G-19 | | | | | |
| P.I. Station | 8+579.392 | X | 628,756.0712 | Y | 4,174,486.7742 |
| Delta = | 2° 12' 55.42" (RT) | | | | |
| Tangent = | 135.0576 | | | | |
| Length = | 270.0816 | | | | |
| Radius = | 6,985.0000 | | | | |
| External = | 1.3056 | | | | |
| Long Chord = | 270.0648 | | | | |
| Mid. Ord. = | 1.3053 | | | | |
| P.C. Station | 8+444.334 | X | 628,688.4612 | Y | 4,174,603.6907 |
| P.T. Station | 8+714.416 | X | 628,819.1111 | Y | 4,174,367.3316 |
| C.C. | | X | 622,641.6993 | Y | 4,171,106.9929 |
| Back = S | 30° 02' 23.16" E | | | | |
| Ahead = S | 27° 49' 27.74" E | | | | |
| Chord Bear = S | 28° 55' 55.45" E | | | | |

---

Ending subchain FR-G-1 description

Course from PT FR-G-19 to PC FR-G-20 S 27° 49' 27.74" E Dist 174.7146

Chain FR-G-2 found within chain FR-G, contains:
CUR FR-G-20 CUR FR-G-21 CUR FR-G-22

Beginning subchain FR-G-2 description

---

Curve Data

| | | | | | |
|---|---|---|---|---|---|
| Curve FR-G-20 | | | | | |
| P.I. Station | 9+061.783 | X | 628,981.2492 | Y | 4,174,060.1260 |
| Delta = | 21° 43' 08.27" (RT) | | | | |
| Tangent = | 172.6527 | | | | |
| Length = | 341.1607 | | | | |
| Radius = | 900.0000 | | | | |
| External = | 16.4109 | | | | |
| Long Chord = | 339.1218 | | | | |
| Mid. Ord. = | 16.1170 | | | | |
| P.C. Station | 8+889.130 | X | 628,900.6614 | Y | 4,174,212.8171 |
| P.T. Station | 9+230.291 | X | 628,999.6122 | Y | 4,173,888.4526 |
| C.C. | | X | 628,104.7171 | Y | 4,173,792.7305 |
| Back = S | 27° 49' 27.74" E | | | | |
| Ahead = S | 6° 06' 19.47" E | | | | |
| Chord Bear = S | 16° 57' 53.61" E | | | | |

Course from PT FR-G-20 to PC FR-G-21 S 6° 06' 19.47" E Dist 275.6907

Curve Data

| | | | | | |
|---|---|---|---|---|---|
| Curve FR-G-21 | | | | | |
| P.I. Station | 9+562.668 | X | 629,034.9631 | Y | 4,173,557.9615 |
| Delta = | 6° 29' 19.53" (LT) | | | | |
| Tangent = | 56.6857 | | | | |
| Length = | 113.2502 | | | | |
| Radius = | 1,000.0000 | | | | |
| External = | 1.6053 | | | | |
| Long Chord = | 113.1897 | | | | |
| Mid. Ord. = | 1.6028 | | | | |
| P.C. Station | 9+505.982 | X | 629,028.9341 | Y | 4,173,614.3257 |
| P.T. Station | 9+619.232 | X | 629,047.3231 | Y | 4,173,502.6397 |
| C.C. | | X | 630,023.2620 | Y | 4,173,720.6836 |
| Back = S | 6° 06' 19.47" E | | | | |
| Ahead = S | 12° 35' 39.00" E | | | | |
| Chord Bear = S | 9° 20' 59.24" E | | | | |

Course from PT FR-G-21 to PC FR-G-22 S 12° 35' 39.00" E Dist 143.7483

Curve Data

| | | | | | |
|---|---|---|---|---|---|
| Curve FR-G-22 | | | | | |
| P.I. Station | 9+812.157 | X | 629,089.3892 | Y | 4,173,314.3567 |
| Delta = | 6° 37' 20.27" (RT) | | | | |
| Tangent = | 49.1766 | | | | |
| Length = | 98.2438 | | | | |
| Radius = | 850.0000 | | | | |
| External = | 1.4214 | | | | |
| Long Chord = | 98.1891 | | | | |
| Mid. Ord. = | 1.4190 | | | | |
| P.C. Station | 9+762.980 | X | 629,078.6665 | Y | 4,173,362.3501 |
| P.T. Station | 9+861.224 | X | 629,094.5055 | Y | 4,173,265.4470 |
| C.C. | | X | 628,249.1184 | Y | 4,173,177.0128 |
| Back = S | 12° 35' 39.00" E | | | | |
| Ahead = S | 5° 58' 18.73" E | | | | |
| Chord Bear = S | 9° 16' 58.87" E | | | | |

---

Ending subchain FR-G-2 description

Ending chain FR-G description

STATE OF TEXAS
JOEL K. DAVENPORT, JR.
79276
REGISTERED PROFESSIONAL ENGINEER

Joel K. Davenport, Jr. P.E. 79276 — 9/19/00 Date

Texas Department of Transportation

# HORIZONTAL ALIGNMENT DATA

SHEET 5 OF 8

| FED. RD. DIV. NO. | FEDERAL AID PROJECT NO. | | SHEET NO. |
|---|---|---|---|
| 6 | NH 2000(704),etc. | | 168 |
| STATE | DIST. | COUNTY | |
| TEXAS | SAT | BEXAR | |
| CONT. | SECT. | JOB | HIGHWAY NO. |
| 2452 | 01 | 036,etc. | LP 1604 |

lp1604fm471-90\alignCURVDATA019.dgn

## MISTY
## MISTY WOODS ℄

Chain MISTY contains:
10 CUR MISTY-1 CUR MISTY-2

Beginning chain MISTY description

Point 10 X 628,145.1775 Y 4,182,228.2774 Sta 0+000.000

Course from 10 to PC MISTY-1 N 87° 58' 13.26" W Dist 23.2645

Curve Data

Curve MISTY-1
P.I. Station 0+039.663 X 628,105.5392 Y 4,182,229.6822
Delta = 56° 33' 42.75" (RT)
Tangent = 16.3987
Length = 30.0896
Radius = 30.4800
External = 4.1314
Long Chord = 28.8826
Mid. Ord. = 3.6382
P.C. Station 0+023.264 X 628,121.9276 Y 4,182,229.1014
P.T. Station 0+053.354 X 628,096.9932 Y 4,182,243.6780
C.C. X 628,123.0071 Y 4,182,259.5622
Back = N 87° 58' 13.26" W
Ahead = N 31° 24' 30.51" W
Chord Bear = N 59° 41' 21.88" W

Curve Data

Curve MISTY-2
P.I. Station 0+069.007 X 628,088.8361 Y 4,182,257.0371
Delta = 54° 21' 51.84" (LT)
Tangent = 15.6526
Length = 28.9206
Radius = 30.4800
External = 3.7842
Long Chord = 27.8478
Mid. Ord. = 3.3663
P.C. Station 0+053.354 X 628,096.9932 Y 4,182,243.6780
P.T. Station 0+082.275 X 628,073.2260 Y 4,182,258.1909
C.C. X 628,070.9794 Y 4,182,227.7938
Back = N 31° 24' 30.51" W
Ahead = N 85° 46' 22.35" W
Chord Bear = N 58° 35' 26.43" W

Ending chain MISTY description

## ELLISON
## NORTH ELLISON DRIVE

Chain ELLISON contains:
NED1 NED3

Beginning chain ELLISON description

Point NED1 X 628,156.5750 Y 4,182,056.1595 Sta 0+100.000

Course from NED1 to NED3 S 88° 05' 02.38" E Dist 136.2998

Point NED3 X 628,292.7986 Y 4,182,051.6024 Sta 0+236.300

Ending chain ELLISON description

## WISE
## WISEMAN BLVD. ℄

Chain WISE contains:
WB1 WB3

Beginning chain WISE description

Point WB1 X 628,096.2830 Y 4,181,622.8648 Sta 0+100.000

Course from WB1 to WB3 S 88° 05' 14.93" E Dist 140.3506

Point WB3 X 628,236.5554 Y 4,181,618.1808 Sta 0+240.351

Ending chain WISE description

## NTARWIS
## N. TURNAROUND @ WISEMAN BLVD.

Chain NTARWIS contains:
701 CUR NTARWIS-1 702

Beginning chain NTARWIS description

Point 701 X 628,121.9116 Y 4,181,706.2840 Sta 0+100.000

Course from 701 to PC NTARWIS-1 S 1° 12' 05.73" E Dist 30.4909

Curve Data

Curve NTARWIS-1
Feature: DEFAULT
P.I. Station 0+379.257 X 628,127.7677 Y 4,181,427.0879
Delta = 174° 03' 09.33" (LT)
Tangent = 248.7666
Length = 39.2568
Radius = 12.9228
External = 236.1792
Long Chord = 25.8108
Mid. Ord. = 12.2524
P.C. Station 0+130.491 X 628,122.5510 Y 4,181,675.7998
P.T. Station 0+169.748 X 628,148.3495 Y 4,181,675.0017
C.C. X 628,135.4710 Y 4,181,676.0708
Back = S 1° 12' 05.73" E
Ahead = N 4° 44' 44.94" E
Chord Bear = S 88° 13' 40.39" E

Course from PT NTARWIS-1 to 702 N 4° 44' 44.94" E Dist 30.4597

Point 702 X 628,150.8696 Y 4,181,705.3569 Sta 0+200.207

Ending chain NTARWIS description

## STARWIS
## S. TURNAROUND @ WISEMAN BLVD.

Chain STARWIS contains:
730 CUR WIS1 731

Beginning chain STARWIS description

Point 730 X 628,114.3828 Y 4,181,540.2125 Sta 0+100.000

Course from 730 to PC WIS1 N 6° 25' 35.07" E Dist 27.9723

Curve Data

Curve WIS1
Feature: DEFAULT
P.I. Station 0+308.531 X 628,137.7230 Y 4,181,747.4334
Delta = 170° 41' 28.28" (RT)
Tangent = 180.5589
Length = 43.7931
Radius = 14.7000
External = 166.4563
Long Chord = 29.3030
Mid. Ord. = 13.5072
P.C. Station 0+127.972 X 628,117.5136 Y 4,181,568.0090
P.T. Station 0+171.765 X 628,146.8027 Y 4,181,567.1029
C.C. X 628,132.1213 Y 4,181,566.3637
Back = S 6° 25' 35.07" E
Ahead = S 2° 52' 56.65" E
Chord Bear = S 88° 13' 40.79" E

Course from PT WIS1 to 731 S 2° 52' 56.65" E Dist 27.3322

Point 731 X 628,148.1771 Y 4,181,539.8053 Sta 0+199.098

Ending chain STARWIS description

## REED
## REED ROAD ℄

Chain REED contains:
RR1 RR3

Beginning chain REED description

Point RR1 X 628,093.6814 Y 4,180,811.7503 Sta 0+100.000

Course from RR1 to RR3 N 89° 35' 03.80" E Dist 128.3894

Point RR3 X 628,222.0674 Y 4,180,812.6816 Sta 0+228.389

Ending chain REED description

## KILMAR
## KILMARNOCH LANE ℄

Chain KILMAR contains:
KL1 KL3

Beginning chain KILMAR description

Point KL1 X 628,098.0090 Y 4,180,175.2790 Sta 0+100.000

Course from KL1 to KL3 N 89° 46' 25.37" E Dist 130.3991

Point KL3 X 628,228.4071 Y 4,180,175.7940 Sta 0+230.399

Ending chain KILMAR description

## MILITAR
## MILITARY DRIVE ℄

Chain MILITAR contains:
18 19 20 21

Beginning chain MILITAR description

Point 18 X 627,964.0974 Y 4,179,693.9741 Sta 0+000.000

Course from 18 to 19 N 89° 36' 37.62" E Dist 90.0000

Point 19 X 628,054.0953 Y 4,179,694.5860 Sta 0+090.000

Course from 19 to 20 S 87° 06' 38.22" E Dist 47.2585

Point 20 X 628,101.2937 Y 4,179,692.2038 Sta 0+137.258

Course from 20 to 21 S 89° 53' 52.35" E Dist 150.4693

Point 21 X 628,251.7628 Y 4,179,691.9356 Sta 0+287.728

Ending chain MILITAR description

## NTARMIL
## N. TURNAROUND @ MILITARY DRIVE

Chain NTARMIL contains:
705 CUR NTARMIL-1 706

Beginning chain NTARMIL description

Point 705 X 628,122.5299 Y 4,179,775.1885 Sta 0+100.000

Course from 705 to PC NTARMIL-1 S 4° 12' 12.99" E Dist 30.5188

Curve Data

Curve NTARMIL-1
Feature: DEFAULT
P.I. Station 0+333.018 X 628,139.6104 Y 4,179,542.7971
Delta = 172° 22' 18.66" (LT)
Tangent = 202.4995
Length = 40.6141
Radius = 13.5000
External = 189.4491
Long Chord = 26.9401
Mid. Ord. = 12.6020
P.C. Station 0+130.519 X 628,124.7669 Y 4,179,744.7519
P.T. Station 0+171.133 X 628,151.7065 Y 4,179,744.9350
C.C. X 628,138.2306 Y 4,179,745.7414
Back = S 4° 12' 12.99" E
Ahead = N 3° 25' 28.35" E
Chord Bear = N 89° 36' 37.68" E

Course from PT NTARMIL-1 to 706 N 3° 25' 28.35" E Dist 30.5149

Point 706 X 628,153.5292 Y 4,179,775.3955 Sta 0+201.648

Ending chain NTARMIL description

STATE OF TEXAS
JOEL K. DAVENPORT, JR.
79276
REGISTERED
PROFESSIONAL ENGINEER

Joel K. Davenport, Jr. 9/19/00
Joel K. Davenport, Jr. P.E. 79276 Date

©2000 Texas Department of Transportation

# HORIZONTAL ALIGNMENT DATA

SHEET 6 OF 8

| FED. RD. DIV. NO. | FEDERAL AID PROJECT NO. | | SHEET NO. |
|---|---|---|---|
| 6 | NH 2000(704),etc. | | 169 |
| STATE | DIST. | COUNTY | |
| TEXAS | SAT | BEXAR | |
| CONT. | SECT. | JOB | HIGHWAY NO. |
| 2452 | 01 | 036,etc. | LP 1604 |

lp1604fm471-90\alignCURVDATA019.dgn

Plotted on: 01/26/2004

## MISTY
## MISTY WOODS ℄

Chain MISTY contains:
TO CUR MISTY-1 CUR MISTY-2

Beginning chain MISTY description

Point 10 X 628,145.1775 Y 4,182,228.2774 Sta 0+000.000

Course from 10 to PC MISTY-1 N 87° 58' 13.26" W Dist 23.2645

Curve Data

Curve MISTY-1
P.I. Station 0+039.663 X 628,105.5392 Y 4,182,229.6822
Delta = 56° 33' 42.75" (RT)
Tangent = 16.3987
Length = 30.0896
Radius = 30.4800
External = 4.1314
Long Chord = 28.8826
Mid. Ord. = 3.6382
P.C. Station 0+023.264 X 628,121.9276 Y 4,182,229.1014
P.T. Station 0+053.354 X 628,096.9932 Y 4,182,243.6780
C.C. X 628,123.0071 Y 4,182,259.5622
Back = N 87° 58' 13.26" W
Ahead = N 31° 24' 30.51" W
Chord Bear = N 59° 41' 21.88" W

Curve Data

Curve MISTY-2
P.I. Station 0+069.007 X 628,088.8361 Y 4,182,257.0371
Delta = 54° 21' 51.84" (LT)
Tangent = 15.6526
Length = 28.9206
Radius = 30.4800
External = 3.7842
Long Chord = 27.8478
Mid. Ord. = 3.3663
P.C. Station 0+053.354 X 628,096.9932 Y 4,182,243.6780
P.T. Station 0+082.275 X 628,073.2260 Y 4,182,258.1909
C.C. X 628,070.9794 Y 4,182,227.7938
Back = N 31° 24' 30.51" W
Ahead = N 85° 46' 22.35" W
Chord Bear = N 58° 35' 26.43" W

Ending chain MISTY description

## ELLISON
## NORTH ELLISON DRIVE

Chain ELLISON contains:
NED1 NED3

Beginning chain ELLISON description

Point NED1 X 628,156.5750 Y 4,182,056.1595 Sta 0+100.000

Course from NED1 to NED3 S 88° 05' 02.38" E Dist 136.2998

Point NED3 X 628,292.7986 Y 4,182,051.6024 Sta 0+236.300

Ending chain ELLISON description

## WISE
## WISEMAN BLVD. ℄

Chain WISE contains:
WB1 WB3

Beginning chain WISE description

Point WB1 X 628,096.2830 Y 4,181,622.8648 Sta 0+100.000

Course from WB1 to WB3 S 88° 05' 14.93" E Dist 140.3506

Point WB3 X 628,236.5554 Y 4,181,618.1808 Sta 0+240.351

Ending chain WISE description

CHANGE ORDER NO. 64

-REVISED ALIGNMENT DATA

## NTARWIS
## N. TURNAROUND @ WISEMAN BLVD.

Chain NTARWIS contains:
701 CUR NTARWIS-1 702

Beginning chain NTARWIS description

Point 701 X 628,121.9116 Y 4,181,706.2840 Sta 0+100.000

Course from 701 to PC NTARWIS-1 S 1° 12' 05.73" E Dist 30.4909

Curve Data

Curve NTARWIS-1
Feature: DEFAULT
P.I. Station 0+379.257 X 628,127.7677 Y 4,181,427.0879
Delta = 174° 03' 09.33" (LT)
Tangent = 248.7666
Length = 39.2568
Radius = 12.9228
External = 236.1792
Long Chord = 25.8108
Mid. Ord. = 12.2524
P.C. Station 0+130.491 X 628,122.5510 Y 4,181,675.7998
P.T. Station 0+169.748 X 628,148.3495 Y 4,181,675.0017
C.C. X 628,135.4710 Y 4,181,676.0708
Back = S 1° 12' 05.73" E
Ahead = N 4° 44' 44.94" E
Chord Bear = S 88° 13' 40.39" E

Course from PT NTARWIS-1 to 702 N 4° 44' 44.94" E Dist 30.4597

Point 702 X 628,150.8696 Y 4,181,705.3569 Sta 0+200.207

Ending chain NTARWIS description

## STARWIS
## S. TURNAROUND @ WISEMAN BLVD.

Chain STARWIS contains:
730 CUR STARWIS-1

Beginning chain STARWIS description

Point 730 X 628,114.383 Y 4,181,540.212 Sta 0+100.000

Course from 730 to PC STARWIS-1 N 6° 25' 35.01" E Dist 28.987

Curve Data

Curve STARWIS-1
Feature: DEFAULT
Description: NO NAME TRIB
P.I. Station 0+412.918 X 628,149.408 Y 4,181,851.164
Delta = 174° 30' 56.13" (RT)
Tangent = 283.931
Length = 41.422
Radius = 13.599
External = 270.657
Long Chord = 27.168
Mid. Ord. = 12.949
P.C. Station 0+128.987 X 628,117.627 Y 4,181,569.017
P.T. Station 0+170.409 X 628,144.739 Y 4,181,567.271
C.C. X 628,131.141 Y 4,181,567.495
Back = N 6° 25' 35.65" E
Ahead = S 0° 56' 31.79" W
Chord Bear = S 86° 18' 56.28" E

Ending chain STARWIS description

## REED
## REED ROAD ℄

Chain REED contains:
RR1 RR3

Beginning chain REED description

Point RR1 X 628,093.6814 Y 4,180,811.7503 Sta 0+100.000

Course from RR1 to RR3 N 89° 35' 03.80" E Dist 128.3894

Point RR3 X 628,222.0674 Y 4,180,812.6816 Sta 0+228.389

Ending chain REED description

## KILMAR
## KILMARNOCH LANE ℄

Chain KILMAR contains:
KL1 KL3

Beginning chain KILMAR description

Point KL1 X 628,098.0090 Y 4,180,175.2790 Sta 0+100.000

Course from KL1 to KL3 N 89° 46' 25.37" E Dist 130.3991

Point KL3 X 628,228.4071 Y 4,180,175.7940 Sta 0+230.399

Ending chain KILMAR description

## MILITAR
## MILITARY DRIVE ℄

Chain MILITAR contains:
18 19 20 21

Beginning chain MILITAR description

Point 18 X 627,964.0974 Y 4,179,693.9741 Sta 0+000.000

Course from 18 to 19 N 89° 36' 37.62" E Dist 90.0000

Point 19 X 628,054.0953 Y 4,179,694.5860 Sta 0+090.000

Course from 19 to 20 S 87° 06' 38.22" E Dist 47.2585

Point 20 X 628,101.2937 Y 4,179,692.2038 Sta 0+137.258

Course from 20 to 21 S 89° 53' 52.35" E Dist 150.4693

Point 21 X 628,251.7628 Y 4,179,691.9356 Sta 0+287.728

Ending chain MILITAR description

## NTARMIL
## N. TURNAROUND @ MILITARY DRIVE

Chain NTARMIL contains:
751 CUR NTARMIL-2 706

Beginning chain NTARMIL description

Point 751 N 4,179,775.065 E 628,126.160 Sta 0+100.000

Course from 751 to PC NTARMIL-2 S 0° 20' 02.01" E Dist 30.219

Curve Data

Curve NTARMIL-2
Feature: DEFAULT
Description: NO NAME TRIB
P.I. Station 0+515.266 N 4,179,359.806 E 628,128.621
Delta = 176° 13' 46.94" (LT)
Tangent = 385.047
Length = 38.981
Radius = 12.673
External = 372.583
Long Chord = 25.333
Mid. Ord. = 12.257
P.C. Station 0+130.219 N 4,179,744.846 E 628,126.336
P.T. Station 0+169.200 N 4,179,744.163 E 628,151.660
C.C. N 4,179,744.922 E 628,139.010
Back = S 0° 20' 23.99" E
Ahead = N 3° 25' 49.08" E
Chord Bear = S 88° 27' 17.46" E

Course from PT NTARMIL-2 to 706 N 3° 25' 28.20" E Dist 31.288

Point 706 N 4,179,775.395 E 628,153.529 Sta 0+200.488

Ending chain NTARMIL description

555 EAST RAMSEY SAN ANTONIO TEXAS 78216 PHONE (210)375-9000 FAX (210)375-9010
PAPE-DAWSON ENGINEERS CIVIL & ENVIRONMENTAL
STATE OF TEXAS J. KENT O'BRIEN 64398 LICENSED PROFESSIONAL ENGINEER
J. KENT O'BRIEN P.E. 1/27/2004 DATE

CHANGE ORDER NO. 64 | REVISED SHEET

© 2000 Texas Department of Transportation

# HORIZONTAL ALIGNMENT DATA

SHEET 6 OF 8

| FED. RD. DIV. NO. | FEDERAL AID PROJECT NO. | | SHEET NO. |
|---|---|---|---|
| 6 | NH 2000(704), etc. | | 169A |
| STATE | DIST. | COUNTY | |
| TEXAS | SAT | BEXAR | |
| CONT. | SECT. | JOB | HIGHWAY NO. |
| 2452 | 01 | 036, etc. | LP 1604 |

Design Filename: p:\52\20\11\design\civil\plansheets\summaries\alignmentdata.dgn

lp1604fm471-90\alignCURVDATA019.dgn

## STARMIL
## S. TURNAROUND @ MILITARY DR.

Chain STARMIL contains:
707 CUR STARMIL-1 708

Beginning chain STARMIL description

Point 707 X 628,123.7266 Y 4,179,608.0245 Sta 0+100.000

Course from 707 to PC STARMIL-1 N 3° 25' 27.71" E Dist 30.5377

Curve Data

Curve STARMIL-1
P.I. Station = 0+332.579 X 628,137.6187 Y 4,179,840.1886
Delta = 172° 22' 18.93" (RT)
Tangent = 202.0416
Length = 40.5219
Radius = 13.4693
External = 189.0208
Long Chord = 26.8790
Mid. Ord. = 12.5734
P.C. Station = 0+130.538 X 628,125.5506 Y 4,179,638.5077
P.T. Station = 0+171.060 X 628,152.4289 Y 4,179,638.6905
C.C. X 628,138.9959 Y 4,179,637.7031
Back = N 3° 25' 27.71" E
Ahead = S 4° 12' 13.36" E
Chord Bear = N 89° 36' 37.17" E

Course from PT STARMIL-1 to 708 S 4° 12' 13.36" E Dist 30.5139

Point 708 X 628,154.6657 Y 4,179,608.2587 Sta 0+201.573

Ending chain STARMIL description

## WCOAK
## WEST CREEK OAKS ℄

Chain WCOAK contains:
WCO1 WCO3

Beginning chain WCOAK description

Point WCO1 X 628,131.0261 Y 4,179,089.6941 Sta 0+100.000

Course from WCO1 to WCO3 S 88° 48' 23.74" W Dist 155.8238

Point WCO3 X 627,975.2361 Y 4,179,086.4487 Sta 0+255.824

Ending chain WCOAK description

## NTARPOT
## N. TURNAROUND @ POTRANCO / FM 1957

Chain NTARPOT contains:
709 CUR NTARPOT-1 710

Beginning chain NTARPOT description

Point 709 X 628,136.4949 Y 4,178,405.0226 Sta 0+100.000

Course from 709 to PC NTARPOT-1 S 4° 00' 43.49" E Dist 30.6501

Curve Data

Curve NTARPOT-1
P.I. Station = 0+392.756 X 628,156.9781 Y 4,178,112.9840
Delta = 172° 22' 18.68" (LT)
Tangent = 262.1059
Length = 52.5689
Radius = 17.4737
External = 245.2140
Long Chord = 34.8700
Mid. Ord. = 16.3114
P.C. Station = 0+130.650 X 628,138.6394 Y 4,178,374.4476
P.T. Station = 0+183.219 X 628,173.5092 Y 4,178,374.5681
C.C. X 628,156.0703 Y 4,178,375.6702
Back = S 4° 00' 43.49" E
Ahead = N 3° 36' 57.83" E
Chord Bear = N 89° 48' 07.17" E

Course from PT NTARPOT-1 to 710 N 3° 36' 57.83" E Dist 31.2511

Point 710 X 628,175.4803 Y 4,178,405.7571 Sta 0+214.470

Ending chain NTARPOT description

## FM1957
## POTRANCO ROAD / FM 1957 ℄

Chain FM1957 contains:
107 CUR FM1957-1 108

Beginning chain FM1957 description

Point 107 X 627,908.3999 Y 4,178,272.5366 Sta 20+000.000

Course from 107 to PC FM1957-1 N 73° 31' 16.36" E Dist 58.4405

Curve Data

Curve FM1957-1
P.I. Station = 20+170.000 X 628,071.4174 Y 4,178,320.7589
Delta = 15° 51' 50.87" (RT)
Tangent = 111.5597
Length = 221.6922
Radius = 800.6760
External = 7.7346
Long Chord = 220.9847
Mid. Ord. = 7.6606
P.C. Station = 20+058.441 X 627,964.4400 Y 4,178,289.1139
P.T. Station = 20+280.133 X 628,182.9707 Y 4,178,321.9557
C.C. X 628,191.5600 Y 4,177,521.3258
Back = N 73° 31' 16.36" E
Ahead = N 89° 23' 07.22" E
Chord Bear = N 81° 27' 11.79" E

Course from PT FM1957-1 to 108 N 89° 23' 07.22" E Dist 180.8220

Point 108 X 628,363.7823 Y 4,178,323.8955 Sta 20+460.955

Ending chain FM1957 description

## STARPOT
## S. TURNAROUND @ POTRANCO / FM 1957

Chain STARPOT contains:
711 CUR STARPOT-1 712

Beginning chain STARPOT description

Point 711 X 628,137.0702 Y 4,178,238.5665 Sta 0+100.000

Course from 711 to PC STARPOT-1 N 3° 36' 57.68" E Dist 30.2652

Curve Data

Curve STARPOT-1
P.I. Station = 0+392.673 X 628,155.5290 Y 4,178,530.6563
Delta = 172° 22' 18.54" (RT)
Tangent = 262.4074
Length = 52.6296
Radius = 17.4939
External = 245.4960
Long Chord = 34.9103
Mid. Ord. = 16.3302
P.C. Station = 0+130.265 X 628,138.9790 Y 4,178,268.7714
P.T. Station = 0+182.895 X 628,173.8891 Y 4,178,268.8920
C.C. X 628,156.4381 Y 4,178,267.6680
Back = N 3° 36' 57.68" E
Ahead = S 4° 00' 43.78" E
Chord Bear = N 89° 48' 06.95" E

Course from PT STARPOT-1 to 712 S 4° 00' 43.78" E Dist 31.0308

Point 712 X 628,176.0603 Y 4,178,237.9373 Sta 0+213.926

Ending chain STARPOT description

## NTARMAR
## N. TURNAROUND @ MARBACH ROAD

Chain NTARMAR contains:
721 CUR NTARMAR-1 722

Beginning chain NTARMAR description

Point 721 X 628,535.2800 Y 4,174,812.2506 Sta 0+100.000

Course from 721 to PC NTARMAR-1 S 33° 51' 13.92" E Dist 37.8546

Curve Data

Curve NTARMAR-1
P.I. Station = 0+257.854 X 628,623.2170 Y 4,174,681.1586
Delta = 172° 22' 18.63" (LT)
Tangent = 119.9999
Length = 24.0676
Radius = 8.0000
External = 112.2662
Long Chord = 15.9646
Mid. Ord. = 7.4678
P.C. Station = 0+137.855 X 628,556.3679 Y 4,174,780.8138
P.T. Station = 0+161.922 X 628,570.1880 Y 4,174,788.8057
C.C. X 628,563.0115 Y 4,174,785.2704
Back = S 33° 51' 13.92" E
Ahead = N 26° 13' 32.55" W
Chord Bear = N 59° 57' 36.77" E

Course from PT NTARMAR-1 to 722 N 26° 13' 32.55" W Dist 37.8498

Point 722 X 628,553.4619 Y 4,174,822.7592 Sta 0+199.772

Ending chain NTARMAR description

## MAR
## MARBACH ROAD ℄

Chain MAR contains:
890 CUR MAAR1

Beginning chain MAR description

Point 890 X 628,562.0760 Y 4,174,722.3652 Sta 0+100.000

Course from 890 to PC MAAR1 N 59° 57' 35.24" E Dist 63.7730

Curve Data

Curve MAAR1
P.I. Station = 0+191.658 X 628,641.4223 Y 4,174,768.2500
Delta = 14° 34' 43.50" (LT)
Tangent = 27.8854
Length = 55.4695
Radius = 218.0000
External = 1.7762
Long Chord = 55.3200
Mid. Ord. = 1.7619
P.C. Station = 0+163.773 X 628,617.2826 Y 4,174,754.2904
P.T. Station = 0+219.242 X 628,661.2709 Y 4,174,787.8364
C.C. X 628,508.1502 Y 4,174,943.0074
Back = N 59° 57' 35.24" E
Ahead = N 45° 22' 51.74" E
Chord Bear = N 52° 40' 13.49" E

Ending chain MAR description

STATE OF TEXAS
JOEL K. DAVENPORT, JR.
79276
REGISTERED PROFESSIONAL ENGINEER

Joel K. Davenport, Jr. P.E. 79276

9/19/00
Date

Texas Department of Transportation

# HORIZONTAL ALIGNMENT DATA

SHEET 7 OF 8

| FED. RD. DIV. NO. | FEDERAL AID PROJECT NO. | | SHEET NO. |
|---|---|---|---|
| 6 | NH 2000(704), etc. | | 170 |
| STATE | DIST. | COUNTY | |
| TEXAS | SAT | BEXAR | |
| CONT. | SECT. | JOB | HIGHWAY NO. |
| 2452 | 01 | 036, etc. | LP 1604 |

lp1604fm471-90\alignCURVDATA019.dgn

Plotted on: 01/26/2004

Design Filename: p:\52\20\11\design\civil\plansheets\summaries\valigndata.dgn

lp1604fm471-90\alignCURVDATA019.dgn

## STARMIL
### S. TURNAROUND @ MILITARY DR.

Chain STARMIL contains:
707 CUR STARMIL-2

Beginning chain STARMIL description

Point 707 X 628,123.727 Y 4,179,608.025 Sta 0+100.000

Course from 707 to PC STARMIL-2 N 3° 25' 27.57" E Dist 31.275

Curve Data

Curve STARMIL-2
Feature: DEFAULT
Description: NO NAME TRIB

| | | | | | |
|---|---|---|---|---|---|
| P.I. Station | 0+528.576 | X | 628,148.175 | Y | 4,180,035.903 |
| Delta = | 176° 21' 17.19" (RT) | | | | |
| Tangent = | 397.301 | | | | |
| Length = | 38.914 | | | | |
| Radius = | 12.643 | | | | |
| External = | 384.860 | | | | |
| Long Chord = | 25.273 | | | | |
| Mid. Ord. = | 12.241 | | | | |
| P.C. Station | 0+131.275 | X | 628,125.595 | Y | 4,179,639.243 |
| P.T. Station | 0+170.189 | X | 628,150.859 | Y | 4,179,638.610 |
| C.C. | | X | 628,138.217 | Y | 4,179,638.525 |
| Back = N | 3° 15' 29.07" E | | | | |
| Ahead = S | 0° 23' 13.74" E | | | | |
| Chord Bear = S | 88° 33' 52.34" E | | | | |

Ending chain STARMIL description

## WCOAK
### WEST CREEK OAKS ℄

Chain WCOAK contains:
WCO1 WCO3

Beginning chain WCOAK description

Point WCO1 X 628,131.0261 Y 4,179,089.6941 Sta 0+100.000

Course from WCO1 to WCO3 S 88° 48' 23.74" W Dist 155.8238

Point WCO3 X 627,975.2361 Y 4,179,086.4487 Sta 0+255.824

Ending chain WCOAK description

## NTARPOT
### N. TURNAROUND @ POTRANCO / FM 1957

Chain NTARPOT contains:
CUR NTARPOT-1 710

Beginning chain NTARPOT description

Curve Data

Curve NTARPOT-1
Feature: DEFAULT
Description: NO NAME TRIB

| | | | | | |
|---|---|---|---|---|---|
| P.I. Station | 0+363.969 | N | 4,178,111.082 | E | 628,156.859 |
| Delta = | 172° 45' 40.51" (LT) | | | | |
| Tangent = | 263.969 | | | | |
| Length = | 50.346 | | | | |
| Radius = | 16.697 | | | | |
| External = | 247.799 | | | | |
| Long Chord = | 33.328 | | | | |
| Mid. Ord. = | 15.643 | | | | |
| P.C. Station | 0+100.000 | N | 4,178,374.523 | E | 628,140.179 |
| P.T. Station | 0+150.346 | N | 4,178,374.525 | E | 628,173.507 |
| C.C. | | N | 4,178,375.578 | E | 628,156.843 |
| Back = S | 3° 37' 22.51" E | | | | |
| Ahead = N | 3° 36' 56.98" E | | | | |
| Chord Bear = N | 89° 59' 47.24" E | | | | |

Course from PT NTARPOT-1 to 710 N 3° 36' 56.98" E Dist 31.294

Point 710 N 4,178,405.757 E 628,175.480 Sta 0+181.640

Ending chain NTARPOT description

## FM1957
### POTRANCO ROAD / FM 1957 ℄

Chain FM1957 contains:
107 CUR FM1957-1 108

Beginning chain FM1957 description

Point 107 X 627,908.3999 Y 4,178,272.5366 Sta 20+000.000

Course from 107 to PC FM1957-1 N 73° 31' 16.36" E Dist 58.4405

Curve Data

Curve FM1957-1

| | | | | | |
|---|---|---|---|---|---|
| P.I. Station | 20+170.000 | X | 628,071.4174 | Y | 4,178,320.7589 |
| Delta = | 15° 51' 50.87" (RT) | | | | |
| Tangent = | 111.5597 | | | | |
| Length = | 221.6922 | | | | |
| Radius = | 800.6760 | | | | |
| External = | 7.7346 | | | | |
| Long Chord = | 220.9847 | | | | |
| Mid. Ord. = | 7.6606 | | | | |
| P.C. Station | 20+058.441 | X | 627,964.4400 | Y | 4,178,289.1139 |
| P.T. Station | 20+280.133 | X | 628,182.9707 | Y | 4,178,321.9557 |
| C.C. | | X | 628,191.5600 | Y | 4,177,521.3258 |
| Back = N | 73° 31' 16.36" E | | | | |
| Ahead = N | 89° 23' 07.22" E | | | | |
| Chord Bear = N | 81° 27' 11.79" E | | | | |

Course from PT FM1957-1 to 108 N 89° 23' 07.22" E Dist 180.8220

Point 108 X 628,363.7823 Y 4,178,323.8955 Sta 20+460.955

Ending chain FM1957 description

## STARPOT
### S. TURNAROUND @ POTRANCO / FM 1957

Chain STARPOT contains:
711 CUR STARPOT-1

Beginning chain STARPOT description

Point 711 N 4,178,238.530 E 628,137.068 Sta 0+100.000

Course from 711 to PC STARPOT-1 N 3° 36' 43.56" E Dist 30.039

Curve Data

Curve STARPOT-1
Feature: DEFAULT
Description: NO NAME TRIB

| | | | | | |
|---|---|---|---|---|---|
| P.I. Station | 0+696.165 | N | 4,178,833.804 | E | 628,169.634 |
| Delta = | 176° 38' 55.77" (RT) | | | | |
| Tangent = | 566.126 | | | | |
| Length = | 51.059 | | | | |
| Radius = | 16.561 | | | | |
| External = | 549.807 | | | | |
| Long Chord = | 33.107 | | | | |
| Mid. Ord. = | 16.077 | | | | |
| P.C. Station | 0+130.039 | N | 4,178,268.510 | E | 628,138.960 |
| P.T. Station | 0+181.098 | N | 4,178,267.683 | E | 628,172.058 |
| C.C. | | N | 4,178,267.612 | E | 628,155.497 |
| Back = N | 3° 06' 21.26" E | | | | |
| Ahead = S | 0° 14' 42.97" E | | | | |
| Chord Bear = S | 88° 34' 10.85" E | | | | |

Ending chain STARPOT description

## NTARMAR
### N. TURNAROUND @ MARBACH ROAD

Chain NTARMAR contains:
721 CUR NTARMAR-1 722

Beginning chain NTARMAR description

Point 721 X 628,535.2800 Y 4,174,812.2506 Sta 0+100.000

Course from 721 to PC NTARMAR-1 S 33° 51' 13.92" E Dist 37.8546

Curve Data

Curve NTARMAR-1

| | | | | | |
|---|---|---|---|---|---|
| P.I. Station | 0+257.854 | X | 628,623.2170 | Y | 4,174,681.1586 |
| Delta = | 172° 22' 18.63" (LT) | | | | |
| Tangent = | 119.9999 | | | | |
| Length = | 24.0676 | | | | |
| Radius = | 8.0000 | | | | |
| External = | 112.2662 | | | | |
| Long Chord = | 15.9646 | | | | |
| Mid. Ord. = | 7.4678 | | | | |
| P.C. Station | 0+137.855 | X | 628,556.3679 | Y | 4,174,780.8138 |
| P.T. Station | 0+161.922 | X | 628,570.1880 | Y | 4,174,788.8057 |
| C.C. | | X | 628,563.0115 | Y | 4,174,785.2704 |
| Back = S | 33° 51' 13.92" E | | | | |
| Ahead = N | 26° 13' 32.55" W | | | | |
| Chord Bear = N | 59° 57' 36.77" E | | | | |

Course from PT NTARMAR-1 to 722 N 26° 13' 32.55" W Dist 37.8498

Point 722 X 628,553.4619 Y 4,174,822.7592 Sta 0+199.772

Ending chain NTARMAR description

## MAR
### MARBACH ROAD ℄

Chain MAR contains:
890 CUR MAAR1

Beginning chain MAR description

Point 890 X 628,562.0760 Y 4,174,722.3652 Sta 0+100.000

Course from 890 to PC MAAR1 N 59° 57' 35.24" E Dist 63.7730

Curve Data

Curve MAAR1

| | | | | | |
|---|---|---|---|---|---|
| P.I. Station | 0+191.658 | X | 628,641.4223 | Y | 4,174,768.2500 |
| Delta = | 14° 34' 43.50" (LT) | | | | |
| Tangent = | 27.8854 | | | | |
| Length = | 55.4695 | | | | |
| Radius = | 218.0000 | | | | |
| External = | 1.7762 | | | | |
| Long Chord = | 55.3200 | | | | |
| Mid. Ord. = | 1.7619 | | | | |
| P.C. Station | 0+163.773 | X | 628,617.2826 | Y | 4,174,754.2904 |
| P.T. Station | 0+219.242 | X | 628,661.2709 | Y | 4,174,787.8364 |
| C.C. | | X | 628,508.1502 | Y | 4,174,943.0074 |
| Back = N | 59° 57' 35.24" E | | | | |
| Ahead = N | 45° 22' 51.74" E | | | | |
| Chord Bear = N | 52° 40' 13.49" E | | | | |

Ending chain MAR description

CHANGE ORDER NO. 64

-REVISED ALIGNMENT DATA

CHANGE ORDER NO. 64 | REVISED SHEET

555 EAST RAMSEY SAN ANTONIO TEXAS 78216 PHONE (210)375-9000 FAX (210)375-9010
PAPE-DAWSON ENGINEERS CIVIL & ENVIRONMENTAL

STATE OF TEXAS J. KENT O'BRIEN 64398 LICENSED PROFESSIONAL ENGINEER

J. KENT O'BRIEN P.E. 1/27/2004 DATE

©2000 Texas Department of Transportation

# HORIZONTAL ALIGNMENT DATA

SHEET 7 OF 8

| FED.RD. DIV.NO. | FEDERAL AID PROJECT NO. | SHEET NO. |
|---|---|---|
| 6 | NH 2000(704), etc. | 170A |
| STATE | DIST. | COUNTY |
| TEXAS | SAT | BEXAR |
| CONT. | SECT. | JOB / HIGHWAY NO. |
| 2452 | 01 | 036, etc. / LP 1604 |

## STARMIL
## S. TURNAROUND @ MILITARY DR.

Chain STARMIL contains:
707 CUR STARMIL-1 708

Beginning chain STARMIL description

Point 707 X 628,123.7266 Y 4,179,608.0245 Sta 0+100.000

Course from 707 to PC STARMIL-1 N 3° 25' 27.71" E Dist 30.5377

Curve Data

| | | | | | |
|---|---|---|---|---|---|
| Curve STARMIL-1 | | | | | |
| P.I. Station | 0+332.579 | X | 628,137.6187 | Y | 4,179,840.1886 |
| Delta = | 172° 22' 18.93" | (RT) | | | |
| Tangent = | 202.0416 | | | | |
| Length = | 40.5219 | | | | |
| Radius = | 13.4693 | | | | |
| External = | 189.0208 | | | | |
| Long Chord = | 26.8790 | | | | |
| Mid. Ord. = | 12.5734 | | | | |
| P.C. Station | 0+130.538 | X | 628,125.5506 | Y | 4,179,638.5077 |
| P.T. Station | 0+171.060 | X | 628,152.4289 | Y | 4,179,638.6905 |
| C.C. | | X | 628,138.9959 | Y | 4,179,637.7031 |
| Back = N | 3° 25' 27.71" E | | | | |
| Ahead = S | 4° 12' 13.36" E | | | | |
| Chord Bear = N | 89° 36' 37.17" E | | | | |

Course from PT STARMIL-1 to 708 S 4° 12' 13.36" E Dist 30.5139

Point 708 X 628,154.6657 Y 4,179,608.2587 Sta 0+201.573

Ending chain STARMIL description

## WCOAK
## WEST CREEK OAKS ℄

Chain WCOAK contains:
WC01 WC03

Beginning chain WCOAK description

Point WC01 X 628,131.0261 Y 4,179,089.6941 Sta 0+100.000

Course from WC01 to WC03 S 88° 48' 23.74" W Dist 155.8238

Point WC03 X 627,975.2361 Y 4,179,086.4487 Sta 0+255.824

Ending chain WCOAK description

## NTARPOT
## N. TURNAROUND @ POTRANCO / FM 1957

Chain NTARPOT contains:
709 CUR NTARPOT-1 710

Beginning chain NTARPOT description

Point 709 X 628,136.4949 Y 4,178,405.0226 Sta 0+100.000

Course from 709 to PC NTARPOT-1 S 4° 00' 43.49" E Dist 30.6501

Curve Data

| | | | | | |
|---|---|---|---|---|---|
| Curve NTARPOT-1 | | | | | |
| P.I. Station | 0+392.756 | X | 628,156.9781 | Y | 4,178,112.9840 |
| Delta = | 172° 22' 18.68" | (LT) | | | |
| Tangent = | 262.1059 | | | | |
| Length = | 52.5689 | | | | |
| Radius = | 17.4737 | | | | |
| External = | 245.2140 | | | | |
| Long Chord = | 34.8700 | | | | |
| Mid. Ord. = | 16.3114 | | | | |
| P.C. Station | 0+130.650 | X | 628,138.6394 | Y | 4,178,374.4476 |
| P.T. Station | 0+183.219 | X | 628,173.5092 | Y | 4,178,374.5681 |
| C.C. | | X | 628,156.0703 | Y | 4,178,375.6702 |
| Back = S | 4° 00' 43.49" E | | | | |
| Ahead = N | 3° 36' 57.83" E | | | | |
| Chord Bear = N | 89° 48' 07.17" E | | | | |

Course from PT NTARPOT-1 to 710 N 3° 36' 57.83" E Dist 31.2511

Point 710 X 628,175.4803 Y 4,178,405.7571 Sta 0+214.470

Ending chain NTARPOT description

## FM1957
## POTRANCO ROAD / FM 1957 ℄

Chain FM1957 contains:
107 CUR FM1957-1 108

Beginning chain FM1957 description

Point 107 X 627,908.3999 Y 4,178,272.5366 Sta 20+000.000

Course from 107 to PC FM1957-1 N 73° 31' 16.36" E Dist 58.4405

Curve Data

| | | | | | |
|---|---|---|---|---|---|
| Curve FM1957-1 | | | | | |
| P.I. Station | 20+170.000 | X | 628,071.4174 | Y | 4,178,320.7589 |
| Delta = | 15° 51' 50.87" | (RT) | | | |
| Tangent = | 111.5597 | | | | |
| Length = | 221.6922 | | | | |
| Radius = | 800.6760 | | | | |
| External = | 7.7346 | | | | |
| Long Chord = | 220.9847 | | | | |
| Mid. Ord. = | 7.6606 | | | | |
| P.C. Station | 20+058.441 | X | 627,964.4400 | Y | 4,178,289.1139 |
| P.T. Station | 20+280.133 | X | 628,182.9707 | Y | 4,178,321.9557 |
| C.C. | | X | 628,191.5600 | Y | 4,177,521.3258 |
| Back = N | 73° 31' 16.36" E | | | | |
| Ahead = N | 89° 23' 07.22" E | | | | |
| Chord Bear = N | 81° 27' 11.79" E | | | | |

Course from PT FM1957-1 to 108 N 89° 23' 07.22" E Dist 180.8220

Point 108 X 628,363.7823 Y 4,178,323.8955 Sta 20+460.955

Ending chain FM1957 description

## STARPOT
## S. TURNAROUND @ POTRANCO / FM 1957

Chain STARPOT contains:
711 CUR STARPOT-1 712

Beginning chain STARPOT description

Point 711 X 628,137.0702 Y 4,178,238.5665 Sta 0+100.000

Course from 711 to PC STARPOT-1 N 3° 36' 57.68" E Dist 30.2652

Curve Data

| | | | | | |
|---|---|---|---|---|---|
| Curve STARPOT-1 | | | | | |
| P.I. Station | 0+392.673 | X | 628,155.5290 | Y | 4,178,530.6563 |
| Delta = | 172° 22' 18.54" | (RT) | | | |
| Tangent = | 262.4074 | | | | |
| Length = | 52.6296 | | | | |
| Radius = | 17.4939 | | | | |
| External = | 245.4960 | | | | |
| Long Chord = | 34.9103 | | | | |
| Mid. Ord. = | 16.3302 | | | | |
| P.C. Station | 0+130.265 | X | 628,138.9790 | Y | 4,178,268.7714 |
| P.T. Station | 0+182.895 | X | 628,173.8891 | Y | 4,178,268.8920 |
| C.C. | | X | 628,156.4381 | Y | 4,178,267.6680 |
| Back = N | 3° 36' 57.68" E | | | | |
| Ahead = S | 4° 00' 43.78" E | | | | |
| Chord Bear = N | 89° 48' 06.95" E | | | | |

Course from PT STARPOT-1 to 712 S 4° 00' 43.78" E Dist 31.0308

Point 712 X 628,176.0603 Y 4,178,237.9373 Sta 0+213.926

Ending chain STARPOT description

## DCTRAIL
## DODGE CITY TRAIL ℄

Chain DCTRAIL contains:
DCTRAIL1 CUR DCTRAIL DCTRAIL3

Beginning chain DCTRAIL description

Point DCTRAIL X 628,312.6547 Y 4,175,247.9980 Sta 0+000.000

Course from DCTRAIL1 to PC DCTRAIL S 75° 48' 06.59" W Dist 65.0051

Curve Data

| | | | | | |
|---|---|---|---|---|---|
| Curve DCTRAIL | | | | | |
| P.I. Station | 0+077.485 | X | 628,237.5364 | Y | 4,175,228.9927 |
| Delta = | 14° 13' 39.52" | (RT) | | | |
| Tangent = | 12.4802 | | | | |
| Length = | 24.8319 | | | | |
| Radius = | 100.0000 | | | | |
| External = | 0.7758 | | | | |
| Long Chord = | 24.7682 | | | | |
| Mid. Ord. = | 0.7698 | | | | |
| P.C. Station | 0+065.005 | X | 628,249.6353 | Y | 4,175,232.0538 |
| P.T. Station | 0+089.837 | X | 628,225.0562 | Y | 4,175,228.9991 |
| C.C. | | X | 628,225.1077 | Y | 4,175,328.9991 |
| Back = S | 75° 48' 06.59" W | | | | |
| Ahead = N | 89° 58' 13.89" W | | | | |
| Chord Bear = S | 82° 54' 56.35" W | | | | |

Course from PT DCTRAIL to DCTRAIL3 N 89° 58' 13.89" W Dist 95.7960

Point DCTRAIL X 628,129.2603 Y 4,175,229.0484 Sta 0+185.633

Ending chain DCTRAIL description

## NTARMAR
## N. TURNAROUND @ MARBACH ROAD

Chain NTARMAR contains:
721 CUR NTARMAR-1 722

Beginning chain NTARMAR description

Point 721 X 628,535.2800 Y 4,174,812.2506 Sta 0+100.000

Course from 721 to PC NTARMAR-1 S 33° 51' 13.92" E Dist 37.8546

Curve Data

| | | | | | |
|---|---|---|---|---|---|
| Curve NTARMAR-1 | | | | | |
| P.I. Station | 0+257.854 | X | 628,623.2170 | Y | 4,174,681.1586 |
| Delta = | 172° 22' 18.63" | (LT) | | | |
| Tangent = | 119.9999 | | | | |
| Length = | 24.0676 | | | | |
| Radius = | 8.0000 | | | | |
| External = | 112.2662 | | | | |
| Long Chord = | 15.9646 | | | | |
| Mid. Ord. = | 7.4678 | | | | |
| P.C. Station | 0+137.855 | X | 628,556.3679 | Y | 4,174,780.8138 |
| P.T. Station | 0+161.922 | X | 628,570.1880 | Y | 4,174,788.8057 |
| C.C. | | X | 628,563.0115 | Y | 4,174,785.2704 |
| Back = S | 33° 51' 13.92" E | | | | |
| Ahead = N | 26° 13' 32.55" W | | | | |
| Chord Bear = N | 59° 57' 36.77" E | | | | |

Course from PT NTARMAR-1 to 722 N 26° 13' 32.55" W Dist 37.8498

Point 722 X 628,553.4619 Y 4,174,822.7592 Sta 0+199.772

Ending chain NTARMAR description

## MAR
## MARBACH ROAD ℄

Chain MAR contains:
890 CUR MAAR1

Beginning chain MAR description

Point 890 X 628,562.0760 Y 4,174,722.3652 Sta 0+100.000

Course from 890 to PC MAAR1 N 59° 57' 35.24" E Dist 63.7730

Curve Data

| | | | | | |
|---|---|---|---|---|---|
| Curve MAAR1 | | | | | |
| P.I. Station | 0+191.658 | X | 628,641.4223 | Y | 4,174,768.2500 |
| Delta = | 14° 34' 43.50" | (LT) | | | |
| Tangent = | 27.8854 | | | | |
| Length = | 55.4695 | | | | |
| Radius = | 218.0000 | | | | |
| External = | 1.7762 | | | | |
| Long Chord = | 55.3200 | | | | |
| Mid. Ord. = | 1.7619 | | | | |
| P.C. Station | 0+163.773 | X | 628,617.2826 | Y | 4,174,754.2904 |
| P.T. Station | 0+219.242 | X | 628,661.2709 | Y | 4,174,787.8364 |
| C.C. | | X | 628,508.1502 | Y | 4,174,943.0074 |
| Back = N | 59° 57' 35.24" E | | | | |
| Ahead = N | 45° 22' 51.74" E | | | | |
| Chord Bear = N | 52° 40' 13.49" E | | | | |

Ending chain MAR description

CHANGE ORDER NO. 129

-ADDED NEW DODGE CITY TRAIL ALIGNMENT DATA.

STATE OF TEXAS
FITZGERALDO G. SANCHEZ
76084
LICENSED PROFESSIONAL ENGINEER

Fitzgeraldo G. Sanchez 05-23-06
Fitzgeraldo G. Sanchez, P.E. Date

CHANGE ORDER 129

REVISED SHEET

©2000 Texas Department of Transportation

HORIZONTAL ALIGNMENT DATA

SHEET 7 OF 8

| FED. RD. DIV. NO. | FEDERAL AID PROJECT NO. | | SHEET NO. |
|---|---|---|---|
| 6 | NH 2000(704), etc. | | 170 AA |
| STATE | DIST. | COUNTY | |
| TEXAS | SAT | BEXAR | |
| CONT. | SECT. | JOB | HIGHWAY NO. |
| 2452 | 01 | 036, etc. | LP 1604 |

1-24-06

lp1604fm471-90\alignCURVDATA019.dgn

## STARMAR
## S. TURNAROUND ● MARBACH ROAD

Chain STARMAR contains:
723 CUR STARMAR-1 724

Beginning chain STARMAR description

Point 723 X 628,626.6283 Y 4,174,654.2840 Sta 0+100.000

Course from 723 to PC STARMAR-1 N 26° 13' 32.63" W Dist 37.8547

| | | Curve Data |
|---|---|---|
| Curve STARMAR-1 | | |
| P.I. Station | 0+257.855 | X 628,556.8708 Y 4,174,795.8895 |
| Delta = | 172° 22' 18.74" | (RT) |
| Tangent = | 120.0004 | |
| Length = | 24.0677 | |
| Radius = | 8.0000 | |
| External = | 112.2667 | |
| Long Chord = | 15.9646 | |
| Mid. Ord. = | 7.4678 | |
| P.C. Station | 0+137.855 | X 628,609.9000 Y 4,174,688.2419 |
| P.T. Station | 0+161.922 | X 628,623.7201 Y 4,174,696.2338 |
| C.C. | | X 628,617.0765 Y 4,174,691.7772 |
| Back = | N 26° 13' 32.63" W | |
| Ahead = | S 33° 51' 13.89" E | |
| Chord Bear = | N 59° 57' 36.74" E | |

Course from PT STARMAR-1 to 724 S 33° 51' 13.89" E Dist 37.8494

Point 724 X 628,644.8052 Y 4,174,664.8013 Sta 0+199.772

Ending chain STARMAR description

## BIGMESA
## BIGMESA DRIVE ℄

Chain BIGMESA contains:
BMD1 BMD2

Beginning chain BIGMESA description

Point BMD1 X 628,962.8535 Y 4,173,861.5146 Sta 0+099.785

Course from BMD1 to BMD2 N 83° 53' 40.28" E Dist 151.8456

Point BMD2 X 629,113.8378 Y 4,173,877.6648 Sta 0+251.631

Ending chain BIGMESA description

## NBEX3
## N.B. TEMP. EXIT RAMP S. OF BIGMESA DR.

Chain NBEX3 contains:
CUR TC-T-1 CUR TC-T-2

Beginning chain NBEX3 description

| | | Curve Data |
|---|---|---|
| Curve TC-T-1 | | |
| P.I. Station | 0+163.613 | X 629,065.0166 Y 4,173,406.9351 |
| Delta = | 14° 30' 04.26" | (RT) |
| Tangent = | 63.6133 | |
| Length = | 126.5467 | |
| Radius = | 500.0000 | |
| External = | 4.0304 | |
| Long Chord = | 126.2092 | |
| Mid. Ord. = | 3.9982 | |
| P.C. Station | 0+100.000 | X 629,051.1461 Y 4,173,469.0178 |
| P.T. Station | 0+226.547 | X 629,062.8997 Y 4,173,343.3571 |
| C.C. | | X 628,563.1766 Y 4,173,359.9959 |
| Back = | S 12° 35' 39.00" E | |
| Ahead = | S 1° 54' 25.26" W | |
| Chord Bear = | S 5° 20' 36.87" E | |

Course from PT TC-T-1 to PC TC-T-2 S 1° 54' 25.26" W Dist 159.3243

| | | Curve Data |
|---|---|---|
| Curve TC-T-2 | | |
| P.I. Station | 0+445.653 | X 629,055.6084 Y 4,173,124.3726 |
| Delta = | 7° 57' 10.31" | (LT) |
| Tangent = | 59.7816 | |
| Length = | 119.3711 | |
| Radius = | 860.0000 | |
| External = | 2.0753 | |
| Long Chord = | 119.2753 | |
| Mid. Ord. = | 2.0703 | |
| P.C. Station | 0+385.871 | X 629,057.5978 Y 4,173,184.1211 |
| P.T. Station | 0+505.242 | X 629,061.9048 Y 4,173,064.9236 |
| C.C. | | X 629,917.1214 Y 4,173,155.5024 |
| Back = | S 1° 54' 25.26" W | |
| Ahead = | S 6° 02' 45.05" E | |
| Chord Bear = | S 2° 04' 09.90" E | |

Ending chain NBEX3 description

STATE OF TEXAS
JOEL K. DAVENPORT, JR.
79276
REGISTERED PROFESSIONAL ENGINEER

Joel K Davenport, Jr. 9/19/00
Joel K. Davenport, Jr. P.E. 79276 Date

©2000 Texas Department of Transportation

# HORIZONTAL ALIGNMENT DATA

SHEET 8 OF 8

| FED. RD. DIV. NO. | FEDERAL AID PROJECT NO. | | SHEET NO. |
|---|---|---|---|
| 6 | NH 2000(704), etc. | | 171 |
| STATE | DIST. | COUNTY | |
| TEXAS | SAT | BEXAR | |
| CONT. | SECT. | JOB | HIGHWAY NO. |
| 2452 | 01 | 036, etc. | LP 1604 |

lp1604fm471-90\alignCURVDATA019.dgn

Plotted on: 8/25/2005
Design Filename: T:\AO\Design\lp1604fm471-90\PD_Phase2_change_order_mylars\submittal\plansheets\summaries\alignd ata.dgn
T:\AO\Design\lp1604fm471-90\PD_Phase2_change_order_mylars\submittal\plansheets\summaries\alignd ata.dgn

## STARMAR
## S. TURNAROUND ℄ MARBACH ROAD

Chain STARMAR contains:
723 CUR STARMAR-1

Beginning chain STARMAR description

Point 723 N 4,174,654.284 E 628,626.628 Sta 0+100.000

Course from 723 to PC STARMAR-1 N 26° 13' 21.80" W Dist 37.854

Curve Data

Curve STARMAR-1
Feature: DEFAULT
Description: NO NAME TRIB
P.I. Station 0+249.678 N 4,174,788.558 E 628,560.491
Delta - 172° 22' 08.60" (RT)
Tangent - 111.824
Length - 22.436
Radius - 7.458
External - 104.614
Long Chord - 14.882
Mid. Ord. - 6.961
P.C. Station 0+137.854 N 4,174,688.243 E 628,609.902
P.T. Station 0+160.290 N 4,174,695.692 E 628,622.785
C.C. N 4,174,691.538 E 628,616.592
Back - N 26° 13' 21.80" W
Ahead - S 33° 51' 13.20" E
Chord Bear - N 59° 57' 42.50" E

Ending chain STARMAR description

## DOVE
## DOVE CANYON ROAD ℄

Chain DOVE contains:
4 CUR DOVE-1

Beginning chain DOVE description

Point 4 N 4,176,237.524 E 628,290.171 Sta 0+000.000

Course from 4 to PC DOVE-1 S 89° 38' 48.73" W Dist 106.243

Curve Data

Curve DOVE-1
P.I. Station 0+131.735 N 4,176,236.712 E 628,158.438
Delta - 7° 02' 17.58" (RT)
Tangent - 25.492
Length - 50.921
Radius - 414.528
External - 0.783
Long Chord - 50.889
Mid. Ord. - 0.782
P.C. Station 0+106.243 N 4,176,236.869 E 628,183.930
P.T. Station 0+157.163 N 4,176,239.679 E 628,133.119
C.C. N 4,176,651.389 E 628,181.375
Back - S 89° 38' 48.73" W
Ahead - N 83° 18' 53.69" W
Chord Bear - N 86° 50' 02.48" W

Ending chain DOVE description

## EMORY
## EMORY PEAK ℄

Chain EMORY contains:
EMORY1 EMORY2

Beginning chain EMORY description

Point EMORY1 X 628,286.1419 Y 4,175,590.6795 Sta 0+000.000

Course from EMORY1 to EMORY2 S 89° 52' 42.79" W Dist 115.5500

Point EMORY2 X 628,170.5922 Y 4,175,590.4346 Sta 0+115.550

Ending chain EMORY description

## DETDOV
## DOVE CANYON ROAD DETOUR ℄

Beginning chain DETDOV description

Point DETDOV1 X 628,147.2110 Y 4,176,238.2710 Sta 0+000.000

Course from DETDOV1 to PC DETDOV1 S 81° 27' 31.25" E Dist 35.8309

Curve Data

Curve DETDOV1
P.I. Station 0+042.680 X 628,189.4180 Y 4,176,231.9320
Delta - 25° 43' 19.15" (RT)
Tangent - 6.8494
Length - 13.4680
Radius - 30.0000
External - 0.7720
Long Chord - 13.3552
Mid. Ord. - 0.7526
P.C. Station 0+035.831 X 628,182.6445 Y 4,176,232.9493
P.T. Station 0+049.299 X 628,195.0788 Y 4,176,228.0758
C.C. X 628,178.1889 Y 4,176,203.2820
Back - S 81° 27' 31.25" E
Ahead - S 55° 44' 12.10" E
Chord Bear - S 68° 35' 51.67" E

Course from PT DETDOV1 to PC DETDOV2 S 55° 44' 12.10" E Dist 22.2937

Curve Data

Curve DETDOV2
P.I. Station 0+091.845 X 628,230.2415 Y 4,176,204.1224
Delta - 55° 36' 54.89" (RT)
Tangent - 20.2526
Length - 37.2737
Radius - 38.4000
External - 5.0134
Long Chord - 35.8275
Mid. Ord. - 4.4345
P.C. Station 0+071.593 X 628,213.5036 Y 4,176,215.5245
P.T. Station 0+108.866 X 628,230.2844 Y 4,176,183.8699
C.C. X 628,191.8845 Y 4,176,183.7885
Back - S 55° 44' 12.10" E
Ahead - S 0° 07' 17.21" E
Chord Bear - S 27° 55' 44.65" E

Course from PT DETDOV2 to PC DETDOV3 S 0° 07' 17.21" E Dist 176.9180

Curve Data

Curve DETDOV3
P.I. Station 0+338.614 X 628,230.7714 Y 4,175,954.1230
Delta - 3° 27' 29.77" (RT)
Tangent - 52.8294
Length - 105.6268
Radius - 1,750.0000
External - 0.7972
Long Chord - 105.6108
Mid. Ord. - 0.7969
P.C. Station 0+285.784 X 628,230.6594 Y 4,176,006.9523
P.T. Station 0+391.411 X 628,227.6964 Y 4,175,901.3831
C.C. X 626,480.6634 Y 4,176,003.2429
Back - S 0° 07' 17.21" E
Ahead - S 3° 20' 12.56" W
Chord Bear - S 1° 36' 27.68" W

Course from PT DETDOV3 to PC DETDOV4 S 3° 20' 12.56" W Dist 15.1055

Curve Data

Curve DETDOV4
P.I. Station 0+458.800 X 628,223.7740 Y 4,175,834.1083
Delta - 3° 25' 21.20" (LT)
Tangent - 52.2836
Length - 104.5360
Radius - 1,750.0000
External - 0.7808
Long Chord - 104.5205
Mid. Ord. - 0.7805
P.C. Station 0+406.517 X 628,226.8172 Y 4,175,886.3032
P.T. Station 0+511.053 X 628,223.8522 Y 4,175,781.8248
C.C. X 629,973.8503 Y 4,175,784.4434
Back - S 3° 20' 12.56" W
Ahead - S 0° 05' 08.64" E
Chord Bear - S 1° 37' 31.96" W

Course from PT DETDOV4 to PC DETDOV5 S 0° 04' 50.35" E Dist 240.5132

Curve Data

Curve DETDOV5
P.I. Station 0+791.570 X 628,224.2720 Y 4,175,501.3080
Delta - 90° 00' 19.81" (LT)
Tangent - 40.0038
Length - 62.8357
Radius - 40.0000
External - 16.5713
Long Chord - 56.5713
Mid. Ord. - 11.7171
P.C. Station 0+751.566 X 628,224.1908 Y 4,175,541.3118
P.T. Station 0+814.402 X 628,264.2758 Y 4,175,501.3930
C.C. X 628,264.1907 Y 4,175,541.3929
Back - S 0° 06' 58.63" E
Ahead - N 89° 52' 41.56" E
Chord Bear - S 45° 07' 08.54" E

Course from PT DETDOV5 to DETDOV7 N 89° 52' 41.66" E Dist 57.3925

Point DETDOV7 X 628,321.6681 Y 4,175,501.5150 Sta 0+871.794

Ending chain DETDOV description

## BIGMESA
## BIGMESA DRIVE ℄

Chain BIGMESA contains:
BMD1 BMD2

Beginning chain BIGMESA description

Point BMD1 X 628,962.8535 Y 4,173,861.5146 Sta 0+099.785

Course from BMD1 to BMD2 N 83° 53' 40.28" E Dist 151.8456

Point BMD2 X 629,113.8378 Y 4,173,877.6648 Sta 0+251.631

Ending chain BIGMESA description

## NBEX3
## N.B. TEMP. EXIT RAMP S. OF BIGMESA DR.

Chain NBEX3 contains:
CUR TC-T-1 CUR TC-T-2

Beginning chain NBEX3 description

Curve Data

Curve TC-T-1
P.I. Station 0+163.613 X 629,065.0166 Y 4,173,406.9351
Delta - 14° 30' 04.26" (RT)
Tangent - 63.6133
Length - 126.5467
Radius - 500.0000
External - 4.0304
Long Chord - 126.2092
Mid. Ord. - 3.9982
P.C. Station 0+100.000 X 629,051.1461 Y 4,173,469.0178
P.T. Station 0+226.547 X 629,062.8997 Y 4,173,343.3571
C.C. X 628,563.1766 Y 4,173,359.9959
Back - S 12° 35' 39.00" E
Ahead - S 1° 54' 25.26" W
Chord Bear - S 5° 20' 36.87" E

Course from PT TC-T-1 to PC TC-T-2 S 1° 54' 25.26" W Dist 159.3243

Curve Data

Curve TC-T-2
P.I. Station 0+445.653 X 629,055.6084 Y 4,173,124.3726
Delta - 7° 57' 10.31" (LT)
Tangent - 59.7816
Length - 119.3711
Radius - 860.0000
External - 2.0753
Long Chord - 119.2753
Mid. Ord. - 2.0703
P.C. Station 0+385.871 X 629,057.5978 Y 4,173,184.1211
P.T. Station 0+505.242 X 629,061.9048 Y 4,173,064.9236
C.C. X 629,917.1214 Y 4,173,155.5024
Back - S 1° 54' 25.26" W
Ahead - S 6° 02' 45.05" E
Chord Bear - S 2° 04' 09.90" E

Ending chain NBEX3 description

CHANGE ORDER NO. 94

CHANGE ORDER NO. 94

-REVISED ALIGNMANT DATA
-ADDED DOVE CANYON ROAD
-ADDED DOVE CANYON ROAD DETOUR
-ADDED EMORY PEAK

STATE OF TEXAS
FITZGERALDO G. SANCHEZ
76084
LICENCED
PROFESSIONAL ENGINEER

Fitzgeraldo G. Sanchez 08-25-05
Fitzgeraldo G. Sanchez, P.E. Date

©2000
Texas Department of Transportation

# HORIZONTAL ALIGNMENT DATA

SHEET 8 OF 8

| FED.RD. DIV.NO. | FEDERAL AID PROJECT NO. | | SHEET NO. |
|---|---|---|---|
| 6 | NH 2000(704),etc. | | (7) A |
| STATE | DIST. | COUNTY | |
| TEXAS | SAT | BEXAR | |
| CONT. | SECT. | JOB | HIGHWAY NO. |
| 2452 | 01 | 036,etc. | LP 1604 |

Plotted on: 01/26/2004

## STARMAR
## S. TURNAROUND @ MARBACH ROAD

Chain STARMAR contains:
723 CUR STARMAR-1

Beginning chain STARMAR description

Point 723 N 4,174,654.284 E 628,626.628 Sta 0+100.000

Course from 723 to PC STARMAR-1 N 26° 13' 21.80" W Dist 37.854

| | Curve Data |
|---|---|
| Curve STARMAR-1 | |
| Feature: DEFAULT | |
| Description: NO NAME TRIB | |
| P.I. Station | 0+249.678 N 4,174,788.558 E 628,560.491 |
| Delta = | 172° 22' 08.60" (RT) |
| Tangent = | 111.824 |
| Length = | 22.436 |
| Radius = | 7.458 |
| External = | 104.614 |
| Long Chord = | 14.882 |
| Mid. Ord. = | 6.961 |
| P.C. Station | 0+137.854 N 4,174,688.243 E 628,609.902 |
| P.T. Station | 0+160.290 N 4,174,695.692 E 628,622.785 |
| C.C. | N 4,174,691.538 E 628,616.592 |
| Back = | N 26° 13' 21.80" W |
| Ahead = | S 33° 51' 13.20" E |
| Chord Bear = | N 59° 57' 42.50" E |

Ending chain STARMAR description

## DOVE
## DOVE CANYON ROAD ℄

Chain DOVE contains:
4 CUR DOVE-1

Beginning chain DOVE description

Point 4 N 4,176,237.524 E 628,290.171 Sta 0+000.000

Course from 4 to PC DOVE-1 S 89° 38' 48.73" W Dist 106.243

| | Curve Data |
|---|---|
| Curve DOVE-1 | |
| P.I. Station | 0+131.735 N 4,176,236.712 E 628,158.438 |
| Delta = | 7° 02' 17.58" (RT) |
| Tangent = | 25.492 |
| Length = | 50.921 |
| Radius = | 414.528 |
| External = | 0.783 |
| Long Chord = | 50.889 |
| Mid. Ord. = | 0.782 |
| P.C. Station | 0+106.243 N 4,176,236.869 E 628,183.930 |
| P.T. Station | 0+157.163 N 4,176,239.679 E 628,133.119 |
| C.C. | N 4,176,651.389 E 628,181.375 |
| Back = | S 89° 38' 48.73" W |
| Ahead = | N 83° 18' 53.69" W |
| Chord Bear = | N 86° 50' 02.48" W |

Ending chain DOVE description

## DET DV4
## DOVE CANYON ROAD DETOUR ℄

Beginning chain DET DV4 description

Point 1211 N 4,176,238.271 E 628,147.211 Sta 0+000.000

Course from 1211 to PC DET DV4-1 S 81° 27' 30.41" E Dist 32.779

| | Curve Data |
|---|---|
| Curve DET DV4-1 | |
| P.I. Station | 0+042.680 N 4,176,231.932 E 628,189.418 |
| Delta = | 36° 31' 44.38" (RT) |
| Tangent = | 9.901 |
| Length = | 19.127 |
| Radius = | 30.000 |
| External = | 1.592 |
| Long Chord = | 18.804 |
| Mid. Ord. = | 1.511 |
| P.C. Station | 0+032.779 N 4,176,233.403 E 628,179.627 |
| P.T. Station | 0+051.905 N 4,176,224.922 E 628,196.410 |
| C.C. | N 4,176,203.735 E 628,175.171 |
| Back = | S 81° 27' 30.41" E |
| Ahead = | S 44° 55' 46.03" E |
| Chord Bear = | S 63° 11' 38.22" E |

Course from PT DET DV4-1 to PC DET DV4-2 S 44° 55' 46.04" E Dist 8.285

| | Curve Data |
|---|---|
| Curve DET DV4-2 | |
| P.I. Station | 0+072.554 N 4,176,210.303 E 628,210.993 |
| Delta = | 44° 47' 48.18" (RT) |
| Tangent = | 12.364 |
| Length = | 23.456 |
| Radius = | 30.000 |
| External = | 2.448 |
| Long Chord = | 22.863 |
| Mid. Ord. = | 2.263 |
| P.C. Station | 0+060.190 N 4,176,219.057 E 628,202.261 |
| P.T. Station | 0+083.646 N 4,176,197.939 E 628,211.022 |
| C.C. | N 4,176,197.870 E 628,181.022 |
| Back = | S 44° 55' 46.03" E |
| Ahead = | S 0° 07' 57.85" E |
| Chord Bear = | S 22° 31' 51.94" E |

Course from PT DET DV4-2 to PC DET DV4-3 S 0° 07' 57.85" E Dist 280.921

| | Curve Data |
|---|---|
| Curve DET DV4-3 | |
| P.I. Station | 0+413.029 N 4,175,868.557 E 628,211.785 |
| Delta = | 6° 55' 59.56" (LT) |
| Tangent = | 48.462 |
| Length = | 96.806 |
| Radius = | 800.000 |
| External = | 1.467 |
| Long Chord = | 96.747 |
| Mid. Ord. = | 1.464 |
| P.C. Station | 0+364.566 N 4,175,917.019 E 628,211.673 |
| P.T. Station | 0+461.372 N 4,175,820.463 E 628,217.746 |
| C.C. | N 4,175,918.873 E 629,011.670 |
| Back = | S 0° 07' 57.85" E |
| Ahead = | S 7° 03' 57.41" E |
| Chord Bear = | S 3° 35' 57.63" E |

| | Curve Data |
|---|---|
| Curve DET DV4-4 | |
| P.I. Station | 0+509.950 N 4,175,772.255 E 628,223.722 |
| Delta = | 6° 56' 58.71" (RT) |
| Tangent = | 48.577 |
| Length = | 97.035 |
| Radius = | 800.000 |
| External = | 1.473 |
| Long Chord = | 96.976 |
| Mid. Ord. = | 1.471 |
| P.C. Station | 0+461.372 N 4,175,820.463 E 628,217.746 |
| P.T. Station | 0+558.408 N 4,175,723.678 E 628,223.820 |
| C.C. | N 4,175,722.054 E 627,423.822 |
| Back = | S 7° 03' 57.41" E |
| Ahead = | S 0° 06' 58.70" E |
| Chord Bear = | S 3° 35' 28.06" E |

Course from PT DET DV4-4 to PC DET DV4-5 S 0° 06' 58.70" E Dist 182.367

| | Curve Data |
|---|---|
| Curve DET DV4-5 | |
| P.I. Station | 0+780.778 N 4,175,501.308 E 628,224.272 |
| Delta = | 90° 00' 18.48" (LT) |
| Tangent = | 40.004 |
| Length = | 62.835 |
| Radius = | 40.000 |
| External = | 16.571 |
| Long Chord = | 56.571 |
| Mid. Ord. = | 11.717 |
| P.C. Station | 0+740.774 N 4,175,541.312 E 628,224.191 |
| P.T. Station | 0+803.610 N 4,175,501.393 E 628,264.275 |
| C.C. | N 4,175,541.393 E 628,264.191 |
| Back = | S 0° 06' 58.70" E |
| Ahead = | N 89° 52' 42.82" E |
| Chord Bear = | S 45° 07' 07.94" E |

Course from PT DET DV4-5 to 1212 N 89° 52' 42.82" E Dist 50.793

Point 1212 N 4,175,501.501 E 628,315.068 Sta 0+854.403

Ending chain DET DV4 description

## BIGMESA
## BIGMESA DRIVE ℄

Chain BIGMESA contains:
BMD1 BMD2

Beginning chain BIGMESA description

Point BMD1 X 628,962.8535 Y 4,173,861.5146 Sta 0+099.785

Course from BMD1 to BMD2 N 83° 53' 40.28" E Dist 151.8456

Point BMD2 X 629,113.8378 Y 4,173,877.6648 Sta 0+251.631

Ending chain BIGMESA description

## NBEX3
## N.B. TEMP. EXIT RAMP S. OF BIGMESA DR.

Chain NBEX3 contains:
CUR TC-T-1 CUR TC-T-2

Beginning chain NBEX3 description

| | Curve Data |
|---|---|
| Curve TC-T-1 | |
| P.I. Station | 0+163.613 X 629,065.0166 Y 4,173,406.9351 |
| Delta = | 14° 30' 04.26" (RT) |
| Tangent = | 63.6133 |
| Length = | 126.5467 |
| Radius = | 500.0000 |
| External = | 4.0304 |
| Long Chord = | 126.2092 |
| Mid. Ord. = | 3.9982 |
| P.C. Station | 0+100.000 X 629,051.1461 Y 4,173,469.0178 |
| P.T. Station | 0+226.547 X 629,062.8997 Y 4,173,343.3571 |
| C.C. | X 628,563.1766 Y 4,173,359.9959 |
| Back = | S 12° 35' 39.00" E |
| Ahead = | S 1° 54' 25.26" W |
| Chord Bear = | S 5° 20' 36.87" E |

Course from PT TC-T-1 to PC TC-T-2 S 1° 54' 25.26" W Dist 159.3243

| | Curve Data |
|---|---|
| Curve TC-T-2 | |
| P.I. Station | 0+445.653 X 629,055.6084 Y 4,173,124.3726 |
| Delta = | 7° 57' 10.31" (LT) |
| Tangent = | 59.7816 |
| Length = | 119.3711 |
| Radius = | 860.0000 |
| External = | 2.0753 |
| Long Chord = | 119.2753 |
| Mid. Ord. = | 2.0703 |
| P.C. Station | 0+385.871 X 629,057.5978 Y 4,173,184.1211 |
| P.T. Station | 0+505.242 X 629,061.9048 Y 4,173,064.9236 |
| C.C. | X 629,917.1214 Y 4,173,155.5024 |
| Back = | S 1° 54' 25.26" W |
| Ahead = | S 6° 02' 45.05" E |
| Chord Bear = | S 2° 04' 09.90" E |

Ending chain NBEX3 description

**CHANGE ORDER NO. 64**

-REVISED ALIGNMANT DATA
-ADDED DOVE CANYON ROAD
-ADDED DOVE CANYON ROAD DETOUR

555 EAST RAMSEY SAN ANTONIO TEXAS 78216
PHONE (210)375-9000
FAX (210)375-9010
PAPE-DAWSON ENGINEERS
CIVIL & ENVIRONMENTAL

STATE OF TEXAS
J. KENT O'BRIEN
64398
LICENSED
PROFESSIONAL ENGINEER

J. KENT O'BRIEN P.E. 1/27/2004 DATE

CHANGE ORDER NO. 64 | REVISED SHEET

©2000 Texas Department of Transportation

# HORIZONTAL ALIGNMENT DATA

SHEET 8 OF 8

| FED.RD. DIV.NO. | FEDERAL AID PROJECT NO. | | SHEET NO. |
|---|---|---|---|
| 6 | NH 2000(704),etc. | | 171A |
| STATE | DIST. | COUNTY | |
| TEXAS | SAT | BEXAR | |
| CONT. | SECT. | JOB | HIGHWAY NO. |
| 2452 | 01 | 036,etc. | LP 1604 |

Design Filename: p:\52\20\11\design\civil\plansheets\summaries\aligndata.dgn

lp1604fm471-90\alignCURVDATA019.dgn

QUANTITIES THIS SHEET
CSJ 2452-01-037

SCALE : 1:2000

| ESTIMATED QUANTITIES | | |
|---|---|---|
| ITEM | UNIT | QTY. |
| REMOV CONC (PAV) | M2 | 563 |
| PORT CONC TRAF BAR (REMOV) | M | 291.2 |
| QUADGD SYS(REMOVE)(760mm)(TY B)(10 BAY) | EA | 1 |
| PLANE ASPH CONC PAV (0 - 40 MM) | M2 | 9806 |

✳ FOR CONTRACTORS INFORMATION ONLY

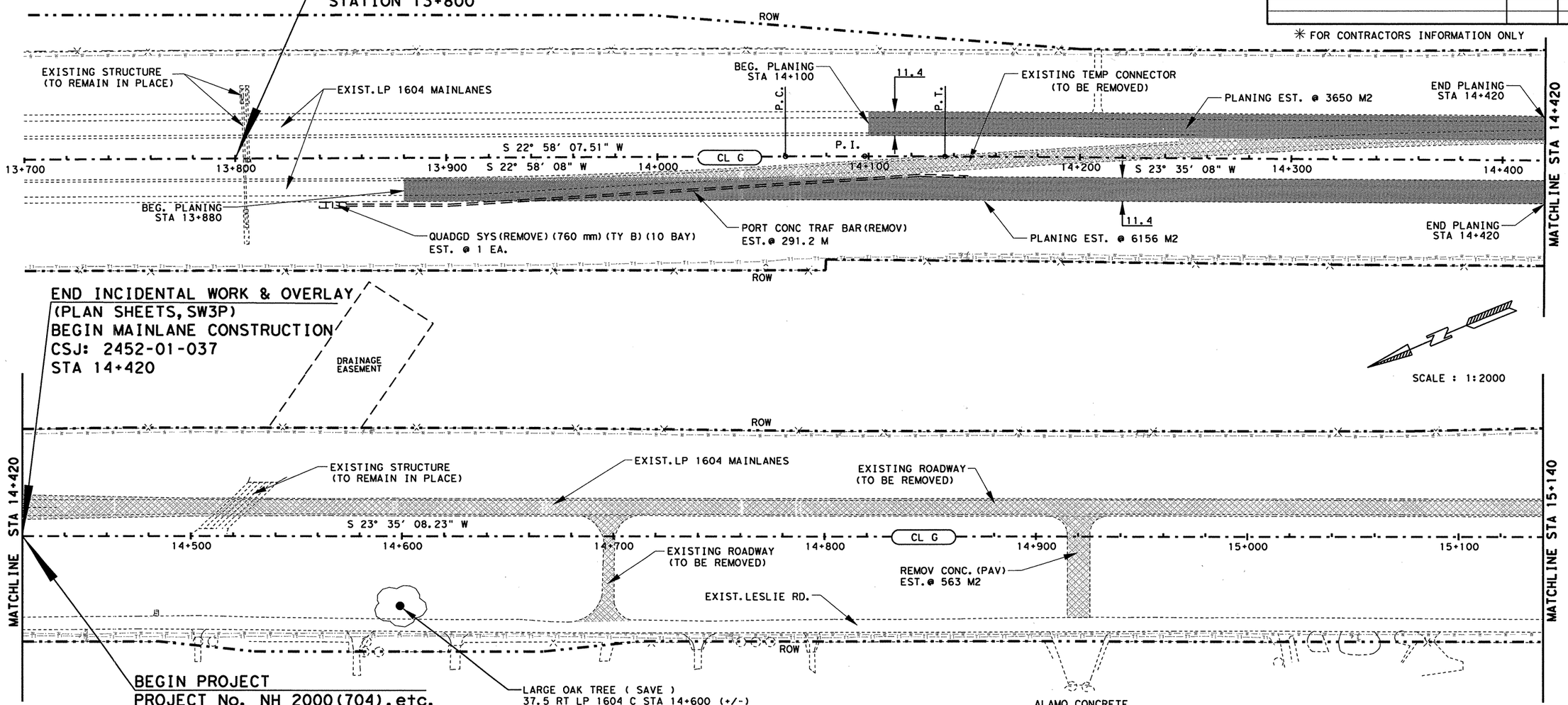


SCALE : 1:2000

| UTILITY LEGEND | |
|---|---|
| WATER LINE | |
| TELEPHONE LINE | |
| CABLE LINE | |
| GAS LINE | |

LEGEND

- LIMITS OF ROADWAY TO BE REMOVED
- CL G — ℄ LP 1604
- LIMITS OF ROADWAY TO BE PLANED

NOTE(S):

ALL REMOVAL ITEMS SHALL BE CONSIDERED SUBSIDIARY TO ITEM 100 PREP ROW UNLESS OTHERWISE NOTED.

ALL DIMENSIONS ARE IN METERS UNLESS OTHERWISE NOTED.

FOR EXISTING SIGN REMOVAL SEE SHEET(S) 36-39.

FOR HORIZONTAL ALIGNMENT/DATA, SEE SHEET(S) 164-171.

STATE OF TEXAS
JOEL K. DAVENPORT, JR.
79276
REGISTERED
PROFESSIONAL ENGINEER

Joel K. Davenport, Jr. 9/19/00
Joel K. Davenport, Jr. P.E. 79276 Date

Texas Department of Transportation

# EXISTING PLAN

SHEET 1 OF 19

| FED. RD. DIV. NO. | FEDERAL AID PROJECT NO. | | SHEET NO. |
|---|---|---|---|
| 6 | NH 2000(704), etc. | | 172 |
| STATE | DIST. | COUNTY | |
| TEXAS | SAT | BEXAR | |
| CONT. | SECT. | JOB | HIGHWAY NO. |
| 2452 | 01 | 036, etc. | LP 1604 |

lp1604fm471-90\existongplan01.dgn

## ESTIMATED QUANTITIES

| | ITEM | UNIT | 2452-01-037 QTY. | 2452-01-038 QTY. |
|---|---|---|---|---|
| * | REMOV CONC (RIPRAP) | M2 | | 580 |
| | REMOV OLD STR (LARGE) | EA | | 1 |
| * | REMOV OLD STR (SMALL) | EA | 1 | |
| | REMOV METAL BEAM GUARD FENCE | M | | 106.4 |
| | REMOV TERMINAL-ANCHOR SECTION | EA | | 2 |

* FOR CONTRACTORS INFORMATION ONLY

SCALE : 1:2000

QUANTITIES THIS SHEET CSJ 2452-01-037

QUANTITIES THIS SHEET CSJ 2452-01-038

LP 1604 CONTROL BREAK
CSJ: 2452-01-037 (BK)
CSJ: 2452-01-038 (AHD)
STA 15+500

REMOV OLD STR (LARGE) EST. @ 1 EA.

REMOV CONC. (RIPRAP) EST. @ 580 M2

REMOV MBGF EST. @ 53.2 M

DRAINAGE EASEMENT

ROW

DRAINAGE EASEMENT

EXIST. LP 1604 MAINLANES

REMOV TAS EST. @ 1 EA.

REMOV OLD STR (SMALL) EST. @ 1 EA.

EXISTING ROADWAY (TO BE REMOVED)

MATCHLINE STA 15+140

S23° 35' 08.23"W

P.C.

15+200

15+300

15+400

P.T.

S17° 45' 14.71"W

P.C.

15+500

CL G

15+600

P.I.

15+700

P.T.

S 24° 27' 21.91" W

15+800

MATCHLINE STA 15+860

REMOVE MBGF EST. @ 53.2 M

BEGIN LESLIE RD. REMOVAL RT., STA. 15+260

EXISTING ROADWAY (TO BE REMOVED)

EXIST. LESLIE RD.

EXISTING ROADWAY (TO BE REMOVED)

ROW

DRAINAGE EASEMENT

WESTWOOD LOOP

WESTWOOD VISTA

END REMOVAL STA 0+075.000

STATE OF TEXAS
JOEL K. DAVENPORT, JR.
79276
REGISTERED PROFESSIONAL ENGINEER

Joel K. Davenport, Jr. 9/19/00
Joel K. Davenport, Jr. P.E. 79276 Date

### LEGEND

LIMITS OF ROADWAY TO BE REMOVED

(CL G) ℄ LP 1604

### UTILITY LEGEND

W WATER LINE

T TELEPHONE LINE

C CABLE LINE

G GAS LINE

NOTE(S):

ALL REMOVAL ITEMS SHALL BE CONSIDERED SUBSIDIARY TO ITEM 100 PREP ROW UNLESS OTHERWISE NOTED.

ALL DIMENSIONS ARE IN METERS UNLESS OTHERWISE NOTED.

FOR EXISTING SIGN REMOVAL SEE SHEET(S) 36-39.

FOR HORIZONTAL ALIGNMENT/DATA, SEE SHEET(S) 164-171.

Texas Department of Transportation

# EXISTING PLAN

SHEET 2 OF 19

| FED. RD. DIV. NO. | FEDERAL AID PROJECT NO. | | SHEET NO. |
|---|---|---|---|
| 6 | NH 2000(704), etc. | | 173 |
| STATE | DIST. | COUNTY | |
| TEXAS | SAT | BEXAR | |
| CONT. | SECT. | JOB | HIGHWAY NO. |
| 2452 | 01 | 036, etc. | LP 1604 |

lp1604fm471-90\existingplan02.dgn

| ESTIMATED QUANTITIES | | | |
|---|---|---|---|
| ITEM | UNIT | 2452-01-037 QTY. | 2452-01-038 QTY. |
| * REMOV CONC (RIPRAP) | M2 | | 580 |
| REMOV OLD STR (LARGE) | EA | | 1 |
| REMOV METAL BEAM GUARD FENCE | M | | 106.4 |
| REMOV TERMINAL-ANCHOR SECTION | EA | | 2 |

* FOR CONTRACTORS INFORMATION ONLY

SCALE : 1:2000

CHANGE ORDER 28

REVISED SHEET

QUANTITIES THIS SHEET CSJ 2452-01-037

QUANTITIES THIS SHEET CSJ 2452-01-038

LP 1604 CONTROL BREAK
CSJ: 2452-01-037 (BK)
CSJ: 2452-01-038 (AHD)
STA 15+500

REMOVE OLD STR. (LARGE) EST. @ 1 EA.

REMOVE CONC. (RIPRAP) EST. @ 580 M2

REMOVE MBGF EST. @ 53.2 M

DRAINAGE EASEMENT

DRAINAGE EASEMENT

ROW

EXIST. LP 1604 MAINLANES

REMOVE TAS. EST. @ 1 EA.

REMOVE OLD STR. (SMALL) EST. @ 1 EA.

EXISTING ROADWAY (TO BE REMOVED)

MATCHLINE STA 15+140

S23° 35' 08.23" W

P.C.

15+200

15+300

15+400

P.T.

S 17° 45' 14.71" W

S17° 45' 14.71" W

P.C.

15+500

CL G

15+600

P.I.

15+700

P.T.

S 24° 27' 21.91" W

15+800

MATCHLINE STA 15+860

REMOVE MBGF EST. @ 53.2 M

BEGIN LESLIE RD. REMOVAL STA. 0+025

EXISTING ROADWAY (TO BE REMOVED)

EXIST. LESLIE RD.

EXISTING ROADWAY (TO BE REMOVED)

ROW

BEGIN LESLIE RD. CONNECTOR
STA 0+000.000 = 48.36 RT
LP 1604 C STA 15+260.000
BEGIN OVERLAY

EXIST. DEVELOPERS DRAINAGE (TO REMAIN IN PLACE)

EXIST STRUCT. (TO REMAIN IN PLACE)

DRAINAGE EASEMENT

WESTWOOD VISTA

CHANGE ORDER NO. 28

-REVISED STATION TO BEGIN LESLIE RD. REMOVAL
-UPDATED WESTWOOD VISTA AREA
-CORRECTED NOTE @ WW LOOP
-ADDED DEVELOPERS DRAINAGE

WESTWOOD LOOP

END REMOVAL STA 0+080.000

END REMOVAL STA 0+080.000

STATE OF TEXAS
JEROME D. PAVLISKA
76075
REGISTERED PROFESSIONAL ENGINEER

Jerome D. Pavliska P.E. 8-11-03
Jerome D. Pavliska, P.E. Date

LEGEND

UTILITY LEGEND

WATER LINE

TELEPHONE LINE

CABLE LINE

GAS LINE

LIMITS OF ROADWAY TO BE REMOVED

CL G ℄ LP 1604

NOTE(S):

ALL REMOVAL ITEMS SHALL BE CONSIDERED SUBSIDIARY TO ITEM 100 PREP ROW UNLESS OTHERWISE NOTED.

ALL DIMENSIONS ARE IN METERS UNLESS OTHERWISE NOTED.

FOR EXISTING SIGN REMOVAL SEE SHEET(S) 36-39.

FOR HORIZONTAL ALIGNMENT/DATA, SEE SHEET(S) 164-171

© 2001

Texas Department of Transportation

# EXISTING PLAN

SHEET 2 OF 19

| FED. RD. DIV. NO. | FEDERAL AID PROJECT NO. | | SHEET NO. |
|---|---|---|---|
| 6 | NH 2000(704), etc. | | 173A |
| STATE | DIST. | COUNTY | |
| TEXAS | SAT | BEXAR | |
| CONT. | SECT. | JOB | HIGHWAY NO. |
| 2452 | 01 | 036, etc. | LP 1604 |

01/23/03

lp1604fm471-90\existingplan02.dgn

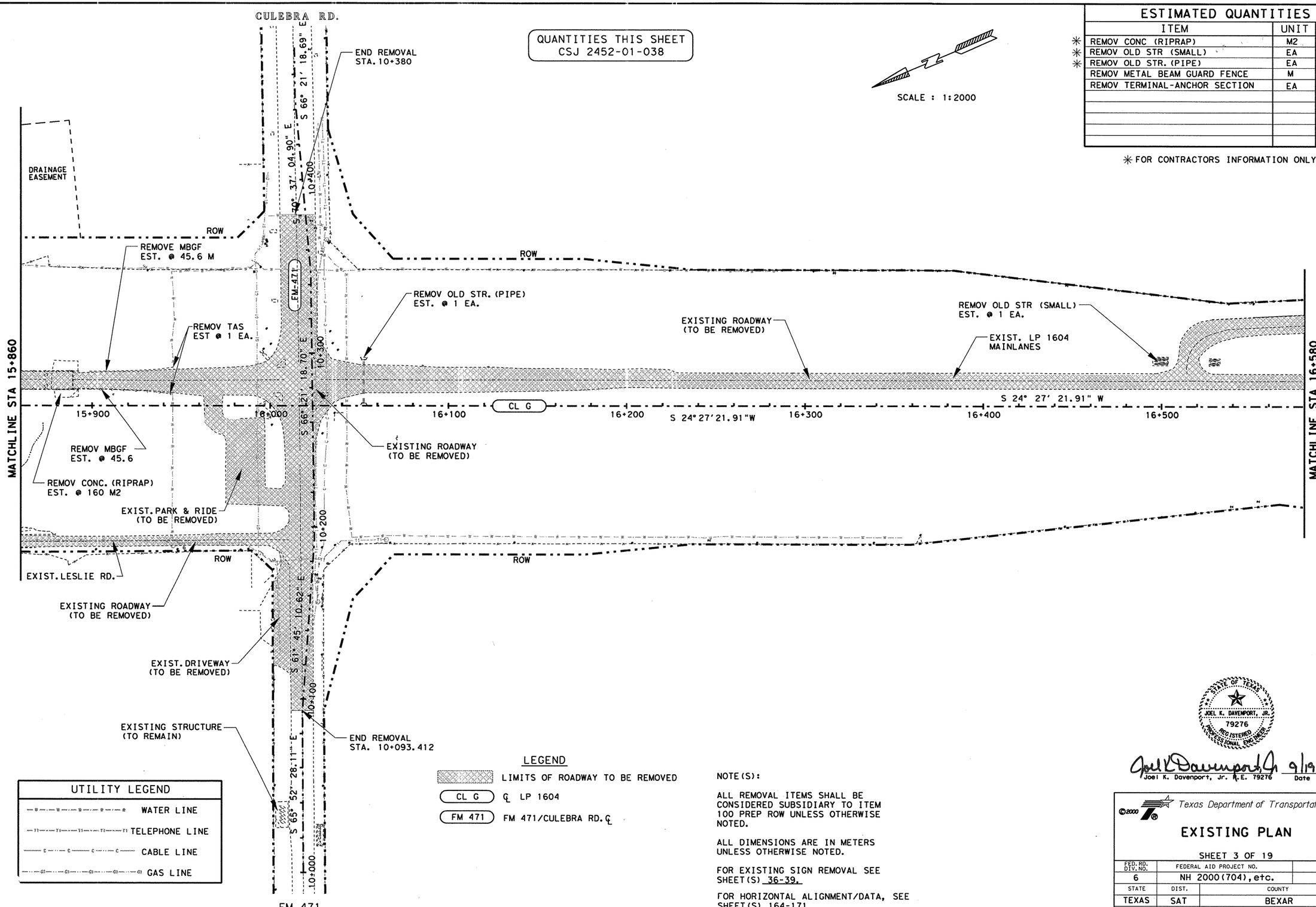


QUANTITIES THIS SHEET
CSJ 2452-01-038

SCALE : 1:2000

## ESTIMATED QUANTITIES

| | ITEM | UNIT | QTY. |
|---|---|---|---|
| ✳ | REMOV CONC (RIPRAP) | M2 | 160 |
| ✳ | REMOV OLD STR (SMALL) | EA | 1 |
| ✳ | REMOV OLD STR. (PIPE) | EA | 1 |
| | REMOV METAL BEAM GUARD FENCE | M | 91.2 |
| | REMOV TERMINAL-ANCHOR SECTION | EA | 2 |

✳ FOR CONTRACTORS INFORMATION ONLY

### UTILITY LEGEND

- WATER LINE
- TELEPHONE LINE
- CABLE LINE
- GAS LINE

### LEGEND

- LIMITS OF ROADWAY TO BE REMOVED
- CL G — ℄ LP 1604
- FM 471 — FM 471/CULEBRA RD. ℄

NOTE(S):

ALL REMOVAL ITEMS SHALL BE CONSIDERED SUBSIDIARY TO ITEM 100 PREP ROW UNLESS OTHERWISE NOTED.

ALL DIMENSIONS ARE IN METERS UNLESS OTHERWISE NOTED.

FOR EXISTING SIGN REMOVAL SEE SHEET(S) 36-39.

FOR HORIZONTAL ALIGNMENT/DATA, SEE SHEET(S) 164-171.

STATE OF TEXAS
JOEL K. DAVENPORT, JR.
79276
REGISTERED PROFESSIONAL ENGINEER

Joel K. Davenport, Jr. P.E. 79276 — 9/19/00
Date

Texas Department of Transportation

# EXISTING PLAN

SHEET 3 OF 19

| FED. RD. DIV. NO. | FEDERAL AID PROJECT NO. | | SHEET NO. |
|---|---|---|---|
| 6 | NH 2000(704), etc. | | 174 |
| STATE | DIST. | COUNTY | |
| TEXAS | SAT | BEXAR | |
| CONT. | SECT. | JOB | HIGHWAY NO. |
| 2452 | 01 | 036, etc. | LP 1604 |

lp1604fm471-90\existingplan03.dgn

SCALE : 1:2000

## ESTIMATED QUANTITIES

| ITEM | UNIT | 2452-01-038 QTY. | 2452-01-037 QTY. |
|---|---|---|---|
| * REMOV OLD STR (PIPE) | EA | | 1 |
| | | | |
| | | | |
| | | | |
| | | | |

*FOR CONTRACTORS INFORMATION ONLY

QUANTITIES THIS SHEET CSJ 2452-01-038

QUANTITIES THIS SHEET CSJ 2452-01-037

END REMOVAL LT., LP 1604 ℄ STA. 16+614.13

ROW

EXIST. SH 151 FRONTAGE RD. (TO REMAIN)

W.B. SH 151

EXISTING ROADWAY (TO BE REMOVED)

END REMOVAL STA. 0+095

S 69° 36' 01.08" E

0+100

EXISTING ROADWAY (TO BE REMOVED)

EXIST. LP 1604 MAINLANES

SH151W

MATCHLINE STA 16+580

16+600

16+700

16+800

S 24° 27' 21.91" W

16+900

CL G

17+000

17+100

17+200

0+000

P.C.

MATCHLINE STA 17+300

EXISTING DRIVEWAY (TO BE REMOVED)

EXISTING DRIVEWAY (TO BE REMOVED)

REMOV OLD STR (PIPE) EST. @ 1 EA.

LP 1604 CONTROL BREAK
CSJ: 2452-01-038 (BK)
CSJ: 2452-01-037 (AHD)
STA 17+000

ROW

ROW

### UTILITY LEGEND

- WATER LINE
- TELEPHONE LINE
- CABLE LINE
- GAS LINE

### LEGEND

- LIMITS OF ROADWAY TO BE REMOVED
- CL G — ℄ LP 1604
- SH151W — W.B. SH 151

NOTE(S):

ALL REMOVAL ITEMS SHALL BE CONSIDERED SUBSIDIARY TO ITEM 100 PREP ROW UNLESS OTHERWISE NOTED.

ALL DIMENSIONS ARE IN METERS UNLESS OTHERWISE NOTED.

FOR EXISTING SIGN REMOVAL SEE SHEET(S) 36-39.

FOR HORIZONTAL ALIGNMENT/DATA, SEE SHEET(S) 164-171.

STATE OF TEXAS — JOEL K. DAVENPORT, JR. — 79276 — REGISTERED PROFESSIONAL ENGINEER

Joel K. Davenport, Jr. P.E. 79276 — 9/19/00 Date

Texas Department of Transportation

# EXISTING PLAN

SHEET 4 OF 19

| FED. RD. DIV. NO. | FEDERAL AID PROJECT NO. | | SHEET NO. |
|---|---|---|---|
| 6 | NH 2000(704), etc. | | 175 |
| STATE | DIST. | COUNTY | |
| TEXAS | SAT | BEXAR | |
| CONT. | SECT. | JOB | HIGHWAY NO. |
| 2452 | 01 | 036, etc. | LP 1604 |

lp1604fm471-90\existingplan04.dgn

SCALE : 1:2000

## ESTIMATED QUANTITIES

| ITEM | UNIT | 2452-01-038 QTY. | 2452-01-037 QTY. |
|---|---|---|---|
| * REMOV OLD STR (PIPE) | EA | | 1 |

*FOR CONTRACTORS INFORMATION ONLY

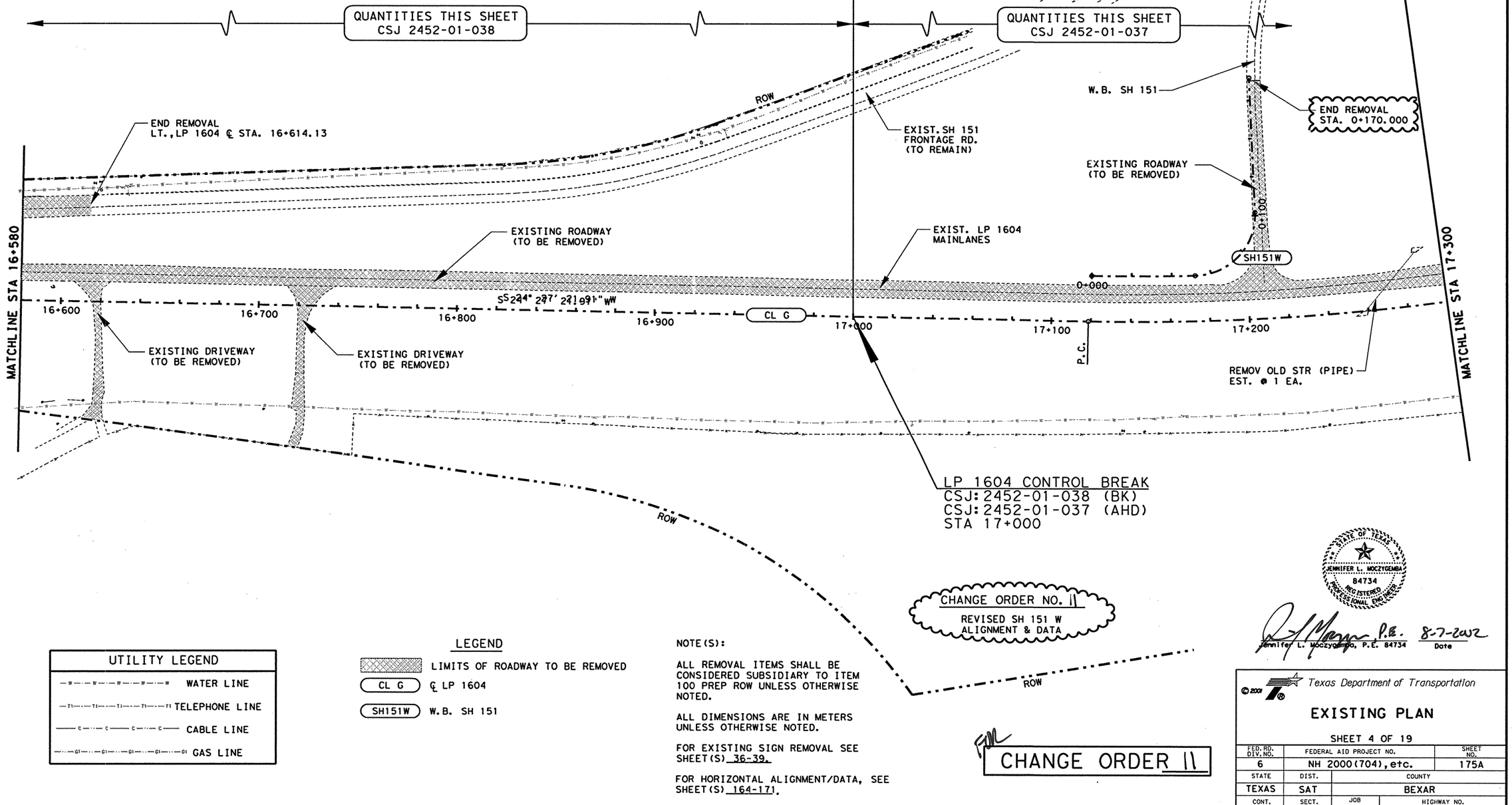


### UTILITY LEGEND

- WATER LINE
- TELEPHONE LINE
- CABLE LINE
- GAS LINE

### LEGEND

- LIMITS OF ROADWAY TO BE REMOVED
- CL G — ℄ LP 1604
- SH151W — W.B. SH 151

NOTE(S):

ALL REMOVAL ITEMS SHALL BE CONSIDERED SUBSIDIARY TO ITEM 100 PREP ROW UNLESS OTHERWISE NOTED.

ALL DIMENSIONS ARE IN METERS UNLESS OTHERWISE NOTED.

FOR EXISTING SIGN REMOVAL SEE SHEET(S) 36-39.

FOR HORIZONTAL ALIGNMENT/DATA, SEE SHEET(S) 164-171.

CHANGE ORDER NO. 11
REVISED SH 151 W ALIGNMENT & DATA

FINAL
CHANGE ORDER 11

STATE OF TEXAS
JENNIFER L. MOCZYGEMBA
84734
REGISTERED PROFESSIONAL ENGINEER

Jennifer L. Moczygemba, P.E. 84734 — 8-7-2012 Date

Texas Department of Transportation

# EXISTING PLAN

SHEET 4 OF 19

| FED. RD. DIV. NO. | FEDERAL AID PROJECT NO. | | SHEET NO. |
|---|---|---|---|
| 6 | NH 2000(704), etc. | | 175A |
| STATE | DIST. | COUNTY | |
| TEXAS | SAT | BEXAR | |
| CONT. | SECT. | JOB | HIGHWAY NO. |
| 2452 | 01 | 036, etc. | LP 1604 |

lp1604fm471-90existingplan04.dgn

QUANTITIES THIS SHEET
CSJ 2452-01-037

SCALE : 1:2000

| ESTIMATED QUANTITIES | | |
|---|---|---|
| ITEM | UNIT | QTY. |
| ✳ REMOV OLD STR (SMALL) | EA | 1 |
| ✳ REMOV OLD STR (PIPE) | EA | 2 |

✳ FOR CONTRACTORS INFORMATION ONLY

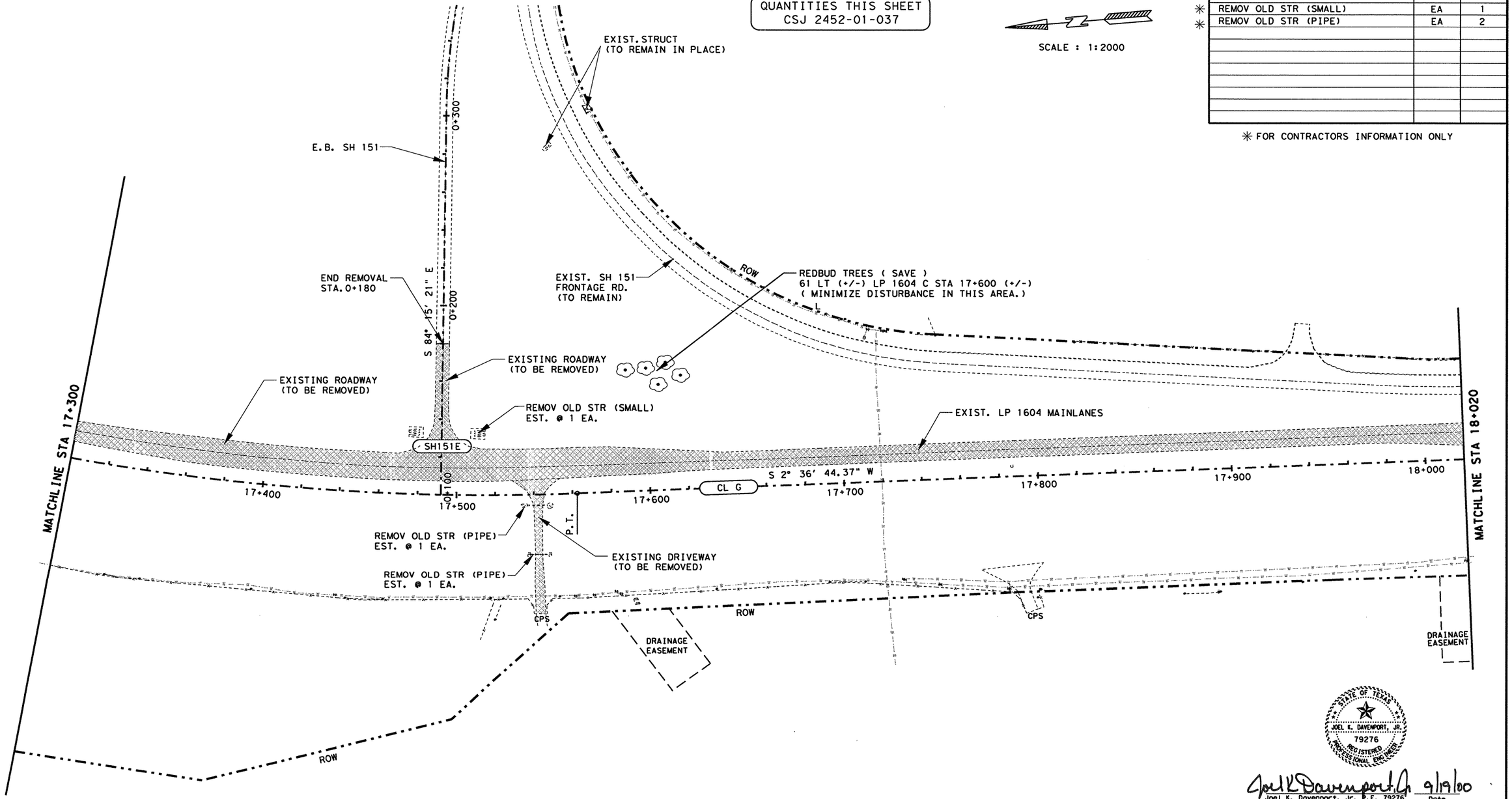


| UTILITY LEGEND | |
|---|---|
| W W W W W W W | WATER LINE |
| T1 T1 T1 T1 T1 T1 T1 | TELEPHONE LINE |
| C C C C C C C | CABLE LINE |
| G1 G1 G1 G1 G1 G1 G1 | GAS LINE |

LEGEND

- LIMITS OF ROADWAY TO BE REMOVED
- CL G — LOOP 1604 CENTER LINE
- SH151E — E.B. SH 151

NOTE(S):

ALL REMOVAL ITEMS SHALL BE CONSIDERED SUBSIDIARY TO ITEM 100 PREP ROW UNLESS OTHERWISE NOTED.

ALL DIMENSIONS ARE IN METERS UNLESS OTHERWISE NOTED.

FOR EXISTING SIGN REMOVAL SEE SHEET(S) 36-39.

FOR HORIZONTAL ALIGNMENT/DATA, SEE SHEET(S) 164-171.

STATE OF TEXAS
JOEL K. DAVENPORT, JR.
79276
REGISTERED
PROFESSIONAL ENGINEER

Joel K Davenport Jr 9/19/00
Joel K. Davenport, Jr. P.E. 79276 Date

Texas Department of Transportation

# EXISTING PLAN

SHEET 5 OF 19

| FED. RD. DIV. NO. | FEDERAL AID PROJECT NO. | | SHEET NO. |
|---|---|---|---|
| 6 | NH 2000(704), etc. | | 176 |
| STATE | DIST. | COUNTY | |
| TEXAS | SAT | BEXAR | |
| CONT. | SECT. | JOB | HIGHWAY NO. |
| 2452 | 01 | 036, etc. | LP 1604 |

lp1604fm471-90\existingplan05.dgn

QUANTITIES THIS SHEET
CSJ 2452-01-037

SCALE : 1:2000

| ESTIMATED QUANTITIES | | |
|---|---|---|
| ITEM | UNIT | QTY. |
| ✳ REMOV OLD STR (SMALL) | EA. | 1 |
| ✳ REMOV OLD STR (PIPE) | EA. | 4 |
| ✳ REMOV METAL BEAM GUARD FENCE | M | 15.2 |

✳ FOR CONTRACTORS INFORMATION ONLY

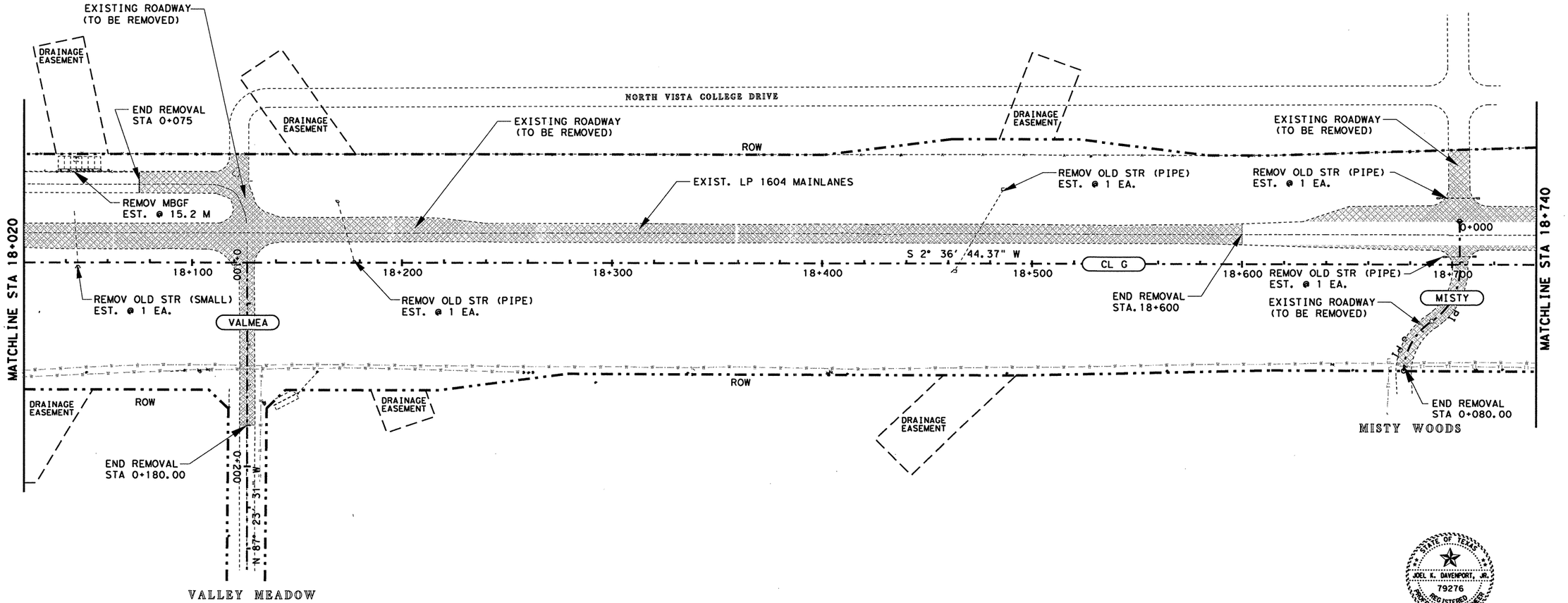


| UTILITY LEGEND | |
|---|---|
| W W W W W | WATER LINE |
| T1 T1 T1 T1 T1 | TELEPHONE LINE |
| C C C C | CABLE LINE |
| G1 G1 G1 G1 | GAS LINE |

LEGEND

- LIMITS OF ROADWAY TO BE REMOVED
- CL G — ℄ LP 1604
- VALMEA — VALLEY MEADOW ℄
- MISTY — MISTY WOODS ℄

NOTE(S):

ALL REMOVAL ITEMS SHALL BE CONSIDERED SUBSIDIARY TO ITEM 100 PREP ROW UNLESS OTHERWISE NOTED.

ALL DIMENSIONS ARE IN METERS UNLESS OTHERWISE NOTED.

FOR EXISTING SIGN REMOVAL SEE SHEET(S) 36-39.

FOR HORIZONTAL ALIGNMENT/DATA, SEE SHEET(S) 164-171.

STATE OF TEXAS
JOEL K. DAVENPORT, JR.
79276
REGISTERED PROFESSIONAL ENGINEER

Joel K Davenport Jr 9/19/00
Joel K. Davenport, Jr. P.E. 79276 Date

©2000 Texas Department of Transportation

# EXISTING PLAN

SHEET 6 OF 19

| FED. RD. DIV. NO. | FEDERAL AID PROJECT NO. | | SHEET NO. |
|---|---|---|---|
| 6 | NH 2000(704), etc. | | 177 |
| STATE | DIST. | COUNTY | |
| TEXAS | SAT | BEXAR | |
| CONT. | SECT. | JOB | HIGHWAY NO. |
| 2452 | 01 | 036, etc. | LP 1604 |

lp1604fm471-90\existingplan06.dgn

QUANTITIES THIS SHEET
CSJ 2452-01-037

SCALE : 1:2000

## ESTIMATED QUANTITIES

| | ITEM | UNIT | QTY. |
|---|---|---|---|
| * | REMOV CONC (SDWLK) | M2 | 100.6 |
| * | REMOV (CURB) | M | 456 |
| | REPAIR EXIST FLEX PAV STRUCT (200 MM) | M2 | 111.6 |
| * | REMOV OLD STR (PIPE) | EA | 6 |
| | PLANE ASPH CONC PAV (0 - 40 MM) | M2 | 482 |

*FOR CONTRACTORS INFORMATION ONLY

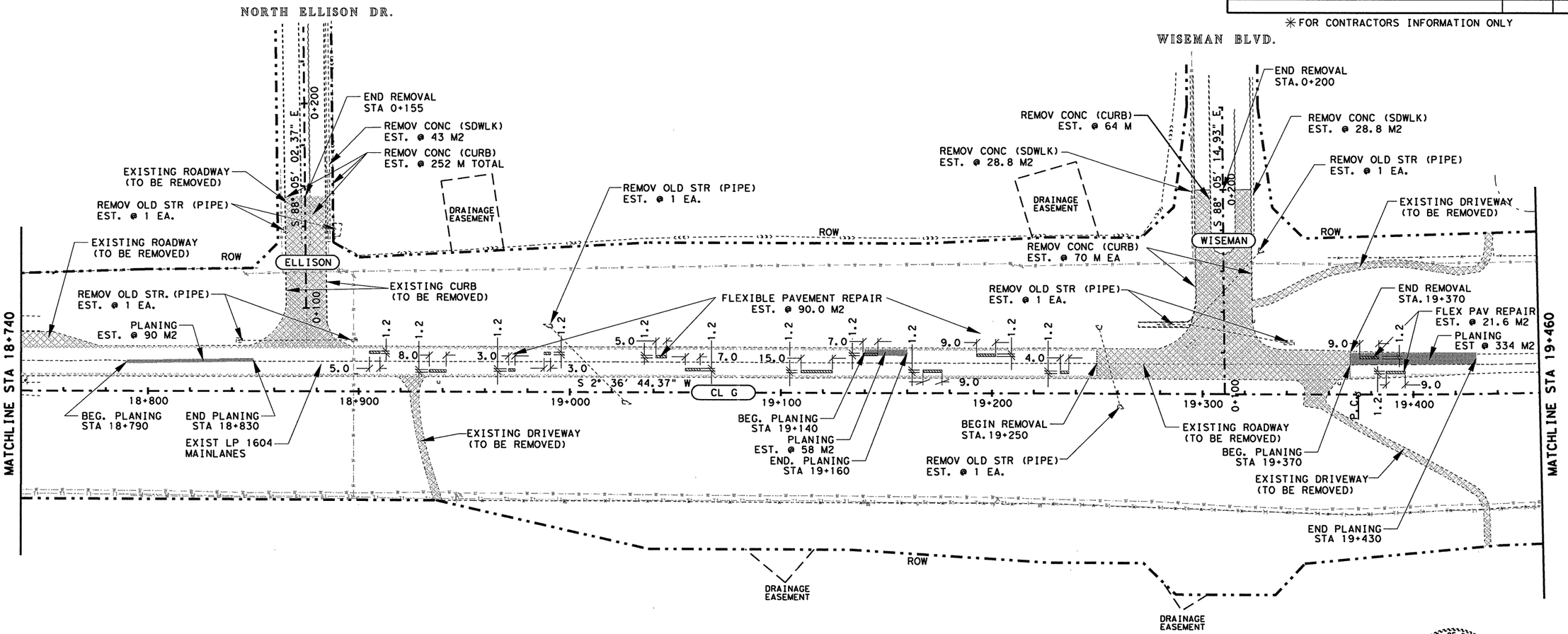


STATE OF TEXAS
JOEL K. DAVENPORT, JR.
79276
REGISTERED PROFESSIONAL ENGINEER

Joel K Davenport Jr 9/19/00
Joel K. Davenport, Jr. P.E. 79276 Date

### UTILITY LEGEND

- WATER LINE
- TELEPHONE LINE
- CABLE LINE
- GAS LINE

### LEGEND

- LIMITS OF ROADWAY TO BE REMOVED
- CL G — ℄ LOOP 1604
- ELLISON — NORTH ELLISON DRIVE ℄
- WISEMAN — WISEMAN BLVD. ℄
- LIMITS OF FLEXIBLE PAVEMENT REPAIR.
- LIMITS OF ROADWAY TO BE PLANED

NOTE(S):

ALL REMOVAL ITEMS SHALL BE CONSIDERED SUBSIDIARY TO ITEM 100 PREP ROW UNLESS OTHERWISE NOTED.

ALL DIMENSIONS ARE IN METERS UNLESS OTHERWISE NOTED.

FOR EXISTING SIGN REMOVAL SEE SHEET(S) 36-39 .

FOR HORIZONTAL ALIGNMENT/DATA, SEE SHEET(S) 164-171

ALL FLEXIBLE PAVEMENT REPAIR AREAS & DIMENSIONS ARE APPROXIMATE. THE CONTRACTOR SHALL VERIFY THE AREAS & DIMENSIONS OF EACH FLEXIBLE PAVEMENT REPAIR WITH THE ENGINEER.

Texas Department of Transportation

# EXISTING PLAN

SHEET 7 OF 19

| FED. RD. DIV. NO. | FEDERAL AID PROJECT NO. | SHEET NO. |
|---|---|---|
| 6 | NH 2000(704), etc. | 178 |
| STATE | DIST. | COUNTY |
| TEXAS | SAT | BEXAR |
| CONT. | SECT. | JOB / HIGHWAY NO. |
| 2452 | 01 | 036, etc. / LP 1604 |

lp1604fm471-90\existingplan07.dgn

QUANTITIES THIS SHEET
CSJ 2452-01-037

SCALE : 1:2000

## ESTIMATED QUANTITIES

| ITEM | UNIT | QTY. |
|---|---|---|
| ✳ REMOV CONC (SDWLK) | M2 | 100.6 |
| ✳ REMOV (CURB) | M | 456 |
| REPAIR EXIST FLEX PAV STRUCT (200 MM) | M2 | 55.2 |
| ✳ REMOV OLD STR (PIPE) | EA | 6 |
| PLANE ASPH CONC PAV (0 - 40 MM) | M2 | 482 |
| ✳ REMOV CONC (RET. WALL) | M2 | 12 |
| ✳ REMOV CATTLEGUARD | EA | 1 |

✳ FOR CONTRACTORS INFORMATION ONLY

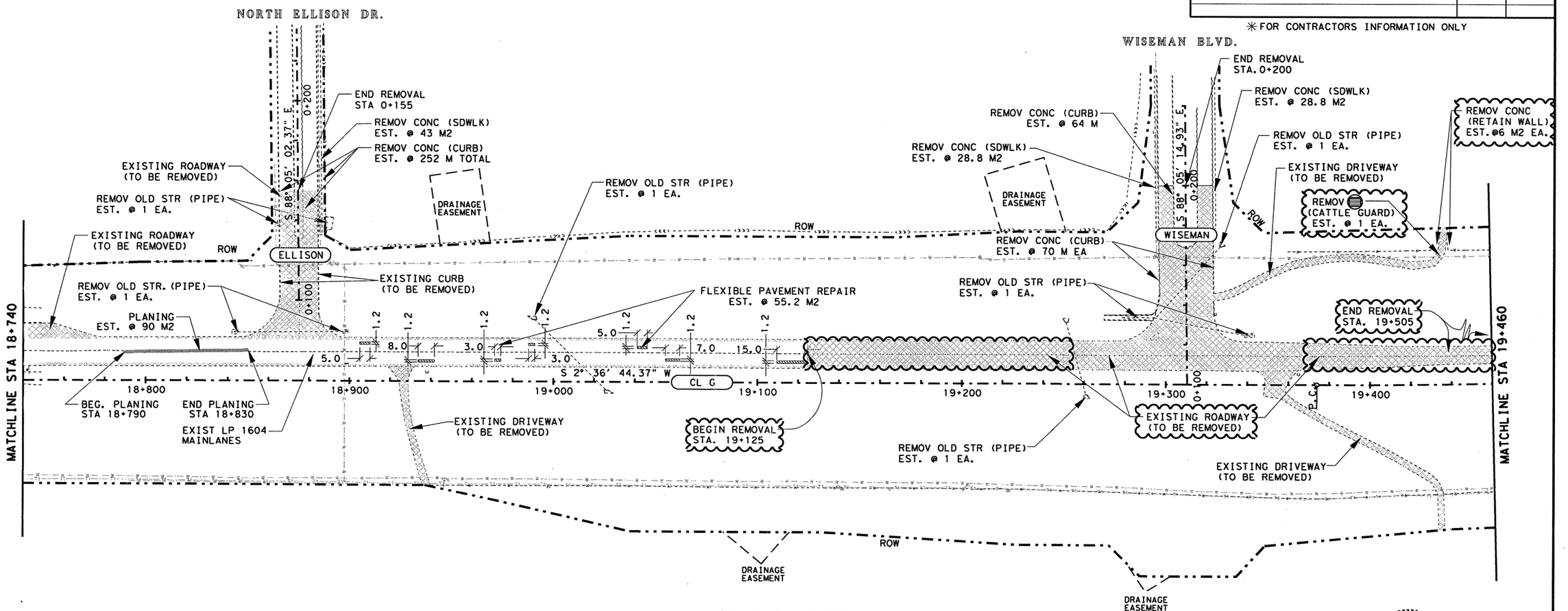


EXISTING CATTLE GUARD SHALL BE REMOVED AND REMAIN THE PROPERTY OF LAND OWNER. ONCE CATTLE GUARD HAS BEEN REMOVED CONTRACTOR SHALL MOVE TO A SITE ON PROPERTY SUITABLE TO LAND OWNER.

CHANGE ORDER 64

REVISED SHEET

STATE OF TEXAS
JEROME D. PAVLISKA
76075
REGISTERED PROFESSIONAL ENGINEER

Jerome D. Pavliska, P.E. 4-28-04
Jerome D. Pavliska, P.E. — Date

### UTILITY LEGEND

- W — WATER LINE
- T — TELEPHONE LINE
- C — CABLE LINE
- G — GAS LINE

### LEGEND

- LIMITS OF ROADWAY TO BE REMOVED
- CL G — ℄ LOOP 1604
- ELLISON — NORTH ELLISON DRIVE ℄
- WISEMAN — WISEMAN BLVD. ℄
- LIMITS OF FLEXIBLE PAVEMENT REPAIR.
- LIMITS OF ROADWAY TO BE PLANED

NOTE(S):

ALL REMOVAL ITEMS SHALL BE CONSIDERED SUBSIDIARY TO ITEM 100 PREP ROW UNLESS OTHERWISE NOTED.

ALL DIMENSIONS ARE IN METERS UNLESS OTHERWISE NOTED.

FOR EXISTING SIGN REMOVAL SEE SHEET(S) 36-39 .

FOR HORIZONTAL ALIGNMENT/DATA, SEE SHEET(S) 164-171

ALL FLEXIBLE PAVEMENT REPAIR AREAS & DIMENSIONS ARE APPROXIMATE. THE CONTRACTOR SHALL VERIFY THE AREAS & DIMENSIONS OF EACH FLEXIBLE PAVEMENT REPAIR WITH THE ENGINEER.

**CHANGE ORDER NO. 64**
-UPDATED VIEW
-ADDED ADDITIONAL REMOVAL ITEMS
-REVISED QUANTITIES.

© 2000 Texas Department of Transportation

# EXISTING PLAN

SHEET 7 OF 19

| FED.RD. DIV.NO. | FEDERAL AID PROJECT NO. | | SHEET NO. |
|---|---|---|---|
| 6 | NH 2000(704), etc. | | 178 A |
| STATE | DIST. | COUNTY | |
| TEXAS | SAT | BEXAR | |
| CONT. | SECT. | JOB | HIGHWAY NO. |
| 2452 | 01 | 036, etc. | LP 1604 |

LEVELS DISPLAYED
1 2 3 4 5 6 7 8 9 10 11 12 13 14 15 16
17 18 19 20 21 22 23 24 25 26 27 28 29 30 32
33 34 35 36 37 38 39 40 41 42 43 44 45 46 47 48
49 50 51 52 53 54 55 56 57 58 59 60 61 63

ACC: t:\ao\design\lp1604
FILE: existingplan07 ch.DGN

QUANTITIES THIS SHEET
CSJ 2452-01-037

NOTE(S):

ALL REMOVAL ITEMS SHALL BE CONSIDERED SUBSIDIARY TO ITEM 100 PREP ROW UNLESS OTHERWISE NOTED.

ALL DIMENSIONS ARE IN METERS UNLESS OTHERWISE NOTED.

FOR EXISTING SIGN REMOVAL SEE SHEET(S) 36-39 .

FOR HORIZONTAL ALIGNMENT/DATA, SEE SHEET(S) 164-171 .

ALL FLEXIBLE PAVEMENT REPAIR AREAS & DIMENSIONS ARE APPROXIMATE. THE CONTRACTOR SHALL VERIFY THE AREAS & DIMENSIONS OF EACH FLEXIBLE PAVEMENT REPAIR WITH THE ENGINEER.

EXISTING CATTLE GUARD SHALL BE REMOVED AND REMAIN THE PROPERTY OF LAND OWNER. ONCE CATTLE GUARD HAS BEEN REMOVED CONTRACTOR SHALL MOVE TO A SITE ON PROPERTY SUITABLE TO LAND OWNER.

SCALE : 1:2000

## ESTIMATED QUANTITIES

| ITEM | UNIT | QTY. |
|---|---|---|
| EXCAVATION (RDWY) | M3 | 1,093 |
| ASPH CONC (TY A) | MGR | 2,206 |
| PLANE ASPH CONC PAV (0 - 40 MM) | M2 | 3,498 |
| HOT MIX (TY C)(PG 64-22) | MGR | 317 |

✳ SEE PLAN SHEET NO. 210 AND 211 FOR QUANTITIES ON O.C.S.T. AND HOT MIX (TY C)(SURF).

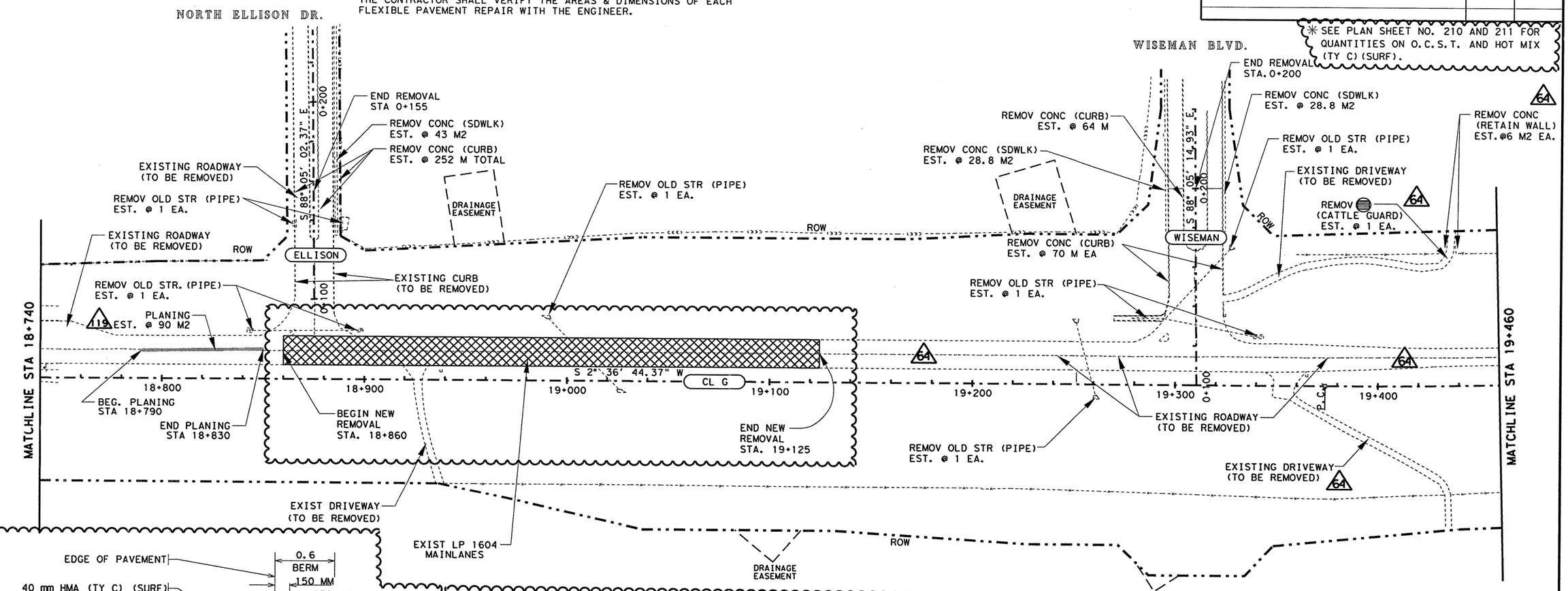


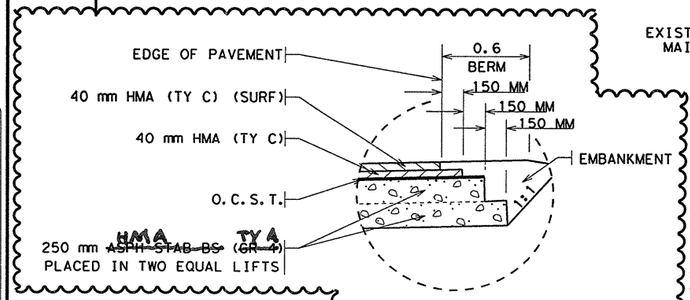


LEGEND

- CL G — ℄ LOOP 1604
- ELLISON — NORTH ELLISON DRIVE ℄
- WISEMAN — WISEMAN BLVD. ℄
- RECONSTRUCTED AREA
- LIMITS OF ROADWAY TO BE PLANED

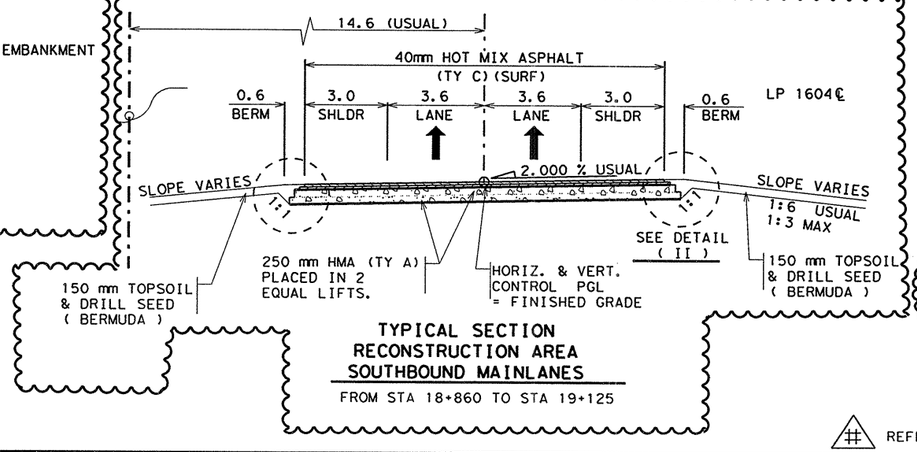


**TYPICAL SECTION RECONSTRUCTION AREA SOUTHBOUND MAINLANES**

FROM STA 18+860 TO STA 19+125

CHANGE ORDER #141

REVISED SHEET

**CHANGE ORDER NO. 141**

-ADDED RECONSTRUCTION AREA

-ADDED QUANTITIES

△ REFERS TO CHANGES MADE AS PART OF CHANGE ORDER.

STATE OF TEXAS
MIGUEL G. ROGERIO
96620
LICENSED
PROFESSIONAL ENGINEER

Miguel G. Rogerio 10/23/2006
Miguel G. Rogerio P.E. Date

©2006
Texas Department of Transportation

## EXISTING PLAN

SHEET 7a OF 19

| FED.RD. DIV.NO. | FEDERAL AID PROJECT NO. | SHEET NO. |
|---|---|---|
| 6 | NH 2000(704),etc. | 178AA |
| STATE | DIST. | COUNTY |
| TEXAS | SAT | BEXAR |
| CONT. | SECT. | JOB / HIGHWAY NO. |
| 2452 | 01 | 036,etc. / LP 1604 |

10-18-06

LEVELS DISPLAYED
1 2 3 4 5 6 7 8 9 10 11 12 13 14 15 16 17 18 19 20 21 22 23 24 25 26 27 28 29 30 31 32 33 34 35 36 37 38 39 40 41 42 43 44 45 46 47 48 49 50 51 52 53 54 55 56 57 58 59 60 61 63

ACC: t:\ao\design\lp1604
FILE: existingplan07 ch.DGN

QUANTITIES THIS SHEET
CSJ 2452-01-037

SCALE : 1:2000

| ESTIMATED QUANTITIES | | |
|---|---|---|
| ITEM | UNIT | QTY. |
| ✳ REMOV CONC (SDWLK) | M2 | 100.6 |
| ✳ REMOV (CURB) | M | 456 |
| REPAIR EXIST FLEX PAV STRUCT (200 MM) | M2 | 55.2 |
| ✳ REMOV OLD STR (PIPE) | EA | 6 |
| ✳ PLANE ASPH CONC PAV (0 - 40 MM) | M2 | 482 |
| ✳ REMOV CONC (RET. WALL) | M2 | 12 |
| ✳ REMOV CATTLEGUARD | EA | 1 |
| ✳ REMOV CONC (CURB OR C & G) | M | 85 |
| | | |
| | | |

64

✳FOR CONTRACTORS INFORMATION ONLY

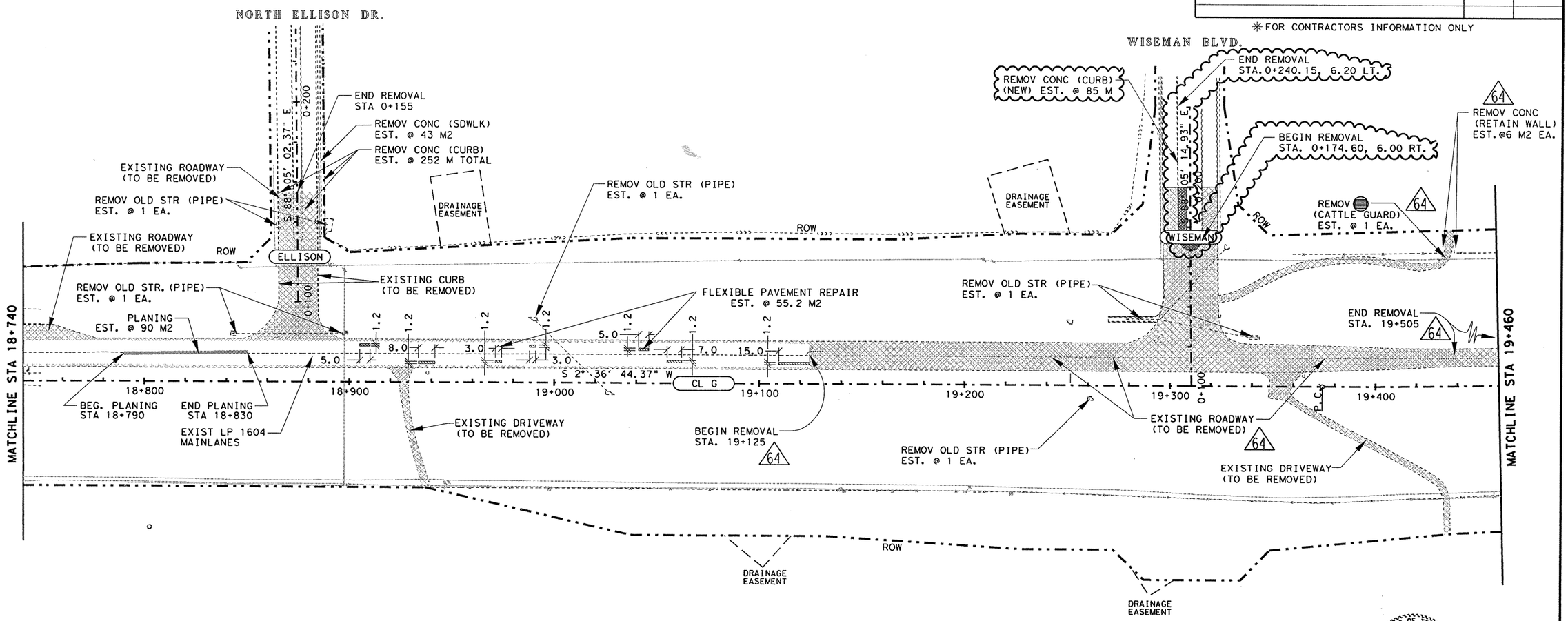


EXISTING CATTLE GUARD SHALL BE REMOVED AND REMAIN THE PROPERTY OF LAND OWNER. ONCE CATTLE GUARD HAS BEEN REMOVED CONTRACTOR SHALL MOVE TO A SITE ON PROPERTY SUITABLE TO LAND OWNER.

64

# CHANGE ORDER #144

REVISED SHEET

(#) REFERS TO CHANGES MADE AS PART OF CHANGE ORDER.

| UTILITY LEGEND |
|---|
| WATER LINE |
| TELEPHONE LINE |
| CABLE LINE |
| GAS LINE |

LEGEND

- LIMITS OF ROADWAY TO BE REMOVED
- (CL G) ℄ LOOP 1604
- (ELLISON) NORTH ELLISON DRIVE ℄
- (WISEMAN) WISEMAN BLVD. ℄
- LIMITS OF FLEXIBLE PAVEMENT REPAIR.
- LIMITS OF ROADWAY TO BE PLANED

NOTE(S):

ALL REMOVAL ITEMS SHALL BE CONSIDERED SUBSIDIARY TO ITEM 100 PREP ROW UNLESS OTHERWISE NOTED.

ALL DIMENSIONS ARE IN METERS UNLESS OTHERWISE NOTED.

FOR EXISTING SIGN REMOVAL SEE SHEET(S) 36-39 .

FOR HORIZONTAL ALIGNMENT/DATA, SEE SHEET(S) 164-171

ALL FLEXIBLE PAVEMENT REPAIR AREAS & DIMENSIONS ARE APPROXIMATE. THE CONTRACTOR SHALL VERIFY THE AREAS & DIMENSIONS OF EACH FLEXIBLE PAVEMENT REPAIR WITH THE ENGINEER.

CHANGE ORDER NO. 144
-ADDED NEW MODIFICATION TO INTERSECTION (WISEMAN ONLY)
-REVISED QUANTITIES

STATE OF TEXAS
MIGUEL G. ROGERIO
96620
LICENSED PROFESSIONAL ENGINEER

Miguel G. Rogerio, P.E. 11/14/2006
Miguel G. Rogerio, P.E. — Date

©2006
Texas Department of Transportation

## EXISTING PLAN

SHEET 7b OF 19

| FED. RD. DIV. NO. | FEDERAL AID PROJECT NO. | SHEET NO. |
|---|---|---|
| 6 | NH 2000(704), etc. | 178B |
| STATE | DIST. | COUNTY |
| TEXAS | SAT | BEXAR |
| CONT. | SECT. | JOB | HIGHWAY NO. |
| 2452 | 01 | 036, etc. | LP 1604 |


LEVELS DISPLAYED
1 2 3 4 5 6 7 8 9 10 11 12 13 14 15 16
17 18 19 20 21 22 23 24 25 26 27 28 29 30 31 32
33 34 35 36 37 38 39 40 41 42 43 44 45 46 47 48
49 50 51 52 53 54 55 56 57 58 59 60 61 63
ACC: t:\ao\construction\2452-01-036\CO\CO #144 Wiseman Rd LTL\
FILE: existingplan07B ch.DGN

QUANTITIES THIS SHEET
CSJ 2452-01-037

SCALE : 1:2000

## ESTIMATED QUANTITIES

| ITEM | UNIT | QTY. |
|---|---|---|
| ✳ REMOV CONC (SDWLK) | M2 | 100.6 |
| ✳ REMOV (CURB) | M | 456 |
| ~~REPAIR EXIST FLEX PAV STRUCT (200 MM)~~ | ~~M2~~ | ~~50.2~~ |
| ✳ REMOV OLD STR (PIPE) | EA | 6 |
| ~~PLANE ASPH CONC PAV (0 - 40 MM)~~ | ~~M2~~ | ~~90~~ |
| ✳ REMOV CONC (RET. WALL) | M2 | 12 |
| ✳ REMOV CATTLEGUARD | EA | 1 |

64

✳FOR CONTRACTORS INFORMATION ONLY

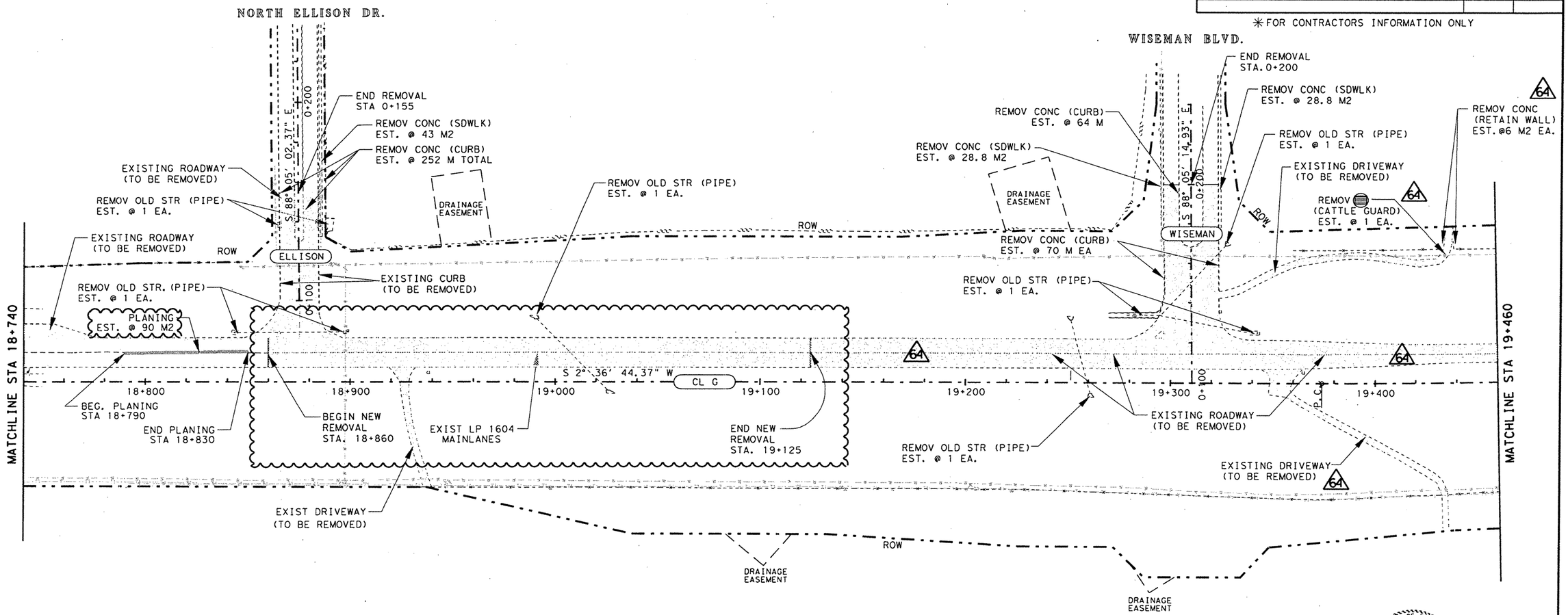


EXISTING CATTLE GUARD SHALL BE REMOVED AND REMAIN THE PROPERTY OF LAND OWNER. ONCE CATTLE GUARD HAS BEEN REMOVED CONTRACTOR SHALL MOVE TO A SITE ON PROPERTY SUITABLE TO LAND OWNER.

64

CHANGE ORDER 119

REVISED SHEET

CHANGE ORDER NO. 119

-REVISED REMOVAL ITEMS DUE TO NEW REHAB PLAN TO S'BD. ML'S.
-ELIMINATED PAVEMENT REPAIR AREAS.
-REVISED/CORRECTED QUANTITIES

STATE OF TEXAS
FITZGERALDO G. SANCHEZ
76084
LICENSED
PROFESSIONAL ENGINEER

Fitzgeraldo G. Sanchez 03-10-06
Fitzgeraldo G. Sanchez, P.E. Date

NOTE(S):

ALL REMOVAL ITEMS SHALL BE CONSIDERED SUBSIDIARY TO ITEM 100 PREP ROW UNLESS OTHERWISE NOTED.

ALL DIMENSIONS ARE IN METERS UNLESS OTHERWISE NOTED.

FOR EXISTING SIGN REMOVAL SEE SHEET(S) 36-39 .

FOR HORIZONTAL ALIGNMENT/DATA, SEE SHEET(S) 164-171 .

ALL FLEXIBLE PAVEMENT REPAIR AREAS & DIMENSIONS ARE APPROXIMATE. THE CONTRACTOR SHALL VERIFY THE AREAS & DIMENSIONS OF EACH FLEXIBLE PAVEMENT REPAIR WITH THE ENGINEER.

#  REFERS TO CHANGES MADE AS PART OF CHANGE ORDER.

LEGEND

- LIMITS OF ROADWAY TO BE REMOVED
- (CL G) ℄ LOOP 1604
- (ELLISON) NORTH ELLISON DRIVE ℄
- (WISEMAN) WISEMAN BLVD. ℄
- LIMITS OF FLEXIBLE PAVEMENT REPAIR.
- LIMITS OF ROADWAY TO BE PLANED

UTILITY LEGEND

- WATER LINE
- TELEPHONE LINE
- CABLE LINE
- GAS LINE

©2000 Texas Department of Transportation

EXISTING PLAN

SHEET 7 OF 19

| FED.RD. DIV.NO. | FEDERAL AID PROJECT NO. | | SHEET NO. |
|---|---|---|---|
| 6 | NH 2000(704),etc. | | 178 A |
| STATE | DIST. | COUNTY | |
| TEXAS | SAT | BEXAR | |
| CONT. | SECT. | JOB | HIGHWAY NO. |
| 2452 | 01 | 036,etc. | LP 1604 |

02-17-06

LEVELS DISPLAYED
1 2 3 4 5 6 7 8 9 10 11 12 13 14 15 16 17 18 19 20 21 22 23 24 25 26 27 28 29 30 31 32 33 34 35 36 37 38 39 40 41 42 43 44 45 46 47 48 49 50 51 52 53 54 55 56 57 58 59 60 61 63

ACC: t:\gov\design\lp1604
FILE: existingplan07 ch.DGN

SEE SCHEDULE OF BARRICADES SHEET NO. 63
FOR CONSTRUCTION SIGN PLACEMENT.
Ⓐ Ⓑ Ⓒ #

SCALE 1:5000

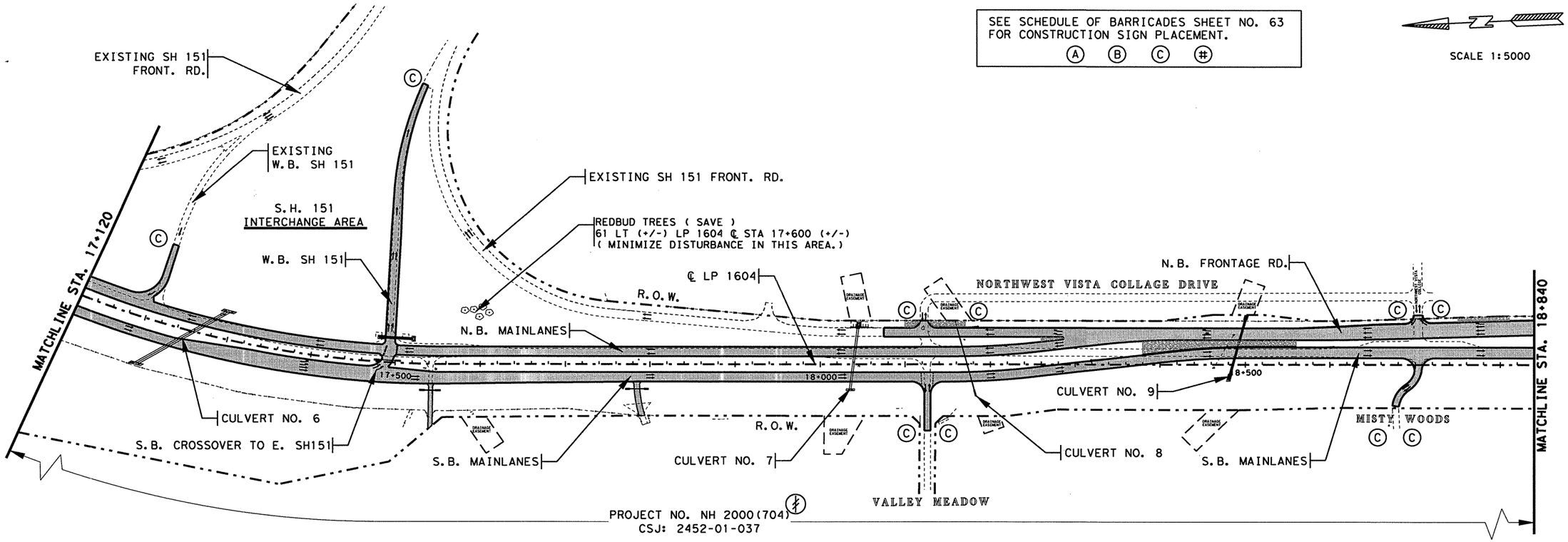


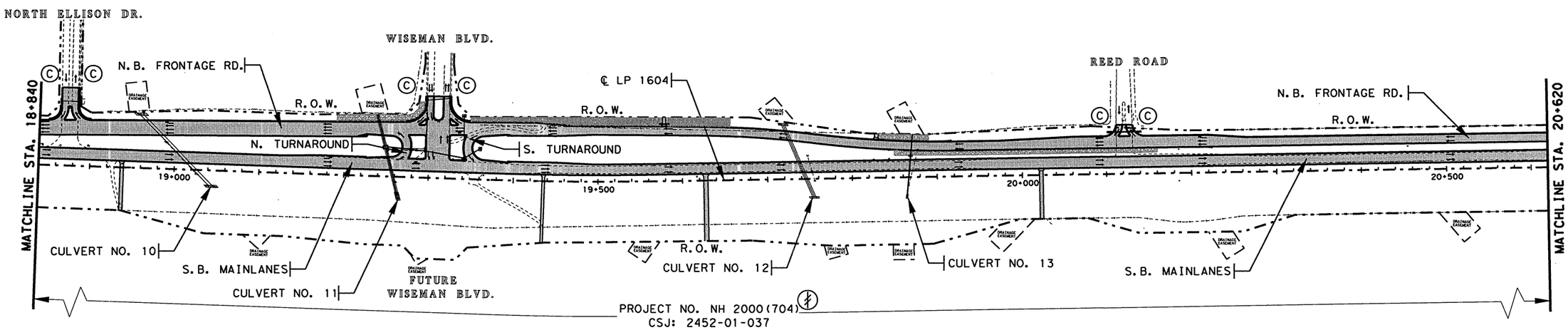


Ⓔ SEE EXCEPTION RELATED NOTE SHEET NO. 3

STATE OF TEXAS
JOEL K. DAVENPORT, JR.
79276
REGISTERED PROFESSIONAL ENGINEER

Joel K Davenport Jr 9/19/00
Joel K. Davenport, Jr., P.E. 79276 Date

©2000
Texas Department of Transportation

# PROJECT & BARRICADE LAYOUT

SHEET 2 OF 4

| FED. RD. DIV. NO. | FEDERAL AID PROJECT NO. | | SHEET NO. |
|---|---|---|---|
| 6 | NH 2000(704), etc. | | 4 |
| STATE | DIST. | COUNTY | |
| TEXAS | SAT | BEXAR | |
| CONT. | SECT. | JOB | HIGHWAY NO. |
| 2452 | 01 | 036, etc. | LP 1604 |

lp1604fm471-90\projcy02.dgn

QUANTITIES THIS SHEET
CSJ 2452-01-037

SCALE : 1:2000

| ESTIMATED QUANTITIES | | |
|---|---|---|
| ITEM | UNIT | QTY. |
| * REMOV CONC (CURB) | M | 68 |
| * REMOV OLD STR (PIPE) | EA | 2 |
| | | |
| | | |
| | | |
| | | |
| | | |
| | | |
| | | |

* FOR CONTRACTORS INFORMATION ONLY

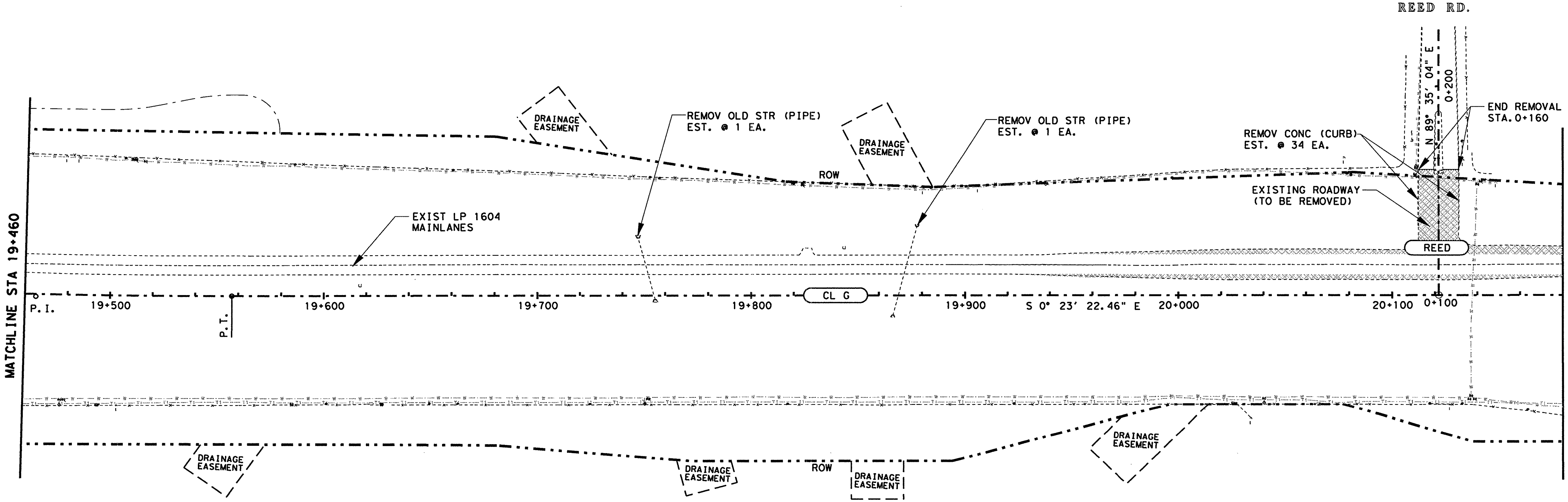


| UTILITY LEGEND |
|---|
| WATER LINE |
| TELEPHONE LINE |
| CABLE LINE |
| GAS LINE |

LEGEND

LIMITS OF ROADWAY TO BE REMOVED

CL G — ℄ LOOP 1604

REED — REED ROAD ℄

NOTE(S):

ALL REMOVAL ITEMS SHALL BE CONSIDERED SUBSIDIARY TO ITEM 100 PREP ROW UNLESS OTHERWISE NOTED.

ALL DIMENSIONS ARE IN METERS UNLESS OTHERWISE NOTED.

FOR EXISTING SIGN REMOVAL SEE SHEET(S) 36-39.

FOR HORIZONTAL ALIGNMENT/DATA, SEE SHEET(S) 164-171.

STATE OF TEXAS
JOEL K. DAVENPORT, JR.
79276
REGISTERED PROFESSIONAL ENGINEER

Joel K. Davenport, Jr. P.E. 79276 — 9/19/00 Date

©2000 Texas Department of Transportation

EXISTING PLAN

SHEET 8 OF 19

| FED. RD. DIV. NO. | FEDERAL AID PROJECT NO. | | SHEET NO. |
|---|---|---|---|
| 6 | NH 2000(704), etc. | | 179 |
| STATE | DIST. | COUNTY | |
| TEXAS | SAT | BEXAR | |
| CONT. | SECT. | JOB | HIGHWAY NO. |
| 2452 | 01 | 036, etc. | LP 1604 |

lp1604fm471-90\existingplan08.dgn

QUANTITIES THIS SHEET
CSJ 2452-01-037

SCALE : 1:2000

| ESTIMATED QUANTITIES | | |
|---|---|---|
| ITEM | UNIT | QTY. |
| ✳ REMOV CONC (CURB) | M | 68 |
| ✳ REMOV OLD STR (PIPE) | EA | 2 |
| REMOV GATE | EA | 1 |

✳FOR CONTRACTORS INFORMATION ONLY

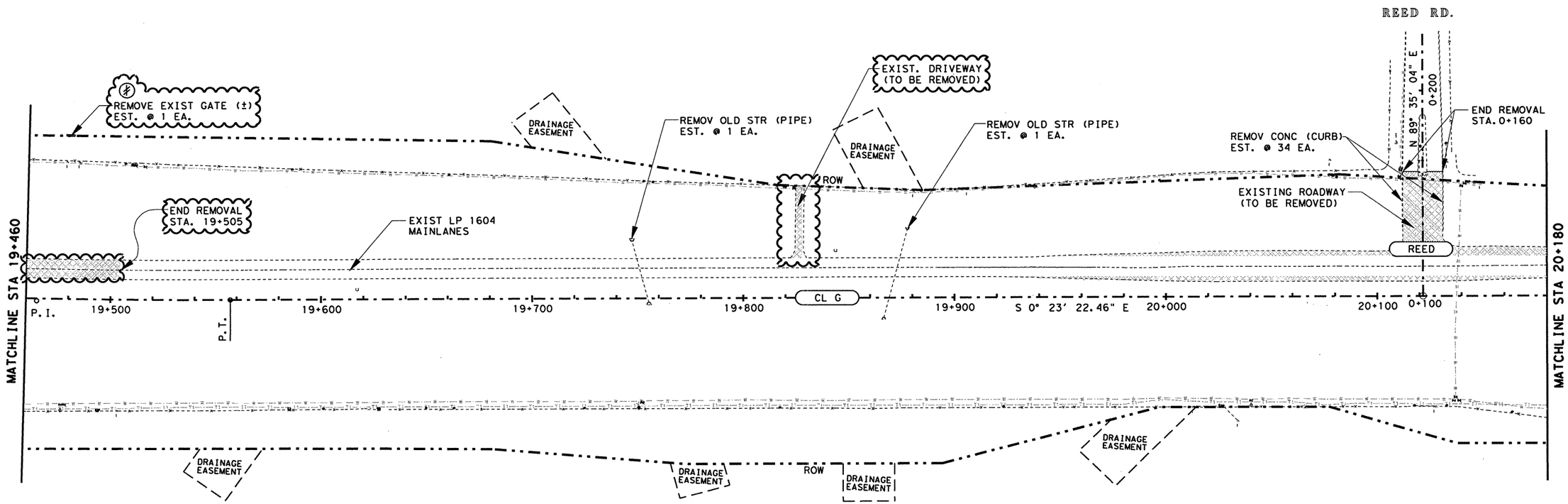


(±) EXISTING GATE SHALL BE REMOVED AND PLACED ACCORDING TO DETAILS SHOWN ON DRIVEWAY #13 PLAN/PROFILE AND DETAIL SHEET. ONCE GATE HAS BEEN REMOVED THE EXIST. FENCE SHALL BE REPAIRED/REPLACED TO THE SATISFACTION OF THE ENGINEER.

CHANGE ORDER 64

REVISED SHEET

| UTILITY LEGEND | |
|---|---|
| W W W W W W W | WATER LINE |
| T T T T T T T | TELEPHONE LINE |
| C C C C C C C | CABLE LINE |
| G G G G G G G | GAS LINE |

LEGEND

- LIMITS OF ROADWAY TO BE REMOVED
- CL G — ℄ LOOP 1604
- REED — REED ROAD ℄

NOTE(S):

ALL REMOVAL ITEMS SHALL BE CONSIDERED SUBSIDIARY TO ITEM 100 PREP ROW UNLESS OTHERWISE NOTED.

ALL DIMENSIONS ARE IN METERS UNLESS OTHERWISE NOTED.

FOR EXISTING SIGN REMOVAL SEE SHEET(S) 36-39.

FOR HORIZONTAL ALIGNMENT/DATA, SEE SHEET(S) 164-171.

**CHANGE ORDER NO. 64**

-UPDATED VIEW
-ADDED ADDITIONAL REMOVAL ITEMS
-ADDED EXIST. DRIVE
-REVISED QUANTITIES.

STATE OF TEXAS
JEROME D. PAVLISKA
76075
REGISTERED PROFESSIONAL ENGINEER

Jerome D. Pavliska, P.E. 4-28-04
Jerome D. Pavliska, P.E. — Date

©2000 Texas Department of Transportation

EXISTING PLAN

SHEET 8 OF 19

| FED. RD. DIV. NO. | FEDERAL AID PROJECT NO. | | SHEET NO. |
|---|---|---|---|
| 6 | NH 2000(704), etc. | | 179 A |
| STATE | DIST. | COUNTY | |
| TEXAS | SAT | BEXAR | |
| CONT. | SECT. | JOB | HIGHWAY NO. |
| 2452 | 01 | 036, etc. | LP 1604 |

05-01-04

tp1604fm471-90\existingplan08*ch.dgn

QUANTITIES THIS SHEET
CSJ 2452-01-037

SCALE : 1:2000

| ESTIMATED QUANTITIES | | |
|---|---|---|
| ITEM | UNIT | QTY. |
| ✳ REMOV CONC (CURB) | M | 68 |
| ✳ REMOV OLD STR (PIPE) | EA | 2 |
| 64 REMOV GATE | EA | 1 |
| 118 REPAIR EXIST. FLEX. PAV. STRUCT (200 mm). | M2 | 39 |

✳ FOR CONTRACTORS INFORMATION ONLY

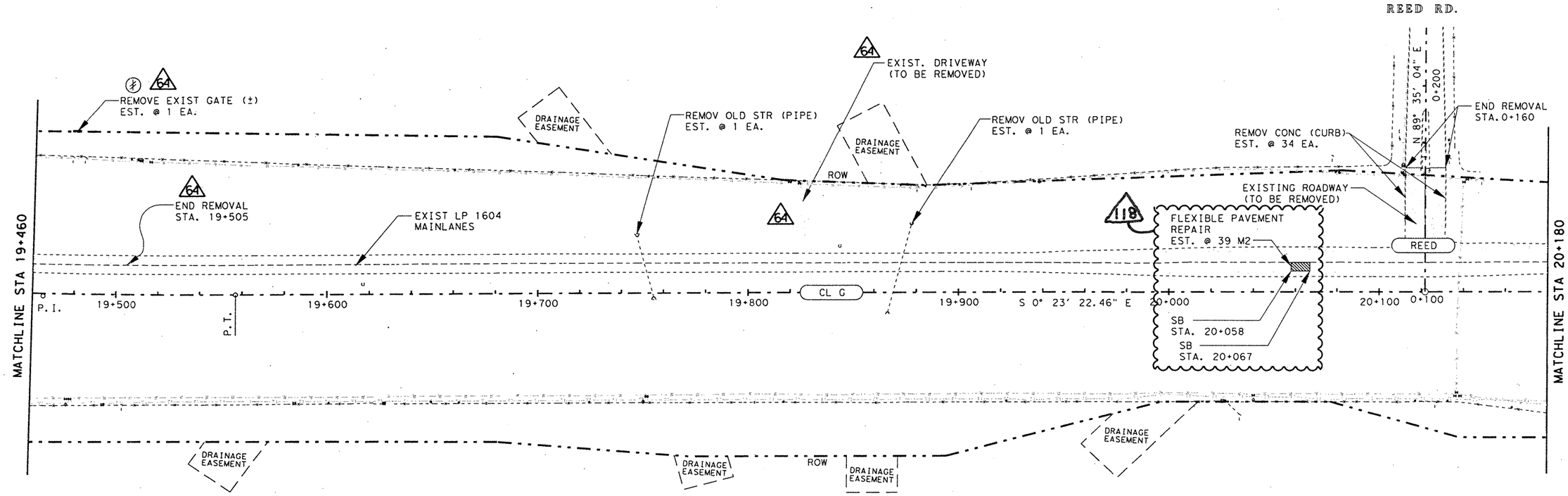


(✳) 64 EXISTING GATE SHALL BE REMOVED AND PLACED ACCORDING TO DETAILS SHOWN ON DRIVEWAY #13 PLAN/PROFILE AND DETAIL SHEET. ONCE GATE HAS BEEN REMOVED THE EXIST. FENCE SHALL BE REPAIRED/REPLACED TO THE SATISFACTION OF THE ENGINEER.

CHANGE ORDER 119

REVISED SHEET

| UTILITY LEGEND |
|---|
| WATER LINE |
| TELEPHONE LINE |
| CABLE LINE |
| GAS LINE |

LEGEND

- LIMITS OF ROADWAY TO BE REMOVED
- CL G — ℄ LOOP 1604
- REED — REED ROAD ℄
- LIMITS OF FLEXIBLE PAVEMENT REPAIR.

NOTE(S):

ALL REMOVAL ITEMS SHALL BE CONSIDERED SUBSIDIARY TO ITEM 100 PREP ROW UNLESS OTHERWISE NOTED.

ALL DIMENSIONS ARE IN METERS UNLESS OTHERWISE NOTED.

FOR EXISTING SIGN REMOVAL SEE SHEET(S) 36-39.

FOR HORIZONTAL ALIGNMENT/DATA, SEE SHEET(S) 164-171.

CHANGE ORDER NO. 119

-ADDED NEW FLEXIBLE PAVEMENT REPAIR AREA.
-ADDED NEW QUANTITIES.

STATE OF TEXAS
FITZGERALDO G. SANCHEZ
76084
LICENCED PROFESSIONAL ENGINEER

Fitzgeraldo G Sanchez 03-10-06
Fitzgeraldo G. Sanchez, P.E. Date

©2000 Texas Department of Transportation

EXISTING PLAN

SHEET 8 OF 19

| FED.RD. DIV.NO. | FEDERAL AID PROJECT NO. | | SHEET NO. |
|---|---|---|---|
| 6 | NH 2000(704),etc. | | 179 AB |
| STATE | DIST. | COUNTY | |
| TEXAS | SAT | BEXAR | |
| CONT. | SECT. | JOB | HIGHWAY NO. |
| 2452 | 01 | 036,etc. | LP 1604 |

02-17-06

T:\AO\Design\lp1604fm471-90\existingplan08sch.dgn
2/9/2006

QUANTITIES THIS SHEET
CSJ 2452-01-037

SCALE : 1:2000

| ESTIMATED QUANTITIES | | |
|---|---|---|
| ITEM | UNIT | QTY. |
| ✳ REMOV CONC (CURB) | M | 68 |
| ✳ REMOV OLD STR (PIPE) | EA | 2 |
| Repair Ext Flex Pav Struct (200mm) | $m^2$ | 39 |

✳ FOR CONTRACTORS INFORMATION ONLY

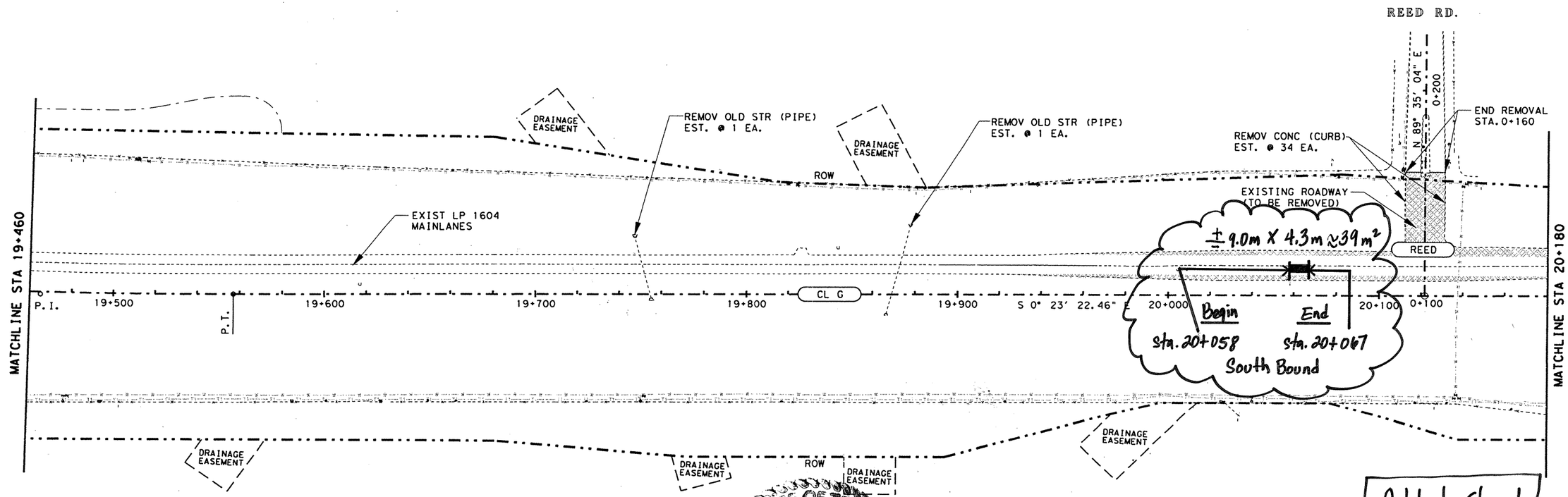


| UTILITY LEGEND | |
|---|---|
| W W W W W W W | WATER LINE |
| T1 T1 T1 T1 T1 T1 T1 | TELEPHONE LINE |
| C C C C C C C | CABLE LINE |
| G1 G1 G1 G1 G1 G1 G1 | GAS LINE |

LEGEND

- LIMITS OF ROADWAY TO BE REMOVED
- CL G — ℄ LOOP 1604
- REED — REED ROAD ℄

NOTE(S):

ALL REMOVAL ITEMS SHALL BE CONSIDERED SUBSIDIARY TO ITEM 100 PREP ROW UNLESS OTHERWISE NOTED.

ALL DIMENSIONS ARE IN METERS UNLESS OTHERWISE NOTED.

FOR EXISTING SIGN REMOVAL SEE SHEET(S) 36-39.

FOR HORIZONTAL ALIGNMENT/DATA, SEE SHEET(S) 164-171.

STATE OF TEXAS
Fitzgerald G. Sanchez
76084
REGISTERED PROFESSIONAL ENGINEER
02-27-06
CO#118

Change Order 118
Change Order No. 118
- Added new flexible Pavement Repair
- Added new Quantities

Added Sheet

STATE OF TEXAS
JOEL K. DAVENPORT, JR.
79276
REGISTERED PROFESSIONAL ENGINEER

Joel K. Davenport Jr. 9/19/06
Joel K. Davenport, Jr. P.E. 79276 Date

©2000 Texas Department of Transportation

EXISTING PLAN

SHEET 8 OF 19

| FED. RD. DIV. NO. | FEDERAL AID PROJECT NO. | SHEET NO. |
|---|---|---|
| 6 | NH 2000(704), etc. | 179A |
| STATE | DIST. | COUNTY |
| TEXAS | SAT | BEXAR |
| CONT. | SECT. | JOB / HIGHWAY NO. |
| 2452 | 01 | 036, etc. / LP 1604 |

lp1604fm471-90\existingplan08.dgn

SCALE : 1:2000

## ESTIMATED QUANTITIES

| | ITEM | UNIT | 2452-01-037 QTY. | 2452-01-036 QTY. |
|---|---|---|---|---|
| ✳ | REMOV CONC (CURB) | M | | 100 |
| ✳ | REMOV OLD STR (PIPE) | EA | 2 | |
| | | | | |
| | | | | |
| | | | | |

✳FOR CONTRACTORS INFORMATION ONLY

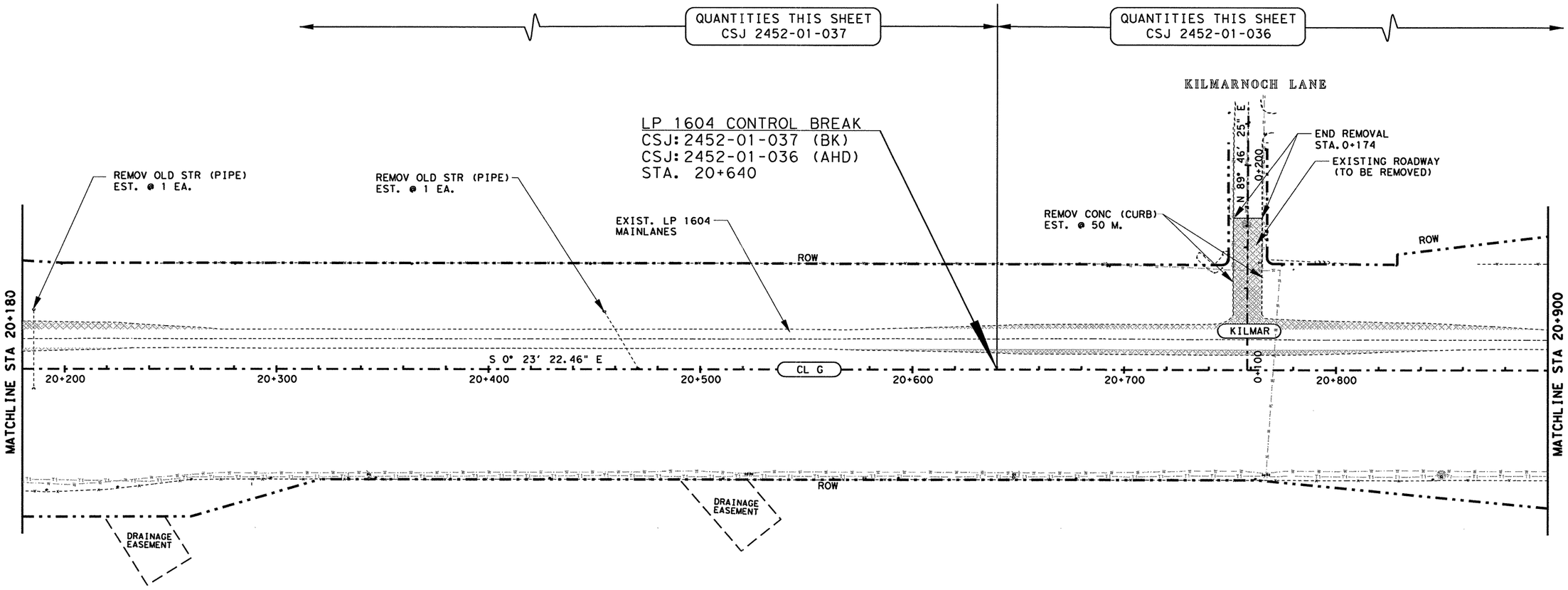


| UTILITY LEGEND | |
|---|---|
| W W W W W | WATER LINE |
| T1 T1 T1 T1 T1 | TELEPHONE LINE |
| C C C C C | CABLE LINE |
| G1 G1 G1 G1 G1 | GAS LINE |

LEGEND

- LIMITS OF ROADWAY TO BE REMOVED
- (CL G) ℄ LOOP 1604
- (KILMAR) KILMARNOCH LANE ℄

NOTE(S):

ALL REMOVAL ITEMS SHALL BE CONSIDERED SUBSIDIARY TO ITEM 100 PREP ROW UNLESS OTHERWISE NOTED.

ALL DIMENSIONS ARE IN METERS UNLESS OTHERWISE NOTED.

FOR EXISTING SIGN REMOVAL SEE SHEET(S) 36-39.

FOR HORIZONTAL ALIGNMENT/DATA, SEE SHEET(S) 164-171.

STATE OF TEXAS
JOEL K. DAVENPORT, JR.
79276
REGISTERED PROFESSIONAL ENGINEER

Joel K. Davenport Jr. 9/19/00
Joel K. Davenport, Jr. P.E. 79276 Date

Texas Department of Transportation

# EXISTING PLAN

SHEET 9 OF 19

| FED. RD. DIV. NO. | FEDERAL AID PROJECT NO. | | SHEET NO. |
|---|---|---|---|
| 6 | NH 2000(704),etc. | | 180 |
| STATE | DIST. | COUNTY | |
| TEXAS | SAT | BEXAR | |
| CONT. | SECT. | JOB | HIGHWAY NO. |
| 2452 | 01 | 036,etc. | LP 1604 |

I:\p1604fm471-90\existingplan09.dgn

SCALE : 1:2000

## ESTIMATED QUANTITIES

| ITEM | UNIT | 2452-01-037 QTY. | 2452-01-036 QTY. |
|---|---|---|---|
| ✳ REMOV CONC (CURB) | M | | 100 |
| ✳ REMOV OLD STR (PIPE) | EA | 2 | |
| Repair Exit Flex Pav. Struct (200mm) | $m^2$ | 392 | 771 m |

✳ FOR CONTRACTORS INFORMATION ONLY

QUANTITIES THIS SHEET CSJ 2452-01-037

QUANTITIES THIS SHEET CSJ 2452-01-036

KILMARNOCH LANE

LP 1604 CONTROL BREAK
CSJ: 2452-01-037 (BK)
CSJ: 2452-01-036 (AHD)
STA. 20+640

REMOV OLD STR (PIPE) EST. @ 1 EA.

REMOV OLD STR (PIPE) EST. @ 1 EA.

EXIST. LP 1604 MAINLANES

North Bound
4.3m X 66m = 283.80 $m^2$
ROW
Begin Sta. 20+568
End 20+634

REMOV CONC (CURB) EST. @ 50 M.

North Bound
4.3m X 54m = 232.2 $m^2$
Begin Sta. 20+710
End 20+764

END REMOVAL STA. 0+174

EXISTING ROADWAY (TO BE REMOVED)

N 89° 46' 25" E

0+200

North Bound
4.3m X 12m = 51.60 $m^2$
ROW
Begin 20+768
End 20+780

North Bound
3.85m X 35m ≈ 135 $m^2$

Begin 20+865

0+100

0+200 STA

MATCHLINE STA 20+180

S 0° 23' 22.46" E

20+200 20+300 20+400 20+500 CL G 20+600 20+700 20+800

Begin Sta. 20+613
End Sta. 20+666
4.3m x 53m ≈ 227.90 $m^2$
South Bound

Begin 20+710
End 20+763
4.3m x 53m ≈ 227.9 $m^2$
South Bound

Begin 20+899
3.6m x 1m ≈ 4.0 $m^2$
South Bound.

MATCHLINE STA 20+900

ROW

DRAINAGE EASEMENT

DRAINAGE EASEMENT

STATE OF TEXAS
Fitzgeraldo G. Sanchez
76084
REGISTERED PROFESSIONAL ENGINEER
02-28-06
CO #118

CSJ 2452-01-037
4.3 x 25m ≈ 108 $m^2$
4.3 x 66 m ≈ 283.80 $m^2$
≈ 392.0 $m^2$

CSJ 2452-01-036
4.3m X 28 m ≈ 120 $m^2$
4.3m X 54 m ≈ 232.2 $m^2$
4.3m X 53m ≈ 227.9 $m^2$
4.3m X 12m ≈ 51.60 $m^2$
3.85m x 35m ≈ 135.0 $m^2$
3.6 m x 1m ≈ 4.0 $m^2$
≈ 771. $m^2$

Change Order #8
Added Sheet

Change Order No #8
- Added new flexible Pavement Repair Struct.
- Added new Quantities

STATE OF TEXAS
JOEL K. DAVENPORT, JR.
79276
REGISTERED PROFESSIONAL ENGINEER

Joel K. Davenport Jr 9/19/00
Joel K. Davenport, Jr P.E. 79276 Date

### UTILITY LEGEND

- WATER LINE
- TELEPHONE LINE
- CABLE LINE
- GAS LINE

### LEGEND

- LIMITS OF ROADWAY TO BE REMOVED
- CL G — ℄ LOOP 1604
- KILMAR — KILMARNOCH LANE ℄

NOTE(S):

ALL REMOVAL ITEMS SHALL BE CONSIDERED SUBSIDIARY TO ITEM 100 PREP ROW UNLESS OTHERWISE NOTED.

ALL DIMENSIONS ARE IN METERS UNLESS OTHERWISE NOTED.

FOR EXISTING SIGN REMOVAL SEE SHEET(S) 36-39.

FOR HORIZONTAL ALIGNMENT/DATA, SEE SHEET(S) 164-171.

©2000

Texas Department of Transportation

## EXISTING PLAN

SHEET 9 OF 19

| FED. RD. DIV. NO. | FEDERAL AID PROJECT NO. | SHEET NO. |
|---|---|---|
| 6 | NH 2000(704), etc. | 180 A |
| STATE | DIST. | COUNTY |
| TEXAS | SAT | BEXAR |
| CONT. | SECT. | JOB / HIGHWAY NO. |
| 2452 | 01 | 036, etc. / LP 1604 |

tp1604fm471-90existingplan09.dgn

SCALE : 1:2000

## ESTIMATED QUANTITIES

| ITEM | UNIT | 2452-01-037 QTY. | 2452-01-036 QTY. |
|---|---|---|---|
| * REMOV CONC (CURB) | M | | 100 |
| * REMOV OLD STR (PIPE) | EA | 2 | |
| REPAIR EXIST. FLEX. PAV. STRUCT (200 mm). | M2 | 400 | 786 |

118

* FOR CONTRACTORS INFORMATION ONLY

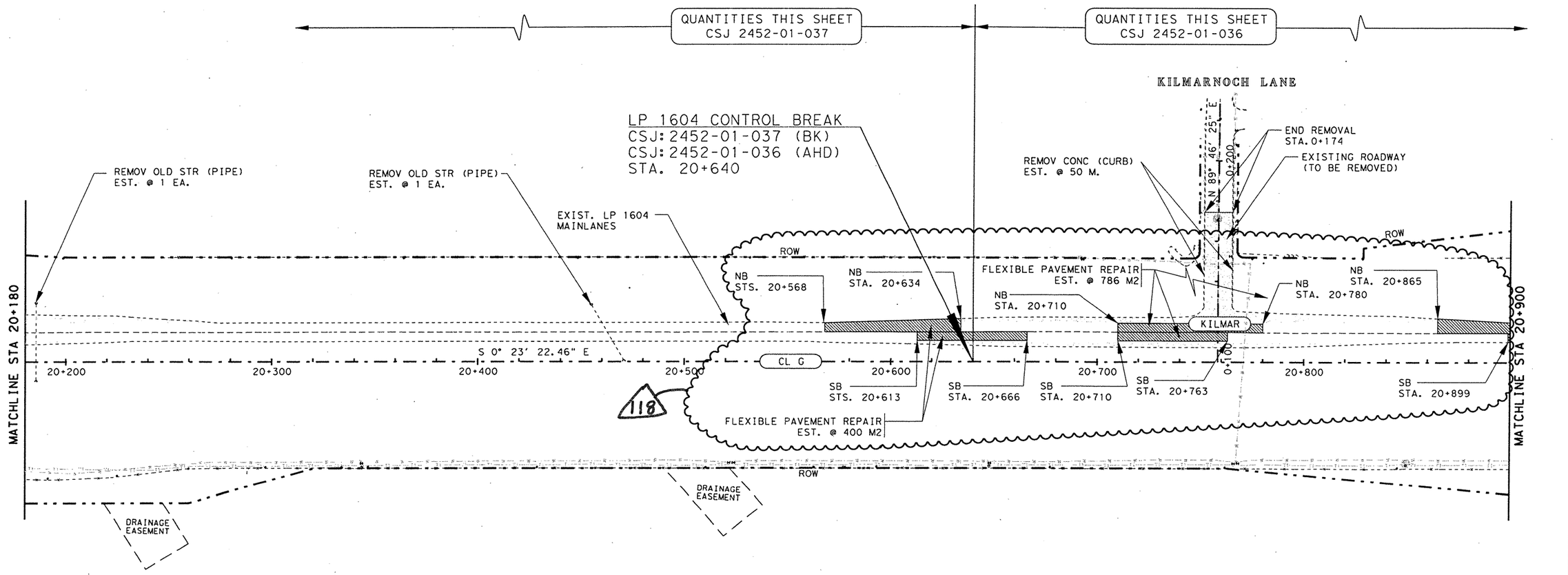


| UTILITY LEGEND | |
|---|---|
| | WATER LINE |
| | TELEPHONE LINE |
| | CABLE LINE |
| | GAS LINE |

LEGEND

- LIMITS OF ROADWAY TO BE REMOVED
- CL G — ℄ LOOP 1604
- KILMAR — KILMARNOCH LANE ℄
- LIMITS OF FLEXIBLE PAVEMENT REPAIR.

NOTE(S):

ALL REMOVAL ITEMS SHALL BE CONSIDERED SUBSIDIARY TO ITEM 100 PREP ROW UNLESS OTHERWISE NOTED.

ALL DIMENSIONS ARE IN METERS UNLESS OTHERWISE NOTED.

FOR EXISTING SIGN REMOVAL SEE SHEET(S) 36-39.

FOR HORIZONTAL ALIGNMENT/DATA, SEE SHEET(S) 164-171.

CHANGE ORDER 119

REVISED SHEET

CHANGE ORDER NO. 119

-ADDED NEW FLEXIBLE PAVEMENT REPAIR AREAS.
-ADDED NEW QUANTITIES.

STATE OF TEXAS
FITZGERALDO G. SANCHEZ
76084
LICENCED PROFESSIONAL ENGINEER

Fitzgeraldo G. Sanchez 03-10-06
Fitzgeraldo G. Sanchez, P.E. Date

©2000 Texas Department of Transportation

# EXISTING PLAN

SHEET 9 OF 19

| FED.RD. DIV.NO. | FEDERAL AID PROJECT NO. | | SHEET NO. |
|---|---|---|---|
| 6 | NH 2000(704),etc. | | 180 AB |
| STATE | DIST. | COUNTY | |
| TEXAS | SAT | BEXAR | |
| CONT. | SECT. | JOB | HIGHWAY NO. |
| 2452 | 01 | 036,etc. | LP 1604 |

I:\AO\Design\lp1604fm471-90\existingplan09A.dgn
2/9/2006

02-17-06

QUANTITIES THIS SHEET
CSJ 2452-01-036

SCALE : 1:2000

## ESTIMATED QUANTITIES

| | ITEM | UNIT | QTY. |
|---|---|---|---|
| ✳ | REMOV CONC (DRWY) | M2 | 1850 |
| ✳ | REMOV CONC (CURB) | M | 340 |
| | REPAIR EXIST FLEX PAV STRUCT ( 200 MM ) | M2 | 72 |
| ✳ | REMOV OLD STR (SMALL) | EA | 1 |
| ✳ | REMOV OLD STR (PIPE) | EA | 2 |
| | PLANE ASPH CONC PAV (0 - 40 MM) | M2 | 56 |

✳ FOR CONTRACTORS INFORMATION ONLY

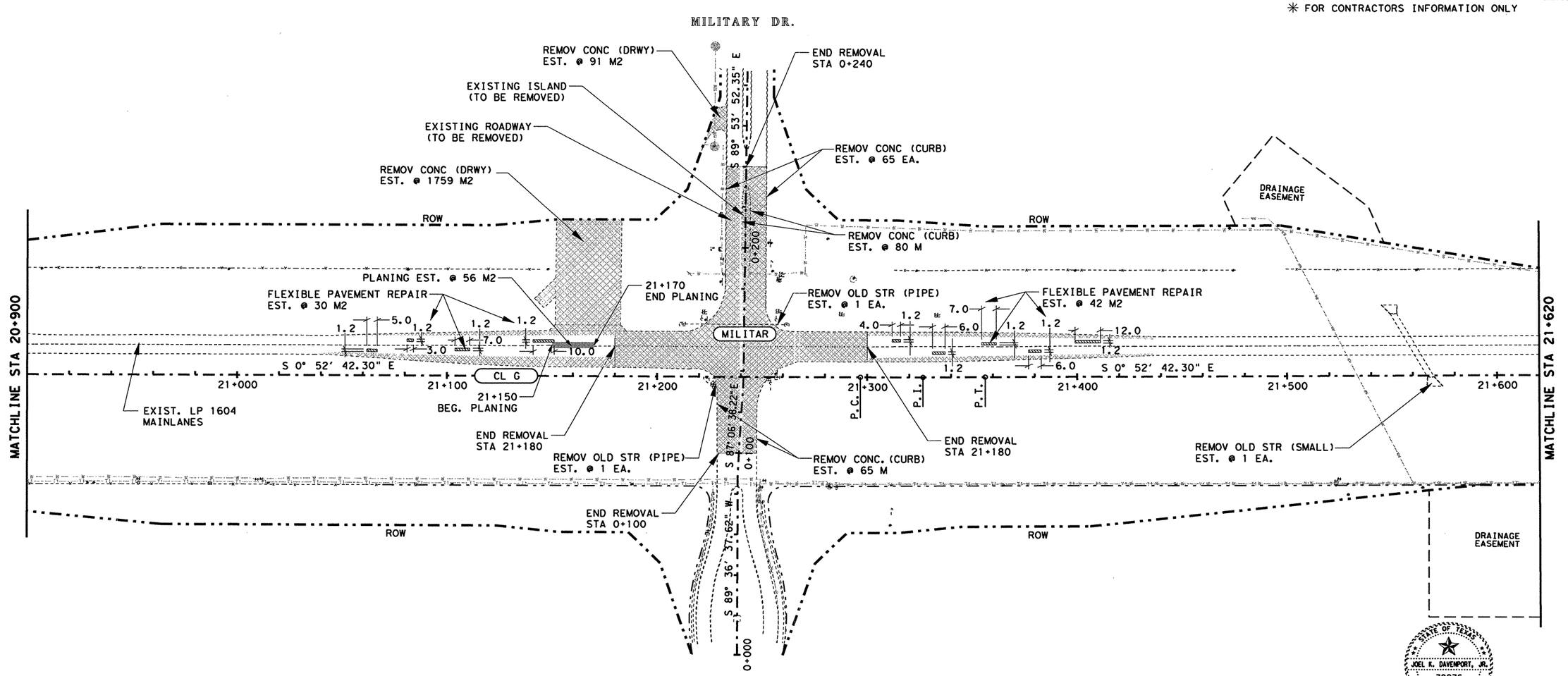


### UTILITY LEGEND

- WATER LINE
- TELEPHONE LINE
- CABLE LINE
- GAS LINE

### LEGEND

- LIMITS OF ROADWAY TO BE REMOVED
- CL G — ℄ LOOP 1604
- MILITAR — MILITARY DRIVE ℄
- LIMITS OF FLEXIBLE PAVEMENT REPAIR.
- LIMITS OF ROADWAY TO BE PLANED

NOTE(S):

ALL REMOVAL ITEMS SHALL BE CONSIDERED SUBSIDIARY TO ITEM 100 PREP ROW UNLESS OTHERWISE NOTED.

ALL DIMENSIONS ARE IN METERS UNLESS OTHERWISE NOTED.

FOR EXISTING SIGN REMOVAL SEE SHEET(S) 36-39 .

FOR HORIZONTAL ALIGNMENT/DATA, SEE SHEET(S) 164-171.

ALL FLEXIBLE PAVEMENT REPAIR AREAS & DIMENSIONS ARE APPROXIMATE. THE CONTRACTOR SHALL VERIFY THE AREAS & DIMENSIONS OF EACH FLEXIBLE PAVEMENT REPAIR WITH THE ENGINEER.

STATE OF TEXAS
JOEL K. DAVENPORT, JR.
79276
REGISTERED PROFESSIONAL ENGINEER

Joel K Davenport Jr 9/9/00
Joel K. Davenport, Jr. P.E. 79276 Date

© 2000

Texas Department of Transportation

# EXISTING PLAN

SHEET 10 OF 19

| FED. RD. DIV. NO. | FEDERAL AID PROJECT NO. | | SHEET NO. |
|---|---|---|---|
| 6 | NH 2000(704),etc. | | 181 |
| STATE | DIST. | COUNTY | |
| TEXAS | SAT | BEXAR | |
| CONT. | SECT. | JOB | HIGHWAY NO. |
| 2452 | 01 | 036,etc. | LP 1604 |

lp1604fm471-90\existingplan10.dgn

QUANTITIES THIS SHEET
CSJ 2452-01-036

SCALE : 1:2000

## ESTIMATED QUANTITIES

| | ITEM | UNIT | QTY. |
|---|---|---|---|
| * | REMOV CONC (DRWY) | M2 | 1850 |
| * | REMOV CONC (CURB) | M | 340 |
| | REPAIR EXIST FLEX PAV STRUCT ( 200 MM ) | M2 | 72 |
| * | REMOV OLD STR (SMALL) | EA | 1 |
| * | REMOV OLD STR (PIPE) | EA | 2 |
| | PLANE ASPH CONC PAV (0 - 40 MM) | M2 | 56 |
| | REMOV CONC (DRWY) | M2 | 264 |
| | REMOV CONC (CURB) | M | 169 |
| | REMOV OLD STR (PIPE) | M | 24.4 |

* FOR CONTRACTORS INFORMATION ONLY

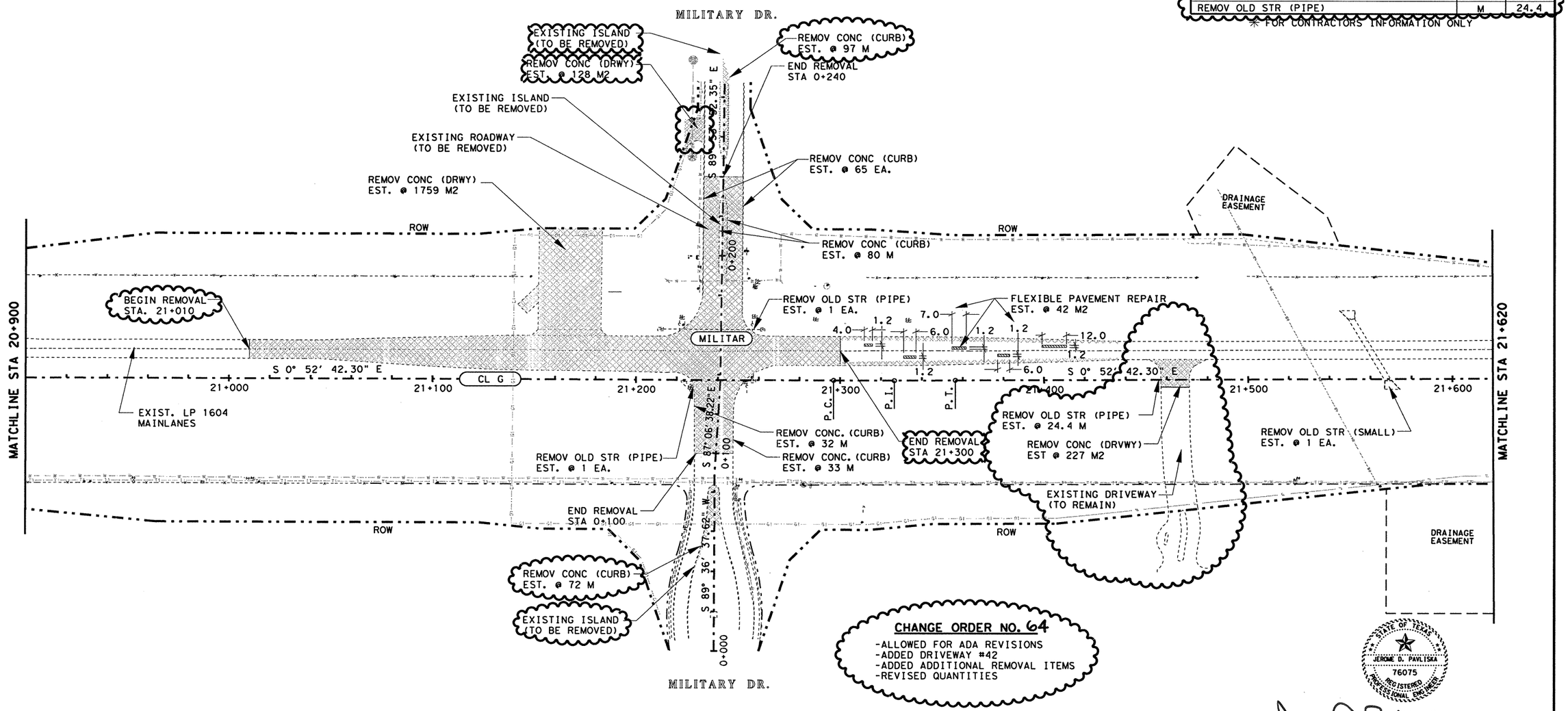


**CHANGE ORDER NO. 64**
-ALLOWED FOR ADA REVISIONS
-ADDED DRIVEWAY #42
-ADDED ADDITIONAL REMOVAL ITEMS
-REVISED QUANTITIES

| UTILITY LEGEND | |
|---|---|
| — W — W — W — W — W — W — W — | WATER LINE |
| — T — T — T — T — T — T — T — | TELEPHONE LINE |
| — C — C — C — C — C — C — C — | CABLE LINE |
| — G — G — G — G — G — G — G — | GAS LINE |

LEGEND

- LIMITS OF ROADWAY TO BE REMOVED
- CL G — ℄ LOOP 1604
- MILITAR — MILITARY DRIVE ℄
- LIMITS OF FLEXIBLE PAVEMENT REPAIR.
- LIMITS OF ROADWAY TO BE PLANED

NOTE(S):

ALL REMOVAL ITEMS SHALL BE CONSIDERED SUBSIDIARY TO ITEM 100 PREP ROW UNLESS OTHERWISE NOTED.

ALL DIMENSIONS ARE IN METERS UNLESS OTHERWISE NOTED.

FOR EXISTING SIGN REMOVAL SEE SHEET(S) 36-39 .

FOR HORIZONTAL ALIGNMENT/DATA, SEE SHEET(S) 164-171.

ALL FLEXIBLE PAVEMENT REPAIR AREAS & DIMENSIONS ARE APPROXIMATE. THE CONTRACTOR SHALL VERIFY THE AREAS & DIMENSIONS OF EACH FLEXIBLE PAVEMENT REPAIR WITH THE ENGINEER.

CHANGE ORDER 64

REVISED SHEET

STATE OF TEXAS
JEROME D. PAVLISKA
76075
REGISTERED PROFESSIONAL ENGINEER

Jerome D. Pavliska P.E. 4-28-04
Jerome D. Pavliska, P.E. Date

©2000 Texas Department of Transportation

# EXISTING PLAN

SHEET 10 OF 19

| FED.RD. DIV.NO. | FEDERAL AID PROJECT NO. | | SHEET NO. |
|---|---|---|---|
| 6 | NH 2000(704),etc. | | 181A |
| STATE | DIST. | COUNTY | |
| TEXAS | SAT | BEXAR | |
| CONT. | SECT. | JOB | HIGHWAY NO. |
| 2452 | 01 | 036,etc. | LP 1604 |

lp1604fm471-90\existingplan10*pd.dgn

QUANTITIES THIS SHEET
CSJ 2452-01-036

SCALE : 1:2000

## ESTIMATED QUANTITIES

| | ITEM | UNIT | QTY. |
|---|---|---|---|
| ✳ | REMOV CONC (DRWY) | M2 | 1850 |
| ✳ | REMOV CONC (CURB) | M | 340 |
| 118 | REPAIR EXIST FLEX PAV STRUCT ( 200 MM ) | M2 | 50 |
| ✳ | REMOV OLD STR (SMALL) | EA | 1 |
| ✳ | REMOV OLD STR (PIPE) | EA | 2 |
| | PLANE ASPH CONC PAV (0 40 MM) | M2 | 50 |
| 64 | REMOV CONC (DRWY) | M2 | 227 |
| | REMOV CONC (CURB) | M | 169 |
| | REMOV OLD STR (PIPE) | M | 24.4 |

✳ FOR CONTRACTORS INFORMATION ONLY

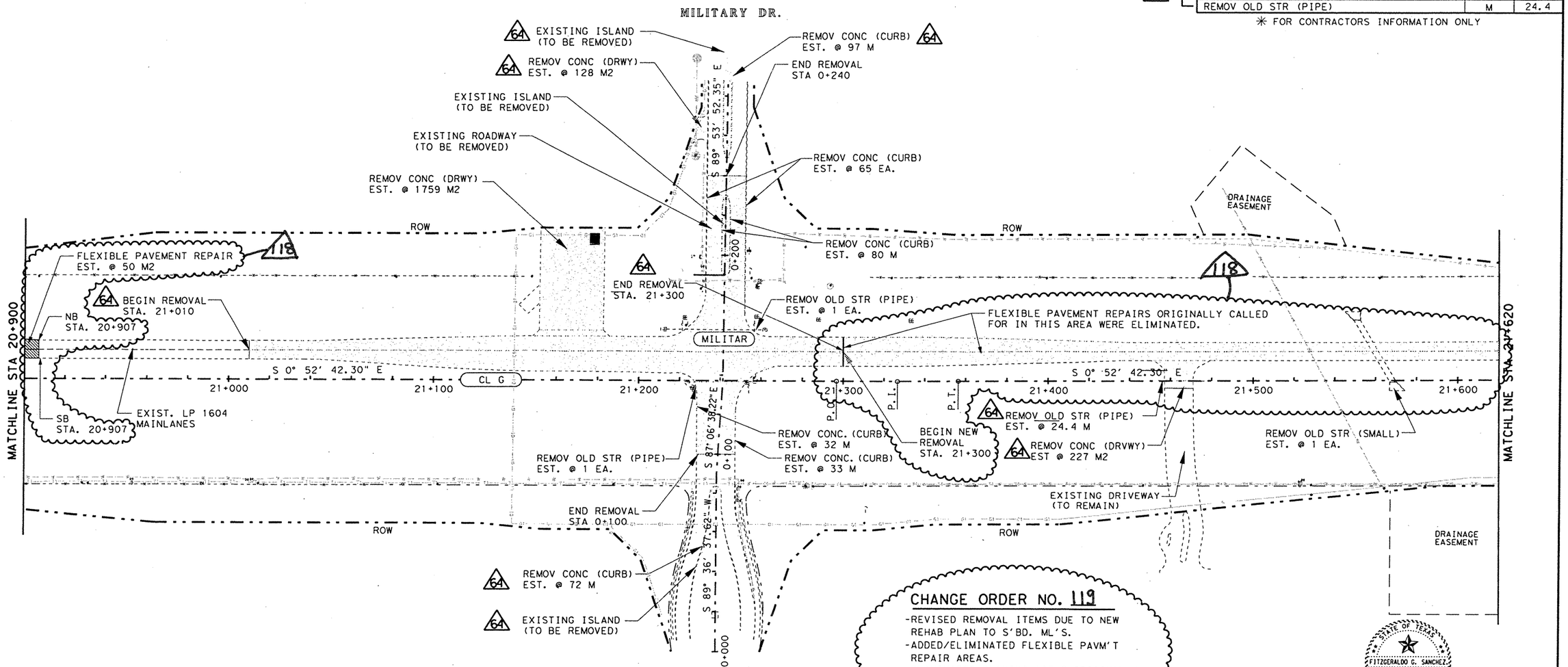


### CHANGE ORDER NO. 119

-REVISED REMOVAL ITEMS DUE TO NEW REHAB PLAN TO S'BD. ML'S.
-ADDED/ELIMINATED FLEXIBLE PAVM'T REPAIR AREAS.
-ELIMINATED PLANING AREAS ORIGINALLY CALLED FOR IN THIS SHEET.
-REVISED/CORRECTED QUANTITIES.

STATE OF TEXAS
FITZGERALDO G. SANCHEZ
76084
LICENCED
PROFESSIONAL ENGINEER

Fitzgeraldo G. Sanchez 03-10-06
Fitzgeraldo G. Sanchez, P.E. Date

### UTILITY LEGEND

- WATER LINE
- TELEPHONE LINE
- CABLE LINE
- GAS LINE

### LEGEND

- LIMITS OF ROADWAY TO BE REMOVED
- CL G — ℄ LOOP 1604
- MILITAR — MILITARY DRIVE ℄
- LIMITS OF FLEXIBLE PAVEMENT REPAIR.
- LIMITS OF ROADWAY TO BE PLANED

NOTE(S):

ALL REMOVAL ITEMS SHALL BE CONSIDERED SUBSIDIARY TO ITEM 100 PREP ROW UNLESS OTHERWISE NOTED.

ALL DIMENSIONS ARE IN METERS UNLESS OTHERWISE NOTED.

FOR EXISTING SIGN REMOVAL SEE SHEET(S) 36-39 .

FOR HORIZONTAL ALIGNMENT/DATA, SEE SHEET(S) 164-171.

ALL FLEXIBLE PAVEMENT REPAIR AREAS & DIMENSIONS ARE APPROXIMATE. THE CONTRACTOR SHALL VERIFY THE AREAS & DIMENSIONS OF EACH FLEXIBLE PAVEMENT REPAIR WITH THE ENGINEER.

# REFERS TO CHANGES MADE AS PART OF CHANGE ORDER.

CHANGE ORDER 119

REVISED SHEET

©2000 Texas Department of Transportation

## EXISTING PLAN

SHEET 10 OF 19

| FED.RD. DIV.NO. | FEDERAL AID PROJECT NO. | | SHEET NO. |
|---|---|---|---|
| 6 | NH 2000(704), etc. | | 181AB |
| STATE | DIST. | COUNTY | |
| TEXAS | SAT | BEXAR | |
| CONT. | SECT. | JOB | HIGHWAY NO. |
| 2452 | 01 | 036, etc. | LP 1604 |

02-17-06

T:\AO\Design\p1604fm471-90\existingplan10-Axpd.dgn
2/9/2006

QUANTITIES THIS SHEET
CSJ 2452-01-036

SCALE : 1:2000

## ESTIMATED QUANTITIES

| | ITEM | UNIT | QTY. |
|---|---|---|---|
| * | REMOV CONC (DRWY) | M2 | 1850 |
| * | REMOV CONC (CURB) | M | 340 |
| 82 | REPAIR EXIST FLEX PAV STRUCT ( 200 MM ) | M2 | [illegible] |
| * | REMOV OLD STR (SMALL) | EA | 1 |
| * | REMOV OLD STR (PIPE) | EA | 2 |
| | PLANE ASPH CONC PAV (0 - 40 MM) | M2 | 56 |

* FOR CONTRACTORS INFORMATION ONLY

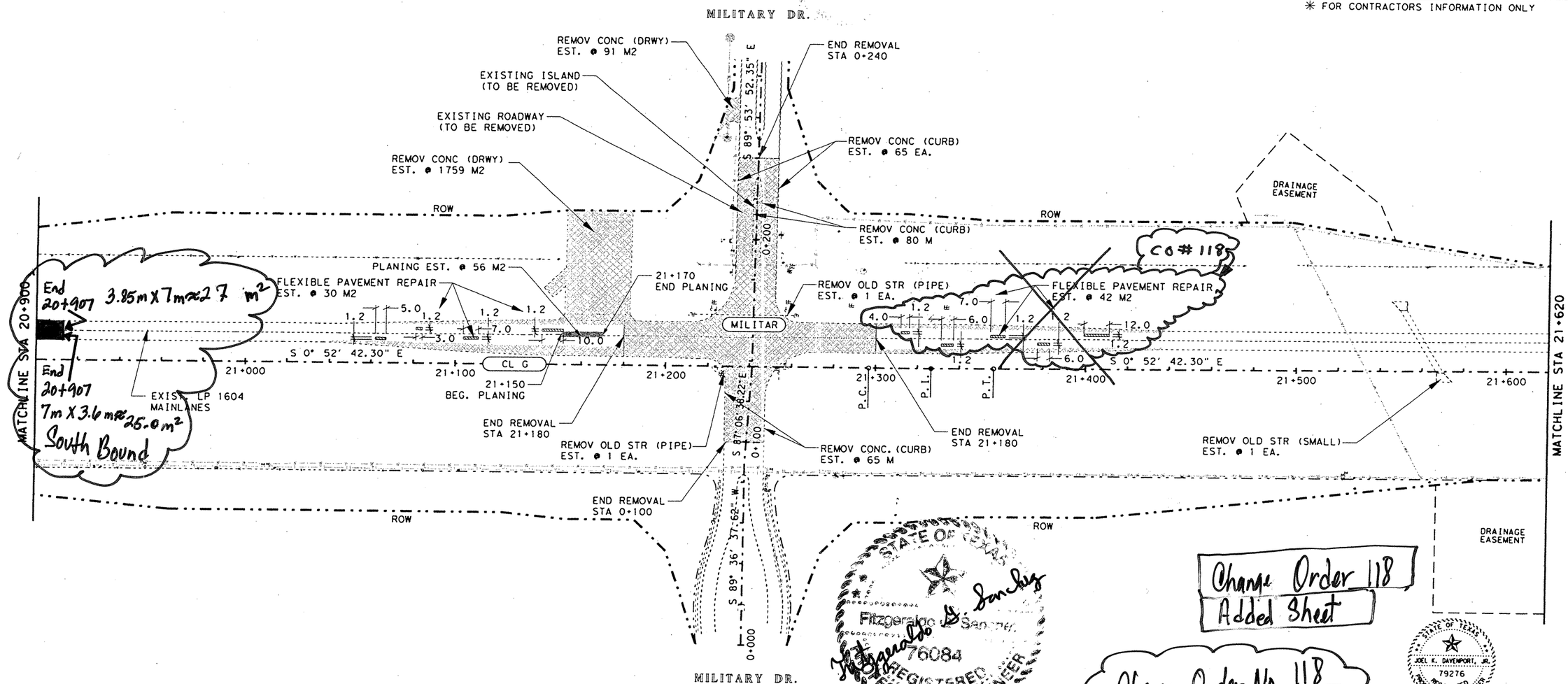


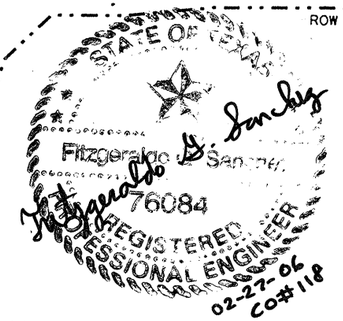


Change Order 118
Added Sheet

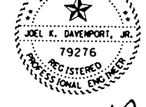


Change Order No 118
- Revised Flexible Pav Repair
- Revise Quantities

Joel K. Davenport Jr. 9/19/06
Joel K. Davenport, Jr. P.E. 79276 Date

NOTE(S):

ALL REMOVAL ITEMS SHALL BE CONSIDERED SUBSIDIARY TO ITEM 100 PREP ROW UNLESS OTHERWISE NOTED.

ALL DIMENSIONS ARE IN METERS UNLESS OTHERWISE NOTED.

FOR EXISTING SIGN REMOVAL SEE SHEET(S) 36-39 .

FOR HORIZONTAL ALIGNMENT/DATA, SEE SHEET(S) 164-171.

ALL FLEXIBLE PAVEMENT REPAIR AREAS & DIMENSIONS ARE APPROXIMATE. THE CONTRACTOR SHALL VERIFY THE AREAS & DIMENSIONS OF EACH FLEXIBLE PAVEMENT REPAIR WITH THE ENGINEER.

LEGEND

- LIMITS OF ROADWAY TO BE REMOVED
- CL G — ℄ LOOP 1604
- MILITAR — MILITARY DRIVE ℄
- LIMITS OF FLEXIBLE PAVEMENT REPAIR.
- LIMITS OF ROADWAY TO BE PLANED

UTILITY LEGEND

- WATER LINE
- TELEPHONE LINE
- CABLE LINE
- GAS LINE

Texas Department of Transportation

EXISTING PLAN

SHEET 10 OF 19

| FED. RD. DIV. NO. | FEDERAL AID PROJECT NO. | SHEET NO. |
|---|---|---|
| 6 | NH 2000(704), etc. | 181A |
| STATE | DIST. | COUNTY |
| TEXAS | SAT | BEXAR |
| CONT. | SECT. | JOB / HIGHWAY NO. |
| 2452 | 01 | 036, etc. / LP 1604 |

lp1604fm471-90existingplan10.dgn

QUANTITIES THIS SHEET
CSJ 2452-01-036

SCALE : 1:2000

| ESTIMATED QUANTITIES | | |
|---|---|---|
| ITEM | UNIT | QTY. |
| ✳ REMOV OLD STR (PIPE) | EA | 1 |
| PLANE ASPH CONC PAV (0 - 40 MM) | M2 | 300 |

✳ FOR CONTRACTORS INFORMATION ONLY

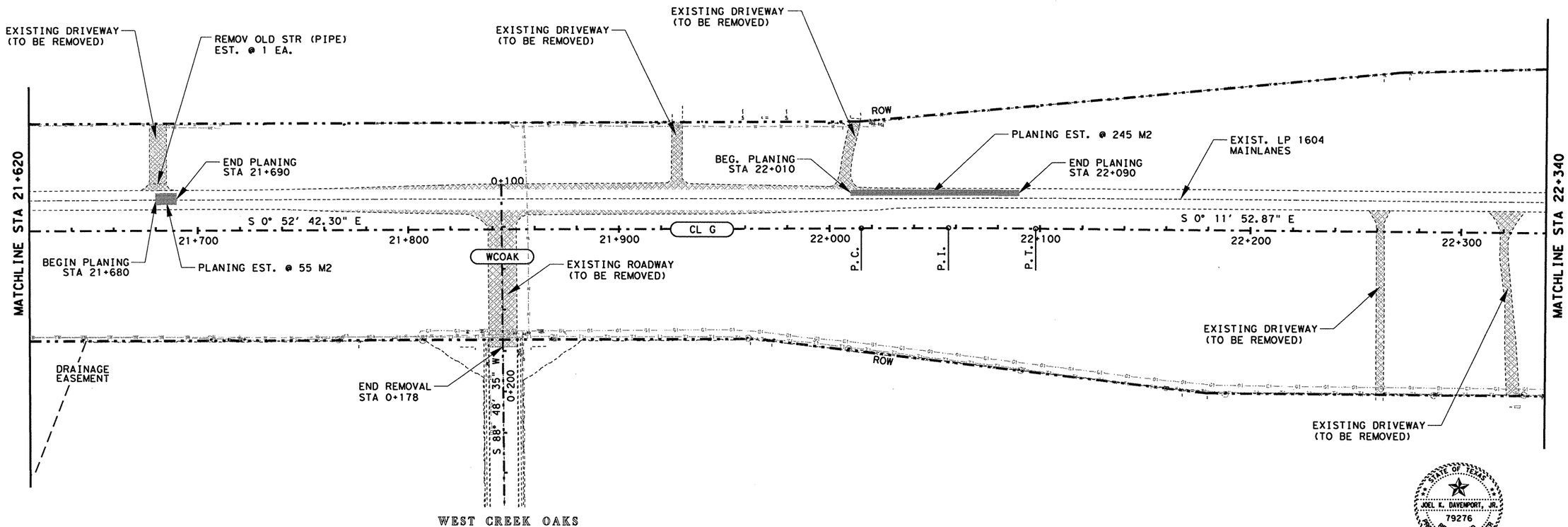


STATE OF TEXAS
JOEL K. DAVENPORT, JR.
79276
REGISTERED PROFESSIONAL ENGINEER

Joel K. Davenport, Jr. 9/19/00
Joel K. Davenport, Jr. P.E. 79276 Date

| UTILITY LEGEND | |
|---|---|
| W W W W W W W | WATER LINE |
| T T T T T T T | TELEPHONE LINE |
| C C C C C C C | CABLE LINE |
| G G G G G G G | GAS LINE |

LEGEND

- LIMITS OF ROADWAY TO BE REMOVED
- CL G — ℄ LOOP 1604
- WCOAK — WEST CREEK OAKS ℄
- LIMITS OF ROADWAY TO BE PLANED

NOTE(S):

ALL REMOVAL ITEMS SHALL BE CONSIDERED SUBSIDIARY TO ITEM 100 PREP ROW UNLESS OTHERWISE NOTED.

ALL DIMENSIONS ARE IN METERS UNLESS OTHERWISE NOTED.

FOR EXISTING SIGN REMOVAL SEE SHEET(S) 36-39 .

FOR HORIZONTAL ALIGNMENT/DATA, SEE SHEET(S) 164-171.

Texas Department of Transportation

# EXISTING PLAN

SHEET 11 OF 19

| FED. RD. DIV. NO. | FEDERAL AID PROJECT NO. | | SHEET NO. |
|---|---|---|---|
| 6 | NH 2000(704),etc. | | 182 |
| STATE | DIST. | COUNTY | |
| TEXAS | SAT | BEXAR | |
| CONT. | SECT. | JOB | HIGHWAY NO. |
| 2452 | 01 | 036,etc. | LP 1604 |

lp1604fm471-90existingplan11.dgn

QUANTITIES THIS SHEET
CSJ 2452-01-036

SCALE : 1:2000

| ESTIMATED QUANTITIES | | |
|---|---|---|
| ITEM | UNIT | QTY. |
| ✳ REMOV OLD STR (PIPE) | EA | 1 |
| PLANE ASPH CONC PAV (0 - 40 MM) | M2 | 300 |

✳ FOR CONTRACTORS INFORMATION ONLY

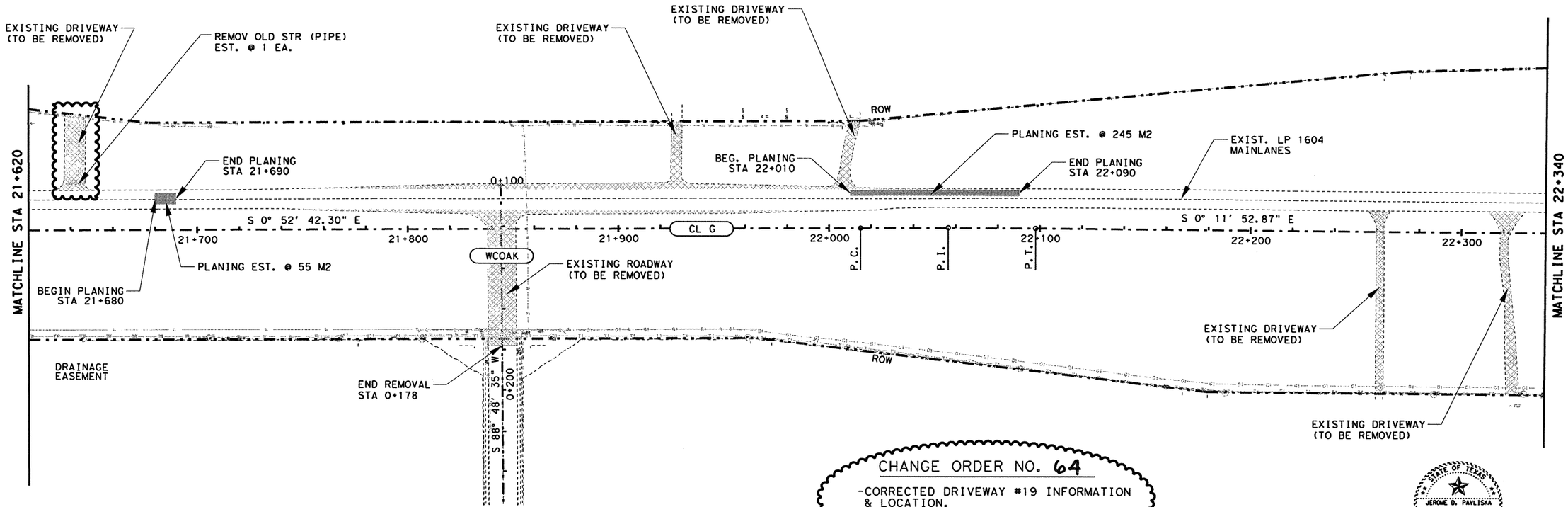


CHANGE ORDER NO. 64

-CORRECTED DRIVEWAY #19 INFORMATION & LOCATION.

-NO QUANTITY CHANGES.

STATE OF TEXAS
JEROME D. PAVLISKA
76075
REGISTERED PROFESSIONAL ENGINEER

Jerome D. Pavliska P.E. 4-28-04
Jerome D. Pavliska, P.E. — Date

| UTILITY LEGEND | |
|---|---|
| W | WATER LINE |
| T | TELEPHONE LINE |
| C | CABLE LINE |
| G | GAS LINE |

LEGEND

- LIMITS OF ROADWAY TO BE REMOVED
- CL G — ℄ LOOP 1604
- WCOAK — WEST CREEK OAKS ℄
- LIMITS OF ROADWAY TO BE PLANED

NOTE(S):

ALL REMOVAL ITEMS SHALL BE CONSIDERED SUBSIDIARY TO ITEM 100 PREP ROW UNLESS OTHERWISE NOTED.

ALL DIMENSIONS ARE IN METERS UNLESS OTHERWISE NOTED.

FOR EXISTING SIGN REMOVAL SEE SHEET(S) 36-39 .

FOR HORIZONTAL ALIGNMENT/DATA, SEE SHEET(S) 164-171.

CHANGE ORDER 64

REVISED SHEET

©2000 Texas Department of Transportation

EXISTING PLAN

SHEET 11 OF 19

| FED.RD. DIV.NO. | FEDERAL AID PROJECT NO. | | SHEET NO. |
|---|---|---|---|
| 6 | NH 2000(704),etc. | | 182 A |
| STATE | DIST. | COUNTY | |
| TEXAS | SAT | BEXAR | |
| CONT. | SECT. | JOB | HIGHWAY NO. |
| 2452 | 01 | 036,etc. | LP 1604 |

lp1604fm471-90\existingplan11.dgn

QUANTITIES THIS SHEET
CSJ 2452-01-036

SCALE : 1:2000

| ESTIMATED QUANTITIES | | |
|---|---|---|
| ITEM | UNIT | QTY. |
| * REMOV OLD STR (PIPE) | EA | 1 |
| * PLANE ASPH CONC PAV (0 - 40 MM) | M2 | 300 |
| Repair Ext Flex Pav. Struct. (200mm) | $m^2$ | 622 |

* FOR CONTRACTORS INFORMATION ONLY

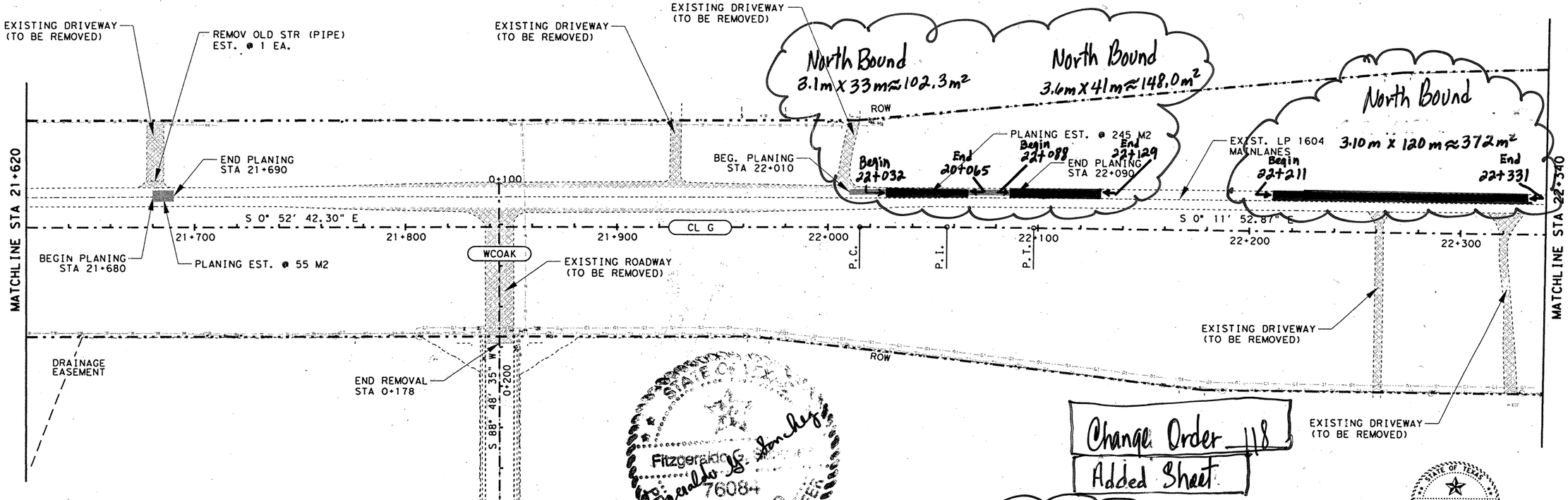


STATE OF TEXAS
Fitzgerald G. Stanley
76084
REGISTERED PROFESSIONAL ENGINEER
02-27-06
COTTLP

Change Order 118
Added Sheet

Change Order No 118
- Added new flexible Pavement Repair Area.
- Revise Quantities

STATE OF TEXAS
JOEL K. DAVENPORT, JR.
79276
REGISTERED PROFESSIONAL ENGINEER

Joel K. Davenport, Jr. 9/19/00
Joel K. Davenport, Jr. P.E. 79276 Date

| UTILITY LEGEND | |
|---|---|
| W W W W W W W | WATER LINE |
| T1 T1 T1 T1 T1 T1 T1 | TELEPHONE LINE |
| C C C C C C C | CABLE LINE |
| G1 G1 G1 G1 G1 G1 G1 | GAS LINE |

LEGEND

- LIMITS OF ROADWAY TO BE REMOVED
- CL G — ℄ LOOP 1604
- WCOAK — WEST CREEK OAKS ℄
- LIMITS OF ROADWAY TO BE PLANED

NOTE(S):

ALL REMOVAL ITEMS SHALL BE CONSIDERED SUBSIDIARY TO ITEM 100 PREP ROW UNLESS OTHERWISE NOTED.

ALL DIMENSIONS ARE IN METERS UNLESS OTHERWISE NOTED.

FOR EXISTING SIGN REMOVAL SEE SHEET(S) 36-39.

FOR HORIZONTAL ALIGNMENT/DATA, SEE SHEET(S) 164-171.

©2000
Texas Department of Transportation

EXISTING PLAN

SHEET 11 OF 19

| FED. RD. DIV. NO. | FEDERAL AID PROJECT NO. | SHEET NO. |
|---|---|---|
| 6 | NH 2000(704), etc. | 182A |
| STATE | DIST. | COUNTY |
| TEXAS | SAT | BEXAR |
| CONT. | SECT. | JOB / HIGHWAY NO. |
| 2452 | 01 | 036, etc. / LP 1604 |

lp1604fm471-90\existingplan11.dgn

QUANTITIES THIS SHEET
CSJ 2452-01-036

SCALE : 1:2000

| ESTIMATED QUANTITIES | | |
|---|---|---|
| ITEM | UNIT | QTY. |
| * REMOV OLD STR (PIPE) | EA | 1 |
| * PLANE ASPH CONC PAV (0 - 40 MM) | M2 | 170 |
| REPAIR EXIST LFEX. PAV. STRUCT. (200 mm) | M2 | 622 |

* FOR CONTRACTORS INFORMATION ONLY

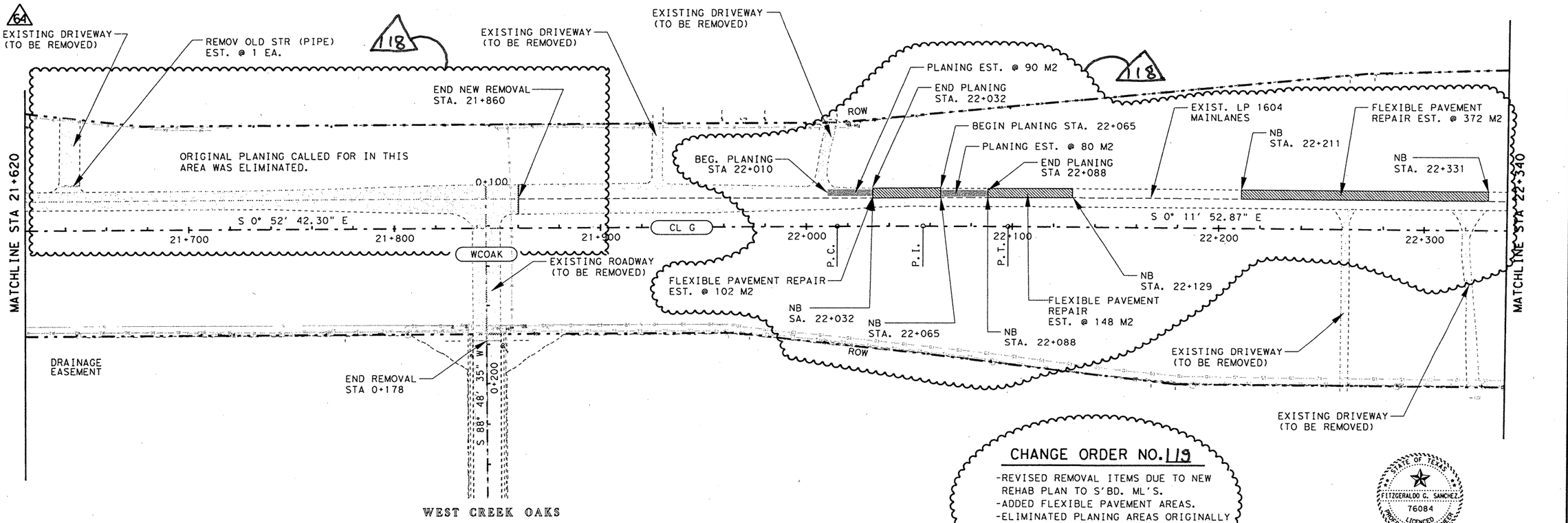


CHANGE ORDER NO. 119

-REVISED REMOVAL ITEMS DUE TO NEW REHAB PLAN TO S'BD. ML'S.
-ADDED FLEXIBLE PAVEMENT AREAS.
-ELIMINATED PLANING AREAS ORIGINALLY CALLED FOR IN THIS SHEET.
-REVISED/CORRECTED QUANTITIES

STATE OF TEXAS
FITZGERALDO G. SANCHEZ
76084
LICENCED
PROFESSIONAL ENGINEER

Fitzgeraldo G. Sanchez 03-10-06
Fitzgeraldo G. Sanchez, P.E. Date

| UTILITY LEGEND | |
|---|---|
| WATER LINE | |
| TELEPHONE LINE | |
| CABLE LINE | |
| GAS LINE | |

LEGEND

| | |
|---|---|
| | LIMITS OF ROADWAY TO BE REMOVED |
| CL G | ℄ LOOP 1604 |
| WCOAK | WEST CREEK OAKS ℄ |
| | LIMITS OF ROADWAY TO BE PLANED |
| | LIMITS OF FLEXIBLE PAVEMENT REPAIR. |

NOTE(S):

ALL REMOVAL ITEMS SHALL BE CONSIDERED SUBSIDIARY TO ITEM 100 PREP ROW UNLESS OTHERWISE NOTED.

ALL DIMENSIONS ARE IN METERS UNLESS OTHERWISE NOTED.

FOR EXISTING SIGN REMOVAL SEE SHEET(S) 36-39 .

FOR HORIZONTAL ALIGNMENT/DATA, SEE SHEET(S) 164-171.

(#) REFERS TO CHANGES MADE AS PART OF CHANGE ORDER.

CHANGE ORDER 119

REVISED SHEET

©2000 Texas Department of Transportation

EXISTING PLAN

SHEET 11 OF 19

| FED. RD. DIV. NO. | FEDERAL AID PROJECT NO. | | SHEET NO. |
|---|---|---|---|
| 6 | NH 2000(704), etc. | | 182AB |
| STATE | DIST. | COUNTY | |
| TEXAS | SAT | BEXAR | |
| CONT. | SECT. | JOB | HIGHWAY NO. |
| 2452 | 01 | 036, etc. | LP 1604 |

02-17-06

T:\AO\Design\lp1604fm471-90\existingplan11A.dgn
2/9/2006

QUANTITIES THIS SHEET
CSJ 2452-01-036

SCALE : 1:2000

## ESTIMATED QUANTITIES

| ITEM | UNIT | QTY. |
|---|---|---|
| ✳ REMOV CONC (CURB) | M | 470 |
| REMOV RAIL (TY 1) | M | 25.4 |
| ✳ REMOV OLD STR (PIPE) | EA | 4 |
| REMOV METAL BEAM GUARD FENCE | M | 45.6 |
| REMOV TERMINAL-ANCHOR SECTION | EA | 4 |
| PLANE ASPH CONC PAV (0 - 40 MM) | M2 | 886 |

✳ FOR CONTRACTORS INFORMATION ONLY

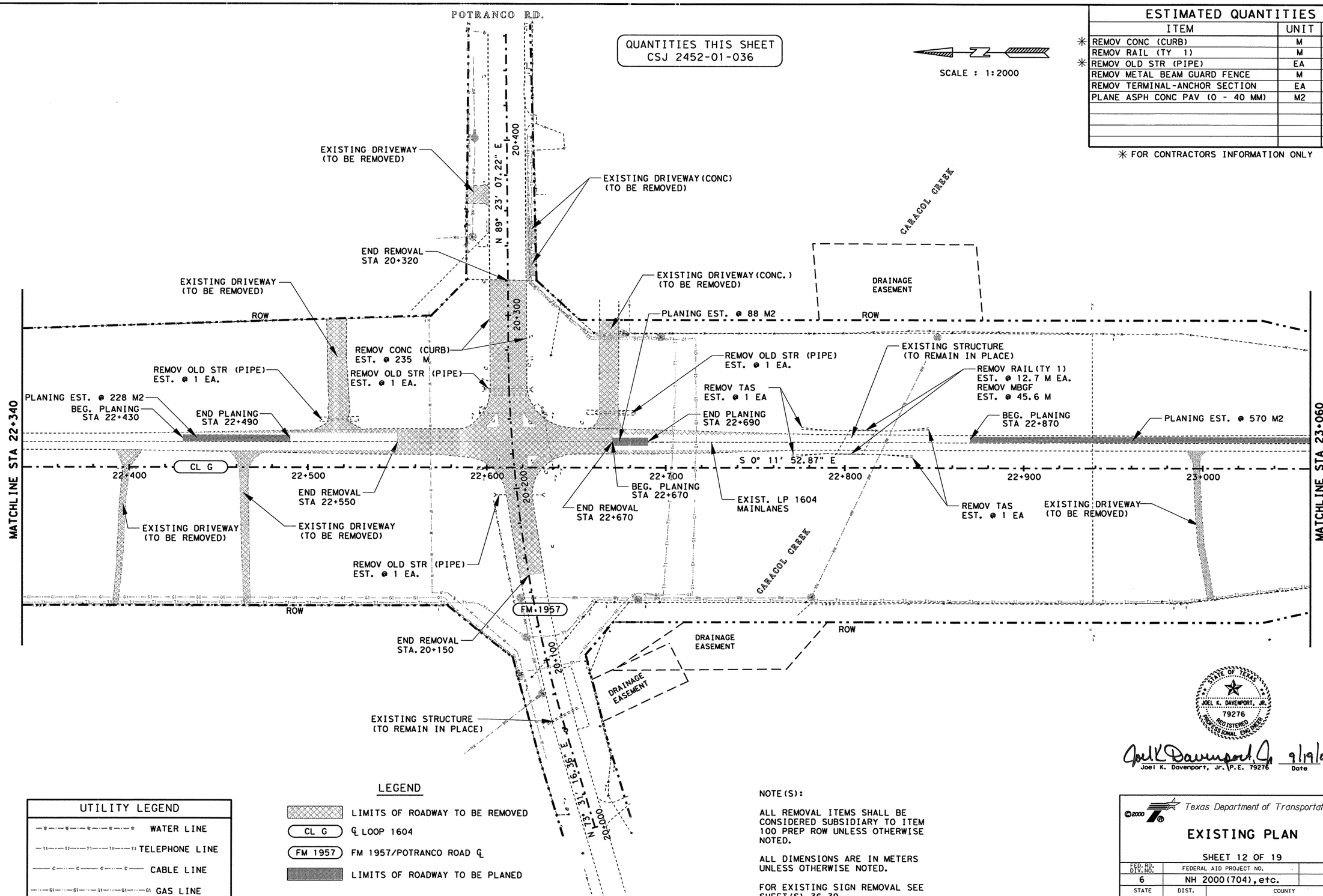


### UTILITY LEGEND

- WATER LINE
- TELEPHONE LINE
- CABLE LINE
- GAS LINE

### LEGEND

- LIMITS OF ROADWAY TO BE REMOVED
- (CL G) ℄ LOOP 1604
- (FM 1957) FM 1957/POTRANCO ROAD ℄
- LIMITS OF ROADWAY TO BE PLANED

NOTE(S):

ALL REMOVAL ITEMS SHALL BE CONSIDERED SUBSIDIARY TO ITEM 100 PREP ROW UNLESS OTHERWISE NOTED.

ALL DIMENSIONS ARE IN METERS UNLESS OTHERWISE NOTED.

FOR EXISTING SIGN REMOVAL SEE SHEET(S) 36-39.

FOR HORIZONTAL ALIGNMENT/DATA SEE SHEET(S) 164-171.

STATE OF TEXAS
JOEL K. DAVENPORT, JR.
79276
REGISTERED PROFESSIONAL ENGINEER

Joel K Davenport Jr 9/19/00
Joel K. Davenport, Jr. P.E. 79276 Date

Texas Department of Transportation

# EXISTING PLAN

SHEET 12 OF 19

| FED. RD. DIV. NO. | FEDERAL AID PROJECT NO. | | SHEET NO. |
|---|---|---|---|
| 6 | NH 2000(704), etc. | | 183 |
| STATE | DIST. | COUNTY | |
| TEXAS | SAT | BEXAR | |
| CONT. | SECT. | JOB | HIGHWAY NO. |
| 2452 | 01 | 036, etc. | LP 1604 |

lp1604fm471-90\existingplan12.dgn

POTRANCO RD.

QUANTITIES THIS SHEET
CSJ 2452-01-036

SCALE : 1:2000

| ESTIMATED QUANTITIES | | |
|---|---|---|
| ITEM | UNIT | QTY. |
| * REMOV CONC (CURB) | M | 470 |
| REMOV RAIL (TY 1) | M | 25.4 |
| * REMOV OLD STR (PIPE) | EA | 4 |
| REMOV METAL BEAM GUARD FENCE | M | 45.6 |
| REMOV TERMINAL-ANCHOR SECTION | EA | 4 |
| PLANE ASPH CONC PAV (0 - 40 MM) | M2 | 886 |
| REMOV OLD STR (LARGE) | EA | 1 |
| | | |
| | | |
| | | |

* FOR CONTRACTORS INFORMATION ONLY

MATCHLINE STA 22+340

EXISTING DRIVEWAY (TO BE REMOVED)

N 89° 23' 07.22" E

20+400

EXISTING DRIVEWAY (CONC) (TO BE REMOVED)

END REMOVAL STA 20+320

EXISTING DRIVEWAY (TO BE REMOVED)

ROW

20+300

REMOV CONC (CURB) EST. @ 235 M

REMOV OLD STR (PIPE) EST. @ 1 EA.

REMOV OLD STR (PIPE) EST. @ 1 EA.

PLANING EST. @ 228 M2

BEG. PLANING STA 22+430

END PLANING STA 22+490

CL G

22+400

22+500

END REMOVAL STA 22+550

EXISTING DRIVEWAY (TO BE REMOVED)

EXISTING DRIVEWAY (TO BE REMOVED)

22+600

20+200

REMOV OLD STR (PIPE) EST. @ 1 EA.

ROW

FM 1957

END REMOVAL STA. 20+150

20+100

EXISTING STRUCTURE (TO REMAIN IN PLACE)

N 73° 31' 16.35" E

20+000

FM 1957

END REMOVAL STA 22+670

BEG. PLANING STA 22+670

22+700

EXIST. LP 1604 MAINLANES

CARACOL CREEK

DRAINAGE EASEMENT

ROW

DRAINAGE EASEMENT

EXISTING DRIVEWAY (CONC.) (TO BE REMOVED)

PLANING EST. @ 88 M2

REMOV OLD STR (PIPE) EST. @ 1 EA.

END PLANING STA 22+690

REMOV TAS EST. @ 1 EA

S 0° 11' 52.87" E

22+800

CARACOL CREEK

DRAINAGE EASEMENT

ROW

REMOV OLD STR (LARGE) EST. @ 1 EA

REMOV RAIL (TY 1) EST. @ 12.7 M EA.
REMOV MBGF EST. @ 45.6 M

BEG. PLANING STA 22+870

22+900

PLANING EST. @ 570 M2

23+000

REMOV TAS EST. @ 1 EA

EXISTING DRIVEWAY (TO BE REMOVED)

MATCHLINE STA 23+060

CHANGE ORDER 13 10 37

CHANGE ORDER NO. 13 10 37
- NOTE REVISION ON PLAN SHEET
- QUANTITY ADDENDUM

STATE OF TEXAS
JENNIFER L. MOCZYGEMBA
84734
REGISTERED PROFESSIONAL ENGINEER

Jennifer L. Moczygemba, P.E. 84734 — Date 10-10-01

| UTILITY LEGEND | |
|---|---|
| WATER LINE | W |
| TELEPHONE LINE | T |
| CABLE LINE | C |
| GAS LINE | G |

LEGEND

- LIMITS OF ROADWAY TO BE REMOVED
- CL G — ℄ LOOP 1604
- FM 1957 — FM 1957/POTRANCO ROAD ℄
- LIMITS OF ROADWAY TO BE PLANED

NOTE(S):

ALL REMOVAL ITEMS SHALL BE CONSIDERED SUBSIDIARY TO ITEM 100 PREP ROW UNLESS OTHERWISE NOTED.

ALL DIMENSIONS ARE IN METERS UNLESS OTHERWISE NOTED.

FOR EXISTING SIGN REMOVAL SEE SHEET(S) 36-39.

FOR HORIZONTAL ALIGNMENT/DATA SEE SHEET(S) 164-171.

©2000

Texas Department of Transportation

# EXISTING PLAN

SHEET 12 OF 19

| FED.RD. DIV.NO. | FEDERAL AID PROJECT NO. | SHEET NO. |
|---|---|---|
| 6 | NH 2000(704), etc. | 183A |
| STATE | DIST. | COUNTY |
| TEXAS | SAT | BEXAR |
| CONT. | SECT. | JOB / HIGHWAY NO. |
| 2452 | 01 | 036, etc. / LP 1604 |

8-10-01

lp1604fm471-90\existingplan12.dgn

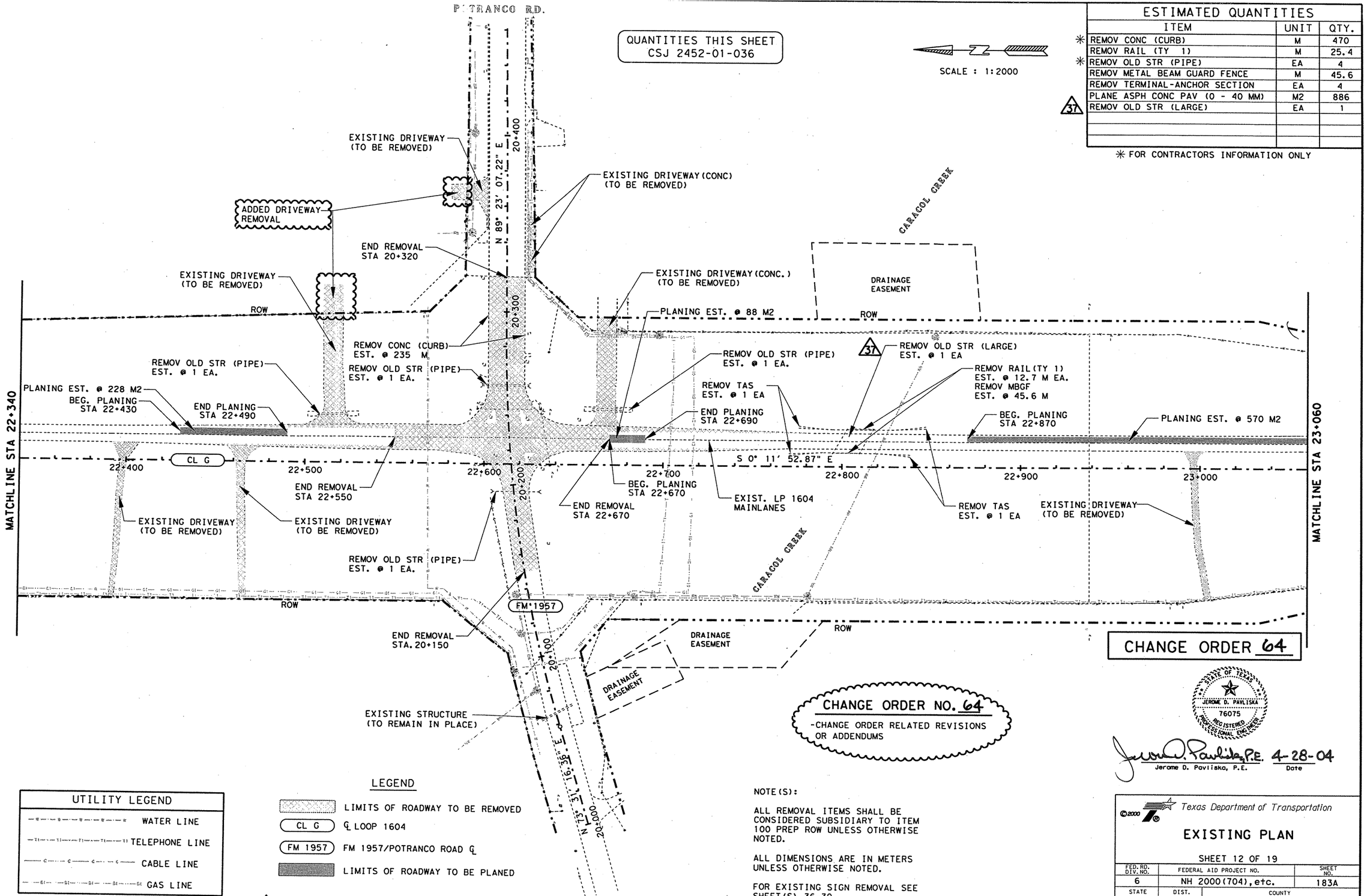


| ESTIMATED QUANTITIES | | |
|---|---|---|
| ITEM | UNIT | QTY. |
| ✳ REMOV CONC (CURB) | M | 470 |
| REMOV RAIL (TY 1) | M | 25.4 |
| ✳ REMOV OLD STR (PIPE) | EA | 4 |
| REMOV METAL BEAM GUARD FENCE | M | 45.6 |
| REMOV TERMINAL-ANCHOR SECTION | EA | 4 |
| PLANE ASPH CONC PAV (0 - 40 MM) | M2 | 886 |
| (37) REMOV OLD STR (LARGE) | EA | 1 |

✳ FOR CONTRACTORS INFORMATION ONLY

CHANGE ORDER 64

CHANGE ORDER NO. 64
-CHANGE ORDER RELATED REVISIONS OR ADDENDUMS

STATE OF TEXAS
JEROME D. PAVLISKA
76075
REGISTERED PROFESSIONAL ENGINEER

Jerome D. Pavliska, P.E. 4-28-04
Jerome D. Pavliska, P.E. Date

LEGEND

- LIMITS OF ROADWAY TO BE REMOVED
- (CL G) ℄ LOOP 1604
- (FM 1957) FM 1957/POTRANCO ROAD ℄
- LIMITS OF ROADWAY TO BE PLANED

(#) REFERS TO CHANGES MADE AS PART OF CHANGE ORDER.

UTILITY LEGEND

- WATER LINE
- TELEPHONE LINE
- CABLE LINE
- GAS LINE

NOTE(S):

ALL REMOVAL ITEMS SHALL BE CONSIDERED SUBSIDIARY TO ITEM 100 PREP ROW UNLESS OTHERWISE NOTED.

ALL DIMENSIONS ARE IN METERS UNLESS OTHERWISE NOTED.

FOR EXISTING SIGN REMOVAL SEE SHEET(S) 36-39.

FOR HORIZONTAL ALIGNMENT/DATA SEE SHEET(S) 164-171.

©2000

Texas Department of Transportation

# EXISTING PLAN

SHEET 12 OF 19

| FED. RD. DIV. NO. | FEDERAL AID PROJECT NO. | | SHEET NO. |
|---|---|---|---|
| 6 | NH 2000(704),etc. | | 183A |
| STATE | DIST. | COUNTY | |
| TEXAS | SAT | BEXAR | |
| CONT. | SECT. | JOB | HIGHWAY NO. |
| 2452 | 01 | 036,etc. | LP 1604 |

lp1604fm471-90\existingplan12.dgn

QUANTITIES THIS SHEET
CSJ 2452-01-036

SCALE : 1:2000

## ESTIMATED QUANTITIES

| | ITEM | UNIT | QTY. |
|---|---|---|---|
| * | REMOV CONC (CURB) | M | 470 |
| | REMOV RAIL (TY 1) | M | 25.4 |
| * | REMOV OLD STR (PIPE) | EA | 4 |
| | REMOV METAL BEAM GUARD FENCE | M | 45.6 |
| | REMOV TERMINAL-ANCHOR SECTION | EA | 4 |
| | PLANE ASPH CONC PAV (0 - 40 MM) | M2 | 798 |
| 37 | REMOV OLD STR (LARGE) | EA | 1 |

* FOR CONTRACTORS INFORMATION ONLY

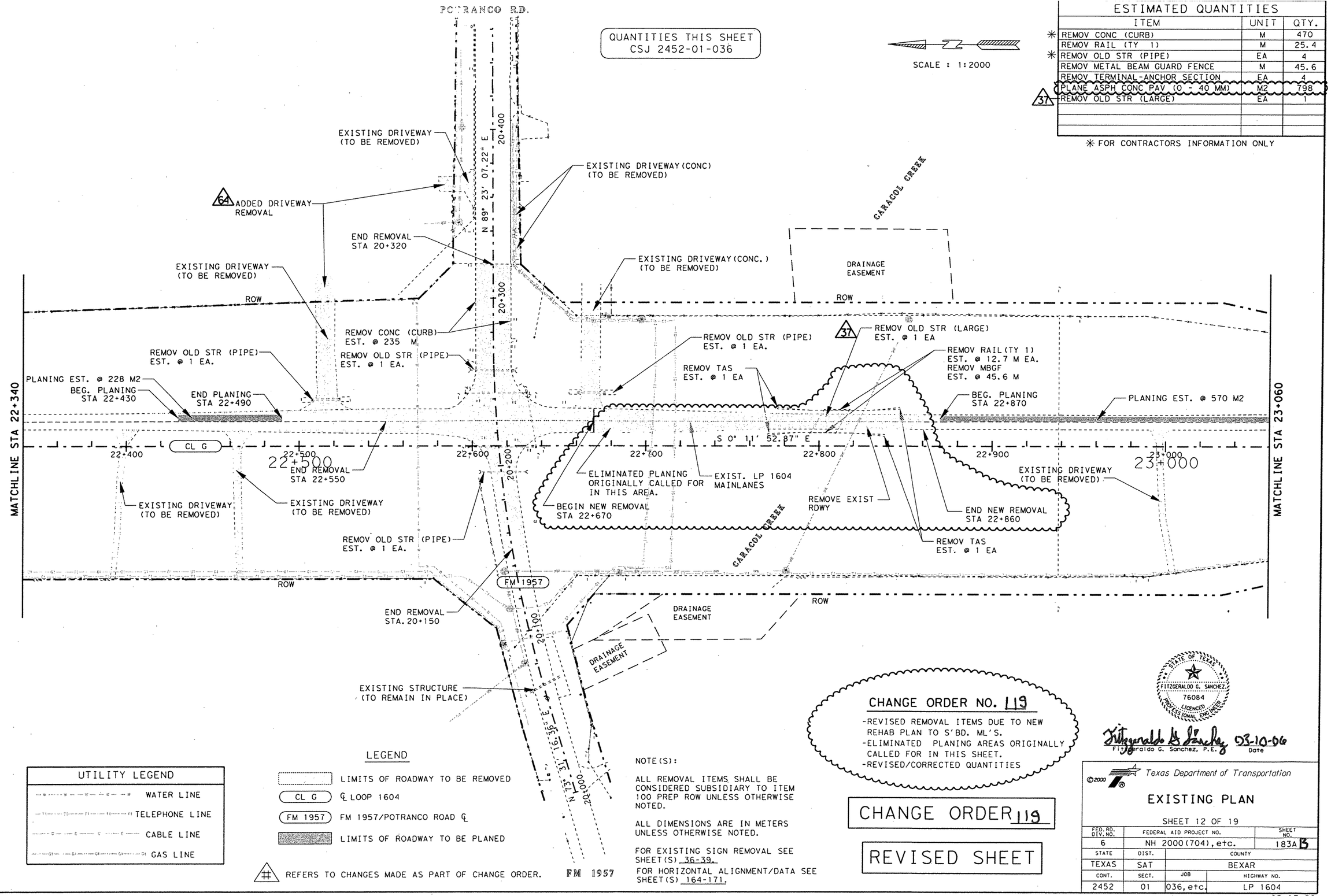


### UTILITY LEGEND

- W — W — W — W — W — W — W — WATER LINE
- T1 — T1 — T1 — T1 — T1 — T1 — T1 — TELEPHONE LINE
- C — C — C — C — C — C — C — CABLE LINE
- G1 — G1 — G1 — G1 — G1 — G1 — G1 — GAS LINE

### LEGEND

- LIMITS OF ROADWAY TO BE REMOVED
- (CL G) ℄ LOOP 1604
- (FM 1957) FM 1957/POTRANCO ROAD ℄
- LIMITS OF ROADWAY TO BE PLANED

(#) REFERS TO CHANGES MADE AS PART OF CHANGE ORDER.

NOTE(S):

ALL REMOVAL ITEMS SHALL BE CONSIDERED SUBSIDIARY TO ITEM 100 PREP ROW UNLESS OTHERWISE NOTED.

ALL DIMENSIONS ARE IN METERS UNLESS OTHERWISE NOTED.

FOR EXISTING SIGN REMOVAL SEE SHEET(S) 36-39.

FOR HORIZONTAL ALIGNMENT/DATA SEE SHEET(S) 164-171.

CHANGE ORDER NO. 119

- -REVISED REMOVAL ITEMS DUE TO NEW REHAB PLAN TO S'BD. ML'S.
- -ELIMINATED PLANING AREAS ORIGINALLY CALLED FOR IN THIS SHEET.
- -REVISED/CORRECTED QUANTITIES

CHANGE ORDER 119

REVISED SHEET

STATE OF TEXAS
FITZGERALDO G. SANCHEZ
76084
LICENSED
PROFESSIONAL ENGINEER

Fitzgeraldo G. Sanchez 03-10-06
Fitzgeraldo G. Sanchez, P.E. Date

©2000 Texas Department of Transportation

# EXISTING PLAN

SHEET 12 OF 19

| FED. RD. DIV. NO. | FEDERAL AID PROJECT NO. | | SHEET NO. |
|---|---|---|---|
| 6 | NH 2000(704), etc. | | 183A B |
| STATE | DIST. | COUNTY | |
| TEXAS | SAT | BEXAR | |
| CONT. | SECT. | JOB | HIGHWAY NO. |
| 2452 | 01 | 036, etc. | LP 1604 |

02-17-06

I:\AO\Design\lp1604fm471-90\existingplan12A.dgn
2/9/2006

QUANTITIES THIS SHEET
CSJ 2452-01-036

SCALE : 1:2000

| ESTIMATED QUANTITIES | | |
|---|---|---|
| ITEM | UNIT | QTY. |
| PLANE ASPH CONC PAV (0 - 40 MM) | M2 | 1395 |

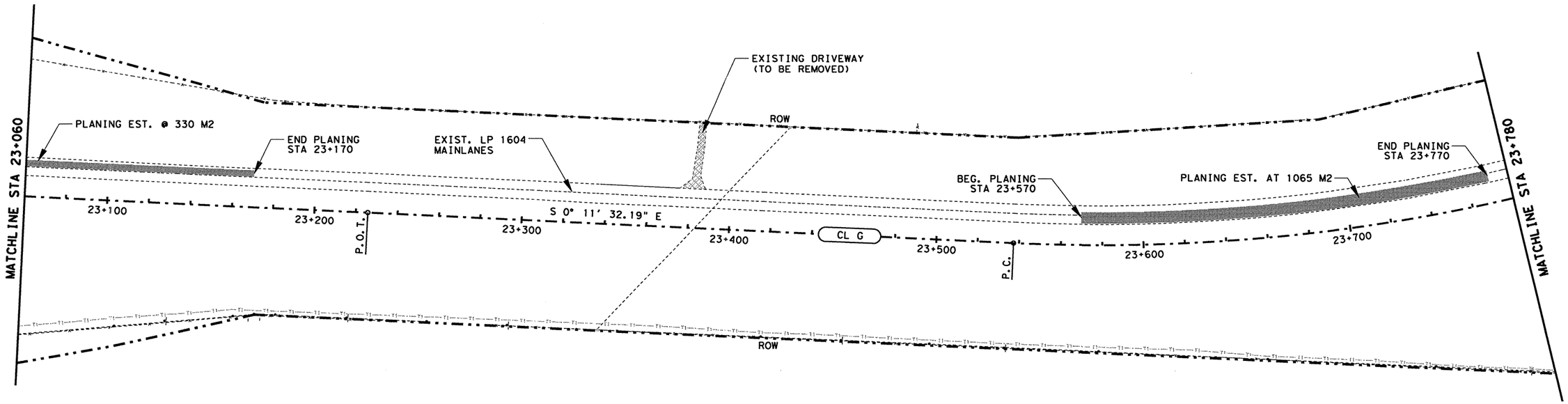


| UTILITY LEGEND | |
|---|---|
| W W W W W W W W | WATER LINE |
| T T T T T T T T | TELEPHONE LINE |
| C C C C | CABLE LINE |
| G1 G1 G1 G1 G1 G1 | GAS LINE |

LEGEND

- LIMITS OF ROADWAY TO BE REMOVED
- CL G — ℄ LOOP 1604
- LIMITS OF ROADWAY TO BE PLANED

NOTE(S):

ALL REMOVAL ITEMS SHALL BE CONSIDERED SUBSIDIARY TO ITEM 100 PREP ROW UNLESS OTHERWISE NOTED.

ALL DIMENSIONS ARE IN METERS UNLESS OTHERWISE NOTED.

FOR EXISTING SIGN REMOVAL SEE SHEET(S) 36-39.

FOR HORIZONTAL ALIGNMENT/DATA, SEE SHEET(S) 164-171.

STATE OF TEXAS
JOEL K. DAVENPORT, JR.
79276
REGISTERED
PROFESSIONAL ENGINEER

Joel K Davenport Jr 9/19/00
Joel K. Davenport, Jr. P.E. 79276 Date

Texas Department of Transportation

# EXISTING PLAN

SHEET 13 OF 19

| FED. RD. DIV. NO. | FEDERAL AID PROJECT NO. | | SHEET NO. |
|---|---|---|---|
| 6 | NH 2000(704), etc. | | 184 |
| STATE | DIST. | COUNTY | |
| TEXAS | SAT | BEXAR | |
| CONT. | SECT. | JOB | HIGHWAY NO. |
| 2452 | 01 | 036, etc. | LP 1604 |

lp1604fm471-90\existingplan13.dgn

QUANTITIES THIS SHEET
CSJ 2452-01-036

SCALE : 1:2000

| ESTIMATED QUANTITIES | | |
|---|---|---|
| ITEM | UNIT | QTY. |
| ✳ REMOV CONC (RIPRAP) | M2 | 2400 |
| REMOV OLD STR (LARGE) | EA | 1 |
| REMOV METAL BEAM GUARD FENCE | M | 486.4 |
| REMOV TERMINAL-ANCHOR SECTION | EA | 4 |
| PLANE ASPH CONC PAV (0 - 40 MM) | M2 | 1084 |

✳ FOR CONTRACTORS INFORMATION ONLY

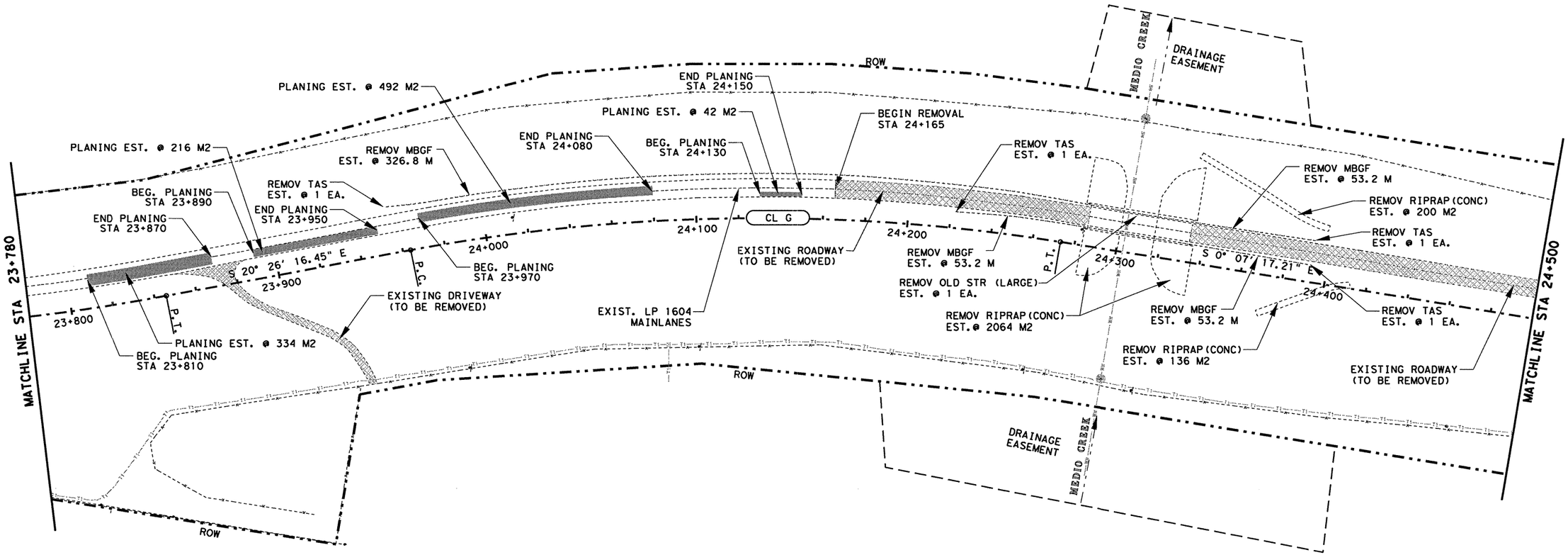


STATE OF TEXAS
JOEL K. DAVENPORT, JR.
79276
REGISTERED PROFESSIONAL ENGINEER

Joel K. Davenport, Jr. 9/19/00
Joel K. Davenport, Jr. P.E. 79276 Date

| UTILITY LEGEND | |
|---|---|
| W W W W W W W | WATER LINE |
| T1 T1 T1 T1 T1 T1 T1 | TELEPHONE LINE |
| C C C C C C C | CABLE LINE |
| G1 G1 G1 G1 G1 G1 G1 | GAS LINE |

LEGEND

- LIMITS OF ROADWAY TO BE REMOVED
- CL G — ℄ LOOP 1604
- LIMITS OF ROADWAY TO BE PLANED

NOTE(S):

ALL REMOVAL ITEMS SHALL BE CONSIDERED SUBSIDIARY TO ITEM 100 PREP ROW UNLESS OTHERWISE NOTED.

ALL DIMENSIONS ARE IN METERS UNLESS OTHERWISE NOTED.

FOR EXISTING SIGN REMOVAL SEE SHEET(S) 36-39.

FOR HORIZONTAL ALIGNMENT/DATA, SEE SHEET(S) 164-171.

Texas Department of Transportation

# EXISTING PLAN

SHEET 14 OF 19

| FED. RD. DIV. NO. | FEDERAL AID PROJECT NO. | | SHEET NO. |
|---|---|---|---|
| 6 | NH 2000(704),etc. | | 185 |
| STATE | DIST. | COUNTY | |
| TEXAS | SAT | BEXAR | |
| CONT. | SECT. | JOB | HIGHWAY NO. |
| 2452 | 01 | 036,etc. | LP 1604 |

lp1604fm471-90\existingplan14.dgn

QUANTITIES THIS SHEET
CSJ 2452-01-036

SCALE : 1:2000

## ESTIMATED QUANTITIES

| ITEM | UNIT | QTY. |
|---|---|---|
| ✳ REMOV OLD STR (PIPE) | EA. | 1 |
| | | |
| | | |
| | | |
| | | |
| | | |
| | | |
| | | |
| | | |

✳ FOR CONTRACTORS INFORMATION ONLY

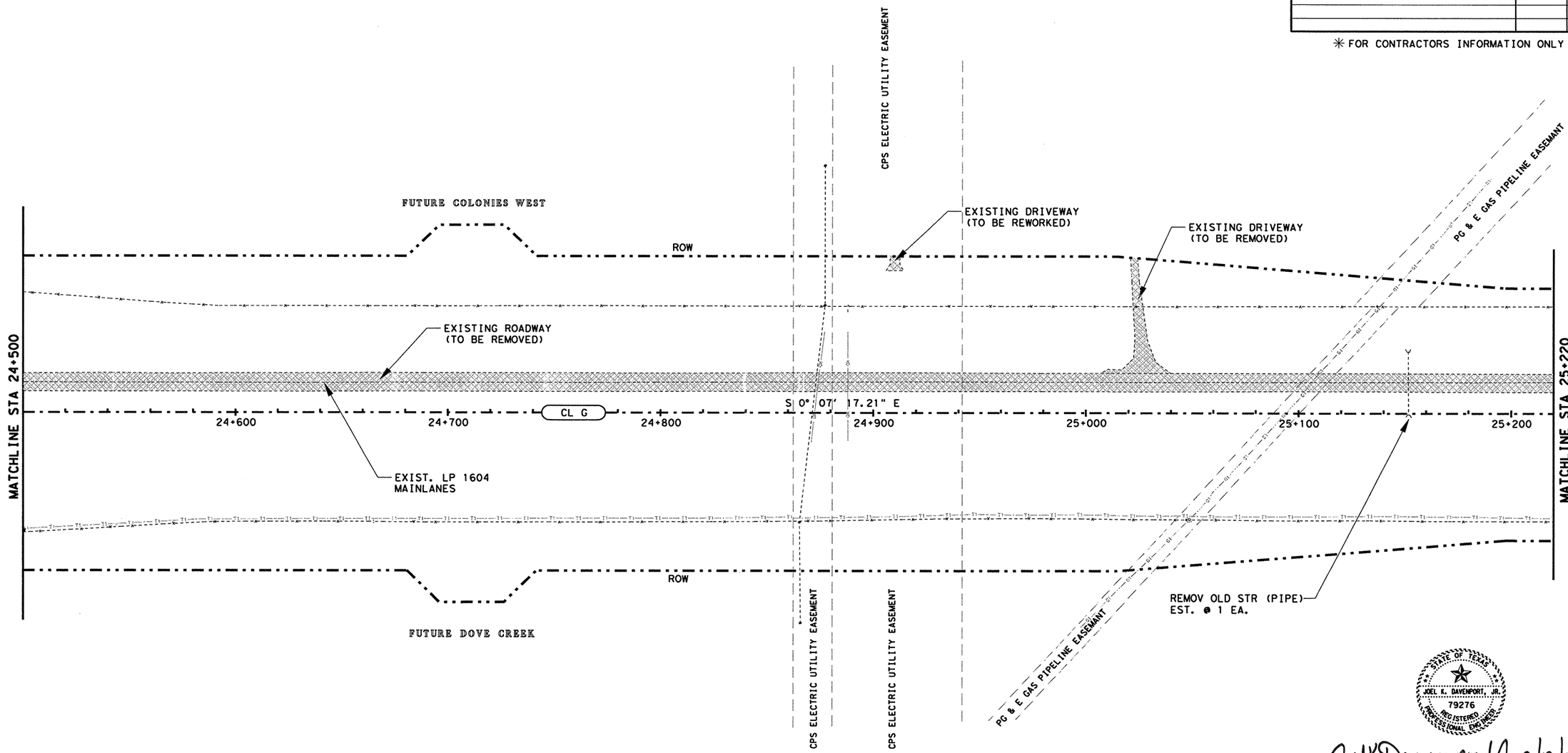


STATE OF TEXAS
JOEL K. DAVENPORT, JR.
79276
REGISTERED PROFESSIONAL ENGINEER

Joel K Davenport Jr 9/19/00
Joel K. Davenport, Jr. P.E. 79276 Date

### UTILITY LEGEND

- WATER LINE
- TELEPHONE LINE
- CABLE LINE
- GAS LINE

### LEGEND

- LIMITS OF ROADWAY TO BE REMOVED
- CL G — ℄ LOOP 1604

NOTE(S):

ALL REMOVAL ITEMS SHALL BE CONSIDERED SUBSIDIARY TO ITEM 100 PREP ROW UNLESS OTHERWISE NOTED.

ALL DIMENSIONS ARE IN METERS UNLESS OTHERWISE NOTED.

FOR EXISTING SIGN REMOVAL SEE SHEET(S) 36-39.

FOR HORIZONTAL ALIGNMENT/DATA, SEE SHEET(S) 164-171.

Texas Department of Transportation

## EXISTING PLAN

SHEET 15 OF 19

| FED. RD. DIV. NO. | FEDERAL AID PROJECT NO. | | SHEET NO. |
|---|---|---|---|
| 6 | NH 2000(704), etc. | | 186 |
| STATE | DIST. | COUNTY | |
| TEXAS | SAT | BEXAR | |
| CONT. | SECT. | JOB | HIGHWAY NO. |
| 2452 | 01 | 036, etc. | LP 1604 |

lp1604fm471-90\existingplan15.dgn

QUANTITIES THIS SHEET
CSJ 2452-01-036

SCALE : 1:2000

| ESTIMATED QUANTITIES | | |
|---|---|---|
| ITEM | UNIT | QTY. |
| ✳ REMOV OLD STR (PIPE) | EA. | 1 |
| REMOV OLD STR (PIPE) | M | 33.6 |

✳ FOR CONTRACTORS INFORMATION ONLY

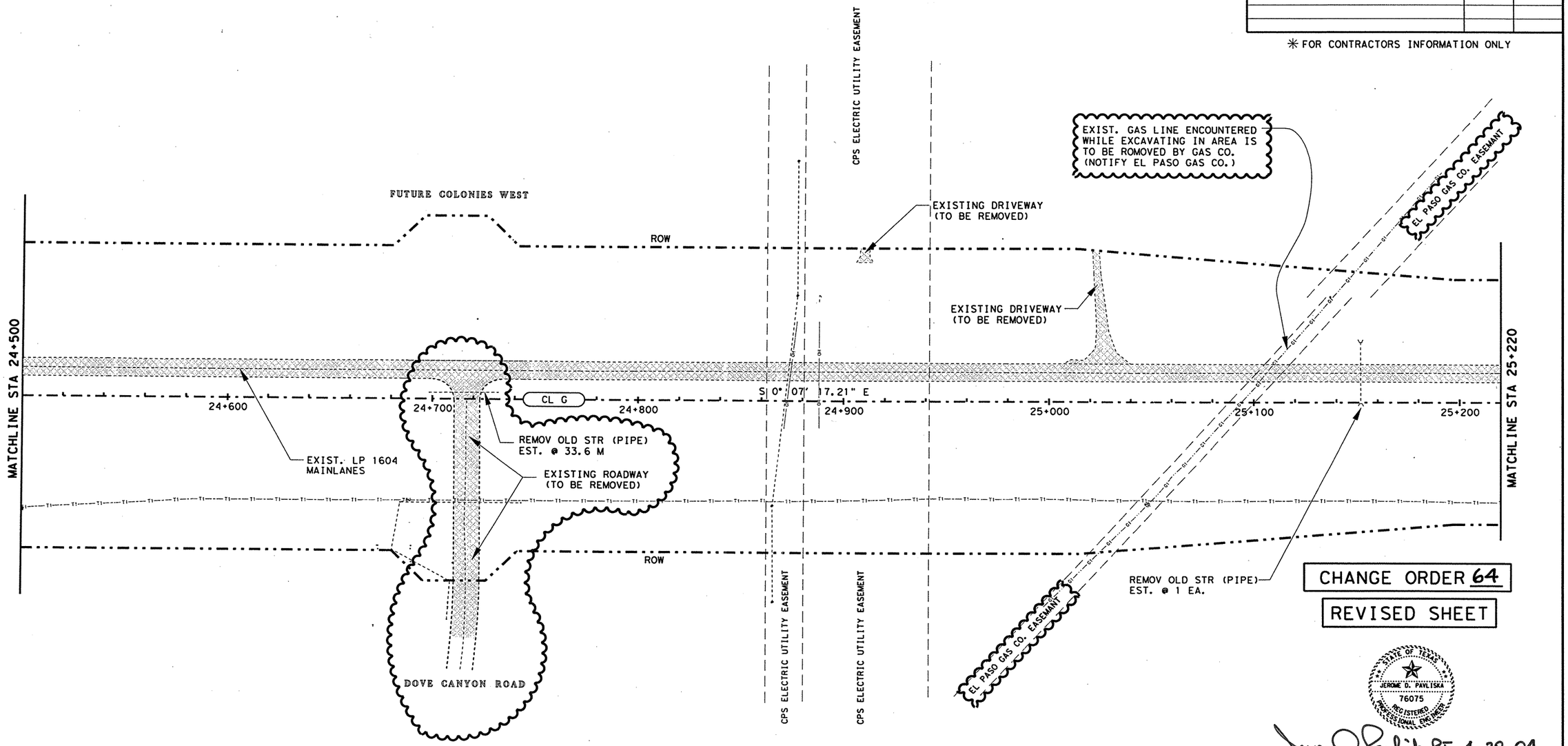


CHANGE ORDER 64

REVISED SHEET

STATE OF TEXAS
JEROME D. PAVLISKA
76075
REGISTERED PROFESSIONAL ENGINEER

Jerome D. Pavliska, P.E. 4-28-04
Jerome D. Pavliska, P.E. — Date

| UTILITY LEGEND |
|---|
| WATER LINE |
| TELEPHONE LINE |
| CABLE LINE |
| GAS LINE |

LEGEND

LIMITS OF ROADWAY TO BE REMOVED

CL G — ℄ LOOP 1604

NOTE(S):

ALL REMOVAL ITEMS SHALL BE CONSIDERED SUBSIDIARY TO ITEM 100 PREP ROW UNLESS OTHERWISE NOTED.

ALL DIMENSIONS ARE IN METERS UNLESS OTHERWISE NOTED.

FOR EXISTING SIGN REMOVAL SEE SHEET(S) 36-39.

FOR HORIZONTAL ALIGNMENT/DATA, SEE SHEET(S) 164-171.

**CHANGE ORDER NO. 64**

-ADDED DOVE CANYON ROAD
-REVISED QUANTITIES
-UPDATED UTILITY INFO. (GAS LINE)

©2000 Texas Department of Transportation

EXISTING PLAN

SHEET 15 OF 19

| FED. RD. DIV. NO. | FEDERAL AID PROJECT NO. | SHEET NO. |
|---|---|---|
| 6 | NH 2000(704), etc. | 186A |
| STATE | DIST. | COUNTY |
| TEXAS | SAT | BEXAR |
| CONT. | SECT. | JOB / HIGHWAY NO. |
| 2452 | 01 | 036, etc. / LP 1604 |

05-01-04

$FILE$

QUANTITIES THIS SHEET
CSJ 2452-01-036

SCALE : 1:2000

| ESTIMATED QUANTITIES | | |
|---|---|---|
| ITEM | UNIT | QTY. |
| ✳ REMOV OLD STR (PIPE) | EA. | 1 |

✳ FOR CONTRACTORS INFORMATION ONLY

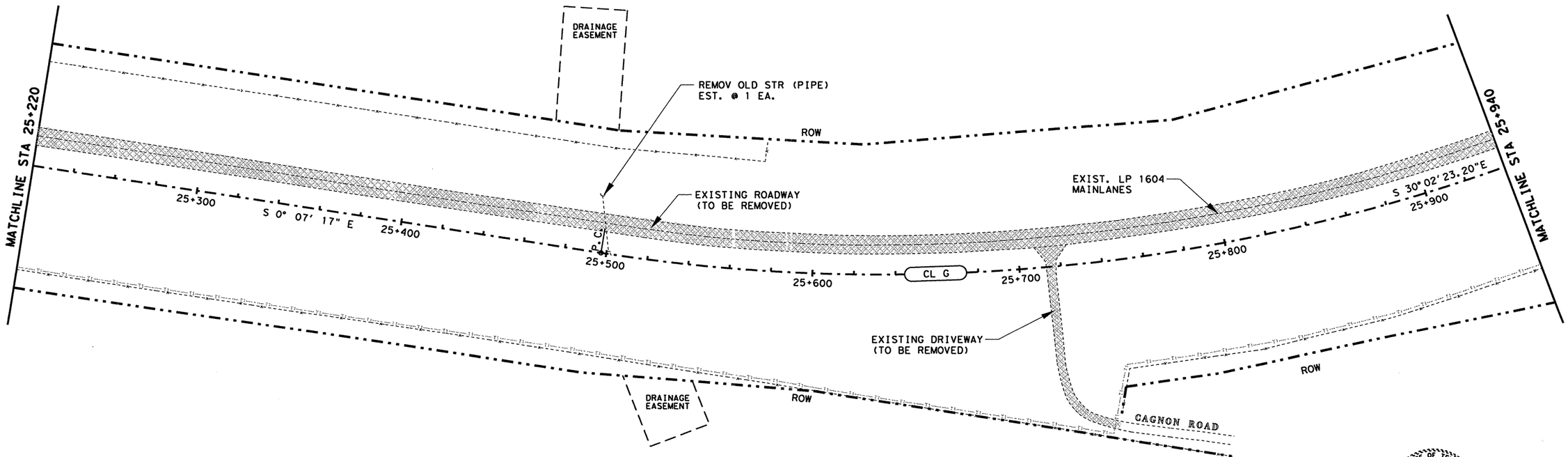


STATE OF TEXAS
JOEL K. DAVENPORT, JR.
79276
REGISTERED PROFESSIONAL ENGINEER

Joel K. Davenport, Jr. P.E. 79276 — 9/19/00
Joel K. Davenport, Jr. P.E. 79276 — Date

| UTILITY LEGEND | |
|---|---|
| | WATER LINE |
| | TELEPHONE LINE |
| | CABLE LINE |
| | GAS LINE |

LEGEND

LIMITS OF ROADWAY TO BE REMOVED

CL G — ℄ LOOP 1604

NOTE(S):

ALL REMOVAL ITEMS SHALL BE CONSIDERED SUBSIDIARY TO ITEM 100 PREP ROW UNLESS OTHERWISE NOTED.

ALL DIMENSIONS ARE IN METERS UNLESS OTHERWISE NOTED.

FOR EXISTING SIGN REMOVAL SEE SHEET(S) 36-39.

FOR HORIZONTAL ALIGNMENT/DATA, SEE SHEET(S) 164-171.

©2000 Texas Department of Transportation

# EXISTING PLAN

SHEET 16 OF 19

| FED.RD. DIV.NO. | FEDERAL AID PROJECT NO. | | SHEET NO. |
|---|---|---|---|
| 6 | NH 2000(704), etc. | | 187 |
| STATE | DIST. | COUNTY | |
| TEXAS | SAT | BEXAR | |
| CONT. | SECT. | JOB | HIGHWAY NO. |
| 2452 | 01 | 036, etc. | LP 1604 |

lp1604fm471-90\existingplan16.dgn

QUANTITIES THIS SHEET
CSJ 2452-01-036

SCALE : 1:2000

## ESTIMATED QUANTITIES

| | ITEM | UNIT | QTY. |
|---|---|---|---|
| ✳ | REMOV OLD STR (PIPE) | EA. | 1 |
| | REMOVE CONC. (CURB) | M | 150 |
| | PLANE ASPHALT CONC PAV | M2 | 1496 |

✳ FOR CONTRACTORS INFORMATION ONLY

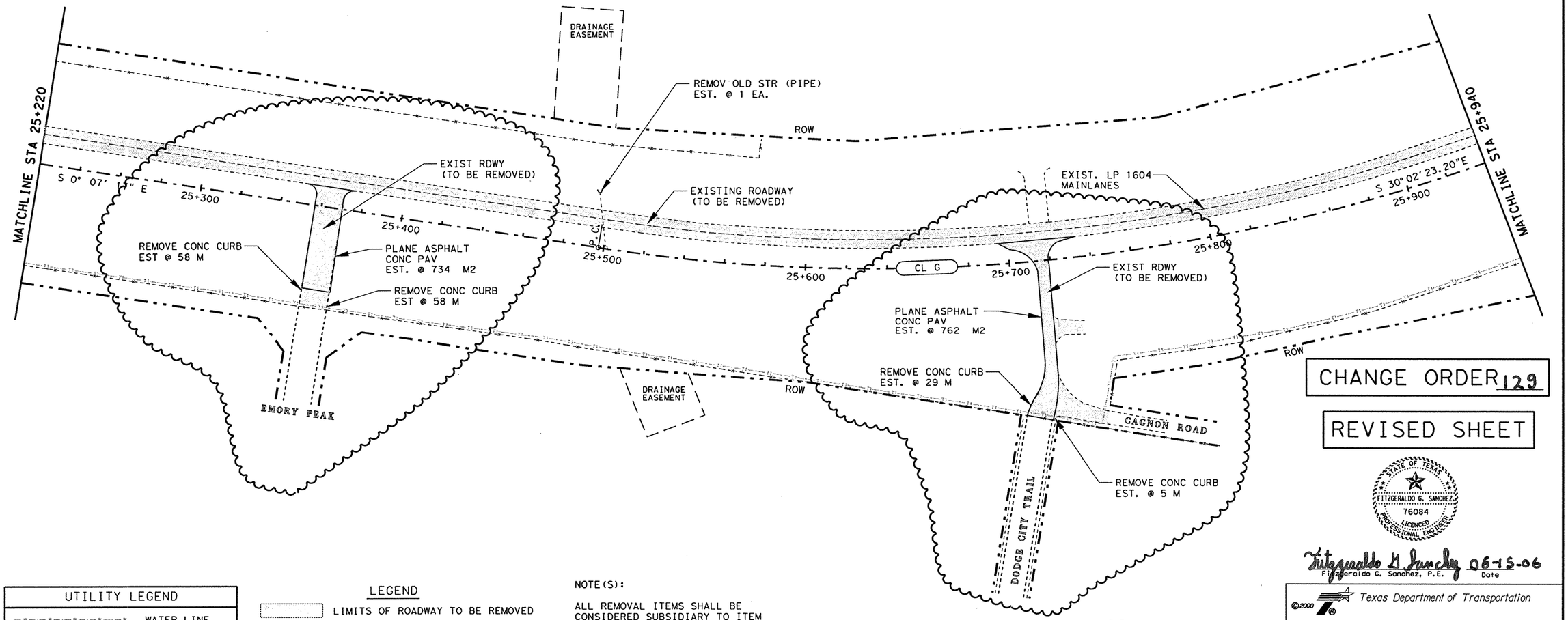


CHANGE ORDER 129

REVISED SHEET




Fitzgeraldo G. Sanchez 06-15-06
Fitzgeraldo G. Sanchez, P.E. Date

### UTILITY LEGEND

| | |
|---|---|
| —W—W—W—W—W— | WATER LINE |
| —T1—T1—T1—T1—T1— | TELEPHONE LINE |
| —C—C—C—C—C— | CABLE LINE |
| —G1—G1—G1—G1—G1— | GAS LINE |

### LEGEND

LIMITS OF ROADWAY TO BE REMOVED

CL G ℄ LOOP 1604

NOTE(S):

ALL REMOVAL ITEMS SHALL BE CONSIDERED SUBSIDIARY TO ITEM 100 PREP ROW UNLESS OTHERWISE NOTED.

ALL DIMENSIONS ARE IN METERS UNLESS OTHERWISE NOTED.

FOR EXISTING SIGN REMOVAL SEE SHEET(S) 36-39.

FOR HORIZONTAL ALIGNMENT/DATA, SEE SHEET(S) 164-171.

**CHANGE ORDER NO. 129**

-ADDED NEW INTERSECTIONS AND REMOVAL ITEMS.

-NEW QUANTITIES.

©2000
Texas Department of Transportation

## EXISTING PLAN

SHEET 16 OF 19

| FED.RD. DIV.NO. | FEDERAL AID PROJECT NO. | | SHEET NO. |
|---|---|---|---|
| 6 | NH 2000(704),etc. | | 187 A |
| STATE | DIST. | COUNTY | |
| TEXAS | SAT | BEXAR | |
| CONT. | SECT. | JOB | HIGHWAY NO. |
| 2452 | 01 | 036,etc. | LP 1604 |

lp1604fm471-90\existingplan16*ch.dgn

6-07-06

QUANTITIES THIS SHEET
CSJ 2452-01-036

SCALE : 1:2000

## ESTIMATED QUANTITIES

| | ITEM | UNIT | QTY. |
|---|---|---|---|
| ✳ | REMOV CONC (CURB) | M | 194 |
| ✳ | REMOV OLD STR (PIPE) | EA. | 1 |

✳FOR CONTRACTORS INFORMATION ONLY

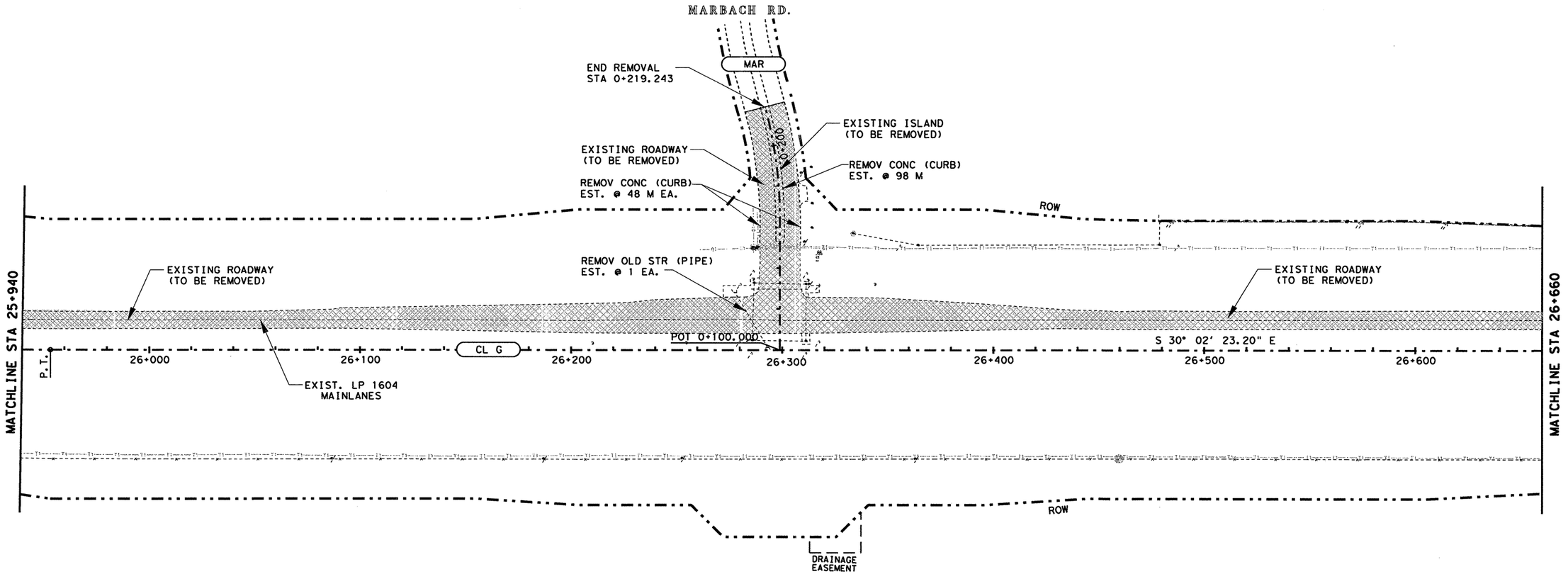


STATE OF TEXAS
JOEL K. DAVENPORT, JR.
79276
REGISTERED
PROFESSIONAL ENGINEER

Joel K. Davenport, Jr. 9/19/00
Joel K. Davenport, Jr. P.E. 79276 Date

### UTILITY LEGEND

- WATER LINE
- TELEPHONE LINE
- CABLE LINE
- GAS LINE

### LEGEND

- LIMITS OF ROADWAY TO BE REMOVED
- CL G — ℄ LOOP 1604
- MAR — MARBACH ROAD ℄

NOTE(S):

ALL REMOVAL ITEMS SHALL BE CONSIDERED SUBSIDIARY TO ITEM 100 PREP ROW UNLESS OTHERWISE NOTED.

ALL DIMENSIONS ARE IN METERS UNLESS OTHERWISE NOTED.

FOR EXISTING SIGN REMOVAL SEE SHEET(S) 36-39.

FOR HORIZONTAL ALIGNMENT/DATA, SEE SHEET(S) 164-171.

Texas Department of Transportation

## EXISTING PLAN

SHEET 17 OF 19

| FED. RD. DIV. NO. | FEDERAL AID PROJECT NO. | | SHEET NO. |
|---|---|---|---|
| 6 | NH 2000(704),etc. | | 188 |
| STATE | DIST. | COUNTY | |
| TEXAS | SAT | BEXAR | |
| CONT. | SECT. | JOB | HIGHWAY NO. |
| 2452 | 01 | 036,etc. | LP 1604 |

lp1604fm471-90\existingplan17.dgn

QUANTITIES THIS SHEET
CSJ 2452-01-036

SCALE : 1:2000

## ESTIMATED QUANTITIES

| ITEM | UNIT | QTY. |
|---|---|---|
| ✳ REMOV CONC (CURB) | M | 194 |
| ✳ REMOV OLD STR (PIPE) | EA. | 1 |
| | | |
| REMOV CONC (CURB) | M | 229 |
| REMOV OLD STR (PIPE) | M | 27.6 |

✳FOR CONTRACTORS INFORMATION ONLY

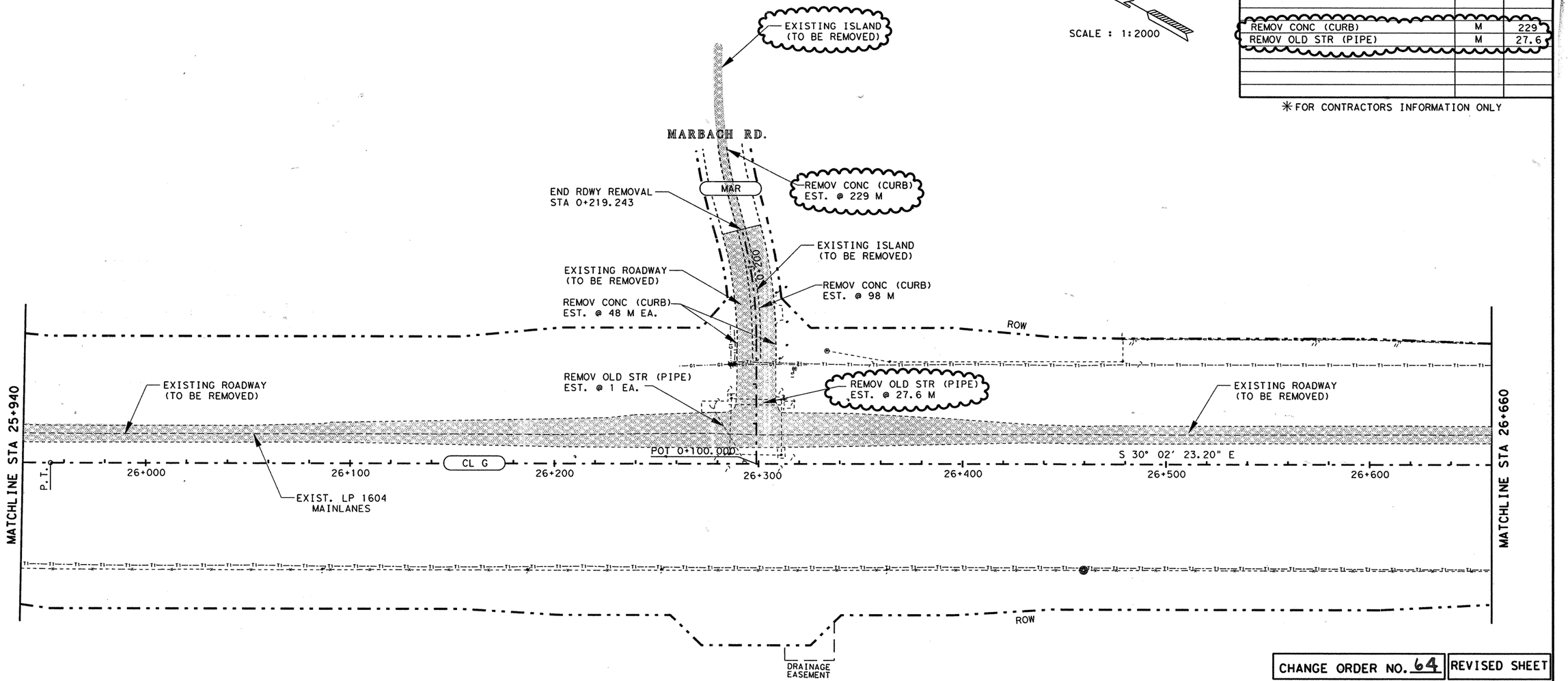


CHANGE ORDER NO. 64 | REVISED SHEET

**CHANGE ORDER NO. 64**

-ADDED ADDITIONAL REMOVAL ITEMS
-REVISED QUANTITIES

| UTILITY LEGEND | |
|---|---|
| W W W W W | WATER LINE |
| T1 T1 T1 T1 T1 | TELEPHONE LINE |
| C C C C | CABLE LINE |
| G1 G1 G1 G1 G1 | GAS LINE |

LEGEND

- LIMITS OF ROADWAY TO BE REMOVED
- CL G — ℄ LOOP 1604
- MAR — MARBACH ROAD ℄

NOTE(S):

ALL REMOVAL ITEMS SHALL BE CONSIDERED SUBSIDIARY TO ITEM 100 PREP ROW UNLESS OTHERWISE NOTED.

ALL DIMENSIONS ARE IN METERS UNLESS OTHERWISE NOTED.

FOR EXISTING SIGN REMOVAL SEE SHEET(S) 36-39.

FOR HORIZONTAL ALIGNMENT/DATA, SEE SHEET(S) 164-171.


555 EAST RAMSEY SAN ANTONIO TEXAS 78216
PHONE (210)375-9000
FAX (210)375-9010
PAPE-DAWSON ENGINEERS
CIVIL & ENVIRONMENTAL
STATE OF TEXAS
J. KENT O'BRIEN
64398
LICENSED
PROFESSIONAL ENGINEER
J. KENT O'BRIEN P.E.
1/27/2004
DATE


©2000
Texas Department of Transportation

# EXISTING PLAN

SHEET 17 OF 19

| FED.RD. DIV.NO. | FEDERAL AID PROJECT NO. | | SHEET NO. |
|---|---|---|---|
| 6 | NH 2000(704),etc. | | 188A |
| STATE | DIST. | COUNTY | |
| TEXAS | SAT | BEXAR | |
| CONT. | SECT. | JOB | HIGHWAY NO. |
| 2452 | 01 | 036,etc. | LP 1604 |

lp1604fm471-90\existingplan17.dgn

QUANTITIES THIS SHEET
CSJ 2452-01-036

SCALE : 1:2000

| ESTIMATED QUANTITIES | | |
|---|---|---|
| ITEM | UNIT | QTY. |
| ✳ REMOV OLD STR (PIPE) | EA. | 2 |

✳FOR CONTRACTORS INFORMATION ONLY

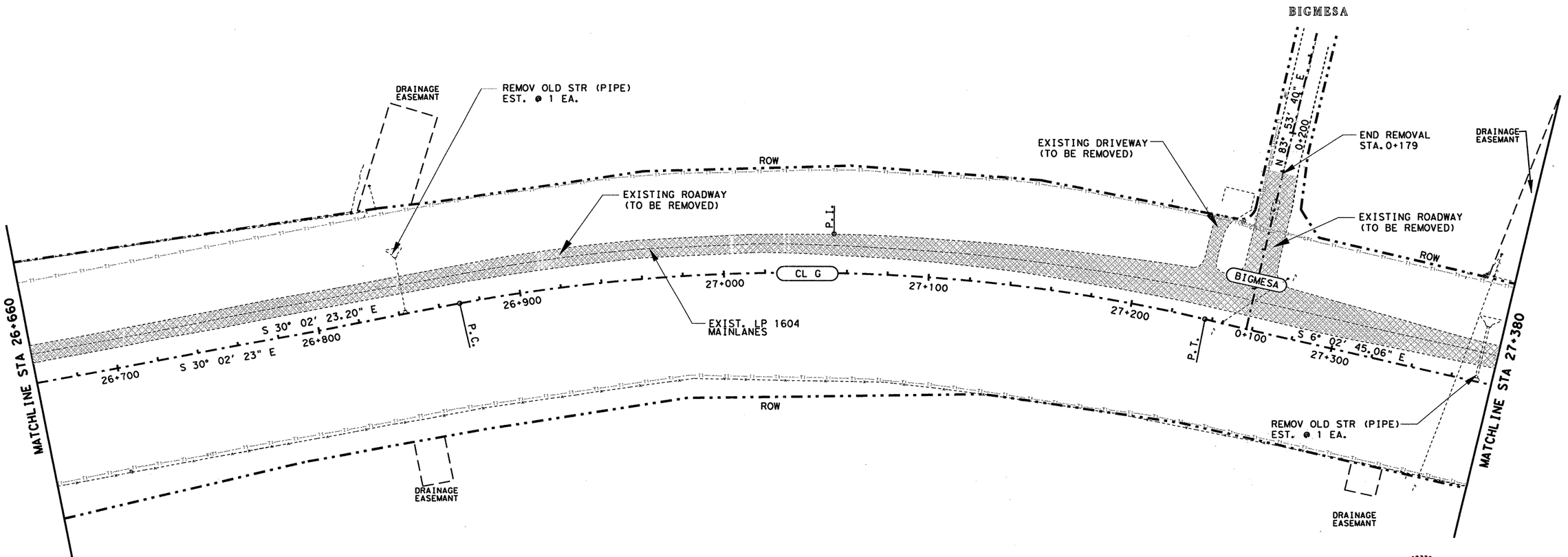


STATE OF TEXAS
JOEL K. DAVENPORT, JR.
79276
REGISTERED
PROFESSIONAL ENGINEER

Joel K. Davenport Jr. 9/19/00
Joel K. Davenport, Jr. P.E. 79276 Date

| UTILITY LEGEND | |
|---|---|
| W W W W W W W | WATER LINE |
| T1 T1 T1 T1 T1 T1 T1 | TELEPHONE LINE |
| C C C C C C C | CABLE LINE |
| G1 G1 G1 G1 G1 G1 G1 | GAS LINE |

LEGEND

- LIMITS OF ROADWAY TO BE REMOVED
- (CL G) ℄ LOOP 1604
- (BIGMESA) BIGMESA DRIVE ℄

NOTE(S):

ALL REMOVAL ITEMS SHALL BE CONSIDERED SUBSIDIARY TO ITEM 100 PREP ROW UNLESS OTHERWISE NOTED.

ALL DIMENSIONS ARE IN METERS UNLESS OTHERWISE NOTED.

FOR EXISTING SIGN REMOVAL SEE SHEET(S) 36-39.

FOR HORIZONTAL ALIGNMENT/DATA, SEE SHEET(S) 164-171.

Texas Department of Transportation

## EXISTING PLAN

SHEET 18 OF 19

| FED.RD. DIV.NO. | FEDERAL AID PROJECT NO. | | SHEET NO. |
|---|---|---|---|
| 6 | NH 2000(704),etc. | | 189 |
| STATE | DIST. | COUNTY | |
| TEXAS | SAT | BEXAR | |
| CONT. | SECT. | JOB | HIGHWAY NO. |
| 2452 | 01 | 036,etc. | LP 1604 |

lp1604fm471-90\existingplan18.dgn

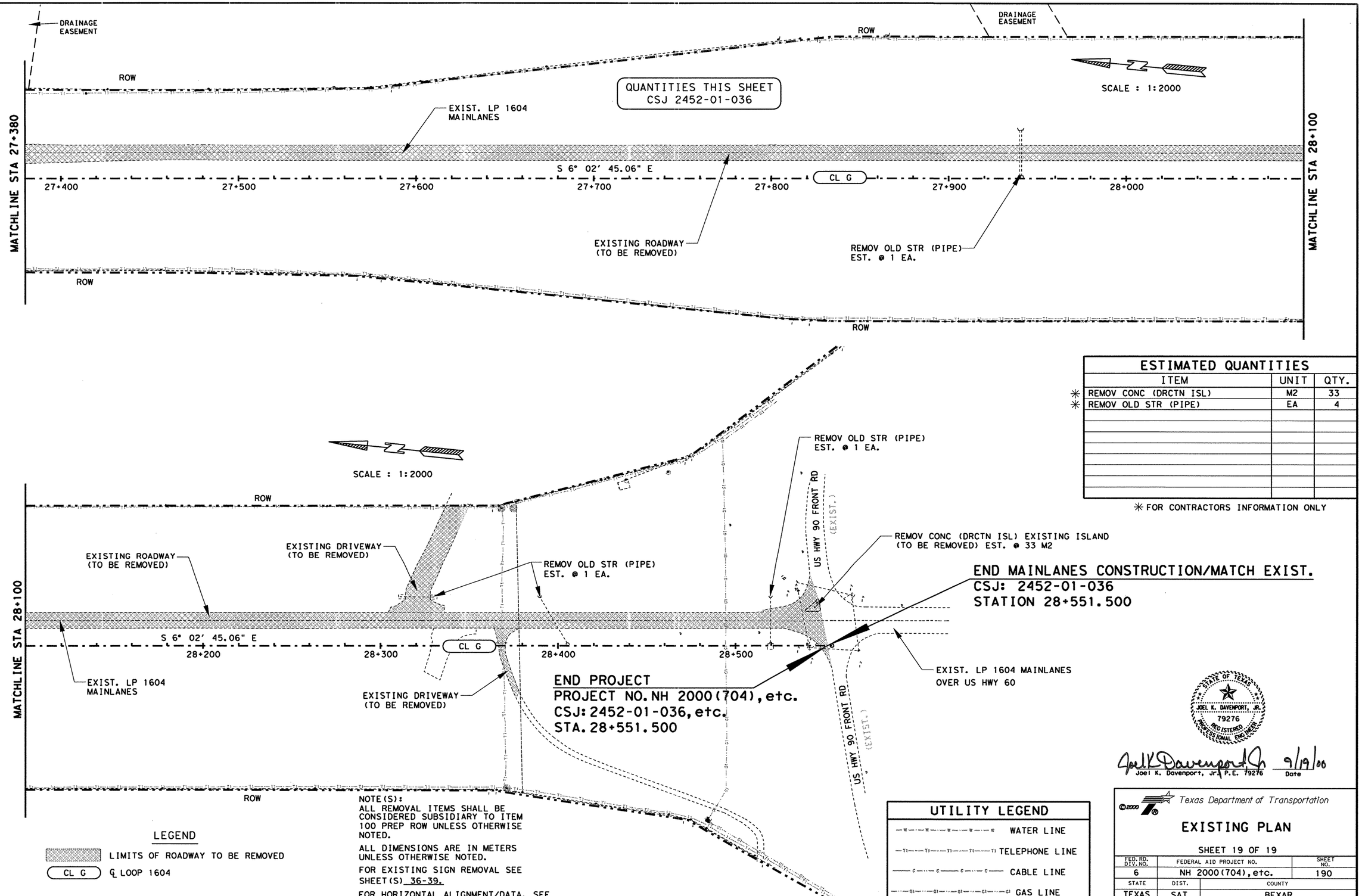


## ESTIMATED QUANTITIES

| | ITEM | UNIT | QTY. |
|---|---|---|---|
| ✳ | REMOV CONC (DRCTN ISL) | M2 | 33 |
| ✳ | REMOV OLD STR (PIPE) | EA | 4 |

✳ FOR CONTRACTORS INFORMATION ONLY

LEGEND

LIMITS OF ROADWAY TO BE REMOVED

CL G ℄ LOOP 1604

NOTE(S):
ALL REMOVAL ITEMS SHALL BE CONSIDERED SUBSIDIARY TO ITEM 100 PREP ROW UNLESS OTHERWISE NOTED.

ALL DIMENSIONS ARE IN METERS UNLESS OTHERWISE NOTED.

FOR EXISTING SIGN REMOVAL SEE SHEET(S) 36-39.

FOR HORIZONTAL ALIGNMENT/DATA, SEE SHEET(S) 164-171.

## UTILITY LEGEND

- WATER LINE
- TELEPHONE LINE
- CABLE LINE
- GAS LINE

STATE OF TEXAS
JOEL K. DAVENPORT, JR.
79276
REGISTERED PROFESSIONAL ENGINEER

Joel K. Davenport, Jr. P.E. 79276 — 9/19/00 Date

Texas Department of Transportation

# EXISTING PLAN

SHEET 19 OF 19

| FED. RD. DIV. NO. | FEDERAL AID PROJECT NO. | | SHEET NO. |
|---|---|---|---|
| 6 | NH 2000(704), etc. | | 190 |
| STATE | DIST. | COUNTY | |
| TEXAS | SAT | BEXAR | |
| CONT. | SECT. | JOB | HIGHWAY NO. |
| 2452 | 01 | 036, etc. | LP 1604 |

lp1604fm471-90\existingplan19.dgn

QUANTITIES THIS SHEET
CSJ 2452-01-037

SCALE: 1:1000

## ESTIMATED QUANTITIES

| ITEM # | ITEM | UNIT | QTY. |
|---|---|---|---|
| 110-5001 | EXCAVATION (RDWY) | M3 | 739 |
| 160-5002 | FURN AND PLAC TPSL (CL 2) (150 mm) | M2 | 3528 |
| 164-5025 | DRILL SEED (PERM) (URBAN) (CLAY) | M2 | 3528 |
| 3011-5018 | HOT MIX (TY C) (SURF) | MGR | 107 |
| | | | |

NOTE(S):

ALL DIMENSIONS ARE IN METERS UNLESS OTHERWISE NOTED.

FOR HORIZONTAL ALIGNMENT / DATA, SEE SHEETS 164 - 171

SAW CUTTING CALLED FOR ON THIS SHEET & ELSEWHERE, SHALL BE CONSIDERED SUBSIDIARY TO VARIOUS PERTINENT BID ITEMS.

FOR LIMITS OF SEEDING & TOPSOIL, SEE PROJECT X-SECTIONS.

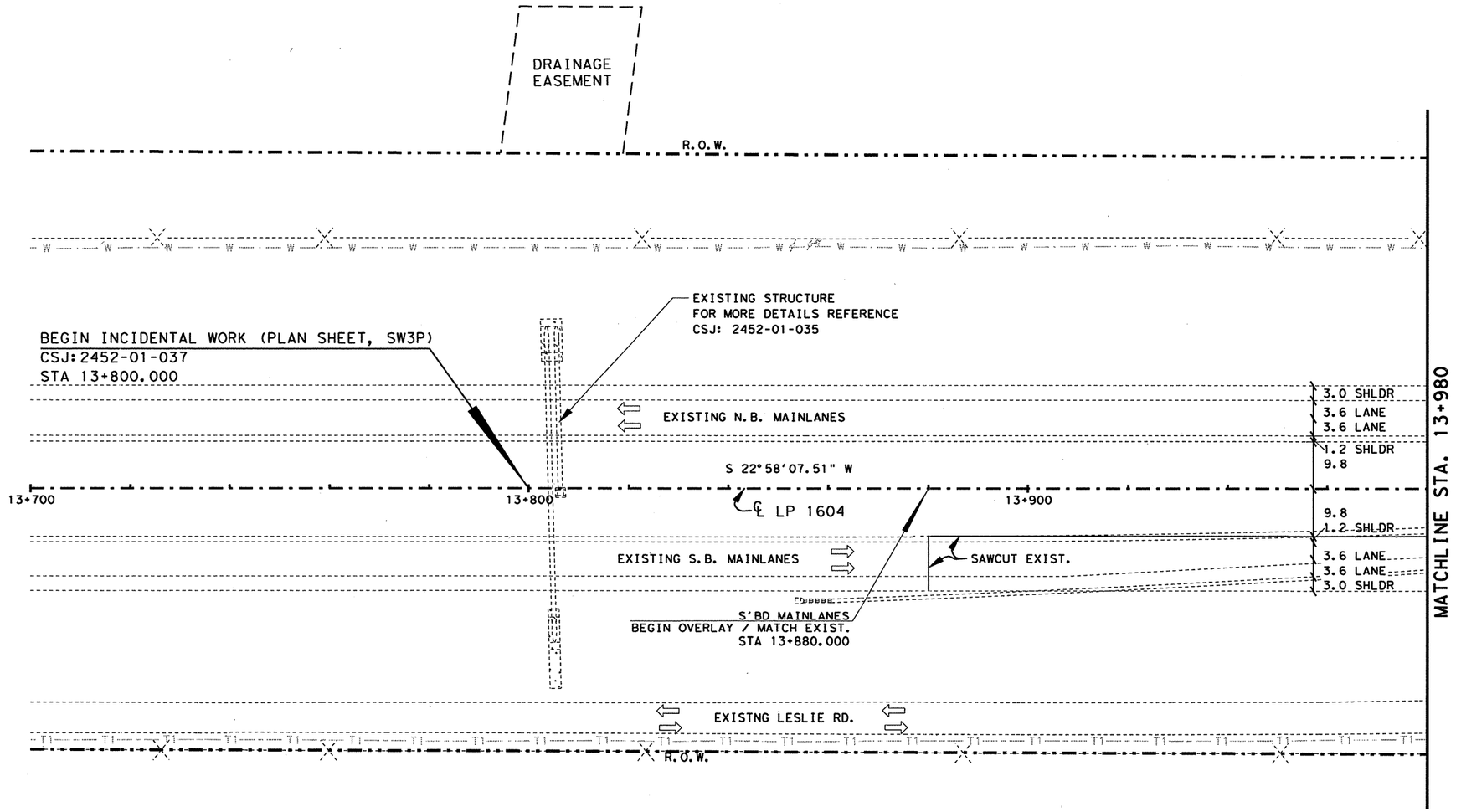


## UTILITY LEGEND

| | |
|---|---|
| — W — · — W — · — | WATER LINE |
| — T1 — — T1 — — | TELEPHONE LINE |
| ——— C ——·—— C —— | CABLE LINE |
| — · — G1 — · — G1 — · — | GAS LINE |

LEVELS DISPLAYED
1 2 3 4 5 6 7 8 9 10 11 12 13 14 15 16
17 18 19 20 21 22 23 24 25 26 27 28 29 30 31 32
33 34 35 36 37 38 39 40 41 42 43 44 45 46 47 48
49 50 51 52 53 54 55 56 57 58 59 60 61 62 63

ACC: t:\ao\design\lp1604fm471-90\
FILE: plan01.dgn

STATE OF TEXAS
JOEL K. DAVENPORT, JR.
79276
REGISTERED PROFESSIONAL ENGINEER

Joel K. Davenport, Jr. 9/19/00
Joel K. Davenport, Jr. P.E. 79276 Date

Texas Department of Transportation

# PLAN SHEET

SHEET 1 OF 57

| FED. RD. DIV. NO. | FEDERAL AID PROJECT NO. | | SHEET NO. |
|---|---|---|---|
| 6 | NH 2000(704), etc. | | 191 |
| STATE | DIST. | COUNTY | |
| TEXAS | SAT | BEXAR | |
| CONT. | SECT. | JOB | HIGHWAY NO. |
| 2452 | 01 | 036, etc. | LP 1604 |

QUANTITIES THIS SHEET
CSJ 2452-01-037

SCALE: 1:1000

## ESTIMATED QUANTITIES

| ITEM # | ITEM | UNIT | QTY. |
|---|---|---|---|
| 110-5001 | EXCAVATION (RDWY) | M3 | 2568 |
| 160-5002 | FURN AND PLAC TPSL (CL 2) (150 mm) | M2 | 5096 |
| 164-5025 | DRILL SEED (PERM) (URBAN) (CLAY) | M2 | 5096 |
| 3011-5018 | HOT MIX (TY C) (SURF) | MGR | 429 |
| | | | |

NOTE(S):

ALL DIMENSIONS ARE IN METERS UNLESS OTHERWISE NOTED.

FOR HORIZONTAL ALIGNMENT / DATA, SEE SHEET 164 - 171.

SAW CUTTING CALLED FOR ON THIS SHEET & ELSEWHERE, SHALL BE CONSIDERED SUBSIDIARY TO VARIOUS PERTINENT BID ITEMS.

FOR LIMITS OF SEEDING & TOPSOIL, SEE PROJECT X-SECTIONS.

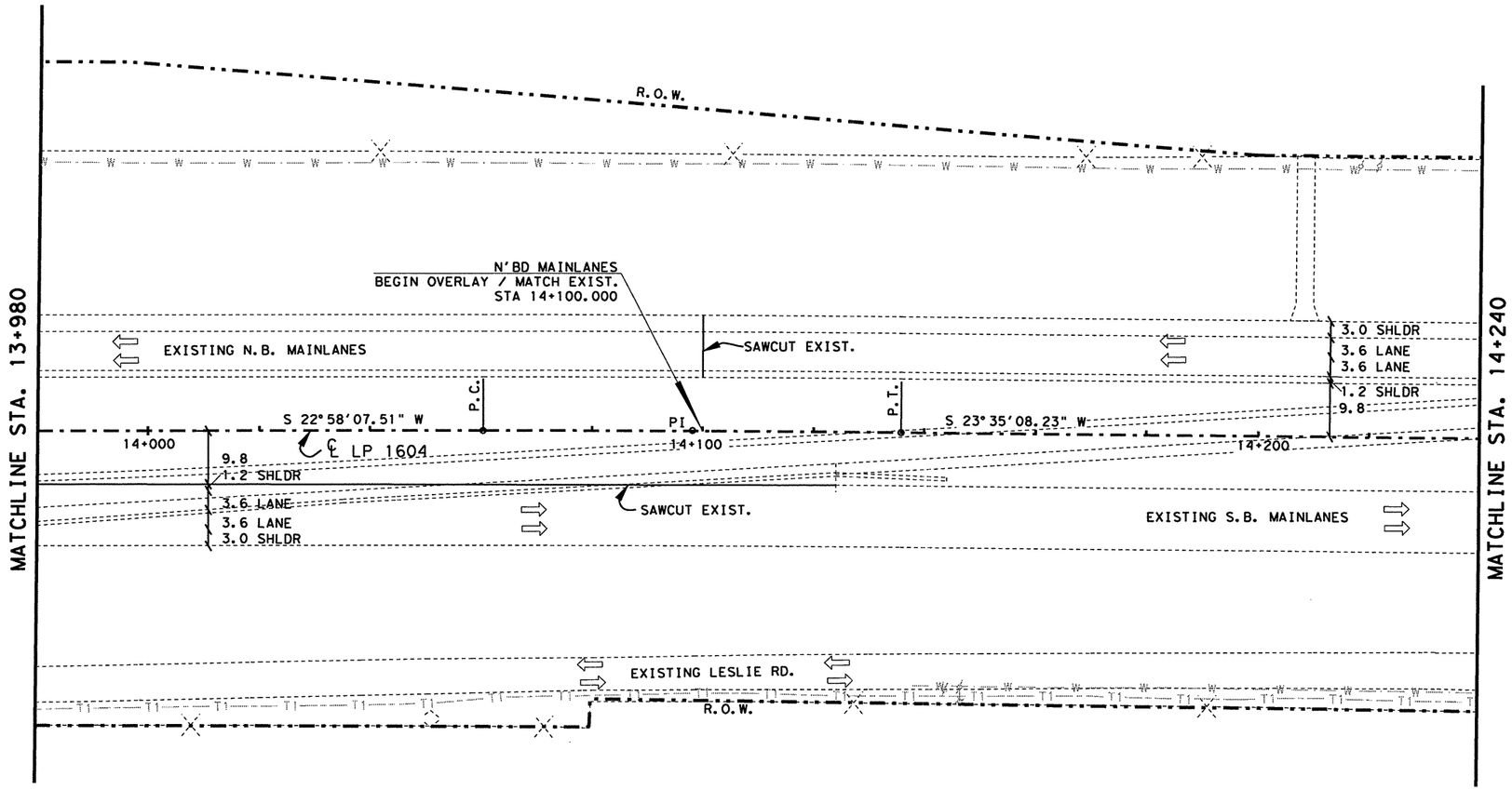


### UTILITY LEGEND

| | |
|---|---|
| W W | WATER LINE |
| T1 T1 | TELEPHONE LINE |
| C C | CABLE LINE |
| G1 G1 | GAS LINE |

LEVELS DISPLAYED
1 2 3 4 5 6 7 8 9 10 11 12 13 14 15 16
17 18 19 20 21 22 23 24 25 26 27 28 29 30 31 32
33 34 35 36 37 38 39 40 41 42 43 44 45 46 47 48
49 50 51 52 53 54 55 56 57 58 59 60 61 62 63

ACC: t:\ao\design\lp1604fm471-90\
FILE: plan02.dgn

STATE OF TEXAS
JOEL K. DAVENPORT, JR.
79276
REGISTERED PROFESSIONAL ENGINEER

Joel K Davenport Jr 9/19/00
Joel K. Davenport, Jr. P.E. 79276 Date

Texas Department of Transportation

# PLAN SHEET

SHEET 2 OF 57

| FED.RD. DIV.NO. | FEDERAL AID PROJECT NO. | | SHEET NO. |
|---|---|---|---|
| 6 | NH 2000(704), etc. | | 192 |
| STATE | DIST. | COUNTY | |
| TEXAS | SAT | BEXAR | |
| CONT. | SECT. | JOB | HIGHWAY NO. |
| 2452 | 01 | 036, etc. | LP 1604 |

QUANTITIES THIS SHEET
CSJ 2452-01-037

SCALE: 1:1000

## ESTIMATED QUANTITIES

| | ITEM # | ITEM | UNIT | QTY. |
|---|---|---|---|---|
| | 100-5002 | PREP ROW | KM | 0.26 |
| | 110-5001 | EXCAVATION (RDWY) | M3 | 3044 |
| | 132-5018 | EMBANK (ORD COMP) (TY B) (CL 3) | M3 | 2028 |
| | 160-5002 | FURN AND PLAC TPSL (CL 2) (150 MM) | M2 | 7096 |
| | 164-5049 | DRILL SEED (PERM) (URBAN) (CLAY) | M2 | 7096 |
| | 247-5024 | FL BS (COMPL IN PLAC) (TY A GR6 CL 4) | M3 | 797 |
| | 310-5006 | ASPH MATL (AE-P) | L | 1008 |
| * | | ONE CRSE SURF TREAT | M2 | 1920 |
| | 316-5028 | AGGR ( TY PB ) GR 4 | M3 | 17 |
| | 316-5226 | ASPH (AC-15P, HFRS-2P OR CRS-2P) | L | 2611 |
| | 540-5006 | MBGF (TIM POST) (2.67 MM) | M | 76 |
| | 3117-5003 | HOT MIX (TY C) | MGR | 180 |
| | 3117-5018 | HOT MIX (TY C) (SURF) | MGR | 557 |
| | 5119-5003 | SINGLE GDRAIL TERM (TY III) | EA | 1 |
| | | | | |

* FOR CONTRACTORS INFORMATION ONLY

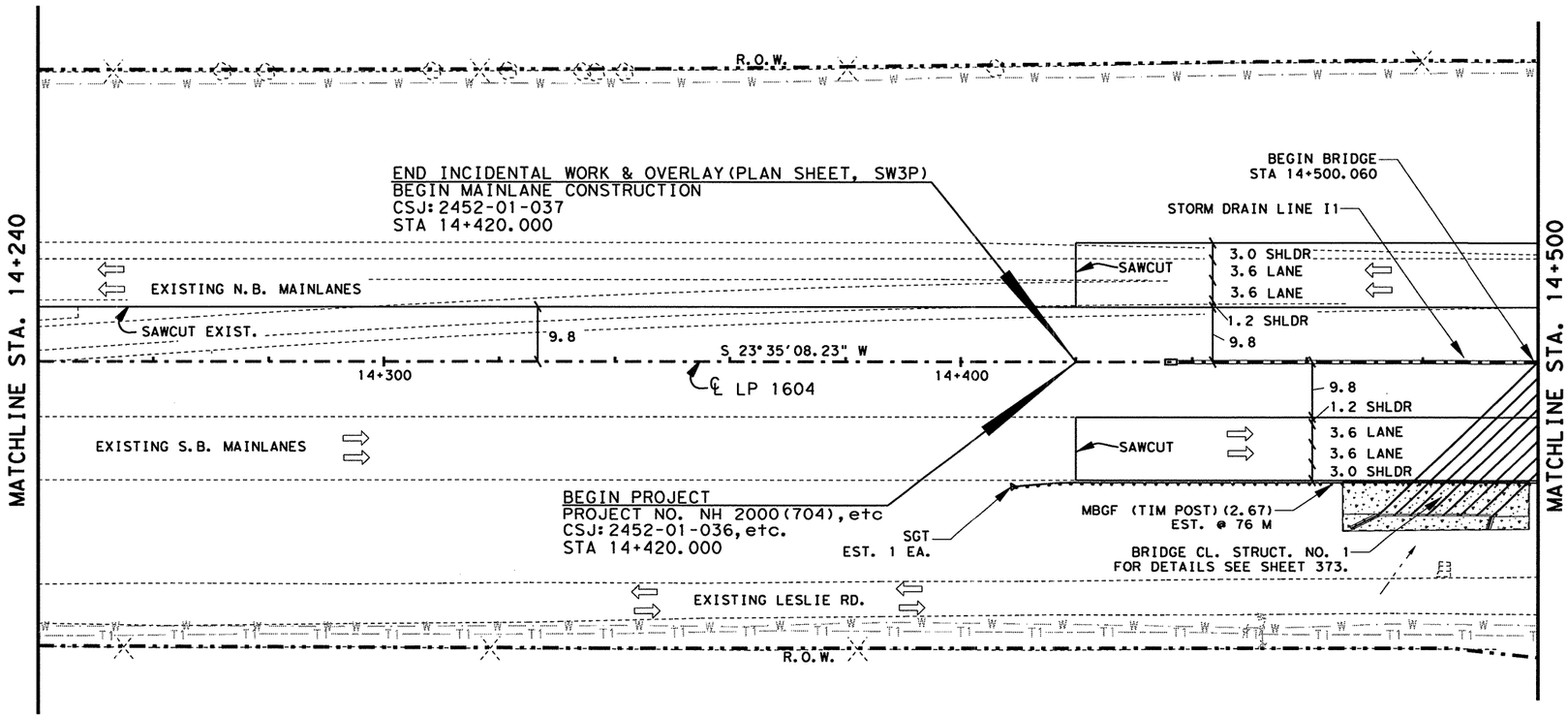


NOTE(S):

ALL DIMENSIONS ARE IN METERS UNLESS OTHERWISE NOTED.

FOR HORIZONTAL ALIGNMENT / DATA, SEE SHEET 164 - 171.

SAW CUTTING CALLED FOR ON THIS SHEET & ELSEWHERE, SHALL BE CONSIDERED SUBSIDIARY TO VARIOUS PERTINENT BID ITEMS.

FOR LIMITS OF SEEDING & TOPSOIL, SEE PROJECT X-SECTIONS.

## UTILITY LEGEND

| | |
|---|---|
| — W — · — W — · — | WATER LINE |
| — T1 — — — T1 — — — | TELEPHONE LINE |
| ——— C ——·——·— C ——— | CABLE LINE |
| — · — G1 — · — · — G1 — · — | GAS LINE |

LEVELS DISPLAYED
1 2 3 4 5 6 7 8 9 10 11 12 13 14 15 16
17 18 19 20 21 22 23 24 25 26 27 28 29 30 31 32
33 34 35 36 37 38 39 40 41 42 43 44 45 46 47 48
49 50 51 52 53 54 55 65 76 85 96 06 16 26 63

ACC: t:\ao\design\lp1604fm471-90\
FILE: plan03.dgn

STATE OF TEXAS
JOEL K. DAVENPORT, JR.
79276
REGISTERED PROFESSIONAL ENGINEER

Joel K. Davenport, Jr. 9/19/00
Joel K. Davenport, Jr. P.E. 79276 Date

Texas Department of Transportation

# PLAN SHEET

SHEET 3 OF 57

| FED. RD. DIV. NO. | FEDERAL AID PROJECT NO. | | SHEET NO. |
|---|---|---|---|
| 6 | NH 2000(704), etc. | | 193 |
| STATE | DIST. | COUNTY | |
| TEXAS | SAT | BEXAR | |
| CONT. | SECT. | JOB | HIGHWAY NO. |
| 2452 | 01 | 036, etc. | LP 1604 |

QUANTITIES THIS SHEET
CSJ 2452-01-037

SCALE: 1:1000

## ESTIMATED QUANTITIES

| ITEM # | ITEM | UNIT | QTY. |
|---|---|---|---|
| 100-5002 | PREP ROW | KM | 0.28 |
| 110-5001 | EXCAVATION (RDWY) | M3 | 13375 |
| 132-5018 | EMBANK (ORD COMP) (TY B) (CL 3) | M3 | 11250 |
| 150-5003 | BLADING | H | 6 |
| 156-5003 | BLDZR WORK (ORD COMP) (TY A) | H | 6 |
| 160-5002 | FURN AND PLAC TPSL (CL 2) (150 MM) | M2 | 16019 |
| 164-5049 | DRILL SEED (PERM) (URBAN) (CLAY) | M2 | 16019 |
| 247-5024 | FL BS (COMPL IN PLAC)(TY A GR 6 CL 4) | M3 | 2793 |
| 310-5006 | ASPH MATL (AE-P) | L | 3534 |
| * | ONE CRSE SURF TREAT | M2 | 6730 |
| 316-5028 | AGGR (TY PB, GR 4) | M3 | 61 |
| 316-5226 | ASPH (AC-15P, HFRS-2P OR CRS-2P) | L | 9153 |
| 540-5005 | TERM ANCHOR SECTION (2.67 MM) | EA | 3 |
| 540-5006 | MBGF (TIM POST) (2.67 MM) | M | 98.8 |
| 3117-5003 | HOT MIX (TY C) | MGR | 633 |
| 3117-5018 | HOT MIX (TY C) (SURF) | MGR | 601 |
| 5119-5003 | SINGLE GDRAIL TERM (TY III) | EA | 1 |
| | | | |

*FOR CONTRACTORS INFORMATION ONLY

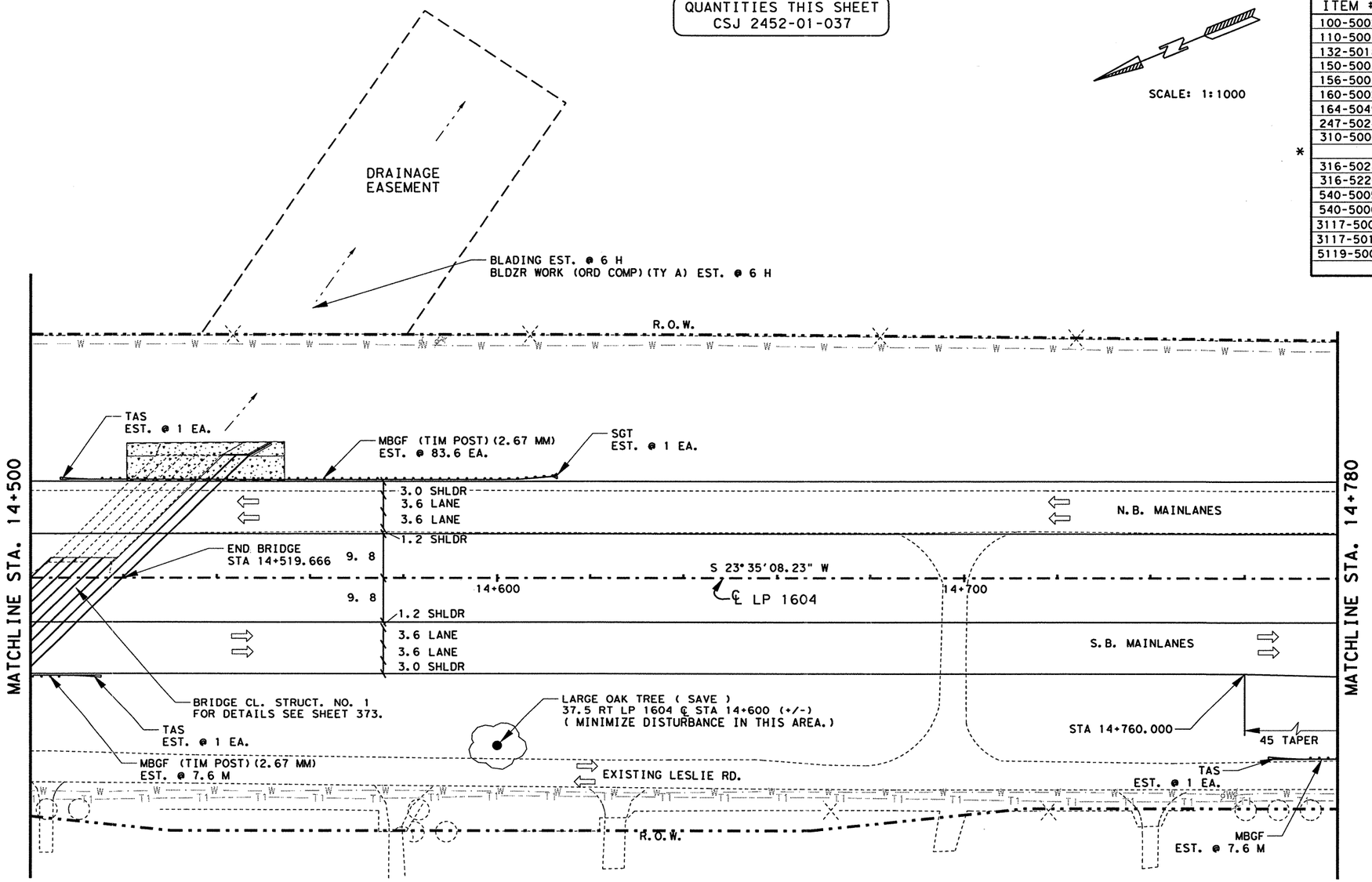


NOTE(S):

ALL DIMENSIONS ARE IN METERS UNLESS OTHERWISE NOTED.

FOR HORIZONTAL ALIGNMENT / DATA, SEE SHEETS 164 - 171.

FOR LIMITS OF SEEDING & TOPSOIL, SEE PROJECT X-SECTIONS AND TYPICAL SECTIONS.

## UTILITY LEGEND

| | |
|---|---|
| — W — · — W — · — | WATER LINE |
| — T1 — — — T1 — — — | TELEPHONE LINE |
| ——— C ——·——·——C ——— | CABLE LINE |
| — · — · — G1 — · — · — G1 — · — · — | GAS LINE |

LEVELS DISPLAYED
1 2 3 4 5 6 7 8 9 10 11 12 13 14 15 16
17 18 19 20 21 22 23 24 25 26 27 28 29 30 31 32
33 34 35 36 37 38 39 40 41 42 43 44 45 46 47 48
49 50 51 52 63 64 65 66 75 85 96 06 16 26 3

ACC: t:\ao\design\lp1604fm471-90\
FILE: plan04.dgn

STATE OF TEXAS
JOEL K. DAVENPORT, JR.
79276
REGISTERED PROFESSIONAL ENGINEER

Joel K Davenport Jr 10/26/00
Joel K. Davenport, Jr. P.E. 79276 Date

©2000 Texas Department of Transportation

# PLAN SHEET

SHEET 4 OF 57

| FED.RD. DIV.NO. | FEDERAL AID PROJECT NO. | | SHEET NO. |
|---|---|---|---|
| 6 | NH 2000(704), etc. | | 194 |
| STATE | DIST. | COUNTY | |
| TEXAS | SAT | BEXAR | |
| CONT. | SECT. | JOB | HIGHWAY NO. |
| 2452 | 01 | 036, etc. | LP 1604 |

QUANTITIES THIS SHEET
CSJ 2452-01-037

SCALE: 1:1000

## ESTIMATED QUANTITIES

| | ITEM # | ITEM | UNIT | QTY. |
|---|---|---|---|---|
| | 100-5002 | PREP ROW | KM | 0.28 |
| | 110-5001 | EXCAVATION (RDWY) | M3 | 13375 |
| | 132-5018 | EMBANK (ORD COMP) (TY B) (CL 3) | M3 | 11429 |
| | 150-5003 | BLADING | H | 6 |
| | 156-5003 | BLDZR WORK (ORD COMP) (TY A) | H | 6 |
| | 160-5002 | FURN AND PLAC TPSL (CL 2) (150 MM) | M2 | 16019 |
| | 164-5049 | DRILL SEED (PERM) (URBAN) (CLAY) | M2 | 16019 |
| | 247-5024 | FL BS (COMPL IN PLAC) (TY A GR 6 CL 4) | M3 | 2793 |
| | 310-5006 | ASPH MATL (AE-P) | L | 3534 |
| * | | ONE CRSE SURF TREAT | M2 | 6730 |
| | 316-5028 | AGGR (TY PB, GR 4) | M3 | 61 |
| | 316-5226 | ASPH (AC-15P, HFRS-2P OR CRS-2P) | L | 9153 |
| | 540-5005 | TERM ANCHOR SECTION (2.67 MM) | EA | 2 |
| | 540-5006 | MBGF (TIM POST) (2.67 MM) | M | 281.2 |
| | 3117-5003 | HOT MIX (TY C) | MGR | 633 |
| | 3117-5018 | HOT MIX (TY C) (SURF) | MGR | 601 |
| | 5119-5003 | SINGLE GDRAIL TERM (TY III) | EA | 2 |
| | 423-5005 | RET WALL (CONC BLOCK) | M2 | 62.1 |
| | 432-5001 | RIPRAP (CONC) (CL B) | M3 | 11.2 |

* FOR CONTRACTORS INFORMATION ONLY

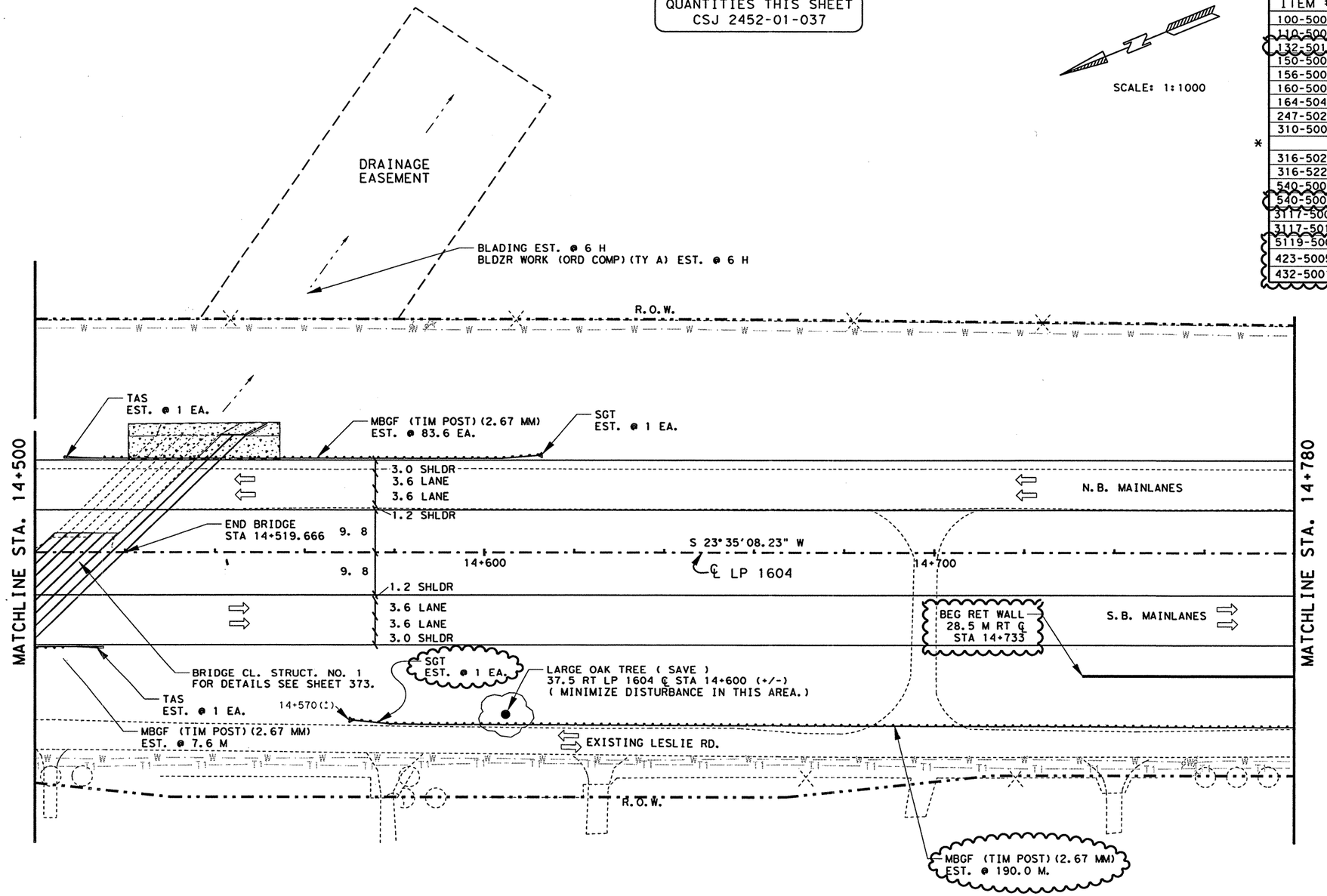


NOTE(S):

ALL DIMENSIONS ARE IN METERS UNLESS OTHERWISE NOTED.

FOR HORIZONTAL ALIGNMENT / DATA, SEE SHEETS 164 - 171.

FOR LIMITS OF SEEDING & TOPSOIL, SEE PROJECT X-SECTIONS AND TYPICAL SECTIONS.

FOR PLAN & PROFILE OF RET WALL (CONC BLOCK) SEE SHEET 195C.

CHANGE ORDER 12

### UTILITY LEGEND

| | |
|---|---|
| — W — W — | WATER LINE |
| — T1 — T1 — | TELEPHONE LINE |
| — C — C — | CABLE LINE |
| — G1 — G1 — | GAS LINE |

CHANGE ORDER NO. 12

-EXTENDED MBGF & RELATED SGT FOR SLOPE PROTECTION.
-ELIMINATED RIPRAP SIDE SLOPE
-ELIMINATED LIGHT SERVICE
-REVISED QUANTITIES
-ADD CONC BLOCK WALL

STATE OF TEXAS — TERRY G. McCOY — 75016 — REGISTERED PROFESSIONAL ENGINEER

Terry G. McCoy, P.E. — 3.8.02 Date

FOR MOD'S ASSOC WITH CO 12 ONLY

©2000 Texas Department of Transportation

PLAN SHEET

SHEET 4 OF 57

| FED.RD. DIV.NO. | FEDERAL AID PROJECT NO. | | SHEET NO. |
|---|---|---|---|
| 6 | NH 2000(704), etc. | | 194A |
| STATE | DIST. | COUNTY | |
| TEXAS | SAT | BEXAP | |
| CONT. | SECT. | JOB | HIGHWAY NO. |
| 2452 | 01 | 036, etc. | |

LEVELS DISPLAYED
1 2 3 4 5 6 7 8 9 10 11 12 13 14 15 16
17 18 19 20 21 22 23 24 25 26 27 28 29 30 31 32
33 34 35 36 37 38 39 40 41 42 43 44 45 46 47 48
49 50 51 52 53 54 55 56 57 58 59 60 61 62 63

ACC: *:\ao\design\p1604fm471-90\
FILE: plan04.dgn

QUANTITIES THIS SHEET
CSJ 2452-01-037

SCALE: 1:1000

## ESTIMATED QUANTITIES

| | ITEM # | ITEM | UNIT | QTY. |
|---|---|---|---|---|
| | 100-5002 | PREP ROW | KM | 0.26 |
| | 110-5001 | EXCAVATION (RDWY) | M3 | 21418 |
| | 132-5018 | EMBANK (ORD COMP) (TY B) (CL 3) | M3 | 1535 |
| | 160-5002 | FURN AND PLAC TPSL (CL 2) (150 MM) | M2 | 12346 |
| | 164-5049 | DRILL SEED (PERM) (URBAN) (CLAY) | M2 | 12346 |
| | 247-5024 | FL BS (COMPL IN PLAC)(TY A GR 6 CL 4) | M3 | 2702 |
| | 310-5006 | ASPH MATL (AE-P) | L | 3285 |
| * | | ONE CRSE SURF TREAT | M2 | 6521 |
| | 316-5028 | AGGR (TY PB, GR 4) | M3 | 59 |
| | 316-5226 | ASPH (AC-15P, HFRS-2P OR CRS-2P) | L | 8869 |
| | 432-5001 | RIPRAP (CONC) (CL B) | M3 | 85 |
| | 530-5078 | DRVWAYS (CONC) (200 MM) | M2 | 234 |
| | 540-5006 | MBGF (TIM POST) (2.67 MM) | M | 60.8 |
| | 3117-5003 | HOT MIX (TY C) | MGR | 613 |
| | 3117-5018 | HOT MIX (TY C) (SURF) | MGR | 584 |
| | 5119-5003 | SINGLE GDRAIL TERM (TY III) | EA | 1 |
| | | | | |

* FOR CONTRACTORS INFORMATION ONLY

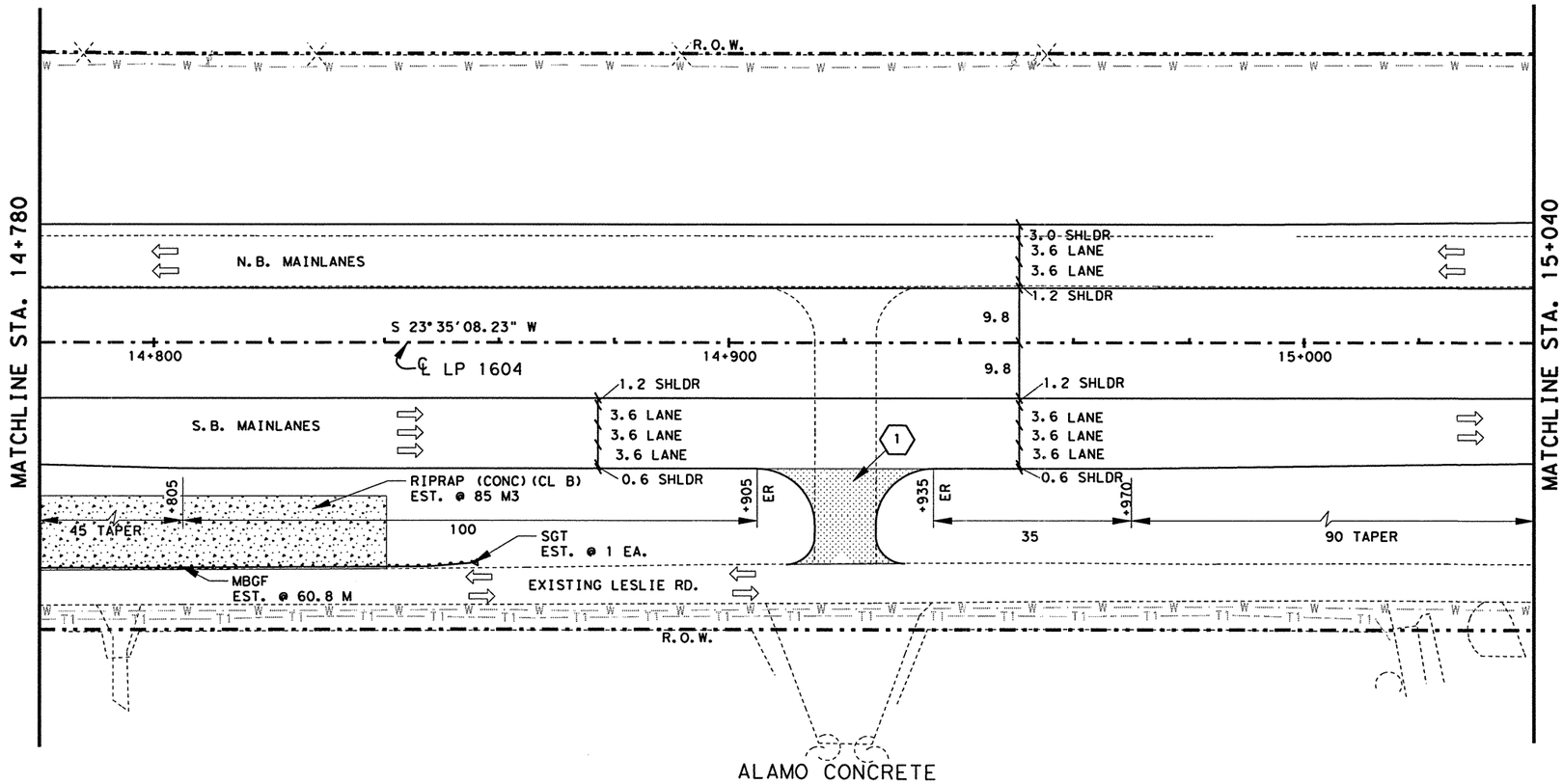


### UTILITY LEGEND

| | |
|---|---|
| — W — W — | WATER LINE |
| — T1 — T1 — | TELEPHONE LINE |
| — C — C — | CABLE LINE |
| — G1 — G1 — | GAS LINE |

NOTE(S):

ALL DIMENSIONS ARE IN METERS UNLESS OTHERWISE NOTED.

FOR HORIZONTAL ALIGNMENT / DATA, SEE SHEETS 164 -171.

FOR LIMITS OF SEEDING & TOPSOIL, SEE PROJECT X-SECTIONS AND TYPICAL SECTIONS.

FOR RIPRAP DETAILS SEE PROJECT X-SECTIONS AND SHEET(S) 342.

(#) DRIVEWAY #, FOR MORE DETAILS SEE SHEET(S) 27,28 & 337.

STATE OF TEXAS
JOEL K. DAVENPORT, JR.
79276
REGISTERED PROFESSIONAL ENGINEER

Joel K. Davenport Jr 10/26/00
Joel K. Davenport, Jr. P.E. 79276 Date

©2000
Texas Department of Transportation

# PLAN SHEET

SHEET 5 OF 57

| FED.RD. DIV.NO. | FEDERAL AID PROJECT NO. | | SHEET NO. |
|---|---|---|---|
| 6 | NH 2000(704), etc. | | 195 |
| STATE | DIST. | COUNTY | |
| TEXAS | SAT | BEXAR | |
| CONT. | SECT. | JOB | HIGHWAY NO. |
| 2452 | 01 | 036, etc. | LP 1604 |

LEVELS DISPLAYED
1 2 3 4 5 6 7 8 9 10 11 12 13 14 15 16
17 18 19 20 21 22 23 24 25 26 27 28 29 30 31 32
33 34 45 56 57 58 59 40 41 42 43 44 45 46 47 48
49 50 51 52 53 54 55 56 57 58 59 60 61 62 63
ACC: t:\ao\design\lp1604fm471-90\
FILE: plan05.dgn

QUANTITIES THIS SHEET
CSJ 2452-01-037

SCALE: 1:1000

ELIMINATED AS PART OF CHANGE ORDER NO. 12

## ESTIMATED QUANTITIES

| | ITEM # | ITEM | UNIT | QTY. |
|---|---|---|---|---|
| | 100-5002 | PREP ROW | KM | 0.26 |
| | 110-5001 | EXCAVATION (RDWY) | M3 | 21418 |
| | 132-5018 | EMBANK (ORD COMP) (TY B) (CL 3) | M3 | 1934 |
| | 160-5002 | FURN AND PLACE TOPSOIL (4") (SOD MAT) | M2 | 3122 |
| | 164-5049 | DRILL SEED (PERM) (URBAN) (CLAY) | M2 | 13126 |
| | 247-5024 | FL BS (COMPL IN PLACE) (TY A GR 6 CL 4) | M3 | 2702 |
| | 310-5006 | ASPH MATL (AE-P) | L | 3285 |
| * | | ONE CRSE SURF TREAT | M2 | 6521 |
| | 316-5028 | AGGR (TY PB, GR 4) | M3 | 59 |
| | 316-5226 | ASPH (AC-15P, HFRS-2P OR CRS-2P) | L | 8869 |
| | 432-5001 | RIPRAP (CONC) (CL B) | M3 | 28.8 |
| | 530-5018 | DRIVEWAYS (CONC) (8") | M2 | 234 |
| | 540-5006 | MBGF (TIM POST) (2.67 MM) | M | 136.8 |
| | 3117-5003 | HOT MIX (TY C) | MGR | 613 |
| | 3117-5018 | HOT MIX (TY C) (SURF) | MGR | 584 |
| | 5119-5003 | SINGLE GDRAIL TERM (TY III) | EA | 1 |
| | 423-5005 | RET WALL (CONC BLOCK) | M2 | 159.7 |

* FOR CONTRACTORS INFORMATION ONLY

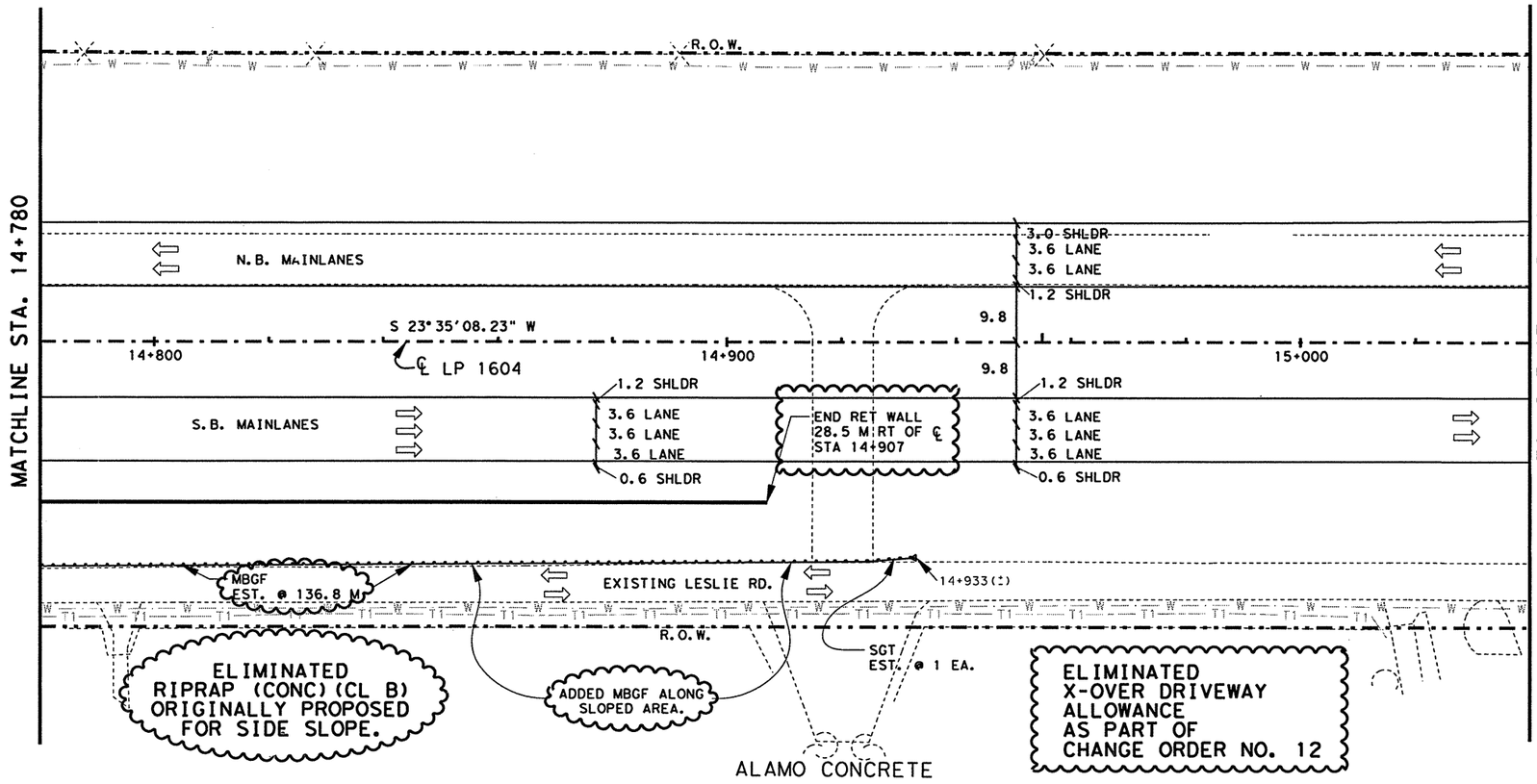


NOTE(S):

ALL DIMENSIONS ARE IN METERS UNLESS OTHERWISE NOTED.

FOR HORIZONTAL ALIGNMENT / DATA, SEE SHEETS 164 -171.

FOR LIMITS OF SEEDING & TOPSOIL, SEE PROJECT X-SECTIONS AND TYPICAL SECTIONS.

FOR RIPRAP DETAILS SEE PROJECT X-SECTIONS AND SHEET(S) 342.

(#) DRIVEWAY #, FOR MORE DETAILS SEE SHEET(S) 27,28 & 337.

FOR PLAN & PROFILE OF RET WALL (CONC BLOCK), SEE SHEET 195C.

CHANGE ORDER 12

| UTILITY LEGEND | |
|---|---|
| — W — · — W — · — | WATER LINE |
| — T1 — — — T1 — — — | TELEPHONE LINE |
| ——— C ——·——·—— C ——— | CABLE LINE |
| — · — G1 — · — G1 — · — | GAS LINE |

CHANGE ORDER NO. 12
-EXTENDED MBGF & RELATED SGT FOR SLOPE PROTECTION.
-ELIMINATED RIPRAP SIDE SLOPE
-ELIMINATED LIGHT SERVICE
-REVISED QUANTITIES
-ADD CONC BLOCK WALL

STATE OF TEXAS · TERRY G. McCOY · 75016 · REGISTERED PROFESSIONAL ENGINEER

Terry G. McCoy 3-8-02
Terry G. McCoy, P.E. Date

FOR MOD'S ASSOCIATED WITH CO 12 ONLY

©2000 Texas Department of Transportation

PLAN SHEET
SHEET 5 OF 57

| FED.RD. DIV.NO. | FEDERAL AID PROJECT NO. | | SHEET NO. |
|---|---|---|---|
| 6 | NH 2000(704), etc. | | 195B |
| STATE | DIST. | COUNTY | |
| TEXAS | SAT | BEXAR | |
| CONT. | SECT. | JOB | HIGHWAY NO. |
| 2452 | 01 | 036, etc. | LP 1604 |

03-07-02

LEVELS DISPLAYED
1 2 3 4 5 6 7 8 9 10 11 12 13 14 15 16
17 18 19 20 21 22 23 24 25 26 27 28 29 30 31 32
33 34 35 36 37 38 39 40 41 42 43 44 45 46 47 48
49 50 51 52 53 54 55 56 57 58 59 60 61 62 63

ACC: t:\ao\design\lp1604fm471-90\
FILE: plan05.dgn

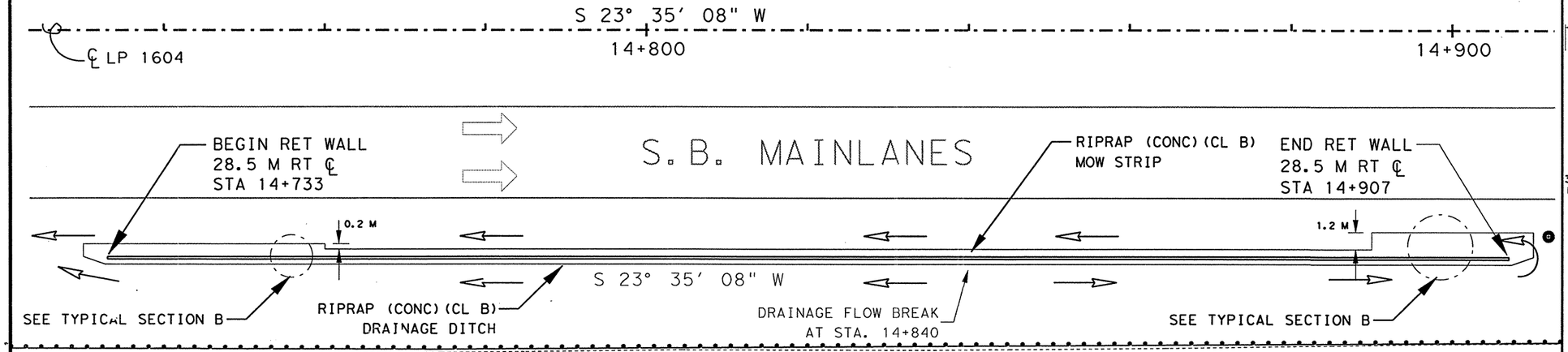


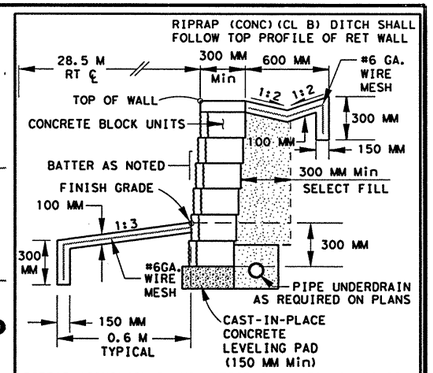


**TYPICAL SECTION**

STA 14+760 THRU STA 14+890
(NOT TO SCALE)

SCALE
H 1:600
V 1:60

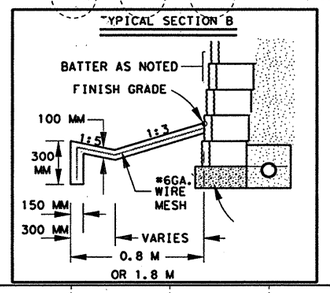


**ESTIMATED QUANTITIES**

| ITEM | UNIT | QTY. |
|---|---|---|
| RET WALL (CONC BLOCK) | M2 | 221.8 |
| RIPRAP (CONC) (CL B) | M3 | 40 |
| PIPE UNDERDRAIN (100MM) | M | 187.0 |

* QUANTITIES FOR CONTRACTOR INFO. ONLY.
* FOR PAY QUANTITIES SEE SHEET 194A &195B.

NOTE(S): ALL DIMENSIONS ARE IN METERS UNLESS OTHERWISE NOTED

REFER TO STATE STANDARD CONCRETE BLOCK RETAINING WALL RW (CB) AND PROJECT CROSS SECTIONS FOR MORE INFORMATION

NON-SHRINK GROUT SHALL BE PLACED BETWEEN RIPRAP AND RETAINING WALL

PIPE UNDERDRAIN SHALL RUN THE ENTIRE LENGTH OF THE RETAINING WALL, AND SHALL BE EXTENDED AT THE BEGINNING OF THE RETAINING WALL FROM STA. 14+720 TO STA. 14+907 OR AS DIRECTED BY THE ENGINEER.

● RIPRAP SHALL BE CONSTRUCTED AS DIRECTED BY THE ENGINEER

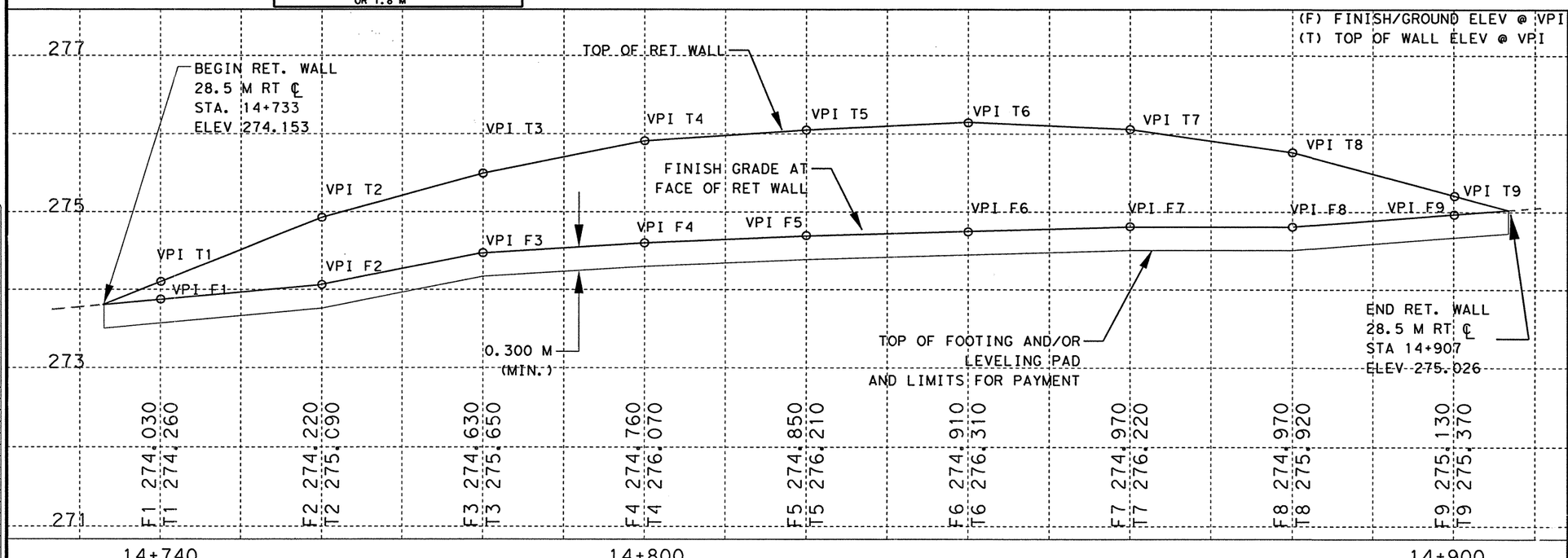


LEVELS DISPLAYED
1 2 3 4 5 6 7 8 9 10 11 12 31 41 51 61
7 18 19 20 21 22 32 42 52 62 72 82 92 93 103 132
133 145 156 167 178 189 194 204 214 224 234 244 254 264 274 284
95 105 116 126 135 145 1 76 86 96 106 116 126 3

ACC: 48IA1A:/usr/d481303
FILE: .DGN

CHANGE ORDER 12

NEW SHEET

STATE OF TEXAS
TERRY G. McCOY
75016
REGISTERED PROFESSIONAL ENGINEER

Terry G. McCoy, P.E. — 3.8.02 Date

©2002 Texas Department of Transportation

# RETAINING WALL A PLAN & PROFILE

STA 14+733 TO STA 14+907

| FED. RD. DIV. NO. | FEDERAL AID PROJECT NO. | | SHEET NO. |
|---|---|---|---|
| 6 | NH 2000(704), etc. | | 195C |
| STATE | DIST. | COUNTY | |
| TEXAS | SAT | BEXAR | |
| CONT. | SECT. | JOB | HIGHWAY NO. |
| 2452 | 01 | 036, etc | LP 1604 |

07_07_02

QUANTITIES THIS SHEET
CSJ 2452-01-037

SCALE: 1:1000

DRAINAGE EASEMENT

BLADING EST. @ 3 H
BLDZR WORK (ORD COMP)(TY A) EST. @ 3 H

R.O.W.

BEGIN N. B. ENTRANCE RAMP CONTROL
PC STA 0+035.634 = 19.0 LT.
LP 1604 ℄ STA 15+275.866

MATCHLINE STA. 15+040

MATCHLINE STA. 15+300

3.0 SHLDR
VARIES
3.6 LANE
3.6 LANE
1.2 SHLDR

S 21°20'54.97" W

N.B. MAINLANES

9.8
9.8

S 23°35'08.23" W

15+100

℄ LP 1604

P.C.

15+200

1.2 SHLDR
3.6 LANE
3.6 LANE
3.0 SHLDR

S.B. MAINLANES

CULVERT NO. 2
FOR DETAILS SEE SHEET 376.

90 TAPER

END PAV EDGE TRANS
21.2 RT., STA 15+060.000

EXISTING LESLIE ROAD

P.O.T.

P.C.

S 24°00'05.02" W

0.0000

R.O.W.

2

BEGIN LESLIE RD. CONNECTOR
STA 0+000.000 = 48.36 RT
LP 1604 ℄ STA 15+260.000

| ESTIMATED QUANTITIES | | | |
|---|---|---|---|
| ITEM # | ITEM | UNIT | QTY. |
| 100-5002 | PREP ROW | KM | 0.26 |
| 110-5001 | EXCAVATION (RDWY) | M3 | 1335 |
| 132-5018 | EMBANK (ORD COMP)(TY B)(CL 3) | M3 | 27632 |
| 150-5003 | BLADING | H | 3 |
| 156-5003 | BLDZR WORK (ORD COMP)(TY A) | H | 3 |
| 160-5002 | FURN AND PLAC TPSL (CL 2)(150 MM) | M2 | 14735 |
| 164-5049 | DRILL SEED (PERM)(URBAN)(CLAY) | M2 | 14735 |
| 247-5024 | FL BS (COMPL IN PLAC)(TY A GR 6 CL 4) | M3 | 3019 |
| 310-5006 | ASPH MATL (AE-P) | L | 4026 |
| * | ONE CRSE SURF TREAT | M2 | 7296 |
| 316-5028 | AGGR (TY PB,GR 4) | M3 | 66 |
| 316-5226 | ASPH (AC-15P, HFRS-2P OR CRS-2P) | L | 9923 |
| 530-5003 | DRVWAYS (ASPH- CONC PAV) | M2 | 52 |
| 3117-5003 | HOT MIX (TY C) | MGR | 686 |
| 3117-5018 | HOT MIX (TY C)(SURF) | MGR | 654 |
| | | | |

* FOR CONTRACTORS INFORMATION ONLY

NOTE(S):

ALL DIMENSIONS ARE IN METERS UNLESS OTHERWISE NOTED.

FOR HORIZONTAL ALIGNMENT / DATA, SEE SHEET(S) 164 - 171.

FOR LIMITS OF SEEDING & TOPSOIL, SEE PROJECT X-SECTIONS AND TYPICAL SECTIONS.

(#) DRIVEWAY #, FOR MORE DETAILS SEE SHEET(S) 27, 28 & 336.

## UTILITY LEGEND

| | |
|---|---|
| —W—W— | WATER LINE |
| —T1—T1— | TELEPHONE LINE |
| —C—C— | CABLE LINE |
| —G1—G1— | GAS LINE |

LEVELS DISPLAYED
1 3 4 5 6 7 8 9 10 11 12 21 31 41 51 61 71 81 91 92 02 12 22 32 42 52 62 72 82 92 03 13 23 33 43 53 56 57 58 59 64 04 14 24 34 44 45 46 47 48 49 50 51 52 53 54 55 56 57 58 59 60 61 62 63

ACC: t:\gc\design\lp1604fm471-90\
FILE: plan06.dgn

STATE OF TEXAS
JOEL K. DAVENPORT, JR.
79276
REGISTERED
PROFESSIONAL ENGINEER

Joel K. Davenport, Jr. P.E. 79276 — 9/19/00 Date

Texas Department of Transportation

# PLAN SHEET

SHEET 6 OF 57

| FED.RD. DIV.NO. | FEDERAL AID PROJECT NO. | | SHEET NO. |
|---|---|---|---|
| 6 | NH 2000(704),etc. | | 196 |
| STATE | DIST. | COUNTY | |
| TEXAS | SAT | BEXAR | |
| CONT. | SECT. | JOB | HIGHWAY NO. |
| 2452 | 01 | 036,etc. | LP 1604 |

QUANTITIES THIS SHEET
CSJ 2452-01-037

SCALE: 1:1000

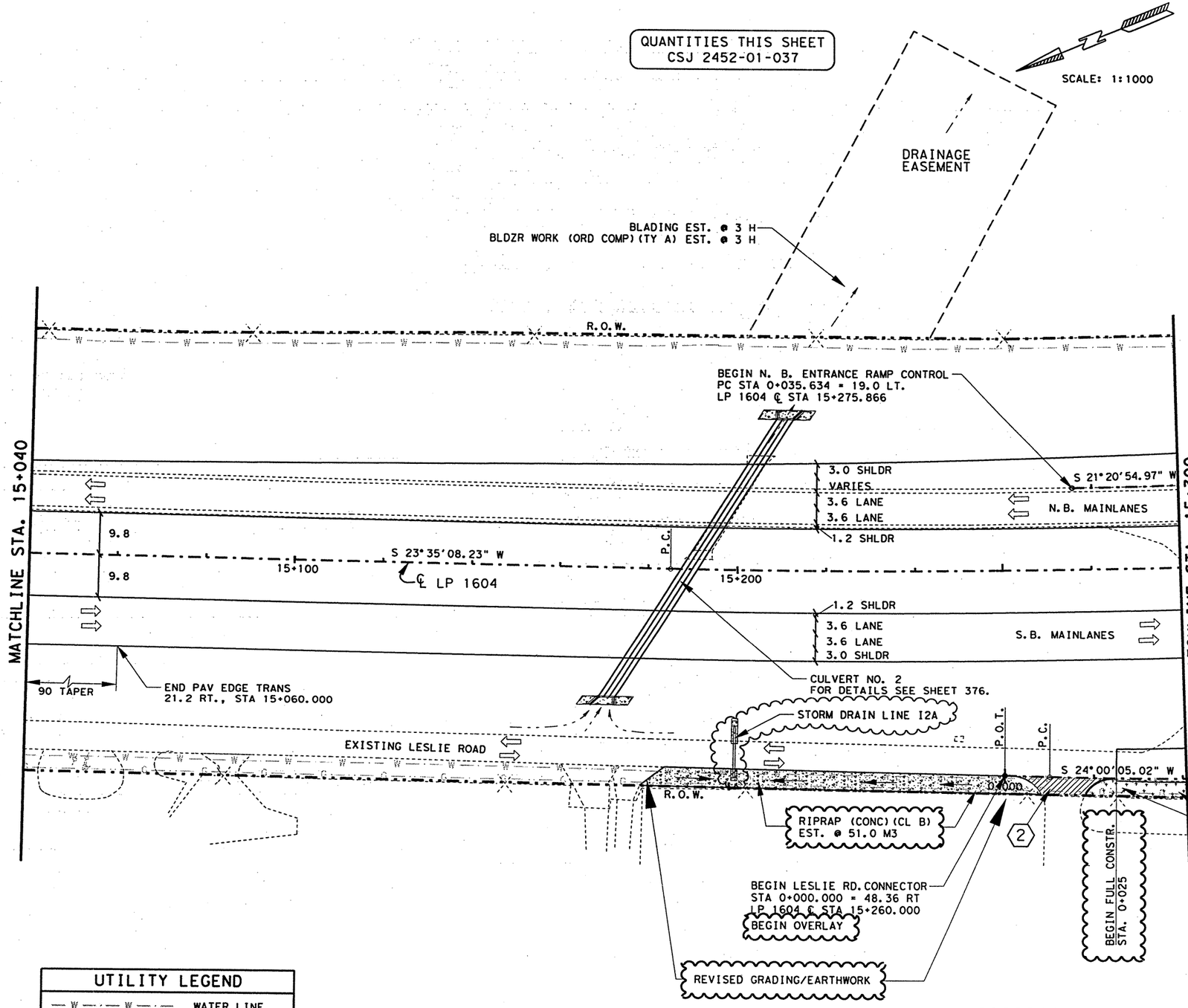


## ESTIMATED QUANTITIES

| | ITEM # | ITEM | UNIT | QTY. |
|---|---|---|---|---|
| | 100-5002 | PREP ROW | KM | 0.26 |
| | 110-5001 | EXCAVATION (RDWY) | M3 | 1423 |
| | 132-5018 | EMBANK (ORD COMP)(TY B)(CL 3) | M3 | 27,632 |
| | 150-5003 | BLADING | H | 3 |
| | 156-5003 | BLDZR WORK (ORD COMP)(TY A) | H | 3 |
| | 160-5002 | FURN AND PLAC TPSL (CL 2)(150 MM) | M2 | 14,387 |
| | 162-5008 | BLOCK SOD (BERMUDA) | M2 | 85 |
| | 164-5025 | BRDCST SEED (PERM)(URBAN)(CLAY) | M2 | 14,302 |
| | 247-5024 | FL BS (COMPL IN PLACE)(TY A GR 6 CL 4) | M3 | 3019 |
| | 310-5006 | ASPH MATL (AE-P) | L | 4026 |
| * | | ONE CRSE SURF TREAT | M2 | 7296 |
| | 316-5028 | AGGR (TY PB, GR 4) | M3 | 66 |
| | 316-5226 | ASPH (AC-15P, HFRS-2P OR CRS-2P) | L | 9923 |
| | 432-5001 | RIPRAP (CONC)(CL B) | M3 | 51.0 |
| | 530-5003 | DRVWAYS (ASPH- CONC PAV) | M2 | 52.0 |
| | 3117-5003 | HOT MIX (TY C) | MGR | 686 |
| | 3117-5018 | HOT MIX (TY C)(SURF) | MGR | 654 |
| | | | | |
| | | | | |

* FOR CONTRACTORS INFORMATION ONLY

NOTE(S):

ALL DIMENSIONS ARE IN METERS UNLESS OTHERWISE NOTED.

FOR HORIZONTAL ALIGNMENT / DATA, SEE SHEET(S) 164 - 171.

FOR LIMITS OF SEEDING & TOPSOIL, SEE PROJECT X-SECTIONS AND TYPICAL SECTIONS.

(#) DRIVEWAY #, FOR MORE DETAILS SEE SHEET(S) 27, 28 & 336.

△ REFERS TO CHANGES MADE AS PART OF CHANGE ORDER.

CHANGE ORDER 28

REVISED SHEET

## UTILITY LEGEND

- W — W — WATER LINE
- T1 — T1 — TELEPHONE LINE
- C — C — CABLE LINE
- G1 — G1 — GAS LINE

SOD APPLICATION AREAS.

## CHANGE ORDER NO. 28

-ADDED STORM DRAIN LINE I2A.
-REVISED GRADING/EARTHWORK
-ADDED SODDING AREAS.
-ADDED/REVISED QUANTITIES.

STATE OF TEXAS
JEROME D. PAVLISKA
76075
REGISTERED PROFESSIONAL ENGINEER

Jerome D. Pavliska, P.E. 8-11-03
Jerome D. Pavliska, P.E. Date

©2000
Texas Department of Transportation

PLAN SHEET

SHEET 6 OF 57

| FED.RD. DIV.NO. | FEDERAL AID PROJECT NO. | | SHEET NO. |
|---|---|---|---|
| 6 | NH 2000(704), etc. | | 196A |
| STATE | DIST. | COUNTY | |
| TEXAS | SAT | BEXAR | |
| CONT. | SECT. | JOB | HIGHWAY NO. |
| 2452 | 01 | 036, etc. | LP 1604 |

LEVELS DISPLAYED
1 2 3 4 5 6 7 8 9 10 11 12 13 14 15 16
17 18 19 20 21 22 23 24 25 26 27 28 29 30 31 32
33 34 35 36 37 38 39 40 41 42 43 44 45 46 47 48
49 50 51 52 63 64 55 56 57 58 59 60 61 62 63
ACC: t:\ao\design\lp1604fm471-90\
FILE: plan06co28.dgn

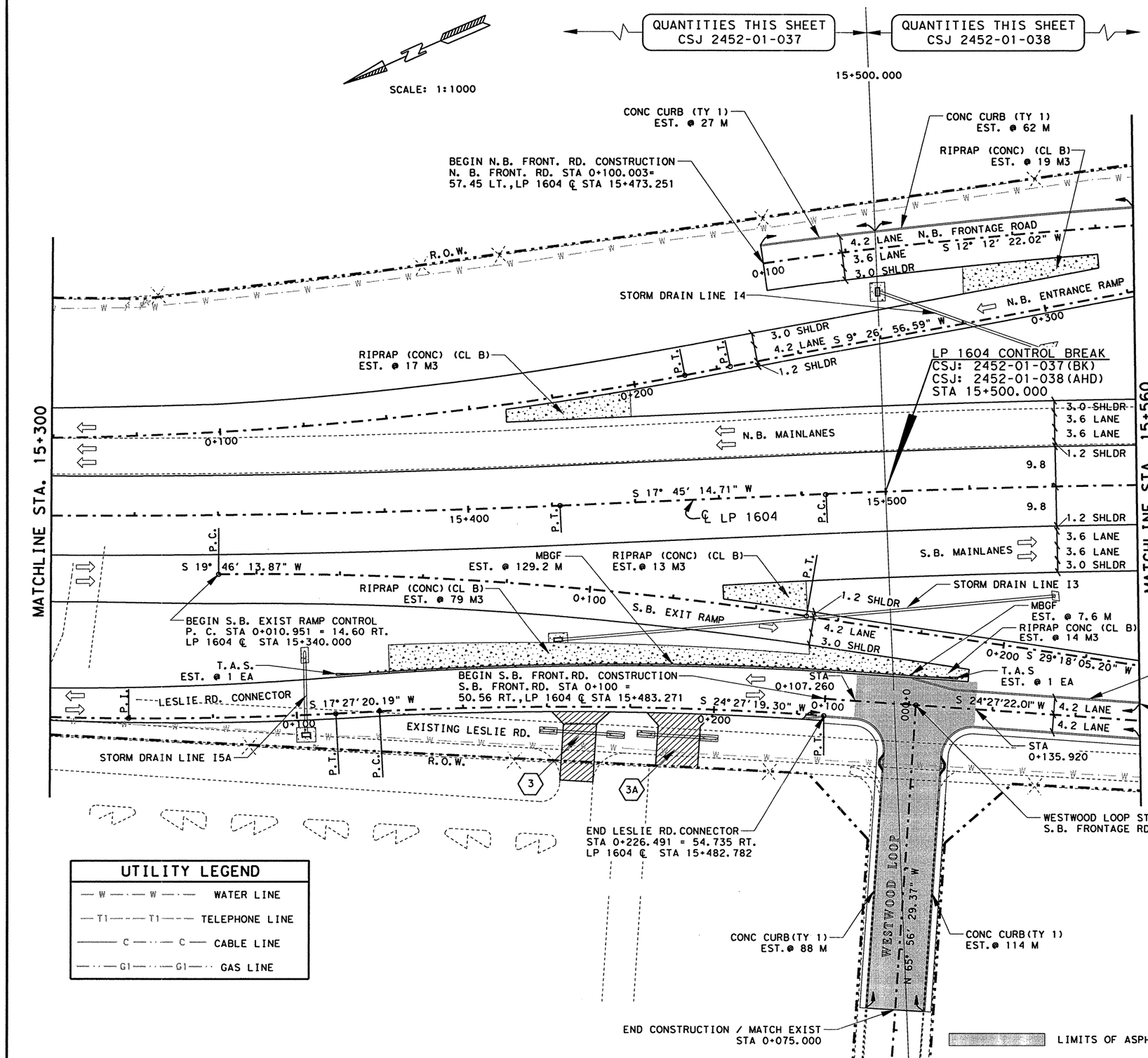


## ESTIMATED QUANTITIES

| ITEM # | ITEM | UNIT | CSJ 2452 01-037 QTY. | CSJ 2452 01-038 QTY. |
|---|---|---|---|---|
| 100-5002 | PREP ROW | KM | 0.20 | 0.06 |
| 110-5001 | EXCAVATION (RDWY) | M3 | 28218 | 31538 |
| 132-5018 | EMBANK (ORD COMP) (TY B) (CL 3) | M3 | 5691 | 83 |
| 160-5002 | FURN AND PLAC TPSL (CL 2) (150 MM) | M2 | 10697 | 5080 |
| 164-5049 | DRILL SEED (PERM) (URBAN) (CLAY) | M2 | 10697 | 5080 |
| 247-5024 | FL BS (COMPL IN PLAC)(TY A GR 6 CL 4) | M3 | 4050 | 1575 |
| 310-5006 | ASPH MATL (AE-P) | L | 4608 | 2135 |
| * | ONE CRSE SURF TREAT | M2 | 10351 | 4586 |
| 316-5028 | AGGR (TY PB, GR 4) | M3 | 94 | 42 |
| 316-5226 | ASPH (AC-15P, HFRS-2P OR CRS-2P) | L | 14077 | 6237 |
| 345-5004 | ASPH STAB BS (GR 4) | MGR | 449 | 634 |
| 432-5001 | RIPRAP (CONC) (CL B) | M3 | 109 | 33 |
| 529-5001 | CONC CURB (TY 1) | M | 115 | 231 |
| 530-5003 | DRVWAYS (ASPH- CONC PAV) | M2 | 288 | |
| 540-5005 | TERM ANCH SECTION (2.67 MM) | EA | 1 | 1 |
| 540-5006 | MBGF (TIM POST) (2.67 MM) | M | 129.2 | 7.6 |
| 3117-5003 | HOT MIX (TY C) | MGR | 971 | 428 |
| 3117-5018 | HOT MIX (TY C) (SURF) | MGR | 925 | 405 |

* FOR CONTRACTORS INFORMATION ONLY

NOTE(S):

ALL DIMENSIONS ARE IN METERS UNLESS OTHERWISE NOTED.

FOR HORIZONTAL ALIGNMENT / DATA, SEE SHEET(S) 164 - 171.

FOR INTERSECTION LAYOUT, SEE SHEET(S) 316.

FOR LIMITS OF SEEDING & TOPSOIL, SEE PROJECT X-SECTIONS AND TYPICAL SECTIONS.

FOR RIPRAP DETAILS SEE PROJECT X-SECTIONS AND SHEET(S) 342.

FOR ADDITIONAL STORM DRAIN INFO. REFER TO SPECIFIC STORM DRAIN PROFILES SHEET(S)

(#) DRIVEWAY #, FOR MORE DETAILS SEE SHEET(S) 27, 28 & 336.

WHEELCHAIR RAMPS.TY 2

### UTILITY LEGEND

- W — W — WATER LINE
- T1 — T1 — TELEPHONE LINE
- C — C — CABLE LINE
- GI — GI — GAS LINE

LEVELS DISPLAYED
1 2 3 4 5 6 7 8 9 10 11 12 13 14 15 16
17 18 19 20 22 23 24 25 26 27 29 30 31 32
33 34 35 36 37 38 39 40 41 42 43 44 45 46 47 48
49 50 51 52 53 54 55 56 57 58 59 60 61 62 63

ACC: t:\oo\design\lp1604fm471-90\
FILE: plan07.dgn

STATE OF TEXAS
JOEL K. DAVENPORT, JR.
79276
REGISTERED
PROFESSIONAL ENGINEER

Joel K. Davenport, Jr. P.E. 79276 — 11/1/00 Date

©2000
Texas Department of Transportation

# PLAN SHEET

SHEET 7 OF 57

| FED. RD. DIV. NO. | FEDERAL AID PROJECT NO. | | SHEET NO. |
|---|---|---|---|
| 6 | NH 2000(704),etc. | | 197 |
| STATE | DIST. | COUNTY | |
| TEXAS | SAT | BEXAR | |
| CONT. | SECT. | JOB | HIGHWAY NO. |
| 2452 | 01 | 036,etc. | LP 1604 |

QUANTITIES THIS SHEET CSJ 2452-01-037

QUANTITIES THIS SHEET CSJ 2452-01-038

SCALE: 1:1000

15+500.000

CONC CURB (TY A) EST. @ 27 M

CONC CURB (TY A) EST. @ 62 M

RIPRAP (CONC) (CL B) EST. @ 19 M3

BEGIN N.B. FRONT. RD. CONSTRUCTION
N. B. FRONT. RD. STA 0+100.003=
57.45 LT., LP 1604 ℄ STA 15+473.251

R.O.W.

4.2 LANE N.B. FRONTAGE ROAD S 12° 12' 22.02" W
3.6 LANE
3.0 SHLDR

0+100

STORM DRAIN LINE I4

N.B. ENTRANCE RAMP

0+300

3.0 SHLDR
4.2 LANE S 9° 26' 56.59" W
1.2 SHLDR

RIPRAP (CONC) (CL B) EST. @ 17 M3

P.T.

P.T.

0+200

LP 1604 CONTROL BREAK
CSJ: 2452-01-037(BK)
CSJ: 2452-01-038(AHD)
STA 15+500.000

3.0 SHLDR
3.6 LANE
3.6 LANE
1.2 SHLDR

0+100

N.B. MAINLANES

9.8

S 17° 45' 14.71" W

℄ LP 1604

P.C.

15+500

9.8

1.2 SHLDR
3.6 LANE
3.6 LANE
3.0 SHLDR

MATCHLINE STA. 15+300

MATCHLINE STA. 15+560

Extend Ty A Curb to Sta ± 1+023 or 20 meters N. of Drop Inlet

20 MBGF (BLK OUT) EST. @ 129.2 M

P.C.

S 19° 46' 13.87" W

RIPRAP (CONC) (CL B) EST. @ 79 M3

RUCTION RIPRAP (CONC) (CL B) EST.@ 13 M3

483.271

P.T.

S.B. MAINLANES

1.2 SHLDR

STORM DRAIN LINE I3

S.B. EXIT RAMP

RIPRAP CONC (CL B) EST. @ 14 M3

STORM DRAIN LINE I-5C

4.2 LANE
3.0 SHLDR

MBGF (BLK OUT) EST. @ 7.6 M 20

STA 0+107.260

0+200

S 29° 18' 05.20" W

T. A. S EST. @ 1 EA

CONC CURB (TY 1) EST. @ 55 M

BEGIN S.B. EXIST RAMP CONTROL
P. C. STA 0+010.951 = 14.60 RT.
LP 1604 ℄ STA 15+340.000

S.G.T. EST. @ 1 EA

BLOCK SOD (BERMUDA) EST. @ 701 M2

LESLIE RD. CONNECTOR

S 17°27'20.19" W

P.T.

P.C.

S 24°27'19.30" W

0+100

0+200

0+000

S 24°27'22.01" W

4.2 LANE
4.2 LANE

END CURB STA 15+560

STA 0+135.920 EXISTING LESLIE RD.

CONC. SIDEWALKS

REVISED EARTHWORK AND GRADING.

BLOCK SOD (BERMUDA) EST. @ 636 M2

BLOCK SOD (BERMUDA) EST. @ 903 M2

3

3A

STORM DRAIN LINE 15A REVISED / RELOCATED

CONC. SIDEWALKS

END LESLIE RD. CONNECTOR
STA 0+226.491 = 54.735 RT.
LP 1604 ℄ STA 15+482.782

RIPRAP (CONC) (CLB) EST. @ 19 M3

WESTWOOD LOOP STA 0+000
S.B. FRONTAGE RD. STA 0+121.653

REVISED EARTHWORK AND GRADING, REVISED DRIVEWAY #3A.

RET. WALL 1 EST.@ 146 M2
PIPE UNDERDR EST.@ 91 M

RET. WALL 2 EST. TOTAL @ 210.5 M2
PIPE UNDERDR EST. TOTAL @ 116 M

WESTWOOD LOOP

N 65° 56' 29.37" E

STORM DRAIN LINE I-5B

RIPRAP (CONC) (CLB) EST. @ 23 M3

CONC. CURB (TY A) EST.@ 93 M

CONC. CURB (TY A) EST.@ 119 M

CONC. SIDEWALKS EST.@ 211 M2

CONC. SIDEWALKS EST.@ 173 M2

END CONSTRUCTION / MATCH EXIST STA 0+080.000

LIMITS OF ASPH STAB BS @ INTERSECTION

SOD APPLICATION AREAS.

## UTILITY LEGEND

- W — W — WATER LINE
- T1 — T1 — TELEPHONE LINE
- C — C — CABLE LINE
- G1 — G1 — GAS LINE

## CHANGE ORDER NO. 28

- -UPDATED VIEW
- -REVISED DRIVEWAY 3A
- -REVISED/RELOCATED LINE 15A
- -ADDED CONC. SIDEWALK
- -ADDED SODDING AREAS
- -REVISED EARTHWORK / GRADING
- -ADDED RET. WALL #1 & #2
- -ADDED/REVISED QUANTITIES

## ESTIMATED QUANTITIES

| | ITEM # | ITEM | UNIT | CSJ 2452 01-037 QTY. | CSJ 2452 01-038 QTY. |
|---|---|---|---|---|---|
| | 100-5002 | PREP ROW | KM | 0.20 | 0.06 |
| | 110-5001 | EXCAVATION (RDWY) | M3 | 29,375 | 33,628 |
| | 132-5018 | EMBANK (ORD COMP) (TY B) (CL 3) | M3 | 5691 | 82 |
| | 160-5002 | FURN AND PLAC TPSL (CL 2) (150 MM) | M2 | 10,697 | 5080 |
| | 162-5008 | BLOCK SOD (BERMUDA) | M2 | 1604 | 636 |
| | 164-5025 | BRDCST SEED (PERM) (URBAN) (CLAY) | M2 | 9093 | 4444 |
| | 247-5024 | FL BS (COMPL IN PLACE)(TY A GR 6 CL 4) | M3 | 4050 | 1575 |
| | 310-5006 | ASPH MATL (AE-P) | L | 4608 | 2135 |
| * | | ONE CRSE SURF TREAT | M2 | 10,351 | 4659 |
| | 316-5028 | AGGR (TY PB, GR 4) | M3 | 94 | 43 |
| | 316-5226 | ASPH (AC-15P, HFRS-2P OR CRS-2P) | L | 14,146 | 6267 |
| | 345-5004 | ASPH STAB BS (GR 4) | MGR | 488 | 651 |
| | 423-5005 | RETAINING WALL (CONC BLOCK) | M2 | 146.0 | 210.5 |
| | 432-5001 | RIPRAP (CONC) (CL B) | M3 | 128 | 56 |
| | 529-5001 | CONC CURB (TY 1) | M | | 55 |
| | 529-5026 | CONC CURB (TY A) | M | 120 | 181 |
| | 530-5001 | DRVWYS (CONC) (150 MM) | M2 | 260 | |
| | | | | | |
| | 531-5002 | CONCRETE SIDEWALKS | M2 | 211 | 173 |
| | 540-5005 | TERM ANCH SECTION (2.67 MM) | EA | | 1 |
| 20 | 540-5030 | MBGF (BLK OUT) (TIM POST) (2.67 MM) | M | 129.2 | 7.6 |
| | 556-5016 | PIPE UNDERDRAIN (TY 6) (100 MM) | M | 91 | 116 |
| | 3117-5003 | HOT MIX (TY C) | MGR | 976 | 430 |
| | 3117-5018 | HOT MIX (TY C) (SURF) | MGR | 929 | 407 |
| | 5119-5003 | SINGLE GDRAIL TERM (TY III) | EA | 1.0 | |

* FOR CONTRACTORS INFORMATION ONLY

NOTE(S):

ALL DIMENSIONS ARE IN METERS UNLESS OTHERWISE NOTED.

FOR HORIZONTAL ALIGNMENT / DATA, SEE SHEET(S) 164 - 171.

FOR INTERSECTION LAYOUT, SEE SHEET(S) 316.

FOR LIMITS OF SEEDING & TOPSOIL, SEE PROJECT X-SECTIONS AND TYPICAL SECTIONS.

FOR RIPRAP DETAILS SEE PROJECT X-SECTIONS AND SHEET(S) 342A.

FOR ADDITIONAL STORM DRAIN INFO. REFER TO SPECIFIC STORM DRAIN PROFILES SHEET(S)

# DRIVEWAY #, FOR MORE DETAILS SEE SHEET(S) 27, 28 & 336.

WHEELCHAIR RAMPS. TY 2

FOR RETAINING WALL DETAILS SEE SHEET(S) 361A-H

△ REFERS TO CHANGES MADE AS PART OF CHANGE ORDER.

STATE OF TEXAS
JEROME D. PAVLISKA
76075
REGISTERED PROFESSIONAL ENGINEER

Jerome D. Pavliska P.E. 8-18-03
Jerome D. Pavliska, P.E. Date

CHANGE ORDER 28

REVISED SHEET

©2003

Texas Department of Transportation

PLAN SHEET

SHEET 7 OF 57

| FED. RD. DIV. NO. | FEDERAL AID PROJECT NO. | SHEET NO. |
|---|---|---|
| 6 | NH 2000(704), etc. | 197A |
| STATE | DIST. | COUNTY |
| TEXAS | SAT | BEXAR |
| CONT. | SECT. | JOB / HIGHWAY NO. |
| 2452 | 01 | 036, etc. / LP 1604 |

01-23-03

LEVELS DISPLAYED
1 2 3 4 5 6 7 8 9 10 11 12 13 14 15 16
17 18 19 20 22 23 24 25 26 27 29 30 31 32
33 34 35 36 37 38 39 40 41 42 43 44 45 46 47 48
49 50 51 52 53 54 55 56 57 58 59 60 61 62 63

ACC: t:\oo\design\lp1604fm471-90\

FILE: plan07 C028.dgn

QUANTITIES THIS SHEET
CSJ 2452-01-038

SCALE: 1:1000

FUTURE DRAINAGE EASEMENT LIMITS

EXISTING DRAINAGE EASEMENT LIMITS

CONC CURB (TY 1) EST. @ 250 M

RIPRAP (CONC) (CL B) EST. @ 69 M3

R.O.W.

BEGIN CURB TAPER 4.2 LT STA 0+383.500

BEGIN BRIDGE STA 0+437.500 *

1:15 TRANSITION

N. B. FRONTAGE ROAD

4.2 LANE
3.6 LANE

0+200

0+300

S 24° 27' 21.99" W

S 24° 27' 21.09" W

0+400

0+500

P.T.

4.2 LANE
3.6 LANE
3.6 LANE
3.6 LANE
1.2 SHLDR

N.B. ENTRANCE RAMP

4.2 LANE

1.2 SHLDR

0+400

1:15 TRANSITION

END N.B. ENTRANCE RAMP CONTROL
P.T. STA 0+506.214 = 63.48 LT.
LP 1604 ℄ STA 15+739.170

BEGIN EDGE OF PAV. TAPER 4.8 RT STA 0+380.000

P.C.

STORM DRAIN LINE I6

FOR CULEBRA CRK. GRADING PLAN, SEE SHEET(S) 519.

MBGF @ 38 M

TOE OF SLOPE

MATCHLINE STA. 15+560

3.0 SHLDR

BEGIN MAINLANE BRIDGES STA 15+795.900

N.B. MAINLANES

3.6 LANE
3.6 LANE

1.2 SHLDR

9.8

℄ LP 1604

MBGF @ 15.2 M

P.T.

S 24° 27' 21.91" W

15+600

9.8

15+700

SGT EST. @ 1 EA

MBGF @ 53.2 M

15+800

1.2 SHLDR

S.B. MAINLANES

3.6 LANE
3.6 LANE
3.0 SHLDR

MATCHLINE STA. 15+840

SGT EST. @ 1 EA

MBGF @ 38 M

S 29° 18' 05.20" W

1.2 SHLDR

4.2 LANE

P.C.

END S.B. EXIT RAMP CONTROL
P.T. STA 0+343.135 = 57.67 RT.
LP 1604 ℄ STA 15+672.020

BEGIN EDGE OF PAV. TAPER 8.4 LT STA 0+354.300

MBGF @ 30.4 M

RIPRAP (CONC) (CL B) FOR PAYMENT SEE SHEET 32.

STORM DRAIN LINE I7

MBGF @ 60.9 M

S.B. EXIT RAMP

S 24° 22' 41.23" W

0+300

SGT EST @ 1

CURB / RIPRAP TRANS., FOR DETAILS SEE SHEET(S) 338.

EDGE OF PAV.

1:15 TRANSITION

1.2 SHLDR
3.6 LANE
3.6 LANE
3.6 LANE
4.2 LANE

STA 0+357.190

STA 0+385.920

0+200

3.6 LANE
4.2 LANE

0+300

0+000

S 24° 27' 22.01" W

0+400

S.B. FRONTAGE ROAD

EXISTING LESLIE ROAD

30 M TAPER

60 M

STA 0+267.193

R.O.W.

CONC CURB (TY 1) EST. @ 260 M

RIPRAP (CONC) (CL B) EST. @ 69 M3

RAIL (CURB RAMP HANDRAIL) EST @ 74 M

WESTWOOD VISTA STA 0+000
S.B. FRONTAGE RD. STA 0+370.646

STORM DRAIN LINE I8

WESTWOOD VISTA N 69° 58' 09" W

P.C.

END CONSTRUCTION / MATCH EXIST. STA 0+080

EXISTING DRAINAGE EASEMENT LIMITS

FUTURE DRAINAGE EASEMENT LIMITS

BEGIN BRIDGE STA 0+411.900

LIMITS OF BRIDGE RELATED RIPRAP (CONC) (CL B)

RIPRAP (CONC) (CL B) EST. @ 65 M3

RAIL (CURB RAMP HANDRAIL) EST @ 40 M

CONC CURB (TY 1) EST. @ 109 M

LIMITS OF ASPH STAB BS @ INTERSECTION

## UTILITY LEGEND

| | |
|---|---|
| — W — W — | WATER LINE |
| — T1 — T1 — | TELEPHONE LINE |
| — C — C — | CABLE LINE |
| — G1 — G1 — | GAS LINE |

## ESTIMATED QUANTITIES

| ITEM # | ITEM | UNIT | QTY. |
|---|---|---|---|
| 100-5002 | PREP ROW | KM | 0.28 |
| 110-5001 | EXCAVATION (RDWY) | M3 | 45855 |
| 132-5018 | EMBANK (ORD COMP) (TY B) (CL 3) | M3 | 60758 |
| 160-5002 | FURN AND PLAC TPSL (CL 2) (150 MM) | M2 | 26373 |
| 164-5049 | DRILL SEED (PERM) (URBAN) (CLAY) | M2 | 26373 |
| 247-5024 | FL BS (COMPL IN PLAC)(TY A GR 6 CL 4) | M3 | 5535 |
| 310-5006 | ASPH MATL (AE-P) | L | 6688 |
| | ONE CRSE SURF TREAT | M2 | 13831 |
| 316-5028 | AGGR (TY PB, GR 4) | M3 | 126 |
| 316-5226 | ASPH (AC-15P, HFRS-2P OR CRS-2P) | L | 18810 |
| 345-5004 | ASPH STAB BS (GR 4) | MGR | 1205 |
| 432-5001 | RIPRAP (CONC) (CL B) | M3 | 203 |
| 450-5027 | RAIL (CURB RAMP HANDRAIL) | M | 114 |
| 529-5001 | CONC CURB (TY 1) | M | 619 |
| 540-5006 | MBGF (TIM POST) (2.67 MM) | M | 235.7 |
| 3117-5003 | HOT MIX (TY C) | MGR | 1290 |
| 3117-5018 | HOT MIX (TY C) (SURF) | MGR | 1222 |
| 5119-5003 | SINGLE GDRAIL TERM (TY III) | EA | 3 |

* FOR CONTRACTORS INFORMATION ONLY

NOTE(S):

ALL DIMENSIONS ARE IN METERS UNLESS OTHERWISE NOTED.

FOR HORIZONTAL ALIGNMENT / DATA, SEE SHEET(S) 164 - 171.

FOR INTERSECTION LAYOUT, SEE SHEET(S) 316.

FOR BRIDGE LAYOUTS / DETAILS, SEE SHEET(S) 483 - 520.

FOR LIMITS OF SODDING / SEEDING & TOPSOIL, SEE PROJECT X-SECTIONS AND TYPICAL SECTIONS.

FOR RIPRAP DETAILS SEE PROJECT X-SECTIONS AND SHEET(S) 316, 342.

FOR RIPRAP ASSOCIATED WITH STORM DRAINAGE STRUCTURES SEE SHEET(S) 454 - 470.

FOR FUTURE DRAINAGE EASEMENT REQUIREMENTS SEE SHEET 520.

FOR ADDITIONAL STORM DRAIN INFO. REFER TO THE SPECIFIC STORM DRAIN PROFILE SHEET(S)

WHEELCHAIR RAMPS TY 2

STATE OF TEXAS
JOEL K. DAVENPORT, JR.
79276
REGISTERED PROFESSIONAL ENGINEER

Joel K. Davenport, Jr. 11/1/06
Joel K. Davenport, Jr. P.E. 79276 Date

Texas Department of Transportation

# PLAN SHEET

SHEET 8 OF 57

| FED. RD. DIV. NO. | FEDERAL AID PROJECT NO. | | SHEET NO. |
|---|---|---|---|
| 6 | NH 2000(704), etc. | | 198 |
| STATE | DIST. | COUNTY | |
| TEXAS | SAT | BEXAR | |
| CONT. | SECT. | JOB | HIGHWAY NO. |
| 2452 | 01 | 036, etc. | LP 1604 |

LEVELS DISPLAYED
1 2 3 4 5 6 7 8 9 10 11 12 13 31 41 51 61
71 81 91 92 93 94 95 96 97 98 99 31
33 34 35 36 37 38 39 40 41 42 43 44 45 46 47 48
49 50 51 52 53 54 55 56 57 58 59 60 61 62 63

ACC: t:\ao\design\lp1604fm471-90\
FILE: plan08.dgn

QUANTITIES THIS SHEET
CSJ 2452-01-038

SCALE: 1:1000

MATCHLINE STA. 15+560

MATCHLINE STA. 15+840

CONC CURB (TY A) EST. @ 250 M

RIPRAP (CONC) (CL B) EST. @ 69 M3

R.O.W.

FUTURE DRAINAGE EASEMENT LIMITS

EXISTING DRAINAGE EASEMENT LIMITS

FOR CULEBRA CRK. GRADING PLAN, SEE SHEET(S) 519.

BEGIN CURB TAPER 4.2 LT STA 0+383.500

BEGIN BRIDGE STA 0+437.500 *

1:15 TRANSITION

N. B. FRONTAGE ROAD

4.2 LANE
3.6 LANE

0+200

0+300

S 24° 27' 21.09" W

S 24° 27' 21.99" W

0+400

0+500

4.2 LANE
3.6 LANE
3.6 LANE
3.6 LANE

1.2 SHLDR

N.B. ENTRANCE RAMP

4.2 LANE

1.2 SHLDR

0+400

1:15 TRANSITION

END N.B. ENTRANCE RAMP CONTROL
P.T. STA 0+506.214 = 63.48 LT.
LP 1604 ℄ STA 15+739.170

BEGIN EDGE OF PAV. TAPER
4.8 RT STA 0+380.000

MBGF TRANS (THRIE BEAM) EST. @ 1 EA

STORM DRAIN LINE I6

MBGF (BLKOUT) EST. @ 38 M

TOE OF SLOPE

BEGIN MAINLANE BRIDGES STA 15+795.900

3.0 SHLDR

N.B. MAINLANES

3.6 LANE
3.6 LANE

1.2 SHLDR

9.8

℄ LP 1604

15+600

15+700

P.T.

MBGF (BLKOUT) EST. @ 15.2 M

S 24° 27' 21.91" W

MBGF TRANS (THRIE BEAM) EST. @ 2 EA

15+800

SGT EST. @ 1 EA

MBGF (BLKOUT) EST. @ 47.5 M

9.8

1.2 SHLDR

S.B. MAINLANES

3.6 LANE
3.6 LANE
3.0 SHLDR

SGT EST. @ 1 EA

MBGF (BLKOUT) EST. @ 32.3 M

MBGF (BLKOUT) EST. @ 30.4 M

STORM DRAIN LINE I7

MBGF TRANS (THRIE BEAM) EST. @ 1 EA

MBGF (BLKOUT) EST. @ 55.2 M

RIPRAP (CONC) (CL B) FOR PAYMENT SEE SHEET 32.

S 29° 18' 05.20" W

1.2 SHLDR

4.2 LANE

P.C.

S.B. EXIT RAMP

S 24° 22' 41.23" W

0+300

END S.B. EXIT RAMP CONTROL
P.T. STA 0+343.135 = 57.67 RT.
LP 1604 ℄ STA 15+672.020

BEGIN EDGE OF PAV. TAPER
8.4 LT STA 0+354.300

SGT EST @ 1

EDGE OF PAV. 1:15 TRANSITION

1.2 SHLDR

3.6 LANE
3.6 LANE
3.6 LANE
4.2 LANE

0+200

3.6 LANE
4.2 LANE

1.5M BERM

EXISTING LESLIE ROAD

30 M TAPER

R.O.W.

STA 0+267.193

0+100

0+300

STA 0+359.35

S.B. FRONTAGE ROAD

62.155 M

STA 0+386.77

S 24° 27' 22.01" W

MBGF TRANS (THRIE BEAM) EST. @ 1 EA
MBGF (BLK OUT) EST. @ 21.5 M

TAS EST. 0+400 @ 1 EA

CL C CONC (RAIL FOUNDATION) EST. @ 0.38 M3

CONC CURB (TY A) EST. @ 260 M

RIPRAP (CONC) (CL B) EST. @ 69 M3

RAIL (TY PRI) EST @ 76.5 M

WESTWOOD VISTA STA 0+000
S.B. FRONTAGE RD. STA 0+372.441 PC 0+045.102

STORM DRAIN LINE I8

END CONSTRUCTION / MATCH EXIST. STA 0+080

WESTWOOD VISTA

N 67° 50' 23" W

EXISTING DRAINAGE EASEMENT LIMITS

BEGIN BRIDGE STA 0+411.900

LIMITS OF BRIDGE RELATED RIPRAP (CONC) (CL B)

RIPRAP (CONC) (CL B) EST. @ 55 M3

FUTURE DRAINAGE EASEMENT LIMITS

RAIL (TY PRI) EST @ 35.3 M

CONC CURB (TY A) EST. @ 127 M

STORM DRAIN LINE I-8A

LIMITS OF ASPH STAB BS @ INTERSECTION

## UTILITY LEGEND

| | |
|---|---|
| — W — W — | WATER LINE |
| — T1 — T1 — | TELEPHONE LINE |
| — C — C — | CABLE LINE |
| — G1 — G1 — | GAS LINE |

## CHANGE ORDER NO. 20

-REVISED QUANTITIES
-ADDITION OF MBGF (THRIE BEAM) AND CL C FOOTING
-CHANGES MBGF TO MBGF (BLKOUT)

REVISED SHEET

## ESTIMATED QUANTITIES

| ITEM # | ITEM | UNIT | QTY. |
|---|---|---|---|
| 100-5002 | PREP ROW | KM | 0.28 |
| 110-5001 | EXCAVATION (RDWY) | M3 | 45855 |
| 132-5018 | EMBANK (ORD COMP) (TY B) (CL 3) | M3 | 60758 |
| 160-5002 | FURN AND PLAC TPSL (CL 2) (150 MM) | M2 | 26373 |
| 164-5049 | DRILL SEED (PERM) (URBAN) (CLAY) | M2 | 26373 |
| 247-5024 | FL BS (COMPL IN PLAC)(TY A GR 6 CL 4) | M3 | 5535 |
| 310-5006 | ASPH MATL (AE-P) | L | 6688 |
| | ONE CRSE SURF TREAT | M2 | 13831 |
| 316-5028 | AGGR (TY PB, GR 4) | M3 | 126 |
| 316-5226 | ASPH (AC-15P, HFRS-2P OR CRS-2P) | L | 18810 |
| 345-5004 | ASPH STAB BS (GR 4) | MGR | 1205 |
| 420-5050 | CL C CONC (RAIL FOUNDATION) | M3 | 0.38 |
| 432-5001 | RIPRAP (CONC) (CL B) | M3 | 203 |
| 450-5060 | RAIL (TY PRI) | M | 114 |
| 529-5001 | CONC CURB (TY A) | M | 619 |
| 540-5006 | MBGF (TIM POST) (2.67 MM) | M | 0 |
| 540-5007 | MBGF (BLK OUT) (TIM POST) (2.67 MM) | M | 240.1 |
| 540-5030 | MBGF TRANS (THRIE BEAM) | EA | 5 |
| 3117-5003 | HOT MIX (TY C) | MGR | 1298 |
| 3117-5018 | HOT MIX (TY C) (SURF) | MGR | 1222 |
| 5119-5003 | SINGLE GDRAIL TERM (TY III) | EA | 3 |

* FOR CONTRACTORS INFORMATION ONLY

NOTE(S):

ALL DIMENSIONS ARE IN METERS UNLESS OTHERWISE NOTED.

FOR HORIZONTAL ALIGNMENT / DATA, SEE SHEET(S) 164 - 171.

FOR INTERSECTION LAYOUT, SEE SHEET(S) 316.

FOR BRIDGE LAYOUTS / DETAILS, SEE SHEET(S) 483 - 520.

FOR LIMITS OF SODDING / SEEDING & TOPSOIL, SEE PROJECT X-SECTIONS AND TYPICAL SECTIONS.

FOR RIPRAP DETAILS SEE PROJECT X-SECTIONS AND SHEET(S) 316, 342.

FOR RIPRAP ASSOCIATED WITH STORM DRAINAGE STRUCTURES SEE SHEET(S) 454 - 470.

FOR FUTURE DRAINAGE EASEMENT REQUIREMENTS SEE SHEET 520.

FOR ADDITIONAL STORM DRAIN INFO. REFER TO THE SPECIFIC STORM DRAIN PROFILE SHEET(S)

WHEELCHAIR RAMPS TY 2

BRIDGE RAIL DETAILS, SEE SHEET(S) 507A, 513A, 513B, 527A

CHANGE ORDER 20

STATE OF TEXAS
JENNIFER L. MOCZYGEMBA
84734
REGISTERED PROFESSIONAL ENGINEER

Jennifer L. Moczygemba, P.E. 84734 — 8-8-2002 Date

© 2001 Texas Department of Transportation

PLAN SHEET

SHEET 8 OF 57

| FED. RD. DIV. NO. | FEDERAL AID PROJECT NO. | | SHEET NO. |
|---|---|---|---|
| 6 | NH 2000(704), etc. | | 198B |
| STATE | DIST. | COUNTY | |
| TEXAS | SAT | BEXAR | |
| CONT. | SECT. | JOB | HIGHWAY NO. |
| 2452 | 01 | 036, etc. | LP 1604 |

LEVELS DISPLAYED
1 2 3 4 5 6 7 8 9 10 11 12 13 14 15 16
17 18 19 20 21 22 23 24 25 26 27 28 29 30 31
33 34 35 56 57 58 39 40 41 42 43 44 45 46 47 48
49 50 51 52 53 54 55 56 57 58 59 60 61 62 63

ACC: t:\ao\design\lp1604fm471-90\

FILE: plan08*c020.dgn

SCALE: 1:1000

QUANTITIES THIS SHEET
CSJ 2452-01-038

MATCHLINE STA. 15+560

MATCHLINE STA. 15+840

CONC CURB (TY A) EST. @ 250 M

RIPRAP (CONC) (CL B) EST. @ 69 M3

R.O.W.

FUTURE DRAINAGE EASEMENT LIMITS

EXISTING DRAINAGE EASEMENT LIMITS

FOR CULEBRA CRK. GRADING PLAN, SEE SHEET(S) 519A.

BEGIN CURB TAPER 4.2 LT STA 0+383.500

BEGIN BRIDGE STA 0+437.500

1:15 TRANSITION

4.2 LANE
3.6 LANE
3.6 LANE
3.6 LANE
1.2 SHLDR

N. B. FRONTAGE ROAD

4.2 LANE
3.6 LANE

0+200

0+300

S 24° 27' 21.09" W

S 24° 27' 21.99" W

0+400

0+500

N.B. ENTRANCE RAMP

4.2 LANE

1.2 SHLDR

END N.B. ENTRANCE RAMP CONTROL
P.T. STA 0+506.214 = 63.48 LT.
LP 1604 ℄ STA 15+739.170

BEGIN EDGE OF PAV. TAPER
4.8 RT STA 0+383.000

STORM DRAIN LINE I6

ELIMINATED MBGF TRANS (THRIE BEAM) EST. @ 1 EA (FROM C.O. #20)

MBGF (BLKOUT) @ 38 M

TOE OF SLOPE

BEGIN MAINLANE BRIDGES STA 15+795.900

3.0 SHLDR

N.B. MAINLANES

3.6 LANE
3.6 LANE
1.2 SHLDR

9.8

℄ LP 1604

15+600

15+700

15+800

MBGF (BLKOUT) EST.@ 15.2 M

S 24° 27' 21.91" W

MBGF TRANS (THRIE BEAM) EST. @ 2 EA

SGT EST. @ 1 EA

MBGF (BLKOUT) EST.@ 47.5 M

9.8

1.2 SHLDR

S.B. MAINLANES

3.6 LANE
3.6 LANE
3.0 SHLDR

MBGF (BLKOUT) EST.@ 32.3 M

MBGF (BLKOUT) EST.@ 30.4 M

BLOCK SOD (BERMUDA) EST. @ 100 M2

BLOCK SOD (BERMUDA) EST. @ 199 M2

BLOCK SOD (BERMUDA) EST. @ 677 M2

END S.B. EXIT RAMP CONTROL
P.T. STA 0+343.135 = 57.67 RT.
LP 1604 ℄ STA 15+672.020

BEGIN EDGE OF PAV. TAPER 8.4 LT STA 0+354.300

MBGF TRANS (THRIE BEAM) EST. @ 1 EA

RIPRAP (CONC) (CL B) FOR PAYMENT SEE SHEET 32.

SGT EST @ 1

MBGF (BLKOUT) EST.@ 55.2 M

STORM DRAIN LINE I7

1.2 SHLDR

3.6 LANE
3.6 LANE
3.6 LANE
4.2 LANE

EDGE OF PAV. 1:15 TRANSITION

S 29° 18' 05.20" W

1.2 SHLDR

4.2 LANE

S.B. EXIT RAMP

P.C.

S 24° 22' 41.23" W

0+300

0+200

3.6 LANE
4.2 LANE

STA 0+267.193

STA 0+359.35

STA 0+386.77

S 24° 27' 22.01" W

0+400

MBGF TRANS (THRIE BEAM) EST. @ 1 EA

MBGF (BLK OUT) EST. @ 21.5 M

CONC SIDEWALK EST. @ 87 M2

EXISTING LESLIE ROAD

30 M TAPER

62.155 M

S.B. FRONTAGE ROAD

SGT EST @ 1 EA

BEGIN BRIDGE STA 0+411.900

3B

RET. WALL 3 EST. @ 74.3 M2 PIPE UNDERDR EST.@ 38 M

3C

RET. WALL 4 EST. @ 74.3 M2 PIPE UNDERDR EST.@ 39 M

CONC SIDEWALK EST. @ 112 M2

CONC CURB (TY A) EST. @ 260 M

RIPRAP (CONC) (CL B) EST. @ 60 M3

CONC SIDEWALK EST. @ 39 M2

RIPRAP (CONC) (CL B) EST. @ 10 M3

RIPRAP (CONC) (CL B) EST. @ 10 M3

RAIL (TY PR1) EST @ 76.5 M

R.O.W.

CL "C" CONC. (RAIL FOUNDATION) EST. @ 0.38 M3

EXISTING DRAINAGE EASEMENT LIMITS

LIMITS OF BRIDGE RELATED RIPRAP (CONC) (CL B)

RET. WALL 2 (SEE PREVIOUS SHEET FOR QUANITIES)

REVISED EARTHWORK AND GRADING ADDED SIDEWALK, ADDED NEW DRIVEWAYS #3B AND #3C, ADDED RET. WALL #2, 3 AND #4.

WESTWOOD VISTA STA 0+000
S.B. FRONTAGE RD. STA 0+372.441

PC 0+045.102

N 67° 50' 23" W

FUTURE DRAINAGE EASEMENT LIMITS

BLOCK SOD (BERMUDA) EST. @ 68 M2

RAIL (TY PR1) EST @ 44.4 M

REVISED STORM DRAIN LINE I8

RIPRAP (CONC) (CL B) EST. @ 73 M3

REVISED EARTHWORK AND GRADING

END CONSTRUCTION / MATCH EXIST. STA 0+080

WESTWOOD VIST

CONC CURB (TY A) EST. @ 127 M

STORM DRAIN LINE I-8A

SOD APPLICATION AREAS.

LIMITS OF ASPH STAB BS @ INTERSECTION

## UTILITY LEGEND

- W — W — WATER LINE
- T1 — T1 — TELEPHONE LINE
- C — C — CABLE LINE
- G1 — G1 — GAS LINE

## CHANGE ORDER NO. 28

-UPDATED VIEW
-ADDED DRIVEWAYS 3B, 3C
-REVISED RIPRAP @ WEST WOOD VISTA
-REVISED LINE I-8
-ADDED RET. WALL 2,3 & 4
-ADDED CONC SIDEWALK
-ADDED SODDING AREAS.
-REVISED ALIGNMENT TO WESTWOOD VISTA
-ADDED/REVISED QUANTITIES

## ESTIMATED QUANTITIES

| ITEM # | ITEM | UNIT | QTY. |
|---|---|---|---|
| 100-5002 | PREP ROW | KM | 0.28 |
| 110-5001 | EXCAVATION (RDWY) | M3 | 47,596 |
| 132-5018 | EMBANK (ORD COMP) (TY B) (CL 3) | M3 | 61,823 |
| | EMBANK (ORD COMP) (TY B) (CL 3) SPECIAL | M3 | 750 |
| 160-5002 | FURN AND PLAC TPSL (CL 2) (150 MM) | M2 | 26,133 |
| 162-5008 | BLOCK SOD (BERMUDA) | M2 | 1044 |
| 164-5025 | BRDCST SEED (PERM) (URBAN) (CLAY) | M2 | 25,089 |
| 247-5024 | FL BS (COMPL IN PLAC) (TY A GR 6 CL 4) | M3 | 5575 |
| 310-5006 | ASPH MATL (AE-P) | L | 6817 |
| | ONE CRSE SURF TREAT | M2 | 13,926 |
| 316-5028 | AGGR (TY PB, GR 4) | M3 | 127 |
| 316-5226 | ASPH (AC-15P, HFRS-2P OR CRS-2P) | L | 18,939 |
| 345-5004 | ASPH STAB BS (GR 4) | MGR | 1205 |
| 420-5050 | CL C CONC (RAIL FOUNDATION) | M3 | 0.38 |
| 423-5005 | RETAINING WALL (CONC BLOCK) | M2 | 148.6 |
| 432-5001 | RIPRAP (CONC) (CL B) | M2 | 222 |
| 450-5060 | RAIL (TY PR1) | M | 120.9 |
| 529-5001 | CONC CURB (TY A) | M | 637 |
| 530-5001 | DRVWYS (CONC) (150 MM) | M2 | 330 |
| 531-5002 | CONCRETE SIDEWALK | M2 | 238 |
| 540-5007 | MBGF (BLK OUT) (TIM POST) (2.67 MM) | M | 240.1 |
| 540-5030 | MBGF TRANS (THRIE BEAM) | EA | 4 |
| 556-5016 | PIPE UNDERDRAIN (TY 6) (100 MM) | M | 77 |
| 3117-5003 | HOT MIX (TY C) | MGR | 1298 |
| 3117-5018 | HOT MIX (TY C) (SURF) | MGR | 1231 |
| 5119-5003 | SINGLE GDRAIL TERM (TY III) | EA | 4 |

* FOR CONTRACTORS INFORMATION ONLY

NOTE(S):

ALL DIMENSIONS ARE IN METERS UNLESS OTHERWISE NOTED.

FOR HORIZONTAL ALIGNMENT / DATA, SEE SHEET(S) 164 - 171.

FOR INTERSECTION LAYOUT, SEE SHEET(S) 316.

FOR BRIDGE LAYOUTS / DETAILS, SEE SHEET(S) 483 - 520.

FOR LIMITS OF SODDING / SEEDING & TOPSOIL, SEE PROJECT X-SECTIONS AND TYPICAL SECTIONS.

FOR RIPRAP DETAILS SEE PROJECT X-SECTIONS AND SHEET(S) 316A, 342A & 519A.

FOR RIPRAP ASSOCIATED WITH STORM DRAINAGE STRUCTURES SEE SHEET(S) 454 - 470.

FOR FUTURE DRAINAGE EASEMENT REQUIREMENTS SEE SHEET 520.

FOR ADDITIONAL STORM DRAIN INFO. REFER TO THE SPECIFIC STORM DRAIN PROFILE SHEET(S)

= WHEELCHAIR RAMPS TY 2

FOR RETAINING WALL DETAILS SEE SHEET(S) 361A-H

# = REFERS TO CHANGES MADE AS PART OF CHANGE ORDER.

CHANGE ORDER 28

REVISED SHEET

©2003

Texas Department of Transportation

PLAN SHEET

SHEET 8 OF 57

| FED. RD. DIV. NO. | FEDERAL AID PROJECT NO. | SHEET NO. |
|---|---|---|
| 6 | NH 2000(704), etc. | 198C |
| STATE | DIST. | COUNTY |
| TEXAS | SAT | BEXAR |
| CONT. | SECT. | JOB / HIGHWAY NO. |
| 2452 | 01 | 036, etc. / LP 1604 |

STATE OF TEXAS — JEROME D. PAVLISKA — 76075 — REGISTERED PROFESSIONAL ENGINEER

Jerome D. Pavlisko, P.E. 8-18-03

Jerome D. Pavlisko, P.E. — Date

01-27-03

LEVELS DISPLAYED
1 2 3 4 5 6 7 8 9 10 11 12 13 14 15 16
17 18 19 20 21 22 23 24 25 26 27 28 29 30 31
33 34 35 36 37 38 39 40 41 42 43 44 45 46 47 48
49 50 51 52 53 54 55 56 57 58 59 60 61 62 63

ACC: t:\ao\design\lp1604fm471-90\
FILE: plan08+co28.dgn

QUANTITIES THIS SHEET
CSJ 2452-01-038

SCALE: 1:1000

DRAINAGE EASEMENT

CULEBRA CREEK

R.O.W.

CONC CURB (TY 1) EST. @ 124 M

FM 471 STA 10+336.557
N.B. FRONT. RD. STA 0+657.454

CONC SIDEWALK EST. @ 186 M2

MBGF-w-(BLK OUT) EST. @ 38 M

SGT EST. @ 1 EA

S 24°27'21.09" W

0+500

4.2 LANE
3.6 LANE
3.6 LANE
3.6 LANE

STA 0+614.500

0+600

1.2 SHLDR

P.O.T.

SGT EST. @ 1 EA

END BRIDGE STA 0+538.000

MBGF EST. @ 38 M

CONC. CURB (TY A) EST. @ 168 M

STORM DRAIN LINE Z

TOP OF SLOPE

TOE OF SLOPE

FOR LANDSCAPE PAVER DETAILS TO DIRECT ISLANDS SEE SHEET(S) 338.

3.0 SHLDR

3.6 LANE
3.6 LANE

N.B. MAINLANES

STORM DRAIN LINE Y

1.2 SHLDR
9.8

STORM DRAIN LINE Y
S 24°27'21.91" W

℄ LP 1604

15+900

9.8
1.2 SHLDR

3.6 LANE
3.6 LANE
3.0 SHLDR

S.B. MAINLANES

MBGF EST. @ 114 M

℄ FM 471 STA 10+269.548
LP 1604 ℄ STA 16+023.703

FOR CULEBRA CRK. GRADING PLAN, SEE SHEET(S) 519.

STORM DRAIN LINE X

RIPRAP CONC (CL B) FOR PAYMENT SEE BRIDGE DETAILS.

END BRIDGE STA 0+511.500

1.2 SHLDR

P.O.T.

3.6 LANE
3.6 LANE
3.6 LANE
3.6 LANE
4.2 LANE

S.B. FRONTAGE ROAD

S 24°27'22.01" W

0+500

FM 471 STA 10+203.117
S.B. FRONT. RD. STA 0+634.833

STA 0+590.000

0+600

EXISTING LESLIE ROAD

R.O.W.

CULEBRA CREEK

EXISTING DRAINAGE EASEMENT LIMITS

FUTURE DRAINAGE EASEMENT LIMITS

MATCHLINE STA. 15+840

MATCHLINE STA. 16+100

S 70°37'04.90" E

10+400

N.B. FRONTAGE ROAD STORM DRAIN LINE Z

STORM DRAIN LINE ZB

STORM DRAIN LINE ZA

P.O.T.

CONC CURB (TY 1) EST. @ 77 M

CONC SIDEWALK EST. @ 66 M2

R.O.W.

ER

103

4.2 LANE
3.6 LANE
3.6 LANE
3.6 LANE

STA 0+714.000

0+700

P.O.T.

100

FOR RIPRAP & LANDSCAPING PAVER DETAILS SEE SHEET(S) 338 - 341.
( FOR PAYMENT SEE SHEET(S) 32.

MBGF EST. @ 30.4 M

MBGF EST. @ 30.4 M

MBGF EST. @ 15.2 M

END MAINLANE BRIDGES STA 16+065.100

16+000

S 66°21'38.70" E

NTAR

STAR

CULEBRA ROAD

CONC. CURB (TY A) EST. @ 168 M

STORM DRAIN LINE XA

100

STA 0+690.000

P.C.

P.O.T.

1.2 SHLDR

STORM DRAIN LINE X

3.6 LANE
3.6 LANE
3.6 LANE
4.2 LANE

0+700

P.O.T.

100

ER

R.O.W.

CONC CURB (TY 1) EST. @ 130 M

CONC SIDEWALK EST. @ 195 M2

MAILBOX EST. @ 1 EA

S 61°45'10.62" E

CONC SIDEWALK EST. @ 66 M2

CONC. CURB (TY 1) EST. @ 75 M

CULVERT NO. 5 FOR DETAILS SEE SHEET(S) 377.

LIMITS OF ASPH STAB BS @ INTERSECTION

## UTILITY LEGEND

| | |
|---|---|
| W — W — | WATER LINE |
| T1 — T1 — | TELEPHONE LINE |
| C — C — | CABLE LINE |
| G1 — G1 — | GAS LINE |

## DIRECT ISLAND QUANTITIES

| ISLAND NO. | PAVER SURFACE AREA (M2) | CONC CURB TY A (M) |
|---|---|---|
| ① | 148 M2 | 62 M |
| ② | 80 M2 | 45 M |
| ③ | 866 M2 | 259 M |
| ④ | 173 M2 | 182 M |
| ⑤ | 877 M2 | 259 M |
| ⑥ | 73 M2 | 42 M |
| ⑦ | 80 M2 | 43 M |

## ESTIMATED QUANTITIES

| ITEM # | ITEM | UNIT | QTY. |
|---|---|---|---|
| 100-5002 | PREP ROW | KM | 0.26 |
| 110-5001 | EXCAVATION (RDWY) | M3 | 17078 |
| 132-5018 | EMBANK (ORD COMP)(TY B)(CL 3) | M3 | 22482 |
| 160-5002 | FURN AND PLAC TPSL (CL 2)(150 MM) | M2 | 18034 |
| 164-5049 | DRILL SEED (PERM)(URBAN)(CLAY) | M2 | 18034 |
| 247-5024 | FL BS (COMPL IN PLAC)(TY A GR 6 CL 4) | M3 | 2040 |
| 310-5006 | ASPH MATL (AE-P) | L | 4569 |
| | ONE CRSE SURF TREAT | M2 | 24331 |
| 316-5028 | AGGR (TY PB, GR 4) | M3 | 221 |
| 316-5226 | ASPH (AC-15P, HFRS-2P OR CRS-2P) | L | 33090 |
| 345-5004 | ASPH STAB BS (GR 4) | MGR | 12168 |
| 529-5001 | CONC CURB (TY 1) | M | 406 |
| 529-5026 | CONC CURB (TY A) | M | 1228 |
| 530-5061 | DRVWAYS (ASPH-CONC PAV) | M2 | 437 |
| 531-5002 | CONCRETE SIDEWALKS | M2 | 513 |
| 540-5006 | MBGF (TIM POST)(2.67 MM) | M | 228 |
| 540-5007 | MBGF (BLK OUT)TIM POST 2.67 MM | M | 38 |
| 560-5001 | MAILBOX INSTALL (SINGLE) | EA | 1 |
| 3117-5003 | HOT MIX (TY C) | MGR | 1867 |
| 3117-5018 | HOT MIX (TY C)(SURF) | MGR | 1790 |
| 5027-5001 | LANDSCAPE PAVERS | M2 | 2297 |
| 5119-5003 | SINGLE GDRAIL TERM (TY III) | EA | 2 |

* FOR CONTRACTORS INFORMATION ONLY

NOTE(S):

ALL DIMENSIONS ARE IN METERS UNLESS OTHERWISE NOTED.

FOR HORIZONTAL ALIGNMENT / DATA, SEE SHEET(S) 164 - 171.

FOR LIMITS OF SEEDING & TOPSOIL, SEE PROJECT X-SECTIONS AND TYPICAL SECTIONS.

FOR INTERSECTION LAYOUT, SEE SHEET(S) 317 -320.

FOR ILLUMINATION LAYOUTS / DETAILS SEE SHEET(S) 606, 607.

FOR SIGNALIZATION LAYOUT / DETAILS SEE SHEET(S) 557 - 560.

FOR BRIDGE LAYOUTS / DETAILS, SEE SHEET(S) 483 - 520.

FOR RIPRAP ASSOCIATED WITH STORM DRAINAGE STRUCTURES SEE SHEET(S) 454 - 470.

FOR FUTURE DRAINAGE EASEMENT REQUIREMENTS SEE SHEET 520.

FOR ADDITIONAL STORM DRAIN INFO. REFER TO THE SPECIFIC STORM DRAIN PROFILE SHEET(S).

(#) DRIVEWAY #, FOR MORE DETAILS SEE SHEET(S) 27, 28 & 336.

WHEELCHAIR RAMPS TY 2

STATE OF TEXAS
JOEL K. DAVENPORT, JR.
79276
REGISTERED PROFESSIONAL ENGINEER

Joel K. Davenport Jr. 11/1/00
Joel K. Davenport, Jr., P.E. 79276 Date

Texas Department of Transportation

# PLAN SHEET

SHEET 9 OF 57

| FED. RD. DIV. NO. | FEDERAL AID PROJECT NO. | SHEET NO. |
|---|---|---|
| 6 | NH 2000(704), etc. | 199 |
| STATE | DIST. | COUNTY |
| TEXAS | SAT | BEXAR |
| CONT. | SECT. | JOB / HIGHWAY NO. |
| 2452 | 01 | 036, etc. / LP 1604 |

LEVELS DISPLAYED
1 2 3 4 5 6 7 8 9 10 11 12 20 30 40 50 51 52 53 54 55 56 57 58 59 60 61 62 63 71 78 91 92 93 94 95 96 97 98 99 100 101 102 103 104 105 106 107 108 109 110 111 112 113 114 115 116 117 118 119 120 121 122 123 124 125 126 127 128 129 130 131 132 133 134 135 136 137 138 139 140 141 142 143 144 145 146 147 148 149 150 151 152 153 154 155 156 157 158 159 160 161 162 163 164 165 166 167 168 169 170 171 172 173 174 175 176 177 178 179 180 181 182 183 184 185 186 187 188 189 190 191 192 193 194 195 196 197 198 199 200 201 202 203 204 205 206 207 208 209 210 211 212 213 214 215 216 217 218 219 220 221 222 223 224 225 226 227 228 229 230 231 232 233 234 235 236 237 238 239 240 241 242 243 244 245 246 247 248 249 250 251 252 253 254 255

ACC: t:\ao\design\lp1604fm471-90\
FILE: plan09.dgn

QUANTITIES THIS SHEET
CSJ 2452-01-038

SCALE: 1:1000

DRAINAGE EASEMENT

CULEBRA CREEK

CONC CURB (TY 1) EST. @ 124 M

FM 471 STA 10+336.557
N.B. FRONT. RD. STA 0+657.454

R.O.W.

CONC SIDEWALK EST. @ 186 M2

MBGF-w-(BLK OUT) EST. @ 38 M

SGT EST. @ 1 EA

S 24°27'21.09" W

0+500

4.2 LANE
3.6 LANE
3.6 LANE
3.6 LANE

STA 0+614.500

0+600

1.2 SHLDR

P.O.T.

SGT EST. @ 1 EA

END BRIDGE STA 0+538.000

MBGF EST. @ 38 M

CONC. CURB(TY A) EST. @ 168 M

FOR STAMPED CONCRETE DETAILS TO DIRECT ISLANDS SEE SHEET(S) 338D.

TOE OF SLOPE

TOP OF SLOPE

3.0 SHLDR

MATCHLINE STA. 15+840

3.6 LANE
3.6 LANE

N.B. MAINLANES

STORM DRAIN LINE Y

1.2 SHLDR
9.8

STORM DRAIN LINE Y
S 24°27'21.91" W

℄ LP 1604

15+900

9.8
1.2 SHLDR
3.6 LANE
3.6 LANE
3.6 LANE
3.0 SHLDR

S.B. MAINLANES

MBGF EST. @ 114 M

℄ FM 471 STA 10+269.548
LP 1604 ℄ STA 16+023.703

FOR CULEBRA CRK. GRADING PLAN, SEE SHEET(S) 519.

STORM DRAIN LINE X

RIPRAP CONC (CL B) FOR PAYMENT SEE BRIDGE DETAILS.

END BRIDGE STA 0+511.500

1.2 SHLDR

P.O.T.

S.B. FRONTAGE ROAD
S 24°27'22.01" W

0+500

3.6 LANE
3.6 LANE
3.6 LANE
3.6 LANE
4.2 LANE

FM 471 STA 10+203.117
S.B. FRONT. RD. STA 0+634.833

STA 0+590.000

0+600

EXISTING LESLIE ROAD

R.O.W.

CONC CURB (TY 1) EST. @ 130 M

CONC SIDEWALK EST. @ 195 M2

MAILBOX EST. @ 1 EA

CULEBRA CREEK

EXISTING DRAINAGE EASEMENT LIMITS

FUTURE DRAINAGE EASEMENT LIMITS

| DIRECT ISLAND QUANTITIES | | |
|---|---|---|
| ISLAND NO. | STAMPED SURFACE AREA (M2) | CONC CURB TY A (M) |
| ① | 148 M2 | 62 M |
| ② | 80 M2 | 45 M |
| ③ | 866 M2 | 259 M |
| ④ | 173 M2 | 182 M |
| ⑤ | 877 M2 | 259 M |
| ⑥ | 73 M2 | 42 M |
| ⑦ | 80 M2 | 43 M |

| UTILITY LEGEND | |
|---|---|
| — W — W — | WATER LINE |
| — T1 — T1 — | TELEPHONE LINE |
| — C — C — | CABLE LINE |
| — G1 — G1 — | GAS LINE |

LEVELS DISPLAYED
1 2 3 4 5 6 7 8 9 10 11 12 13 14 15 16
17 18 19 20 21 22 24 26 28 30 32 33 34 36
37 38 39 40 41 42 43 44 45 46 47 48
49 51 53 55 57 59 61 63 65 67 69 71 73 75 77 79 81 83 85 86

ACC: *:\dgn\design\p1604fm471-90\
FILE: plan09.dgn

P.O.T.

N.B. FRONTAGE ROAD

STA 0+714.000

0+700

4.2 LANE
3.6 LANE
3.6 LANE
3.6 LANE

1.2 SHLDR

100

FOR RIPRAP & STAMPED CONCRETE DETAILS SEE SHEET(S) 338C.
FOR PAYMENT SEE SHEET(S) 26 & 32.

MBGF EST. @ 30.4 M

MBGF EST. @ 30.4 M

MBGF EST. @ 15.2 M

END MAINLANE BRIDGES STA 16+065.100

MATCHLINE STA. 16+100

CONC. CURB(TY A) EST. @ 168 M

STORM DRAIN LINE XA

100

STA 0+690.000

P.O.T.

1.2 SHLDR

3.6 LANE
3.6 LANE
3.6 LANE
4.2 LANE

0+700

STORM DRAIN LINE X

P.O.T.

100

R.O.W.

CONC SIDEWALK EST. @ 66 M2

CONC. CURB (TY 1) EST. @ 75 M

CULVERT NO. 5 FOR DETAILS SEE SHEET(S) 377.

CULEBRA ROAD

NTAR

STAR

S 66° 21' 10" E

S 61° 45' 10.62" E

CONC CURB (TY 1) EST. @ 77 M

CONC SIDEWALK EST. @ 66 M2

103

1.2 SHLDR

| ESTIMATED QUANTITIES | | | |
|---|---|---|---|
| ITEM # | ITEM | UNIT | QTY. |
| 100-5002 | PREP ROW | KM | 0.26 |
| 110-5001 | EXCAVATION (RDWY) | M3 | 17078 |
| 132-5018 | EMBANK (ORD COMP) (TY B) (CL 3) | M3 | 22482 |
| 160-5002 | FURN AND PLAC TPSL (CL 2) (150 MM) | M2 | 18034 |
| 164-5049 | DRILL SEED (PERM) (URBAN) (CLAY) | M2 | 18034 |
| 247-5024 | FL BS (COMPL IN PLACE)TY A GR 6 CL 4) | M3 | 2040 |
| 310-5006 | ASPH MATL (AE-P) | L | 4569 |
| | ONE CRSE SURF TREAT | M2 | 24331 |
| 316-5028 | AGGR (TY PB, GR 4) | M3 | 221 |
| 316-5226 | ASPH (AC-15P, HFRS-2P OR CRS-2P) | L | 33090 |
| 345-5004 | ASPH STAB BS (GR 4) | MGR | 12168 |
| 529-5001 | CONC CURB (TY 1) | M | 406 |
| 529-5026 | CONC CURB (TY A) | M | 1228 |
| 530-5061 | DRVWAYS (ASPH-CONC PAV) | M2 | 437 |
| 531-5002 | CONCRETE SIDEWALKS | M2 | 513 |
| 540-5006 | MBGF (TIM POST) (2.67 MM) | M | 228 |
| 540-5007 | MBGF (BLK OUT) TIM POST 2.67 MM | M | 38 |
| 560-5001 | MAILBOX INSTALL (SINGLE) | EA | 1 |
| 3117-5003 | HOT MIX (TY C) | MGR | 1867 |
| 3117-5018 | HOT MIX (TY C) (SURF) | MGR | 1790 |
| 3027-5001 | LANDSCAPE PAVERS | M2 | 2297.0 |
| 3149-5003 | SINGLE GRATE TERM (TY T11) | EA | 2 |
| | | | |

*FOR CONTRACTORS INFORMATION ONLY

NOTE(S):

ALL DIMENSIONS ARE IN METERS UNLESS OTHERWISE NOTED.

FOR HORIZONTAL ALIGNMENT / DATA, SEE SHEET(S) 164 - 171.

FOR LIMITS OF SEEDING & TOPSOIL, SEE PROJECT X-SECTIONS AND TYPICAL SECTIONS.

FOR INTERSECTION LAYOUT, SEE SHEET(S) 317 -320.

FOR ILLUMINATION LAYOUTS / DETAILS SEE SHEET(S) 606, 607.

FOR SIGNALIZATION LAYOUT / DETAILS SEE SHEET(S) 557 - 560.

FOR BRIDGE LAYOUTS / DETAILS, SEE SHEET(S) 483 - 520.

FOR RIPRAP ASSOCIATED WITH STORM DRAINAGE STRUCTURES SEE SHEET(S) 454 - 470.

FOR FUTURE DRAINAGE EASEMENT REQUIREMENTS SEE SHEET 520.

FOR ADDITIONAL STORM DRAIN INFO. REFER TO THE SPECIFIC STORM DRAIN PROFILE SHEET(S).

(#) DRIVEWAY #, FOR MORE DETAILS SEE SHEET(S) 27, 28 & 336.

WHEELCHAIR RAMPS TY 2

**CHANGE ORDER NO. 19**

CHANGE ORDER NO. 19
-VOID ORIGINAL SHT 199
-PAVERS REPLACED WITH STAMPED CONCRETE

LIMITS OF ASPH STAB BS @ INTERSECTION

STATE OF TEXAS
TERRY G. McCOY
75016
REGISTERED PROFESSIONAL ENGINEER

FOR COR RECORD ONLY

Terry G. McCoy, P.E. 1-17-02
Terry G. McCoy, P.E. Date

© 2000 Texas Department of Transportation

# PLAN SHEET

SHEET 9 OF 57

| FED. RD. DIV. NO. | FEDERAL AID PROJECT NO. | SHEET NO. |
|---|---|---|
| 6 | NH 2000(704), etc. | 199A |
| STATE | DIST. | COUNTY |
| TEXAS | SAT | BEXAR |
| CONT. | SECT. | JOB / HIGHWAY NO. |
| 2452 | 01 | 036, etc. / LP 1604 |

01-15-02

**REVISED SHEET**

QUANTITIES THIS SHEET
CSJ 2452-01-038

DRAINAGE EASEMENT

ADDED AS PART OF CHANGE ORDER NO. 1

CL C CONC (RAIL FOUNDATION) EST. @ 0.38 M3
MBGF TRANS (THRIE BEAM) EST. @ 1 EA

MBGF (BLK OUT) EST. @ 30.5 M

CULEBRA CREEK

CONC CURB (TY 1) EST. @ 124 M

FM 471 STA 10+336.557
N.B. FRONT. RD. STA 0+657.454

R.O.W.

CONC SIDEWALK EST. @ 186 M2

CO#1 CULV#27

SGT EST. @ 1 EA

S 24°27'21.09" W

0+500

4.2 LANE
3.6 LANE
3.6 LANE
3.6 LANE

STA 0+614.500

0+600

N.B. FRONTAGE ROAD

1.2 SHLDR

P.O.T.

SGT EST. @ 1 EA

END BRIDGE STA 0+538.000

MBGF TRANS (THRIE BEAM) EST. @ 1 EA

MBGF (BLKOUT) EST. @ 32.3 M

CONC. CURB(TY A) EST. @ 168 M

CO#1 STORM DRAIN LINE ZR

FOR STAMPED CONCRETE DETAILS TO DIRECT ISLANDS SEE SHEET(S) 338D (CO #19)

TOE OF SLOPE

TOP OF SLOPE

3.0 SHLDR

MATCHLINE STA. 15+840

3.6 LANE
3.6 LANE

N.B. MAINLANES

STORM DRAIN LINE Y

1.2 SHLDR
9.8

STORM DRAIN LINE Y
S 24°27'21.91" W

℄ LP 1604

15+900

9.8
1.2 SHLDR

3.6 LANE
3.6 LANE
3.0 SHLDR

S.B. MAINLANES

MBGF (BLKOUT) EST. @ 114 M

℄ FM 471 STA 10+269.548
LP 1604 ℄ STA 16+023.703

FOR CULEBRA CRK. GRADING PLAN, SEE SHEET(S) 519.

STORM DRAIN LINE X

RIPRAP CONC (CL B) FOR PAYMENT SEE BRIDGE DETAILS.

END BRIDGE STA 0+511.500

1.2 SHLDR

P.O.T.

S.B. FRONTAGE ROAD
S 24°27'22.01" W

0+500

3.6 LANE
3.6 LANE
3.6 LANE
3.6 LANE
4.2 LANE

FM 471 STA 10+203.117
S.B. FRONT. RD. STA 0+634.833

STA 0+590.000

0+600

EXISTING LESLIE ROAD

R.O.W.

CULEBRA CREEK

EXISTING DRAINAGE EASEMENT LIMITS

FUTURE DRAINAGE EASEMENT LIMITS

CONC CURB (TY 1) EST. @ 130 M

CONC SIDEWALK EST. @ 195 M2

MAILBOX EST. @ 1 EA

END WIDENING BEGIN FULL CONSTRUCTION STA. 10+150.000 (CULEBRA ROAD) CO # 25 .

S 61°45'10.62"E

S 66°21'48.70"E

CULEBRA ROAD

NTAR

STAR

SCALE: 1:1000

10+400

S 15°04'90" E

0°37'

16-080 LT

EARTHWORK 25
GRADING REV (BETWEEN N' BD FRONT. RD. & EAST R.O.W.)

CONC CURB (TY 1) EST. @ 77 M

R.O.W.

CONC SIDEWALK EST. @ 66 M2

H.E.B. DRAINAGE

103

P.O.T.

CO#1 STORM DRAIN LINE ZT

4.2 LANE
3.6 LANE
3.6 LANE
3.6 LANE

0+700

STA 0+714.000

P.O.T.

1.2 SHLDR

100

CO #19 FOR RIPRAP & STAMPED CONCRETE DETAILS SEE SHEET(S) 338C.
FOR PAYMENT SEE SHEET(S) 26 & 32.

MBGF TRANS (THRIE BEAM) EST @ 1 EA
MBGF (BLKOUT) EST. @ 24.7 M

MATCHLINE STA. 16+100

MBGF TRANS (THRIE BEAM) EST. @ 1 EA
MBGF (BLKOUT) EST. @ 15.2 M

END MAINLANE BRIDGES STA 16+065.100

CONC. CURB(TY A) EST. @ 168 M

STORM DRAIN LINE XA

100

STA 0+690.000

P.C.

P.O.T.

STORM DRAIN LINE X

3.6 LANE
3.6 LANE
3.6 LANE
4.2 LANE

0+700

1.2 SHLDR

P.O.T.

100

R.O.W.

CONC SIDEWALK EST. @ 66 M2

CONC. CURB (TY 1) EST. @ 75 M

CULVERT NO. 5 FOR DETAILS SEE SHEET(S) 377.

LIMITS OF ASPH STAB BS @ INTERSECTION

NOTE(S):

ALL DIMENSIONS ARE IN METERS UNLESS OTHERWISE NOTED.

FOR HORIZONTAL ALIGNMENT / DATA, SEE SHEET(S) 164 - 171.

FOR LIMITS OF SEEDING & TOPSOIL, SEE PROJECT X-SECTIONS AND TYPICAL SECTIONS.

FOR INTERSECTION LAYOUT, SEE SHEET(S) 317 -320.

FOR ILLUMINATION LAYOUTS / DETAILS SEE SHEET(S) 606, 607.

FOR SIGNALIZATION LAYOUT / DETAILS SEE SHEET(S) 557 - 560.

FOR BRIDGE LAYOUTS / DETAILS, SEE SHEET(S) 483 - 520.

FOR RIPRAP ASSOCIATED WITH STORM DRAINAGE STRUCTURES SEE SHEET(S) 454 - 470.

FOR FUTURE DRAINAGE EASEMENT REQUIREMENTS SEE SHEET 520.

FOR ADDITIONAL STORM DRAIN INFO. REFER TO THE SPECIFIC STORM DRAIN PROFILE SHEET(S).

(#) DRIVEWAY #, FOR MORE DETAILS SEE SHEET(S) 27, 28 & 336.

WHEELCHAIR RAMPS TY 2

BRIDGE RAIL DETAILS, SEE SHEET(S) ~~507A, 511A, 521A~~ (507A)

## ESTIMATED QUANTITIES

| ITEM # | ITEM | UNIT | QTY. |
|---|---|---|---|
| 100-5002 | PREP ROW | KM | 0.26 |
| 110-5001 | EXCAVATION (RDWY) | M3 | 17113 |
| 132-5018 | EMBANK (ORD COMP) (TY B) (CL 3) | M3 | 22482 |
| 160-5002 | FURN AND PLAC TPSL (CL 2) (150 MM) | M2 | 18034 |
| 164-5049 | DRILL SEED (PERM) (URBAN) (CLAY) | M2 | 18034 |
| 247-5024 | FL BS (COMPL IN PLACE)(TY A GR 6 CL 4) | M3 | 2040 |
| 310-5006 | ASPH MATL (AE-P) | L | 4569 |
| | ONE CRSE SURF TREAT | M2 | 24331 |
| 316-5028 | AGGR (TY PB, GR 4) | M3 | 221 |
| 316-5226 | ASPH (AC-15P, HFRS-2P OR CRS-2P) | L | 33090 |
| 345-5004 | ASPH STAB BS (GR 4) | MGR | 12168 |
| 529-5001 | CONC CURB (TY 1) | M | 406 |
| 529-5026 | CONC CURB (TY A) | M | 1228 |
| 530-5061 | DRVWAYS (ASPH-CONC PAV) | M2 | 437 |
| 531-5002 | CONCRETE SIDEWALKS | M2 | 513 |
| 540-5006 | MBGF (TIM POST) (2.67 MM) | M | 0 |
| 540-5007 | MBGF (BLK OUT) TIM POST 2.67 MM | M | 241.4 |
| 540-5030 | MBGF TRANS (THRIE BEAM) | EA | 4 |
| 560-5001 | MAILBOX INSTALL (SINGLE) | EA | 1 |
| 3117-5003 | HOT MIX (TY C) | MGR | 1867 |
| 3117-5018 | HOT MIX (TY C) (SURF) | MGR | 1790 |
| ~~5027-5001~~ | ~~LANDSCAPE PAVERS~~ | M2 | ~~2297~~ 0 |
| 5119-5003 | SINGLE CORAIL TERM (TY III) | EA | 2 |
| 420-5050 | CL C CONC (RAIL FOUNDATION) | M3 | 0.38 |

* FOR CONTRACTORS INFORMATION ONLY

## DIRECT ISLAND QUANTITIES

| ISLAND NO. | STAMPED SURFACE AREA (M2) | CONC CURB TY A (M) |
|---|---|---|
| ① | 148 M2 | 62 M |
| ② | 80 M2 | 45 M |
| ③ | 866 M2 | 259 M |
| ④ | 173 M2 | 182 M |
| ⑤ | 877 M2 | 259 M |
| ⑥ | 73 M2 | 42 M |
| ⑦ | 80 M2 | 43 M |

## UTILITY LEGEND

- W — W — WATER LINE
- T1 — T1 — TELEPHONE LINE
- C — C — CABLE LINE
- G1 — G1 — GAS LINE

## CHANGE ORDER 20

CHANGE ORDER NO. 20
-REVISED QUANTITIES
-ADDITION OF MBGF TRANS (THRIE BEAM) AND CL C FOOTING
-CHANGE MBGF TO MBGF (BLKOUT)

©2002

Texas Department of Transportation

# PLAN SHEET

SHEET 9 OF 57

| FED. RD. DIV. NO. | FEDERAL AID PROJECT NO. | SHEET NO. |
|---|---|---|
| 6 | NH 2000(704), etc. | 199C |
| STATE | DIST. | COUNTY |
| TEXAS | SAT | BEXAR |
| CONT. | SECT. | JOB / HIGHWAY NO. |
| 2452 | 01 | 036, etc. / LP 1604 |

STATE OF TEXAS — JENNIFER L. MOCZYGEMBA — 84734 — REGISTERED PROFESSIONAL ENGINEER

Jennifer L. Moczygemba, P.E. 84734 — 8-8-2002 Date

LEVELS DISPLAYED
1 2 3 4 5 6 7 8 9 10 11 12 13 14 15 16
17 18 19 21 22 23 24 25 26 27 28 29 30 31 32 33
33 34 35 36 37 38 39 40 41 42 43 44 45 46 47 48
49 50 51 52 53 54 55 56 57 58 59 60 61 62 63

ACC: t:\ao\design\lp1604fm471-90\
FILE: plan09*co20.dgn

QUANTITIES THIS SHEET
CSJ 2452-01-038

DRAINAGE EASEMENT

ADDED AS PART OF CHANGE ORDER NO. 1

CULEBRA CREEK

R.O.W.

CONC CURB (TY 1) EST. @ 124 M

FM 471 STA 10+336.557
N.B. FRONT. RD. STA 0+657.454

MBGF-w-(BLK OUT) EST. @ 38 M

CO#1 CULV#27

CONC SIDEWALK EST. @ 186 M2

SGT EST. @ 1 EA

S 24°27'21.09" W

0+500

4.2 LANE
3.6 LANE
3.6 LANE
3.6 LANE

STA 0+614.500

0+600

N.B. FRONTAGE ROAD

1.2 SHLDR

END BRIDGE STA 0+538.000

SGT EST. @ 1 EA

MBGF EST. @ 38 M

CONC. CURB (TY A) EST. @ 168 M

CO#1 STORM DRAIN LINE ZR

FOR STAMPED CONCRETE DETAILS TO DIRECT ISLANDS SEE SHEET(S) 338D (CO #19)

TOE OF SLOPE

TOP OF SLOPE

3.0 SHLDR

3.6 LANE
3.6 LANE

N.B. MAINLANES

STORM DRAIN LINE Y

1.2 SHLDR
9.8

STORM DRAIN LINE Y
S 24°27'21.91" W

℄ LP 1604

15+900

9.8
1.2 SHLDR

3.6 LANE
3.6 LANE
3.0 SHLDR

S.B. MAINLANES

MBGF EST. @ 114 M

℄ FM 471 STA 10+269.548
LP 1604 ℄ STA 16+023.703

FOR CULEBRA CRK. GRADING PLAN, SEE SHEET(S) 519.

STORM DRAIN LINE X

RIPRAP CONC (CL B) FOR PAYMENT SEE BRIDGE DETAILS.

END BRIDGE STA 0+511.500

1.2 SHLDR

S.B. FRONTAGE ROAD

S 24°27'22.01" W

0+500

3.6 LANE
3.6 LANE
3.6 LANE
3.6 LANE
4.2 LANE

FM 471 STA 10+203.117
S.B. FRONT. RD. STA 0+634.833

STA 0+590.000

0+600

EXISTING LESLIE ROAD

R.O.W.

EXISTING DRAINAGE EASEMENT LIMITS

FUTURE DRAINAGE EASEMENT LIMITS

CULEBRA CREEK

MATCHLINE STA. 15+840

MATCHLINE STA. 16+100

S 0° 37' 04.90" E

10+400

SCALE: 1:1000

EARTHWORK
16-080 LT
GRADING REV (BETWEEN N' BD FRONT. RD. & EAST R.O.W.)

CONC CURB (TY 1) EST. @ 77 M

R.O.W.

CONC SIDEWALK EST. @ 66 M2

H.E.B. DRAINAGE

103

R.O.T.

CO#1 STORM DRAIN LINE ZT

4.2 LANE
3.6 LANE
3.6 LANE
3.6 LANE

0+700

STA 0+714.000

1.2 SHLDR

100

CO #19 FOR RIPRAP & STAMPED CONCRETE DETAILS SEE SHEET(S) 338C.
FOR PAYMENT SEE SHEET(S) 26 & 32.

MBGF EST. @ 30.4 M

MBGF EST. @ 30.4 M

MBGF EST. @ 15.2 M

END MAINLANE BRIDGES STA 16+065.100

16+000

S 66° 21' 18.70" E

NTAR

STAR

CULEBRA ROAD

CONC. CURB (TY A) EST. @ 168 M

STORM DRAIN LINE XA

100

STA 0+690.000

P.O.T.

STORM DRAIN LINE X

3.6 LANE
3.6 LANE
3.6 LANE
4.2 LANE

0+700

1.2 SHLDR

P.O.T.

100

R.O.W.

CONC SIDEWALK EST. @ 66 M2

CONC. CURB (TY 1) EST. @ 75 M

CULVERT NO. 5 FOR DETAILS SEE SHEET(S) 377

S 61°45'10.62" E

CONC CURB (TY 1) EST. @ 130 M

CONC SIDEWALK EST. @ 195 M2

MAILBOX EST. @ 1 EA

END WIDENING
BEGIN FULL CONSTRUCTION
STA. 10+150.000 (CULEBRA ROAD)
CO # 25

LIMITS OF ASPH STAB BS @ INTERSECTION

## ESTIMATED QUANTITIES

| ITEM # | ITEM | UNIT | QTY. |
|---|---|---|---|
| 100-5002 | PREP ROW | KM | 0.26 |
| 110-5001 | EXCAVATION (RDWY) | M3 | 17113 |
| 132-5018 | EMBANK (ORD COMP) (TY B) (CL 3) | M3 | 22482 |
| 160-5002 | FURN AND PLAC TPSL (CL 2) (150 MM) | M2 | 18034 |
| 164-5049 | DRILL SEED (PERM) (URBAN) (CLAY) | M2 | 18034 |
| 247-5024 | FL BS (COMPL IN PLAC)(TY A GR 6 CL 4) | M3 | 2040 |
| 310-5006 | ASPH MATL (AE-P) | L | 4569 |
| | ONE CRSE SURF TREAT | M2 | 24331 |
| 316-5028 | AGGR (TY PB, GR 4) | M3 | 221 |
| 316-5226 | ASPH (AC-15P, HFRS-2P OR CRS-2P) | L | 33090 |
| 345-5004 | ASPH STAB BS (GR 4) | MGR | 12168 |
| 529-5001 | CONC CURB (TY 1) | M | 406 |
| 529-5026 | CONC CURB (TY A) | M | 1228 |
| 530-5061 | DRVWAYS (ASPH-CONC PAV) | M2 | 437 |
| 531-5002 | CONCRETE SIDEWALKS | M2 | 513 |
| 540-5006 | MBGF (TIM POST) (2.67 MM) | M | 228 |
| 540-5007 | MBGF (BLK OUT) TIM POST 2.67 MM | M | 38 |
| 560-5001 | MAILBOX INSTALL (SINGLE) | EA | 1 |
| 3117-5003 | HOT MIX (TY C) | MGR | 1867 |
| 3117-5018 | HOT MIX (TY C) (SURF) | MGR | 1790 |
| ~~5027-5001~~ | ~~LANDSCAPE PAVERS~~ | ~~M2~~ | ~~2297~~ 0 |
| 5119-5003 | SINGLE GDRAIL TERM (TY III) | EA | 2 |

* FOR CONTRACTORS INFORMATION ONLY

REVISED SHEET

NOTE(S):

ALL DIMENSIONS ARE IN METERS UNLESS OTHERWISE NOTED.

FOR HORIZONTAL ALIGNMENT / DATA, SEE SHEET(S) 164 - 171.

FOR LIMITS OF SEEDING & TOPSOIL, SEE PROJECT X-SECTIONS AND TYPICAL SECTIONS.

FOR INTERSECTION LAYOUT, SEE SHEET(S) 317 -320.

FOR ILLUMINATION LAYOUTS / DETAILS SEE SHEET(S) 606, 607.

FOR SIGNALIZATION LAYOUT / DETAILS SEE SHEET(S) 557 - 560.

FOR BRIDGE LAYOUTS / DETAILS, SEE SHEET(S) 483 - 520.

FOR RIPRAP ASSOCIATED WITH STORM DRAINAGE STRUCTURES SEE SHEET(S) 454 - 470.

FOR FUTURE DRAINAGE EASEMENT REQUIREMENTS SEE SHEET 520.

FOR ADDITIONAL STORM DRAIN INFO. REFER TO THE SPECIFIC STORM DRAIN PROFILE SHEET(S).

(#) DRIVEWAY #, FOR MORE DETAILS SEE SHEET(S) 27, 28 & 336.

WHEELCHAIR RAMPS TY 2

CHANGE ORDER NO. 25

- REVISED QUANTITIES
- REVISED LIMITS OF FULL CONSTRUCTION ON CULEBRA RD

CHANGE ORDER NO 25

PART OF CO #19

DIRECT ISLAND QUANTITIES

| ISLAND NO. | STAMPED SURFACE AREA (M2) | CONC CURB TY A (M) |
|---|---|---|
| ① | 148 M2 | 62 M |
| ② | 80 M2 | 45 M |
| ③ | 866 M2 | 259 M |
| ④ | 173 M2 | 182 M |
| ⑤ | 877 M2 | 259 M |
| ⑥ | 73 M2 | 42 M |
| ⑦ | 80 M2 | 43 M |

UTILITY LEGEND

- W — W — WATER LINE
- T1 — T1 — TELEPHONE LINE
- C — C — CABLE LINE
- G1 — G1 — GAS LINE

LEVELS DISPLAYED
1 2 3 4 5 6 7 8 9 10 11 12 13 14 15 16 17 18 19 20 21 22 23 24 25 26 27 28 29 30 31 32 33 34 35 36 37 38 39 40 41 42 43 44 45 46 47 48 49 50 51 52 53 54 55 56 57 58 59 60 61 62 63

ACC: f:\ao\des\gn\lp1604fm471-90\
FILE: plan09.dgn

©2002

Texas Department of Transportation

# PLAN SHEET

SHEET 9 OF 57

| FED.RD. DIV.NO. | FEDERAL AID PROJECT NO. | | SHEET NO. |
|---|---|---|---|
| 6 | NH 2000(704), etc. | | 199C |
| STATE | DIST. | COUNTY | |
| TEXAS | SAT | BEXAR | |
| CONT. | SECT. | JOB | HIGHWAY NO. |
| 2452 | 01 | 036, etc. | LP 1604 |

STATE OF TEXAS — JENNIFER L. MOCZYGEMBA — 84734 — REGISTERED PROFESSIONAL ENGINEER

Jennifer L. Moczygemba, P.E. 84734 — P.E. — 5-29-02 Date

For CO #25

05-14-02

QUANTITIES THIS SHEET
CSJ 2452-01-038

REVISED GRADING & EARTHWORK

DRAINAGE EASEMENT

CL C CONC (RAIL FOUNDATION) EST. @ 0.38 M3
MBGF TRANS (THRIE BEAM) EST. @ 1 EA (20)

CONC CURB (TY 1) EST. @ 124 M

FM 471 STA 10+336.557
N.B. FRONT. RD. STA 0+657.454

R.O.W.

CULEBRA CREEK

MBGF (BLK OUT) EST. @ 30.5 M (20)

(1) CULV#27

CONC SIDEWALK EST. @ 186 M2

SGT EST. @ 1 EA

S 24°27'21.09" W

0+500

4.2 LANE
3.6 LANE
3.6 LANE
3.6 LANE

STA 0+614.500

0+600

N.B. FRONTAGE ROAD

1.2 SHLDR

SGT EST. @ 1 EA

END BRIDGE STA 0+538.000

MBGF TRANS (THRIE BEAM) EST. @ 1 EA (20)

MBGF (BLKOUT) EST. @ 32.3 M (20)

CONC. CURB (TY A) EST. @ 168 M

STORM DRAIN LINE ZR (1)

FOR STAMPED CONCRETE DETAILS TO DIRECT ISLANDS SEE SHEET(S) 338D (19)

TOE OF SLOPE

TOP OF SLOPE

3.0 SHLDR

MATCHLINE STA. 15+840

3.6 LANE
3.6 LANE

N.B. MAINLANES

STORM DRAIN LINE Y

1.2 SHLDR
9.8

STORM DRAIN LINE Y
S 24°27'21.91" W

℄ LP 1604

15+900

9.8
1.2 SHLDR

REVISED GRADING & EARTHWORK

3.6 LANE
3.6 LANE
3.0 SHLDR

S.B. MAINLANES

MBGF (BLKOUT) EST. @ 114 M (20)

℄ FM 471 STA 10+269.548
LP 1604 ℄ STA 16+023.703

FOR CULEBRA CRK. GRADING PLAN, SEE SHEET(S) 519A. (35)

STORM DRAIN LINE X

RIPRAP CONC (CL B) FOR PAYMENT SEE BRIDGE DETAILS.

END BRIDGE STA 0+511.500

1.2 SHLDR

S.B. FRONTAGE ROAD

S 24°27'22.01" W

0+500

3.6 LANE
3.6 LANE
3.6 LANE
3.6 LANE
4.2 LANE

FM 471 STA 10+203.117
S.B. FRONT. RD. STA 0+634.833

STA 0+590.000

0+600

EXISTING LESLIE ROAD

CULEBRA CREEK

EXISTING DRAINAGE EASEMENT LIMITS

FUTURE DRAINAGE EASEMENT LIMITS

R.O.W.

CONC CURB (TY 1) EST. @ 130 M

CONC SIDEWALK EST. @ 195 M2

MAILBOX EST. @ 1 EA

END WIDENING BEGIN FULL CONSTRUCTION STA. 10+150.000 (CULEBRA ROAD) (25)

Eliminate! (4)

(19)

DIRECT ISLAND QUANTITIES

| ISLAND NO. | STAMPED SURFACE AREA (M2) | CONC CURB TY A (M) |
|---|---|---|
| (1) | 148 M2 | 62 M |
| (2) | 80 M2 | 45 M |
| (3) | 866 M2 | 259 M |
| (4) | 173 M2 | 182 M |
| (5) | 877 M2 | 259 M |
| (6) | 73 M2 | 42 M |
| (7) | 80 M2 | 43 M |

UTILITY LEGEND

- W — W — WATER LINE
- T1 — T1 — TELEPHONE LINE
- C — C — CABLE LINE
- G1 — G1 — GAS LINE

S 70° 37' 04.90" E

10+400

P.O.T.

(1) (2) (3) (4) (5) (6) (7)

STORM DRAIN LINE ZT (1)

0+700

STA 0+714.000

4.2 LANE
3.6 LANE
3.6 LANE
3.6 LANE

P.O.T.

1.2 SHLDR

100

FOR RIPRAP & STAMPED CONCRETE DETAILS SEE SHEET(S) 338C.
FOR PAYMENT SEE SHEET(S) 26 & 32.

MBGF TRANS (THRIE BEAM) EST. @ 1 EA (19)
MBGF (BLKOUT) EST. @ 24.7 M (20)

MATCHLINE STA. 16+100

MBGF (BLKOUT) EST. @ 24.7 M (20)

MBGF TRANS (THRIE BEAM) EST. @ 1 EA (20)

MBGF (BLKOUT) EST. @ 15.2 M (20)

END MAINLANE BRIDGES STA 16+065.100

16+000

S 66° 21' 16.70" E

NTAR

CULEBRA ROAD

STAR

CONC. CURB (TY A) EST. @ 168 M

STORM DRAIN LINE XA

100

STA 0+690.000

P.C.

P.O.T.

STORM DRAIN LINE X

3.6 LANE
3.6 LANE
3.6 LANE
4.2 LANE

0+700

1.2 SHLDR

P.O.T.

100

R.O.W.

CONC SIDEWALK EST. @ 66 M2

CONC. CURB (TY 1) EST. @ 75 M

CULVERT NO. 5 FOR DETAILS SEE SHEET(S) 377.

S 61°45'10.62" E

SCALE: 1:1000

(25) EARTHWORK
16-080 LT GRADING REV (BETWEEN N' BD FRONT. RD. & EAST R.O.W.)

CONC CURB (TY 1) EST. @ 77 M

CONC SIDEWALK EST. @ 66 M2 (25)

H.E.B. DRAINAGE

103

R.O.W.

(1) STORM DRAIN LINE ZT

4.2 LANE
3.6 LANE
3.6 LANE
3.6 LANE

(20) (20) (20) (19) (20)

1.2 SHLDR

* FOR CONTRACTORS INFORMATION ONLY

NOTE(S):

ALL DIMENSIONS ARE IN METERS UNLESS OTHERWISE NOTED.

FOR HORIZONTAL ALIGNMENT / DATA, SEE SHEET(S) 164 - 171.

FOR LIMITS OF SEEDING & TOPSOIL, SEE PROJECT X-SECTIONS AND TYPICAL SECTIONS.

FOR INTERSECTION LAYOUT, SEE SHEET(S) 317 -320.

FOR ILLUMINATION LAYOUTS / DETAILS SEE SHEET(S) 606, 607.

FOR SIGNALIZATION LAYOUT / DETAILS SEE SHEET(S) 557 - 560.

FOR BRIDGE LAYOUTS / DETAILS, SEE SHEET(S) 483 - 520.

FOR RIPRAP ASSOCIATED WITH STORM DRAINAGE STRUCTURES SEE SHEET(S) 454 - 470.

FOR FUTURE DRAINAGE EASEMENT REQUIREMENTS SEE SHEET 520.

FOR ADDITIONAL STORM DRAIN INFO. REFER TO THE SPECIFIC STORM DRAIN PROFILE SHEET(S).

(#) DRIVEWAY #, FOR MORE DETAILS SEE SHEET(S) 27, 28 & 336.

WHEELCHAIR RAMPS TY 2

BRIDGE RAIL DETAILS, SEE SHEET(S) 507A, 513A, 521A, 527A (20)

(#) REFERS TO CHANGES MADE AS PART OF CHANGE ORDER.

CHANGE ORDER NO. 28
- REVISED GRADING & EARTHWORK QUANTITIES

REVISED SHEET

## ESTIMATED QUANTITIES

| ITEM # | ITEM | UNIT | QTY. |
|---|---|---|---|
| 100-5002 | PREP ROW | KM | 0.26 |
| 110-5001 | EXCAVATION (RDWY) | M3 | 17091 |
| 132-5018 | EMBANK (ORD COMP)(TY B)(CL 3) | M3 | 33821 |
| 160-5002 | FURN AND PLAC TPSL (CL 2)(150 MM) | M2 | 18034 |
| 164-5049 | DRILL SEED (PERM)(URBAN)(CLAY) | M2 | 18034 |
| 247-5024 | FL BS (COMPL IN PLAC)(TY A GR 6 CL 4) | M3 | 2040 |
| 310-5006 | ASPH MATL (AE-P) | L | 4569 |
| | ONE CRSE SURF TREAT | M2 | 24331 |
| 316-5028 | AGGR (TY PB,GR 4) | M3 | 221 |
| 316-5226 | ASPH (AC-15P, HFRS-2P OR CRS-2P) | L | 33090 |
| 345-5004 | ASPH STAB BS (GR 4) | MGR | 12168 |
| 529-5001 | CONC CURB (TY 1) | M | 406 |
| 529-5026 | CONC CURB (TY A) | M | 1228 |
| 530-5061 | DRVWAYS (ASPH-CONC PAV) | M2 | 437 |
| 531-5002 | CONCRETE SIDEWALKS | M2 | 513 |
| 540-5006 | MBGF (TIM POST)(2.67 MM) | M | 0 |
| 540-5007 | MBGF (BLK OUT)TIM POST 2.67 MM | M | 241.4 |
| 540-5030 | MBGF TRANS (THRIE BEAM) | EA | 4 |
| 560-5001 | MAILBOX INSTALL (SINGLE) | EA | 1 |
| 3117-5003 | HOT MIX (TY C) | MGR | 1867 |
| 3117-5018 | HOT MIX (TY C)(SURF) | MGR | 1790 |
| ~~5027-5001~~ | ~~LANDSCAPE PAVERS~~ | ~~M2~~ | ~~2297~~ 0 |
| 5119-5003 | SINGLE GDRAIL TERM (TY III) | EA | 2 |
| 420-5050 | CL C CONC (RAIL FOUNDATION) | M3 | 0.38 |

LIMITS OF ASPH STAB BS @ INTERSECTION

STATE OF TEXAS
JEROME D. PAVLISKA
76075
REGISTERED PROFESSIONAL ENGINEER

Jerome D. Pavliska P.E. 2-7-03
Jerome D. Pavliska, P.E. — Date

©2003

Texas Department of Transportation

# PLAN SHEET

SHEET 9 OF 57

| FED. RD. DIV. NO. | FEDERAL AID PROJECT NO. | | SHEET NO. |
|---|---|---|---|
| 6 | NH 2000(704),etc. | | 199 D |
| STATE | DIST. | COUNTY | |
| TEXAS | SAT | BEXAR | |
| CONT. | SECT. | JOB | HIGHWAY NO. |
| 2452 | 01 | 036,etc. | LP 1604 |

LEVELS DISPLAYED
1 2 3 4 5 6 7 8 9 10 11 12 13 14 15 16
17 18 19 20 21 22 23 24 25 26 27 28 29 30 31 32
33 34 35 36 37 38 39 40 41 42 43 44 45 46 47 48
49 50 51 52 53 54 55 56 57 58 59 60 61 62 63

ACC: *:\oo\design\lp1604fm471-90\
FILE: plan09*c028.dgn

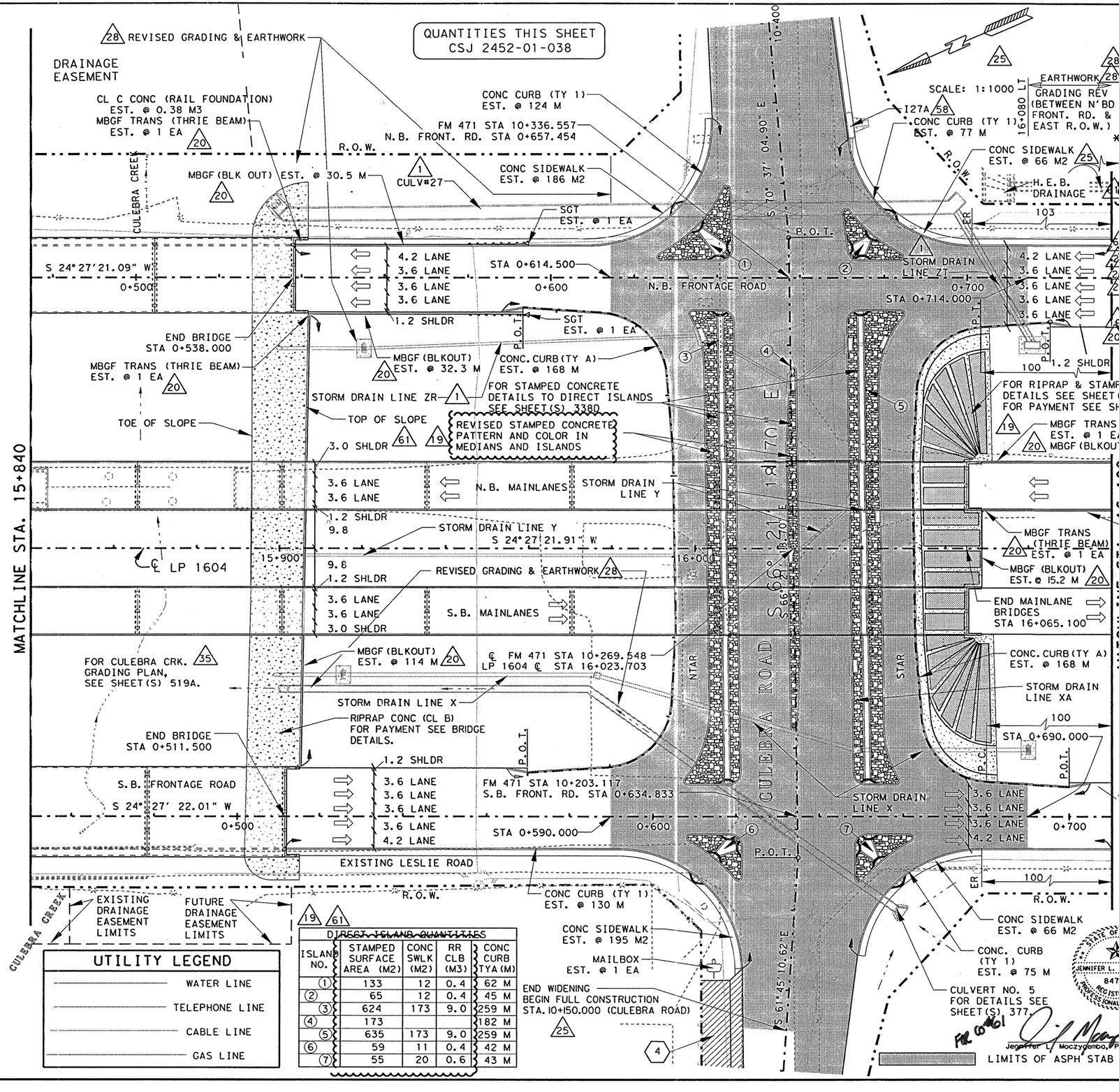


## ESTIMATED QUANTITIES

| ITEM # | ITEM | UNIT | QTY. |
|---|---|---|---|
| 100-5002 | PREP ROW | KM | 0.26 |
| 110-5001 | EXCAVATION (RDWY) | M3 | 17091 |
| 132-5018 | EMBANK (ORD COMP) (TY B) (CL 3) | M3 | 33821 |
| 160-5002 | FURN AND PLAC TPSL (CL 2) (150 MM) | M2 | 18034 |
| 164-5049 | DRILL SEED (PERM) (URBAN) (CLAY) | M2 | 18034 |
| 247-5024 | FL BS (COMPL IN PLAC)(TY A GR 6 CL 4) | M3 | 2040 |
| 310-5006 | ASPH MATL (AE-P) | L | 4569 |
| | ONE CRSE SURF TREAT | M2 | 24331 |
| 316-5028 | AGGR (TY PB, GR 4) | M3 | 221 |
| 316-5226 | ASPH (AC-15P, HFRS-2P OR CRS-2P) | L | 33090 |
| ~~345-5001~~ | ~~ASPH STAB BS (GR 4)~~ | ~~MGR~~ | ~~12168~~ |
| 432-5001 | RIPRAP (CONC) (CL B) | M3 | 20 |
| ~~529-5001~~ | ~~CONC CURB (TY 1)~~ | ~~M~~ | ~~486~~ |
| 529-5026 | CONC CURB (TY A) | M | 1228 |
| ~~530-5001~~ | ~~DRIVWAYS (ASPH/CONC PAVT)~~ | ~~M2~~ | ~~437~~ |
| 531-5002 | CONCRETE SIDEWALKS | M2 | ~~513~~ 914 |
| ~~540-5006~~ | ~~MBGF (TIM POST) (2.67 MM)~~ | ~~M~~ | ~~0~~ |
| 540-5007 | MBGF (BLK OUT) TIM POST 2.67 MM | M | 241.4 |
| 540-5030 | MBGF TRANS (THRIE BEAM) | EA | 4 |
| 560-5001 | MAILBOX INSTALL (SINGLE) | EA | 1 |
| 3117-5003 | HOT MIX (TY C) | MGR | 1867 |
| 3117-5018 | HOT MIX (TY C) (SURF) | MGR | 1790 |
| ~~5027-5001~~ | ~~LANDSCAPE PAVERS~~ | ~~M2~~ | ~~2297~~ 0 |
| 5119-5003 | SINGLE GDRAIL TERM (TY III) | EA | 2 |
| 420-5050 | CL C CONC (RAIL FOUNDATION) | M3 | 0.38 |

NOTE(S): * FOR CONTRACTORS INFORMATION ONLY

ALL DIMENSIONS ARE IN METERS UNLESS OTHERWISE NOTED.

FOR HORIZONTAL ALIGNMENT / DATA, SEE SHEET(S) 164 - 171.

FOR LIMITS OF SEEDING & TOPSOIL, SEE PROJECT X-SECTIONS AND TYPICAL SECTIONS.

FOR INTERSECTION LAYOUT, SEE SHEET(S) 317 -320.

FOR ILLUMINATION LAYOUTS / DETAILS SEE SHEET(S) 606, 607.

FOR SIGNALIZATION LAYOUT / DETAILS SEE SHEET(S) 557 - 560.

FOR BRIDGE LAYOUTS / DETAILS, SEE SHEET(S) 483 - 520.

FOR RIPRAP ASSOCIATED WITH STORM DRAINAGE STRUCTURES SEE SHEET(S) 454 - 470.

FOR FUTURE DRAINAGE EASEMENT REQUIREMENTS SEE SHEET 520.

FOR ADDITIONAL STORM DRAIN INFO. REFER TO THE SPECIFIC STORM DRAIN PROFILE SHEET(S).

(#) DRIVEWAY #, FOR MORE DETAILS SEE SHEET(S) 27, 28 & 336.

WHEELCHAIR RAMPS TY 2

BRIDGE RAIL DETAILS, SEE SHEET(S) 507A, 513A, 521A, 527A

(#) REFERS TO CHANGES MADE AS PART OF CHANGE ORDER.

CHANGE ORDER NO. 61
-REVISED PATTERN AND COLOR FOR STAMPED CONCRETE
-SEE SHEET 338E FOR DETAILS

REVISED SHEET

### UTILITY LEGEND

- WATER LINE
- TELEPHONE LINE
- CABLE LINE
- GAS LINE

### DIRECT ISLANDS QUANTITIES

| ISLAND NO. | STAMPED SURFACE AREA (M2) | CONC SWLK (M2) | RR CLB (M3) | CONC CURB TYA (M) |
|---|---|---|---|---|
| ① | 133 | 12 | 0.4 | 62 M |
| ② | 65 | 12 | 0.4 | 45 M |
| ③ | 624 | 173 | 9.0 | 259 M |
| ④ | 173 | | | 182 M |
| ⑤ | 635 | 173 | 9.0 | 259 M |
| ⑥ | 59 | 11 | 0.4 | 42 M |
| ⑦ | 55 | 20 | 0.6 | 43 M |

LEVELS DISPLAYED
1 2 3 4 5 6 7 8 9 10 11 12 21 31 41 51 61
17 18 19 20 21 22 23 24 25 26 27 28 29 30 31 32
33 34 35 36 37 38 39 40 41 42 43 44 45 46 47 48
49 50 51 52 53 54 55 56 57 58 59 60 61 62 63

ACC: t:\ao\design\lp1604fm471-90\
FILE: plan09xC028.dgn

©2003

Texas Department of Transportation

## PLAN SHEET

SHEET 9 OF 57

| FED.RD. DIV.NO. | FEDERAL AID PROJECT NO. | | SHEET NO. |
|---|---|---|---|
| 6 | NH 2000(704), etc. | | 199 |
| STATE | DIST. | COUNTY | |
| TEXAS | SAT | BEXAR | |
| CONT. | SECT. | JOB | HIGHWAY NO. |
| 2452 | 01 | 036, etc. | LP 1604 |

STATE OF TEXAS — JENNIFER L. MOCZYGEMBA — 84734 — REGISTERED PROFESSIONAL ENGINEER

FOR CO #61

Jennifer L. Moczygemba, P.E. 84734 — Date 6-13-03

6/12/03

QUANTITIES THIS SHEET
CSJ 2452-01-038

SCALE: 1:1000

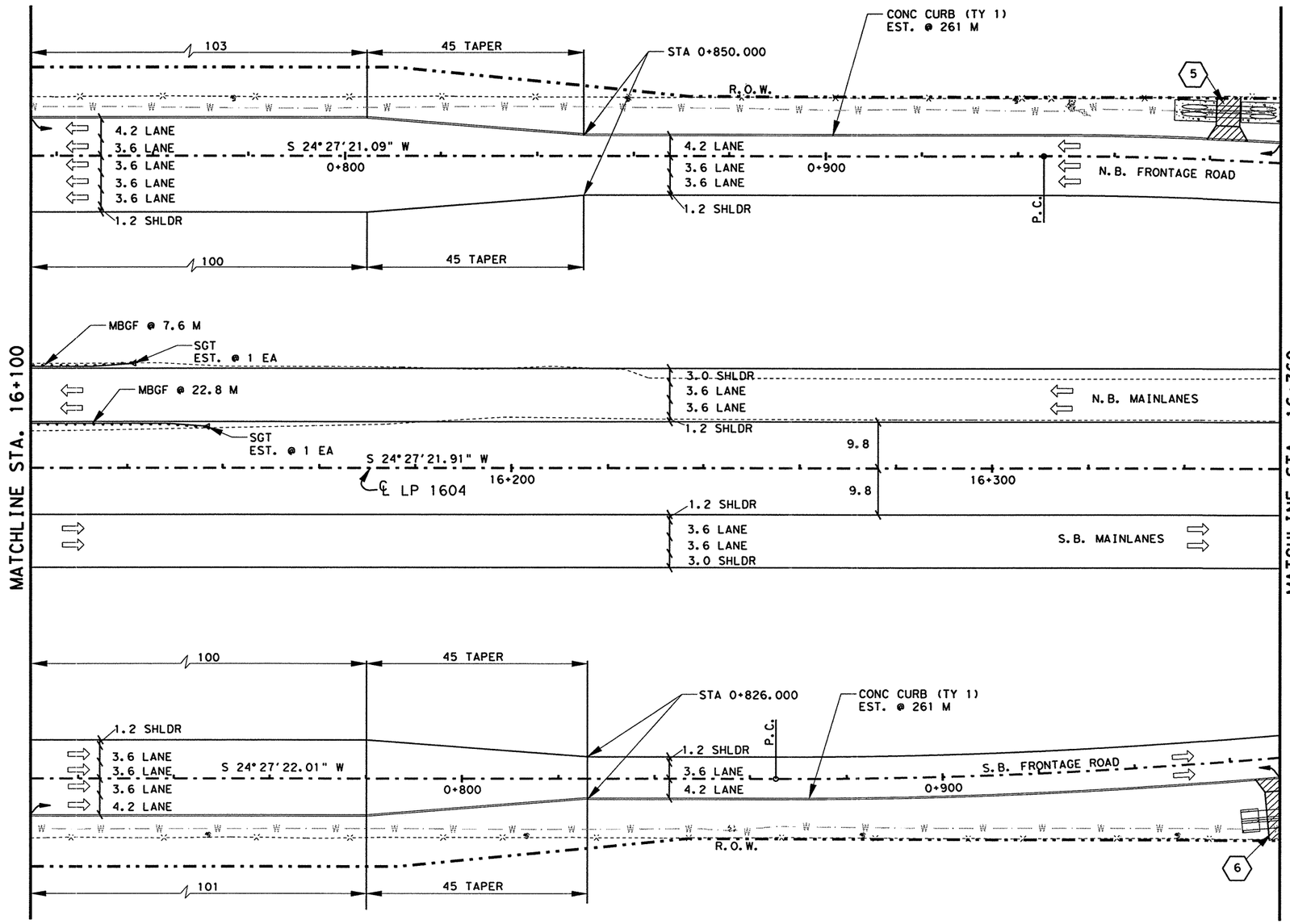


## ESTIMATED QUANTITIES

| ITEM # | ITEM | UNIT | QTY. |
|---|---|---|---|
| 100-5002 | PREP ROW | KM | 0.26 |
| 110-5001 | EXCAVATION (RDWY) | M3 | 8993 |
| 132-5018 | EMBANK (ORD COMP) (TY B) (CL 3) | M3 | 50293 |
| 160-5002 | FURN AND PLAC TPSL (CL 2) (150 MM) | M2 | 28459 |
| 164-5049 | DRILL SEED (PERM) (URBAN) (CLAY) | M2 | 28459 |
| 247-5024 | FL BS (COMPL IN PLAC)(TY A GR 6 CL 4) | M3 | 5640 |
| 310-5006 | ASPH MATL (AE-P) | L | 7659 |
| * | ONE CRSE SURF TREAT | M2 | 13630 |
| 316-5028 | AGGR (TY PB, GR 4) | M3 | 124 |
| 316-5226 | ASPH (AC-15P, HFRS-2P OR CRS-2P) | L | 18537 |
| 529-5001 | CONC CURB (TY 1) | M | 522 |
| 530-5003 | DRVWAYS (ASPH- CONC PAV) | M2 | 127 |
| 540-5006 | MBGF (TIM POST) (2.67 MM) | M | 30.4 |
| 3117-5003 | HOT MIX (TY C) | MGR | 1274 |
| 3117-5018 | HOT MIX (TY C) (SURF) | MGR | 1211 |
| 5119-5003 | SINGLE GDRAIL TERM (TY III) | EA | 2 |

* FOR CONTRACTORS INFORMATION ONLY

NOTE(S):

ALL DIMENSIONS ARE IN METERS UNLESS OTHERWISE NOTED.

FOR HORIZONTAL ALIGNMENT / DATA, SEE SHEET(S) 164 -171.

FOR LIMITS OF SEEDING & TOPSOIL, SEE PROJECT X-SECTIONS AND TYPICAL SECTIONS.

(#) DRIVEWAY #, FOR MORE DETAILS SEE SHEET(S) 27, 28 & 336.

## UTILITY LEGEND

| | |
|---|---|
| — W — W — | WATER LINE |
| — T1 — T1 — | TELEPHONE LINE |
| — C — C — | CABLE LINE |
| — G1 — G1 — | GAS LINE |

LEVELS DISPLAYED
1 2 3 4 5 6 7 8 9 10 11 12 13 14 15 16
17 18 19 20 21 22 23 24 25 26 27 28 29 30 31 32
33 34 35 36 37 38 39 40 41 42 43 44 45 46 47 48
49 50 51 52 53 54 55 56 57 58 59 60 61 62 63

ACC: t:\oo\design\lp1604fm471-90\
FILE: plan10.dgn

STATE OF TEXAS
JOEL K. DAVENPORT, JR.
79276
REGISTERED
PROFESSIONAL ENGINEER

Joel K Davenport Jr. 11/1/00
Joel K. Davenport, Jr., P.E. 79276 Date

Texas Department of Transportation

# PLAN SHEET

SHEET 10 OF 57

| FED. RD. DIV. NO. | FEDERAL AID PROJECT NO. | | SHEET NO. |
|---|---|---|---|
| 6 | NH 2000(704), etc. | | 200 |
| STATE | DIST. | COUNTY | |
| TEXAS | SAT | BEXAR | |
| CONT. | SECT. | JOB | HIGHWAY NO. |
| 2452 | 01 | 036, etc. | LP 1604 |

QUANTITIES THIS SHEET
CSJ 2452-01-038

SCALE: 1:1000

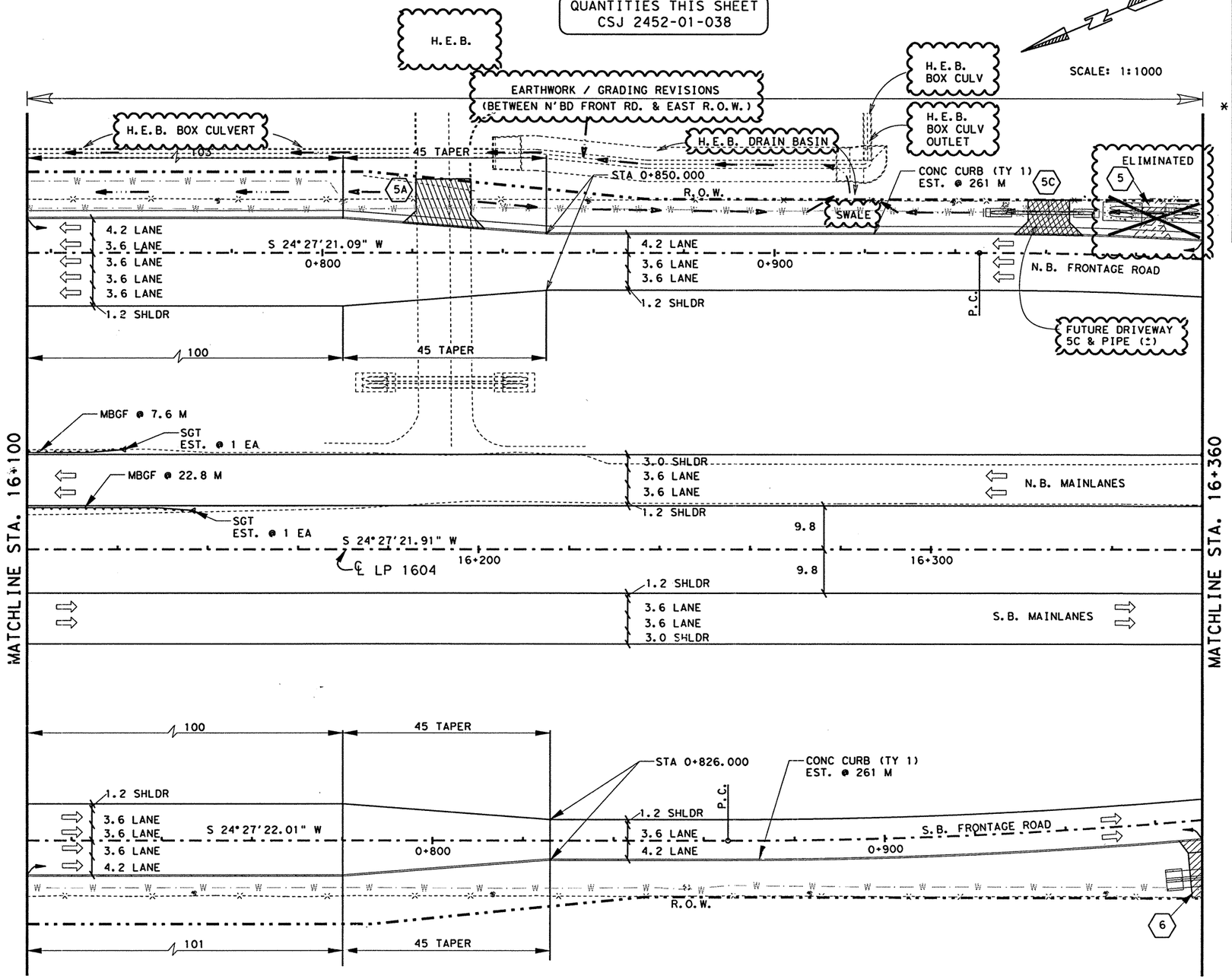


## ESTIMATED QUANTITIES

| ITEM # | ITEM | UNIT | QTY. |
|---|---|---|---|
| 100-5002 | PREP ROW | KM | 0.26 |
| 110-5001 | EXCAVATION (RDWY) | M3 | 9246 |
| 132-5018 | EMBANK (ORD COMP) (TY B) (CL 3) | M3 | 50346 |
| 160-5002 | FURN AND PLAC TPSL (CL 2) (150 MM) | M2 | 28459 |
| 164-5049 | DRILL SEED (PERM) (URBAN) (CLAY) | M2 | 28459 |
| 247-5024 | FL BS (COMPL IN PLAC)(TY A GR 6 CL 4) | M3 | 5640 |
| 310-5006 | ASPH MATL (AE-P) | L | 7659 |
| | ONE CRSE SURF TREAT | M2 | 13630 |
| 316-5028 | AGGR (TY PB, GR 4) | M3 | 124 |
| 316-5226 | ASPH (AC-15P, HFRS-2P OR CRS-2P) | L | 18537 |
| 529-5001 | CONC CURB (TY 1) | M | 522 |
| 530-5001 | DRIVEWAYS (CONC) (150MM) | M2 | 223 |
| 530-5003 | DRVWY (ASPH, CONC PAV) | M2 | 75 |
| 540-5006 | MBGF (TIM POST) (2.67 MM) | M | 30.4 |
| 3117-5003 | HOT MIX (TY C) | MGR | 1274 |
| 3117-5018 | HOT MIX (TY C) (SURF) | MGR | 1211 |
| 5119-5003 | SINGLE GDRAIL TERM (TY III) | EA | 2 |

* FOR CONTRACTORS INFORMATION ONLY

NOTE(S):

ALL DIMENSIONS ARE IN METERS UNLESS OTHERWISE NOTED.

FOR HORIZONTAL ALIGNMENT / DATA, SEE SHEET(S) 164 -171.

FOR LIMITS OF SEEDING & TOPSOIL, SEE PROJECT X-SECTIONS AND TYPICAL SECTIONS.

(#) DRIVEWAY # FOR MORE DETAILS SEE SHEET(S) 27B, 28B & 336B-C, ETC.

## UTILITY LEGEND

| | |
|---|---|
| — W — W — | WATER LINE |
| — T1 — T1 — | TELEPHONE LINE |
| — C — C — | CABLE LINE |
| — G1 — G1 — | GAS LINE |

CHANGE ORDER NO. 25

- ELIMINATED ORIGINAL DRIVEWAY #5 THIS SHEET
- ADDED NEW DRIVEWAY #5A (H.E.B.)
- ADDED FUTURE DRIVEWAY # 5C
- REVISED QUANTITIES

CHANGE ORDER 25

STATE OF TEXAS
JENNIFER L. MOCZYGEMBA
84734
REGISTERED PROFESSIONAL ENGINEER

Jennifer L. Moczygemba, P.E. 84734 — Date 5-29-02

©2002

Texas Department of Transportation

# PLAN SHEET

SHEET 10 OF 57

| FED.RD. DIV.NO. | FEDERAL AID PROJECT NO. | | SHEET NO. |
|---|---|---|---|
| 6 | NH 2000(704), etc. | | 200A |
| STATE | DIST. | COUNTY | |
| TEXAS | SAT | BEXAR | |
| CONT. | SECT. | JOB | HIGHWAY NO. |
| 2452 | 01 | 036, etc. | LP 1604 |


LEVELS DISPLAYED
1 2 3 4 5 6 7 8 9 10 11 12 13 14 15 16
17 18 19 20 21 22 23 24 25 26 27 28 29 30 31 32
33 34 35 36 37 38 39 40 41 42 43 44 45 46 47 48
49 50 51 52 53 54 55 56 57 58 59 60 61 62 63

ACC: t:\ao\design\lp1604fm471-90\
FILE: plan10.dgn

QUANTITIES THIS SHEET
CSJ 2452-01-038

SCALE: 1:1000

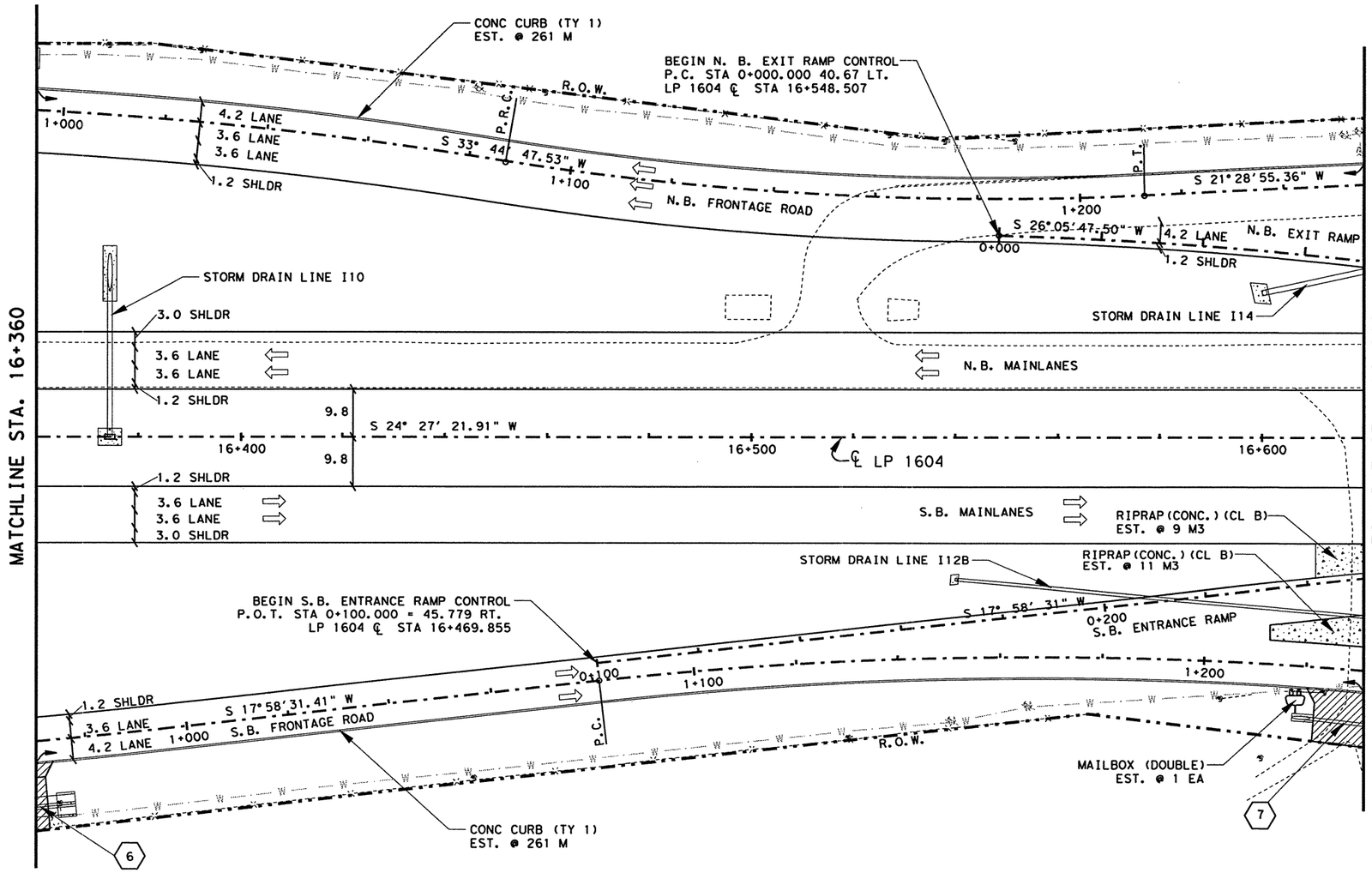


## ESTIMATED QUANTITIES

| | ITEM # | ITEM | UNIT | QTY. |
|---|---|---|---|---|
| | 100-5002 | PREP ROW | KM | 0.26 |
| | 110-5001 | EXCAVATION (RDWY) | M3 | 11478 |
| | 132-5018 | EMBANK (ORD COMP) (TY B) (CL 3) | M3 | 2629 |
| | 160-5002 | FURN AND PLAC TPSL (CL 2) (150 MM) | M2 | 17589 |
| | 164-5049 | DRILL SEED (PERM) (URBAN) (CLAY) | M2 | 17589 |
| | 247-5024 | FL BS (COMPL IN PLAC)(TY I GR 6 CL 4) | M3 | 5470 |
| | 310-5006 | ASPH MATL (AE-P) | L | 7239 |
| * | | ONE CRSE SURF TREAT | M2 | 13207 |
| | 316-5028 | AGGR (TY PB, GR 4) | M3 | 120 |
| | 316-5226 | ASPH (AC-15P, HFRS-2P OR CRS-2P) | L | 17962 |
| | 432-5001 | RIPRAP (CONC) (CL B) | M3 | 20 |
| | 529-5001 | CONC CURB (TY 1) | M | 522 |
| | 530-5003 | DRVWAYS (ASPH-CONC PAV) | M2 | 148 |
| | 560-5002 | INSTALL MAILBOX (DOUBLE) | EA | 1 |
| | 3117-5003 | HOT MIX (TY C) | MGR | 1234 |
| | 3117-5018 | HOT MIX (TY C) (SURF) | MGR | 1171 |

* FOR CONTRACTORS INFORMATION ONLY

NOTE(S):

ALL DIMENSIONS ARE IN METERS UNLESS OTHERWISE NOTED.

FOR HORIZONTAL ALIGNMENT / DATA, SEE SHEET(S) 164 - 171.

FOR LIMITS OF SEEDING & TOPSOIL, SEE PROJECT X-SECTIONS AND TYPICAL SECTIONS.

FOR ADDITIONAL STORM DRAIN INFO. REFER TO THE SPECIFIC STORM DRAIN PROFILE SHEET(S).

(#) DRIVEWAY #, FOR MORE DETAILS SEE SHEET(S) 27, 28 & 336.

FOR RIPRAP DETAILS SEE PROJECT X-SECTIONS AND SHEET(S) 342.

FOR RIPRAP ASSOCIATED WITH STORM DRAINAGE STRUCTURES SEE SHEET(S) 454 - 470.

## UTILITY LEGEND

| | |
|---|---|
| — W — W — | WATER LINE |
| — T1 — T1 — | TELEPHONE LINE |
| — C — C — | CABLE LINE |
| — G1 — G1 — | GAS LINE |

LEVELS DISPLAYED
1 2 3 4 5 6 7 8 9 10 11 12 13 14 15 16
17 18 19 20 21 22 23 24 25 26 27 28 29 30 31 32
33 34 35 36 37 38 39 40 41 42 43 44 45 46 47 48
49 50 51 52 53 54 55 56 57 58 59 60 61 62 63

ACC: t:\ao\design\lp1604fm471-90\
FILE: plan11.dgn

STATE OF TEXAS
JOEL K. DAVENPORT, JR.
79276
REGISTERED PROFESSIONAL ENGINEER

Joel K. Davenport Jr. 11/1/00
Joel K. Davenport, Jr. P.E. 79276 Date

©2000 Texas Department of Transportation

# PLAN SHEET

SHEET 11 OF 57

| FED. RD. DIV. NO. | FEDERAL AID PROJECT NO. | | SHEET NO. |
|---|---|---|---|
| 6 | NH 2000(704), etc. | | 201 |
| STATE | DIST. | COUNTY | |
| TEXAS | SAT | BEXAR | |
| CONT. | SECT. | JOB | HIGHWAY NO. |
| 2452 | 01 | 036, etc. | LP 1604 |

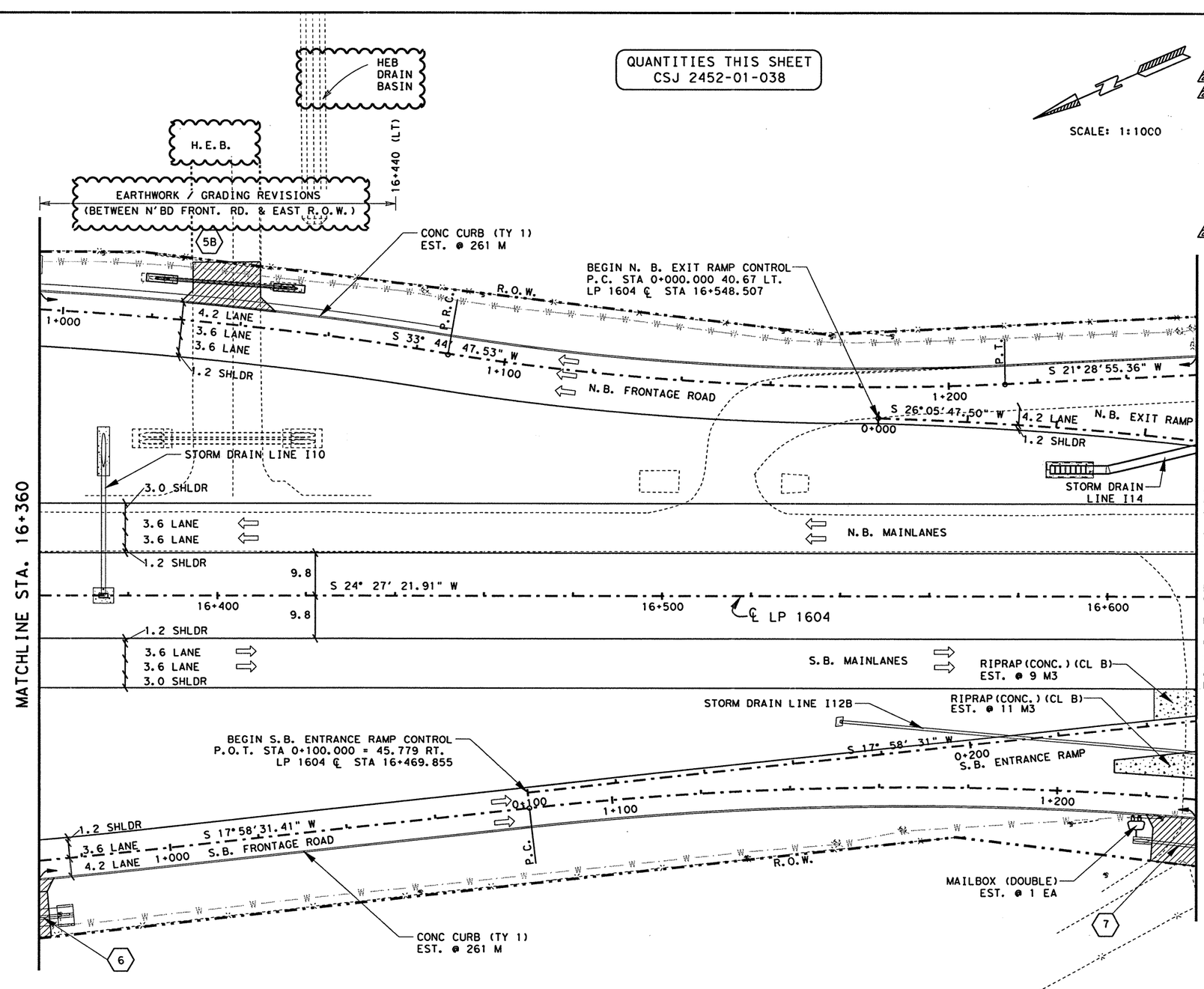


## ESTIMATED QUANTITIES

| ITEM # | ITEM | UNIT | QTY. |
|---|---|---|---|
| 100-5002 | PREP ROW | KM | 0.26 |
| 25 110-5001 | EXCAVATION (RDWY) | M3 | 11936 |
| 25 132-5018 | EMBANK (ORD COMP) (TY B) (CL 3) | M3 | 2703 |
| 160-5002 | FURN AND PLAC (PSL (CL 2) (150 MM) | M2 | 17589 |
| 164-5049 | DRILL SEED (PERM) (URBAN) (CLAY) | M2 | 17589 |
| 247-5024 | FL BS (COMPL IN PLACE) (TY GR 6 CL 4) | M3 | 5470 |
| 310-5006 | ASPH MATL (AE-P) | L | 7239 |
| * | ONE CRSE SURF TREAT | M2 | 13207 |
| 316-5028 | AGGR (TY PB, GR 4) | M3 | 120 |
| 316-5226 | ASPH (AC-15P, HFRS-2P OR CRS-2P) | L | 17962 |
| 432-5001 | RIPRAP (CONC) (CL B) | M3 | 20 |
| 528-5001 | CONC CURB (TY 1) | M | 522 |
| 25 530-5001 | DRVWAYS (CONC) (150MM) | M2 | 166 |
| 530-5003 | DRVWAYS (ASPH-CONC PAV) | M2 | 148 |
| 560-5002 | INSTALL MAILBOX (DOUBLE) | EA | 1 |
| 3117-5003 | HOT MIX (TY C) | MGR | 1234 |
| 3117-5018 | HOT MIX (TY C) (SURF) | MGR | 1171 |

* FOR CONTRACTORS INFORMATION ONLY

NOTE(S):

ALL DIMENSIONS ARE IN METERS UNLESS OTHERWISE NOTED.

FOR HORIZONTAL ALIGNMENT / DATA, SEE SHEET(S) 164 - 171.

FOR LIMITS OF SEEDING & TOPSOIL, SEE PROJECT X-SECTIONS AND TYPICAL SECTIONS.

FOR ADDITIONAL STORM DRAIN INFO. REFER TO THE SPECIFIC STORM DRAIN PROFILE SHEET(S).

(#) DRIVEWAY #. FOR MORE DETAILS SEE SHEET(S) 27A, 28B & 336D-E.

FOR RIPRAP DETAILS SEE PROJECT X-SECTIONS AND SHEET(S) 342.

FOR RIPRAP ASSOCIATED WITH STORM DRAINAGE STRUCTURES SEE SHEET(S) 454 - 470.

25 CHANGE ORDER NO. 25
(THE INSTALLATION OF THE H.E.B. DRIVEWAYS (DRVY 5A, 5B &8A))

## UTILITY LEGEND

| | |
|---|---|
| — W — · — W — · — | WATER LINE |
| — T1 — — — T1 — — — | TELEPHONE LINE |
| ——— C ——·—— C —— | CABLE LINE |
| — · · — G1 — · · — G1 — · · | GAS LINE |

## CHANGE ORDER NO. 25

-ADDED NEW DRIVEWAY #5B (HEB)
-REVISED QUANTITIES.

CHANGE ORDER 25

FOR

STATE OF TEXAS
JENNIFER L. MOCZYGEMBA
84734
REGISTERED
PROFESSIONAL ENGINEER

Jennifer L. Moczygemba P.E. 84734 — 5-29-02 Date

©2002

Texas Department of Transportation

# PLAN SHEET

SHEET 11 OF 57

| FED. RD. DIV. NO. | FEDERAL AID PROJECT NO. | SHEET NO. |
|---|---|---|
| 6 | NH 2000(704), etc. | 201A |
| STATE | DIST. | COUNTY |
| TEXAS | SAT | BEXAR |
| CONT. | SECT. | JOB | HIGHWAY NO. |
| 2452 | 01 | 036, etc. | LP 1604 |

LEVELS DISPLAYED
1 2 3 4 5 6 7 8 9 10 11 12 13 14 15 16
17 18 19 20 21 22 23 24 25 26 27 28 29 30 31 32
33 34 35 36 37 38 39 40 41 42 43 44 45 46 47 48
49 50 51 52 53 54 55 56 57 58 59 60 61 62 63

ACC: t:\oo\design\lp1604fm471-90\
FILE: plan11.dgn

QUANTITIES THIS SHEET
CSJ 2452-01-038

SCALE: 1:1000

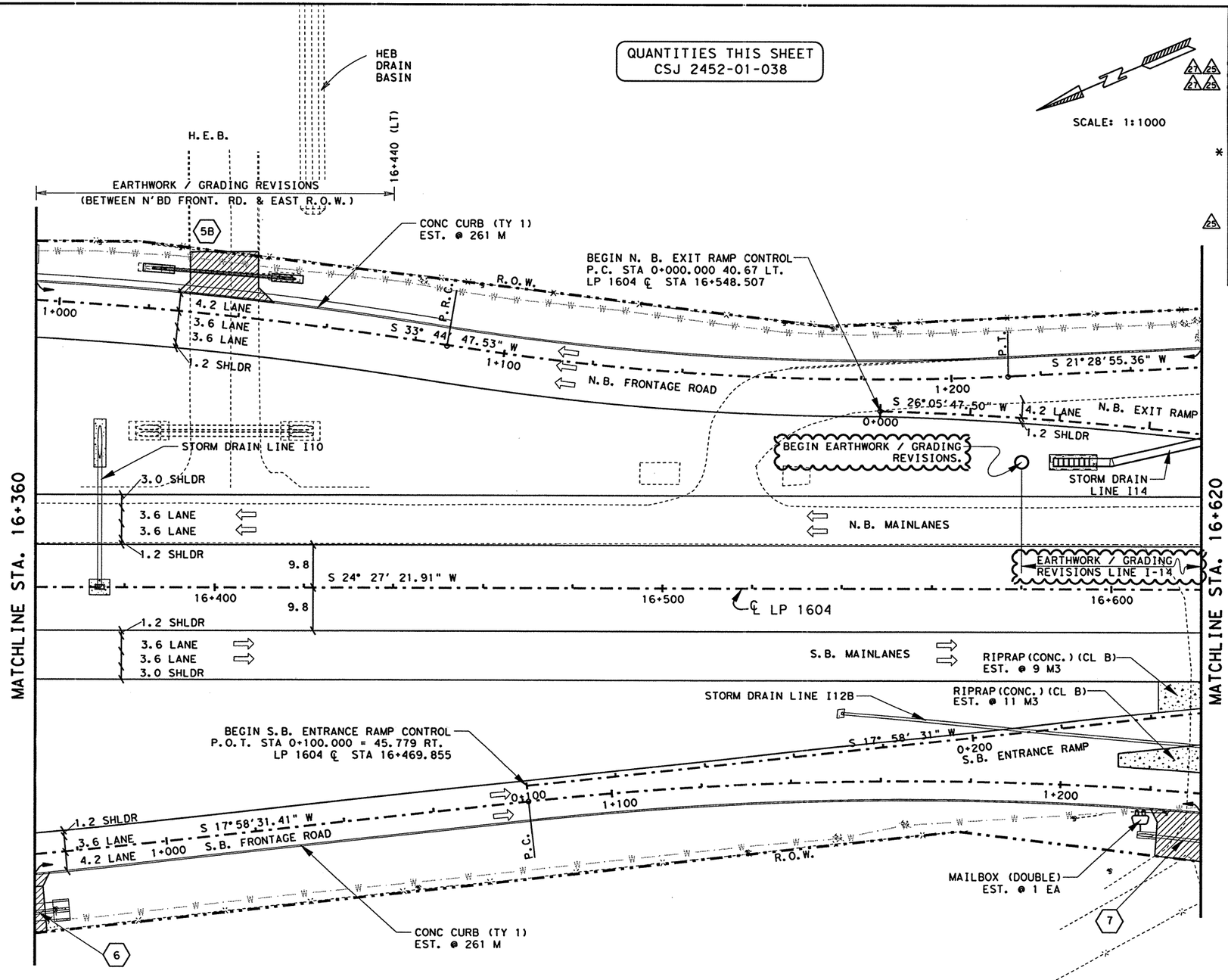


## ESTIMATED QUANTITIES

| ITEM # | ITEM | UNIT | QTY. |
|---|---|---|---|
| 100-5002 | PREP ROW | KM | 0.26 |
| 110-5001 | EXCAVATION (RDWY) | M3 | 11696 |
| 132-5018 | EMBANK (ORD COMP) (TY B) (CL 3) | M3 | 2716 |
| 160-5002 | FURN AND PLAC TPSL (CL 2) (150 MM) | M2 | 17589 |
| 164-5049 | DRILL SEED (PERM) (URBAN) (CLAY) | M2 | 17589 |
| 247-5024 | FL BS (COMPL IN PLAC)(TY IGR 6 CL 4) | M3 | 5470 |
| 310-5006 | ASPH MATL (AE-P) | L | 7239 |
| * | ONE CRSE SURF TREAT | M2 | 13207 |
| 316-5028 | AGGR (TY PB, GR 4) | M3 | 120 |
| 316-5226 | ASPH (AC-15P, HFRS-2P OR CRS-2P) | L | 17962 |
| 432-5001 | RIPRAP (CONC) (CL B) | M3 | 20 |
| 529-5001 | CONC CURB (TY 1) | M | 522 |
| 530-5001 | DRVWAYS (CONC) (150MM) | M2 | 166 |
| 530-5003 | DRVWAYS (ASPH-CONC PAV) | M2 | 148 |
| 560-5002 | INSTALL MAILBOX (DOUBLE) | EA | 1 |
| 3117-5003 | HOT MIX (TY C) | MGR | 1234 |
| 3117-5018 | HOT MIX (TY C) (SURF) | MGR | 1171 |

* FOR CONTRACTORS INFORMATION ONLY

NOTE(S):

ALL DIMENSIONS ARE IN METERS UNLESS OTHERWISE NOTED.

FOR HORIZONTAL ALIGNMENT / DATA, SEE SHEET(S) 164 - 171.

FOR LIMITS OF SEEDING & TOPSOIL, SEE PROJECT X-SECTIONS AND TYPICAL SECTIONS.

FOR ADDITIONAL STORM DRAIN INFO. REFER TO THE SPECIFIC STORM DRAIN PROFILE SHEET(S).

(#) DRIVEWAY #, FOR MORE DETAILS SEE SHEET(S) 27, 28 & 336.

FOR RIPRAP DETAILS SEE PROJECT X-SECTIONS AND SHEET(S) 342.

FOR RIPRAP ASSOCIATED WITH STORM DRAINAGE STRUCTURES SEE SHEET(S) 454 - 470.

△25 CHANGE ORDER NO. 25
(THE INSTALLATION OF THE H.E.B. DRIVEWAYS (DRVY 5A, 5B &8A))

△27 CHANGE ORDER NO. 27
(ADJUSTMENT TO LINE I-14)

FOR CHANGE ORDER 27

## UTILITY LEGEND

| | |
|---|---|
| — W — W — | WATER LINE |
| — T1 — T1 — | TELEPHONE LINE |
| — C — C — | CABLE LINE |
| — G1 — G1 — | GAS LINE |

## CHANGE ORDER NO. 27

- UPDATED VIEW TO SHOW REVISED LINE I-14.
- UPDATED EARTHWORK / GRADING ASSOCIATED WITH REVISED LINE I-14.
- REVISED EARTHWORK QUANTITIES.

STATE OF TEXAS
JENNIFER L. MCCYGEMBA
84734
REGISTERED PROFESSIONAL ENGINEER

Jennifer L. Mcczygemba, P.E. 84734 — P.E. — 5-30-02 Date

©2002
Texas Department of Transportation

# PLAN SHEET

SHEET 11 OF 57

| FED. RD. DIV. NO. | FEDERAL AID PROJECT NO. | SHEET NO. |
|---|---|---|
| 6 | NH 2000(704), etc. | 201 |
| STATE | DIST. | COUNTY |
| TEXAS | SAT | BEXAR |
| CONT. | SECT. | JOB / HIGHWAY NO. |
| 2452 | 01 | 036, etc. / LP 1604 |

05-07-02

LEVELS DISPLAYED
1 2 3 4 5 6 7 8 9 10 11 12 13 14 15 16
17 18 19 20 21 22 23 24 25 26 27 28 29 30 31 32
33 34 35 36 37 38 39 40 41 42 43 44 45 46 47 48
49 50 51 52 53 54 55 56 57 58 59 60 61 62 63

ACC: t:\ao\design\lp1604fm471-90\
FILE: plan11.dgn

QUANTITIES THIS SHEET
CSJ 2452-01-038

SCALE: 1:1000

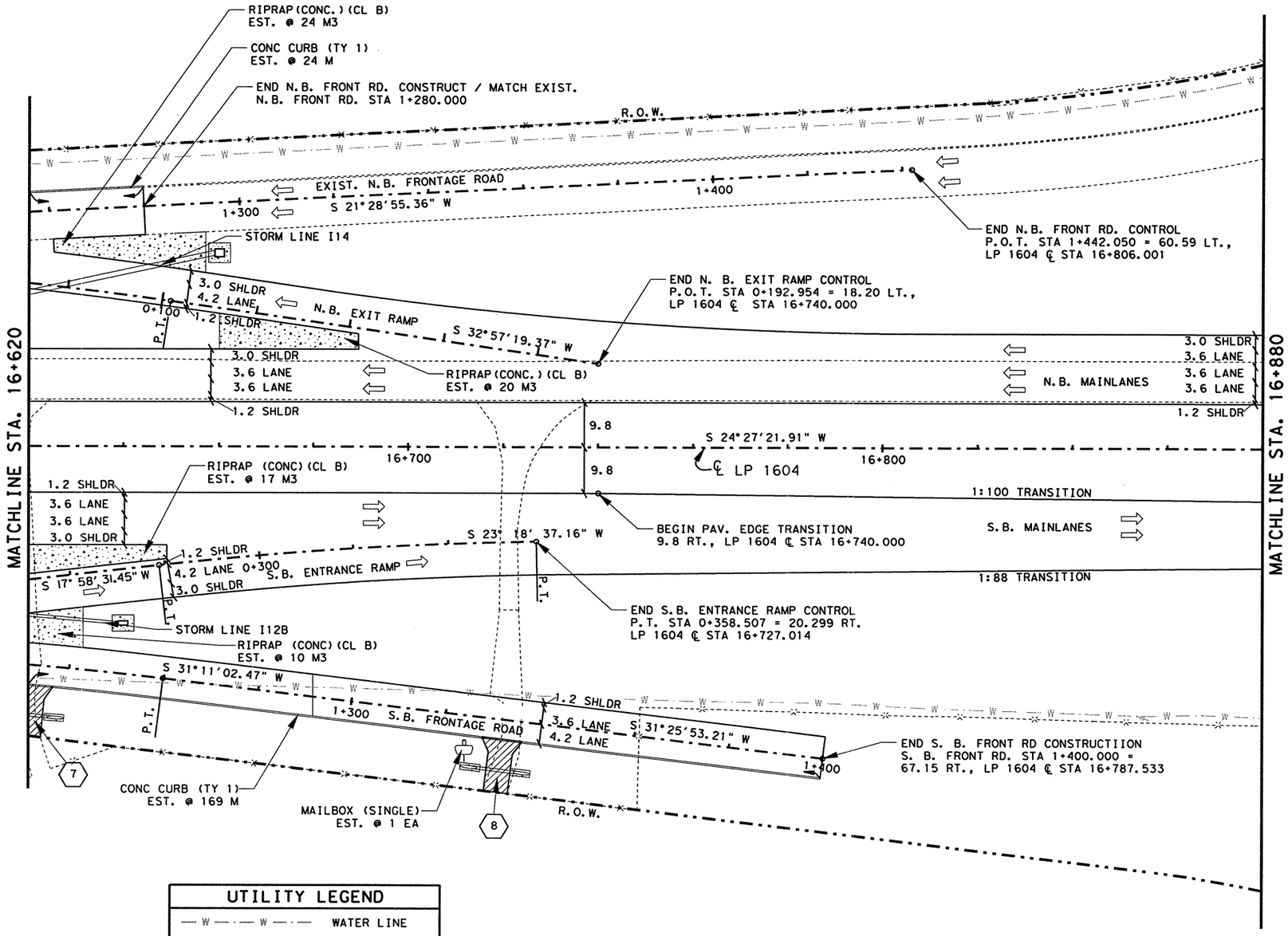


## UTILITY LEGEND

| | |
|---|---|
| W W | WATER LINE |
| T1 T1 | TELEPHONE LINE |
| C C | CABLE LINE |
| G1 G1 | GAS LINE |

## ESTIMATED QUANTITIES

| ITEM # | ITEM | UNIT | QTY. |
|---|---|---|---|
| 100-5002 | PREP ROW | KM | 0.26 |
| 110-5001 | EXCAVATION (RDWY) | M3 | 29631 |
| 132-5018 | EMBANK (ORD COMP) (TY B) (CL 3) | M3 | 502 |
| 160-5002 | FURN AND PLAC TPSL (CL 2) (150 MM) | M2 | 18929 |
| 164-5049 | DRILL SEED (PERM) (URBAN) (CLAY) | M2 | 18929 |
| 247-5024 | FL BS (COMPL IN PLAC)(TY A GR 6 CL 4) | M3 | 4733 |
| 310-5006 | ASPH MATL (AE-P) | L | 5364 |
| | ONE CRSE SURF TREAT | M2 | 11464 |
| 316-5028 | AGGR (TY PB, GR 4) | M3 | 104 |
| 316-5226 | ASPH (AC-15P, HFRS-2P OR CRS-2P) | L | 15591 |
| 432-5001 | RIPRAP (CONC) (CL B) | M3 | 71 |
| 529-5001 | CONC CURB (TY 1) | M | 193 |
| 530-5003 | DRVWAYS (ASPH-CONC PAV) | M2 | 103 |
| 560-5001 | MAILBOX INSTALL (SINGLE) | EA | 1 |
| 3117-5003 | HOT MIX (TY C) | MGR | 1075 |
| 3117-5018 | HOT MIX (TY C) (SURF) | MGR | 1027 |

*FOR CONTRACTORS INFORMATION ONLY

NOTE(S):

ALL DIMENSIONS ARE IN METERS UNLESS OTHERWISE NOTED.

FOR HORIZONTAL ALIGNMENT / DATA, SEE SHEET(S) 164 - 171.

FOR LIMITS OF SEEDING & TOPSOIL, SEE PROJECT X-SECTIONS AND TYPICAL SECTIONS.

FOR ADDITIONAL STORM DRAIN INFO. REFER TO THE SPECIFIC STORM DRAIN PROFILE SHEET(S).

(#) DRIVEWAY #, FOR MORE DETAILS SEE SHEET(S) 27, 28 & 336.

FOR RIPRAP DETAILS SEE PROJECT X-SECTIONS AND SHEET(S) 342.

FOR RIPRAP ASSOCIATED WITH STORM DRAINAGE STRUCTURES SEE SHEET(S) 454 - 470.

STATE OF TEXAS
JOEL K. DAVENPORT, JR.
79276
REGISTERED PROFESSIONAL ENGINEER

Joel K. Davenport, Jr. 11/1/00
Joel K. Davenport, Jr. P.E. 79276 Date


LEVELS DISPLAYED
1 2 3 4 5 6 7 8 9 10 11 12 13 14 15 16
17 18 19 20 21 22 23 24 25 26 27 28 29 30 31 32
33 34 35 36 37 38 39 40 41 42 43 44 45 46 47 48
49 50 51 52 53 54 55 56 57 58 59 60 61 62 63
ACC: ↑↑ao\design\lp1604fm471-90\
FILE: plan12.dgn



©2000 Texas Department of Transportation


# PLAN SHEET

SHEET 12 OF 57

| FED.RD. DIV.NO. | FEDERAL AID PROJECT NO. | | SHEET NO. |
|---|---|---|---|
| 6 | NH 2000(704), etc. | | 202 |
| STATE | DIST. | COUNTY | |
| TEXAS | SAT | BEXAR | |
| CONT. | SECT. | JOB | HIGHWAY NO. |
| 2452 | 01 | 036, etc. | LP 1604 |

QUANTITIES THIS SHEET
CSJ 2452-01-038

CHANGE ORDER NO. 14
-UPDATED PLAN VIEW ON THIS SHEET

SCALE: 1:1000

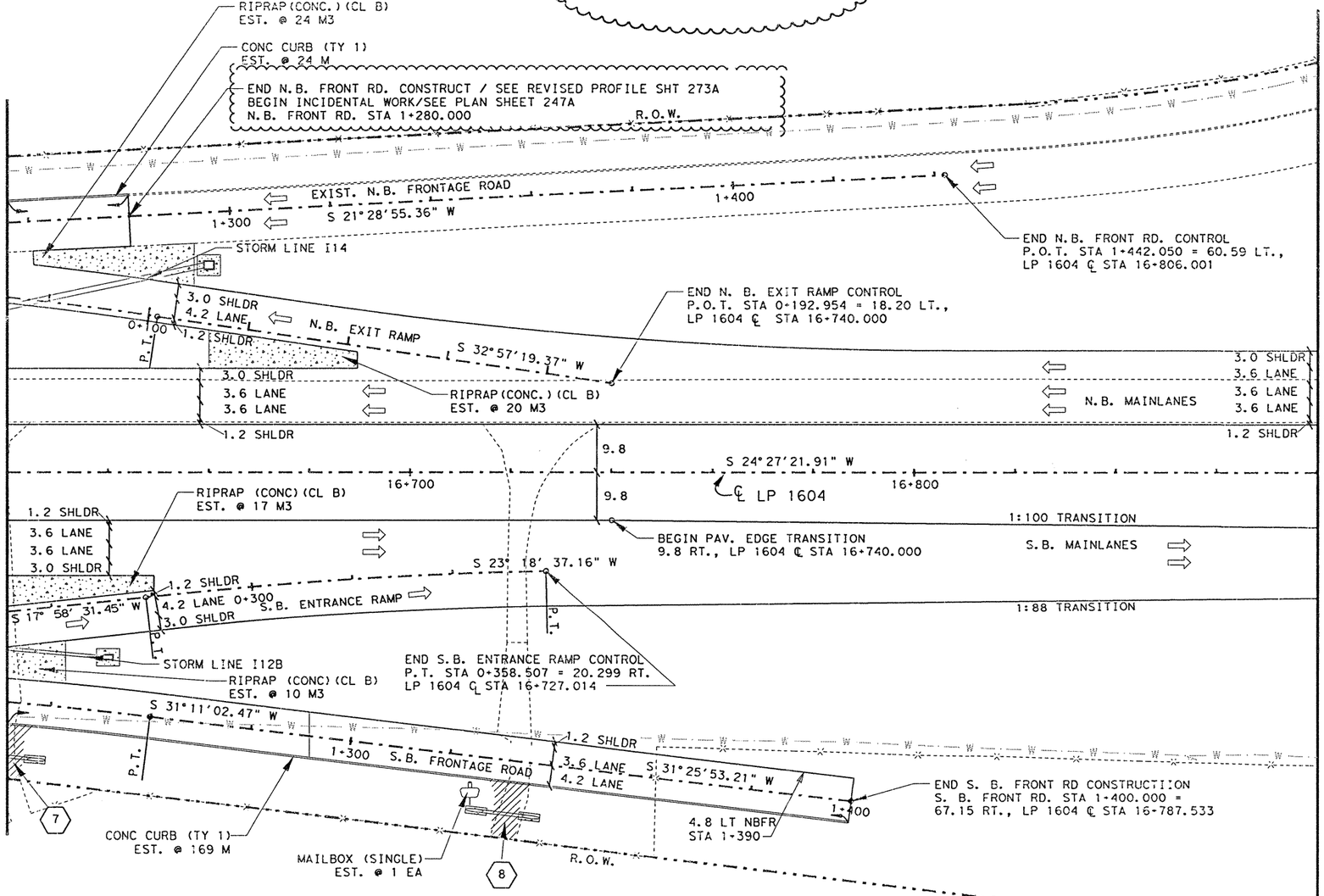


## ESTIMATED QUANTITIES

| ITEM # | ITEM | UNIT | QTY. |
|---|---|---|---|
| 100-5002 | PREP ROW | KM | 0.26 |
| 110-5001 | EXCAVATION (RDWY) | M3 | 29631 |
| 132-5018 | EMBANK (ORD COMP) (TY B) (CL 3) | M3 | 502 |
| 160-5002 | FURN AND PLAC TPSL (CL 2) (150 MM) | M2 | 18929 |
| 164-5049 | DRILL SEED (PERM) (URBAN) (CLAY) | M2 | 18929 |
| 247-5024 | FL BS (COMPL IN PLAC) (TY A GR 6 CL 4) | M3 | 4733 |
| 310-5006 | ASPH MATL (AE-P) | L | 5364 |
| * | ONE CRSE SURF TREAT | M2 | 11464 |
| 316-5028 | AGGR (TY PB, GR 4) | M3 | 104 |
| 316-5226 | ASPH (AC-15P, HFRS-2P OR CRS-2P) | L | 15591 |
| 432-5001 | RIPRAP (CONC) (CL B) | M3 | 71 |
| 529-5001 | CONC CURB (TY 1) | M | 193 |
| 530-5003 | DRVWAYS (ASPH-CONC PAV) | M2 | 103 |
| 560-5001 | MAILBOX INSTALL (SINGLE) | EA | 1 |
| 3117-5003 | HOT MIX (TY C) | MGR | 1075 |
| 3117-5018 | HOT MIX (TY C) (SURF) | MGR | 1027 |

*FOR CONTRACTORS INFORMATION ONLY

NOTE(S):

ALL DIMENSIONS ARE IN METERS UNLESS OTHERWISE NOTED.

FOR HORIZONTAL ALIGNMENT / DATA, SEE SHEET(S) 164 - 171.

FOR LIMITS OF SEEDING & TOPSOIL, SEE PROJECT X-SECTIONS AND TYPICAL SECTIONS.

FOR ADDITIONAL STORM DRAIN INFO. REFER TO THE SPECIFIC STORM DRAIN PROFILE SHEET(S).

(#) DRIVEWAY #, FOR MORE DETAILS SEE SHEET(S) 27, 28 & 336.

FOR RIPRAP DETAILS SEE PROJECT X-SECTIONS AND SHEET(S) 342.

FOR RIPRAP ASSOCIATED WITH STORM DRAINAGE STRUCTURES SEE SHEET(S) 454 - 470.

## UTILITY LEGEND

| | |
|---|---|
| — W — W — | WATER LINE |
| — T1 — T1 — | TELEPHONE LINE |
| — C — C — | CABLE LINE |
| — G1 — G1 — | GAS LINE |

CHANGE ORDER 14

STATE OF TEXAS
TERRY G. McCOY
75016
REGISTERED
PROFESSIONAL ENGINEER

Terry G. McCoy 1-17-02
Terry G. McCoy, P.E. Date
FOR CO # 14 ONLY

©2000
Texas Department of Transportation

PLAN SHEET
SHEET 12 OF 57

| FED.RD. DIV.NO. | FEDERAL AID PROJECT NO. | | SHEET NO. |
|---|---|---|---|
| 6 | NH 2000(704), etc. | | 202A |
| STATE | DIST. | COUNTY | |
| TEXAS | SAT | BEXAR | |
| CONT. | SECT. | JOB | HIGHWAY NO. |
| 2452 | 01 | 036, etc. | LP 1604 |

1-15-02

LEVELS DISPLAYED
1 2 3 4 5 6 7 8 9 10 11 12 13 14 15 16
17 18 19 20 21 22 23 24 25 26 27 28 29 30 31 32
33 34 35 36 37 38 39 40 41 42 43 44 45 46 47 48
50 51 52 53 54 55 56 57 58 59 60 61

ACC: t:\eo\design\lp1604fm471-90\
FILE: plan12.dgn

QUANTITIES THIS SHEET
CSJ 2452-01-038

SCALE: 1:1000

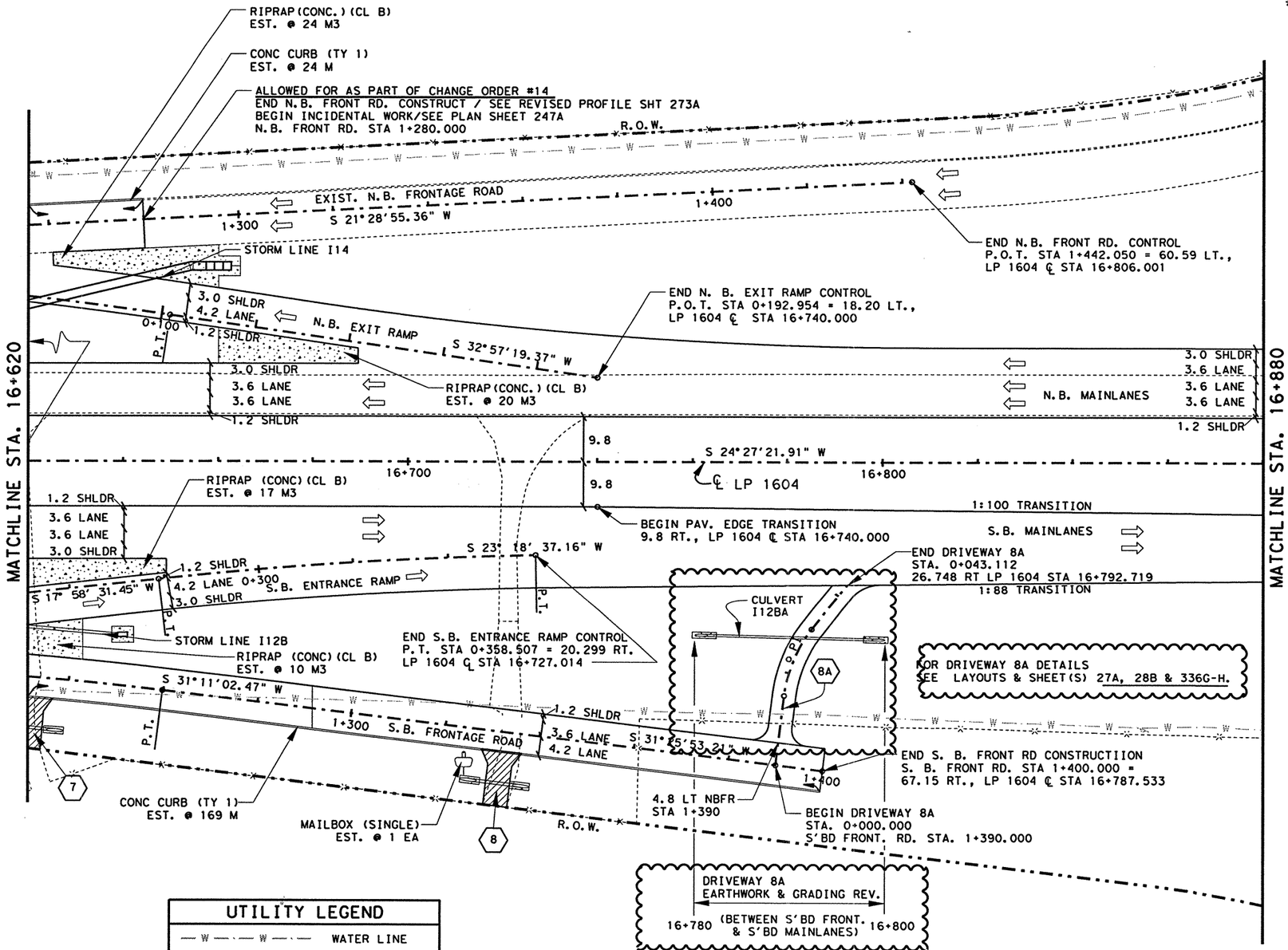


## UTILITY LEGEND

- W — W — WATER LINE
- T1 — T1 — TELEPHONE LINE
- C — C — CABLE LINE
- G1 — G1 — GAS LINE

## CHANGE ORDER NO. 25

- ADDED DRIVEWAY 8A AND ASSOCIATED PIPE CULVERT
- REVISED QUANTITIES

## ESTIMATED QUANTITIES

| ITEM # | ITEM | UNIT | QTY. |
|---|---|---|---|
| ~~100-5002~~ | ~~PREP ROW~~ | ~~KM~~ | ~~0.26~~ |
| ~~110-5001~~ | ~~EXCAVATION (RDWY)~~ 11342 | ~~M3~~ | ~~20282~~ |
| 132-5018 | EMBANK (ORD COMP) (TY B) (CL 3) | M3 | 503 |
| 160-5002 | FURN AND PLAC TPSL (CL 2) (150 MM) | M2 | 18929 |
| 164-5049 | DRILL SEED (PERM) (URBAN) (CLAY) | M2 | 18929 |
| 247-5024 | FL BS (COMPL IN PLAC) (TY A GR 6 CL 4) | M3 | 4733 |
| 310-5006 | ASPH MATL (AE-P) | L | 5364 |
| | ONE CRSE SURF TREAT | M2 | 11464 |
| 316-5028 | AGGR (TY PB, GR 4) | M3 | 104 |
| 316-5226 | ASPH (AC-15P, HFRS-2P OR CRS-2P) | L | 15591 |
| 432-5001 | RIPRAP (CONC) (CL B) | M3 | 71 |
| ~~529-5001~~ | ~~CONC CURB (TY 1)~~ | ~~M~~ | ~~193~~ |
| 530-5003 | DRVWAYS (ASPH-CONC PAV) | M2 | 302 |
| ~~560-5001~~ | ~~MAILBOX INSTALL (SINGLE)~~ | ~~EA~~ | ~~1~~ |
| 3117-5003 | HOT MIX (TY C) | MGR | 1075 |
| 3117-5018 | HOT MIX (TY C) (SURF) | MGR | 1027 |

*FOR CONTRACTORS INFORMATION ONLY

NOTE(S):

ALL DIMENSIONS ARE IN METERS UNLESS OTHERWISE NOTED.

FOR HORIZONTAL ALIGNMENT / DATA, SEE SHEET(S) 164 - 171.

FOR LIMITS OF SEEDING & TOPSOIL, SEE PROJECT X-SECTIONS AND TYPICAL SECTIONS.

FOR ADDITIONAL STORM DRAIN INFO. REFER TO THE SPECIFIC STORM DRAIN PROFILE SHEET(S).

(#) DRIVEWAY #, FOR MORE DETAILS SEE SHEET(S) 27B, 28B & 336G-H.

FOR RIPRAP DETAILS SEE PROJECT X-SECTIONS AND SHEET(S) 342.

FOR RIPRAP ASSOCIATED WITH STORM DRAINAGE STRUCTURES SEE SHEET(S) 454 - 470.

REVISED SHEET

CHANGE ORDER 25

STATE OF TEXAS
JENNIFER L. MOCZYGEMBA
84734
REGISTERED
PROFESSIONAL ENGINEER

Jennifer L. Moczygemba, P.E. 84734 — 7-15-02 Date

Texas Department of Transportation

PLAN SHEET

SHEET 12 OF 57

| FED. RD. DIV. NO. | FEDERAL AID PROJECT NO. | | SHEET NO. |
|---|---|---|---|
| 6 | NH 2000(704), etc. | | 202B |
| STATE | DIST. | COUNTY | |
| TEXAS | SAT | BEXAR | |
| CONT. | SECT. | JOB | HIGHWAY NO. |
| 2452 | 01 | 036, etc. | LP 1604 |

LEVELS DISPLAYED
1 2 3 4 5 6 7 8 9 10 11 12 13 14 15 16 17 18 19 20 21 22 23 24 25 26 27 28 29 30 31 32 33 34 35 36 37 38 39 40 41 42 43 44 45 46 47 48 49 50 51 52 53 54 55 56 57 58 59 60 61 62 63

ACC: t:\govdesign\lp1604fm471-90\
FILE: plan12.dgn

QUANTITIES THIS SHEET
CSJ 2452-01-038

SCALE: 1:1000

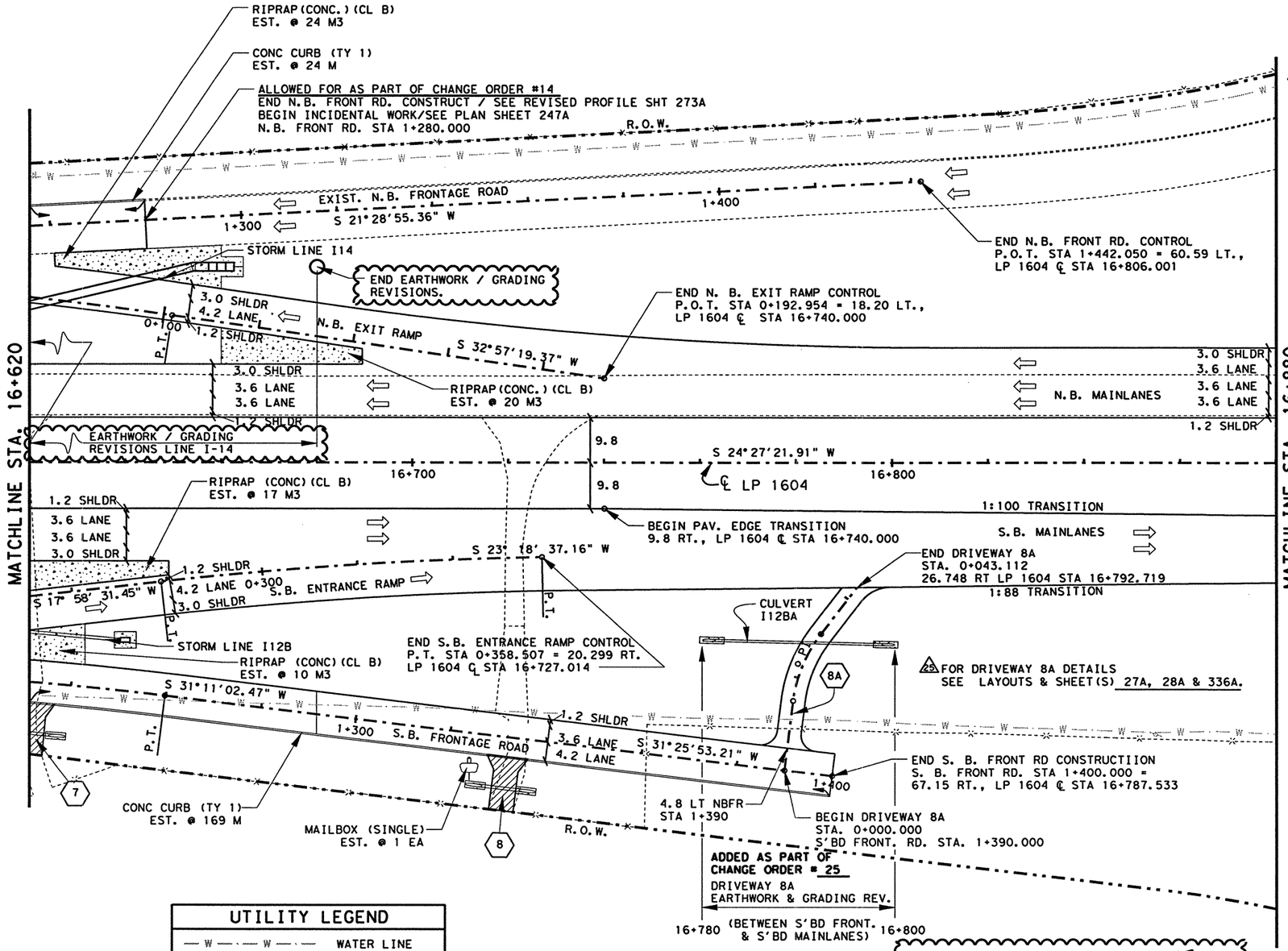


## ESTIMATED QUANTITIES

| ITEM # | ITEM | UNIT | QTY. |
|---|---|---|---|
| ~~100-5002~~ | ~~PREP ROW~~ | ~~KM~~ | ~~0.26~~ |
| 110-5001 | EXCAVATION (RDWY) ~~24311~~ 46057 | M3 | ~~27629~~ |
| 132-5018 | EMBANK (ORD COMP) (TY B) (CL 3) | M3 | 503 |
| 160-5002 | FURN AND PLAC TPSL (CL 2) (150 MM) | M2 | 18929 |
| 164-5049 | DRILL SEED (PERM) (URBAN) (CLAY) | M2 | 18929 |
| 247-5024 | FL BS (COMPL IN PLAC) (TY A GR 6 CL 4) | M3 | 4733 |
| 310-5006 | ASPH MATL (AE-P) | L | 5364 |
| * | ONE CRSE SURF TREAT | M2 | 11464 |
| 316-5028 | AGGR (TY PB, GR 4) | M3 | 104 |
| 316-5226 | ASPH (AC-15P, HFRS-2P OR CRS-2P) | L | 15591 |
| 432-5001 | RIPRAP (CONC) (CL B) | M3 | 71 |
| 529-5001 | CONC CURB (TY 1) | M | 193 |
| 530-5003 | DRVWAYS (ASPH-CONC PAV) | M2 | 302 |
| 560-5001 | MAILBOX INSTALL (SINGLE) | EA | 1 |
| 3117-5003 | HOT MIX (TY C) | MGR | 1075 |
| 3117-5018 | HOT MIX (TY C) (SURF) | MGR | 1027 |

*FOR CONTRACTORS INFORMATION ONLY

NOTE(S):

ALL DIMENSIONS ARE IN METERS UNLESS OTHERWISE NOTED.

FOR HORIZONTAL ALIGNMENT / DATA, SEE SHEET(S) 164 - 171.

FOR LIMITS OF SEEDING & TOPSOIL, SEE PROJECT X-SECTIONS AND TYPICAL SECTIONS.

FOR ADDITIONAL STORM DRAIN INFO. REFER TO THE SPECIFIC STORM DRAIN PROFILE SHEET(S).

(#) DRIVEWAY #, FOR MORE DETAILS SEE SHEET(S) 27, 28 & 336.

FOR RIPRAP DETAILS SEE PROJECT X-SECTIONS AND SHEET(S) 342.

FOR RIPRAP ASSOCIATED WITH STORM DRAINAGE STRUCTURES SEE SHEET(S) 454 - 470.

△25 CHANGE ORDER NO. 25
(THE INSTALLATION OF THE H.E.B. DRIVEWAYS (DRVY 5A,5B &8A))

△27 CHANGE ORDER NO. 27
(ADJUSTMENT TO LINE I-14)

CHANGE ORDER 27

STATE OF TEXAS
JENNIFER L. MOCZYGEMBA
84734
REGISTERED PROFESSIONAL ENGINEER

Jennifer L. Moczygemba, P.E. 84734 — P.E. — 5-30-02 Date

## UTILITY LEGEND

| | |
|---|---|
| — W — W — | WATER LINE |
| — T1 — T1 — | TELEPHONE LINE |
| — C — C — | CABLE LINE |
| — G1 — G1 — | GAS LINE |

## CHANGE ORDER NO. 27

- UPDATED VIEW TO SHOW REVISED LINE I-14.
- UPDATED EARTHWORK / GRADING ASSOCIATED WITH REVISED LINE I-14.
- REVISED EARTHWORK QUANTITIES.

Texas Department of Transportation

# PLAN SHEET

SHEET 12 OF 57

| FED.RD. DIV. NO. | FEDERAL AID PROJECT NO. | | SHEET NO. |
|---|---|---|---|
| 6 | NH 2000(704), etc. | | 202 |
| STATE | DIST. | COUNTY | |
| TEXAS | SAT | BEXAR | |
| CONT. | SECT. | JOB | HIGHWAY NO. |
| 2452 | 01 | 036, etc. | LP 1604 |

LEVELS DISPLAYED
1 2 3 4 5 6 7 8 9 10 11 12 13 14 15 16
17 18 19 20 21 22 23 24 25 26 27 28 29 30 31 32
33 34 35 36 37 38 39 40 41 42 43 44 45 46 47 48
49 50 51 52 53 54 55 56 57 58 59 60 61 62 63

ACC: t:\ao\design\p1604fm471-90\
FILE: plan12.dgn

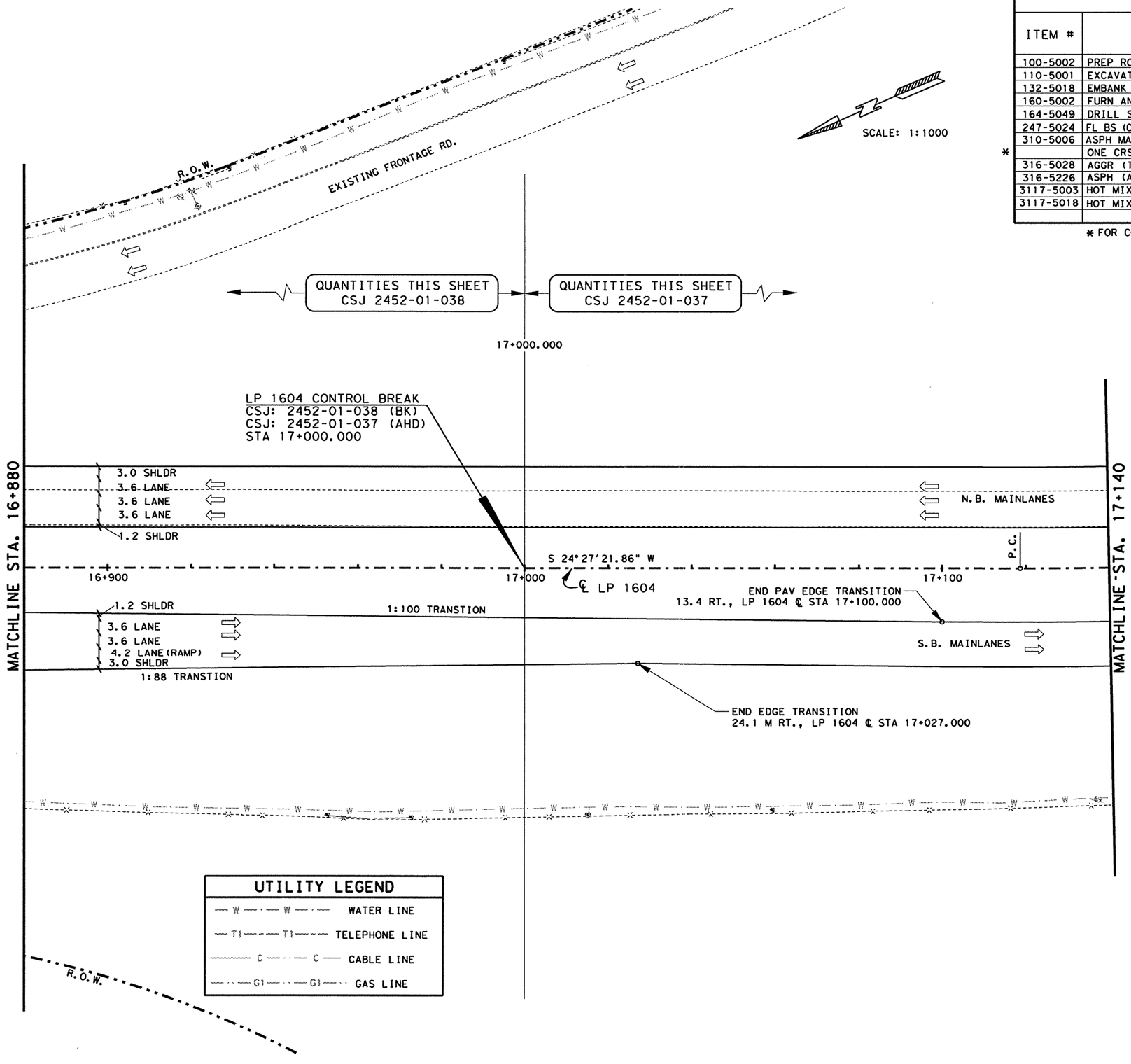


## ESTIMATED QUANTITIES

| | ITEM # | ITEM | UNIT | CSJ 2452 01-038 QTY. | CSJ 2452 01-037 QTY. |
|---|---|---|---|---|---|
| | 100-5002 | PREP ROW | KM | 0.12 | 0.14 |
| | 110-5001 | EXCAVATION (RDWY) | M3 | 36130 | 35321 |
| | 132-5018 | EMBANK (ORD COMP) (TY B) (CL 3) | M3 | 46 | 56 |
| | 160-5002 | FURN AND PLAC TPSL (CL 2) (150 MM) | M2 | 9255 | 9376 |
| | 164-5049 | DRILL SEED (PERM) (URBAN) (CLAY) | M2 | 9255 | 9376 |
| | 247-5024 | FL BS (COMPL IN PLAC)(TY A GR 6 CL4) | M3 | 1451 | 1591 |
| | 310-5006 | ASPH MATL (AE-P) | L | 1944 | 2263 |
| * | | ONE CRSE SURF TREAT | M2 | 3520 | 3851 |
| | 316-5028 | AGGR (TY PB, GR 4) | M3 | 32 | 35 |
| | 316-5226 | ASPH (AC-15P, HFRS-2P OR CRS-2P) | L | 4787 | 5237 |
| | 3117-5003 | HOT MIX (TY C) | MGR | 331 | 362 |
| | 3117-5018 | HOT MIX (TY C) (SURF) | MGR | 317 | 346 |
| | | | | | |

* FOR CONTRACTORS INFORMATION ONLY

NOTE(S):

ALL DIMENSIONS ARE IN METERS UNLESS OTHERWISE NOTED.

FOR HORIZONTAL ALIGNMENT / DATA, SEE SHEET(S) 164 - 171.

FOR LIMITS OF SEEDING & TOPSOIL, SEE PROJECT X-SECTIONS AND TYPICAL SECTIONS.

### UTILITY LEGEND

| | |
|---|---|
| — W — W — | WATER LINE |
| — T1 — T1 — | TELEPHONE LINE |
| — C — C — | CABLE LINE |
| — G1 — G1 — | GAS LINE |

LEVELS DISPLAYED
1 2 3 4 5 6 7 8 9 10 11 12 13 14 15 16
17 18 19 20 21 22 23 24 25 26 27 28 29 30 31 32
33 34 35 36 37 38 39 40 41 42 43 44 45 46 47 48
49 50 51 52 53 54 55 56 57 58 59 60 61 62 63

ACC: t:\ao\design\lp1604fm471-90\
FILE: plan13.dgn

STATE OF TEXAS
JOEL K. DAVENPORT, JR.
79276
REGISTERED PROFESSIONAL ENGINEER

Joel K. Davenport, Jr. 9/19/00
Joel K. Davenport, Jr. P.E. 79276 Date

©2000
Texas Department of Transportation

# PLAN SHEET

SHEET 13 OF 57

| FED.RD. DIV.NO. | FEDERAL AID PROJECT NO. | | SHEET NO. |
|---|---|---|---|
| 6 | NH 2000(704), etc. | | 203 |
| STATE | DIST. | COUNTY | |
| TEXAS | SAT | BEXAR | |
| CONT. | SECT. | JOB | HIGHWAY NO. |
| 2452 | 01 | 036, etc. | LP 1604 |

## ESTIMATED QUANTITIES

| ITEM # | ITEM | UNIT | CSJ 2452 01-038 QTY. | CSJ 2452 01-037 QTY. |
|---|---|---|---|---|
| 100-5002 | PREP ROW | KM | 0.12 | 0.14 |
| 110-5001 | EXCAVATION (RDWY) | M3 | 36130 | 35321 |
| 132-5018 | EMBANK (ORD COMP) (TY B) (CL 3) | M3 | 46 | 56 |
| 160-5002 | FURN AND PLAC TPSL (CL 2) (150 MM) | M2 | 9255 | 9376 |
| 164-5049 | DRILL SEED (PERM) (URBAN) (CLAY) | M2 | 9255 | 9376 |
| 247-5024 | FL BS (COMPL IN PLAC)(TY A GR 6 CL4) | M3 | 1451 | 1591 |
| 310-5006 | ASPH MATL (AE-P) | L | 1944 | 2263 |
| * | ONE CRSE SURF TREAT | M2 | 3520 | 3851 |
| 316-5028 | AGGR (TY PB, GR 4) | M3 | 32 | 35 |
| 316-5226 | ASPH (AC-15P, HFRS-2P OR CRS-2P) | L | 4787 | 5237 |
| 3117-5003 | HOT MIX (TY C) | MGR | 331 | 362 |
| 3117-5018 | HOT MIX (TY C) (SURF) | MGR | 317 | 346 |
| | | | | |

* FOR CONTRACTORS INFORMATION ONLY

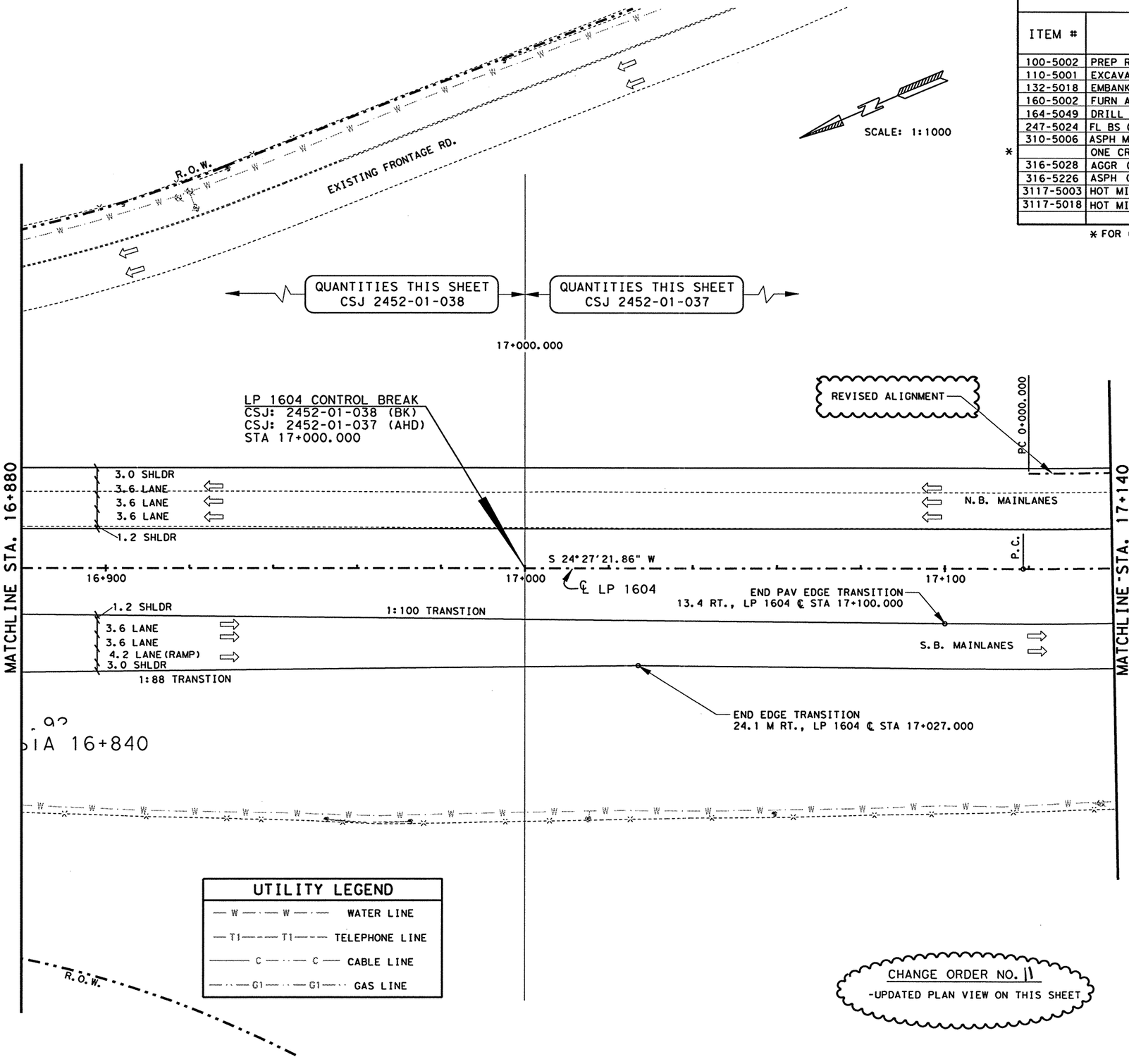


### UTILITY LEGEND

| | |
|---|---|
| — W — W — | WATER LINE |
| — T1 — T1 — | TELEPHONE LINE |
| — C — C — | CABLE LINE |
| — G1 — G1 — | GAS LINE |

NOTE(S):

ALL DIMENSIONS ARE IN METERS UNLESS OTHERWISE NOTED.

FOR HORIZONTAL ALIGNMENT / DATA, SEE SHEET(S) 164 - 171.

FOR LIMITS OF SEEDING & TOPSOIL, SEE PROJECT X-SECTIONS AND TYPICAL SECTIONS.

CHANGE ORDER NO. 11
-UPDATED PLAN VIEW ON THIS SHEET

For CHANGE ORDER 11

STATE OF TEXAS
JENNIFER L. MOCZYGEMBA
84734
REGISTERED PROFESSIONAL ENGINEER

Jennifer L. Moczygemba, P.E. 84734 — 8-7-2002 Date

LEVELS DISPLAYED
1 2 3 4 5 6 7 8 9 10 11 12 13 14 15 16 17 18 19 20 21 22 23 24 25 26 27 28 29 30 31 32 33 34 35 36 37 38 39 40 41 42 43 44 45 46 47 48 49 50 51 52 53 54 55 56 57 58 59 60 61 62 63

ACC: t:\ao\design\lp1604fm471-90\
FILE: plan13.dgn

©2000 Texas Department of Transportation

# PLAN SHEET

SHEET 13 OF 57

| FED. RD. DIV. NO. | FEDERAL AID PROJECT NO. | | SHEET NO. |
|---|---|---|---|
| 6 | NH 2000(704), etc. | | 203A |
| STATE | DIST. | COUNTY | |
| TEXAS | SAT | BEXAR | |
| CONT. | SECT. | JOB | HIGHWAY NO. |
| 2452 | 01 | 036, etc. | LP 1604 |

QUANTITIES THIS SHEET
CSJ 2452-01-037

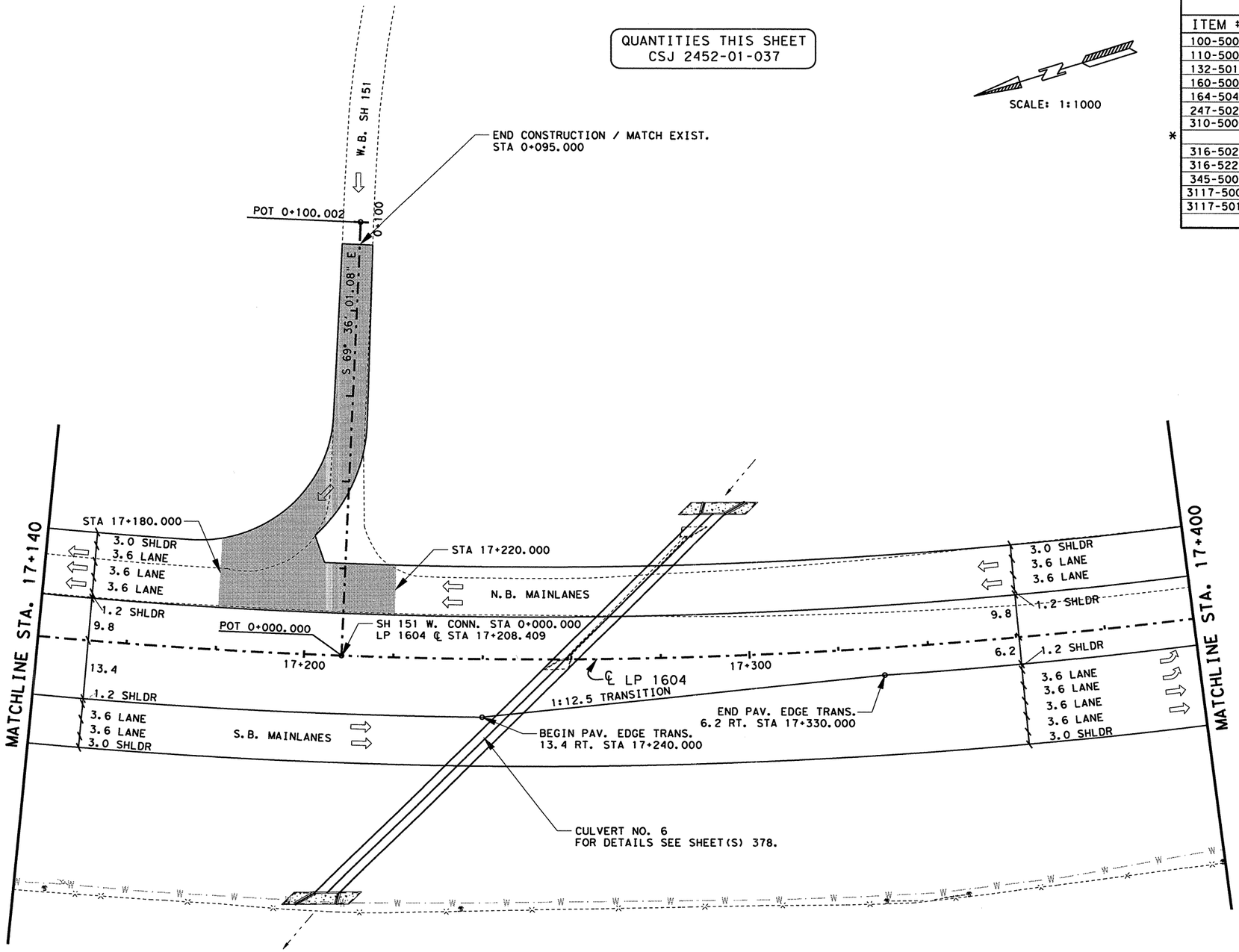


SCALE: 1:1000

## ESTIMATED QUANTITIES

| | ITEM # | ITEM | UNIT | QTY. |
|---|---|---|---|---|
| | 100-5002 | PREP ROW | KM | 0.26 |
| | 110-5001 | EXCAVATION (RDWY) | M3 | 2718 |
| | 132-5018 | EMBANK (ORD COMP) (TY B) (CL 3) | M3 | 30415 |
| | 160-5002 | FURN AND PLAC TPSL (CL 2) (150 MM) | M2 | 14928 |
| | 164-5049 | DRILL SEED (PERM) (URBAN) (CLAY) | M2 | 14928 |
| | 247-5024 | FL BS (COMPL IN PLAC)(TY A GR 6 CL 4) | M3 | 2810 |
| | 310-5006 | ASPH MATL (AE-P) | L | 2906 |
| * | | ONE CRSE SURF TREAT | M2 | 8010 |
| | 316-5028 | AGGR (TY PB, GR 4) | M3 | 73 |
| | 316-5226 | ASPH (AC-15P, HFRS-2P OR CRS-2P) | L | 10894 |
| | 345-5004 | ASPH STAB BS (GR 4) | MGR | 952 |
| | 3117-5003 | HOT MIX (TY C) | MGR | 753 |
| | 3117-5018 | HOT MIX (TY C) (SURF) | MGR | 720 |
| | | | | |

* FOR CONTRACTORS INFORMATION ONLY

NOTE(S):

ALL DIMENSIONS ARE IN METERS UNLESS OTHERWISE NOTED.

FOR HORIZONTAL ALIGNMENT / DATA, SEE SHEET(S) 164 - 171.

FOR LIMITS OF SEEDING & TOPSOIL, SEE PROJECT X-SECTIONS AND TYPICAL SECTIONS.

FOR INTERSECTION LAYOUT, SEE SHEET(S) 321.

FOR RIPRAP ASSOCIATED WITH STORM DRAINAGE STRUCTURES SEE SHEET(S) 454 - 470.

## UTILITY LEGEND

| | |
|---|---|
| — W — · — W — · — | WATER LINE |
| — T1 — · — T1 — · — | TELEPHONE LINE |
| ——— C ——— · ——— C ——— | CABLE LINE |
| — · — G1 — · — · — G1 — · — · | GAS LINE |

LIMITS OF ASPH STAB BS @ INTERSECTION

STATE OF TEXAS
JOEL K. DAVENPORT, JR.
79276
REGISTERED
PROFESSIONAL ENGINEER

Joel K. Davenport Jr. 9/19/00
Joel K. Davenport, Jr. P.E. 79276 Date

Texas Department of Transportation

# PLAN SHEET

SHEET 14 OF 57

| FED. RD. DIV. NO. | FEDERAL AID PROJECT NO. | | SHEET NO. |
|---|---|---|---|
| 6 | NH 2000(704), etc. | | 204 |
| STATE | DIST. | COUNTY | |
| TEXAS | SAT | BEXAR | |
| CONT. | SECT. | JOB | HIGHWAY NO. |
| 2452 | 01 | 036, etc. | LP 1604 |

LEVELS DISPLAYED
1 2 3 4 5 6 7 8 9 10 11 12 13 14 15 16 17 18 19 20 21 22 23 24 25 26 27 28 29 30 31 32 33 34 35 36 37 38 39 40 41 42 43 44 45 46 47 48 49 50 51 52 53 54 55 56 57 58 59 60 61 62 63

ACC: t:\oo\design\lp1604fm471-90\
FILE: plan01.dgn

QUANTITIES THIS SHEET
CSJ 2452-01-037

SCALE: 1:1000

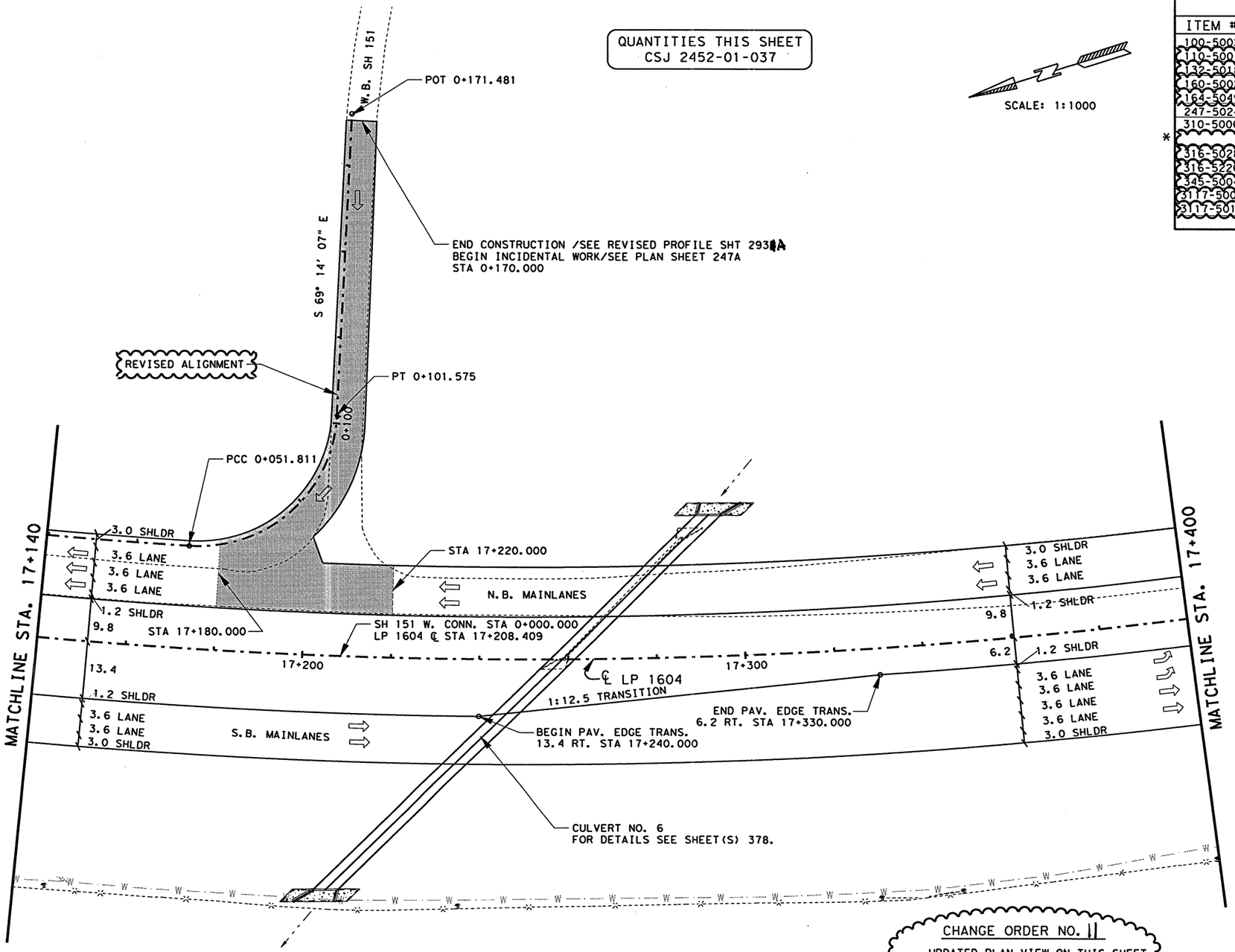


## ESTIMATED QUANTITIES

| | ITEM # | ITEM | UNIT | QTY. |
|---|---|---|---|---|
| | 100-5002 | PREP ROW | KM | 0.26 |
| | 110-5001 | EXCAVATION (RDWY) | M3 | 3539 |
| | 132-5018 | EMBANK (ORD COMP) (TY B) (C) 3) | M3 | 30398 |
| | 160-5002 | FURN AND PLAC TPSL (CL 2) (150 MM) | M2 | 14298 |
| | 164-5049 | DRILL SEED (PERM) (URBAN) (CLAY) | M2 | 14298 |
| | 247-5024 | FL BS (COMPL IN PLACE)(TY A GR 6 CL 4) | M3 | 2810 |
| | 310-5006 | ASPH MATL (AE-P) | L | 2906 |
| * | | ONE CRSE SURF TREAT | M2 | 8253 |
| | 316-5028 | AGGR (TY PB, GR 4) | M3 | 75 |
| | 316-5226 | ASPH (AC-15P, HFRS-2P OR CRS-2P) | L | 11224 |
| | 345-5004 | ASPH STAB BS (GR 4) | MGR | 1144 |
| | 3117-5003 | HOT MIX (TY C) | MGR | 774 |
| | 3117-5018 | HOT MIX (TY C) (SURF) | MGR | 740 |

* FOR CONTRACTORS INFORMATION ONLY

NOTE(S)

ALL DIMENSIONS ARE IN METERS UNLESS OTHERWISE NOTED.

FOR HORIZONTAL ALIGNMENT / DATA, SEE SHEET(S) 164 - 171.

FOR LIMITS OF SEEDING & TOPSOIL, SEE PROJECT X-SECTIONS AND TYPICAL SECTIONS.

FOR INTERSECTION LAYOUT, SEE SHEET(S) 321.

FOR RIPRAP ASSOCIATED WITH STORM DRAINAGE STRUCTURES SEE SHEET(S) 454 - 470.

FOR CHANGE ORDER 11

CHANGE ORDER NO. 11
-UPDATED PLAN VIEW ON THIS SHEET
-REVISED QUANTITIES

## UTILITY LEGEND

| | |
|---|---|
| — W — · — W — · — | WATER LINE |
| — T1 — · — T1 — · — | TELEPHONE LINE |
| ——— C ——— · ——— C ——— | CABLE LINE |
| — · — G1 — · — G1 — · — | GAS LINE |

LIMITS OF ASPH STAB BS @ INTERSECTION

STATE OF TEXAS
JENNIFER L. MACZYGEMBA
84734
REGISTERED
PROFESSIONAL ENGINEER

Jennifer L. Maczygemba, P.E. 84734 — 8-7-2002 Date

© 2001 Texas Department of Transportation

# PLAN SHEET

SHEET 14 OF 57

| FED. RD. DIV. NO. | FEDERAL AID PROJECT NO. | | SHEET NO. |
|---|---|---|---|
| 6 | NH 2000(704), etc. | | 204A |
| STATE | DIST. | COUNTY | |
| TEXAS | SAT | BEXAR | |
| CONT. | SECT. | JOB | HIGHWAY NO. |
| 2452 | 01 | 036, etc. | LP 1604 |

LEVELS DISPLAYED
1 2 3 4 5 6 7 8 9 10 11 12 31 41 51 61
17 18 19 20 21 22 32 42 52 62 72 82 93 03 13 23
33 43 53 63 73 83 94 04 14 24 34 44 54 64 74 84
95 05 15 25 35 45 55 65 75 85 96 06 16 26 36

ACC: t:\ao\design\lp1604fm471-90\
FILE: plan14.dgn

QUANTITIES THIS SHEET
CSJ 2452-01-037

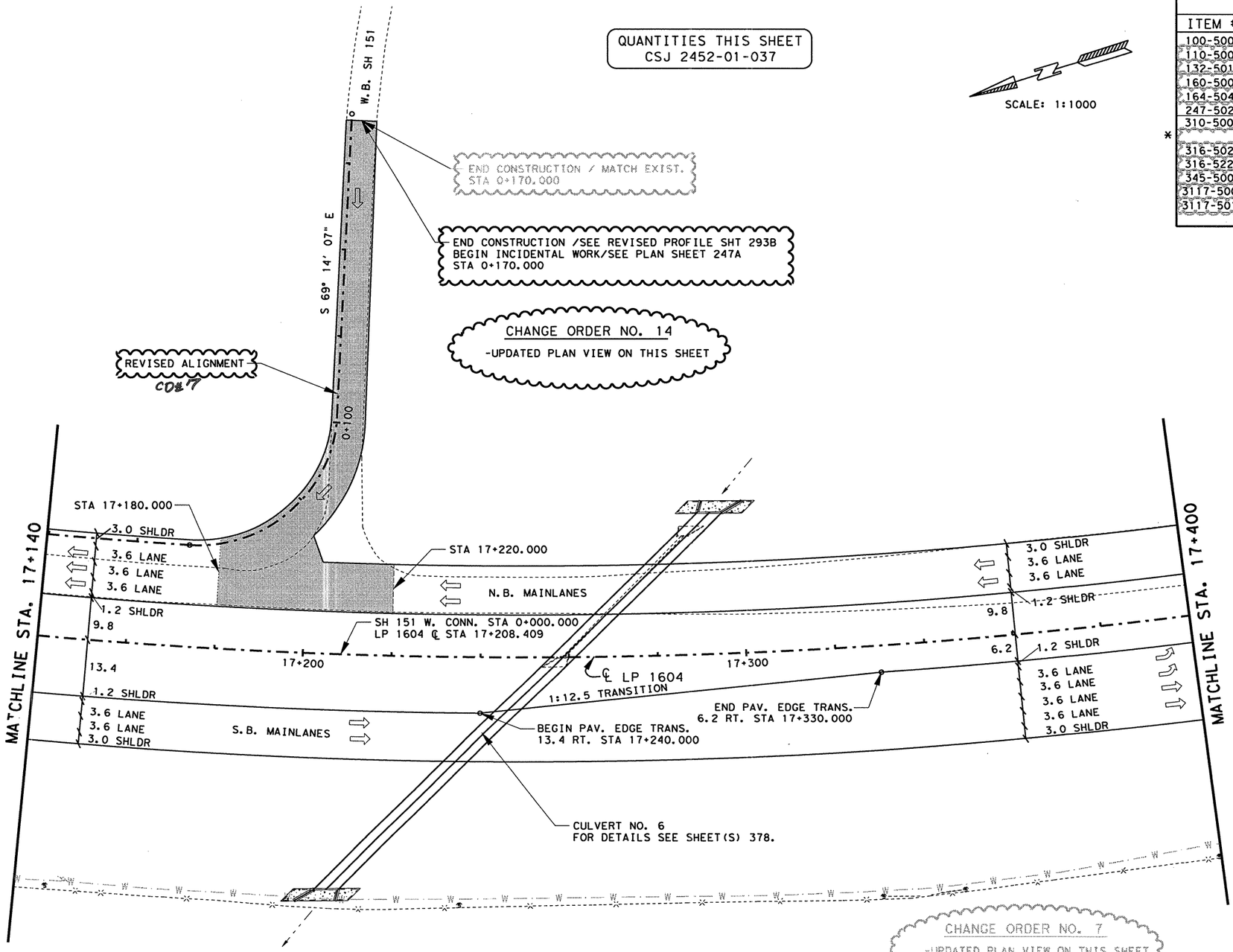


SCALE: 1:1000

## ESTIMATED QUANTITIES

| | ITEM # | ITEM | UNIT | QTY. |
|---|---|---|---|---|
| | 100-5002 | PREP ROW | KM | 0.26 |
| | 110-5001 | EXCAVATION (RDWY) | M3 | 3539 |
| | 132-5018 | EMBANK (ORD COMP) (TY B) (CL 3) | M3 | 30398 |
| | 160-5002 | FURN AND PLAC TPSL (CL 2) (150 MM) | M2 | 14298 |
| | 164-5049 | DRILL SEED (PERM) (URBAN) (CLAY) | M2 | 14298 |
| | 247-5024 | FL BS (COMPL IN PLACKTY A GR 6 CL 4) | M3 | 2810 |
| | 310-5006 | ASPH MATL (AE-P) | L | 2906 |
| * | | ONE CRSE SURF TREAT | M2 | 8253 |
| | 316-5028 | AGGR (TY PB, GR 4) | M3 | 75 |
| | 316-5226 | ASPH (AC-15P, HFRS-2P OR CRS-2P) | L | 11224 |
| | 345-5004 | ASPH STAB BS (GR 4) | MGR | 1144 |
| | 3117-5003 | HOT MIX (TY C) | MGR | 774 |
| | 3117-5018 | HOT MIX (TY C) (SURF) | MGR | 740 |

* FOR CONTRACTORS INFORMATION ONLY

NOTE(S)

ALL DIMENSIONS ARE IN METERS UNLESS OTHERWISE NOTED.

FOR HORIZONTAL ALIGNMENT / DATA, SEE SHEET(S) 164 - 171.

FOR LIMITS OF SEEDING & TOPSOIL, SEE PROJECT X-SECTIONS AND TYPICAL SECTIONS.

FOR INTERSECTION LAYOUT, SEE SHEET(S) 321.

FOR RIPRAP ASSOCIATED WITH STORM DRAINAGE STRUCTURES SEE SHEET(S) 454 - 470.

CHANGE ORDER 14

CHANGE ORDER 7

## UTILITY LEGEND

| | |
|---|---|
| W W | WATER LINE |
| T1 T1 | TELEPHONE LINE |
| C C | CABLE LINE |
| G1 G1 | GAS LINE |

LIMITS OF ASPH STAB BS @ INTERSECTION

STATE OF TEXAS
TERRY C. McCOY
75016
REGISTERED PROFESSIONAL ENGINEER

Terry C. McCoy, P.E. 1-17-02
Date
FOR CO# 14 ONLY

© 2001
Texas Department of Transportation

# PLAN SHEET

SHEET 14 OF 57

| FED. RD. DIV. NO. | FEDERAL AID PROJECT NO. | SHEET NO. |
|---|---|---|
| 6 | NH 2000(704), etc. | 204B |
| STATE | DIST. | COUNTY |
| TEXAS | SAT | BEXAR |
| CONT. | SECT. | JOB / HIGHWAY NO. |
| 2452 | 01 | 036, etc. / LP 1604 |

1-15-02

LEVELS DISPLAYED
1 2 3 4 5 6 7 8 9 10 11 12 13 14 15 16
17 18 19 20 21 22 23 24 25 26 27 28 29 30 31 32
33 34 35 36 37 38 39 40 41 42 43 44 45 46 47 48
49 50 51 52 53 54 55 56 57 58 59 60 61 62 63 64

ACC: t:\oo\design\lp1604fm471-90\
FILE: plan14.dgn

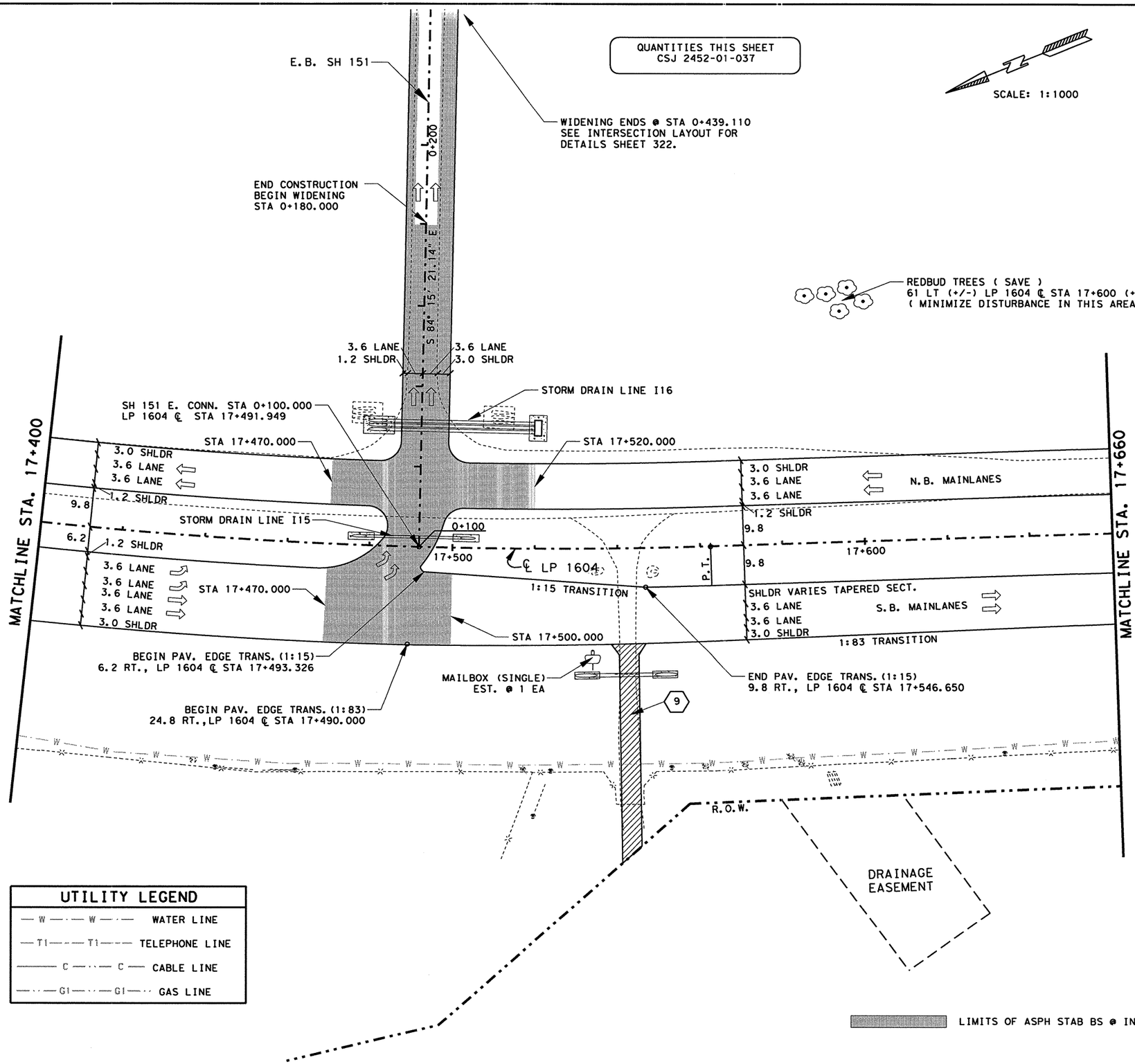


## ESTIMATED QUANTITIES

| | ITEM # | ITEM | UNIT | QTY. |
|---|---|---|---|---|
| | 100-5002 | PREP ROW | KM | 0.26 |
| | 110-5001 | EXCAVATION (RDWY) | M3 | 2733 |
| | 132-5018 | EMBANK (ORD COMP)(TY B)(CL 3) | M3 | 9589 |
| | 160-5002 | FURN AND PLAC TPSL (CL 2)(150 MM) | M2 | 12923 |
| | 164-5049 | DRILL SEED (PERM)(URBAN)(CLAY) | M2 | 12923 |
| | 247-5024 | FL BS (COMPL IN PLAC)(TY A GR 6 CL 4) | M3 | 2681 |
| | 310-5006 | ASPH MATL (AE-P) | L | 2890 |
| * | | ONE CRSE SURF TREAT | M2 | 8646 |
| | 316-5028 | AGGR (TY PB,GR 4) | M3 | 79 |
| | 316-5226 | ASPH (AC-15P, HFRS-2P OR CRS-2P) | L | 11758 |
| | 345-5004 | ASPH STAB BS (GR 4) | MGR | 1693 |
| | 530-5003 | DRVWAYS (ASPH-CONC PAV) | M2 | 280 |
| | 560-5001 | MAILBOX INTALL (SINGLE) | EA | 1 |
| | 3117-5003 | HOT MIX (TY C) | MGR | 813 |
| | 3117-5018 | HOT MIX (TY C)(SURF) | MGR | 929 |
| | | | | |

* FOR CONTRACTORS INFORMATION ONLY

NOTE(S):

ALL DIMENSIONS ARE IN METERS UNLESS OTHERWISE NOTED.

FOR HORIZONTAL ALIGNMENT / DATA, SEE SHEET(S) 164 -171.

FOR LIMITS OF SEEDING & TOPSOIL, SEE PROJECT X-SECTIONS AND TYPICAL SECTIONS.

FOR INTERSECTION LAYOUT, SEE SHEET(S) 322.

FOR ADDITIONAL STORM DRAIN INFO. REFER TO THE SPECIFIC STORM DRAIN PROFILE SHEET(S).

FOR RIPRAP ASSOCIATED WITH STORM DRAINAGE STRUCTURES SEE SHEET(S) 454 - 470.

(#) DRIVEWAY #, FOR MORE DETAILS SEE SHEET(S) 27, 28 & 336.

STATE OF TEXAS
JOEL K. DAVENPORT, JR.
79276
REGISTERED PROFESSIONAL ENGINEER

Joel K Davenport Jr 9/19/00
Joel K. Davenport, Jr. P.E. 79276 Date

Texas Department of Transportation

# PLAN SHEET

SHEET 15 OF 57

| FED. RD. DIV. NO. | FEDERAL AID PROJECT NO. | | SHEET NO. |
|---|---|---|---|
| 6 | NH 2000(704),etc. | | 205 |
| STATE | DIST. | COUNTY | |
| TEXAS | SAT | BEXAR | |
| CONT. | SECT. | JOB | HIGHWAY NO. |
| 2452 | 01 | 036,etc. | LP 1604 |

LEVELS DISPLAYED
1 2 3 4 5 6 7 8 9 10 11 12 13 14 15 16 17 18 19 20 21 22 23 24 25 26 27 28 29 30 31 32 33 34 35 36 37 38 39 40 41 42 43 44 45 46 47 48 49 50 51 52 53 54 55 56 57 58 59 60 61 62 63

ACC: t:\ao\design\lp1604fm471-90\
FILE: plan15.dgn

QUANTITIES THIS SHEET
CSJ 2452-01-037

SCALE: 1:1000

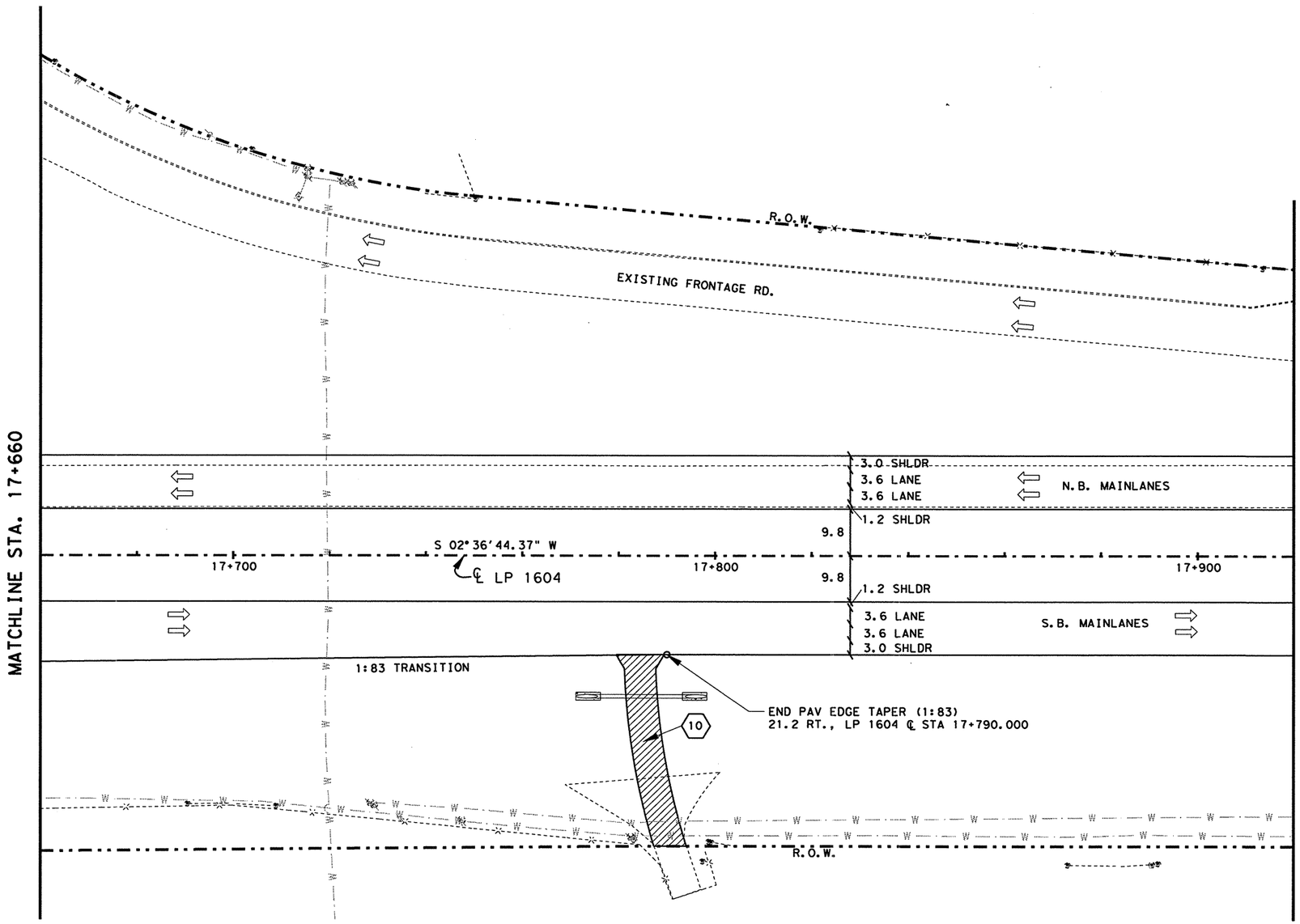


## ESTIMATED QUANTITIES

| | ITEM # | ITEM | UNIT | QTY. |
|---|---|---|---|---|
| | 100-5002 | PREP ROW | KM | 0.26 |
| | 110-5001 | EXCAVATION (RDWY) | M3 | 46856 |
| | 132-5018 | EMBANK (ORD COMP) (TY B) (CL 3) | M3 | 748 |
| | 160-5002 | FURN AND PLAC TPSL (CL 2) (150 MM) | M2 | 21832 |
| | 164-5049 | DRILL SEED (PERM) (URBAN) (CLAY) | M2 | 21832 |
| | 247-5024 | FL BS (COMPL IN PLAC)(TY A GR 6 CL 4) | M3 | 2629 |
| | 310-5006 | ASPH MATL (AE-P) | L | 3276 |
| * | | ONE CRSE SURF TREAT | M2 | 6338 |
| | 316-5028 | AGGR (TY PB, GR 4) | M3 | 58 |
| | 316-5226 | ASPH (AC-15P, HFRS-2P OR CRS-2P) | L | 8620 |
| | 530-5003 | DRVWAYS (ASPH-CONC PAV) | M2 | 299 |
| | 3117-5003 | HOT MIX (TY C) | MGR | 596 |
| | 3117-5018 | HOT MIX (TY C) (SURF) | MGR | 566 |
| | | | | |

* FOR CONTRACTORS INFORMATION ONLY

NOTE(S):

ALL DIMENSIONS ARE IN METERS UNLESS OTHERWISE NOTED.

FOR HORIZONTAL ALIGNMENT / DATA, SEE SHEET(S) 164 - 171.

FOR LIMITS OF SEEDING & TOPSOIL, SEE PROJECT X-SECTIONS AND TYPICAL SECTIONS.

(#) DRIVEWAY #, FOR MORE DETAILS SEE SHEET(S) 27, 28 & 336.

FOR RIPRAP ASSOCIATED WITH STORM DRAINAGE STRUCTURES SEE SHEET(S) 454 - 470.

## UTILITY LEGEND

| | |
|---|---|
| — W — W — | WATER LINE |
| — T1 — T1 — | TELEPHONE LINE |
| — C — C — | CABLE LINE |
| — G1 — G1 — | GAS LINE |

STATE OF TEXAS
JOEL K. DAVENPORT, JR.
79276
REGISTERED PROFESSIONAL ENGINEER

Joel K Davenport Jr 9/19/00
Joel K. Davenport, Jr. P.E. 79276 Date

Texas Department of Transportation

# PLAN SHEET

SHEET 16 OF 57

| FED. RD. DIV. NO. | FEDERAL AID PROJECT NO. | | SHEET NO. |
|---|---|---|---|
| 6 | NH 2000(704), etc. | | 206 |
| STATE | DIST. | COUNTY | |
| TEXAS | SAT | BEXAR | |
| CONT. | SECT. | JOB | HIGHWAY NO. |
| 2452 | 01 | 036, etc. | LP 1604 |

LEVELS DISPLAYED
1 2 3 4 5 6 7 8 9 10 11 12 31 41 51 61
17 18 19 20 21 22 23 24 25 26 27 28 29 30 31 32
33 34 35 36 37 38 39 40 41 42 43 44 45 46 47 48
49 50 51 52 53 54 55 56 57 58 59 60 61 62 63

ACC: t:\ao\design\lp1604fm471-90\
FILE: plan16.dgn

QUANTITIES THIS SHEET
CSJ 2452-01-037

SCALE: 1:1000

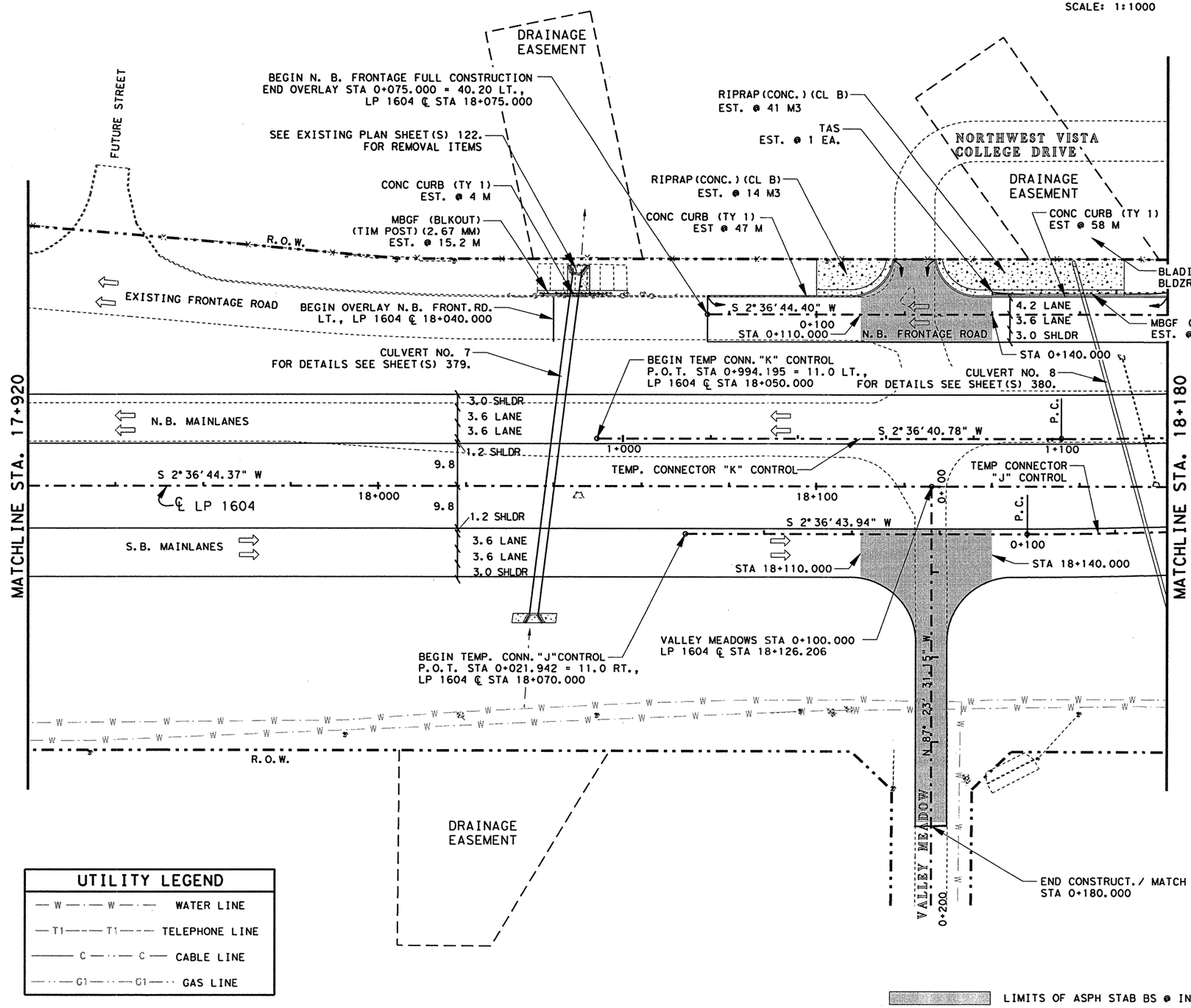


## ESTIMATED QUANTITIES

| ITEM # | ITEM | UNIT | QTY. |
|---|---|---|---|
| 100-5002 | PREP ROW | KM | 0.26 |
| 110-5001 | EXCAVATION (RDWY) | M3 | 13003 |
| 132-5018 | EMBANK (ORD COMP)(TY B)(CL 3) | M3 | 4776 |
| 150-5003 | BLADING | H | 4 |
| 156-5003 | BLDZR WORK (ORD COMP)(TY A) | H | 4 |
| 160-5002 | FURN AND PLAC TPSL (CL 2)(150 MM) | M2 | 13896 |
| 164-5049 | DRILL SEED (PERM)(URBAN)(CLAY) | M2 | 13896 |
| * 247-5024 | FL BS (COMPL IN PLAC)(TY A GR 6 CL 4) | M3 | 2803 |
| 310-5006 | ASPH MATL (AE-P) | L | 4130 |
| | ONE CRSE SURF TREAT | M2 | 8139 |
| 316-5028 | AGGR (TY PB,GR 4) | M3 | 74 |
| 316-5226 | ASPH (AC-15P, HFRS-2P OR CRS-2P) | L | 11069 |
| 345-5004 | ASPH STAB BS (GR 4) | MGR | 1096 |
| 432-5001 | RIPRAP (CONC)(CL B) | M3 | 55 |
| 529-5001 | CONC CURB (TY 1) | M | 109 |
| 540-5005 | TERM ANCHOR SECT(2.67 MM) | EA | 1 |
| 540-5007 | MBGF (BLK OUT)(TIM POST)(2.67) | M | 38 |
| 3117-5003 | HOT MIX (TY C) | MGR | 764 |
| 3117-5018 | HOT MIX (TY C)(SURF) | MGR | 758 |

*FOR CONTRACTORS INFORMATION ONLY

NOTE(S):

ALL DIMENSIONS ARE IN METERS UNLESS OTHERWISE NOTED.

FOR HORIZONTAL ALIGNMENT / DATA, SEE SHEET(S) 164 - 171.

FOR INTERSECTION LAYOUTS, SEE SHEET(S) 323.

FOR LIMITS OF SEEDING & TOPSOIL, SEE PROJECT X-SECTIONS AND TYPICAL SECTIONS.

FOR RIPRAP DETAILS SEE PROJECT X-SECTIONS AND SHEET(S) 342.

FOR RIPRAP ASSOCIATED WITH STORM DRAINAGE STRUCTURES SEE SHEET(S) 454 - 470.

## UTILITY LEGEND

| | |
|---|---|
| W W | WATER LINE |
| T1 T1 | TELEPHONE LINE |
| C C | CABLE LINE |
| G1 G1 | GAS LINE |

LIMITS OF ASPH STAB BS @ INTERSECTION

STATE OF TEXAS
JOEL K. DAVENPORT, JR.
79276
REGISTERED PROFESSIONAL ENGINEER

Joel K Davenport Jr 11/1/00
Joel K. Davenport, Jr. P.E. 79276 Date

©2000 Texas Department of Transportation

# PLAN SHEET

SHEET 17 OF 57

| FED.RD. DIV.NO. | FEDERAL AID PROJECT NO. | | SHEET NO. |
|---|---|---|---|
| 6 | NH 2000(704),etc. | | 207 |
| STATE | DIST. | COUNTY | |
| TEXAS | SAT | BEXAR | |
| CONT. | SECT. | JOB | HIGHWAY NO. |
| 2452 | 01 | 036,etc. | LP 1604 |

LEVELS DISPLAYED
1 2 3 4 5 6 7 8 9 10 11 12 13 14 15 16
17 18 19 20 21 22 23 24 25 26 27 28 29 30 31 32
33 34 35 36 37 38 39 40 41 42 43 44 45 46 47 48
49 50 51 52 53 54 55 56 57 58 59 60 61 62 63

ACC: t:\ao\design\lp1604fm471-90\
FILE: plan17.dgn

QUANTITIES THIS SHEET
CSJ 2452-01-037

SCALE: 1:1000

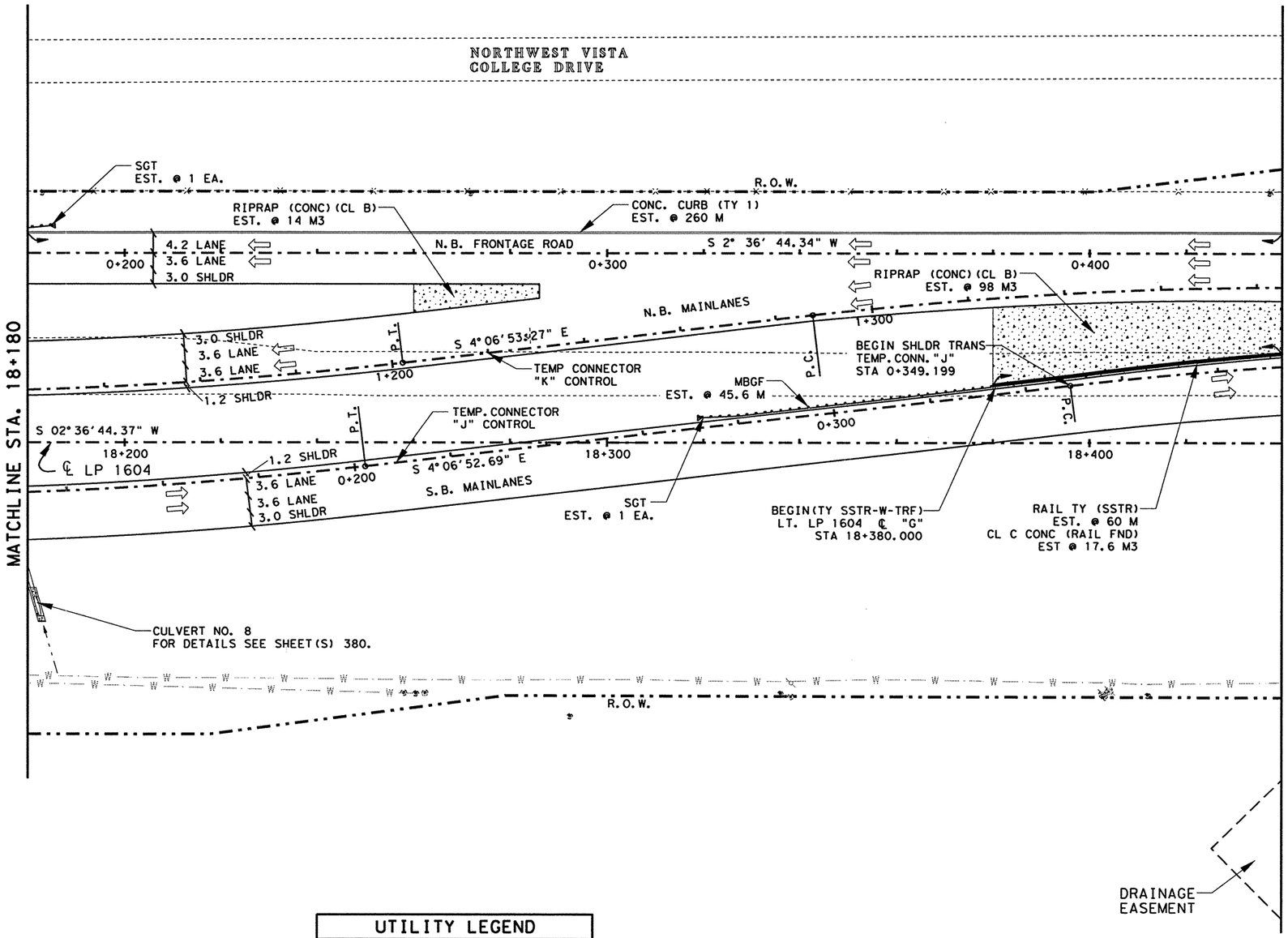


## ESTIMATED QUANTITIES

| ITEM # | ITEM | UNIT | QTY. |
|---|---|---|---|
| 100-5002 | PREP ROW | KM | 0.26 |
| 110-5001 | EXCAVATION (RDWY) | M3 | 18528 |
| 132-5018 | EMBANK (ORD COMP) (TY B) (CL 3) | M3 | 3801 |
| 160-5002 | FURN AND PLAC TPSL (CL 2) (150 MM) | M2 | 11090 |
| 164-5049 | DRILL SEED (PERM) (URBAN) (CLAY) | M2 | 11090 |
| 247-5024 | FL BS (COMPL IN PLACKTY A GR 6 CL 4) | M3 | 3534 |
| 310-5006 | ASPH MATL (AE-P) | L | 5555 |
| * | ONE CRSE SURF TREAT | M2 | 8552 |
| 316-5028 | AGGR (TY PB, GR 4) | M3 | 78 |
| 316-5226 | ASPH (AC-15P, HFRS-2P OR CRS-2P) | L | 11631 |
| 420-5050 | CL C CONC (RAIL FOUNDATION) | M3 | 17.6 |
| 432-5001 | RIPRAP (CONC) (CL B) | M3 | 112 |
| 450-5045 | RAIL (TY SSTR) | M | 60 |
| 529-5001 | CONC CURB (TY 1) | M | 260 |
| 540-5006 | MBGF (TIM POST) (2.67 MM) | M | 45.6 |
| 3117-5003 | HOT MIX (TY C) | MGR | 800 |
| 3117-5018 | HOT MIX (TY C) (SURF) | MGR | 763 |
| 5119-5003 | SINGLE GDRAIL TERM (TY III) | EA | 2 |
| | | | |

* FOR CONTRACTORS INFORMATION ONLY

NOTE(S):

ALL DIMENSIONS ARE IN METERS UNLESS OTHERWISE NOTED.

FOR HORIZONTAL ALIGNMENT / DATA, SEE SHEET(S) 164 - 171.

FOR LIMITS OF SEEDING & TOPSOIL, SEE PROJECT X-SECTIONS AND TYPICAL SECTIONS.

FOR RIPRAP DETAILS SEE PROJECT X-SECTIONS AND SHEET(S) 342.

FOR RIPRAP ASSOCIATED WITH STORM DRAINAGE STRUCTURES SEE SHEET(S) 454 - 470.

## UTILITY LEGEND

| | |
|---|---|
| W | WATER LINE |
| T1 | TELEPHONE LINE |
| C | CABLE LINE |
| G1 | GAS LINE |

LEVELS DISPLAYED
1 2 3 4 5 6 7 8 9 10 11 12 13 14 15 16
17 18 19 20 22 24 25 26 27 28 29 30 31 32
33 34 35 36 37 38 39 40 41 42 43 44 45 46 47 48
49 50 51 52 53 54 55 56 57 58 59 60 61 62 63

ACC: *:\ao\design\lp1604fm471-90\
FILE: plan18.dgn

STATE OF TEXAS
JOEL K. DAVENPORT, JR.
79276
REGISTERED
PROFESSIONAL ENGINEER

Joel K Davenport, Jr. 11/1/00
Joel K. Davenport, Jr. P.E. 79276 Date

©2000 Texas Department of Transportation

# PLAN SHEET

SHEET 18 OF 57

| FED. RD. DIV. NO. | FEDERAL AID PROJECT NO. | | SHEET NO. |
|---|---|---|---|
| 6 | NH 2000(704), etc. | | 208 |
| STATE | DIST. | COUNTY | |
| TEXAS | SAT | BEXAR | |
| CONT. | SECT. | JOB | HIGHWAY NO. |
| 2452 | 01 | 036, etc. | LP 1604 |

QUANTITIES THIS SHEET
CSJ 2452-01-037

SCALE: 1:1000

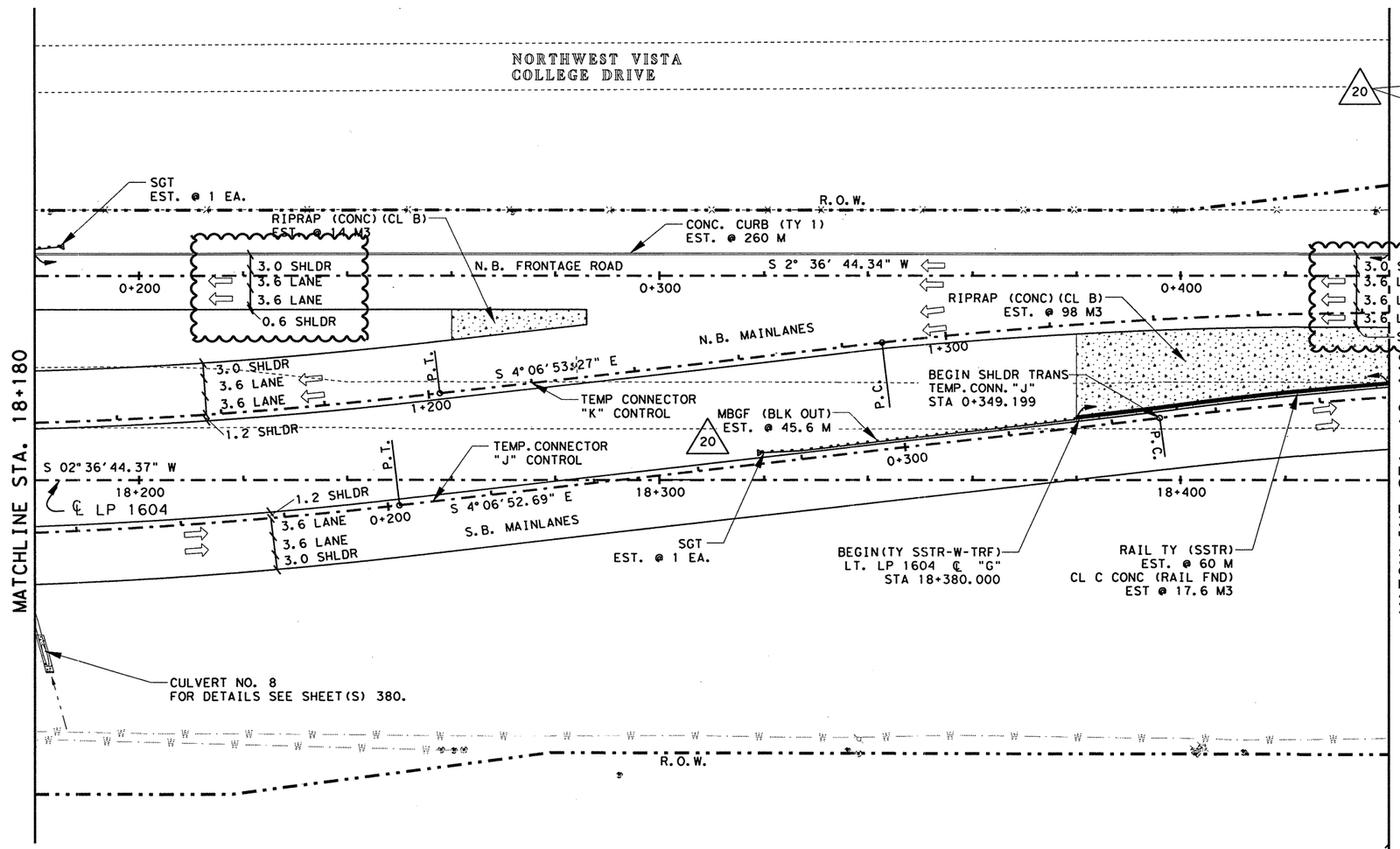


## ESTIMATED QUANTITIES

| ITEM # | ITEM | UNIT | QTY. |
|---|---|---|---|
| 100-5002 | PREP ROW | KM | 0.26 |
| 110-5001 | EXCAVATION (RDWY) | M3 | 18529 |
| 132-5018 | EMBANK (ORD COMP) (TY B) (CL 3) | M3 | 3801 |
| 160-5002 | FURN AND PLAC TPSL (CL 2) (150 MM) | M2 | 11090 |
| 164-5049 | DRILL SEED (PERM) (URBAN) (CLAY) | M2 | 11090 |
| 247-5024 | FL BS (COMPL IN PLAC)(TY A GR 6 CL 4) | M3 | 3534 |
| 310-5006 | ASPH MATL (AE-P) | L | 5555 |
| | ONE CRSE SURF TREAT | M2 | 8552 |
| 316-5028 | AGGR (TY PB, GR 4) | M3 | 78 |
| 316-5226 | ASPH (AC-15P, HFRS-2P OR CRS-2P) | L | 11631 |
| 420-5050 | CL C CONC (RAIL FOUNDATION) | M3 | 17.6 |
| 432-5001 | RIPRAP (CONC) (CL B) | M3 | 112 |
| 450-5045 | RAIL (TY SSTR) | M | 60 |
| 529-5001 | CONC CURB (TY 1) | M | 260 |
| ~~540-5006~~ | ~~MBGF (TIM POST) (2.67 MM)~~ | ~~M~~ | ~~45.6~~ |
| 540-5007 | MBGF (TIM POST) (2.67 MM) (BLKOUT) | M | 45.6 |
| 3117-5003 | HOT MIX (TY C) | MGR | 800 |
| 3117-5018 | HOT MIX (TY C) (SURF) | MGR | 763 |
| 5119-5003 | SINGLE GDRAIL TERM (TY III) | EA | 2 |

* FOR CONTRACTORS INFORMATION ONLY

NOTE(S):

ALL DIMENSIONS ARE IN METERS UNLESS OTHERWISE NOTED.

FOR HORIZONTAL ALIGNMENT / DATA, SEE SHEET(S) 164 - 171.

FOR LIMITS OF SEEDING & TOPSOIL, SEE PROJECT X-SECTIONS AND TYPICAL SECTIONS.

FOR RIPRAP DETAILS SEE PROJECT X-SECTIONS AND SHEET(S) 342.

FOR RIPRAP ASSOCIATED WITH STORM DRAINAGE STRUCTURES SEE SHEET(S) 454 - 470.

CHANGE ORDER 64

REVISED SHEET

CHANGE ORDER NO. 64
-REVISED LANE CONFIGURATIONS
-REVISED QUANTITIES

DRAINAGE EASEMENT

UTILITY LEGEND

| | |
|---|---|
| W W | WATER LINE |
| T1 T1 | TELEPHONE LINE |
| C C | CABLE LINE |
| G1 G1 | GAS LINE |

# REFERS TO CHANGES MADE AS PART OF CHANGE ORDER

STATE OF TEXAS
JEROME D. PAVLISKA
76075
REGISTERED PROFESSIONAL ENGINEER

Jerome D. Pavliska, P.E. 4-28-04
Jerome D. Pavliska, P.E. Date

Texas Department of Transportation

PLAN SHEET

SHEET 18 OF 57

| FED.RD. DIV.NO. | FEDERAL AID PROJECT NO. | | SHEET NO. |
|---|---|---|---|
| 6 | NH 2000(704), etc. | | 208 A |
| STATE | DIST. | COUNTY | |
| TEXAS | SAT | BEXAR | |
| CONT. | SECT. | JOB | HIGHWAY NO. |
| 2452 | 01 | 036, etc. | LP 1604 |

LEVELS DISPLAYED
1 2 3 4 5 6 7 8 9 10 11 12 13 14 15 16
17 18 19 20 21 22 23 24 25 26 27 28 29 30 31 32
33 34 35 36 37 38 39 40 41 42 43 44 45 46 47 48
49 50 51 52 53 54 55 56 57 58 59 60 61 62 63

ACC: t:\ao\design\lp1604fm471-90\
FILE: plan18x0020.dgn

QUANTITIES THIS SHEET
CSJ 2452-01-037

SCALE: 1:1000

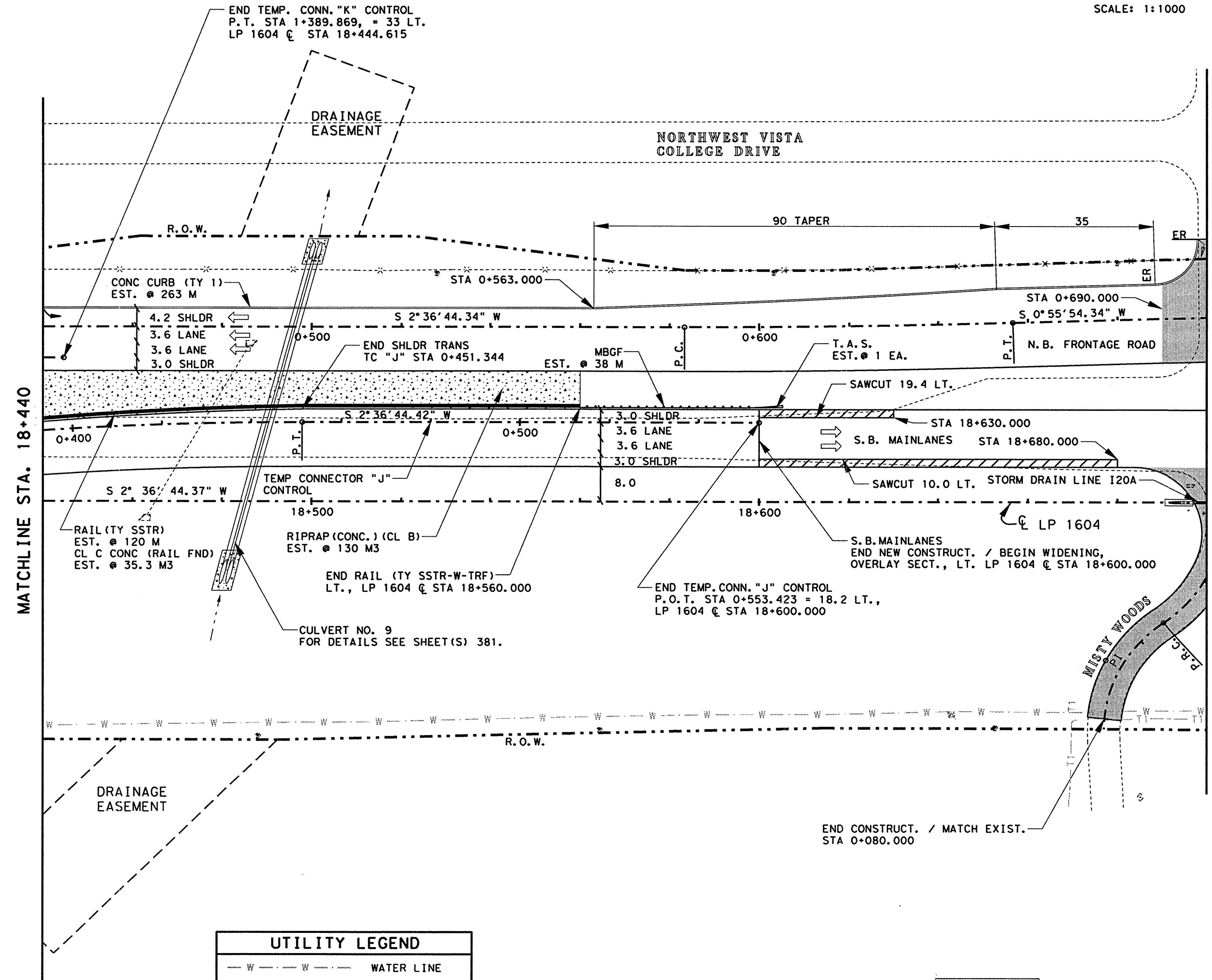


| ITEM # | ITEM | UNIT | QTY. |
|---|---|---|---|
| 100-5002 | PREP ROW | KM | 0.26 |
| 110-5001 | EXCAVATION (RDWY) | M3 | 5252 |
| 132-5018 | EMBANK (ORD COMP) (TY B) (CL 3) | M3 | 7711 |
| 160-5002 | FURN AND PLAC TPSL (CL 2) (150 MM) | M2 | 9994 |
| 164-5049 | DRILL SEED (PERM) (URBAN) (CLAY) | M2 | 9994 |
| 247-5024 | FL BS (COMPL IN PLAC)(TY A GR 6 CL 4) | M3 | 2554 |
| 310-5006 | ASPH MATL (AE-P) | L | 4154 |
| * | ONE CRSE SURF TREAT | M2 | 8422 |
| 316-5028 | AGGR (TY PB, GR 4) | M3 | 77 |
| 316-5226 | ASPH (AC-15P, HFRS-2P OR CRS-2P) | L | 11454 |
| 345-5004 | ASPH STAB BS (GR 4) | MGR | 646 |
| 420-5050 | CL C CONC (RAIL FOUNDATION) | M3 | 35.3 |
| 432-5001 | RIPRAP (CONC) (CL B) | M3 | 130 |
| 450-5045 | RAIL TY (SSTR) | M | 120 |
| 529-5001 | CONC CURB (TY 1) | M | 263 |
| 540-5005 | TERM ANCHOR SECT (2.67 MM) | EA | 1 |
| 540-5006 | MBGF (TIM POST) (2.67 MM) | M | 38 |
| 3022-5003 | HOT MIX (TY C) | MGR | 793 |
| ⧣ 3117-5003 | HOT MIX (TY C) (SURF) | MGR | 760 |
| 3117-5018 | HOT MIX (TY C) (LEVEL-UP) | MGR | 155 |

Table title: ESTIMATED QUANTITIES

* FOR CONTRACTORS INFORMATION ONLY
⧣ QUANTITY COMPUTER GENERATED

NOTE(S):

ALL DIMENSIONS ARE IN METERS UNLESS OTHERWISE NOTED.

FOR HORIZONTAL ALIGNMENT / DATA, SEE SHEET(S) 164 - 171.

FOR LIMITS OF SEEDING & TOPSOIL, SEE PROJECT X-SECTIONS AND TYPICAL SECTIONS.

FOR INTERSECTION LAYOUT, SEE SHEET(S) 323.

FOR RIPRAP DETAILS SEE PROJECT X-SECTIONS AND SHEET(S) 342.

FOR RIPRAP ASSOCIATED WITH STORM DRAINAGE STRUCTURES SEE SHEET(S) 454 - 470.

FOR ADDITIONAL STORM DRAIN INFO. REFER TO THE SPECIFIC STORM DRAIN PROFILE SHEET(S).

UTILITY LEGEND

| | |
|---|---|
| — W — · — W — | WATER LINE |
| — T1 — — T1 — | TELEPHONE LINE |
| —— C — · · — C — | CABLE LINE |
| — · · — G1 — · · — G1 — | GAS LINE |

LIMITS OF ASPH STAB BS @ INTERSECTION

WIDENING AREA

STATE OF TEXAS
JOEL K. DAVENPORT, JR.
79276
REGISTERED PROFESSIONAL ENGINEER

Joel K. Davenport, Jr. P.E. 79276 — 11/1/00 Date

©2000 Texas Department of Transportation

PLAN SHEET

SHEET 19 OF 57

| FED. RD. DIV. NO. | FEDERAL AID PROJECT NO. | | SHEET NO. |
|---|---|---|---|
| 6 | NH 2000(704), etc. | | 209 |
| STATE | DIST. | COUNTY | |
| TEXAS | SAT | BEXAR | |
| CONT. | SECT. | JOB | HIGHWAY NO. |
| 2452 | 01 | 036, etc. | LP 1604 |

ACC: t:ao\design\lp1604fm471-90\
FILE: plan19.dgn
LEVELS DISPLAYED

QUANTITIES THIS SHEET
CSJ 2452-01-037

SCALE: 1:1000

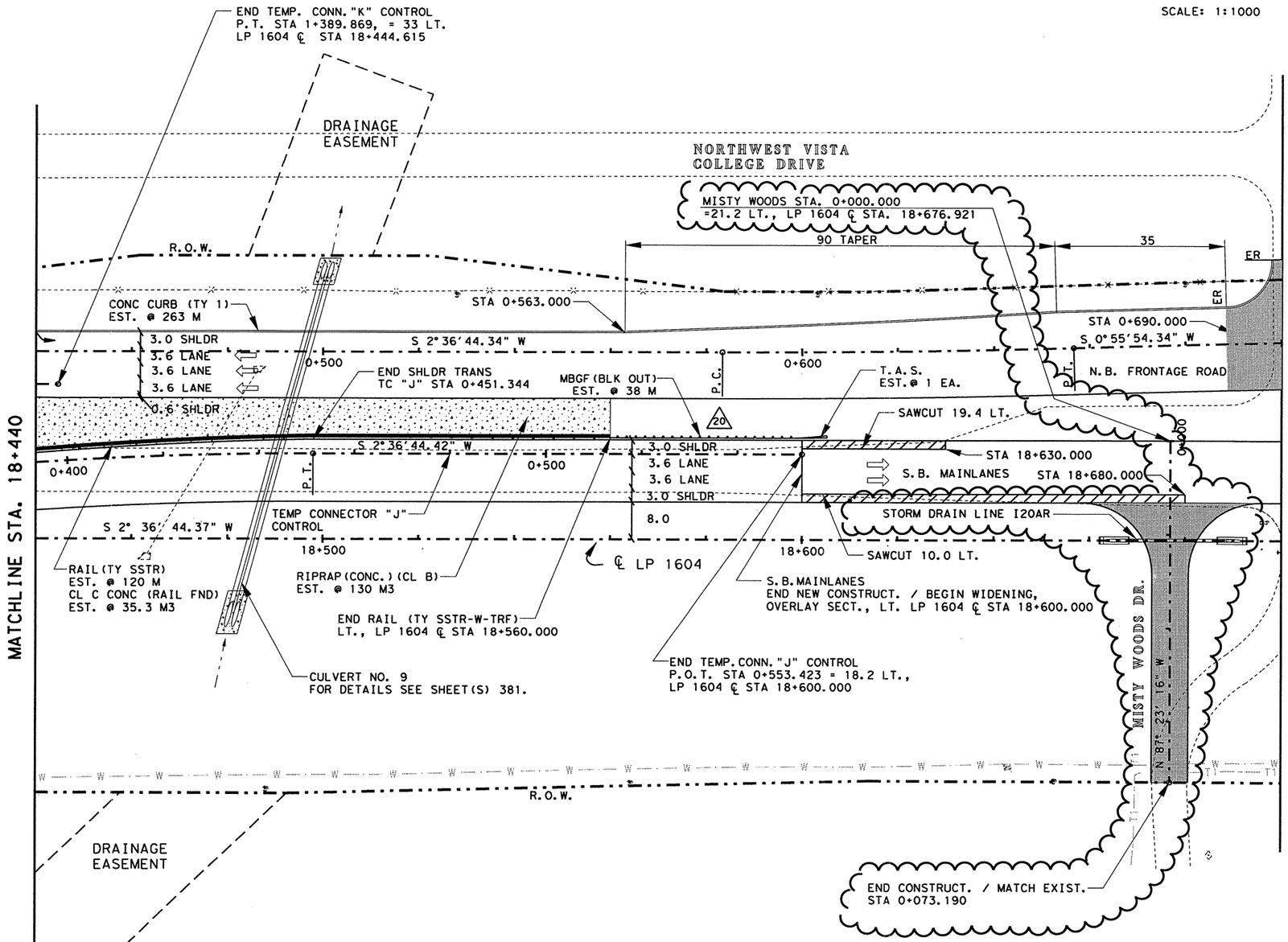


## ESTIMATED QUANTITIES

| | ITEM # | ITEM | UNIT | QTY. |
|---|---|---|---|---|
| | 100-5002 | PREP ROW | KM | 0.26 |
| | 110-5001 | EXCAVATION (RDWY) | M3 | 5582 |
| | 132-5018 | EMBANK (ORD COMP) (TY B) (CL 3) | M3 | 7721 |
| | 160-5002 | FURN AND PLAC TPSL (CL 2) (150 MM) | M2 | 9994 |
| | 164-5049 | DRILL SEED (PERM) (URBAN) (CLAY) | M2 | 9994 |
| | 247-5024 | FL BS (COMPL IN PLAC) (TY A GR 6 CL 4) | M3 | 2554 |
| | 310-5006 | ASPH MATL (AF-P) | L | 4154 |
| * | | ONE CRSE SURF TREAT | M2 | 8594 |
| | 316-5028 | AGGR (TY PB, GR 4) | M3 | 79 |
| | 316-5226 | ASPH (AC-15P, HFRS-2P OR CRS-2P) | L | 11688 |
| | 345-5004 | ASPH STAB BS (GR 4) | MGR | 776 |
| | 420-5050 | CL C CONC (RAIL FOUNDATION) | M3 | 35.3 |
| | 432-5001 | RIPRAP (CONC) (CL B) | M3 | 130 |
| | 450-5045 | RAIL TY (SSTR) | M | 120 |
| | 529-5001 | CONC CURB (TY 1) | M | 263 |
| | 540-5005 | TERM ANCHOR SECT (2.67 MM) | EA | 1 |
| 20 | 540-5007 | MBGF (BLK OUT) (TIM POST) (2.67 MM) | M | 38 |
| | 3022-5003 | HOT MIX (TY C) | MGR | 810 |
| | 3117-5003 | HOT MIX (TY C) (SURF) | MGR | 775 |
| # | 3117-5018 | HOT MIX (TY C) (LEVEL-UP) | MGR | 183 |

* FOR CONTRACTORS INFORMATION ONLY
# QUANTITY COMPUTER GENERATED

NOTE(S):

ALL DIMENSIONS ARE IN METERS UNLESS OTHERWISE NOTED.

FOR HORIZONTAL ALIGNMENT / DATA, SEE SHEET(S) 164 - 171.

FOR LIMITS OF SEEDING & TOPSOIL, SEE PROJECT X-SECTIONS AND TYPICAL SECTIONS.

FOR INTERSECTION LAYOUT, SEE SHEET(S) 323.

FOR RIPRAP DETAILS SEE PROJECT X-SECTIONS AND SHEET(S) 342.

FOR RIPRAP ASSOCIATED WITH STORM DRAINAGE STRUCTURES SEE SHEET(S) 454 - 470.

FOR ADDITIONAL STORM DRAIN INFO. REFER TO THE SPECIFIC STORM DRAIN PROFILE SHEET(S).

# REFERS TO CHANGES MADE AS PART OF CHANGE ORDER

CHANGE ORDER____

REVISED SHEET

## UTILITY LEGEND

| | |
|---|---|
| —W—W— | WATER LINE |
| —T1—T1— | TELEPHONE LINE |
| —C—C— | CABLE LINE |
| —G1—G1— | GAS LINE |

LIMITS OF ASPH STAB BS @ INTERSECTION

WIDENING AREA

## CHANGE ORDER NO. 64

-RE-ALIGNED MISTY WOODS
-REVISED QUANTITIES

STATE OF TEXAS
JEROME D. PAVLISKA
76075
REGISTERED PROFESSIONAL ENGINEER

Jerome D. Pavliska, P.E. 6-18-04
Jerome D. Pavliska, P.E. — Date

©2000
Texas Department of Transportation

# PLAN SHEET

SHEET 19 OF 57

| FED.RD. DIV.NO. | FEDERAL AID PROJECT NO. | | SHEET NO. |
|---|---|---|---|
| 6 | NH 2000(704), etc. | | 209A |
| STATE | DIST. | COUNTY | |
| TEXAS | SAT | BEXAR | |
| CONT. | SECT. | JOB | HIGHWAY NO. |
| 2452 | 01 | 036, etc. | LP 1604 |

LEVELS DISPLAYED
1 2 3 4 5 6 7 8 9 10 11 12 13 14 15 16
17 18 19 20 21 22 23 24 25 26 27 28 29 30 31 32
33 34 45 56 57 58 59 60 41 42 43 44 45 46 47 48
49 50 51 52 53 54 55 56 57 58 59 60 61 62 63

ACC: t:\oo\design\lp1604fm471-90\
FILE: plan19.dgn

QUANTITIES THIS SHEET
CSJ 2452-01-037

SCALE: 1:1000

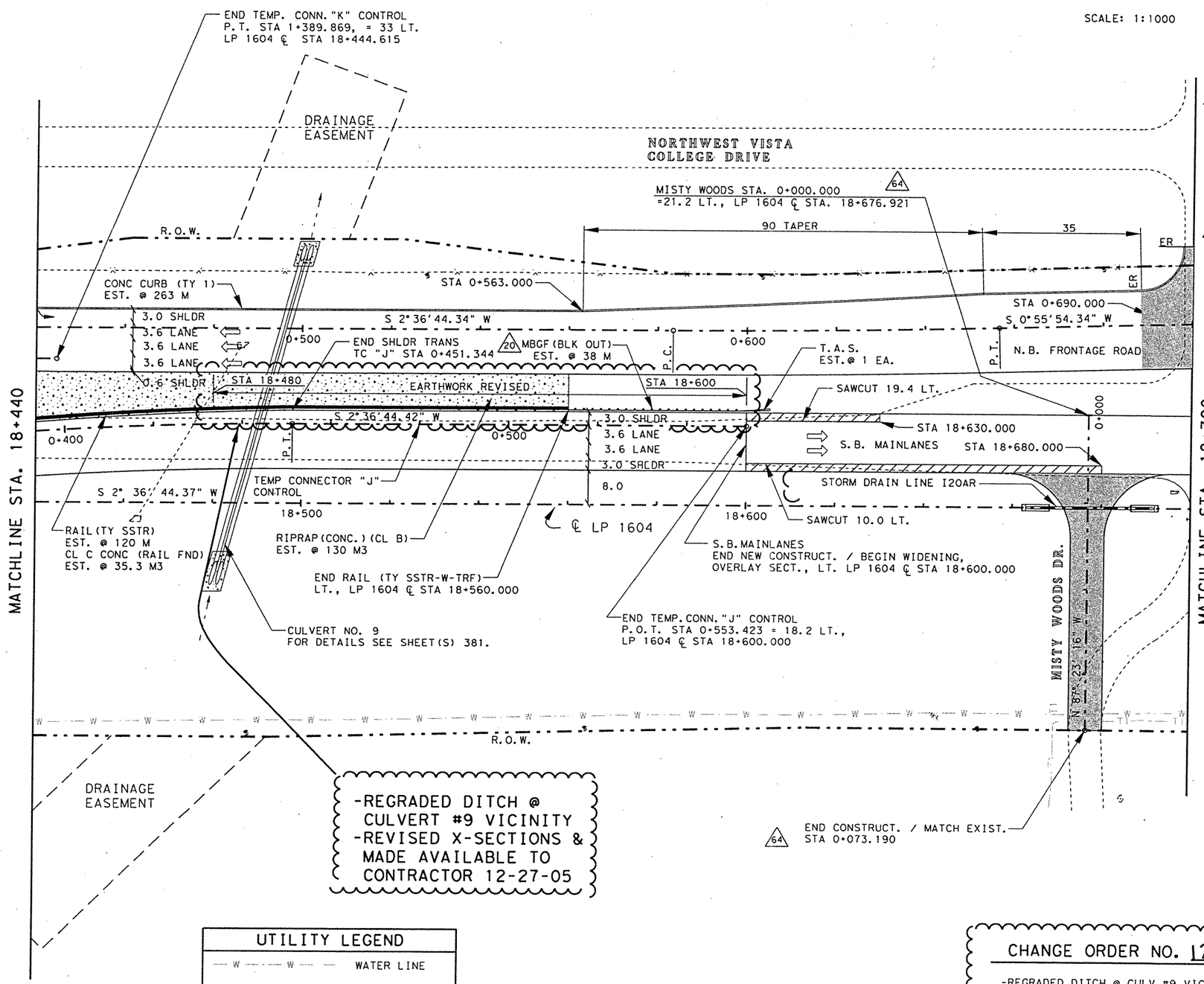


## ESTIMATED QUANTITIES

| ITEM # | ITEM | UNIT | QTY. |
|---|---|---|---|
| 100-5002 | PREP ROW | KM | 0.26 |
| 110-5001 | EXCAVATION (RDWY) | M3 | 5550 |
| 132-5018 | EMBANK (ORD COMP) (TY B) (CL 3) | M3 | 7734 |
| 160-5002 | FURN AND PLAC TPSL (CL 2) (150 MM) | M2 | 9994 |
| 164-5049 | DRILL SEED (PERM) (URBAN) (CLAY) | M2 | 9994 |
| 247-5024 | FL BS (COMPL IN PLAC)(TY A GR 6 CL 4) | M3 | 2554 |
| 310-5006 | ASPH MATL (AE-P) | L | 4154 |
| * | ONE CRSE SURF TREAT | M2 | 8594 |
| 64 316-5028 | AGGR (TY PB, GR 4) | M3 | 79 |
| 316-5226 | ASPH (AC-15P, HFRS-2P OR CRS-2P) | L | 11688 |
| 345-5004 | ASPH STAB BS (GR 4) | MGR | 776 |
| 420-5050 | CL C CONC (RAIL FOUNDATION) | M3 | 35.3 |
| 432-5001 | RIPRAP (CONC) (CL B) | M3 | 130 |
| 450-5045 | RAIL TY (SSTR) | M | 120 |
| 529-5001 | CONC CURB (TY 1) | M | 263 |
| 540-5005 | TERM ANCHOR SECT (2.67 MM) | EA | 1 |
| 20 540-5007 | MBGF (BLK OUT) (TIM POST) (2.67 MM) | M | 38 |
| 3022-5003 | HOT MIX (TY C) | MGR | 810 |
| 64 3117-5003 | HOT MIX (TY C) (SURF) | MGR | 775 |
| # 3117-5018 | HOT MIX (TY C) (LEVEL-UP) | MGR | 183 |

* FOR CONTRACTORS INFORMATION ONLY
\# QUANTITY COMPUTER GENERATED

NOTE(S):

ALL DIMENSIONS ARE IN METERS UNLESS OTHERWISE NOTED.

FOR HORIZONTAL ALIGNMENT / DATA, SEE SHEET(S) 164 - 171.

FOR LIMITS OF SEEDING & TOPSOIL, SEE PROJECT X-SECTIONS AND TYPICAL SECTIONS.

FOR INTERSECTION LAYOUT, SEE SHEET(S) 323.

FOR RIPRAP DETAILS SEE PROJECT X-SECTIONS AND SHEET(S) 342.

FOR RIPRAP ASSOCIATED WITH STORM DRAINAGE STRUCTURES SEE SHEET(S) 454 - 470.

FOR ADDITIONAL STORM DRAIN INFO. REFER TO THE SPECIFIC STORM DRAIN PROFILE SHEET(S).

# REFERS TO CHANGES MADE AS PART OF CHANGE ORDER

CHANGE ORDER 123

REVISED SHEET

## UTILITY LEGEND

| | |
|---|---|
| W W | WATER LINE |
| T1 T1 | TELEPHONE LINE |
| C C | CABLE LINE |
| G1 G1 | GAS LINE |

LIMITS OF ASPH STAB BS @ INTERSECTION

WIDENING AREA

CHANGE ORDER NO. 123

-REGRADED DITCH @ CULV #9 VICINITY.
-REVISED EARTHWORK QUANTITIES.

STATE OF TEXAS
FITZGERALDO G. SANCHEZ
76084
LICENCED PROFESSIONAL ENGINEER

Fitzgerald G. Sanchez 03-13-06
Fitzgerald G. Sanchez, P.E. Date

©2000 Texas Department of Transportation

PLAN SHEET
SHEET 19 OF 57

| FED. RD. DIV. NO. | FEDERAL AID PROJECT NO. | SHEET NO. |
|---|---|---|
| 6 | NH 2000(704), etc. | 209A |
| STATE | DIST. | COUNTY |
| TEXAS | SAT | BEXAR |
| CONT. | SECT. | JOB | HIGHWAY NO. |
| 2452 | 01 | 036, etc. | LP 1604 |

3-10-06

LEVELS DISPLAYED
1 2 3 4 5 6 7 8 9 10 11 12 13 14 15 16
17 18 19 20 21 22 23 24 25 26 27 28 29 30 31 32
33 34 35 36 37 38 39 40 41 42 43 44 45 46 47 48
49 50 51 52 53 54 55 56 57 58 59 60 61 62 63

ACC: t:\oo\design\lp1604fm471-90\
FILE: plan19.dgn

## UTILITY LEGEND

| | |
|---|---|
| — W — · — W — · — | WATER LINE |
| — T1 — · — T1 — · — | TELEPHONE LINE |
| ——— C — · — C — | CABLE LINE |
| — · — G1 — · — G1 — · — | GAS LINE |

QUANTITIES THIS SHEET
CSJ 2452-01-037

SCALE: 1:1000

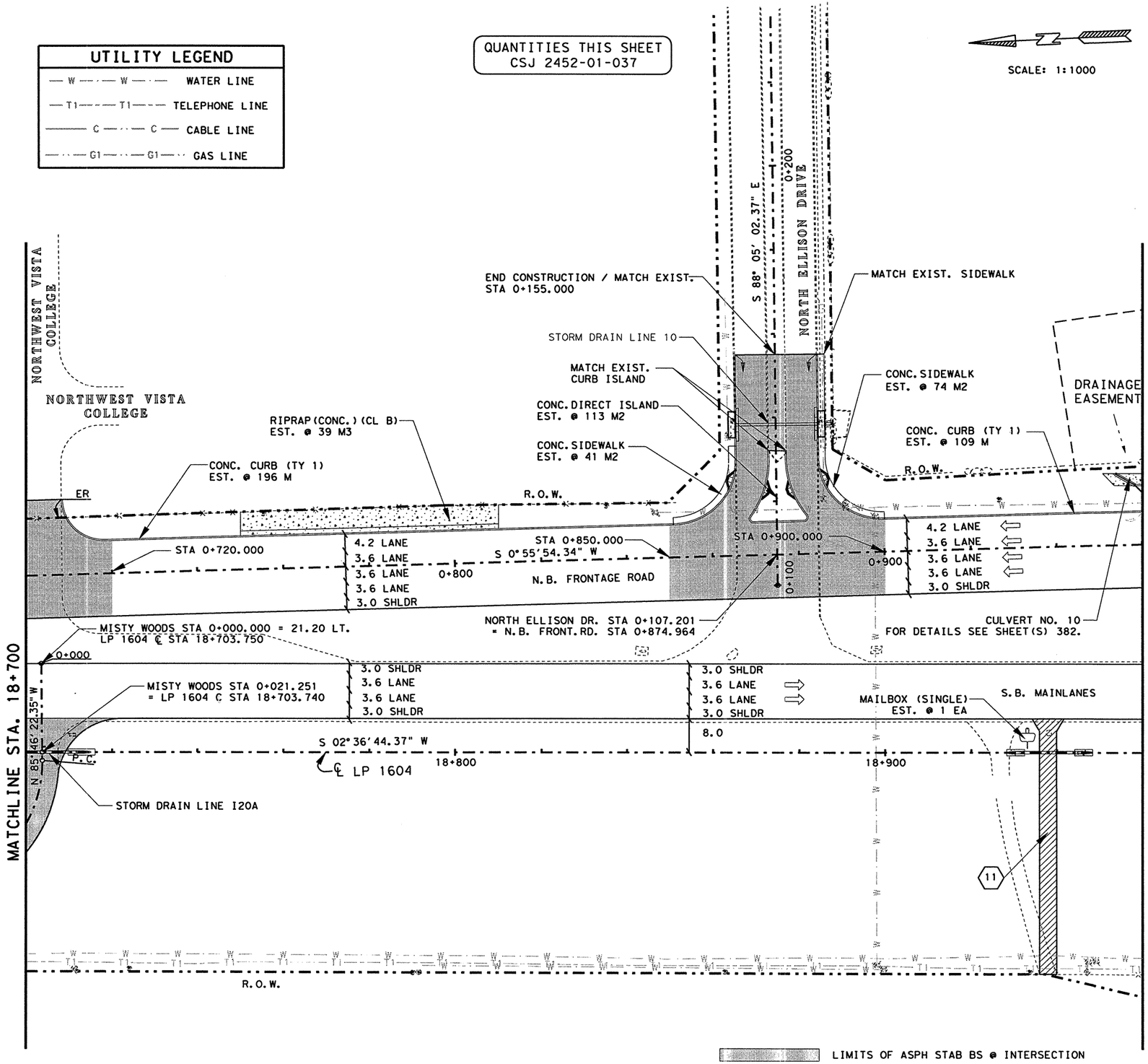


## ESTIMATED QUANTITIES

| | ITEM # | ITEM | UNIT | QTY. |
|---|---|---|---|---|
| | 100-5002 | PREP ROW | KM | 0.26 |
| | 110-5001 | EXCAVATION (RDWY) | M3 | 13505 |
| | 132-5018 | EMBANK (ORD COMP) (TY B) (CL 3) | M3 | 1596 |
| | 160-5002 | FURN AND PLAC TPSL (CL 2) (150 MM) | M2 | 11951 |
| | 164-5049 | DRILL SEED (PERM) (URBAN) (CLAY) | M2 | 11951 |
| | 247-5024 | FL BS (COMPL IN PLAC)(TY A GR 6 CL 4) | M3 | 1477 |
| | 310-5006 | ASPH MATL (AE-P) | L | 3708 |
| * | | ONE CRSE SURF TREAT | M2 | 9683 |
| | 316-5028 | AGGR (TY PB, GR 4) | M3 | 88 |
| | 316-5226 | ASPH (AC-15P, HFRS-2P OR CRS-2P) | L | 13169 |
| | 345-5004 | ASPH STAB BS (GR 4) | MGR | 1915 |
| | 432-5001 | RIPRAP (CONC) (CL B) | M3 | 39 |
| | 529-5001 | CONC CURB (TY 1) | M | 305 |
| | 530-5003 | DRVWAYS (ASPH- CONC PAV) | M2 | 248 |
| | 531-5002 | CONCRETE SIDEWALKS | M2 | 115 |
| | 536-5003 | CONC DIRECT ISLAND | M2 | 113 |
| | 560-5001 | MAILBOX INSTAL (SINGLE) | EA | 1 |
| | 3117-5003 | HOT MIX (TY C) | MGR | 899 |
| | 3117-5018 | HOT MIX (TY C) (SURF) | MGR | 864 |
| # | 3117-5024 | HOT MIX (TY C) (LEVEL-UP) | MGR | 653 |
| | | | | |

* FOR CONTRACTORS INFORMATION ONLY
# QUANTITY COMPUTER GENERATED

NOTE(S):

ALL DIMENSIONS ARE IN METERS UNLESS OTHERWISE NOTED.

FOR HORIZONTAL ALIGNMENT / DATA, SEE SHEET(S) 164 - 171.

FOR LIMITS OF SEEDING & TOPSOIL, SEE PROJECT X-SECTIONS AND TYPICAL SECTIONS.

FOR INTERSECTION LAYOUT, SEE SHEET(S) 323, 325.

FOR RIPRAP DETAILS SEE PROJECT X-SECTIONS AND SHEET(S) 342.

FOR RIPRAP ASSOCIATED WITH STORM DRAINAGE STRUCTURES SEE SHEET(S) 454 - 470.

FOR ADDITIONAL STORM DRAIN INFO. REFER TO THE SPECIFIC STORM DRAIN PROFILE SHEET(S).

(#) DRIVEWAY #, FOR MORE DETAILS SEE SHEET(S) 27, 28 & 336.

WHEELCHAIR RAMPS TY 2

STATE OF TEXAS
JOEL K. DAVENPORT, JR.
79276
REGISTERED PROFESSIONAL ENGINEER

Joel K. Davenport, Jr. 11/1/00
Joel K. Davenport, Jr. P.E. 79276 Date

©2000
Texas Department of Transportation

# PLAN SHEET

SHEET 20 OF 57

| FED.RD. DIV.NO. | FEDERAL AID PROJECT NO. | | SHEET NO. |
|---|---|---|---|
| 6 | NH 2000(704), etc. | | 210 |
| STATE | DIST. | COUNTY | |
| TEXAS | SAT | BEXAR | |
| CONT. | SECT. | JOB | HIGHWAY NO. |
| 2452 | 01 | 036, etc. | LP 1604 |

LEVELS DISPLAYED
1 2 3 4 5 6 7 8 9 10 11 21 31 41 51 61
71 81 91 02 12 22 32 42 52 62 72 82 92 03 13 23
33 43 53 63 73 83 93 04 14 24 34 44 54 64 74 84
94 05 15 25 35 45 55 65 75 85 95 06 16 26 36
ACC: t:\ao\design\lp1604fm471-90\
FILE: plan20.dgn

Plotted on: 6/15/2004
Design Filename: T:\AO\Design\lp1604fm471-90\PD*Phase2*change*order*mylars\submittal\plansheets\road\plan-profile\plan20.dgn
LEVELS DISPLAYED
1 2 3 4 5 6 7 8 9 10 11 12 13 14 15 16 17 18 19 20 21 22 23 24 25 26 27 28 29 30 31 32 33 34 35 36 37 38 39 40 41 42 43 44 45 46 47 48 49 50 51 52 53 54 55 56 57 58 59 60 61 62 63
ACC: *:ao\design\lp1604fm471-90\
FILE: plan20.dgn

## UTILITY LEGEND

- W — W — WATER LINE
- T1 — T1 — TELEPHONE LINE
- C — C — CABLE LINE
- G1 — G1 — GAS LINE

QUANTITIES THIS SHEET
CSJ 2452-01-037

SCALE: 1:1000

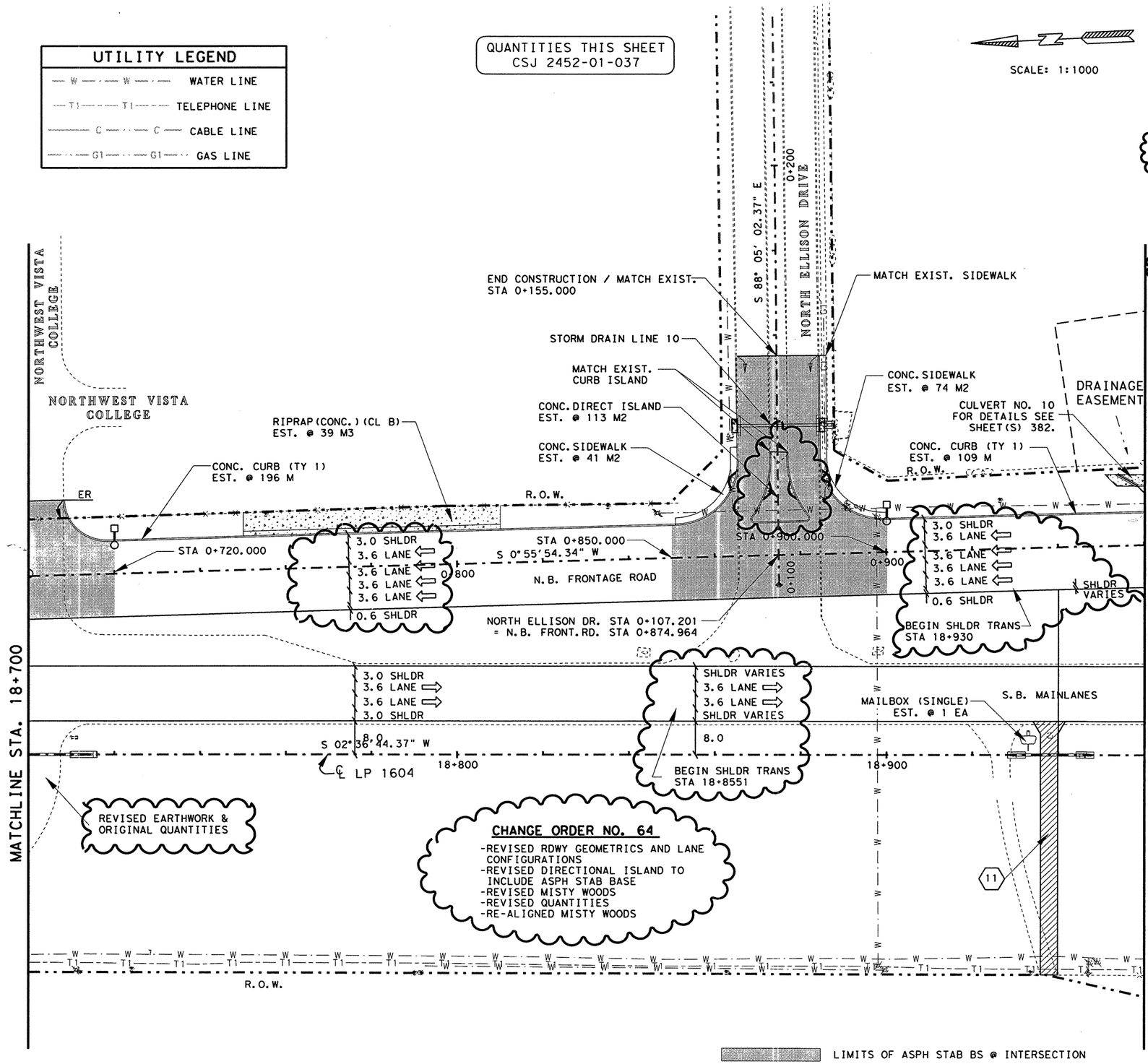


## ESTIMATED QUANTITIES

| | ITEM # | ITEM | UNIT | QTY. |
|---|---|---|---|---|
| | 100-5002 | PREP ROW | KM | 0.26 |
| | 110-5001 | EXCAVATION (RDWY) | M3 | 13803 |
| | 132-5018 | EMBANK (ORD COMP) (TY B) (CL 3) | M3 | 1591 |
| | 160-5002 | FURN AND PLAC TPSL (CL 2) (150 MM) | M2 | 11951 |
| | 164-5049 | DRILL SEED (PERM) (URBAN) (CLAY) | M2 | 11951 |
| | 247-5024 | FL BS (COMPL IN PLAC) (TY A GR 6 CL 4) | M3 | 1477 |
| | 310-5006 | ASPH MATL (AE-P) | L | 3822 |
| * | | ONE CRSE SURF TREAT | M2 | 9809 |
| | 316-5028 | AGGR (TY PB, GR 4) | M3 | 89 |
| | 316-5226 | ASPH (AC-15P, HFRS-2P OR CRS-2P) | L | 13341 |
| | 345-5004 | ASPH STAB BS (GR 4) | MGR | 2013 |
| | 432-5001 | RIPRAP (CONC) (CL B) | M3 | 39 |
| | 529-5001 | CONC CURB (TY 1) | M | 305 |
| | 530-5003 | DRVWAYS (ASPH- CONC PAV) | M2 | 248 |
| | 531-5002 | CONCRETE SIDEWALKS | M2 | 115 |
| | 536-5003 | CONC DIRECT ISLAND | M2 | 113 |
| | 560-5001 | MAILBOX INSTAL (SINGLE) | EA | 1 |
| | 3117-5003 | HOT MIX (TY C) | MGR | 911 |
| | 3117-5014 | HOT MIX (TY C) (SURF) | MGR | 876 |
| # | 3117-5024 | HOT MIX (TY C) (LEVEL-UP) | MGR | 773 |

* FOR CONTRACTORS INFORMATION ONLY
# QUANTITY COMPUTER GENERATED

NOTE(S):

ALL DIMENSIONS ARE IN METERS UNLESS OTHERWISE NOTED.

FOR HORIZONTAL ALIGNMENT / DATA, SEE SHEET(S) 164 - 171.

FOR LIMITS OF SEEDING & TOPSOIL, SEE PROJECT X-SECTIONS AND TYPICAL SECTIONS.

FOR INTERSECTION LAYOUT, SEE SHEET(S) 323, 325.

FOR RIPRAP DETAILS SEE PROJECT X-SECTIONS AND SHEET(S) 342.

FOR RIPRAP ASSOCIATED WITH STORM DRAINAGE STRUCTURES SEE SHEET(S) 454 - 470.

FOR ADDITIONAL STORM DRAIN INFO. REFER TO THE SPECIFIC STORM DRAIN PROFILE SHEET(S).

(#) DRIVEWAY #, FOR MORE DETAILS SEE SHEET(S) 27, 28 & 336.

WHEELCHAIR RAMPS TY 2

FOR RIPRAP ASSOCIATED WITH STORM RETAINING WALLS, SEE SHEET(S) TO .

CHANGE ORDER NO. 64 | REVISED SHEET

STATE OF TEXAS
JEROME D. PAVLISKA
76075
REGISTERED PROFESSIONAL ENGINEER

Jerome D. Pavliska, P.E. 6-18-04
Jerome D. Pavliska, P.E. Date

©2000
Texas Department of Transportation

PLAN SHEET
SHEET 20 OF 57

| FED.RD. DIV.NO. | FEDERAL AID PROJECT NO. | | SHEET NO. |
|---|---|---|---|
| 6 | NH 2000(704), etc. | | 210A |
| STATE | DIST. | COUNTY | |
| TEXAS | SAT | BEXAR | |
| CONT. | SECT. | JOB | HIGHWAY NO. |
| 2452 | 01 | 036, etc. | LP 1604 |

06-15-04

QUANTITIES THIS SHEET
CSJ 2452-01-037

SCALE: 1:1000

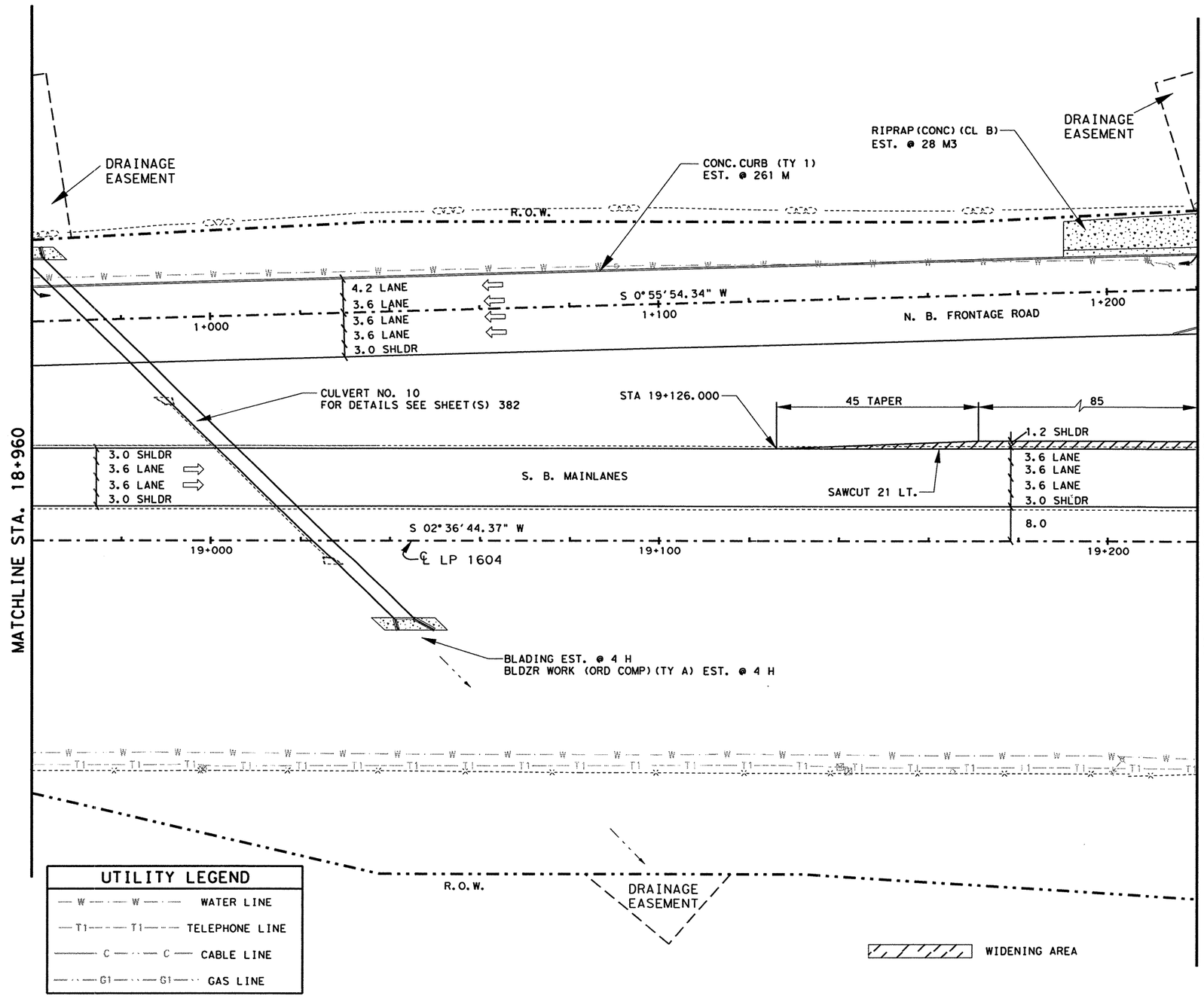


## ESTIMATED QUANTITIES

| | ITEM # | ITEM | UNIT | QTY. |
|---|---|---|---|---|
| | 100-5002 | PREP ROW | KM | 0.26 |
| | 110-5001 | EXCAVATION (RDWY) | M3 | 18417 |
| | 132-5018 | EMBANK (ORD COMP) (TY B) (CL 3) | M3 | 5797 |
| | 150-5003 | BLADING | H | 4 |
| | 156-5003 | BLDZR WORK (ORD COMP) (TY A) | H | 4 |
| | 160-5002 | FURN AND PLAC TPSL (CL 2) (150 MM) | M2 | 14741 |
| | 164-5049 | DRILL SEED (PERM) (URBAN) (CLAY) | M2 | 14741 |
| | 247-5024 | FL BS (COMPL IN PLAC)(TY A GR 6 CL 4) | M3 | 2005 |
| | 310-5006 | ASPH MATL (AE-P) | L | 4895 |
| * | | ONE CRSE SURF TREAT | M2 | 8484 |
| | 316-5028 | AGGR (TY PB, GR 4) | M3 | 77 |
| | 316-5226 | ASPH (AC-15P, HFRS-2P OR CRS-2P) | L | 11538 |
| | 345-5004 | ASPH STAB BS (GR 4) | MGR | 98 |
| | 432-5001 | RIPRAP (CONC) (CL B) | M3 | 28 |
| | 529-5001 | CONC CURB (TY 1) | M | 261 |
| | 3117-5003 | HOT MIX (TY C) | MGR | 806 |
| | 3117-5018 | HOT MIX (TY C) (SURF) | MGR | 774 |
| # | 3117-5024 | HOT MIX (TY C) (LEVEL-UP) | MGR | 724 |
| | | | | |

* FOR CONTRACTORS INFORMATION ONLY
# QUANTITY COMPUTER GENERATED

NOTE(S):

ALL DIMENSIONS ARE IN METERS UNLESS OTHERWISE NOTED.

FOR HORIZONTAL ALIGNMENT / DATA, SEE SHEET(S) 164 - 171.

FOR LIMITS OF SEEDING & TOPSOIL, SEE PROJECT X-SECTIONS AND TYPICAL SECTIONS.

FOR RIPRAP DETAILS SEE PROJECT X-SECTIONS AND SHEET(S) 342.

FOR RIPRAP ASSOCIATED WITH STORM DRAINAGE STRUCTURES SEE SHEET(S) 454 - 470.

## UTILITY LEGEND

| | |
|---|---|
| W W | WATER LINE |
| T1 T1 | TELEPHONE LINE |
| C C | CABLE LINE |
| G1 G1 | GAS LINE |

STATE OF TEXAS
JOEL K. DAVENPORT, JR.
79276
REGISTERED PROFESSIONAL ENGINEER

Joel K. Davenport, Jr. 11/1/00
Joel K. Davenport, Jr. P.E. 79276 Date

©2000
Texas Department of Transportation

# PLAN SHEET

SHEET 21 OF 57

| FED.RD. DIV.NO. | FEDERAL AID PROJECT NO. | | SHEET NO. |
|---|---|---|---|
| 6 | NH 2000(704), etc. | | 211 |
| STATE | DIST. | COUNTY | |
| TEXAS | SAT | BEXAR | |
| CONT. | SECT. | JOB | HIGHWAY NO. |
| 2452 | 01 | 036, etc. | LP 1604 |

LEVELS DISPLAYED
1 2 3 4 5 6 7 8 9 10 11 12 13 14 15 16
17 18 19 20 21 22 23 24 25 26 27 28 29 30 31 32
33 34 35 36 37 38 39 40 41 42 43 44 45 46 47 48
49 50 51 52 53 54 55 56 57 58 59 60 61 62 63

ACC: t:\ao\design\lp1604fm471-90\
FILE: plan21.dgn

QUANTITIES THIS SHEET
CSJ 2452-01-037

SCALE: 1:1000

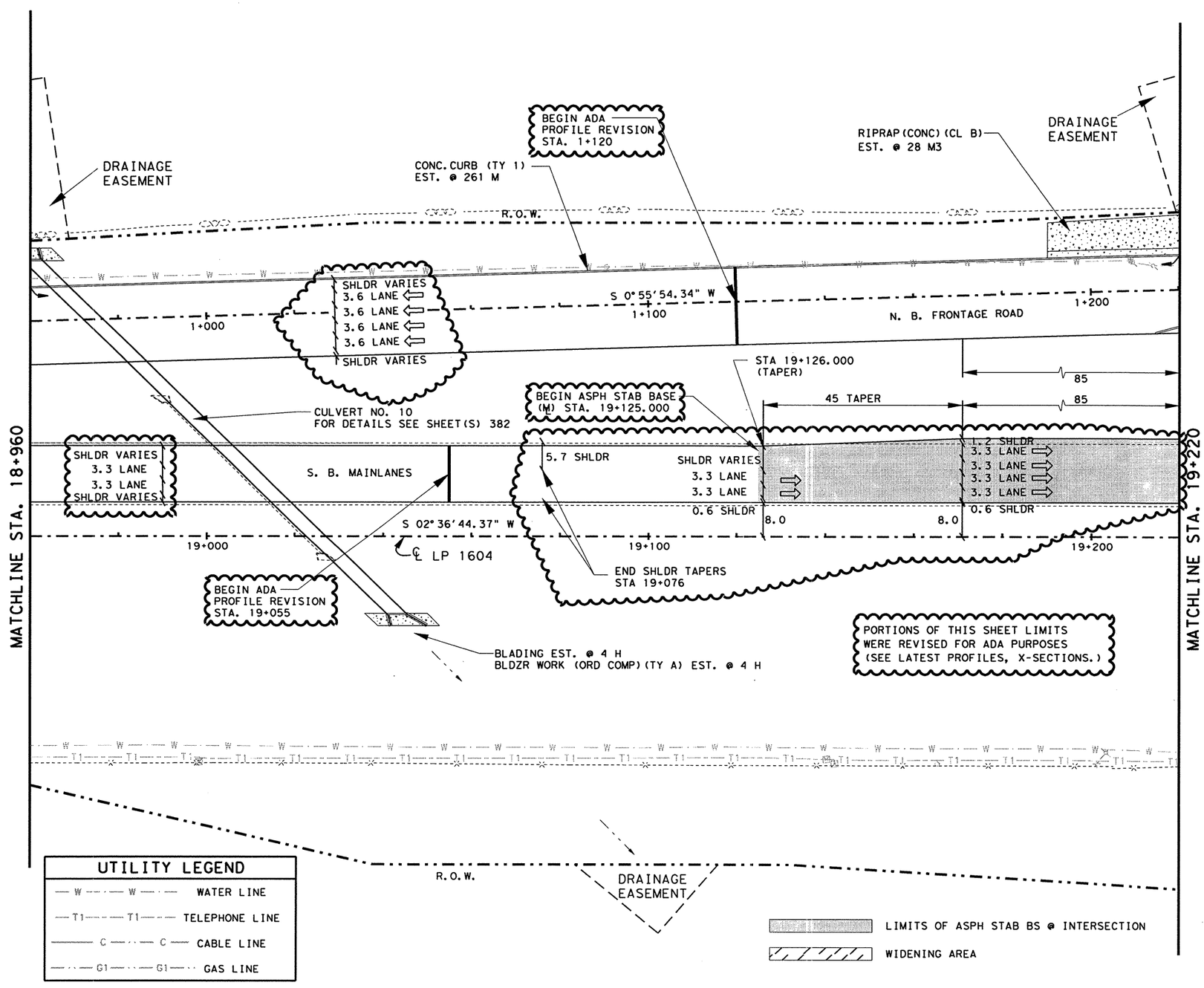


## UTILITY LEGEND

| | |
|---|---|
| W W | WATER LINE |
| T1 T1 | TELEPHONE LINE |
| C C | CABLE LINE |
| G1 G1 | GAS LINE |

## ESTIMATED QUANTITIES

| | ITEM # | ITEM | UNIT | QTY. |
|---|---|---|---|---|
| | 100-5002 | PREP ROW | KM | 0.26 |
| | 110-5001 | EXCAVATION (RDWY) | M3 | 18257 |
| | 132-5018 | EMBANK (ORD COMP) (TY B) (CL 3) | M3 | 6748 |
| | 150-5003 | BLADING | H | 4 |
| | 156-5003 | BLDZR WORK (ORD COMP) (TY A) | H | 4 |
| | 160-5002 | FURN AND PLAC TPSL (CL 2) (150 MM) | M2 | 14741 |
| | 164-5049 | DRILL SEED (PERM) (URBAN) (CLAY) | M2 | 14741 |
| | 247-5024 | FL BS (COMPL IN PLAC) (TY A GR 6 CL 4) | M3 | 2005 |
| | 310-5006 | ASPH MATL (AE-P) | L | 4895 |
| * | | ONE CRSE SURF TREAT | M2 | 8484 |
| | 316-5028 | AGGR (TY PB, GR 4) | M3 | 77 |
| | 316-5226 | ASPH (AC-15P, HFRS-2P OR CRS-2P) | L | 11538 |
| | 345-5004 | ASPH STAB BS (GR 4) | MGR | 1041 |
| | 432-5001 | RIPRAP (CONC) (CL B) | M3 | 28 |
| | 529-5001 | CONC CURB (TY 1) | M | 261 |
| | 3117-5003 | HOT MIX (TY C) | MGR | 806 |
| | 3117-5018 | HOT MIX (TY C) (SURF) | MGR | 774 |
| # | 3117-5024 | HOT MIX (TY C) (LEVEL-UP) | MGR | 512 |

* FOR CONTRACTORS INFORMATION ONLY
# QUANTITY COMPUTER GENERATED

NOTE(S):

ALL DIMENSIONS ARE IN METERS UNLESS OTHERWISE NOTED.

FOR HORIZONTAL ALIGNMENT / DATA, SEE SHEET(S) 164 - 171.

FOR LIMITS OF SEEDING & TOPSOIL, SEE PROJECT X-SECTIONS AND TYPICAL SECTIONS.

FOR RIPRAP DETAILS SEE PROJECT X-SECTIONS AND SHEET(S) 342.

FOR RIPRAP ASSOCIATED WITH STORM DRAINAGE STRUCTURES SEE SHEET(S) 454 - 470.

**CHANGE ORDER NO. 64**
-REVISED LANE CONFIGURATIONS
-REMOVED WIDENING SECTIONS
-EXTENDED LIMITS OF ASPH STAB BASE
-REVISED QUANTITIES

CHANGE ORDER 64

REVISED SHEET

STATE OF TEXAS
JEROME D. PAVLISKA
76075
REGISTERED PROFESSIONAL ENGINEER

Jerome D. Pavlisko, P.E. 4-28-04
Jerome D. Pavlisko, P.E. — Date

©2000
Texas Department of Transportation

PLAN SHEET
SHEET 21 OF 57

| FED. RD. DIV. NO. | FEDERAL AID PROJECT NO. | | SHEET NO. |
|---|---|---|---|
| 6 | NH 2000(704), etc. | | 211A |
| STATE | DIST. | COUNTY | |
| TEXAS | SAT | BEXAR | |
| CONT. | SECT. | JOB | HIGHWAY NO. |
| 2452 | 01 | 036, etc. | LP 1604 |

LEVELS DISPLAYED
1 2 3 4 5 6 7 8 9 10 11 12 13 14 15 16
17 18 19 20 21 22 23 24 25 26 27 28 29 30 31 32
33 34 35 36 37 38 39 40 41 42 43 44 45 46 47 48
49 50 51 52 53 54 55 56 57 58 59 60 61 62 63

ACC: t:\oo\design\lp1604fm471-90\
FILE: plan21.dgn

## UTILITY LEGEND

| | |
|---|---|
| — W — W — | WATER LINE |
| — T1 — T1 — | TELEPHONE LINE |
| — C — C — | CABLE LINE |
| — G1 — G1 — | GAS LINE |

QUANTITIES THIS SHEET
CSJ 2452-01-037

SCALE: 1:1000

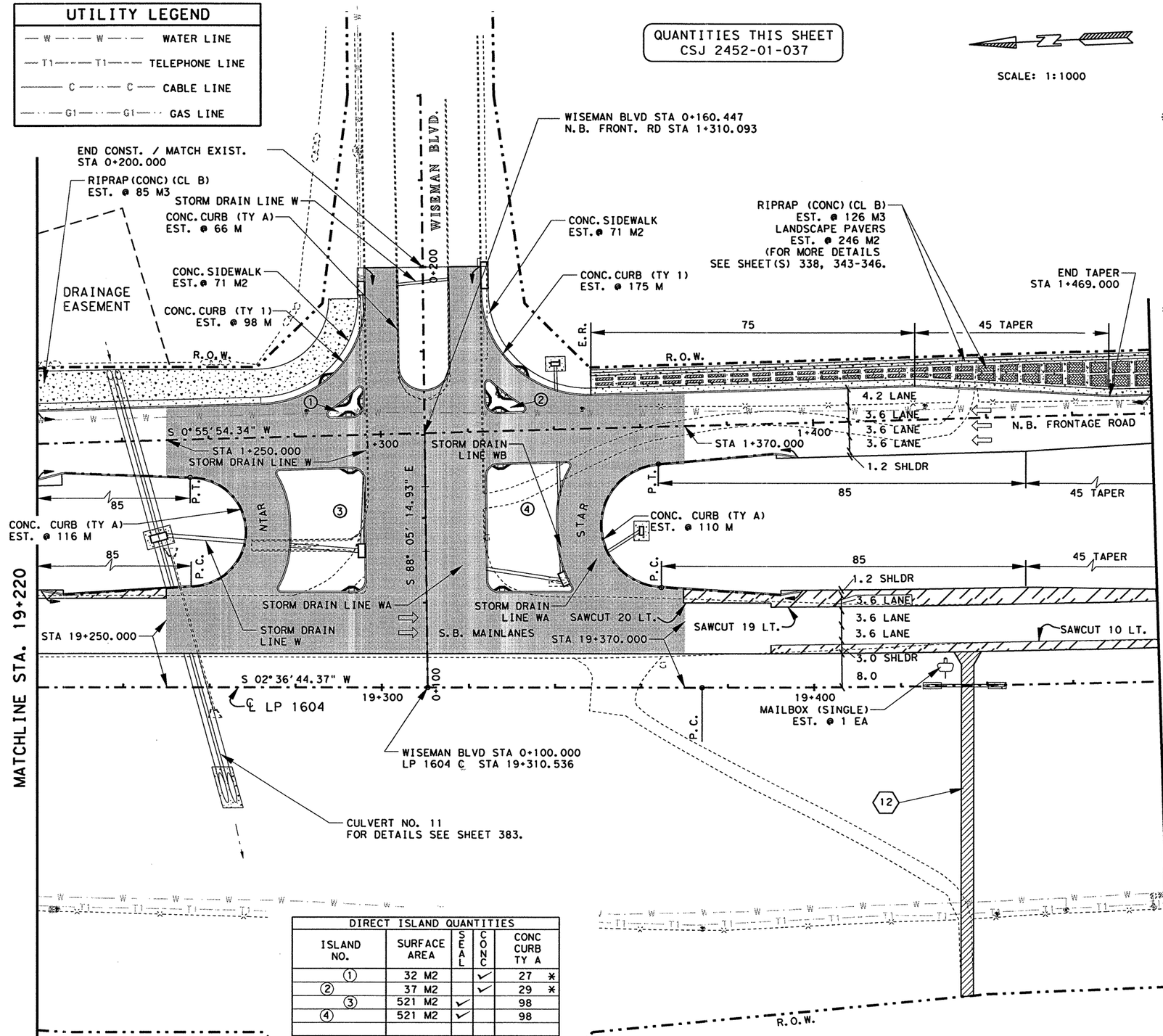


## ESTIMATED QUANTITIES

| | ITEM # | ITEM | UNIT | QTY. |
|---|---|---|---|---|
| | 100-5002 | PREP ROW | KM | 0.26 |
| | 110-5001 | EXCAVATION (RDWY) | M3 | 28819 |
| | 132-5018 | EMBANK (ORD COMP) (TY B) (CL 3) | M3 | 8016 |
| | 160-5002 | FURN AND PLAC TPSL (CL 2) (150 MM) | M2 | 11241 |
| | 164-5049 | DRILL SEED (PERM) (URBAN) (CLAY) | M2 | 11241 |
| | 247-5024 | FL BS (COMPL IN PLAC)(TY A GR 6 CL 4) | M3 | 908 |
| * | 310-5006 | ASPH MATL (AE-P) | L | 2278 |
| | | ONE CRSE SURF TREAT | M2 | 10760 |
| | 316-5028 | AGGR (TY PB, GR 4) | M3 | 98 |
| | 316-5226 | ASPH (AC-15P, HFRS-2P OR CRS-2P) | L | 14634 |
| | 345-5004 | ASPH STAB BS (GR 4) | MGR | 5381 |
| | 432-5001 | RIPRAP (CONC) (CL B) | M3 | 211 |
| | 529-5001 | CONC CURB (TY 1) | M | 273 |
| | 529-5026 | CONC CURB (TY A) | M | 488 |
| | 530-5003 | DRVWAYS (ASPH- CONC PAV) | M2 | 242 |
| | 531-5002 | CONCRETE SIDEWALKS | M2 | 142 |
| | 536-5003 | CONC DIRECT ISLAND | M2 | 69 |
| | 560-5001 | MAILBOX INSTAL (SINGLE) | EA | 1 |
| | 3117-5003 | HOT MIX (TY C) | MGR | 989 |
| | 3117-5018 | HOT MIX (TY C) (SURF) | MGR | 946 |
| ♯ | 3117-5024 | HOT MIX (TY C) (LEVEL-UP) | MGR | 174 |
| | 5027-5001 | LANDSCAPE PAVERS | M2 | 246 |

* FOR CONTRACTORS INFORMATION ONLY
♯ QUANTITY COMPUTER GENERATED

NOTE(S):

ALL DIMENSIONS ARE IN METERS UNLESS OTHERWISE NOTED.

FOR HORIZONTAL ALIGNMENT / DATA, SEE SHEET(S) 164 - 171.

FOR LIMITS OF SEEDING & TOPSOIL, SEE PROJECT X-SECTIONS AND TYPICAL SECTIONS.

FOR INTERSECTION LAYOUT, SEE SHEET(S) 324.

FOR ILLUMINATION LAYOUT / DETAILS, SEE SHEET(S) 617.

FOR RIPRAP DETAILS SEE PROJECT X-SECTIONS AND SHEET(S) 342.

FOR RIPRAP ASSOCIATED WITH STORM DRAINAGE STRUCTURES SEE SHEET(S) 454 - 470.

FOR ADDITIONAL STORM DRAIN INFO. REFER TO THE SPECIFIC STORM DRAIN PROFILE SHEET(S).

(#) DRIVEWAY #, FOR MORE DETAILS SEE SHEET(S) 27, 28 & 336.

WHEELCHAIR RAMPS TY 2

### DIRECT ISLAND QUANTITIES

| ISLAND NO. | SURFACE AREA | SEAL | CONC | CONC CURB TY A | |
|---|---|---|---|---|---|
| ① | 32 M2 | | ✓ | 27 | * |
| ② | 37 M2 | | ✓ | 29 | * |
| ③ | 521 M2 | ✓ | | 98 | |
| ④ | 521 M2 | ✓ | | 98 | |
| | | | | | |

STATE OF TEXAS
JOEL K. DAVENPORT, JR.
79276
REGISTERED
PROFESSIONAL ENGINEER

Joel K. Davenport Jr. 11/1/00
Joel K. Davenport, Jr., P.E. 79276 Date

Texas Department of Transportation

# PLAN SHEET

SHEET 22 OF 57

| FED. RD. DIV. NO. | FEDERAL AID PROJECT NO. | | SHEET NO. |
|---|---|---|---|
| 6 | NH 2000(704), etc. | | 212 |
| STATE | DIST. | COUNTY | |
| TEXAS | SAT | BEXAR | |
| CONT. | SECT. | JOB | HIGHWAY NO. |
| 2452 | 01 | 036, etc. | LP 1604 |

LEVELS DISPLAYED
1 2 3 4 5 6 7 8 9 10 11 12 13 14 15 16
17 18 19 20 21 22 23 24 25 26 27 28 29 30 31 32
33 34 35 36 37 38 39 40 41 42 43 44 45 46 47 48
49 50 51 52 53 54 55 56 57 58 59 60 61 62 63

ACC: t:\oo\design\lp1604fm471-90\
FILE: plan22.dgn

## UTILITY LEGEND

| | |
|---|---|
| — W — W — | WATER LINE |
| — T1 — T1 — | TELEPHONE LINE |
| — C — C — | CABLE LINE |
| — G1 — G1 — | GAS LINE |

QUANTITIES THIS SHEET
CSJ 2452-01-037

SCALE: 1:1000

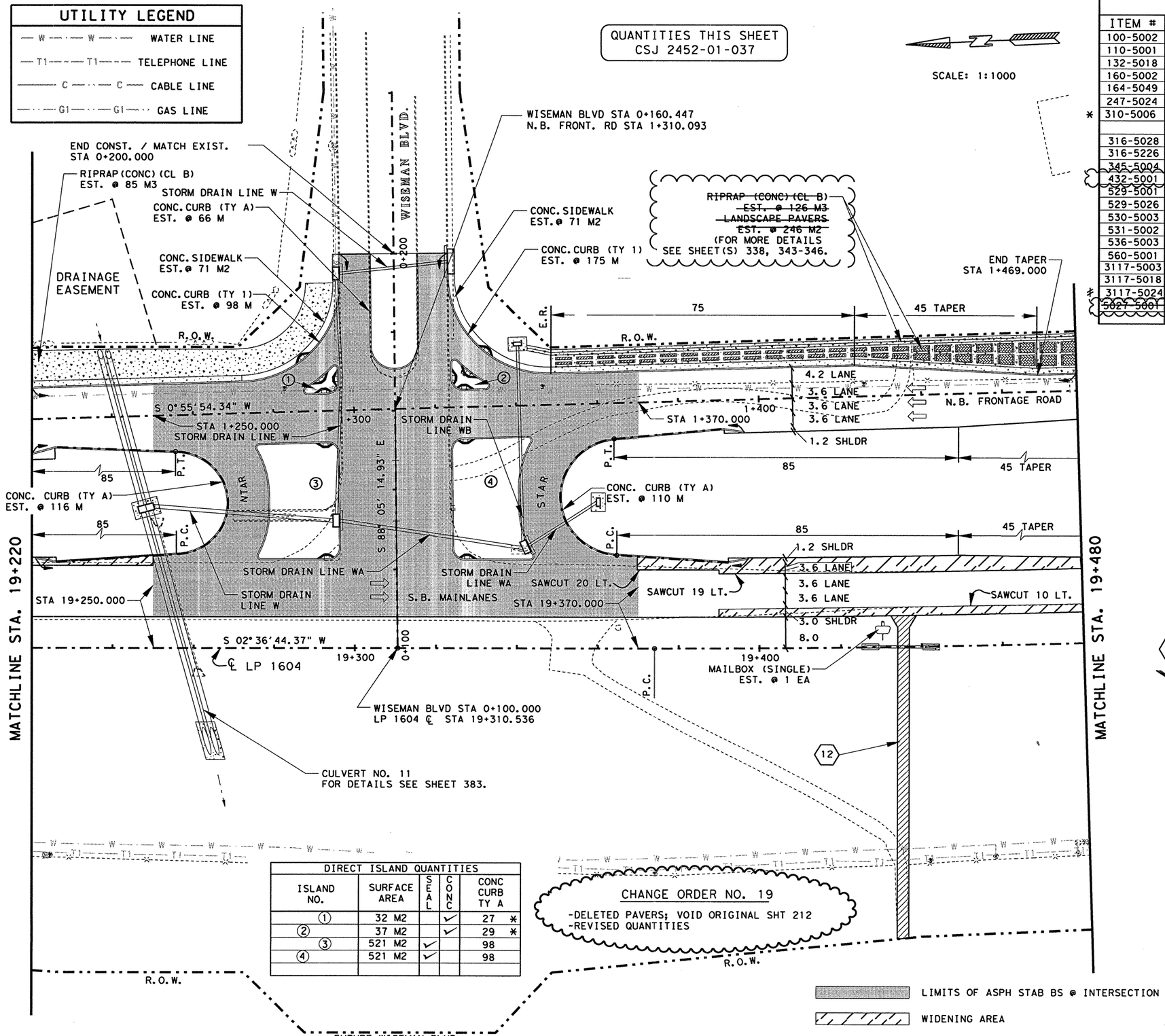


## ESTIMATED QUANTITIES

| | ITEM # | ITEM | UNIT | QTY. |
|---|---|---|---|---|
| | 100-5002 | PREP ROW | KM | 0.26 |
| | 110-5001 | EXCAVATION (RDWY) | M3 | 28819 |
| | 132-5018 | EMBANK (ORD COMP) (TY B) (CL 3) | M3 | 8016 |
| | 160-5002 | FURN AND PLAC TPSL (CL 2) (150 MM) | M2 | 11241 |
| | 164-5049 | DRILL SEED (PERM) (URBAN) (CLAY) | M2 | 11241 |
| | 247-5024 | FL BS (COMPL IN PLAC) (TY A GR 6 CL 4) | M3 | 908 |
| * | 310-5006 | ASPH MATL (AE-P) | L | 2278 |
| | | ONE CRSE SURF TREAT | M2 | 10760 |
| | 316-5028 | AGGR (TY PB, GR 4) | M3 | 98 |
| | 316-5226 | ASPH (AC-15P, HFRS-2P OR CRS-2P) | L | 14634 |
| | 345-5004 | ASPH STAB BS (GR 4) | MGR | 5381 |
| | ~~432-5001~~ | ~~RIPRAP (CONC) (CL B)~~ | ~~M3~~ | ~~21185~~ |
| | 529-5001 | CONC CURB (TY 1) | M | 273 |
| | 529-5026 | CONC CURB (TY A) | M | 488 |
| | 530-5003 | DRVWAYS (ASPH- CONC PAV) | M2 | 242 |
| | 531-5002 | CONCRETE SIDEWALKS | M2 | 142 |
| | 536-5003 | CONC DIRECT ISLAND | M2 | 69 |
| | 560-5001 | MAILBOX INSTAL (SINGLE) | EA | 1 |
| | 3117-5003 | HOT MIX (TY C) | MGR | 989 |
| | 3117-5018 | HOT MIX (TY C) (SURF) | MGR | 946 |
| # | 3117-5024 | HOT MIX (TY C) (LEVEL-UP) | MGR | 174 |
| | ~~5027-5001~~ | ~~LANDSCAPE PAVERS~~ | ~~M2~~ | ~~246~~ 0 |

* FOR CONTRACTORS INFORMATION ONLY
\# QUANTITY COMPUTER GENERATED

| DIRECT ISLAND QUANTITIES | | | | |
|---|---|---|---|---|
| ISLAND NO. | SURFACE AREA | SEAL | CONC | CONC CURB TY A |
| ① | 32 M2 | | ✓ | 27 * |
| ② | 37 M2 | | ✓ | 29 * |
| ③ | 521 M2 | ✓ | | 98 |
| ④ | 521 M2 | ✓ | | 98 |
| | | | | |

CHANGE ORDER NO. 19
-DELETED PAVERS; VOID ORIGINAL SHT 212
-REVISED QUANTITIES

LIMITS OF ASPH STAB BS @ INTERSECTION

WIDENING AREA

NOTE(S):

ALL DIMENSIONS ARE IN METERS UNLESS OTHERWISE NOTED.

FOR HORIZONTAL ALIGNMENT / DATA, SEE SHEET(S) 164 - 171.

FOR LIMITS OF SEEDING & TOPSOIL, SEE PROJECT X-SECTIONS AND TYPICAL SECTIONS.

FOR INTERSECTION LAYOUT, SEE SHEET(S) 324.

FOR ILLUMINATION LAYOUT / DETAILS, SEE SHEET(S) 617.

FOR RIPRAP DETAILS SEE PROJECT X-SECTIONS AND SHEET(S) 342.

FOR RIPRAP ASSOCIATED WITH STORM DRAINAGE STRUCTURES SEE SHEET(S) 454 - 470.

FOR ADDITIONAL STORM DRAIN INFO. REFER TO THE SPECIFIC STORM DRAIN PROFILE SHEET(S).

(#) DRIVEWAY #, FOR MORE DETAILS SEE SHEET(S) 27, 28 & 336.

WHEELCHAIR RAMPS TY 2

CHANGE ORDER 19

STATE OF TEXAS
TERRY G. McCOY
75016
REGISTERED
PROFESSIONAL ENGINEER

Terry G. McCoy, P.E. 1-17-02
Date

FOR CO#19 ONLY

©2000 Texas Department of Transportation

## PLAN SHEET

SHEET 22 OF 57

| FED.RD. DIV.NO. | FEDERAL AID PROJECT NO. | | SHEET NO. |
|---|---|---|---|
| 6 | NH 2000(704), etc. | | 212A |
| STATE | DIST. | COUNTY | |
| TEXAS | SAT | BEXAR | |
| CONT. | SECT. | JOB | HIGHWAY NO. |
| 2452 | 01 | 036, etc. | LP 1604 |

LEVELS DISPLAYED
1 2 3 4 5 6 7 8 9 10 11 12 13 14 15 16
17 18 19 20 21 22 23 24 25 26 27 28 29 30 31 32
33 34 35 36 37 38 39 40 41 42 43 44 45 46 47 48
49 50 51 52 53 54 55 56 57 58 59 60 61 63

ACC: t:\oo\design\lp1604fm471-90\
FILE: plan22.dgn

1-16-02

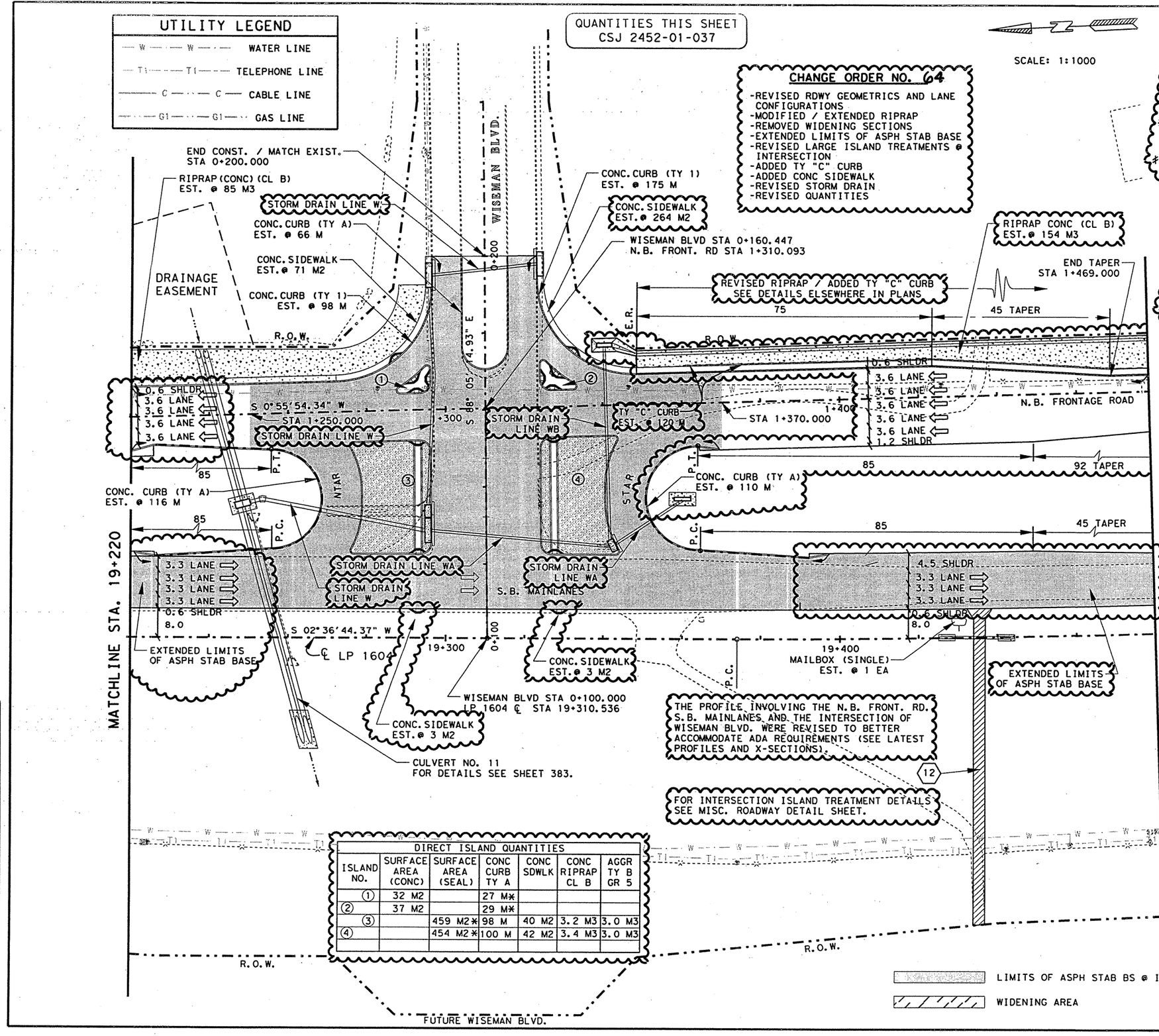


| DIRECT ISLAND QUANTITIES | | | | | | | |
|---|---|---|---|---|---|---|---|
| ISLAND NO. | SURFACE AREA (CONC) | SURFACE AREA (SEAL) | CONC CURB TY A | CONC SDWLK | CONC RIPRAP CL B | AGGR TY B GR 5 | |
| ① | 32 M2 | | 27 M* | | | | |
| ② | 37 M2 | | 29 M* | | | | |
| ③ | | 459 M2* | 98 M | 40 M2 | 3.2 M3 | 3.0 M3 | |
| ④ | | 454 M2* | 100 M | 42 M2 | 3.4 M3 | 3.0 M3 | |

## ESTIMATED QUANTITIES

| | ITEM # | ITEM | UNIT | QTY. |
|---|---|---|---|---|
| | 100-5002 | PREP ROW | KM | 0.26 |
| | 110-5001 | EXCAVATION (RDWY) | M3 | 28276 |
| | 132-5018 | EMBANK (ORD COMP) (TY B) (CL 3) | M3 | 10581 |
| | 160-5002 | FURN AND PLAC TPSL (CL 2) (150 MM) | M2 | 10824 |
| | 164-5049 | DRILL SEED (PERM) (URBAN) (CLAY) | M2 | 10824 |
| | 247-5024 | FL BS (COMPL IN PLAC) (TY A GR 6 CL 4) | M3 | 1097 |
| * | 310-5006 | ASPH MATL (AE-P) | L | 5571 |
| | | ONE CRSE SURF TREAT | M2 | 12140 |
| | 316-5028 | AGGR (TY PB, GR 4) | M3 | 102 |
| ## | 316-5226 | ASPH (AC-15P, HFRS-2P OR CRS-2P) | L | 16712 |
| | 345-5004 | ASPH STAB BS (GR 4) | MGR | 6671 |
| | 432-5001 | RIPRAP (CONC) (CL B) | M3 | 239 |
| | 529-5001 | CONC CURB (TY 1) | M | 273 |
| | 529-5026 | CONC CURB (TY A) | M | 490 |
| | 529-5030 | CONC CURB (TY C) | M | 120 |
| | 530-5003 | DRIVWAYS (ASPH- CONC PAV) | M2 | 242 |
| | 531-5002 | CONCRETE SIDEWALKS | M2 | 423 |
| | 536-5003 | CONC DIRECT ISLAND | M2 | 69 |
| | 560-5001 | MAILBOX INSTAL (SINGLE) | EA | 1 |
| | 3117-5003 | HOT MIX (TY C) | MGR | 1028 |
| | 3117-5018 | HOT MIX (TY C) (SURF) | MGR | 985 |
| # | 3117-5024 | HOT MIX (TY C) (LEVEL-UP) | MGR | 0 |
| | 316-5021 | AGGR (TY B, GR 5) | M3 | 6 |

* FOR CONTRACTORS INFORMATION ONLY
\# QUANTITY COMPUTER GENERATED
\## QUANTITY INCLUDES ASPHALT FOR DIRECT. ISLANDS.

NOTE(S):

ALL DIMENSIONS ARE IN METERS UNLESS OTHERWISE NOTED.

FOR HORIZONTAL ALIGNMENT / DATA, SEE SHEET(S) 164 - 171.

FOR LIMITS OF SEEDING & TOPSOIL, SEE PROJECT X-SECTIONS AND TYPICAL SECTIONS.

FOR INTERSECTION LAYOUT, SEE SHEET(S) 324.

FOR ILLUMINATION LAYOUT / DETAILS, SEE SHEET(S) 617.

FOR RIPRAP DETAILS SEE PROJECT X-SECTIONS AND MISC. ROADWAY DETAILS.

FOR RIPRAP ASSOCIATED WITH STORM DRAINAGE STRUCTURES SEE SHEET(S) 454 - 470.

FOR ADDITIONAL STORM DRAIN INFO. REFER TO THE SPECIFIC STORM DRAIN PROFILE SHEET(S).

(#) DRIVEWAY #, FOR MORE DETAILS SEE SHEET(S) 27, 28 & 336.

WHEELCHAIR RAMPS TY 2

CHANGE ORDER 64

REVISED SHEET

STATE OF TEXAS
JEROME D. PAVLISKA
76075
REGISTERED PROFESSIONAL ENGINEER

Jerome D. Pavliska, P.E. 6-22-04
Jerome D. Pavliska, P.E. — Date

©2000 Texas Department of Transportation

PLAN SHEET

SHEET 22 OF 57

| FED. RD. DIV. NO. | FEDERAL AID PROJECT NO. | | SHEET NO. |
|---|---|---|---|
| 6 | NH 2000(704), etc. | | 212 B |
| STATE | DIST. | COUNTY | |
| TEXAS | SAT | BEXAR | |
| CONT. | SECT. | JOB | HIGHWAY NO. |
| 2452 | 01 | 036, etc. | LP 1604 |

LEVELS DISPLAYED
1 2 3 4 5 6 7 8 9 10 11 12 13 14 15 16
17 18 19 20 21 22 23 24 25 26 27 28 29 30 31 32
33 34 35 36 37 38 39 40 41 42 43 44 45 46 47 48
49 50 51 52 53 54 55 56 57 58 59 60 61 62

ACC: t:\ao\design\lp1604fm471-90\
FILE: plan22.dgn

## UTILITY LEGEND

- WATER LINE
- TELEPHONE LINE
- CABLE LINE
- GAS LINE

QUANTITIES THIS SHEET
CSJ 2452-01-037

SCALE: 1:1000

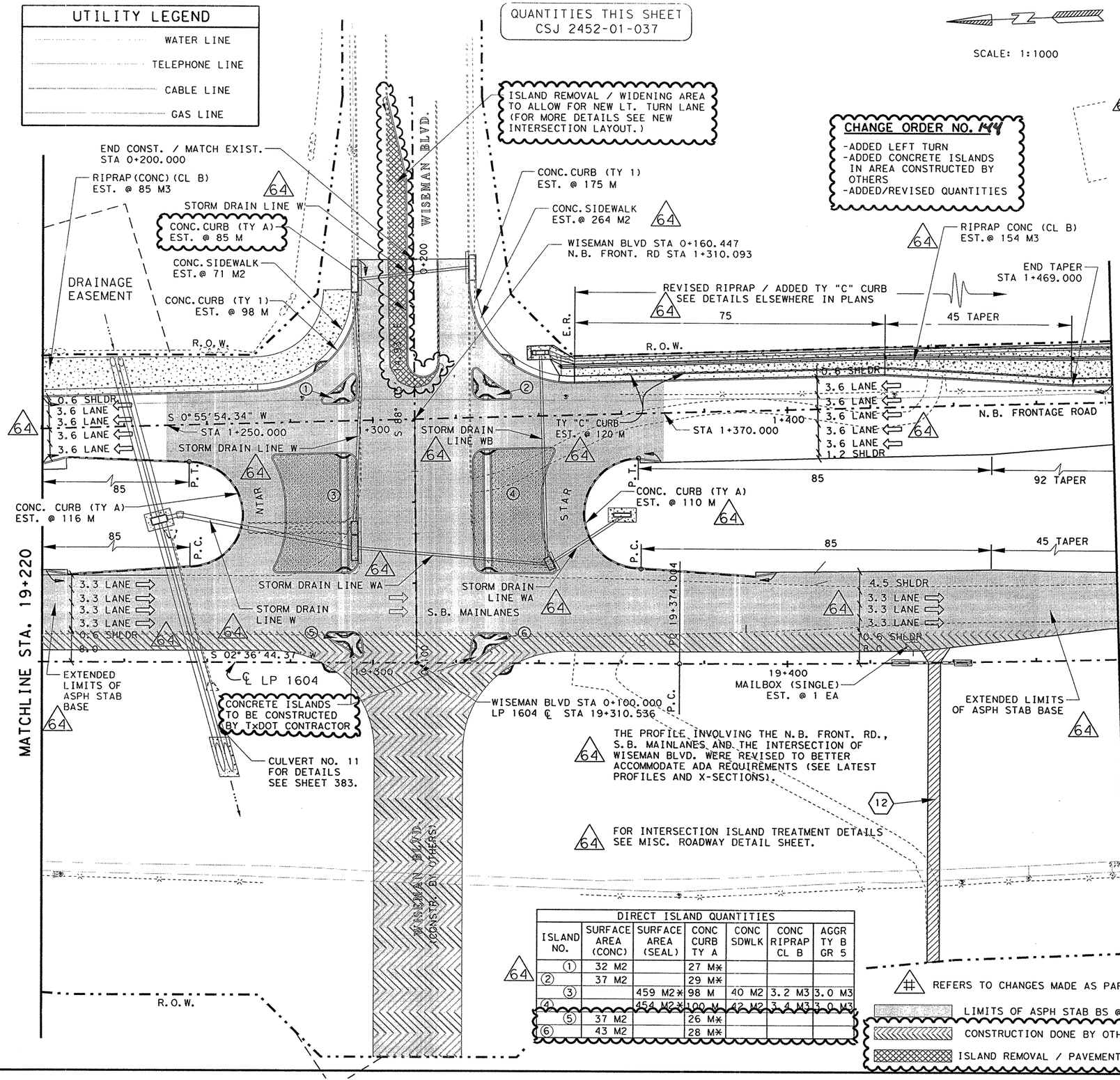


### DIRECT ISLAND QUANTITIES

| ISLAND NO. | SURFACE AREA (CONC) | SURFACE AREA (SEAL) | CONC CURB TY A | CONC SDWLK | CONC RIPRAP CL B | AGGR TY B GR 5 |
|---|---|---|---|---|---|---|
| ① | 32 M2 | | 27 M* | | | |
| ② | 37 M2 | | 29 M* | | | |
| ③ | | 459 M2* | 98 M | 40 M2 | 3.2 M3 | 3.0 M3 |
| ④ | | 454 M2* | 100 M | 42 M2 | 3.4 M3 | 3.0 M3 |
| ⑤ | 37 M2 | | 26 M* | | | |
| ⑥ | 43 M2 | | 28 M* | | | |

### ESTIMATED QUANTITIES

| | ITEM # | ITEM | UNIT | QTY. |
|---|---|---|---|---|
| | 100-5002 | PREP ROW | KM | 0.26 |
| | 110-5001 | EXCAVATION (RDWY) | M3 | 28352 |
| | 132-5018 | EMBANK (ORD COMP) (TY B) (CL 3) | M3 | 10581 |
| | 160-5002 | FURN AND PLAC TPSL (CL 2) (150 MM) | M2 | 10283 |
| | 164-5021 | DRILL SEED (TEMP) (COOL) | M2 | 11283 |
| | 247-5024 | FL BS (COMPL IN PLACE)(TY A GR 6 CL 4) | M3 | 1097 |
| * | 310-5006 | ASPH MATL (AE-P) | L | 5571 |
| | | ONE CRSE SURF TREAT | M2 | 12140 |
| | 316-5021 | AGGR (TY A, GR 5) | M3 | 6 |
| | 316-5028 | AGGR (TY PB, GR 4) | M3 | 105 |
| ## | 316-5226 | ASPH (AC-15P, HFRS-2P OR CRS-2P) | L | 17180 |
| | 345-5004 | ASPH STAB BS (GR 4) | MGR | 6671 |
| | 432-5001 | RIPRAP (CONC) (CL B) | M3 | 239 |
| | 529-5001 | CONC CURB (TY 1) | M | 273 |
| | 529-5026 | CONC CURB (TY A) | M | 575 |
| | 529-5030 | CONC CURB (TY C) | M | 120 |
| | 530-5003 | DRVWAYS (ASPH- CONC PAV) | M2 | 242 |
| | 531-5002 | CONCRETE SIDEWALKS | M2 | 423 |
| | 536-5003 | CONC DIRECT ISLAND | M2 | 149 |
| | 560-5001 | MAILBOX INSTAL (SINGLE) | EA | 1 |
| | 3117-5103 | HOT MIX (TY C) | MGR | 1059 |
| | 3117-5084 | HOT MIX (TY C) (SURF) | MGR | 1013 |
| # | 3117-5074 | HOT MIX (TY C) (LEVEL-UP) | MGR | |
| | 340-500 | ASPH CONC (TY A) | MGR | 271 |

* FOR CONTRACTORS INFORMATION ONLY
\# QUANTITY COMPUTER GENERATED
\## QUANTITY INCLUDES ASPHALT FOR DIRECT. ISLANDS.

NOTE(S):

ALL DIMENSIONS ARE IN METERS UNLESS OTHERWISE NOTED.

FOR HORIZONTAL ALIGNMENT / DATA, SEE SHEET(S) 164 - 171.

FOR LIMITS OF SEEDING & TOPSOIL, SEE PROJECT X-SECTIONS AND TYPICAL SECTIONS.

FOR INTERSECTION LAYOUT, SEE SHEET(S) 324.

FOR ILLUMINATION LAYOUT / DETAILS, SEE SHEET(S) 617.

64 FOR RIPRAP DETAILS SEE PROJECT X-SECTIONS AND MISC. ROADWAY DETAILS.

FOR RIPRAP ASSOCIATED WITH STORM DRAINAGE STRUCTURES SEE SHEET(S) 454 - 470.

FOR ADDITIONAL STORM DRAIN INFO. REFER TO THE SPECIFIC STORM DRAIN PROFILE SHEET(S).

(#) DRIVEWAY #, FOR MORE DETAILS SEE SHEET(S) 27, 28 & 336.

WHEELCHAIR RAMPS TY 2

64 REFERS TO CHANGES MADE AS PART OF CHANGE ORDER.

LIMITS OF ASPH STAB BS @ INTERSECTION

CONSTRUCTION DONE BY OTHERS

ISLAND REMOVAL / PAVEMENT WIDENING SECTION

CHANGE ORDER #144

REVISED SHEET

STATE OF TEXAS
MIGUEL G. ROGERIO
96620
LICENSED
PROFESSIONAL ENGINEER

Miguel G. Rogerio, P.E. 11/14/2006
Miguel G. Rogerio, P.E. Date

©2006
Texas Department of Transportation

PLAN SHEET
SHEET 22c OF 57

| FED. RD. DIV. NO. | FEDERAL AID PROJECT NO. | | SHEET NO. |
|---|---|---|---|
| 6 | NH 2000(704),etc. | | 212C |
| STATE | DIST. | COUNTY | |
| TEXAS | SAT | BEXAR | |
| CONT. | SECT. | JOB | HIGHWAY NO. |
| 2452 | 01 | 036,etc. | LP 1604 |

LEVELS DISPLAYED
1 2 3 4 5 6 7 8 9 10 11 12 13 14 15 16
17 18 19 20 21 22 23 24 25 26 27 28 29 30 31 32
33 34 35 36 37 38 39 40 41 42 43 44 45 46 47 48
50 51 52 53 54 55 56 57 58 59 60 61 62

ACC: *:\co\construction/2452-01-036\
CO\CO # Wiseman Rd LTL\
FILE: plan22.dgn

QUANTITIES THIS SHEET
CSJ 2452-01-037

SCALE: 1:1000

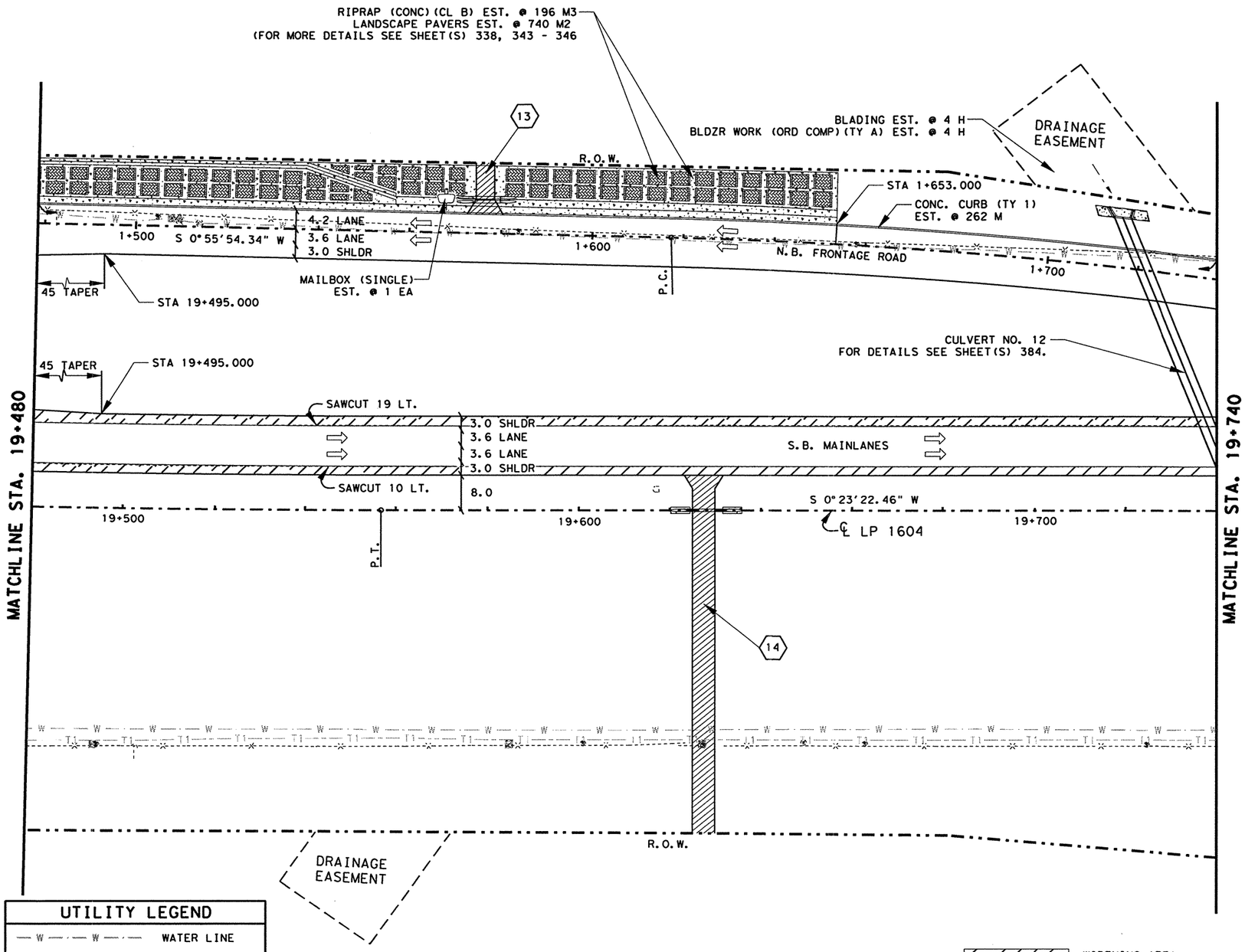


## ESTIMATED QUANTITIES

| | ITEM # | ITEM | UNIT | QTY. |
|---|---|---|---|---|
| | 100-5002 | PREP ROW | KM | 0.26 |
| | 110-5001 | EXCAVATION (RDWY) | M3 | 37112 |
| | 132-5018 | EMBANK (ORD COMP) (TY B) (CL 3) | M3 | 894 |
| | 150-5003 | BLADING | H | 4 |
| | 156-5003 | BLDZR WORK (ORD COMP) (TY A) | H | 4 |
| | 160-5002 | FURN AND PLAC TPSL (CL 2) (150 MM) | M2 | 13177 |
| | 164-5049 | DRILL SEED (PERM) (URBAN) (CLAY) | M2 | 13177 |
| | 247-5024 | FL BS (COMPL IN PLAC) (TY A GR 6 CL 4) | M3 | 1255 |
| | 310-5006 | ASPH MATL (AE-P) | L | 3021 |
| * | | ONE CRSE SURF TREAT | M2 | 6666 |
| | 316-5028 | AGGR (TY PB, GR 4) | M3 | 61 |
| | 316-5226 | ASPH (AC-15P, HFRS-2P OR CRS-2P) | L | 9066 |
| | 345-5004 | ASPH STAB BS (GR 4) | MGR | 796 |
| | 432-5001 | RIPRAP (CONC) (CL B) | M3 | 196 |
| | 529-5001 | CONC CURB (TY 1) | M | 262 |
| | 530-5001 | DRVWAYS (CONC) (150 MM) | M2 | 49 |
| | 530-5003 | DRVWAYS (ASPH- CONC PAV) | M2 | 409 |
| | 560-5001 | MAILBOX INSTAL (SINGLE) | EA | 1 |
| # | 3117-5003 | HOT MIX (TY C) | MGR | 623 |
| # | 3117-5018 | HOT MIX (TY C) (SURF) | MGR | 591 |
| # | 3117-5024 | HOT MIX (TY C) (LEVEL-UP) | MGR | 425 |
| | 5027-5001 | LANDSCAPE PAVERS | M2 | 740 |

* FOR CONTRACTORS INFORMATION ONLY
# QUANTITY COMPUTER GENERATED

NOTE(S):

ALL DIMENSIONS ARE IN METERS UNLESS OTHERWISE NOTED.

FOR HORIZONTAL ALIGNMENT / DATA, SEE SHEET(S) 164 - 171.

FOR LIMITS OF SEEDING & TOPSOIL, SEE PROJECT X-SECTIONS AND TYPICAL SECTIONS.

(#) DRIVEWAY #, FOR MORE DETAILS SEE SHEET(S) 27, 28 & 336.

FOR RIPRAP ASSOCIATED WITH STORM DRAINAGE STRUCTURES SEE SHEET(S) 454 - 470.

### UTILITY LEGEND

| | |
|---|---|
| W W | WATER LINE |
| T1 T1 | TELEPHONE LINE |
| C C | CABLE LINE |
| GI GI | GAS LINE |

WIDENING AREA

STATE OF TEXAS
JOEL K. DAVENPORT, JR.
79276
REGISTERED PROFESSIONAL ENGINEER

Joel K. Davenport Jr 11/1/00
Joel K. Davenport, Jr., P.E. 79276 Date

©2000
Texas Department of Transportation

# PLAN SHEET

SHEET 23 OF 57

| FED.RD. DIV.NO. | FEDERAL AID PROJECT NO. | | SHEET NO. |
|---|---|---|---|
| 6 | NH 2000(704), etc. | | 213 |
| STATE | DIST. | COUNTY | |
| TEXAS | SAT | BEXAR | |
| CONT. | SECT. | JOB | HIGHWAY NO. |
| 2452 | 01 | 036, etc. | LP 1604 |

LEVELS DISPLAYED
1 2 3 4 5 6 7 8 9 10 11 12 13 14 15 16
17 18 19 20 21 22 23 24 25 26 27 28 29 30 31 32
33 34 35 36 37 38 39 40 41 42 43 44 45 46 47 48
49 50 51 52 53 54 55 56 57 58 59 60 61 62 63

ACC: t:\ao\design\lp1604fm471-90\
FILE: plan23.dgn

QUANTITIES THIS SHEET
CSJ 2452-01-037

SCALE: 1:1000

~~RIPRAP (CONC) (CL B) EST. @ 196 M3~~
~~LANDSCAPE PAVERS EST. @ 740 M2~~
(FOR MORE DETAILS SEE SHEET(S) 338, 343 - 346

CHANGE ORDER NO. 19
-DELETED PAVERS; VOID ORIGINAL SHT 213
-REVISED QUANTITIES

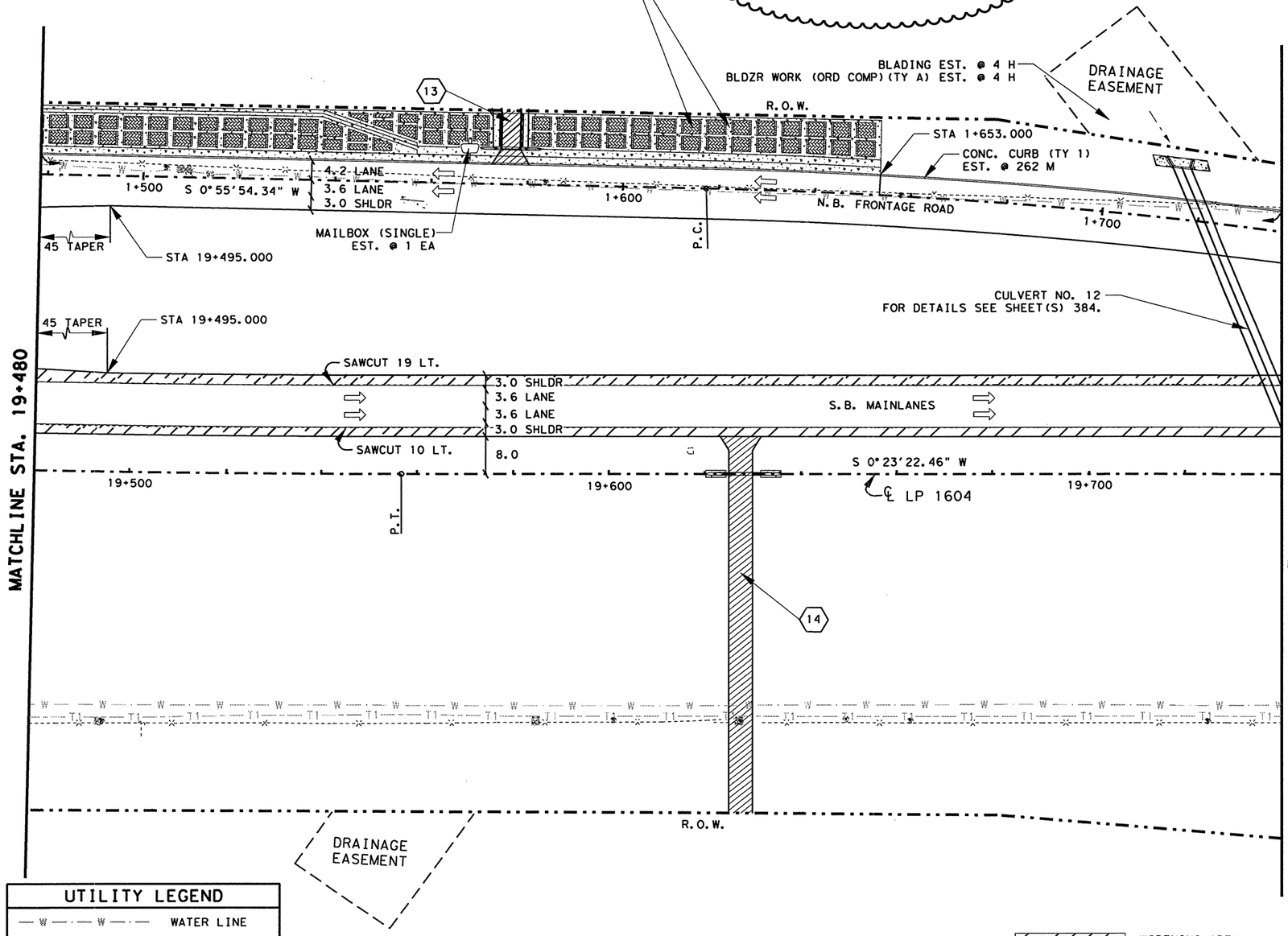


## UTILITY LEGEND

| | |
|---|---|
| —W—W— | WATER LINE |
| —T1—T1— | TELEPHONE LINE |
| —C—C— | CABLE LINE |
| —G1—G1— | GAS LINE |

WIDENING AREA

## ESTIMATED QUANTITIES

| | ITEM # | ITEM | UNIT | QTY. |
|---|---|---|---|---|
| | 100-5002 | PREP ROW | KM | 0.26 |
| | 110-5001 | EXCAVATION (RDWY) | M3 | 37112 |
| | 132-5018 | EMBANK (ORD COMP) (TY B) (CL 3) | M3 | 894 |
| | 150-5003 | BLADING | H | 4 |
| | 156-5003 | BLDZR WORK (ORD COMP) (TY A) | H | 4 |
| | 160-5002 | FURN AND PLAC TPSL (CL 2) (150 MM) | M2 | 13177 |
| | 164-5049 | DRILL SEED (PERM) (URBAN) (CLAY) | M2 | 13177 |
| | 247-5024 | FL BS (COMPL IN PLAC)(TY A GR 6 CL 4) | M3 | 1255 |
| | 310-5006 | ASPH MATL (AE-P) | L | 3021 |
| * | | ONE CRSE SURF TREAT | M2 | 6666 |
| | 316-5028 | AGGR (TY PB, GR 4) | M3 | 61 |
| | 316-5226 | ASPH (AC-15P, HFRS-2P OR CRS-2P) | L | 9066 |
| | ~~345-5004~~ | ~~ASPH STAB BS (GR 4)~~ | ~~MGR~~ | ~~796~~ |
| | ~~432-5001~~ | ~~RIPRAP (CONC) (CL B)~~ | ~~M3~~ | ~~196.0~~ |
| | ~~529-5001~~ | ~~CONC CURB (TY 1)~~ | ~~M~~ | ~~262~~ |
| | 530-5001 | DRVWAYS (CONC) (150 MM) | M2 | 49 |
| | 530-5003 | DRVWAYS (ASPH- CONC PAV) | M2 | 409 |
| | 560-5001 | MAILBOX INSTAL (SINGLE) | EA | 1 |
| | 3117-5003 | HOT MIX (TY C) | MGR | 623 |
| | 3117-5018 | HOT MIX (TY C) (SURF) | MGR | 591 |
| # | 3117-5024 | HOT MIX (TY C) (LEVEL-UP) | MGR | 425 |
| # | ~~5027-5001~~ | ~~LANDSCAPE PAVERS~~ | M2 | ~~740.0~~ |

* FOR CONTRACTORS INFORMATION ONLY
# QUANTITY COMPUTER GENERATED

NOTE(S):

ALL DIMENSIONS ARE IN METERS UNLESS OTHERWISE NOTED.

FOR HORIZONTAL ALIGNMENT / DATA, SEE SHEET(S) 164 - 171.

FOR LIMITS OF SEEDING & TOPSOIL, SEE PROJECT X-SECTIONS AND TYPICAL SECTIONS.

(#) DRIVEWAY #, FOR MORE DETAILS SEE SHEET(S) 27, 28 & 336.

FOR RIPRAP ASSOCIATED WITH STORM DRAINAGE STRUCTURES SEE SHEET(S) 454 - 470.

CHANGE ORDER 19

STATE OF TEXAS
TERRY G. McCOY
75016
REGISTERED PROFESSIONAL ENGINEER

Terry G. McCoy, P.E. — Date 1-17-02

FOR CO# 19 ONLY

©2000 Texas Department of Transportation

# PLAN SHEET

SHEET 23 OF 57

| FED.RD. DIV.NO. | FEDERAL AID PROJECT NO. | SHEET NO. |
|---|---|---|
| 6 | NH 2000(704), etc. | 213A |
| STATE | DIST. | COUNTY |
| TEXAS | SAT | BEXAR |
| CONT. | SECT. | JOB / HIGHWAY NO. |
| 2452 | 01 | 036, etc. / LP 1604 |

1-16-02

LEVELS DISPLAYED
1 2 3 4 5 6 7 8 9 10 11 12 13 14 15 16
17 18 19 20 21 22 23 24 25 26 27 28 29 30 31 32
33 34 35 36 37 38 39 40 41 42 43 44 45 46 47 48
49 50 51 52 53 54 55 56 57 58 59 60 61 63

ACC: *:\ao\design\lp1604fm471-90\
FILE: plan23.dgn

QUANTITIES THIS SHEET
CSJ 2452-01-037

SCALE: 1:1000

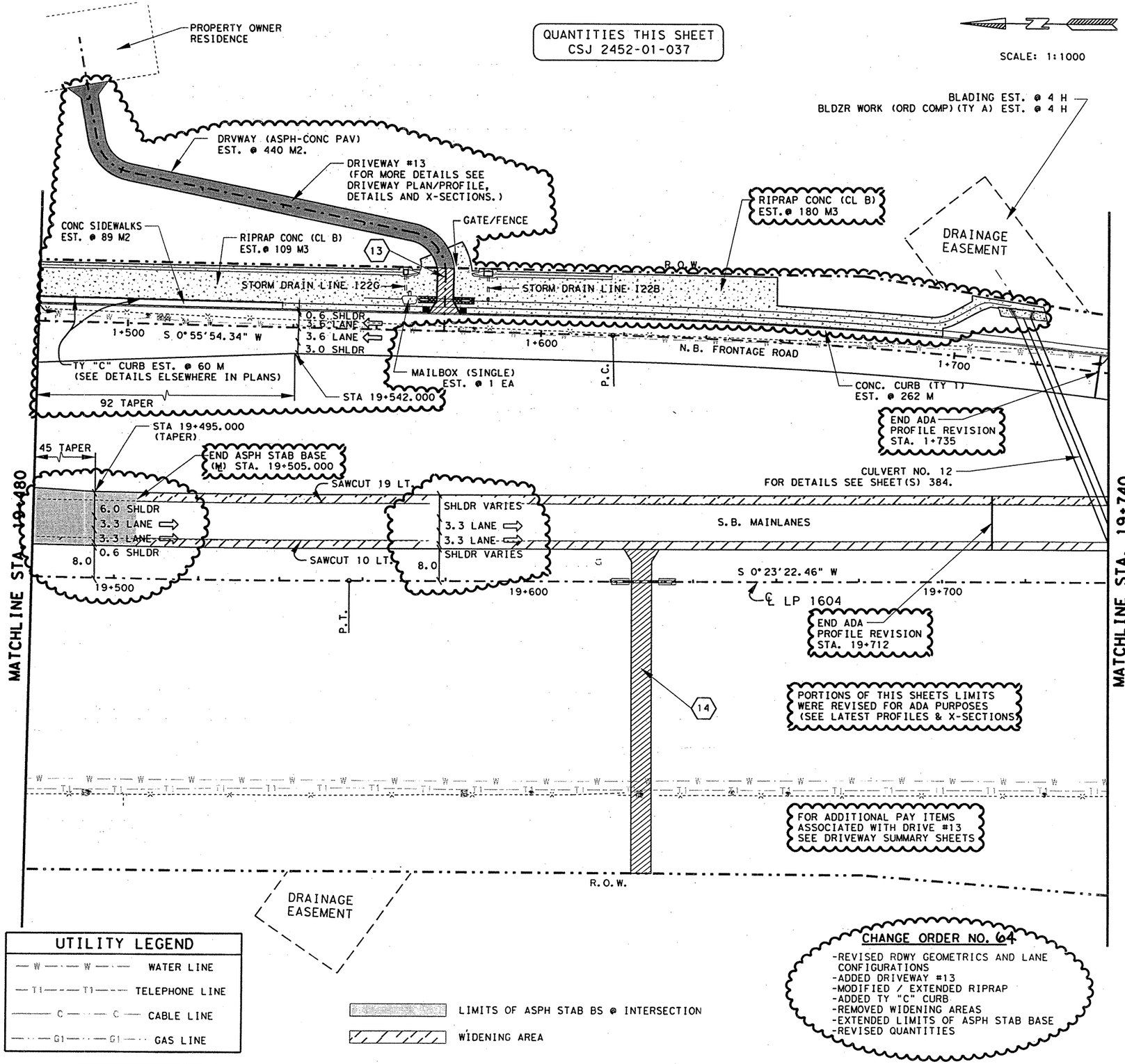


## UTILITY LEGEND

- W — W — WATER LINE
- T1 — T1 — TELEPHONE LINE
- C — C — CABLE LINE
- G1 — G1 — GAS LINE

LIMITS OF ASPH STAB BS @ INTERSECTION

WIDENING AREA

**CHANGE ORDER NO. 64**

-REVISED RDWY GEOMETRICS AND LANE CONFIGURATIONS
-ADDED DRIVEWAY #13
-MODIFIED / EXTENDED RIPRAP
-ADDED TY "C" CURB
-REMOVED WIDENING AREAS
-EXTENDED LIMITS OF ASPH STAB BASE
-REVISED QUANTITIES

## ESTIMATED QUANTITIES

| | ITEM # | ITEM | UNIT | QTY. |
|---|---|---|---|---|
| | 100-5002 | PREP ROW | KM | 0.26 |
| | 110-5001 | EXCAVATION (RDWY) | M3 | 38146 |
| | 132-5018 | EMBANK (ORD COMP)(TY B)(CL 3) | M3 | 892 |
| | 150-5003 | BLADING | H | 4 |
| | 156-5003 | BLDZR WORK (ORD COMP)(TY A) | H | 4 |
| | 160-5002 | FURN AND PLAC TPSL (CL 2)(150 MM) | M2 | 13063 |
| | 164-5049 | DRILL SEED (PERM)(URBAN)(CLAY) | M2 | 13063 |
| | 247-5024 | FL BS (COMPL IN PLAC)(TY A GR 6 CL 4) | M3 | 1301 |
| | 310-5006 | ASPH MATL (AE-P) | L | 3124 |
| * | | ONE CRSE SURF TREAT | M2 | 6780 |
| | 316-5028 | AGGR (TY PB, GR 4) | M3 | 62 |
| | 316-5226 | ASPH (AC-15P, HFRS-2P OR CRS-2P) | L | 9221 |
| | 345-5004 | ASPH STAB BS (GR 4) | MGR | 997 |
| | 432-5001 | RIPRAP (CONC)(CL B) | M3 | 289 |
| | 529-5001 | CONC CURB (TY 1) | M | 262 |
| | 529-5030 | CONC CURB (TY C) | M | 60 |
| | 530-5001 | DRVWAYS (CONC)(150 MM) | M2 | 50 |
| | 530-5003 | DRVWAYS (ASPH- CONC PAV) | M2 | 841 |
| | 531-5002 | CONCRETE SIDEWALKS | M2 | 89 |
| | 560-5001 | MAILBOX INSTAL (SINGLE) | EA | 1 |
| | 3117-5003 | HOT MIX (TY C) | MGR | 634 |
| | 3117-5018 | HOT MIX (TY C)(SURF) | MGR | 602 |
| # | 3117-5024 | HOT MIX (TY C)(LEVEL-UP) | MGR | 404 |

* FOR CONTRACTORS INFORMATION ONLY
# QUANTITY COMPUTER GENERATED

NOTE(S):

ALL DIMENSIONS ARE IN METERS UNLESS OTHERWISE NOTED.

FOR HORIZONTAL ALIGNMENT / DATA, SEE SHEET(S) 164 - 171.

FOR LIMITS OF SEEDING & TOPSOIL, SEE PROJECT X-SECTIONS AND TYPICAL SECTIONS.

(#) DRIVEWAY #, FOR MORE DETAILS SEE SHEET(S) 27, 28 & 336.

FOR RIPRAP ASSOCIATED WITH STORM DRAINAGE STRUCTURES SEE SHEET(S) 454 - 470.

FOR RIPRAP DETAILS SEE PROJECT X-SECTION AND ROADWAY MISC. DETAILS SHEETS.

CHANGE ORDER 64

REVISED SHEET

STATE OF TEXAS
JEROME D. PAVLISKA
76075
REGISTERED PROFESSIONAL ENGINEER

Jerome D. Pavliska P.E 6-22-04
Jerome D. Pavliska, P.E. Date

©2000
Texas Department of Transportation

PLAN SHEET
SHEET 23 OF 57

| FED. RD. DIV. NO. | FEDERAL AID PROJECT NO. | | SHEET NO. |
|---|---|---|---|
| 6 | NH 2000(704), etc. | | 213 B |
| STATE | DIST. | COUNTY | |
| TEXAS | SAT | BEXAR | |
| CONT. | SECT. | JOB | HIGHWAY NO. |
| 2452 | 01 | 036, etc. | LP 1604 |

LEVELS DISPLAYED
1 2 3 4 5 6 7 8 9 10 11 12 13 14 15 16
17 18 19 20 21 22 23 24 25 26 27 28 29 30 31 32
33 34 35 36 37 38 39 40 41 42 43 44 45 46 47 48
49 50 51 52 53 54 55 56 57 58 59 60 61 62

ACC: t:\oo\design\lp1604fm471-90\
FILE: plan23.dgn

QUANTITIES THIS SHEET
CSJ 2452-01-037

SCALE: 1:1000

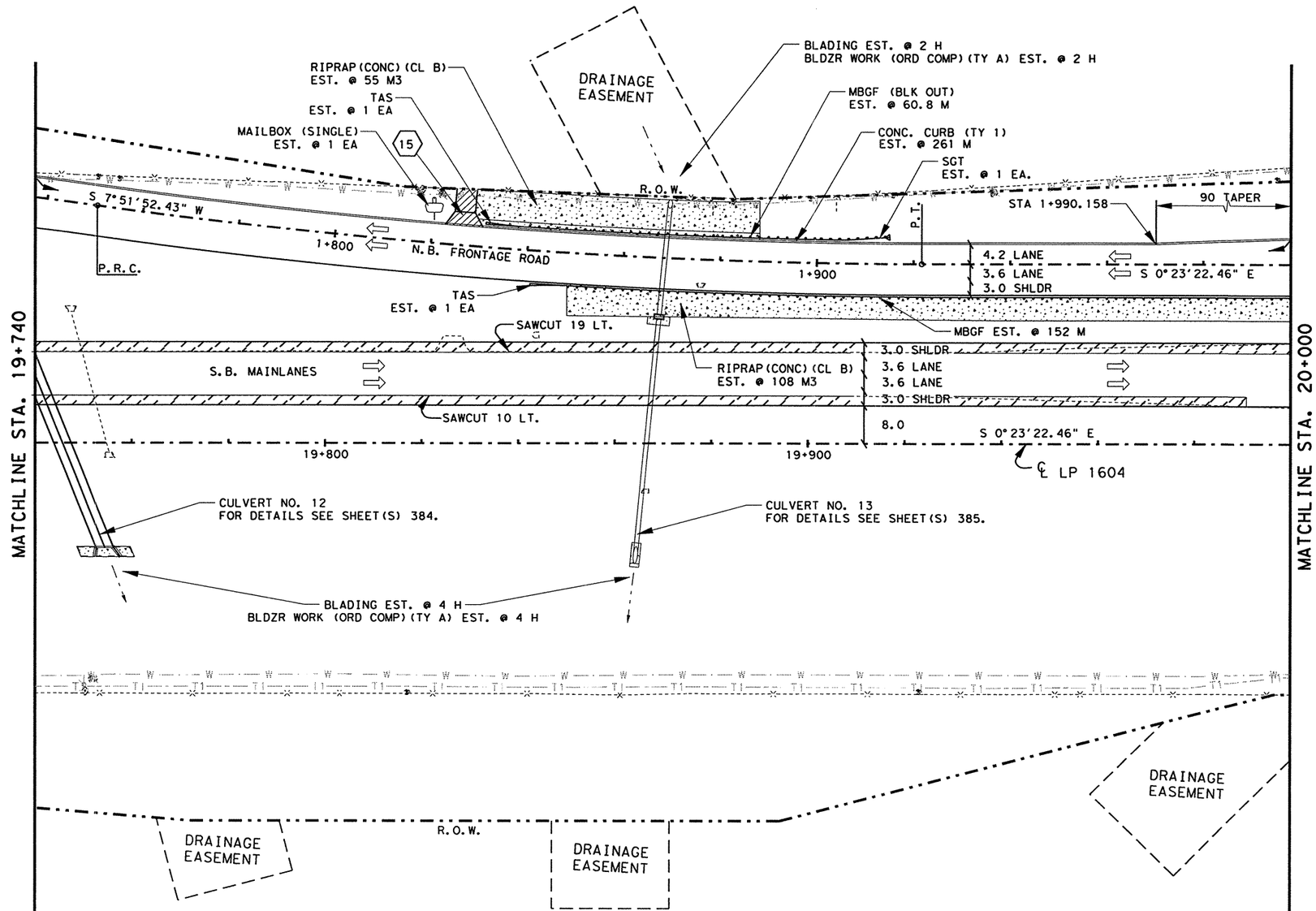


## UTILITY LEGEND

| | |
|---|---|
| — W — W — | WATER LINE |
| — T1 — T1 — | TELEPHONE LINE |
| — C — C — | CABLE LINE |
| — G1 — G1 — | GAS LINE |

WIDENING AREA

## ESTIMATED QUANTITIES

| | ITEM # | ITEM | UNIT | QTY. |
|---|---|---|---|---|
| | 100-5002 | PREP ROW | KM | 0.26 |
| | 110-5001 | EXCAVATION (RDWY) | M3 | 2408 |
| | 132-5018 | EMBANK (ORD COMP) (TY B) (CL 3) | M3 | 9239 |
| | 150-5003 | BLADING | H | 6 |
| | 156-5003 | BLDZR WORK (ORD COMP) (TY A) | H | 6 |
| | 160-5002 | FURN AND PLAC TPSL (CL 2) (150 MM) | M2 | 10177 |
| | 164-5049 | DRILL SEED (PERM) (URBAN) (CLAY) | M2 | 10177 |
| | 247-5024 | FL BS (COMPL IN PLAC)(TY A GR 6 CL 4) | M3 | 1288 |
| | 310-5006 | ASPH MATL (AE-P) | L | 3102 |
| * | | ONE CRSE SURF TREAT | M2 | 6696 |
| | 316-5028 | AGGR (TY PB, GR 4) | M3 | 61 |
| | 316-5226 | ASPH (AC-15P, HFRS-2P OR CRS-2P) | L | 9106 |
| | 345-5004 | ASPH STAB BS (GR 4) | MGR | 756 |
| | 432-5001 | RIPRAP (CONC) (CL B) | M3 | 163 |
| | 529-5001 | CONC CURB (TY 1) | M | 261 |
| | 530-5061 | DRVWAYS (ASPH- CONC PAV) | M2 | 38 |
| | 540-5005 | TERM ANCHOR SECT (2.67 MM) | EA | 2 |
| | 540-5006 | MBGF (TIM POST) (2.67 MM) | M | 152 |
| | 540-5007 | MBGF (TIM POST) (BLK OUT) (2.67 MM) | M | 60.8 |
| | 560-5001 | MAILBOX INSTAL (SINGLE) | EA | 1 |
| | 3117-5003 | HOT MIX (TY C) | MGR | 626 |
| | 3117-5018 | HOT MIX (TY C) (SURF) | MGR | 594 |
| # | 3117-5024 | HOT MIX (TY C) (LEVEL-UP) | MGR | 498 |
| | 5119-5003 | SINGLE GDRAIL TERM (TY III) | EA | 1 |
| | | | | |

* FOR CONTRACTORS INFORMATION ONLY
\# QUANTITY COMPUTER GENERATED

NOTE(S):

ALL DIMENSIONS ARE IN METERS UNLESS OTHERWISE NOTED.

FOR HORIZONTAL ALIGNMENT / DATA, SEE SHEET(S) 164 - 171.

FOR LIMITS OF SEEDING & TOPSOIL, SEE PROJECT X-SECTIONS AND TYPICAL SECTIONS.

FOR RIPRAP DETAILS SEE PROJECT X-SECTIONS AND SHEET(S) 342.

(#) DRIVEWAY #, FOR MORE DETAILS SEE SHEET(S) 27, 28 & 336.

FOR RIPRAP ASSOCIATED WITH STORM DRAINAGE STRUCTURES SEE SHEET(S) 454 - 470.

STATE OF TEXAS
JOEL K. DAVENPORT, JR.
79276
REGISTERED
PROFESSIONAL ENGINEER

Joel K. Davenport, Jr. 11/1/00
Joel K. Davenport, Jr. P.E. 79276 Date

Texas Department of Transportation

# PLAN SHEET

SHEET 24 OF 57

| FED.RD. DIV.NO. | FEDERAL AID PROJECT NO. | | SHEET NO. |
|---|---|---|---|
| 6 | NH 2000(704), etc. | | 214 |
| STATE | DIST. | COUNTY | |
| TEXAS | SAT | BEXAR | |
| CONT. | SECT. | JOB | HIGHWAY NO. |
| 2452 | 01 | 036, etc. | LP 1604 |

LEVELS DISPLAYED
1 2 3 4 5 6 7 8 9 10 11 12 13 14 15 16 17 18 19 20 21 22 23 24 25 26 27 28 29 30 31 32 33 34 35 36 37 38 39 40 41 42 43 44 45 46 47 48 49 50 51 52 53 54 55 56 57 58 59 60 61 62 63

ACC: t:\ao\design\lp1604fm471-90\
FILE: plan24.dgn

QUANTITIES THIS SHEET
CSJ 2452-01-037

SCALE: 1:1000

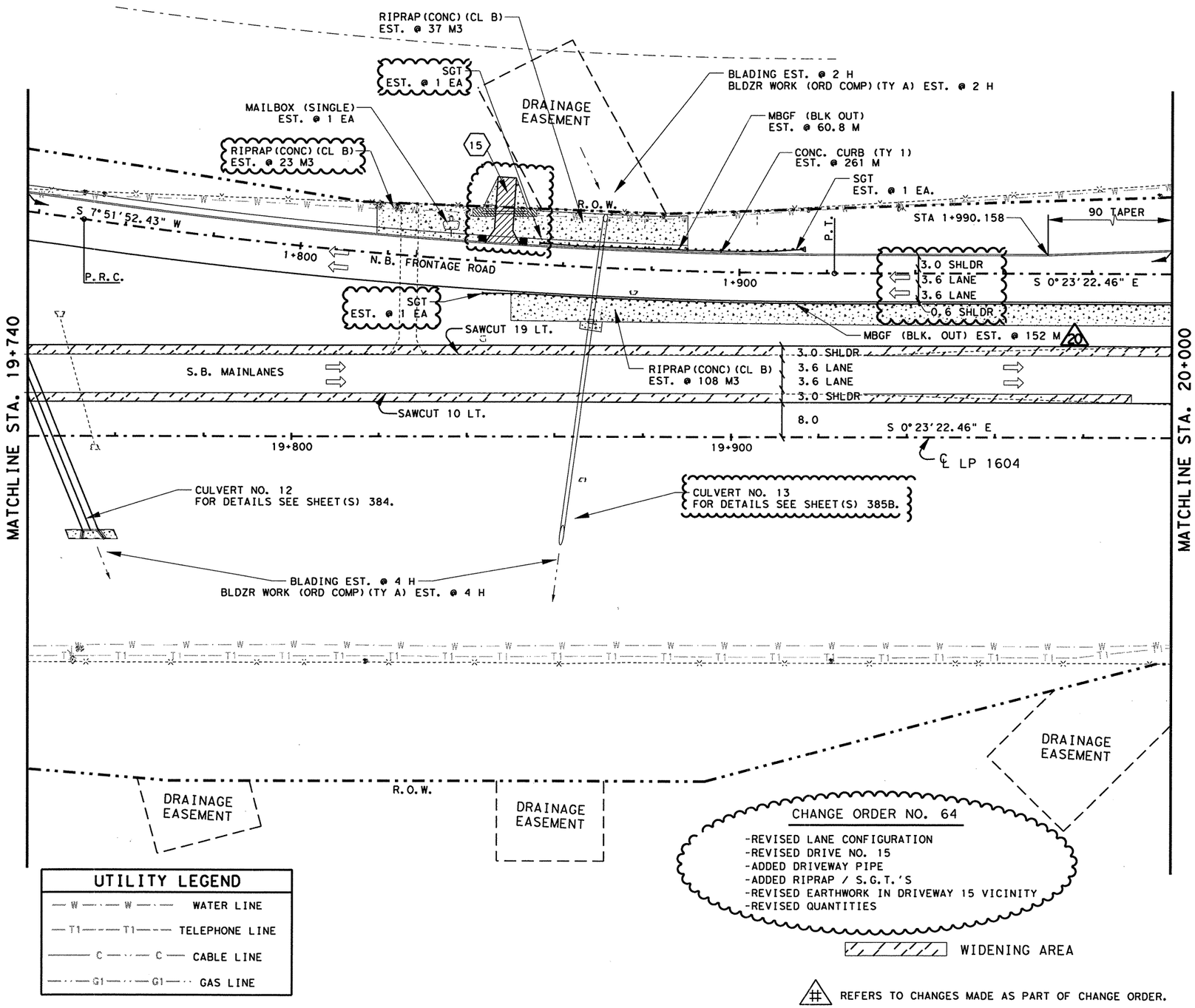


## ESTIMATED QUANTITIES

| | ITEM # | ITEM | UNIT | QTY. |
|---|---|---|---|---|
| | 100-5002 | PREP ROW | KM | 0.26 |
| | 110-5001 | EXCAVATION (RDWY) | M3 | 2467 |
| | 132-5018 | EMBANK (ORD COMP) (TY B) (CL 3) | M3 | 9229 |
| | 150-5003 | BLADING | H | 6 |
| | 156-5003 | BLDZR WORK (ORD COMP) (TY A) | H | 6 |
| | 160-5002 | FURN AND PLAC TPSL (CL 2) (150 MM) | M2 | 10177 |
| | 164-5049 | DRILL SEED (PERM) (URBAN) (CLAY) | M2 | 10177 |
| | 247-5024 | FL BS (COMPL IN PLAC) (TY A GR 6 CL 4) | M3 | 1288 |
| | 310-5006 | ASPH MATL (AE-P) | L | 3102 |
| * | | ONE CRSE SURF TREAT | M2 | 6696 |
| | 316-5028 | AGGR (TY PB, GR 4) | M3 | 61 |
| | 316-5226 | ASPH (AC-15P, HFRS-2P OR CRS-2P) | L | 9106 |
| | 345-5004 | ASPH STAB BS (GR 4) | MGR | 756 |
| | 432-5001 | RIPRAP (CONC) (CL B) | M3 | 168 |
| | 529-5001 | CONC CURB (TY 1) | M | 261 |
| | | DRVWAYS (ASPH-CONC PAV) (SPL) | M2 | 70 |
| | 540-5005 | TERM ANCHOR SECT (2.67 MM) | EA | 2 |
| ⚠ | 540-5006 | MBGF (TIM POST) (2.67 MM) | M | 152 |
| ⚠ | 540-5007 | MBGF (TIM POST) (BLK OUT) (2.67 MM) | M | 212.8 |
| | 560-5001 | MAILBOX INSTAL (SINGLE) | EA | 1 |
| | 3117-5003 | HOT MIX (TY C) | MGR | 626 |
| | 3117-5018 | HOT MIX (TY C) (SURF) | MGR | 594 |
| # | 3117-5024 | HOT MIX (TY C) (LEVEL-UP) | MGR | 501 |
| | 5119-5003 | SINGLE GDRAIL TERM (TY III) | EA | 3 |

* FOR CONTRACTORS INFORMATION ONLY
# QUANTITY COMPUTER GENERATED

NOTE(S):

ALL DIMENSIONS ARE IN METERS UNLESS OTHERWISE NOTED.

FOR HORIZONTAL ALIGNMENT / DATA, SEE SHEET(S) 164 - 171.

FOR LIMITS OF SEEDING & TOPSOIL, SEE PROJECT X-SECTIONS AND TYPICAL SECTIONS.

FOR RIPRAP DETAILS SEE PROJECT X-SECTIONS AND SHEET(S) 342.

(#) DRIVEWAY #, FOR MORE DETAILS SEE SHEET(S) 27, 28 & 336.

FOR RIPRAP ASSOCIATED WITH STORM DRAINAGE STRUCTURES SEE SHEET(S) 454 - 470.

## UTILITY LEGEND

| | |
|---|---|
| — W — · — W — · — | WATER LINE |
| — T1 — — — T1 — — — | TELEPHONE LINE |
| ——— C ——·——·——— C ——— | CABLE LINE |
| ——·——·— G1 —·——·— G1 —·—·— | GAS LINE |

CHANGE ORDER NO. 64

-REVISED LANE CONFIGURATION
-REVISED DRIVE NO. 15
-ADDED DRIVEWAY PIPE
-ADDED RIPRAP / S.G.T.'S
-REVISED EARTHWORK IN DRIVEWAY 15 VICINITY
-REVISED QUANTITIES

WIDENING AREA

(#) REFERS TO CHANGES MADE AS PART OF CHANGE ORDER.

CHANGE ORDER 64

REVISED SHEET

STATE OF TEXAS
JEROME D. PAVLISKA
76075
REGISTERED
PROFESSIONAL ENGINEER

Jerome D. Pavliska P.E. 1-12-05
Jerome D. Pavliska, P.E. — Date

©2005
Texas Department of Transportation

PLAN SHEET
SHEET 24 OF 57

| FED. RD. DIV. NO. | FEDERAL AID PROJECT NO. | | SHEET NO. |
|---|---|---|---|
| 6 | NH 2000(704), etc. | | 214A |
| STATE | DIST. | COUNTY | |
| TEXAS | SAT | BEXAR | |
| CONT. | SECT. | JOB | HIGHWAY NO. |
| 2452 | 01 | 036, etc. | LP 1604 |

01-10-05

LEVELS DISPLAYED
1 2 3 4 5 6 7 8 9 10 11 12 13 14 15 16
17 18 19 20 21 22 23 24 25 26 27 28 29 30 31 32
33 34 35 36 37 38 39 40 41 42 43 44 45 46 47 48
49 50 51 52 53 54 55 56 57 58 59 60 61 62 63

ACC: t:\ao\design\lp1604fm471-90\
FILE: plan24x0064.dgn

QUANTITIES THIS SHEET
CSJ 2452-01-037

SCALE: 1:1000

DRIVEWAY (CONC) (150mm) EST. @ 132 M2 (FOR MORE DETAILS SEE DRIVEWAY PLAN/PROFILE SHEET 346E)

WIRE FENCE (TY D) ** EST. @ 93 M

RIPRAP (CONC) (CL B) EST. @ 57 M3

SGT (64) EST. @ 1 EA

GATE (TY 2) EST. @ 1 EA

WIRE FENCE (TY D) ** EST. @ 3 M

EXIST 400mm WATER

RIPRAP (CONC) (CL B) EST. @ 5 M3

DRAINAGE EASEMENT

BLADING EST. @ 2 H
BLDZR WORK (ORD COMP) (TY A) EST. @ 2 H

MBGF (BLK OUT) EST. @ 60.8 M

CONC. CURB (TY 1) EST. @ 261 M

SGT EST. @ 1 EA.

400mm WATER (51)

3.1 (+)

R.O.W.

P.T.

STA 1+990.158

90 TAPER

S 7°51'52.43" W

1+800

N.B. FRONTAGE ROAD

P.R.C.

RELOCATED MAILBOX (SINGLE) EST. @ 1 EA

1+900

3.0 SHLDR
3.6 LANE
3.6 LANE
0.6 SHLDR

S 0°23'22.46" E

SGT (64) EST. @ 1 EA

SAWCUT 19 LT.

MBGF (BLK. OUT) EST. @ 152 M (20)

MATCHLINE STA. 19+740

S.B. MAINLANES

RIPRAP (CONC) (CL B) EST. @ 108 M3

3.0 SHLDR
3.6 LANE
3.6 LANE
3.0 SHLDR

SAWCUT 10 LT.

8.0

19+800

19+900

S 0°23'22.46" E

℄ LP 1604

MATCHLINE STA. 20+000

CULVERT NO. 12
FOR DETAILS SEE SHEET(S) 384.

CULVERT NO. 13 (88)
FOR DETAILS SEE SHEET(S) 385B.

BLADING EST. @ 4 H
BLDZR WORK (ORD COMP) (TY A) EST. @ 4 H

** REMOVAL OF EXISTING FENCE SHALL BE CONSIDERED SUBSIDIARY TO THE FENCE BEING PLACED. NO DIRECT PAYMANT WILL BE MADE FOR THE EXISTING FENCE REMOVAL.

DRAINAGE EASEMENT

R.O.W.

DRAINAGE EASEMENT

DRAINAGE EASEMENT

CHANGE ORDER NO. 99
-REVISED DRIVE NO. 15 (7-22-05)
-ADDED DRIVEWAY PIPE
-ADDED FENCE & GATE
-ADDED RIPRAP / S.G.T.'S
-REVISED QUANTITIES
-UPDATED UTILITY INFO.

UTILITY LEGEND

| | |
|---|---|
| — W — · — W — · — | WATER LINE |
| — T1 — · — T1 — · — | TELEPHONE LINE |
| ——— C ——— · ——— C ——— | CABLE LINE |
| — · — G1 — · — G1 — · — | GAS LINE |

WIDENING AREA

(#) REFERS TO CHANGES MADE AS PART OF CHANGE ORDER.

## ESTIMATED QUANTITIES

| | ITEM # | ITEM | UNIT | QTY. |
|---|---|---|---|---|
| 64 | 100-5002 | PREP ROW | KM | 0.26 |
| 64 | 110-5001 | EXCAVATION (RDWY) | M3 | 2467 |
| 64 | 132-5018 | EMBANK (ORD COMP) (TY B) (CL 3) | M3 | 9229 |
| | 150-5003 | BLADING | H | 6 |
| | 156-5003 | BLDZR WORK (ORD COMP) (TY A) | H | 6 |
| | 160-5002 | FURN AND PLAC TPSL (CL 2) (150 MM) | M2 | 10177 |
| | 164-5049 | DRILL SEED (PERM) (URBAN) (CLAY) | M2 | 10177 |
| | 247-5024 | FL BS (COMPL IN PLAC)(TY A GR 6 CL 4) | M3 | 1288 |
| | 310-5006 | ASPH MATL (AE-P) | L | 3102 |
| * | | ONE CRSE SURF TREAT | M2 | 6696 |
| | 316-5028 | AGGR (TY PB, GR 4) | M3 | 61 |
| | 316-5226 | ASPH (AC-15P, HFRS-2P OR CRS-2P) | L | 9106 |
| | 345-5004 | ASPH STAB BS (GR 4) | MGR | 756 |
| | 432-5001 | RIPRAP (CONC) (CL B) | M3 | 170 |
| | 529-5001 | CONC CURB (TY 1) | M | 261 |
| | 530-5001 | DRVWAYS (CONC) (150MM) | M2 | 132 |
| 20 | ~~540-5005~~ | ~~TERM ANCHOR SECT (2.67 MM)~~ | ~~EA~~ | ~~2~~ |
| 20 | ~~540-5006~~ | ~~MBGF (TIM POST) (2.67 MM)~~ | ~~M~~ | ~~152~~ |
| 20 | 540-5007 | MBGF (TIM POST) (BLK OUT) (2.67 MM) | M | 212.8 |
| | 560-5001 | MAILBOX INSTAL (SINGLE) | EA | 1 |
| | 3117-5003 | HOT MIX (TY C) | MGR | 626 |
| | 3117-5018 | HOT MIX (TY C) (SURF) | MGR | 594 |
| 64 # | 3117-5024 | HOT MIX (TY C) (LEVEL-UP) | MGR | 501 |
| 64 | 5119-5003 | SINGLE GDRAIL TERM (TY III) | EA | 3 |
| | 552-**** | GATE (TY 2) | EA | 1 |
| ** | 552-5009 | WIRE FENCE (TY D) | M | 96 |

* FOR CONTRACTORS INFORMATION ONLY
# QUANTITY COMPUTER GENERATED

NOTE(S):

ALL DIMENSIONS ARE IN METERS UNLESS OTHERWISE NOTED.

FOR HORIZONTAL ALIGNMENT / DATA, SEE SHEET(S) 164 - 171.

FOR LIMITS OF SEEDING & TOPSOIL, SEE PROJECT X-SECTIONS AND TYPICAL SECTIONS.

FOR RIPRAP DETAILS SEE PROJECT X-SECTIONS AND SHEET(S) 342.

(#) DRIVEWAY #, FOR MORE DETAILS SEE SHEET(S) 27, 28 & 336.

FOR RIPRAP ASSOCIATED WITH STORM DRAINAGE STRUCTURES SEE SHEET(S) 454 - 470.

CHANGE ORDER 99

REVISED SHEET

STATE OF TEXAS
RUBEN GUERRERO
95031
LICENSED
PROFESSIONAL ENGINEER

Ruben Guerrero, P.E. 95031 — Date 7-30-05

©2005
Texas Department of Transportation

PLAN SHEET
SHEET 24 OF 57

| FED. RD. DIV. NO. | FEDERAL AID PROJECT NO. | | SHEET NO. |
|---|---|---|---|
| 6 | NH 2000(704), etc. | | 214A |
| STATE | DIST. | COUNTY | |
| TEXAS | SAT | BEXAR | |
| CONT. | SECT. | JOB | HIGHWAY NO. |
| 2452 | 01 | 036, etc. | LP 1604 |

7-22-05

LEVELS DISPLAYED
1 2 3 4 5 6 7 8 9 10 11 12 13 14 15 16
17 18 19 20 21 22 23 24 25 26 27 28 29 30 31 32
33 34 35 36 37 38 39 40 41 42 43 44 45 46 47 48
49 50 51 52 53 54 55 56 57 58 59 60 61 62 63

ACC: t:\ao\design\lp1604fm471-90\
FILE: plan24xc064.dgn

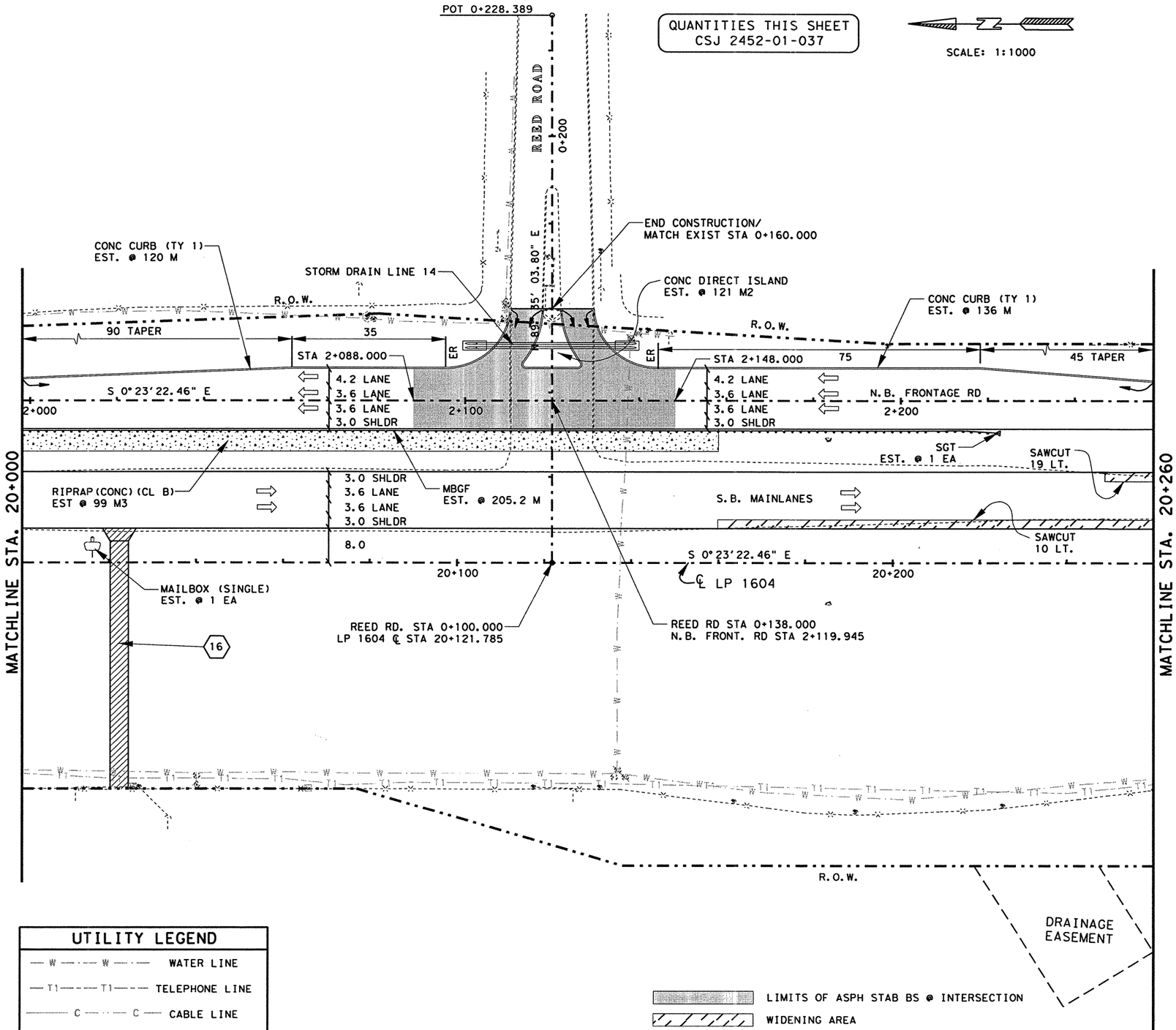


## UTILITY LEGEND

| | |
|---|---|
| — W — · — W — · — | WATER LINE |
| — T1 — · — · — T1 — · — · — | TELEPHONE LINE |
| ——— C ——— · ——— C ——— | CABLE LINE |
| — · — G1 — · — · — G1 — · — · | GAS LINE |

## ESTIMATED QUANTITIES

| | ITEM # | ITEM | UNIT | QTY. |
|---|---|---|---|---|
| | 100-5002 | PREP ROW | KM | 0.26 |
| | 110-5001 | EXCAVATION (RDWY) | M3 | 5292 |
| | 132-5018 | EMBANK (ORD COMP) (TY B) (CL 3) | M3 | 3004 |
| | 160-5002 | FURN AND PLAC TPSL (CL 2) (150 MM) | M2 | 8698 |
| | 164-5049 | DRILL SEED (PERM) (URBAN) (CLAY) | M2 | 8698 |
| | 247-5024 | FL BS (COMPL IN PLACXTY A GR 6 CL 4) | M3 | 1213 |
| | 310-5006 | ASPH MATL (AE-P) | L | 3060 |
| * | | ONE CRSE SURF TREAT | M2 | 7548 |
| | 316-5028 | AGGR (TY PB, GR 4) | M3 | 69 |
| | 316-5226 | ASPH (AC-15P, HFRS-2P OR CRS-2P) | L | 10265 |
| | 345-5004 | ASPH STAB BS (GR 4) | MGR | 1072 |
| | 432-5001 | RIPRAP (CONC) (CL B) | M3 | 99 |
| | 529-5001 | CONC CURB (TY 1) | M | 256 |
| | 530-5003 | DRVWAYS (ASPH-CONC PAV) | M2 | 253 |
| | 536-5003 | CONC DIRECT ISLAND | M2 | 121 |
| | 540-5006 | MBGF (TIM POST) (2.67 MM) | M | 205.2 |
| | 560-5001 | MAILBOX INSTAL (SINGLE) | EA | 1 |
| | 3117-5003 | HOT MIX (TY C) | MGR | 695 |
| | 3117-5018 | HOT MIX (TY C) (SURF) | MGR | 664 |
| ♯ | 3117-5024 | HOT MIX (TY C) (LEVEL-UP) | MGR | 486 |
| | 5119-5003 | SINGLE GDRAIL TERM (TY III) | EA | 1 |

* FOR CONTRACTORS INFORMATION ONLY
♯ QUANTITY COMPUTER GENERATED

NOTE(S):

ALL DIMENSIONS ARE IN METERS UNLESS OTHERWISE NOTED.

FOR HORIZONTAL ALIGNMENT / DATA, SEE SHEET(S) 164 - 171.

FOR LIMITS OF SEEDING & TOPSOIL, SEE PROJECT X-SECTIONS AND TYPICAL SECTIONS.

FOR INTERSECTION LAYOUT, SEE SHEET(S) 325.

FOR RIPRAP DETAILS SEE PROJECT X-SECTIONS AND SHEET(S) 342.

FOR RIPRAP ASSOCIATED WITH STORM DRAINAGE STRUCTURES SEE SHEET(S) 454 - 470.

FOR ADDITIONAL STORM DRAIN INFO. REFER TO THE SPECIFIC STORM DRAIN PROFILE SHEET(S).

(#) DRIVEWAY #, FOR MORE DETAILS SEE SHEET(S) 27, 28 & 336.

WHEELCHAIR RAMPS TY 2

STATE OF TEXAS
JOEL R. DAVENPORT, JR.
79276
REGISTERED PROFESSIONAL ENGINEER

Joel R. Davenport, Jr P.E. 79276 — 11/1/00 Date

Texas Department of Transportation

# PLAN SHEET

SHEET 25 OF 57

| FED. RD. DIV. NO. | FEDERAL AID PROJECT NO. | | SHEET NO. |
|---|---|---|---|
| 6 | NH 2000(704), etc. | | 215 |
| STATE | DIST. | COUNTY | |
| TEXAS | SAT | BEXAR | |
| CONT. | SECT. | JOB | HIGHWAY NO. |
| 2452 | 01 | 036, etc. | LP 1604 |

LEVELS DISPLAYED
1 2 3 4 15 16 17 18 19 101 11 21 31 41 51 61 71 81 91 92 121 122 123 124 125 126 127 128 129 130 131 133 333 335 351 353 735 935 940 941 942 943 944 945 946 947 948 949 951 952 953 955 956 957 958 959 961 962 963
ACC: t:\ao\design\lp1604fm471-90\
FILE: plan25.dgn

Plotted on: 01/26/2004

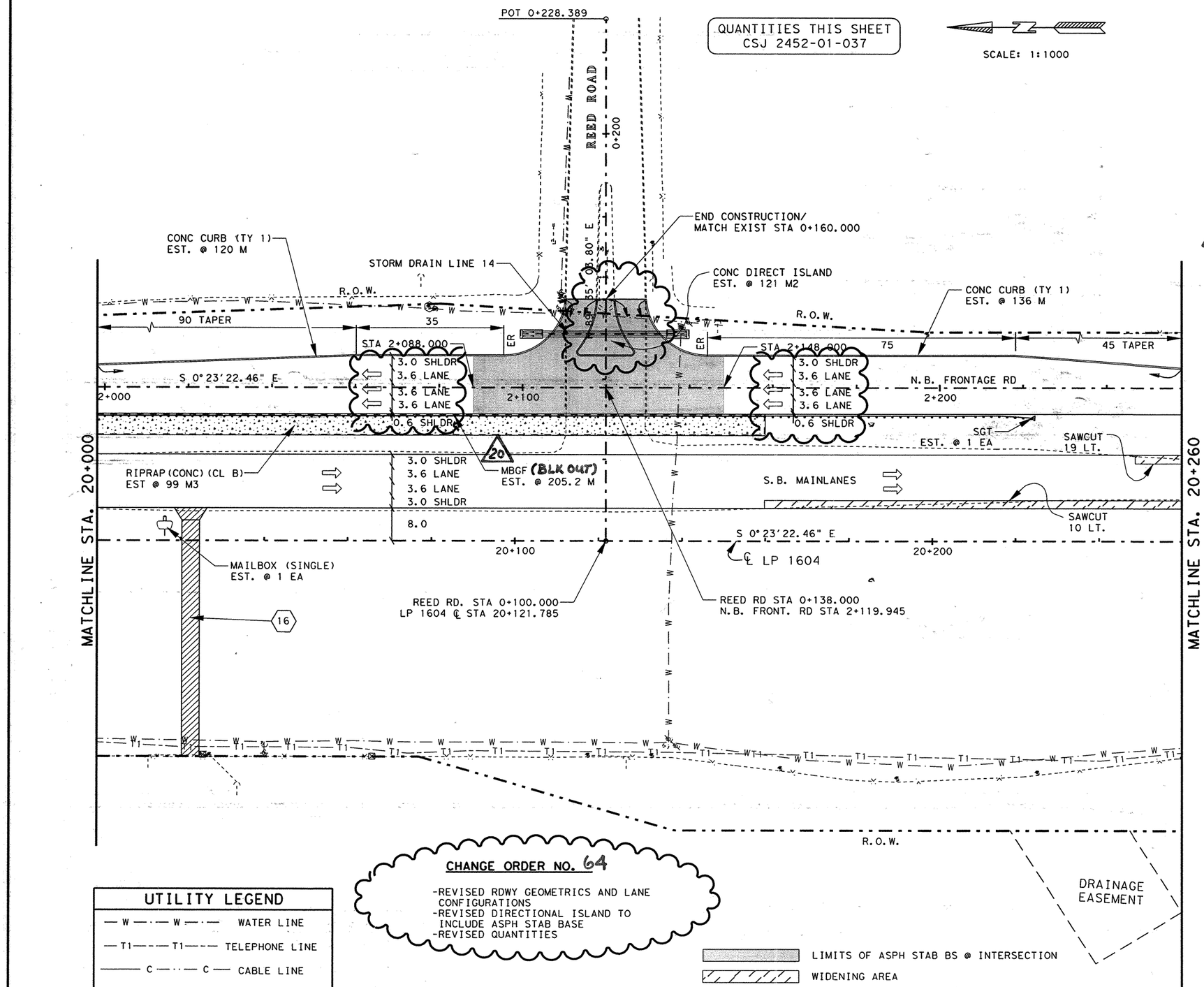


## ESTIMATED QUANTITIES

| | ITEM # | ITEM | UNIT | QTY. |
|---|---|---|---|---|
| | 100-5002 | PREP ROW | KM | 0.26 |
| | 110-5001 | EXCAVATION (RDWY) | M3 | 5292 |
| | 132-5018 | EMBANK (ORD COMP) (TY B) (CL 3) | M3 | 3004 |
| | 160-5002 | FURN AND PLAC TPSL (CL 2) (150 MM) | M2 | 8698 |
| | 164-5049 | DRILL SEED (PERM) (URBAN) (CLAY) | M2 | 8698 |
| | 247-5024 | FL BS (COMPL IN PLACE) (TY A GR 6 CL 4) | M3 | 1213 |
| | 310-5006 | ASPH MATL (AE-P) | L | 3165 |
| * | | ONE CRSE SURF TREAT | M2 | 7665 |
| | 316-5028 | AGGR (TY PB, GR 4) | M3 | 70 |
| | 316-5226 | ASPH (AC-15P, HFRS-2P OR CRS-2P) | L | 10424 |
| | 345-5004 | ASPH STAB BS (GR 4) | MGR | 1163 |
| | 432-5001 | RIPRAP (CONC) (CL B) | M3 | 99 |
| | 529-5001 | CONC CURB (TY 1) | M | 256 |
| | 530-5003 | DRVWAYS (ASPH-CONC PAV) | M2 | 253 |
| | 536-5003 | CONC DIRECT ISLAND | M2 | 121 |
| 20 | 540-5007 | MBGF (TIM POST) (2.67 MM) (BLK OUT) | M | 205.2 |
| | 560-5001 | MAILBOX INSTAL (SINGLE) | EA | 1 |
| | 3117-5003 | HOT MIX (TY C) | MGR | 706 |
| | 3117-5018 | HOT MIX (TY C) (SURF) | MGR | 664 |
| # | 3117-5024 | HOT MIX (TY C) (LEVEL-UP) | MGR | 486 |
| | 5119-5003 | SINGLE GDRAIL TERM (TY III) | EA | 1 |

* FOR CONTRACTORS INFORMATION ONLY
\# QUANTITY COMPUTER GENERATED

NOTE(S):

ALL DIMENSIONS ARE IN METERS UNLESS OTHERWISE NOTED.

FOR HORIZONTAL ALIGNMENT / DATA, SEE SHEET(S) 164 - 171.

FOR LIMITS OF SEEDING & TOPSOIL, SEE PROJECT X-SECTIONS AND TYPICAL SECTIONS.

FOR INTERSECTION LAYOUT, SEE SHEET(S) 325.

FOR RIPRAP DETAILS SEE PROJECT X-SECTIONS AND SHEET(S) 342.

FOR RIPRAP ASSOCIATED WITH STORM DRAINAGE STRUCTURES SEE SHEET(S) 454 - 470.

FOR ADDITIONAL STORM DRAIN INFO. REFER TO THE SPECIFIC STORM DRAIN PROFILE SHEET(S).

(#) DRIVEWAY #, FOR MORE DETAILS SEE SHEET(S) 27, 28 & 336.

WHEELCHAIR RAMPS TY 2

**CHANGE ORDER NO. 64**

-REVISED RDWY GEOMETRICS AND LANE CONFIGURATIONS
-REVISED DIRECTIONAL ISLAND TO INCLUDE ASPH STAB BASE
-REVISED QUANTITIES

### UTILITY LEGEND

- W — W — WATER LINE
- T1 — T1 — TELEPHONE LINE
- C — C — CABLE LINE
- G1 — G1 — GAS LINE

CHANGE ORDER NO. 64 | REVISED SHEET

555 EAST RAMSEY SAN ANTONIO TEXAS 78216 PHONE (210)375-9000 FAX (210)375-9010
PAPE-DAWSON ENGINEERS CIVIL & ENVIRONMENTAL
STATE OF TEXAS J. KENT O'BRIEN 64398 LICENSED PROFESSIONAL ENGINEER
J. KENT O'BRIEN P.E. 1/27/2004 DATE

©2000 Texas Department of Transportation

# PLAN SHEET

SHEET 25 OF 57

| FED. RD. DIV. NO. | FEDERAL AID PROJECT NO. | | SHEET NO. |
|---|---|---|---|
| 6 | NH 2000(704), etc. | | 215A |
| STATE | DIST. | COUNTY | |
| TEXAS | SAT | BEXAR | |
| CONT. | SECT. | JOB | HIGHWAY NO. |
| 2452 | 01 | 036, etc. | LP 1604 |

Design Filename: p:\52\20\11\design\civil\plansheets\road\plan-profile\plan25.dgn
LEVELS DISPLAYED 1 2 3 4 5 6 7 8 9 10 11 12 13 14 15 16 17 18 19 20 21 22 23 24 25 26 27 28 29 30 31 32 33 34 35 36 37 38 39 40 41 42 43 44 45 46 47 48 49 50 51 52 53 54 55 56 57 58 59 60 61 62 63
ACC: t:\do\design\lp1604fm471-90\
FILE: plan25.dgn

QUANTITIES THIS SHEET
CSJ 2452-01-037

SCALE: 1:1000

## ESTIMATED QUANTITIES

| | ITEM # | ITEM | UNIT | QTY. |
|---|---|---|---|---|
| | 100-5002 | PREP ROW | KM | 0.26 |
| | 110-5001 | EXCAVATION (RDWY) | M3 | 4424 |
| | 132-5018 | EMBANK (ORD COMP) (TY B) (CL 3) | M3 | 1088 |
| | 160-5002 | FURN AND PLAC TPSL (CL 2) (150 MM) | M2 | 8407 |
| | 164-5049 | DRILL SEED (PERM) (URBAN) (CLAY) | M2 | 8407 |
| | 247-5024 | FL BS (COMPL IN PLACE)(TY A GR 6 CL 4) | M3 | 1258 |
| | 310-5006 | ASPH MATL (AE-P) | L | 3027 |
| * | | ONE CRSE SURF TREAT | M2 | 6617 |
| | 316-5028 | AGGR (TY PB, GR 4) | M3 | 60 |
| | 316-5226 | ASPH (AC-15P, HFRS-2P OR CRS-2P) | L | 8999 |
| | 345-5004 | ASPH STAB BS (GR 4) | MGR | 776 |
| | 529-5001 | CONC CURB (TY 1) | M | 261 |
| | 3117-5003 | HOT MIX (TY C) | MGR | 618 |
| | 3117-5018 | HOT MIX (TY C) (SURF) | MGR | 587 |
| ≠ | 3117-5024 | HOT MIX (TY C) (LEVEL-UP) | MGR | 881 |
| | | | | |

* FOR CONTRACTORS INFORMATION ONLY
≠ QUANTITY COMPUTER GENERATED

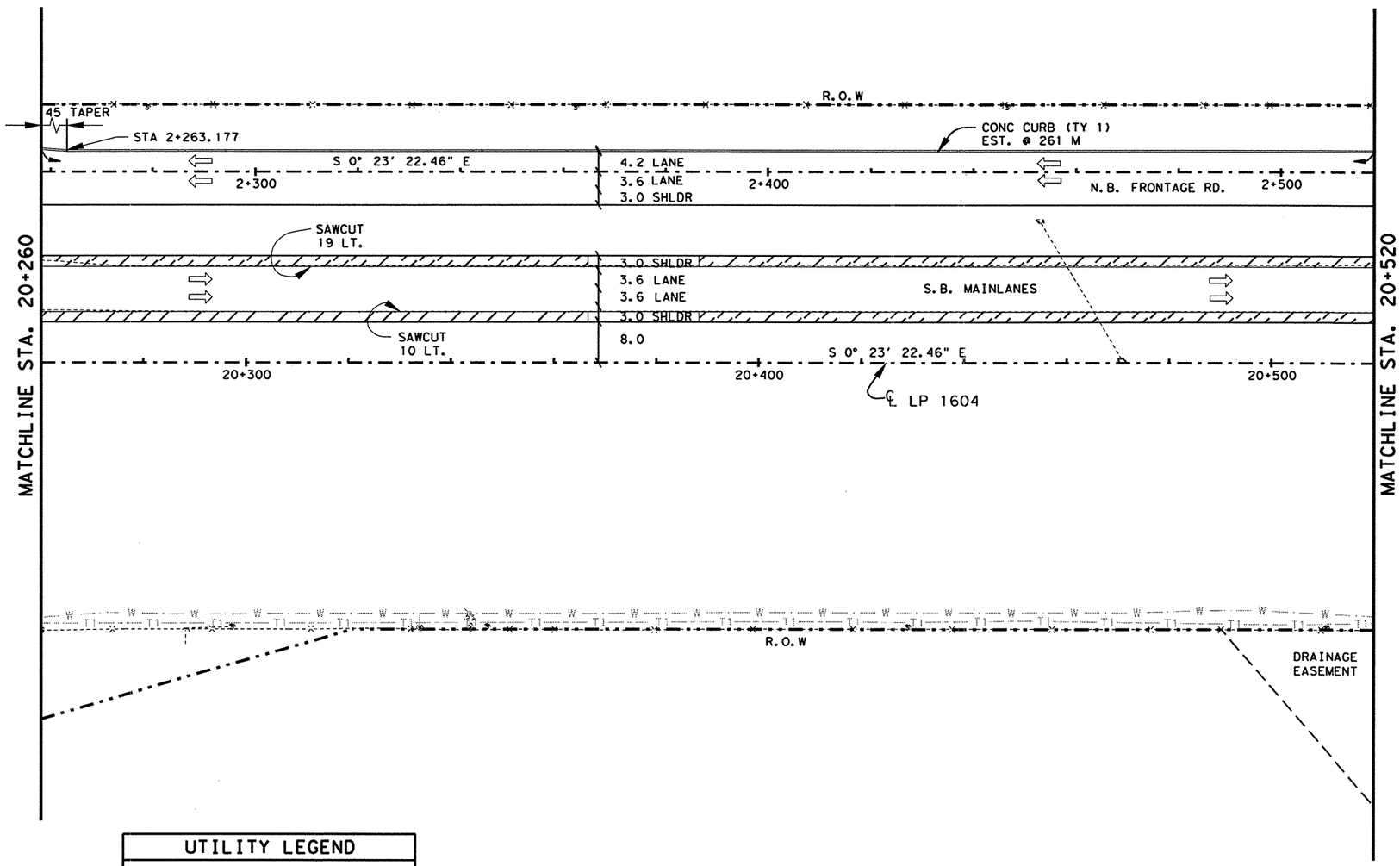


### UTILITY LEGEND

| | |
|---|---|
| — W — · — W — · — | WATER LINE |
| — T1 — — — T1 — — — | TELEPHONE LINE |
| ——— C ——— · ——— C ——— | CABLE LINE |
| — · — G1 — · — G1 — · — | GAS LINE |

WIDENING AREA

NOTE(S):

ALL DIMENSIONS ARE IN METERS UNLESS OTHERWISE NOTED.

FOR HORIZONTAL ALIGNMENT / DATA, SEE SHEET(S) 164 - 171.

FOR LIMITS OF SEEDING & TOPSOIL, SEE PROJECT X-SECTIONS AND TYPICAL SECTIONS.

STATE OF TEXAS
JOEL K. DAVENPORT, JR.
79276
REGISTERED
PROFESSIONAL ENGINEER

Joel K. Davenport, Jr. P.E. 79276 — 11/1/00 Date

©2000
Texas Department of Transportation

# PLAN SHEET

SHEET 26 OF 57

| FED.RD. DIV.NO. | FEDERAL AID PROJECT NO. | | SHEET NO. |
|---|---|---|---|
| 6 | NH 2000(704), etc. | | 216 |
| STATE | DIST. | COUNTY | |
| TEXAS | SAT | BEXAR | |
| CONT. | SECT. | JOB | HIGHWAY NO. |
| 2452 | 01 | 036, etc. | LP 1604 |

LEVELS DISPLAYED
1 2 3 4 5 6 7 8 9 10 11 12 13 14 15 16
17 18 19 20 21 22 23 24 25 26 27 28 29 30 31 32
33 34 35 36 37 38 39 40 41 42 43 44 45 46 47 48
49 50 51 52 53 54 55 56 57 58 59 60 61 62 63
ACC: t:\os\design\lp1604fm471-90\
FILE: plan26.dgn

QUANTITIES THIS SHEET
CSJ 2452-01-037

SPECIAL NOTES(S):

a). THE INTENT OF THIS AGREED UPON USFWS COORDINATION IS TO MINIMIZE THE POTENTIAL FOR INFILTRATION OF ROADWAY RUNOFF IN THE VICINITY OF CRITICAL HABITAT UNIT#16.

b). AREAS THAT ARE TO BE TREATED AS DETAILED ARE TO BE CONSTRUCTED AS SOON AS POSSIBLE IN ORDER TO MINIMIZE THE POTENTIAL OF FILTRATION TO THIS AREA.

c.) ANY VOIDS, OPENINGS, CAVES, ETC. DISCOVERED DURING CONSTRUCTION OF THIS AREA SHALL CAUSE AN IMMEDIATE CEASE TO CONSTRUCTION ACTIVITIES AND TO NOTIFY THE PROJECT ENGINEER.

d). APPROPRIATE SW3P DEVICES AND OR PRACTICES SHALL BE UTILIZED AS DEEMED NECESSARY BY THE ENGINEER.

CLAY SHALL MEET THE FOLLOWING SPECIFICATIONS:

| Property | Unit | Specficiation |
|---|---|---|
| Permeability | Cm/Sec | Not $>1 \times 10^{-7}$ |
| Plasticity Index | % | Not < 15 |
| Liquid Limit | % | Not < 30 |
| Particles Passing 200 mesh sieve | % | Not < 30 |
| Percent Passing 1" screen | | 100% |

SCALE: 1:1000

USFWS CRITICAL HABITAT UNIT #16 BOUNDARY (+)

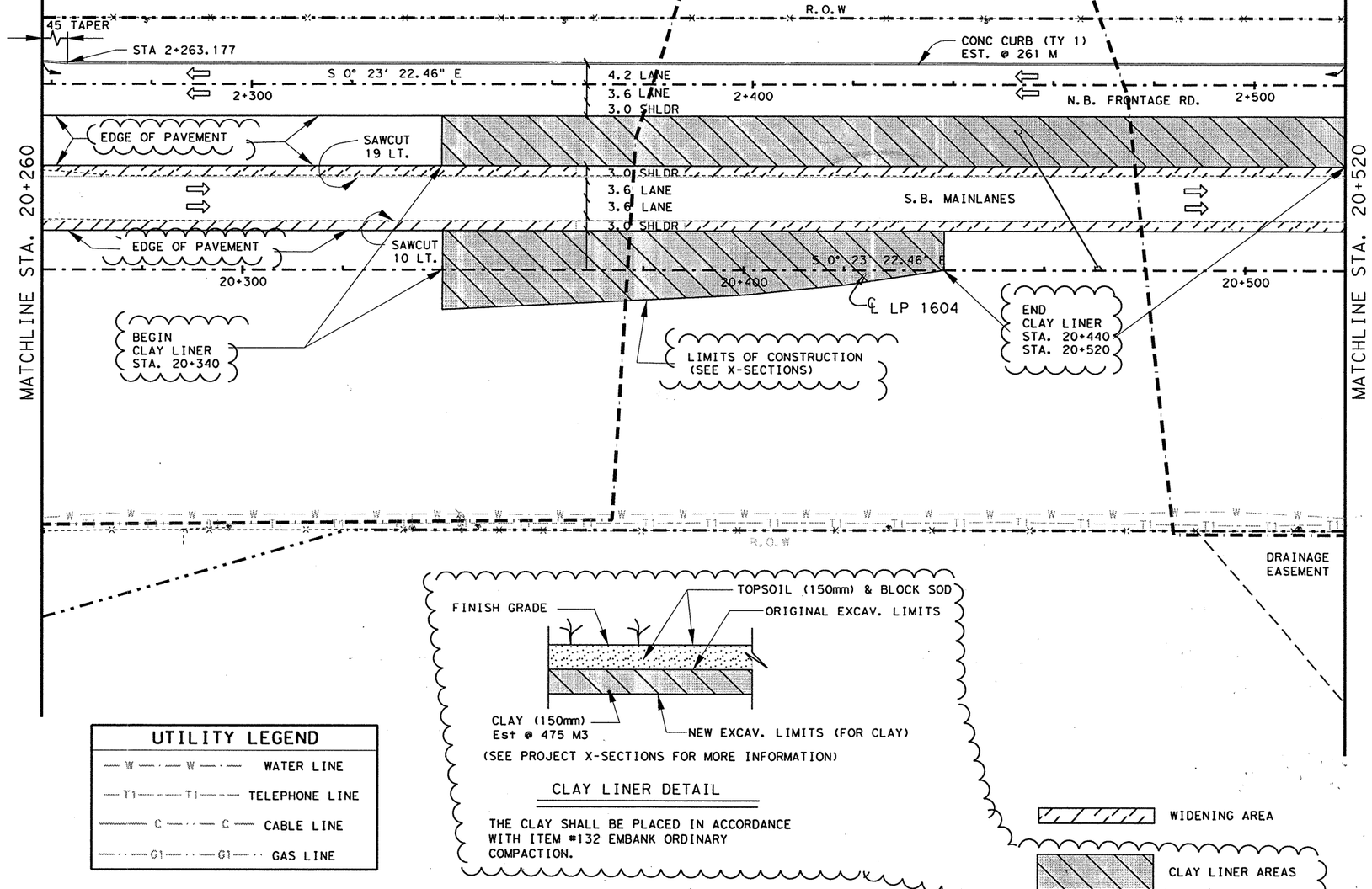





(SEE PROJECT X-SECTIONS FOR MORE INFORMATION)

CLAY LINER DETAIL

THE CLAY SHALL BE PLACED IN ACCORDANCE WITH ITEM #132 EMBANK ORDINARY COMPACTION.

WIDENING AREA

CLAY LINER AREAS

UTILITY LEGEND

- W — W — WATER LINE
- T1 — T1 — TELEPHONE LINE
- C — C — CABLE LINE
- G1 — G1 — GAS LINE

ESTIMATED QUANTITIES

| | ITEM # | ITEM | UNIT | QTY. |
|---|---|---|---|---|
| | 100-5002 | PREP ROW | KM | 0.26 |
| | 110-5001 | EXCAVATION (RDWY) | M3 | 4424 |
| | 132-5018 | EMBANK (ORD COMP)(TY B)(CL 3) | M3 | 1088 |
| | | | | |
| | 160-5002 | FURN AND PLAC TPSL (CL 2)(150 MM) | M2 | 8407 |
| | 164-5049 | DRILL SEED (PERM)(URBAN)(CLAY) | M2 | 5240 |
| | 247-5024 | FL BS (COMPL IN PLAC)(TY A GR 6 CL 4) | M3 | 1258 |
| | 310-5006 | ASPH MATL (AE-P) | L | 3027 |
| * | | ONE CRSE SURF TREAT | M2 | 6617 |
| | 316-5028 | AGGR (TY PB,GR 4) | M3 | 60 |
| | 316-5226 | ASPH (AC-15P, HFRS-2P OR CRS-2P) | L | 8999 |
| | 345-5004 | ASPH STAB BS (GR 4) | MGR | 776 |
| | 529-5001 | CONC CURB (TY 1) | M | 261 |
| | 3117-5003 | HOT MIX (TY C) | MGR | 618 |
| | 3117-5018 | HOT MIX (TY C)(SURF) | MGR | 587 |
| # | 3117-5024 | HOT MIX (TY C)(LEVEL UP) | MGR | 881 |
| | 162-5008 | BLOCK SOD (BERMUDA) | M2 | 3167 |

* FOR CONTRACTORS INFORMATION ONLY
# QUANTITY COMPUTER GENERATED

NOTE(S):

ALL DIMENSIONS ARE IN METERS UNLESS OTHERWISE NOTED.

FOR HORIZONTAL ALIGNMENT / DATA, SEE SHEET(S) 164 - 171.

FOR LIMITS OF SEEDING & TOPSOIL, SEE PROJECT X-SECTIONS AND TYPICAL SECTIONS.

CHANGE ORDER NO. 81

-ADDED USFWS CRITICAL HABITAT UNIT #16
-ADDED CLAY LINER & DETAILS
-REVISED/ADDED QUANTITIES

CHANGE ORDER 81

REVISED SHEET

STATE OF TEXAS
JEROME D. PAVLISKA
76075
REGISTERED PROFESSIONAL ENGINEER

Jerome D. Pavliska, P.E. 4-12-04
Jerome D. Pavliska, P.E. Date

Texas Department of Transportation

PLAN SHEET

SHEET 26 OF 57

| FED.RD. DIV.NO. | FEDERAL AID PROJECT NO. | | SHEET NO. |
|---|---|---|---|
| 6 | NH 2000(704),etc. | | 216 A |
| STATE | DIST. | COUNTY | |
| TEXAS | SAT | BEXAR | |
| CONT. | SECT. | JOB | HIGHWAY NO. |
| 2452 | 01 | 036,etc. | LP 1604 |

LEVELS DISPLAYED
1 2 3 4 5 6 7 8 9 10 11 12 13 14 15 16
17 18 19 20 21 22 23 24 25 26 27 28 29 30 31 32
33 34 35 36 37 38 39 40 41 42 43 44 45 46 47 48
49 50 51 52 53 54 55 65 75 85 95 06 16 26 3

ACC: t:\ao\design\lp1604fm471-90\
FILE: plan26*C081.dgn

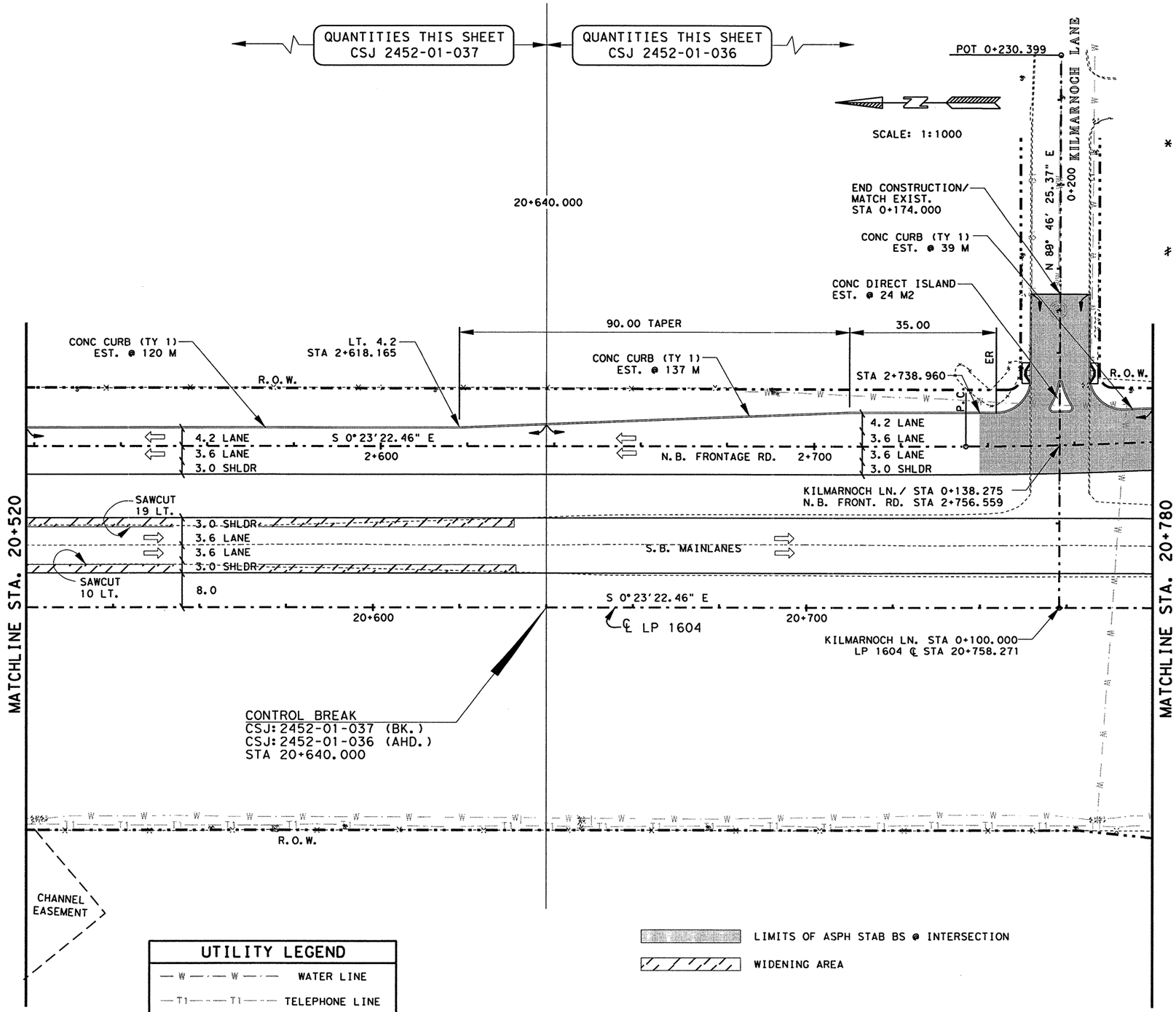


## ESTIMATED QUANTITIES

| | ITEM # | ITEM | UNIT | CSJ: 2452 01-037 QTY. | CSJ: 2452 01-036 QTY. |
|---|---|---|---|---|---|
| | 100-5002 | PREP ROW | KM | 0.12 | 0.14 |
| | 110-5001 | EXCAVATION (RDWY) | M3 | 574 | 2014 |
| | 132-5018 | EMBANK (ORD COMP) (TY B) (CL 3) | M3 | 501 | 461 |
| | 160-5002 | FURN AND PLAC TPSL (CL 2) (150 MM) | M2 | 3478 | 3791 |
| | 164-5049 | DRILL SEED (PERM) (URBAN) (CLAY) | M2 | 3478 | 3791 |
| | 247-5024 | FL BS (COMPL IN PLAC)(TY A GR 6 CL 3) | M3 | 598 | 588 |
| | 310-5006 | ASPH MATL (AE-P) | L | 1441 | 1450 |
| * | | ONE CRSE SURF TREAT | M2 | 3095 | 4328 |
| | 316-5028 | AGGR (TY PB, GR 4) | M3 | 28 | 39 |
| | 316-5226 | ASPH (AC-15P, HFRS-2P OR CRS-2P) | L | 4209 | 5886 |
| | 345-5004 | ASPH STAB BS (GR 4) | MGR | 335 | 794 |
| | 529-5001 | CONC CURB (TY 1) | M | 120 | 176 |
| | 536-5003 | CONC DIRECT ISLAND | M2 | | 24 |
| | 3117-5003 | HOT MIX (TY C) | MGR | 290 | 408 |
| | 3117-5018 | HOT MIX (TY C) (SURF) | MGR | 275 | 389 |
| # | 3117-5024 | HOT MIX (TY C) (LEVEL-UP) | MGR | 296 | 484 |
| | | | | | |
| | | | | | |

* FOR CONTRACTORS INFORMATION ONLY
# QUANTITY COMPUTER GENERATED

NOTE(S):

ALL DIMENSIONS ARE IN METERS UNLESS OTHERWISE NOTED.

FOR HORIZONTAL ALIGNMENT / DATA, SEE SHEET(S) 164 - 171.

FOR LIMITS OF SEEDING & TOPSOIL, SEE PROJECT X-SECTIONS AND TYPICAL SECTIONS.

FOR INTERSECTION LAYOUT, SEE SHEET 326.

WHEELCHAIR RAMPS TY 2

FOR RIPRAP ASSOCIATED WITH STORM DRAINAGE STRUCTURES SEE SHEET(S) 454 - 470.

STATE OF TEXAS
JOEL K. DAVENPORT, JR.
79276
REGISTERED
PROFESSIONAL ENGINEER

Joel K. Davenport, Jr. 11/1/00
Joel K. Davenport, Jr. P.E. 79276 Date

©2000
Texas Department of Transportation

# PLAN SHEET

SHEET 27 OF 57

| FED.RD. DIV.NO. | FEDERAL AID PROJECT NO. | SHEET NO. |
|---|---|---|
| 6 | NH 2000(704), etc. | 217 |

| STATE | DIST. | COUNTY | |
|---|---|---|---|
| TEXAS | SAT | BEXAR | |
| CONT. | SECT. | JOB | HIGHWAY NO. |
| 2452 | 01 | 036, etc. | LP 1604 |

LEVELS DISPLAYED
1 2 3 4 5 6 7 8 9 10 11 12 13 14 15 16
17 18 19 20 21 22 23 24 25 26 27 28 29 30 31 32
33 34 35 36 37 38 39 40 41 42 43 44 45 46 47 48
49 50 51 52 53 54 55 56 57 58 59 60 61 62 63
ACC: t:\ao\design\lp1604fm471-90\
FILE: plan27.dgn

Plotted on: 6/15/2004
Design Filename: T:\AO\Design\lp1604fm471-90\PD\Phase2*change*order*my1ars\submittal\plansheets\road\plan-profile\plan27.dgn

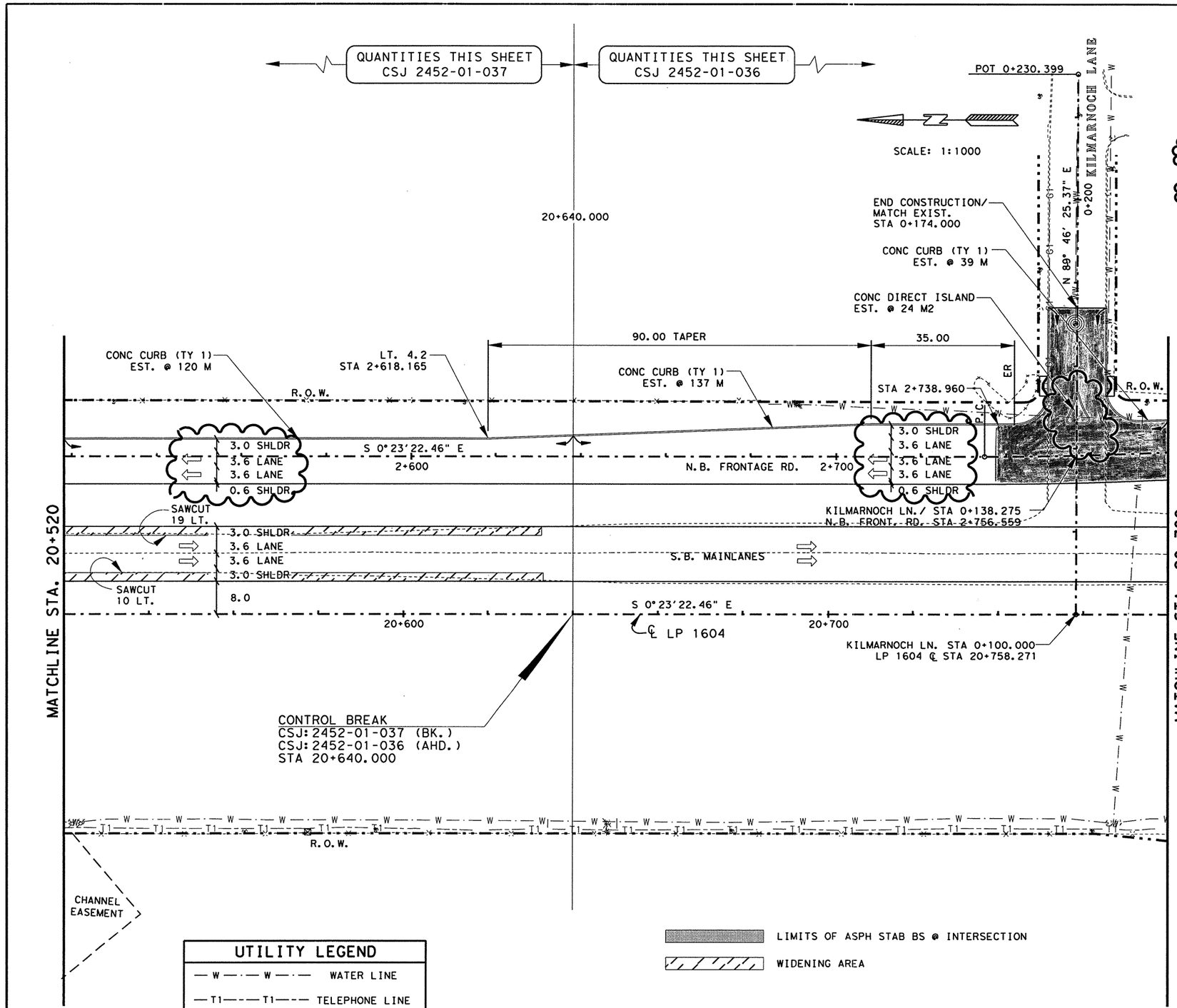


## UTILITY LEGEND

| | |
|---|---|
| — W — W — | WATER LINE |
| — T1 — T1 — | TELEPHONE LINE |
| — C — C — | CABLE LINE |
| — G1 — G1 — | GAS LINE |

## ESTIMATED QUANTITIES

| | ITEM # | ITEM | UNIT | CSJ: 2452 01-037 QTY. | CSJ: 2452 01-036 QTY. |
|---|---|---|---|---|---|
| | 100-5002 | PREP ROW | KM | 0.12 | 0.14 |
| | 110-5001 | EXCAVATION (RDWY) | M3 | 574 | 2014 |
| | 132-5018 | EMBANK (ORD COMP) (TY B) (CL 3) | M3 | 501 | 463 |
| | 160-5002 | FURN AND PLAC TPSL (CL 2) (150 MM) | M2 | 3478 | 3791 |
| | 164-5049 | DRILL SEED (PERM) (URBAN) (CLAY) | M2 | 3478 | 3791 |
| | 247-5024 | FL BS (COMPL IN PLACE) (TY A GR 6 CL 3) | M3 | 588 | 588 |
| | 310-5006 | ASPH MATL (AE-P) | L | 1441 | 1471 |
| * | | ONE CRSE SURF TREAT | M2 | 3095 | 4352 |
| | 316-5028 | ASPH (AC-15P) (TY B GR 4) | M3 | 28 | 38 |
| | 316-5226 | ASPH (AC-15P, HFRS-2P OR CRS-2P) | L | 4209 | 5918 |
| | 345-5004 | ASPH STAB BS (GR 4) | MGR | 335 | 812 |
| | 529-5001 | CONC CURB (TY 1) | M | 120 | 176 |
| | 536-5003 | CONC DIRECT ISLAND | M2 | | 24 |
| | 3117-5003 | HOT MIX (TY C) | MGR | 290 | 410 |
| | 3117-5018 | HOT MIX (TY C) (SURF) | MGR | 275 | 389 |
| # | 3117-5024 | HOT MIX (TY C) (LEVEL-UP) | MGR | 296 | 484 |
| | | | | | |
| | | | | | |

* FOR CONTRACTORS INFORMATION ONLY
# QUANTITY COMPUTER GENERATED

NOTE(S):

ALL DIMENSIONS ARE IN METERS UNLESS OTHERWISE NOTED.

FOR HORIZONTAL ALIGNMENT / DATA, SEE SHEET(S) 164 - 171.

FOR LIMITS OF SEEDING & TOPSOIL, SEE PROJECT X-SECTIONS AND TYPICAL SECTIONS.

FOR INTERSECTION LAYOUT, SEE SHEET 326.

WHEELCHAIR RAMPS TY 2

FOR RIPRAP ASSOCIATED WITH STORM DRAINAGE STRUCTURES SEE SHEET(S) 454 - 470.

**CHANGE ORDER NO. 64**

-REVISED RDWY GEOMETRICS AND LANE CONFIGURATIONS
-REVISED DIRECTIONAL ISLAND TO INCLUDE ASPH STAB BASE
-REVISED QUANTITIES

**CHANGE ORDER NO. 64** | **REVISED SHEET**

STATE OF TEXAS
JEROME D. PAVLISKA
76075
REGISTERED
PROFESSIONAL ENGINEER

Jerome D. Pavliska, P.E. 6-18-04
Jerome D. Pavliska, P.E. — Date

©2000 Texas Department of Transportation

# PLAN SHEET

SHEET 27 OF 57

| FED. RD. DIV. NO. | FEDERAL AID PROJECT NO. | SHEET NO. |
|---|---|---|
| 6 | NH 2000(704), etc. | 217A |

| STATE | DIST. | COUNTY | |
|---|---|---|---|
| TEXAS | SAT | BEXAR | |
| CONT. | SECT. | JOB | HIGHWAY NO. |
| 2452 | 01 | 036, etc. | LP 1604 |

06-15-04

LEVELS DISPLAYED
1 2 3 4 5 6 7 8 9 10 11 12 13 14 15 16
17 18 19 20 21 22 23 24 25 26 27 28 29 30 31 32
33 34 35 36 37 38 39 40 41 42 43 44 45 46 47 48
49 50 51 52 53 54 55 56 57 58 59 60 61 62 63
ACC: t:\ao\design\lp1604fm471-90\
FILE: plan27.dgn

QUANTITIES THIS SHEET
CSJ 2452-01-036

SCALE: 1:1000

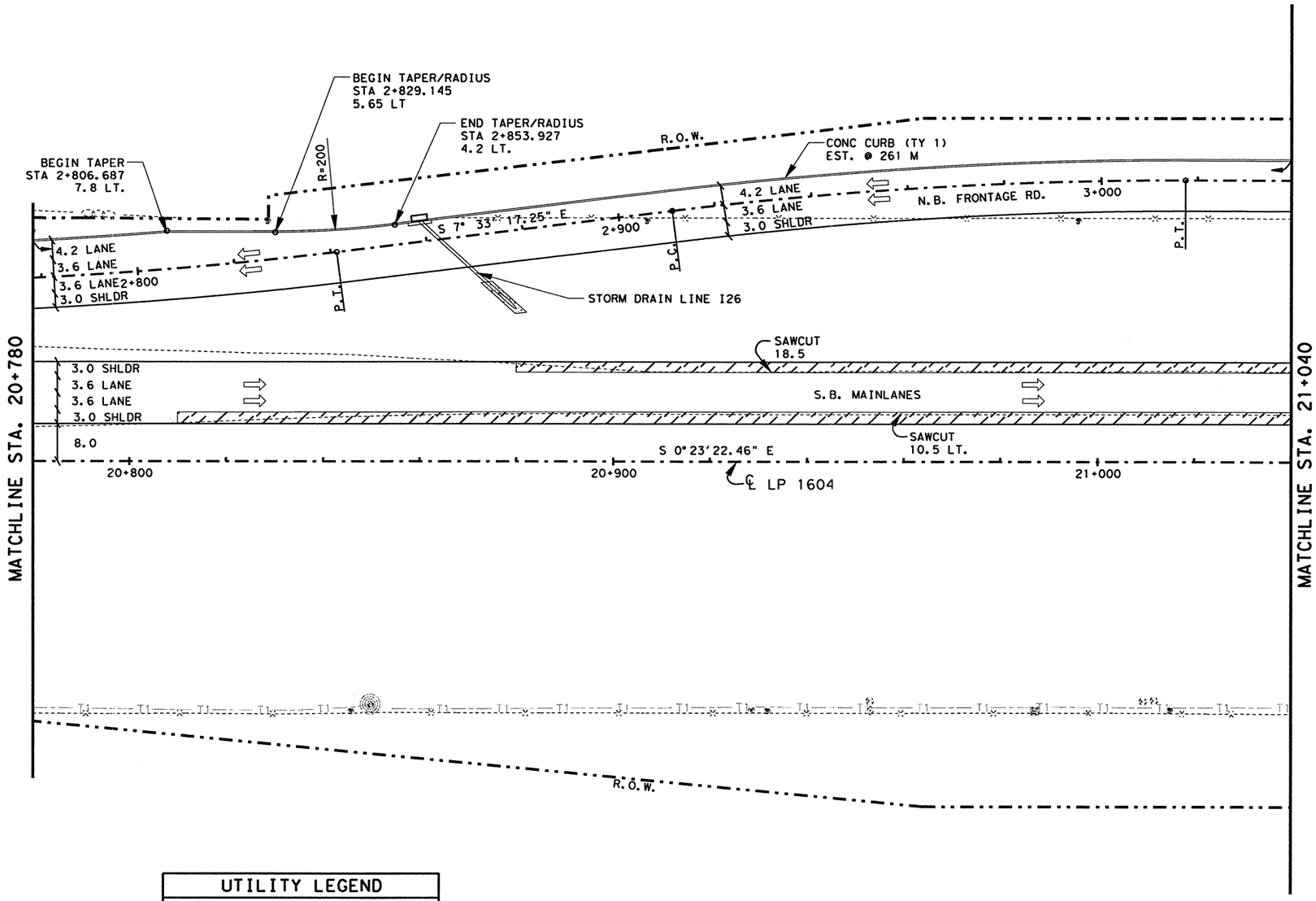


## UTILITY LEGEND

| | |
|---|---|
| W W | WATER LINE |
| T1 T1 | TELEPHONE LINE |
| C C | CABLE LINE |
| G1 G1 | GAS LINE |

WIDENING AREA

## ESTIMATED QUANTITIES

| | ITEM # | ITEM | UNIT | QTY. |
|---|---|---|---|---|
| | 100-5002 | PREP ROW | KM | 0.26 |
| | 110-5001 | EXCAVATION (RDWY) | M3 | 13114 |
| | 132-5018 | EMBANK (ORD COMP) (TY B) (CL 3) | M3 | 574 |
| | 160-5002 | FURN AND PLAC TPSL (CL 2) (150 MM) | M2 | 11836 |
| | 164-5049 | DRILL SEED (PERM) (URBAN) (CLAY) | M2 | 11836 |
| | 247-5024 | FL BS (COMPL IN PLAC)(TY A GR 6 CL 4) | M3 | 1332 |
| | 310-5006 | ASPH MATL (AE-P) | L | 3211 |
| * | | ONE CRSE SURF TREAT | M2 | 6782 |
| | 316-5028 | AGGR (TY PB,GR 4) | M3 | 62 |
| | 316-5226 | ASPH (AC-15P, HFRS-2P OR CRS-2P) | L | 9224 |
| | 345-5004 | ASPH STAB BS (GR 4) | MGR | 657 |
| | 529-5001 | CONC CURB (TY 1) | M | 261 |
| | 3117-5003 | HOT MIX (TY C) | MGR | 637 |
| | 3117-5018 | HOT MIX (TY C) (SURF) | MGR | 606 |
| # | 3117-5024 | HOT MIX (TY C) (LEVEL-UP) | MGR | 517 |
| | | | | |

* FOR CONTRACTORS INFORMATION ONLY
# QUANTITY COMPUTER GENERATED

NOTE(S):

ALL DIMENSIONS ARE IN METERS UNLESS OTHERWISE NOTED.

FOR HORIZONTAL ALIGNMENT / DATA, SEE SHEET(S) 164 - 171.

FOR LIMITS OF SEEDING & TOPSOIL, SEE PROJECT X-SECTIONS AND TYPICAL SECTIONS.

FOR ADDITIONAL STORM DRAIN INFO. REFER TO THE SPECIFIC STORM DRAIN PROFILE SHEET(S).

FOR RIPRAP ASSOCIATED WITH STORM DRAINAGE STRUCTURES SEE SHEET(S) 454 - 470.

STATE OF TEXAS
JOEL K. DAVENPORT, JR.
79276
REGISTERED
PROFESSIONAL ENGINEER

Joel K Davenport Jr 11/1/00
Joel K. Davenport, Jr. P.E. 79276 Date

©2000
Texas Department of Transportation

# PLAN SHEET

SHEET 28 OF 57

| FED.RD. DIV.NO. | FEDERAL AID PROJECT NO. | | SHEET NO. |
|---|---|---|---|
| 6 | NH 2000(704),etc. | | 218 |
| STATE | DIST. | COUNTY | |
| TEXAS | SAT | BEXAR | |
| CONT. | SECT. | JOB | HIGHWAY NO. |
| 2452 | 01 | 036,etc. | LP 1604 |


LEVELS DISPLAYED
1 2 3 4 5 6 7 8 9 10 11 12 13 14 15 16
17 18 19 20 21 22 23 24 25 26 27 28 29 30 31 32
33 34 35 36 37 38 39 40 41 42 43 44 45 46 47 48
49 50 51 52 53 54 55 56 57 58 59 60 61 62 63

ACC: t:\ao\design\lp1604fm471-90\
FILE: plan28.dgn

QUANTITIES THIS SHEET
CSJ 2452-01-036

SCALE: 1:1000

## ESTIMATED QUANTITIES

| ITEM # | ITEM | UNIT | QTY. |
|---|---|---|---|
| 100-5002 | PREP ROW | KM | 0.26 |
| 110-5001 | EXCAVATION (RDWY) | M3 | 13953 |
| 132-5018 | EMBANK (ORD COMP)(TY B)(CL 3) | M3 | 649 |
| 160-5002 | FURN AND PLAC TPSL (CL 2)(150 MM) | M2 | 11836 |
| 164-5049 | DRILL SEED (PERM)(URBAN)(CLAY) | M2 | 11836 |
| 247-5024 | FL BS (COMPL IN PLACITY A GR 6 CL 4) | M3 | 1342 |
| 310-5006 | ASPH MATL (AE-P) | L | 3234 |
| * | ONE CRSE SURF TREAT | M2 | 6807 |
| 316-5028 | AGGR (TY PB, GR 4) | M3 | 62 |
| 316-5226 | ASPH (AC-15P, HFRS-2P OR CRS-2P) | L | 9257 |
| 345-5004 | ASPH STAB BS (GR 4) | MGR | 909 |
| 529-5001 | CONC CURB (TY 1) | M | 261 |
| 3117-5003 | HOT MIX (TY C) | MGR | 638 |
| 3117-5018 | HOT MIX (TY C)(SURF) | MGR | 607 |
| # | 3117-5024 HOT MIX (TY C)(LEVEL-UP) | MGR | 418 |

* FOR CONTRACTORS INFORMATION ONLY
# QUANTITY COMPUTER GENERATED

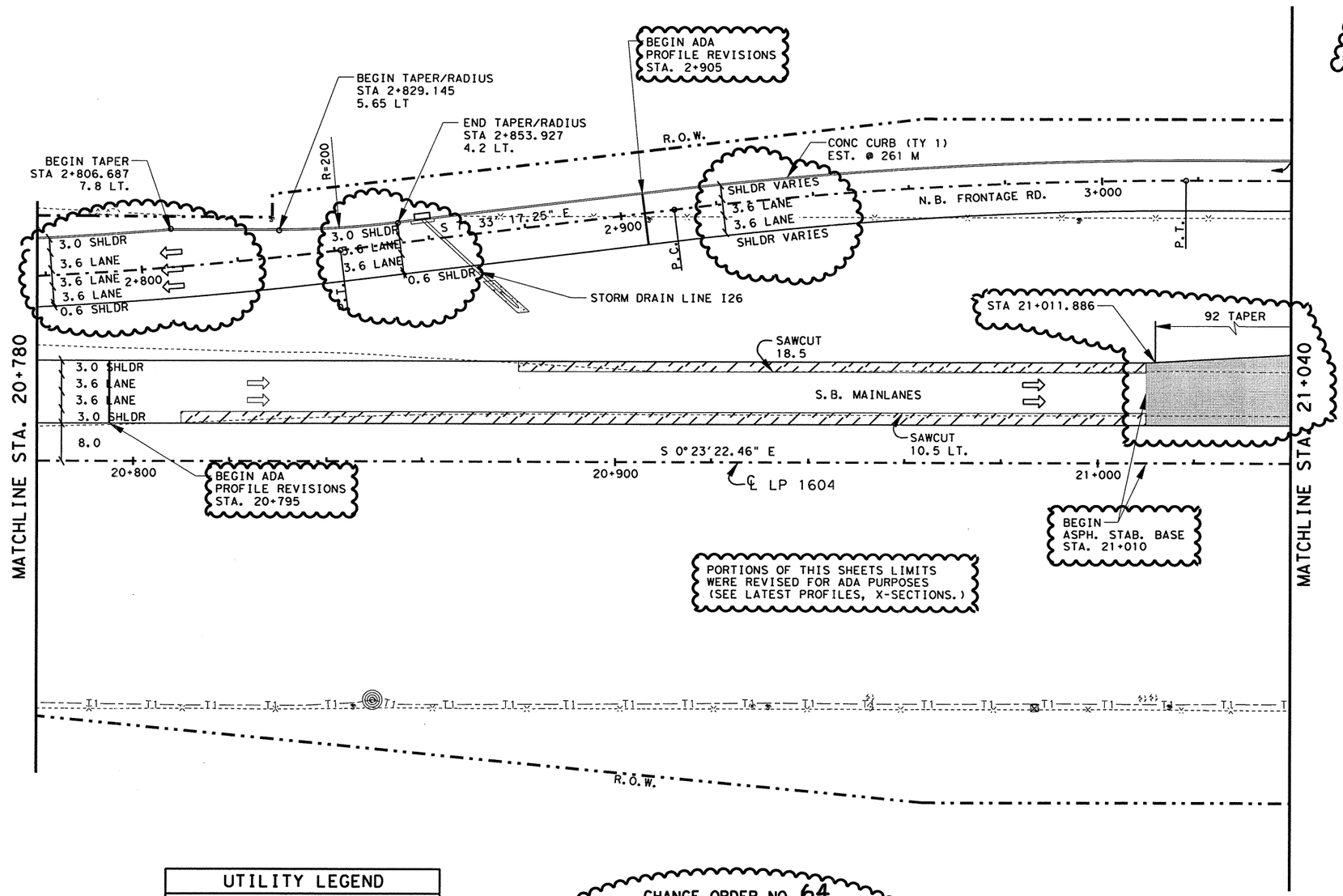


PORTIONS OF THIS SHEETS LIMITS WERE REVISED FOR ADA PURPOSES (SEE LATEST PROFILES, X-SECTIONS.)

NOTE(S):

ALL DIMENSIONS ARE IN METERS UNLESS OTHERWISE NOTED.

FOR HORIZONTAL ALIGNMENT / DATA, SEE SHEET(S) 164 - 171.

FOR LIMITS OF SEEDING & TOPSOIL, SEE PROJECT X-SECTIONS AND TYPICAL SECTIONS.

FOR ADDITIONAL STORM DRAIN INFO. REFER TO THE SPECIFIC STORM DRAIN PROFILE SHEET(S).

FOR RIPRAP ASSOCIATED WITH STORM DRAINAGE STRUCTURES SEE SHEET(S) 454 - 470.

CHANGE ORDER 64

REVISED SHEET

### UTILITY LEGEND

| | |
|---|---|
| W W | WATER LINE |
| T1 T1 | TELEPHONE LINE |
| C C | CABLE LINE |
| G1 G1 | GAS LINE |

CHANGE ORDER NO. 64
-REVISED RDWY GEOMETRICS AND LANE CONFIGURATIONS
-EXTENDED LIMITS OF ASPH. STAB. BASE
-REVISED QUANTITIES

WIDENING AREA

LIMITS OF ASPH STAB BS @ INTERSECTION

STATE OF TEXAS
JEROME D. PAVLISKA
76075
REGISTERED PROFESSIONAL ENGINEER

Jerome D. Pavliska, P.E. 4-28-04
Jerome D. Pavliska, P.E. Date

©2000 Texas Department of Transportation

PLAN SHEET
SHEET 28 OF 57

| FED.RD. DIV.NO. | FEDERAL AID PROJECT NO. | | SHEET NO. |
|---|---|---|---|
| 6 | NH 2000(704),etc. | | 218A |
| STATE | DIST. | COUNTY | |
| TEXAS | SAT | BEXAR | |
| CONT. | SECT. | JOB | HIGHWAY NO. |
| 2452 | 01 | 036,etc. | LP 1604 |

LEVELS DISPLAYED
1 2 3 4 5 6 7 8 9 10 11 12 13 14 15 16
17 18 19 20 21 22 23 24 25 26 27 28 29 30 31 32
33 34 35 36 37 38 39 40 41 42 43 44 45 46 47 48
49 50 51 52 53 54 55 56 57 58 59 60 61 62 63

ACC: t:\ao\design\lp1604fm471-90\
FILE: plan28*pd.dgn

QUANTITIES THIS SHEET
CSJ 2452-01-036

SCALE: 1:1000

END CONSTRUCT / MATCH EXIST.
STA 0+274.300

MILITARY DR. STA 0+197.261
N.B. FRONT. RD. STA 3+241.149

S 89°53'52.35" E

MILITARY DRIVE

CONC CURB (TY 1)
EST. @ 124 M

45 TAPER | 75 | R.O.W. | ER

STA 3+084.277

CONC CURB (TY 1)
EST. @ 250 M

STA 3+179.000

4.2 LANE
3.6 LANE
3.0 SHLDR

3+100

N.B. FRONTAGE RD.

S 0° 23' 22.46" E

3+200

0+200

STORM DRAIN LINE V

STA 3+299.000

3+300

STA
3+057.589

45 TAPER | 85

CONC CURB (TY A)
EST. @ 103 M

NTAR

STAR

CONC CURB (TY A)
EST. @ 90 M

STA 21+058.312

45 TAPER | 85

STORM DRAIN
LINE I25

STORM DRAIN
LINE I27

STA 21+300.000

S.B. MAINLANES

SAWCUT 21 LT.
SAWCUT 8.5 LT.

1.2 SHLDR
3.6 LANE
3.6 LANE
3.6 LANE
3.6 LANE
1.2 SHLDR

SAWCUT 18.5 LT.
SAWCUT 21 LT.
SAWCUT 10.5 LT.

STA 21+180.000

STA. 21+040

MATCHLINE STA.

8.0

6.2 | 6.2 | S 0°23'22.46" W

℄ LP 1604

21+100 | 21+200 | 21+300

P.C. | P.O.T.

STA 21+084.000

45 TAPER | 75 | ER

MILITARY DR. STA 0+137.258
LP 1604 ℄ STA 21+241.357

S 87°06'38.22" E

0+100

CONC CURB (TY A)
EST. @ 78 M

CONC CURB (TY A)
EST. @ 79 M

CONC SIDEWALK
EST. @ 142 M2

CONC SIDEWALK
EST. @ 131 M2

MATCH EXIST.
SIDEWALK

MATCH EXIST.
SIDEWALK

P.O.T.

END CONSTRUCTION / MATCH EXIST.
STA 0+080.000

S 89°36'37.62" W

MILITARY DRIVE

R.O.W. | R.O.W.

## ESTIMATED QUANTITIES

| ITEM # | ITEM | UNIT | QTY. |
|---|---|---|---|
| 100-5002 | PREP ROW | KM | 0.28 |
| 110-5001 | EXCAVATION (RDWY) | M3 | 10694 |
| 132-5018 | EMBANK (ORD COMP)(TY B)(CL 3) | M3 | 1234 |
| 160-5002 | FURN AND PLAC TPSL (CL 2)(150 MM) | M2 | 12646 |
| 164-5049 | DRILL SEED (PERM)(URBAN)(CLAY) | M2 | 12646 |
| 247-5024 | FL BS (COMPL IN PLACE)(TY A GR 6 CL 3) | M3 | 992 |
| 310-5006 | ASPH MATL (AE-P) | L | 3738 |
| * | ONE CRSE SURF TREAT | M3 | 15616 |
| 316-5028 | AGGR (TY PB,GR 4) | M2 | 142 |
| 316-5226 | ASPH (AC-15P, HFRS-2P OR CRS-2P) | L | 21238 |
| 345-5004 | ASPH STAB BASE (GR 4) | MGR | 6644 |
| 529-5001 | CONC CURB (TY 1) | M | 374 |
| 529-5026 | CONC CURB (TY A) | M | 550 |
| 530-5001 | DRVWYS (CONC)(150 MM) | M2 | 339 |
| 531-5002 | CONCRETE SIDEWALKS | M2 | 273 |
| 536-5003 | CONC DIRECT ISLAND | M2 | 163 |
| 3117-5003 | HOT MIX (TY C) | MGR | 1209 |
| 3117-5018 | HOT MIX (TY C)(SURF) | MGR | 1175 |
| 3117-5024 | HOT MIX (TY C)(LEVEL-UP) | MGR | 397 |
| | | | |

* FOR CONTRACTORS INFORMATION ONLY
# QUANTITY COMPUTER GENERATED

NOTE(S):

ALL DIMENSIONS ARE IN METERS UNLESS OTHERWISE NOTED.

FOR HORIZONTAL ALIGNMENT / DATA, SEE SHEET(S) 164 - 171.

FOR LIMITS OF SEEDING & TOPSOIL, SEE PROJECT X-SECTIONS AND TYPICAL SECTIONS.

FOR INTERSECTION LAYOUT, SEE SHEET(S) 327 - 328.

FOR ILLUMINATION LAYOUT / DETAILS SEE SHEET 620.

FOR SIGNALIZATION LAYOUT / DETAILS, SEE SHEET(S) 565 - 569.

FOR RIPRAP DETAILS SEE PROJECT X-SECTIONS AND SHEET(S) 342.

FOR RIPRAP ASSOCIATED WITH STORM DRAINAGE STRUCTURES SEE SHEET(S) 454 - 470.

FOR ADDITIONAL STORM DRAIN INFO. REFER TO THE SPECIFIC STORM DRAIN PROFILE SHEET(S).

(#) DRIVEWAY #, FOR MORE DETAILS SEE SHEET(S) 27, 28 & 336.

WHEELCHAIR RAMPS TY 2

## UTILITY LEGEND

| | |
|---|---|
| W W | WATER LINE |
| T1 T1 | TELEPHONE LINE |
| C C | CABLE LINE |
| G1 G1 | GAS LINE |
| | WIDENING AREA |
| | LIMITS OF ASPH STAB BS @ INTERSECTION |

## DIRECT ISLAND QUANTITIES

| ISLAND NO. | SURFACE AREA | SEAL | CONC | CONC CURB TY A |
|---|---|---|---|---|
| 1 | 38 M2 | | ✓ | 29 * |
| 2 | 39 M2 | | ✓ | 30 * |
| 3 | 525 M2 | ✓ | | 99 |
| 4 | 550 M2 | ✓ | | 101 |
| 5 | 49 M2 | | ✓ | 33 * |
| 6 | 37 M2 | | ✓ | 29 * |
| | | | | |

STATE OF TEXAS
JOEL K. DAVENPORT, JR.
79276
REGISTERED PROFESSIONAL ENGINEER

Joel K. Davenport, Jr. P.E. 79276 — 11/1/00 Date

©2000

Texas Department of Transportation

# PLAN SHEET

SHEET 29 OF 57

| FED.RD. DIV.NO. | FEDERAL AID PROJECT NO. | | SHEET NO. |
|---|---|---|---|
| 6 | NH 2000(704),etc. | | 21. |
| STATE | DIST. | COUNTY | |
| TEXAS | SAT | BEXAR | |
| CONT. | SECT. | JOB | HIGHWAY NO. |
| 2452 | 01 | 036,etc. | LP 1604 |

LEVELS DISPLAYED
1 2 3 4 5 6 7 8 9 10 11 12 13 14 15 16
17 18 19 20 21 22 23 24 25 26 27 28 29 30 31 32
33 34 35 36 37 38 39 40 41 42 43 44 45 46 47 48
49 50 51 52 53 54 55 56 57 58 59 60 61 62 63

ACC: t:\ao\design\lp1604fm471-90\
FILE: plan29.dgn

QUANTITIES THIS SHEET
CSJ 2452-01-036

## UTILITY LEGEND

- W — W — WATER LINE
- T1 — T1 — TELEPHONE LINE
- C — C — CABLE LINE
- G1 — G1 — GAS LINE

### DIRECT ISLAND QUANTITIES

| ISLAND NO. | SURFACE AREA (CONC) | SURFACE AREA (SEAL) | CONC CURB TY A | CONC SDWLK | CONC RIPRAP CL B | AGGR TY B GR 5 |
|---|---|---|---|---|---|---|
| ① | 38 M2 | | 29 * | | | |
| ② | 39 M2 | | 30 * | | | |
| ③ | | 462 M2 * | 99 | 40 M2 | 3.3 M3 | 3.0 M3 |
| ④ | | 487 M2 * | 101 | 40 M2 | 3.3 M3 | 3.0 M3 |
| ⑤ | 49 M2 | | 33 * | | | |
| ⑥ | 37 M2 | | 29 * | | | |

SCALE: 1:1000

END SIDEWALKS

INCIDENTAL WORK AREA
SEE INTERSECTION SEQUENCE OF WORK
PHASE 2B SHEET 1 OF 5 FOR REPLACEMENT ITEMS

THIS SHEETS INTERSECTION, N.B. FRONTAGE RD. AND S.B. MAINLANES PROFILES, X-SECTIONS AND EARTHWORK WERE REVISED FOR ADA PURPOSES (SEE LATEST).

END CONSTRUCT / MATCH EXIST.
STA 0+274.300

NEW GAS LINE

CONC SIDEWALKS
EST. @ 161 M2

MILITARY DR. STA 0+197.261
N.B. FRONT. RD. STA 3+241.149

CONC SIDEWALKS
EST. @ 182 M2

CONC CURB (TY 1)
EST. @ 124 M

MILITARY DRIVE

S 89° 53' 52.35" E

45 TAPER

CONC CURB (TY 1)
EST. @ 250 M

STA 3+084.277

0.6 SHLDR
3.6 LANE
3.6 LANE
SHLDR VARIES

N.B. FRONTAGE RD.

3+100

STA 3+059.019

45 TAPER

0.6 SHLDR
3.6 LANE
3.6 LANE
3.6 LANE
3.6 LANE
1.2 SHLDR

STA 3+179.000

S 0° 23' 22.46" E

3+200

STORM DRAIN LINE V

STA 3+299.000

3+300

R.O.W.

75

ER

85

NEW GAS LINE

CONC CURB (TY A)
EST. @ 110 M

CONC CURB (TY A)
EST @ 69 M

92 TAPER

85

1.2 SHLDR
3.6 LANE
3.6 LANE
3.6 LANE
3.6 LANE
3.6 LANE
3.6 LANE
1.2 SHLDR

STORM DRAIN
LINE I25

STORM DRAIN
LINE I27

STA 21+300.000
SAWCUT 21 LT.
SAWCUT 8.5 LT.
S.B. MAINLANES

MATCHLINE STA. 21+040

MATCHLINE STA. 21+320

6.2

S 0° 23' 22.46" W

℄ LP 1604

21+100

21+200

21+300

STA 21+084.000

45 TAPER

75

P.O.T.

P.C.

MILITARY DR. STA 0+137.258
LP 1604 ℄ STA 21+241.357

S 87° 06' 38.22" E

0+100

CONC CURB (TY A)
EST. @ 78 M

CONC CURB (TY A)
EST. @ 79 M

CONC SIDEWALK
EST. @ 142 M2

CONC SIDEWALK
EST. @ 131 M2

MATCH EXIST.
SIDEWALK

MATCH EXIST.
SIDEWALK

**CHANGE ORDER NO.**

-REVISED RDWY GEOMETRICS AND LANE CONFIGURATIONS.
-REVISED LARGE ISLAND TREATMENTS AT INTERSECTION.
-REVISED INTERSECTION & APPROACHES FOR ADA PURPOSES.
-ADDED CONC SIDEWALKS
-ADDED INCIDENTAL WORK AREAS.
-ADDED NEW UTILITY, INFO.
-REVISED QUANTITIES.

CONTRACTOR IS CAUTIONED ABOUT NEW GAS UTILITY IN VICINITY.

END CONSTRUCTION / MATCH EXIST.
STA 0+080.000

INCIDENTAL WORK AREA
SEE INTERSECTION SEQUENCE OF WORK
PHASE 2B SHEET 1 OF 5 FOR REPLACEMENT ITEMS

S 89° 36' 37.62" W

MILITARY DRIVE

R.O.W.

WIDENING AREA

LIMITS OF ASPH STAB BS @ INTERSECTION

## ESTIMATED QUANTITIES

| ITEM # | ITEM | UNIT | QTY. |
|---|---|---|---|
| 100-5002 | PREP ROW | KM | 0.28 |
| 110-5001 | EXCAVATION (RDWY) | M3 | 14004 |
| 132-5018 | EMBANK (ORD COMP) (TY B) (CL 3) | M3 | 1518 |
| 160-5002 | FURN AND PLAC TPSL (CL 2) (150 MM) | M2 | 12471 |
| 164-5049 | DRILL SEED (PERM) (URBAN) (CLAY) | M2 | 12471 |
| 247-5024 | FL BS (COMPL IN PLACE)(TY A GR 6 CL 3) | M3 | 1020 |
| 310-5006 | ASPH MATL (AE-P) | L | 4245 |
| * | ONE CRSE SURF TREAT | M2 | 16399 |
| 316-5028 | AGGR (TY PB, GR 4) | M3 | 137 |
| ** 316-5226 | ASPH (AC-15P, HFRS-2P OR CRS-2P) | L | 22042 |
| 345-5004 | ASPH STAB BASE (GR 4) | MGR | 8102 |
| 432-5001 | RIPRAP (CONC) (CL B) | M3 | 6.6 |
| 529-5001 | CONC CURB (TY 1) | M | 374 |
| 529-5026 | CONC CURB (TY A) | M | 536 |
| 530-5001 | DRVWYS (CONC) (150 MM) | M2 | 424 |
| 531-5002 | CONCRETE SIDEWALKS | M2 | 696 |
| 536-5003 | CONC DIRECT ISLAND | M2 | 163 |
| 3117-5003 | HOT MIX (TY C) | MGR | 1262 |
| 3117-5018 | HOT MIX (TY C) (SURF) | MGR | 1228 |
| * 3117-5024 | HOT MIX (TY C) (LEVEL-UP) | MGR | 9 |
| 316-5021 | AGGR (TY B, GR 5) | M2 | 6 |

* FOR CONTRACTORS INFORMATION ONLY
** QUANTITY COMPUTER GENERATED
*** QUANTITY INCLUDES ASPHALT FOR DIRECTIONAL ISLANDS

NOTE(S):

ALL DIMENSIONS ARE IN METERS UNLESS OTHERWISE NOTED.

FOR HORIZONTAL ALIGNMENT / DATA, SEE SHEET(S) 164 - 171.

FOR LIMITS OF SEEDING & TOPSOIL, SEE PROJECT X-SECTIONS AND TYPICAL SECTIONS.

FOR INTERSECTION LAYOUT, SEE SHEET(S) 327 - 328.

FOR ILLUMINATION LAYOUT / DETAILS SEE SHEET 620.

FOR SIGNALIZATION LAYOUT / DETAILS, SEE SHEET(S) 565 - 569.

FOR RIPRAP DETAILS SEE PROJECT X-SECTIONS AND SHEET(S) 342.

FOR RIPRAP ASSOCIATED WITH STORM DRAINAGE STRUCTURES SEE SHEET(S) 454 - 470.

FOR ADDITIONAL STORM DRAIN INFO. REFER TO THE SPECIFIC STORM DRAIN PROFILE SHEET(S).

FOR INTERSECTION ISLAND TREATMENT DETAILS, SEE MISC. ROADWAY DETAIL SHEET.

DRIVEWAY #, FOR MORE DETAILS SEE SHEET(S) 27, 28 & 336.

WHEELCHAIR RAMPS TY 2

CHANGE ORDER ___ ⊗ REVISED SHEET

⊗ CORRECTED EARTHWORK AS PER DWC 7-20-04 MEMO.

STATE OF TEXAS
JEROME D. PAVLISKA
76075
REGISTERED PROFESSIONAL ENGINEER

Jerome D. Pavliska, P.E 8-17-04
Jerome D. Pavliska, P.E. Date

Texas Department of Transportation

# PLAN SHEET

SHEET 29 OF 57

| FED. RD. DIV. NO. | FEDERAL AID PROJECT NO. | | SHEET NO. |
|---|---|---|---|
| 6 | NH 2000(704), etc. | | 219A |
| STATE | DIST. | COUNTY | |
| TEXAS | SAT | BEXAR | |
| CONT. | SECT. | JOB | HIGHWAY NO. |
| 2452 | 01 | 036, etc. | LP 1604 |

LEVELS DISPLAYED
1 2 3 4 5 6 7 8 9 10 11 12 13 14 15 16
17 18 19 20 21 22 23 24 25 26 27 28 29 30 31 32
33 34 35 36 37 38 39 40 41 42 43 44 45 46 47 48
49 50 51 52 63 64 55 56 57 58 59 60 61 62 63

ACC: *:\ao\design\lp1604fm471-90\
FILE: plan29*pd.dgn

T:\AO\Design\lp1604fm471-90\plan29*pd.dgn

QUANTITIES THIS SHEET
CSJ 2452-01-036

## UTILITY LEGEND

- W — W — WATER LINE
- T1 — T1 — TELEPHONE LINE
- C — C — CABLE LINE
- G1 — G1 — GAS LINE

DIRECT ISLAND QUANTITIES 64

| ISLAND NO. | SURFACE AREA (CONC) | SURFACE AREA (SEAL) | CONC CURB TY A | CONC SDWLK | CONC RIPRAP CL B | AGGR TY B GR 5 |
|---|---|---|---|---|---|---|
| ① | 38 M2 | | 29 * | | | |
| ② | 39 M2 | | 30 * | | | |
| ③ | | 462 M2 * | 99 | 40 M2 | 3.3 M3 | 3.0 M3 |
| ④ | | 487 M2 * | 101 | 40 M2 | 3.3 M3 | 3.0 M3 |
| ⑤ | 49 M2 | | 33 * | | | |
| ⑥ | 37 M2 | | 29 * | | | |

SCALE: 1:1000

64 END SIDEWALKS

INCIDENTAL WORK AREA
SEE INTERSECTION SEQUENCE OF WORK
PHASE 2B SHEET 1 OF 5 FOR REPLACEMENT
ITEMS 64

18

END CONSTRUCT / MATCH EXIST.
STA 0+274.300

NEW GAS LINE

64 CONC SIDEWALKS
EST. @ 161 M2

MILITARY DR. STA 0+197.261
N.B. FRONT. RD. STA 3+241.149

17

S 89°53'52.35" E

MILITARY DRIVE

CONC SIDEWALKS
EST. @ 182 M2 64

CONC CURB (TY 1)
EST. @ 124 M

THIS SHEETS INTERSECTION, N.B. FRONTAGE RD. AND S.B. MAINLANES PROFILES, X-SECTIONS AND EARTHWORK WERE REVISED FOR ADA PURPOSES (SEE LATEST). 64

45 TAPER
75
R.O.W.
STA 3+084.277
CONC CURB (TY 1)
EST. @ 250 M
0.6 SHLDR
3.6 LANE
3.6 LANE
SHLDR VARIES
N.B. FRONTAGE RD.
3+100
64
3.6 LANE
3.6 LANE
3.6 LANE
3.6 LANE
STA 3+179.000
1.2 SHLDR
S 0° 23' 22.46" E
3+200
STORM DRAIN LINE V
STA 3+299.000
3+300
R.O.W.
ER
75
W
STA
3+059.019
45 TAPER
85
64 NEW GAS LINE
64 CONC CURB (TY A)
EST. @ 110 M
ER
NTAR
STAR
85
CONC CURB (TY A)
EST. @ 69 M
92 TAPER
85
1.2 SHLDR
3.6 LANE
3.6 LANE
3.6 LANE
3.6 LANE
3.6 LANE
1.2 SHLDR
6.2
STORM DRAIN
LINE I25
STORM DRAIN
LINE I27
STA 21+300.000
SAWCUT 21 LT.
S.B. MAINLANES
SAWCUT 8.5 LT.
45 TAPER
75
21+100
STA 21+084.000
S 0° 23' 22.46" W
℄ LP 1604
21+200
ER
P.O.T.
6.2
P.C.
21+300
75
MATCHLINE STA. 21+040
MATCHLINE STA. 21+320

MILITARY DR. STA 0+137.258
LP 1604 ℄ STA 21+241.357

CONC CURB (TY A)
EST. @ 78 M

CONC CURB (TY A)
EST. @ 79 M

CONC SIDEWALK
EST. @ 142 M2

CONC SIDEWALK
EST. @ 131 M2

S 87°06'38.22" E
0+100
P.O.T.

64 CONTRACTOR IS CAUTIONED ABOUT NEW GAS UTILITY IN VICINITY.

MATCH EXIST.
SIDEWALK

MATCH EXIST.
SIDEWALK

END CONSTRUCTION / MATCH EXIST.
STA 0+080.000

64 INCIDENTAL WORK AREA
SEE INTERSECTION SEQUENCE OF WORK
PHASE 2B SHEET 1 OF 5 FOR REPLACEMENT
ITEMS

S 89°36'37.62" W
MILITARY DRIVE

R.O.W.
R.O.W.

CHANGE ORDER NO. 96
-CORRECTED NTAR DISCOVERY BY DWC.

LIMITS OF ASPH STAB BS @ INTERSECTION

WIDENING AREA / NEW CONSTRUCTION (BLACK BASE)

## ESTIMATED QUANTITIES

| ITEM # | ITEM | UNIT | QTY. |
|---|---|---|---|
| 100-5002 | PREP ROW | KM | 0.28 |
| 110-5001 | EXCAVATION (RDWY) | M3 | 3900 |
| 132-5018 | EMBANK (ORD COMP) (TY B) (CL 3) | M3 | 1518 |
| 160-5002 | FURN AND PLAC TPSL (CL 2) (150 MM) | M2 | 12471 |
| 164-5049 | DRILL SEED (PERM) (URBAN) (CLAY) | M2 | 12471 |
| 247-5024 | FL BS (COMPL IN PLACE) (TY A GR 6 CL 3) | M3 | 1020 |
| 310-5006 | ASPH MATL (AE-P) | L | 3092 |
| | ONE CRSE SURF TREAT | M2 | 16399 |
| 316-5028 | AGGR (TY PB, GR 4) | M3 | 137 |
| 316-5226 | ASPH (AC-15P, HFRS-2P OR CRS-2P) | L | 22042 |
| 345-5004 | ASPH STAB BASE (GR 4) | MGR | 8102 |
| 432-5001 | RIPRAP (CONC) (CL B) | M3 | 6.6 |
| 529-5001 | CONC CURB (TY 1) | M | 374 |
| 529-5026 | CONC CURB (TY A) | M | 536 |
| 530-5001 | DRVWYS (CONC) (150 MM) | M2 | 424 |
| 531-5002 | CONCRETE SIDEWALKS | M2 | 696 |
| 536-5003 | CONC DIRECT ISLAND | M2 | 163 |
| 3117-5003 | HOT MIX (TY C) | MGR | 1262 |
| 3117-5018 | HOT MIX (TY C) (SURF) | MGR | 1228 |
| 3117-5024 | HOT MIX (TY C) (LEVEL-UP) | MGR | 9 |
| 316-5021 | AGGR (TY B, GR 5) | M2 | 6 |

* FOR CONTRACTORS INFORMATION ONLY
\# QUANTITY COMPUTER GENERATED
64 \#\# QUANTITY INCLUDES ASPHALT FOR DIRECTIONAL ISLANDS

NOTE(S):

ALL DIMENSIONS ARE IN METERS UNLESS OTHERWISE NOTED.

FOR HORIZONTAL ALIGNMENT / DATA, SEE SHEET(S) 164 - 171.

FOR LIMITS OF SEEDING & TOPSOIL, SEE PROJECT X-SECTIONS AND TYPICAL SECTIONS.

FOR INTERSECTION LAYOUT, SEE SHEET(S) 327 - 328.

FOR ILLUMINATION LAYOUT / DETAILS SEE SHEET 620.

FOR SIGNALIZATION LAYOUT / DETAILS, SEE SHEET(S) 565 - 569.

FOR RIPRAP DETAILS SEE PROJECT X-SECTIONS AND SHEET(S) 342.

FOR RIPRAP ASSOCIATED WITH STORM DRAINAGE STRUCTURES SEE SHEET(S) 454 - 470.

FOR ADDITIONAL STORM DRAIN INFO. REFER TO THE SPECIFIC STORM DRAIN PROFILE SHEET(S).

64 FOR INTERSECTION ISLAND TREATMENT DETAILS, SEE MISC. ROADWAY DETAIL SHEET.

# DRIVEWAY #, FOR MORE DETAILS SEE SHEET(S) 27, 28 & 336.

WHEELCHAIR RAMPS TY 2

# REFERS TO CHANGES MADE AS PART OF CHANGE ORDER.

CHANGE ORDER 96 ⊗ REVISED SHEET

⊗ CORRECTED EARTHWORK AS PER DWC 7-20-04 MEMO AND CORRECTED MILITARY NTAR 4-28-05

STATE OF TEXAS
FITZGERALDO G. SANCHEZ
76084
LICENSED PROFESSIONAL ENGINEER

Fitzgeraldo G. Sanchez 08-02-06
Fitzgeraldo G. Sanchez, P.E. Date

LEVELS DISPLAYED
1 2 3 4 5 6 7 8 9 10 11 12 13 14 15 16
17 18 19 20 21 22 23 24 25 26 27 28 29 30 31 32
33 34 35 36 37 38 39 40 41 42 43 44 45 46 47 48
49 50 51 52 53 54 55 56 57 58 59 60 61 62 63

ACC: t:\ao\design\lp1604fm471-90\
FILE: plan29*pd.dgn

© 2000

Texas Department of Transportation

PLAN SHEET

SHEET 29 OF 57

| FED.RD. DIV.NO. | FEDERAL AID PROJECT NO. | | SHEET NO. |
|---|---|---|---|
| 6 | NH 2000(704), etc. | | 219AA |
| STATE | DIST. | COUNTY | |
| TEXAS | SAT | BEXAR | |
| CONT. | SECT. | JOB | HIGHWAY NO. |
| 2452 | 01 | 036, etc. | LP 1604 |

QUANTITIES THIS SHEET
CSJ 2452-01-036

SCALE: 1:1000

## UTILITY LEGEND

- W — W — WATER LINE
- T1 — T1 — TELEPHONE LINE
- C — C — CABLE LINE
- G1 — G1 — GAS LINE

DIRECT ISLAND QUANTITIES 64

| ISLAND NO. | SURFACE AREA (CONC) | SURFACE AREA (SEAL) | CONC CURB TY A | CONC SDWLK | CONC RIPRAP CL B | AGGR TY B GR 5 |
|---|---|---|---|---|---|---|
| 1 | 38 M2 | | 29 * | | | |
| 2 | 39 M2 | | 30 * | | | |
| 3 | | 462 M2 * | 99 | 40 M2 | 3.3 M3 | 3.0 M3 |
| 4 | | 487 M2 * | 101 | 40 M2 | 3.3 M3 | 3.0 M3 |
| 5 | 49 M2 | | 33 * | | | |
| 6 | 37 M2 | | 29 * | | | |

THIS SHEETS INTERSECTION, N.B. FRONTAGE RD. AND S.B. MAINLANES PROFILES, X-SECTIONS AND EARTHWORK WERE REVISED FOR ADA PURPOSES (SEE LATEST). 64

64 END SIDEWALKS

INCIDENTAL WORK AREA SEE INTERSECTION SEQUENCE OF WORK PHASE 2B SHEET 1 OF 5 FOR REPLACEMENT ITEMS 64

18

END CONSTRUCT / MATCH EXIST. STA 0+274.300

NEW GAS LINE

S 89° 53' 52.35" E

MILITARY DRIVE

64 CONC SIDEWALKS EST. @ 161 M2

CONC SIDEWALKS EST. @ 182 M2 64

MILITARY DR. STA 0+197.261
N.B. FRONT. RD. STA 3+241.149

17

CONC CURB (TY 1) EST. @ 124 M

45 TAPER

75

R.O.W.

STA 3+084.277

CONC CURB (TY 1) EST. @ 250 M

0.6 SHLDR

3.6 LANE

3.6 LANE

SHLDR VARIES

N.B. FRONTAGE RD.

3+100

64

STA 3+179.000

3.6 LANE

3.6 LANE

3.6 LANE

1.2 SHLDR

S 0° 23' 22.46" E

3+200

STORM DRAIN LINE V

0+200

STA 3+299.000

3+300

STA 3+059.019

45 TAPER

64 NEW GAS LINE

85

64 CONC CURB (TY A) EST. @ 110 M

NTAR

STAR

92 TAPER

85

1.2 SHLDR

3.6 LANE

3.6 LANE

3.6 LANE

3.6 LANE

3.6 LANE

1.2 SHLDR

6.2

6.2

S 0° 23' 22.46" W

℄ LP 1604

21+100

21+200

STORM DRAIN LINE I25

CONC CURB (TY A) EST. @ 69 M

85

STA 21+300.000

S.B. MAINLANES

STORM DRAIN LINE I27

5

6

6.2

P.C.

21+300

MATCHLINE STA. 21+040

STA 21+084.000

45 TAPER

75

P.O.T.

75

MATCHLINE STA. 21+320

MILITARY DR. STA 0+137.258
LP 1604 ℄ STA 21+241.357

CONC CURB (TY A) EST. @ 78 M

CONC CURB (TY A) EST. @ 79 M

CONC SIDEWALK EST. @ 142 M2

CONC SIDEWALK EST. @ 131 M2

S 87° 06' 38.22" E

0+100

P.O.T.

MATCH EXIST. SIDEWALK

MATCH EXIST. SIDEWALK

**CHANGE ORDER NO. 119**

-NEW REHAB TREATMENT TO S.B. MAINLANES
-REVISED QUANTITIES

64 CONTRACTOR IS CAUTIONED ABOUT NEW GAS UTILITY IN VICINITY.

END CONSTRUCTION / MATCH EXIST. STA 0+080.000

INCIDENTAL WORK AREA SEE INTERSECTION SEQUENCE OF WORK PHASE 2B SHEET 1 OF 5 FOR REPLACEMENT ITEMS 64

S 89° 36' 37.62" W

MILITARY DRIVE

R.O.W.

R.O.W.

LIMITS OF ASPH STAB BS @ INTERSECTION

WIDENING AREA / NEW CONSTRUCTION (BLACK BASE)

## ESTIMATED QUANTITIES

| ITEM # | ITEM | UNIT | QTY. |
|---|---|---|---|
| 100-5002 | PREP ROW | KM | 0.28 |
| 110-5001 | EXCAVATION (RDWY) | M3 | 13924 |
| 132-5018 | EMBANK (ORD COMP) (TY B) (CL 3) | M3 | 1546 |
| 160-5002 | FURN AND PLAC TPSL (CL 2) (150 MM) | M2 | 12471 |
| 164-5049 | DRILL SEED (PERM) (URBAN) (CLAY) | M2 | 12471 |
| 247-5024 | FL BS (COMPL IN PLACE) (TY A GR 6 CL 3) | M3 | 1162 |
| 310-5006 | ASPH MATL (AE-P) | L | 3084 |
| | ONE CRSE SURF TREAT | M2 | 16644 |
| 316-5028 | AGGR (TY PB, GR 4) | M3 | 151 |
| 316-5226 | ASPH (AC-15P, HFRS-2P OR CRS-2P) | L | 22636 |
| 345-5004 | ASPH STAB BASE (GR 4) | MGR | 8795 |
| 432-5001 | RIPRAP (CONC) (CL B) | M3 | 6.6 |
| 529-5001 | CONC CURB (TY 1) | M | 374 |
| 529-5026 | CONC CURB (TY A) | M | 536 |
| 530-5001 | DRVWYS (CONC) (150 MM) | M2 | 424 |
| 531-5002 | CONCRETE SIDEWALKS | M2 | 696 |
| 536-5003 | CONC DIRECT ISLAND | M2 | 163 |
| 3117-5003 | HOT MIX (TY C) | MGR | 1262 |
| 3117-5018 | HOT MIX (TY C) (SURF) | MGR | 1228 |
| 3117-5021 | HOT MIX (TY C) (LEVEL UP) | MGR | 6 |
| 316-5021 | AGGR (TY B, GR 5) | M2 | 6 |

* FOR CONTRACTORS INFORMATION ONLY
‡ QUANTITY COMPUTER GENERATED
64 ‡‡ QUANTITY INCLUDES ASPHALT FOR DIRECTIONAL ISLANDS

NOTE(S):

ALL DIMENSIONS ARE IN METERS UNLESS OTHERWISE NOTED.

FOR HORIZONTAL ALIGNMENT / DATA, SEE SHEET(S) 164 - 171.

FOR LIMITS OF SEEDING & TOPSOIL, SEE PROJECT X-SECTIONS AND TYPICAL SECTIONS.

FOR INTERSECTION LAYOUT, SEE SHEET(S) 327 - 328.

FOR ILLUMINATION LAYOUT / DETAILS SEE SHEET 620.

FOR SIGNALIZATION LAYOUT / DETAILS, SEE SHEET(S) 565 - 569.

FOR RIPRAP DETAILS SEE PROJECT X-SECTIONS AND SHEET(S) 342.

FOR RIPRAP ASSOCIATED WITH STORM DRAINAGE STRUCTURES SEE SHEET(S) 454 - 470.

FOR ADDITIONAL STORM DRAIN INFO. REFER TO THE SPECIFIC STORM DRAIN PROFILE SHEET(S).

64 FOR INTERSECTION ISLAND TREATMENT DETAILS, SEE MISC. ROADWAY DETAIL SHEET.

# DRIVEWAY #, FOR MORE DETAILS SEE SHEET(S) 27, 28 & 336.

WHEELCHAIR RAMPS TY 2

# REFERS TO CHANGES MADE AS PART OF CHANGE ORDER.

CHANGE ORDER 119 | REVISED SHEET

STATE OF TEXAS
FITZGERALDO G. SANCHEZ
76084
LICENCED PROFESSIONAL ENGINEER

Fitzgeraldo G. Sanchez, P.E. 03-10-06 Date

© 2000 Texas Department of Transportation

PLAN SHEET

SHEET 29 OF 57

| FED.RD. DIV.NO. | FEDERAL AID PROJECT NO. | | SHEET NO. |
|---|---|---|---|
| 6 | NH 2000(704), etc. | | 219 AB |
| STATE | DIST. | COUNTY | |
| TEXAS | SAT | BEXAR | |
| CONT. | SECT. | JOB | HIGHWAY NO. |
| 2452 | 01 | 036, etc. | LP 1604 |

2-17-06

Plotted on: 24/2006

Design Filenc. I:\AO\Design\lp1604fm471-90\plan29*pd.dgn

LEVELS DISPLAYED
1 2 3 4 5 6 7 8 9 10 11 12 13 14 15 16
17 18 19 20 21 22 23 24 25 26 27 28 29 30 31 32
33 34 35 36 37 38 39 40 41 42 43 44 45 46 47 48
49 50 51 52 53 54 55 56 57 58 59 60 61 62 63

ACC: I:\AO\design\lp1604fm471-90\
FILE: plan29*pd.dgn

QUANTITIES THIS SHEET
CSJ 2452-01-036

## UTILITY LEGEND

— W — · — W — · — WATER LINE
— T1 — · — T1 — · — TELEPHONE LINE
— C — · — C — CABLE LINE
— G1 — · — G1 — · — GAS LINE

DIRECT ISLAND QUANTITIES (64)

| ISLAND NO. | SURFACE AREA (CONC) | SURFACE AREA (SEAL) | CONC CURB TY A | CONC SDWLK | CONC RIPRAP CL B | AGGR TY B GR 5 |
|---|---|---|---|---|---|---|
| ① | 38 M2 | | 29 * | | | |
| ② | 39 M2 | | 30 * | | | |
| ③ | | 462 M2 * | 99 | 40 M2 | 3.3 M3 | 3.0 M3 |
| ④ | | 487 M2 * | 101 | 40 M2 | 3.3 M3 | 3.0 M3 |
| ⑤ | 49 M2 | | 33 * | | | |
| ⑥ | 37 M2 | | 29 * | | | |

SCALE: 1:1000

64 END SIDEWALKS

INCIDENTAL WORK AREA
SEE INTERSECTION SEQUENCE OF WORK
PHASE 2B SHEET 1 OF 5 FOR REPLACEMENT
ITEMS 64

THIS SHEETS INTERSECTION, N.B. FRONTAGE RD. AND S.B. MAINLANES PROFILES, X-SECTIONS AND EARTHWORK WERE REVISED FOR ADA PURPOSES (SEE LATEST). 64

END CONSTRUCT / MATCH EXIST.
STA 0+274.300

NEW GAS LINE

64 CONC SIDEWALKS EST. @ 161 M2

MILITARY DR. STA 0+197.261
N.B. FRONT. RD. STA 3+241.149

CONC SIDEWALKS EST. @ 182 M2 64

CONC CURB (TY 1) EST. @ 124 M

MILITARY DRIVE

S 89° 53' 52.35" E

45 TAPER

STA 3+084.277

CONC CURB (TY 1) EST. @ 250 M

0.6 SHLDR

3.6 LANE

3.6 LANE

SHLDR VARIES

N.B. FRONTAGE RD.

3+100

STA 3+059.019

45 TAPER

64 NEW GAS LINE

64 CONC CURB (TY A) EST. @ 110 M

92 TAPER

85

1.2 SHLDR

3.6 LANE ×5

1.2 SHLDR

6.2

45 TAPER

75

21+100

STA 21+084.000

44

S 0° 23' 22.46" W
℄ LP 1604

21+200

STA 3+179.000

3.6 LANE ×4

1.2 SHLDR

S 0° 23' 22.46" E

3+200

STORM DRAIN LINE V

NTAR

STORM DRAIN LINE I25

STORM DRAIN LINE I27

STAR

STA 3+299.000

3+300

85

CONC CURB (TY A) EST. @ 69 M

STA 21+300.000

S.B. MAINLANES

6.2

P.C.

21+300

75

MILITARY DR. STA 0+137.258
LP 1604 ℄ STA 21+241.357

S 87° 06' 38.22" E

0+100

P.O.T.

CONC CURB (TY A) EST. @ 78 M

CONC SIDEWALK EST. @ 142 M

CONC CURB (TY A) EST. @ 79 M

CONC SIDEWALK EST. @ 131 M

MATCH EXIST. SIDEWALK

MATCH EXIST. SIDEWALK

64 CONTRACTOR IS CAUTIONED ABOUT NEW GAS UTILITY IN VICINITY.

END CONSTRUCTION / MATCH EXIST.
STA 0+080.000

64 INCIDENTAL WORK AREA
SEE INTERSECTION SEQUENCE OF WORK
PHASE 2B SHEET 1 OF 5 FOR REPLACEMENT
ITEMS

S 89° 36' 37.62" W
MILITARY DRIVE

R.O.W.

MATCHLINE STA. 21+040

MATCHLINE STA. 21+320

**CHANGE ORDER NO. 131**
-ALLOWED FOR NEW DRIVEWAY #44
@ WALGREENS
-REVISED QUANTITIES

LIMITS OF ASPH STAB BS @ INTERSECTION

119 WIDENING AREA / NEW CONSTRUCTION (BLACK BASE)

## ESTIMATED QUANTITIES

| ITEM # | ITEM | UNIT | QTY. |
|---|---|---|---|
| 100-5002 | PREP ROW | KM | 0.28 |
| 110-5001 | EXCAVATION (RDWY) | M3 | 13924 |
| 132-5018 | EMBANK (ORD COMP) (TY B) (CL 3) | M3 | 1546 |
| 160-5002 | FURN AND PLAC TPSL (CL 2) (150 MM) | M2 | 12471 |
| 164-5049 | DRILL SEED (PERM) (URBAN) (CLAY) | M2 | 12471 |
| 247-5024 | FL BS (COMPL IN PLACE) (TY A GR 6 CL 3) | M3 | 1166 |
| 310-5006 | ASPH MATL (AE-P) | L | 3092 |
| * | ONE CRSE SURF TREAT | M2 | 15790 |
| 316-5028 | AGGR (TY PB, GR 4) | M3 | 152 |
| ** 316-5226 | ASPH (AC-15P, HFRS-2P OR CRS-2P) | L | 21474 |
| 345-5004 | ASPH STAB BASE (GR 4) | MGR | 8801 |
| 432-5001 | RIPRAP (CONC) (CL B) | M3 | 6.6 |
| 529-5001 | CONC CURB (TY 1) | M | 374 |
| 529-5026 | CONC CURB (TY A) | M | 536 |
| 530-5001 | DRVWYS (CONC) (150 MM) | M2 | 697 |
| 531-5002 | CONCRETE SIDEWALKS | M2 | 696 |
| 536-5003 | CONC DIRECT ISLAND | M2 | 163 |
| 3117-5003 | HOT MIX (TY C) | MGR | 1262 |
| 3117-5018 | HOT MIX (TY C) (SURF) | MGR | 1228 |
| * 3117-5021 | HOT MIX (TY C) (LEVEL UP) | MGR | 6 |
| 316-5021 | AGGR (TY B, GR 5) | M2 | 6 |

119 119

* FOR CONTRACTORS INFORMATION ONLY
\# QUANTITY COMPUTER GENERATED
64 ## QUANTITY INCLUDES ASPHALT FOR DIRECTIONAL ISLANDS

NOTE(S):

ALL DIMENSIONS ARE IN METERS UNLESS OTHERWISE NOTED.

FOR HORIZONTAL ALIGNMENT / DATA, SEE SHEET(S) 164 - 171.

FOR LIMITS OF SEEDING & TOPSOIL, SEE PROJECT X-SECTIONS AND TYPICAL SECTIONS.

FOR INTERSECTION LAYOUT, SEE SHEET(S) 327 - 328.

FOR ILLUMINATION LAYOUT / DETAILS SEE SHEET 620.

FOR SIGNALIZATION LAYOUT / DETAILS, SEE SHEET(S) 565 - 569.

FOR RIPRAP DETAILS SEE PROJECT X-SECTIONS AND SHEET(S) 342.

FOR RIPRAP ASSOCIATED WITH STORM DRAINAGE STRUCTURES SEE SHEET(S) 454 - 470.

FOR ADDITIONAL STORM DRAIN INFO. REFER TO THE SPECIFIC STORM DRAIN PROFILE SHEET(S).

64 FOR INTERSECTION ISLAND TREATMENT DETAILS, SEE MISC. ROADWAY DETAIL SHEET.

DRIVEWAY #, FOR MORE DETAILS SEE SHEET(S) 27, 28 & 336.

WHEELCHAIR RAMPS TY 2

# REFERS TO CHANGES MADE AS PART OF CHANGE ORDER.

CHANGE ORDER 131 | REVISED SHEET

STATE OF TEXAS
FITZGERALDO G. SANCHEZ
76084
LICENCED
PROFESSIONAL ENGINEER

Fitzgeraldo G. Sanchez, P.E. 06-13-06 Date

Texas Department of Transportation

# PLAN SHEET

SHEET 29 OF 57

| FED.RD. DIV. NO. | FEDERAL AID PROJECT NO. | | SHEET NO. |
|---|---|---|---|
| 6 | NH 2000(704), etc. | | 219A |
| STATE | DIST. | COUNTY | |
| TEXAS | SAT | BEXAR | |
| CONT. | SECT. | JOB | HIGHWAY NO. |
| 2452 | 01 | 036, etc. | LP 1604 |

6-09-06

LEVELS DISPLAYED
1 2 3 4 5 6 7 8 9 10 11 12 13 14 15 16
17 18 19 20 21 22 23 24 25 26 27 28 29 30 31 32
33 34 35 36 37 38 39 40 41 42 43 44 45 46 47 48
49 50 51 52 53 54 55 56 57 58 59 60 61 62 63

ACC: t:\govdesign\lp1604fm471-90\
FILE: plan29a*pd.dgn

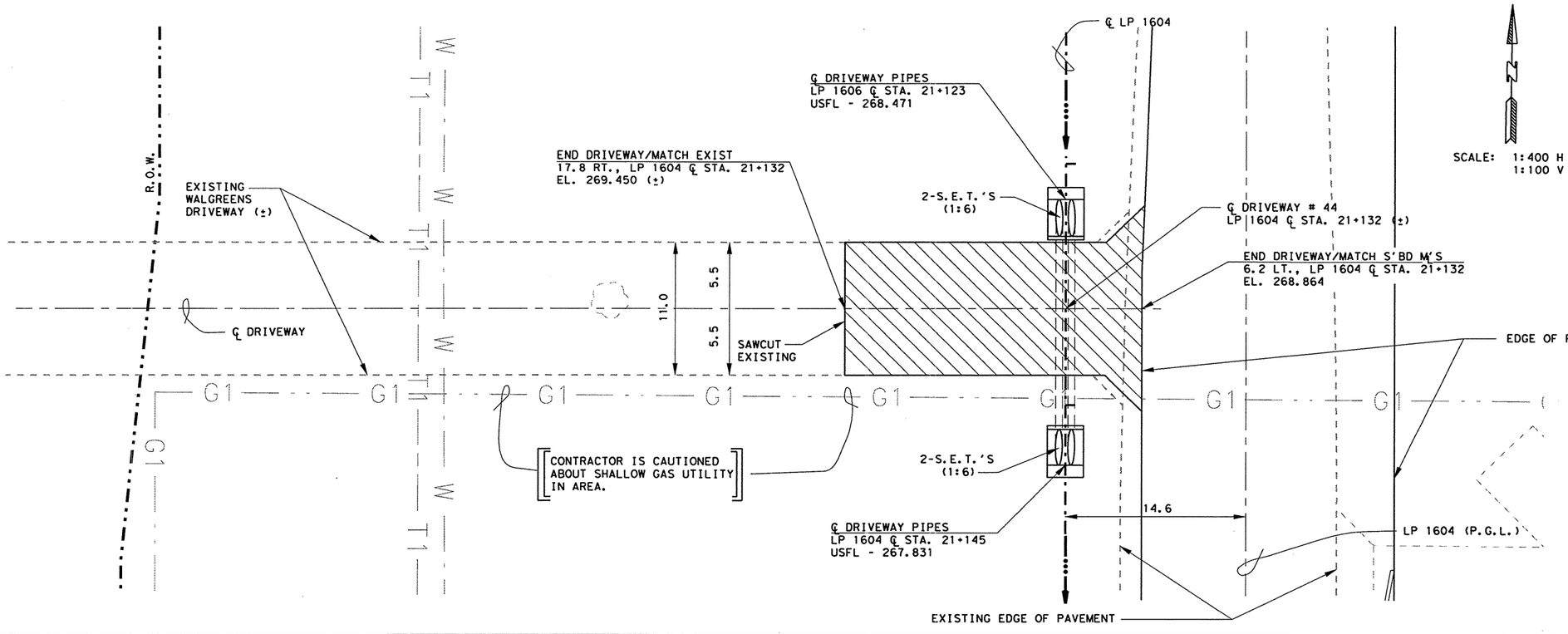


NOTE(S):

ALL DIMENSIONS ARE IN METERS UNLESS OTHERWISE NOTED.

FOR PAY ITEMS SEE APPROPRIATE PLAN SHEET(S).

FOR MORE DRIVEWAY DETAILS SEE SHEET(S) 27A, 28A & 336A.

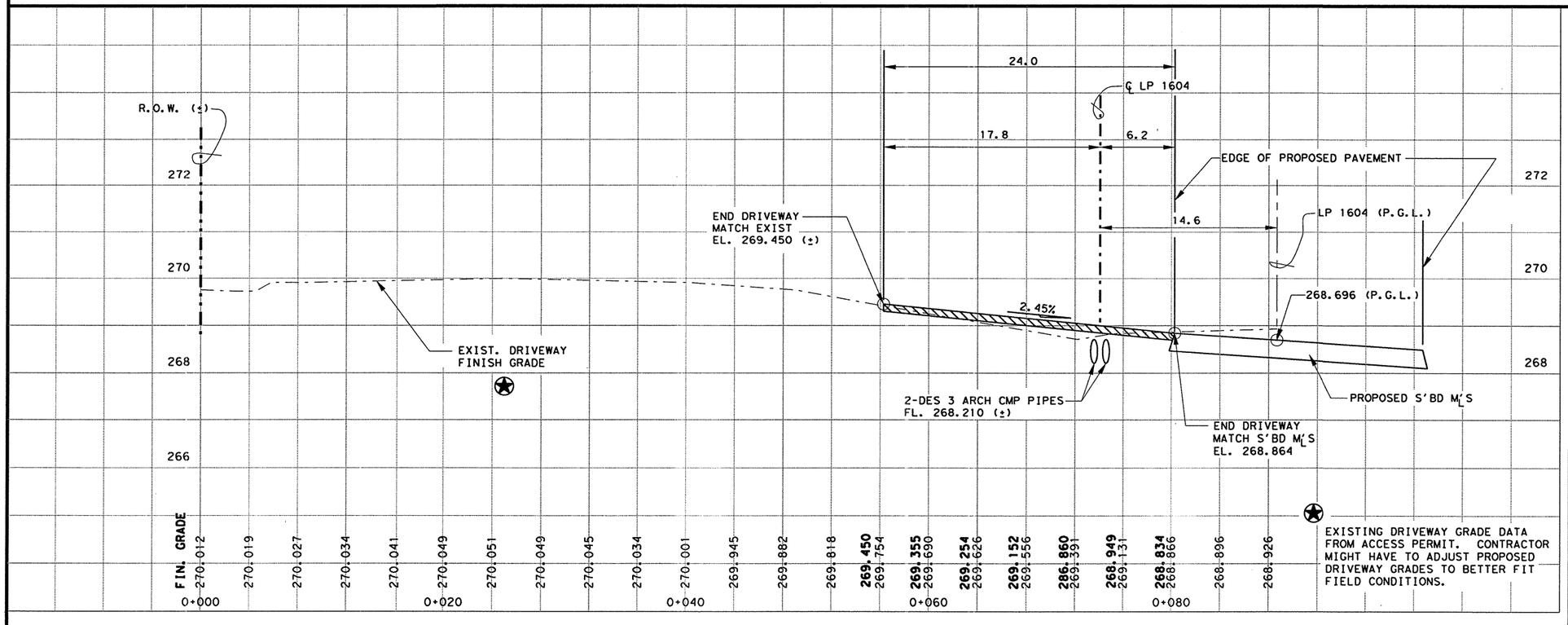


EXISTING DRIVEWAY GRADE DATA FROM ACCESS PERMIT. CONTRACTOR MIGHT HAVE TO ADJUST PROPOSED DRIVEWAY GRADES TO BETTER FIT FIELD CONDITIONS.

CHANGE ORDER 131

NEW SHEET

STATE OF TEXAS
FITZGERALDO G. SANCHEZ
76084
LICENCED
PROFESSIONAL ENGINEER

Fitzgeraldo G. Sanchez, P.E. 06-13-06
Date

©2003

Texas Department of Transportation

# DRIVEWAY # 44

(WALGREENS)

SHEET 1 OF 1

| FED. RD. DIV. NO. | FEDERAL AID PROJECT NO. | | SHEET NO. |
|---|---|---|---|
| 6 | NH 2000(704), etc | | 219B |
| STATE | DIST. | COUNTY | |
| TEXAS | SAT | BEXAR | |
| CONT. | SECT. | JOB | HIGHWAY NO. |
| 2452 | 01 | 036, etc | LP 1604 |

LEVELS DISPLAYED
1 2 3 4 5 6 7 8 9 10 11 21 31 41 51 61
17 18 19 20 21 22 23 24 25 26 27 28 29 30 31 32
33 34 35 36 37 38 39 40 41 42 43 44 45 46 47 48
49 50 51 52 53 54 55 56 57 58 59 60 61 62 63

lp1604fm471-90
drive44.dgn

06-09-06

QUANTITIES THIS SHEET
CSJ 2452-01-036

SCALE: 1:1000

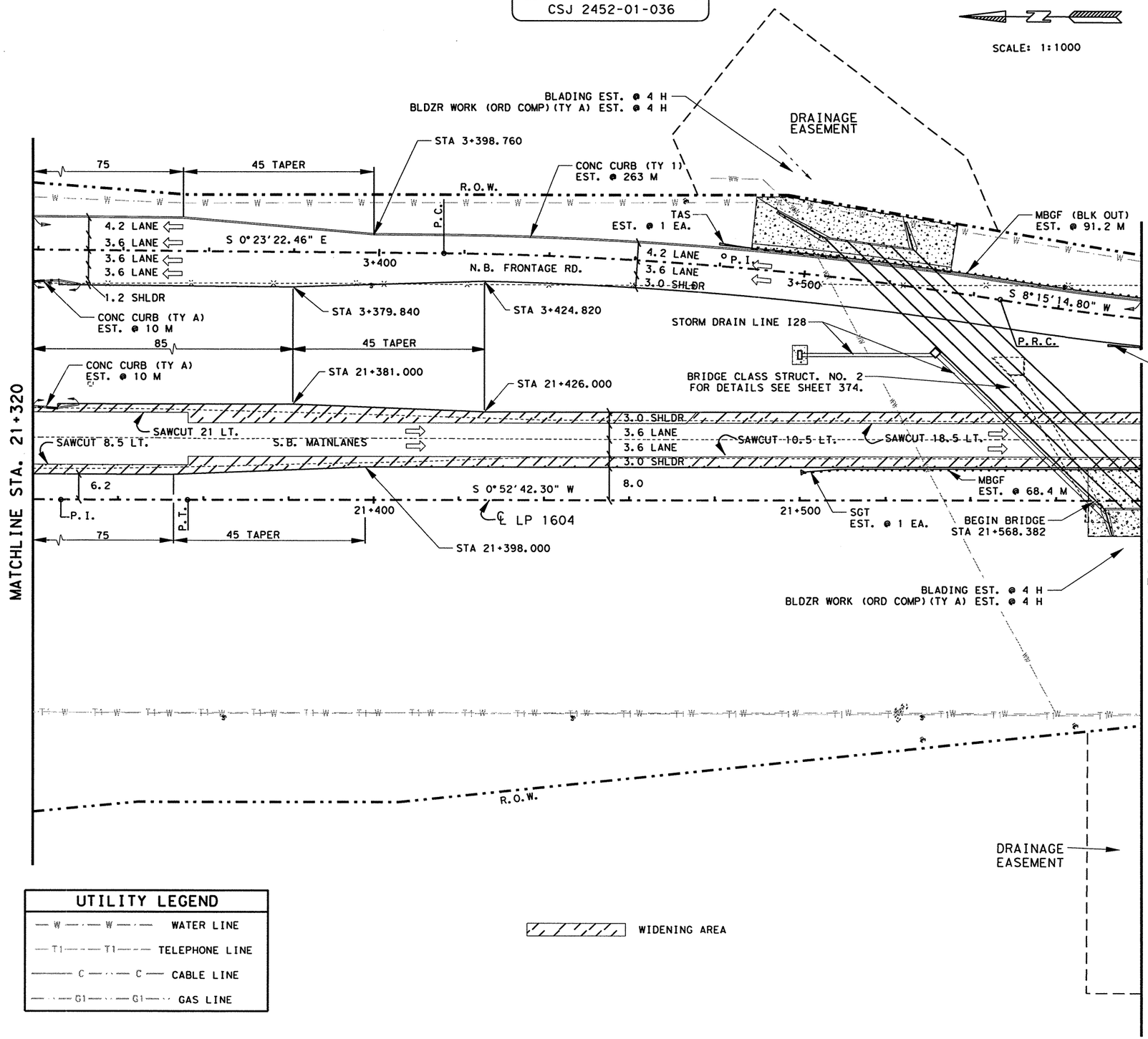


## ESTIMATED QUANTITIES

| | ITEM # | ITEM | UNIT | QTY. |
|---|---|---|---|---|
| | 100-5002 | PREP ROW | KM | 0.26 |
| | 110-5001 | EXCAVATION (RDWY) | M3 | 6822 |
| | 132-5018 | EMBANK (ORD COMP)(TY B)(CL 3) | M3 | 12526 |
| | 150-5003 | BLADING | H | 8 |
| | 156-5003 | BLDZR WORK (ORD COMP)(TY A) | H | 8 |
| | 160-5002 | FURN AND PLAC TPSL (CL 2)(150 MM) | M2 | 12190 |
| | 164-5049 | DRILL SEED (PERM)(URBAN)(CLAY) | M2 | 12190 |
| | 247-5024 | FL BS (COMPL IN PLACE)(TY A GR 6 CL 4) | M3 | 1402 |
| | 310-5006 | ASPH MATL (AE-P) | L | 3387 |
| * | | ONE CRSE SURF TREAT | M2 | 7218 |
| | 316-5028 | AGGR (TY PB, GR 4) | M3 | 66 |
| | 316-5226 | ASPH (AC-15P, HFRS-2P OR CRS-2P) | L | 9816 |
| | 345-5004 | ASPH STAB BASE (GR 4) | MGR | 969 |
| | 529-5001 | CONC CURB (TY 1) | M | 20 |
| | 529-5026 | CONC CURB (TY A) | | 263 |
| | 540-5005 | TERM ANCH SECT (2.67 MM) | EA | 2 |
| | 540-5006 | MBGF (TIM POST)(2.67 MM) | M | 68.4 |
| | 540-5007 | MBGF (BLK OUT)(TIM POST(2.67 MM) | M | 91.2 |
| | 3117-5003 | HOT MIX (TY C) | MGR | 675 |
| | 3117-5018 | HOT MIX (TY C)(SURF) | MGR | 643 |
| # | 3117-5024 | HOT MIX (TY C)(LEVEL-UP) | MGR | 834 |
| | 5119-5003 | SINGLE GDRAIL TERM (TY III) | EA | 1 |

* FOR CONTRACTORS INFORMATION ONLY
\# QUANTITY COMPUTER GENERATED

NOTE(S):

ALL DIMENSIONS ARE IN METERS UNLESS OTHERWISE NOTED.

FOR HORIZONTAL ALIGNMENT / DATA, SEE SHEET(S) 164 - 171.

FOR LIMITS OF SEEDING & TOPSOIL, SEE PROJECT X-SECTIONS AND TYPICAL SECTIONS.

FOR RIPRAP DETAILS SEE PROJECT X-SECTIONS AND SHEET(S) 342.

FOR RIPRAP ASSOCIATED WITH STORM DRAINAGE STRUCTURES SEE SHEET(S) 454 - 470.

FOR ADDITIONAL STORM DRAIN INFO. REFER TO THE SPECIFIC STORM DRAIN PROFILE SHEET(S).

## UTILITY LEGEND

| | |
|---|---|
| — W — W — | WATER LINE |
| — T1 — T1 — | TELEPHONE LINE |
| — C — C — | CABLE LINE |
| — G1 — G1 — | GAS LINE |

STATE OF TEXAS
JOEL K. DAVENPORT, JR.
79276
REGISTERED PROFESSIONAL ENGINEER

Joel K. Davenport, Jr. 11/1/00
Joel K. Davenport, Jr. P.E. 79276 Date

Texas Department of Transportation

# PLAN SHEET

SHEET 30 OF 57

| FED. RD. DIV. NO. | FEDERAL AID PROJECT NO. | | SHEET NO. |
|---|---|---|---|
| 6 | NH 2000(704), etc. | | 220 |
| STATE | DIST. | COUNTY | |
| TEXAS | SAT | BEXAR | |
| CONT. | SECT. | JOB | HIGHWAY NO. |
| 2452 | 01 | 036, etc. | LP 1604 |

LEVELS DISPLAYED
1 2 3 4 5 6 7 8 9 10 11 12 13 14 15 16
17 18 19 20 21 22 23 24 25 26 27 28 29 30 31 32
33 34 45 56 63 73 80 94 104 124 134 145 146 147 148
49 50 51 52 53 54 55 56 57 58 59 60 61 62 63

ACC: *:ao\design\lp1604fm471-90\
FILE: plan30.dgn

QUANTITIES THIS SHEET
CSJ 2452-01-036

SCALE: 1:1000

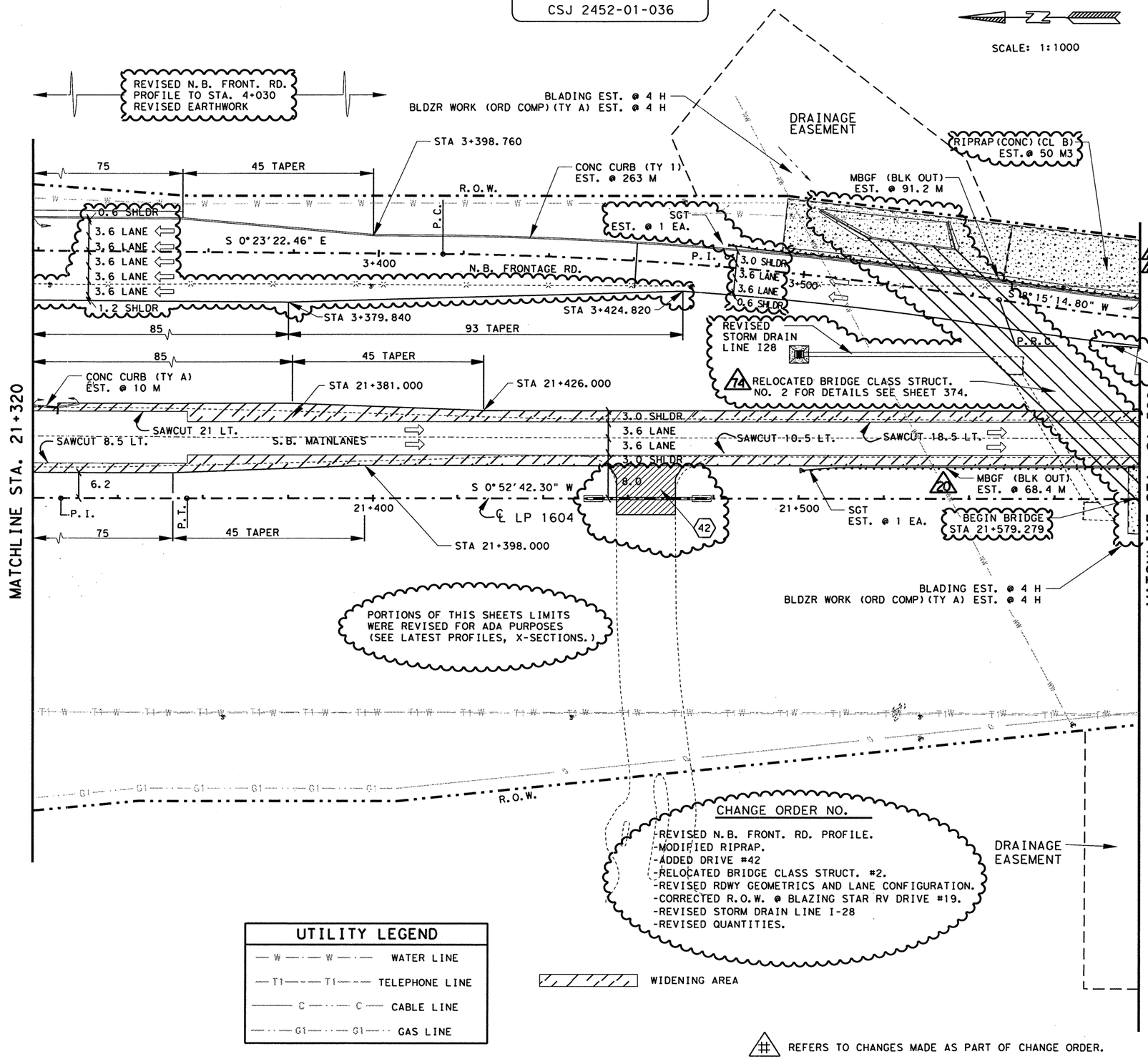


## ESTIMATED QUANTITIES

| ITEM # | ITEM | UNIT | QTY. |
|---|---|---|---|
| 100-5002 | PREP ROW | KM | 0.26 |
| 110-5001 | EXCAVATION (RDWY) | M3 | 5553 |
| 132-5018 | EMBANK (ORD COMP)(TY B)(CL 3) | M3 | 16292 |
| 150-5003 | BLADING | H | 8 |
| 156-5003 | BLDZR WORK (ORD COMP)(TY A) | H | 8 |
| 160-5002 | FURN AND PLAC TPSL (CL 2)(150 MM) | M2 | 11695 |
| 164-5049 | DRILL SEED (PERM)(URBAN)(CLAY) | M2 | 11695 |
| 247-5024 | FL BS (COMPL IN PLAC)(TY A GR 6 CL 4) | M3 | 1773 |
| 310-5006 | ASPH MATL (AE-P) | L | 3900 |
| | ONE CRSE SURF TREAT | M2 | 7929 |
| 316-5028 | AGGR (TY PB,GR 4) | M3 | 72 |
| 316-5226 | ASPH (AC-15P, HFRS-2P OR CRS-2P) | L | 10329 |
| 345-5004 | ASPH STAB BASE (GR 4) | MGR | 969 |
| 432-5001 | RIPRAP (CONC)(CL B) | M3 | 50 |
| 529-5001 | CONC CURB (TY 1) | M | 263 |
| 529-5026 | CONC CURB (TY A) | M | 10 |
| 530-5003 | DRVWY (ASPH-CONC PAV) | M2 | 172 |
| 540-5005 | TERM ANCH SECT (2.67 MM) | EA | 2 |
| 540-5006 | MBGF (TIM POST) (2.67 MM) | M | 159.6 |
| 540-5007 | MBGF (BLK OUT)(TIM POST(2.67 MM) | M | 159.6 |
| 3117-5003 | HOT MIX (TY C) | MGR | 724 |
| 3117-5018 | HOT MIX (TY C)(SURF) | MGR | 689 |
| 3117-5024 | HOT MIX (TY C)(LEVEL-UP) | MGR | 832 |
| 5119-5003 | SINGLE GDRAIL TERM (TY III) | EA | 3 |

* FOR CONTRACTORS INFORMATION ONLY
≠ QUANTITY COMPUTER GENERATED

NOTE(S):

ALL DIMENSIONS ARE IN METERS UNLESS OTHERWISE NOTED.

FOR HORIZONTAL ALIGNMENT / DATA, SEE SHEET(S) 164 - 171.

FOR LIMITS OF SEEDING & TOPSOIL, SEE PROJECT X-SECTIONS AND TYPICAL SECTIONS.

FOR RIPRAP DETAILS SEE PROJECT X-SECTIONS AND SHEET(S) 342.

FOR RIPRAP ASSOCIATED WITH STORM DRAINAGE STRUCTURES SEE SHEET(S) 454 - 470.

FOR ADDITIONAL STORM DRAIN INFO. REFER TO THE SPECIFIC STORM DRAIN PROFILE SHEET(S).

(#) DRIVEWAY #, FOR MORE DETAILS SEE SHEET(S)27, 28,315A,315B & 336.

CHANGE ORDER____

REVISED SHEET

CHANGE ORDER NO.

-REVISED N.B. FRONT. RD. PROFILE.
-MODIFIED RIPRAP.
-ADDED DRIVE #42
-RELOCATED BRIDGE CLASS STRUCT. #2.
-REVISED RDWY GEOMETRICS AND LANE CONFIGURATION.
-CORRECTED R.O.W. @ BLAZING STAR RV DRIVE #19.
-REVISED STORM DRAIN LINE I-28
-REVISED QUANTITIES.

## UTILITY LEGEND

| | |
|---|---|
| —W—W— | WATER LINE |
| —T1—T1— | TELEPHONE LINE |
| —C—C— | CABLE LINE |
| —G1—G1— | GAS LINE |

(#) REFERS TO CHANGES MADE AS PART OF CHANGE ORDER.

STATE OF TEXAS
JEROME D. PAVLISKA
76075
REGISTERED PROFESSIONAL ENGINEER

Jerome D. Pavliska P.E 6-18-04
Jerome D. Pavliska, P.E. — Date

Texas Department of Transportation

PLAN SHEET
SHEET 30 OF 57

| FED. RD. DIV. NO. | FEDERAL AID PROJECT NO. | | SHEET NO. |
|---|---|---|---|
| 6 | NH 2000(704),etc. | | 220A |
| STATE | DIST. | COUNTY | |
| TEXAS | SAT | BEXAR | |
| CONT. | SECT. | JOB | HIGHWAY NO. |
| 2452 | 01 | 036,etc. | LP 1604 |

LEVELS DISPLAYED
1 2 3 4 5 6 7 8 9 10 11 12 13 14 15 16
17 18 19 20 21 22 23 24 25 26 27 28 29 30 31 32
33 34 35 36 37 38 39 40 41 42 43 44 45 46 47 48
49 50 51 52 53 54 55 56 57 58 59 60 61 62 63

ACC: t:\oo\design\lp1604fm471-90\
FILE: plan30*ch.dgn

QUANTITIES THIS SHEET
CSJ 2452-01-036

SCALE: 1:1000

64 REVISED N.B. FRONT. RD. PROFILE TO STA. 4+030
REVISED EARTHWORK

BLADING EST. @ 4 H
BLDZR WORK (ORD COMP)(TY A) EST. @ 4 H

DRAINAGE EASEMENT

64 RIPRAP (CONC)(CL B) EST.@ 50 M3

MBGF (BLK OUT) EST. @ 91.2 M

STA 3+398.760

CONC CURB (TY 1) EST. @ 263 M

64 EST. @ 1 EA.

SGT

75 | 45 TAPER

R.O.W.

P.C.

0.6 SHLDR
3.6 LANE
3.6 LANE
3.6 LANE
3.6 LANE
3.6 LANE
1.2 SHLDR

S 0°23'22.46" E

3+400

N.B. FRONTAGE RD.

P.I.

64

3.0 SHLDR
3.6 LANE
3.6 LANE
0.6 SHLDR

3+500

S 8°15'14.80" W

P.R.C.

STA 3+379.840

STA 3+424.820

85 | 93 TAPER

64 REVISED STORM DRAIN LINE I28

85 | 45 TAPER

CONC CURB (TY A) EST. @ 10 M

STA 21+381.000

STA 21+426.000

74 RELOCATED BRIDGE CLASS STRUCT. NO. 2 FOR DETAILS SEE SHEET 374.

MATCHLINE STA. 21+320

S.B. MAINLANES

3.0 SHLDR
3.6 LANE
3.6 LANE
3.0 SHLDR

SAWCUT 18.5 LT.

MATCHLINE STA. 21+580

6.2

P.I.

P.T.

S 0°52'42.30" W

21+400

℄ LP 1604

21+500

SGT EST. @ 1 EA.

20 MBGF (BLK OUT) EST. @ 68.4 M

BEGIN BRIDGE STA 21+579.279

75 | 45 TAPER

STA 21+398.000

42

64

BLADING EST. @ 4 H
BLDZR WORK (ORD COMP)(TY A) EST. @ 4 H

64 PORTIONS OF THIS SHEETS LIMITS WERE REVISED FOR ADA PURPOSES (SEE LATEST PROFILES, X-SECTIONS.)

R.O.W.

DRAINAGE EASEMENT

CHANGE ORDER NO. 119
-NEW REHAB TREATMENT TO S.B. MAINLANES
-REVISED QUANTITIES

WIDENING AREA / NEW CONSTRUCTION (BLACK BASE)

UTILITY LEGEND

| | |
|---|---|
| —W— W— | WATER LINE |
| —T1— T1— | TELEPHONE LINE |
| —C— C— | CABLE LINE |
| —G1— G1— | GAS LINE |

## ESTIMATED QUANTITIES

| ITEM # | ITEM | UNIT | QTY. |
|---|---|---|---|
| 100-5002 | PREP ROW | KM | 0.26 |
| 110-5001 | EXCAVATION (RDWY) | M3 | 5571 |
| 132-5018 | EMBANK (ORD COMP)(TY B)(CL 3) | M3 | 17008 |
| 150-5003 | BLADING | H | 8 |
| 156-5003 | BLDZR WORK (ORD COMP)(TY A) | H | 8 |
| 160-5002 | FURN AND PLAC TPSL (CL 2)(150 MM) | M2 | 11695 |
| 164-5049 | DRILL SEED (PERM)(URBAN)(CLAY) | M2 | 11695 |
| 247-5024 | FL BS (COMPL IN PLACE)(TY A GR 6 CL 4) | M3 | 1598 |
| 310-5006 | ASPH MATL (AE-P) | L | 3488 |
| | ONE CRSE SURF TREAT | M2 | 7827 |
| 316-5028 | AGGR (TY PB,GR 4) | M3 | 71 |
| 316-5226 | ASPH (AC-15P, HFRS-2P OR CRS-2P) | L | 10645 |
| 345-5004 | ASPH STAB BASE (GR 4) | MGR | 2275 |
| 432-5001 | RIPRAP (CONC)(CL B) | M3 | 50 |
| 529-5001 | CONC CURB (TY 1) | M | 263 |
| 529-5026 | CONC CURB (TY A) | M | 10 |
| 530-5003 | DRVWY (ASPH-CONC PAV) | M2 | 172 |
| 540-5005 | TERM ANCH SECT (2.67 MM) | EA | 2 |
| 540-5006 | MBGF (TIM POST)(2.67 MM) | M | 159.6 |
| 540-5007 | MBGF (BLK OUT)(TIM POST(2.67 MM) | M | 159.6 |
| 3117-5003 | HOT MIX (TY C) | MGR | 724 |
| 3117-5018 | HOT MIX (TY C)(SURF) | MGR | 689 |
| 3117-5024 | HOT MIX (TY C)(LEVEL UP) | MGR | 0 |
| 5119-5003 | SINGLE GUARD TERM (T 111) | EA | 2 |

* FOR CONTRACTORS INFORMATION ONLY
# QUANTITY COMPUTER GENERATED

64 SGT EST. @ 1 EA

NOTE(S):

ALL DIMENSIONS ARE IN METERS UNLESS OTHERWISE NOTED.

FOR HORIZONTAL ALIGNMENT / DATA, SEE SHEET(S) 164 - 171.

FOR LIMITS OF SEEDING & TOPSOIL, SEE PROJECT X-SECTIONS AND TYPICAL SECTIONS.

FOR RIPRAP DETAILS SEE PROJECT X-SECTIONS AND SHEET(S) 342.

FOR RIPRAP ASSOCIATED WITH STORM DRAINAGE STRUCTURES SEE SHEET(S) 454 - 470.

FOR ADDITIONAL STORM DRAIN INFO. REFER TO THE SPECIFIC STORM DRAIN PROFILE SHEET(S).

(#) DRIVEWAY #, FOR MORE DETAILS SEE SHEET(S)27, 28,315A,315B & 336.

(#) REFERS TO CHANGES MADE AS PART OF CHANGE ORDER.

CHANGE ORDER 119

REVISED SHEET

STATE OF TEXAS
FITZGERALDO G. SANCHEZ
76084
LICENCED
PROFESSIONAL ENGINEER

Fitzgeraldo G. Sanchez 03-10-06
Fitzgeraldo G. Sanchez, P.E. Date

©2000 Texas Department of Transportation

PLAN SHEET
SHEET 30 OF 57

| FED.RD. DIV.NO. | FEDERAL AID PROJECT NO. | | SHEET NO. |
|---|---|---|---|
| 6 | NH 2000(704),etc. | | 220A |
| STATE | DIST. | COUNTY | |
| TEXAS | SAT | BEXAR | |
| CONT. | SECT. | JOB | HIGHWAY NO. |
| 2452 | 01 | 036,etc. | LP 1604 |

2-17-06

LEVELS DISPLAYED
1 2 3 4 5 6 7 8 9 10 11 12 13 14 15 16
17 18 19 20 21 22 23 24 25 26 27 28 29 30 31 32
33 34 35 36 37 38 39 40 41 42 43 44 45 46 47 48
49 50 51 52 53 54 55 56 57 58 59 60 61 62 63

ACC: *:\ao\design\lp1604fm471-90\
FILE: plan30*ch.dgn

QUANTITIES THIS SHEET
CSJ 2452-01-036

SCALE: 1:1000

## ESTIMATED QUANTITIES

| ITEM # | ITEM | UNIT | QTY. |
|---|---|---|---|
| 100-5002 | PREP ROW | KM | 0.28 |
| 110-5001 | EXCAVATION (RDWY) | M3 | 8091 |
| 132-5018 | EMBANK (ORD COMP)(TY B)(CL 3) | M3 | 4271 |
| 160-5002 | FURN AND PLAC TPSL (CL 2)(150 MM) | M2 | 7618 |
| 164-5049 | DRILL SEED (PERM)(URBAN)(CLAY) | M2 | 7618 |
| 247-5024 | FL BS (COMPL IN PLAC)(TY A GR 6 CL 4) | M3 | 1355 |
| 310-5006 | ASPH MATL (AE-P) | L | 3261 |
| * | ONE CRSE SURF TREAT | M2 | 8246 |
| 316-5028 | AGGR (TY PB,GR 4) | M3 | 75 |
| 316-5226 | ASPH (AC-15P, HFRS-2P OR CRS-2P) | L | 11215 |
| 345-5004 | ASPH STAB BS (GR 4) | MGR | 1683 |
| 529-5001 | CONC CURB (TY 1) | M | 281 |
| 530-5003 | DRVWAYS (ASPH-CONC PAV) | M2 | 162 |
| 540-5005 | TERM ANCH SECT (2.67 MM) | EA | 1 |
| 540-5006 | MBGF (TIM POST)(2.67 MM) | M | 205.2 |
| 3117-5003 | HOT MIX (TY C) | MGR | 774 |
| 3117-5018 | HOT MIX (TY C)(SURF) | MGR | 737 |
| 3117-5024 | HOT MIX (TY C)(LEVEL-UP) | MGR | 771 |
| 5119-5003 | SINGLE GDRAIL TERM (TY III) | EA | 2 |
| | | | |
| | | | |

* FOR CONTRACTORS INFORMATION ONLY
# QUANTITY COMPUTER GENERATED

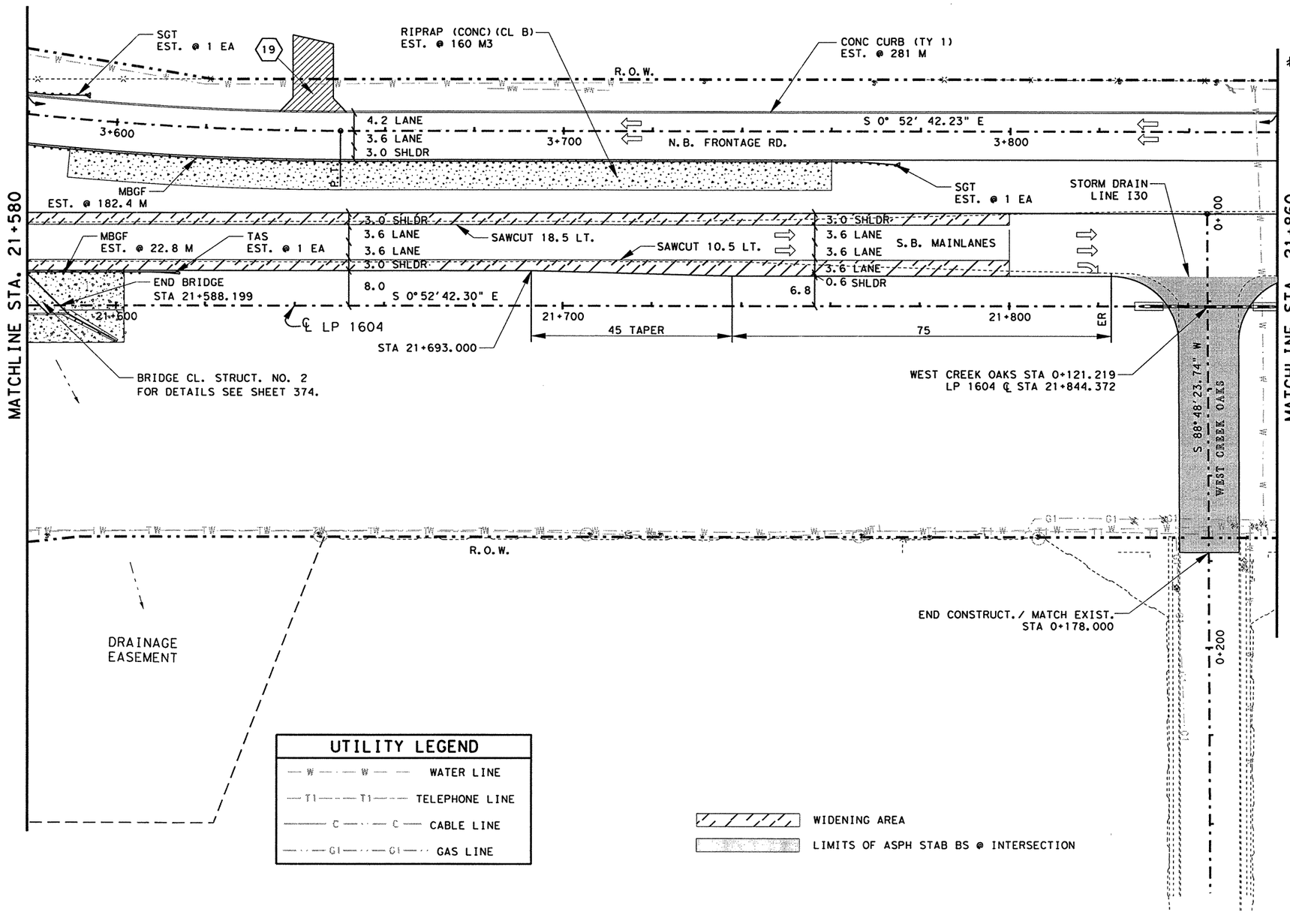


### UTILITY LEGEND

| | |
|---|---|
| W W | WATER LINE |
| T1 T1 | TELEPHONE LINE |
| C C | CABLE LINE |
| G1 G1 | GAS LINE |

NOTE(S):

ALL DIMENSIONS ARE IN METERS UNLESS OTHERWISE NOTED.

FOR HORIZONTAL ALIGNMENT / DATA, SEE SHEET(S) 164 - 171.

FOR LIMITS OF SEEDING & TOPSOIL, SEE PROJECT X-SECTIONS AND TYPICAL SECTIONS.

FOR INTERSECTION LAYOUT, SEE SHEET 326.

FOR RIPRAP DETAILS SEE PROJECT X-SECTIONS AND SHEET 342

FOR RIPRAP ASSOCIATED WITH STORM DRAINAGE STRUCTURES SEE SHEET(S) 454 - 470.

FOR ADDITIONAL STORM DRAIN INFO. REFER TO THE SPECIFIC STORM DRAIN PROFILE SHEET(S).

(#) DRIVEWAY #, FOR MORE DETAILS SEE SHEET(S)27, 28 & 336.

STATE OF TEXAS
JOEL K. DAVENPORT, JR.
79276
REGISTERED PROFESSIONAL ENGINEER

Joel K Davenport Jr 11/1/00
Joel K. Davenport, Jr., P.E. 79276 Date

Texas Department of Transportation

# PLAN SHEET

SHEET 31 OF 57

| FED.RD. DIV.NO. | FEDERAL AID PROJECT NO. | | SHEET NO. |
|---|---|---|---|
| 6 | NH 2000(704),etc. | | 221 |
| STATE | DIST. | COUNTY | |
| TEXAS | SAT | BEXAR | |
| CONT. | SECT. | JOB | HIGHWAY NO. |
| 2452 | 01 | 036,etc. | LP 1604 |

LEVELS DISPLAYED
1 2 3 4 5 6 7 8 9 10 11 12 13 14 15 16 17 18 19 20 21 22 23 24 25 26 27 28 29 30 31 32 33 34 35 36 37 38 39 40 41 42 43 44 45 46 47 48 49 50 51 52 53 54 55 56 57 58 59 60 61 62 63

ACC: t:\oo\design\lp1604fm471-90\
FILE: plan31.dgn

QUANTITIES THIS SHEET
CSJ 2452-01-036

SCALE: 1:1000

REVISED N.B. FRONT. RD. PROFILE TO STA. 4+030
REVISED EARTHWORK

FOR DRIVEWAY RELATED DETAILS SEE SHEET(S) 346H, I.

BLAZING STAR RV RESORT DRIVEWAY

RIPRAP (CONC) (CL B) EST. @ 50 M3

MBGF (BLK OUT) EST. @ 22.8 M

RIPRAP (CONC) (CL B) EST. @ 29 M3

CONC CURB (TY 1) EST. @ 281 M

R.O.W.

3+600

SGT EST. @ 1 EA

3.0 SHLDR
3.6 LANE
3.6 LANE
0.6 SHLDR

3+700

N.B. FRONTAGE RD.

S 0° 52' 42.23" E

3+800

MBGF (BLK OUT) EST. @ 182.4 M

MODIFIED RIPRAP (CONC) (CL B) EST. @ 36 M3

SGT EST. @ 1 EA

STORM DRAIN LINE I30

MBGF (BLK OUT) EST. @ 22.8 M

TAS EST. @ 1 EA

3.0 SHLDR
3.6 LANE
3.6 LANE
3.0 SHLDR

SAWCUT 18.5 LT.

SAWCUT 10.5 LT.

3.0 SHLDR
3.6 LANE
3.6 LANE
3.6 LANE
0.6 SHLDR

S.B. MAINLANES

8.0

6.8

S 0°52'42.30" E

21+600

℄ LP 1604

21+700

21+800

45 TAPER

75

ER

END BRIDGE STA 21+597.099

STA 21+693.000

WEST CREEK OAKS STA 0+121.219
LP 1604 ℄ STA 21+844.372

S 88° 48' 23.74" W

WEST CREEK OAKS

MATCHLINE STA. 21+580

MATCHLINE STA. 21+860

0+00

0+200

BRIDGE CL. STRUCT. NO. 2
FOR DETAILS SEE SHEET 374.

END ADA PROFILE REVISIONS STA. 21+592

PORTIONS OF THIS SHEETS LIMITS WERE REVISED FOR ADA PURPOSES (SEE LATEST PROFILES, X-SECTIONS.)

R.O.W.

END CONSTRUCT. / MATCH EXIST.
STA 0+178.000

DRAINAGE EASEMENT

CHANGE ORDER NO. 64
-REVISED N.B. FRONT. RD. PROFILE.
-CORRECTED R.O.W. @ BLAZING STAR & DRIVE #19
-REVISED LANE CONFIGURATIONS.
-RELOCATED BRIDGE CLASS STRUCT. #2
-REVISED DRIVE #19
-REVISED QUANTITIES.

WIDENING AREA

LIMITS OF ASPH STAB BS @ INTERSECTION

UTILITY LEGEND

| | |
|---|---|
| W W | WATER LINE |
| T1 T1 | TELEPHONE LINE |
| C C | CABLE LINE |
| G1 G1 | GAS LINE |

(#) REFERS TO CHANGES MADE AS PART OF CHANGE ORDER.

## ESTIMATED QUANTITIES

| ITEM # | ITEM | UNIT | QTY. |
|---|---|---|---|
| 100-5002 | PREP ROW | KM | 0.28 |
| 110-5001 | EXCAVATION (RDWY) | M3 | 8546 |
| 132-5018 | EMBANK (ORD COMP) (TY B) (CL 3) | M3 | 5079 |
| 160-5002 | FURN AND PLAC TPSL (CL 2) (150 MM) | M2 | 6996 |
| 164-5049 | DRILL SEED (PERM) (URBAN) (CLAY) | M2 | 6996 |
| 247-5024 | FL BS (COMPL IN PLACE) (TY A GR 6 CL 4) | M3 | 1355 |
| 310-5006 | ASPH MATL (AE-P) | L | 3261 |
| | ONE CRSE SURF TREAT | M2 | 8246 |
| 316-5028 | AGGR (TY PB, GR 4) | M3 | 75 |
| 316-5226 | ASPH (AC-15P, HFRS-2P OR CRS-2P) | L | 11215 |
| 345-5004 | ASPH STAB BS (GR 4) | MGR | 1683 |
| 529-5001 | CONC CURB (TY 1) | M | 281 |
| 432-5001 | RIPRAP (CONC) (CL B) | M3 | 215 |
| 530-5003 | DRVWAYS (ASPH-CONC PAV) (SPL) | M2 | 479 |
| 540-5005 | TERM ANCH SECT (2.67 MM) | EA | 1 |
| ~~540-5006~~ | ~~MBGF (TIM POST) (2.67 MM)~~ | ~~M~~ | ~~205.2~~ |
| 540-5007 | MBGF (BLK OUT) (TIM POST) (2.67 MM) | M | 228.0 |
| 3117-5003 | HOT MIX (TY C) | MGR | 774 |
| 3117-5018 | HOT MIX (TY C) (SURF) | MGR | 737 |
| 3117-5024 | HOT MIX (TY C) (LEVEL-UP) | MGR | 761 |
| 5119-5003 | SINGLE GDRAIL TERM (TY III) | EA | 2 |

* FOR CONTRACTORS INFORMATION ONLY
# QUANTITY COMPUTER GENERATED

NOTE(S):

ALL DIMENSIONS ARE IN METERS UNLESS OTHERWISE NOTED.

FOR HORIZONTAL ALIGNMENT / DATA, SEE SHEET(S) 164 - 171.

FOR LIMITS OF SEEDING & TOPSOIL, SEE PROJECT X-SECTIONS AND TYPICAL SECTIONS.

FOR INTERSECTION LAYOUT, SEE SHEET 326.

FOR RIPRAP DETAILS SEE PROJECT X-SECTIONS AND SHEET 342

FOR RIPRAP ASSOCIATED WITH STORM DRAINAGE STRUCTURES SEE SHEET(S) 454 - 470.

FOR ADDITIONAL STORM DRAIN INFO. REFER TO THE SPECIFIC STORM DRAIN PROFILE SHEET(S).

(#) DRIVEWAY #1 FOR MORE DETAILS SEE SHEET(S) 27, 28, 315A, 315B, 336H, 346H, & 346I .

CHANGE ORDER 64

REVISED SHEET

STATE OF TEXAS
JEROME D. PAVLISKA
76075
REGISTERED PROFESSIONAL ENGINEER

Jerome D. Pavliska, P.E. 12-9-04
Jerome D. Pavliska, P.E. Date

©2000
Texas Department of Transportation

PLAN SHEET
SHEET 31 OF 57

| FED. RD. DIV. NO. | FEDERAL AID PROJECT NO. | SHEET NO. |
|---|---|---|
| 6 | NH 2000(704), etc. | 221A |
| STATE | DIST. | COUNTY |
| TEXAS | SAT | BEXAR |
| CONT. | SECT. | JOB | HIGHWAY NO. |
| 2452 | 01 | 036, etc. | LP 1604 |


LEVELS DISPLAYED
1 2 3 4 5 6 7 8 9 10 11 12 13 14 15 16
17 18 19 20 21 22 23 24 25 26 27 28 29 30 31 32
33 34 35 36 37 38 39 40 41 42 43 44 45 46 47 48
49 50 51 52 53 54 55 56 57 58 59 60 61 62 63

ACC: t:\ao\design\lp1604fm471-90\
FILE: plan31*ch.dgn

QUANTITIES THIS SHEET
CSJ 2452-01-036

SCALE: 1:1000

REVISED N.B. FRONT. RD.
PROFILE TO STA. 4+030
REVISED EARTHWORK (64)

(64) FOR DRIVEWAY RELATED DETAILS SEE SHEET(S) 346H, I.

BLAZING STAR RV RESORT DRIVEWAY (64)

RIPRAP (CONC) (CL B) EST. @ 50 M3 (64)

MBGF (BLK OUT) EST. @ 22.8 M (64)

(19)

(64) RIPRAP (CONC) (CL B) EST. @ 29 M3

CONC CURB (TY 1) EST. @ 281 M

R.O.W.

3+600

SGT EST. @ 1 EA

3.0 SHLDR
3.6 LANE
3.6 LANE
0.6 SHLDR

(64)

3+700

S 0° 52' 42.23" E

N.B. FRONTAGE RD.

3+800

SGT EST. @ 1 EA

STORM DRAIN LINE I30

MBGF (BLK OUT) EST. @ 182.4 M

MODIFIED RIPRAP (CONC) (CL B) EST. @ 136 M3 (64)

MATCHLINE STA. 21+580

MBGF (BLK OUT) EST. @ 22.8 M

TAS EST. @ 1 EA

3.0 SHLDR
3.6 LANE
3.6 LANE
3.0 SHLDR

SAWCUT 18.5 LT.

SAWCUT 10.5 LT.

3.0 SHLDR
3.6 LANE S.B. MAINLANES
3.6 LANE
0.6 SHLDR

8.0

6.8

S 0°52'42.30" E

21+600

21+700

21+800

45 TAPER

75

(64)

℄ LP 1604

END BRIDGE STA 21+597.099

STA 21+693.000

ER

WEST CREEK OAKS STA 0+121.219
LP 1604 ℄ STA 21+844.372

MATCHLINE STA. 21+860

S 88° 48' 23.74" W

WEST CREEK OAKS

BRIDGE CL. STRUCT. NO. 2
FOR DETAILS SEE SHEET 374.

END ADA (64)
PROFILE REVISIONS
STA. 21+592

(64) PORTIONS OF THIS SHEETS LIMITS WERE REVISED FOR ADA PURPOSES (SEE LATEST PROFILES, X-SECTIONS.)

R.O.W.

END CONSTRUCT. / MATCH EXIST.
STA 0+178.000

0+200

DRAINAGE EASEMENT

**CHANGE ORDER NO.**

-NEW REHAB TREATMENT TO S.B. MAINLANES
-REVISED QUANTITIES

UTILITY LEGEND

| | |
|---|---|
| W W | WATER LINE |
| TI TI | TELEPHONE LINE |
| C C | CABLE LINE |
| G1 G1 | GAS LINE |

LIMITS OF ASPH STAB BS @ INTERSECTION

WIDENING AREA / NEW CONSTRUCTION (BLACK BASE)

## ESTIMATED QUANTITIES

| ITEM # | ITEM | UNIT | QTY. |
|---|---|---|---|
| ~~100-5002~~ | ~~PREP ROW~~ | ~~KM~~ | ~~0.28~~ |
| 110-5001 | EXCAVATION (RDWY) | M3 | 8659 |
| 132-5018 | EMBANK (ORD COMP) (TY B) (CL 3) | M3 | 6133 |
| 160-5002 | FURN AND PLAC TPSL (CL 2) (150 MM) | M2 | 6996 |
| 164-5049 | DRILL SEED (PERM) (URBAN) (CLAY) | M2 | 6996 |
| 247-5024 | FL BS (COMPL IN PLACE) (TY A GR 6 CL 4) | M3 | 1355 |
| 310-5006 | ASPH MATL (AE-P) | L | 2934 |
| * | ONE CRSE SURF TREAT | M2 | 8420 |
| 316-5028 | AGGR (TY PB, GR 4) | M3 | 77 |
| 316-5226 | ASPH (AC-15P, HFRS-2P OR CRS-2P) | L | 11451 |
| 345-5004 | ASPH STAB BS (GR 4) | MGR | 3173 |
| 529-5001 | CONC CURB (TY 1) | M | 281 |
| 432-5001 | RIPRAP (CONC) (CL B) | M3 | 215 |
| 530-5003 | DRVWAYS (ASPH-CONC PAV) (SPL) | M2 | 479 |
| 540-5005 | TERM ANCH SECT (2.67 MM) | EA | 1 |
| ~~540-5006~~ | ~~MBGF (TIM POST) (2.67 MM)~~ | ~~M~~ | ~~205.2~~ |
| 540-5007 | MBGF (BLK OUT) (TIM POST) (2.67 MM) | M | 228.0 |
| 3117-5003 | HOT MIX (TY C) | MGR | 774 |
| 3117-5018 | HOT MIX (TY C) (SURF) | MGR | 737 |
| ~~3117-5024~~ | ~~HOT MIX (TY C) (LEVEL UP)~~ | ~~MGR~~ | ~~0~~ |
| 5119-5003 | SINGLE GDRAIL TERM (TY III) | EA | 2 |

* FOR CONTRACTORS INFORMATION ONLY
# QUANTITY COMPUTER GENERATED

NOTE(S):

ALL DIMENSIONS ARE IN METERS UNLESS OTHERWISE NOTED.

FOR HORIZONTAL ALIGNMENT / DATA, SEE SHEET(S) 164 - 171.

FOR LIMITS OF SEEDING & TOPSOIL, SEE PROJECT X-SECTIONS AND TYPICAL SECTIONS.

FOR INTERSECTION LAYOUT, SEE SHEET 326.

FOR RIPRAP DETAILS SEE PROJECT X-SECTIONS AND SHEET 342

FOR RIPRAP ASSOCIATED WITH STORM DRAINAGE STRUCTURES SEE SHEET(S) 454 - 470.

FOR ADDITIONAL STORM DRAIN INFO. REFER TO THE SPECIFIC STORM DRAIN PROFILE SHEET(S).

(#) DRIVEWAY #, FOR MORE DETAILS SEE SHEET(S) 27, 28, 315A, 315B, 336H, 346H, & 346I .

(#) REFERS TO CHANGES MADE AS PART OF CHANGE ORDER.

CHANGE ORDER 119

REVISED SHEET

STATE OF TEXAS
FITZGERALDO G. SANCHEZ
76084
LICENCED
PROFESSIONAL ENGINEER

Fitzgeraldo G. Sanchez, P.E. 03-10-06
Date

©2000 Texas Department of Transportation

PLAN SHEET

SHEET 31 OF 57

| FED.RD. DIV.NO. | FEDERAL AID PROJECT NO. | SHEET NO. |
|---|---|---|
| 6 | NH 2000(704), etc. | 221A B |
| STATE | DIST. | COUNTY |
| TEXAS | SAT | BEXAR |
| CONT. | SECT. | JOB / HIGHWAY NO. |
| 2452 | 01 | 036, etc. / LP 1604 |

2-17-06

LEVELS DISPLAYED
1 2 3 4 5 6 7 8 9 10 11 12 13 14 15 16 17 18 19 20 21 22 23 24 25 26 27 28 29 30 31 32 33 34 35 36 37 38 39 40 41 42 43 44 45 46 47 48 49 50 51 52 53 54 55 56 57 58 59 60 61 62 63

ACC: t:\oo\design\lp1604fm471-90\
FILE: plan31sch.dgn

QUANTITIES THIS SHEET
CSJ 2452-01-036

SCALE: 1:1000

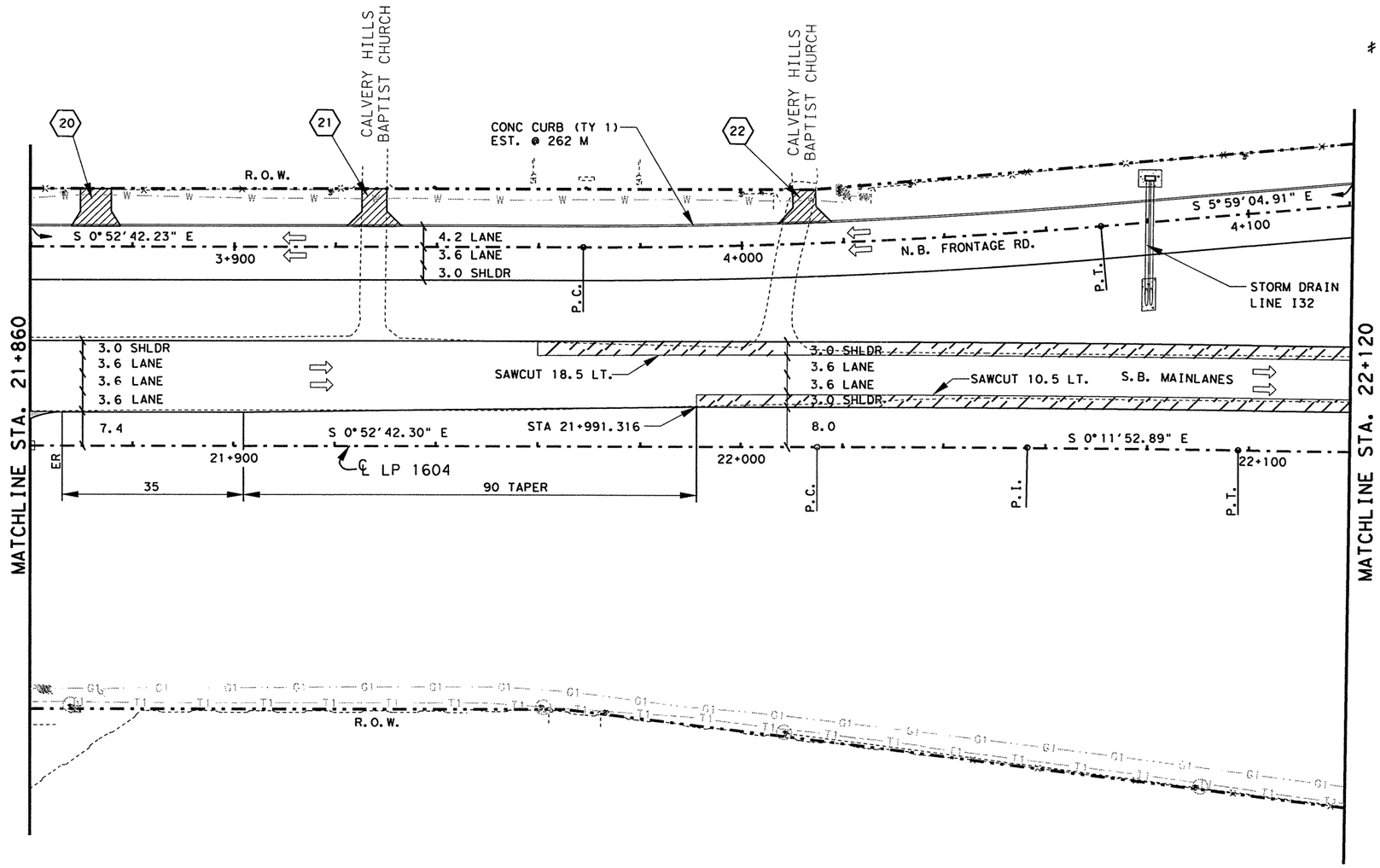


| ESTIMATED QUANTITIES | | | |
|---|---|---|---|
| ITEM # | ITEM | UNIT | QTY. |
| 100-5002 | PREP ROW | KM | 0.26 |
| 110-5001 | EXCAVATION (RDWY) | M3 | 3771 |
| 132-5018 | EMBANK (ORD COMP) (TY B) (CL 3) | M3 | 825 |
| 160-5002 | FURN AND PLAC TPSL (CL 2) (150 MM) | M2 | 8669 |
| 164-5049 | DRILL SEED (PERM) (URBAN) (CLAY) | M2 | 8669 |
| 247-5024 | FL BS (COMPL IN PLAC)(TY A GR 6 CL 4) | M3 | 1261 |
| 310-5006 | ASPH MATL (AE-P) | L | 3036 |
| * | ONE CRSE SURF TREAT | M2 | 6666 |
| 316-5028 | AGGR (TY PB, GR 4) | M3 | 61 |
| 316-5226 | ASPH (AC-15P, HFRS-2P OR CRS-2P) | L | 9066 |
| 345-5004 | ASPH STAB BS (GR 4) | MGR | 524 |
| 529-5001 | CONC CURB (TY 1) | M | 262 |
| 530-5003 | DRVWAYS (ASPH-CONC PAV) | M2 | 147 |
| 3117-5003 | HOT MIX (TY C) | MGR | 629 |
| 3117-5018 | HOT MIX (TY C) (SURF) | MGR | 598 |
| ≠ 3117-5024 | HOT MIX (TY C) (LEVEL-UP) | MGR | 341 |
| | | | |

* FOR CONTRACTORS INFORMATION ONLY
≠ QUANTITY COMPUTER GENERATED

NOTE(S):

ALL DIMENSIONS ARE IN METERS UNLESS OTHERWISE NOTED.

FOR HORIZONTAL ALIGNMENT / DATA, SEE SHEET(S) 164 - 171.

FOR LIMITS OF SEEDING & TOPSOIL, SEE PROJECT X-SECTIONS AND TYPICAL SECTIONS.

FOR RIPRAP ASSOCIATED WITH STORM DRAINAGE STRUCTURES SEE SHEET(S) 454 - 470.

FOR ADDITIONAL STORM DRAIN INFO. REFER TO THE SPECIFIC STORM DRAIN PROFILE SHEET(S).

(#) DRIVEWAY #, FOR MORE DETAILS SEE SHEET(S) 27, 28 & 336.

| UTILITY LEGEND | |
|---|---|
| — W — W — | WATER LINE |
| — T1 — T1 — | TELEPHONE LINE |
| — C — C — | CABLE LINE |
| — G1 — G1 — | GAS LINE |

WIDENING AREA

LIMITS OF ASPH STAB BS @ INTERSECTION

STATE OF TEXAS
JOEL K. DAVENPORT, JR.
79276
REGISTERED PROFESSIONAL ENGINEER

Joel K. Davenport, Jr. P.E. 79276 — 11/1/00 Date

©2000
Texas Department of Transportation

# PLAN SHEET

SHEET 32 OF 57

| FED.RD. DIV.NO. | FEDERAL AID PROJECT NO. | | SHEET NO. |
|---|---|---|---|
| 6 | NH 2000(704),etc. | | 222 |
| STATE | DIST. | COUNTY | |
| TEXAS | SAT | BEXAR | |
| CONT. | SECT. | JOB | HIGHWAY NO. |
| 2452 | 01 | 036,etc. | LP 1604 |

LEVELS DISPLAYED
1 2 3 4 5 6 7 8 9 10 11 12 13 14 15 16
17 18 19 20 21 22 23 24 25 26 27 28 29 30 31 32
33 34 35 36 37 38 39 40 41 42 43 44 45 46 47 48
49 50 51 52 53 54 55 56 57 58 59 60 61 62 63

ACC: t:\ao\design\lp1604fm471-90\
FILE: plan32.dgn

QUANTITIES THIS SHEET
CSJ 2452-01-036

SCALE: 1:1000

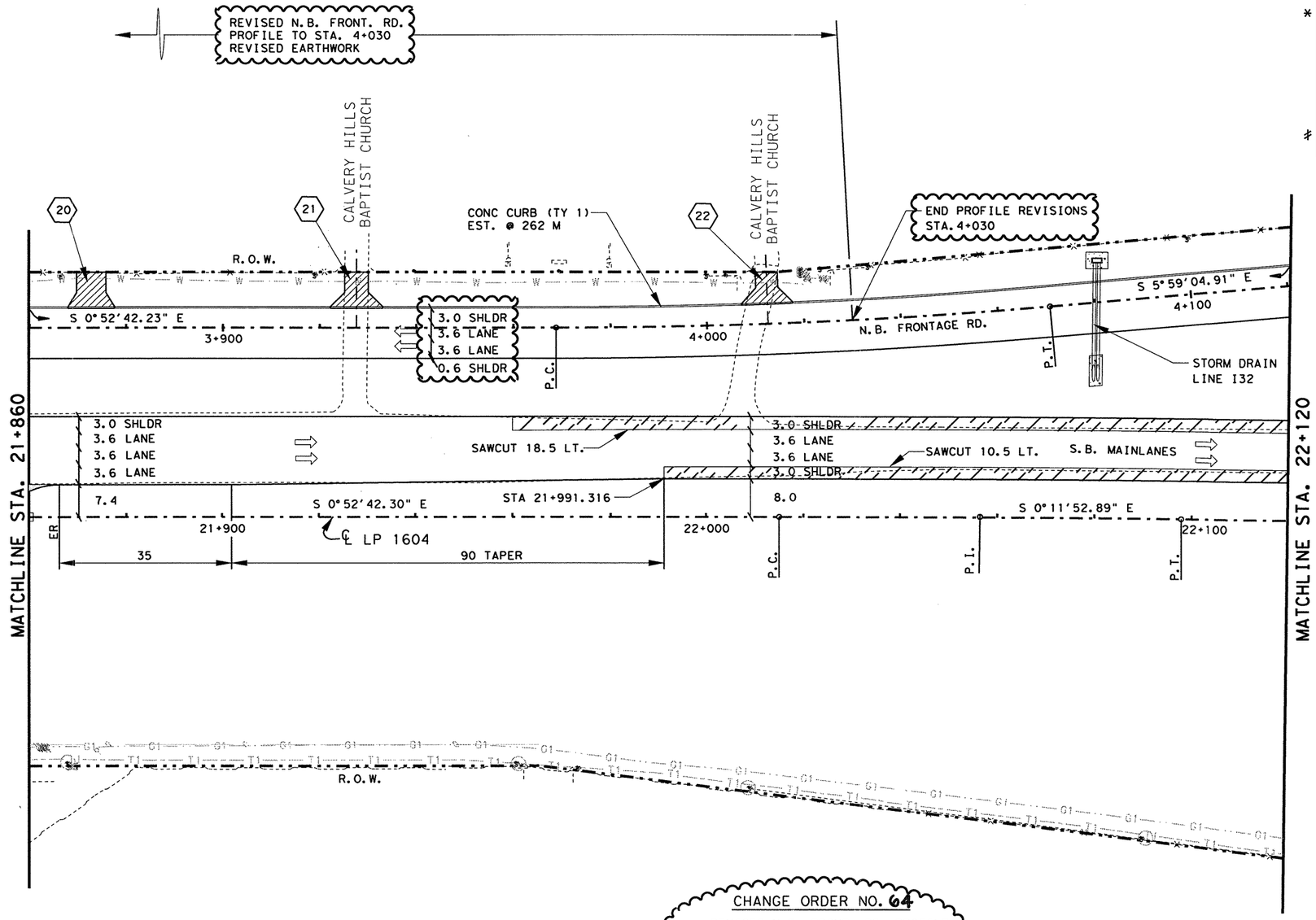


| ESTIMATED QUANTITIES | | | |
|---|---|---|---|
| ITEM # | ITEM | UNIT | QTY. |
| 100-5002 | PREP ROW | KM | 0.26 |
| 110-5001 | EXCAVATION (RDWY) | M3 | 4260 |
| 132-5018 | EMBANK (ORD COMP) (TY B) (CL 3) | M3 | 734 |
| 160-5002 | FURN AND PLAC TPSL (CL 2) (150 MM) | M2 | 8669 |
| 164-5049 | DRILL SEED (PERM) (URBAN) (CLAY) | M2 | 8669 |
| 247-5024 | FL BS (COMPL IN PLAC)(TY A GR 6 CL 4) | M3 | 1261 |
| 310-5006 | ASPH MATL (AE-P) | L | 3036 |
| * | ONE CRSE SURF TREAT | M2 | 6666 |
| 316-5028 | AGGR (TY PB, GR 4) | M3 | 61 |
| 316-5226 | ASPH (AC-15P, HFRS-2P OR CRS-2P) | L | 9066 |
| 345-5004 | ASPH STAB BS (GR 4) | MGR | 524 |
| 529-5001 | CONC CURB (TY 1) | M | 262 |
| 530-5003 | DRVWAYS (ASPH-CONC PAV) | M2 | 147 |
| 3117-5003 | HOT MIX (TY C) | MGR | 629 |
| 3117-5018 | HOT MIX (TY C) (SURF) | MGR | 598 |
| # | 3117-5024 HOT MIX (TY C) (LEVEL-UP) | MGR | 341 |

* FOR CONTRACTORS INFORMATION ONLY
# QUANTITY COMPUTER GENERATED

NOTE(S):

ALL DIMENSIONS ARE IN METERS UNLESS OTHERWISE NOTED.

FOR HORIZONTAL ALIGNMENT / DATA, SEE SHEET(S) 164 - 171.

FOR LIMITS OF SEEDING & TOPSOIL, SEE PROJECT X-SECTIONS AND TYPICAL SECTIONS.

FOR RIPRAP ASSOCIATED WITH STORM DRAINAGE STRUCTURES SEE SHEET(S) 454 - 470.

FOR ADDITIONAL STORM DRAIN INFO. REFER TO THE SPECIFIC STORM DRAIN PROFILE SHEET(S).

(#) DRIVEWAY #, FOR MORE DETAILS SEE SHEET(S) 27, 28 & 336.

CHANGE ORDER 64

REVISED SHEET

CHANGE ORDER NO. 64
-REVISED N.B. FRONT. RD. PROFILE.
-REVISED LANE CONFIGURATIONS
-REVISED QUANTITIES.

UTILITY LEGEND

| | |
|---|---|
| — W — W — | WATER LINE |
| — T1 — T1 — | TELEPHONE LINE |
| — C — C — | CABLE LINE |
| — G1 — G1 — | GAS LINE |

WIDENING AREA

LIMITS OF ASPH STAB BS @ INTERSECTION

STATE OF TEXAS
JEROME D. PAVLISKA
76075
REGISTERED PROFESSIONAL ENGINEER

Jerome D. Pavliska, P.E. 4-28-04
Jerome D. Pavliska, P.E. Date

Texas Department of Transportation

PLAN SHEET

SHEET 32 OF 57

| FED.RD. DIV.NO. | FEDERAL AID PROJECT NO. | | SHEET NO. |
|---|---|---|---|
| 6 | NH 2000(704), etc. | | 222A |
| STATE | DIST. | COUNTY | |
| TEXAS | SAT | BEXAR | |
| CONT. | SECT. | JOB | HIGHWAY NO. |
| 2452 | 01 | 036, etc. | LP 1604 |

LEVELS DISPLAYED
1 2 3 4 5 6 7 8 9 10 11 12 13 14 15 16
17 18 19 20 21 22 23 24 25 26 27 28 29 30 31 32
33 34 45 56 57 58 59 60 41 42 43 44 45 46 47 48
49 50 51 52 53 54 55 56 57 58 59 60 61 62 63

ACC: *:\oo\design\lp1604fm471-90\
FILE: plan32*ch.dgn

QUANTITIES THIS SHEET
CSJ 2452-01-036

SCALE: 1:1000

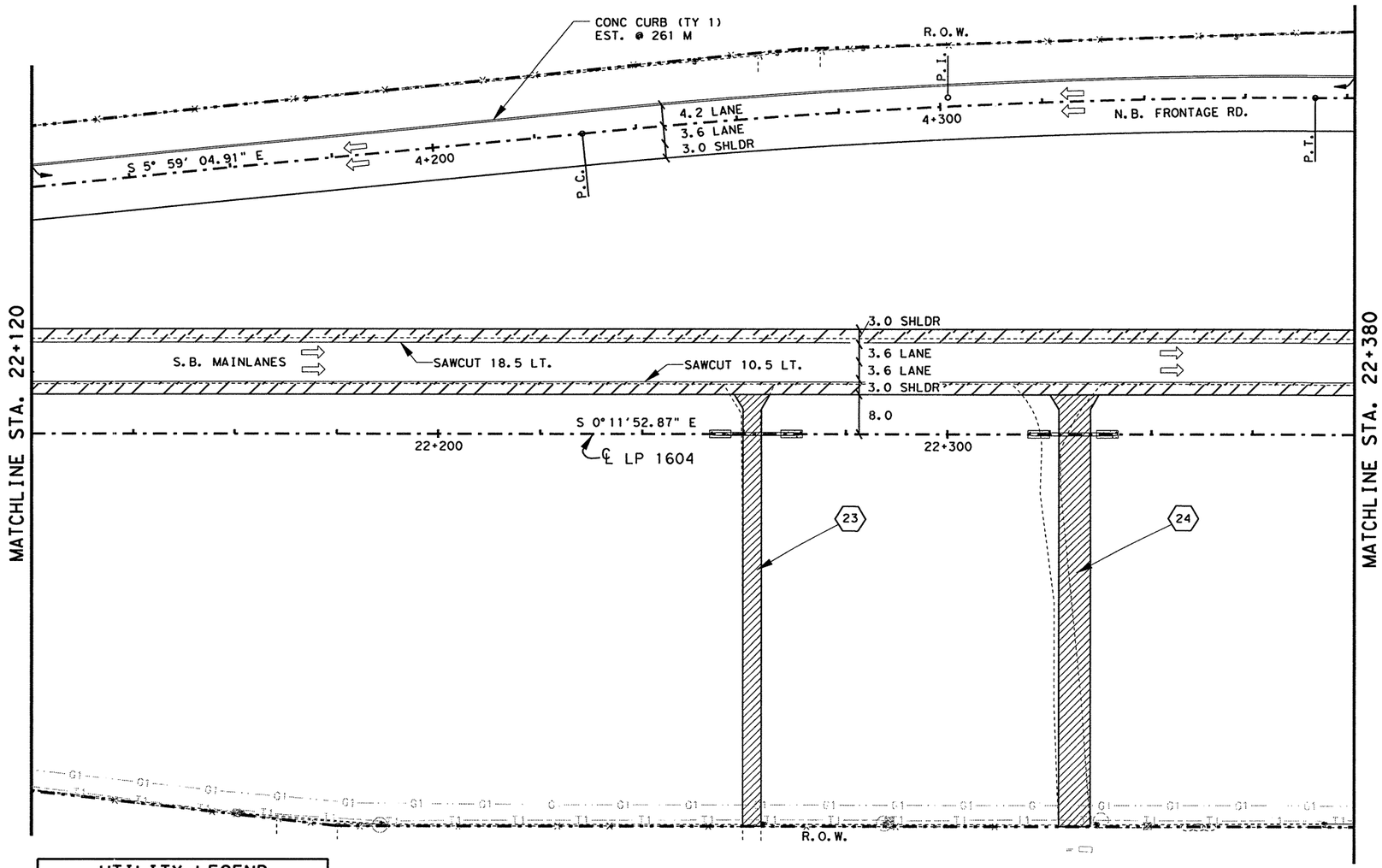


## UTILITY LEGEND

| | |
|---|---|
| W — W — | WATER LINE |
| T1 — T1 — | TELEPHONE LINE |
| C — C — | CABLE LINE |
| G1 — G1 — | GAS LINE |

WIDENING AREA

## ESTIMATED QUANTITIES

| | ITEM # | ITEM | UNIT | QTY. |
|---|---|---|---|---|
| | 100-5002 | PREP ROW | KM | 0.26 |
| | 110-5001 | EXCAVATION (RDWY) | M3 | 14349 |
| | 132-5018 | EMBANK (ORD COMP) (TY B) (CL 3) | M3 | 518 |
| | 160-5002 | FURN AND PLAC TPSL (CL 2) (150 MM) | M2 | 15138 |
| | 164-5049 | DRILL SEED (PERM) (URBAN) (CLAY) | M2 | 15138 |
| | 247-5024 | FL BS (COMPL IN PLAC)(TY A GR 6 CL 4) | M3 | 1261 |
| | 310-5006 | ASPH MATL (AE-P) | L | 3035 |
| * | | ONE CRSE SURF TREAT | M2 | 6622 |
| | 316-5028 | AGGR (TY PB, GR 4) | M3 | 60 |
| | 316-5226 | ASPH (AC-15P, HFRS-2P OR CRS-2P) | L | 9006 |
| | 345-5004 | ASPH STAB BS (GR 4) | MGR | 922 |
| | 529-5001 | CONC CURB (TY 1) | M | 261 |
| | 530-5003 | DRVWAYS (ASPH- CONC PAV) | M2 | 880 |
| | 3117-5003 | HOT MIX (TY C) | MGR | 619 |
| | 3117-5018 | HOT MIX (TY C) (SURF) | MGR | 587 |
| # | 3117-5024 | HOT MIX (TY C) (LEVEL-UP) | MGR | 421 |

* FOR CONTRACTORS INFORMATION ONLY
# QUANTITY COMPUTER GENERATED

NOTE(S):

ALL DIMENSIONS ARE IN METERS UNLESS OTHERWISE NOTED.

FOR HORIZONTAL ALIGNMENT / DATA, SEE SHEET(S) 164 - 171.

FOR LIMITS OF SEEDING & TOPSOIL, SEE PROJECT X-SECTIONS AND TYPICAL SECTIONS.

(##) DRIVEWAY #, FOR MORE DETAILS SEE SHEET(S) 27, 28 & 336..

FOR RIPRAP ASSOCIATED WITH STORM DRAINAGE STRUCTURES SEE SHEET(S) 454 - 470.

STATE OF TEXAS
JOEL K. DAVENPORT, JR.
79276
REGISTERED PROFESSIONAL ENGINEER

Joel K Davenport Jr 11/1/00
Joel K. Davenport, Jr. P.E. 79276 Date

©2000
Texas Department of Transportation

# PLAN SHEET

SHEET 33 OF 57

| FED.RD. DIV.NO. | FEDERAL AID PROJECT NO. | | SHEET NO. |
|---|---|---|---|
| 6 | NH 2000(704), etc. | | 223 |
| STATE | DIST. | COUNTY | |
| TEXAS | SAT | BEXAR | |
| CONT. | SECT. | JOB | HIGHWAY NO. |
| 2452 | 01 | 036, etc. | LP 1604 |

LEVELS DISPLAYED
1 2 3 4 5 6 7 8 9 10 11 12 21 31 41 51 61 71 81 91 92 02 12 22 32 42 52 62 72 82 93 03 13 23 33 43 53 63 73 83 93 04 14 24 34 44 54 64 74 84 94 05 15 25 35 45 55 65 75 85 95 06 16 26 36

ACC: t:\ao\design\lp1604fm471-90\
FILE: plan33.dgn

Plotted on: 6/15/2004
Design Filename: T:\AO\Design\lp1604fm471-90\PD*Phase2*change*order*mylars\submittal\plansheets\road\plan33.dgn

QUANTITIES THIS SHEET
CSJ 2452-01-036

SCALE: 1:1000

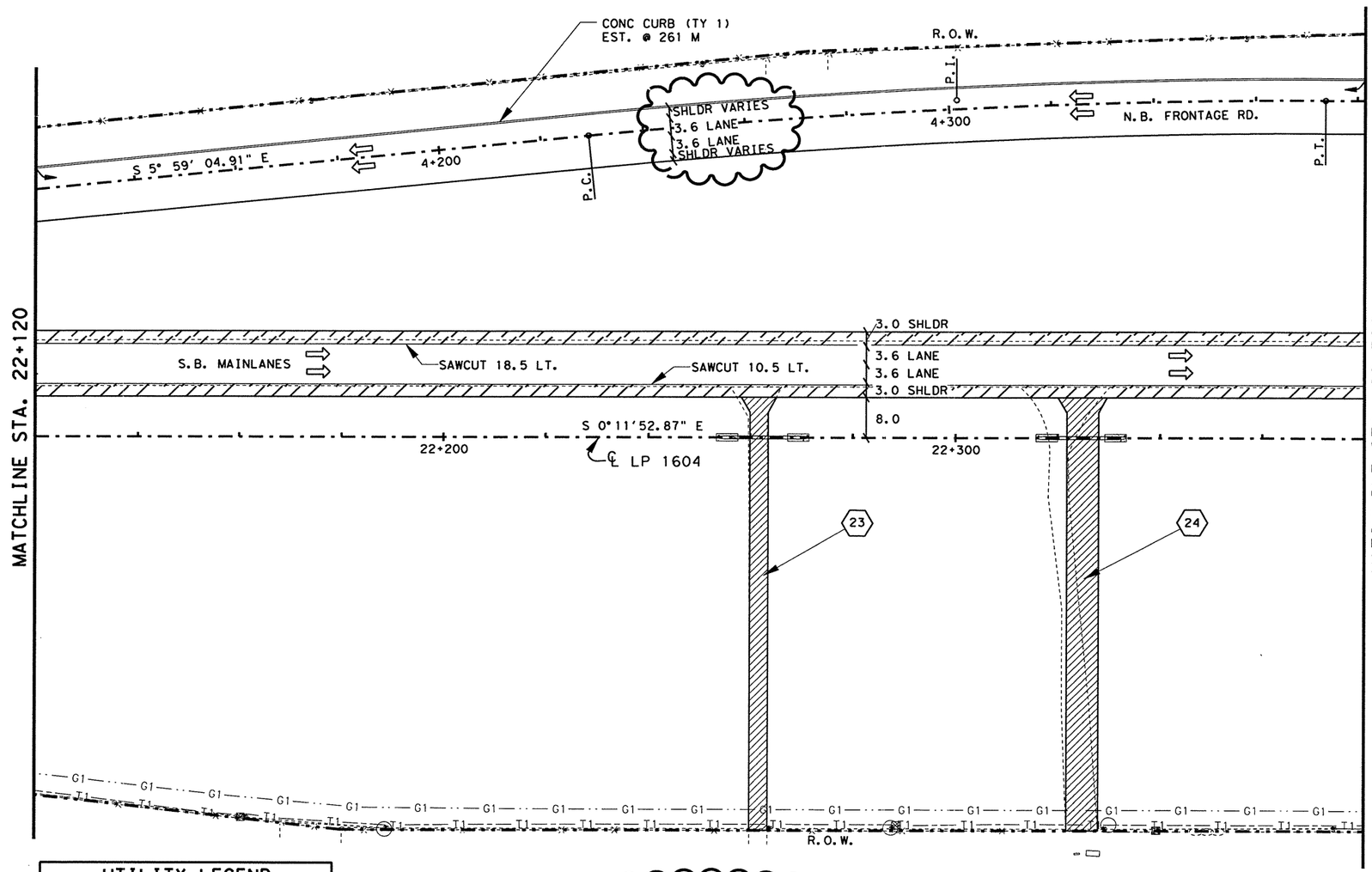


## ESTIMATED QUANTITIES

| | ITEM # | ITEM | UNIT | QTY. |
|---|---|---|---|---|
| | 100-5002 | PREP ROW | KM | 0.26 |
| | 110-5001 | EXCAVATION (RDWY) | M3 | 14350 |
| | 132-5018 | EMBANK (ORD COMP)(TY B) FCL 3) | M3 | 518 |
| | 160-5002 | FURN AND PLAC TPSL (CL 2)(150 MM) | M2 | 15138 |
| | 164-5049 | DRILL SEED (PERM)(URBAN)(CLAY) | M2 | 15138 |
| | 247-5024 | FL BS (COMPL IN PLAC)(TY A GR 6 CL 4) | M3 | 1261 |
| | 310-5006 | ASPH MATL (AE-P) | L | 3035 |
| * | | ONE CRSE SURF TREAT | M2 | 6622 |
| | 316-5028 | AGGR (TY PB, GR 4) | M3 | 60 |
| | 316-5226 | ASPH (AC-15P, HFRS-2P OR CRS-2P) | L | 9006 |
| | 345-5004 | ASPH STAB BS (GR 4) | MGR | 922 |
| | 529-5001 | CONC CURB (TY 1) | M | 261 |
| | 530-5003 | DRVWAYS (ASPH- CONC PAV) | M2 | 880 |
| | 3117-5003 | HOT MIX (TY C) | MGR | 619 |
| | 3117-5018 | HOT MIX (TY C)(SURF) | MGR | 587 |
| # | 3117-5024 | HOT MIX (TY C)(LEVEL-UP) | MGR | 421 |

* FOR CONTRACTORS INFORMATION ONLY
# QUANTITY COMPUTER GENERATED

NOTE(S):

ALL DIMENSIONS ARE IN METERS UNLESS OTHERWISE NOTED.

FOR HORIZONTAL ALIGNMENT / DATA, SEE SHEET(S) 164 - 171.

FOR LIMITS OF SEEDING & TOPSOIL, SEE PROJECT X-SECTIONS AND TYPICAL SECTIONS.

(#) DRIVEWAY #, FOR MORE DETAILS SEE SHEET(S) 27, 28 & 336.

FOR RIPRAP ASSOCIATED WITH STORM DRAINAGE STRUCTURES SEE SHEET(S) 454 - 470.

## UTILITY LEGEND

| | |
|---|---|
| — W — · — W — · — | WATER LINE |
| — T1 — — — T1 — — — | TELEPHONE LINE |
| ——— C — · · — C — | CABLE LINE |
| — · · — G1 — · · — G1 — · · | GAS LINE |

**CHANGE ORDER NO. 64**

-REVISED RDWY GEOMETRICS AND LANE CONFIGURATIONS.
-REVISED QUANTITIES.

WIDENING AREA

CHANGE ORDER NO. 64 | REVISED SHEET

STATE OF TEXAS
JEROME D. PAVLISKA
76075
REGISTERED PROFESSIONAL ENGINEER

Jerome D. Pavliska, P.E 6-18-04
Jerome D. Pavliska, P.E. Date

Texas Department of Transportation

# PLAN SHEET

SHEET 33 OF 57

| FED. RD. DIV. NO. | FEDERAL AID PROJECT NO. | | SHEET NO. |
|---|---|---|---|
| 6 | NH 2000(704),etc. | | 223A |
| STATE | DIST. | COUNTY | |
| TEXAS | SAT | BEXAR | |
| CONT. | SECT. | JOB | HIGHWAY NO. |
| 2452 | 01 | 036,etc. | LP 1604 |

06-15-04

LEVELS DISPLAYED
1 2 3 4 5 6 7 8 9 10 11 12 13 14 15 16
17 18 19 20 21 22 23 24 25 26 27 28 29 30 31 32
33 34 35 36 37 38 39 40 41 42 43 44 45 46 47 48
49 50 51 52 63 54 55 56 57 58 59 60 61 62 63
ACC: t:\ao\design\lp1604fm471-90\
FILE: plan33.dgn

QUANTITIES THIS SHEET
CSJ 2452-01-036

SCALE: 1:1000

NOTE(S):

ALL DIMENSIONS ARE IN METERS UNLESS OTHERWISE NOTED.

FOR HORIZONTAL ALIGNMENT / DATA, SEE SHEET(S) 164 - 171.

FOR LIMITS OF SEEDING & TOPSOIL, SEE PROJECT X-SECTIONS AND TYPICAL SECTIONS.

FOR INTERSECTION LAYOUT, SEE SHEET(S) 329 -331.

FOR ILLUMINATION LAYOUT / DETAILS SEE SHEET 622

FOR SIGNALIZATION LAYOUT / DETAILS SEE SHEET 570.

FOR RIPRAP DETAILS SEE PROJECT X-SECTIONS AND SHEET 342.

FOR RIPRAP ASSOCIATED WITH STORM DRAINAGE STRUCTURES SEE SHEET(S) 454 - 470.

FOR ADDITIONAL STORM DRAIN INFO. REFER TO THE SPECIFIC STORM DRAIN PROFILE SHEET(S).

(#) DRIVEWAY #, FOR MORE DETAILS SEE SHEET(S)27, 28 & 336.

WHEELCHAIR RAMPS TY 2

WIDENING AREA

LIMITS OF ASPH STAB BS @ INTERSECTION

## ESTIMATED QUANTITIES

| | ITEM # | ITEM | UNIT | QTY. |
|---|---|---|---|---|
| | 100-5002 | PREP ROW | KM | 0.32 |
| | 110-5001 | EXCAVATION (RDWY) | M3 | 24143 |
| | 132-5018 | EMBANK (ORD COMP)(TY B)(CL 3) | M3 | 4305 |
| | 160-5002 | FURN AND PLAC TPSL (CL 2)(150 MM) | M2 | 15164 |
| | 164-5049 | DRILL SEED (PERM)(URBAN)(CLAY) | M2 | 15164 |
| | 247-5024 | FL BS (COMPL IN PLAC)(TY A GR 6 CL 4) | M3 | 1214 |
| | 310-5006 | ASPH MATL (AE-P) | L | 4416 |
| * | | ONE CRSE SURF TREAT | M2 | 21934 |
| | 316-5028 | AGGR (TY PB,GR 4) | M3 | 199 |
| | 316-5226 | ASPH (AC-15P, HFRS-2P OR CRS-2P) | L | 29830 |
| | 345-5004 | ASPH STAB BS (GR 4) | MGR | 8737 |
| | 529-5001 | CONC CURB (TY 1) | M | 480 |
| | 529-5026 | CONC CURB (TY A) | M | 459 |
| | 530-5001 | DRVWAYS (CONC)(150 MM) | M2 | 209 |
| | 530-5003 | DRVWAYS (ASPH- CONC PAV) | M2 | 870 |
| | 536-5003 | CONC DIRECT ISLAND | M2 | 288 |
| | 3117-5003 | HOT MIX (TY C) | MGR | 1776 |
| | 3117-5018 | HOT MIX (TY C)(SURF) | MGR | 1725 |
| # | 3117-5024 | HOT MIX (TY C)(LEVEL-UP) | MGR | 99 |
| | | | | |

* FOR CONTRACTORS INFORMATION ONLY
# QUANTITY COMPUTER GENERATED

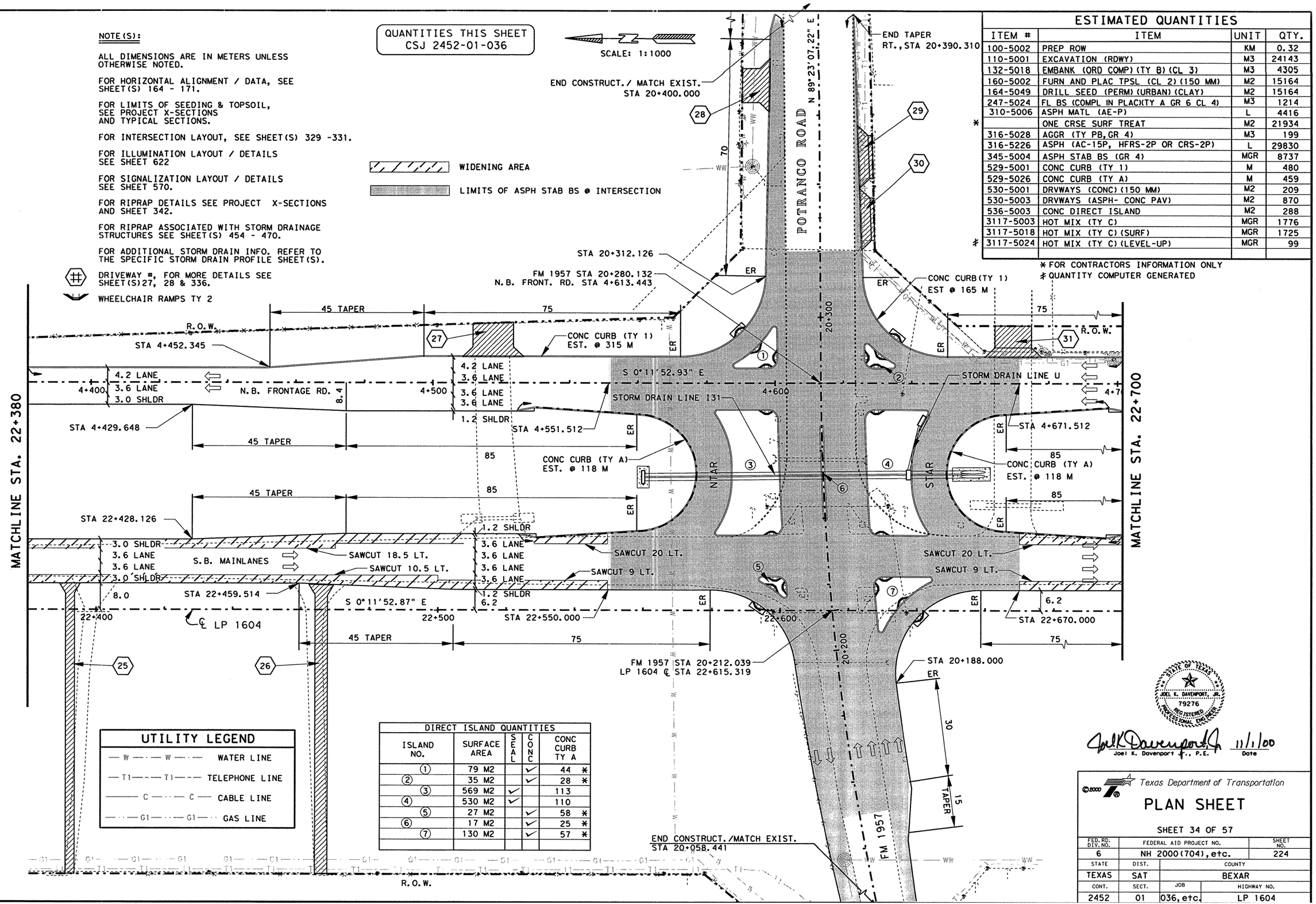


## UTILITY LEGEND

- W — W — WATER LINE
- T1 — T1 — TELEPHONE LINE
- C — C — CABLE LINE
- G1 — G1 — GAS LINE

## DIRECT ISLAND QUANTITIES

| ISLAND NO. | SURFACE AREA | SEAL | CONC | CONC CURB TY A |
|---|---|---|---|---|
| ① | 79 M2 | | ✓ | 44 * |
| ② | 35 M2 | | ✓ | 28 * |
| ③ | 569 M2 | ✓ | | 113 |
| ④ | 530 M2 | ✓ | | 110 |
| ⑤ | 27 M2 | | ✓ | 58 * |
| ⑥ | 17 M2 | | ✓ | 25 * |
| ⑦ | 130 M2 | | ✓ | 57 * |

STATE OF TEXAS
JOEL K. DAVENPORT, JR.
79276
REGISTERED
PROFESSIONAL ENGINEER

Joel K. Davenport Jr., P.E. 11/1/00
Date

Texas Department of Transportation

# PLAN SHEET

SHEET 34 OF 57

| FED.RD. DIV.NO. | FEDERAL AID PROJECT NO. | SHEET NO. |
|---|---|---|
| 6 | NH 2000(704), etc. | 224 |
| STATE | DIST. | COUNTY |
| TEXAS | SAT | BEXAR |
| CONT. | SECT. | JOB / HIGHWAY NO. |
| 2452 | 01 | 036, etc. / LP 1604 |

LEVELS DISPLAYED
1 2 3 4 5 6 7 8 9 10 11 12 13 14 15 16
17 18 19 20 21 22 23 24 25 26 27 28 29 30 31 32
33 34 35 36 37 38 39 40 41 42 43 44 45 46 47 48
49 50 51 52 53 54 55 56 57 58 59 60 62 63

ACC: *:ao\design\lp1604fm471-90\
FILE: plan34.dgn

NOTE(S):

ALL DIMENSIONS ARE IN METERS UNLESS OTHERWISE NOTED.

FOR HORIZONTAL ALIGNMENT / DATA, SEE SHEET(S) 164 - 171.

FOR LIMITS OF SEEDING & TOPSOIL, SEE PROJECT X-SECTIONS AND TYPICAL SECTIONS.

FOR INTERSECTION LAYOUT, SEE SHEET(S) 329 -331.

FOR ILLUMINATION LAYOUT / DETAILS SEE SHEET 622

FOR SIGNALIZATION LAYOUT / DETAILS SEE SHEET 570.

FOR RIPRAP DETAILS SEE PROJECT X-SECTIONS AND SHEET 342.

FOR RIPRAP ASSOCIATED WITH STORM DRAINAGE STRUCTURES SEE SHEET(S) 454 - 470.

FOR ADDITIONAL STORM DRAIN INFO. REFER TO THE SPECIFIC STORM DRAIN PROFILE SHEET(S).

FOR INTERSECTION ISLAND TREATMENT DETAILS, SEE MISC. ROADWAY DETAIL SHEET.

(#) DRIVEWAY #, FOR MORE DETAILS SEE SHEET(S)27, 28 & 336.

WHEELCHAIR RAMPS TY 2

QUANTITIES THIS SHEET
CSJ 2452-01-036

SCALE: 1:1000

WIDENING AREA

LIMITS OF ASPH STAB BS @ INTERSECTION

**CHANGE ORDER NO. 64**
-REVISED RDWY GEOMETRICS AND LANE CONFIGURATIONS
-REVISED DRIVEWAYS #27 THRU 31
-EXTENDED LIMITS OF ASPH BASE ON N.B. FRONT. RD.
-REVISED LARGER ISLAND TREATMENT AT INTERSECTION
-ADDED CONC SIDEWALKS
-ADDED STORM DRAIN LINE P5
-REVISED EARTHWORK
-REVISED QUANTITIES

END CONSTRUCT./ MATCH EXIST. STA 20+400.000

STORM DRAIN LINE P5

EARTHWORK REVISION STA. 20+320 TO 20+420 (WIDENING LEFT)

POTRANCO ROAD

N 89°23'07.22" E

END TAPER RT., STA 20+390.310

CONC SIDEWALKS EST. @ 161 M2

BEGIN N.B. FRONT. RD. X-SLOPE TRANSITION REVISION STA. 4+650 TO STA. 4+958 (REVISED EARTHWORK)

STA 20+312.126

FM 1957 STA 20+280.132
N.B. FRONT. RD. STA 4+613.443

CONC SIDEWALKS EST. @ 256 M2

CONC CURB (TY 1) EST. @ 315 M

CONC CURB (TY 1) EST @ 165 M

45 TAPER

R.O.W.

STA 4+452.345

0.6 SHLDR
3.6 LANE
3.6 LANE
3.0 SHLDR

N.B. FRONTAGE RD.

0.6 SHLDR
3.6 LANE
3.6 LANE
3.6 LANE
3.6 LANE
1.2 SHLDR

STA 4+429.648

STA 4+551.512

STORM DRAIN LINE I31

S 0°11'52.93" E

ORIGINAL 0.212 % X-SLOPE

CONC CURB (TY A) EST. @ 91 M

CONC CURB (TY A) EST. @ 90 M

92 TAPER

STA 22+387.215

MATCHLINE STA. 22+380

MATCHLINE STA. 22+700

VARIES SHLDR
3.6 LANE
3.6 LANE
3.0 SHLDR

S.B. MAINLANES

1.2 SHLDR
3.6 LANE
3.6 LANE
3.6 LANE
3.6 LANE
1.2 SHLDR

SAWCUT 18.5 LT.
SAWCUT 10.5 LT.
SAWCUT 20 LT.
SAWCUT 9 LT.
SAWCUT 20 LT.
SAWCUT 9 LT.

STORM DRAIN LINE U

STA 22+459.514

STA 22+550.000

STA 22+670.000

S 0°11'52.87" E

℄ LP 1604

45 TAPER

FM 1957 STA 20+212.039
LP 1604 ℄ STA 22+615.319

STA 20+188.000

4.2 LANE
3.6 LANE
4.2 LANE
3.6 LANE
4.2 LANE

30

15 TAPER

FM 1957

END CONSTRUCT./MATCH EXIST. STA 20+058.441

R.O.W.

**ESTIMATED QUANTITIES**

| ITEM # | ITEM | UNIT | QTY. |
|---|---|---|---|
| 100-5002 | PREP ROW | KM | 0.32 |
| 110-5001 | EXCAVATION (RDWY) | M3 | 23237 |
| 132-5018 | EMBANK (ORD COMP) (TY B) (CL 3) | M3 | 4107 |
| 160-5002 | FURN AND PLAC TPSL (CL 2) (150 MM) | M2 | 14442 |
| 164-5049 | DRILL SEED (PERM) (URBAN) (CLAY) | M2 | 14442 |
| 247-5024 | FL BS (COMPL IN PLACE)(TY A GR 6 CL 4) | M3 | 1013 |
| 310-5006 | ASPH MATL (AE-P) | L | 5066 |
| * | ONE CRSE SURF TREAT | M2 | 22496 |
| 316-5028 | AGGR (TY PB, GR 4) | M3 | 196 |
| ** 316-5226 | ASPH (AC-15P, HFRS-2P OR CRS-2P) | L | 30800 |
| 345-5004 | ASPH STAB BS (GR 4) | MGR | 9690 |
| 432-5001 | RIPRAP (CONC) (CL B) | M3 | 8.5 |
| 529-5001 | CONC CURB (TY 1) | M | 480 |
| 529-5026 | CONC CURB (TY A) | M | 404 |
| 530-5001 | DRVWAYS (CONC) (150 MM) | M2 | 308 |
| 530-5003 | DRVWAYS (ASPH- CONC PAV) | M2 | 618 |
| 531-5002 | CONCRETE SIDEWALKS | M2 | 521 |
| 536-5003 | CONC DIRECT ISLAND | M2 | 288 |
| 3117-5003 | HOT MIX (TY C) | MGR | 1844 |
| 3117-5018 | HOT MIX (TY C) (SURF) | MGR | 1793 |
| 3117-5024 | HOT MIX (TY C) (LEVEL-UP) | MGR | 89 |
| 316-5021 | AGGR (TY B, GR 5) | M3 | 6 |

* FOR CONTRACTORS INFORMATION ONLY
** QUANTITY COMPUTER GENERATED
** QUANTITY INCLUDES ASPHALT FOR DIRECTIONAL ISLANDS

Remove Drvwys # 29, 30, & 31

**DIRECT ISLAND QUANTITIES**

| ISLAND NO. | SURFACE AREA (CONC) | SURFACE AREA (SEAL) | CONC CURB TY A | CONC SDWLK | CONC RIPRAP CL B | AGGR TY B GR 5 |
|---|---|---|---|---|---|---|
| ① | 79 M2 | | 44 * | | | |
| ② | 35 M2 | | 28 * | | | |
| ③ | | 489 M2 * | 113 | 52 M2 | 4.3 M3 | 3 M3 |
| ④ | | 450 M2 * | 110 | 52 M2 | 4.2 M3 | 3 M3 |
| ⑤ | 27 M2 | | 58 * | | | |
| ⑥ | 17 M2 | | 25 * | | | |
| ⑦ | 130 M2 | | 57 * | | | |

**UTILITY LEGEND**

- W — W — WATER LINE
- T1 — T1 — TELEPHONE LINE
- C — C — CABLE LINE
- G1 — G1 — GAS LINE

CHANGE ORDER NO. 64

REVISED SHEET

STATE OF TEXAS
JEROME D. PAVLISKA
76075
REGISTERED PROFESSIONAL ENGINEER

Jerome D. Pavliska, P.E. 4-28-04
Jerome D. Pavliska, P.E. Date

©2000

Texas Department of Transportation

# PLAN SHEET

SHEET 34 OF 57

| FED. RD. DIV. NO. | FEDERAL AID PROJECT NO. | SHEET NO. |
|---|---|---|
| 6 | NH 2000(704), etc. | 224 A |
| STATE | DIST. | COUNTY |
| TEXAS | SAT | BEXAR |
| CONT. | SECT. | JOB / HIGHWAY NO. |
| 2452 | 01 | 036, etc. / LP 1604 |

05-01-04

LEVELS DISPLAYED
1 2 3 4 5 6 7 8 9 10 11 12 14 15 16
17 18 19 20 21 22 23 24 25 26 27 28 29 30 31 32
33 34 35 36 37 38 39 40 41 42 43 44 45 46 47 48
49 50 51 52 53 54 55 56 57 58 59 60 61 62 63

ACC: t:\ao\design\lp1604fm471-90\
FILE: plan34*pd.dgn

NOTE(S):

ALL DIMENSIONS ARE IN METERS UNLESS OTHERWISE NOTED.

FOR HORIZONTAL ALIGNMENT / DATA, SEE SHEET(S) 164 - 171.

FOR LIMITS OF SEEDING & TOPSOIL, SEE PROJECT X-SECTIONS AND TYPICAL SECTIONS.

FOR INTERSECTION LAYOUT, SEE SHEET(S) 329 -331.

FOR ILLUMINATION LAYOUT / DETAILS SEE SHEET 622

FOR SIGNALIZATION LAYOUT / DETAILS SEE SHEET 570.

FOR RIPRAP DETAILS SEE PROJECT X-SECTIONS AND SHEET 342.

FOR RIPRAP ASSOCIATED WITH STORM DRAINAGE STRUCTURES SEE SHEET(S) 454 - 470.

FOR ADDITIONAL STORM DRAIN INFO. REFER TO THE SPECIFIC STORM DRAIN PROFILE SHEET(S).

64 FOR INTERSECTION ISLAND TREATMENT DETAILS, SEE MISC. ROADWAY DETAIL SHEET.

# DRIVEWAY #, FOR MORE DETAILS SEE SHEET(S)27, 28 & 336.

WHEELCHAIR RAMPS TY 2

# REFERS TO CHANGES MADE AS PART OF CHANGE ORDER.

QUANTITIES THIS SHEET
CSJ 2452-01-036

SCALE: 1:1000

WIDENING AREA / NEW CONSTRUCTION (BLACK BASE)

LIMITS OF ASPH STAB BS @ INTERSECTION

CHANGE ORDER NO. 119
-NEW REHAB TREATMENT TO S.B. MAINLANES
-REMOVED DRIVEWAY #29, #30, AND #31 (CONSTRUCTED BY OTHERS)
-REVISED QUANTITIES

END CONSTRUCT./ MATCH EXIST. STA 20+400.000

STORM DRAIN LINE P5

EARTHWORK REVISION STA. 20+320 TO 20+420 (WIDENING LEFT)

STA 20+312.126

FM 1957 STA 20+280.132
N.B. FRONT. RD. STA 4+613.443

CONC SIDEWALKS EST. @ 256 M2

CONC CURB (TY 1) EST. @ 315 M

45 TAPER

75

R.O.W.

STA 4+452.345

0.6 SHLDR
3.6 LANE
3.6 LANE
3.0 SHLDR

4+400

N.B. FRONTAGE RD.

8.4

4+500

0.6 SHLDR
3.6 LANE
3.6 LANE
3.6 LANE
3.6 LANE
1.2 SHLDR

STA 4+429.648

45 TAPER

85

STA 4+551.512

S 0°11'52.93" E

4+600

STORM DRAIN LINE I31

CONC CURB (TY A) EST. @ 91 M

92 TAPER

80

STA 22+387.215

VARIES SHLDR
3.6 LANE
3.6 LANE
3.0 SHLDR

S.B. MAINLANES

SAWCUT 18.5 LT.
SAWCUT 10.5 LT.

1.2 SHLDR
3.6 LANE
3.6 LANE
3.6 LANE
3.6 LANE
3.6 LANE
1.2 SHLDR

SAWCUT 20 LT.
SAWCUT 9 LT.

STA 22+459.514

8.0

22+400

℄ LP 1604

S 0°11'52.87" E

6.2

22+500

STA 22+550.000

22+600

45 TAPER

75

FM 1957 STA 20+212.039
LP 1604 ℄ STA 22+615.319

STORM DRAIN LINE U

20+200

20+300

POTRANCO ROAD

N 89°23'07.22" E

END TAPER RT., STA 20+390.310

CONC SIDEWALKS EST. @ 161 M2

BEGIN N.B. FRONT. RD. X-SLOPE TRANSITION REVISION STA. 4+650 TO STA. 4+958 (REVISED EARTHWORK)

CONC CURB (TY 1) EST @ 165 M

ORIGINAL X-SLOPE

0.212 %

4+7

85

CONC CURB (TY A) EST. @ 90 M

85

STA 22+670.000

75

STA 20+188.000

4.2 LANE
3.6 LANE
3.6 LANE
4.2 LANE

30

15 TAPER

FM 1957

END CONSTRUCT./MATCH EXIST. STA 20+058.441

R.O.W.

MATCHLINE STA. 22+380

MATCHLINE STA. 22+700

CHANGE ORDER NO. 119

REVISED SHEET

ESTIMATED QUANTITIES

| ITEM # | ITEM | UNIT | QTY. |
|---|---|---|---|
| 100-5002 | PREP ROW | KM | 0.32 |
| 110-5001 | EXCAVATION (RDWY) | M3 | 23310 |
| 132-5018 | EMBANK (ORD COMP)(TY B)(CL 3) | M3 | 4157 |
| 160-5002 | FURN AND PLAC TPSL (CL 2)(150 MM) | M2 | 14442 |
| 164-5049 | DRILL SEED (PERM)(URBAN)(CLAY) | M2 | 14442 |
| 247-5024 | FL BS (COMPL IN PLAC)(TY A GR 6 CL 4) | M3 | 1138 |
| 310-5006 | ASPH MATL (AE-P) | L | 3023 |
| | ONE CRSE SURF TREAT | M2 | 18493 |
| 316-5028 | AGGR (TY PB,GR 4) | M3 | 168 |
| 316-5226 | ASPH (AC-15P, HFRS-2P OR CRS-2P) | L | 25150 |
| 345-5004 | ASPH STAB BS (GR 4) | MGR | 9923 |
| 432-5001 | RIPRAP (CONC) (CL B) | M3 | 8.5 |
| 529-5001 | CONC CURB (TY 1) | M | 480 |
| 529-5026 | CONC CURB (TY A) | M | 404 |
| 530-5001 | DRVWAYS (CONC)(150 MM) | M2 | 524 |
| 530-5003 | DRVWAYS (ASPH- CONC PAV) | M2 | 555 |
| 531-5002 | CONCRETE SIDEWALKS | M2 | 521 |
| 536-5003 | CONC DIRECT ISLAND | M2 | 288 |
| 3117-5003 | HOT MIX (TY C) | MGR | 1844 |
| 3117-5018 | HOT MIX (TY C)(SURF) | MGR | 1793 |
| 3117-5024 | HOT MIX (TY C)(LEVEL-UP) | MGR | 54 |
| 316-5021 | AGGR (TY B,GR 5) | M3 | 6 |

* FOR CONTRACTORS INFORMATION ONLY
# QUANTITY COMPUTER GENERATED
## QUANTITY INCLUDES ASPHALT FOR DIRECTIONAL ISLANDS

DIRECT ISLAND QUANTITIES 64

| ISLAND NO. | SURFACE AREA (CONC) | SURFACE AREA (SEAL) | CONC CURB TY A | CONC SDWLK | CONC RIPRAP CL B | AGGR TY B GR 5 |
|---|---|---|---|---|---|---|
| (1) | 79 M2 | | 44 * | | | |
| (2) | 35 M2 | | 28 * | | | |
| (3) | | 489 M2 * | 113 | 52 M2 | 4.3 M3 | 3 M3 |
| (4) | | 450 M2 * | 110 | 52 M2 | 4.2 M3 | 3 M3 |
| (5) | 27 M2 | | 58 * | | | |
| (6) | 17 M2 | | 25 * | | | |
| (7) | 130 M2 | | 57 * | | | |

UTILITY LEGEND

W — W — WATER LINE
T1 — T1 — TELEPHONE LINE
C — C — CABLE LINE
G1 — G1 — GAS LINE

STATE OF TEXAS
FITZGERALDO G. SANCHEZ
76084
LICENCED
PROFESSIONAL ENGINEER

Fitzgeraldo G. Sanchez 03-10-06
Fitzgeraldo G. Sanchez, P.E. Date

©2000

Texas Department of Transportation

PLAN SHEET

SHEET 34 OF 57

| FED.RD. DIV.NO. | FEDERAL AID PROJECT NO. | | SHEET NO. |
|---|---|---|---|
| 6 | NH 2000(704),etc. | | 224AB |
| STATE | DIST. | COUNTY | |
| TEXAS | SAT | BEXAR | |
| CONT. | SECT. | JOB | HIGHWAY NO. |
| 2452 | 01 | 036,etc. | LP 1604 |

2-17-06

Plotted on. 24/2006

Design Filenc. T:\AO\Design\lp1604fm471-90\plan34*pd.dgn

ACC: t:ao\design\lp1604fm471-90\

FILE: plan34*pd.dgn

LEVELS DISPLAYED

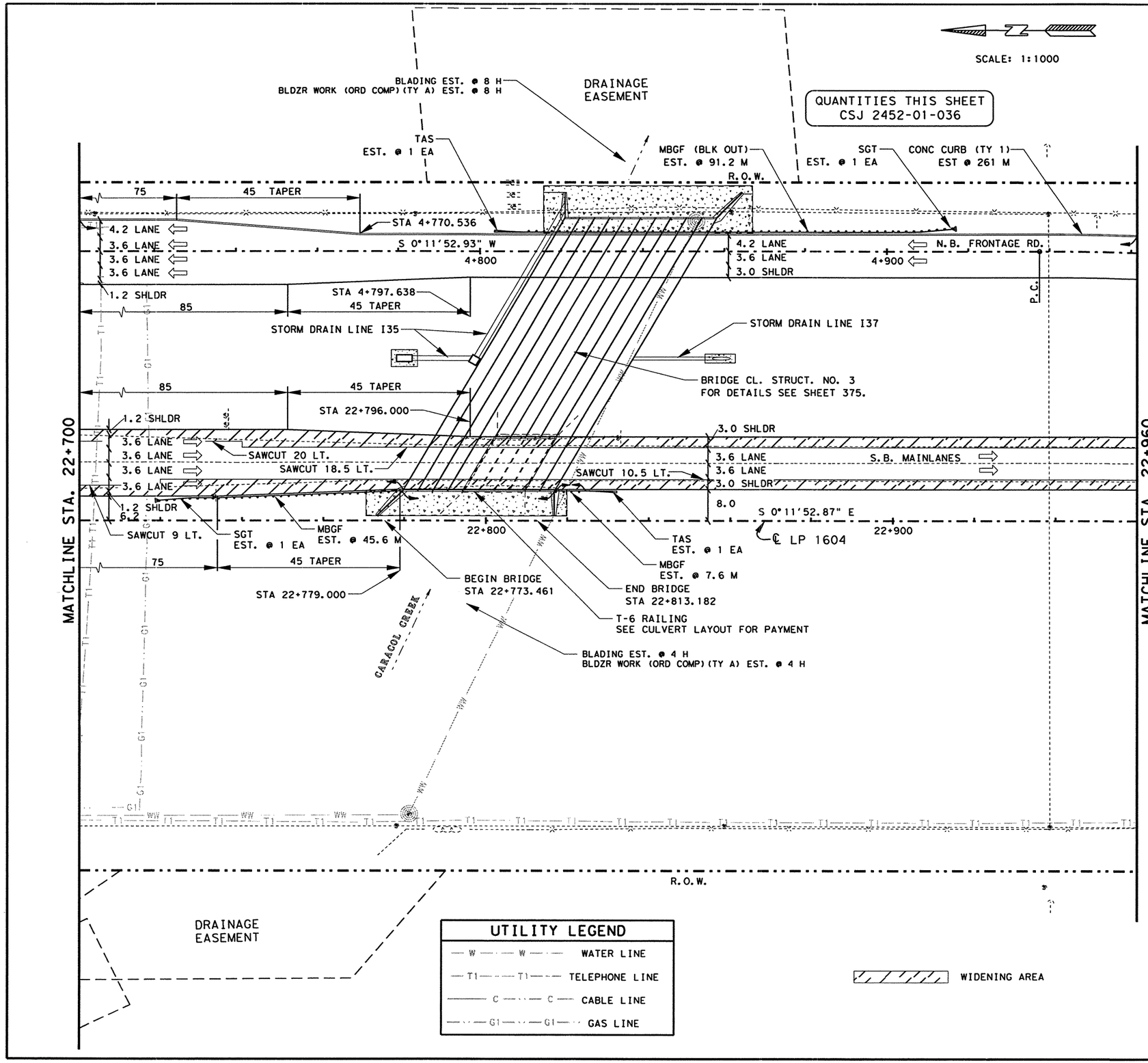


## ESTIMATED QUANTITIES

| | ITEM # | ITEM | UNIT | QTY. |
|---|---|---|---|---|
| | 100-5002 | PREP ROW | KM | 0.26 |
| | 110-5001 | EXCAVATION (RDWY) | M3 | 292 |
| | 132-5018 | EMBANK (ORD COMP)(TY B)(CL 3) | M3 | 23114 |
| | 150-5003 | BLADING | H | 12 |
| | 156-5003 | BLDZR WORK (ORD COMP)(TY A) | H | 12 |
| | 160-5002 | FURN AND PLAC TPSL (CL 2)(150 MM) | M2 | 15661 |
| | 164-5049 | DRILL SEED (PERM)(URBAN)(CLAY) | M2 | 15661 |
| | 247-5024 | FL BS (COMPL IN PLAC)(TY A GR 6 CL 4) | M3 | 1378 |
| | 310-5006 | ASPH MATL (AE-P) | L | 3328 |
| * | | ONE CRSE SURF TREAT | M2 | 7149 |
| | 316-5028 | AGGR (TY PB,GR 4) | M3 | 65 |
| | 316-5226 | ASPH (AC-15P, HFRS-2P OR CRS-2P) | L | 9723 |
| | 345-5004 | ASPH STAB BS (GR 4) | MGR | 1007 |
| | 529-5001 | CONC CURB (TY 1) | M | 261 |
| | 540-5005 | TERM ANCH SECT (2.67 MM) | EA | 2 |
| | 540-5006 | MBGF (TIM POST)(2.67 MM) | M | 53.2 |
| | 540-5007 | MBGF (BLK OUT)(TIM POST)(2.67 MM) | M | 91.2 |
| | 3117-5003 | HOT MIX (TY C) | MGR | 668 |
| | 3117-5018 | HOT MIX (TY C)(SURF) | MGR | 637 |
| # | 3117-5024 | HOT MIX (TY C)(LEVEL-UP) | MGR | 200 |
| | 5119-5003 | SINGLE GDRAIL TERM (TY III) | EA | 2 |

* FOR CONTRACTORS INFORMATION ONLY
# QUANTITY COMPUTER GENERATED

NOTE(S):

ALL DIMENSIONS ARE IN METERS UNLESS OTHERWISE NOTED.

FOR HORIZONTAL ALIGNMENT / DATA, SEE SHEET(S) 164 - 171.

FOR LIMITS OF SEEDING & TOPSOIL, SEE PROJECT X-SECTIONS AND TYPICAL SECTIONS.

FOR ADDITIONAL STORM DRAIN INFO. REFER TO THE SPECIFIC STORM DRAIN PROFILE SHEET(S).

FOR RIPRAP ASSOCIATED WITH STORM DRAINAGE STRUCTURES SEE SHEET(S) 454 - 470.

STATE OF TEXAS
JOEL K. DAVENPORT, JR.
79276
REGISTERED PROFESSIONAL ENGINEER

Joel K. Davenport Jr. 11/1/00
Joel K. Davenport Jr., P.E. Date

Texas Department of Transportation

# PLAN SHEET

SHEET 35 OF 57

| FED.RD. DIV.NO. | FEDERAL AID PROJECT NO. | | SHEET NO. |
|---|---|---|---|
| 6 | NH 2000(704),etc. | | 225 |
| STATE | DIST. | COUNTY | |
| TEXAS | SAT | BEXAR | |
| CONT. | SECT. | JOB | HIGHWAY NO. |
| 2452 | 01 | 036,etc. | LP 1604 |

LEVELS DISPLAYED
1 2 3 4 5 6 7 8 9 10 11 12 13 14 15 16
17 18 19 20 21 22 23 24 25 26 27 28 29 30 31 32
33 34 35 55 63 75 89 94 141 142 143 144 145 646 748
496 505 525 535 545 565 575 589 606 616 2631

ACC: t:\ao\design\lp1604fm471-90\
FILE: plan35.dgn

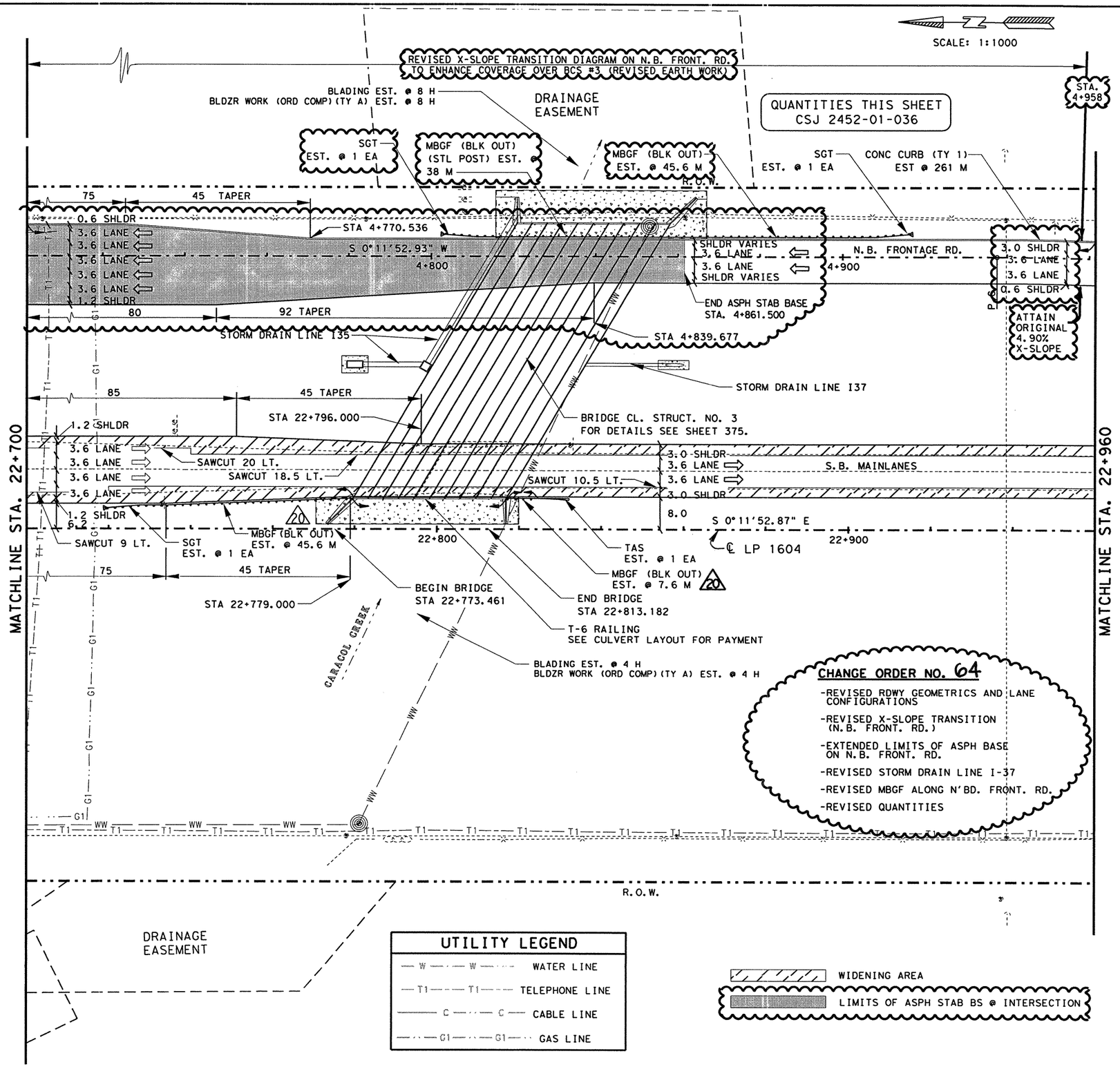


## ESTIMATED QUANTITIES

| | ITEM # | ITEM | UNIT | QTY. |
|---|---|---|---|---|
| | 100-5002 | PREP ROW | KM | 0.26 |
| | 110-5001 | EXCAVATION (RDWY) | M3 | 290 |
| | 132-5018 | EMBANK (ORD COMP) (TY B) (CL 3) | M3 | 23414 |
| | 150-5003 | BLADING | H | 12 |
| | 156-5003 | BLDZR WORK (ORD COMP) (TY A) | H | 12 |
| | 160-5002 | FURN AND PLAC TPSL (CL 2) (150 MM) | M2 | 15270 |
| | 164-5049 | DRILL SEED (PERM) (URBAN) (CLAY) | M2 | 15270 |
| | 247-5024 | FL BS (COMPL IN PLAC)(TY A GR 6 CL 4) | M3 | 477 |
| | 310-5006 | ASPH MATL (AE-P) | L | 3680 |
| * | | ONE CRSE SURF TREAT | M2 | 7540 |
| | 316-5028 | AGGR (TY PB, GR 4) | M3 | 69 |
| | 316-5226 | ASPH (AC-15P, HFRS-2P OR CRS-2P) | L | 10255 |
| | 345-5004 | ASPH STAB BS (GR 4) | MGR | 3022 |
| | 529-5001 | CONC CURB (TY 1) | M | 261 |
| | 540-5005 | TERM ANCH SECT (2.67 MM) | EA | 4 |
| 20 | 540-5006 | MBGF (TIM POST) (2.67 MM) | M | 205 |
| 20 | 540-5007 | MBGF (BLK OUT) (TIM POST) (2.67 MM) | M | 98.8 |
| | 3117-5003 | HOT MIX (TY C) | MGR | 98 |
| | 3117-5018 | HOT MIX (TY C) (SURF) | MGR | 674 |
| # | 3117-5024 | HOT MIX (TY C) (LEVEL-UP) | MGR | 226 |
| | 5119-5003 | SINGLE GDRAIL TERM (TY III) | EA | 3 |
| | 540-5008 | MBGF (BLK OUT) STL POST (2.67 MM) | M | 38 |

* FOR CONTRACTORS INFORMATION ONLY
\# QUANTITY COMPUTER GENERATED

NOTE(S):

-ALL DIMENSIONS ARE IN METERS UNLESS OTHERWISE NOTED.

-FOR HORIZONTAL ALIGNMENT / DATA, SEE SHEET(S) 164 - 171.

-FOR LIMITS OF SEEDING & TOPSOIL, SEE PROJECT X-SECTIONS AND TYPICAL SECTIONS.

-FOR ADDITIONAL STORM DRAIN INFO. REFER TO THE SPECIFIC STORM DRAIN PROFILE SHEET(S).

-FOR RIPRAP ASSOCIATED WITH STORM DRAINAGE STRUCTURES SEE SHEET(S) 454 - 470.

20 -REFERS TO CHANGES MADE AS PART OF CHANGE ORDER.

**CHANGE ORDER NO. 64**

-REVISED RDWY GEOMETRICS AND LANE CONFIGURATIONS

-REVISED X-SLOPE TRANSITION (N.B. FRONT. RD.)

-EXTENDED LIMITS OF ASPH BASE ON N.B. FRONT. RD.

-REVISED STORM DRAIN LINE I-37

-REVISED MBGF ALONG N'BD. FRONT. RD.

-REVISED QUANTITIES

## UTILITY LEGEND

| | |
|---|---|
| W W | WATER LINE |
| T1 T1 | TELEPHONE LINE |
| C C | CABLE LINE |
| G1 G1 | GAS LINE |

**CHANGE ORDER NO. 64**

**REVISED SHEET**

STATE OF TEXAS · JEROME D. PAVLISKA · 76075 · REGISTERED PROFESSIONAL ENGINEER

Jerome D. Pavliska, P.E. 6-18-04

Jerome D. Pavliska, P.E. Date

©2000

Texas Department of Transportation

# PLAN SHEET

SHEET 35 OF 57

| FED. RD. DIV. NO. | FEDERAL AID PROJECT NO. | | SHEET NO. |
|---|---|---|---|
| 6 | NH 2000(704), etc. | | 225A |
| STATE | DIST. | COUNTY | |
| TEXAS | SAT | BEXAR | |
| CONT. | SECT. | JOB | HIGHWAY NO. |
| 2452 | 01 | 036, etc. | LP 1604 |

06-18-04

LEVELS DISPLAYED
1 2 3 4 5 6 7 8 9 10 11 12 13 14 15 16 17 18 19 20 21 22 23 24 25 26 27 28 29 30 31 32 33 34 35 36 37 38 39 40 41 42 43 44 45 46 47 48 49 50 51 52 53 54 55 56 57 58 59 60 61 62 63

ACC: t:\ao\design\lp1604fm471-90\
FILE: plan35a*pd.dgn

SCALE: 1:1000

REVISED X-SLOPE TRANSITION DIAGRAM ON N.B. FRONT. RD.
TO ENHANCE COVERAGE OVER BCS #3 (REVISED EARTH WORK)

QUANTITIES THIS SHEET
CSJ 2452-01-036

DRAINAGE EASEMENT

BLADING EST. @ 8 H
BLDZR WORK (ORD COMP)(TY A) EST. @ 8 H

SGT EST. @ 1 EA

MBGF (BLK OUT) (STL POST) EST. @ 38 M

MBGF (BLK OUT) EST. @ 45.6 M

SGT EST. @ 1 EA

CONC CURB (TY 1) EST @ 261 M

STA. 4+958

R.O.W.

75 | 45 TAPER

0.6 SHLDR
3.6 LANE
3.6 LANE
3.6 LANE
3.6 LANE
3.6 LANE
1.2 SHLDR

STA 4+770.536

S 0°11'52.93" W
4+800

SHLDR VARIES
3.6 LANE
3.6 LANE
SHLDR VARIES

N.B. FRONTAGE RD.
4+900

3.0 SHLDR
3.6 LANE
3.6 LANE
0.6 SHLDR

P.C.

ATTAIN ORIGINAL 4.90% X-SLOPE

END ASPH STAB BASE
STA. 4+861.500

80 | 92 TAPER

STORM DRAIN LINE I35

STA 4+839.677

STORM DRAIN LINE I37

85 | 45 TAPER

STA 22+796.000

BRIDGE CL. STRUCT. NO. 3
FOR DETAILS SEE SHEET 375.

MATCHLINE STA. 22+700

1.2 SHLDR
3.6 LANE
3.6 LANE
3.6 LANE
3.6 LANE
1.2 SHLDR

3.0 SHLDR
3.6 LANE
3.6 LANE
3.6 LANE
3.0 SHLDR

S.B. MAINLANES

8.0

22+800

22+900

S 0°11'52.87" E

℄ LP 1604

MATCHLINE STA. 22+960

SGT EST. @ 1 EA

MBGF (BLK OUT) EST. @ 45.6 M

TAS EST. @ 1 EA

MBGF (BLK OUT) EST. @ 7.6 M

75 | 45 TAPER

STA 22+779.000

BEGIN BRIDGE
STA 22+773.461

END BRIDGE
STA 22+813.182

T-6 RAILING
SEE CULVERT LAYOUT FOR PAYMENT

BLADING EST. @ 4 H
BLDZR WORK (ORD COMP)(TY A) EST. @ 4 H

CARACOL CREEK

R.O.W.

DRAINAGE EASEMENT

CHANGE ORDER NO. 119
-NEW REHAB TREATMENT TO S.B. MAINLANES
-REVISED QUANTITIES

UTILITY LEGEND

| | |
|---|---|
| W W | WATER LINE |
| T1 T1 | TELEPHONE LINE |
| C C | CABLE LINE |
| G1 G1 | GAS LINE |

WIDENING AREA / NEW CONSTRUCTION (BLACK BASE)

LIMITS OF ASPH STAB BS @ INTERSECTION

## ESTIMATED QUANTITIES

| | ITEM # | ITEM | UNIT | QTY. |
|---|---|---|---|---|
| | 100-5002 | PREP ROW | KM | 0.26 |
| | 110-5001 | EXCAVATION (RDWY) | M3 | 491 |
| | 132-5018 | EMBANK (ORD COMP)(TY B)(CL 3) | M3 | 24065 |
| | 150-5003 | BLADING | H | 12 |
| | 156-5003 | BLDZR WORK (ORD COMP)(TY A) | H | 12 |
| | 160-5002 | FURN AND PLAC TPSL (CL 2)(150 MM) | M2 | 15270 |
| * | 164-5049 | DRILL SEED (PERM)(URBAN)(CLAY) | M2 | 15270 |
| | 247-5024 | FL BS (COMPL IN PLAC)(TY A GR 6 CL 4) | M3 | 484 |
| | 310-5006 | ASPH MATL (AE-P) | L | 1048 |
| * | | ONE CRSE SURF TREAT | M2 | 6885 |
| | 316-5028 | AGGR (TY PB, GR 4) | M3 | 63 |
| | 316-5226 | ASPH (AC-15P, HFRS-2P OR CRS-2P) | L | 9363 |
| | 345-5004 | ASPH STAB BS (GR 4) | MGR | 3812 |
| | 529-5001 | CONC CURB (TY 1) | M | 261 |
| | 540-5005 | TERM ANCH SECT (2.67 MM) | EA | 1 |
| 20 | ~~540-5006~~ | ~~MBGF (TIM POST)(2.67 MM)~~ | ~~M~~ | ~~53.2~~ |
| 20 | 540-5007 | MBGF (BLK OUT)(TIM POST)(2.67 MM) | M | 98.8 |
| | 3117-5003 | HOT MIX (TY C) | MGR | 705 |
| | 3117-5018 | HOT MIX (TY C)(SURF) | MGR | 674 |
| # | 3117-5024 | HOT MIX (TY C)(LEVEL-UP) | MGR | 26 |
| | 5119-5003 | SINGLE GDRAIL TERM (TY III) | EA | 3 |
| | | | | |
| | 540-5008 | MBGF (BLK OUT) STL POST (2.67 MM) | M | 38 |

* FOR CONTRACTORS INFORMATION ONLY
\# QUANTITY COMPUTER GENERATED

NOTE(S):

-ALL DIMENSIONS ARE IN METERS UNLESS OTHERWISE NOTED.

-FOR HORIZONTAL ALIGNMENT / DATA, SEE SHEET(S) 164 - 171.

-FOR LIMITS OF SEEDING & TOPSOIL, SEE PROJECT X-SECTIONS AND TYPICAL SECTIONS.

-FOR ADDITIONAL STORM DRAIN INFO. REFER TO THE SPECIFIC STORM DRAIN PROFILE SHEET(S).

-FOR RIPRAP ASSOCIATED WITH STORM DRAINAGE STRUCTURES SEE SHEET(S) 454 - 470.

# -REFERS TO CHANGES MADE AS PART OF CHANGE ORDER.

CHANGE ORDER NO. 119

REVISED SHEET

STATE OF TEXAS
FITZGERALDO G. SANCHEZ
76084
LICENCED
PROFESSIONAL ENGINEER

Fitzgeraldo G. Sanchez 03-10-06
Fitzgeraldo G. Sanchez, P.E. Date

©2000
Texas Department of Transportation

PLAN SHEET
SHEET 35 OF 57

| FED.RD. DIV.NO. | FEDERAL AID PROJECT NO. | SHEET NO. |
|---|---|---|
| 6 | NH 2000(704), etc. | 225AB |
| STATE | DIST. | COUNTY |
| TEXAS | SAT | BEXAR |
| CONT. | SECT. | JOB / HIGHWAY NO. |
| 2452 | 01 | 036, etc. / LP 1604 |

LEVELS DISPLAYED
1 2 3 4 5 6 7 8 9 10 11 12 13 14 15 16 17 18 19 20 21 22 23 24 25 26 27 28 29 30 31 32 33 34 35 36 37 38 39 40 41 42 43 44 45 46 47 48 49 50 51 52 53 54 55 56 57 58 59 60 61 62 63

ACC: t:\ao\design\1p1604fm471-90\
FILE: plan35a*pd.dgn

2-17-06

QUANTITIES THIS SHEET
CSJ 2452-01-036

SCALE: 1:1000

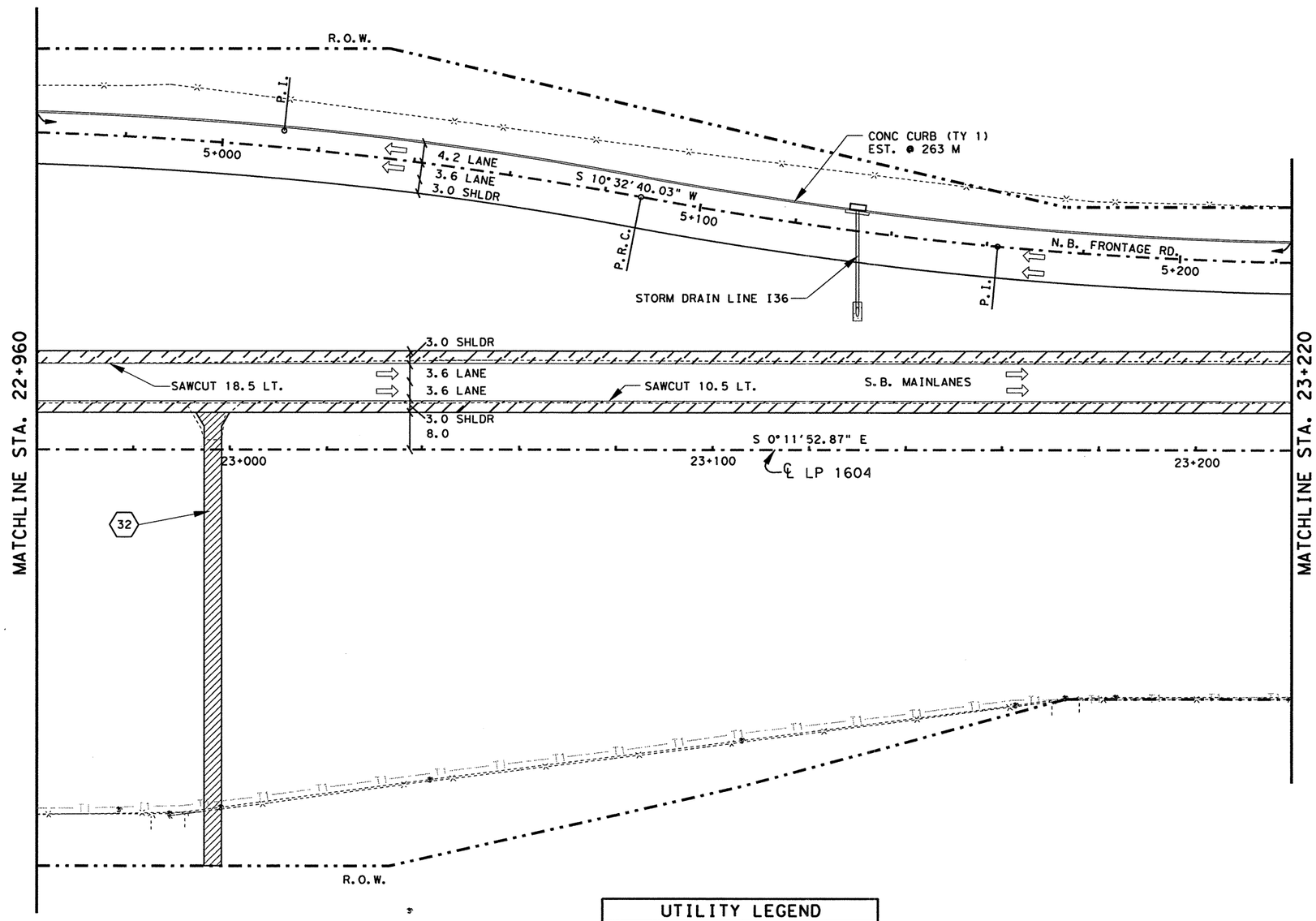


| ESTIMATED QUANTITIES | | | |
|---|---|---|---|
| ITEM # | ITEM | UNIT | QTY. |
| 100-5002 | PREP ROW | KM | 0.26 |
| 110-5001 | EXCAVATION (RDWY) | M3 | 13191 |
| 132-5018 | EMBANK (ORD COMP) (TY B) (CL 3) | M3 | 6192 |
| 160-5002 | FURN AND PLAC TPSL (CL 2) (150 MM) | M2 | 15146 |
| 164-5049 | DRILL SEED (PERM) (URBAN) (CLAY) | M2 | 15146 |
| 247-5024 | FL BS (COMPL IN PLAC)(TY A GR 6 CL 4) | M3 | 1266 |
| 310-5006 | ASPH MATL (AE-P) | L | 3047 |
| * | ONE CRSE SURF TREAT | M2 | 6635 |
| 316-5028 | AGGR (TY PB, GR 4) | M3 | 60 |
| 316-5226 | ASPH (AC-15P, HFRS-2P OR CRS-2P) | L | 9024 |
| 345-5004 | ASPH STAB BS (GR 4) | MGR | 922 |
| 529-5001 | CONC CURB (TY 1) | M | 263 |
| 530-5003 | DRVWAYS (ASPH- CONC PAV) | M2 | 393 |
| 3117-5003 | HOT MIX (TY C) | MGR | 620 |
| 3117-5018 | HOT MIX (TY C) (SURF) | MGR | 588 |
| ≠ 3117-5024 | HOT MIX (TY C) (LEVEL-UP) | MGR | 118 |
| | | | |

* FOR CONTRACTORS INFORMATION ONLY
≠ QUANTITY COMPUTER GENERATED

NOTE(S):

ALL DIMENSIONS ARE IN METERS UNLESS OTHERWISE NOTED.

FOR HORIZONTAL ALIGNMENT / DATA, SEE SHEET(S) 164 - 171.

FOR LIMITS OF SEEDING & TOPSOIL, SEE PROJECT X-SECTIONS AND TYPICAL SECTIONS.

FOR RIPRAP ASSOCIATED WITH STORM DRAINAGE STRUCTURES SEE SHEET(S) 454 - 470.

FOR ADDITIONAL STORM DRAIN INFO. REFER TO THE SPECIFIC STORM DRAIN PROFILE SHEET(S).

(#) DRIVEWAY #, FOR MORE DETAILS SEE SHEET(S) 27, 28 & 336.

| UTILITY LEGEND | |
|---|---|
| W — W | WATER LINE |
| T1 — T1 | TELEPHONE LINE |
| C — C | CABLE LINE |
| G1 — G1 | GAS LINE |

WIDENING AREA

STATE OF TEXAS
JOEL K. DAVENPORT, JR.
79276
REGISTERED PROFESSIONAL ENGINEER

Joel K. Davenport Jr., P.E. 11/1/00
Joel K. Davenport Jr., P.E. — Date

©2000
Texas Department of Transportation

PLAN SHEET
SHEET 36 OF 57

| FED.RD. DIV.NO. | FEDERAL AID PROJECT NO. | | SHEET NO. |
|---|---|---|---|
| 6 | NH 2000(704), etc. | | 226 |
| STATE | DIST. | COUNTY | |
| TEXAS | SAT | BEXAR | |
| CONT. | SECT. | JOB | HIGHWAY NO. |
| 2452 | 01 | 036, etc. | LP 1604 |

LEVELS DISPLAYED
1 2 3 4 5 6 7 8 9 10 11 12 13 14 15 16
17 18 19 20 21 22 23 24 25 26 27 28 29 30 31 32 33
34 35 45 55 63 73 83 94 104 114 124 134 144 154 164 174 184
195 205 215 225 235 245 255 265 275 285 296 306 316 326 336 343

ACC: t:\ao\design\lp1604fm471-90\
FILE: plan36.dgn

QUANTITIES THIS SHEET
CSJ 2452-01-036

SCALE: 1:1000

## ESTIMATED QUANTITIES

| | ITEM # | ITEM | UNIT | QTY. |
|---|---|---|---|---|
| | 100-5002 | PREP ROW | KM | 0.28 |
| | 110-5001 | EXCAVATION (RDWY) | M3 | 5467 |
| | 132-5018 | EMBANK (ORD COMP) (TY B) (CL 3) | M3 | 295 |
| | 160-5002 | FURN AND PLAC TPSL (CL 2) (150 MM) | M2 | 7709 |
| | 164-5049 | DRILL SEED (PERM) (URBAN) (CLAY) | M2 | 7709 |
| | 247-5024 | FL BS (COMPL IN PLAC)(TY A GR 6 CL 4) | M3 | 1354 |
| | 310-5006 | ASPH MATL (AE-P) | L | 3259 |
| * | | ONE CRSE SURF TREAT | M2 | 7123 |
| | 316-5028 | AGGR (TY PB, GR 4) | M3 | 65 |
| | 316-5226 | ASPH (AC-15P, HFRS-2P OR CRS-2P) | L | 9687 |
| | 345-5004 | ASPH STAB BS (GR 4) | MGR | 993 |
| | 529-5001 | CONC CURB (TY 1) | M | 280 |
| | 530-5003 | DRVWAYS (ASPH- CONC PAV) | M2 | 29 |
| | 3117-5003 | HOT MIX (TY C) | MGR | 666 |
| | 3117-5018 | HOT MIX (TY C) (SURF) | MGR | 632 |
| # | 3117-5024 | HOT MIX (TY C) (LEVEL-UP) | MGR | 197 |

* FOR CONTRACTORS INFORMATION ONLY
# QUANTITY COMPUTER GENERATED

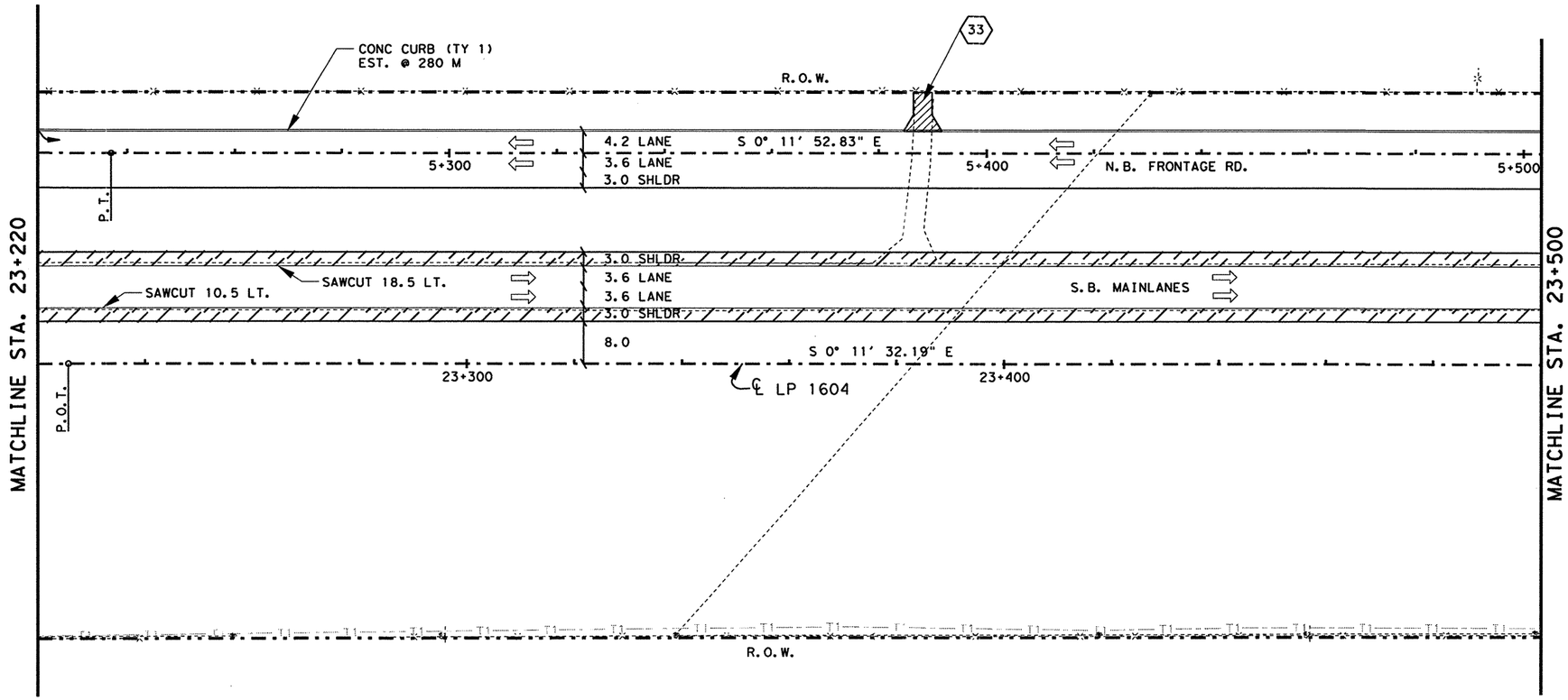


NOTE(S):

ALL DIMENSIONS ARE IN METERS UNLESS OTHERWISE NOTED.

FOR HORIZONTAL ALIGNMENT / DATA, SEE SHEET(S) 164 - 171.

FOR LIMITS OF SEEDING & TOPSOIL, SEE PROJECT X-SECTIONS AND TYPICAL SECTIONS.

(#) DRIVEWAY #, FOR MORE DETAILS SEE SHEET(S) 27, 28 & 336.

## UTILITY LEGEND

| | |
|---|---|
| W W | WATER LINE |
| T1 T1 | TELEPHONE LINE |
| C C | CABLE LINE |
| G1 G1 | GAS LINE |

WIDENING AREA

STATE OF TEXAS
JOEL K. DAVENPORT, JR.
79276
REGISTERED
PROFESSIONAL ENGINEER

Joel K Davenport Jr 11/1/00
Joel K. Davenport Jr., P.E. Date

©2000
Texas Department of Transportation

# PLAN SHEET

SHEET 37 OF 57

| FED.RD. DIV.NO. | FEDERAL AID PROJECT NO. | | SHEET NO. |
|---|---|---|---|
| 6 | NH 2000(704), etc. | | 227 |
| STATE | DIST. | COUNTY | |
| TEXAS | SAT | BEXAR | |
| CONT. | SECT. | JOB | HIGHWAY NO. |
| 2452 | 01 | 036, etc. | LP 1604 |

LEVELS DISPLAYED
1 2 3 4 5 6 7 8 9 10 11 12 13 14 15 16
17 18 19 20 21 22 23 24 25 26 27 28 29 30 31 32
33 34 35 36 37 38 39 40 41 42 43 44 45 46 47 48
49 50 51 52 53 54 55 56 57 58 59 60 61 62 63

ACC: t:\ao\design\lp1604fm471-90\
FILE: plan37.dgn

QUANTITIES THIS SHEET
CSJ 2452-01-036

SCALE: 1:1000

## ESTIMATED QUANTITIES

| | ITEM # | ITEM | UNIT | QTY. |
|---|---|---|---|---|
| | 100-5002 | PREP ROW | KM | 0.26 |
| | 110-5001 | EXCAVATION (RDWY) | M3 | 5152 |
| | 132-5018 | EMBANK (ORD COMP) (TY B) (CL 3) | M3 | 239 |
| | 160-5002 | FURN AND PLAC TPSL (CL 2) (150 MM) | M2 | 8577 |
| | 164-5049 | DRILL SEED (PERM) (URBAN) (CLAY) | M2 | 8577 |
| | 247-5024 | FL BS (COMPL IN PLACXTY A GR 6 CL 4) | M3 | 1206 |
| | 310-5006 | ASPH MATL (AE-P) | L | 2902 |
| * | | ONE CRSE SURF TREAT | M2 | 6440 |
| | 316-5028 | AGGR (TY PB,GR 4) | M3 | 59 |
| | 316-5226 | ASPH (AC-15P, HFRS-2P OR CRS-2P) | L | 8758 |
| | 345-5004 | ASPH STAB BS (GR 4) | MGR | 909 |
| | 529-5001 | CONC CURB (TY 1) | M | 249 |
| | 3117-5003 | HOT MIX (TY C) | MGR | 602 |
| | 3117-5018 | HOT MIX (TY C) (SURF) | MGR | 571 |
| # | 3117-5024 | HOT MIX (TY C) (LEVEL-UP) | MGR | 63 |
| | | | | |

* FOR CONTRACTORS INFORMATION ONLY
# QUANTITY COMPUTER GENERATED

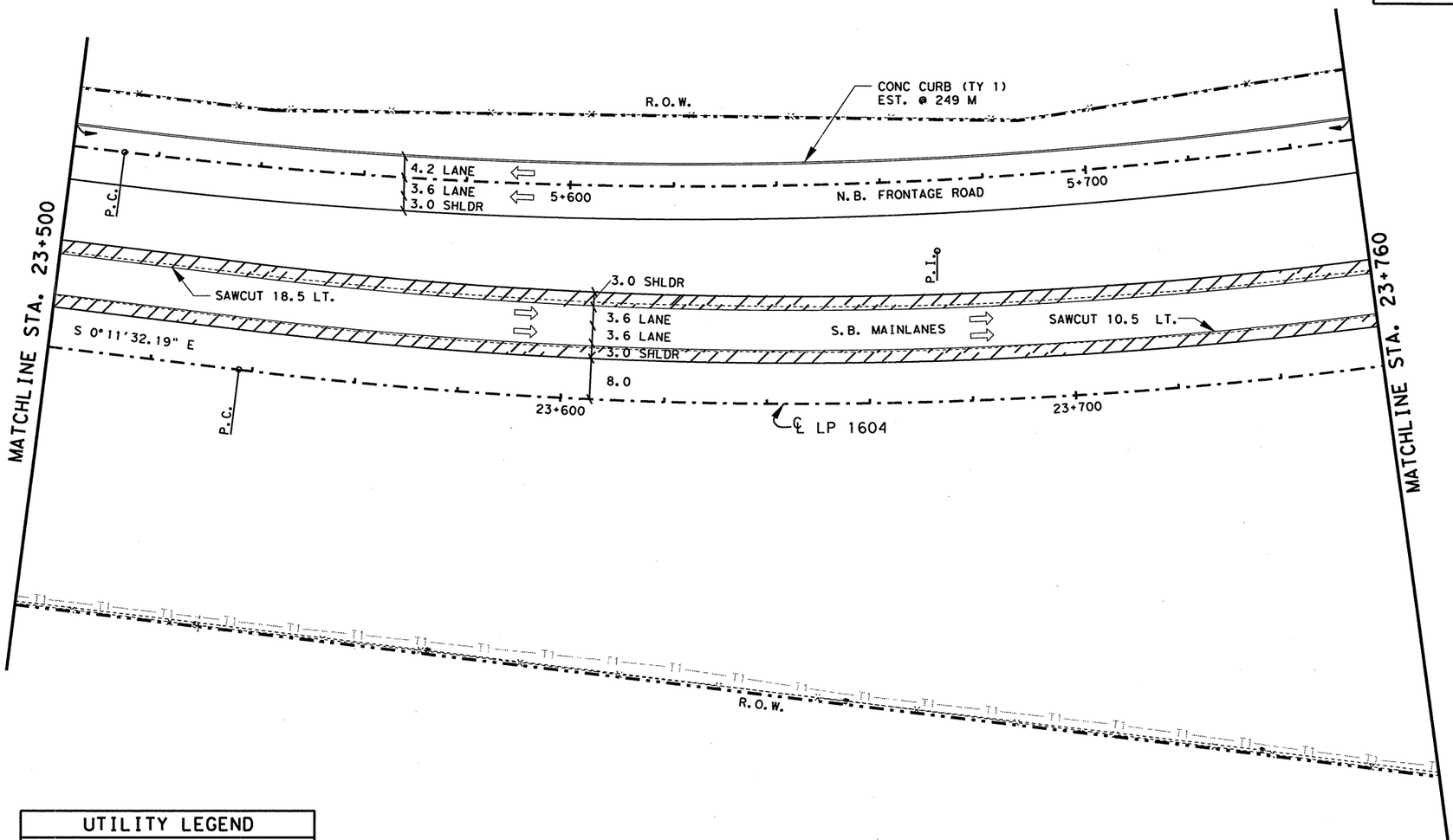


NOTE(S):

ALL DIMENSIONS ARE IN METERS UNLESS OTHERWISE NOTED.

FOR HORIZONTAL ALIGNMENT / DATA, SEE SHEET(S) 164 - 171.

FOR LIMITS OF SEEDING & TOPSOIL, SEE PROJECT X-SECTIONS AND TYPICAL SECTIONS.

| UTILITY LEGEND | |
|---|---|
| W W | WATER LINE |
| T1 T1 | TELEPHONE LINE |
| C C | CABLE LINE |
| GI GI | GAS LINE |

WIDENING AREA

STATE OF TEXAS
JOEL K. DAVENPORT, JR.
79276
REGISTERED
PROFESSIONAL ENGINEER

Joel K. Davenport Jr. 11/1/00
Joel K. Davenport Jr., P.E. Date

©2000
Texas Department of Transportation

# PLAN SHEET

SHEET 38 OF 57

| FED. RD. DIV. NO. | FEDERAL AID PROJECT NO. | | SHEET NO. |
|---|---|---|---|
| 6 | NH 2000(704), etc. | | 228 |
| STATE | DIST. | COUNTY | |
| TEXAS | SAT | BEXAR | |
| CONT. | SECT. | JOB | HIGHWAY NO. |
| 2452 | 01 | 036, etc. | LP 1604 |

LEVELS DISPLAYED
1 2 3 4 5 6 7 8 9 10 11 12 13 14 15 16
17 18 19 20 21 22 23 24 25 26 27 28 29 30 31 32
33 34 35 36 37 38 39 40 41 42 43 44 45 46 47 48
49 50 51 52 53 54 55 56 57 58 59 60 61 62 63

ACC: t:\ao\design\lp1604fm471-90\
FILE: plan01.dgn

QUANTITIES THIS SHEET
CSJ 2452-01-036

SCALE: 1:1000

## ESTIMATED QUANTITIES

| | ITEM # | ITEM | UNIT | QTY. |
|---|---|---|---|---|
| | 100-5002 | PREP ROW | KM | 0.26 |
| | 110-5001 | EXCAVATION (RDWY) | M3 | 5193 |
| | 132-5018 | EMBANK (ORD COMP) (TY B) (CL 3) | M3 | 7723 |
| | 160-5002 | FURN AND PLAC TPSL (CL 2) (150 MM) | M2 | 11990 |
| | 164-5049 | DRILL SEED (PERM) (URBAN) (CLAY) | M2 | 11990 |
| | 247-5024 | FL BS (COMPL IN PLACE)(TY A GR 6 CL 4) | M3 | 1251 |
| | 310-5006 | ASPH MATL (AE-P) | L | 3011 |
| * | | ONE CRSE SURF TREAT | M2 | 6591 |
| | 316-5028 | AGGR (TY PB, GR 4) | M3 | 60 |
| | 316-5226 | ASPH (AC-15P, HFRS-2P OR CRS-2P) | L | 8964 |
| | 345-5004 | ASPH STAB BS (GR 4) | MGR | 921 |
| | 529-5001 | CONC CURB (TY 1) | M | 260 |
| | 530-5003 | DRVWAYS (ASPH- CONC PAV) | M2 | 293 |
| | 3117-5003 | HOT MIX (TY C) | MGR | 616 |
| | 3117-5018 | HOT MIX (TY C) (SURF) | MGR | 585 |
| # | 3117-5024 | HOT MIX (TY C) (LEVEL-UP) | MGR | 82 |

* FOR CONTRACTORS INFORMATION ONLY
# QUANTITY COMPUTER GENERATED

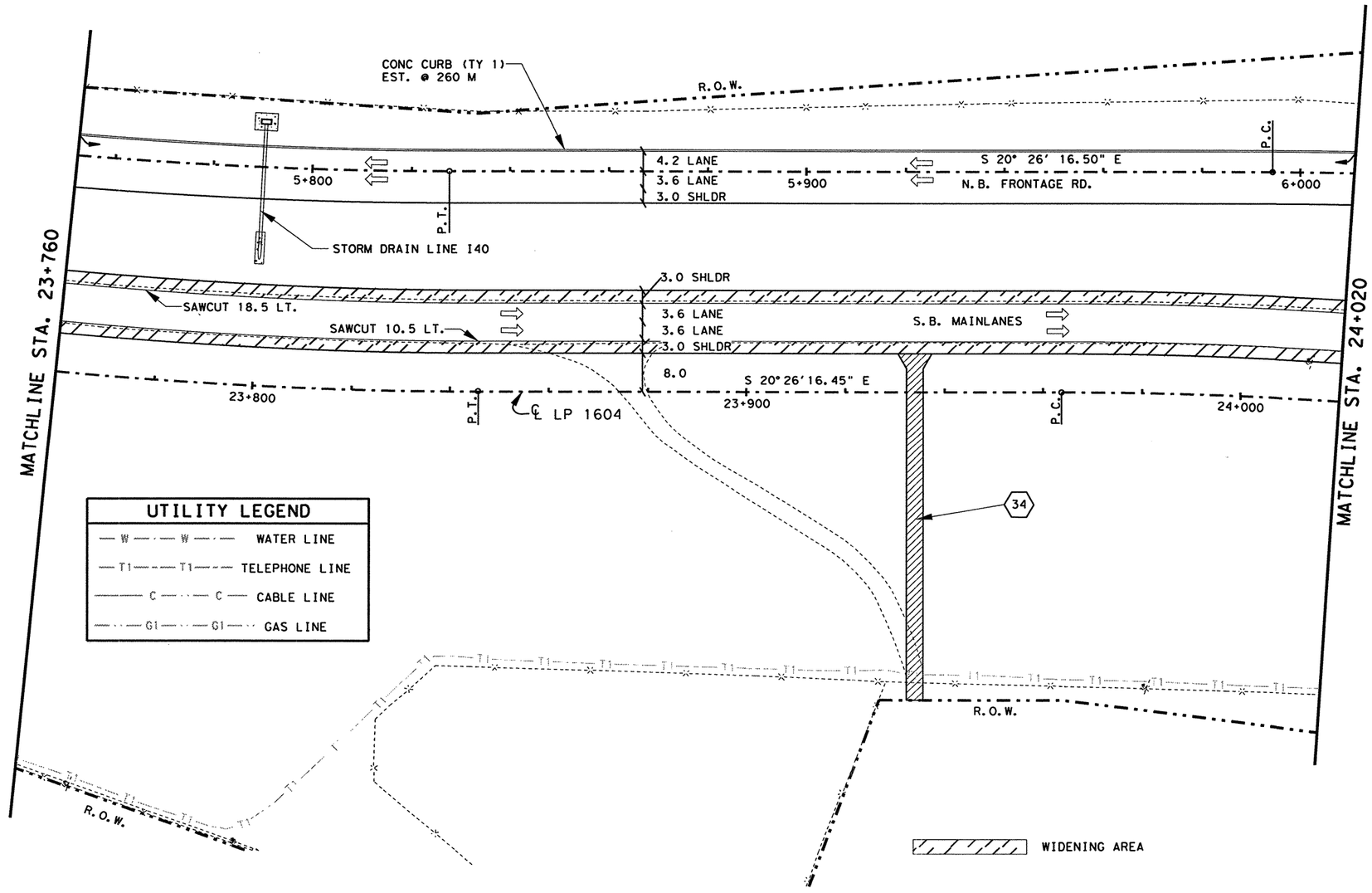


### UTILITY LEGEND

| | |
|---|---|
| —W—W— | WATER LINE |
| —T1—T1— | TELEPHONE LINE |
| —C—C— | CABLE LINE |
| —G1—G1— | GAS LINE |

NOTE(S):

ALL DIMENSIONS ARE IN METERS UNLESS OTHERWISE NOTED.

FOR HORIZONTAL ALIGNMENT / DATA, SEE SHEET(S) 164 - 171.

FOR LIMITS OF SEEDING & TOPSOIL, SEE PROJECT X-SECTIONS AND TYPICAL SECTIONS.

FOR RIPRAP ASSOCIATED WITH STORM DRAINAGE STRUCTURES SEE SHEET(S) 454 - 470.

FOR ADDITIONAL STORM DRAIN INFO. REFER TO THE SPECIFIC STORM DRAIN PROFILE SHEET(S).

(#) DRIVEWAY #, FOR MORE DETAILS SEE SHEET(S) 27, 28 7 336.

STATE OF TEXAS
JOEL K. DAVENPORT, JR.
79276
REGISTERED
PROFESSIONAL ENGINEER

Joel K Davenport Jr 11/1/00
Joel K. Davenport, Jr. P.E. 79276 Date

LEVELS DISPLAYED
1 2 3 4 5 6 7 8 9 10 11 12 13 14 15 16
17 18 19 20 21 22 23 24 25 26 27 28 29 30 31 32
33 34 35 36 37 38 39 40 41 42 43 44 45 46 47 48
49 50 51 52 53 54 55 56 57 58 59 60 61 62 63

ACC: t:\ao\design\lp1604fm471-90\
FILE: plan39.dgn

©2000 Texas Department of Transportation

# PLAN SHEET

SHEET 39 OF 57

| FED. RD. DIV. NO. | FEDERAL AID PROJECT NO. | | SHEET NO. |
|---|---|---|---|
| 6 | NH 2000(704), etc. | | 229 |
| STATE | DIST. | COUNTY | |
| TEXAS | SAT | BEXAR | |
| CONT. | SECT. | JOB | HIGHWAY NO. |
| 2452 | 01 | 036, etc. | LP 1604 |

QUANTITIES THIS SHEET
CSJ 2452-01-036

SCALE: 1:1000

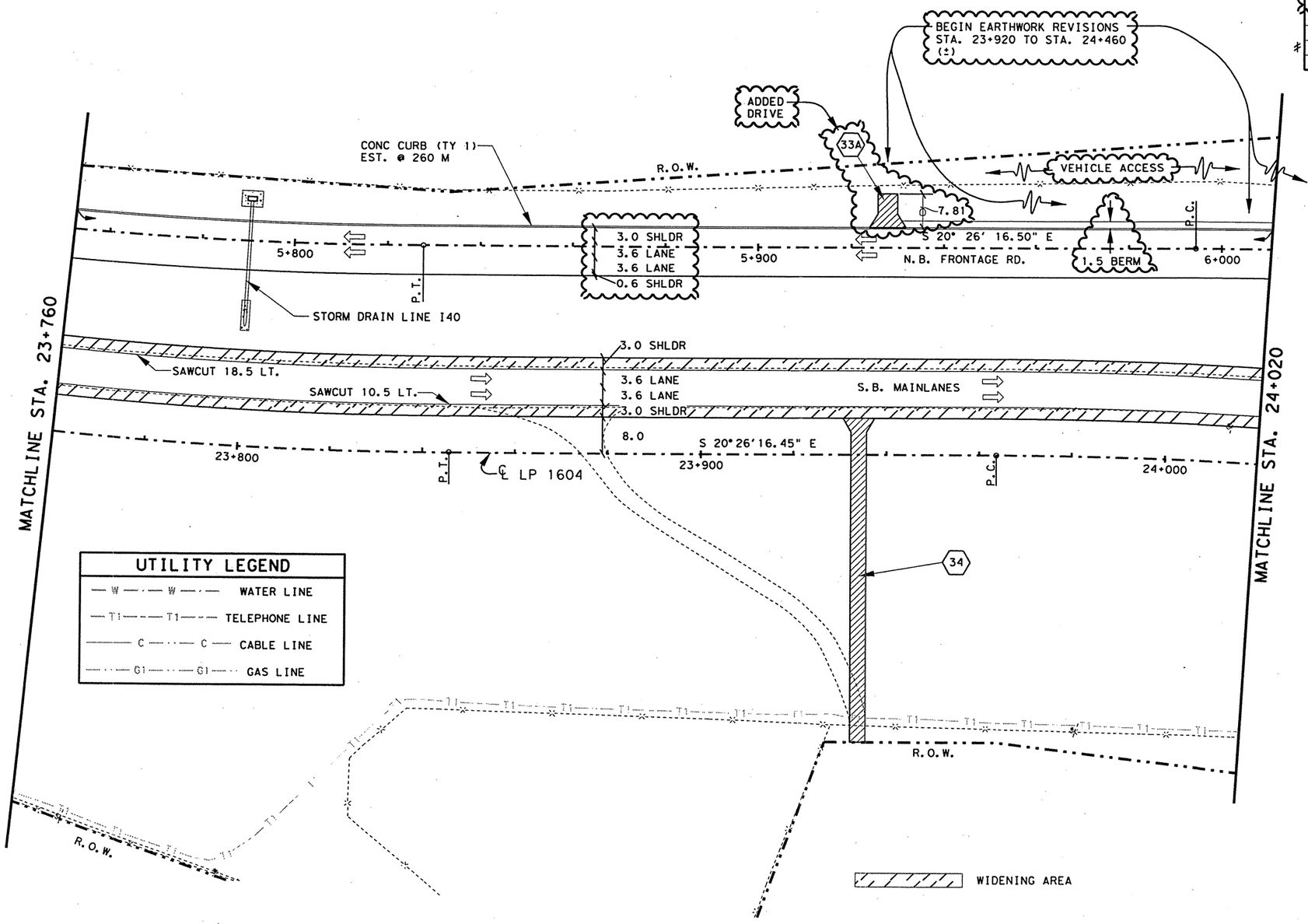


## UTILITY LEGEND

| | |
|---|---|
| — W — · — W — · — | WATER LINE |
| — T1 — · — T1 — · — | TELEPHONE LINE |
| — C — · — C — | CABLE LINE |
| — · — G1 — · — G1 — · — | GAS LINE |

## ESTIMATED QUANTITIES

| | ITEM # | ITEM | UNIT | QTY. |
|---|---|---|---|---|
| | 100-5002 | PREP ROW | KM | 0.26 |
| | 110-5001 | EXCAVATION (RDWY) | M3 | 5197 |
| | 132-5018 | EMBANK (ORD COMP) (TY B) (CL 3) | M3 | 7755 |
| | 160-5002 | FURN AND PLAC TPSL (CL 2) (150 MM) | M2 | 11990 |
| | 164-5049 | DRILL SEED (PERM) (URBAN) (CLAY) | M2 | 11990 |
| | 247-5024 | FL BS (COMPL IN PLAC)(TY A GR 6 CL 4) | M3 | 1251 |
| | 310-5006 | ASPH MATL (AE-P) | L | 3011 |
| * | | ONE CRSE SURF TREAT | M2 | 6591 |
| | 316-5028 | AGGR (TY PB, GR 4) | M3 | 60 |
| | 316-5226 | ASPH (AC-15P, HFRS-2P OR CRS-2P) | L | 8964 |
| | 345-5004 | ASPH STAB BS (GR 4) | MGR | 921 |
| | 529-5001 | CONC CURB (TY 1) | M | 260 |
| | 530-5003 | DRVWAYS (ASPH- CONC PAV) | M2 | 330 |
| | 3117-5003 | HOT MIX (TY C) | MGR | 616 |
| | 3117-5018 | HOT MIX (TY C) (SURF) | MGR | 585 |
| # | 3117-5024 | HOT MIX (TY C) (LEVEL-UP) | MGR | 82 |

* FOR CONTRACTORS INFORMATION ONLY
# QUANTITY COMPUTER GENERATED

NOTE(S):

ALL DIMENSIONS ARE IN METERS UNLESS OTHERWISE NOTED.

FOR HORIZONTAL ALIGNMENT / DATA, SEE SHEET(S) 164 - 171.

FOR LIMITS OF SEEDING & TOPSOIL, SEE PROJECT X-SECTIONS AND TYPICAL SECTIONS.

FOR RIPRAP ASSOCIATED WITH STORM DRAINAGE STRUCTURES SEE SHEET(S) 454 - 470.

FOR ADDITIONAL STORM DRAIN INFO. REFER TO THE SPECIFIC STORM DRAIN PROFILE SHEET(S).

(#) DRIVEWAY #, FOR MORE DETAILS SEE SHEET(S) 27, 28 7 336.

CHANGE ORDER 64

REVISED SHEET

CHANGE ORDER NO. 64

-EARTHWORK REVISIONS NECESSARY FOR DRIVEWAY #33A AND INCIDENTAL WORK ALONG N'BD FRONT. RD. @ MEDIO CREEK.
-REVISED FRONT. RD. LANE CONFIG.
-REVISED QUANTITIES

STATE OF TEXAS
JEROME D. PAVLISKA
76075
REGISTERED PROFESSIONAL ENGINEER

Jerome D. Pavliska P.E. 4-28-04
Jerome D. Pavliska, P.E. Date

LEVELS DISPLAYED
1 2 3 4 5 6 7 8 9 10 11 12 13 14 15 16
17 18 19 20 21 22 23 24 25 26 27 28 29 30 31 32
33 34 45 56 57 58 59 60 41 42 43 44 45 46 47 48
90 91 92 93 94 95 96 97 98 99 100 101 102 103

ACC: t:\ao\design\lp1604fm471-90\
FILE: plan39*ch.dgn

©2000 Texas Department of Transportation

PLAN SHEET

SHEET 39 OF 57

| FED. RD. DIV. NO. | FEDERAL AID PROJECT NO. | | SHEET NO. |
|---|---|---|---|
| 6 | NH 2000(704), etc. | | 229A |
| STATE | DIST. | COUNTY | |
| TEXAS | SAT | BEXAR | |
| CONT. | SECT. | JOB | HIGHWAY NO. |
| 2452 | 01 | 036, etc. | LP 1604 |

05-01-04

QUANTITIES THIS SHEET
CSJ 2452-01-036

SCALE: 1:1000

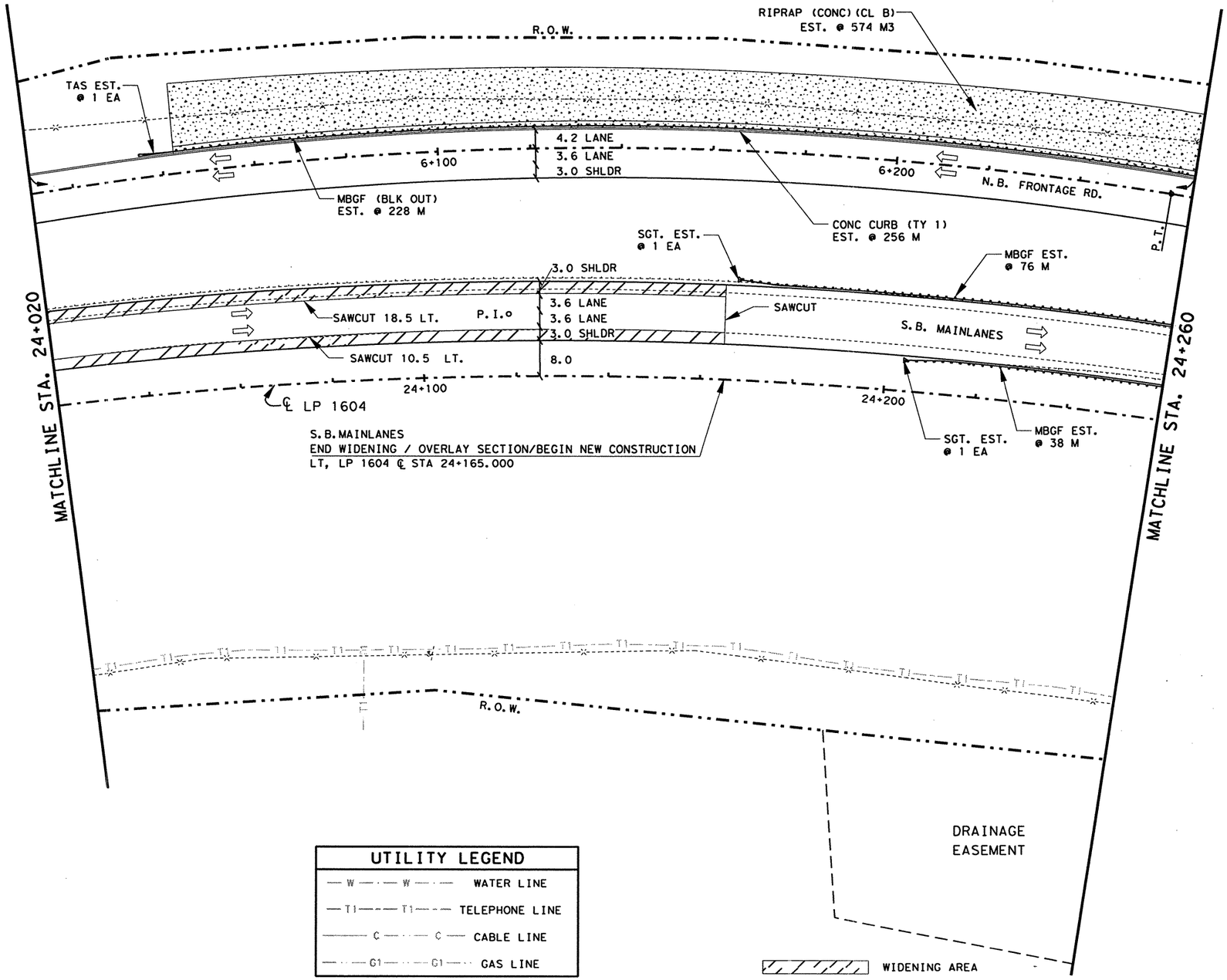


## UTILITY LEGEND

| | |
|---|---|
| — W — W — | WATER LINE |
| — T1 — T1 — | TELEPHONE LINE |
| — C — C — | CABLE LINE |
| — G1 — G1 — | GAS LINE |

## ESTIMATED QUANTITIES

| | ITEM # | ITEM | UNIT | |
|---|---|---|---|---|
| | 100-5002 | PREP ROW | KM | 0.24 |
| | 110-5001 | EXCAVATION (RDWY) | M3 | 628 |
| | 132-5018 | EMBANK (ORD COMP) (TY B) (CL 3) | M3 | 40240 |
| | 160-5002 | FURN AND PLAC TPSL (CL 2) (150 MM) | M2 | 12029 |
| | 164-5049 | DRILL SEED (PERM) (URBAN) (CLAY) | M2 | 12029 |
| | 247-5024 | FL BS (COMPL IN PLACE)(TY A GR 6 CL 4) | M3 | 1772 |
| | 310-5006 | ASPH MATL (AE-P) | L | 3000 |
| * | | ONE CRSE SURF TREAT | M2 | 6309 |
| | 316-5028 | AGGR (TY PB, GR 4) | M3 | 57 |
| | 316-5226 | ASPH (AC-15P, HFRS-2P OR CRS-2P) | L | 8580 |
| | 345-5004 | ASPH STAB BS (GR 4) | MGR | 522 |
| | 432-5001 | RIPRAP (CONC) (CL B) | M3 | 574 |
| | 529-5001 | CONC CURB (TY 1) | M | 256 |
| | 540-5005 | TERM ANCHOR SECT (2.67 MM) | EA | 1 |
| | 540-5006 | MBGF (TIM POST) (2.67 MM) | M | 115.2 |
| | 540-5007 | MBGF (BLK OUT) TIM POST (2.67 MM) | M | 230.4 |
| | 3117-5003 | HOT MIX (TY C) | MGR | 590 |
| | 3117-5018 | HOT MIX (TY C) (SURF) | MGR | 560 |
| # | 3117-5024 | HOT MIX (TY C) (LEVEL-UP) | MGR | 35 |
| | 5119-5003 | SINGLE GDRAIL TERM (TY III) | EA | 2 |

* FOR CONTRACTORS INFORMATION ONLY
# QUANTITY COMPUTER GENERATED

NOTE(S):

ALL DIMENSIONS ARE IN METERS UNLESS OTHERWISE NOTED.

FOR HORIZONTAL ALIGNMENT / DATA, SEE SHEET(S) 164 - 171.

FOR LIMITS OF SEEDING & TOPSOIL, SEE PROJECT X-SECTIONS AND TYPICAL SECTIONS.

FOR RIPRAP DETAILS, SEE PROJECT X-SECTIONS AND SHEET 342.

STATE OF TEXAS
JOEL K. DAVENPORT, JR.
79276
REGISTERED PROFESSIONAL ENGINEER

Joel K Davenport Jr 11/1/00
Joel K. Davenport, Jr. P.E. 79276 Date

Texas Department of Transportation

# PLAN SHEET

SHEET 40 OF 57

| FED.RD. DIV.NO. | FEDERAL AID PROJECT NO. | | SHEET NO. |
|---|---|---|---|
| 6 | NH 2000(704), etc. | | 230 |
| STATE | DIST. | COUNTY | |
| TEXAS | SAT | BEXAR | |
| CONT. | SECT. | JOB | HIGHWAY NO. |
| 2452 | 01 | 036, etc. | LP 1604 |

LEVELS DISPLAYED
1 2 3 4 5 6 7 8 9 10 11 12 13 14 15 16
17 18 19 20 21 22 23 24 25 26 27 28 29 30 31 32
33 34 35 36 37 38 39 40 41 42 43 44 45 46 47 48
49 50 51 52 53 54 55 56 57 58 59 60 61 62 63

ACC: t:\ao\design\lp1604fm471-90\
FILE: plan40.dgn

QUANTITIES THIS SHEET
CSJ 2452-01-036

SCALE: 1:1000

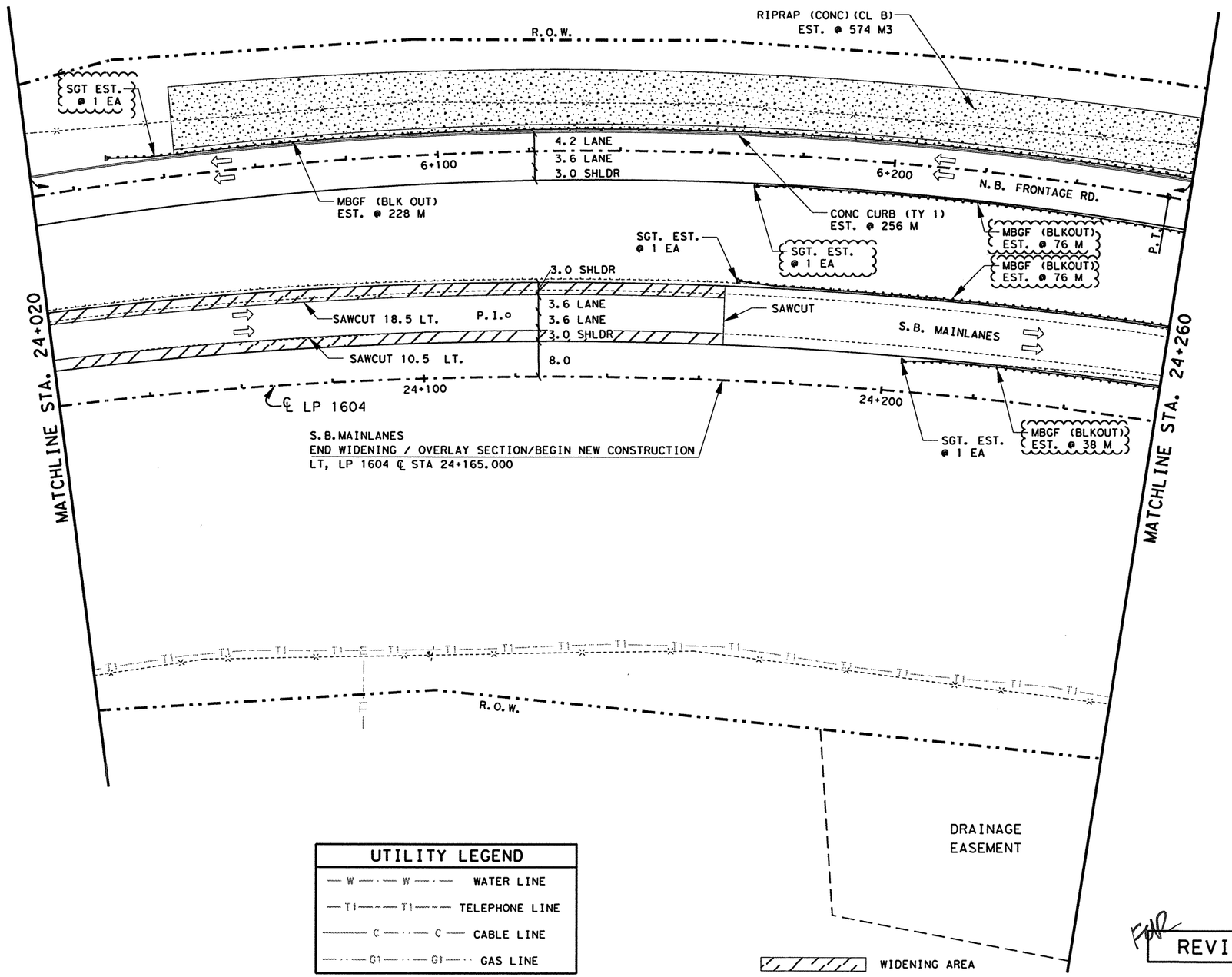


## UTILITY LEGEND

| | |
|---|---|
| — W — · — W — · — | WATER LINE |
| — T1 — — — T1 — — — | TELEPHONE LINE |
| ——— C ——· ——— C ——— | CABLE LINE |
| — · — G1 — · — G1 — · — | GAS LINE |

## ESTIMATED QUANTITIES

| | ITEM # | ITEM | UNIT | |
|---|---|---|---|---|
| | 100-5002 | PREP ROW | KM | 0.24 |
| | 110-5001 | EXCAVATION (RDWY) | M3 | 628 |
| | 132-5018 | EMBANK (ORD COMP)(TY B)(CL 3) | M3 | 40240 |
| | 160-5002 | FURN AND PLAC TPSL (CL 2)(150 MM) | M2 | 12029 |
| | 164-5049 | DRILL SEED (PERM)(URBAN)(CLAY) | M2 | 12029 |
| | 247-5024 | FL BS (COMPL IN PLAC)(TY A GR 6 CL 4) | M3 | 1772 |
| | 310-5006 | ASPH MATL (AE-P) | L | 3000 |
| * | | ONE CRSE SURF TREAT | M2 | 6309 |
| | 316-5028 | AGGR (TY PB, GR 4) | M3 | 57 |
| | 316-5226 | ASPH (AC-15P, HFRS-2P OR CRS-2P) | L | 8580 |
| | 345-5004 | ASPH STAB BS (GR 4) | MGR | 522 |
| | 432-5001 | RIPRAP (CONC)(CL B) | M3 | 574 |
| | 529-5001 | CONC CURB (TY 1) | M | 256 |
| 20 | 540-5005 | TERM ANCHOR SECT (2.67 MM) | EA | 1 |
| 20 | 540-5006 | MBGF (TIM POST)(2.67 MM) | M | 115.2 |
| 20 | 540-5007 | MBGF (BLK OUT) TIM POST (2.67 MM) | M | 230.4 |
| | 3117-5003 | HOT MIX (TY C) | MGR | 590 |
| | 3117-5018 | HOT MIX (TY C)(SURF) | MGR | 560 |
| # | 3117-5024 | HOT MIX (TY C)(LEVEL-UP) | MGR | 35 |
| 20 | 5119-5003 | SINGLE GDRAIL TERM (TY III) | EA | 2 |

* FOR CONTRACTORS INFORMATION ONLY
# QUANTITY COMPUTER GENERATED

NOTE(S):

ALL DIMENSIONS ARE IN METERS UNLESS OTHERWISE NOTED.

FOR HORIZONTAL ALIGNMENT / DATA, SEE SHEET(S) 164 - 171.

FOR LIMITS OF SEEDING & TOPSOIL, SEE PROJECT X-SECTIONS AND TYPICAL SECTIONS.

FOR RIPRAP DETAILS, SEE PROJECT X-SECTIONS AND SHEET 342.

FOR CHANGE ORDER 20

CHANGE ORDER NO. 20
-REVISED QUANTITIES
-ADDED MBGF (BLKOUT) & SGT
-ELIMINATED TAS

STATE OF TEXAS
JENNIFER L. MOCZYGEMBA
84734
REGISTERED PROFESSIONAL ENGINEER

Jennifer L. Moczygemba, P.E. 84734 — 8-8-2002 Date

FOR REVISED SHEET

Texas Department of Transportation

# PLAN SHEET

SHEET 40 OF 57

| FED.RD. DIV.NO. | FEDERAL AID PROJECT NO. | | SHEET NO. |
|---|---|---|---|
| 6 | NH 2000(704), etc. | | 230A |
| STATE | DIST. | COUNTY | |
| TEXAS | SAT | BEXAR | |
| CONT. | SECT. | JOB | HIGHWAY NO. |
| 2452 | 01 | 036, etc. | LP 1604 |

LEVELS DISPLAYED
1 2 3 4 5 6 7 8 9 10 11 12 13 14 15 16 17 18 19 20 21 22 23 24 25 26 27 28 29 30 31 32 33 34 35 36 37 38 39 40 41 42 43 44 45 46 47 48 49 50 51 52 53 54 55 56 57 58 59 60 61 62 63

ACC: t:\ao\design\lp1604fm471-90\
FILE: plan40*co20.dgn

QUANTITIES THIS SHEET
CSJ 2452-01-036

SCALE: 1:1000

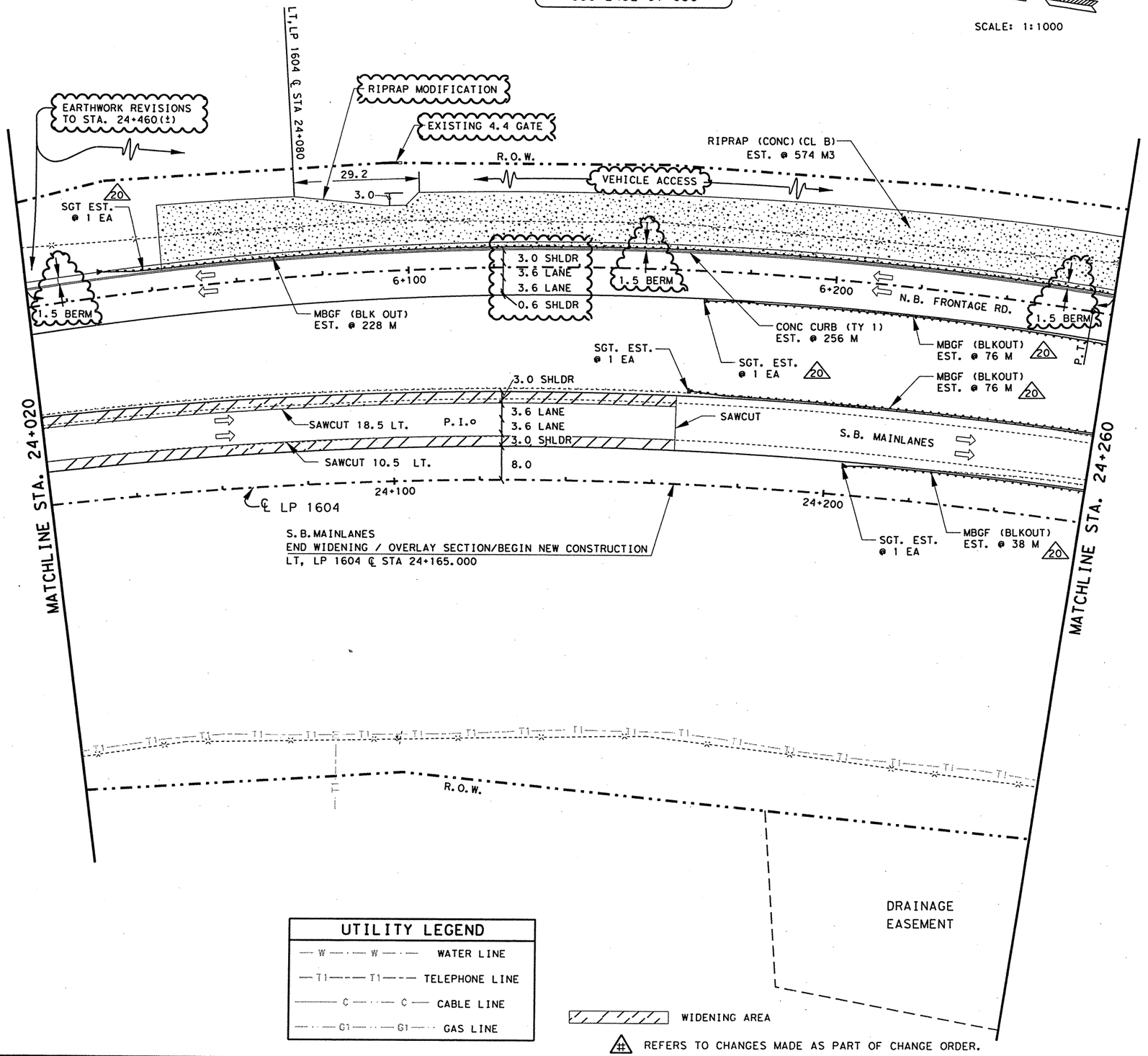


| UTILITY LEGEND | |
|---|---|
| W W | WATER LINE |
| T1 T1 | TELEPHONE LINE |
| C C | CABLE LINE |
| G1 G1 | GAS LINE |

WIDENING AREA

REFERS TO CHANGES MADE AS PART OF CHANGE ORDER.

## ESTIMATED QUANTITIES

| | ITEM # | ITEM | UNIT | |
|---|---|---|---|---|
| | 100-5002 | PREP ROW | KM | 0.24 |
| | 110-5001 | EXCAVATION (RDWY) | M3 | 628 |
| | 132-5018 | EMBANK (ORD COMP)(TY B)(CL 3) | M3 | 40616 |
| | 160-5002 | FURN AND PLAC TPSL (CL 2)(150 MM) | M2 | 12029 |
| | 164-5049 | DRILL SEED (PERM)(URBAN)(CLAY) | M2 | 12029 |
| | 247-5024 | FL BS (COMPL IN PLAC)(TY A GR 6 CL 4) | M3 | 1772 |
| | 310-5006 | ASPH MATL (AE-P) | L | 3000 |
| * | | ONE CRSE SURF TREAT | M2 | 6309 |
| | 316-5028 | AGGR (TY PB, GR 4) | M3 | 57 |
| | 316-5226 | ASPH (AC-15P, HFRS-2P OR CRS-2P) | L | 8580 |
| | 345-5004 | ASPH STAB BS (GR 4) | MGR | 522 |
| | 432-5001 | RIPRAP (CONC)(CL B) | M3 | 574 |
| | 529-5001 | CONC CURB (TY 1) | M | 256 |
| 20 | ~~540-5005~~ | ~~TERM ANCHOR SECT (2.67 MM)~~ | ~~EA~~ | ~~1~~ |
| 20 | ~~540-5006~~ | ~~MBGF (TIM POST)(2.67 MM)~~ | ~~M~~ | ~~115.2~~ |
| 20 | 540-5007 | MBGF (BLK OUT) TIM POST (2.67 MM) | M | 418 |
| | 3117-5003 | HOT MIX (TY C) | MGR | 590 |
| | 3117-5018 | HOT MIX (TY C)(SURF) | MGR | 560 |
| # | 3117-5024 | HOT MIX (TY C)(LEVEL-UP) | MGR | 35 |
| 20 | 5119-5003 | SINGLE GDRAIL TERM (TY III) | EA | 4 |

* FOR CONTRACTORS INFORMATION ONLY
# QUANTITY COMPUTER GENERATED

NOTE(S):

ALL DIMENSIONS ARE IN METERS UNLESS OTHERWISE NOTED.

FOR HORIZONTAL ALIGNMENT / DATA, SEE SHEET(S) 164 - 171.

FOR LIMITS OF SEEDING & TOPSOIL, SEE PROJECT X-SECTIONS AND TYPICAL SECTIONS.

FOR RIPRAP DETAILS, SEE PROJECT X-SECTIONS AND SHEET 342.

CHANGE ORDER 64

REVISED SHEET

CHANGE ORDER NO. 64
-EARTHWORK REVISIONS NECESSARY FOR DRIVEWAY #33A AND INCIDENTAL WORK ALONG N'BD FRONT. RD. @ MEDIO CREEK.
-REVISED FRONT. RD. LANE CONFIG.
-REVISED QUANTITIES

STATE OF TEXAS
JEROME D. PAVLISKA
76075
REGISTERED PROFESSIONAL ENGINEER

Jerome D. Pavliska, P.E. 4-28-04
Jerome D. Pavliska, P.E. Date

©2000 Texas Department of Transportation

PLAN SHEET
SHEET 40 OF 57

| FED. RD. DIV. NO. | FEDERAL AID PROJECT NO. | | SHEET NO. |
|---|---|---|---|
| 6 | NH 2000(704), etc. | | 230B |
| STATE | DIST. | COUNTY | |
| TEXAS | SAT | BEXAR | |
| CONT. | SECT. | JOB | HIGHWAY NO. |
| 2452 | 01 | 036, etc. | LP 1604 |

LEVELS DISPLAYED
1 2 3 4 5 6 7 8 9 10 11 12 13 14 15 16
17 18 19 20 21 22 23 24 25 26 27 28 29 30 31 32
33 34 35 36 37 38 39 40 41 42 43 44 45 46 47 48
49 50 51 52 53 54 55 56 57 58 59 60 61 62 63

ACC: t:\oo\design\lp1604fm471-90\
FILE: plan40*ch.dgn

05-01-04

QUANTITIES THIS SHEET
CSJ 2452-01-036

SCALE: 1:1000

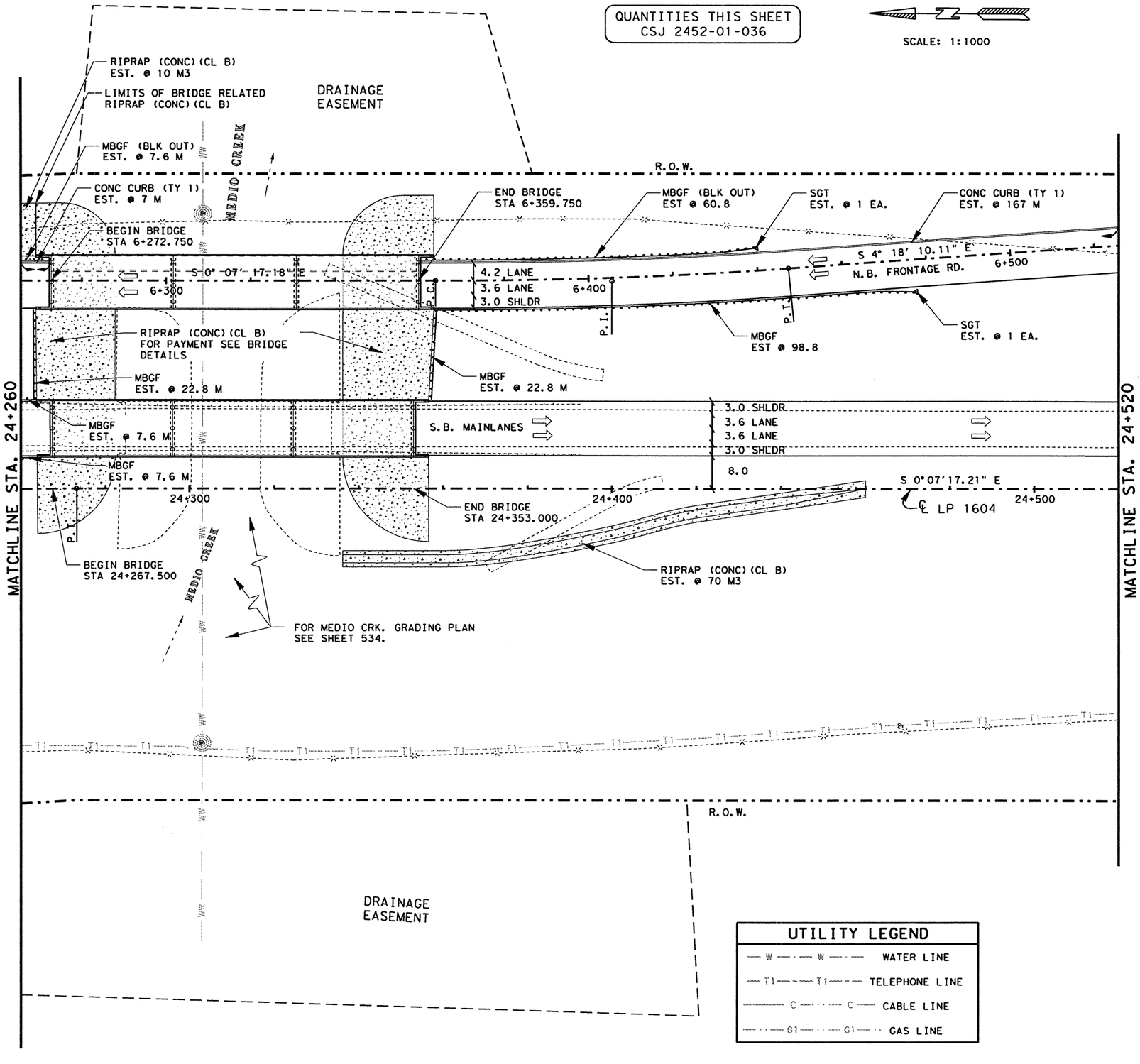


## ESTIMATED QUANTITIES

| | ITEM # | ITEM | UNIT | QTY. |
|---|---|---|---|---|
| | 100-5002 | PREP ROW | KM | 0.26 |
| | 110-5001 | EXCAVATION (RDWY) | M3 | 14641 |
| | 132-5018 | EMBANK (ORD COMP) (TY B) (CL 3) | M3 | 5598 |
| | 160-5002 | FURN AND PLAC TPSL (CL 2) (150 MM) | M2 | 10461 |
| | 164-5049 | DRILL SEED (PERM) (URBAN) (CLAY) | M2 | 10461 |
| | 247-5024 | FL BS (COMPL IN PLAC)(TY A GR 6 CL 4) | M3 | 1820 |
| | 310-5006 | ASPH MATL (AE-P) | L | 2103 |
| * | | ONE CRSE SURF TREAT | M2 | 4395 |
| | 316-5028 | AGGR (TY PB, GR 4) | M3 | 40 |
| | 316-5226 | ASPH (AC-15P, HFRS-2P OR CRS-2P) | L | 5977 |
| | 432-5001 | RIPRAP (CONC) (CL B) | M3 | 80 |
| | 529-5001 | CONC CURB (TY 1) | M | 174 |
| | 540-5006 | MBGF (TIM POST) (2.67 MM) | M | 159.6 |
| | 540-5007 | MBGF (BLK OUT) TIM POST (2.67 MM) | M | 68.4 |
| | 3117-5003 | HOT MIX (TY C) | MGR | 404 |
| | 3117-5018 | HOT MIX (TY C) (SURF) | MGR | 390 |
| | 5119-5003 | SINGLE GDRAIL TERM (TY III) | EA | 2 |
| | | | | |

*FOR CONTRACTORS INFORMATION ONLY

NOTE(S):

ALL DIMENSIONS ARE IN METERS UNLESS OTHERWISE NOTED.

FOR HORIZONTAL ALIGNMENT \ DATA, SEE SHEET(S) 164 - 171.

FOR LIMITS OF SEEDING & TOPSOIL, SEE PROJECT X-SECTIONS AND TYPICAL SECTIONS.

FOR RIPRAP DETAILS SEE PROJECT X-SECTIONS AND SHEET 342.

FOR BRIDGE LAYOUTS \ DETAILS, SEE SHEET(S) 521 - 533.

## UTILITY LEGEND

| | |
|---|---|
| — W — W — | WATER LINE |
| — T1 — T1 — | TELEPHONE LINE |
| — C — C — | CABLE LINE |
| — G1 — G1 — | GAS LINE |

LEVELS DISPLAYED
1 2 3 4 5 6 7 8 9 10 11 12 13 14 15 16
17 18 19 20 21 22 23 24 25 26 27 28 29 30 31 32
33 34 35 36 37 38 39 40 41 42 43 44 45 46 47 48
49 50 51 52 53 54 55 56 57 58 59 60 61 62 63

ACC: *:\aa\design\lp1604fm471-90\
FILE: plan41.dgn

STATE OF TEXAS
JOEL K. DAVENPORT, JR.
79276
REGISTERED
PROFESSIONAL ENGINEER

Joel K. Davenport, Jr. 11/1/00
Joel K. Davenport, Jr. P.E. 79276 Date

©2000
Texas Department of Transportation

# PLAN SHEET

SHEET 41 OF 57

| FED. RD. DIV. NO. | FEDERAL AID PROJECT NO. | | SHEET NO. |
|---|---|---|---|
| 6 | NH 2000(704), etc. | | 231 |
| STATE | DIST. | COUNTY | |
| TEXAS | SAT | BEXAR | |
| CONT. | SECT. | JOB | HIGHWAY NO. |
| 2452 | 01 | 036, etc. | LP 1604 |

QUANTITIES THIS SHEET
CSJ 2452-01-036

SCALE: 1:1000

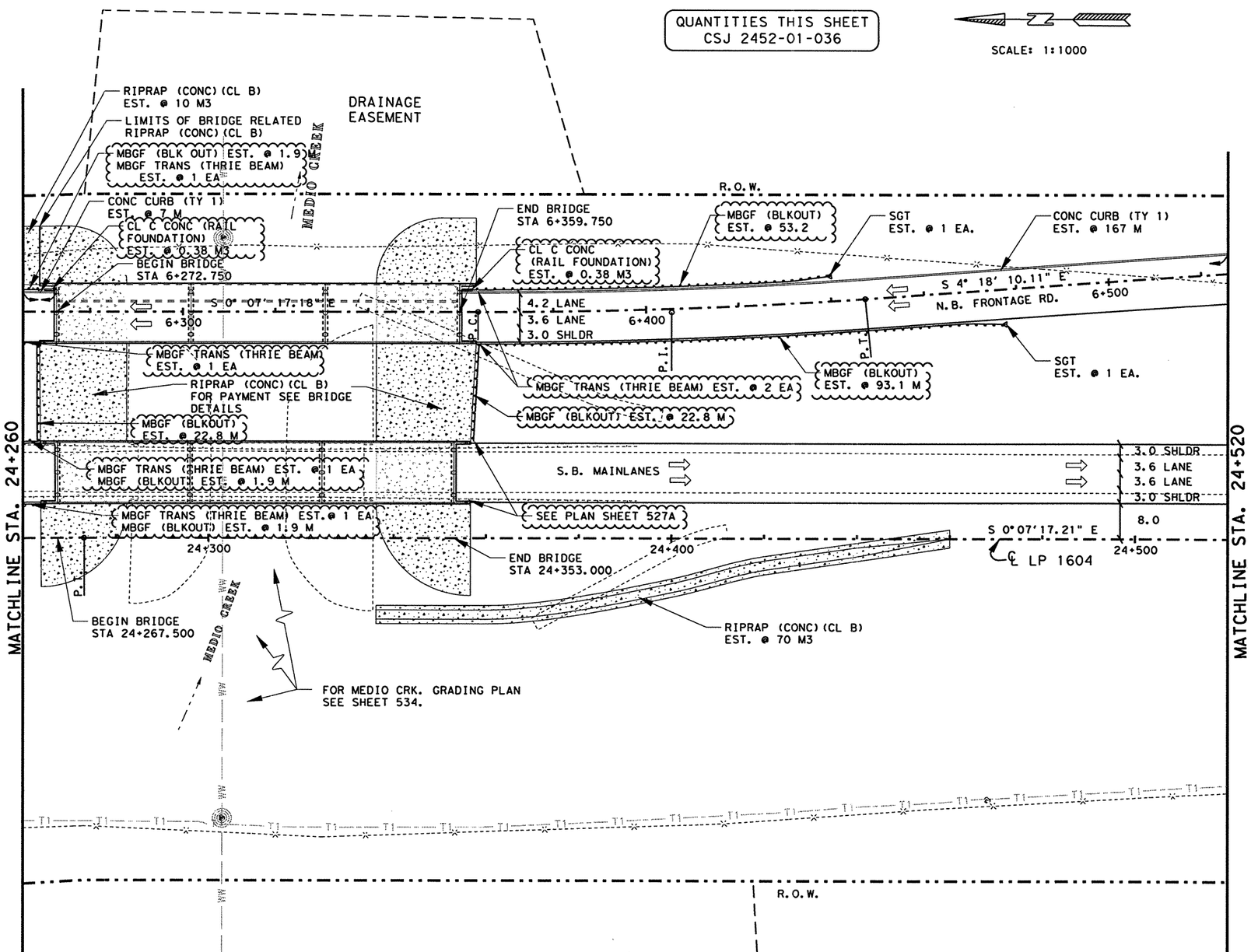


## ESTIMATED QUANTITIES

| | ITEM # | ITEM | UNIT | QTY. |
|---|---|---|---|---|
| | 100-5002 | PREP ROW | KM | 0.26 |
| | 110-5001 | EXCAVATION (RDWY) | M3 | 14641 |
| | 132-5018 | EMBANK (ORD COMP)(TY B)(CL 3) | M3 | 5598 |
| | 160-5002 | FURN AND PLAC TPSL (CL 2)(150 MM) | M2 | 10461 |
| | 164-5049 | DRILL SEED (PERM)(URBAN)(CLAY) | M2 | 10461 |
| | 247-5024 | FL BS (COMPL IN PLAC)(TY A GR 6 CL 4) | M3 | 1820 |
| | 310-5006 | ASPH MATL (AE-P) | L | 2103 |
| * | | ONE CRSE SURF TREAT | M2 | 4395 |
| | 316-5028 | AGGR (TY PB, GR 4) | M3 | 40 |
| | 316-5226 | ASPH (AC-15P, HFRS-2P OR CRS-2P) | L | 5977 |
| 20 | 420-5050 | CL C CONC (RAIL FOUNDATION) | M3 | 0.76 |
| | 432-5001 | RIPRAP (CONC)(CL B) | M3 | 80 |
| | 529-5001 | CONC CURB (TY 1) | M | 174 |
| 20 | 540-5006 | MBGF (TIM POST)(2.67 MM) | M | 0 |
| 20 | 540-5007 | MBGF (BLK OUT) TIM POST (2.67 MM) | M | 197.6 |
| 20 | 540-5030 | MBGF TRANS (THRIE BEAM) | EA | 6 |
| | 3117-5003 | HOT MIX (TY C) | MGR | 404 |
| | 3117-5018 | HOT MIX (TY C)(SURF) | MGR | 390 |
| | 5119-5003 | SINGLE GDRAIL TERM (TY III) | EA | 2 |

*FOR CONTRACTORS INFORMATION ONLY

NOTE(S):

ALL DIMENSIONS ARE IN METERS UNLESS OTHERWISE NOTED.

FOR HORIZONTAL ALIGNMENT \ DATA, SEE SHEET(S) 164 - 171.

FOR LIMITS OF SEEDING & TOPSOIL, SEE PROJECT X-SECTIONS AND TYPICAL SECTIONS.

FOR RIPRAP DETAILS SEE PROJECT X-SECTIONS AND SHEET 342.

FOR BRIDGE LAYOUTS \ DETAILS, SEE SHEET(S) 521 - 533.

BRIDGE RAIL DETAILS, SEE SHEET(S) _____

RAIL QUANTITIES, SEE SHEET(S) _____

FOR CHANGE ORDER 20

CHANGE ORDER NO. 20
-REVISED QUANTITIES
-ADDITION OF MBGF TRANS (THRIE BEAM) AND CL C FOOTING
-CHANGE MBGF TO MBGF (BLKOUT)

STATE OF TEXAS
JENNIFER L. MOCZYGEMBA
84734
REGISTERED PROFESSIONAL ENGINEER

Jennifer L. Moczygemba P.E. 84734 — P.E. — 8-8-2002 Date

## UTILITY LEGEND

| | |
|---|---|
| — W — W — | WATER LINE |
| — T1 — T1 — | TELEPHONE LINE |
| — C — C — | CABLE LINE |
| — G1 — G1 — | GAS LINE |

REVISED SHEET

Texas Department of Transportation

PLAN SHEET

SHEET 41 OF 57

| FED.RD. DIV.NO. | FEDERAL AID PROJECT NO. | | SHEET NO. |
|---|---|---|---|
| 6 | NH 2000(704), etc. | | 231A |
| STATE | DIST. | COUNTY | |
| TEXAS | SAT | BEXAR | |
| CONT. | SECT. | JOB | HIGHWAY NO. |
| 2452 | 01 | 036, etc. | LP 1604 |

8-07-02

LEVELS DISPLAYED
1 2 3 4 5 6 7 8 9 10 11 12 13 14 15 16
17 18 19 20 21 22 23 24 25 26 27 28 29 30 31 32
33 34 35 36 37 38 39 40 41 42 43 44 45 46 47 48
49 50 51 52 53 54 55 56 57 58 59 60 61 62 63

ACC: t:\oo\design\lp1604fm471-90\
FILE: plan41*co20.dgn

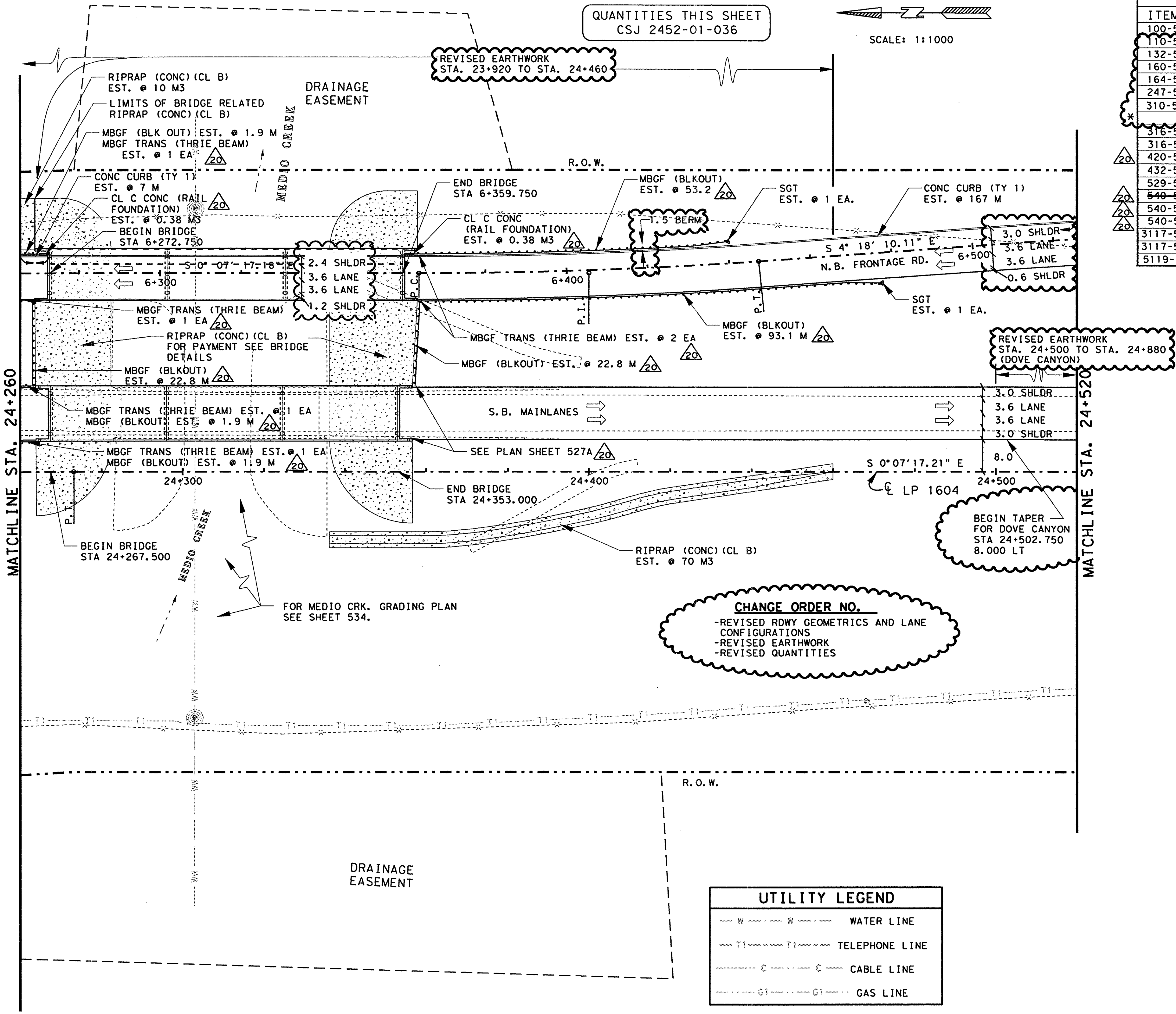


## ESTIMATED QUANTITIES

| ITEM # | ITEM | UNIT | QTY. |
|---|---|---|---|
| 100-5002 | PREP ROW | KM | 0.26 |
| 110-5001 | EXCAVATION (RDWY) | M3 | 14632 |
| 132-5018 | EMBANK (ORD COMP)(TY B)(CL 3) | M3 | 5642 |
| 160-5002 | FURN AND PLAC TPSL (CL 2)(150 MM) | M2 | 10458 |
| 164-5049 | DRILL SEED (PERM)(URBAN)(CLAY) | M2 | 10458 |
| 247-5024 | FL BS (COMPL IN PLAC)(TY A GR 6 CL 4) | M3 | 1821 |
| 310-5006 | ASPH MATL (AE-P) | L | 2106 |
| * | ONE CRSE SURF TREAT | M2 | 4398 |
| 316-5028 | AGGR (TY PB,GR 4) | M3 | 40 |
| 316-5226 | ASPH (AC-15P, HFRS-2P OR CRS-2P) | L | 5977 |
| 420-5050 | CL C CONC (RAIL FOUNDATION) | M3 | 0.76 |
| 432-5001 | RIPRAP (CONC)(CL B) | M3 | 80 |
| 529-5001 | CONC CURB (TY 1) | M | 174 |
| ~~540-5006~~ | ~~MBGF (TIM POST)(2.67 MM)~~ | ~~M~~ | ~~0~~ |
| 540-5007 | MBGF (BLK OUT) TIM POST (2.67 MM) | M | 197.6 |
| 540-5030 | MBGF TRANS (THRIE BEAM) | EA | 6 |
| 3117-5003 | HOT MIX (TY C) | MGR | 404 |
| 3117-5018 | HOT MIX (TY C)(SURF) | MGR | 390 |
| 5119-5003 | SINGLE GDRAIL TERM (TY III) | EA | 2 |

*FOR CONTRACTORS INFORMATION ONLY

NOTE(S):

ALL DIMENSIONS ARE IN METERS UNLESS OTHERWISE NOTED.

FOR HORIZONTAL ALIGNMENT \ DATA, SEE SHEET(S) 164 - 171.

FOR LIMITS OF SEEDING & TOPSOIL, SEE PROJECT X-SECTIONS AND TYPICAL SECTIONS.

FOR RIPRAP DETAILS SEE PROJECT X-SECTIONS AND SHEET 342.

FOR BRIDGE LAYOUTS \ DETAILS, SEE SHEET(S) 521 - 533.

BRIDGE RAIL DETAILS, SEE SHEET(S) ______

RAIL QUANTITIES, SEE SHEET(S) ______

CHANGE ORDER 64

REVISED SHEET

CHANGE ORDER NO. 64 | REVISED SHEET

## UTILITY LEGEND

| | |
|---|---|
| — W — · — W — · — | WATER LINE |
| — T1 — — T1 — — | TELEPHONE LINE |
| —— C — · · — C —— | CABLE LINE |
| — · · — G1 — · · — G1 — · · | GAS LINE |

△ REFERS TO CHANGES MADE AS PART OF CHANGE ORDER.

STATE OF TEXAS
JEROME D. PAVLISKA
76075
REGISTERED PROFESSIONAL ENGINEER

Jerome D. Pavliska, P.E. 4-28-04
Jerome D. Pavliska, P.E. Date

©2000 Texas Department of Transportation

# PLAN SHEET

SHEET 41 OF 57

| FED. RD. DIV. NO. | FEDERAL AID PROJECT NO. | | SHEET NO. |
|---|---|---|---|
| 6 | NH 2000(704),etc. | | 231B |
| STATE | DIST. | COUNTY | |
| TEXAS | SAT | BEXAR | |
| CONT. | SECT. | JOB | HIGHWAY NO. |
| 2452 | 01 | 036,etc. | LP 1604 |

05-01-04

Plotted on: 4/29/2004
Design Filename: I:\AO\Design\lp1604fm471-90\PD*Phase2*change*order*mylars\submital\plansheets\road\plan-profile\plan41*CO20.dgn
LEVELS DISPLAYED
1 2 3 4 5 6 7 8 9 10 11 12 13 14 15 16
17 18 19 20 21 22 23 24 25 26 27 28 29 30 31 32
33 34 35 36 37 38 39 40 41 42 43 44 45 46 47 48
49 50 51 52 53 54 55 56 57 58 59 60 61 62 63
ACC: t:ao\design\lp1604fm471-90\
FILE: plan41*CO20.dgn

QUANTITIES THIS SHEET
CSJ 2452-01-036

SCALE: 1:1000

## ESTIMATED QUANTITIES

| | ITEM # | ITEM | UNIT | QTY. |
|---|---|---|---|---|
| | 100-5002 | PREP ROW | KM | 0.28 |
| | 110-5001 | EXCAVATION (RDWY) | M3 | 94596 |
| | 132-5018 | EMBANK (ORD COMP)(TY B)(CL 3) | M3 | 2885 |
| | 160-5002 | FURN AND PLAC TPSL (CL 2)(150 MM) | M2 | 23095 |
| | 164-5049 | DRILL SEED (PERM)(URBAN)(CLAY) | M2 | 23096 |
| | 247-5024 | FL BS (COMPL IN PLAC)(TY A GR 6 CL 4) | M3 | 2951 |
| | 310-5006 | ASPH MATL (AE-P) | L | 3430 |
| * | | ONE CRSE SURF TREAT | M2 | 7126 |
| | 316-5028 | AGGR (TY PB, GR 4) | M3 | 65 |
| | 316-5226 | ASPH (AC-15P, HFRS-2P OR CRS-2P) | L | 9691 |
| | 529-5001 | CONC CURB (TY 1) | M | 281 |
| | 3117-5003 | HOT MIX (TY C) | MGR | 654 |
| | 3117-5018 | HOT MIX (TY C)(SURF) | MGR | 632 |
| | | | | |
| | | | | |

* FOR CONTRACTORS INFORMATION ONLY

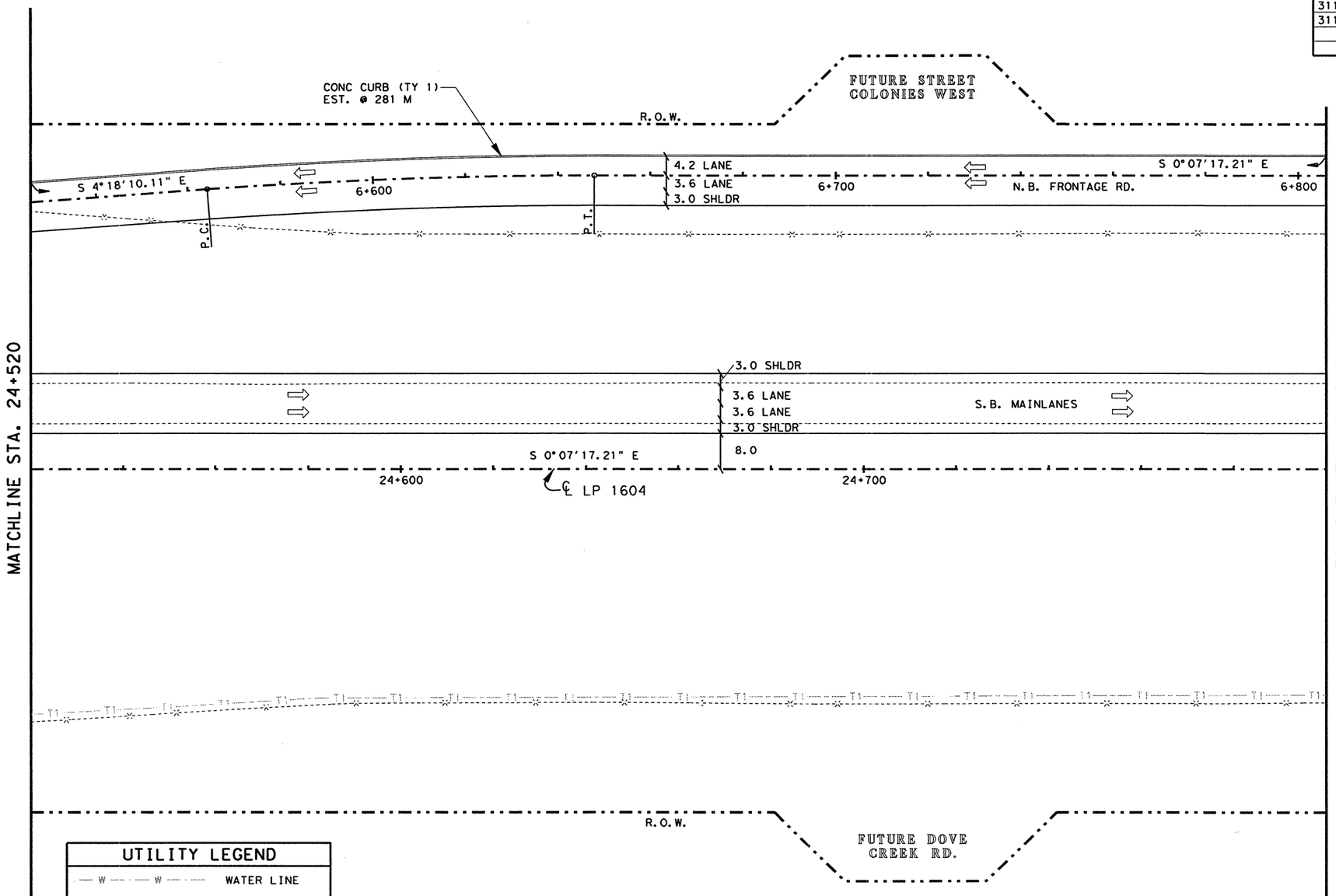


### UTILITY LEGEND

| | |
|---|---|
| W W | WATER LINE |
| T1 T1 | TELEPHONE LINE |
| C C | CABLE LINE |
| G1 G1 | GAS LINE |

NOTE(S):

ALL DIMENSIONS ARE IN METERS UNLESS OTHERWISE NOTED.

FOR HORIZONTAL ALIGNMENT / DATA, SEE SHEET(S) 164 - 171.

FOR LIMITS OF SEEDING & TOPSOIL, SEE PROJECT X-SECTIONS AND TYPICAL SECTIONS.

STATE OF TEXAS
JOEL K. DAVENPORT, JR.
79276
REGISTERED PROFESSIONAL ENGINEER

Joel K Davenport Jr 11/1/00
Joel K. Davenport, Jr. P.E. 79276 Date

LEVELS DISPLAYED
1 2 3 4 5 6 7 8 9 10 11 12 31 41 51 5 6 7 8 9 20 21 22 23 24 25 26 27 28 29 30 31 32 33 34 35 36 37 38 39 40 41 42 43 44 45 46 47 48 49 50 51 52 53 54 55 56 57 58 59 60 61 62 63

ACC: t:\ao\design\lp1604fm471-90\
FILE: plan42.dgn

© 2000 Texas Department of Transportation

# PLAN SHEET

SHEET 42 OF 57

| FED.RD. DIV.NO. | FEDERAL AID PROJECT NO. | | SHEET NO. |
|---|---|---|---|
| 6 | NH 2000(704), etc. | | 232 |
| STATE | DIST. | COUNTY | |
| TEXAS | SAT | BEXAR | |
| CONT. | SECT. | JOB | HIGHWAY NO. |
| 2452 | 01 | 036, etc. | LP 1604 |

QUANTITIES THIS SHEET
CSJ 2452-01-036

SCALE: 1:1000

## ESTIMATED QUANTITIES

| ITEM # | ITEM | UNIT | QTY. |
|---|---|---|---|
| 100-5002 | PREP ROW | KM | 0.28 |
| 110-5001 | EXCAVATION (RDWY) | M3 | 98379 |
| 132-5018 | EMBANK (ORD COMP) (TY B) (CL 3) | M3 | 2879 |
| 160-5002 | FURN AND PLAC TPSL (CL 2) (150 MM) | M2 | 29040 |
| 164-5049 | DRILL SEED (PERM) (URBAN) (CLAY) | M2 | 29040 |
| 247-5024 | FL BS (COMPL IN PLACE) (TY A GR 6 CL 4) | M3 | 3929 |
| 310-5006 | ASPH MATL (AE-P) | L | 5297 |
| | ONE CRSE SURF TREAT | M2 | 9200 |
| 316-5028 | AGGR (TY PB, GR 4) | M3 | 84 |
| 316-5226 | ASPH (AC-15P, HFRS-2P OR CRS-2P) | L | 12512 |
| 432-5001 | RIPRAP (CONC) (CL B) | M3 | 54.3 |
| 529-5001 | CONC CURB (TY 1) | M | 447 |
| 3117-5003 | HOT MIX (TY C) | MGR | 860 |
| 3117-5018 | HOT MIX (TY C) (SURF) | MGR | 827 |

* FOR CONTRACTORS INFORMATION ONLY

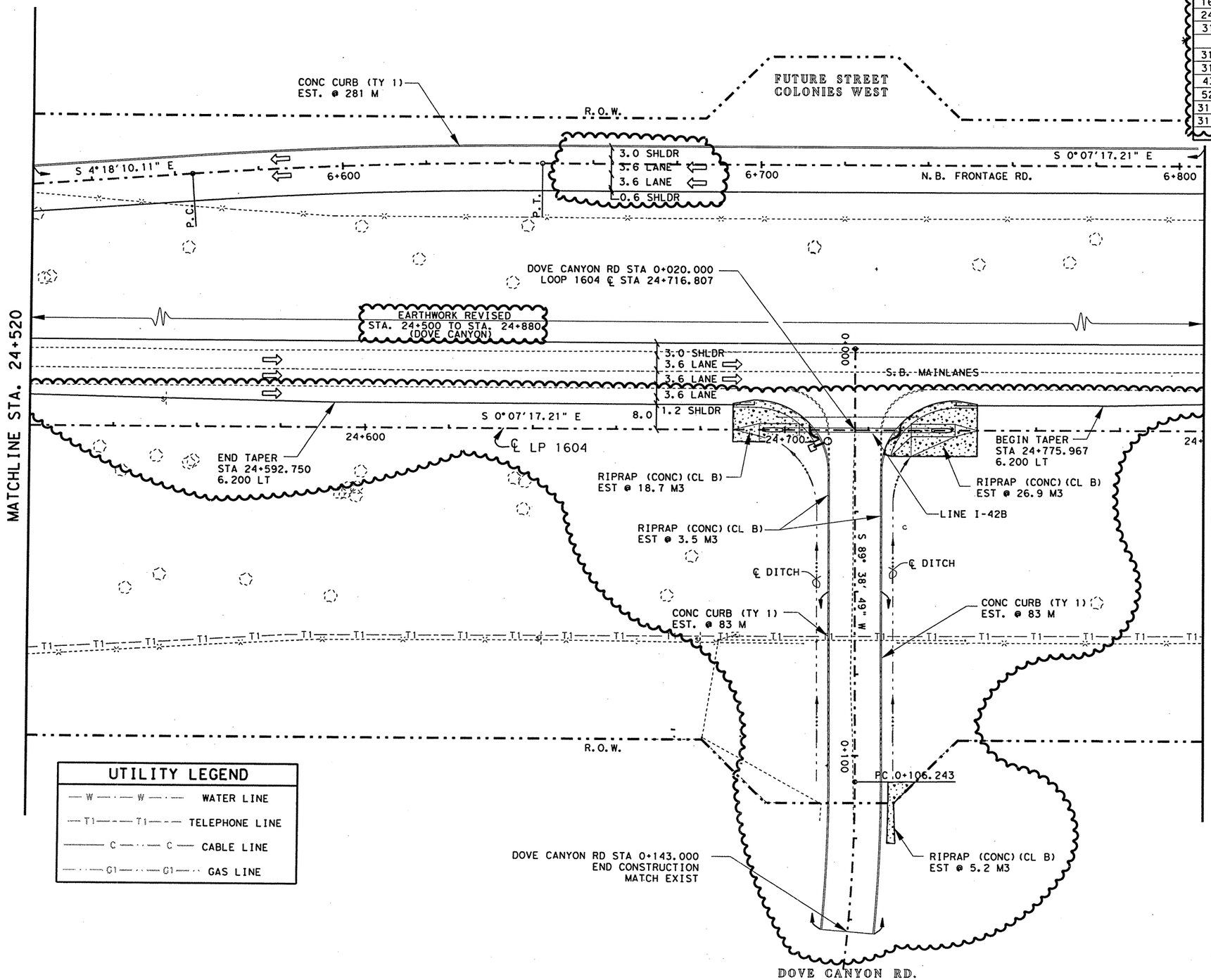


### UTILITY LEGEND

- W — W — WATER LINE
- T1 — T1 — TELEPHONE LINE
- C — C — CABLE LINE
- G1 — G1 — GAS LINE

NOTE(S):

ALL DIMENSIONS ARE IN METERS UNLESS OTHERWISE NOTED.

FOR HORIZONTAL ALIGNMENT / DATA, SEE SHEET(S) 164 - 171.

FOR LIMITS OF SEEDING & TOPSOIL, SEE PROJECT X-SECTIONS AND TYPICAL SECTIONS.

SEE INTERSECTION LAYOUT FOR MORE DETAILS.

**CHANGE ORDER NO. 64**

-REVISED RDWY GEOMETRICS AND LANE CONFIGURATIONS
-ADDED DOVE CANYON RD
-REVISED QUANTITIES

**CHANGE ORDER NO. 64** | **REVISED SHEET**

STATE OF TEXAS
JEROME D. PAVLISKA
76075
REGISTERED PROFESSIONAL ENGINEER

Jerome D. Pavliska, P.E. 4-28-04
Jerome D. Pavliska, P.E. — Date

©2000 Texas Department of Transportation

# PLAN SHEET

SHEET 42 OF 57

| FED. RD. DIV. NO. | FEDERAL AID PROJECT NO. | | SHEET NO. |
|---|---|---|---|
| 6 | NH 2000(704), etc. | | 232A |
| STATE | DIST. | COUNTY | |
| TEXAS | SAT | BEXAR | |
| CONT. | SECT. | JOB | HIGHWAY NO. |
| 2452 | 01 | 036, etc. | LP 1604 |

Plotted on: 4/28/2004
Design Filename: \AO\Design\lp1604fm471-90\PD\Phase2\changeorder*mylars\submittal\plansheets_dd\plan-profile\plan42.dgn
ACC: t:\ao\design\lp1604fm471-90\
FILE: plan42.dgn
LEVELS DISPLAYED

QUANTITIES THIS SHEET
CSJ 2452-01-036

SCALE: 1:1000

EXIST. CPS ELECTRIC UTILITY EASEMENT

35

R.O.W.

P.I.

CONC CURB (TY 1) EST. @ 261 M

36

4.2 LANE S 0°07'17.21" E
3.6 LANE
3.0 SHLDR

6+900

P.C.

N.B. FRONTAGE ROAD

P.T.

S 3°10'59.54" W

7+000

MATCHLINE STA. 24+800

3.0 SHLDR
3.6 LANE
3.6 LANE
3.0 SHLDR
8.0

S.B. MAINLANES

S 0° 07' 17.21" E

24+900

℄ LP 1604

25+000

MATCHLINE STA. 25+060

R.O.W.

EXIST. CPS ELECTRIC UTILITY EASEMENT

EXIST. PG & E GAS PIPELINE EASEMENT

## UTILITY LEGEND

| | |
|---|---|
| W — W | WATER LINE |
| T1 — T1 | TELEPHONE LINE |
| C — C | CABLE LINE |
| G1 — G1 | GAS LINE |

## ESTIMATED QUANTITIES

| ITEM # | ITEM | UNIT | QTY. |
|---|---|---|---|
| 100-5002 | PREP ROW | KM | 0.26 |
| 110-5001 | EXCAVATION (RDWY) | M3 | 108221 |
| 132-5018 | EMBANK (ORD COMP) (TY B) (CL 3) | M3 | 1582 |
| 160-5002 | FURN AND PLAC TPSL (CL 2) (150 MM) | M2 | 19536 |
| 164-5049 | DRILL SEED (PERM) (URBAN) (CLAY) | M2 | 19536 |
| 247-5024 | FL BS (COMPL IN PLAC)(TY A GR 6 CL 4) | M3 | 2741 |
| * 310-5006 | ASPH MATL (AE-P) | L | 3185 |
| | ONE CRSE SURF TREAT | M2 | 6617 |
| 316-5028 | AGGR (TY PB, GR 4) | M3 | 60 |
| 316-5226 | ASPH (AC-15P, HFRS-2P OR CRS-2P) | L | 8999 |
| 529-5001 | CONC CURB (TY 1) | M | 261 |
| 530-5003 | DRVWAYS (ASPH-CONC PAV) | M2 | 100 |
| 3117-5003 | HOT MIX (TY C) | MGR | 607 |
| 3117-5018 | HOT MIX (TY C) (SURF) | MGR | 587 |

* FOR CONTRACTORS INFORMATION ONLY

NOTE(S):

ALL DIMENSIONS ARE IN METERS UNLESS OTHERWISE NOTED.

FOR HORIZONTAL ALIGNMENT / DATA, SEE SHEET(S) 164 -171.

FOR LIMITS OF SEEDING & TOPSOIL, SEE PROJECT X-SECTIONS AND TYPICAL SECTIONS.

(#) DRIVEWAY #, FOR MORE DETAILS SEE SHEET(S) 27, 28 & 233.

STATE OF TEXAS
JOEL K. DAVENPORT, JR.
79276
REGISTERED PROFESSIONAL ENGINEER

Joel K Davenport Jr 11/1/00
Joel K. Davenport, Jr. P.E. 79276 Date

Texas Department of Transportation

# PLAN SHEET

SHEET 43 OF 57

| FED.RD. DIV.NO. | FEDERAL AID PROJECT NO. | | SHEET NO. |
|---|---|---|---|
| 6 | NH 2000(704), etc. | | 233 |
| STATE | DIST. | COUNTY | |
| TEXAS | SAT | BEXAR | |
| CONT. | SECT. | JOB | HIGHWAY NO. |
| 2452 | 01 | 036, etc. | LP 1604 |

LEVELS DISPLAYED
1 2 3 4 5 6 7 8 9 10 11 12 13 14 15 16
17 18 19 20 21 22 23 24 25 26 27 28 29 30 31 32
33 34 35 36 37 38 39 40 41 42 43 44 45 46 47 48
49 50 51 52 53 54 55 56 57 58 59 60 61 62 63

ACC: *:ao\design\lp1604fm471-90\
FILE: plan43.dgn

Plotted on: 4/29/2004
Design Filename: T:\AO\Design\lp1604fm471-90\PD*Phase2*change*order*mylars\submittal\plansheets\road\plan-profile\plan43.dgn
LEVELS DISPLAYED
ACC: t:ao\design\lp1604fm471-90\
FILE: plan43.dgn

QUANTITIES THIS SHEET
CSJ 2452-01-036

SCALE: 1:1000

EXIST. CPS ELECTRIC UTILITY EASEMENT

35

R.O.W.

P.I.

CONC CURB (TY 1) EST. @ 261 M

36

3.0 SHLDR
3.6 LANE
3.6 LANE
0.6 SHLDR

S 0°07'17.21" E

6+900

P.C.

N.B. FRONTAGE ROAD

P.T.

S 3°10'59.54" W

7+000

EARTHWORK REVISED TO STA. 24+880 (DOVE CANYON)

OH

OH

3.0 SHLDR
3.6 LANE
3.6 LANE
3.0 SHLDR
8.0

S.B. MAINLANES

S 0° 07' 17.21" E

MATCHLINE STA. 24+800

END TAPER FOR DOVE CANYON STA 24+865.950 8.000 LT

24+900

℄ LP 1604

25+000

MATCHLINE STA. 25+060

T1 T1 T1 T1 T1 T1 T1 T1 T1 T1 T1 T1 T1 T1 T1 T1 T1 T1 T1 T1 T1 T1 T1 T1

R.O.W.

G1 G1 G1 G1 G1 G1

EXIST. CPS ELECTRIC UTILITY EASEMENT

EXIST. PG & E GAS PIPELINE EASEMENT

## UTILITY LEGEND

| | |
|---|---|
| — W — · — W — · — | WATER LINE |
| — T1 — — — T1 — — — | TELEPHONE LINE |
| ——— C ——·—— C ——— | CABLE LINE |
| — · — G1 — · — · — G1 — · — · | GAS LINE |

## ESTIMATED QUANTITIES

| ITEM # | ITEM | UNIT | QTY. |
|---|---|---|---|
| 100-5002 | PREP ROW | KM | 0.26 |
| 110-5001 | EXCAVATION (RDWY) | M3 | 108205 |
| 132-5018 | EMBANK (ORD COMP) (TY B) (CL 3) | M3 | 1582 |
| 160-5002 | FURN AND PLAC TPSL (CL 2) (150 MM) | M2 | 19492 |
| 164-5049 | DRILL SEED (PERM) (URBAN) (CLAY) | M2 | 19492 |
| 247-5024 | FL BS (COMPL IN PLAC)(TY A GR 6 CL 4) | M3 | 2759 |
| 310-5006 | ASPH MATL (AE-P) | L | 3225 |
| * | ONE CRSE SURF TREAT | M2 | 6661 |
| 316-5028 | AGGR (TY PB GR 4) | M3 | 601 |
| 316-5226 | ASPH (AC-15P, HFRS-2P OR CRS-2P) | L | 9059 |
| 529-5001 | CONC CURB (TY 1) | M | 261 |
| 530-5003 | DRVWAYS (ASPH-CONC PAV) | M2 | 100 |
| 3117-5003 | HOT MIX (TY C) | MGR | 611 |
| 3117-5018 | HOT MIX (TY C) (SURF) | MGR | 591 |

* FOR CONTRACTORS INFORMATION ONLY

NOTE(S):

ALL DIMENSIONS ARE IN METERS UNLESS OTHERWISE NOTED.

FOR HORIZONTAL ALIGNMENT / DATA, SEE SHEET(S) 164 -171.

FOR LIMITS OF SEEDING & TOPSOIL, SEE PROJECT X-SECTIONS AND TYPICAL SECTIONS.

(#) DRIVEWAY #, FOR MORE DETAILS SEE SHEET(S) 27, 28 & 233.

**CHANGE ORDER NO. 64**
-REVISED RDWY GEOMETRICS AND LANE CONFIGURATIONS
-REVISED EARTHWORK
-REVISED QUANTITIES

**CHANGE ORDER NO. 64** | **REVISED SHEET**

STATE OF TEXAS
JEROME D. PAVLISKA
76075
REGISTERED PROFESSIONAL ENGINEER

Jerome D. Pavliska, P.E. 4-28-04
Jerome D. Pavliska, P.E. — Date

©2002
Texas Department of Transportation

# PLAN SHEET

SHEET 43 OF 57

| FED. RD. DIV. NO. | FEDERAL AID PROJECT NO. | | SHEET NO. |
|---|---|---|---|
| 6 | NH 2000(704), etc. | | 233A |
| STATE | DIST. | COUNTY | |
| TEXAS | SAT | BEXAR | |
| CONT. | SECT. | JOB | HIGHWAY NO. |
| 2452 | 01 | 036, etc. | LP 1604 |

QUANTITIES THIS SHEET
CSJ 2452-01-036

SCALE: 1:1000

## ESTIMATED QUANTITIES

| | ITEM # | ITEM | UNIT | QTY. |
|---|---|---|---|---|
| | 100-5002 | PREP ROW | KM | .26 |
| | 110-5001 | EXCAVATION (RDWY) | M3 | 25821 |
| | 132-5018 | EMBANK (ORD COMP) (TY B) (CL 3) | M3 | 5734 |
| | 160-5002 | FURN AND PLAC TPSL (CL 2) (150 MM) | M2 | 11394 |
| | 164-5049 | DRILL SEED (PERM) (URBAN) (CLAY) | M2 | 11394 |
| | 247-5024 | FL BS (COMPL IN PLAC)(TY A GR 6 CL 4) | M3 | 2741 |
| | 310-5006 | ASPH MATL (AE-P) | L | 3185 |
| * | | ONE CRSE SURF TREAT | M2 | 6617 |
| | 316-5028 | AGGR (TY PB, GR 4) | M3 | 60 |
| | 316-5226 | ASPH (AC-15P, HFRS-2P OR CRS-2P) | L | 8999 |
| | 432-5001 | RIPRAP (CONC) (CL B) | M3 | 80 |
| | 529-5001 | CONC CURB (TY 1) | M | 261 |
| | 3117-5003 | HOT MIX (TY C) | MGR | 607 |
| | 3117-5018 | HOT MIX (TY C) (SURF) | MGR | 587 |
| | | | | |

* FOR CONTRACTORS INFORMATION ONLY

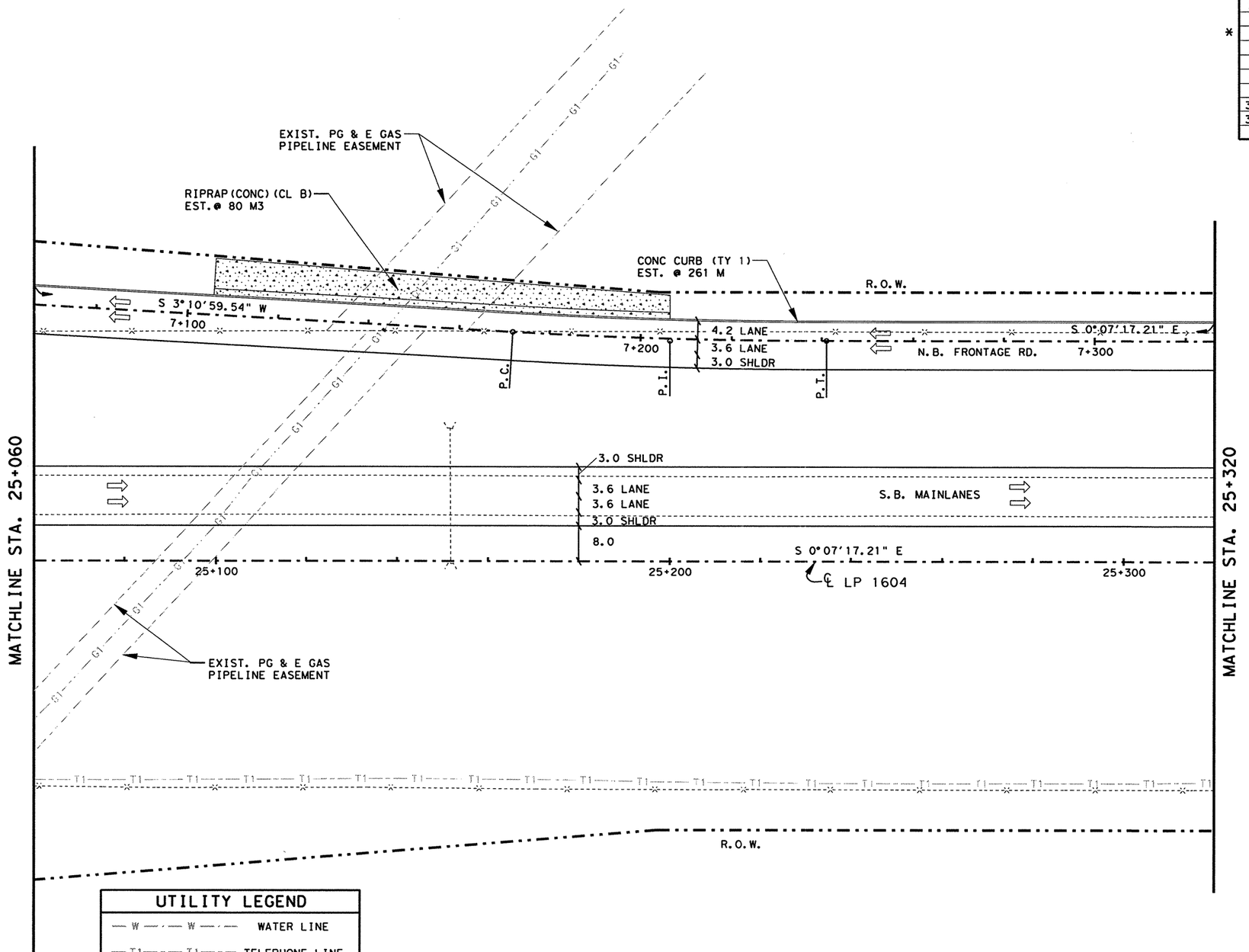


### UTILITY LEGEND

| | |
|---|---|
| W W | WATER LINE |
| T1 T1 | TELEPHONE LINE |
| C C | CABLE LINE |
| G1 G1 | GAS LINE |

NOTE(S):

ALL DIMENSIONS ARE IN METERS UNLESS OTHERWISE NOTED.

FOR HORIZONTAL ALIGNMENT / DATA, SEE SHEET(S) 164 - 171.

FOR LIMITS OF SEEDING & TOPSOIL, SEE PROJECT X-SECTIONS AND TYPICAL SECTIONS.

FOR RIPRAP DETAILS, SEE PROJECT X-SECTIONS AND SHEET 342.

STATE OF TEXAS
JOEL K. DAVENPORT, JR.
79276
REGISTERED PROFESSIONAL ENGINEER

Joel K. Davenport, Jr. P.E. 79276 — Date 11/1/00

©2000
Texas Department of Transportation

# PLAN SHEET

SHEET 44 OF 57

| FED. RD. DIV. NO. | FEDERAL AID PROJECT NO. | | SHEET NO. |
|---|---|---|---|
| 6 | NH 2000(704), etc. | | 234 |
| STATE | DIST. | COUNTY | |
| TEXAS | SAT | BEXAR | |
| CONT. | SECT. | JOB | HIGHWAY NO. |
| 2452 | 01 | 036, etc. | LP 1604 |

LEVELS DISPLAYED
1 2 3 4 5 6 7 8 9 10 11 12 13 14 15 16
17 18 19 20 21 22 23 24 25 26 27 28 29 30 31 32
33 34 35 36 37 38 39 40 41 42 43 44 45 46 47 48
49 50 51 52 53 54 55 56 57 58 59 60 61 62 63

ACC: t:\oo\design\lp1604fm471-90\
FILE: plan44.dgn

QUANTITIES THIS SHEET
CSJ 2452-01-036

SCALE: 1:1000

CONSTRUCTED BY OTHERS

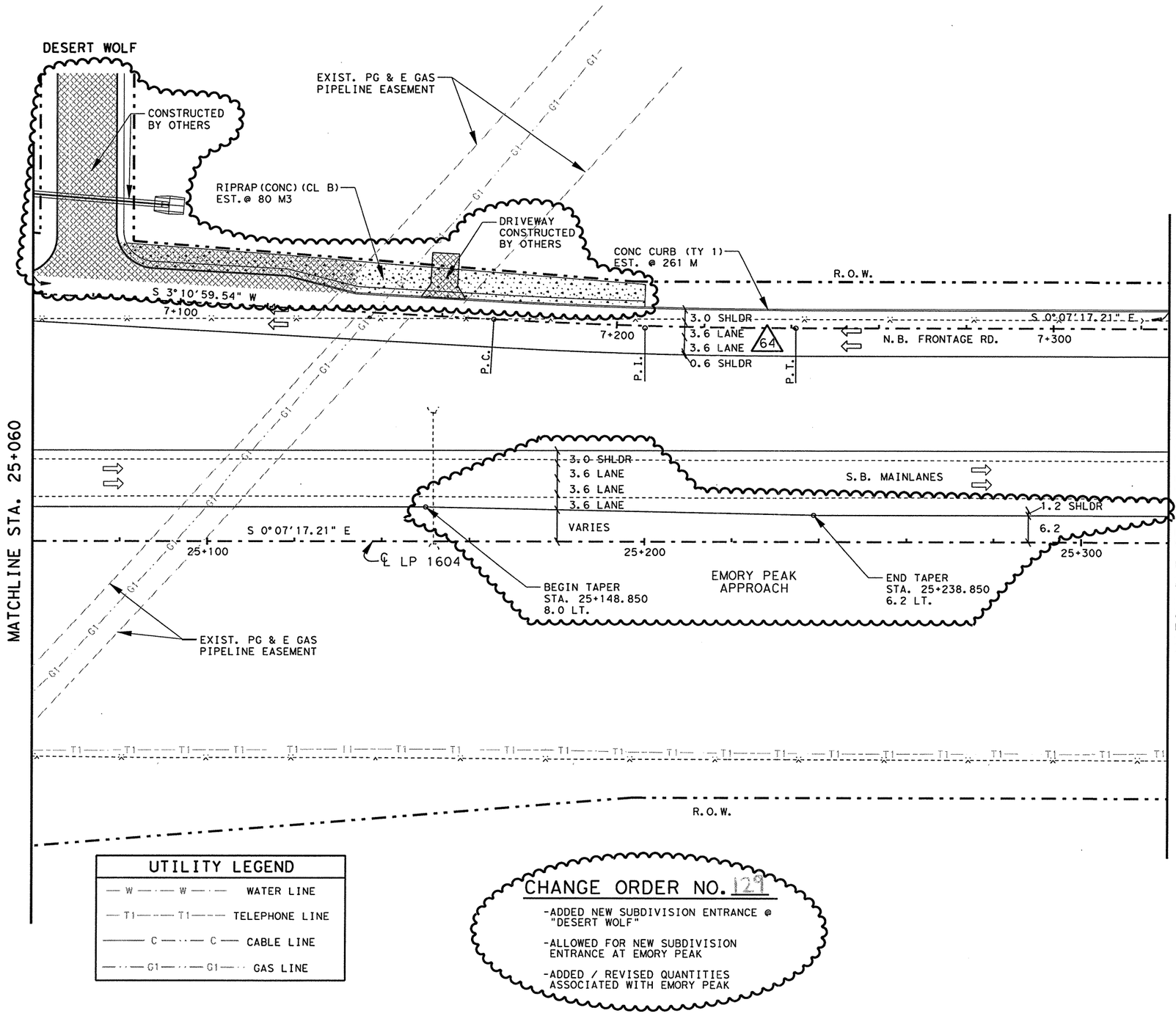


## ESTIMATED QUANTITIES

| | ITEM # | ITEM | UNIT | QTY. |
|---|---|---|---|---|
| | 100-5002 | PREP ROW | KM | 0.26 |
| | 110-5001 | EXCAVATION (RDWY) | M3 | 25738 |
| | 132-5018 | EMBANK (ORD COMP) (TY B) (CL 3) | M3 | 5733 |
| | 160-5002 | FURN AND PLAC TPSL (CL 2) (150 MM) | M2 | 11441 |
| | 164-5049 | DRILL SEED (PERM) (URBAN) (CLAY) | M2 | 11441 |
| | 247-5024 | FL BS (COMPL IN PLAC)(TY A GR 6 CL 4) | M3 | 2809 |
| | 310-5006 | ASPH MATL (AE-P) | L | 6123 |
| * | | ONE CRSE SURF TREAT | M2 | 6804 |
| | 316-5028 | AGGR (TY PB, GR 4) | M3 | 62 |
| | 316-5226 | ASPH (AC-15P, HFRS-2P OR CRS-2P) | L | 9253 |
| | 432-5001 | RIPRAP (CONC) (CL B) | M3 | 80 |
| | 529-5001 | CONC CURB (TY 1) | M | 261 |
| | 3117-5003 | HOT MIX (TY C) | MGR | 626 |
| | 3117-5018 | HOT MIX (TY C) (SURF) | MGR | 608 |

* FOR CONTRACTORS INFORMATION ONLY

NOTE(S):

ALL DIMENSIONS ARE IN METERS UNLESS OTHERWISE NOTED.

FOR HORIZONTAL ALIGNMENT / DATA, SEE SHEET(S) 164 - 171.

FOR LIMITS OF SEEDING & TOPSOIL, SEE PROJECT X-SECTIONS AND TYPICAL SECTIONS.

FOR RIPRAP DETAILS, SEE PROJECT X-SECTIONS AND SHEET 342.

△# REFERS TO CHANGES MADE AS PART OF CHANGE ORDER.

## UTILITY LEGEND

| | |
|---|---|
| — W — W — | WATER LINE |
| — T1 — T1 — | TELEPHONE LINE |
| — C — C — | CABLE LINE |
| — G1 — G1 — | GAS LINE |

## CHANGE ORDER NO. 129

-ADDED NEW SUBDIVISION ENTRANCE @ "DESERT WOLF"

-ALLOWED FOR NEW SUBDIVISION ENTRANCE AT EMORY PEAK

-ADDED / REVISED QUANTITIES ASSOCIATED WITH EMORY PEAK

CHANGE ORDER 129

REVISED SHEET

STATE OF TEXAS
FITZGERALDO G. SANCHEZ
76084
LICENCED PROFESSIONAL ENGINEER

Fitzgeraldo G. Sanchez, P.E. 05-23-06 Date

©2000 Texas Department of Transportation

PLAN SHEET

SHEET 44 OF 57

| FED.RD. DIV.NO. | FEDERAL AID PROJECT NO. | | SHEET NO. |
|---|---|---|---|
| 6 | NH 2000(704), etc. | | 234A |
| STATE | DIST. | COUNTY | |
| TEXAS | SAT | BEXAR | |
| CONT. | SECT. | JOB | HIGHWAY NO. |
| 2452 | 01 | 036, etc. | LP 1604 |

01-30-06

LEVELS DISPLAYED
1 2 3 4 5 6 7 8 9 10 11 12 13 14 15 16
17 18 19 20 21 22 23 24 25 26 27 28 29 30 31 32
33 34 35 36 37 38 39 40 41 42 43 44 45 46 47 48
49 50 51 52 53 54 55 56 57 58 59 60 61 62 63

ACC: t:\ao\design\lp1604fm471-90\
FILE: plan44.dgn

QUANTITIES THIS SHEET
CSJ 2452-01-036

SCALE: 1:1000

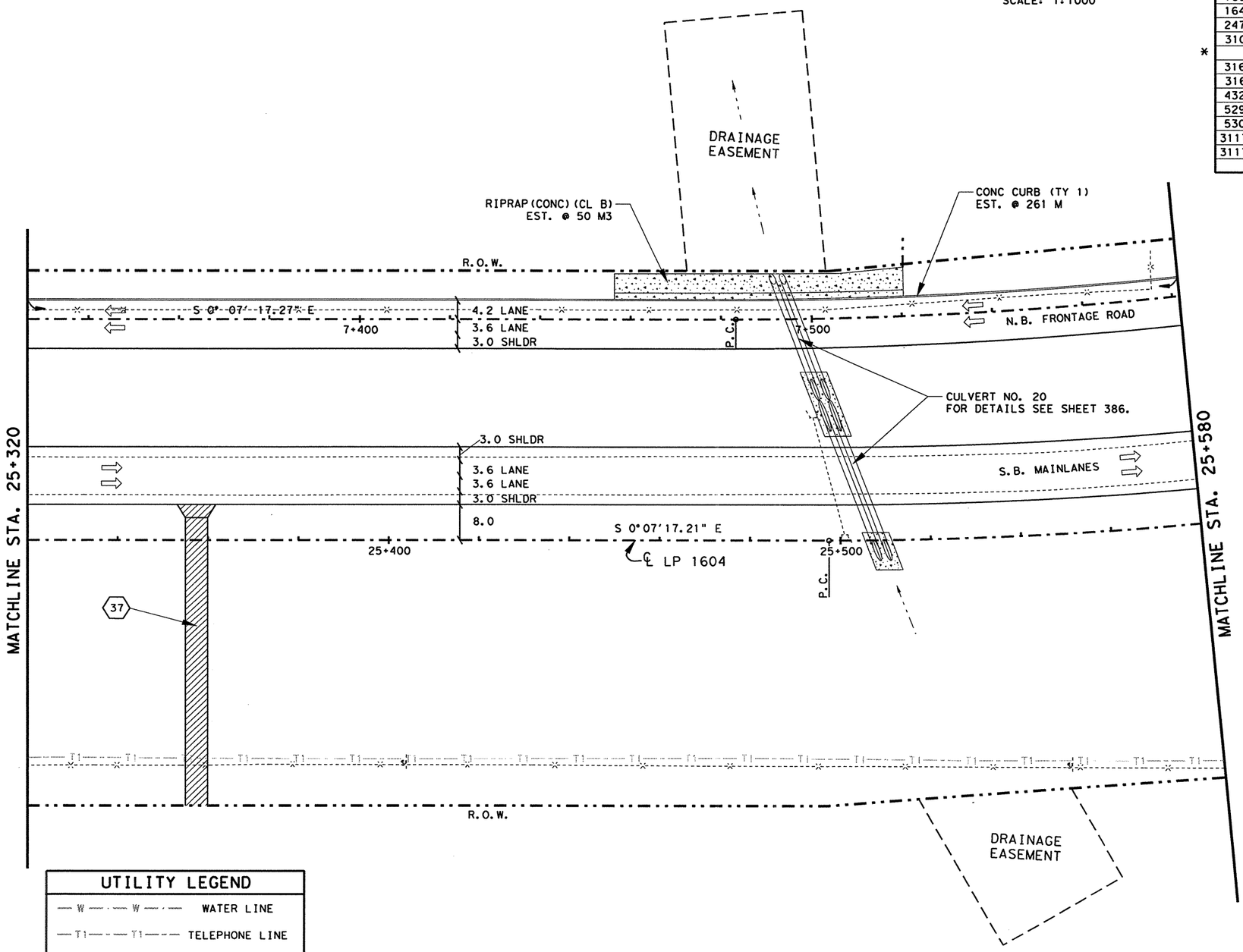


## UTILITY LEGEND

| | |
|---|---|
| — W — W — | WATER LINE |
| — T1 — T1 — | TELEPHONE LINE |
| — C — C — | CABLE LINE |
| — G1 — G1 — | GAS LINE |

## ESTIMATED QUANTITIES

| ITEM # | ITEM | UNIT | QTY. |
|---|---|---|---|
| 100-5002 | PREP ROW | KM | 7.26 |
| 110-5001 | EXCAVATION (RDWY) | M3 | 14755 |
| 132-5018 | EMBANK (ORD COMP) (TY B) (CL 3) | M3 | 2865 |
| 160-5002 | FURN AND PLAC TPSL (CL 2) (150 MM) | M2 | 11457 |
| 164-5049 | DRILL SEED (PERM) (URBAN) (CLAY) | M2 | 11457 |
| 247-5024 | FL BS (COMPL IN PLAC)(TY A GR 6 CL 4) | M3 | 2712 |
| 310-5006 | ASPH MATL (AE-P) | L | 3130 |
| * | ONE CRSE SURF TREAT | M2 | 6544 |
| 316-5028 | AGGR (TY PB,GR 4) | M3 | 59 |
| 316-5226 | ASPH (AC-15P, HFRS-2P OR CRS-2P) | L | 8900 |
| 432-5001 | RIPRAP (CONC) (CL B) | M3 | 50 |
| 529-5001 | CONC CURB (TY 1) | M | 261 |
| 530-5003 | DRVWAYS (ASPH-CONC PAV) | M2 | 356 |
| 3117-5003 | HOT MIX (TY C) | MGR | 601 |
| 3117-5018 | HOT MIX (TY C) (SURF) | MGR | 580 |
| | | | |

* FOR CONTRACTORS INFORMATION ONLY

NOTE(S):

ALL DIMENSIONS ARE IN METERS UNLESS OTHERWISE NOTED.

FOR HORIZONTAL ALIGNMENT / DATA, SEE SHEET(S) 164 - 171.

FOR LIMITS OF SEEDING & TOPSOIL, SEE PROJECT X-SECTIONS AND TYPICAL SECTIONS.

FOR RIPRAP DETAILS, SEE PROJECT X-SECTIONS AND SHEET 342.

FOR RIPRAP ASSOCIATED WITH STORM DRAINAGE STRUCTURES SEE SHEET(S) 454 - 470.

(#) DRIVEWAY #, FOR MORE DETAILS SEE SHEET(S) 27, 28 & 336.

STATE OF TEXAS
JOEL K. DAVENPORT, JR.
79276
REGISTERED PROFESSIONAL ENGINEER

Joel K. Davenport, Jr. 11/1/00
Joel K. Davenport, Jr. P.E. 79276 Date

©2000
Texas Department of Transportation

# PLAN SHEET

SHEET 45 OF 57

| FED.RD. DIV.NO. | FEDERAL AID PROJECT NO. | | SHEET NO. |
|---|---|---|---|
| 6 | NH 2000(704),etc. | | 235 |
| STATE | DIST. | COUNTY | |
| TEXAS | SAT | BEXAR | |
| CONT. | SECT. | JOB | HIGHWAY NO. |
| 2452 | 01 | 036,etc. | LP 1604 |

LEVELS DISPLAYED
1 2 3 4 5 6 7 8 9 10 11 12 13 14 15 16
17 18 19 20 21 22 23 24 25 26 27 28 29 30 31 32
33 34 35 50 63 78 89 90 94 114 124 134 144 154 164 174 18
49 50 51 52 53 54 55 56 57 58 59 60 61 62 63

ACC: t:\ao\design\lp1604fm471-90\
FILE: plan45.dgn

QUANTITIES THIS SHEET
CSJ 2452-01-036

SCALE: 1:1000

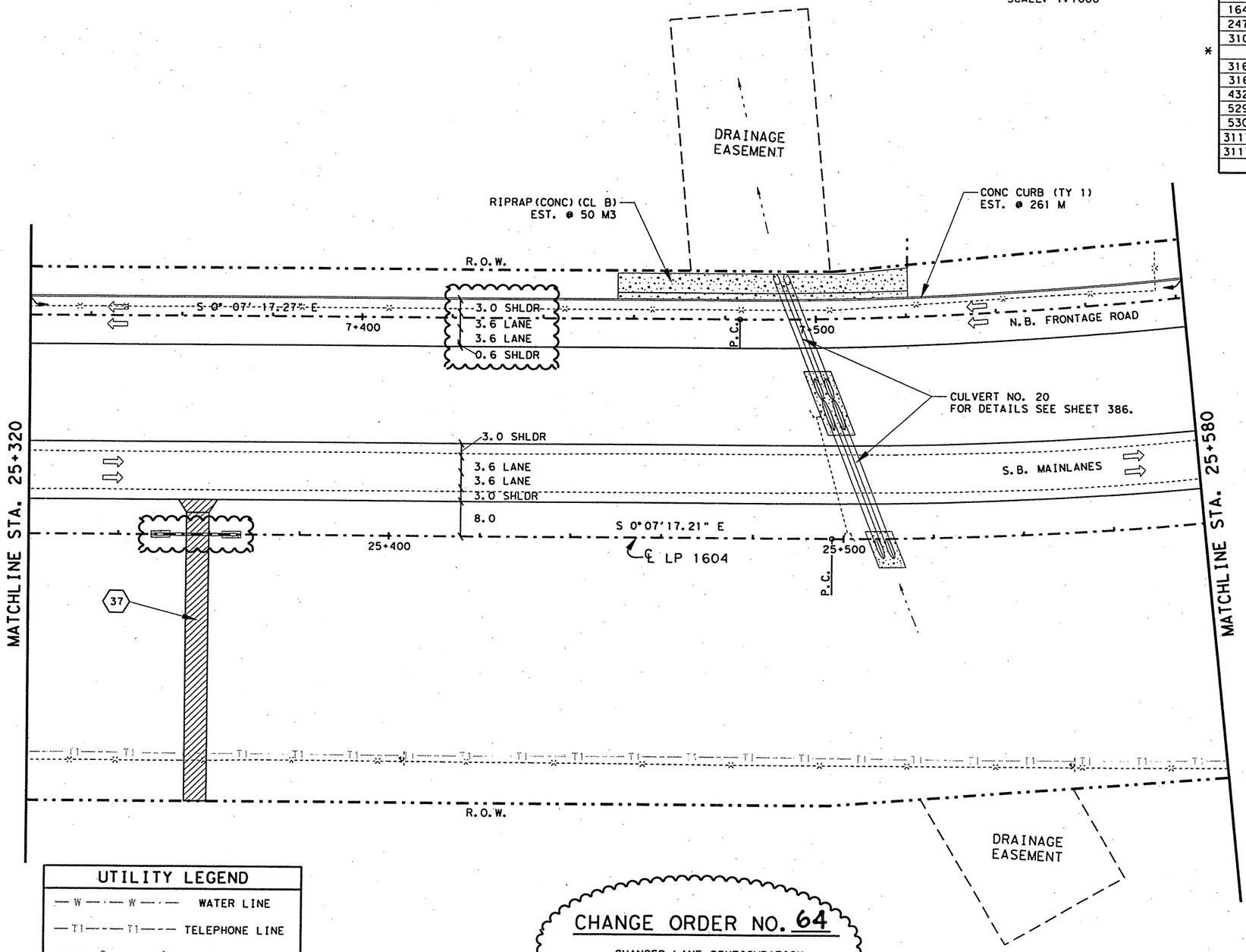


| ESTIMATED QUANTITIES | | | |
|---|---|---|---|
| ITEM # | ITEM | UNIT | QTY. |
| 100-5002 | PREP ROW | KM | 0.26 |
| 110-5001 | EXCAVATION (RDWY) | M3 | 14755 |
| 132-5018 | EMBANK (ORD COMP) (TY B) (CL 3) | M3 | 2865 |
| 160-5002 | FURN AND PLAC TPSL (CL 2) (150 MM) | M2 | 11457 |
| 164-5049 | DRILL SEED (PERM) (URBAN) (CLAY) | M2 | 11457 |
| 247-5024 | FL BS (COMPL IN PLACE)(TY A GR 6 CL 4) | M3 | 2712 |
| 310-5006 | ASPH MATL (AE-P) | L | 3130 |
| * | ONE CRSE SURF TREAT | M2 | 6544 |
| 316-5028 | AGGR (TY PB, GR 4) | M3 | 59 |
| 316-5226 | ASPH (AC-15P, HFRS-2P OR CRS-2P) | L | 8900 |
| 432-5001 | RIPRAP (CONC) (CL B) | M3 | 50 |
| 529-5001 | CONC CURB (TY 1) | M | 261 |
| 530-5003 | DRVWAYS (ASPH-CONC PAV) | M2 | 356 |
| 3117-5003 | HOT MIX (TY C) | MGR | 601 |
| 3117-5018 | HOT MIX (TY C) (SURF) | MGR | 580 |

* FOR CONTRACTORS INFORMATION ONLY

NOTE(S):

ALL DIMENSIONS ARE IN METERS UNLESS OTHERWISE NOTED.

FOR HORIZONTAL ALIGNMENT / DATA, SEE SHEET(S) 164 - 171.

FOR LIMITS OF SEEDING & TOPSOIL, SEE PROJECT X-SECTIONS AND TYPICAL SECTIONS.

FOR RIPRAP DETAILS, SEE PROJECT X-SECTIONS AND SHEET 342.

FOR RIPRAP ASSOCIATED WITH STORM DRAINAGE STRUCTURES SEE SHEET(S) 454 - 470.

(#) DRIVEWAY #, FOR MORE DETAILS SEE SHEET(S) 27, 28 & 336.

| UTILITY LEGEND | |
|---|---|
| — W — W — | WATER LINE |
| — T1 — T1 — | TELEPHONE LINE |
| — C — C — | CABLE LINE |
| — G1 — G1 — | GAS LINE |

CHANGE ORDER NO. 64

- CHANGED LANE CONFIGURATION
- ADDED PIPE TO DRIVEWAY AS PER DRIVEWAY SUMMARY

CHANGE ORDER 64

REVISED SHEET

STATE OF TEXAS
JEROME D. PAVLISKA
76075
REGISTERED PROFESSIONAL ENGINEER

Jerome D. Pavliska P.E. 12-9-04
Jerome D. Pavliska, P.E. — Date

Texas Department of Transportation

PLAN SHEET

SHEET 45 OF 57

| FED. RD. DIV. NO. | FEDERAL AID PROJECT NO. | | SHEET NO. |
|---|---|---|---|
| 6 | NH 2000(704), etc. | | 235 A |
| STATE | DIST. | COUNTY | |
| TEXAS | SAT | BEXAR | |
| CONT. | SECT. | JOB | HIGHWAY NO. |
| 2452 | 01 | 036, etc. | LP 1604 |

11-24-04

LEVELS DISPLAYED
1 2 3 4 5 6 7 8 9 10 11 12 13 14 15 16
17 18 19 20 21 22 23 24 25 26 27 28 29 30 31 32
33 34 35 36 37 38 39 40 41 42 43 44 45 46 47 48
49 50 51 52 53 54 55 56 57 58 59 60 61 62 63

ACC: t:\oo\design\lp1604fm471-90\
FILE: plan45.dgn

QUANTITIES THIS SHEET
CSJ 2452-01-036

SCALE: 1:1000

## ESTIMATED QUANTITIES

| ITEM # | ITEM | UNIT | QTY. |
|---|---|---|---|
| 100-5002 | PREP ROW | KM | 0.26 |
| 110-5001 | EXCAVATION (RDWY) | M3 | 15631 |
| 132-5018 | EMBANK (ORD COMP) (TY B) (CL 3) | M3 | 2862 |
| 160-5002 | FURN AND PLAC TPSL (CL 2) (150 MM) | M2 | 12049 |
| 164-5049 | DRILL SEED (PERM) (URBAN) (CLAY) | M2 | 12049 |
| 247-5024 | FL BS (COMPL IN PLAC)(TY A GR 6 CL 4) | M3 | 2825 |
| 310-5006 | ASPH MATL (AE-P) | L | 7048 |
| * | ONE CRSE SURF TREAT | M2 | 7728 |
| 316-5028 | AGGR (TY PB,GR 4) | M3 | 70 |
| 316-5226 | ASPH (AC-15P, HFRS-2P OR CRS-2P) | L | 10511 |
| 345-5004 | ASPH STAB BS (GR 4) | MGR | 697 |
| 432-5001 | RIPRAP (CONC) (CL B) | M3 | 50 |
| 529-5001 | CONC CURB (TY 1) | M | 411 |
| 3117-5003 | HOT MIX (TY C) | MGR | 709 |
| 3117-5018 | HOT MIX (TY C) (SURF) | MGR | 683 |

* FOR CONTRACTORS INFORMATION ONLY

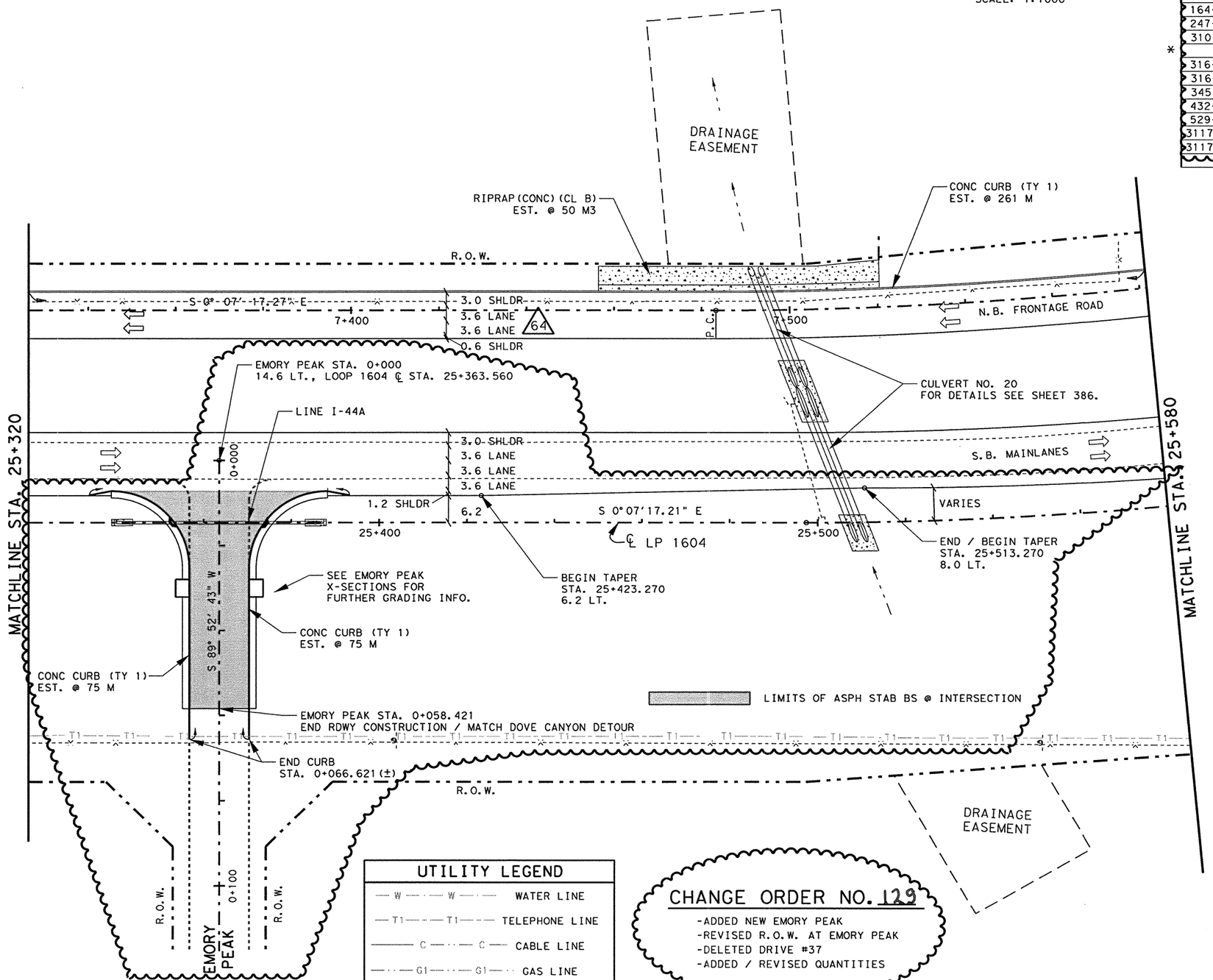


### UTILITY LEGEND

| | |
|---|---|
| W W | WATER LINE |
| T1 T1 | TELEPHONE LINE |
| C C | CABLE LINE |
| G1 G1 | GAS LINE |

### CHANGE ORDER NO. 129

-ADDED NEW EMORY PEAK
-REVISED R.O.W. AT EMORY PEAK
-DELETED DRIVE #37
-ADDED / REVISED QUANTITIES

NOTE(S):

ALL DIMENSIONS ARE IN METERS UNLESS OTHERWISE NOTED.

FOR HORIZONTAL ALIGNMENT / DATA, SEE SHEET(S) 164 - 171.

FOR LIMITS OF SEEDING & TOPSOIL, SEE PROJECT X-SECTIONS AND TYPICAL SECTIONS.

FOR RIPRAP DETAILS, SEE PROJECT X-SECTIONS AND SHEET 342.

FOR RIPRAP ASSOCIATED WITH STORM DRAINAGE STRUCTURES SEE SHEET(S) 454 - 470.

(℄) SEE INTERSECTION LAYOUT / PROFILE SHEET FOR FURTHER DETAILS.

(#) REFERS TO CHANGES MADE AS PART OF CHANGE ORDER.

CHANGE ORDER 129

REVISED SHEET

STATE OF TEXAS
FITZGERALDO G. SANCHEZ
76084
LICENCED
PROFESSIONAL ENGINEER

Fitzgeraldo G. Sanchez, P.E. 06-15-06
Fitzgeraldo G. Sanchez, P.E. Date

©2000 Texas Department of Transportation

PLAN SHEET
SHEET 45 OF 57

| FED.RD. DIV.NO. | FEDERAL AID PROJECT NO. | | SHEET NO. |
|---|---|---|---|
| 6 | NH 2000(704),etc. | | 235 AA |
| STATE | DIST. | COUNTY | |
| TEXAS | SAT | BEXAR | |
| CONT. | SECT. | JOB | HIGHWAY NO. |
| 2452 | 01 | 036,etc. | LP 1604 |

06-07-06

LEVELS DISPLAYED
1 2 3 4 5 6 7 8 9 10 11 12 13 14 15 16
17 18 19 20 21 22 23 24 25 26 27 28 29 30 31 32
33 34 35 45 53 63 73 83 93 94 104 124 134 144 154 164 174 184
193 205 215 225 235 245 255 265 275 285 295 305 315 325 335 345 355 365 375 385 395 405 415 425 435 445 455 465 475 485 495 505 515 525 535 545 555 565 575 585 595 605 615 625 635

ACC: t:\oo\design\p1604fm471-90\
FILE: plan45.dgn

QUANTITIES THIS SHEET
CSJ 2452-01-036

SCALE: 1:1000

## ESTIMATED QUANTITIES

| | ITEM # | ITEM | UNIT | QTY. |
|---|---|---|---|---|
| | 100-5002 | PREP ROW | KM | C.26 |
| | 110-5001 | EXCAVATION (RDWY) | M3 | 12629 |
| | 132-5018 | EMBANK (ORD COMP) (TY B) (CL 3) | M3 | 318 |
| | 160-5002 | FURN AND PLAC TPSL (CL 2) (150 MM) | M2 | 11884 |
| | 164-5049 | DRILL SEED (PERM) (URBAN) (CLAY) | M2 | 11884 |
| | 247-5024 | FL BS (COMPL IN PLAC)(TY A GR 6 CL 4) | M3 | 2641 |
| | 310-5006 | ASPH MATL (AE-P) | L | 3003 |
| * | | ONE CRSE SURF TREAT | M2 | 6378 |
| | 316-5028 | AGGR (TY PB, GR 4) | M3 | 58 |
| | 316-5226 | ASPH (AC-15P, HFRS-2P OR CRS-2P) | L | 8674 |
| | 529-5001 | CONC CURB (TY 1) | M | 244 |
| | 530-5003 | DRVWAYS (ASPH-CONC PAV) | M2 | 421 |
| | 3117-5003 | HOT MIX (TY C) | MGR | 585 |
| | 3117-5018 | HOT MIX (TY C) (SURF) | MGR | 566 |
| | | | | |

* FOR CONTRACTORS INFORMATION ONLY

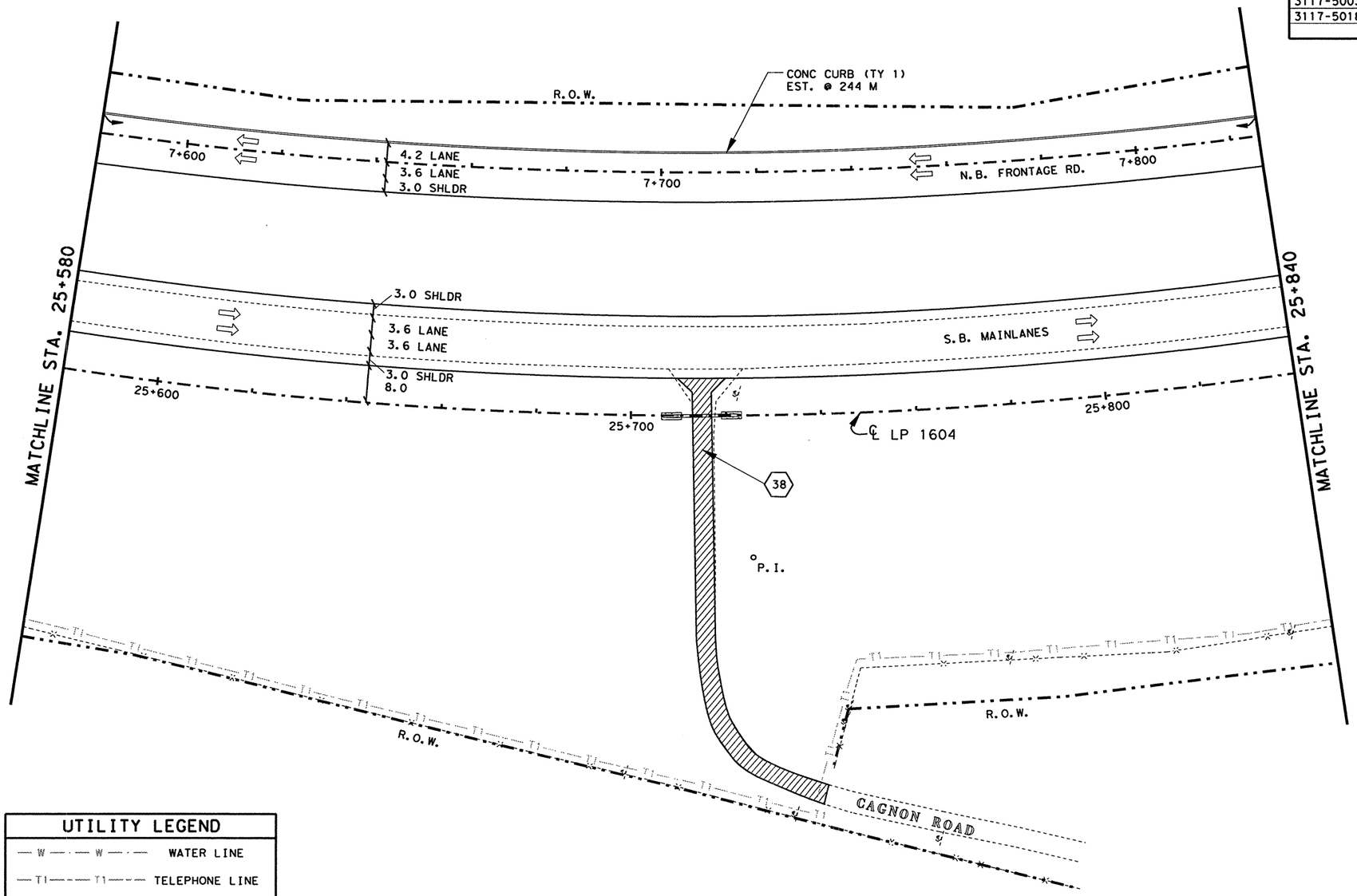


NOTE(S):

ALL DIMENSIONS ARE IN METERS UNLESS OTHERWISE NOTED.

FOR HORIZONTAL ALIGNMENT / DATA, SEE SHEET(S) 164 - 171.

FOR LIMITS OF SEEDING & TOPSOIL, SEE PROJECT X-SECTIONS AND TYPICAL SECTIONS.

(#) DRIVEWAY #, FOR MORE DETAILS SEE SHEET(S) 27, 28 & 336.

FOR RIPRAP ASSOCIATED WITH STORM DRAINAGE STRUCTURES SEE SHEET(S) 454 - 470.

## UTILITY LEGEND

| | |
|---|---|
| — W — W — | WATER LINE |
| — T1 — T1 — | TELEPHONE LINE |
| — C — C — | CABLE LINE |
| — G1 — G1 — | GAS LINE |

LEVELS DISPLAYED
1 2 3 14 15 16 17 18 19 10 11 12 31 41 51 61
17 18 1 32 02 12 22 32 42 52 62 72 82 92 03 13 23
33 43 53 63 73 83 94 04 14 24 34 44 54 64 74 84
95 05 15 25 35 45 55 65 75 85 96 06 16 26 36

ACC: t:\ao\design\lp1604fm471-90\
FILE: plan46.dgn

STATE OF TEXAS
JOEL K. DAVENPORT, JR.
79276
REGISTERED PROFESSIONAL ENGINEER

Joel K. Davenport, Jr. 11/1/00
Joel K. Davenport, Jr., P.E. 79276 Date

©2000 Texas Department of Transportation

# PLAN SHEET

SHEET 46 OF 57

| FED. RD. DIV. NO. | FEDERAL AID PROJECT NO. | | SHEET NO. |
|---|---|---|---|
| 6 | NH 2000(704), etc. | | 236 |
| STATE | DIST. | COUNTY | |
| TEXAS | SAT | BEXAR | |
| CONT. | SECT. | JOB | HIGHWAY NO. |
| 2452 | 01 | 036, etc. | LP 1604 |

QUANTITIES THIS SHEET
CSJ 2452-01-036

SCALE: 1:1000

## ESTIMATED QUANTITIES

| | ITEM # | ITEM | UNIT | QTY. |
|---|---|---|---|---|
| | 100-5002 | PREP ROW | KM | 0.26 |
| | 110-5001 | EXCAVATION (RDWY) | M3 | 12685 |
| | 132-5018 | EMBANK (ORD COMP) (TY B) (CL 3) | M3 | 1163 |
| | 160-5002 | FURN AND PLAC TPSL (CL 2) (150 MM) | M2 | 11942 |
| | 164-5049 | DRILL SEED (PERM) (URBAN) (CLAY) | M2 | 11942 |
| | 247-5024 | FL BS (COMPL IN PLAC)(TY A GR 6 CL 4) | M3 | 2542 |
| | 310-5006 | ASPH MATL (AE-P) | L | 7377 |
| * | | ONE CRSE SURF TREAT | M2 | 8196 |
| | 316-5028 | AGGR (TY PB, GR 4) | M3 | 75 |
| | 316-5226 | ASPH (AC-15P, HFRS-2P OR CRS-2P) | L | 11147 |
| | 345-5004 | ASPH STAB BS (GR 4) | MGR | 1576 |
| | ~~432-5001~~ | ~~RIPRAP (CONC) (CL B)~~ | ~~M2~~ | ~~6~~ |
| | 529-5001 | CONC CURB (TY 1) | M | 460 |
| | 530-5003 | DRVWAYS (ASPH-CONC PAV) | M2 | 399 |
| | 3117-5003 | HOT MIX (TY C) | MGR | 754 |
| | 3117-5018 | HOT MIX (TY C) (SURF) | MGR | 727 |

* FOR CONTRACTORS INFORMATION ONLY

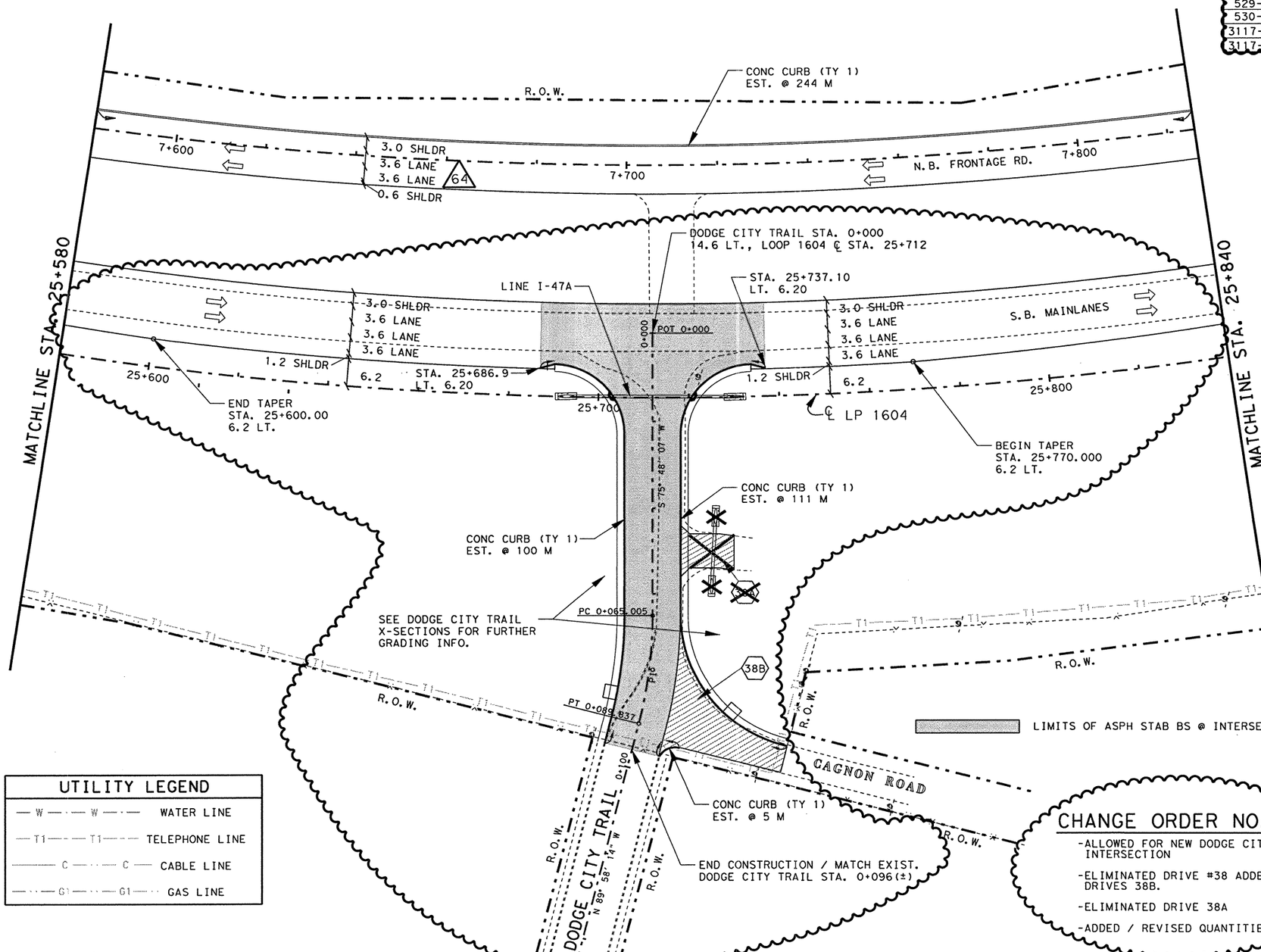


### UTILITY LEGEND

- W — W — WATER LINE
- T1 — T1 — TELEPHONE LINE
- C — C — CABLE LINE
- G1 — G1 — GAS LINE

NOTE(S):

ALL DIMENSIONS ARE IN METERS UNLESS OTHERWISE NOTED.

FOR HORIZONTAL ALIGNMENT / DATA, SEE SHEET(S) 164 - 171.

FOR LIMITS OF SEEDING & TOPSOIL, SEE PROJECT X-SECTIONS AND TYPICAL SECTIONS.

(#) SEE INTERSECTION LAYOUT / PROFILE SHEET FOR FURTHER DETAILS

# DRIVEWAY #, FOR MORE DETAILS SEE SHEET(S) 27, 28 & 336.

FOR RIPRAP ASSOCIATED WITH STORM DRAINAGE STRUCTURES SEE SHEET(S) 454 - 470.

# REFERS TO CHANGES MADE AS PART OF CHANGE ORDER.

CHANGE ORDER 129

REVISED SHEET

CHANGE ORDER NO. 129

- -ALLOWED FOR NEW DODGE CITY TRAIL INTERSECTION
- -ELIMINATED DRIVE #38 ADDED DRIVES 38B.
- -ELIMINATED DRIVE 38A
- -ADDED / REVISED QUANTITIES

STATE OF TEXAS
FITZGERALDO G. SANCHEZ
76084
LICENCED
PROFESSIONAL ENGINEER

Fitzgeraldo G. Sanchez 06-15-06
Fitzgeraldo G. Sanchez, P.E. Date

©2000
Texas Department of Transportation

PLAN SHEET
SHEET 46 OF 57

| FED.RD. DIV.NO. | FEDERAL AID PROJECT NO. | | SHEET NO. |
|---|---|---|---|
| 6 | NH 2000(704), etc. | | 236 AP |
| STATE | DIST. | COUNTY | |
| TEXAS | SAT | BEXAR | |
| CONT. | SECT. | JOB | HIGHWAY NO. |
| 2452 | 01 | 036, etc. | LP 1604 |

06-07-06

LEVELS DISPLAYED
1 2 3 4 5 6 7 8 9 10 11 12 21 31 41 51 61
17 18 19 20 21 22 23 24 25 26 27 28 29 30 31 32
33 34 45 55 65 77 85 89 90 91 92 43 44 45 54 64 74 84
95 05 15 25 35 45 55 65 75 85 96 06 16 26 36

ACC: t:\ov\design\lp1604fm471-90\
FILE: plan46.dgn

QUANTITIES THIS SHEET
CSJ 2452-01-036

SCALE: 1:1000

| ESTIMATED QUANTITIES | | | |
|---|---|---|---|
| ITEM # | ITEM | UNIT | QTY. |
| 100-5002 | PREP ROW | KM | 0.26 |
| 110-5001 | EXCAVATION (RDWY) | M3 | 8134 |
| 132-5018 | EMBANK (ORD COMP) (TY B) (CL 3) | M3 | 791 |
| 160-5002 | FURN AND PLAC TPSL (CL 2) (150 MM) | M2 | 11669 |
| 164-5049 | DRILL SEED (PERM) (URBAN) (CLAY) | M2 | 11669 |
| 247-5024 | FL BS (COMPL IN PLAC)(TY A GR 6 CL 4) | M3 | 2697 |
| 310-5006 | ASPH MATL (AE-P) | L | 3106 |
| * | ONE CRSE SURF TREAT | M2 | 6512 |
| 316-5028 | AGGR (TY PB, GR 4) | M3 | 59 |
| 316-5226 | ASPH (AC-15P, HFRS-2P OR CRS-2P) | L | 8856 |
| 529-5001 | CONC CURB (TY 1) | M | 253 |
| 3117-5003 | HOT MIX (TY C) | MGR | 598 |
| 3117-5018 | HOT MIX (TY C) (SURF) | MGR | 578 |

* FOR CONTRACTORS INFORMATION ONLY

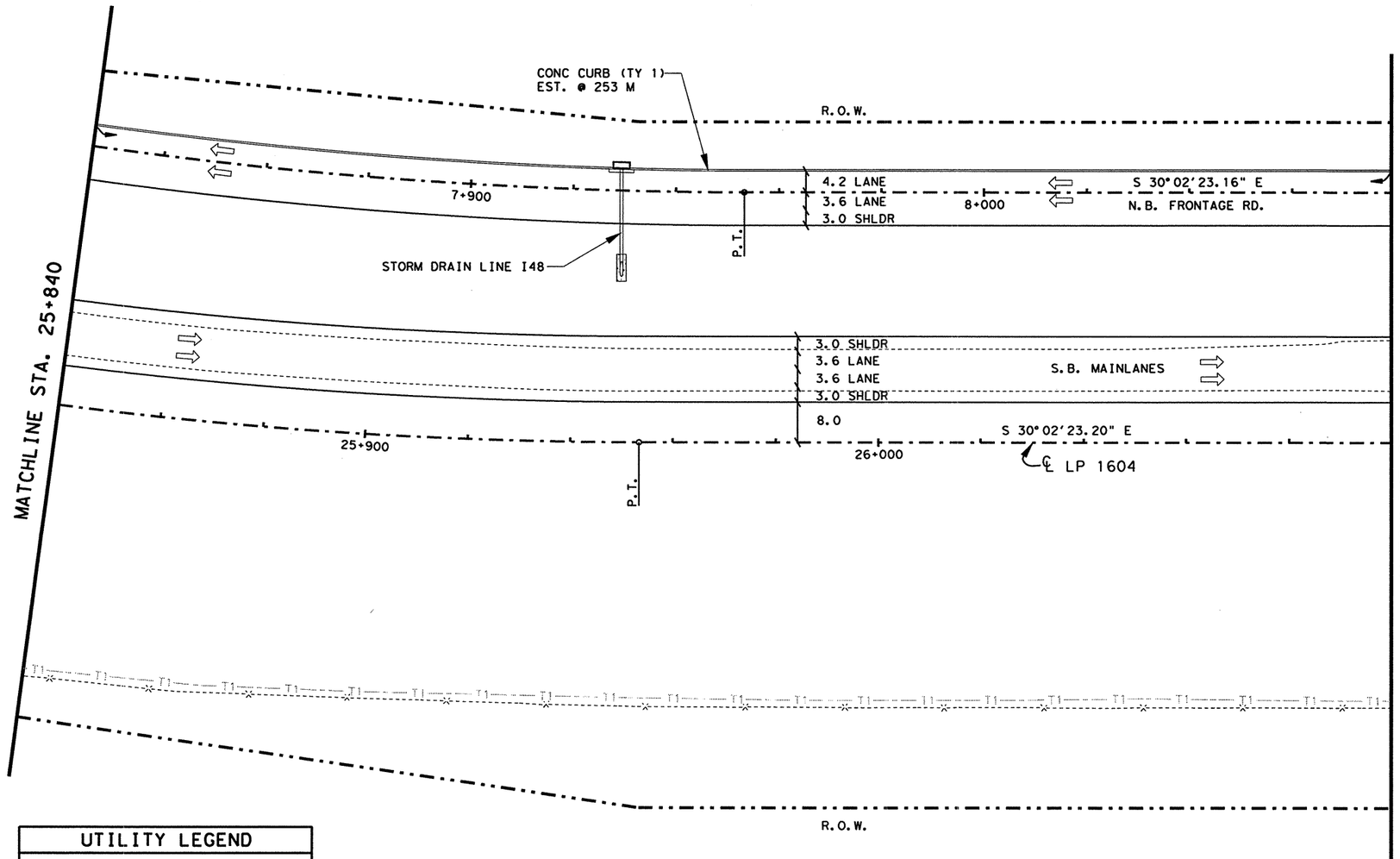


NOTE(S):

ALL DIMENSIONS ARE IN METERS UNLESS OTHERWISE NOTED.

FOR HORIZONTAL ALIGNMENT / DATA, SEE SHEET(S) 164 - 171.

FOR LIMITS OF SEEDING & TOPSOIL, SEE PROJECT X-SECTIONS AND TYPICAL SECTIONS.

FOR ADDITIONAL STORM DRAIN INFO. REFER TO THE SPECIFIC STORM DRAIN PROFILE SHEET(S).

FOR RIPRAP ASSOCIATED WITH STORM DRAINAGE STRUCTURES SEE SHEET(S) 454 - 470.

| UTILITY LEGEND | |
|---|---|
| W W | WATER LINE |
| T1 T1 | TELEPHONE LINE |
| C C | CABLE LINE |
| G1 G1 | GAS LINE |

STATE OF TEXAS
JOEL K. DAVENPORT, JR.
79276
REGISTERED PROFESSIONAL ENGINEER

Joel K. Davenport, Jr. 11/1/00
Joel K. Davenport, Jr. P.E. 79276 Date

Texas Department of Transportation

# PLAN SHEET

SHEET 47 OF 57

| FED. RD. DIV. NO. | FEDERAL AID PROJECT NO. | | SHEET NO. |
|---|---|---|---|
| 6 | NH 2000(704), etc. | | 237 |
| STATE | DIST. | COUNTY | |
| TEXAS | SAT | BEXAR | |
| CONT. | SECT. | JOB | HIGHWAY NO. |
| 2452 | 01 | 036, etc. | LP 1604 |

LEVELS DISPLAYED
1 2 3 4 5 6 7 8 9 10 11 12 13 14 15 16
17 18 19 20 21 22 23 24 25 26 27 28 29 30 31 32
33 34 35 36 37 38 39 40 41 42 43 44 45 46 47 48
49 50 51 52 53 54 55 56 57 58 59 60 61 62 63

ACC: t:\ao\design\lp1604fm471-90\
FILE: plan47.dgn

Plotted on: 01/26/2004

QUANTITIES THIS SHEET
CSJ 2452-01-036

SCALE: 1:1000

## ESTIMATED QUANTITIES

| | ITEM # | ITEM | UNIT | QTY. |
|---|---|---|---|---|
| | 100-5002 | PREP ROW | KM | 0.26 |
| | 110-5001 | EXCAVATION (RDWY) | M3 | 8135 |
| | 132-5018 | EMBANK (ORD COMP) (TY B) (CL 3) | M3 | 791 |
| | 160-5002 | FURN AND PLAC TPSL (CL 2) (150 MM) | M2 | 11669 |
| | 164-5049 | DRILL SEED (PERM) (URBAN) (CLAY) | M2 | 11669 |
| | 247-5024 | FL BS (COMPL IN PLAC)(TY A GR 6 CL 4) | M3 | 2697 |
| | 310-5006 | ASPH MATL (AE-P) | L | 3106 |
| * | | ONE CRSE SURF TREAT | M2 | 6512 |
| | 316-5028 | AGGR (TY PB, GR 4) | M3 | 59 |
| | 316-5226 | ASPH (AC-15P, HFRS-2P OR CRS-2P) | L | 8856 |
| | 529-5001 | CONC CURB (TY 1) | M | 253 |
| | 3117-5003 | HOT MIX (TY C) | MGR | 598 |
| | 3117-5018 | HOT MIX (TY C) (SURF) | MGR | 578 |
| | | | | |

*FOR CONTRACTORS INFORMATION ONLY

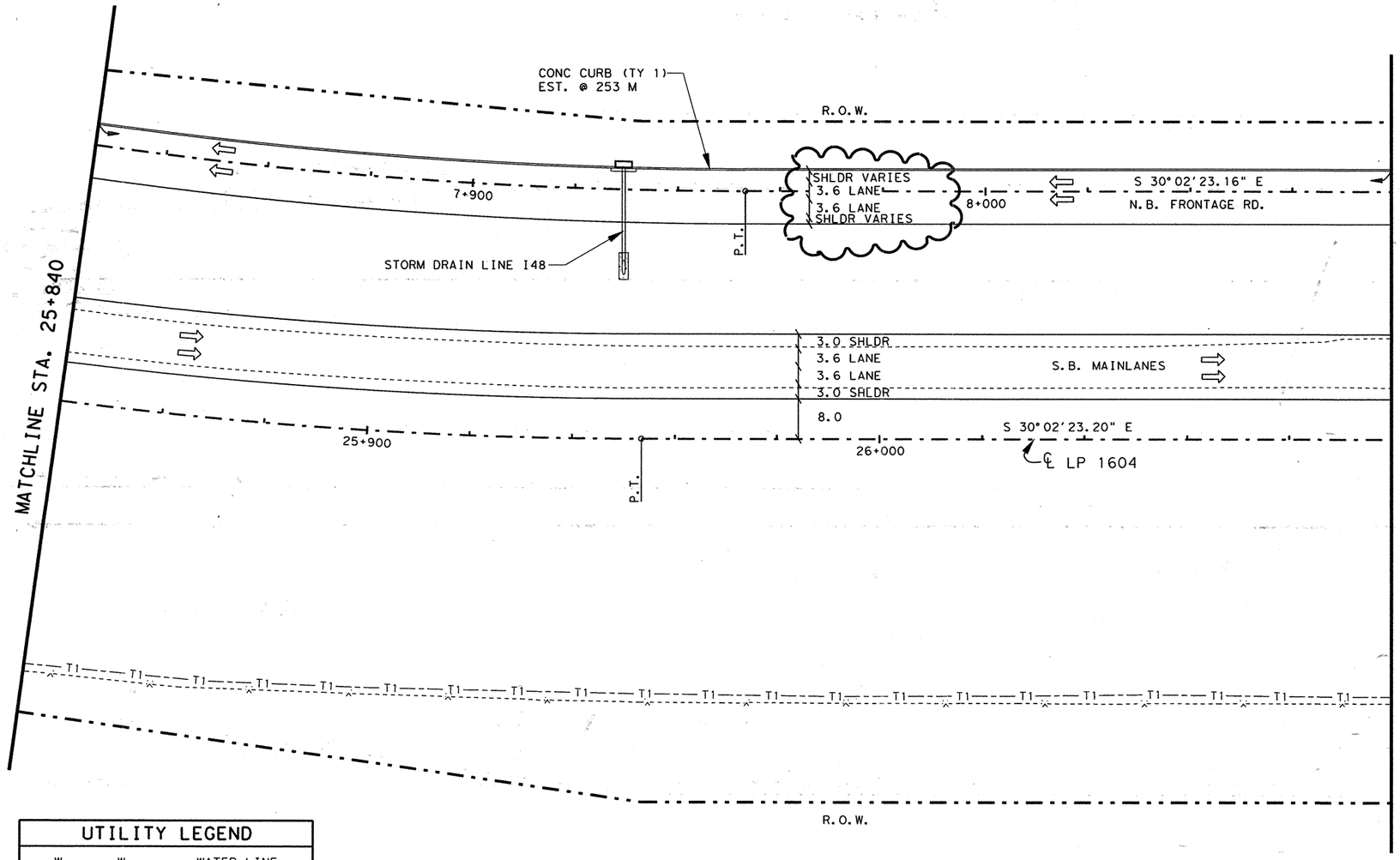


UTILITY LEGEND

| | |
|---|---|
| — W — · — W — · — | WATER LINE |
| — T1 — — — T1 — — — | TELEPHONE LINE |
| ——— C — · — · — C — | CABLE LINE |
| — · — · — G1 — · — · — G1 — · — | GAS LINE |

NOTE(S):

ALL DIMENSIONS ARE IN METERS UNLESS OTHERWISE NOTED.

FOR HORIZONTAL ALIGNMENT / DATA, SEE SHEET(S) 164 - 171.

FOR LIMITS OF SEEDING & TOPSOIL, SEE PROJECT X-SECTIONS AND TYPICAL SECTIONS.

FOR ADDITIONAL STORM DRAIN INFO. REFER TO THE SPECIFIC STORM DRAIN PROFILE SHEET(S).

FOR RIPRAP ASSOCIATED WITH STORM DRAINAGE STRUCTURES SEE SHEET(S) 454 - 470.

CHANGE ORDER NO. 64

-REVISED RDWY GEOMETRICS AND LANE CONFIGURATIONS
- Revised Quantities

CHANGE ORDER NO. 64 | REVISED SHEET

555 EAST RAMSEY SAN ANTONIO TEXAS 78216 PHONE (210)375-9000 FAX (210)375-9010
PAPE-DAWSON ENGINEERS CIVIL & ENVIRONMENTAL
STATE OF TEXAS J. KENT O'BRIEN 64398 LICENSED PROFESSIONAL ENGINEER
J. KENT O'BRIEN P.E. 1/27/2004 DATE

©2000 Texas Department of Transportation

PLAN SHEET
SHEET 47 OF 57

| FED.RD. DIV.NO. | FEDERAL AID PROJECT NO. | | SHEET NO. |
|---|---|---|---|
| 6 | NH 2000(704), etc. | | 237A |
| STATE | DIST. | COUNTY | |
| TEXAS | SAT | BEXAR | |
| CONT. | SECT. | JOB | HIGHWAY NO. |
| 2452 | 01 | 036, etc. | LP 1604 |

Design Filename: p:\52\2011\design\civil\plansheets\road\plan-profile\plan47.dgn
ACC: t:\ao\design\lp1604fm471-90\
FILE: plan47.dgn
LEVELS DISPLAYED

Plotted on: 3/31/2006

Design Filename: t:\oo\design\lp1604fm471-90\pd*phase2*change*order*mylars\submittal\plansheets\road\plan-profile\plan47.dgn

QUANTITIES THIS SHEET
CSJ 2452-01-036

SCALE: 1:1000

| ESTIMATED QUANTITIES | | | |
|---|---|---|---|
| ITEM # | ITEM | UNIT | QTY. |
| 100-5002 | PREP ROW | KM | 0.26 |
| 110-5001 | EXCAVATION (RDWY) | M3 | 8133 |
| 132-5018 | EMBANK (ORD COMP)(TY B)(CL 3) | M3 | 791 |
| 160-5002 | FURN AND PLAC TPSL (CL 2)(150 MM) | M2 | 11669 |
| 164-5049 | DRILL SEED (PERM)(URBAN)(CLAY) | M2 | 11669 |
| 247-5024 | FL BS (COMPL IN PLAC)(TY A GR 6 CL 4) | M3 | 2698 |
| 310-5006 | ASPH MATL (AE-P) | L | 5863 |
| * | ONE CRSE SURF TREAT | M2 | 6514 |
| 316-5028 | AGGR (TY PB,GR 4) | M3 | 59 |
| 316-5226 | ASPH (AC-15P, HFRS-2P OR CRS-2P) | L | 8860 |
| 529-5001 | CONC CURB (TY 1) | M | 253 |
| 3117-5003 | HOT MIX (TY C) | MGR | 599 |
| 3117-5018 | HOT MIX (TY C)(SURF) | MGR | 579 |

*FOR CONTRACTORS INFORMATION ONLY

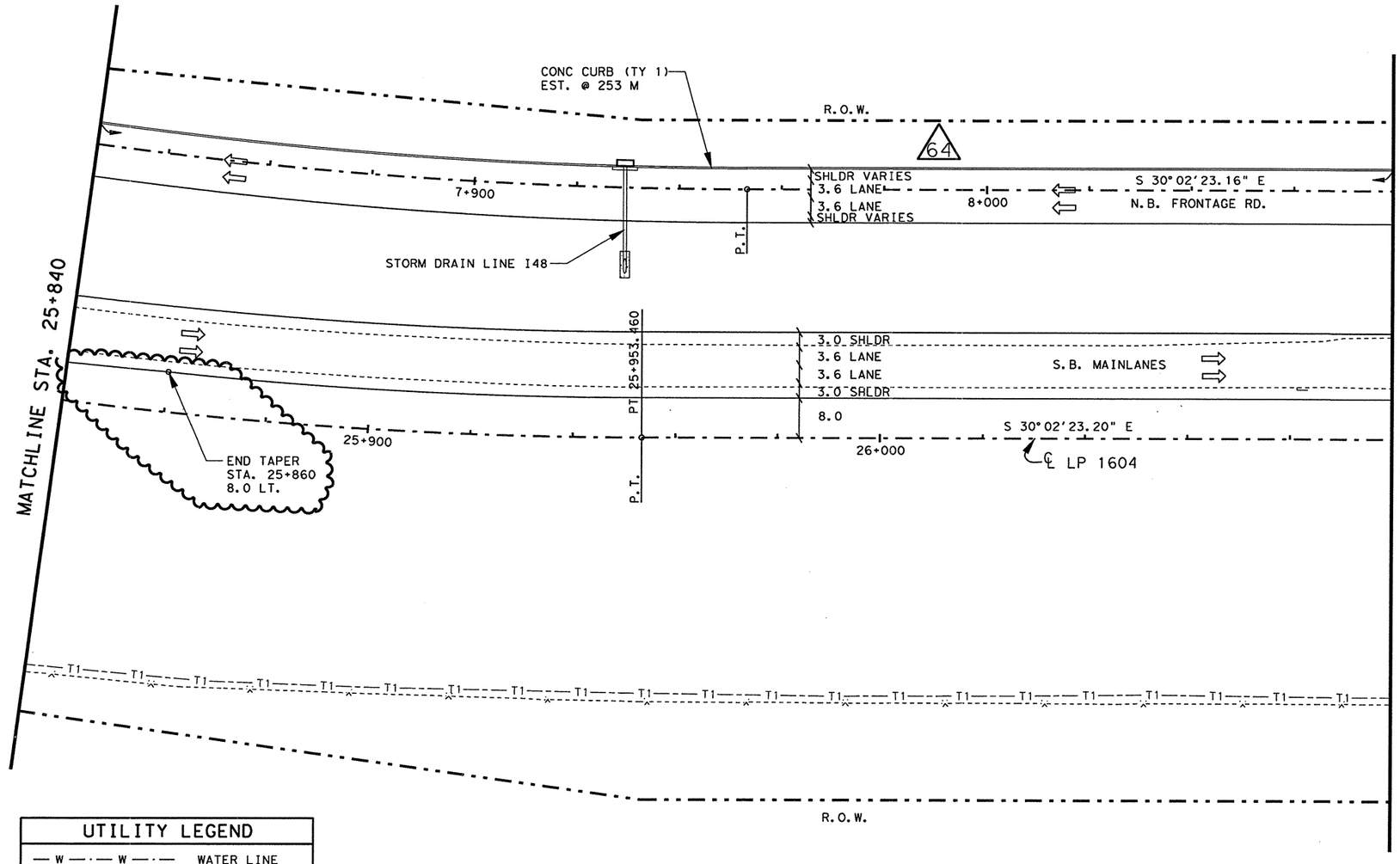


| UTILITY LEGEND | |
|---|---|
| — W —·— W —·— | WATER LINE |
| —T1——T1—— | TELEPHONE LINE |
| ——— C —··— C — | CABLE LINE |
| —··—G1—··—G1—·· | GAS LINE |

NOTE(S):

ALL DIMENSIONS ARE IN METERS UNLESS OTHERWISE NOTED.

FOR HORIZONTAL ALIGNMENT / DATA, SEE SHEET(S) 164 - 171.

FOR LIMITS OF SEEDING & TOPSOIL, SEE PROJECT X-SECTIONS AND TYPICAL SECTIONS.

FOR ADDITIONAL STORM DRAIN INFO. REFER TO THE SPECIFIC STORM DRAIN PROFILE SHEET(S).

FOR RIPRAP ASSOCIATED WITH STORM DRAINAGE STRUCTURES SEE SHEET(S) 454 - 470.

(#) REFERS TO CHANGES MADE AS PART OF CHANGE ORDER.

CHANGE ORDER NO. 129

-ALLOWED FOR NEW DODGE CITY TRAIL INTERSECTION.

-ADDED / REVISED QUANTITIES.

CHANGE ORDER NO. 129 | REVISED SHEET

STATE OF TEXAS
FITZGERALDO G. SANCHEZ
76084
LICENCED
PROFESSIONAL ENGINEER

Fitzgeraldo G. Sanchez, P.E. — 05-23-06 Date

©2000 Texas Department of Transportation

PLAN SHEET

SHEET 47 OF 57

| FED.RD. DIV.NO. | FEDERAL AID PROJECT NO. | | SHEET NO. |
|---|---|---|---|
| 6 | NH 2000(704),etc. | | 237AA |
| STATE | DIST. | COUNTY | |
| TEXAS | SAT | BEXAR | |
| CONT. | SECT. | JOB | HIGHWAY NO. |
| 2452 | 01 | 036,etc. | LP 1604 |

01-30-06

LEVELS DISPLAYED
1 2 3 4 5 6 7 8 9 10 11 12 13 14 15 16
17 18 19 20 21 22 23 24 25 26 27 28 29 30 31 32
33 34 35 36 37 38 39 40 41 42 43 44 45 46 47 48
49 50 51 52 53 54 55 56 57 58 59 60 61 62 63

ACC: t:\oo\design\lp1604fm471-90\
FILE: plan47.dgn

QUANTITIES THIS SHEET
CSJ 2452-01-036

SCALE: 1:1000

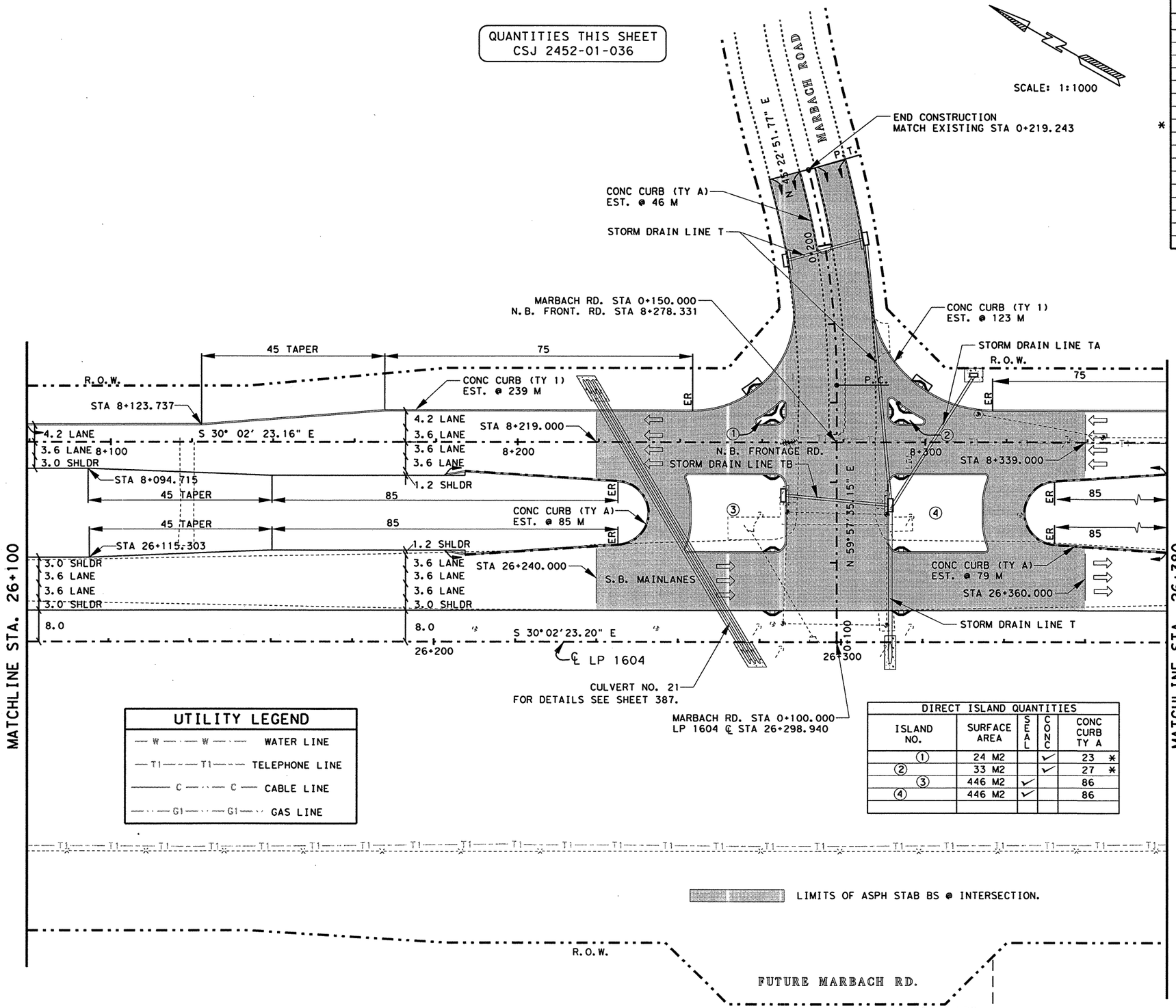


## ESTIMATED QUANTITIES

| ITEM # | ITEM | UNIT | QTY. |
|---|---|---|---|
| 100-5002 | PREP ROW | KM | 0.28 |
| 110-5001 | EXCAVATION (RDWY) | M3 | 7428 |
| 132-5018 | EMBANK (ORD COMP) (TY B) (CL 3) | M3 | 2018 |
| 160-5002 | FURN AND PLAC TPSL (CL 2) (150 MM) | M2 | 10339 |
| 164-5049 | DRILL SEED (PERM) (URBAN) (CLAY) | M2 | 10339 |
| 247-5024 | FL BS (COMPL IN PLAC)(TY A GR 6 CL 4) | M3 | 2178 |
| 310-5006 | ASPH MATL (AE-P) | L | 3570 |
| * | ONE CRSE SURF TREAT | M2 | 13193 |
| 316-5028 | AGGR (TY PB, GR 4) | M3 | 120 |
| 316-5226 | ASPH (AC-15P, HFRS-2P OR CRS-2P) | L | 17942 |
| 345-5004 | ASPH STAB BS (GR 4) | MGR | 4947 |
| 529-5001 | CONC CURB (TY 1) | M | 362 |
| 529-5026 | CONC CURB (TY A) | M | 453 |
| 536-5003 | CONC DIRECT ISLAND | M2 | 57 |
| 3117-5003 | HOT MIX (TY C) | MGR | 1009 |
| 3117-5018 | HOT MIX (TY C) (SURF) | MGR | 994 |

* FOR CONTRACTORS INFORMATION ONLY

NOTE(S):

ALL DIMENSIONS ARE IN METERS UNLESS OTHERWISE NOTED.

FOR HORIZONTAL ALIGNMENT / DATA, SEE SHEET(S) 164 - 171.

FOR LIMITS OF SEEDING & TOPSOIL, SEE PROJECT X-SECTIONS AND TYPICAL SECTIONS.

FOR RIPRAP ASSOCIATED WITH STORM DRAINAGE STRUCTURES SEE SHEET(S) 454 - 470.

FOR INTERSECTION LAYOUT, SEE SHEET 332.

FOR ILLUMINATION LAYOUTS / DETAILS SEE SHEET 623

FOR SIGNALIZATION LAYOUT / DETAILS SEE SHEET(S) 575 - 577.

FOR ADDITIONAL STORM DRAIN INFO. REFER TO THE SPECIFIC STORM DRAIN PROFILE SHEET(S).

WHEELCHAIR RAMPS TY 2

## UTILITY LEGEND

| | |
|---|---|
| W W | WATER LINE |
| T1 T1 | TELEPHONE LINE |
| C C | CABLE LINE |
| G1 G1 | GAS LINE |

### DIRECT ISLAND QUANTITIES

| ISLAND NO. | SURFACE AREA | SEAL | CONC | CONC CURB TY A |
|---|---|---|---|---|
| ① | 24 M2 | | ✓ | 23 * |
| ② | 33 M2 | | ✓ | 27 * |
| ③ | 446 M2 | ✓ | | 86 |
| ④ | 446 M2 | ✓ | | 86 |
| | | | | |

STATE OF TEXAS
JOEL K. DAVENPORT, JR.
79276
REGISTERED
PROFESSIONAL ENGINEER

Joel K. Davenport Jr. 11/1/00
Joel K. Davenport, Jr. P.E. 79276 Date

©2000
Texas Department of Transportation

# PLAN SHEET

SHEET 48 OF 57

| FED. RD. DIV. NO. | FEDERAL AID PROJECT NO. | | SHEET NO. |
|---|---|---|---|
| 6 | NH 2000(704), etc. | | 238 |
| STATE | DIST. | COUNTY | |
| TEXAS | SAT | BEXAR | |
| CONT. | SECT. | JOB | HIGHWAY NO. |
| 2452 | 01 | 036, etc. | LP 1604 |

LEVELS DISPLAYED
1 2 3 4 5 6 7 8 9 10 11 12 13 14 15 16
17 18 19 20 21 22 23 24 25 26 27 28 29 30 31 32
33 34 35 36 37 38 39 40 41 42 43 44 45 46 47 48
49 50 51 52 53 54 55 56 57 58 59 60 61 62 63

ACC: t:\os\design\lp1604fm471-90\
FILE: plan48.dgn

Plotted on: 4/29/2004
Design Filename: T:\AO\Design\lp1604fm471-90\PD+Phase2+change+order+mylars\submittal\plansheets\roadway\plan-profile\plan48.dgn

QUANTITIES THIS SHEET
CSJ 2452-01-036

INCIDENTAL WORK AREA
SEE INTERSECTION SEQUENCE OF WORK
PHASE 2B SHEET 4 OF 5 FOR REPLACEMENT ITEMS

SCALE: 1:1000

MARBACH ROAD
S 15° 22' 51.7" E

END CONSTRUCTION
MATCH EXISTING STA 0+219.243

CONC CURB (TY A)
EST. @ 46 M

STORM DRAIN LINE T

0+200

MARBACH RD. STA 0+150.000
N.B. FRONT. RD. STA 8+278.331

CONC CURB (TY 1)
EST. @ 123 M

STORM DRAIN LINE TA

R.O.W.

45 TAPER
75
CONC CURB (TY 1)
EST. @ 239 M
ER
P.C.
75

R.O.W.
STA 8+123.737
SHLDR VARIES
3.6 LANE
3.6 LANE
3.0 SHLDR
S 30° 02' 23.16" E
0.6 SHLDR
3.6 LANE
3.6 LANE
3.6 LANE
3.6 LANE
1.2 SHLDR
STA 8+219.000
8+200
8+100
STA 8+094.715
45 TAPER
85
ER
CONC CURB (TY A)
EST. @ 85 M
45 TAPER
85
ER
STA 26+115.303
1.2 SHLDR
3.3 LANE
3.3 LANE
3.3 LANE
3.3 LANE
0.6 SHLDR
8.0
26+200
STA 26+240.000
S.B. MAINLANES
S 30°02'23.20" E
℄ LP 1604

N.B. FRONTAGE RD.
STORM DRAIN LINE TB
8+300
STA 8+337
80
85
CONC CURB (TY A)
EST. @ 55 M
STA 26+360.000
STORM DRAIN LINE T
N 59° 57' 35.15" E
26+300
26+380

MATCHLINE STA. 26+100

MATCHLINE STA. 26+380

CULVERT NO. 21
FOR DETAILS SEE SHEET 387.

MARBACH RD. STA 0+100.000
LP 1604 ℄ STA 26+298.940

UTILITY LEGEND

| | |
|---|---|
| W — W | WATER LINE |
| T1 — T1 | TELEPHONE LINE |
| C — C | CABLE LINE |
| G1 — G1 | GAS LINE |

CHANGE ORDER NO. 64

-REVISED RDWY GEOMETRICS AND LANE CONFIGURATIONS
-ADDED INCIDENTAL WORK AREAS
-REVISED LARGE ISLAND TREATMENTS OF INTERSECTION
-REVISED QUANTITIES

DIRECT ISLAND QUANTITIES

| ISLAND NO. | SURFACE AREA (CONC) | SURFACE AREA (SEAL) | CONC CURB TY A | CONC SDWLK | CONC RIPRAP CL B | AGGR TY PB GR 5 |
|---|---|---|---|---|---|---|
| ① | 24 M2 | | 23 * | | | |
| ② | 33 M2 | | 27 * | | | |
| ③ | | 404 M2 * | 86 | 25 M2 | 2.1 M3 | 3.0 M3 |
| ④ | | 404 M2 * | 86 | 25 M2 | 2.1 M3 | 3.0 M3 |
| | | | | | | |
| | | | | | | |

LIMITS OF ASPH STAB BS @ INTERSECTION.

R.O.W.
FUTURE MARBACH RD.
DRAINAGE EASEMENT

ESTIMATED QUANTITIES

| | ITEM # | ITEM | UNIT | QTY. |
|---|---|---|---|---|
| | 100-5002 | PREP ROW | KM | 0.28 |
| | 110-5001 | EXCAVATION (RDWY) | M3 | 7459 |
| | 132-5018 | EMBANK (ORD COMP) (TY B) (CL 3) | M3 | 2027 |
| | 160-5002 | FURN AND PLAC TPSL (CL 2) (150 MM) | M2 | 10247 |
| | 164-5049 | DRILL SEED (PERM) (URBAN) (CLAY) | M2 | 10247 |
| | 247-5024 | FL BS (COMPL IN PLAC)(TY A GR 6 CL 4) | M3 | 2203 |
| | 310-5006 | ASPH MATL (AE-P) | L | 3653 |
| * | | ONE CRSE SURF TREAT | M2 | 13201 |
| | 316-5028 | AGGR (TY PB, GR 4) | M3 | 113 |
| ** | 316-5226 | ASPH (AC-15P, HFRS-2P OR CRS-2P) | L | 18131 |
| | 345-5004 | ASPH STAB BS (GR 4) | MGR | 4970 |
| | 432-5001 | RIPRAP (CONC) (CL B) | M3 | 4.2 |
| | 529-5001 | CONC CURB (TY 1) | M | 247 |
| | 529-5026 | CONC CURB (TY A) | M | 358 |
| | 531-5002 | CONCRETE SIDEWALKS | M2 | 50 |
| | 540-5002 | CONC TRAFFIC ISLAND | M2 | 57 |
| | 3117-5003 | HOT MIX (TY C) | MGR | 1095 |
| | 3117-5018 | HOT MIX (TY C) (SURF) | MGR | 1080 |
| | 316-5021 | AGGR (TY B, GR 5) | M3 | 6 |

* FOR CONTRACTORS INFORMATION ONLY
** QUANTITY INCLUDES ASPHALT FOR DIRECTIONAL ISLANDS

NOTE(S):

ALL DIMENSIONS ARE IN METERS UNLESS OTHERWISE NOTED.

FOR HORIZONTAL ALIGNMENT / DATA, SEE SHEET(S) 164 - 171.

FOR LIMITS OF SEEDING & TOPSOIL, SEE PROJECT X-SECTIONS AND TYPICAL SECTIONS.

FOR RIPRAP ASSOCIATED WITH STORM DRAINAGE STRUCTURES SEE SHEET(S) 454 - 470.

FOR INTERSECTION LAYOUT, SEE SHEET 332.

FOR ILLUMINATION LAYOUTS / DETAILS SEE SHEET 623

FOR SIGNALIZATION LAYOUT / DETAILS SEE SHEET(S) 575 - 577.

FOR ADDITIONAL STORM DRAIN INFO. REFER TO THE SPECIFIC STORM DRAIN PROFILE SHEET(S).

FOR INTERSECTION ISLAND TREATMENT DETAILS, SEE MISC. ROADWAY DETAIL SHEET.

WHEELCHAIR RAMPS TY 2

CHANGE ORDER NO. 64 | REVISED SHEET

STATE OF TEXAS
JEROME D. PAVLISKA
76075
REGISTERED PROFESSIONAL ENGINEER

Jerome D. Pavliska, P.E. 4-28-04
Jerome D. Pavliska, P.E. Date

Texas Department of Transportation

PLAN SHEET
SHEET 48 OF 57

| FED.RD. DIV.NO. | FEDERAL AID PROJECT NO. | SHEET NO. |
|---|---|---|
| 6 | NH 2000(704), etc. | 238A |
| STATE | DIST. | COUNTY |
| TEXAS | SAT | BEXAR |
| CONT. | SECT. | JOB / HIGHWAY NO. |
| 2452 | 01 | 036, etc. / LP 1604 |

05-01-04

LEVELS DISPLAYED
1 2 3 4 5 6 7 8 9 10 11 12 13 14 15 16
17 18 19 20 21 22 23 24 25 26 27 28 29 30 31 32
33 34 35 36 37 38 39 40 41 42 43 44 45 46 47 48
49 50 51 52 53 54 55 56 57 58 59 60 61 62 63

ACC: t:\ao\design\lp1604fm471-90\
FILE: plan48.dgn

Plotted on: 3/31/2006

Design Filename: t:\ao\design\lp1604fm471-90\pd*phase2*change*order*mylars\submittal\plansheets\roadway\plan-profile\plan48*co64.dgn

QUANTITIES THIS SHEET
CSJ 2452-01-036

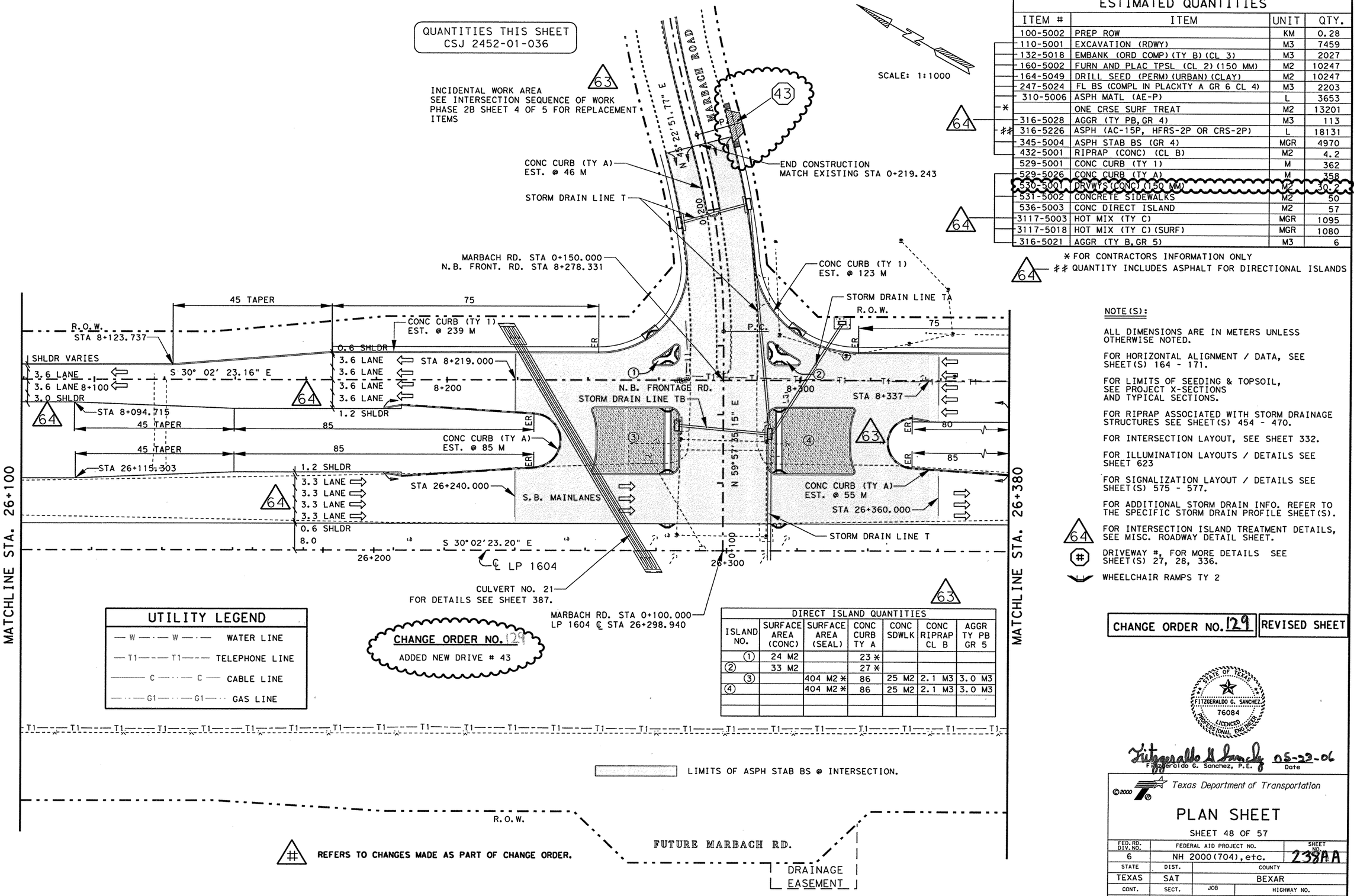


## ESTIMATED QUANTITIES

| ITEM # | ITEM | UNIT | QTY. |
|---|---|---|---|
| 100-5002 | PREP ROW | KM | 0.28 |
| 110-5001 | EXCAVATION (RDWY) | M3 | 7459 |
| 132-5018 | EMBANK (ORD COMP) (TY B) (CL 3) | M3 | 2027 |
| 160-5002 | FURN AND PLAC TPSL (CL 2) (150 MM) | M2 | 10247 |
| 164-5049 | DRILL SEED (PERM) (URBAN) (CLAY) | M2 | 10247 |
| 247-5024 | FL BS (COMPL IN PLAC) (TY A GR 6 CL 4) | M3 | 2203 |
| 310-5006 | ASPH MATL (AE-P) | L | 3653 |
| * | ONE CRSE SURF TREAT | M2 | 13201 |
| 316-5028 | AGGR (TY PB, GR 4) | M3 | 113 |
| ## 316-5226 | ASPH (AC-15P, HFRS-2P OR CRS-2P) | L | 18131 |
| 345-5004 | ASPH STAB BS (GR 4) | MGR | 4970 |
| 432-5001 | RIPRAP (CONC) (CL B) | M2 | 4.2 |
| 529-5001 | CONC CURB (TY 1) | M | 362 |
| 529-5026 | CONC CURB (TY A) | M | 358 |
| 530-5001 | DRVWYS (CONC) (150 MM) | M2 | 30.2 |
| 531-5002 | CONCRETE SIDEWALKS | M2 | 50 |
| 536-5003 | CONC DIRECT ISLAND | M2 | 57 |
| 3117-5003 | HOT MIX (TY C) | MGR | 1095 |
| 3117-5018 | HOT MIX (TY C) (SURF) | MGR | 1080 |
| 316-5021 | AGGR (TY B, GR 5) | M3 | 6 |

* FOR CONTRACTORS INFORMATION ONLY
64 ## QUANTITY INCLUDES ASPHALT FOR DIRECTIONAL ISLANDS

## DIRECT ISLAND QUANTITIES

| ISLAND NO. | SURFACE AREA (CONC) | SURFACE AREA (SEAL) | CONC CURB TY A | CONC SDWLK | CONC RIPRAP CL B | AGGR TY PB GR 5 |
|---|---|---|---|---|---|---|
| ① | 24 M2 | | 23 * | | | |
| ② | 33 M2 | | 27 * | | | |
| ③ | | 404 M2 * | 86 | 25 M2 | 2.1 M3 | 3.0 M3 |
| ④ | | 404 M2 * | 86 | 25 M2 | 2.1 M3 | 3.0 M3 |

## UTILITY LEGEND

| | |
|---|---|
| — W — W — | WATER LINE |
| — T1 — T1 — | TELEPHONE LINE |
| — C — C — | CABLE LINE |
| — G1 — G1 — | GAS LINE |

NOTE(S):

ALL DIMENSIONS ARE IN METERS UNLESS OTHERWISE NOTED.

FOR HORIZONTAL ALIGNMENT / DATA, SEE SHEET(S) 164 - 171.

FOR LIMITS OF SEEDING & TOPSOIL, SEE PROJECT X-SECTIONS AND TYPICAL SECTIONS.

FOR RIPRAP ASSOCIATED WITH STORM DRAINAGE STRUCTURES SEE SHEET(S) 454 - 470.

FOR INTERSECTION LAYOUT, SEE SHEET 332.

FOR ILLUMINATION LAYOUTS / DETAILS SEE SHEET 623

FOR SIGNALIZATION LAYOUT / DETAILS SEE SHEET(S) 575 - 577.

FOR ADDITIONAL STORM DRAIN INFO. REFER TO THE SPECIFIC STORM DRAIN PROFILE SHEET(S).

64 FOR INTERSECTION ISLAND TREATMENT DETAILS, SEE MISC. ROADWAY DETAIL SHEET.

(#) DRIVEWAY #, FOR MORE DETAILS SEE SHEET(S) 27, 28, 336.

WHEELCHAIR RAMPS TY 2

CHANGE ORDER NO. 129 | REVISED SHEET

STATE OF TEXAS
FITZGERALDO G. SANCHEZ
76084
LICENCED PROFESSIONAL ENGINEER

Fitzgeraldo G. Sanchez, P.E. 05-23-06
Date

©2000
Texas Department of Transportation

PLAN SHEET
SHEET 48 OF 57

| FED. RD. DIV. NO. | FEDERAL AID PROJECT NO. | | SHEET NO. |
|---|---|---|---|
| 6 | NH 2000(704), etc. | | 238AA |
| STATE | DIST. | COUNTY | |
| TEXAS | SAT | BEXAR | |
| CONT. | SECT. | JOB | HIGHWAY NO. |
| 2452 | 01 | 036, etc. | LP 1604 |

06-15-05

LEVELS DISPLAYED
1 2 3 4 5 6 7 8 9 10 11 12 13 14 15 16
17 18 19 20 21 22 23 24 25 26 27 28 29 30 31 32
33 34 35 36 37 38 39 40 41 42 43 44 45 46 47 48
49 50 51 52 53 54 55 56 57 58 59 60 61 62 63

ACC: t:\ao\design\lp1604fm471-90\
FILE: plan48.dgn

Plotted on: 05/31/2005

Design Filename: p:\57\75\02\design\civil\plansheets\Drainage\plan48.dgn

ACC: t:ao\design\lp1604fm471-90\

FILE: plan48.dgn

| LEVELS DISPLAYED | | | | | | | | | | | | | | | |
|---|---|---|---|---|---|---|---|---|---|---|---|---|---|---|---|
| 1 | 2 | 3 | 4 | 5 | 6 | 7 | 8 | 9 | 10 | 11 | 12 | 13 | 14 | 15 | 16 |
| 17 | 18 | 19 | 20 | 21 | 22 | 23 | 24 | 25 | 26 | 27 | 28 | 29 | 30 | 31 | 32 |
| 33 | 34 | 35 | 36 | 37 | 38 | 39 | 40 | 41 | 42 | 43 | 44 | 45 | 46 | 47 | 48 |
| 49 | 50 | 51 | 52 | 53 | 54 | 55 | 56 | 57 | 58 | 59 | 60 | 61 | 62 | 63 | |

64

DIRECT ISLAND QUANTITIES

| ISLAND NO. | SURFACE AREA (CONC) | SURFACE AREA (SEAL) | CONC CURB TY A | CONC SDWLK | CONC RIPRAP CL B | AGGR TY PB GR 5 |
|---|---|---|---|---|---|---|
| 1 | 24 M2 | | 23 * | | | |
| 2 | 33 M2 | | 27 * | | | |
| 3 | | 404 M2 * | 86 | 25 M2 | 2.1 M3 | 3.0 M3 |
| 4 | | 404 M2 * | 86 | 25 M2 | 2.1 M3 | 3.0 M3 |
| | | | | | | |
| | | | | | | |

QUANTITIES THIS SHEET
CSJ 2452-01-036

CHANGE ORDER NO. 103

-REVISED TO SHOW MODIFIED CULVERT #21
-REVISED TO SHOW LINE T EXTN, AND PROPOSED MARBACH RD EXTN (BY OTHERS)

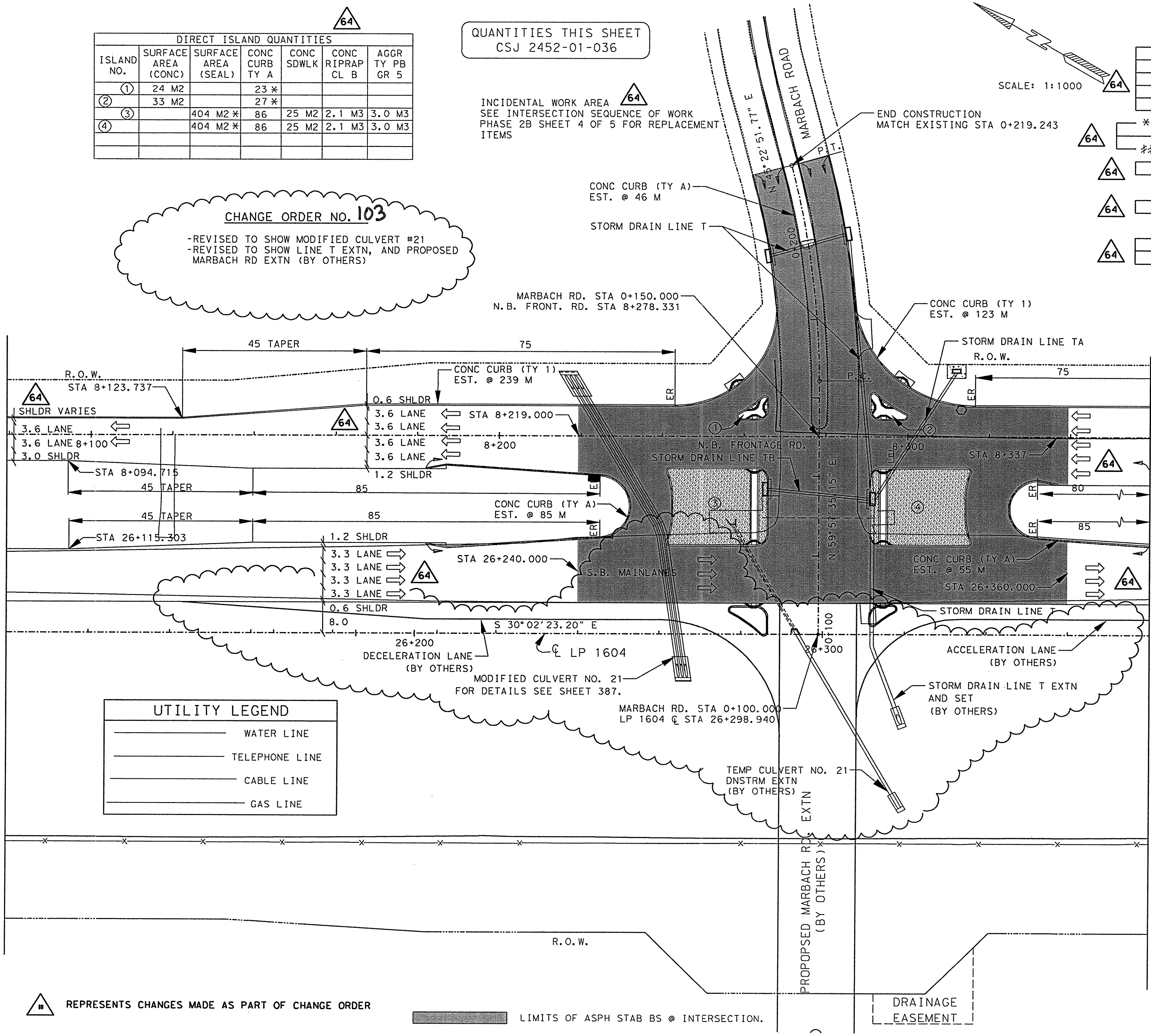


UTILITY LEGEND

| | |
|---|---|
| ——— | WATER LINE |
| ——— | TELEPHONE LINE |
| ——— | CABLE LINE |
| ——— | GAS LINE |

△# REPRESENTS CHANGES MADE AS PART OF CHANGE ORDER

▒ LIMITS OF ASPH STAB BS @ INTERSECTION.

ESTIMATED QUANTITIES

| ITEM # | ITEM | UNIT | QTY. |
|---|---|---|---|
| 100-5002 | PREP ROW | KM | 0.28 |
| 110-5001 | EXCAVATION (RDWY) | M3 | 7459 |
| 132-5018 | EMBANK (ORD COMP)(TY B)(CL 3) | M3 | 2027 |
| 160-5002 | FURN AND PLAC TPSL (CL 2)(150 MM) | M2 | 10247 |
| 164-5049 | DRILL SEED (PERM)(URBAN)(CLAY) | M2 | 10247 |
| 247-5024 | FL BS (COMPL IN PLAC)(TY A GR 6 CL 4) | M3 | 2203 |
| 310-5006 | ASPH MATL (AE-P) | L | 3653 |
| * | ONE CRSE SURF TREAT | M2 | 13201 |
| 316-5028 | AGGR (TY PB, GR 4) | M3 | 113 |
| ## 316-5226 | ASPH (AC-15P, HFRS-2P OR CRS-2P) | L | 18131 |
| 345-5004 | ASPH STAB BS (GR 4) | MGR | 4970 |
| 432-5001 | RIPRAP (CONC) (CL B) | M2 | 4.2 |
| 529-5001 | CONC CURB (TY 1) | M | 362 |
| 529-5026 | CONC CURB (TY A) | M | 358 |
| 531-5002 | CONCRETE SIDEWALKS | M2 | 50 |
| 536-5003 | CONC DIRECT ISLAND | M2 | 57 |
| 3117-5003 | HOT MIX (TY C) | MGR | 1095 |
| 3117-5018 | HOT MIX (TY C)(SURF) | MGR | 1080 |
| 316-5021 | AGGR (TY B, GR 5) | M3 | 6 |

* FOR CONTRACTORS INFORMATION ONLY
## QUANTITY INCLUDES ASPHALT FOR DIRECTIONAL ISLANDS

NOTE(S):

ALL DIMENSIONS ARE IN METERS UNLESS OTHERWISE NOTED.

FOR HORIZONTAL ALIGNMENT / DATA, SEE SHEET(S) 164 - 171.

FOR LIMITS OF SEEDING & TOPSOIL, SEE PROJECT X-SECTIONS AND TYPICAL SECTIONS.

FOR RIPRAP ASSOCIATED WITH STORM DRAINAGE STRUCTURES SEE SHEET(S) 454 - 470.

FOR INTERSECTION LAYOUT, SEE SHEET 332.

FOR ILLUMINATION LAYOUTS / DETAILS SEE SHEET 623

FOR SIGNALIZATION LAYOUT / DETAILS SEE SHEET(S) 575 - 577.

FOR ADDITIONAL STORM DRAIN INFO. REFER TO THE SPECIFIC STORM DRAIN PROFILE SHEET(S).

64 FOR INTERSECTION ISLAND TREATMENT DETAILS, SEE MISC. ROADWAY DETAIL SHEET.

WHEELCHAIR RAMPS TY 2

THIS SEAL AND SIGNATURE ATTESTS ONLY TO THOSE ITEMS NOTED AS PART OF THE CHANGE ORDER.

CHANGE ORDER NO. 103 | REVISED SHEET


555 EAST RAMSEY SAN ANTONIO TEXAS 78216 PHONE (210)375-9000 FAX (210)375-9010
PAPE-DAWSON ENGINEERS
CIVIL & ENVIRONMENTAL
STATE OF TEXAS
J. KENT O'BRIEN
64398
LICENSED PROFESSIONAL ENGINEER
J. KENT O'BRIEN P.E. 5/10/2005
DATE


©2000 Texas Department of Transportation

PLAN SHEET

SHEET 48 OF 57

| FED. RD. DIV. NO. | FEDERAL AID PROJECT NO. | | SHEET NO. |
|---|---|---|---|
| 6 | NH 2000(704), etc. | | 238B |
| STATE | DIST. | COUNTY | |
| TEXAS | SAT | BEXAR | |
| CONT. | SECT. | JOB | HIGHWAY NO. |
| 2452 | 01 | 036, etc. | LP 1604 |

05-20-05

QUANTITIES THIS SHEET
CSJ 2452-01-036

SCALE: 1:1000

| ESTIMATED QUANTITIES | | | |
|---|---|---|---|
| ITEM # | ITEM | UNIT | QTY. |
| 100-5002 | PREP ROW | KM | 0.28 |
| 110-5001 | EXCAVATION (RDWY) | M3 | 12217 |
| 132-5018 | EMBANK (ORD COMP)(TY B)(CL 3) | M3 | 355 |
| 160-5002 | FURN AND PLAC TPSL (CL 2)(150 MM) | M2 | 12538 |
| 164-5049 | DRILL SEED (PERM)(URBAN)(CLAY) | M2 | 12538 |
| 247-5024 | FL BS (COMPL IN PLAC)(TY A GR 6 CL 4) | M3 | 3142 |
| 310-5006 | ASPH MATL (AE-P) | L | 3773 |
| * | ONE CRSE SURF TREAT | M2 | 7602 |
| 316-5028 | AGGR (TY PB,GR 4) | M3 | 69 |
| 316-5226 | ASPH (AC-15P, HFRS-2P OR CRS-2P) | L | 10339 |
| 529-5001 | CONC CURB (TY 1) | M | 281 |
| 529-5026 | CONC CURB (TY A) | M | 30 |
| 3117-5003 | HOT MIX (TY C) | MGR | 698 |
| 3117-5018 | HOT MIX (TY C)(SURF) | MGR | 675 |
| | | | |

* FOR CONTRACTORS INFORMATION ONLY

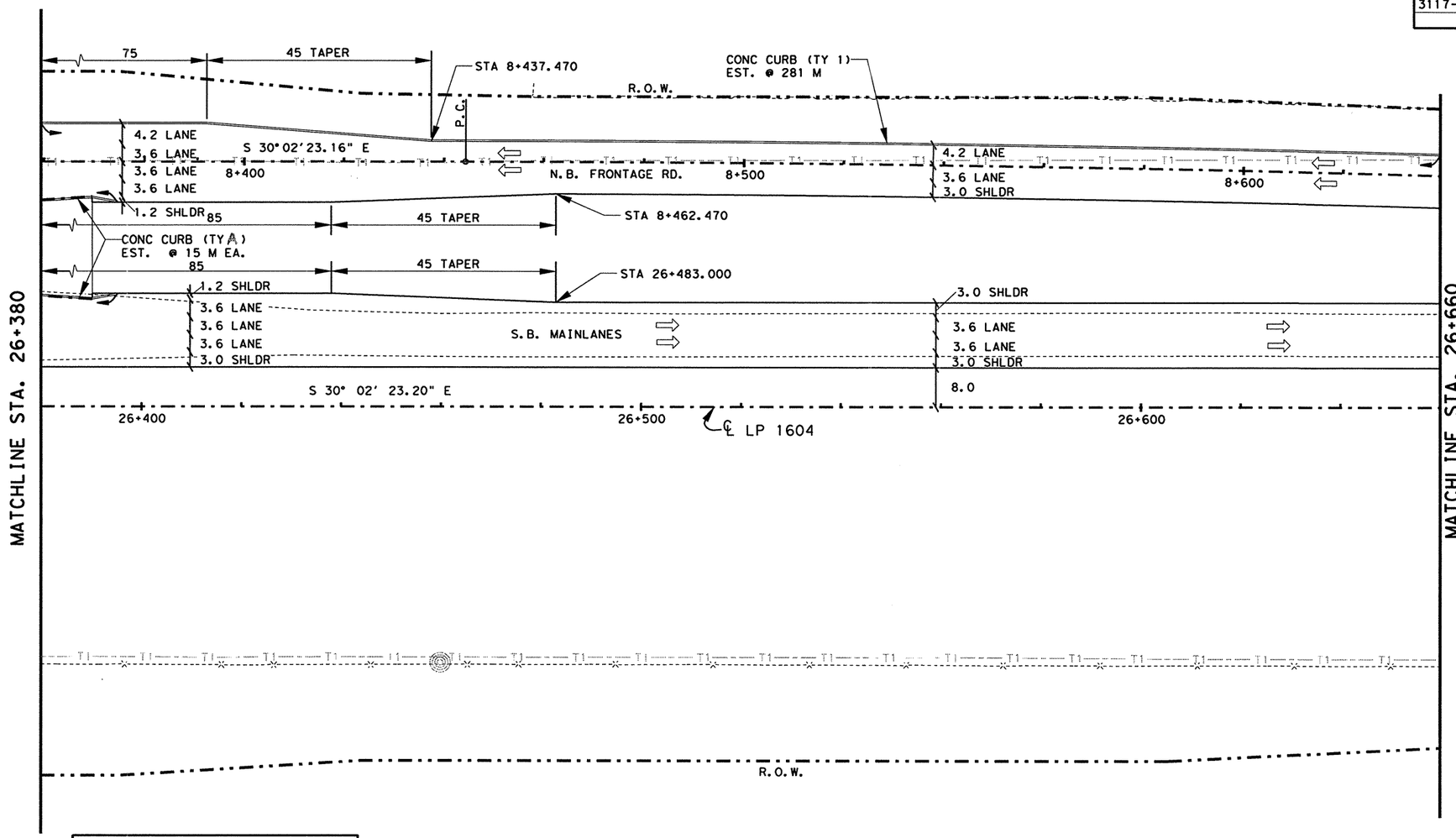


UTILITY LEGEND

| | |
|---|---|
| — W — W — | WATER LINE |
| — T1 — T1 — | TELEPHONE LINE |
| — C — C — | CABLE LINE |
| — G1 — G1 — | GAS LINE |

NOTE(S):

ALL DIMENSIONS ARE IN METERS UNLESS OTHERWISE NOTED.

FOR HORIZONTAL ALIGNMENT / DATA, SEE SHEET(S) 164 - 171.

FOR LIMITS OF SEEDING & TOPSOIL, SEE PROJECT X-SECTIONS AND TYPICAL SECTIONS.

STATE OF TEXAS
JOEL K. DAVENPORT, JR.
79276
REGISTERED
PROFESSIONAL ENGINEER

Joel K Davenport Jr 11/1/00
Joel K. Davenport, Jr. P.E. 79276 Date

©2000
Texas Department of Transportation

PLAN SHEET

SHEET 49 OF 57

| FED. RD. DIV. NO. | FEDERAL AID PROJECT NO. | | SHEET NO. |
|---|---|---|---|
| 6 | NH 2000(704),etc. | | 239 |
| STATE | DIST. | COUNTY | |
| TEXAS | SAT | BEXAR | |
| CONT. | SECT. | JOB | HIGHWAY NO. |
| 2452 | 01 | 036,etc. | LP 1604 |

LEVELS DISPLAYED
1 2 3 4 1 5 1 6 1 7 1 8 1 9 1 10 1 11 2 12 3 13 4 1 5 6 1 7 1 8 1 9 2 10 2 11 2 12 2 13 2 14 2 15 2 16 2 17 2 18 2 19 3 20 3 21 3 22 3 23 4 24 2 25 2 26 2 27 2 28 2 29 3 30 3 31 3 32
3 3 3 4 3 5 3 6 3 7 3 8 3 9 4 0 4 1 4 2 4 3 4 4 4 5 4 6 4 4 4 7 4 8
4 9 5 0 5 1 5 2 5 3 5 4 5 5 5 6 5 7 5 8 5 9 6 0 6 1 6 2 6 3

ACC: t:\oo\design\lp1604fm471-90\
FILE: plan49.dgn

Plotted on: 4/29/2004

Design Filename: T:\AO\Design\lp1604fm471-90\PD\Phase2\change*order*mylars\submittal\plansheets\roadwayplan-profile\plan49.dgn

QUANTITIES THIS SHEET
CSJ 2452-01-036

SCALE: 1:1000

## ESTIMATED QUANTITIES

| ITEM # | ITEM | UNIT | QTY. |
|---|---|---|---|
| 100-5002 | PREP ROW | KM | 0.28 |
| 110-5001 | EXCAVATION (RDWY) | M3 | 12048 |
| 132-5018 | EMBANK (ORD COMP) (TY B) (CL 3) | M3 | 345 |
| 160-5002 | FURN AND PLAC TPSL (CL 2) (150 MM) | M2 | 12139 |
| 164-5049 | DRILL SEED (PERM) (URBAN) (CLAY) | M2 | 12139 |
| 247-5024 | FL BS (COMPL IN PLAC)(TY A GR 6 CL 4) | M3 | 3302 |
| 310-5006 | ASPH MATL (AE-P) | L | 4132 |
| * | ONE CRSE SURF TREAT | M2 | 8001 |
| 316-5028 | AGGR (TY PB, GR 4) | M3 | 73 |
| 316-5226 | ASPH (AC-15P, HFRS-2P OR CRS-2P) | L | 10882 |
| 529-5001 | CONC CURB (TY 1) | M | 281 |
| 529-5026 | CONC CURB (TY A) | M | 15 |
| 3117-5003 | HOT MIX (TY C) | MGR | 736 |
| 3117-5018 | HOT MIX (TY C) (SURF) | MGR | 713 |

* FOR CONTRACTORS INFORMATION ONLY

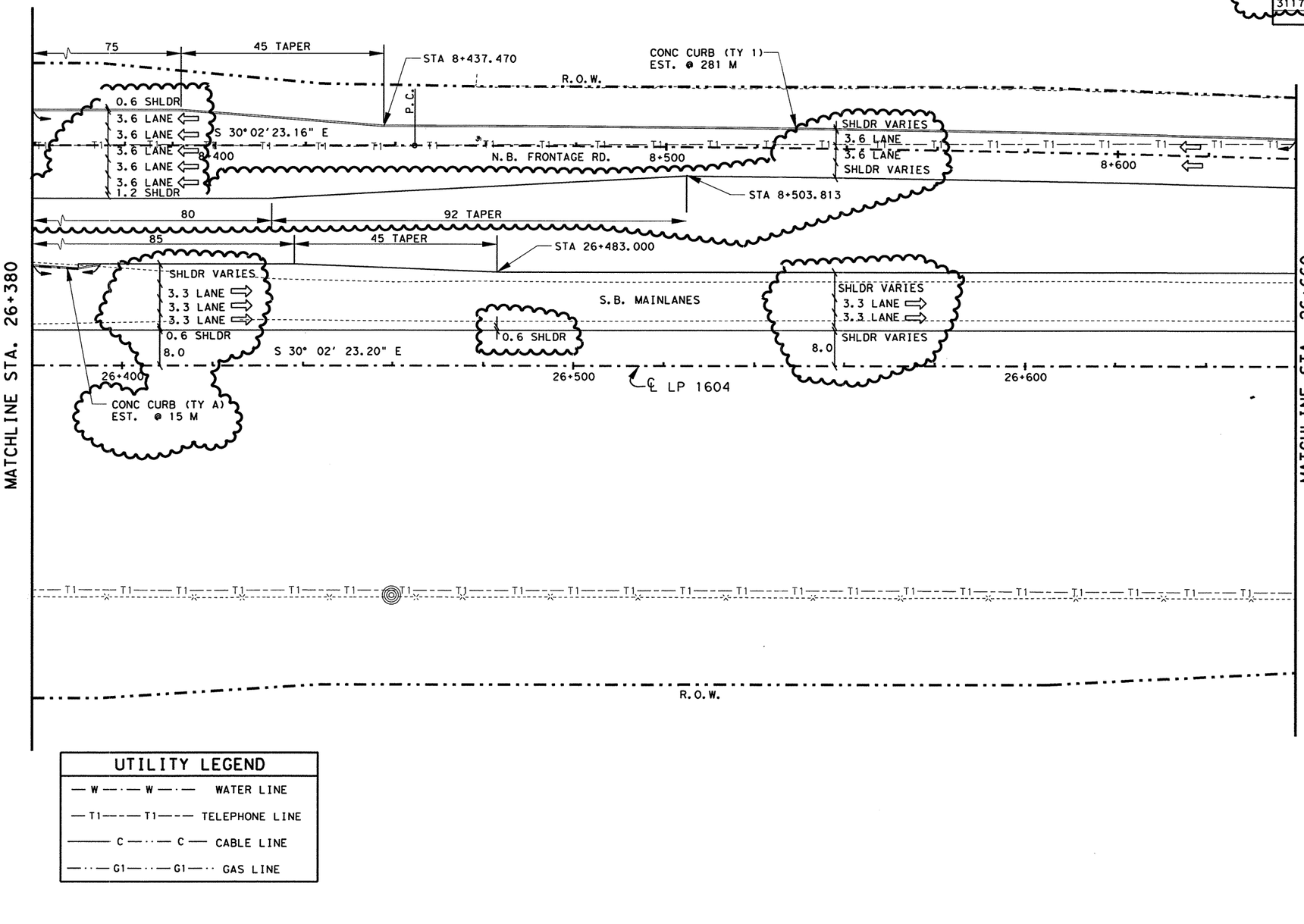


NOTE(S):

ALL DIMENSIONS ARE IN METERS UNLESS OTHERWISE NOTED.

FOR HORIZONTAL ALIGNMENT / DATA, SEE SHEET(S) 164 - 171.

FOR LIMITS OF SEEDING & TOPSOIL, SEE PROJECT X-SECTIONS AND TYPICAL SECTIONS.

CHANGE ORDER NO. 64
-REVISED RDWY GEOMETRICS AND LANE CONFIGURATIONS
-REVISED QUANTITIES

CHANGE ORDER NO. 64 | REVISED SHEET

## UTILITY LEGEND

| | |
|---|---|
| — W —·— W —·— | WATER LINE |
| — T1 —·— T1 —·— | TELEPHONE LINE |
| ——— C —·— C — | CABLE LINE |
| —·— G1 —·— G1 —·· | GAS LINE |

STATE OF TEXAS
JEROME D. PAVLISKA
76075
REGISTERED PROFESSIONAL ENGINEER

Jerome D. Pavliska P.E. 4-28-04
Jerome D. Pavliska, P.E. — Date

©2000 Texas Department of Transportation

PLAN SHEET

SHEET 49 OF 57

| FED.RD. DIV.NO. | FEDERAL AID PROJECT NO. | | SHEET NO. |
|---|---|---|---|
| 6 | NH 2000(704), etc. | | 239A |
| STATE | DIST. | COUNTY | |
| TEXAS | SAT | BEXAR | |
| CONT. | SECT. | JOB | HIGHWAY NO. |
| 2452 | 01 | 036, etc. | LP 1604 |

LEVELS DISPLAYED
1 2 3 4 5 6 7 8 9 10 11 12 13 14 15 16 17 18 19 20 21 22 23 24 25 26 27 28 29 30 31 32 33 34 35 36 37 38 39 40 41 42 43 44 45 46 47 48 49 50 51 52 53 54 55 56 57 58 59 60 61 62 63
ACC: t:\ao\design\lp1604fm471-90\
FILE: plan49.dgn

QUANTITIES THIS SHEET
CSJ 2452-01-036

SCALE: 1:1000

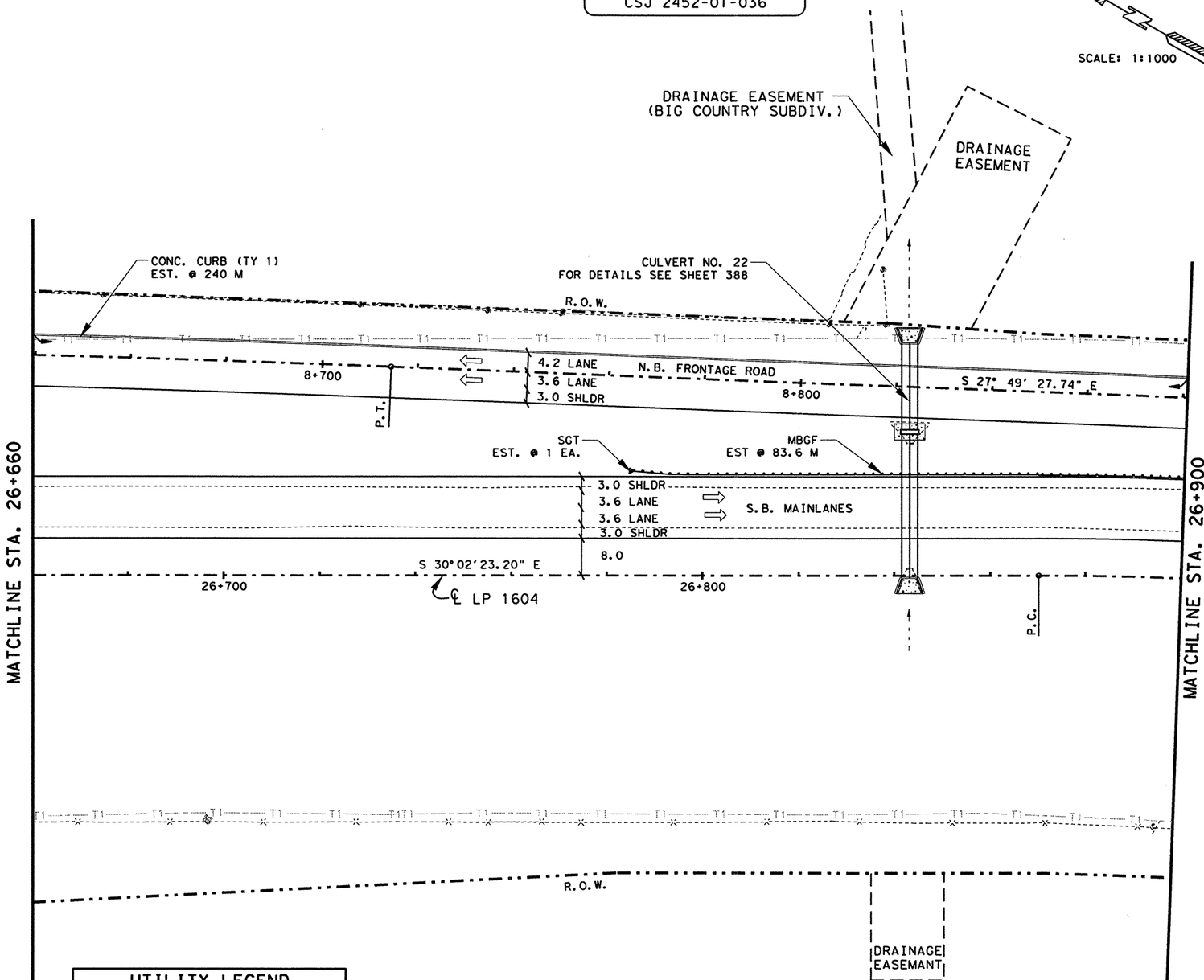


## UTILITY LEGEND

| | |
|---|---|
| — W — W — | WATER LINE |
| — T1 — T1 — | TELEPHONE LINE |
| — C — C — | CABLE LINE |
| — G1 — G1 — | GAS LINE |

## ESTIMATED QUANTITIES

| | ITEM # | ITEM | UNIT | QTY. |
|---|---|---|---|---|
| | 100-5002 | PREP ROW | KM | 0.24 |
| | 110-5001 | EXCAVATION (RDWY) | M3 | 5630 |
| | 132-5018 | EMBANK (ORD COMP) (TY B) (CL 3) | M3 | 1894 |
| | 160-5002 | FURN AND PLAC TPSL (CL 2) (150 MM) | M2 | 8448 |
| | 164-5049 | DRILL SEED (PERM) (URBAN) (CLAY) | M2 | 8448 |
| | 247-5024 | FL BS (COMPL IN PLACE) (TY A GR 6 CL 4) | M3 | 2538 |
| | 310-5006 | ASPH MATL (AE-P) | L | 2954 |
| * | | ONE CRSE SURF TREAT | M2 | 6129 |
| | 316-5028 | AGGR (TY PB, GR 4) | M3 | 56 |
| | 316-5226 | ASPH (AC-15P, HFRS-2P OR CRS-2P) | L | 8335 |
| | 529-5001 | CONC CURB (TY 1) | M | 240 |
| | 540-5006 | MBGF (TIM POST) (2.67 MM) | M | 83.6 |
| | 3117-5003 | HOT MIX (TY C) | MGR | 563 |
| | 3117-5018 | HOT MIX (TY C) (SURF) | MGR | 544 |
| | 5119-5003 | SINGLE GDRAIL TERM (TY III) | EA | 1 |
| | | | | |

* FOR CONTRACTORS INFORMATION ONLY

NOTE(S):

ALL DIMENSIONS ARE IN METERS UNLESS OTHERWISE NOTED.

FOR HORIZONTAL ALIGNMENT / DATA, SEE SHEET(S) 164 - 171.

FOR LIMITS OF SEEDING & TOPSOIL, SEE PROJECT X-SECTIONS AND TYPICAL SECTIONS.

FOR RIPRAP ASSOCIATED WITH STORM DRAINAGE STRUCTURES SEE SHEET(S) 454 - 470.

LEVELS DISPLAYED
1 2 3 4 5 6 7 8 9 10 11 12 13 14 15 16 17 18 19 20 21 22 23 24 25 26 27 28 29 30 31 32 33 34 35 36 37 38 39 40 41 42 43 44 45 46 47 48 49 50 51 52 53 54 55 56 57 58 59 60 61 62 63

ACC: t:\ao\design\lp1604fm471-90\
FILE: plan50.dgn

STATE OF TEXAS
JOEL K. DAVENPORT, JR.
79276
REGISTERED
PROFESSIONAL ENGINEER

Joel K Davenport, Jr 11/1/00
Joel K. Davenport, Jr., P.E. 79276 Date

©2000 Texas Department of Transportation

# PLAN SHEET

SHEET 50 OF 57

| FED. RD. DIV. NO. | FEDERAL AID PROJECT NO. | | SHEET NO. |
|---|---|---|---|
| 6 | NH 2000(704), etc. | | 240 |
| STATE | DIST. | COUNTY | |
| TEXAS | SAT | BEXAR | |
| CONT. | SECT. | JOB | HIGHWAY NO. |
| 2452 | 01 | 036, etc. | LP 1604 |

QUANTITIES THIS SHEET
CSJ 2452-01-036

SCALE: 1:1000

| ESTIMATED QUANTITIES | | | |
|---|---|---|---|
| ITEM # | ITEM | UNIT | QTY. |
| 100-5002 | PREP ROW | KM | 0.24 |
| 110-5001 | EXCAVATION (RDWY) | M3 | 5589 |
| 132-5018 | EMBANK (ORD COMP) (TY B) (CL 3) | M3 | 1900 |
| 160-5002 | FURN AND PLAC TPSL (CL 2) (150 MM) | M2 | 8448 |
| 164-5049 | DRILL SEED (PERM) (URBAN) (CLAY) | M2 | 8448 |
| 247-5024 | FL BS (COMPL IN PLAC)(TY A GR 6 CL 4) | M3 | 2538 |
| 310-5006 | ASPH MATL (AE-P) | L | 2954 |
| * | ONE CRSE SURF TREAT | M2 | 6129 |
| 316-5028 | AGGR (TY PB, GR 4) | M3 | 56 |
| 316-5226 | ASPH (AC-15P, HFRS-2P OR CRS-2P) | L | 8335 |
| 529-5001 | CONC CURB (TY 1) | M | 240 |
| ~~540-5006~~ | ~~MBGF (TIM POST) (2.67 MM)~~ | ~~M~~ | ~~83.6~~ |
| 540-5007 | MBGF (BLK OUT) (TIM POST) (2.67 MM) | M | 83.6 |
| 3117-5003 | HOT MIX (TY C) | MGR | 563 |
| 3117-5018 | HOT MIX (TY C) (SURF) | MGR | 544 |
| 5119-5003 | SINGLE GDRAIL TERM (TY III) | EA | 1 |

* FOR CONTRACTORS INFORMATION ONLY

DRAINAGE EASEMENT
(BIG COUNTRY SUBDIV.)

REVISED CULVERT NO. 22
FOR DETAILS SEE CULVERT
LAYOUT.

DRAINAGE
EASEMENT

STORM DRAIN
LINE I-49B

STORM DRAIN
LINE I-49A

CONC. CURB (TY 1)
EST. @ 240 M

R.O.W.

3.0 SHLDR
3.6 LANE
3.6 LANE
0.6 SHLDR

N.B. FRONTAGE ROAD

8+700

P.T.

8+800

S 27° 49' 27.74" E

MBGF (BLK OUT)
EST @ 83.6 M

SGT
EST. @ 1 EA.

3.0 SHLDR
3.6 LANE
3.6 LANE
3.0 SHLDR

S.B. MAINLANES

8.0

S 30°02'23.20" E

℄ LP 1604

26+700

26+800

MATCHLINE STA. 26+660

MATCHLINE STA. 26+900

P.C.

REVISED EARTHWORK
DITCH LEFT

STA.
26+820

STA.
26+860

R.O.W.

DRAINAGE
EASEMANT

UTILITY LEGEND

| | |
|---|---|
| W W | WATER LINE |
| T1 T1 | TELEPHONE LINE |
| C C | CABLE LINE |
| G1 G1 | GAS LINE |

NOTE(S):

ALL DIMENSIONS ARE IN METERS UNLESS OTHERWISE NOTED.

FOR HORIZONTAL ALIGNMENT / DATA, SEE SHEET(S) 164 - 171.

FOR LIMITS OF SEEDING & TOPSOIL, SEE PROJECT X-SECTIONS AND TYPICAL SECTIONS.

FOR RIPRAP ASSOCIATED WITH STORM DRAINAGE STRUCTURES SEE SHEET(S) 454 - 470.

CHANGE ORDER NO. 64

-REVISED LANE CONFIGURATIONS
-REVISED CULVERT NO. 22
-ADDED STORM DRAIN LINES
I-49A & I-49B
-REVISED QUANTITIES

CHANGE ORDER 64

REVISED SHEET

STATE OF TEXAS
JEROME D. PAVLISKA
76075
REGISTERED
PROFESSIONAL ENGINEER

Jerome D. Pavliska, P.E. 4-28-04
Jerome D. Pavliska, P.E. Date

©2004

Texas Department of Transportation

PLAN SHEET

SHEET 50 OF 57

| FED.RD. DIV.NO. | FEDERAL AID PROJECT NO. | | SHEET NO. |
|---|---|---|---|
| 6 | NH 2000(704), etc. | | 240A |
| STATE | DIST. | COUNTY | |
| TEXAS | SAT | BEXAR | |
| CONT. | SECT. | JOB | HIGHWAY NO. |
| 2452 | 01 | 036, etc. | LP 1604 |

# REFERS TO CHANGES MADE AS PART OF CHANGE ORDER.

LEVELS DISPLAYED
1 2 3 4 5 6 7 8 9 10 11 12 13 14 15 16
17 18 19 20 21 22 23 24 25 26 27 28 29 30 31 32
33 34 35 36 37 38 39 40 41 42 43 44 45 46 47 48
49 50 51 52 53 54 55 56 57 58 59 60 61 62 63

ACC: t:\ao\design\lp1604fm471-90\
FILE: plan50.dgn

QUANTITIES THIS SHEET
CSJ 2452-01-036

SCALE: 1:1000

## ESTIMATED QUANTITIES

| | ITEM # | ITEM | UNIT | QTY. |
|---|---|---|---|---|
| | 100-5002 | PREP ROW | KM | 0.26 |
| | 110-5001 | EXCAVATION (RDWY) | M3 | 10543 |
| | 132-5018 | EMBANK (ORD COMP)(TY B)(CL 3) | M3 | 301 |
| | 160-5002 | FURN AND PLAC TPSL (CL 2)(150 MM) | M2 | 8337 |
| | 164-5049 | DRILL SEED (PERM)(URBAN)(CLAY) | M2 | 8337 |
| | 247-5024 | FL BS (COMPL IN PLAC)(TY A GR 6 CL 4) | M3 | 2831 |
| | 310-5006 | ASPH MATL (AE-P) | L | 3351 |
| * | | ONE CRSE SURF TREAT | M2 | 6840 |
| | 316-5028 | AGGR (TY PB,GR 4) | M3 | 62 |
| | 316-5226 | ASPH (AC-15P, HFRS-2P OR CRS-2P) | L | 9302 |
| | 432-5001 | RIPRAP (CONC)(CL B) | M3 | 58 |
| | 529-5001 | CONC CURB (TY 1) | M | 261 |
| | 540-5006 | MBGF (TIM POST)(2.67 MM) | M | 258.4 |
| | 3117-5003 | HOT MIX (TY C) | MGR | 628 |
| | 3117-5018 | HOT MIX (TY C)(SURF) | MGR | 607 |
| | | | | |

* FOR CONTRACTORS INFORMATION ONLY

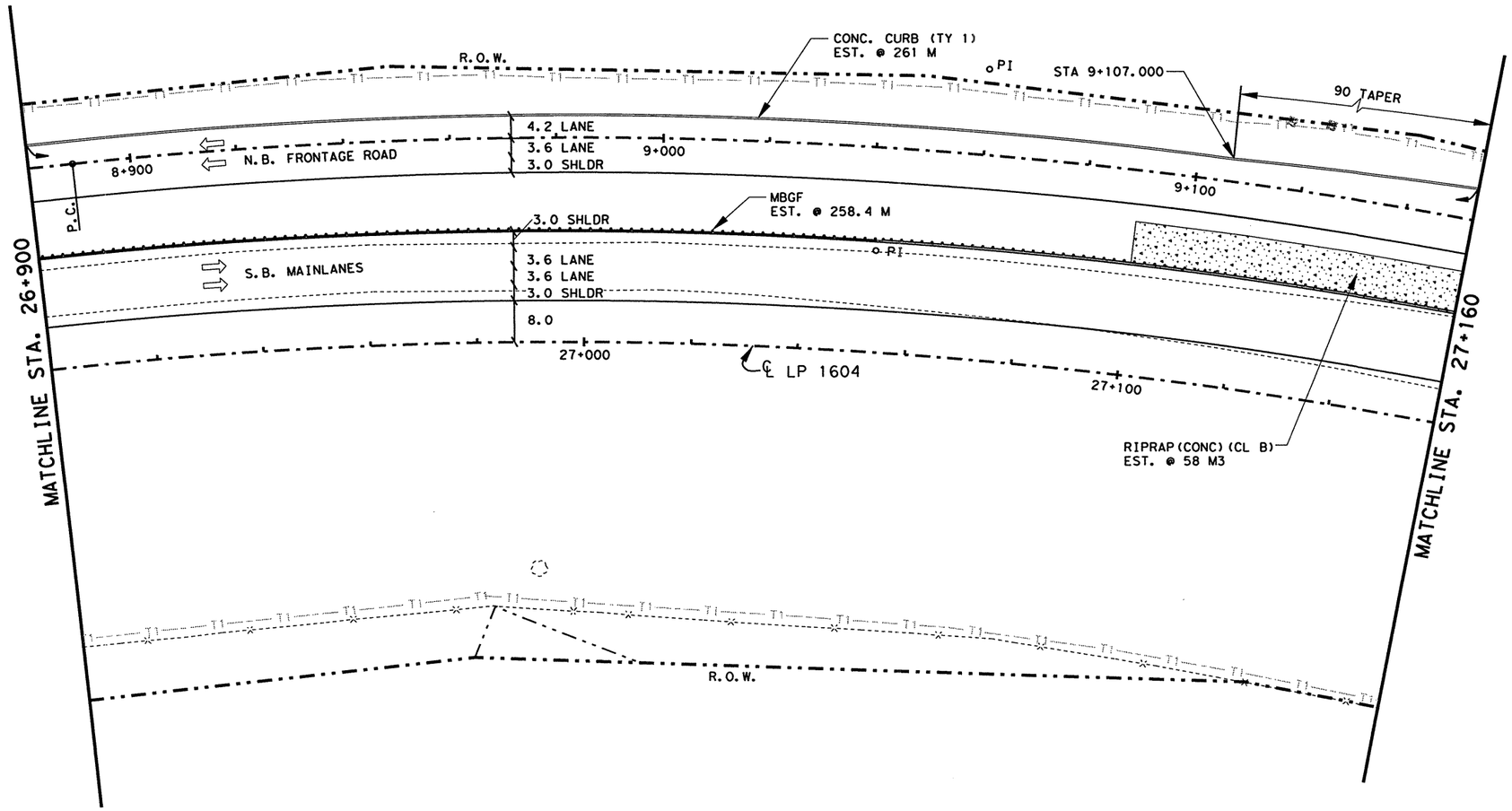


### UTILITY LEGEND

| | |
|---|---|
| —W—W— | WATER LINE |
| —T1—T1— | TELEPHONE LINE |
| —C—C— | CABLE LINE |
| —GI—GI— | GAS LINE |

NOTE(S):

ALL DIMENSIONS ARE IN METERS UNLESS OTHERWISE NOTED.

FOR HORIZONTAL ALIGNMENT / DATA, SEE SHEET(S) 164 -171.

FOR LIMITS OF SEEDING & TOPSOIL, SEE PROJECT X-SECTIONS AND TYPICAL SECTIONS.

FOR RIPRAP DETAILS, SEE PROJECT X-SECTIONS AND SHEET 342.

STATE OF TEXAS
JOEL K. DAVENPORT, JR.
79276
REGISTERED
PROFESSIONAL ENGINEER

Joel K. Davenport, Jr. 11/1/00
Joel K. Davenport, Jr. P.E. 79276 Date

Texas Department of Transportation

# PLAN SHEET

SHEET 51 OF 57

| FED. RD. DIV. NO. | FEDERAL AID PROJECT NO. | SHEET NO. |
|---|---|---|
| 6 | NH 2000(704),etc. | 241 |
| STATE | DIST. | COUNTY |
| TEXAS | SAT | BEXAR |
| CONT. | SECT. | JOB / HIGHWAY NO. |
| 2452 | 01 | 036,etc. / LP 1604 |

LEVELS DISPLAYED
1 2 3 4 5 6 7 8 9 10 11 12 13 14 15 16 17 18 19 20 21 22 23 24 25 26 27 28 29 30 31 32 33 34 35 36 37 38 39 40 41 42 43 44 45 46 47 48 49 50 51 52 53 54 55 56 57 58 59 60 61 62 63

ACC: t:\ao\design\lp1604fm471-90\
FILE: plan51.dgn

QUANTITIES THIS SHEET
CSJ 2452-01-036

SCALE: 1:1000

## ESTIMATED QUANTITIES

| ITEM # | ITEM | UNIT | QTY. |
|---|---|---|---|
| 100-5002 | PREP ROW | KM | 0.26 |
| 110-5001 | EXCAVATION (RDWY) | M3 | 10539 |
| 132-5018 | EMBANK (ORD COMP) (TY B) (CL 3) | M3 | 301 |
| 160-5002 | FURN AND PLAC TPSL (CL 2) (150 MM) | M2 | 8337 |
| 164-5049 | DRILL SEED (PERM) (URBAN) (CLAY) | M2 | 8337 |
| 247-5024 | FL BS (COMPL IN PLAC)(TY A GR 6 CL 4) | M3 | 2831 |
| 310-5006 | ASPH MATL (AE-P) | L | 3351 |
| * | ONE CRSE SURF TREAT | M2 | 6840 |
| 316-5028 | AGGR (TY PB, GR 4) | M3 | 62 |
| 316-5226 | ASPH (AC-15P, HFRS-2P OR CRS-2P) | L | 9302 |
| 432-5001 | RIPRAP (CONC) (CL B) | M3 | 58 |
| 529-5001 | CONC CURB (TY 1) | M | 261 |
| ~~540-5006~~ | ~~MBGF (TIM POST) (2.67 MM)~~ | ~~M~~ | ~~258.4~~ |
| 540-5007 | MBGF (TIM POST) (2.69 MM) (BLKOUT) | M | 258.4 |
| 3117-5003 | HOT MIX (TY C) | MGR | 628 |
| 3117-5018 | HOT MIX (TY C) (SURF) | MGR | 607 |

20

* FOR CONTRACTORS INFORMATION ONLY

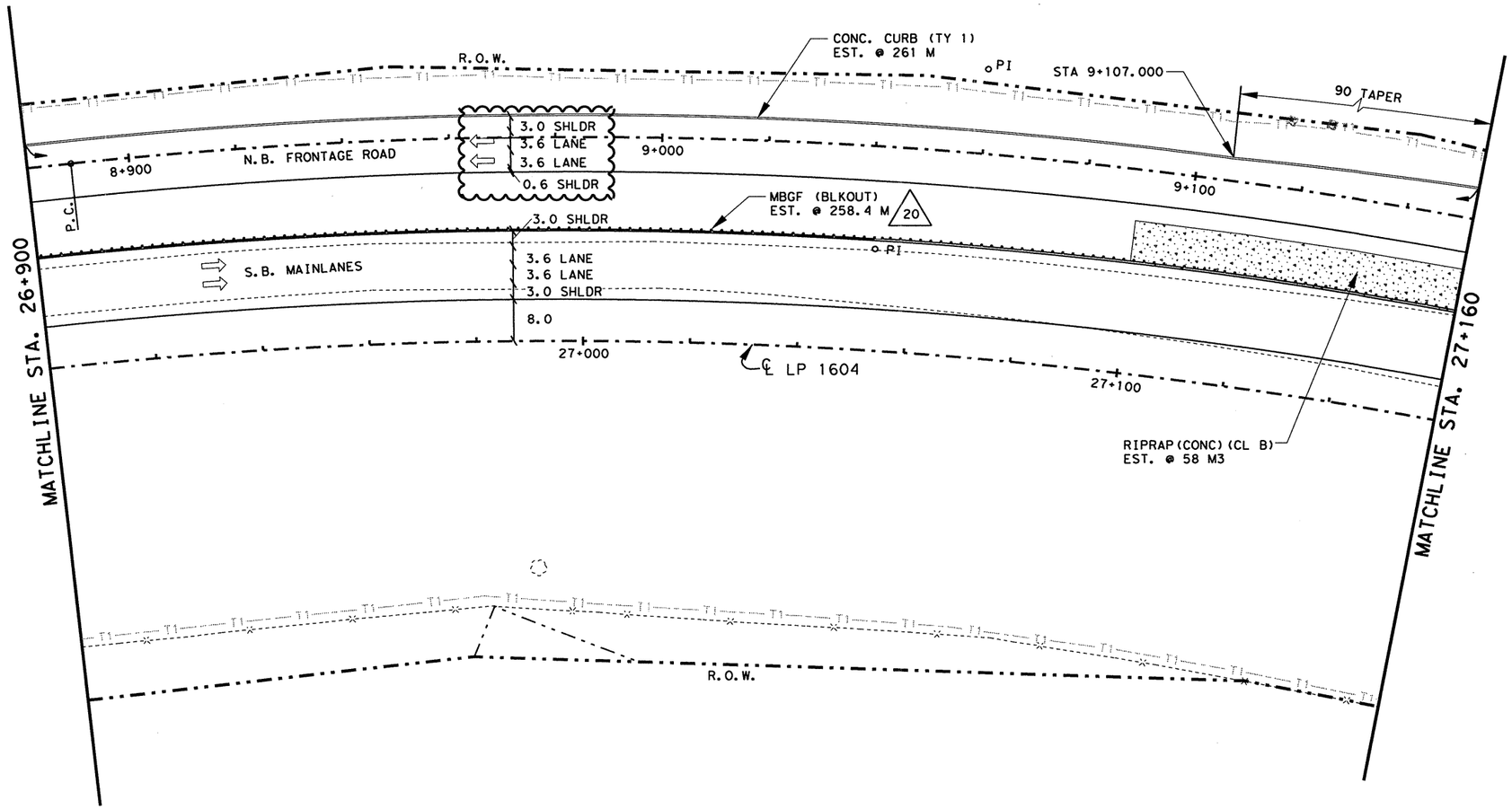


NOTE(S):

ALL DIMENSIONS ARE IN METERS UNLESS OTHERWISE NOTED.

FOR HORIZONTAL ALIGNMENT / DATA, SEE SHEET(S) 164 -171.

FOR LIMITS OF SEEDING & TOPSOIL, SEE PROJECT X-SECTIONS AND TYPICAL SECTIONS.

FOR RIPRAP DETAILS, SEE PROJECT X-SECTIONS AND SHEET 342.

### UTILITY LEGEND

| | |
|---|---|
| —W—W— | WATER LINE |
| —T1—T1— | TELEPHONE LINE |
| —C—C— | CABLE LINE |
| —G1—G1— | GAS LINE |

### CHANGE ORDER NO. 64

-REVISED LANE CONFIGURATION

-REVISED QUANTITIES

(#) REFERS TO CHANGES MADE AS PART OF CHANGE ORDER.

CHANGE ORDER 64

REVISED SHEET

STATE OF TEXAS
JEROME D. PAVLISKA
76075
REGISTERED PROFESSIONAL ENGINEER

Jerome D. Pavliska, P.E. 4-28-04
Jerome D. Pavliska, P.E. — Date

Texas Department of Transportation

PLAN SHEET

SHEET 51 OF 57

| FED. RD. DIV. NO. | FEDERAL AID PROJECT NO. | | SHEET NO. |
|---|---|---|---|
| 6 | NH 2000(704), etc. | | 241A |
| STATE | DIST. | COUNTY | |
| TEXAS | SAT | BEXAR | |
| CONT. | SECT. | JOB | HIGHWAY NO. |
| 2452 | 01 | 036, etc. | LP 1604 |

05-01-04

LEVELS DISPLAYED
1 2 3 4 5 6 7 8 9 10 11 12 13 14 15 16
17 18 19 20 21 22 23 24 25 26 27 28 29 30 31 32
33 34 35 36 37 38 39 40 41 42 43 44 45 46 47 48
49 50 51 52 53 54 55 56 57 58 59 60 61 62 63

ACC: t:\go\design\lp1604fm471-90\
FILE: plan51*c020.dgn

QUANTITIES THIS SHEET
CSJ 2452-01-036

SCALE: 1:1000

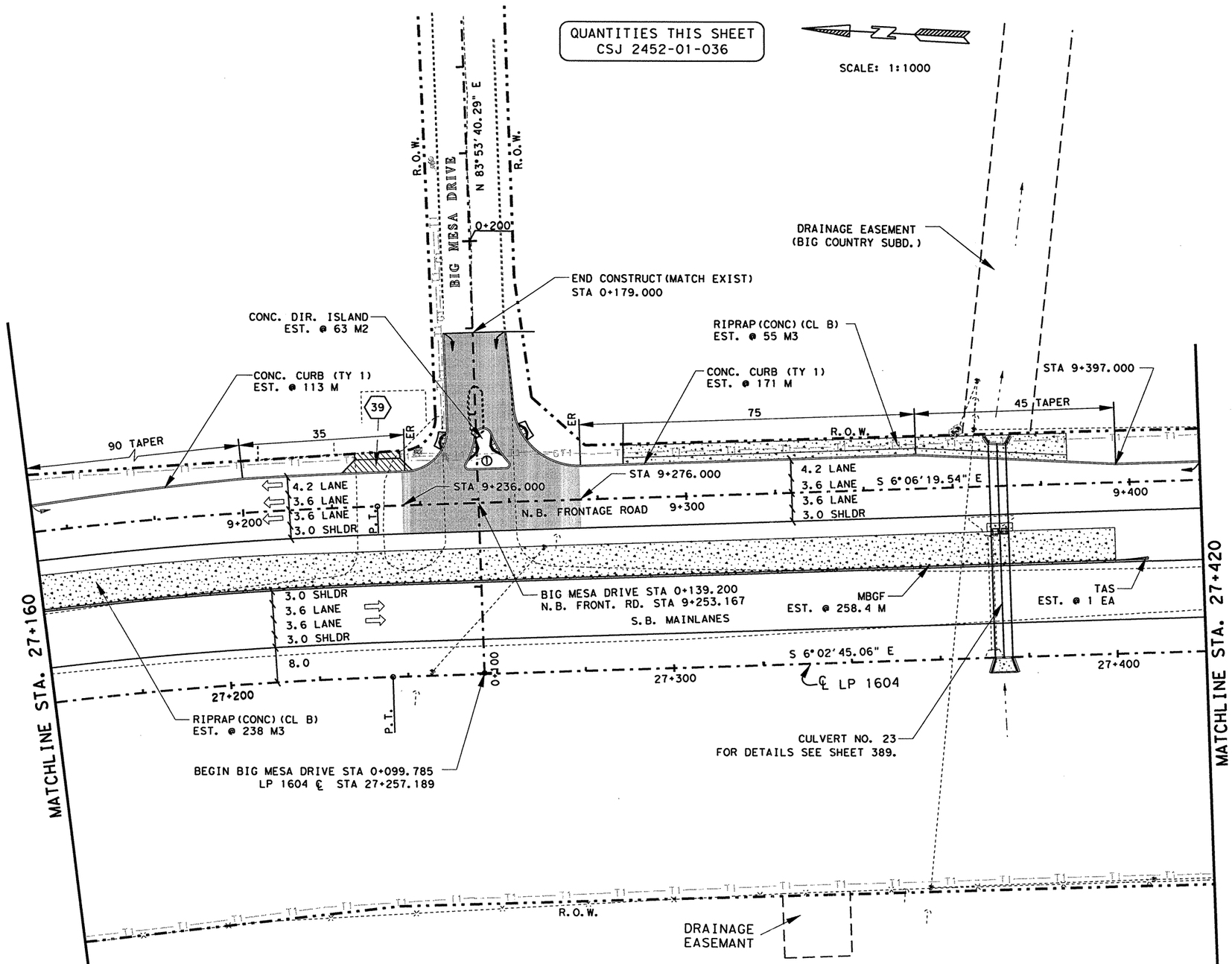


## ESTIMATED QUANTITIES

| ITEM # | ITEM | UNIT | QTY. |
|---|---|---|---|
| 100-5002 | PREP ROW | KM | 0.26 |
| 110-5001 | EXCAVATION (RDWY) | M3 | 6745 |
| 132-5018 | EMBANK (ORD COMP) (TY B) (CL 3) | M3 | 1022 |
| 160-5002 | FURN AND PLAC TPSL (CL 2) (150 MM) | M2 | 6303 |
| 164-5049 | DRILL SEED (PERM) (URBAN) (CLAY) | M2 | 6303 |
| 247-5024 | FL BS (COMPL IN PLAC) (TY A GR 6 CL 4) | M3 | 2833 |
| 310-5006 | ASPH MATL (AE-P) | L | 3431 |
| * | ONE CRSE SURF TREAT | M2 | 8036 |
| 316-5028 | AGGR (TY PB, GR 4) | M3 | 73 |
| 316-5226 | ASPH (AC-15P, HFRS-2P OR CRS-2P) | L | 10929 |
| 345-5004 | ASPH STAB BS (GR 4) | MGR | 861 |
| 432-5001 | RIPRAP (CONC) (CL B) | M3 | 293 |
| 529-5001 | CONC CURB (TY 1) | M | 284 |
| 530-5003 | DRVWAYS (ASPH-CONC PAV) | M2 | 60 |
| 536-5003 | CONC DIRECT ISLAND | M2 | 63 |
| 540-5005 | TERM ANCHOR SECT (2.67 MM) | EA | 1 |
| 540-5006 | MBGF (TIM POST) (2.67 MM) | M | 258.4 |
| 3117-5003 | HOT MIX (TY C) | MGR | 726 |
| 3117-5018 | HOT MIX (TY C) (SURF) | MGR | 707 |
| | | | |

* FOR CONTRACTORS INFORMATION ONLY

NOTE(S):

ALL DIMENSIONS ARE IN METERS UNLESS OTHERWISE NOTED.

FOR HORIZONTAL ALIGNMENT / DATA, SEE SHEET(S) 164 -171.

FOR LIMITS OF SEEDING & TOPSOIL, SEE PROJECT X-SECTIONS AND TYPICAL SECTIONS.

FOR RIPRAP DETAILS, SEE PROJECT X-SECTIONS AND SHEET 342.

FOR RIPRAP ASSOCIATED WITH STORM DRAINAGE STRUCTURES SEE SHEET(S) 454 - 470.

FOR INTERSECTION LAYOUT, SEE SHEET 333.

FOR ILLUMINATION LAYOUTS / DETAILS SEE SHEET 624.

FOR ADDITIONAL STORM DRAIN INFO. REFER TO THE SPECIFIC STORM DRAIN PROFILE SHEET(S).

(#) FOR DRIVEWAY #, FOR MORE DETAILS SEE SHEET(S) 27, 28 & 336.

WHEELCHAIR RAMPS TY 2

## UTILITY LEGEND

| | |
|---|---|
| — W — W — | WATER LINE |
| — T1 — T1 — | TELEPHONE LINE |
| — C — C — | CABLE LINE |
| — G1 — G1 — | GAS LINE |

## DIRECT ISLAND QUANTITIES

| ISLAND NO. | SURFACE AREA | SEAL | CONC | CONC CURB TY A |
|---|---|---|---|---|
| (1) | 63 M2 | | ✓ | 33 * |
| | | | | |

LIMITS OF ASPH STAB BS @ INTERSECTION

LEVELS DISPLAYED
1 2 3 4 5 6 7 8 9 10 11 12 13 14 15 16 17
17 18 19 20 21 22 23 24 25 26 27 28 29 30 31 32
33 34 35 36 37 38 39 40 41 42 43 44 45 46 47 48
49 50 51 52 53 54 55 56 57 58 59 60 61 62 63

ACC: t:\ao\design\lp1604fm471-90\
FILE: plan52.dgn

STATE OF TEXAS
JOEL K. DAVENPORT, JR.
79276
REGISTERED PROFESSIONAL ENGINEER

Joel K. Davenport Jr. 11/1/00
Joel K. Davenport, Jr. P.E. 79276 Date

©2000 Texas Department of Transportation

# PLAN SHEET

SHEET 52 OF 57

| FED. RD. DIV. NO. | FEDERAL AID PROJECT NO. | | SHEET NO. |
|---|---|---|---|
| 6 | NH 2000(704), etc. | | 242 |
| STATE | DIST. | COUNTY | |
| TEXAS | SAT | BEXAR | |
| CONT. | SECT. | JOB | HIGHWAY NO. |
| 2452 | 01 | 036, etc. | LP 1604 |

QUANTITIES THIS SHEET
CSJ 2452-01-036

SCALE: 1:1000

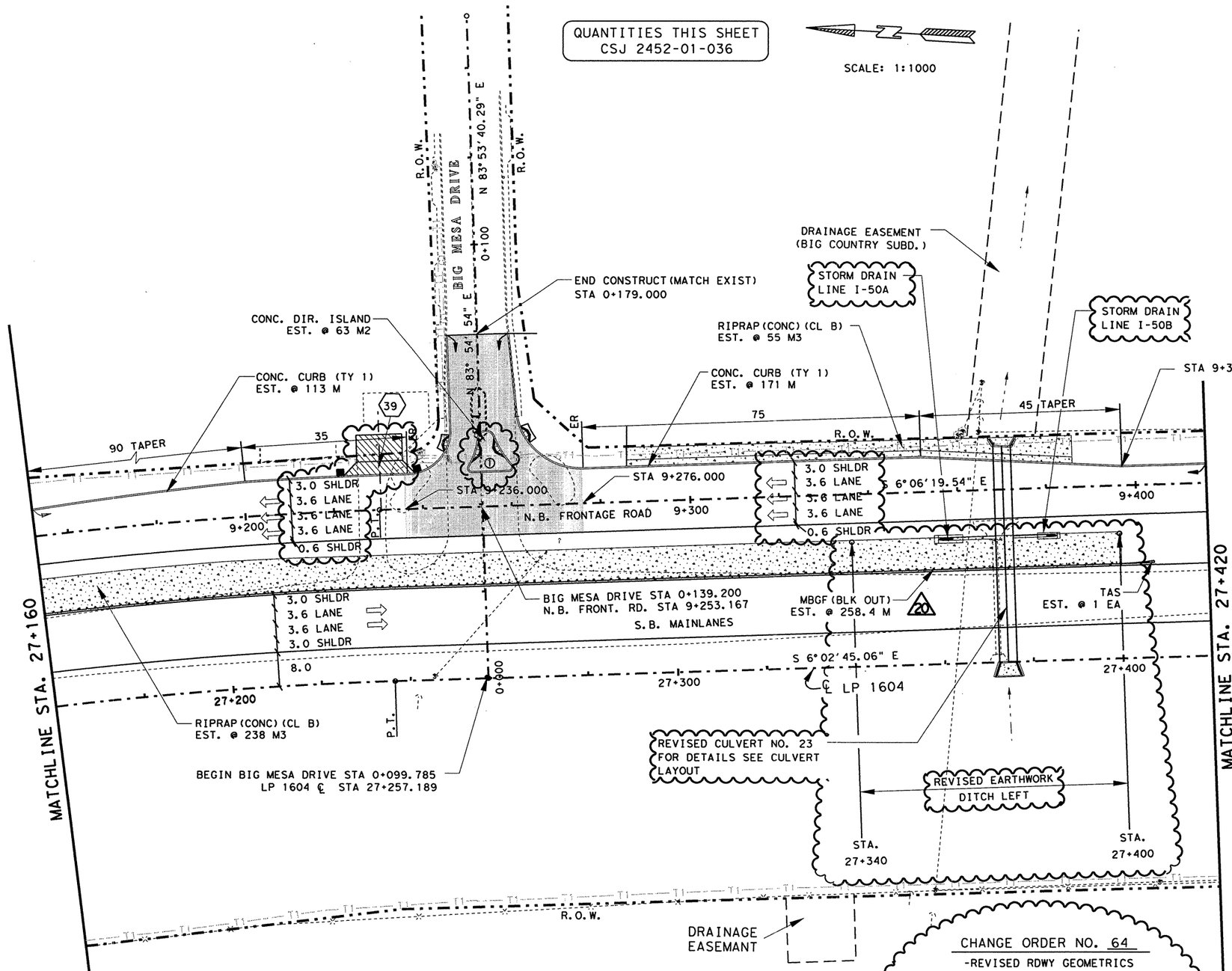


## ESTIMATED QUANTITIES

| | ITEM # | ITEM | UNIT | QTY. |
|---|---|---|---|---|
| | 100-5002 | PREP ROW | KM | 0.26 |
| | 110-5001 | EXCAVATION (RDWY) | M3 | 6698 |
| | 132-5018 | EMBANK (ORD COMP) (TY B) (CL 3) | M3 | 1021 |
| | 160-5002 | FURN AND PLAC TPSL (CL 2) (150 MM) | M2 | 6303 |
| | 164-5049 | DRILL SEED (PERM) (URBAN) (CLAY) | M2 | 6303 |
| | 247-5024 | FL BS (COMPL IN PLAC) (TY A GR 6 CL 4) | M3 | 2833 |
| | 310-5006 | ASPH MATL (AE-P) | L | 3481 |
| * | | ONE CRSE SURF TREAT | M2 | 8099 |
| | 316-5028 | AGGR (TY PB, GR 4) | M3 | 74 |
| | 316-5226 | ASPH (AC-15P, HFRS-2P OR CRS-2P) | L | 11015 |
| | 345-5004 | ASPH STAB BS (GR 4) | MGR | 910 |
| | 432-5001 | RIPRAP (CONC) (CL B) | M3 | 293 |
| | 529-5001 | CONC CURB (TY 1) | M | 284 |
| | 530-5001 | DRIVEWAYS (CONC) (150MM) | M2 | 102 |
| | 530-5003 | DRVWAYS (ASPH CONC PAV) | M2 | 68 |
| | 536-5003 | CONC DIRECT ISLAND | M2 | 63 |
| 2 | ~~540-5005~~ | ~~TERM ANCHOR SECT (2.67 MM)~~ | ~~EA~~ | ~~1~~ |
| 2 | 540-5006 | MBGF (TIM POST) (2.67 MM) | M | 258.4 |
| | 540-5007 | MBGF (BLK OUT) (TIM POST) (2.67 MM) | M | 258.4 |
| | 3117-5003 | HOT MIX (TY C) | MGR | 726 |
| | 3117-5018 | HOT MIX (TY C) (SURF) | MGR | 707 |

* FOR CONTRACTORS INFORMATION ONLY

NOTE(S):

ALL DIMENSIONS ARE IN METERS UNLESS OTHERWISE NOTED.

FOR HORIZONTAL ALIGNMENT / DATA, SEE SHEET(S) 164 -171.

FOR LIMITS OF SEEDING & TOPSOIL, SEE PROJECT X-SECTIONS AND TYPICAL SECTIONS.

FOR RIPRAP DETAILS, SEE PROJECT X-SECTIONS AND SHEET 342.

FOR RIPRAP ASSOCIATED WITH STORM DRAINAGE STRUCTURES SEE SHEET(S) 454 - 470.

FOR INTERSECTION LAYOUT, SEE SHEET 333.

FOR ILLUMINATION LAYOUTS / DETAILS SEE SHEET 624.

FOR ADDITIONAL STORM DRAIN INFO. REFER TO THE SPECIFIC STORM DRAIN PROFILE SHEET(S).

(#) FOR DRIVEWAY #, FOR MORE DETAILS SEE SHEET(S) 27, 28 & 336.

WHEELCHAIR RAMPS TY 2

**CHANGE ORDER 64**

**REVISED SHEET**

## UTILITY LEGEND

| | |
|---|---|
| —W—W— | WATER LINE |
| —T1—T1— | TELEPHONE LINE |
| —C—C— | CABLE LINE |
| —G1—G1— | GAS LINE |

## DIRECT ISLAND QUANTITIES

| ISLAND NO. | SURFACE AREA | SEAL | CONC | CONC CURB TY A |
|---|---|---|---|---|
| (1) | 63 M2 | | ✓ | 33 * |
| | | | | |

CHANGE ORDER NO. 64
- -REVISED RDWY GEOMETRICS AND LANE CONFIGURATION
- -REVISED DIRECTIONAL ISLAND TO INCLUDE APH. STAB. BASE
- -REVISED CULVERT NO. 23
- -ADDED STORM DRAIN LINES I-50A & I-50B
- -REVISED DRIVE #39
- -REVISED QUANTITIES

(#) REFERS TO CHANGES MADE AS PART OF CHANGE ORDER.

LIMITS OF ASPH STAB BS @ INTERSECTION

STATE OF TEXAS
JEROME D. PAVLISKA
76075
REGISTERED PROFESSIONAL ENGINEER

Jerome D. Pavliska, P.E. 12-9-04
Jerome D. Pavliska, P.E. — Date

©2004
Texas Department of Transportation

# PLAN SHEET

SHEET 52 OF 57

| FED.RD. DIV.NO. | FEDERAL AID PROJECT NO. | | SHEET NO. |
|---|---|---|---|
| 6 | NH 2000(704), etc. | | 242A |
| STATE | DIST. | COUNTY | |
| TEXAS | SAT | BEXAR | |
| CONT. | SECT. | JOB | HIGHWAY NO. |
| 2452 | 01 | 036, etc. | LP 1604 |

LEVELS DISPLAYED
1 2 3 4 5 6 7 8 9 10 11 12 13 14 15 16 17 18 19 20 21 22 23 24 25 26 27 28 29 30 31 32 33 34 35 36 37 38 39 40 41 42 43 44 45 46 47 48 49 50 51 52 53 54 55 56 57 58 59 60 61 62 63
ACC: *:\design\lp1604fm471-90\
FILE: plan*C052.dgn

QUANTITIES THIS SHEET
CSJ 2452-01-036

SCALE: 1:1000

## ESTIMATED QUANTITIES

| | ITEM # | ITEM | UNIT | QTY. |
|---|---|---|---|---|
| | 100-5002 | PREP ROW | KM | 0.26 |
| | 110-5001 | EXCAVATION (RDWY) | M3 | 4421 |
| | 132-5018 | EMBANK (ORD COMP) (TY B) (CL 3) | M3 | 5937 |
| | 160-5002 | FURN AND PLAC TPSL (CL 2) (150 MM) | M2 | 9810 |
| | 164-5049 | DRILL SEED (PERM) (URBAN) (CLAY) | M2 | 9810 |
| | 247-5024 | FL BS (COMPL IN PLACXTY A GR 6 CL 4) | M3 | 2745 |
| | 310-5006 | ASPH MATL (AE-P) | L | 3195 |
| * | | ONE CRSE SURF TREAT | M2 | 6628 |
| | 316-5028 | AGGR (TY PB, GR 4) | M3 | 60 |
| | 316-5226 | ASPH (AC-15P, HFRS-2P OR CRS-2P) | L | 9014 |
| | 432-5001 | RIPRAP (CONC) (CL B) | M3 | 107 |
| | 529-5001 | CONC CURB (TY 1) | M | 261 |
| | 3117-5003 | HOT MIX (TY C) | MGR | 608 |
| | 3117-5018 | HOT MIX (TY C) (SURF) | MGR | 588 |
| | | | | |

* FOR CONTRACTORS INFORMATION ONLY

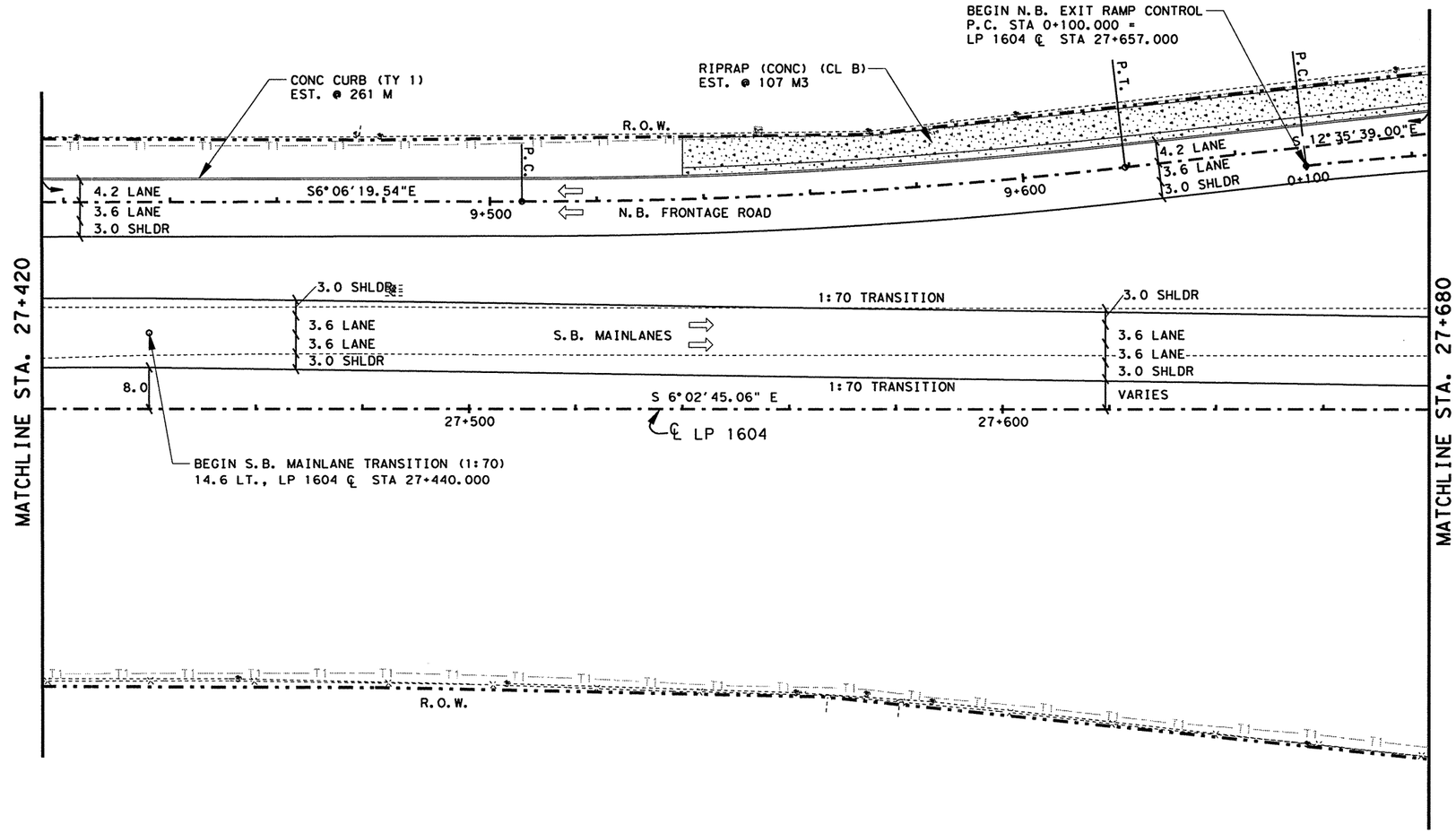


NOTE(S):

ALL DIMENSIONS ARE IN METERS UNLESS OTHERWISE NOTED.

FOR HORIZONTAL ALIGNMENT / DATA, SEE SHEET(S) 164 - 171.

FOR LIMITS OF SEEDING & TOPSOIL, SEE PROJECT X-SECTIONS AND TYPICAL SECTIONS.

FOR RIPRAP DETAILS, SEE PROJECT X-SECTIONS AND SHEET 342.

## UTILITY LEGEND

| | |
|---|---|
| —W— W— | WATER LINE |
| —T1— T1— | TELEPHONE LINE |
| —C— C— | CABLE LINE |
| —G1— G1— | GAS LINE |

JOEL K. DAVENPORT, JR.
79276
REGISTERED
PROFESSIONAL ENGINEER

Joel K Davenport Jr 11/1/00
Joel K. Davenport, Jr. P.E. 79276 Date

Texas Department of Transportation

# PLAN SHEET

SHEET 53 OF 57

| FED. RD. DIV. NO. | FEDERAL AID PROJECT NO. | | SHEET NO. |
|---|---|---|---|
| 6 | NH 2000(704), etc. | | 243 |
| STATE | DIST. | COUNTY | |
| TEXAS | SAT | BEXAR | |
| CONT. | SECT. | JOB | HIGHWAY NO. |
| 2452 | 01 | 036, etc. | LP 1604 |

LEVELS DISPLAYED
1 2 3 4 5 6 7 8 9 10 11 12 13 14 15 16
17 18 19 20 21 22 23 24 25 26 27 28 29 30 31 32
33 34 35 36 37 38 39 40 41 42 43 44 45 46 47 48
49 50 51 52 53 54 55 56 57 58 59 60 61 62 63

ACC: t:\ao\design\lp1604fm471-90\
FILE: plan53.dgn

QUANTITIES THIS SHEET
CSJ 2452-01-036

SCALE: 1:1000

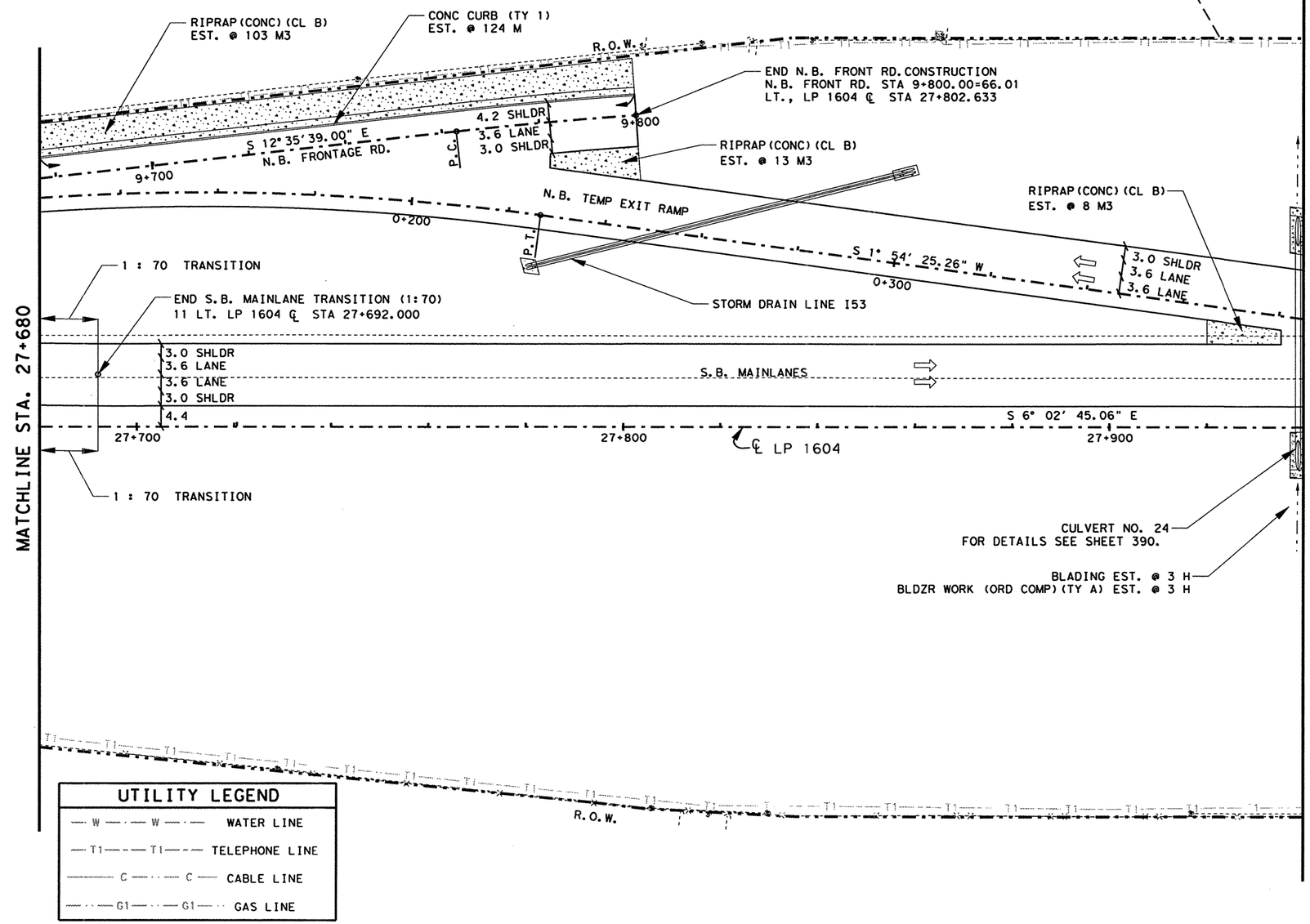


## UTILITY LEGEND

| | |
|---|---|
| W W | WATER LINE |
| T1 T1 | TELEPHONE LINE |
| C C | CABLE LINE |
| G1 G1 | GAS LINE |

## ESTIMATED QUANTITIES

| ITEM # | ITEM | UNIT | QTY. |
|---|---|---|---|
| 100-5002 | PREP ROW | KM | 0.26 |
| 110-5001 | EXCAVATION (RDWY) | M3 | 2324 |
| 132-5018 | EMBANK (ORD COMP) (TY B) (CL 3) | M3 | 9845 |
| 150-5003 | BLADING | H | 3 |
| 156-5003 | BLDZR WORK (ORD COMP) (TY A) | H | 3 |
| 160-5002 | FURN AND PLAC TPSL (CL 2) (150 MM) | M2 | 11399 |
| 164-5049 | DRILL SEED (PERM) (URBAN) (CLAY) | M2 | 11399 |
| 247-5024 | FL BS (COMPL IN PLAC)(TY A GR 6 CL 4) | M3 | 3258 |
| 310-5006 | ASPH MATL (AE-P) | L | 4467 |
| * | ONE CRSE SURF TREAT | M2 | 7899 |
| 316-5028 | AGGR (TY PB, GR 4) | M3 | 72 |
| 316-5226 | ASPH (AC-15P, HFRS-2P OR CRS-2P) | L | 10743 |
| 432-5001 | RIPRAP (CONC) (CL B) | M3 | 124 |
| 529-5001 | CONC CURB (TY 1) | M | 124 |
| 3117-5003 | HOT MIX (TY C) | MGR | 727 |
| 3117-5018 | HOT MIX (TY C) (SURF) | MGR | 709 |

* FOR CONTRACTORS INFORMATION ONLY

NOTE(S):

ALL DIMENSIONS ARE IN METERS UNLESS OTHERWISE NOTED.

FOR HORIZONTAL ALIGNMENT / DATA, SEE SHEET(S) 164 - 171.

FOR LIMITS OF SEEDING & TOPSOIL, SEE PROJECT X-SECTIONS AND TYPICAL SECTIONS.

FOR RIPRAP DETAILS, SEE PROJECT X-SECTIONS AND SHEET 342.

FOR RIPRAP ASSOCIATED WITH STORM DRAINAGE STRUCTURES SEE SHEET(S) 454 - 470.

FOR ADDITIONAL STORM DRAIN INFO. REFER TO THE SPECIFIC STORM DRAIN PROFILE SHEET(S).

STATE OF TEXAS
JOEL K. DAVENPORT, JR.
79276
REGISTERED
PROFESSIONAL ENGINEER

Joel K Davenport, Jr 11/1/00
Joel K. Davenport, Jr. P.E. 79276 Date

Texas Department of Transportation

# PLAN SHEET

SHEET 54 OF 57

| FED.RD. DIV.NO. | FEDERAL AID PROJECT NO. | | SHEET NO. |
|---|---|---|---|
| 6 | NH 2000(704), etc. | | 244 |
| STATE | DIST. | COUNTY | |
| TEXAS | SAT | BEXAR | |
| CONT. | SECT. | JOB | HIGHWAY NO. |
| 2452 | 01 | 036, etc. | LP 1604 |

LEVELS DISPLAYED
1 2 3 4 1 5 6 7 8 9 10 11 12 13 14 15 16
17 18 19 20 21 22 23 24 25 26 27 28 29 30 31 32 33
33 34 35 36 37 38 39 40 41 42 43 44 45 46 47 48
49 50 51 52 53 54 55 56 57 58 59 60 61 62 63 64

ACC: t:\ao\design\lp1604fm471-90\
FILE: plan54.dgn

QUANTITIES THIS SHEET
CSJ 2452-01-036

SCALE: 1:1000

DRAINAGE EASEMENT

R.O.W.

END N.B. EXIT RAMP CONTROL
P.T. STA 0+505.242 = 14.60 LT.
LP 1604 ℄ STA 28+059.782

P.C.

0+400

N. B. MAINLANES

P.T.

S 6°02'45.05" E

0+500

S. B. MAINLANES

S 6°02'45.06" E

28+000

℄ LP 1604

28+100

3.0 SHLDR
3.6 LANE ⇦ N. B. MAINLANES
3.6 LANE ⇦
3.6 LANE ⇨
3.6 LANE ⇨ S. B. MAINLANES
3.0 SHLDR
4.4

MATCHLINE STA. 27+940

MATCHLINE STA. 28+200

CULVERT NO. 24
FOR DETAILS SEE SHEET 390.

R.O.W.

## UTILITY LEGEND

| | |
|---|---|
| — W — · — W — · — | WATER LINE |
| — T1 — · — T1 — · — | TELEPHONE LINE |
| ——— C ——— · ——— C ——— | CABLE LINE |
| — · — G1 — · — · — G1 — · — · | GAS LINE |

## ESTIMATED QUANTITIES

| ITEM # | ITEM | UNIT | QTY. |
|---|---|---|---|
| 100-5002 | PREP ROW | KM | 0.26 |
| 110-5001 | EXCAVATION (RDWY) | M3 | 4942 |
| 132-5018 | EMBANK (ORD COMP) (TY B) (CL 3) | M3 | 981 |
| 160-5002 | FURN AND PLAC TPSL (CL 2) (150 MM) | M2 | 7247 |
| 164-5049 | DRILL SEED (PERM) (URBAN) (CLAY) | M2 | 7247 |
| 247-5024 | FL BS (COMPL IN PLAC)(TY A GR 6 CL 4) | M3 | 2410 |
| 310-5006 | ASPH MATL (AE-P) | L | 3162 |
| * | ONE CRSE SURF TREAT | M2 | 5909 |
| 316-5028 | AGGR (TY PB, GR 4) | M3 | 54 |
| 316-5226 | ASPH (AC-15P, HFRS-2P OR CRS-2P) | L | 8036 |
| 3117-5003 | HOT MIX (TY C) | MGR | 548 |
| 3117-5018 | HOT MIX (TY C) (SURF) | MGR | 541 |
| | | | |

* FOR CONTRACTORS INFORMATION ONLY

NOTE(S):

ALL DIMENSIONS ARE IN METERS UNLESS OTHERWISE NOTED.

FOR HORIZONTAL ALIGNMENT / DATA, SEE SHEET(S) 164 - 171.

FOR LIMITS OF SEEDING & TOPSOIL, SEE PROJECT X-SECTIONS AND TYPICAL SECTIONS.

FOR RIPRAP ASSOCIATED WITH STORM DRAINAGE STRUCTURES SEE SHEET(S) 454 - 470.

STATE OF TEXAS
JOEL K. DAVENPORT, JR.
79276
REGISTERED
PROFESSIONAL ENGINEER

Joel K. Davenport, Jr. 9/19/00
Joel K. Davenport, Jr. P.E. 79276 Date

Texas Department of Transportation

# PLAN SHEET

SHEET 55 OF 57

| FED.RD. DIV.NO. | FEDERAL AID PROJECT NO. | | SHEET NO. |
|---|---|---|---|
| 6 | NH 2000(704), etc. | | 245 |
| STATE | DIST. | COUNTY | |
| TEXAS | SAT | BEXAR | |
| CONT. | SECT. | JOB | HIGHWAY NO. |
| 2452 | 01 | 036, etc. | LP 1604 |

LEVELS DISPLAYED
1 2 3 4 5 6 7 8 9 10 11 12 13 14 15 16
17 18 19 20 21 22 23 24 25 26 27 28 29 30 31 32
33 34 35 36 37 38 39 40 41 42 43 44 45 46 47 48
49 50 51 52 53 54 55 56 57 58 59 60 61 62 63

ACC: t:\ao\design\lp1604fm471-90\
FILE: plan55.dgn

QUANTITIES THIS SHEET
CSJ 2452-01-036

SCALE: 1:1000

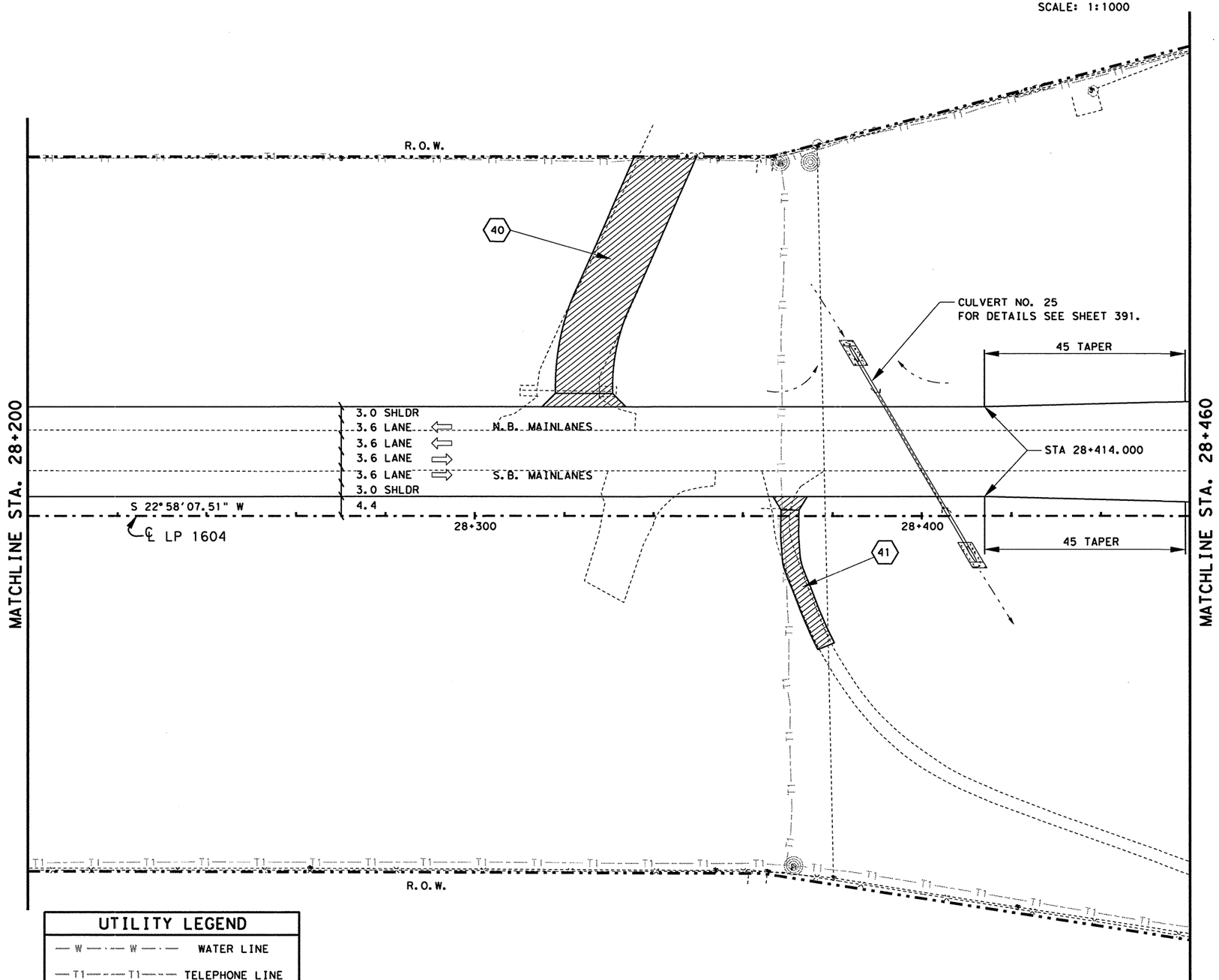


## UTILITY LEGEND

| | |
|---|---|
| — W — · — W — · — | WATER LINE |
| — T1 — — — T1 — — — | TELEPHONE LINE |
| ——— C — · — C — | CABLE LINE |
| — · — G1 — · · — G1 — · · | GAS LINE |

## ESTIMATED QUANTITIES

| | ITEM # | ITEM | UNIT | QTY. |
|---|---|---|---|---|
| | 100-5002 | PREP ROW | KM | 0.26 |
| | 110-5001 | EXCAVATION (RDWY) | M3 | 3579 |
| | 132-5018 | EMBANK (ORD COMP)(TY B)(CL 3) | M3 | 506 |
| | 160-5002 | FURN AND PLAC TPSL (CL 2)(150 MM) | M2 | 5740 |
| | 164-5049 | DRILL SEED (PERM)(URBAN)(CLAY) | M2 | 5740 |
| | 247-5024 | FL BS (COMPL IN PLAC)(TY A GR 6 CL 4) | M3 | 2254 |
| | 310-5006 | ASPH MATL (AE-P) | L | 2804 |
| * | | ONE CRSE SURF TREAT | M2 | 5519 |
| | 316-5028 | AGGR (TY PB,GR 4) | M3 | 50 |
| | 316-5226 | ASPH (AC-15P, HFRS-2P OR CRS-2P) | L | 7506 |
| | 530-5003 | DRVWAYS (ASPH-CONC PAV) | M2 | 1014 |
| | 3117-5003 | HOT MIX (TY C) | MGR | 511 |
| | 3117-5018 | HOT MIX (TY C)(SURF) | MGR | 504 |

* FOR CONTRACTORS INFORMATION ONLY

NOTE(S):

ALL DIMENSIONS ARE IN METERS UNLESS OTHERWISE NOTED.

FOR HORIZONTAL ALIGNMENT / DATA, SEE SHEET(S) 164 - 171.

FOR LIMITS OF SEEDING & TOPSOIL, SEE PROJECT X-SECTIONS AND TYPICAL SECTIONS.

(#) DRIVEWAY #, FOR MORE DETAILS SEE SHEET(S) 27, 28 & 336.

FOR RIPRAP ASSOCIATED WITH STORM DRAINAGE STRUCTURES SEE SHEET(S) 454 - 470.

STATE OF TEXAS
JOEL K. DAVENPORT, JR.
79276
REGISTERED PROFESSIONAL ENGINEER

Joel K. Davenport, Jr. P.E. 79276 — 9/19/00 Date

Texas Department of Transportation

# PLAN SHEET

SHEET 56 OF 57

| FED.RD. DIV.NO. | FEDERAL AID PROJECT NO. | SHEET NO. |
|---|---|---|
| 6 | NH 2000(704),etc. | 246 |
| STATE | DIST. | COUNTY |
| TEXAS | SAT | BEXAR |
| CONT. | SECT. | JOB / HIGHWAY NO. |
| 2452 | 01 | 036,etc. / LP 1604 |

LEVELS DISPLAYED
1 2 3 4 5 6 7 8 9 10 11 12 13 14 15 16
17 18 19 20 21 22 23 24 25 26 27 28 29 30 31 32
33 34 35 36 37 38 39 40 41 42 43 44 45 46 47 48
49 50 52 53 54 55 56 57 58 59 60 61 62 63

ACC: t:\ao\design\lp1604fm471-90\
FILE: plan56.dgn

QUANTITIES THIS SHEET
CSJ 2452-01-036

SCALE: 1:1000

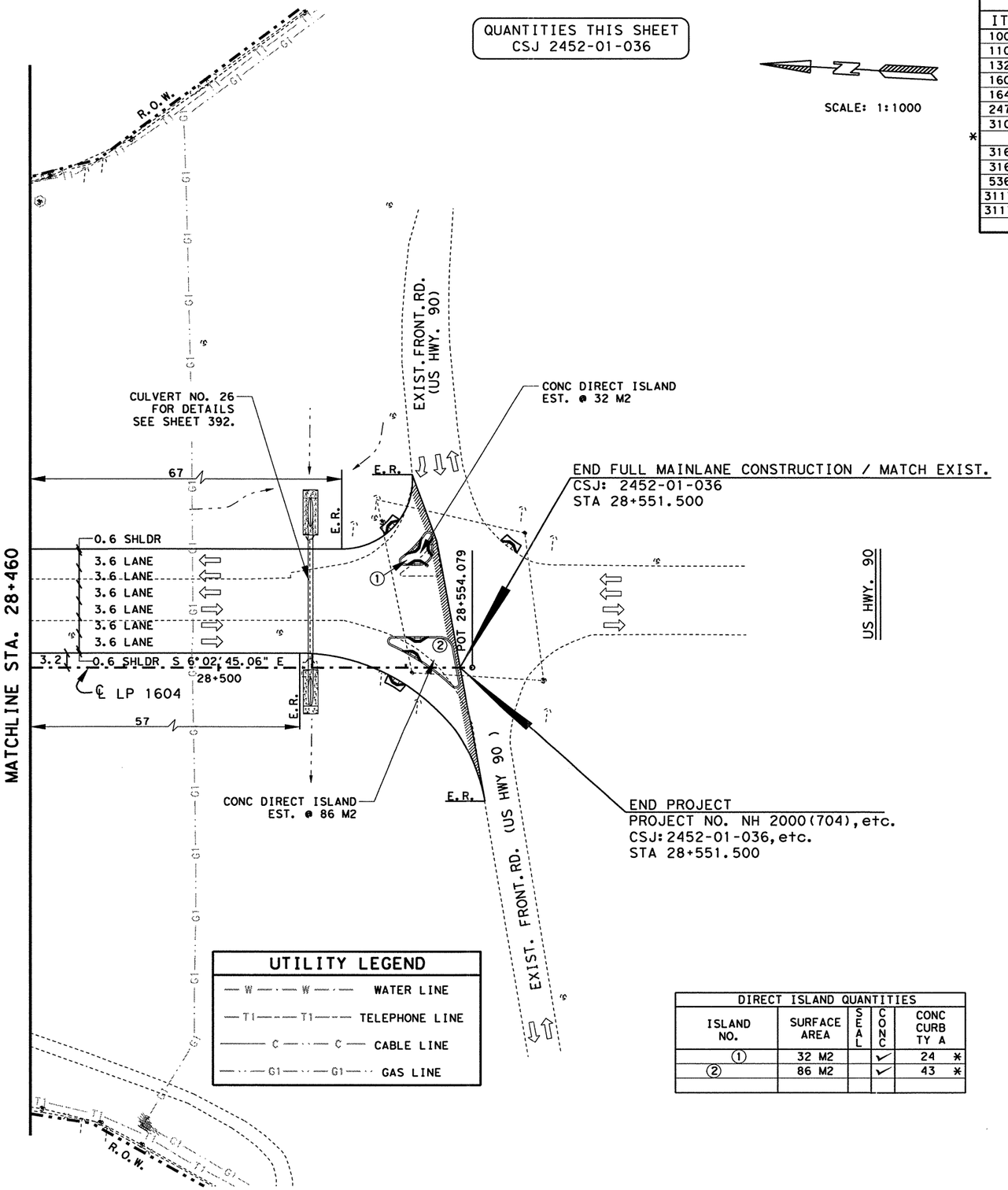


## ESTIMATED QUANTITIES

| | ITEM # | ITEM | UNIT | QTY. |
|---|---|---|---|---|
| | 100-5002 | PREP ROW | KM | 0.07 |
| | 110-5001 | EXCAVATION (RDWY) | M3 | 1398 |
| | 132-5018 | EMBANK (ORD COMP)(TY B)(CL 3) | M3 | 169 |
| | 160-5002 | FURN AND PLAC TPSL (CL 2)(150 MM) | M2 | 1769 |
| | 164-5049 | DRILL SEED (PERM)(URBAN)(CLAY) | M2 | 1769 |
| | 247-5024 | FL BS (COMPL IN PLAC)(TY A GR 6 CL 4) | M3 | 935 |
| | 310-5006 | ASPH MATL (AE-P) | L | 1351 |
| * | | ONE CRSE SURF TREAT | M2 | 2527 |
| | 316-5028 | AGGR (TY PB,GR 4) | M3 | 23 |
| | 316-5226 | ASPH (AC-15P, HFRS-2P OR CRS-2P) | L | 3437 |
| | 536-5003 | CONC DIRECT ISLAND | M2 | 118 |
| | 3117-5003 | HOT MIX (TY C) | MGR | 212 |
| | 3117-5018 | HOT MIX (TY C)(SURF) | MGR | 210 |

*FOR CONTRACTORS INFORMATION ONLY

NOTE(S):

ALL DIMENSIONS ARE IN METERS UNLESS OTHERWISE NOTED.

FOR HORIZONTAL ALIGNMENT / DATA, SEE SHEET(S) 164 - 171.

FOR LIMITS OF SEEDING & TOPSOIL, SEE PROJECT X-SECTIONS AND TYPICAL SECTIONS.

FOR INTERSECTION LAYOUT, SEE SHEET 334.

FOR SIGNALIZATION LAYOUT / DETAILS, SEE SHEET(S) 578 - 580

WHEELCHAIR RAMPS TY 2

FOR RIPRAP ASSOCIATED WITH STORM DRAINAGE STRUCTURES SEE SHEET(S) 454 - 470.

### UTILITY LEGEND

| | |
|---|---|
| W W | WATER LINE |
| T1 T1 | TELEPHONE LINE |
| C C | CABLE LINE |
| G1 G1 | GAS LINE |

### DIRECT ISLAND QUANTITIES

| ISLAND NO. | SURFACE AREA | SEAL | CONC | CONC CURB TY A |
|---|---|---|---|---|
| ① | 32 M2 | | ✓ | 24 * |
| ② | 86 M2 | | ✓ | 43 * |
| | | | | |

STATE OF TEXAS
JOEL K. DAVENPORT, JR.
79276
REGISTERED PROFESSIONAL ENGINEER

Joel K Davenport Jr 9/19/00
Joel K. Davenport, Jr. P.E. 79276 Date

Texas Department of Transportation

# PLAN SHEET

SHEET 57 OF 57

| FED.RD. DIV.NO. | FEDERAL AID PROJECT NO. | | SHEET NO. |
|---|---|---|---|
| 6 | NH 2000(704), etc. | | 247 |
| STATE | DIST. | COUNTY | |
| TEXAS | SAT | BEXAR | |
| CONT. | SECT. | JOB | HIGHWAY NO. |
| 2452 | 01 | 036, etc. | LP 1604 |

LEVELS DISPLAYED
2 3 4 5 6 7 8 9 10 11 12 13 14 15 16
1 8 9 20 21 22 23 24 25 26 27 28 29 30 31 32
3 45 56 57 58 59 60 61 62 63 64 74 48
4 0 52 53 54 55 56 57 58 59 60 61 62 63

ACC: t:\ao\design\lp1604fm471-90\
FILE: plan57.dgn

## ESTIMATED QUANTITIES

| | ITEM # | ITEM | UNIT | QTY. |
|---|---|---|---|---|
| * | | ONE CRSE SURF TREAT | M2 | 8460 |
| | 316-5028 | AGGR (TY PB, GR 4) | M3 | 77 |
| | 316-5226 | ASPH (AC-15P, HFRS-2P OR CRS-2P) | L | 11506 |
| | 3117-5018 | HOT MIX (TY C) (SURF) | MGR | 796 |
| | | REFL PAV MRK TY I (W) (SLD) (100MM) | M | 850 |
| | | REFL PAV MRK TY I (W) (BRK) (100MM) | M | 175 |
| | | REFL PAV MRK TY I (W) (SLD) (200MM) | M | 56 |
| | | REFL PAV MRK TY I (W) (SLD) (600MM) | M | 20 |
| | | REFL PAV MRK TY I (Y) (SLD) (100MM) | M | 850 |
| | | RAIS PAV MRKR CL B (REFL) TY II C-R | EA | 69 |
| | | ELIM EXT PAV & PAV MRKR (RAIS PAV MRKR) | EA | 69 |
| | | WRK ZN PAV SH TRM (TAB) TY W | EA | 201 |
| | | WRK ZN PAV SH TRM (TAB) TY Y | EA | 142 |
| | | BLADING | H | 8 |

*FOR CONTRACTORS INFORMATION ONLY

STATE OF TEXAS
TERRY G. McCOY
75016
REGISTERED PROFESSIONAL ENGINEER

Terry G. McCoy, P.E. — Date 1-17-02

NOTE(S):

ALL DIMENSIONS ARE IN METERS UNLESS OTHERWISE NOTED.

FOR HORIZONTAL ALIGNMENT / DATA, SEE SHEET(S) 164 - 171.

FOR LIMITS OF SEEDING & TOPSOIL, SEE PROJECT X-SECTIONS AND TYPICAL SECTIONS.

FOR INTERSECTION LAYOUT, SEE SHEET 334.

FOR SIGNALIZATION LAYOUT / DETAILS, SEE SHEET(S) 578 - 580

WHEELCHAIR RAMPS TY 2

FOR RIPRAP ASSOCIATED WITH STORM DRAINAGE STRUCTURES SEE SHEET(S) 454 - 470.

QUANTITIES AND PLACEMENT OF TY II REFLECTIVE PAVEMENT MARKINGS ARE EXACTLY THE SAME AS TY I REFLECTIVE PAVEMENT MARKINGS. TY II QUANTITIES ACCOUNTED FOR ON THE PAVEMENT MARKING /DELINEATION SUMMARY.

ANY PAVEMENT MARKING IN CONFLICT WITH PROPOSED PAVEMENT MARKINGS SHALL BE REMOVED BY THE CONTRACTOR OR AS DIRECTED BY THE ENGINEER.

IT SHALL BE TEH RESPONSIBILTY OF THE CONTRACTOR TO ENSURE THE CORRECTNESS IN THE RE-ESTABLISHMENT OF PAVEMENT MARKINGS.

BACKFILLING OF EDGES WILL BE IN ACCORDANCE WITH ITEM 134 BACKFILLING PAVEMENT EDGES AS TYPE B. WORK WILL BE PAID UNDER ITEM 150 BLADING BY THE HOUR.

SCALE 1 : 2000

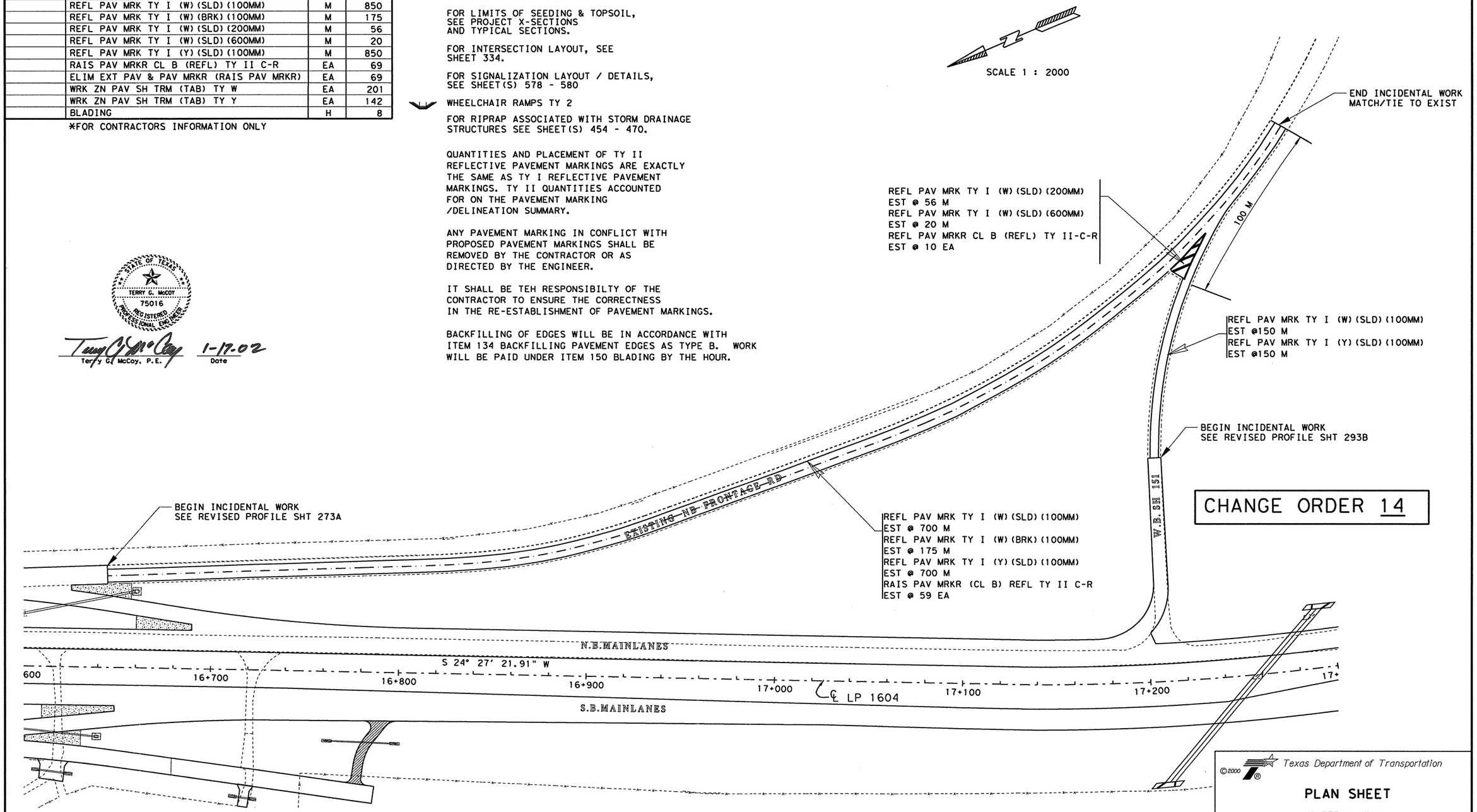


CHANGE ORDER 14

FILE T:\AO\DESIGN\LP1604FM471-90\plan58.dgn 12/27/01
LEVEL 2 3 4 5 6 7 8 9 10 11 12 13 14 15 16 17 18 19 20 21 22 23 24 25 26 27 28 29 30 31 32
DISPLAYED 33 34 35 36 37 38 39 40 41 42 43 44 45 46 47 48 49 50 51 52 53 54 55 56 57 58 59 60 63

©2000 Texas Department of Transportation

## PLAN SHEET

SHEET 1 OF 1

| FED. RD. DIV. NO. | FEDERAL AID PROJECT NO. | | SHEET NO. |
|---|---|---|---|
| 6 | NH 2000(704), ETC. | | 247A |
| STATE | DIST. | COUNTY | |
| TEXAS | SAT | BEXAR | |
| CONT. | SECT. | JOB | HIGHWAY NO. |
| 2452 | 01 | 036, ETC | LP 1604 |

1-15-02

QUANTITIES THIS SHEET
CSJ 2452-01-036

SCALE: 1:1000

| ESTIMATED QUANTITIES | | | |
|---|---|---|---|
| ITEM # | ITEM | UNIT | QTY. |
| 100-5002 | PREP ROW | KM | 0.26 |
| 110-5001 | EXCAVATION (RDWY) | M3 | 4421 |
| 132-5018 | EMBANK (ORD COMP) (TY B) (CL 3) | M3 | 5937 |
| 160-5002 | FURN AND PLAC TPSL (CL 2) (150 MM) | M2 | 9810 |
| 164-5049 | DRILL SEED (PERM) (URBAN) (CLAY) | M2 | 9810 |
| 247-5024 | FL BS (COMPL IN PLAC)(TY A GR 6 CL 4) | M3 | 2745 |
| 310-5006 | ASPH MATL (AE-P) | L | 3195 |
| * | ONE CRSE SURF TREAT | M2 | 6628 |
| 316-5028 | AGGR (TY PB, GR 4) | M3 | 60 |
| 316-5226 | ASPH (AC-15P, HFRS-2P OR CRS-2P) | L | 9014 |
| 432-5001 | RIPRAP (CONC) (CL B) | M3 | 107 |
| 529-5001 | CONC CURB (TY 1) | M | 261 |
| 3117-5003 | HOT MIX (TY C) | MGR | 608 |
| 3117-5018 | HOT MIX (TY C) (SURF) | MGR | 588 |
| | | | |

* FOR CONTRACTORS INFORMATION ONLY

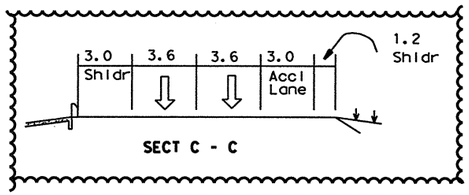


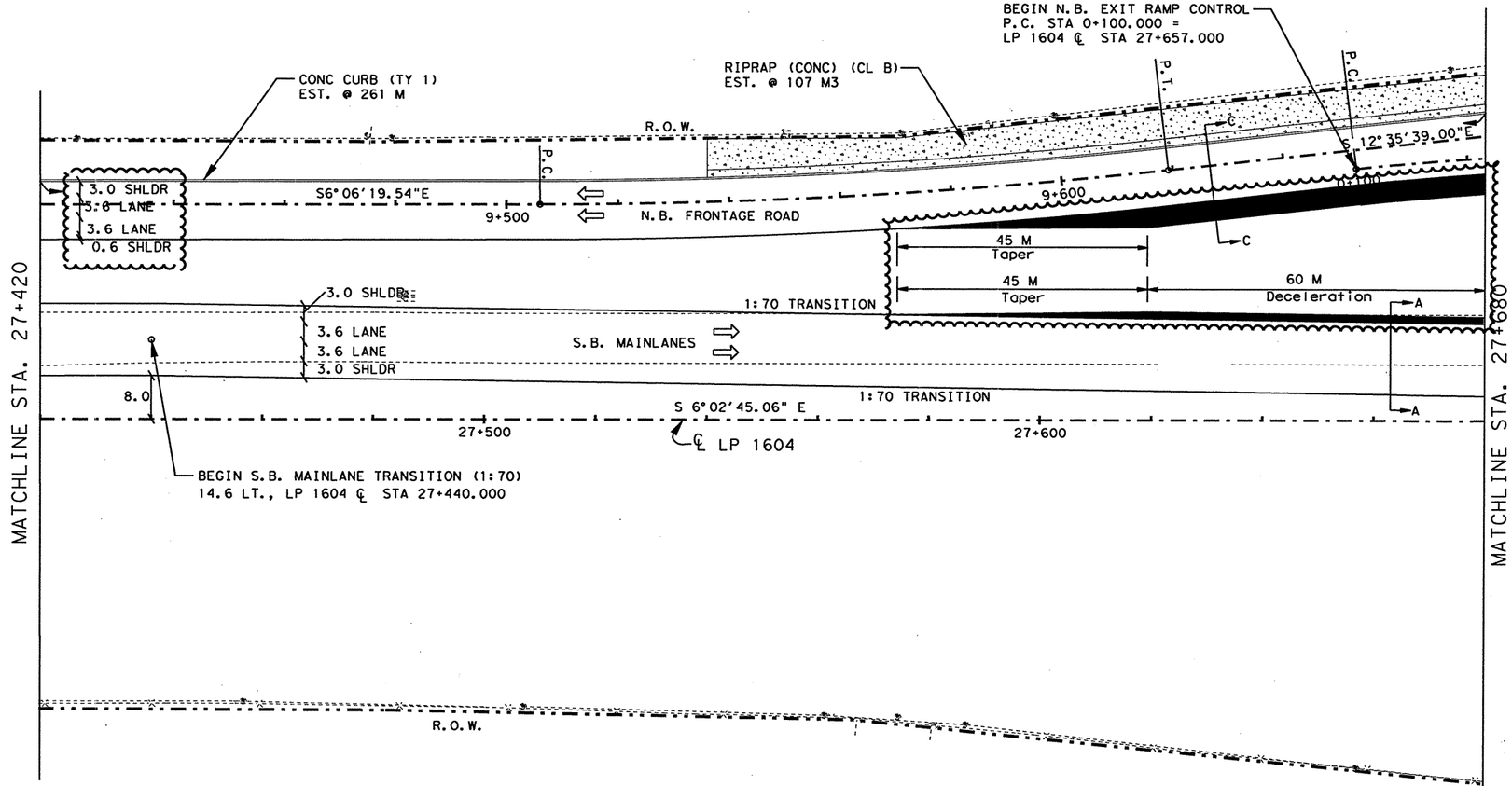


NOTE(S):

ALL DIMENSIONS ARE IN METERS UNLESS OTHERWISE NOTED.

FOR HORIZONTAL ALIGNMENT / DATA, SEE SHEET(S) 164 - 171.

FOR LIMITS OF SEEDING & TOPSOIL, SEE PROJECT X-SECTIONS AND TYPICAL SECTIONS.

FOR RIPRAP DETAILS, SEE PROJECT X-SECTIONS AND SHEET 342.

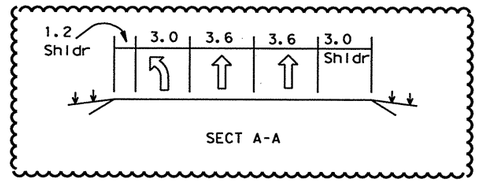


| CHANGE ORDER QUANTITIES | | | |
|---|---|---|---|
| ITEM # | ITEM | UNIT | QTY. |
| 132-5018 | EMBANK (ORD COMP) (TY B) (CL 3) | M3 | 60 |
| 316-5028 | AGGR (TY PB, GR 4) | M3 | 4.3 |
| 316-5226 | ASPH (AC-15P, HFRS-2P OR CRS-2P) | L | 639.2 |
| 3117-5003 | HOT MIX (TY C) | MGR | 40 |
| 3117-5018 | HOT MIX (TY C) (SURF) | MGR | 37 |
| 340-5001 | ASPH CONC (TY A) | MGR | 384 |

| UTILITY LEGEND |
|---|
| WATER LINE |
| TELEPHONE LINE |
| CABLE LINE |
| GAS LINE |

CHANGE ORDER NO. 89

STATE OF TEXAS
JEROME D. PAVLISKA
76075
REGISTERED PROFESSIONAL ENGINEER

Jerome D. Pavliska, P.E. 4-8-05
Jerome D. Pavliska, P.E. Date

©2000 Texas Department of Transportation

# Big Mesa TAR

SHEET 1 OF 4

| FED. RD. DIV. NO. | FEDERAL AID PROJECT NO. | | SHEET NO. |
|---|---|---|---|
| 6 | NH 2000(704), etc. | | 247A |
| STATE | DIST. | COUNTY | |
| TEXAS | SAT | BEXAR | |
| CONT. | SECT. | JOB | HIGHWAY NO. |
| 2452 | 01 | 036, etc. | LP 1604 |

LEVELS DISPLAYED
1 2 3 4 5 6 7 8 9 10 11 12 31 41 51 61
17 81 92 02 12 22 32 42 52 62 72 82 93 03 13 23
33 43 53 63 73 83 94 04 14 24 34 44 54 64 74 84
95 05 15 25 35 45 55 65 75 85 96 06 16 26 36

ACC: t:\oo\design\lp1604fm471-90\
FILE: plan53.dgn

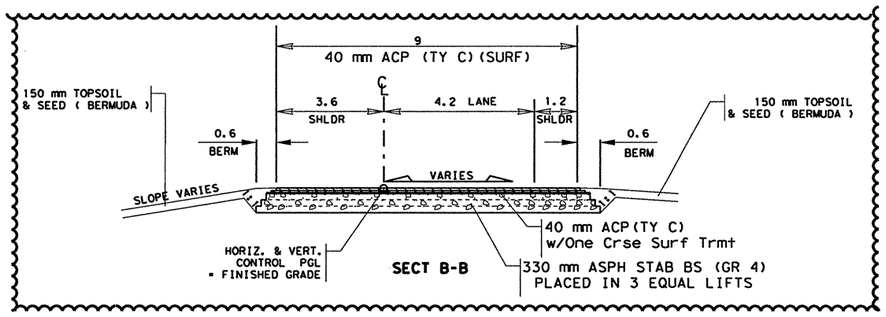


SCALE: 1:1000

QUANTITIES THIS SHEET
CSJ 2452-01-036

DRAINAGE EASEMENT

## ESTIMATED QUANTITIES

| | ITEM # | ITEM | UNIT | QTY. |
|---|---|---|---|---|
| | 100-5002 | PREP ROW | KM | 0.26 |
| | 110-5001 | EXCAVATION (RDWY) | M3 | 2324 |
| | 132-5018 | EMBANK (ORD COMP) (TY B) (CL 3) | M3 | 9845 |
| | 150-5003 | BLADING | H | 3 |
| | 156-5003 | BLDZR WORK (ORD COMP) (TY A) | H | 3 |
| | 160-5002 | FURN AND PLAC TPSL (CL 2) (150 MM) | M2 | 11399 |
| | 164-5049 | DRILL SEED (PERM) (URBAN) (CLAY) | M2 | 11399 |
| | 247-5024 | FL BS (COMPL IN PLAC)(TY A GR 6 CL 4) | M3 | 3258 |
| | 310-5006 | ASPH MATL (AE-P) | L | 4467 |
| * | | ONE CRSE SURF TREAT | M2 | 7899 |
| | 316-5028 | AGGR (TY PB, GR 4) | M3 | 72 |
| | 316-5226 | ASPH (AC-15P, HFRS-2P OR CRS-2P) | L | 10743 |
| | 432-5001 | RIPRAP (CONC) (CL B) | M3 | 124 |
| | 529-5001 | CONC CURB (TY 1) | M | 124 |
| | 3117-5003 | HOT MIX (TY C) | MGR | 727 |
| | 3117-5018 | HOT MIX (TY C) (SURF) | MGR | 709 |
| | | | | |

* FOR CONTRACTORS INFORMATION ONLY

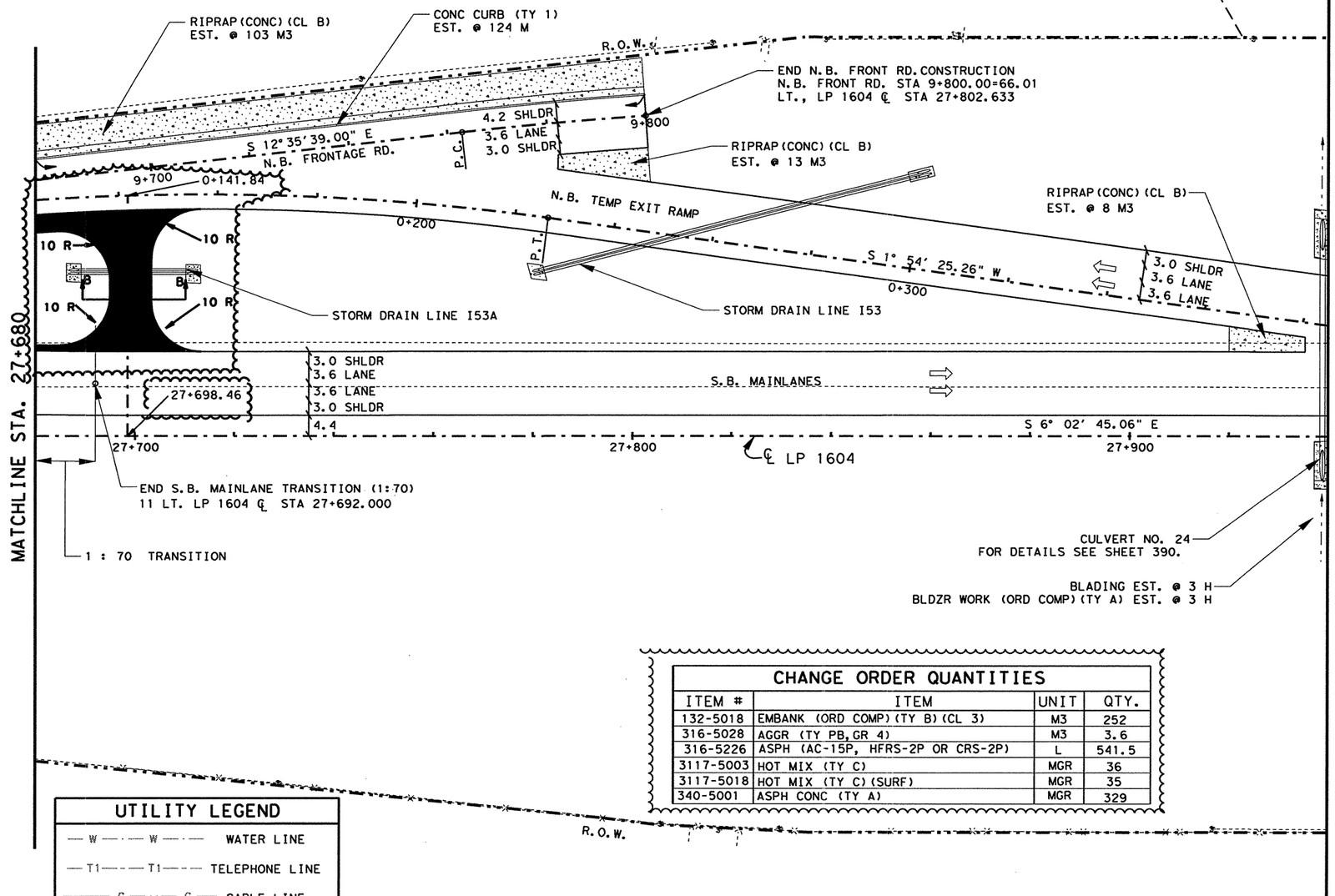


NOTE(S):

ALL DIMENSIONS ARE IN METERS UNLESS OTHERWISE NOTED.

FOR HORIZONTAL ALIGNMENT / DATA, SEE SHEET(S) 164 - 171.

FOR LIMITS OF SEEDING & TOPSOIL, SEE PROJECT X-SECTIONS AND TYPICAL SECTIONS.

FOR RIPRAP DETAILS, SEE PROJECT X-SECTIONS AND SHEET 342.

FOR RIPRAP ASSOCIATED WITH STORM DRAINAGE STRUCTURES SEE SHEET(S) 454 - 470.

FOR ADDITIONAL STORM DRAIN INFO. REFER TO THE SPECIFIC STORM DRAIN PROFILE SHEET(S).

## CHANGE ORDER QUANTITIES

| ITEM # | ITEM | UNIT | QTY. |
|---|---|---|---|
| 132-5018 | EMBANK (ORD COMP) (TY B) (CL 3) | M3 | 252 |
| 316-5028 | AGGR (TY PB, GR 4) | M3 | 3.6 |
| 316-5226 | ASPH (AC-15P, HFRS-2P OR CRS-2P) | L | 541.5 |
| 3117-5003 | HOT MIX (TY C) | MGR | 36 |
| 3117-5018 | HOT MIX (TY C) (SURF) | MGR | 35 |
| 340-5001 | ASPH CONC (TY A) | MGR | 329 |

## UTILITY LEGEND

| | |
|---|---|
| — W — · — W — | WATER LINE |
| — T1 — · — T1 — | TELEPHONE LINE |
| — C — · — C — | CABLE LINE |
| — G1 — · — G1 — | GAS LINE |

CHANGE ORDER NO. 89

STATE OF TEXAS
JEROME D. PAVLISKA
76075
REGISTERED PROFESSIONAL ENGINEER

Jerome D. Pavliska, P.E. 4-8-05
Jerome D. Pavliska, P.E. Date

©2000
Texas Department of Transportation

# Big Mesa TAR

SHEET 2 OF 4

| FED.RD. DIV.NO. | FEDERAL AID PROJECT NO. | | SHEET NO. |
|---|---|---|---|
| 6 | NH 2000(704), etc. | | 247B |
| STATE | DIST. | COUNTY | |
| TEXAS | SAT | BEXAR | |
| CONT. | SECT. | JOB | HIGHWAY NO. |
| 2452 | 01 | 036, etc. | LP 1604 |

LEVELS DISPLAYED
1 2 3 4 5 6 7 8 9 10 11 12 13 14 15 16
17 18 19 20 21 22 23 24 25 26 27 28 29 30 31 32
33 34 35 36 37 38 39 40 41 42 43 44 45 46 47 48
49 50 51 52 53 54 55 56 57 58 59 60 61 62 63

ACC: t:\go\design\lp1604fm471-90\
FILE: plan54.dgn

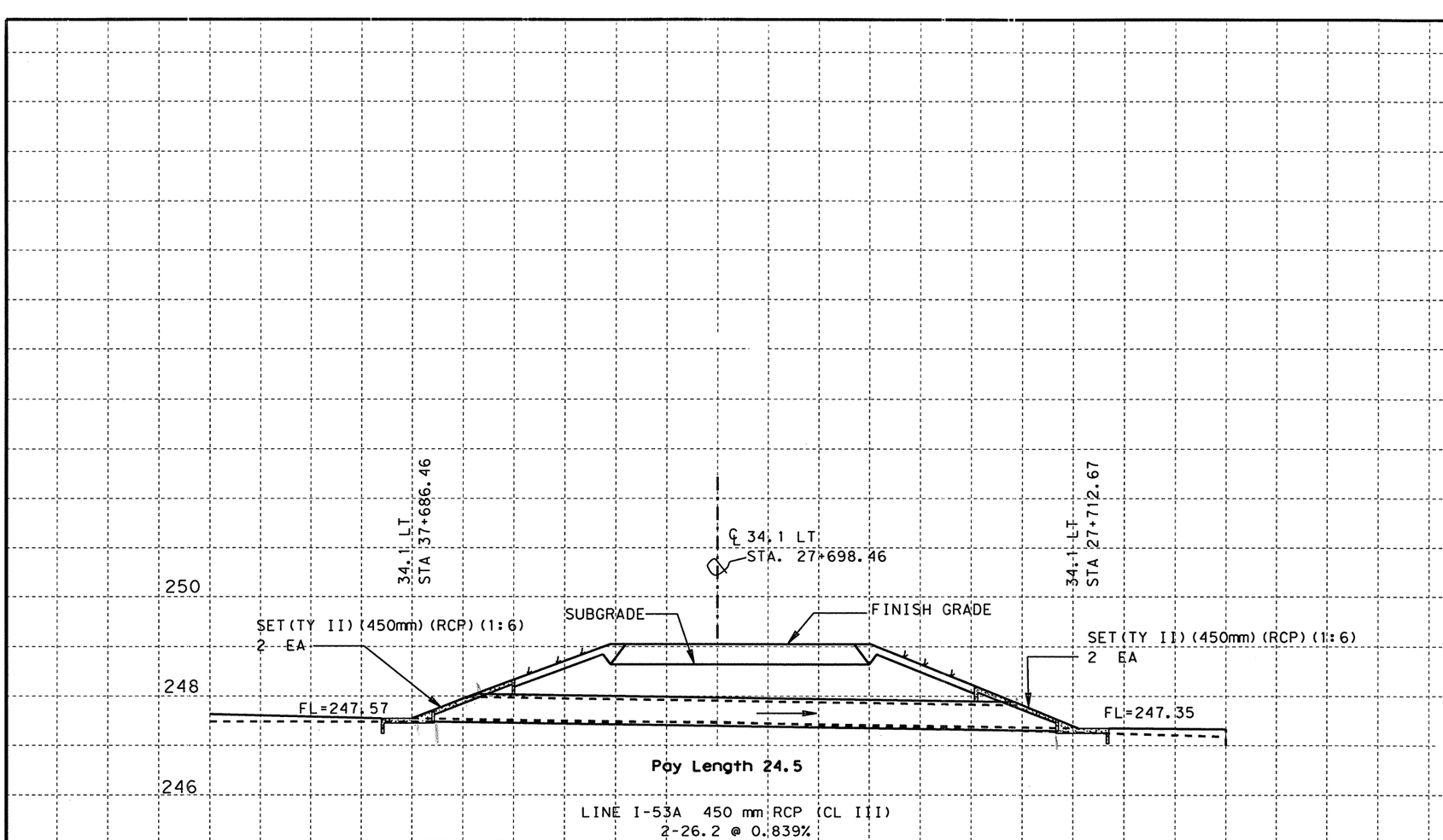


## ESTIMATED QUANTITIES

| DESCRIPTION | UNIT | QTY | |
|---|---|---|---|
| RC PIPE(CL III)(450MM) | M | 49.0 | |
| SET(TY II)(RCP)(450MM)(1:6) | EA | 4 | |
| | | | |
| | | | |
| | | | |
| | | | |
| | | | |
| | | | * |

* FOR CONTRACTORS INFORMATION ONLY.

NOTE(S):

1. DIMENSIONS ARE SHOWN IN METERS UNLESS OTHERWISE NOTED.
2. SET (TY II) CONSTRUCTION SHALL UTILIZE RIPRAP HEADWALL (MOD) STANDARD.
3. SEE PROJECT X-SECTIONS FOR MORE INFORMATION

**CHANGE ORDER NO. 89**

-NEW STORM DRAIN ASSOCIATED WITH LINE I53 & BIG MESA TURNAROUND
-NEW QUANTITIES.

**NEW SHEET**

STATE OF TEXAS
JEROME D. PAVLISKA
76075
REGISTERED PROFESSIONAL ENGINEER

Jerome D. Pavliska P.E. 4-8-05
Jerome D. Pavliska, P.E. Date

SCALE: H: 1:200
V: 1:100

©2004

Texas Department of Transportation

**Big Mesa TAR**
LINE I-53A
SHEET 3 OF 4

| FED.RD. DIV.NO. | FEDERAL AID PROJECT NO. | | SHEET NO. |
|---|---|---|---|
| 6 | NH 2000 (704), etc. | | 247C |
| STATE | DIST. | COUNTY | |
| TEXAS | SAT | BEXAR | |
| CONT. | SECT. | JOB | HIGHWAY NO. |
| 2452 | 01 | 036,etc. | LP 1604 |

LEVELS DISPLAYED
1 2 3 4 5 6 7 8 9 10 11 12 13 14 15 16
17 18 19 20 21 22 23 24 25 26 27 28 29 30 32
33 34 35 36 37 38 39 40 41 42 43 44 45 46 47 48
49 50 51 52 53 54 55 56 57 58 59 60 61 63

ACC: ao\des\f4 4fm471-90
FILE: strdrain22*dgn

| RIPRAP APRONS | | | |
|---|---|---|---|
| TYPE OF MOUNT | EA. | MULTIPLIED BY M3 | TOTAL M3 |
| SINGLE POST | 5 | 1.0 | 5.0 |
| MULTI - POST | 1 | 1.5 | 1.5 |
| OVHD. SIGN BRIDGE | | | |
| CLASS "B" CONC GRAND TOTAL | | | 6.5 |

SEE SHEET NO. 753 FOR RIPRAP APRON DETAILS.

QUANTITIES THIS SHEET
CSJ 2452-01-036

NOTE(S):

ALL DIMENSIONS ARE IN METERS UNLESS OTHERWISE NOTED.

QUANTITIES AND PLACEMENT OF TY II REFLECTIVE PAVEMENT MARKINGS ARE EXACTLY THE SAME AS TY I REFLECTIVE PAVEMENT MARKINGS. TY II QUANTITIES ACCOUNTED FOR ON THE PAVEMENT MARKING /DELINEATION SUMMARY.

ANY PAVEMENT MARKING IN CONFLICT WITH PROPOSED PAVEMENT MARKINGS SHALL BE REMOVED BY THE CONTRACTOR OR AS DIRECTED BY THE ENGINEER.

SCALE 1:1000

| ESTIMATED QUANTITIES | | |
|---|---|---|
| ITEM | UNIT | QUANTITY |
| | | 2452-01-036 |
| REFL PAV MRK TY I (W)(SLD)(100MM) | M | 290 |
| REFL PAV MRK TY I (W)(SLD)(600MM) | M | 25 |
| REFL PAV MRK TY I (Y)(SLD)(100MM) | M | 258 |
| REFL PAV MRK TY I (W)(SLD)(200MM) | M | 48 |
| REFL PAV MRK TY I (W)(ARROW) | EA | 2 |
| REFL PAV MRK TY I (W)(WORD) | EA | 2 |
| RAIS PAV MRKR CL B(TY II C-R) | EA | 24 |
| | | |

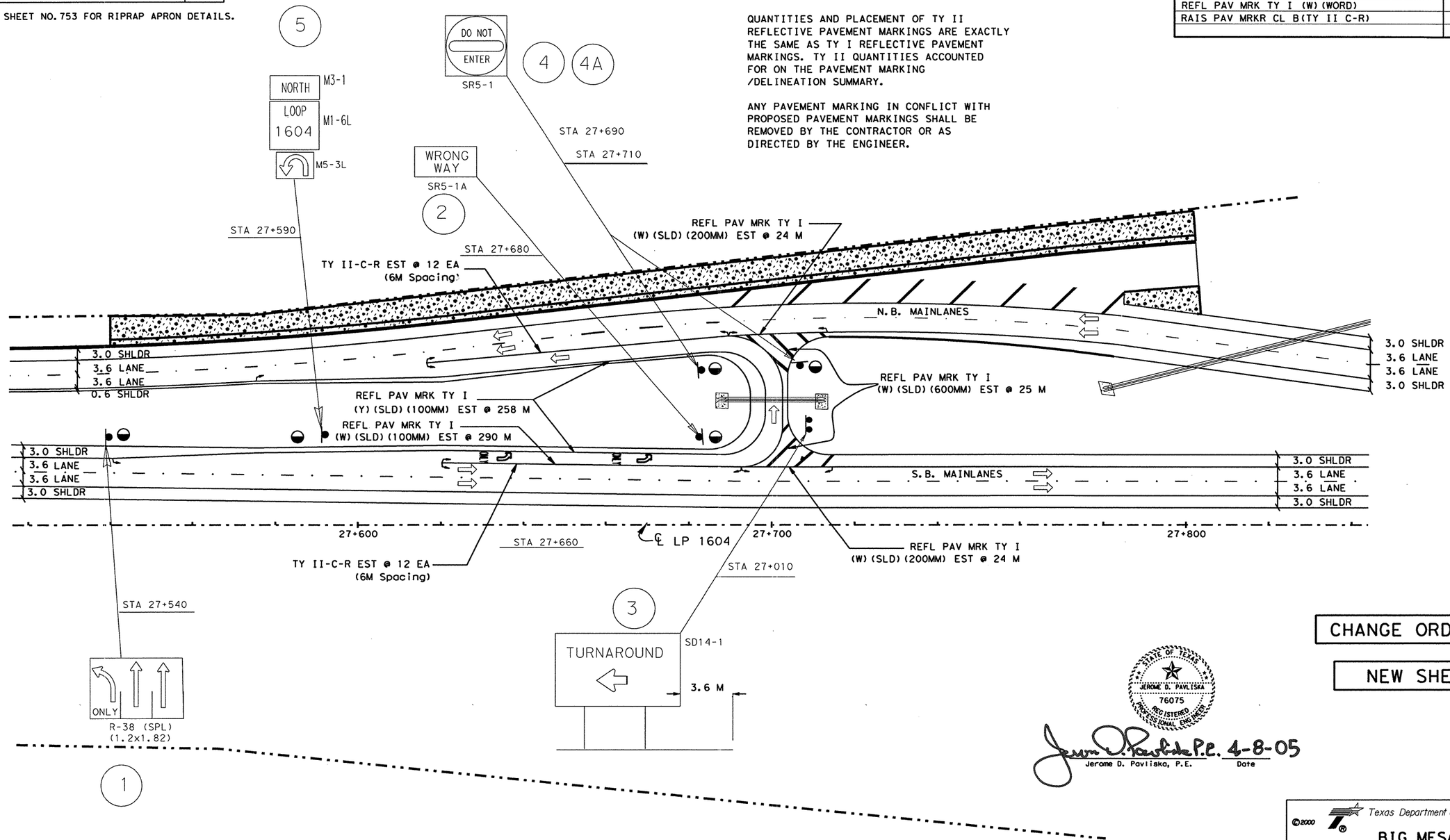


CHANGE ORDER 89

NEW SHEET

STATE OF TEXAS
JEROME D. PAVLISKA
76075
REGISTERED PROFESSIONAL ENGINEER

Jerome D. Pavliska P.E. 4-8-05
Jerome D. Pavliska, P.E. Date

LEVELS DISPLAYED
1 2 3 4 5 6 7 8 9 10 11 12 13 14 15 16
2 3 4 5 6 7 8 9 10 11 12 13 14 15 16 17 18 19 20 21 22 23 24 25 26 27 28 29 30 31 32 33 34 35 36 37 38 39 40 41 42 43 44 45 46 47 48 49 50 51 52 53 54 55 56 57 58 59 60 61 62 63

ACC: t:\ao\design\1p1604fm471-90\pave-sign\
FILE: pavmrkplan54.dgn

©2000 Texas Department of Transportation

# BIG MESA TAR PAVEMENT MARKING

SHEET 4 OF 4

| FED. RD. DIV. NO. | FEDERAL AID PROJECT NO. | | SHEET NO. |
|---|---|---|---|
| 6 | NH 2000(704),etc. | | 247D |
| STATE | DIST. | COUNTY | |
| TEXAS | SAT | BEXAR | |
| CONT. | SECT. | JOB | HIGHWAY NO. |
| 2452 | 01 | 036,etc. | LP 1604 |

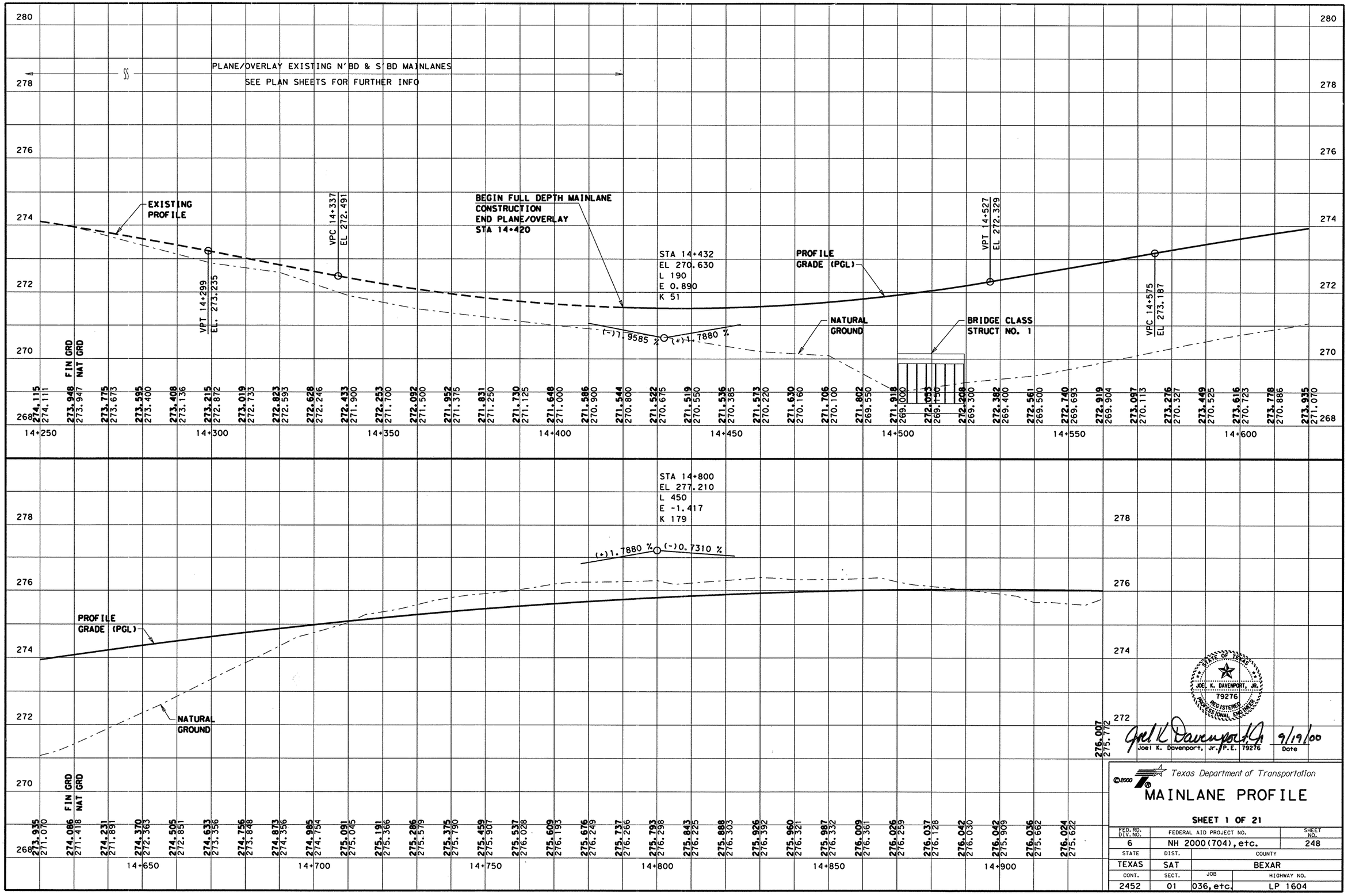


LEVELS DISPLAYED
1 2 3 4 5 6 7 8 9 10 11 12 13 14 15 16
17 18 19 20 21 22 23 24 25 26 27 28 29 30 31 32
33 34 35 36 37 38 39 40 41 42 43 44 45 46 47 48
49 50 51 52 53 54 55 56 57 58 59 60 61 62 63

ACC: lp1604fm471-90\

FILE: prof01.dgn

STATE OF TEXAS
JOEL K. DAVENPORT, JR.
79276
REGISTERED PROFESSIONAL ENGINEER

Joel K. Davenport, Jr. 9/19/00
Joel K. Davenport, Jr., P.E. 79276 Date

© 2000 Texas Department of Transportation

# MAINLANE PROFILE

SHEET 1 OF 21

| FED.RD. DIV.NO. | FEDERAL AID PROJECT NO. | | SHEET NO. |
|---|---|---|---|
| 6 | NH 2000(704), etc. | | 248 |
| STATE | DIST. | COUNTY | |
| TEXAS | SAT | BEXAR | |
| CONT. | SECT. | JOB | HIGHWAY NO. |
| 2452 | 01 | 036, etc. | LP 1604 |

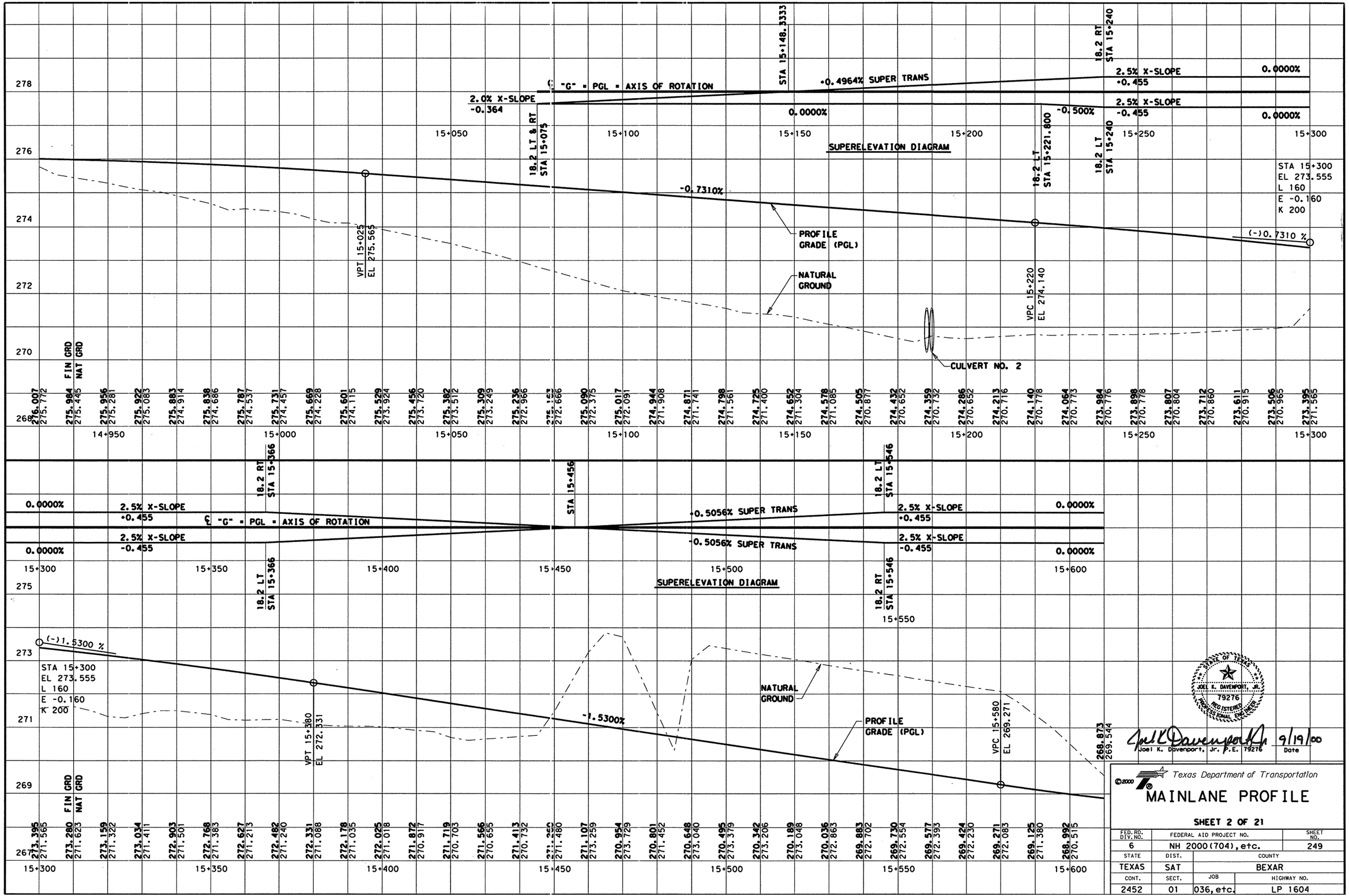


LEVELS DISPLAYED
1 2 3 4 5 6 7 8 9 10 11 12 13 14 15 16
17 18 19 20 21 22 23 24 25 26 27 28 29 30 31 32
33 34 35 36 37 38 39 40 41 42 43 44 45 46 47 48
49 50 51 52 53 54 55 56 57 58 59 60 61 62 63

ACC: lp1604fm471-90\
FILE: prof01.dgn

STATE OF TEXAS
JOEL K. DAVENPORT, JR.
79276
REGISTERED PROFESSIONAL ENGINEER

Joel K. Davenport, Jr. P.E. 79276 — 9/19/00
Date

© 2000 Texas Department of Transportation

# MAINLANE PROFILE

**SHEET 2 OF 21**

| FED.RD. DIV.NO. | FEDERAL AID PROJECT NO. | SHEET NO. |
|---|---|---|
| 6 | NH 2000(704), etc. | 249 |
| STATE | DIST. | COUNTY |
| TEXAS | SAT | BEXAR |
| CONT. | SECT. | JOB / HIGHWAY NO. |
| 2452 | 01 | 036, etc. / LP 1604 |

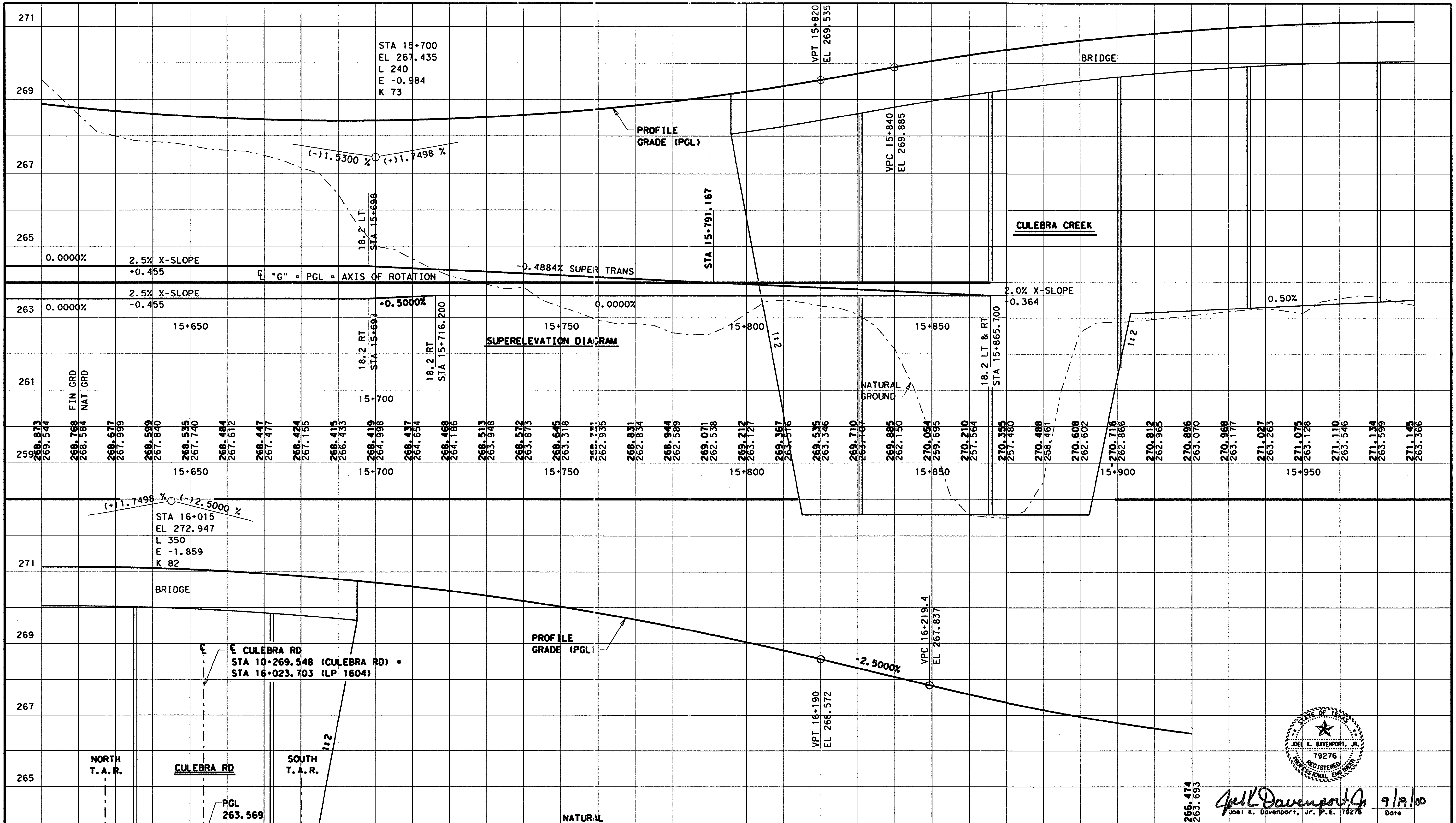


Joel K. Davenport, Jr. P.E. 79276 — 9/1/00 Date

STATE OF TEXAS — JOEL K. DAVENPORT, JR. — 79276 — REGISTERED PROFESSIONAL ENGINEER

©2000 Texas Department of Transportation

# MAINLANE PROFILE

**SHEET 3 OF 21**

| FED. RD. DIV. NO. | FEDERAL AID PROJECT NO. | | SHEET NO. |
|---|---|---|---|
| 6 | NH 2000(704),etc. | | 250 |
| STATE | DIST. | COUNTY | |
| TEXAS | SAT | BEXAR | |
| CONT. | SECT. | JOB | HIGHWAY NO. |
| 2452 | 01 | 036,etc. | LP 1604 |

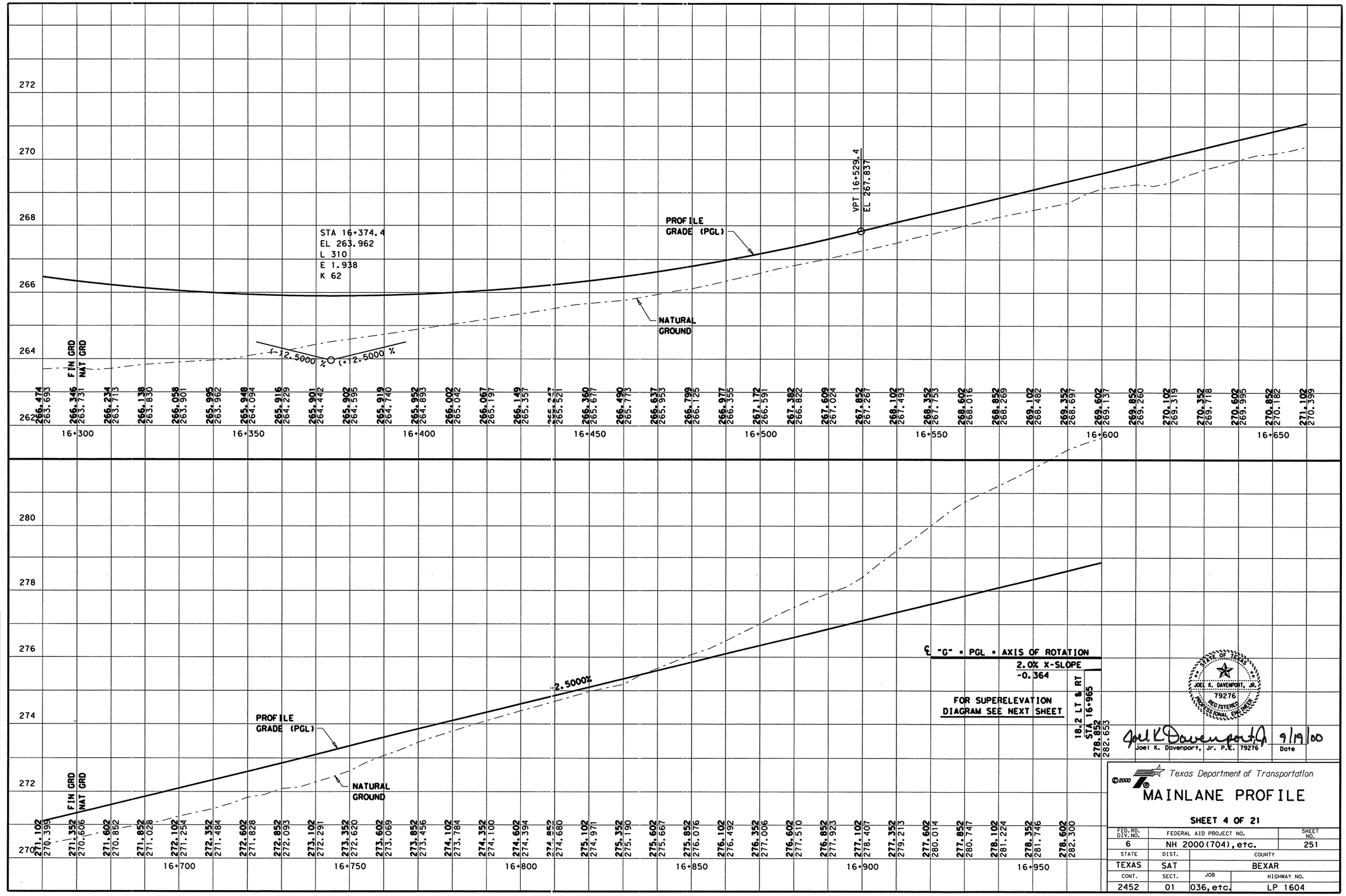


LEVELS DISPLAYED
1 2 3 4 5 6 7 8 9 10 11 12 13 14 15 16
17 18 19 20 21 22 23 24 25 26 27 28 29 30 31 32
33 34 35 36 37 38 39 40 41 42 43 44 45 46 47 48
49 50 51 52 53 54 55 56 57 58 59 60 61 62 63 64

ACC: lp1604fm471-90\

FILE: prof01.dgn

STATE OF TEXAS
JOEL K. DAVENPORT, JR.
79276
REGISTERED PROFESSIONAL ENGINEER

Joel K Davenport 9/19/00
Joel K. Davenport, Jr. P.E. 79276 Date

© 2000 Texas Department of Transportation

# MAINLANE PROFILE

**SHEET 4 OF 21**

| FED. RD. DIV. NO. | FEDERAL AID PROJECT NO. | | SHEET NO. |
|---|---|---|---|
| 6 | NH 2000(704), etc. | | 251 |
| STATE | DIST. | COUNTY | |
| TEXAS | SAT | BEXAR | |
| CONT. | SECT. | JOB | HIGHWAY NO. |
| 2452 | 01 | 036, etc. | LP 1604 |

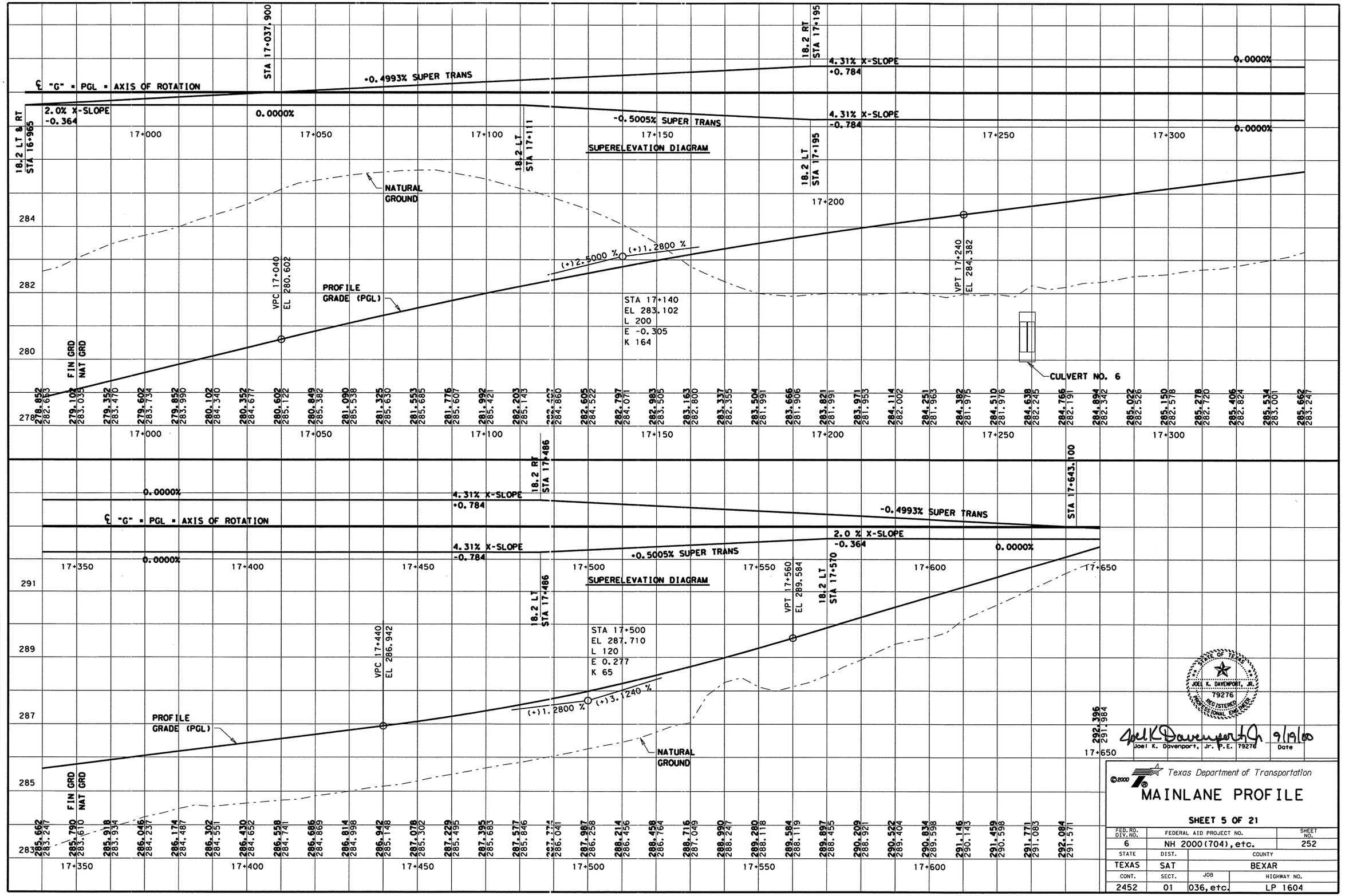


LEVELS DISPLAYED
1 2 3 4 5 6 7 8 9 10 11 12 13 14 15 16
17 18 19 20 21 22 23 24 25 26 27 28 29 30 31 32
33 34 35 36 37 38 39 40 41 42 43 44 45 46 47 48
49 50 51 52 53 54 55 56 57 58 59 60 61 62 63

ACC: lp1604fm471-90\
FILE: prof01.dgn

STATE OF TEXAS
JOEL K. DAVENPORT, JR.
79276
REGISTERED PROFESSIONAL ENGINEER

Joel K. Davenport, Jr. P.E. 79276 — Date 9/19/00

© 2000 Texas Department of Transportation

# MAINLANE PROFILE

SHEET 5 OF 21

| FED. RD. DIV. NO. | FEDERAL AID PROJECT NO. | SHEET NO. |
|---|---|---|
| 6 | NH 2000(704), etc. | 252 |
| STATE | DIST. | COUNTY |
| TEXAS | SAT | BEXAR |
| CONT. | SECT. | JOB / HIGHWAY NO. |
| 2452 | 01 | 036, etc. / LP 1604 |

18.2 RT STA 17+650

℄ "G" = PGL = AXIS OF ROTATION

-0.4993% SUPER TRANS 2.0% X-SLOPE

-0.364

18.2 LT STA 17+650

SUPERELEVATION DIAGRAM

18.2 LT & RT STA 17+716

STA 17+900
EL 300.206
L 400
E -1.277
K 157

(+)3.1240 % (+)0.5705 %

PROFILE GRADE (PGL)

NATURAL GROUND

297

295

293

291

FIN GRD / NAT GRD

292.396 291.984
292.708 292.292
293.021 292.575
293.333 292.629
293.646 292.838
293.958 VPC 17+700 293.089 EL 293.958
294.267 293.384
294.570 293.699
294.866 294.146
295.157 294.595
295.440 294.772
295.717 295.061
295.988 295.520
296.253 295.837
296.511 295.952
296.757 295.884
297.008 296.357
297.247 296.706
297.480 297.039
297.706 297.406
297.926 297.792
298.139 298.223
298.346 298.500
298.547 298.749
298.741 298.934
298.929 299.076
299.111 299.173
299.286 299.224
299.455 299.328
299.617 299.432
299.773 299.538
299.923 299.494
300.066 299.866
300.203 300.177
300.333 299.764
300.457 299.577
300.575 299.249
300.686 299.115

17+650 17+700 17+750 17+800 17+850 17+900 17+950 18+000

END MAINLANE PROFILE
STA 18+070, ELEV 301.147
SEE TEMP CONNECTOR PROFILES
"J" & "K" FOR SPECIFIC
PROFILE DATA TO STA 18+600

PROFILE GRADE (PGL)

302

300

298

296

294

292

VPT 18+100 EL 301.347

NATURAL GROUND

CULVERT NO. 8

CULVERT NO. 7

FIN GRD / NAT GRD

300.686 299.115
300.791 299.067
300.890 298.546
300.982 298.544
301.068 299.034
301.147 299.703
301.220 299.862
301.287 300.127
301.347 300.437
300.623
300.819
300.883
300.835
300.961
300.688
300.356
299.430
300.114
300.583
301.156
301.666
301.590
301.860
301.932
301.941
301.938
301.662
301.675
301.520
301.280
301.030
300.545

18+050 18+100 18+150 18+200 18+250 18+300

LEVELS DISPLAYED
1 2 3 4 5 6 7 8 9 10 11 12 13 14 15 16
17 18 19 20 21 22 23 24 25 26 27 28 29 30 31 32
33 34 35 36 37 38 39 40 41 42 43 44 45 46 47 48
49 50 51 52 53 54 55 56 57 58 59 60 61 62 63

ACC: lp1604fm471-90\

FILE: prof01.dgn

STATE OF TEXAS
JOEL K. DAVENPORT, JR.
79276
REGISTERED PROFESSIONAL ENGINEER

Joel K Davenport Jr. 9/19/00

Joel K. Davenport, Jr. P.E. 79276 — Date

©2000

Texas Department of Transportation

# MAINLANE PROFILE

SHEET 6 OF 21

| FED.RD. DIV.NO. | FEDERAL AID PROJECT NO. | SHEET NO. |
|---|---|---|
| 6 | NH 2000(704), etc. | 253 |
| STATE | DIST. | COUNTY |
| TEXAS | SAT | BEXAR |
| CONT. | SECT. | JOB / HIGHWAY NO. |
| 2452 | 01 | 036, etc. / LP 1604 |

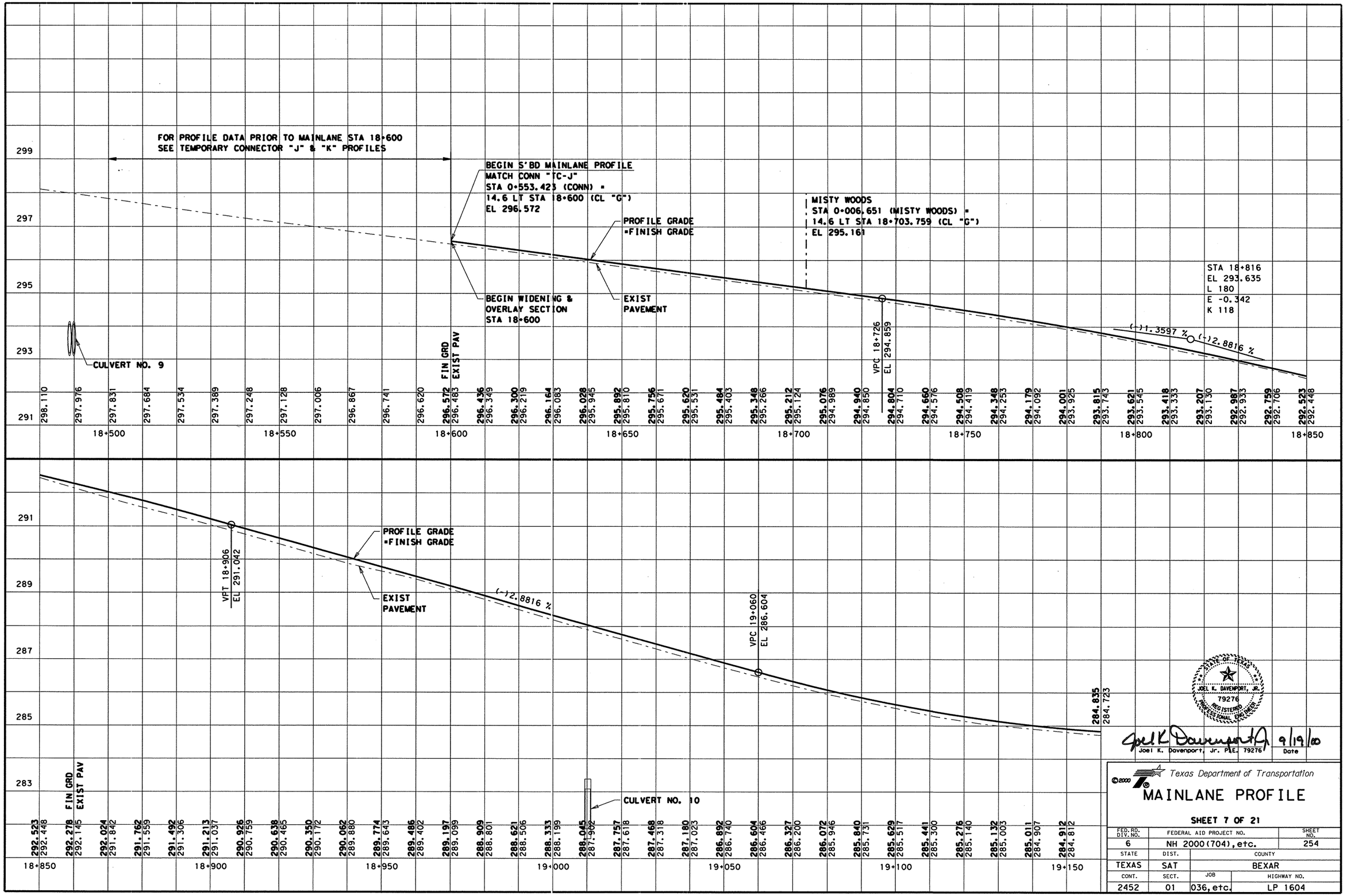


LEVELS DISPLAYED
1 2 3 4 5 6 7 8 9 10 11 12 13 14 15 16
17 18 19 20 21 22 23 24 25 26 27 28 29 30 31 32
33 34 35 36 37 38 39 40 41 42 43 44 45 46 47 48
49 50 51 52 53 54 55 56 57 58 59 60 61 62 63

ACC: lp1604fm471-90\
FILE: prof01.dgn

STATE OF TEXAS
JOEL K. DAVENPORT, JR.
79276
REGISTERED
PROFESSIONAL ENGINEER

Joel K. Davenport 9/19/00
Joel K. Davenport, Jr. P.E. 79276 — Date

Texas Department of Transportation

# MAINLANE PROFILE

**SHEET 7 OF 21**

| FED. RD. DIV. NO. | FEDERAL AID PROJECT NO. | | SHEET NO. |
|---|---|---|---|
| 6 | NH 2000(704), etc. | | 254 |
| STATE | DIST. | COUNTY | |
| TEXAS | SAT | BEXAR | |
| CONT. | SECT. | JOB | HIGHWAY NO. |
| 2452 | 01 | 036, etc. | LP 1604 |

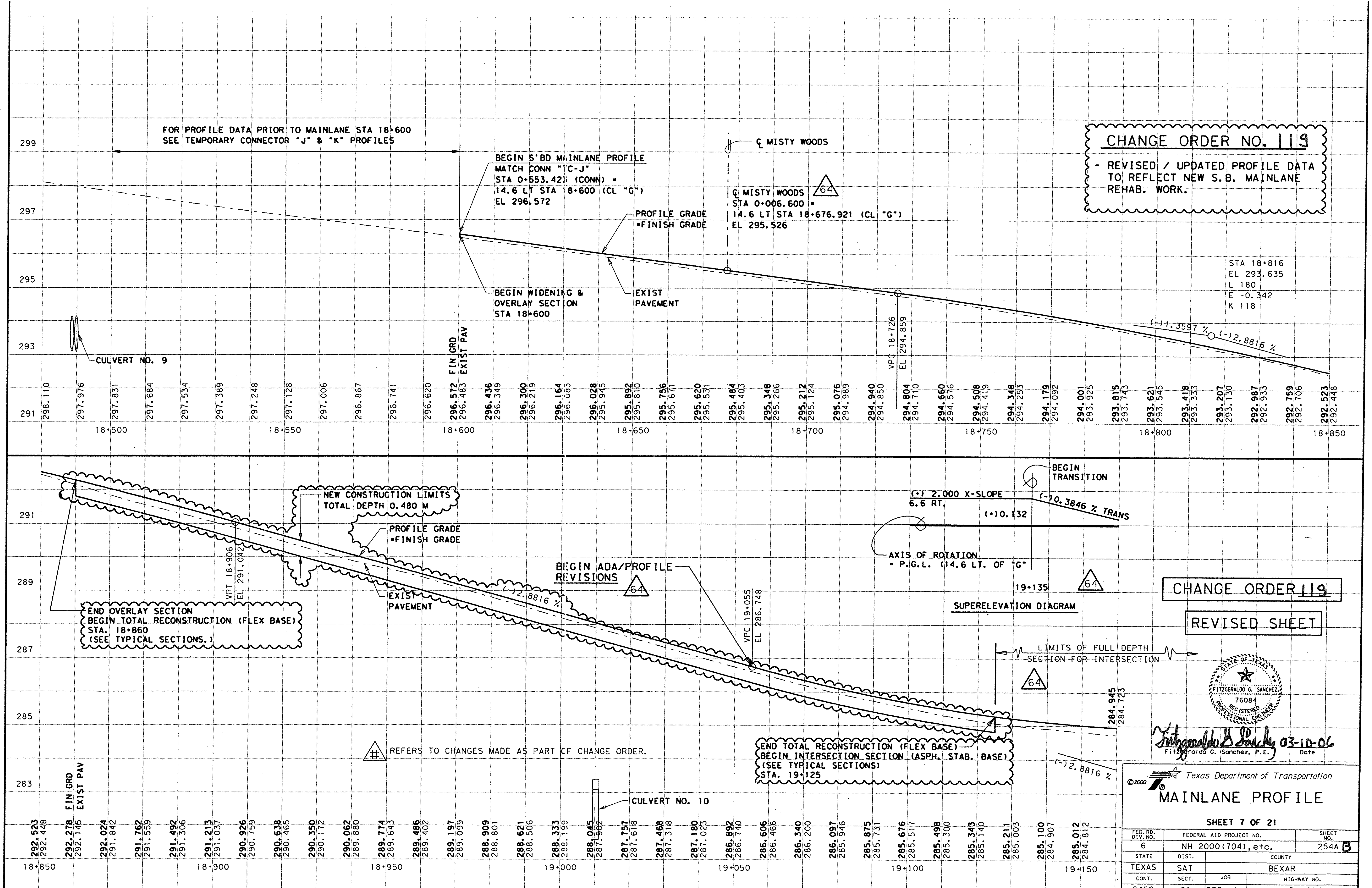


©2000 Texas Department of Transportation

# MAINLANE PROFILE

SHEET 7 OF 21

| FED. RD. DIV. NO. | FEDERAL AID PROJECT NO. | | SHEET NO. |
|---|---|---|---|
| 6 | NH 2000(704), etc. | | 254A B |
| STATE | DIST. | COUNTY | |
| TEXAS | SAT | BEXAR | |
| CONT. | SECT. | JOB | HIGHWAY NO. |
| 2452 | 01 | 036, etc. | LP 1604 |

2-17-06

LEVELS DISPLAYED
ACC: lp1604fm471-90\
FILE: prof01.dgn

FOR PROFILE DATA PRIOR TO MAINLANE STA 18+600
SEE TEMPORARY CONNECTOR "J" & "K" PROFILES

BEGIN S'BD MAINLANE PROFILE
MATCH CONN "C-J"
STA 0+553.423 (CONN) =
14.6 LT STA 18+600 (CL "G")
EL 296.572

℄ MISTY WOODS

℄ MISTY WOODS
STA 0+006.600 =
14.6 LT STA 18+676.921 (CL "G")
EL 295.526

PROFILE GRADE
=FINISH GRADE

BEGIN WIDENING &
OVERLAY SECTION
STA 18+600

EXIST
PAVEMENT

CULVERT NO. 9

VPC 18+726
EL 294.859

STA 18+816
EL 293.635
L 180
E -0.342
K 118

(-)1.3597 %
(-)2.8816 %

| | 18+500 | | 18+550 | | 18+600 | | 18+650 | | 18+700 | | 18+750 | | 18+800 | | 18+850 |
|---|---|---|---|---|---|---|---|---|---|---|---|---|---|---|---|
| FIN GRD | 298.110 | 297.976 | 297.831 | 297.684 | 297.534 | 297.389 | 297.248 | 297.128 | 297.006 | 296.867 | 296.741 | 296.620 | **296.572** | **296.436** | **296.300** |
| EXIST PAV | | | | | | | | | | | | | 296.483 | 296.349 | 296.219 |

| | | | | | | | | | | | | | | | |
|---|---|---|---|---|---|---|---|---|---|---|---|---|---|---|---|
| FIN GRD | **296.164** | **296.028** | **295.892** | **295.756** | **295.620** | **295.484** | **295.348** | **295.212** | **295.076** | **294.940** | **294.804** | **294.660** | **294.508** | **294.348** | **294.179** |
| EXIST PAV | 296.083 | 295.945 | 295.810 | 295.671 | 295.531 | 295.403 | 295.266 | 295.124 | 294.989 | 294.850 | 294.710 | 294.576 | 294.419 | 294.253 | 294.092 |

| | | | | | | | | | | | | | | | |
|---|---|---|---|---|---|---|---|---|---|---|---|---|---|---|---|
| FIN GRD | **294.001** | **293.815** | **293.621** | **293.418** | **293.207** | **292.987** | **292.759** | **292.523** | | | | | | | |
| EXIST PAV | 293.925 | 293.743 | 293.545 | 293.333 | 293.130 | 292.933 | 292.706 | 292.448 | | | | | | | |

VPT 18+906
EL 291.042

PROFILE GRADE
=FINISH GRADE

EXIST
PAVEMENT

(-)2.8816 %

BEGIN ADA/PROFILE
REVISIONS

VPC 19+055
EL 286.748

BEGIN
TRANSITION

(-) 2.000 X-SLOPE
6.6 RT.

(-)0.3846 % TRANS

(-)0.132

AXIS OF ROTATION
= P.G.L. (14.6 LT. OF "G"

19+135

SUPERELEVATION DIAGRAM

LIMITS OF FULL DEPTH
SECTION FOR INTERSECTION

BEGIN TOTAL
NEW CONSTRUCT.
(ASPH. STAB. BASE)
END WIDENING &
OVERLAY SECTION
STA. 19+125

(-)2.8816 %

CULVERT NO. 10

| | 18+850 | | 18+900 | | 18+950 | | 19+000 | | 19+050 | | 19+100 | | 19+150 |
|---|---|---|---|---|---|---|---|---|---|---|---|---|---|
| FIN GRD | **292.523** | **292.278** | **292.024** | **291.762** | **291.492** | **291.213** | **290.926** | **290.638** | **290.350** | **290.062** | **289.774** | **289.486** | **289.197** |
| EXIST PAV | 292.448 | 292.145 | 291.842 | 291.559 | 291.306 | 291.037 | 290.759 | 290.465 | 290.172 | 289.880 | 289.643 | 289.402 | 289.099 |

| | | | | | | | | | | | | | |
|---|---|---|---|---|---|---|---|---|---|---|---|---|---|
| FIN GRD | **288.909** | **288.621** | **288.333** | **288.045** | **287.757** | **287.468** | **287.180** | **286.892** | **286.606** | **286.340** | **286.097** | **285.875** | **285.676** | **285.498** | **285.343** | **285.211** | **285.100** | **285.012** |
| EXIST PAV | 288.801 | 288.506 | 288.199 | 287.902 | 287.618 | 287.318 | 287.023 | 286.740 | 286.466 | 286.200 | 285.946 | 285.731 | 285.517 | 285.300 | 285.140 | 285.003 | 284.907 | 284.812 |

284.945
284.723

CHANGE ORDER NO. 64

- REVISED PROFILE FOR ADA PURPOSES AT WISEMAN BLVD.

-REVISED SUPERELEVATION DIAGRAM

CHANGE ORDER 64

REVISED SHEET

STATE OF TEXAS
JEROME D. PAVLISKA
76075
REGISTERED PROFESSIONAL ENGINEER

Jerome D. Pavliska P.E. 4-28-04
Jerome D. Pavliska, P.E. Date

LEVELS DISPLAYED
1 2 3 4 5 6 7 8 9 10 11 12 13 14 15 16
17 18 19 20 21 22 23 24 25 26 27 28 29 30 31 32
33 34 35 36 37 38 39 40 41 42 43 44 45 46 47 48
49 50 51 52 53 54 55 56 57 58 59 60 61 62 63

ACC: lp1604fm471-90\
FILE: prof01.dgn

©2000

Texas Department of Transportation

# MAINLANE PROFILE

SHEET 7 OF 21

| FED. RD. DIV. NO. | FEDERAL AID PROJECT NO. | SHEET NO. |
|---|---|---|
| 6 | NH 2000(704), etc. | 254A |
| STATE | DIST. | COUNTY |
| TEXAS | SAT | BEXAR |
| CONT. | SECT. | JOB / HIGHWAY NO. |
| 2452 | 01 | 036, etc. / LP 1604 |

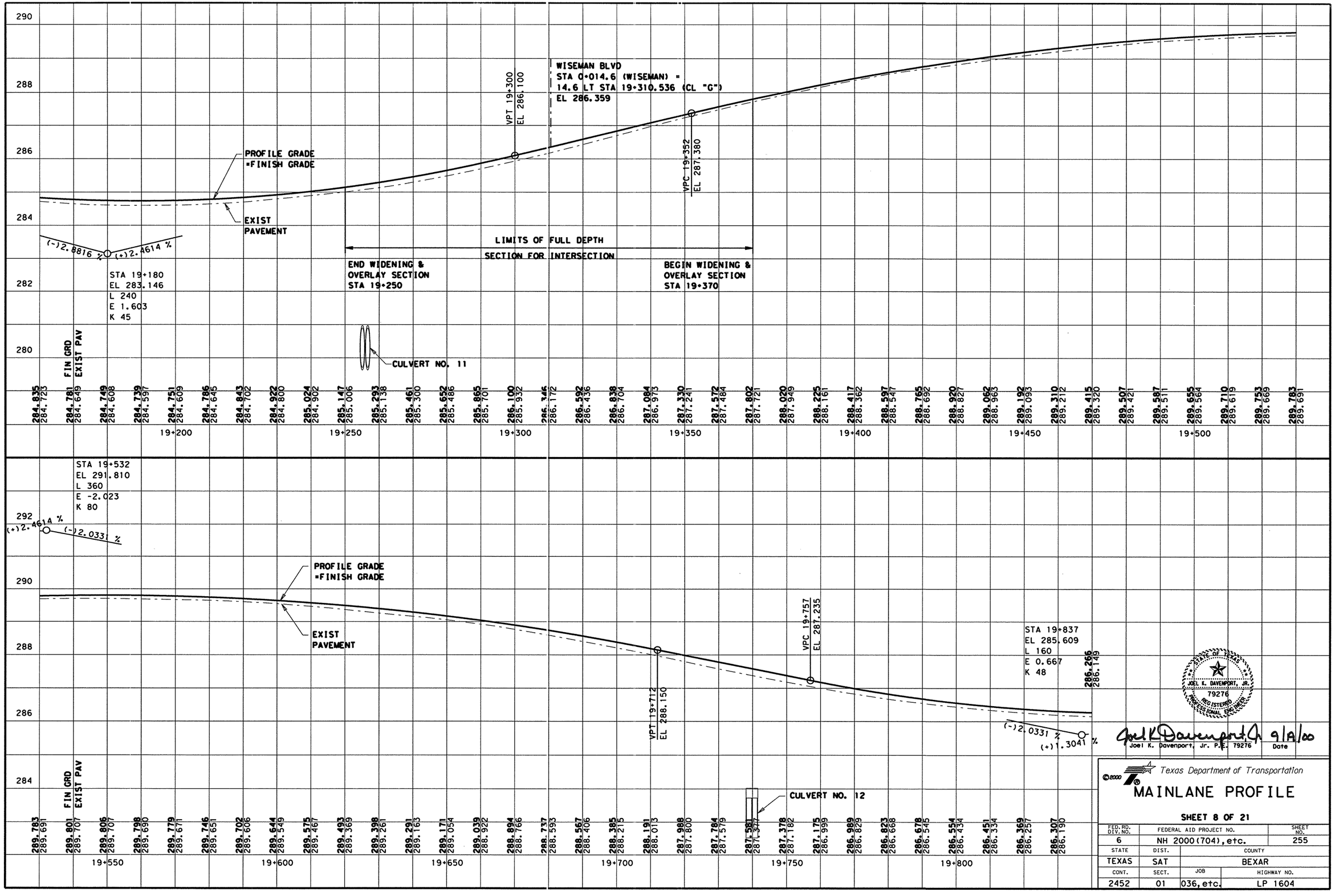


LEVELS DISPLAYED
1 2 3 4 5 6 7 8 9 10 11 12 31 41 51 61
71 81 92 02 12 22 32 42 52 62 72 82 93 03 13 23
33 43 53 63 73 83 94 04 14 24 34 44 54 64 74 84
49 50 51 52 53 54 55 65 75 85 96 06 16 26 36 46
ACC: lp1604fm471-90\
FILE: prof01.dgn

JOEL K. DAVENPORT, JR.
79276
REGISTERED
PROFESSIONAL ENGINEER
STATE OF TEXAS

Joel K Davenport Jr 9/8/00
Joel K. Davenport, Jr. P.E. 79276 Date

Texas Department of Transportation

# MAINLANE PROFILE

SHEET 8 OF 21

| FED.RD. DIV.NO. | FEDERAL AID PROJECT NO. | | SHEET NO. |
|---|---|---|---|
| 6 | NH 2000(704), etc. | | 255 |
| STATE | DIST. | COUNTY | |
| TEXAS | SAT | BEXAR | |
| CONT. | SECT. | JOB | HIGHWAY NO. |
| 2452 | 01 | 036, etc. | LP 1604 |

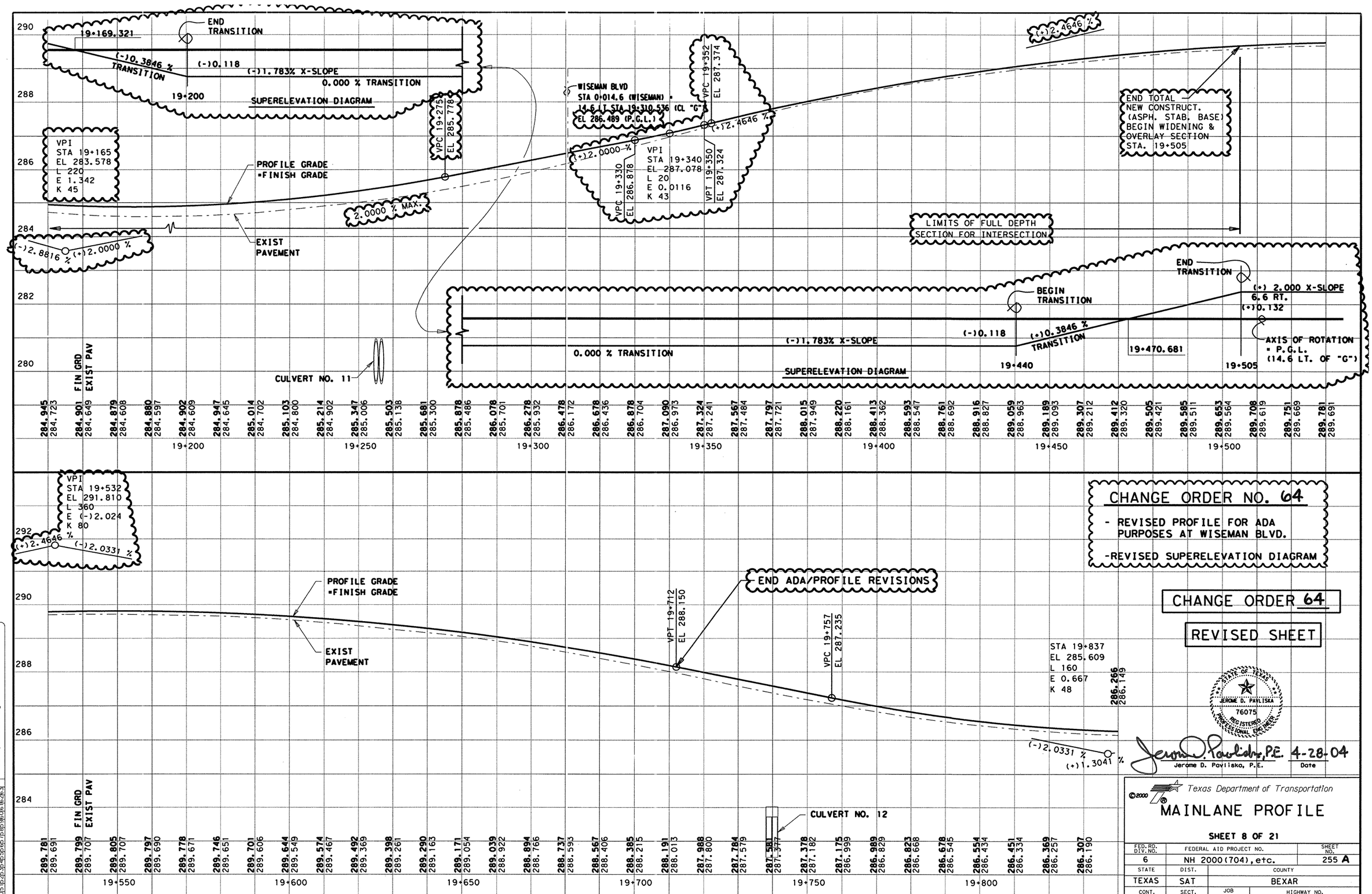


CHANGE ORDER NO. 64

- REVISED PROFILE FOR ADA PURPOSES AT WISEMAN BLVD.

-REVISED SUPERELEVATION DIAGRAM

CHANGE ORDER 64

REVISED SHEET

STATE OF TEXAS
JEROME D. PAVLISKA
76075
REGISTERED PROFESSIONAL ENGINEER

Jerome D. Pavliska, P.E. 4-28-04

Jerome D. Pavliska, P.E. — Date

LEVELS DISPLAYED
1 2 3 4 5 6 7 8 9 10 11 12 13 14 15 16
17 18 19 20 21 22 23 24 25 26 27 28 29 30 31 32
33 34 35 36 37 38 39 40 41 42 43 44 45 46 47 48
49 50 51 62 63 64 65 66 67 68 69 70 61 62 63

ACC: lp1604fm471-90\
FILE: prof01.dgn

© 2000

Texas Department of Transportation

# MAINLANE PROFILE

SHEET 8 OF 21

| FED.RD. DIV.NO. | FEDERAL AID PROJECT NO. | | SHEET NO. |
|---|---|---|---|
| 6 | NH 2000(704), etc. | | 255 A |
| STATE | DIST. | COUNTY | |
| TEXAS | SAT | BEXAR | |
| CONT. | SECT. | JOB | HIGHWAY NO. |
| 2452 | 01 | 036, etc. | LP 1604 |

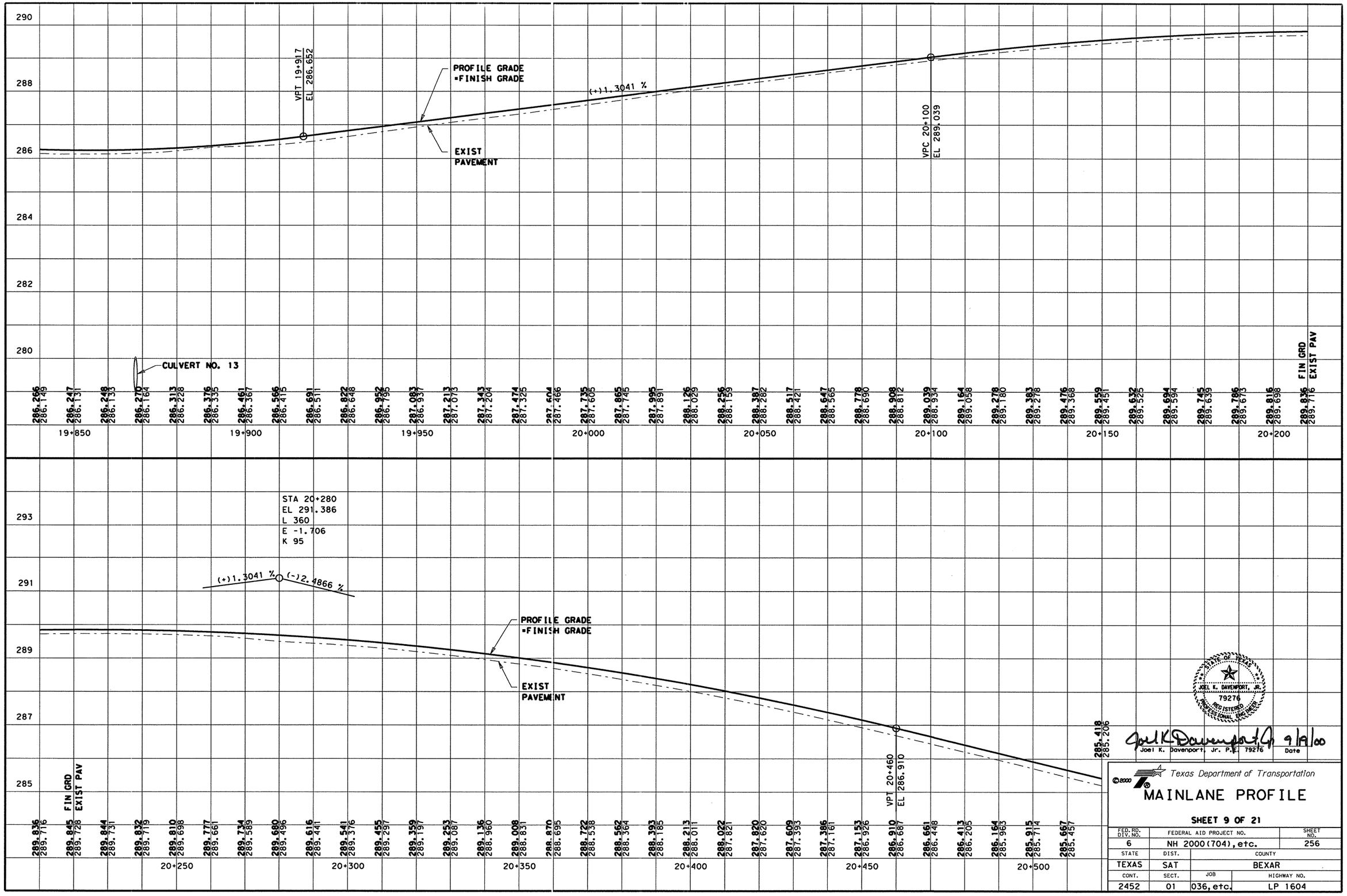


LEVELS DISPLAYED
1 2 3 4 5 6 7 8 9 10 11 12 13 14 15 16 17 18 19 20 21 22 23 24 25 26 27 28 29 30 31 32
33 34 35 36 37 38 39 40 41 42 43 44 45 46 47 48
49 50 51 52 53 54 55 56 57 58 59 60 61 62 63

ACC: lp1604fm471-90\

FILE: prof01.dgn

STATE OF TEXAS
JOEL K. DAVENPORT, JR.
79276
REGISTERED
PROFESSIONAL ENGINEER

Joel K. Davenport Jr. 9/8/00
Joel K. Davenport, Jr. P.E. 79276 Date

Texas Department of Transportation

# MAINLANE PROFILE

**SHEET 9 OF 21**

| FED.RD. DIV.NO. | FEDERAL AID PROJECT NO. | | SHEET NO. |
|---|---|---|---|
| 6 | NH 2000(704), etc. | | 256 |
| STATE | DIST. | COUNTY | |
| TEXAS | SAT | BEXAR | |
| CONT. | SECT. | JOB | HIGHWAY NO. |
| 2452 | 01 | 036, etc. | LP 1604 |

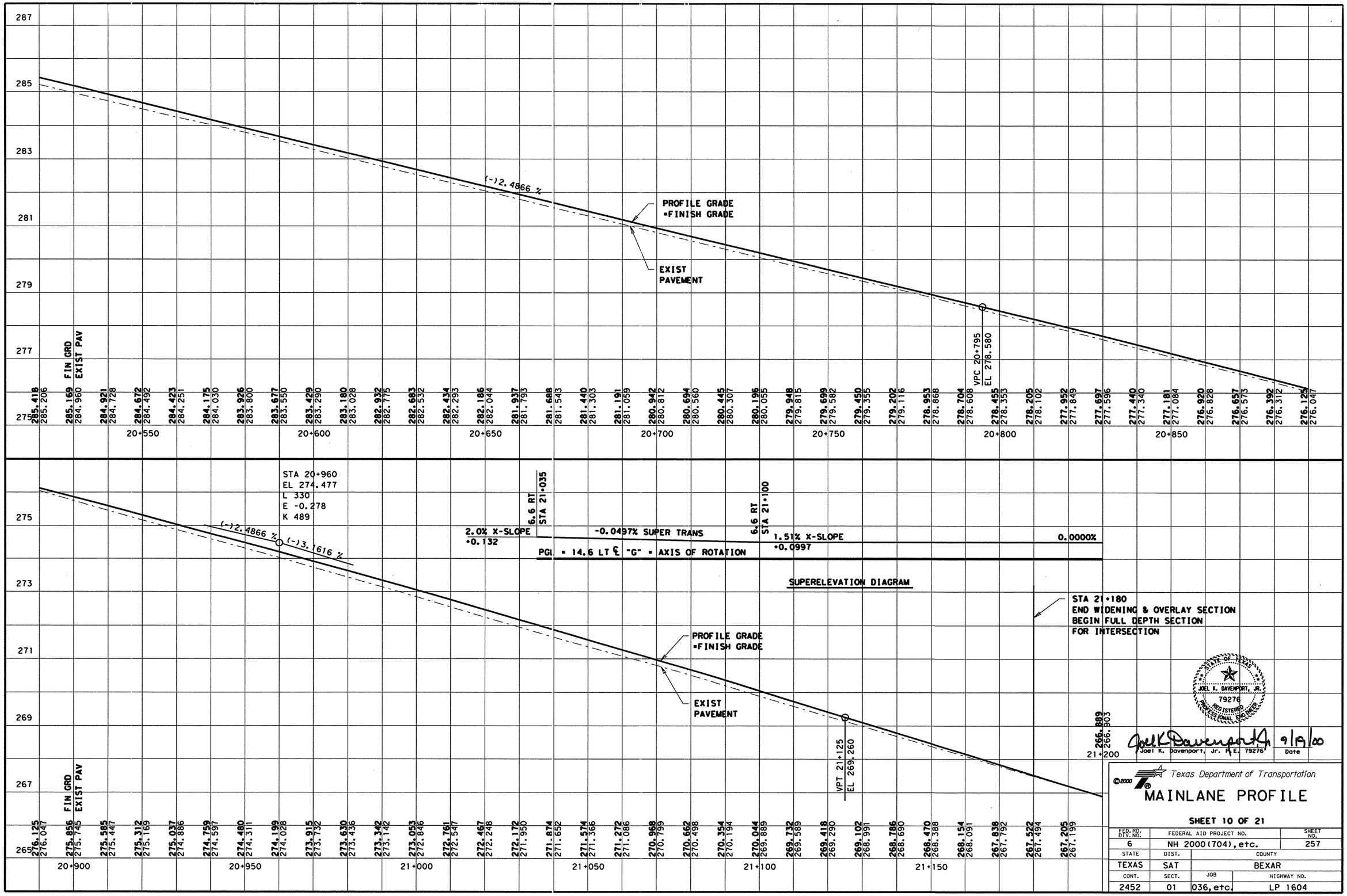


LEVELS DISPLAYED
1 2 3 4 5 6 7 8 9 10 11 12 13 14 15 16
17 18 19 20 21 22 23 24 25 26 27 28 29 30 31 32
33 34 35 36 37 38 39 40 41 42 43 44 45 46 47 48
49 50 51 52 53 54 55 56 57 58 59 60 61 62 63 4

ACC: lp1604fm471-90\
FILE: prof01.dgn

STATE OF TEXAS
JOEL K. DAVENPORT, JR.
79276
REGISTERED
PROFESSIONAL ENGINEER

Joel K. Davenport 9/19/00
Joel K. Davenport, Jr. P.E. 79276 Date

Texas Department of Transportation

# MAINLANE PROFILE

SHEET 10 OF 21

| FED.RD. DIV.NO. | FEDERAL AID PROJECT NO. | | SHEET NO. |
|---|---|---|---|
| 6 | NH 2000(704), etc. | | 257 |
| STATE | DIST. | COUNTY | |
| TEXAS | SAT | BEXAR | |
| CONT. | SECT. | JOB | HIGHWAY NO. |
| 2452 | 01 | 036, etc. | LP 1604 |

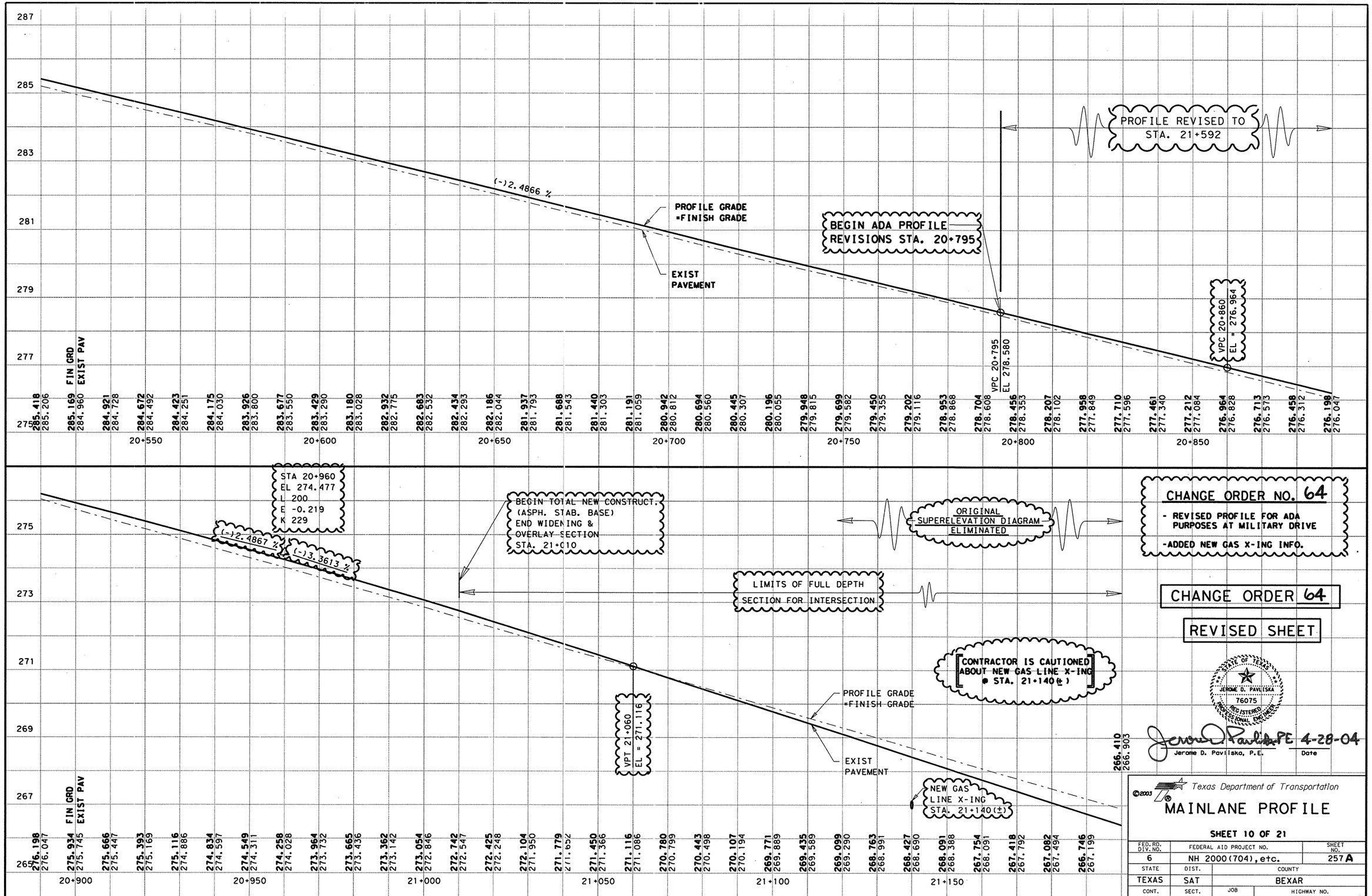


CHANGE ORDER NO. 64

- REVISED PROFILE FOR ADA PURPOSES AT MILITARY DRIVE
-ADDED NEW GAS X-ING INFO.

CHANGE ORDER 64

REVISED SHEET

STATE OF TEXAS
JEROME D. PAVLISKA
76075
REGISTERED PROFESSIONAL ENGINEER

Jerome D. Pavliska PE 4-28-04
Jerome D. Pavliska, P.E. Date

LEVELS DISPLAYED
1 2 3 4 5 6 7 8 9 10 11 12 13 14 15 16
17 18 19 20 21 22 23 24 25 26 27 28 29 30 31 32
33 34 35 36 37 38 39 40 41 42 43 44 45 46 47 48
49 50 51 52 53 54 55 56 57 58 59 60 61 62 63

ACC: lp1604fm471-90\
FILE: prof01.dgn

©2003

Texas Department of Transportation

# MAINLANE PROFILE

SHEET 10 OF 21

| FED.RD. DIV.NO. | FEDERAL AID PROJECT NO. | | SHEET NO. |
|---|---|---|---|
| 6 | NH 2000(704), etc. | | 257A |
| STATE | DIST. | COUNTY | |
| TEXAS | SAT | BEXAR | |
| CONT. | SECT. | JOB | HIGHWAY NO. |
| 2452 | 01 | 036, etc. | LP 1604 |

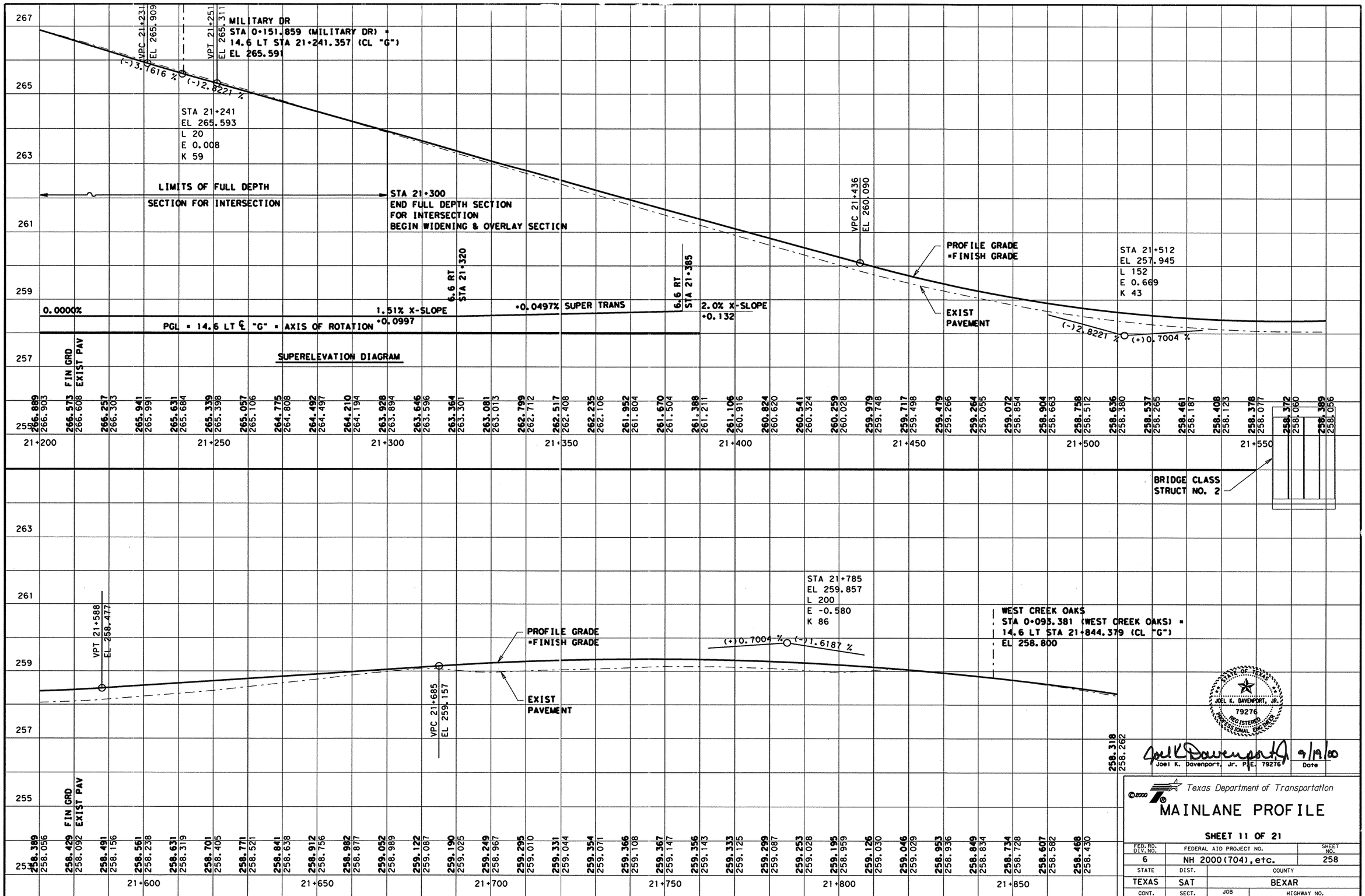


LEVELS DISPLAYED
1 2 3 4 5 6 7 8 9 10 11 12 13 14 15 16
17 18 19 20 21 22 23 24 25 26 27 28 29 30 31 32
33 34 35 36 37 38 39 40 41 42 43 44 45 46 47 48
49 50 51 52 53 54 55 56 57 58 59 60 61 62 63

ACC: lp1604fm471-90\
FILE: prof01.dgn

STATE OF TEXAS
JOEL K. DAVENPORT, JR.
79276
REGISTERED PROFESSIONAL ENGINEER

Joel K Davenport Jr. 9/19/00
Joel K. Davenport, Jr. P.E. 79276 Date

Texas Department of Transportation

# MAINLANE PROFILE

SHEET 11 OF 21

| FED. RD. DIV. NO. | FEDERAL AID PROJECT NO. | SHEET NO. |
|---|---|---|
| 6 | NH 2000(704), etc. | 258 |
| STATE | DIST. | COUNTY |
| TEXAS | SAT | BEXAR |
| CONT. | SECT. | JOB / HIGHWAY NO. |
| 2452 | 01 | 036, etc. / LP 1604 |

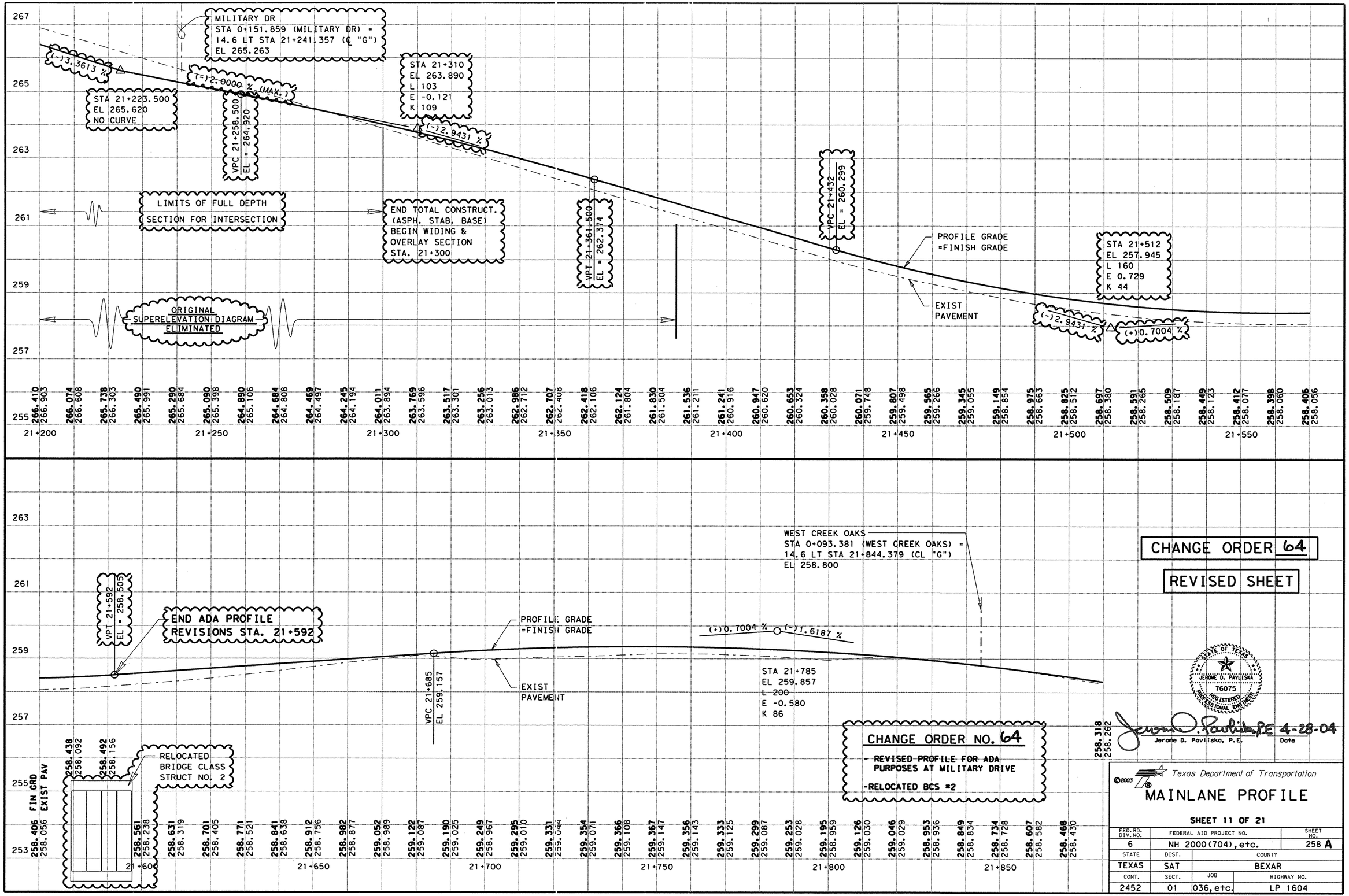


CHANGE ORDER 64

REVISED SHEET

CHANGE ORDER NO. 64

- REVISED PROFILE FOR ADA PURPOSES AT MILITARY DRIVE
-RELOCATED BCS #2

STATE OF TEXAS
JEROME D. PAVLISKA
76075
REGISTERED PROFESSIONAL ENGINEER

Jerome D. Pavliska, P.E. 4-28-04
Jerome D. Pavliska, P.E. Date

LEVELS DISPLAYED
1 2 3 4 5 6 7 8 9 10 11 12 13 14 15 16
17 18 19 20 21 22 23 24 25 26 27 28 29 30 31 32
33 34 35 36 37 38 39 40 41 42 43 44 45 46 47 48
49 50 51 62 63 64 65 66 75 85 96 106 263
ACC: lp1604fm471-90\
FILE: prof01.dgn

©2003

Texas Department of Transportation

# MAINLANE PROFILE

SHEET 11 OF 21

| FED. RD. DIV. NO. | FEDERAL AID PROJECT NO. | SHEET NO. |
|---|---|---|
| 6 | NH 2000(704), etc. | 258 A |
| STATE | DIST. | COUNTY |
| TEXAS | SAT | BEXAR |
| CONT. | SECT. | JOB / HIGHWAY NO. |
| 2452 | 01 | 036, etc. / LP 1604 |

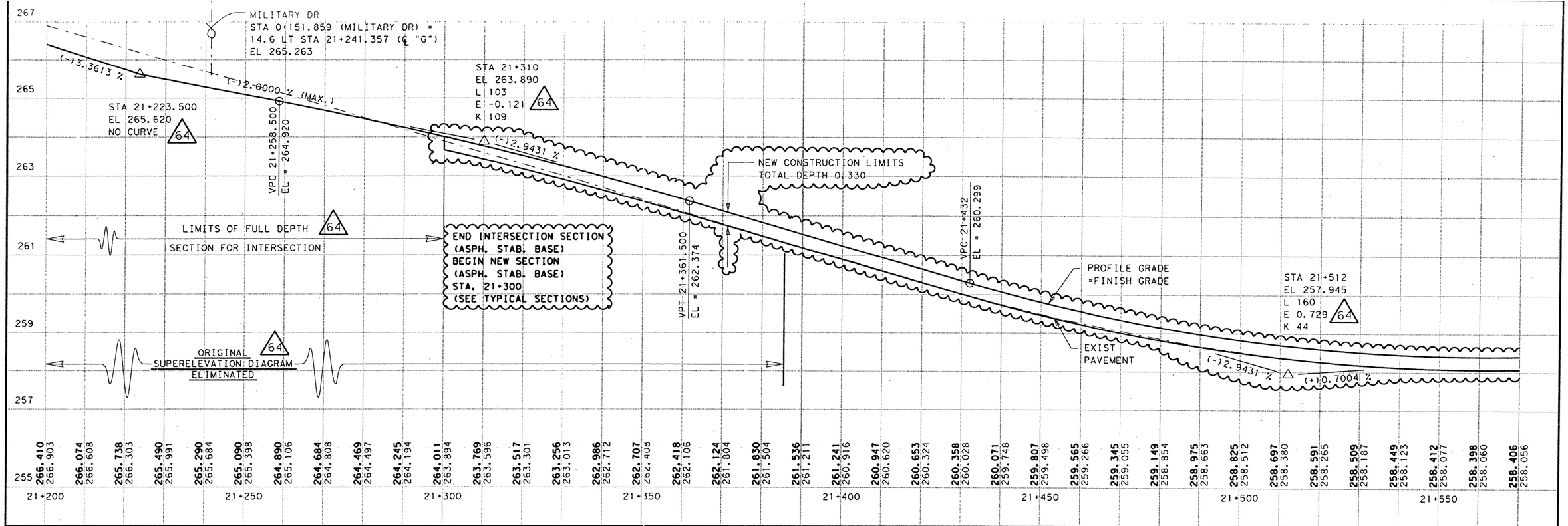


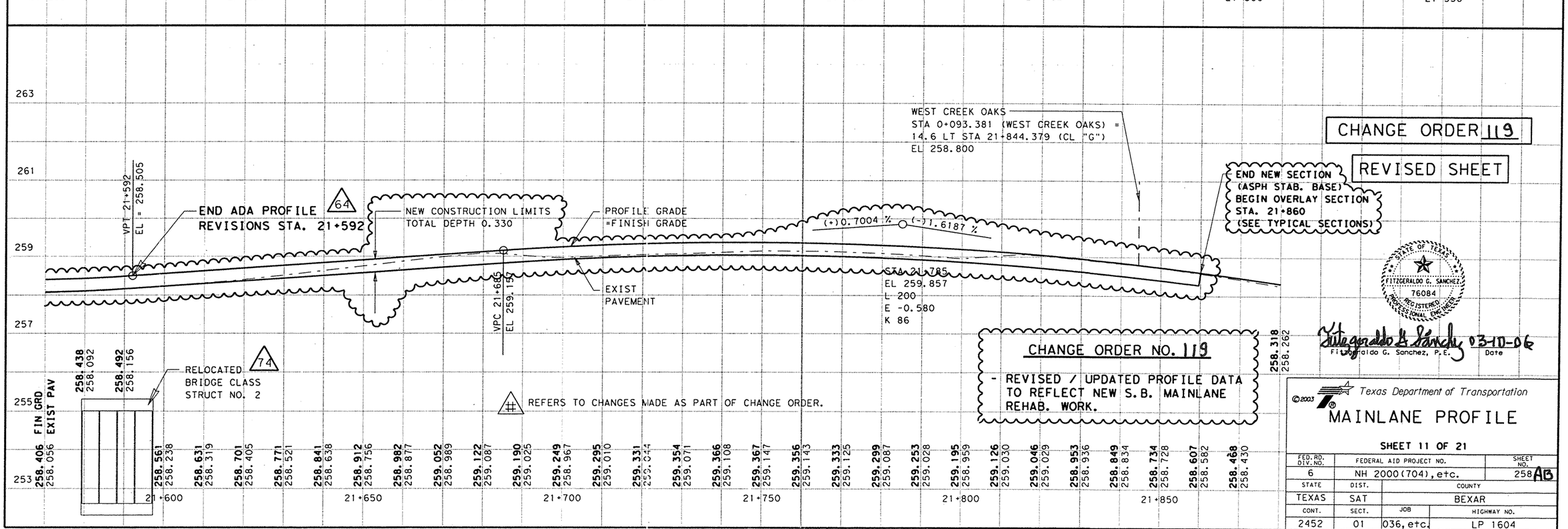


(#) REFERS TO CHANGES MADE AS PART OF CHANGE ORDER.

CHANGE ORDER 119

REVISED SHEET

**CHANGE ORDER NO. 119**

- REVISED / UPDATED PROFILE DATA TO REFLECT NEW S.B. MAINLANE REHAB. WORK.

STATE OF TEXAS
FITZGERALDO G. SANCHEZ
76084
REGISTERED PROFESSIONAL ENGINEER

Fitzgeraldo G. Sanchez 03-10-06
Fitzgeraldo G. Sanchez, P.E. Date

LEVELS DISPLAYED
1 2 3 4 5 6 7 8 9 10 11 12 13 14 15 16
1 7 8 19 20 21 22 23 24 25 26 27 28 29 30 31 32
33 34 35 36 37 38 39 40 41 42 43 44 45 46 47 48
49 50 51 52 53 54 55 56 57 58 59 60 61 62 63

ACC: lp1604fm471-90\
FILE: prof01.dgn

©2003 Texas Department of Transportation

# MAINLANE PROFILE

SHEET 11 OF 21

| FED.RD. DIV. NO. | FEDERAL AID PROJECT NO. | | SHEET NO. |
|---|---|---|---|
| 6 | NH 2000(704), etc. | | 258AB |
| STATE | DIST. | COUNTY | |
| TEXAS | SAT | BEXAR | |
| CONT. | SECT. | JOB | HIGHWAY NO. |
| 2452 | 01 | 036, etc. | LP 1604 |

2-17-06

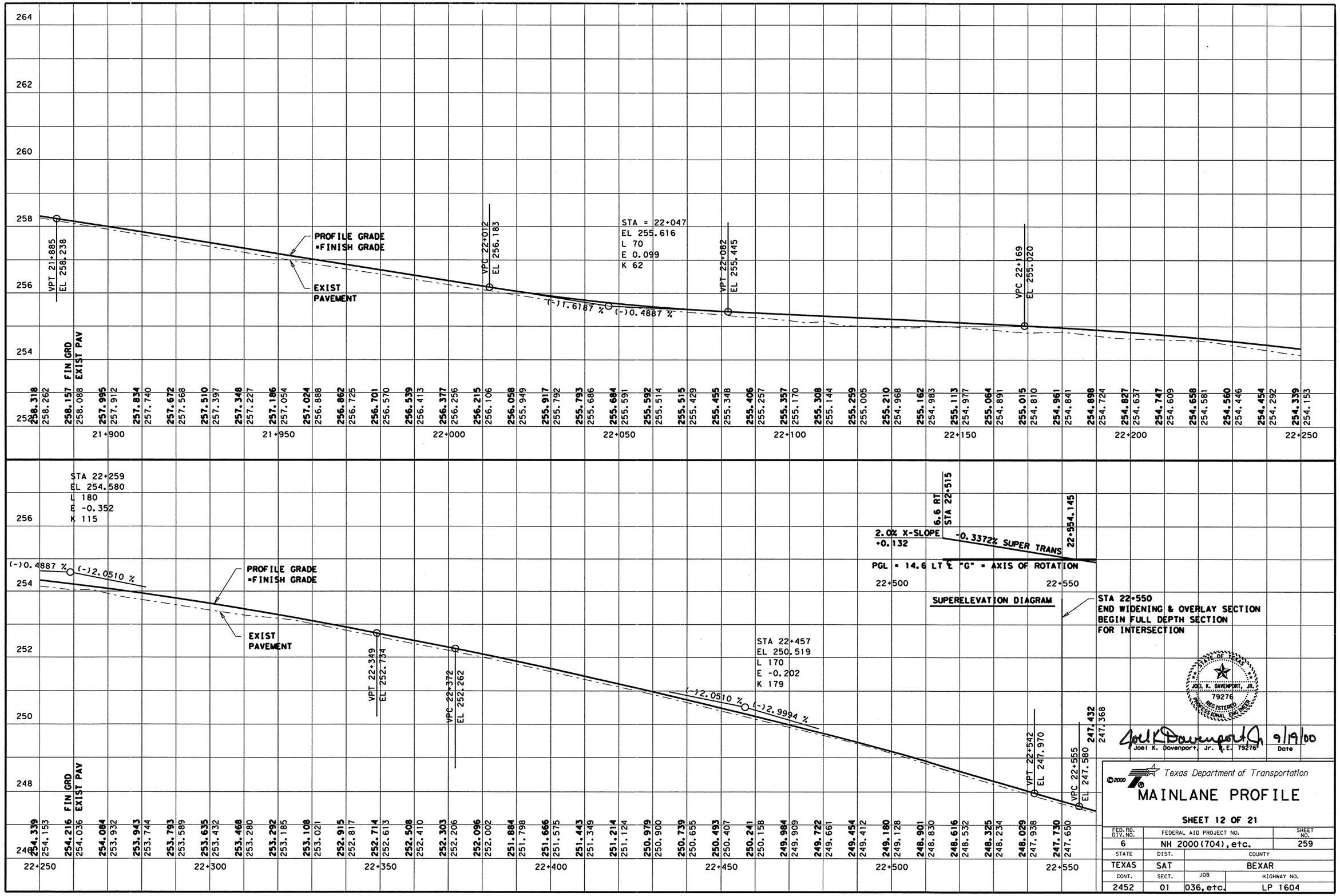


LEVELS DISPLAYED
1 2 3 4 5 6 7 8 9 10 11 12 13 14 15 16
17 18 19 20 21 22 23 24 25 26 27 28 29 30 31 32
33 34 35 36 37 38 39 40 41 42 43 44 45 46 47 48
49 50 51 52 53 54 55 56 57 58 59 60 61 62 63

ACC: lp1604fm471-90\
FILE: prof01.dgn

STATE OF TEXAS
JOEL K. DAVENPORT, JR.
79276
REGISTERED PROFESSIONAL ENGINEER

Joel K Davenport Jr. 9/19/00
Joel K. Davenport, Jr. P.E. 79276 Date

Texas Department of Transportation

# MAINLANE PROFILE

SHEET 12 OF 21

| FED.RD. DIV.NO. | FEDERAL AID PROJECT NO. | SHEET NO. |
|---|---|---|
| 6 | NH 2000(704), etc. | 259 |
| STATE | DIST. | COUNTY |
| TEXAS | SAT | BEXAR |
| CONT. | SECT. | JOB / HIGHWAY NO. |
| 2452 | 01 | 036, etc. / LP 1604 |

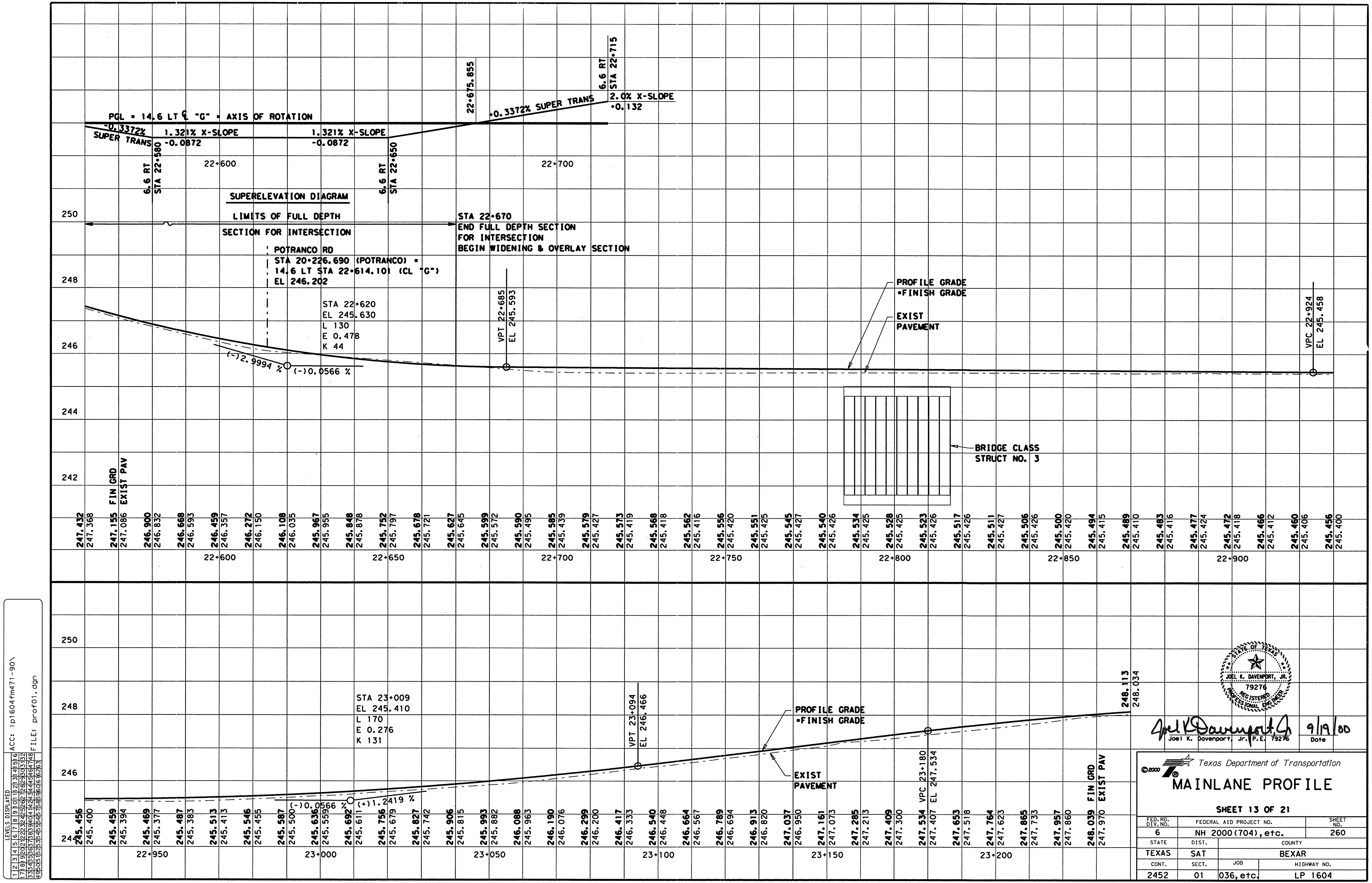


STATE OF TEXAS
JOEL K. DAVENPORT, JR.
79276
REGISTERED PROFESSIONAL ENGINEER

Joel K. Davenport, Jr. P.E. 79276 — 9/19/00 — Date

©2000 Texas Department of Transportation

# MAINLANE PROFILE

**SHEET 13 OF 21**

| FED. RD. DIV. NO. | FEDERAL AID PROJECT NO. | | SHEET NO. |
|---|---|---|---|
| 6 | NH 2000(704),etc. | | 260 |
| STATE | DIST. | COUNTY | |
| TEXAS | SAT | BEXAR | |
| CONT. | SECT. | JOB | HIGHWAY NO. |
| 2452 | 01 | 036,etc. | LP 1604 |

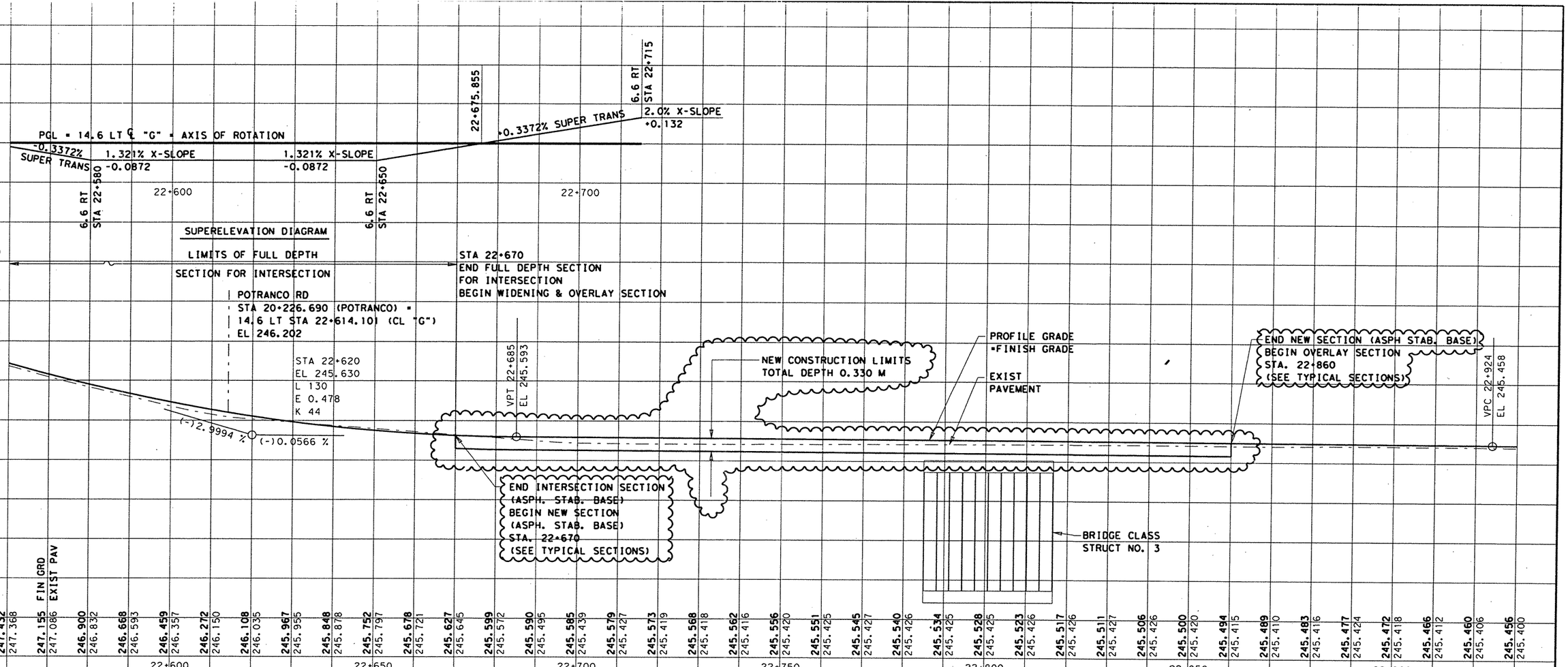


CHANGE ORDER NO. 119

- REVISED / UPDATED PROFILE DATA TO REFLECT NEW S.B. MAINLANE REHAB. WORK.

CHANGE ORDER 119

REVISED SHEET

STATE OF TEXAS
FITZGERALDO G. SANCHEZ
76084
LICENSED
PROFESSIONAL ENGINEER

Fitzgeraldo G. Sanchez 03-10-06
Fitzgeraldo G. Sanchez, P.E. Date

LEVELS DISPLAYED
1 2 3 4 5 6 7 8 9 10 11 12 13 14 15 16
17 18 19 20 21 22 23 24 25 26 27 28 29 30 31 32
33 34 35 36 37 38 39 40 41 42 43 44 45 46 47 48
49 50 51 52 53 54 55 56 57 58 59 60 61 62 63

ACC: lp1604fm471-90\
FILE: prof01.dgn

©2000
Texas Department of Transportation

# MAINLANE PROFILE

SHEET 13 OF 21

| FED.RD. DIV. NO. | FEDERAL AID PROJECT NO. | | SHEET NO. |
|---|---|---|---|
| 6 | NH 2000(704), etc. | | 260A |
| STATE | DIST. | COUNTY | |
| TEXAS | SAT | BEXAR | |
| CONT. | SECT. | JOB | HIGHWAY NO. |
| 2452 | 01 | 036, etc. | LP 1604 |

02-10-06

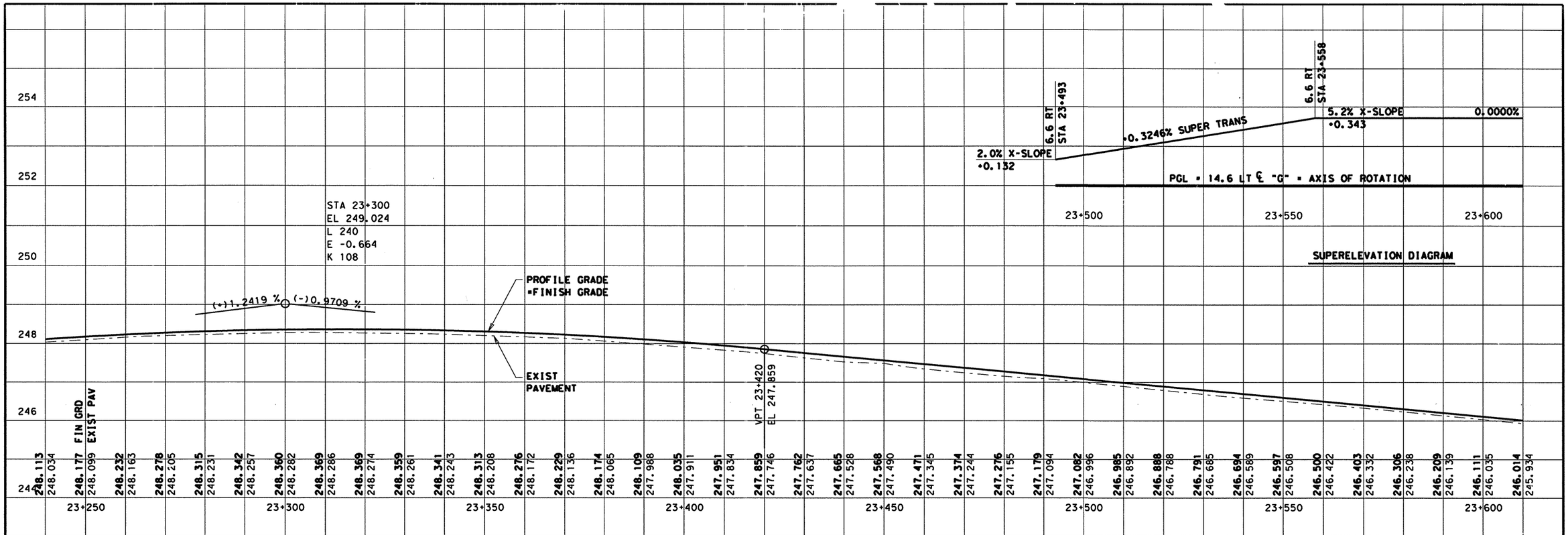


LEVELS DISPLAYED
1 2 3 4 5 6 7 8 9 10 11 12 13 14 15 16
17 18 19 20 21 22 23 24 25 26 27 28 29 30 31 32
33 34 35 36 37 38 39 40 41 42 43 44 45 46 47 48
49 50 51 52 53 54 55 56 57 58 59 60 61 62 63

ACC: lp1604fm471-90\
FILE: prof01.dgn

STATE OF TEXAS
JOEL K. DAVENPORT, JR.
79276
REGISTERED
PROFESSIONAL ENGINEER

Joel K Davenport Jr 9/19/00
Joel K. Davenport, Jr. P.E. 79276 Date

© 2000 Texas Department of Transportation

# MAINLANE PROFILE

SHEET 14 OF 21

| FED.RD. DIV.NO. | FEDERAL AID PROJECT NO. | | SHEET NO. |
|---|---|---|---|
| 6 | NH 2000(704), etc. | | :61 |
| STATE | DIST. | COUNTY | |
| TEXAS | SAT | BEXAR | |
| CONT. | SECT. | JOB | HIGHWAY NO. |
| 2452 | 01 | 036, etc. | 1604 |

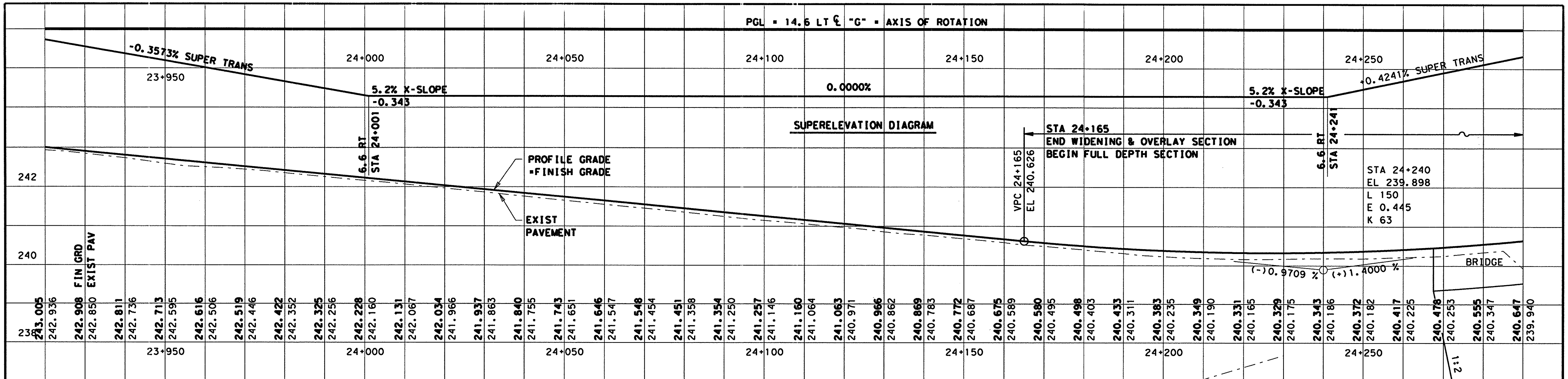


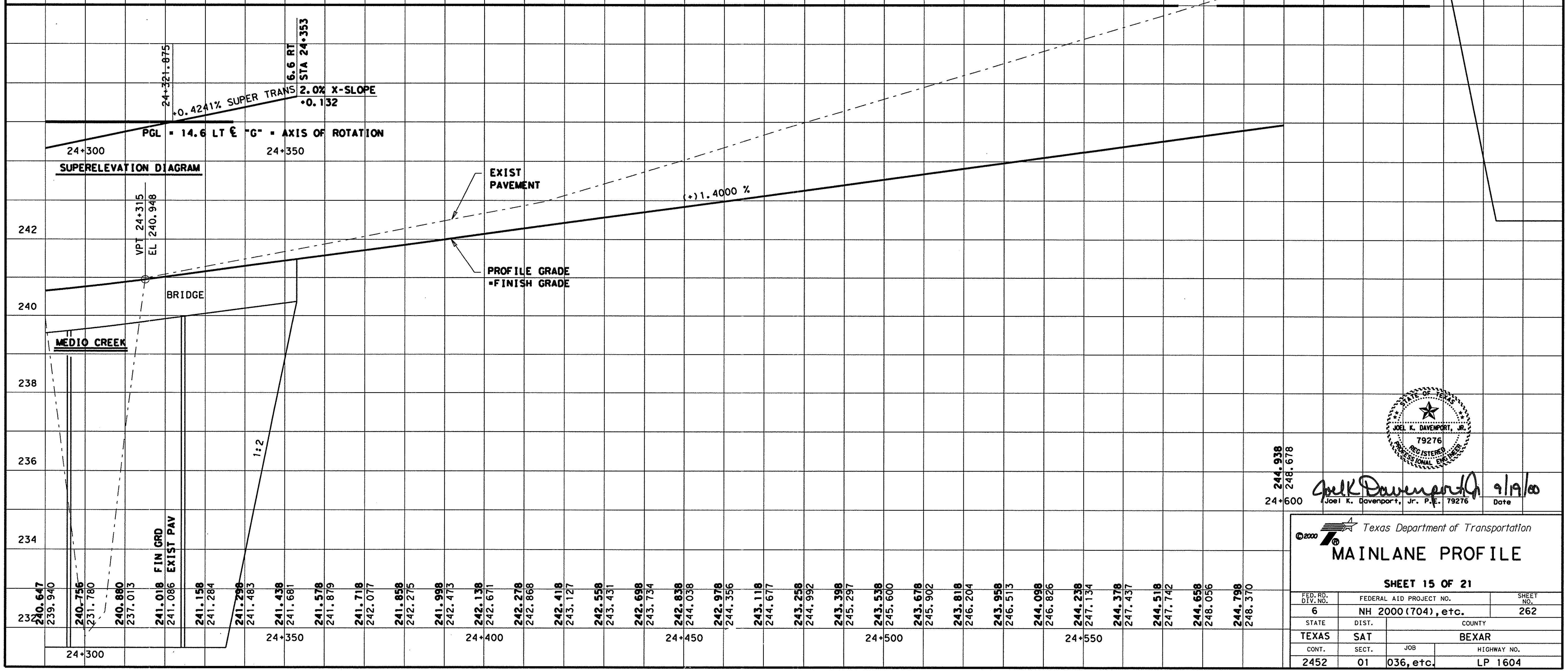


STATE OF TEXAS
JOEL K. DAVENPORT, JR.
79276
REGISTERED
PROFESSIONAL ENGINEER

Joel K. Davenport, Jr. P.E. 79276 — 9/19/00
Date

©2000 Texas Department of Transportation

# MAINLANE PROFILE

**SHEET 15 OF 21**

| FED. RD. DIV. NO. | FEDERAL AID PROJECT NO. | | SHEET NO. |
|---|---|---|---|
| 6 | NH 2000(704),etc. | | 262 |
| STATE | DIST. | COUNTY | |
| TEXAS | SAT | BEXAR | |
| CONT. | SECT. | JOB | HIGHWAY NO. |
| 2452 | 01 | 036,etc. | LP 1604 |

LEVELS DISPLAYED

| | | | | | | | | | | | | | | | |
|---|---|---|---|---|---|---|---|---|---|---|---|---|---|---|---|
| 1 | 2 | 3 | 4 | 5 | 6 | 7 | 8 | 9 | 10 | 11 | 12 | 13 | 14 | 15 | 16 |
| 17 | 18 | 19 | 20 | 21 | 22 | 23 | 24 | 25 | 26 | 27 | 28 | 29 | 30 | 31 | 32 |
| 33 | 34 | 35 | 36 | 37 | 38 | 39 | 40 | 41 | 42 | 43 | 44 | 45 | 46 | 47 | 48 |
| 49 | 50 | 51 | 52 | 53 | 54 | 55 | 56 | 57 | 58 | 59 | 60 | 61 | 62 | 63 | |

ACC: lp1604fm471-90\

FILE: prof01.dgn

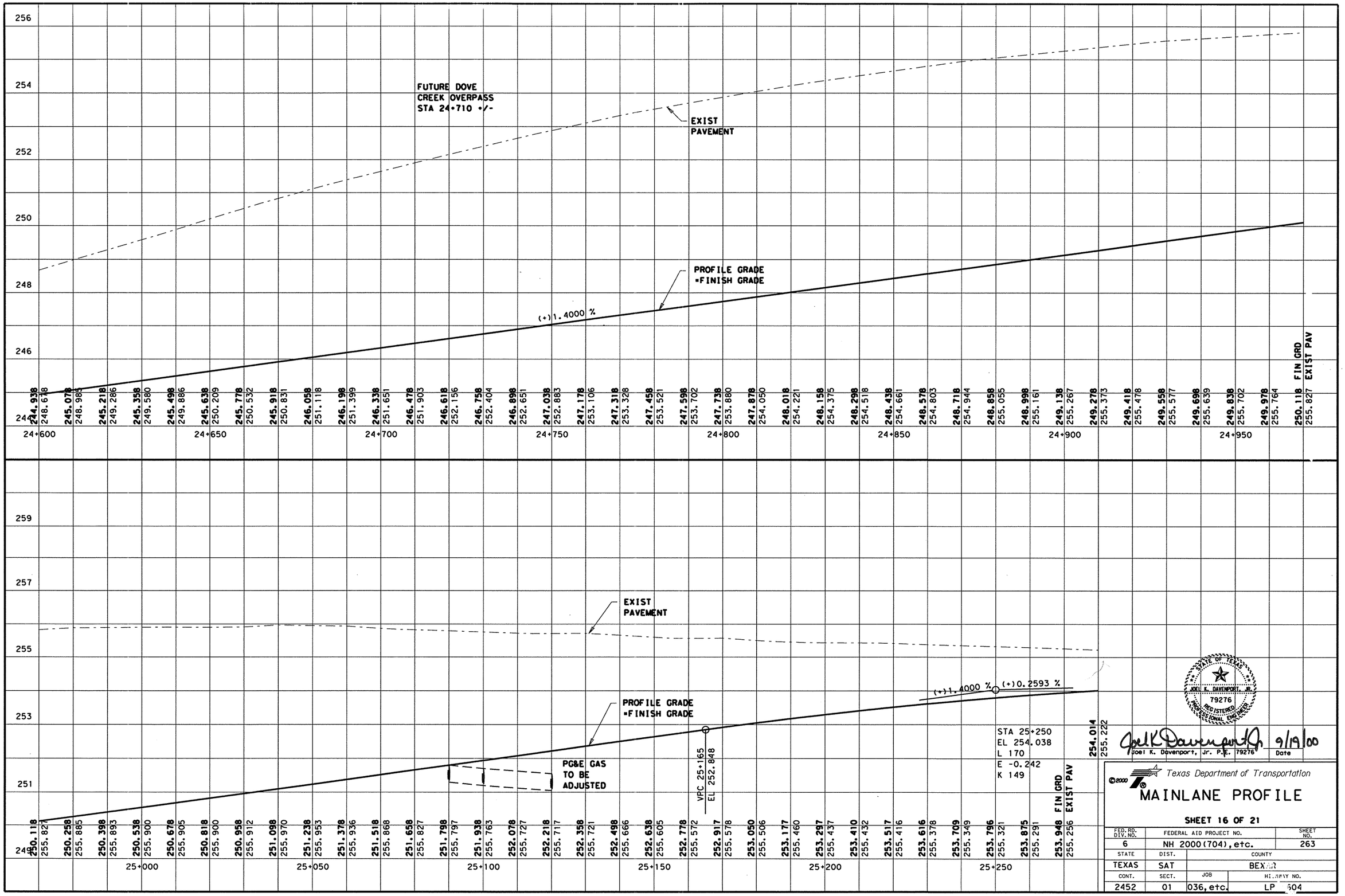


LEVELS DISPLAYED
1 2 3 4 5 6 7 8 9 10 11 12 13 14 15 16
17 18 19 20 21 22 23 24 25 26 27 28 29 30 31 32
33 34 35 36 37 38 39 40 41 42 43 44 45 46 47 48
49 50 51 52 53 54 55 56 57 58 59 60 61 62 63

ACC: lp1604fm471-90\
FILE: prof01.dgn

STATE OF TEXAS
JOEL K. DAVENPORT, JR.
79276
REGISTERED
PROFESSIONAL ENGINEER

Joel K. Davenport, Jr. P.E. 79276 — 9/19/00
Joel K. Davenport, Jr. P.E. 79276 — Date

Texas Department of Transportation

# MAINLANE PROFILE

SHEET 16 OF 21

| FED.RD. DIV.NO. | FEDERAL AID PROJECT NO. | SHEET NO. |
|---|---|---|
| 6 | NH 2000(704), etc. | 263 |
| STATE | DIST. | COUNTY |
| TEXAS | SAT | BEXAR |
| CONT. | SECT. | JOB | HIGHWAY NO. |
| 2452 | 01 | 036, etc. | LP 1604 |

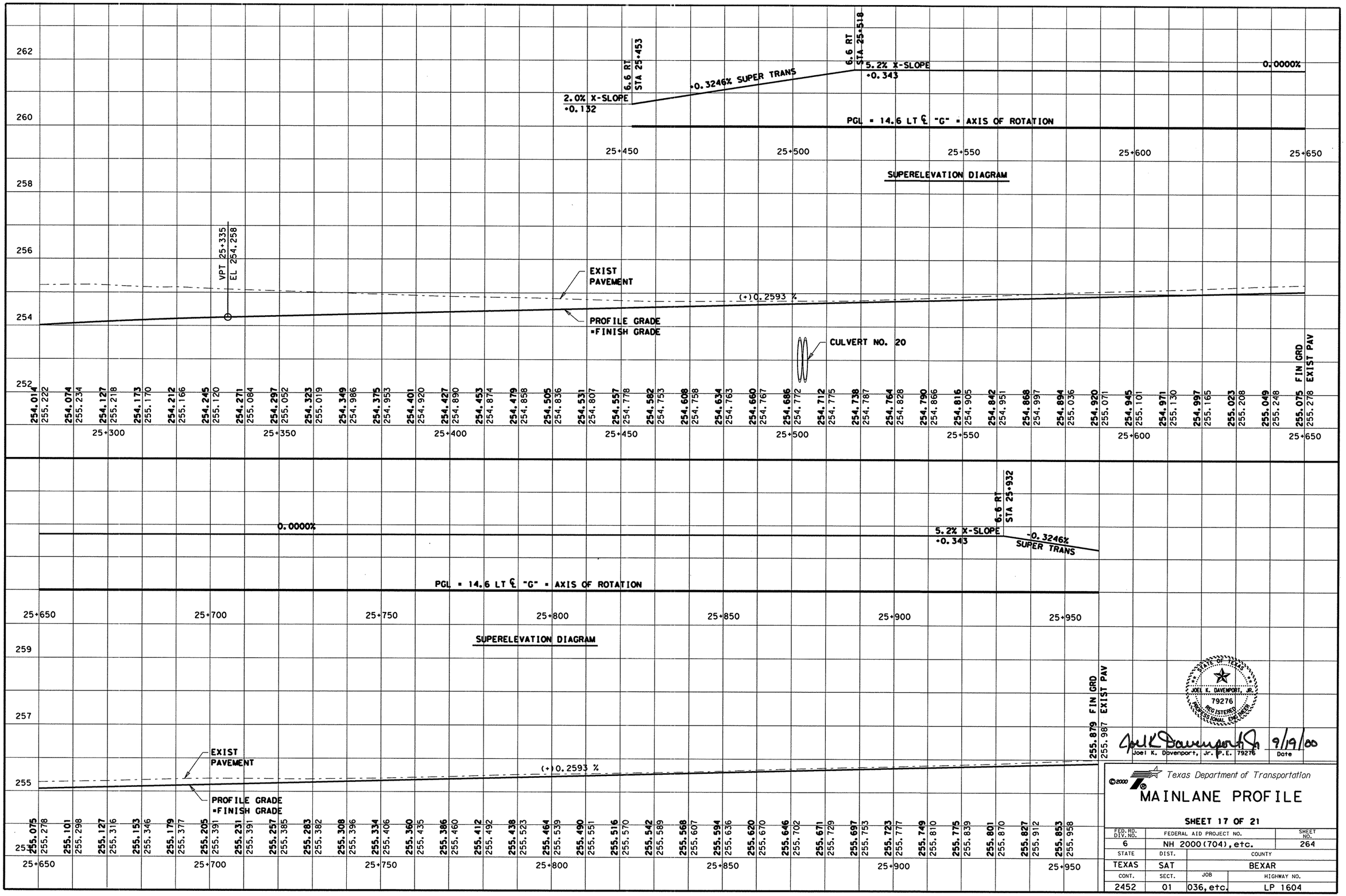


LEVELS DISPLAYED
1 2 3 4 5 6 7 8 9 10 11 12 13 14 15 16
17 18 19 20 21 22 23 24 25 26 27 28 29 30 31 32
33 34 35 36 37 38 39 40 41 42 43 44 45 46 47 48
49 50 51 52 53 54 55 56 57 58 59 60 61 62 63

ACC: lp1604fm471-90\
FILE: prof01.dgn

STATE OF TEXAS
JOEL K. DAVENPORT, JR.
79276
REGISTERED
PROFESSIONAL ENGINEER

Joel K. Davenport, Jr. P.E. 79276 — Date 9/19/00

©2000

Texas Department of Transportation

# MAINLANE PROFILE

SHEET 17 OF 21

| FED. RD. DIV. NO. | FEDERAL AID PROJECT NO. | SHEET NO. |
|---|---|---|
| 6 | NH 2000(704), etc. | 264 |
| STATE | DIST. | COUNTY |
| TEXAS | SAT | BEXAR |
| CONT. | SECT. | JOB / HIGHWAY NO. |
| 2452 | 01 | 036, etc. / LP 1604 |

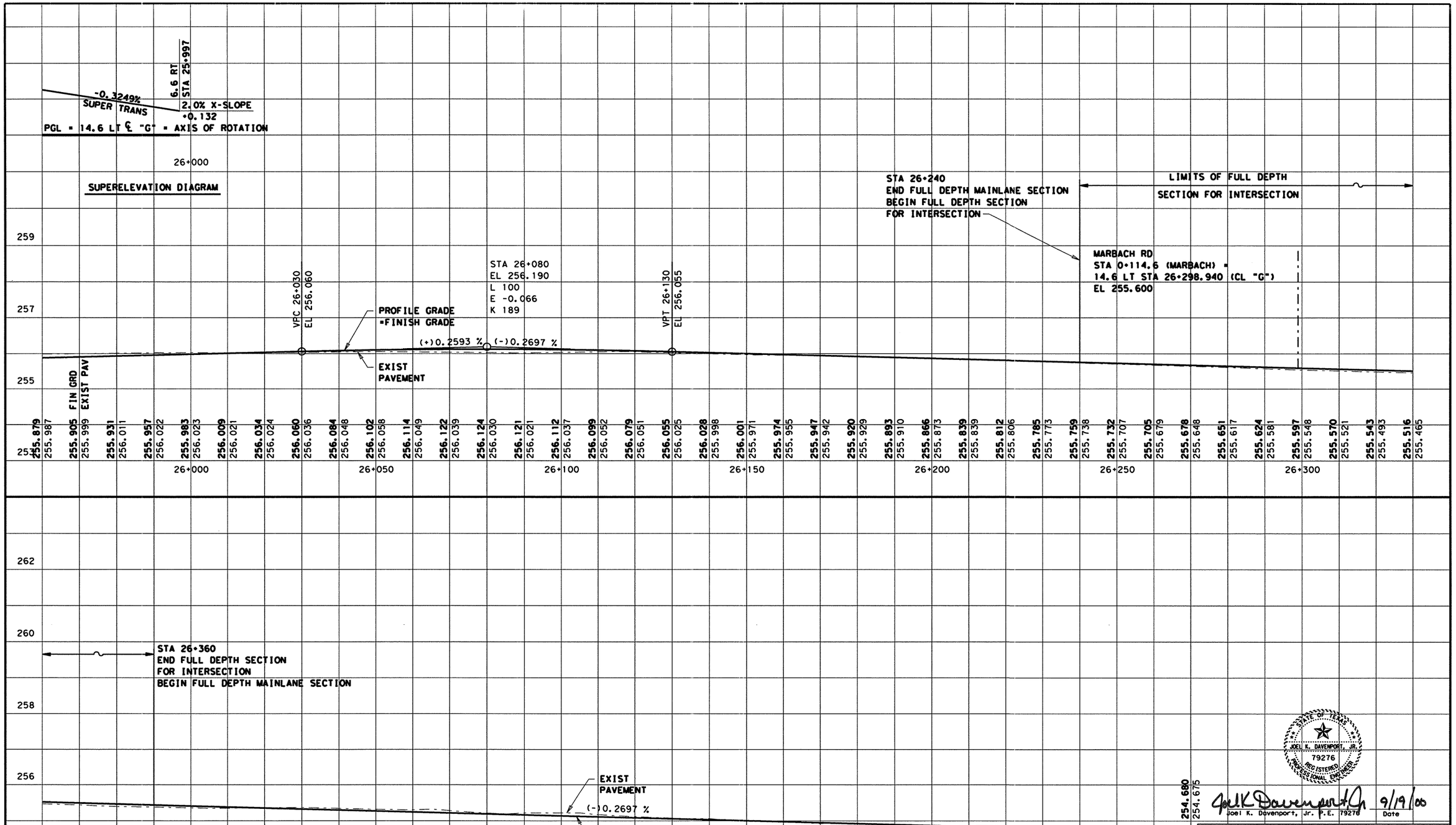


LEVELS DISPLAYED
1 2 3 4 5 6 7 8 9 10 11 12 13 14 15 16
17 18 19 20 21 22 23 24 25 26 27 28 29 30 31 32
33 34 35 36 37 38 39 40 41 42 43 44 45 46 47 48
49 50 51 52 53 54 55 56 57 58 59 60 61 62 63

ACC: lp1604fm471-90\
FILE: prof01.dgn

STATE OF TEXAS
JOEL K. DAVENPORT, JR.
79276
REGISTERED PROFESSIONAL ENGINEER

Joel K. Davenport, Jr. P.E. 79276 — 9/19/00
Date

Texas Department of Transportation

# MAINLANE PROFILE

**SHEET 18 OF 21**

| FED.RD. DIV.NO. | FEDERAL AID PROJECT NO. | SHEET NO. |
|---|---|---|
| 6 | NH 2000(704), etc. | 265 |
| STATE | DIST. | COUNTY |
| TEXAS | SAT | BEXAR |
| CONT. | SECT. | JOB / HIGHWAY NO. |
| 2452 | 01 | 036, etc. / LP 1604 |

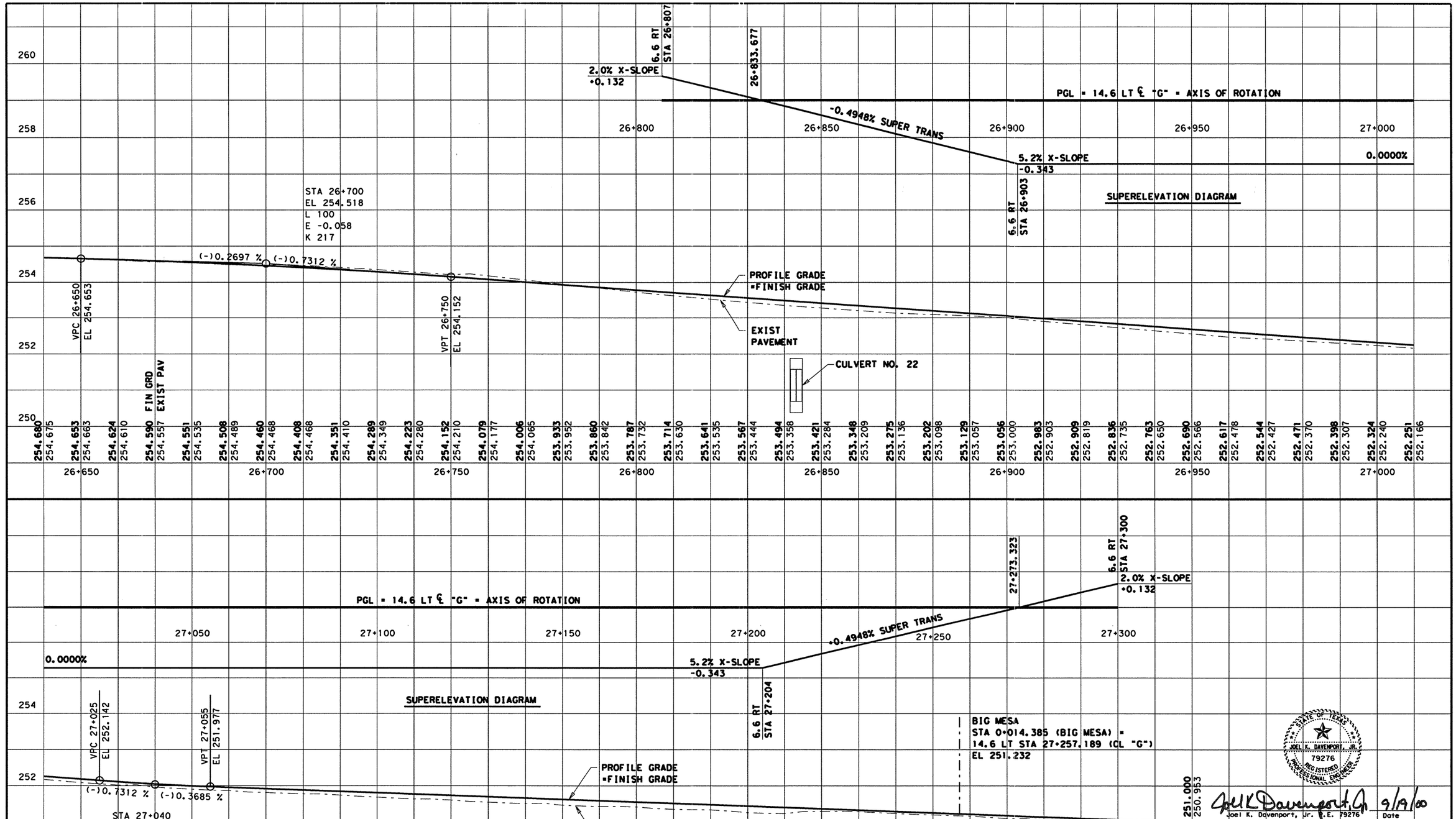


LEVELS DISPLAYED
1 2 3 4 5 6 7 8 9 10 11 12 13 14 15 16
17 18 19 20 21 22 23 24 25 26 27 28 29 30 31 32
33 34 35 36 37 38 39 40 41 42 43 44 45 46 47 48
49 50 51 52 53 54 55 56 57 58 59 60 61 62 63

ACC: lp1604fm471-90\
FILE: prof01.dgn

STATE OF TEXAS
JOEL K. DAVENPORT, JR.
79276
REGISTERED
PROFESSIONAL ENGINEER

Joel K Davenport, Jr. 9/19/00
Joel K. Davenport, Jr. P.E. 79276 Date

©2000

Texas Department of Transportation

# MAINLANE PROFILE

SHEET 19 OF 21

| FED.RD. DIV.NO. | FEDERAL AID PROJECT NO. | SHEET NO. |
|---|---|---|
| 6 | NH 2000(704), etc. | 266 |
| STATE | DIST. | COUNTY |
| TEXAS | SAT | BEXAR |
| CONT. | SECT. | JOB / HIGHWAY NO. |
| 2452 | 01 | 036, etc. / LP 1604 |

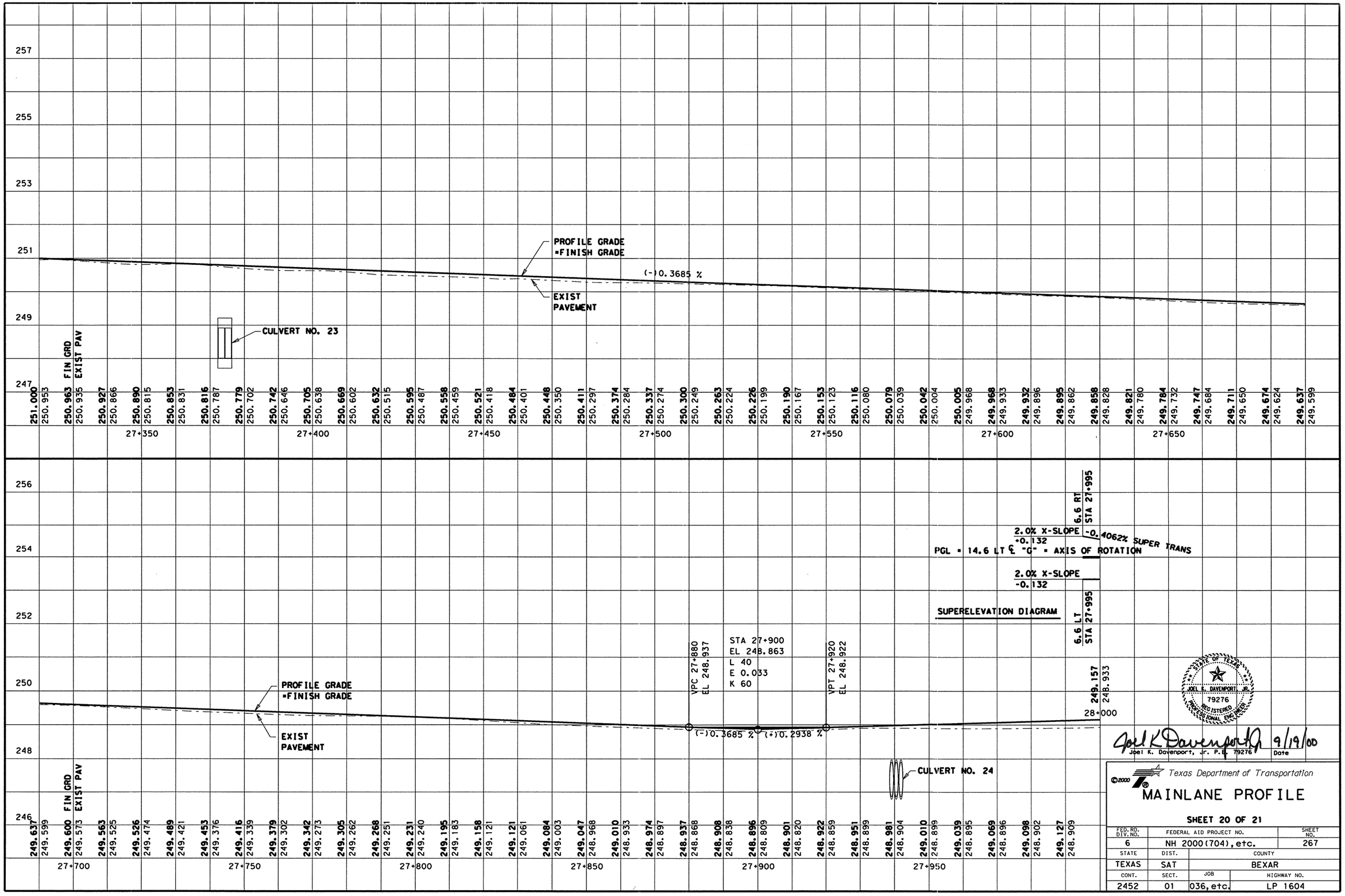


Joel K. Davenport, Jr. P.E. 79276 — 9/19/00
Date

Texas Department of Transportation

# MAINLANE PROFILE

**SHEET 20 OF 21**

| FED. RD. DIV. NO. | FEDERAL AID PROJECT NO. | SHEET NO. |
|---|---|---|
| 6 | NH 2000(704), etc. | 267 |
| STATE | DIST. | COUNTY |
| TEXAS | SAT | BEXAR |
| CONT. | SECT. | JOB / HIGHWAY NO. |
| 2452 | 01 | 036, etc. / LP 1604 |

LEVELS DISPLAYED
1 2 3 4 5 6 7 8 9 10 11 12 13 14 15 16
17 18 19 20 21 22 23 24 25 26 27 28 29 30 31 32
33 34 35 36 37 38 39 40 41 42 43 44 45 46 47 48
49 50 51 52 53 54 55 56 57 58 59 60 61 62 63

ACC: lp1604fm471-90\
FILE: prof01.dgn

-0.4062% SUPER TRANS 28+027.496 PGL = 14.6 LT ℄ "G" = AXIS OF ROTATION

2.0% X-SLOPE

-0.132

28+050

6.6 LT & RT STA 28+060

SUPERELEVATION DIAGRAM

BEGIN CROWN SECTION STA 28+060

PROFILE GRADE =FINISH GRADE

EXIST PAVEMENT

(+)0.2938 %

(-)0.2579 %

STA 28+300
EL 250.038
L 100
E -0.069
K 181

VPC 28+250 EL 249.891

VPT 28+350 EL 249.909

| | 28+000 | | | | 28+050 | | | | 28+100 | | | | 28+150 | | | | 28+200 | | | | 28+250 | | | | 28+300 | | | | 28+350 | | | |
|---|---|---|---|---|---|---|---|---|---|---|---|---|---|---|---|---|---|---|---|---|---|---|---|---|---|---|---|---|---|---|---|---|
| FIN GRD | 249.157 | 249.186 | 249.216 | 249.245 | 249.274 | 249.304 | 249.333 | 249.362 | 249.392 | 249.421 | 249.451 | 249.480 | 249.509 | 249.539 | 249.568 | 249.597 | 249.627 | 249.656 | 249.686 | 249.715 | 249.744 | 249.774 | 249.803 | 249.832 | 249.862 | 249.891 | 249.918 | 249.939 | 249.954 | 249.964 | 249.969 | 249.968 | 249.962 | 249.950 | 249.932 | 249.909 | 249.883 | 249.857 |
| EXIST PAV | 248.933 | 248.965 | 248.996 | 249.032 | 249.069 | 249.107 | 249.144 | 249.177 | 249.208 | 249.238 | 249.271 | 249.307 | 249.344 | 249.380 | 249.417 | 249.454 | 249.491 | 249.532 | 249.576 | 249.613 | 249.637 | 249.661 | 249.685 | 249.714 | 249.745 | 249.772 | 249.801 | 249.837 | 249.874 | 249.910 | 249.894 | 249.874 | 249.855 | 249.852 | 249.854 | 249.855 | 249.852 | 249.822 |

257

255

253

251

249

247

END MAINLANE PROFILE
MATCH EXISTING
14.6 LT STA 28+552 (℄ "G")
EL 249.388

PROFILE GRADE =FINISH GRADE

(-)0.2579 %

EXIST PAVEMENT

CULVERT NO. 25

CULVERT NO. 26

| | 28+400 | | | | 28+450 | | | | 28+500 | | | | 28+550 | |
|---|---|---|---|---|---|---|---|---|---|---|---|---|---|---|
| FIN GRD | 249.857 | 249.832 | 249.806 | 249.780 | 249.754 | 249.728 | 249.703 | 249.677 | 249.651 | 249.625 | 249.600 | 249.574 | 249.548 | 249.522 | 249.496 | 249.471 | 249.445 | 249.419 | 249.393 |
| EXIST PAV | 249.822 | 249.793 | 249.763 | 249.733 | 249.701 | 249.666 | 249.631 | 249.598 | 249.566 | 249.571 | 249.575 | 249.580 | 249.527 | 249.462 | 249.414 | 249.417 | 249.419 | 249.418 | 249.394 |

LEVELS DISPLAYED
1 2 3 4 5 6 7 8 9 10 11 12 13 14 15 16
17 18 19 20 21 22 23 24 25 26 27 28 29 30 31 32
33 34 35 36 37 38 39 40 41 42 43 44 45 46 47 48
49 50 51 52 53 54 55 56 57 58 59 60 61 62 63

ACC: lp1604fm471-90\
FILE: prof01.dgn

STATE OF TEXAS
JOEL K. DAVENPORT, JR.
79276
REGISTERED PROFESSIONAL ENGINEER

Joel K Davenport Jr 9/19/00
Joel K. Davenport, Jr. P.E. 79276 Date

© 2000 Texas Department of Transportation

# MAINLANE PROFILE

**SHEET 21 OF 21**

| FED.RD. DIV.NO. | FEDERAL AID PROJECT NO. | | SHEET NO. |
|---|---|---|---|
| 6 | NH 2000(704), etc. | | 268 |
| STATE | DIST. | COUNTY | |
| TEXAS | SAT | BEXAR | |
| CONT. | SECT. | JOB | HIGHWAY NO. |
| 2452 | 01 | 036, etc. | LP 1604 |

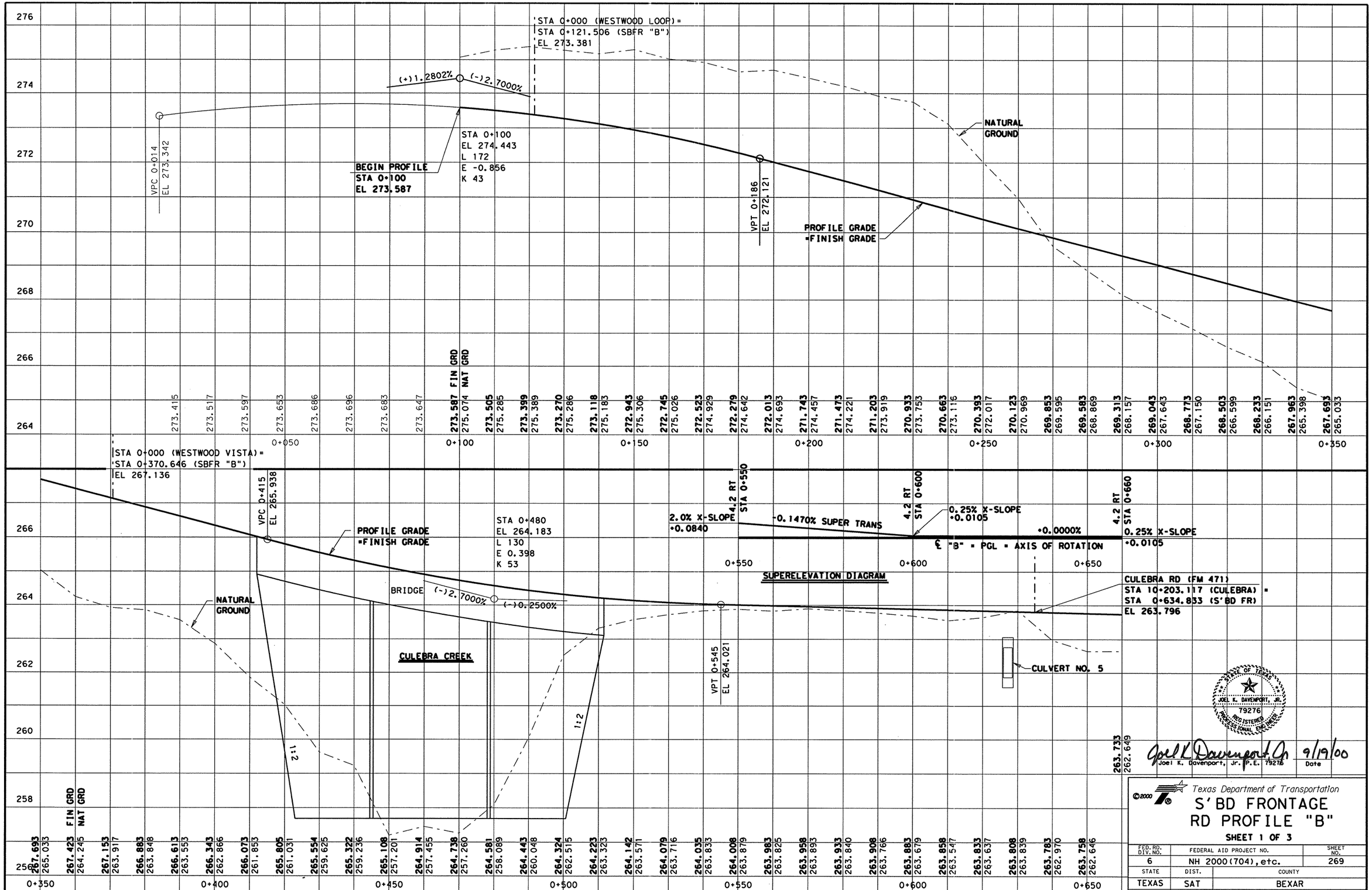


LEVELS DISPLAYED
1 2 3 4 5 6 7 8 9 0 11 12 13 14 15 16
7 18 19 20 21 22 23 24 25 26 27 28 29 30 31 32
33 43 53 63 73 83 93 04 14 24 34 44 54 64 74 84
95 05 15 25 35 45 55 65 75 85 96 06 16 26 63

ACC: lp1604fm471-90\
FILE: prof01.dgn

STATE OF TEXAS
JOEL K. DAVENPORT, JR.
79276
REGISTERED
PROFESSIONAL ENGINEER

Joel K. Davenport, Jr. 9/19/00
Joel K. Davenport, Jr. P.E. 79276 Date

©2000

Texas Department of Transportation

# S'BD FRONTAGE RD PROFILE "B"

SHEET 1 OF 3

| FED. RD. DIV. NO. | FEDERAL AID PROJECT NO. | SHEET NO. |
|---|---|---|
| 6 | NH 2000(704), etc. | 269 |
| STATE | DIST. | COUNTY |
| TEXAS | SAT | BEXAR |
| CONT. | SECT. | JOB / HIGHWAY NO. |
| 2452 | 01 | 076 etc. / LP 1604 |

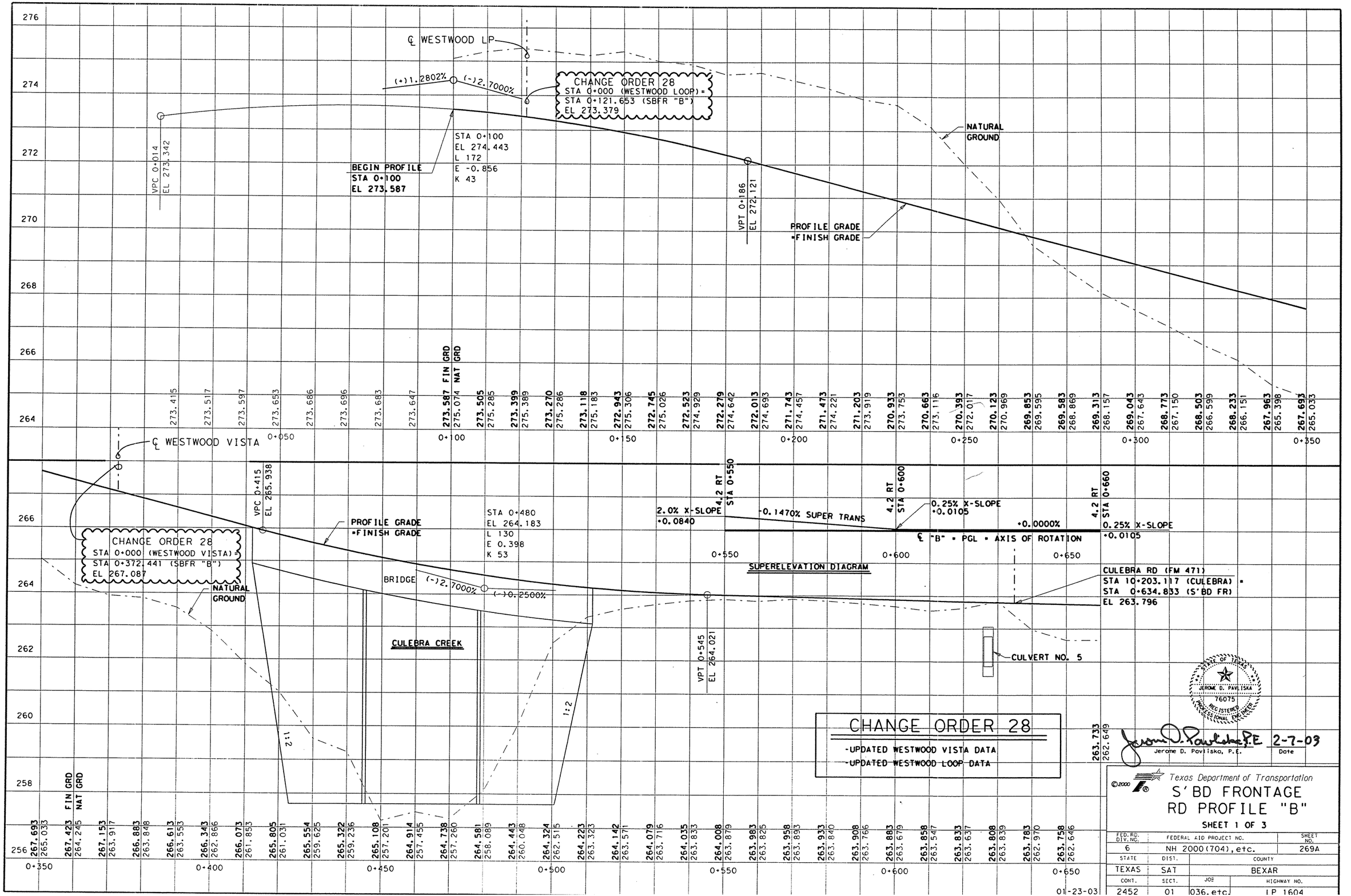


CHANGE ORDER 28

- -UPDATED WESTWOOD VISTA DATA
- -UPDATED WESTWOOD LOOP DATA

STATE OF TEXAS
JEROME D. PAVLISKA
76075
REGISTERED PROFESSIONAL ENGINEER

Jerome D. Pavliska, P.E. 2-7-03
Jerome D. Pavliska, P.E. Date

©2000

Texas Department of Transportation

# S'BD FRONTAGE RD PROFILE "B"

SHEET 1 OF 3

| FED.RD. DIV.NO. | FEDERAL AID PROJECT NO. | SHEET NO. |
|---|---|---|
| 6 | NH 2000(704), etc. | 269A |
| STATE | DIST. | COUNTY |
| TEXAS | SAT | BEXAR |
| CONT. | SECT. | JOB / HIGHWAY NO. |
| 2452 | 01 | 036, etc. / IP 1604 |

01-23-03

LEVELS DISPLAYED
1 2 3 4 5 6 7 8 9 10 11 12 13 14 15 16
17 18 19 20 21 22 23 24 25 26 27 28 29 30 31 32
33 34 35 36 37 38 39 40 41 42 43 44 45 46 47 48
49 50 51 52 53 54 55 56 57 58 59 60 61 62 63

ACC: ip1604fm471-90\
FILE: prof01-c028.dgn

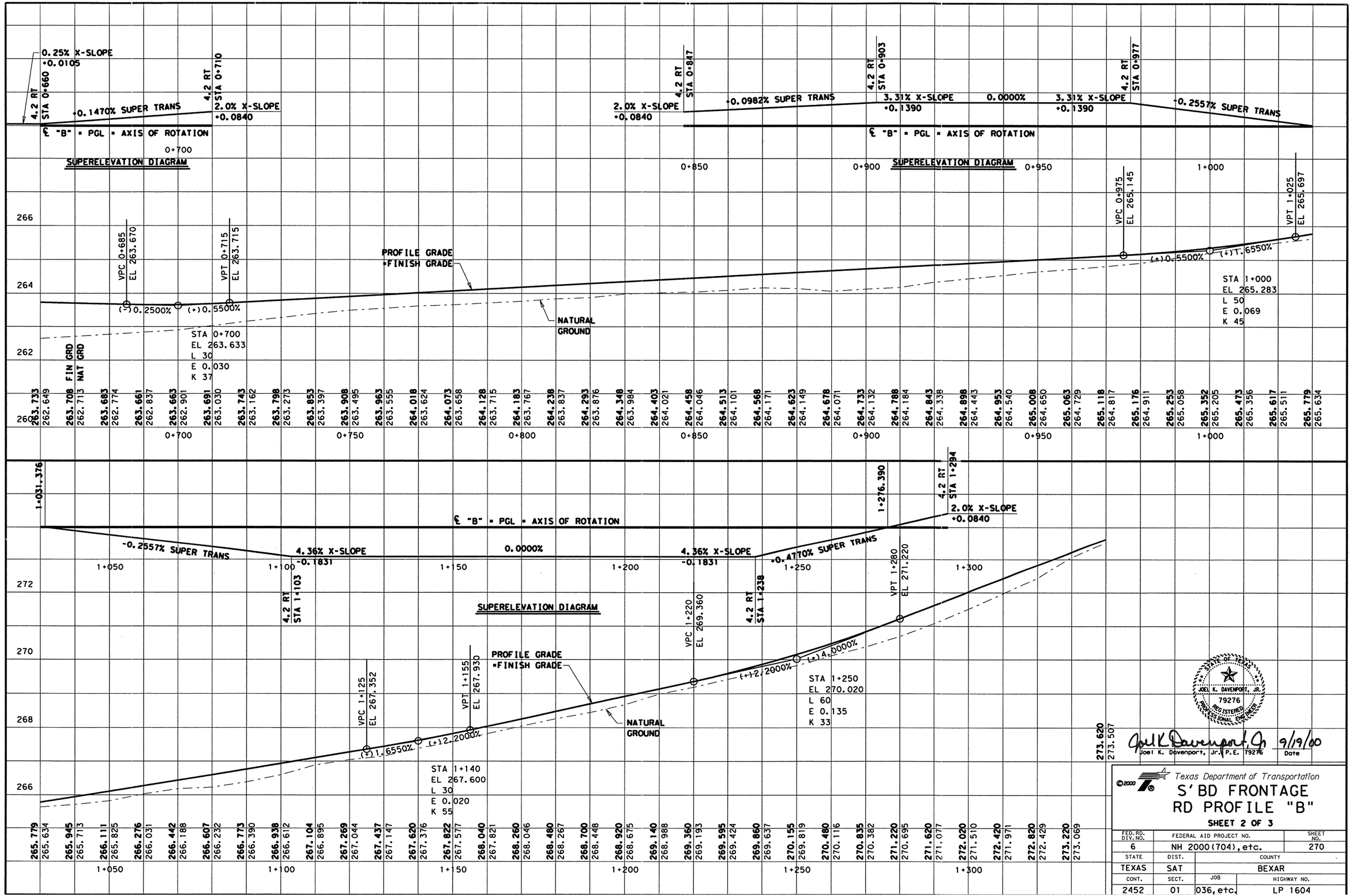


LEVELS DISPLAYED
1 2 3 4 5 6 7 8 9 10 11 12 13 14 15 16 17 18 19 20 21 22 23 24 25 26 27 28 29 30 31 32 33 34 35 36 37 38 39 40 41 42 43 44 45 46 47 48 49 50 51 52 53 54 55 56 57 58 59 60 61 62 63

ACC: lp1604fm471-90\
FILE: prof01.dgn

STATE OF TEXAS
JOEL K. DAVENPORT, JR.
79276
REGISTERED PROFESSIONAL ENGINEER

Joel K. Davenport, Jr. 9/19/00
Joel K. Davenport, Jr., P.E. 79276 — Date

Texas Department of Transportation

# S'BD FRONTAGE RD PROFILE "B"

SHEET 2 OF 3

| FED.RD. DIV.NO. | FEDERAL AID PROJECT NO. | SHEET NO. |
|---|---|---|
| 6 | NH 2000(704), etc. | 270 |
| STATE | DIST. | COUNTY |
| TEXAS | SAT | BEXAR |
| CONT. | SECT. | JOB / HIGHWAY NO. |
| 2452 | 01 | 036, etc. / LP 1604 |

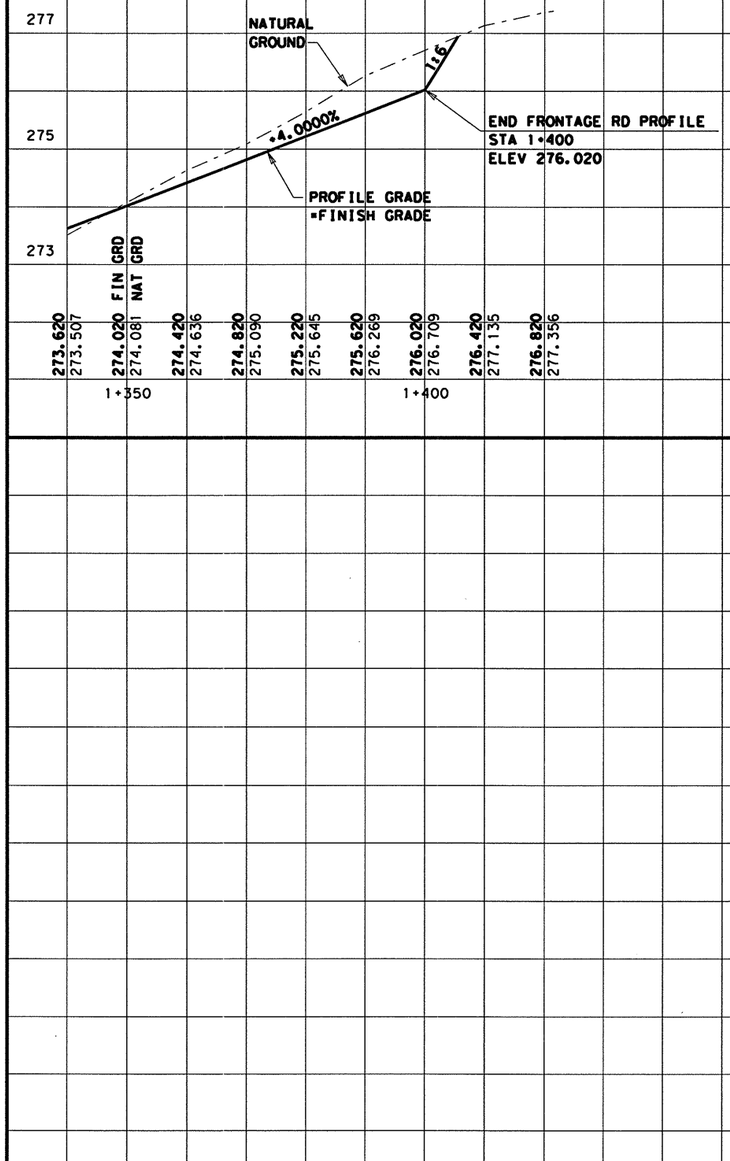


LEVELS DISPLAYED
1 2 3 4 5 6 7 8 9 10 11 12 13 14 15 16
17 18 19 20 21 22 23 24 25 26 27 28 29 30 31 32
33 34 35 36 37 38 39 40 41 42 43 44 45 46 47 48
49 50 51 52 53 54 55 56 57 58 59 60 61 62 63 64

ACC: lp1604fm471-90\

FILE: prof01.dgn

STATE OF TEXAS
JOEL K. DAVENPORT, JR.
79276
REGISTERED
PROFESSIONAL ENGINEER

Joel K. Davenport, Jr. P.E. 79276

9/19/00
Date

©2000

Texas Department of Transportation

# S'BD FRONTAGE RD PROFILE "B"

**SHEET 3 OF 3**

| FED. RD. DIV. NO. | FEDERAL AID PROJECT NO. | | SHEET NO. |
|---|---|---|---|
| 6 | NH 2000(704), etc. | | 271 |
| STATE | DIST. | COUNTY | |
| TEXAS | SAT | BEXAR | |
| CONT. | SECT. | JOB | HIGHWAY NO. |
| 2452 | 01 | 036, etc. | LP 1604 |

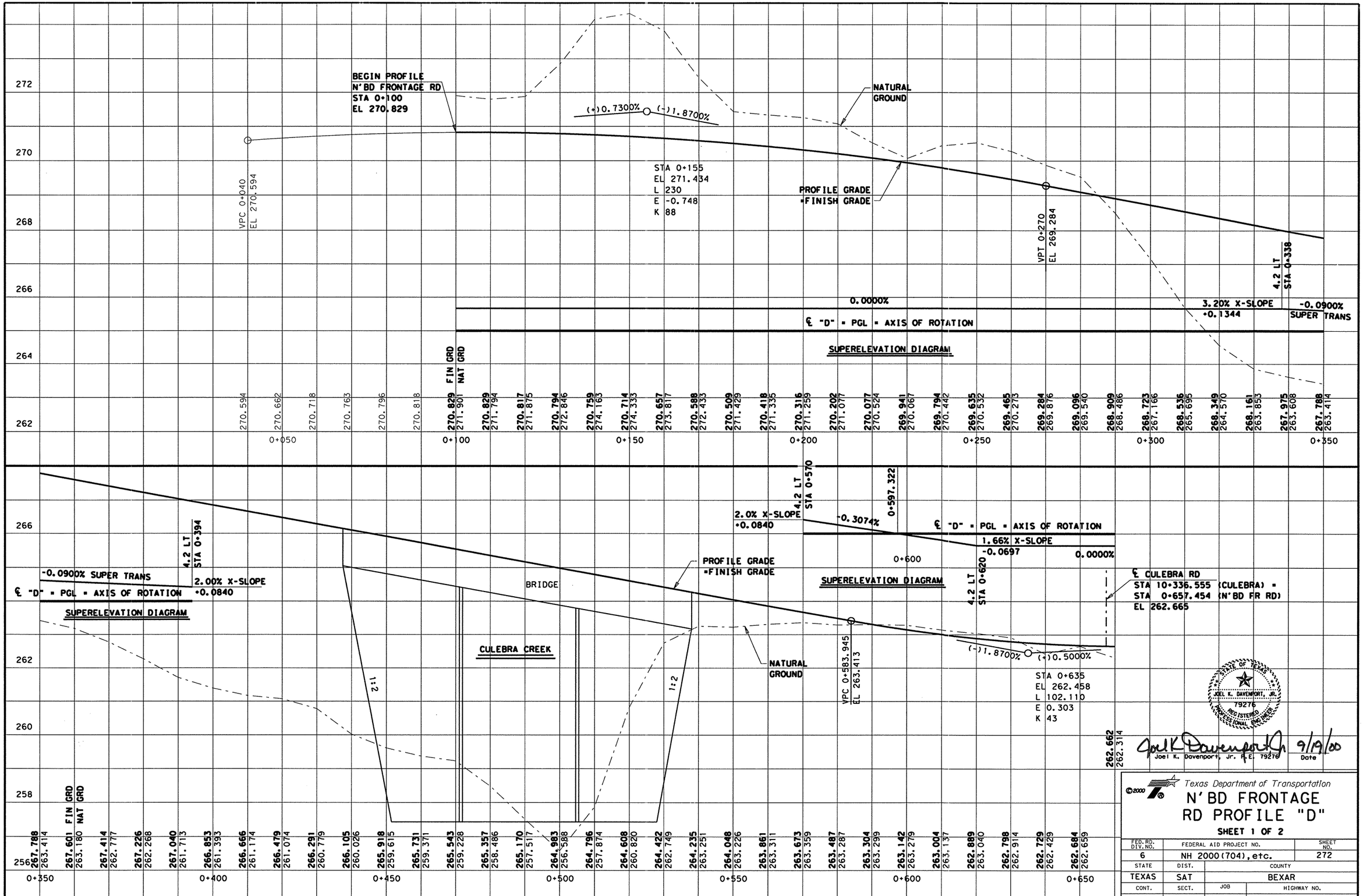
BEGIN PROFILE
N'BD FRONTAGE RD
STA 0+100
EL 270.829
(+)0.7300%
(-)1.8700%
NATURAL GROUND
STA 0+155
EL 271.434
L 230
E -0.748
K 88
PROFILE GRADE
•FINISH GRADE
VPC 0+040
EL 270.594
VPT 0+270
EL 269.284
4.2 LT
STA 0+338
0.0000%
3.20% X-SLOPE
•0.1344
-0.0900%
SUPER TRANS
℄ "D" = PGL = AXIS OF ROTATION
SUPERELEVATION DIAGRAM
FIN GRD
NAT GRD
270.829 271.901
270.829 271.794
270.817 271.875
270.794 272.846
270.759 274.163
270.714 274.333
270.657 273.817
270.588 272.433
270.509 271.429
270.418 271.335
270.316 271.259
270.202 271.077
270.077 270.524
269.941 270.067
269.794 270.442
269.635 270.532
269.465 270.273
269.284 269.876
269.096 269.540
268.909 268.486
268.723 267.166
268.536 265.695
268.349 264.570
268.161 263.853
267.975 263.608
267.788 263.414
270.594
270.662
270.718
270.763
270.796
270.818
0+050
0+100
0+150
0+200
0+250
0+300
0+350
-0.0900% SUPER TRANS
4.2 LT
STA 0+394
2.00% X-SLOPE
•0.0840
℄ "D" = PGL = AXIS OF ROTATION
SUPERELEVATION DIAGRAM
BRIDGE
CULEBRA CREEK
1:2
1:2
PROFILE GRADE
•FINISH GRADE
NATURAL GROUND
2.0% X-SLOPE
•0.0840
4.2 LT
STA 0+570
-0.3074%
0+597.322
℄ "D" = PGL = AXIS OF ROTATION
1.66% X-SLOPE
-0.0697
0.0000%
0+600
SUPERELEVATION DIAGRAM
4.2 LT
STA 0+620
℄ CULEBRA RD
STA 10+336.555 (CULEBRA) =
STA 0+657.454 (N'BD FR RD)
EL 262.665
VPC 0+583.945
EL 263.413
(-)1.8700%
(+)0.5000%
STA 0+635
EL 262.458
L 102.110
E 0.303
K 43
267.601 263.180 FIN GRD NAT GRD
267.414 262.777
267.226 262.268
267.040 261.713
266.853 261.393
266.666 261.174
266.479 261.074
266.291 260.779
266.105 260.026
265.918 259.615
265.731 259.371
265.543 259.228
265.357 258.486
265.170 257.517
264.983 256.588
264.796 257.874
264.608 260.820
264.422 262.749
264.235 263.251
264.048 263.226
263.861 263.311
263.673 263.359
263.487 263.287
263.304 263.299
263.142 263.279
263.004 263.137
262.889 263.040
262.798 262.914
262.729 262.429
262.684 262.659
262.662
262.314
0+350
0+400
0+450
0+500
0+550
0+600
0+650
STATE OF TEXAS
JOEL K. DAVENPORT, JR.
79276
REGISTERED
PROFESSIONAL ENGINEER
Joel K. Davenport Jr. 9/9/00
Joel K. Davenport, Jr. P.E. 79276
Date
©2000
Texas Department of Transportation
N'BD FRONTAGE
RD PROFILE "D"
SHEET 1 OF 2
FED.RD. DIV. NO. 6
FEDERAL AID PROJECT NO. NH 2000(704), etc.
SHEET NO. 272
STATE TEXAS
DIST. SAT
COUNTY BEXAR
CONT. 2452
SECT. 01
JOB 036, etc.
HIGHWAY NO. LP 1604
LEVELS DISPLAYED
ACC: lp1604fm471-90\
FILE: prof01.dgn

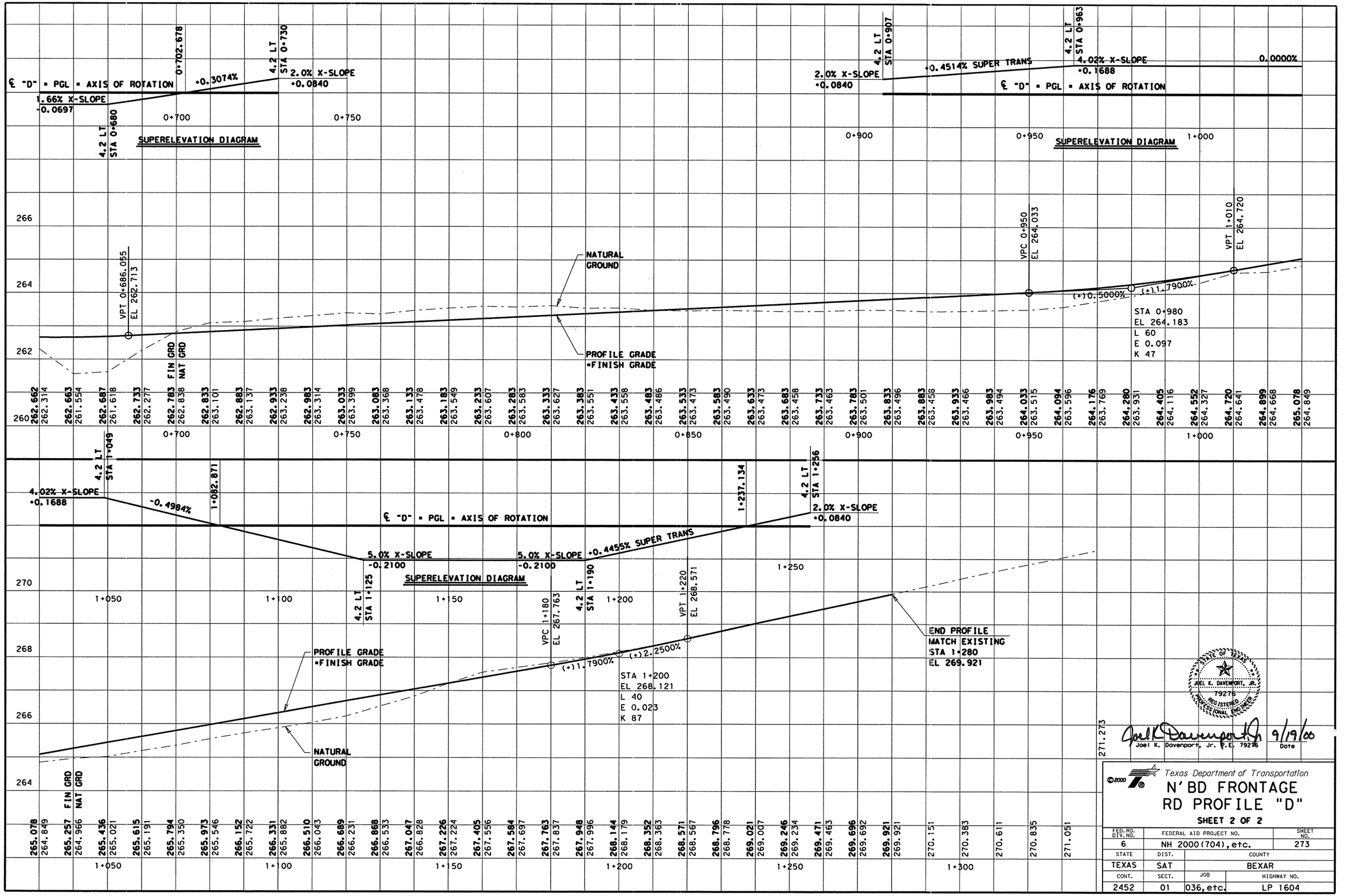


LEVELS DISPLAYED
1 2 3 4 5 6 7 8 9 10 11 12 13 14 15 16
17 18 19 20 21 22 23 24 25 26 27 28 29 30 31 32
33 34 35 36 37 38 39 40 41 42 43 44 45 46 47 48
49 50 51 52 53 54 55 56 57 58 59 60 61 62 63

ACC: lp1604fm471-90\
FILE: prof01.dgn

STATE OF TEXAS
JOEL K. DAVENPORT, JR.
79276
REGISTERED PROFESSIONAL ENGINEER

Joel K. Davenport, Jr. P.E. 79276 — Date 9/19/00

© 2000

Texas Department of Transportation

# N'BD FRONTAGE RD PROFILE "D"

SHEET 2 OF 2

| FED.RD. DIV.NO. | FEDERAL AID PROJECT NO. | SHEET NO. |
|---|---|---|
| 6 | NH 2000(704), etc. | 273 |
| STATE | DIST. | COUNTY |
| TEXAS | SAT | BEXAR |
| CONT. | SECT. | JOB / HIGHWAY NO. |
| 2452 | 01 | 036, etc. / LP 1604 |

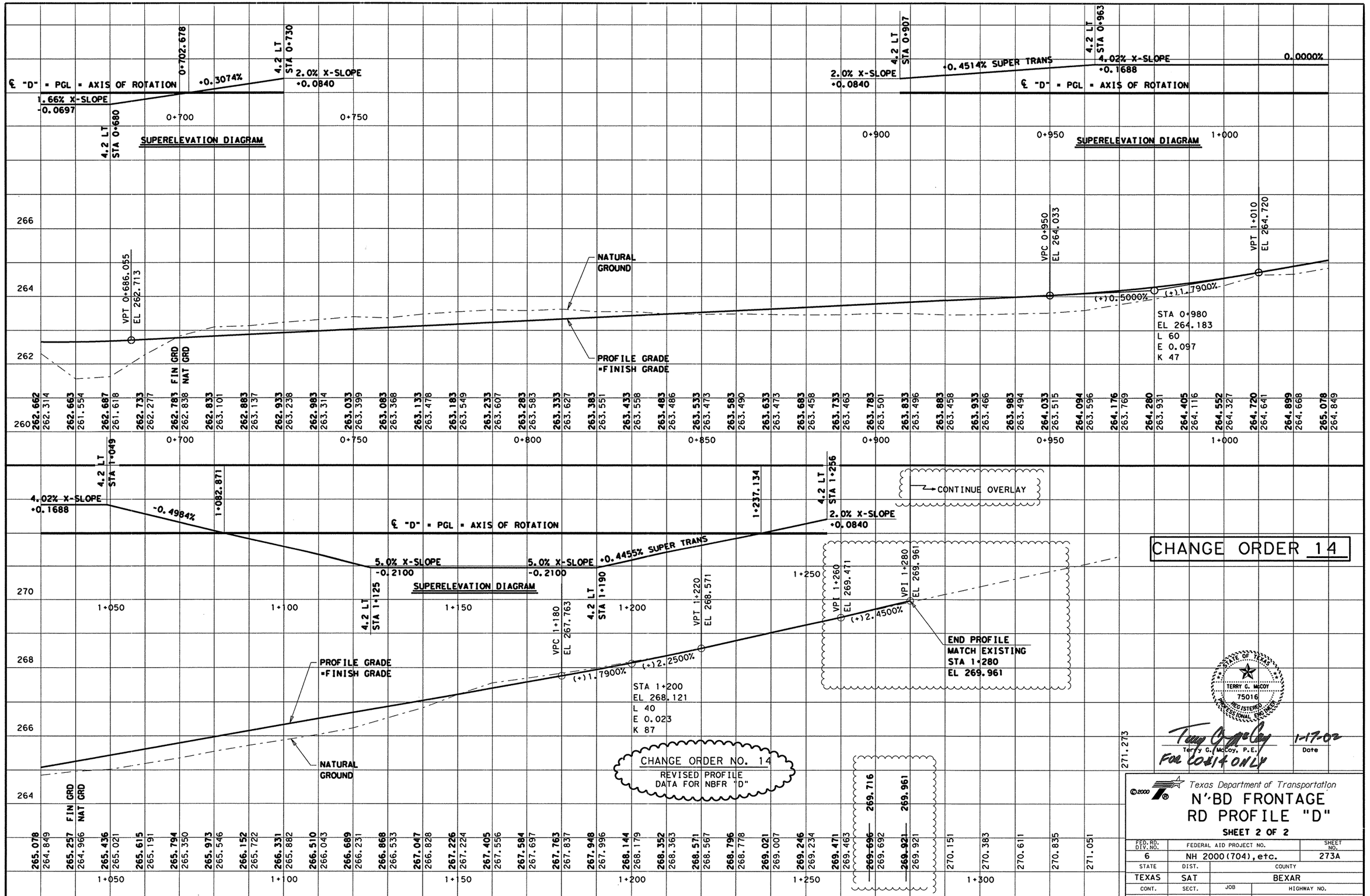


LEVELS DISPLAYED
1 2 3 4 5 6 7 8 9 10 11 12 13 14 15 16
17 18 19 20 21 22 23 24 25 26 27 28 29 30 31 32
33 34 35 36 37 38 39 40 41 42 43 44 45 46 47 48
49 50 51 52 53 54 55 56 57 58 59 60 61 62 63

ACC: lp1604fm471-90\
FILE: prof01.dgn

STATE OF TEXAS
TERRY G. McCOY
75016
REGISTERED PROFESSIONAL ENGINEER

Terry G. McCoy, P.E.
FOR LOGIT ONLY

1-17-02
Date

©2000

Texas Department of Transportation

# N'BD FRONTAGE RD PROFILE "D"

SHEET 2 OF 2

| FED. RD. DIV. NO. | FEDERAL AID PROJECT NO. | SHEET NO. |
|---|---|---|
| 6 | NH 2000(704), etc. | 273A |
| STATE | DIST. | COUNTY |
| TEXAS | SAT | BEXAR |
| CONT. | SECT. | JOB / HIGHWAY NO. |
| 2452 | 01 | 036, etc. / LP 1604 |

1-14-02

PLANE/OVERLAY EXISTING FRONTAGE RD
SEE PLAN SHEETS FOR FURTHER INFO

BEGIN NBFR "G" PROFILE
MATCH EXISTING
STA 0+075
EL 299.343

VPC 0+075
EL 299.343

CULVERT NO. 7

STA 0+200
EL 301.818
L 250
E -1.261
K 62

(+)1.9800%
(-)2.0540%

NATURAL GROUND

PROFILE GRADE
=FINISH GRADE

VPT 0+325
EL 299.250

VPC 0+425
EL 297.196

| | 0+100 | 0+150 | 0+200 | 0+250 | 0+300 | 0+350 | 0+400 |
|---|---|---|---|---|---|---|---|
| FIN GRD | 299.440 | 299.622 | 299.788 | 299.937 | 300.071 | 300.188 | 300.289 |
| NAT GRD | 299.442 | 299.620 | 299.838 | 300.083 | 300.340 | 299.473 | 298.217 |
| FIN GRD | 300.374 | 300.443 | 300.496 | 300.533 | 300.553 | 300.557 | 300.546 |
| NAT GRD | 297.879 | 297.834 | 298.522 | 299.268 | 299.783 | 300.319 | 300.771 |
| FIN GRD | 300.518 | 300.474 | 300.413 | 300.337 | 300.245 | 300.136 | 300.011 |
| NAT GRD | 301.251 | 301.739 | 302.111 | 302.401 | 302.669 | 302.655 | 302.478 |
| FIN GRD | 299.871 | 299.714 | 299.540 | 299.351 | 299.148 | 298.942 | 298.737 |
| NAT GRD | 302 107 | 301.717 | 301.324 | 300.918 | 300.444 | 299.881 | 299.322 |
| FIN GRD | 298.532 | 298.326 | 298.121 | 297.915 | 297.710 | 297.505 | 297.299 |
| NAT GRD | 298.796 | 298.410 | 297.826 | 297.229 | 296.823 | 296.286 | 295.860 |
| FIN GRD | 297.096 | 296.909 | 296.741 | 296.591 | 296.460 | 296.348 | 296.253 |
| NAT GRD | 295.527 | 295.067 | 294.597 | 294.186 | 293.887 | 293.494 | 293.181 |
| FIN GRD | 296.178 | 296.121 | 296.083 | 296.063 | 296.062 | 296.079 | 296.115 |
| NAT GRD | 293.117 | 293.219 | 293.690 | 294.032 | 294.555 | 294.952 | 295.250 |
| FIN GRD | 296.169 | 296.240 | 296.313 | 296.381 | 296.433 | 296.469 | 296.489 |
| NAT GRD | 295.622 | 296.081 | 296.171 | 296.461 | 296.734 | 296.985 | 297.195 |
| FIN GRD | 296.493 | 296.481 | 296.453 | 296.409 | 296.348 | 296.272 | 296.180 |
| NAT GRD | 297.299 | 297.389 | 297.470 | 297.280 | 297.148 | 297.165 | 297.083 |
| FIN GRD | 296.071 | 295.947 | 295.806 | | | | |
| NAT GRD | 297.048 | 297.088 | 297.267 | | | | |

STA 0+500
EL 295.656
L 150
E 0.522
K 54

VPT 0+575
EL 296.204

VPC 0+592
EL 296.328

(-)2.0540%
(+)0.7300%

CULVERT NO. 9

STA 0+720
EL 297.262
L 256
E -1.315
K 62

(+)0.7300%
(-)3.3800%

NATURAL GROUND

PROFILE GRADE
=FINISH GRADE

295.650

STATE OF TEXAS
JOEL K. DAVENPORT, JR.
79276
REGISTERED PROFESSIONAL ENGINEER

Joel K. Davenport, Jr. 9/19/00
Joel K. Davenport, Jr. P.E. 79276 Date

LEVELS DISPLAYED
1 2 3 4 5 6 7 8 9 10 11 12 13 14 15 16
17 18 19 20 21 22 23 24 25 26 27 28 29 30 31 32
33 34 35 36 37 38 39 40 41 42 43 44 45 46 47 48
49 50 51 52 53 54 55 56 57 58 59 60 61 62 63

ACC: lp1604fm471-90\
FILE: prof01.dgn

©2000 Texas Department of Transportation

# N' BU FRONTAGE RD
# "G" PROFILE

SHEET 1 OF 15

| FED.RD. DIV.NO. | FEDERAL AID PROJECT NO. | SHEET NO. |
|---|---|---|
| 6 | NH 2000(704), etc. | 274 |
| STATE | DIST. | COUNTY |
| TEXAS | SAT | BEXAR |
| CONT. | SECT. | JOB / HIGHWAY NO. |
| 2452 | 01 | 036, etc. / LP 1604 |

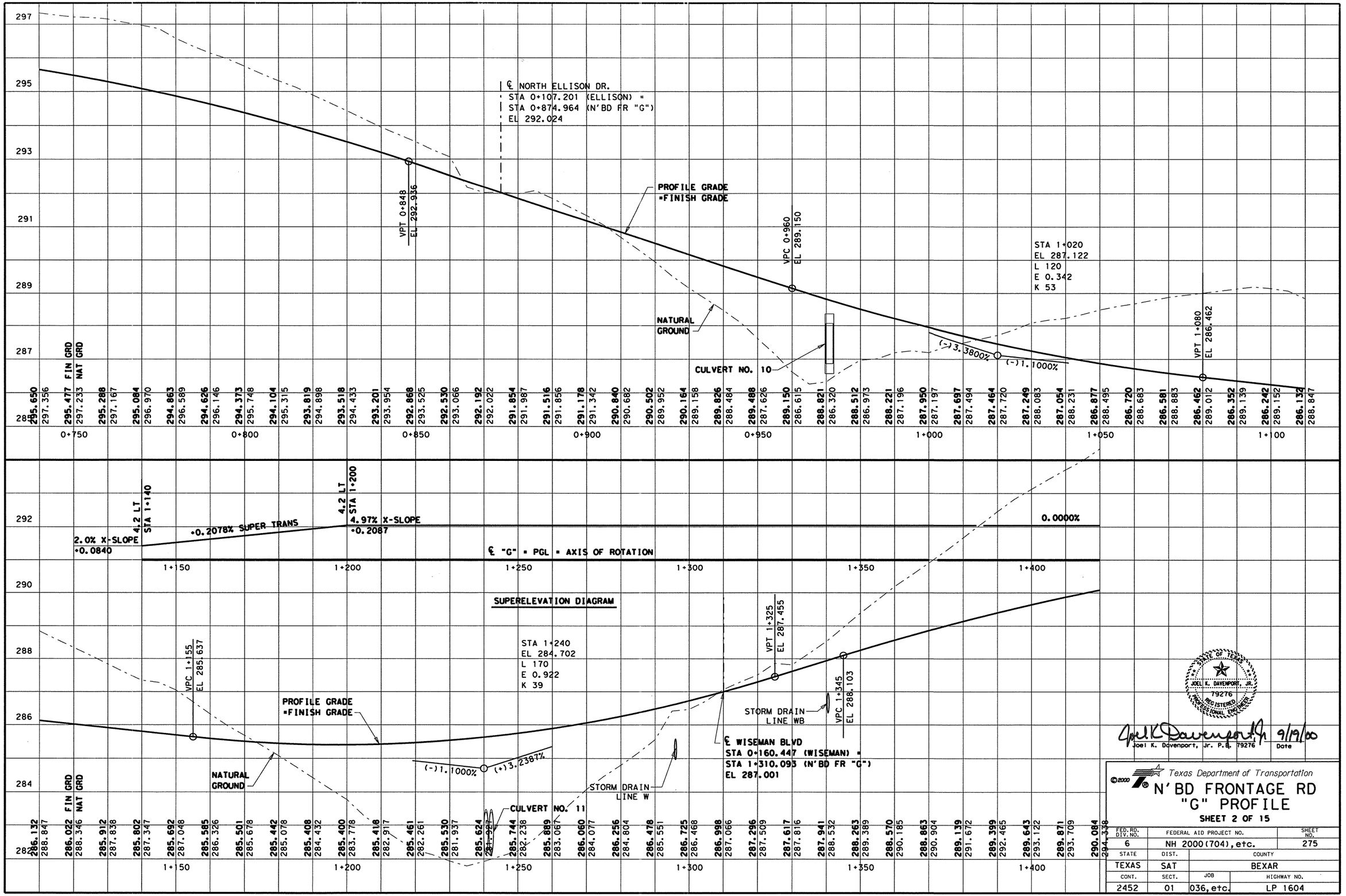


LEVELS DISPLAYED
ACC: lp1604fm471-90\
FILE: prof01.dgn

STATE OF TEXAS
JOEL K. DAVENPORT, JR.
79276
REGISTERED PROFESSIONAL ENGINEER

Joel K. Davenport, Jr. P.E. 79276 — Date 9/19/00

Texas Department of Transportation

# N'BD FRONTAGE RD "G" PROFILE

SHEET 2 OF 15

| FED.RD. DIV.NO. | FEDERAL AID PROJECT NO. | SHEET NO. |
|---|---|---|
| 6 | NH 2000(704), etc. | 275 |
| STATE | DIST. | COUNTY |
| TEXAS | SAT | BEXAR |
| CONT. | SECT. | JOB / HIGHWAY NO. |
| 2452 | 01 | 036, etc. / LP 1604 |

CHANGE ORDER NO. 64

- REVISED PROFILE FOR ADA PURPOSES AT WISEMAN BLVD.

-REVISED SUPERELEVATION DIAGRAM

℄ NORTH ELLISON DR.
STA 0+107.201 (ELLISON) =
STA 0+874.964 (N'BD FR "G")
EL 292.024

VPT 0+848
EL 292.936

PROFILE GRADE
=FINISH GRADE

VPC 0+960
EL 289.150

STA 1+020
EL 287.122
L 120
E 0.342
K 53

NATURAL GROUND

CULVERT NO. 10

(-)3.3800%

(-)1.1000%

VPT 1+080
EL 286.462

| | 0+750 | | 0+800 | | 0+850 | | 0+900 | | 0+950 | | 1+000 | | 1+050 | | 1+100 |
|---|---|---|---|---|---|---|---|---|---|---|---|---|---|---|---|
| FIN GRD | 295.650 | 295.477 | 295.288 | 295.084 | 294.863 | 294.626 | 294.373 | 294.104 | 293.819 | 293.518 | 293.201 | 292.868 | 292.530 | 292.192 | 291.854 |
| NAT GRD | 297.356 | 297.233 | 297.167 | 296.970 | 296.589 | 296.146 | 295.748 | 295.315 | 294.898 | 294.433 | 293.954 | 293.525 | 293.066 | 292.022 | 291.987 |
| FIN GRD | 291.516 | 291.178 | 290.840 | 290.502 | 290.164 | 289.826 | 289.488 | 289.150 | 288.821 | 288.512 | 288.221 | 287.950 | 287.697 | 287.464 | 287.249 |
| NAT GRD | 291.856 | 291.342 | 290.682 | 289.952 | 289.158 | 288.484 | 287.626 | 286.615 | 286.320 | 286.973 | 287.196 | 287.197 | 287.494 | 287.720 | 288.083 |
| FIN GRD | 287.054 | 286.877 | 286.720 | 286.581 | 286.462 | 286.352 | 286.242 | 286.132 | | | | | | | |
| NAT GRD | 288.231 | 288.495 | 288.683 | 288.883 | 289.012 | 289.139 | 289.152 | 288.847 | | | | | | | |

4.2 LT STA 1+140 — BEGIN TRANSITION

4.2 LT STA 1+200 — END TRANSITION

4.2 LT STA 1+400 — BEGIN TRANSITION

| | | | | |
|---|---|---|---|---|
| 2.0% X-SLOPE | (-)0.0152 % TRANSITION | 1.783 % X-SLOPE | 0.000% TRANSITION | 1.783 % X-SLOPE | (+)0.0152 % TRANS |
| +0.0840 | (+)0.0840 | (+)0.0749 | | (+)0.0749 | |

℄ "G" = PGL = AXIS OF ROTATION

| | 1+150 | | 1+200 | | 1+250 | | 1+300 | | 1+350 | | 1+400 | |
|---|---|---|---|---|---|---|---|---|---|---|---|---|
| FIN GRD | 286.132 | 286.022 | 285.923 | 285.845 | 285.789 | 285.755 | 285.742 | 285.751 | 285.782 | 285.834 | 285.907 | 286.003 |
| NAT GRD | 288.847 | 288.346 | 287.838 | 287.347 | 287.048 | 286.326 | 285.678 | 285.078 | 284.432 | 283.778 | 282.917 | 282.261 |
| FIN GRD | 286.120 | 286.258 | 286.408 | 286.557 | 286.707 | 286.856 | 287.005 | 287.155 | 287.304 | 287.454 | 287.603 | 287.928 |
| NAT GRD | 281.937 | 281.923 | 282.238 | 283.067 | 284.077 | 284.804 | 285.551 | 286.468 | 287.066 | 287.509 | 287.816 | 288.532 |
| FIN GRD | 288.250 | 288.559 | 288.851 | 289.128 | 289.389 | 289.634 | 289.863 | 290.075 | | | | |
| NAT GRD | 289.389 | 290.185 | 290.904 | 291.672 | 292.465 | 293.122 | 293.709 | 294.338 | | | | |

BEGIN ADA\PROFILE REVISIONS

VPC 1+120
EL 286.022

NATURAL GROUND

VPI
STA 1+180
EL 285.362
L 120
E 0.389
K 46

PROFILE GRADE
=FINISH GRADE

VPC/VPT 1+240
EL 286.259

(-)1.1000%

(+)1.4940%

BEGIN ASPH.
STAB. BASE
STA. 1+250

CULVERT NO. 11

STORM DRAIN
LINE W

STORM DRAIN
LINE WB

℄ WISEMAN BLVD
STA 0+160.447 (WISEMAN) =
STA 1+310.093 (N'BD FR "G")
EL 287.306 (P.G.L.)

VPI
STA 1+330
EL 287.603
NO CURVE

VPC 1+345
EL 288.090

(+)1.4940%

(+)3.2452%

END ASPH.
STAB. BASE
STA. 1+370

SUPERELEVATION DIAGRAM

CHANGE ORDER 64

REVISED SHEET

STATE OF TEXAS
JEROME D. PAVLISKA
76075
REGISTERED PROFESSIONAL ENGINEER

Jerome D. Pavlisko, P.E. 4-28-04
Jerome D. Pavlisko, P.E. — Date

©2000 Texas Department of Transportation

# N' BD FRONTAGE RD "G" PROFILE

SHEET 2 OF 15

| FED.RD. DIV.NO. | FEDERAL AID PROJECT NO. | | SHEET NO. |
|---|---|---|---|
| 6 | NH 2000(704), etc. | | 275 A |
| STATE | DIST. | COUNTY | |
| TEXAS | SAT | BEXAR | |
| CONT. | SECT. | JOB | HIGHWAY NO. |
| 2452 | 01 | 036, etc. | LP 1604 |

LEVELS DISPLAYED
1 2 3 4 5 6 7 8 9 10 11 12 13 14 15 16
17 18 19 20 21 22 23 24 25 26 27 28 29 30 31 32
33 34 35 36 37 38 39 40 41 42 43 44 45 46 47 48
49 50 51 52 53 54 55 56 57 58 59 60 61 62 63

ACC: lp1604fm471-90\
FILE: prof01.dgn

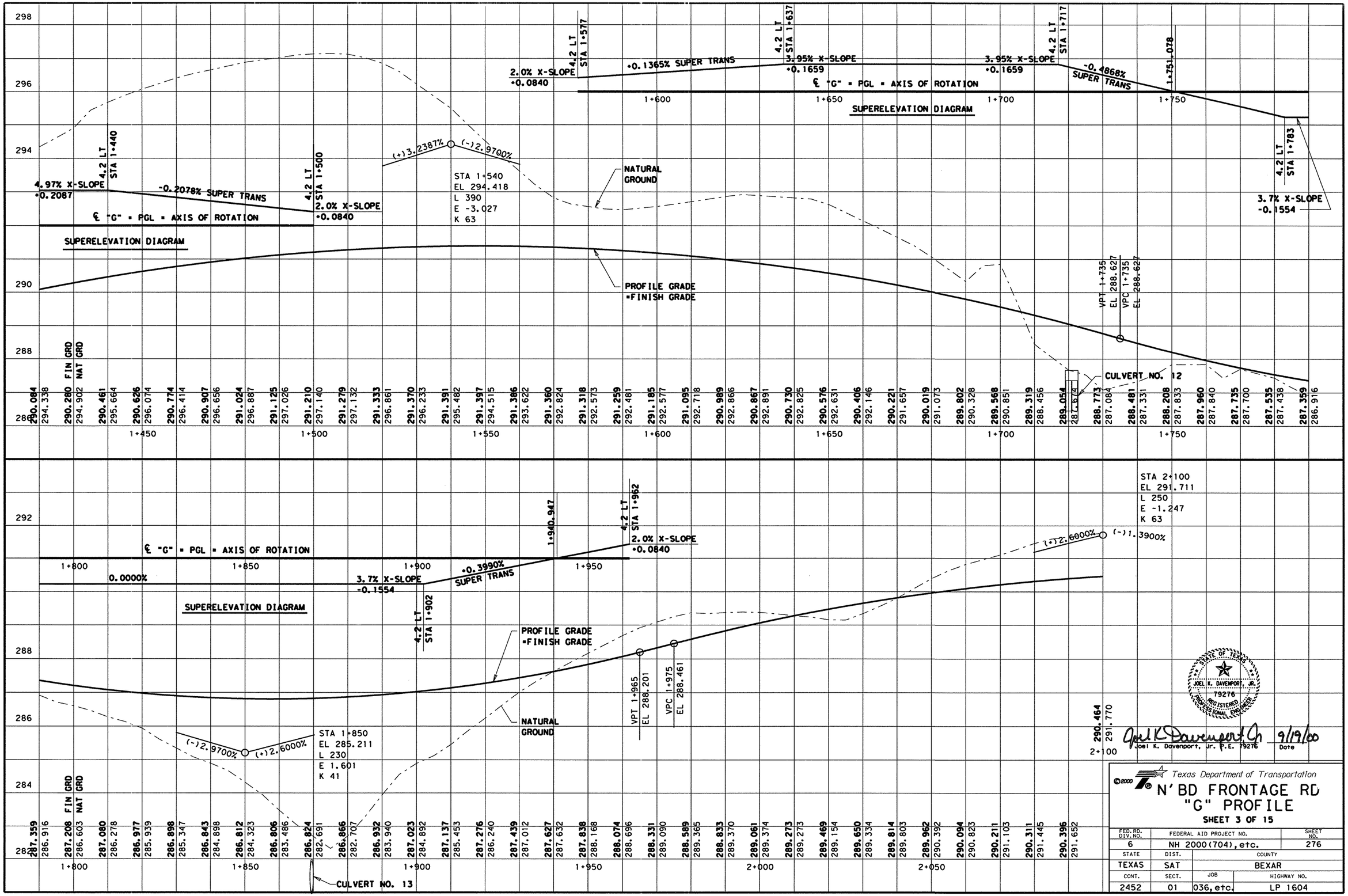


LEVELS DISPLAYED
1 2 3 4 5 6 7 8 9 10 11 21 31 41 51 61
71 81 91 02 12 22 32 42 52 62 72 82 92 03 13 23
33 43 53 63 73 83 93 04 14 24 34 44 54 64 74 84
95 05 15 25 35 45 55 65 75 85 95 06 16 26 36 46
ACC: lp1604fm471-90\
FILE: prof01.dgn

STATE OF TEXAS
JOEL K. DAVENPORT, JR.
79276
REGISTERED PROFESSIONAL ENGINEER

Joel K. Davenport Jr. 9/19/00
Joel K. Davenport, Jr. P.E. 79276 Date

Texas Department of Transportation

# N'BD FRONTAGE RD "G" PROFILE

SHEET 3 OF 15

| FED.RD. DIV.NO. | FEDERAL AID PROJECT NO. | | SHEET NO. |
|---|---|---|---|
| 6 | NH 2000(704), etc. | | 276 |
| STATE | DIST. | COUNTY | |
| TEXAS | SAT | BEXAR | |
| CONT. | SECT. | JOB | HIGHWAY NO. |
| 2452 | 01 | 036, etc. | LP 1604 |

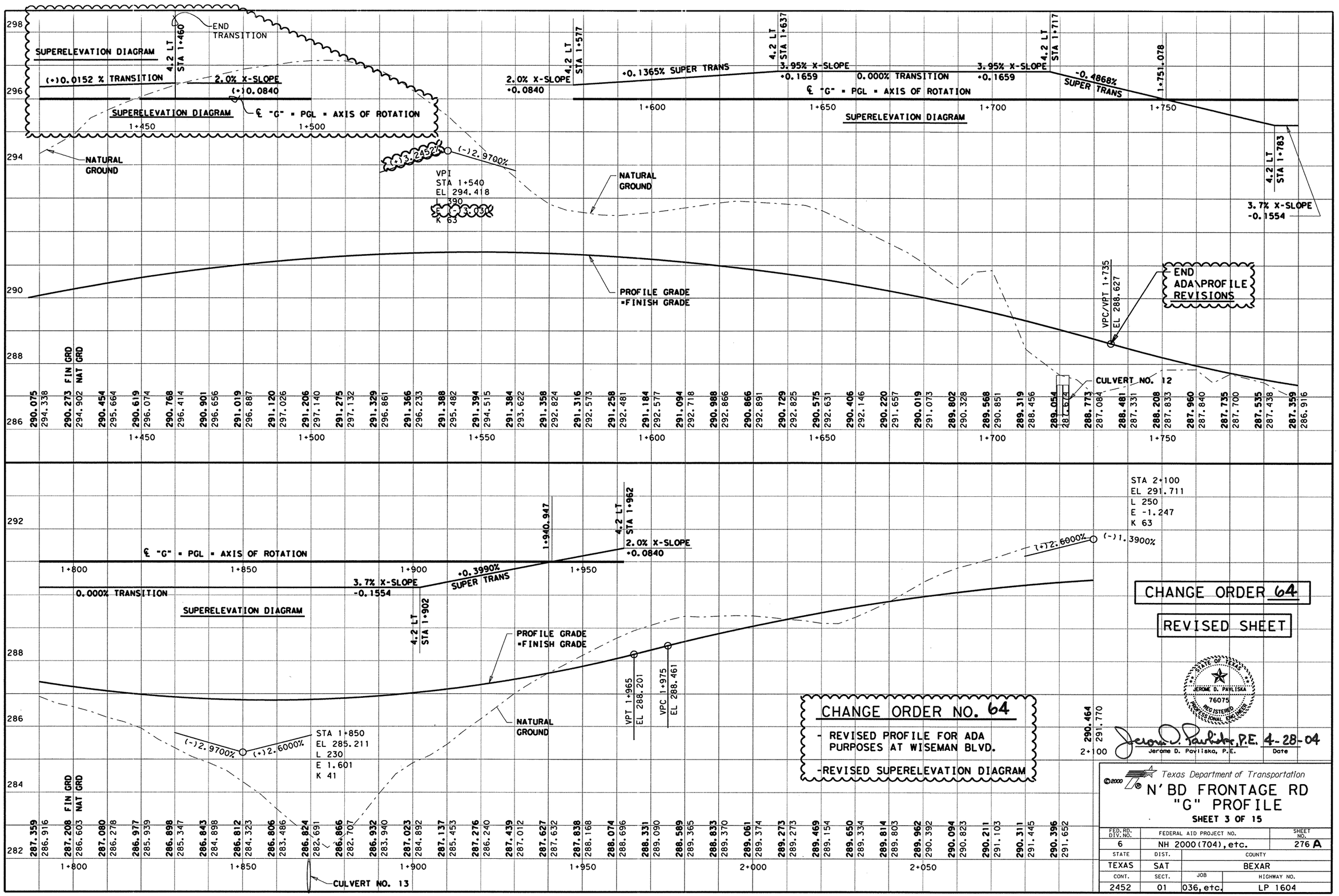


CHANGE ORDER NO. 64

- REVISED PROFILE FOR ADA PURPOSES AT WISEMAN BLVD.
- REVISED SUPERELEVATION DIAGRAM

CHANGE ORDER 64

REVISED SHEET

STATE OF TEXAS
JEROME D. PAVLISKA
76075
REGISTERED PROFESSIONAL ENGINEER

Jerome D. Pavliska, P.E. 4-28-04
Jerome D. Pavliska, P.E. — Date

LEVELS DISPLAYED
1 2 3 4 5 6 7 8 9 10 11 12 13 14 15 16
17 18 19 20 21 22 32 42 52 62 72 82 92 03 13 23
33 43 53 63 73 83 94 04 14 24 34 44 54 64 74 84
95 05 15 25 35 45 55 65 75 85 96 06 16 26 36 46
ACC: lp1604fm471-90\
FILE: prof01.dgn

©2000

Texas Department of Transportation

# N'BD FRONTAGE RD "G" PROFILE

SHEET 3 OF 15

| FED.RD. DIV.NO. | FEDERAL AID PROJECT NO. | SHEET NO. |
|---|---|---|
| 6 | NH 2000(704), etc. | 276 A |
| STATE | DIST. | COUNTY |
| TEXAS | SAT | BEXAR |
| CONT. | SECT. | JOB / HIGHWAY NO. |
| 2452 | 01 | 036, etc. / LP 1604 |

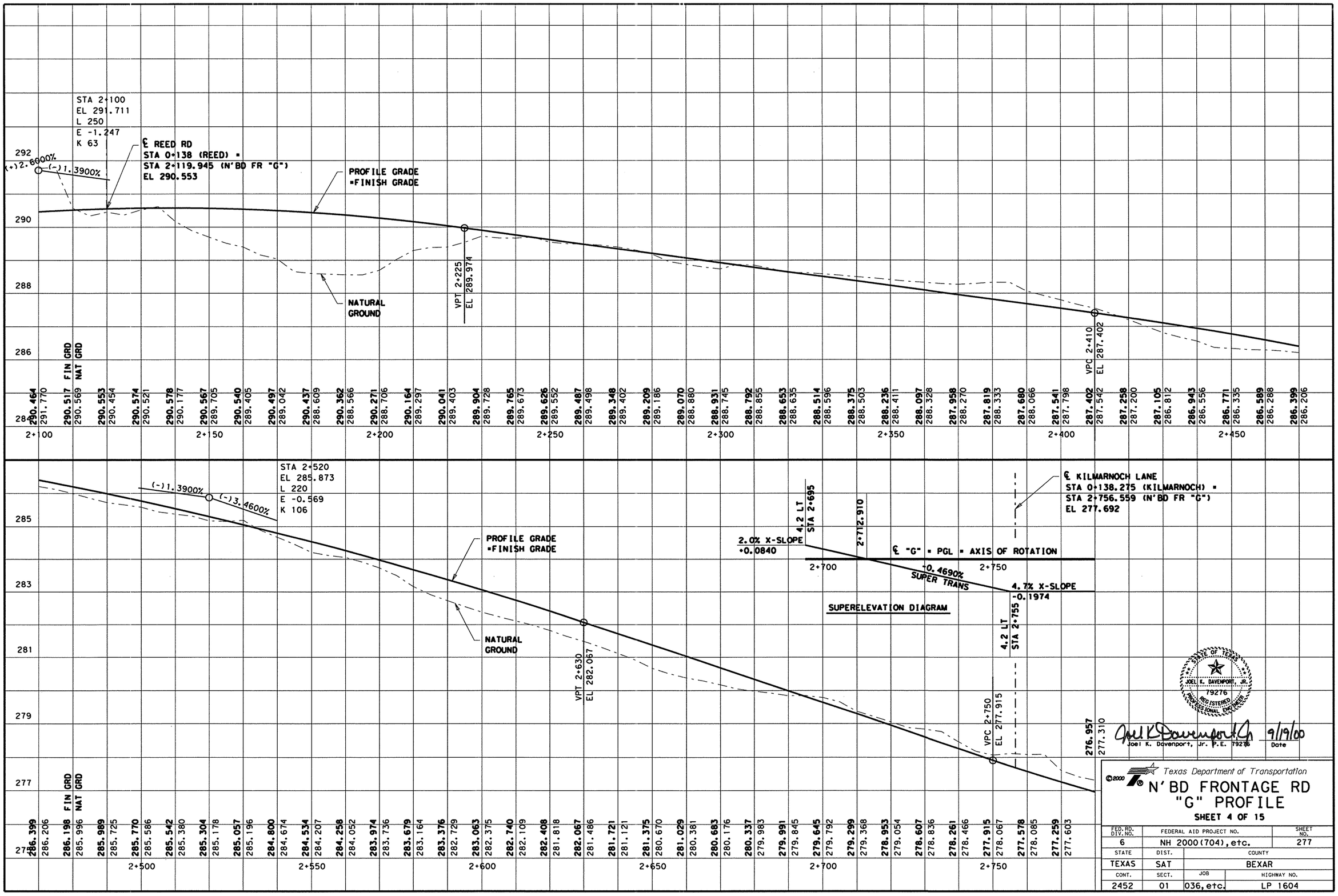


290.464 291.770 | 290.517 290.569 | 290.553 290.454 | 290.574 290.521 | 290.578 290.177 | 290.567 289.705 | 290.540 289.405 | 290.497 289.042 | 290.437 288.609 | 290.362 288.566 | 290.271 288.706 | 290.164 289.297 | 290.041 289.403 | 289.904 289.728 | 289.765 289.673 | 289.626 289.552 | 289.487 289.498 | 289.348 289.402 | 289.209 289.186 | 289.070 288.880 | 288.931 288.745 | 288.792 288.855 | 288.653 288.635 | 288.514 288.596 | 288.375 288.503 | 288.236 288.411 | 288.097 288.328 | 287.958 288.270 | 287.819 288.333 | 287.680 288.066 | 287.541 287.798 | 287.402 287.542 | 287.258 287.200 | 287.105 286.812 | 286.943 286.556 | 286.771 286.335 | 286.589 286.288 | 286.399 286.206

286.399 286.206 | 286.198 285.996 | 285.989 285.725 | 285.770 285.586 | 285.542 285.380 | 285.304 285.178 | 285.057 285.196 | 284.800 284.674 | 284.534 284.207 | 284.258 284.052 | 283.974 283.736 | 283.679 283.164 | 283.376 282.729 | 283.063 282.375 | 282.740 282.109 | 282.408 281.818 | 282.067 281.486 | 281.721 281.121 | 281.375 280.670 | 281.029 280.381 | 280.683 280.176 | 280.337 279.983 | 279.991 279.845 | 279.645 279.792 | 279.299 279.368 | 278.953 279.054 | 278.607 278.836 | 278.261 278.466 | 277.915 278.067 | 277.578 278.085 | 277.259 277.603 | 276.957 277.310

LEVELS DISPLAYED
1 2 3 4 5 6 7 8 9 10 11 12 13 14 15 16
17 18 19 20 21 22 23 24 25 26 27 28 29 30 31 32
33 34 35 36 37 38 39 40 41 42 43 44 45 46 47 48
49 50 51 52 53 54 55 56 57 58 59 60 61 62 63

ACC: lp1604fm471-90\
FILE: prof01.dgn

STATE OF TEXAS
JOEL K. DAVENPORT, JR.
79276
REGISTERED PROFESSIONAL ENGINEER

Joel K Davenport Jr 9/19/00
Joel K. Davenport, Jr. P.E. 79276 Date

©2000

Texas Department of Transportation

# N'BD FRONTAGE RD "G" PROFILE

SHEET 4 OF 15

| FED.RD. DIV.NO. | FEDERAL AID PROJECT NO. | SHEET NO. |
|---|---|---|
| 6 | NH 2000(704),etc. | 277 |
| STATE | DIST. | COUNTY |
| TEXAS | SAT | BEXAR |
| CONT. | SECT. | JOB / HIGHWAY NO. |
| 2452 | 01 | 036,etc. / LP 1604 |

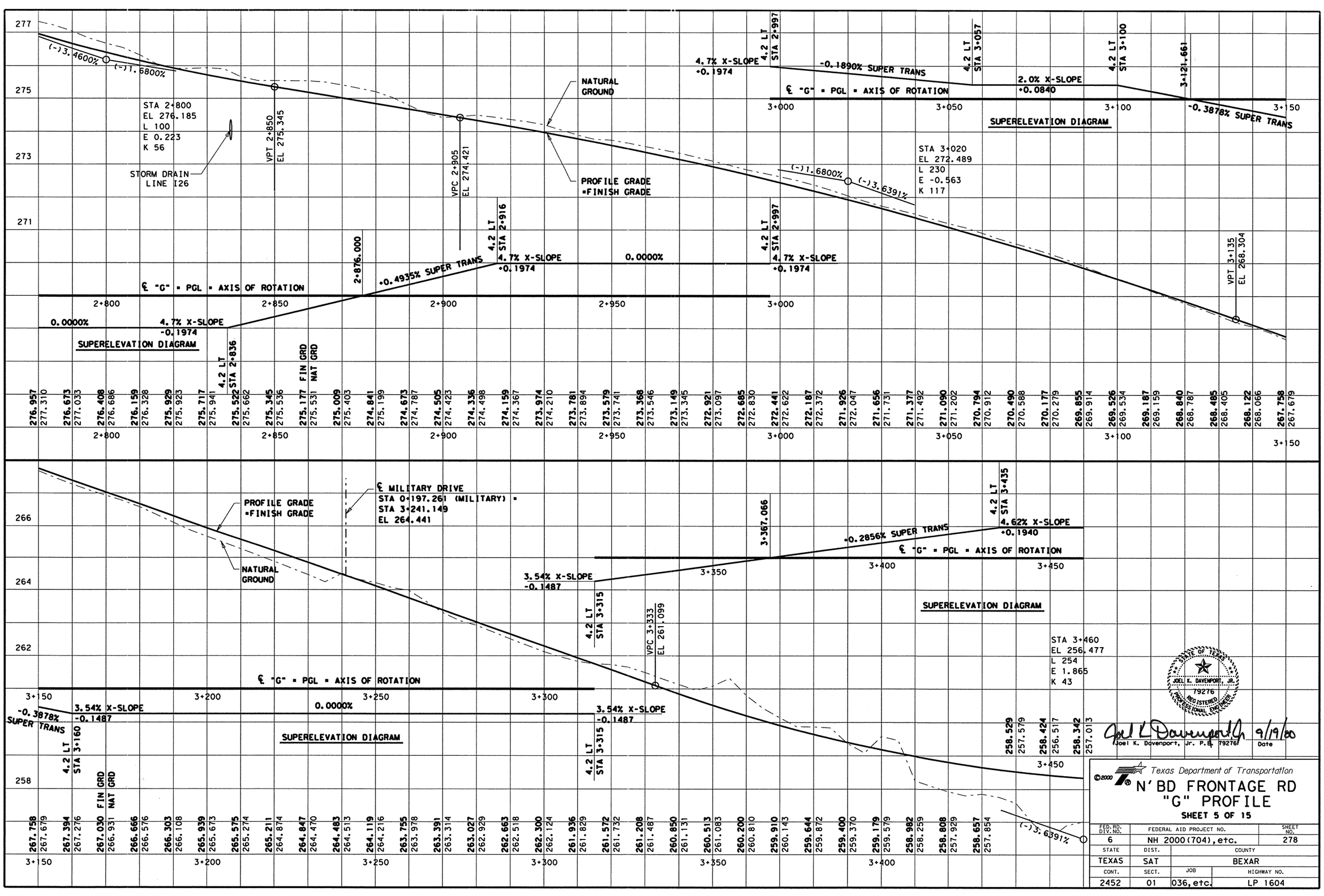


LEVELS DISPLAYED
1 2 3 4 5 6 7 8 9 10 11 12 13 14 15 16
17 18 19 20 21 22 23 24 25 26 27 28 29 30 31 32
33 34 35 36 37 38 39 40 41 42 43 44 45 46 47 48
49 50 51 52 53 54 55 56 57 58 59 60 61 62 63

ACC: lp1604fm471-90\
FILE: prof01.dgn

STATE OF TEXAS
JOEL K. DAVENPORT, JR.
79276
REGISTERED
PROFESSIONAL ENGINEER

Joel K Davenport Jr 9/19/00
Joel K. Davenport, Jr. P.E. 79276 Date

© 2000 Texas Department of Transportation

# N' BD FRONTAGE RD
# "G" PROFILE
SHEET 5 OF 15

| FED.RD. DIV.NO. | FEDERAL AID PROJECT NO. | | SHEET NO. |
|---|---|---|---|
| 6 | NH 2000(704), etc. | | 278 |
| STATE | DIST. | COUNTY | |
| TEXAS | SAT | BEXAR | |
| CONT. | SECT. | JOB | HIGHWAY NO. |
| 2452 | 01 | 036, etc. | LP 1604 |

BEGIN ADA PROFILE REVISIONS
STA. 2+905

(-)3.4600%
(-)1.6800%
277.310
STA 2+800
EL 276.185
L 100
E 0.223
K 56
STORM DRAIN
LINE I26
VPT 2+850
EL 275.345
VPC 2+905
EL. = 274.421
NATURAL
GROUND
PROFILE GRADE
=FINISH GRADE
4.2 LT
STA 2+916
2+876.000
4.2 LT
STA 2+997
(-)1.6800 %
(-)3.8281 %
VPI 3+020
EL 272.489
L 230
E -0.618
K 107
0.0000% TRANSITION
4.7% X-SLOPE
-0.4935% SUPER TRANS
0.1974
0.1974
℄ "G" = PGL = AXIS OF ROTATION
-0.1974
0.0000% TRANSITION
4.7% X-SLOPE
SUPERELEVATION DIAGRAM
4.2 LT
STA 2+836
FIN GRD
NAT GRD
PROFILE REVISED TO STA. 4+030
CONTRACTOR IS CAUTIONED
ABOUT NEW GAS LINE X-ING
@ STA. 3+139(±)
VPT 3+135
EL. = 268.087
NEW GAS
LINE X-ING
STA. 3+139(±)

BEGIN DIAGRAM REVISION
STA. 3+100
DIAGRAM REVISED
TO STA. 3+435
4.2 LT
STA 2+997
4.2 LT
STA 3+057
4.2 LT
STA 3+100
-0.1890% SUPER TRANS
℄ "G" = PGL = AXIS OF ROTATION
0.0840
2.0% X-SLOPE
-0.2800%
SUPER TRANS
3+130
FLAT
SUPERELEVATION DIAGRAM

(-)3.828 %
PROFILE GRADE
=FINISH GRADE
BEGIN
ASPH. STAB. BASE
STA. 3+179
℄ MILITARY DRIVE
STA 0+197.261 (MILITARY) =
STA 3+241.149
EL 264.355
VPI 3+223
EL 264.718
NO CURVE
(-)2.000 % (MAX.)
VPC 3+259
EL= 263.998
(-)4.1493 %
NATURAL
GROUND
BEGIN
ASPH. STAB. BASE
STA. 3+179
VPI 3+290
EL 263.378
L 62
E -0.167
K 29
2.00% X-SLOPE
-0.084
4.2 LT
STA 3+315
VPT\VPC 3+321
EL= 262.092
3+351.254
FLAT
+0.2317% SUPER TRANS
4.62% X-SLOPE
0.1940
℄ "G" = PGL = AXIS OF ROTATION
END DIAGRAM REVISION
STA. 3+435
4.2 LT
STA 3+435
SUPERELEVATION DIAGRAM
-0.2800%
SUPER TRANS
-0.084
0.0000% TRANSITION
2.00% X-SLOPE
-0.084
4.2 LT
STA 3+160
SUPERELEVATION DIAGRAM
DIAGRAM REVISED
TO STA. 3+435
PROFILE REVISED TO STA. 4+030
VPI 3+430
EL 257.569
L 218
E 1.620
K 37
(-)4.1493 %
(-)1.7964 %
FIN GRD
NAT GRD

CHANGE ORDER NO. 64
- REVISED PROFILE FOR ADA PURPOSES AT MILITARY DRIVE
- REVISED PROFILE FOR DRIVEWAY #19
- ADDED NEW GAS X-ING INFO.

CHANGE ORDER 64

REVISED SHEET

STATE OF TEXAS
JEROME D. PAVLISKA
76075
REGISTERED
PROFESSIONAL ENGINEER

Jerome D. Pavliska, P.E. 4-28-04
Jerome D. Pavliska, P.E. Date

©2003 Texas Department of Transportation

# N' BD FRONTAGE RD
# "G" PROFILE

SHEET 5 OF 15

| FED. RD. DIV. NO. | FEDERAL AID PROJECT NO. | SHEET NO. |
|---|---|---|
| 6 | NH 2000(704), etc. | 278A |
| STATE | DIST. | COUNTY |
| TEXAS | SAT | BEXAR |
| CONT. | SECT. | JOB / HIGHWAY NO. |
| 2452 | 01 | 036, etc. / LP 1604 |

05-01-04

LEVELS DISPLAYED
1 2 3 4 5 6 7 8 9 10 11 12 13 14 15 16
17 18 19 20 21 22 23 24 25 26 27 28 29 30 31 32
33 34 35 36 37 38 39 40 41 42 43 44 45 46 47 48
49 50 51 52 53 54 55 56 57 58 59 60 61 62 63

ACC: lp1604fm471-90\
FILE: prof01.dgn

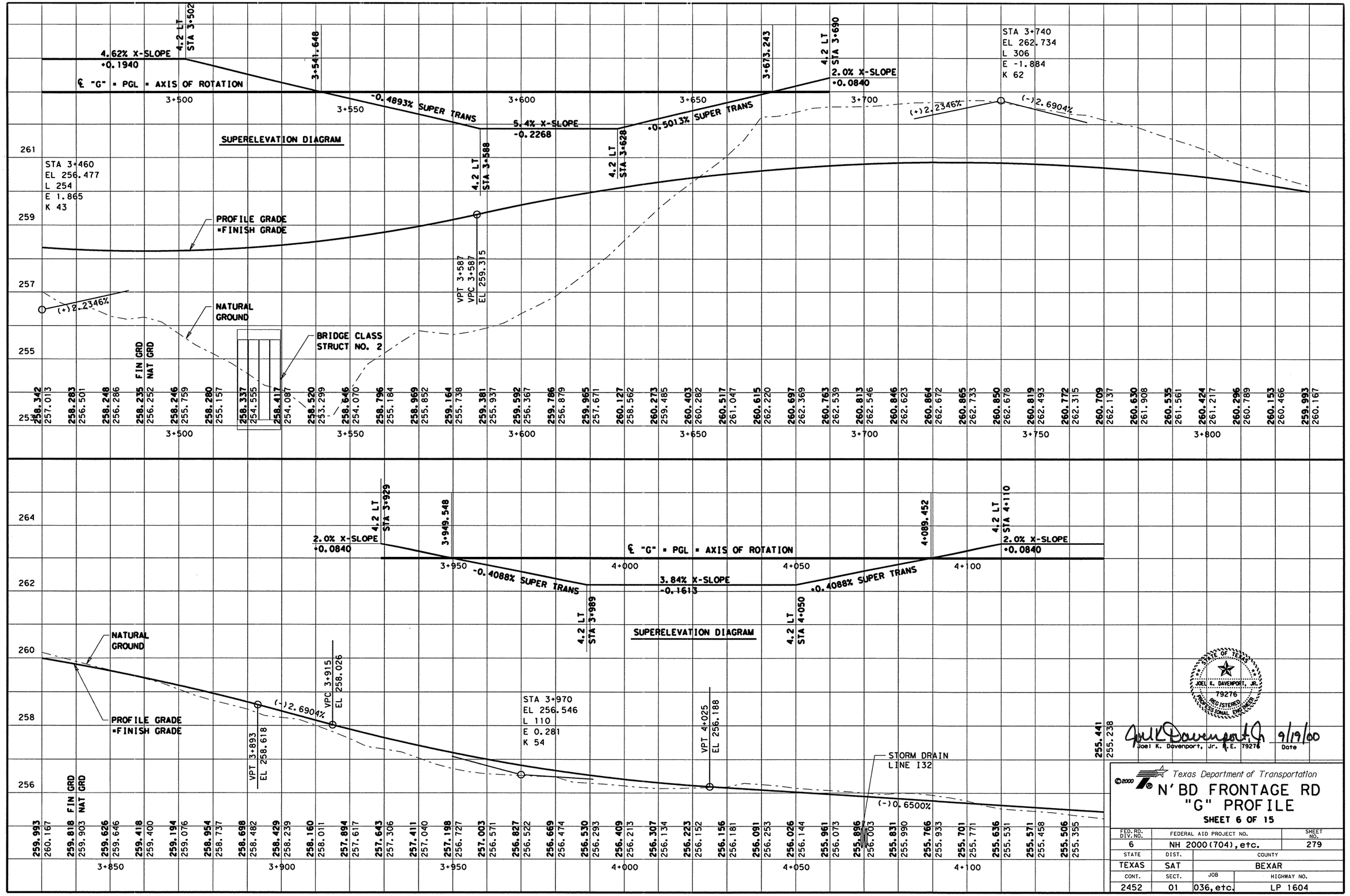


LEVELS DISPLAYED
1 2 3 4 5 6 7 8 9 10 11 12 13 14 15 16
17 18 19 20 21 22 23 24 25 26 27 28 29 30 31 32
33 34 35 36 37 38 39 40 41 42 43 44 45 46 47 48
49 50 51 52 53 54 55 56 57 58 59 60 61 62 63

ACC: lp1604fm471-90\
FILE: prof01.dgn

STATE OF TEXAS
JOEL K. DAVENPORT, JR.
79276
REGISTERED PROFESSIONAL ENGINEER

Joel K. Davenport, Jr. 9/19/00
Joel K. Davenport, Jr. P.E. 79276 Date

Texas Department of Transportation

# N'BD FRONTAGE RD "G" PROFILE

SHEET 6 OF 15

| FED. RD. DIV. NO. | FEDERAL AID PROJECT NO. | SHEET NO. |
|---|---|---|
| 6 | NH 2000(704), etc. | 279 |
| STATE | DIST. | COUNTY |
| TEXAS | SAT | BEXAR |
| CONT. | SECT. | JOB / HIGHWAY NO. |
| 2452 | 01 | 036, etc. / LP 1604 |

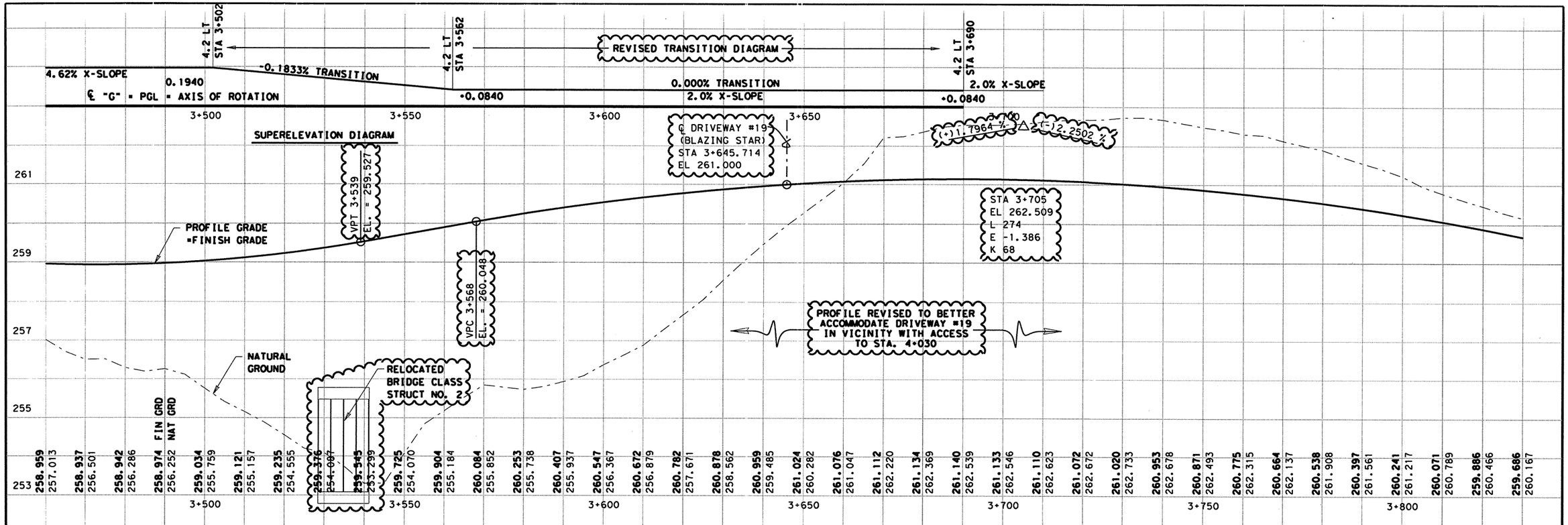


LEVELS DISPLAYED
1 2 3 4 5 6 7 8 9 10 11 12 13 14 15 16
17 18 19 20 21 22 23 24 25 26 27 28 29 30 31 32
33 34 35 36 37 38 39 40 41 42 43 44 45 46 47 48
49 50 51 52 53 54 55 56 57 58 59 60 61 62 63

ACC: lp1604fm471-90\
FILE: prof01.dgn

## CHANGE ORDER NO. 64

- REVISED PROFILE FOR ADA PURPOSES AT MILITARY DRIVE
- REVISED PROFILE FOR DRIVEWAY #19
- RELOCATED BCS #2
- REVISED DRIVE #19 LOCATION

**CHANGE ORDER 64**

**REVISED SHEET**

STATE OF TEXAS
JEROME D. PAVLISKA
76075
REGISTERED PROFESSIONAL ENGINEER

Jerome D. Pavliska P.E. 12-9-04
Jerome D. Pavliska, P.E. Date

©2004

Texas Department of Transportation

# N' BD FRONTAGE RD "G" PROFILE

SHEET 6 OF 15

| FED.RD. DIV.NO. | FEDERAL AID PROJECT NO. | | SHEET NO. |
|---|---|---|---|
| 6 | NH 2000(704), etc. | | 279 A |
| STATE | DIST. | COUNTY | |
| TEXAS | SAT | BEXAR | |
| CONT. | SECT. | JOB | HIGHWAY NO. |
| 2452 | 01 | 036, etc. | LP 1604 |

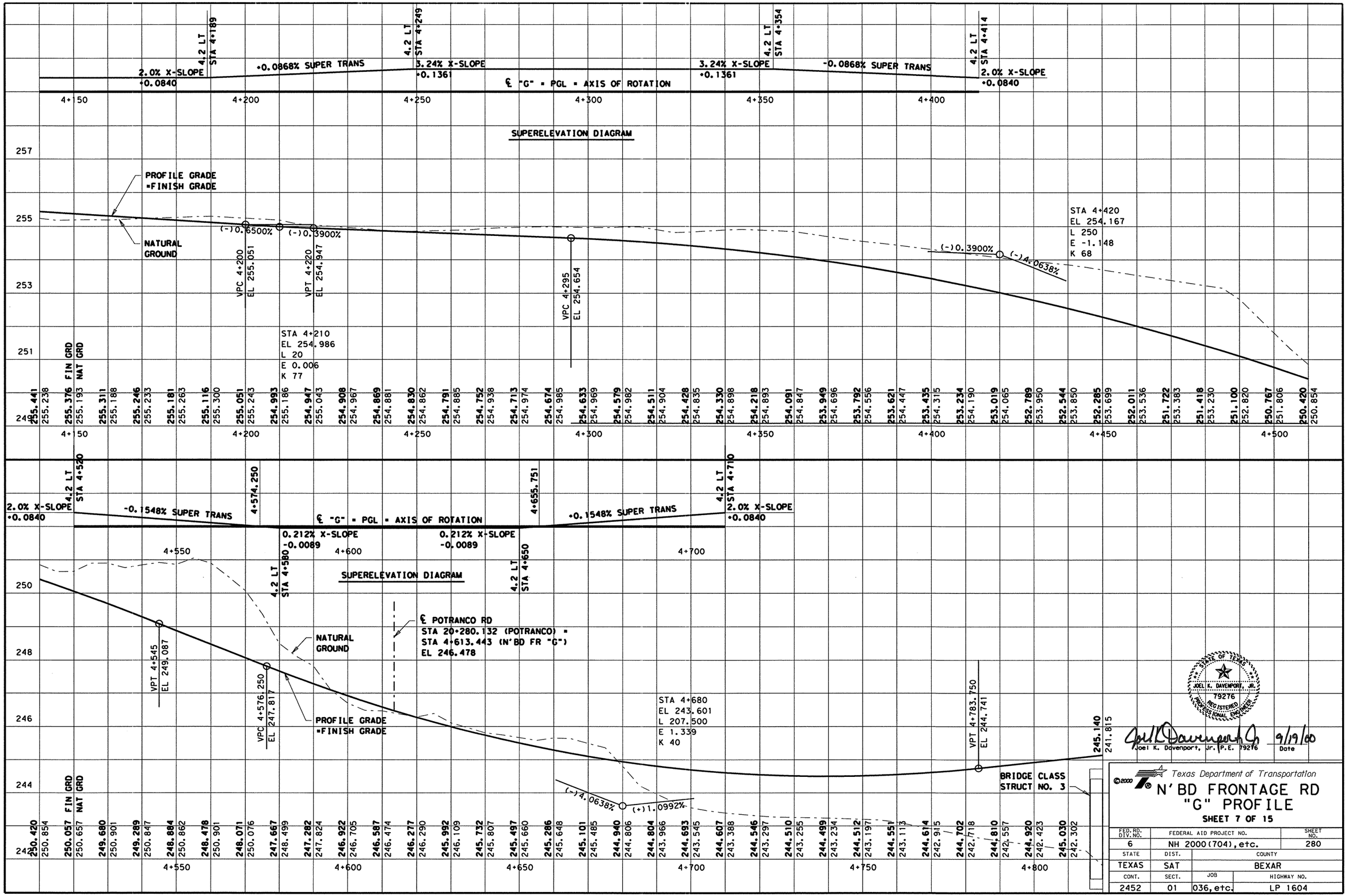


STATE OF TEXAS
JOEL K. DAVENPORT, JR.
79276
REGISTERED PROFESSIONAL ENGINEER

Joel K. Davenport, Jr. P.E. 79276 — 9/19/00 Date

Texas Department of Transportation

# N'BD FRONTAGE RD "G" PROFILE

SHEET 7 OF 15

| FED. RD. DIV. NO. | FEDERAL AID PROJECT NO. | SHEET NO. |
|---|---|---|
| 6 | NH 2000(704), etc. | 280 |
| STATE | DIST. | COUNTY |
| TEXAS | SAT | BEXAR |
| CONT. | SECT. | JOB / HIGHWAY NO. |
| 2452 | 01 | 036, etc. / LP 1604 |

LEVELS DISPLAYED
1 2 3 4 5 6 7 8 9 10 11 12 13 14 15 16
17 18 19 20 21 22 23 24 25 26 27 28 29 30 31 32
33 34 35 36 37 38 39 40 41 42 43 44 45 46 47 48
49 50 51 52 53 54 55 56 57 58 59 60 61 62 63

ACC: lp1604fm471-90\
FILE: prof01.dgn

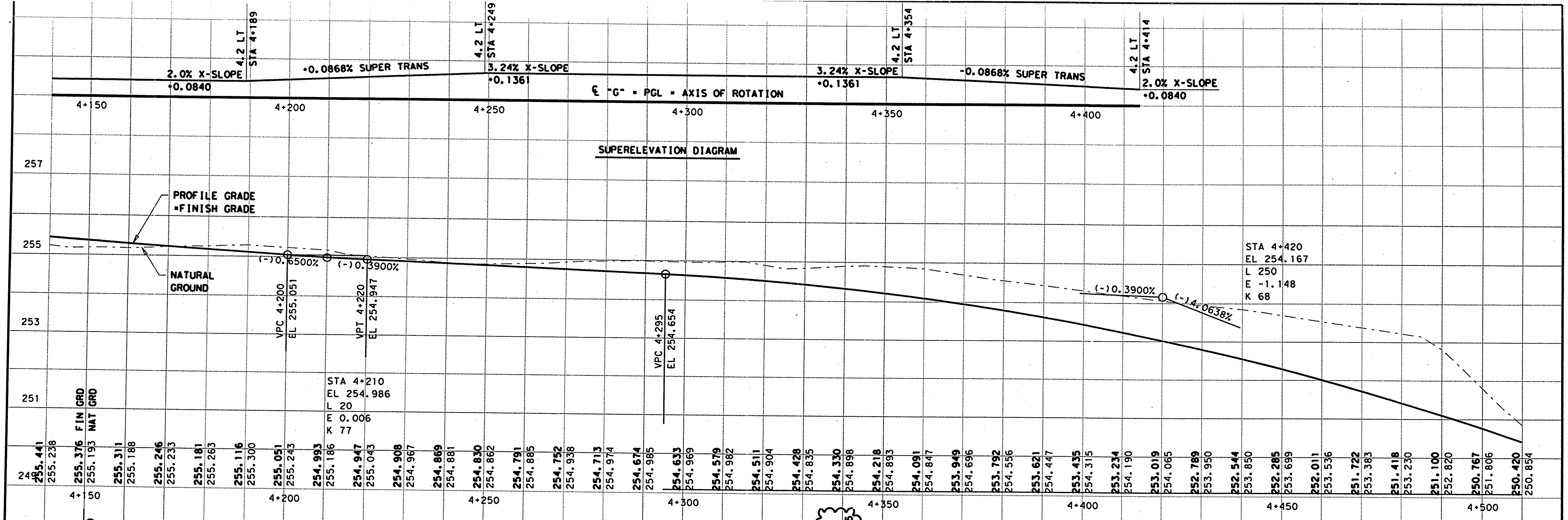


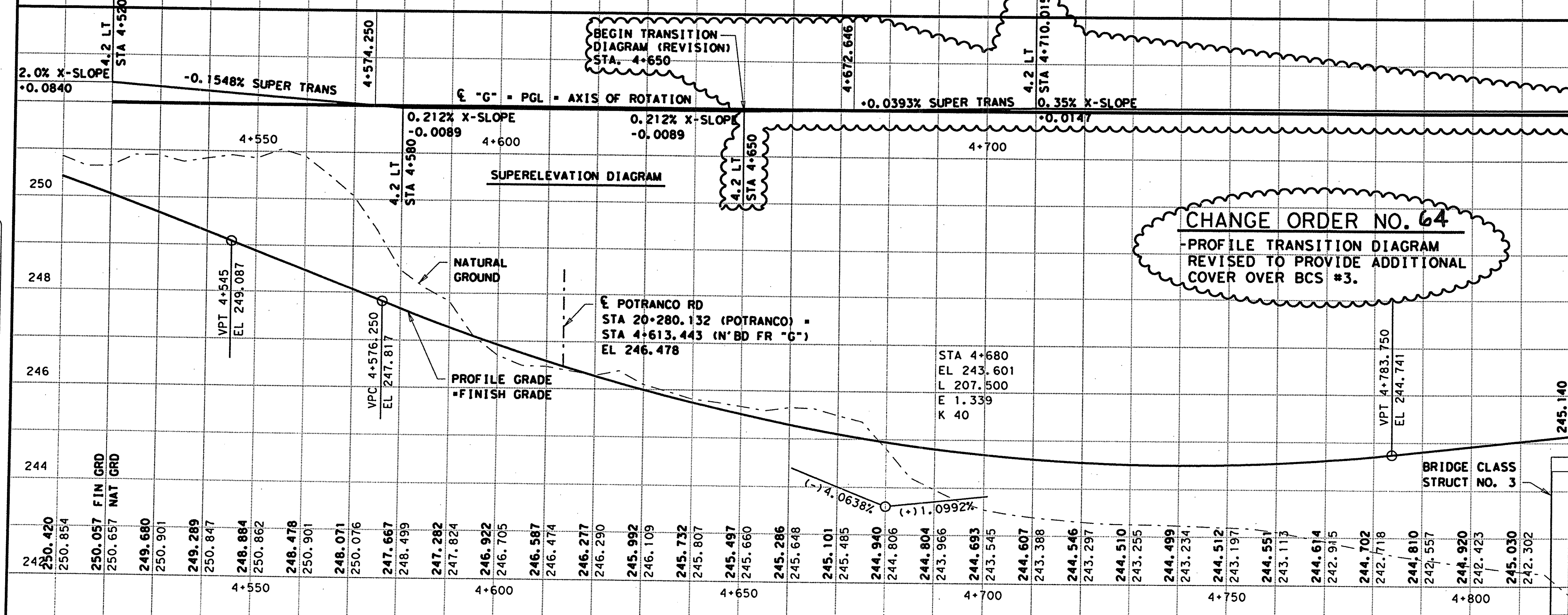


CHANGE ORDER NO. 64
-PROFILE TRANSITION DIAGRAM
REVISED TO PROVIDE ADDITIONAL
COVER OVER BCS #3.

CHANGE ORDER 64

REVISED SHEET

STATE OF TEXAS
JEROME D. PAVLISKA
76075
REGISTERED
PROFESSIONAL ENGINEER

Jerome D. Pavliska P.E 4-28-04
Jerome D. Pavliska, P.E. Date

LEVELS DISPLAYED 1 2 3 4 5 6 7 8 9 10 11 12 13 14 15 16 17 18 19 20 21 22 23 24 25 26 27 28 29 30 31 32 33 34 35 36 37 38 39 40 41 42 43 44 45 46 47 48 49 50 51 52 53 54 55 56 57 58 59 60 61 62 63
ACC: lp1604fm471-90\
FILE: prof01.dgn

©2000 Texas Department of Transportation

# N'BD FRONTAGE RD "G" PROFILE

SHEET 7 OF 15

| FED. RD. DIV. NO. | FEDERAL AID PROJECT NO. | | | SHEET NO. |
|---|---|---|---|---|
| 6 | NH 2000(704), etc. | | | 280A |
| STATE | DIST. | COUNTY | | |
| TEXAS | SAT | BEXAR | | |
| CONT. | SECT. | JOB | HIGHWAY NO. | |
| 2452 | 01 | 036, etc. | LP 1604 | |

05-01-04

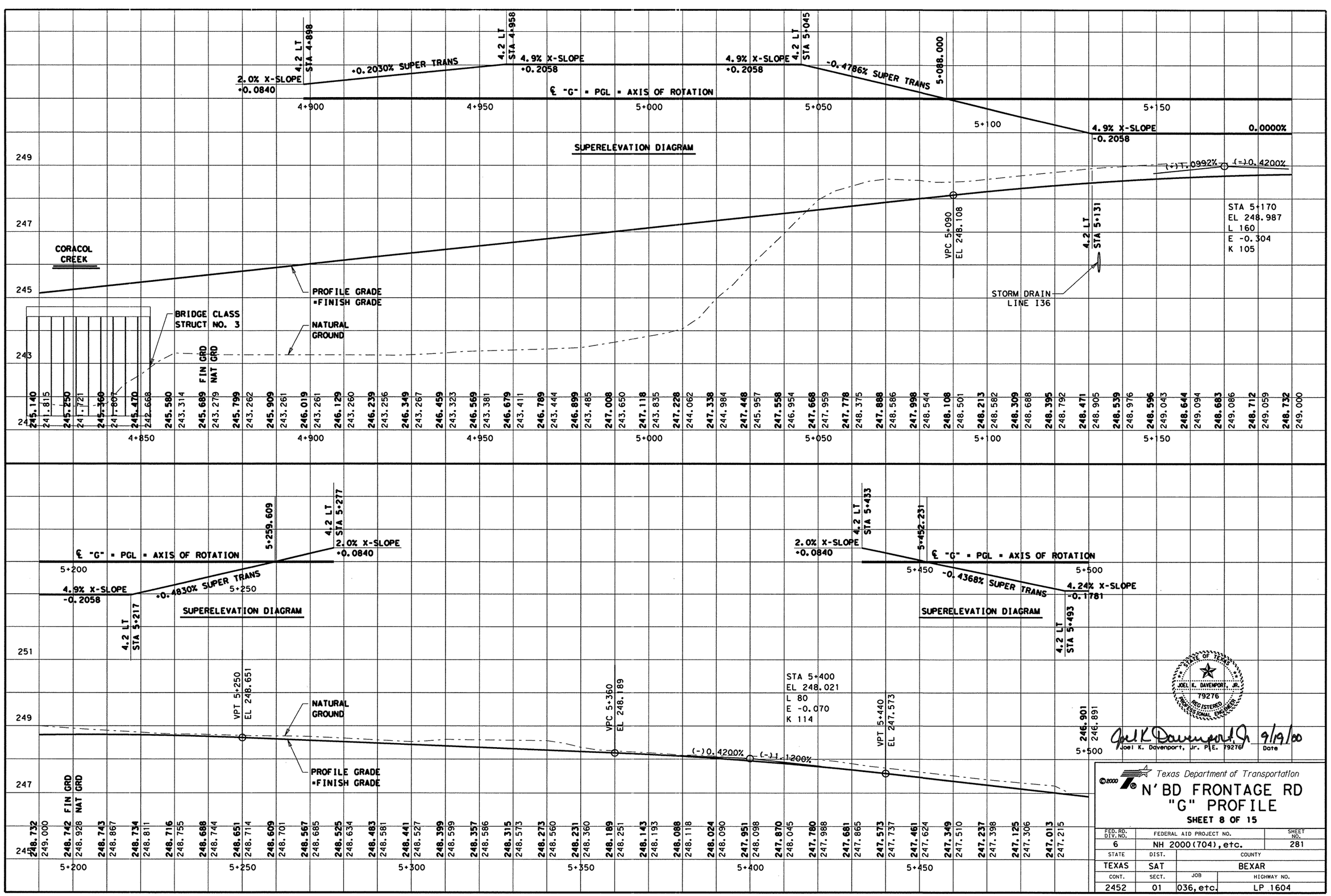


Texas Department of Transportation

# N'BD FRONTAGE RD "G" PROFILE

**SHEET 8 OF 15**

| FED. RD. DIV. NO. | FEDERAL AID PROJECT NO. | SHEET NO. |
|---|---|---|
| 6 | NH 2000(704), etc. | 281 |
| STATE | DIST. | COUNTY |
| TEXAS | SAT | BEXAR |
| CONT. | SECT. | JOB / HIGHWAY NO. |
| 2452 | 01 | 036, etc. / LP 1604 |

0.35% X-SLOPE
-0.0147
4.2 LT STA 4+898
+0.3185% SUPER TRANS
4.9% X-SLOPE
-0.2058
4.2 LT STA 4+958
END TRANSITION DIAGRAM
REVISION STA. 4+958
℄ "G" = PGL = AXIS OF ROTATION
4.9% X-SLOPE
-0.2058
4.2 LT STA 5+045
-0.4786% SUPER TRANS
5+088.000
4.9% X-SLOPE
-0.2058
0.0000%
(+)1.0992%
(-)0.4200%
SUPERELEVATION DIAGRAM
CORACOL CREEK
PROFILE GRADE
FINISH GRADE
NATURAL GROUND
BRIDGE CLASS STRUCT NO. 3
VPC 5+090
EL 248.108
4.2 LT STA 5+131
STORM DRAIN LINE I36
STA 5+170
EL 248.987
L 160
E -0.304
K 105

| | FIN GRD | NAT GRD |
|---|---|---|
| 4+850 | 245.140 | 241.815 |
| | 245.250 | 241.721 |
| | 245.360 | 241.807 |
| | 245.470 | 242.668 |
| | 245.580 | 243.314 |
| | 245.689 | 243.279 |
| | 245.799 | 243.262 |
| | 245.909 | 243.261 |
| 4+900 | 246.019 | 243.261 |
| | 246.129 | 243.260 |
| | 246.239 | 243.256 |
| | 246.349 | 243.267 |
| | 246.459 | 243.323 |
| 4+950 | 246.569 | 243.381 |
| | 246.679 | 243.411 |
| | 246.789 | 243.444 |
| | 246.899 | 243.485 |
| | 247.008 | 243.650 |
| 5+000 | 247.118 | 243.835 |
| | 247.228 | 244.062 |
| | 247.338 | 244.984 |
| | 247.448 | 245.957 |
| | 247.558 | 246.954 |
| 5+050 | 247.668 | 247.959 |
| | 247.778 | 248.375 |
| | 247.888 | 248.586 |
| | 247.998 | 248.544 |
| | 248.108 | 248.501 |
| 5+100 | 248.213 | 248.582 |
| | 248.309 | 248.688 |
| | 248.395 | 248.792 |
| | 248.471 | 248.905 |
| | 248.539 | 248.976 |
| 5+150 | 248.595 | 249.043 |
| | 248.644 | 249.094 |
| | 248.683 | 249.086 |
| | 248.712 | 249.059 |
| | 248.732 | 249.000 |

℄ "G" = PGL = AXIS OF ROTATION
5+259.609
4.2 LT STA 5+277
2.0% X-SLOPE
+0.0840
4.9% X-SLOPE
-0.2058
+0.4830% SUPER TRANS
4.2 LT STA 5+217
SUPERELEVATION DIAGRAM
VPT 5+250
EL 248.651
NATURAL GROUND
PROFILE GRADE
FINISH GRADE
VPC 5+360
EL 248.189
(-)0.4200%
(-)1.1200%
VPT 5+440
EL 247.573
STA 5+400
EL 248.021
L 80
E -0.070
K 114
2.0% X-SLOPE
+0.0840
4.2 LT STA 5+433
5+452.231
℄ "G" = PGL = AXIS OF ROTATION
-0.4368% SUPER TRANS
4.24% X-SLOPE
-0.1781
4.2 LT STA 5+493
SUPERELEVATION DIAGRAM

| | FIN GRD | NAT GRD |
|---|---|---|
| 5+200 | 248.732 | 249.000 |
| | 248.742 | 248.928 |
| | 248.743 | 248.867 |
| | 248.734 | 248.811 |
| | 248.716 | 248.755 |
| | 248.688 | 248.744 |
| | 248.651 | 248.714 |
| 5+250 | 248.609 | 248.701 |
| | 248.567 | 248.685 |
| | 248.525 | 248.634 |
| | 248.483 | 248.581 |
| | 248.441 | 248.527 |
| 5+300 | 248.399 | 248.599 |
| | 248.357 | 248.586 |
| | 248.315 | 248.573 |
| | 248.273 | 248.560 |
| | 248.231 | 248.360 |
| 5+350 | 248.189 | 248.251 |
| | 248.143 | 248.193 |
| | 248.088 | 248.118 |
| | 248.024 | 248.090 |
| | 247.951 | 248.098 |
| 5+400 | 247.870 | 248.045 |
| | 247.780 | 247.988 |
| | 247.681 | 247.865 |
| | 247.573 | 247.737 |
| | 247.461 | 247.624 |
| 5+450 | 247.349 | 247.510 |
| | 247.237 | 247.398 |
| | 247.125 | 247.306 |
| | 247.013 | 247.215 |
| | 246.901 | 246.891 |
| 5+500 | | |

CHANGE ORDER NO. 64
-PROFILE TRANSITION DIAGRAM REVISED TO PROVIDE ADDITIONAL COVER OVER BCS #3.

CHANGE ORDER 64

REVISED SHEET

STATE OF TEXAS
JEROME D. PAVLISKA
76075
REGISTERED PROFESSIONAL ENGINEER

Jerome D. Pavliska, P.E. 4-28-04
Jerome D. Pavliska, P.E. Date

LEVELS DISPLAYED
1 2 3 4 5 6 7 8 9 10 11 12 13 14 15 16
17 18 19 20 21 22 23 24 25 26 27 28 29 30 31 32
33 34 35 36 37 38 39 40 41 42 43 44 45 46 47 48
49 50 51 52 53 54 55 65 75 85 96 06 16 26 36

ACC: lp1604fm471-90\
FILE: prof01.dgn

©2000
Texas Department of Transportation

# N'BD FRONTAGE RD "G" PROFILE

SHEET 8 OF 15

| FED.RD. DIV.NO. | FEDERAL AID PROJECT NO. | SHEET NO. |
|---|---|---|
| 6 | NH 2000(704), etc. | 281A |
| STATE | DIST. | COUNTY |
| TEXAS | SAT | BEXAR |
| CONT. | SECT. | JOB / HIGHWAY NO. |
| 2452 | 01 | 036, etc. / LP 1604 |

05-01-04

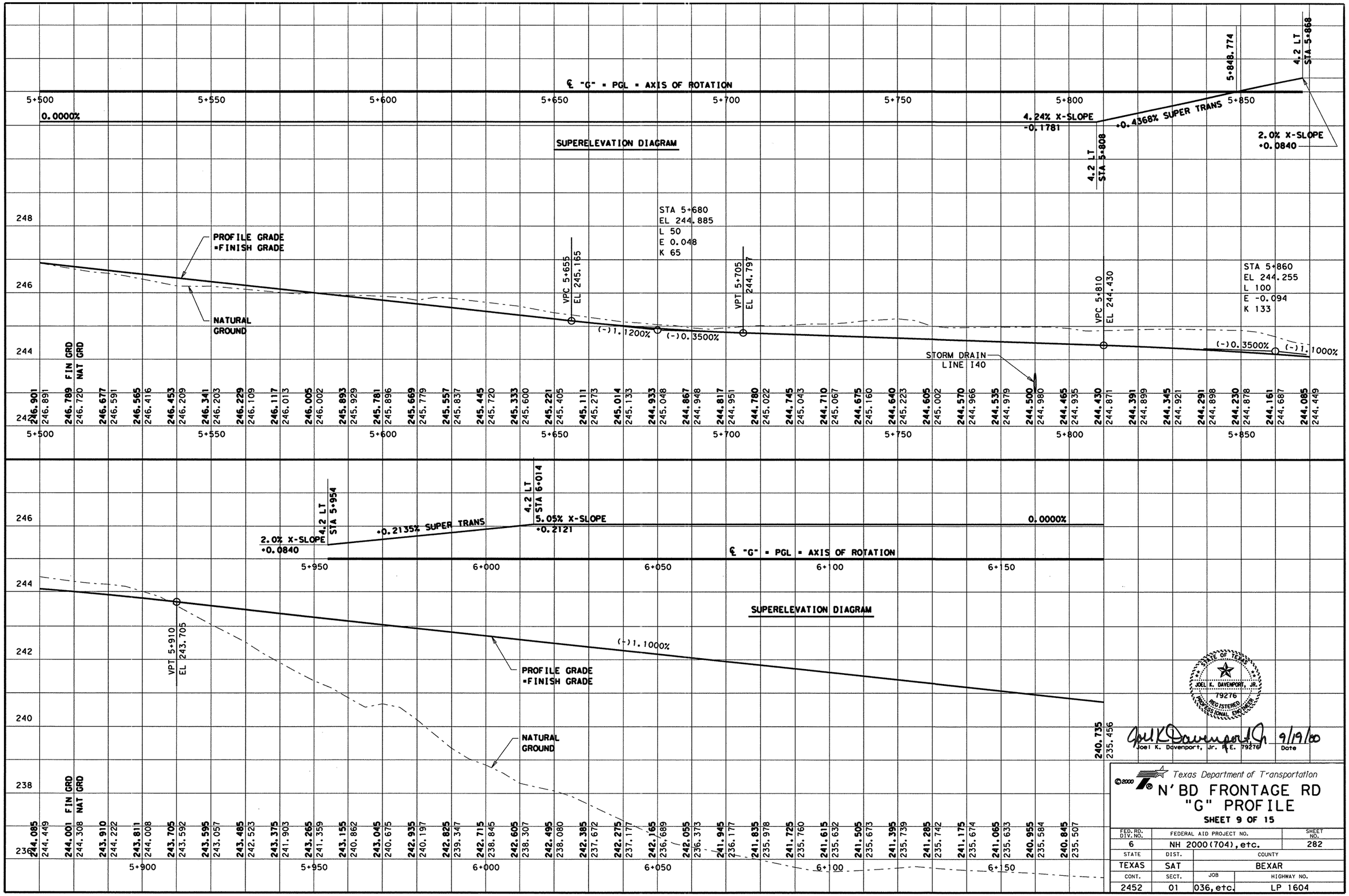


LEVELS DISPLAYED
1 2 3 4 5 6 7 8 9 10 11 21 31 41 51 61
71 81 91 02 12 22 32 42 52 62 72 82 93 03 13 23
33 43 53 63 73 83 93 04 14 24 34 44 54 64 74 84
94 05 15 25 35 45 55 65 75 85 96 06 16 26 36 46
ACC: lp1604fm471-90\
FILE: prof01.dgn

Joel K. Davenport, Jr. 9/19/00
Joel K. Davenport, Jr. P.E. 79276 Date

Texas Department of Transportation

# N' BD FRONTAGE RD "G" PROFILE

SHEET 9 OF 15

| FED. RD. DIV. NO. | FEDERAL AID PROJECT NO. | SHEET NO. |
|---|---|---|
| 6 | NH 2000(704), etc. | 282 |
| STATE | DIST. | COUNTY |
| TEXAS | SAT | BEXAR |
| CONT. | SECT. | JOB / HIGHWAY NO. |
| 2452 | 01 | 036, etc. / LP 1604 |

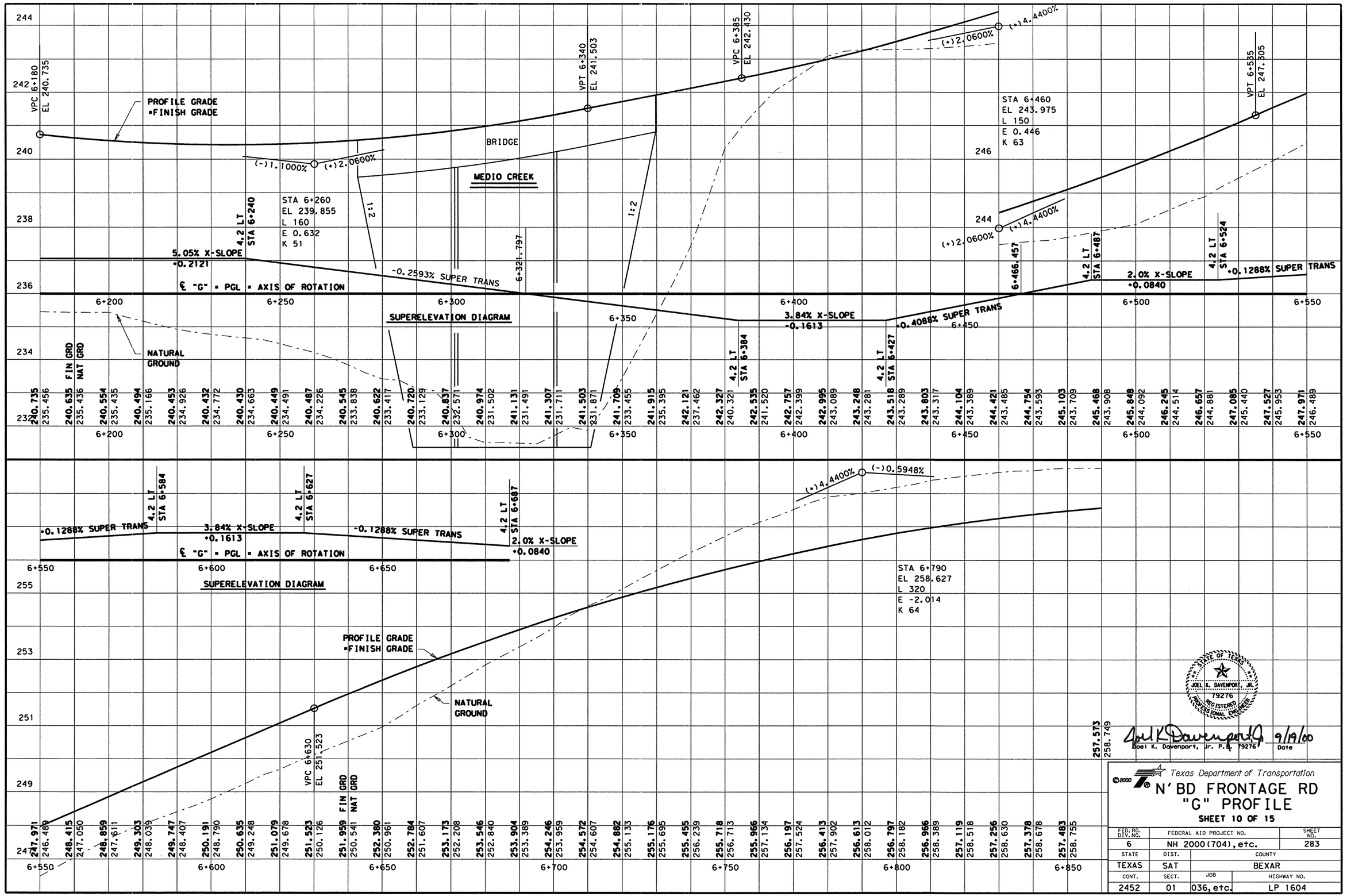


STATE OF TEXAS
JOEL K. DAVENPORT, JR.
79276
REGISTERED PROFESSIONAL ENGINEER

Joel K Davenport Jr. 9/19/00
Joel K. Davenport, Jr. P.E. 79276 Date

Texas Department of Transportation

# N'BD FRONTAGE RD "G" PROFILE

**SHEET 10 OF 15**

| FED. RD. DIV. NO. | FEDERAL AID PROJECT NO. | SHEET NO. |
|---|---|---|
| 6 | NH 2000(704), etc. | 283 |
| STATE | DIST. | COUNTY |
| TEXAS | SAT | BEXAR |
| CONT. | SECT. | JOB / HIGHWAY NO. |
| 2452 | 01 | 036, etc. / LP 1604 |

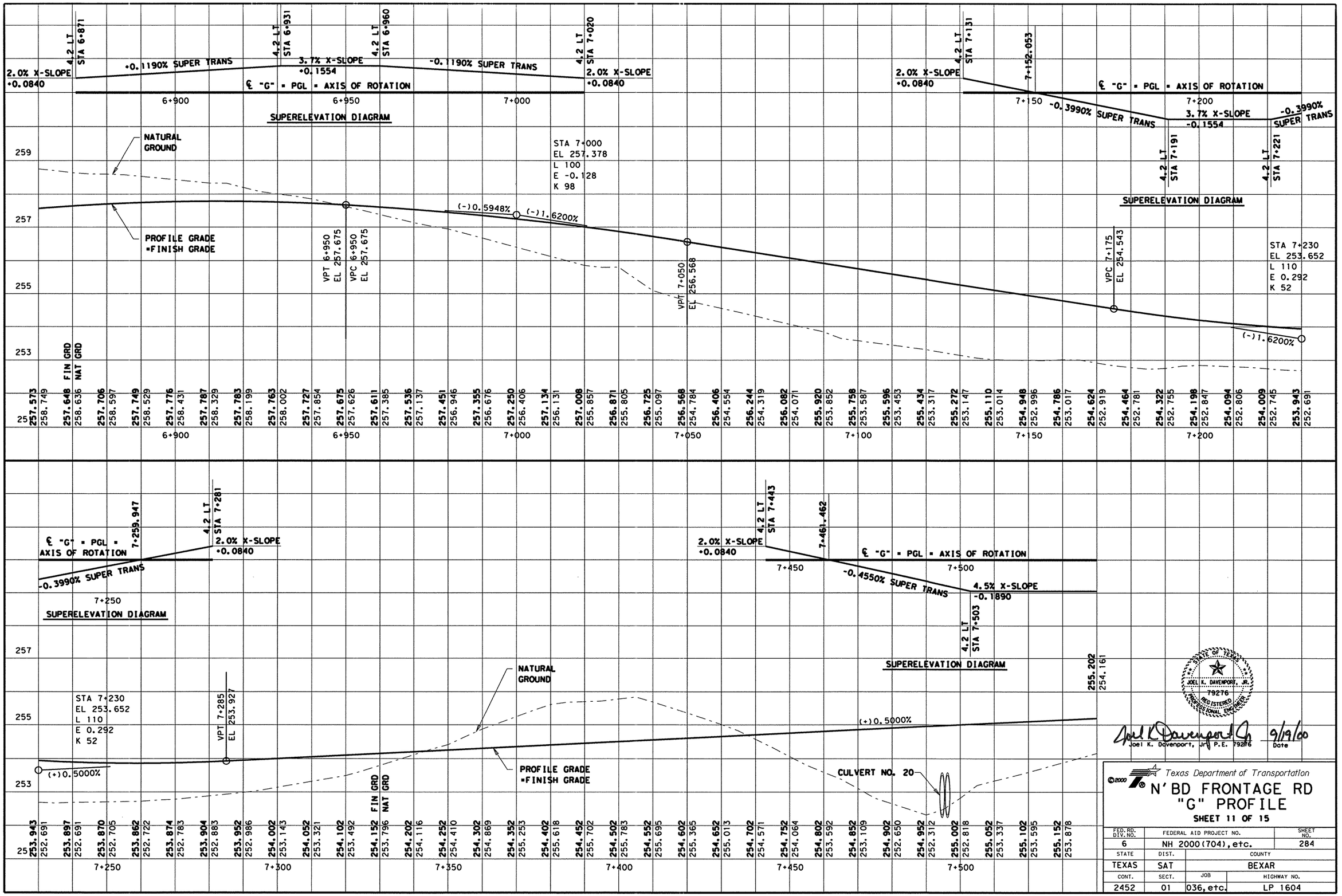


LEVELS DISPLAYED
1 2 3 4 5 6 7 8 9 10 11 12 13 14 15 16
17 18 19 20 21 22 23 24 25 26 27 28 29 30 31 32
33 34 35 36 37 38 39 40 41 42 43 44 45 46 47 48
49 50 51 52 53 54 55 56 57 58 59 60 61 62 63

ACC: lp1604fm471-90\
FILE: prof01.dgn

STATE OF TEXAS
JOEL K. DAVENPORT, JR.
79276
REGISTERED PROFESSIONAL ENGINEER

Joel K Davenport Jr 9/19/00
Joel K. Davenport, Jr. P.E. 79276 Date

Texas Department of Transportation

# N' BD FRONTAGE RD "G" PROFILE

SHEET 11 OF 15

| FED.RD. DIV. NO. | FEDERAL AID PROJECT NO. | | SHEET NO. |
|---|---|---|---|
| 6 | NH 2000(704),etc. | | 284 |
| STATE | DIST. | COUNTY | |
| TEXAS | SAT | BEXAR | |
| CONT. | SECT. | JOB | HIGHWAY NO. |
| 2452 | 01 | 036,etc. | LP 1604 |

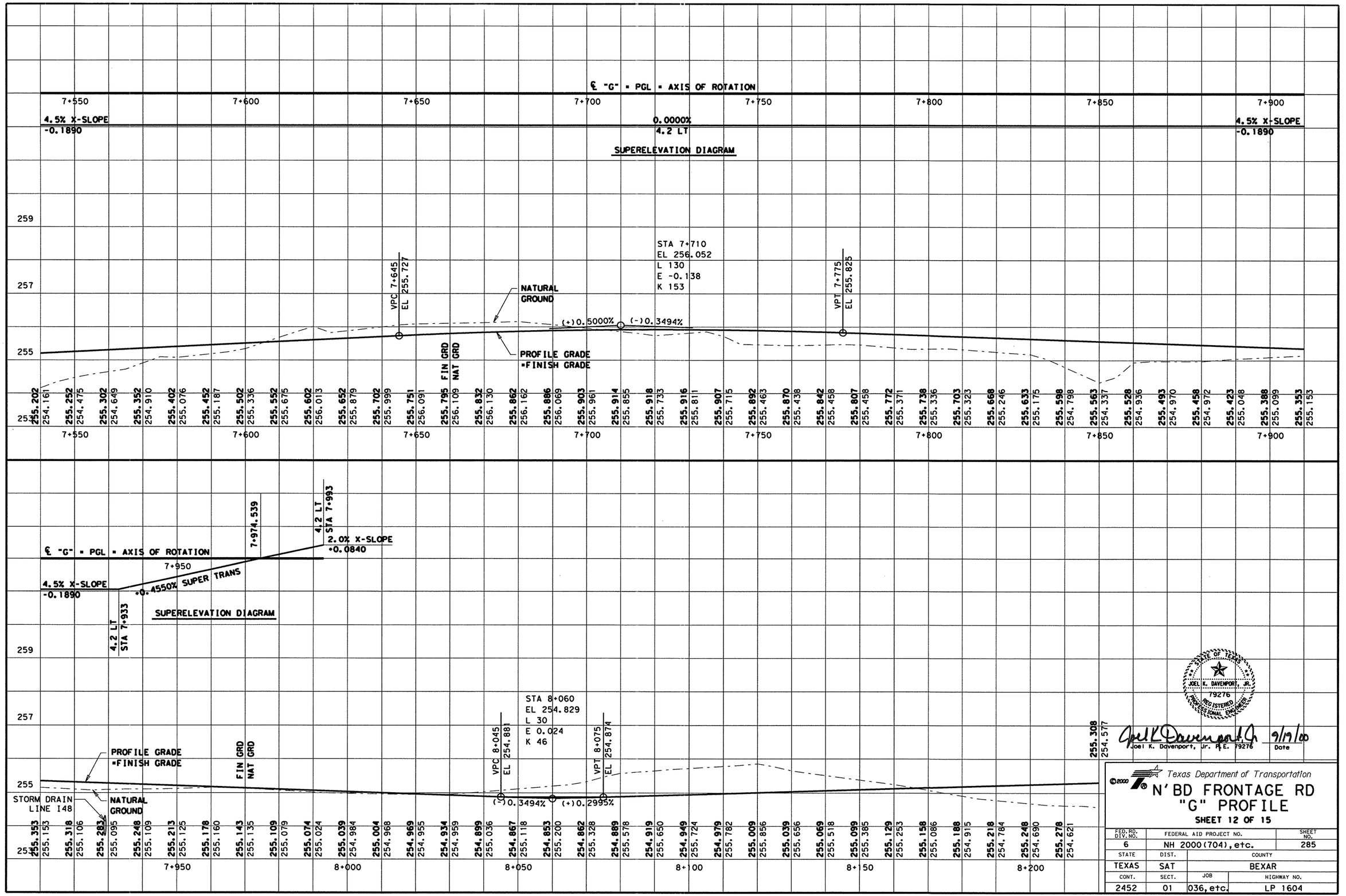


STATE OF TEXAS
JOEL K. DAVENPORT, JR.
79276
REGISTERED PROFESSIONAL ENGINEER

Joel K. Davenport, Jr. P.E. 79276

9/19/00
Date

Texas Department of Transportation

# N' BD FRONTAGE RD "G" PROFILE

SHEET 12 OF 15

| FED.RD. DIV.NO. | FEDERAL AID PROJECT NO. | | SHEET NO. |
|---|---|---|---|
| 6 | NH 2000(704), etc. | | 285 |
| STATE | DIST. | COUNTY | |
| TEXAS | SAT | BEXAR | |
| CONT. | SECT. | JOB | HIGHWAY NO. |
| 2452 | 01 | 036, etc. | LP 1604 |

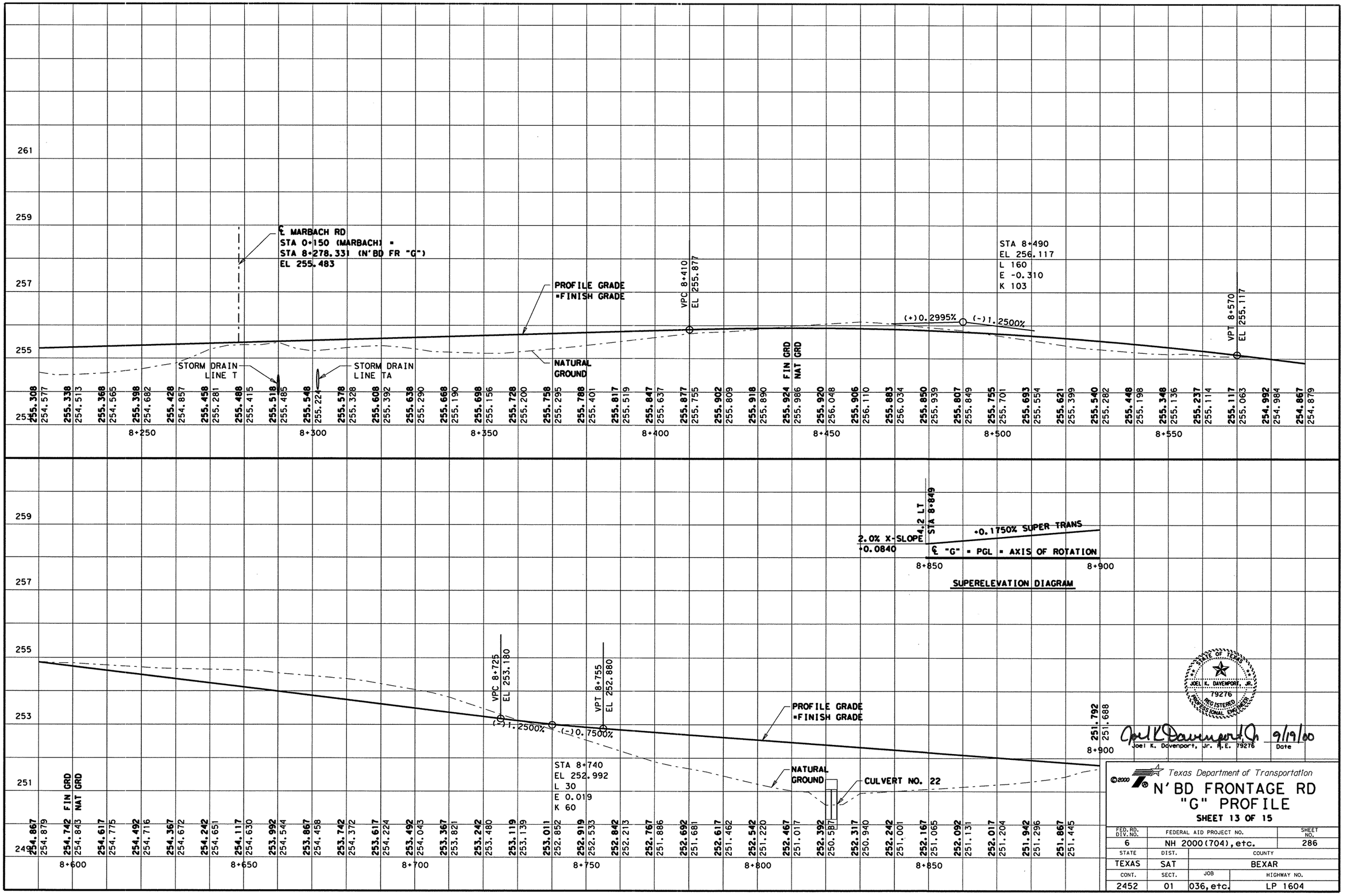


LEVELS DISPLAYED
ACC: lp1604fm471-90\
FILE: prof01.dgn

STATE OF TEXAS
JOEL K. DAVENPORT, JR.
79276
REGISTERED PROFESSIONAL ENGINEER

Joel K Davenport Jr 9/19/00
Joel K. Davenport, Jr. P.E. 79276 Date

© 2000 Texas Department of Transportation

# N' BD FRONTAGE RD "G" PROFILE

SHEET 13 OF 15

| FED. RD. DIV. NO. | FEDERAL AID PROJECT NO. | | SHEET NO. |
|---|---|---|---|
| 6 | NH 2000(704), etc. | | 286 |
| STATE | DIST. | COUNTY | |
| TEXAS | SAT | BEXAR | |
| CONT. | SECT. | JOB | HIGHWAY NO. |
| 2452 | 01 | 036, etc. | LP 1604 |

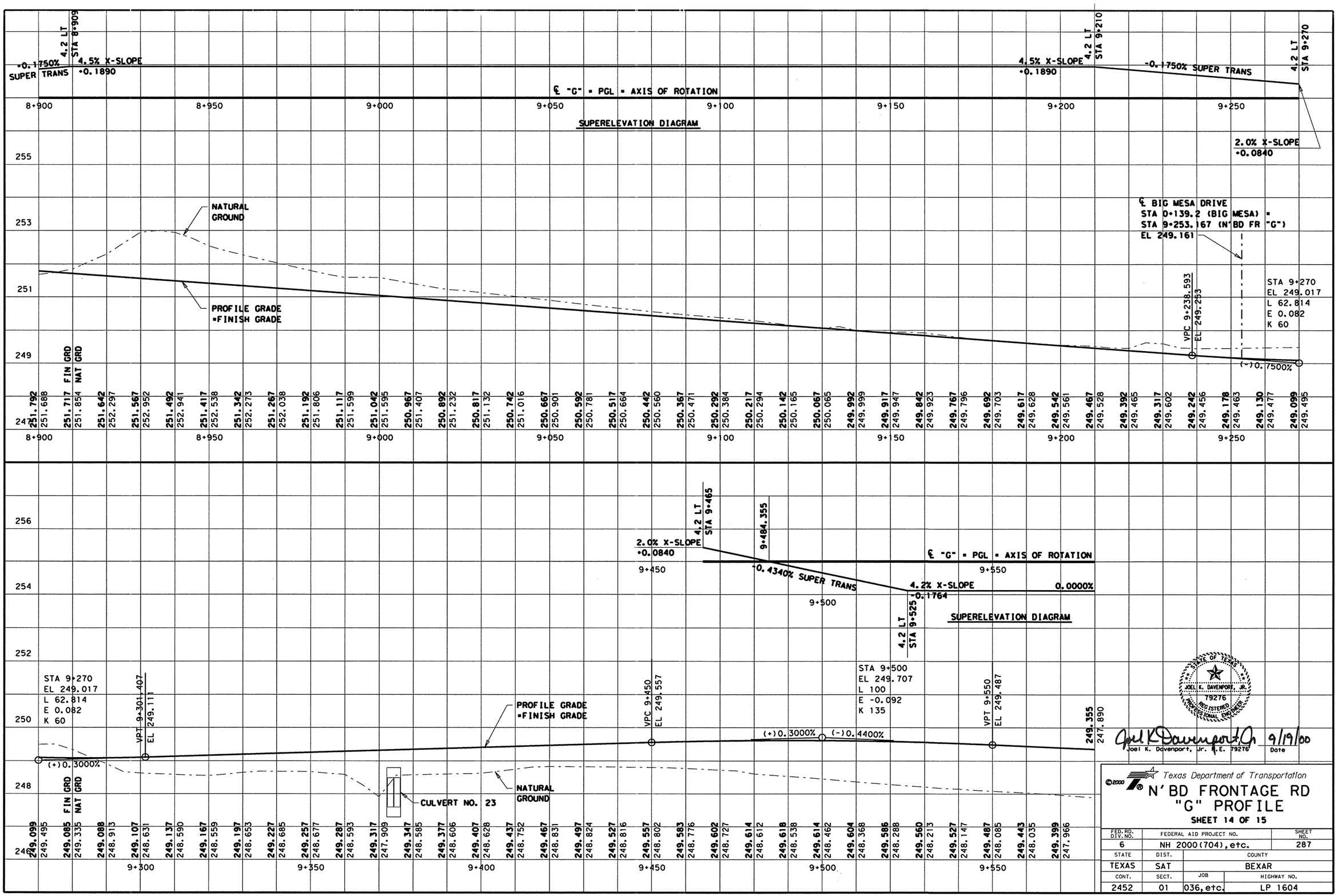


LEVELS DISPLAYED
1 2 3 4 5 6 7 8 9 10 11 12 13 14 15 16
1 7 8 19 20 21 22 23 24 25 26 27 28 29 30 31 32
33 34 35 36 37 38 39 40 41 42 43 44 45 46 47 48
49 50 51 52 53 54 55 56 57 58 59 60 61 62 63

ACC: lp1604fm471-90\
FILE: prof01.dgn

STATE OF TEXAS
JOEL K. DAVENPORT, JR.
79276
REGISTERED PROFESSIONAL ENGINEER

Joel K Davenport Jr 9/19/00
Joel K. Davenport, Jr. P.E. 79276 Date

Texas Department of Transportation

# N'BD FRONTAGE RD "G" PROFILE

SHEET 14 OF 15

| FED.RD. DIV.NO. | FEDERAL AID PROJECT NO. | | SHEET NO. |
|---|---|---|---|
| 6 | NH 2000(704), etc. | | 287 |
| STATE | DIST. | COUNTY | |
| TEXAS | SAT | BEXAR | |
| CONT. | SECT. | JOB | HIGHWAY NO. |
| 2452 | 01 | 036, etc. | LP 1604 |

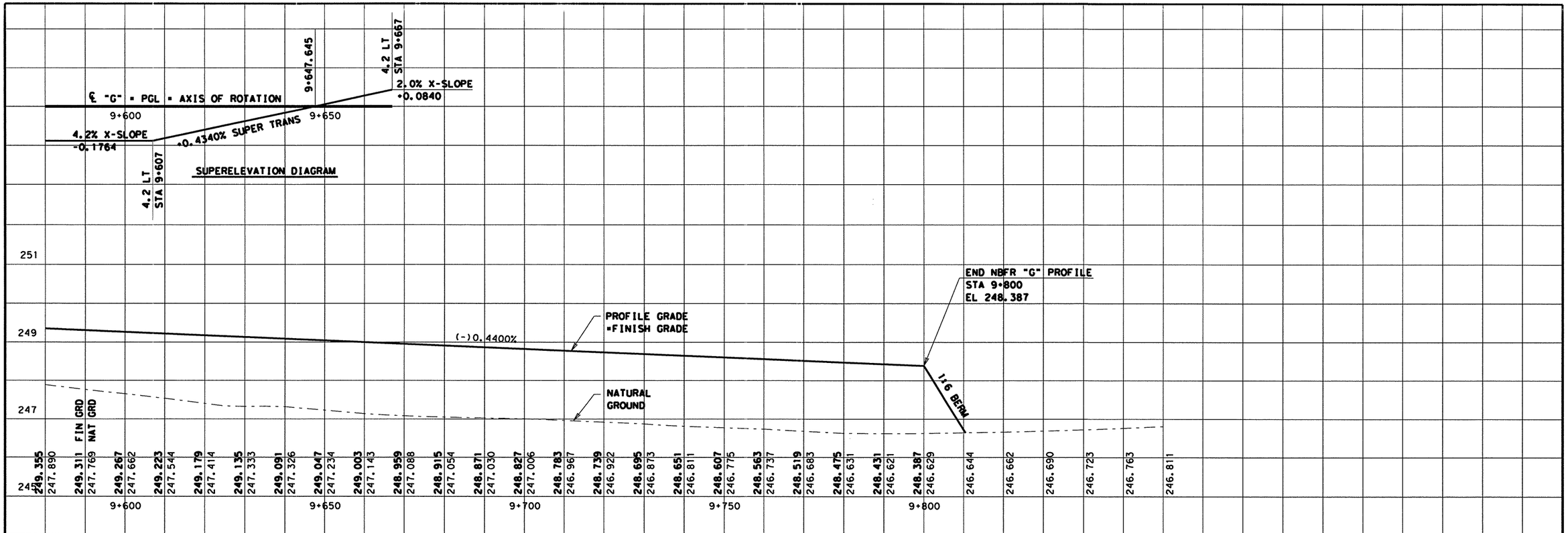


LEVELS DISPLAYED
1 2 3 4 5 6 7 8 9 10 11 12 13 14 15 16
17 18 19 20 21 22 23 24 25 26 27 28 29 30 31 32
33 34 35 36 37 38 39 40 41 42 43 44 45 46 47 48
49 50 51 52 53 54 55 56 57 58 59 60 61 62 63

ACC: lp1604fm471-90\
FILE: prof01.dgn

STATE OF TEXAS
JOEL K. DAVENPORT, JR.
79276
REGISTERED PROFESSIONAL ENGINEER

Joel K Davenport Jr 9/19/00
Joel K. Davenport, Jr. P.E. 79276 Date

Texas Department of Transportation

# N' BD FRONTAGE RD "G" PROFILE

**SHEET 15 OF 15**

| FED. RD. DIV. NO. | FEDERAL AID PROJECT NO. | SHEET NO. |
|---|---|---|
| 6 | NH 2000(704), etc. | 288 |
| STATE | DIST. | COUNTY |
| TEXAS | SAT | BEXAR |
| CONT. | SECT. | JOB / HIGHWAY NO. |
| 2452 | 01 | 036, etc. / LP 1604 |

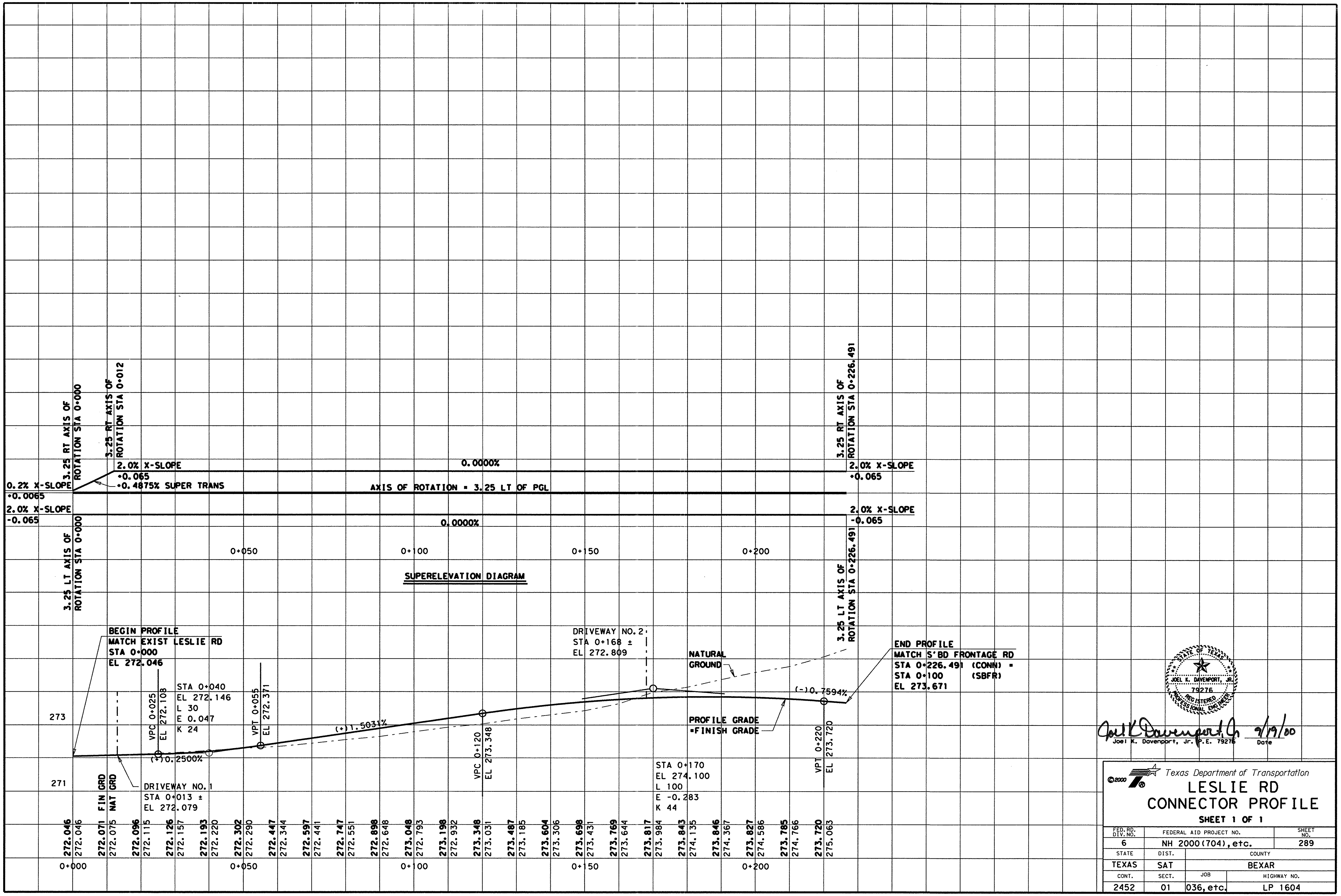


LEVELS DISPLAYED

ACC: lp1604fm471-90\

FILE: prof01.dgn

©2000 Texas Department of Transportation

# LESLIE RD CONNECTOR PROFILE

**SHEET 1 OF 1**

| FED. RD. DIV. NO. | FEDERAL AID PROJECT NO. | | SHEET NO. |
|---|---|---|---|
| 6 | NH 2000(704), etc. | | 289 |
| STATE | DIST. | COUNTY | |
| TEXAS | SAT | BEXAR | |
| CONT. | SECT. | JOB | HIGHWAY NO. |
| 2452 | 01 | 036, etc. | LP 1604 |

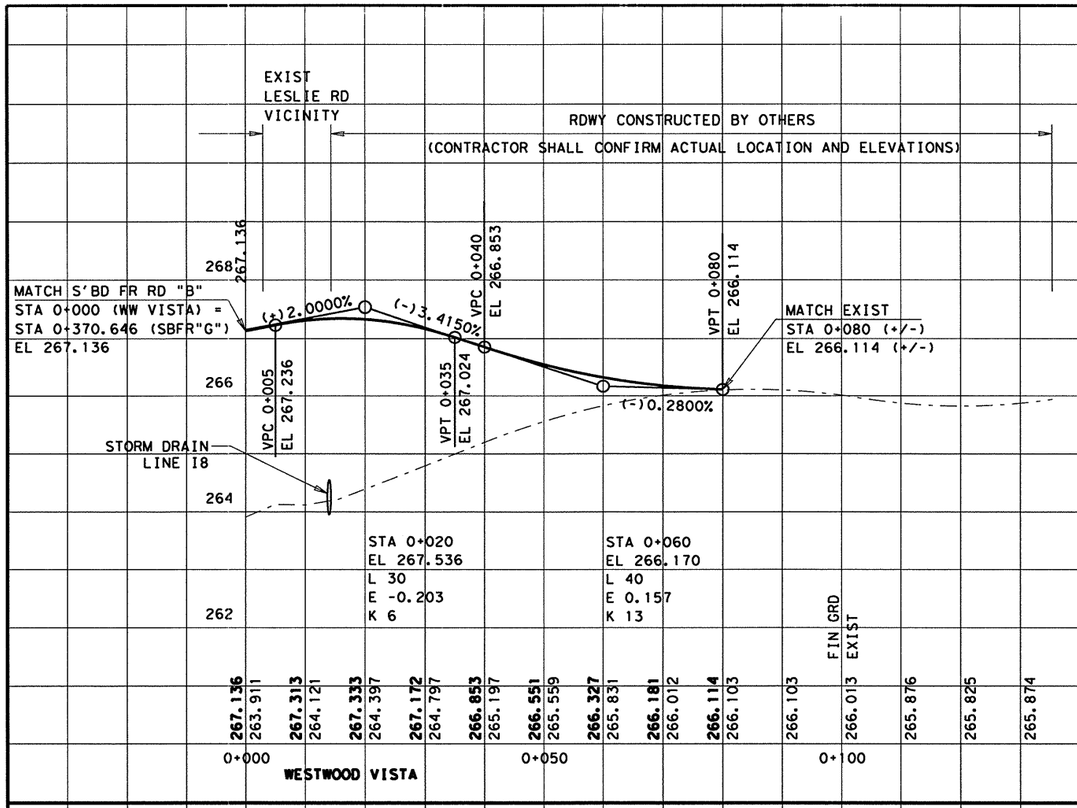


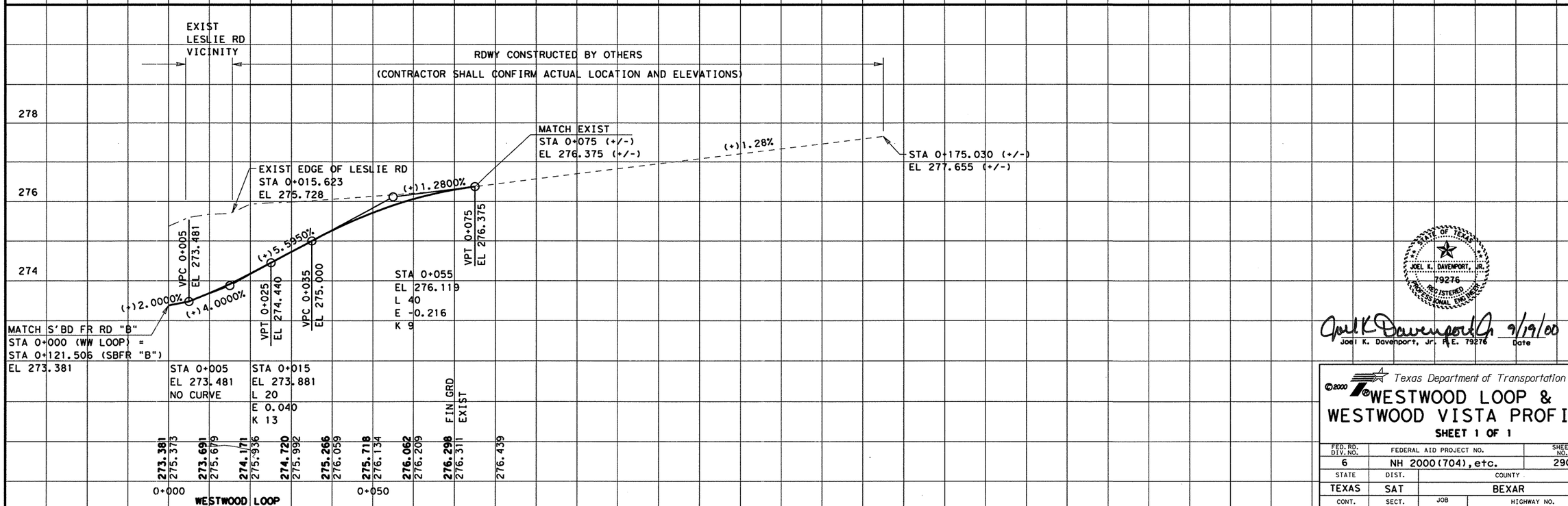


LEVELS DISPLAYED
1 2 3 4 5 6 7 8 9 10 11 12 13 14 15 16
17 18 19 20 21 22 23 24 25 26 27 28 29 30 31 32
33 34 35 36 37 38 39 40 41 42 43 44 45 46 47 48
49 50 51 52 53 54 55 56 57 58 59 60 61 62 63

ACC: lp1604fm471-90\
FILE: prof01.dgn

STATE OF TEXAS
JOEL K. DAVENPORT, JR.
79276
REGISTERED
PROFESSIONAL ENGINEER

Joel K. Davenport, Jr. P.E. 79276 — 9/19/00
Date

© 2000 Texas Department of Transportation

# WESTWOOD LOOP & WESTWOOD VISTA PROFILE

SHEET 1 OF 1

| FED.RD. DIV.NO. | FEDERAL AID PROJECT NO. | | SHEET NO. |
|---|---|---|---|
| 6 | NH 2000(704),etc. | | 290 |
| STATE | DIST. | COUNTY | |
| TEXAS | SAT | BEXAR | |
| CONT. | SECT. | JOB | HIGHWAY NO. |
| 2452 | 01 | 036,etc. | LP 1604 |

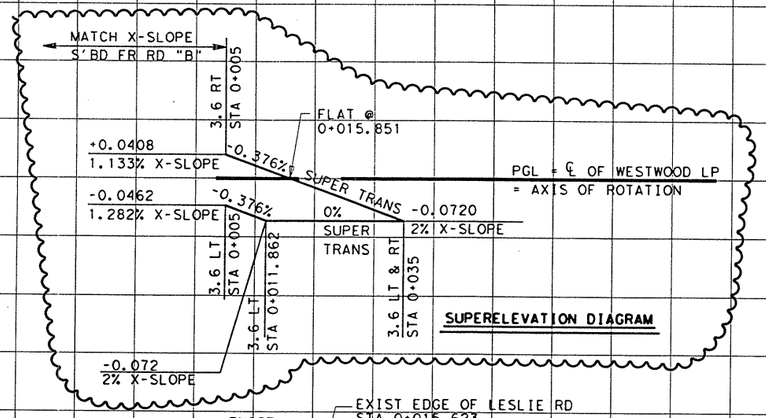


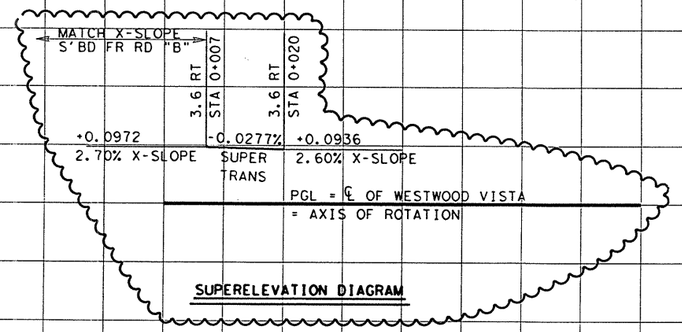


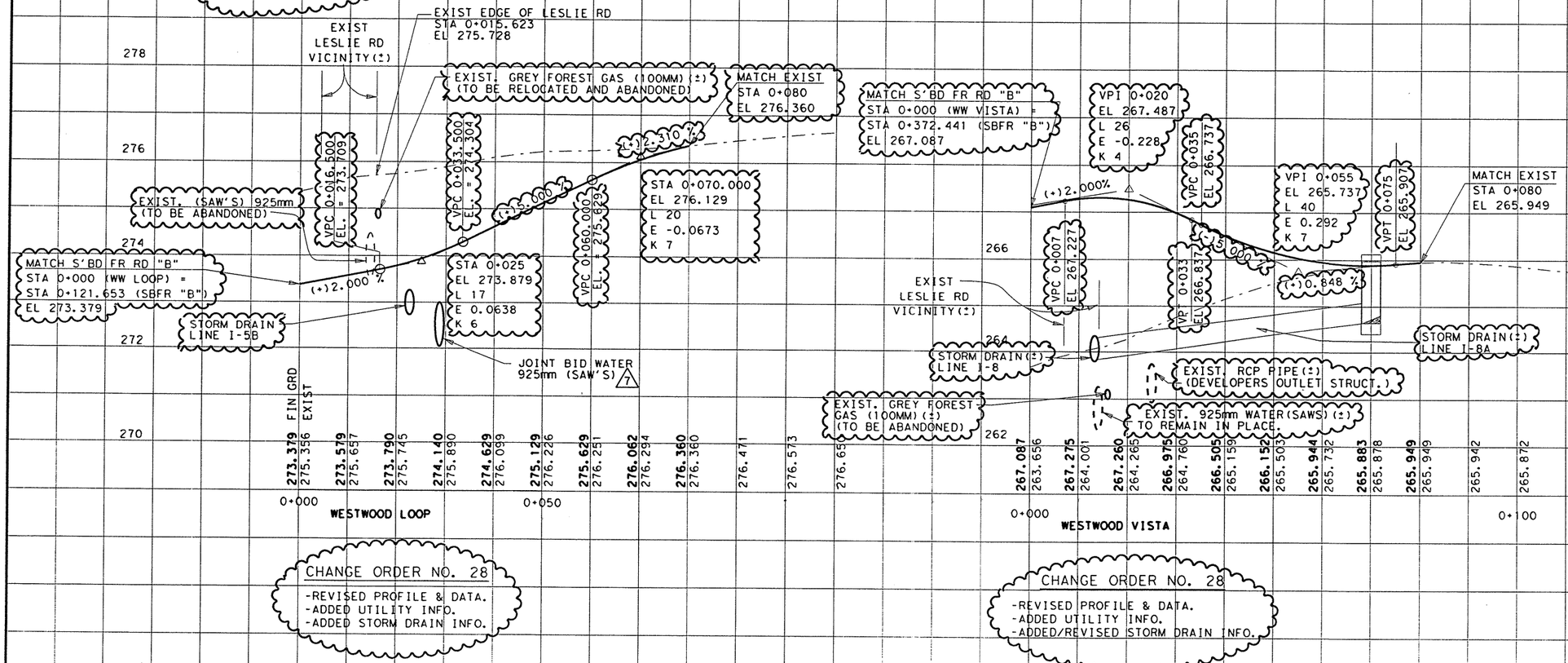


CHANGE ORDER NO. 28
-REVISED PROFILE & DATA.
-ADDED UTILITY INFO.
-ADDED STORM DRAIN INFO.

CHANGE ORDER NO. 28
-REVISED PROFILE & DATA.
-ADDED UTILITY INFO.
-ADDED/REVISED STORM DRAIN INFO.

# REFERS TO CHANGES MADE AS PART OF CHANGE ORDER.

CHANGE ORDER 28

REVISED SHEET

STATE OF TEXAS
JEROME D. PAVLISKA
76075
REGISTERED PROFESSIONAL ENGINEER

Jerome D. Pavlisko P.E. 2-7-03
Jerome D. Pavlisko, P.E. Date

© 2001
Texas Department of Transportation

# WESTWOOD LOOP & WESTWOOD VISTA PROFILES

SHEET 1 OF 1

| FED. RD. DIV. NO. | FEDERAL AID PROJECT NO. | | SHEET NO. |
|---|---|---|---|
| 6 | NH 2000(704), etc. | | 290A |
| STATE | DIST. | COUNTY | |
| TEXAS | SAT | BEXAR | |
| CONT. | SECT. | JOB | HIGHWAY NO. |
| 2452 | 01 | 036, etc. | LP 1604 |

01-23-03

LEVELS DISPLAYED
1 2 3 4 5 6 7 8 9 10 11 12 13 14 15 16
17 18 19 20 21 22 23 24 25 26 27 28 29 30 31 32
33 34 35 36 37 38 39 40 41 42 43 44 45 46 47 48
49 50 51 52 53 54 55 56 57 58 59 60 61 62 63

ACC: lp1604fm471-90\
FILE: prof01-C028.dgn

PGL = ℄ CULEBRA RD = AXIS OF ROTATION

10+100 10+150 10+190.372 10+200 10+250 10+300 10+350

5.4 LT STA 10+093.412 | 5.4 RT STA 10+093.412
2.835% X-SLOPE
-0.1531
3.513% X-SLOPE
-0.1897
+0.1579% SUPER TRANS
+0.1670% SUPER TRANS

SUPERELEVATION DIAGRAM

BEGIN FULL CONSTRUCTION
STA 10+093.412 (CULEBRA RD)
EL 263.761

BEGIN OVERLAY / MATCH EXIST
STA 10+030 (CULEBRA RD)
EL 262.548

PROFILE GRADE
=FINISH GRADE

(+)0.6343% (-)0.2500% (-)0.2500% (-)1.6600%

VPC 10+093.412 EL 263.761
FIN GRD
NAT GRD
VPT 10+163.412 EL 263.895
CULVERT NO. 5
NATURAL GROUND
STORM DRAIN LINE X
VPC 10+245 EL 263.692
STORM DRAIN LINE Y
VPT 10+315 EL 263.023
VPC 10+365 EL 262.193

STA 10+128.412
EL 263.983
L 70
E -0.077
K 79

STA 10+280
EL 263.604
L 70
E -0.123
K 50

5.4 LT STA 10+198.917 | 5.4 RT STA 10+198.917
5.4 LT STA 10+210.917 | 5.4 RT STA 10+210.917
MATCH S'BD FR X-SLOPE
0.25% X-SLOPE
+0.0135
+0.2122% SUPER TRANS
5.4 LT (1.00% X-SLOPE) STA 10+230
+0.054
0.0000% SUPER TRANS
-0.054
0.0000% SUPER TRANS
5.4 RT (1.00% X-SLOPE) STA 10+230
-0.2122% SUPER TRANS
0.25% X-SLOPE
-0.0135

℄ S'BD FRONTAGE RD
STA 10+203.117 (CULEBRA) =
STA 0+634.833 (SBFR)
EL 263.796

5.4 LT STA 10+328.755 | 5.4 RT STA 10+328.755
0.28% X-SLOPE
+0.0151
-0.4443% SUPER TRANS
5.4 LT (1.00% X-SLOPE) STA 10+320
+0.6000% SUPER TRANS
0.03% X-SLOPE
-0.0016
5.4 RT (1.00% X-SLOPE) STA 10+320

℄ LP 1604
STA 10+269.548 (CULEBRA) =
STA 16+023.703 (LP 1604)
EL 263.569

5.4 LT STA 10+340.755 | 5.4 RT STA 10+340.755
MATCH N'BD FR X-SLOPE
-0.0150% SUPER TRANS
-0.4885% SUPER TRANS

℄ N'BD FRONTAGE RD
STA 10+336.555 (CULEBRA) =
STA 0+657.454 (NBFR)
EL 262.665

STORM DRAIN LINE ZB
STORM DRAIN LINE Z

264 / 262 / 260

263.080 262.861 262.674 262.548 262.680 262.827 263.079 263.344 263.544 263.739 **263.800** 263.803 **263.849** 263.841 **263.885** 263.845 **263.909** 263.839 **263.919** 263.837 **263.918** 263.821 **263.903** 263.820 **263.879** 263.794 **263.854** 263.763 **263.829** 263.500 **263.804** 263.443 **263.779** 263.619 **263.754** 263.682 **263.729** 263.626 **263.704** 263.569 **263.676** 263.511 **263.631** 263.403 **263.566** 263.428 **263.481** 263.383 **263.375** 263.224 **263.249** 263.037 **263.103** 262.860 **262.940** 262.670 **262.774** 262.506 **262.608** 262.364 **262.442** 262.262 **262.276** 262.144 **262.113** 262.033

10+050 10+100 10+150 10+200 10+250 10+300 10+350

5.4 LT STA 10+380
-0.0150% SUPER TRANS
0.17% X-SLOPE
+0.0092
PGL = ℄ CULEBRA RD = AXIS OF ROTATION
10+400
-0.4885% SUPER TRANS
3.58% X-SLOPE
-0.1933
SUPERELEVATION DIAGRAM
5.4 RT STA 10+380

END FULL DEPTH CONSTRUCTION
BEGIN WIDEN & OVERLAY
STA 10+380

265 / 263 / 261

VPT 10+395 EL 261.808
STA 10+380
EL 261.944
L 30
E 0.028
K 40

(-)1.6600% (-)0.9096%
PROFILE GRADE
=FINISH GRADE

END WIDEN & OVERLAY
MATCH EXIST
STA 10+446.956
EL 261.335

NATURAL GROUND

**262.113** 262.033 **261.972** 261.927 261.837 261.762 261.661 261.557 261.471 261.383 261.313 261.247 261.195 261.162 261.138 261.183 261.353 261.544 261.823 262.115 262.443 262.707 262.943 263.125

10+400 10+450 10+500 10+550

LEVELS DISPLAYED
1 2 3 4 5 6 7 8 9 10 11 12 13 14 15 16
17 18 19 20 21 22 23 24 25 26 27 28 29 30 31 32
33 34 35 36 37 38 39 40 41 42 43 44 45 46 47 48
49 50 51 52 53 54 55 56 57 58 59 60 61 62 63

ACC: lp1604fm471-90\
FILE: prof01.dgn

STATE OF TEXAS
JOEL K. DAVENPORT, JR.
79276
REGISTERED PROFESSIONAL ENGINEER

Joel K. Davenport, Jr. 9/19/00
Joel K. Davenport, Jr., P.E. 79276 Date

Texas Department of Transportation

# FM 471 (CULEBRA RD) PROFILE

SHEET 1 OF 1

| FED.RD. DIV.NO. | FEDERAL AID PROJECT NO. | SHEET NO. |
|---|---|---|
| 6 | NH 2000(704), etc. | 291 |
| STATE | DIST. | COUNTY |
| TEXAS | SAT | BEXAR |
| CONT. | SECT. | JOB / HIGHWAY NO. |
| 2452 | 01 | 036, etc. / LP 1604 |

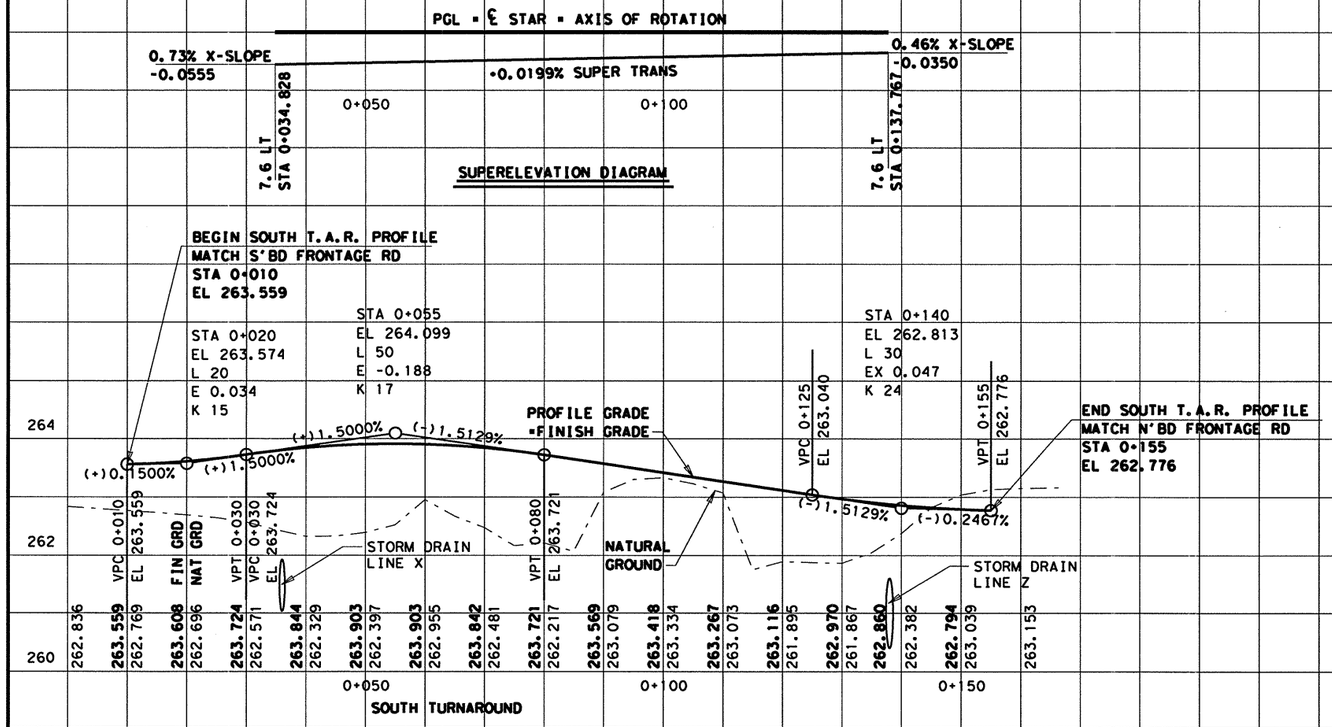


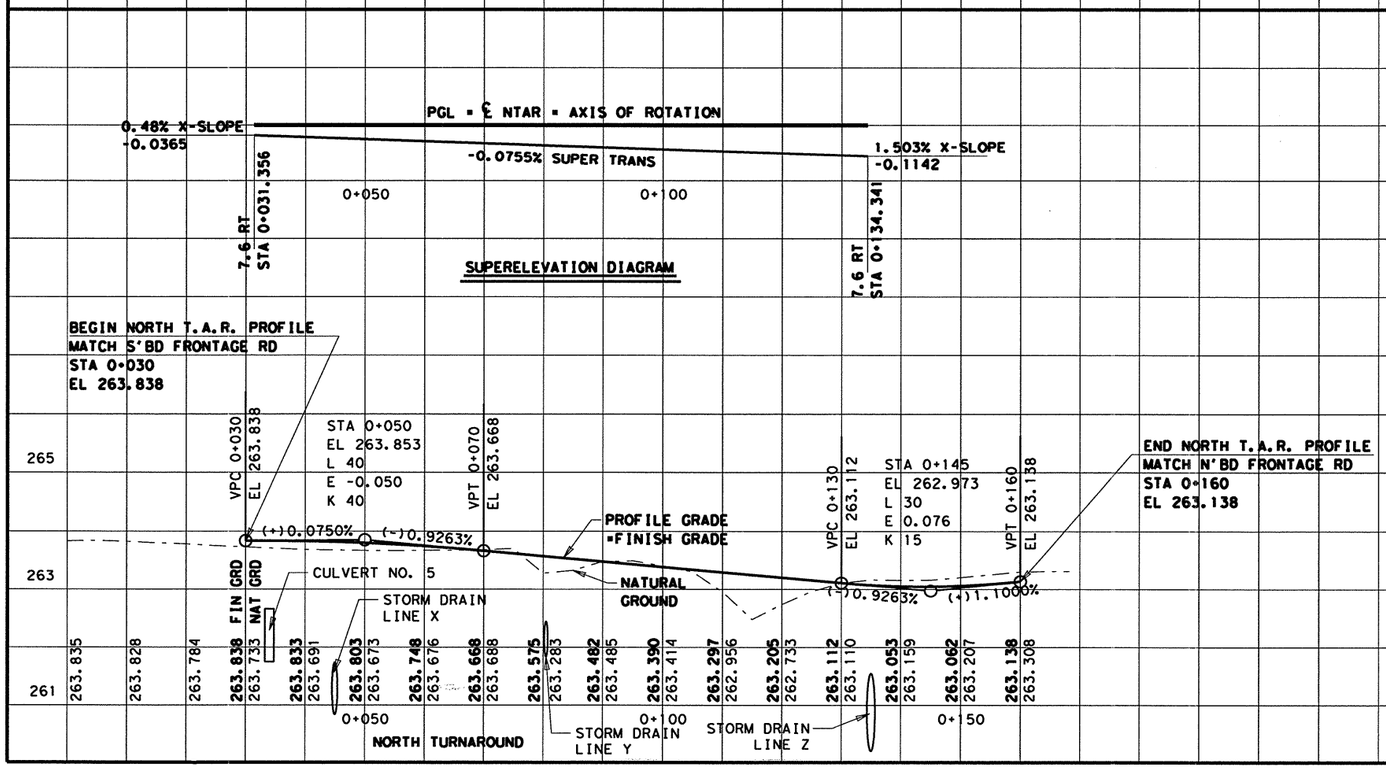


LEVELS DISPLAYED
1 2 3 4 5 6 7 8 9 10 11 12 13 14 15 16
17 18 19 20 21 22 23 24 25 26 27 28 29 30 31 32
33 34 35 36 37 38 39 40 41 42 43 44 45 46 47 48
49 50 51 52 53 54 55 56 57 58 59 60 61 62 63

ACC: lp1604fm471-90\
FILE: prof01.dgn

STATE OF TEXAS
JOEL K. DAVENPORT, JR.
79276
REGISTERED PROFESSIONAL ENGINEER

Joel K. Davenport Jr. 9/19/00
Joel K. Davenport, Jr. P.E. 79276 Date

Texas Department of Transportation

# CULEBRA RD
# TURNAROUNDS PROFILE

SHEET 1 OF 1

| FED.RD. DIV.NO. | FEDERAL AID PROJECT NO. | | SHEET NO. |
|---|---|---|---|
| 6 | NH 2000(704), etc. | | 292 |
| STATE | DIST. | COUNTY | |
| TEXAS | SAT | BEXAR | |
| CONT. | SECT. | JOB | HIGHWAY NO. |
| 2452 | 01 | 036, etc. | LP 1604 |

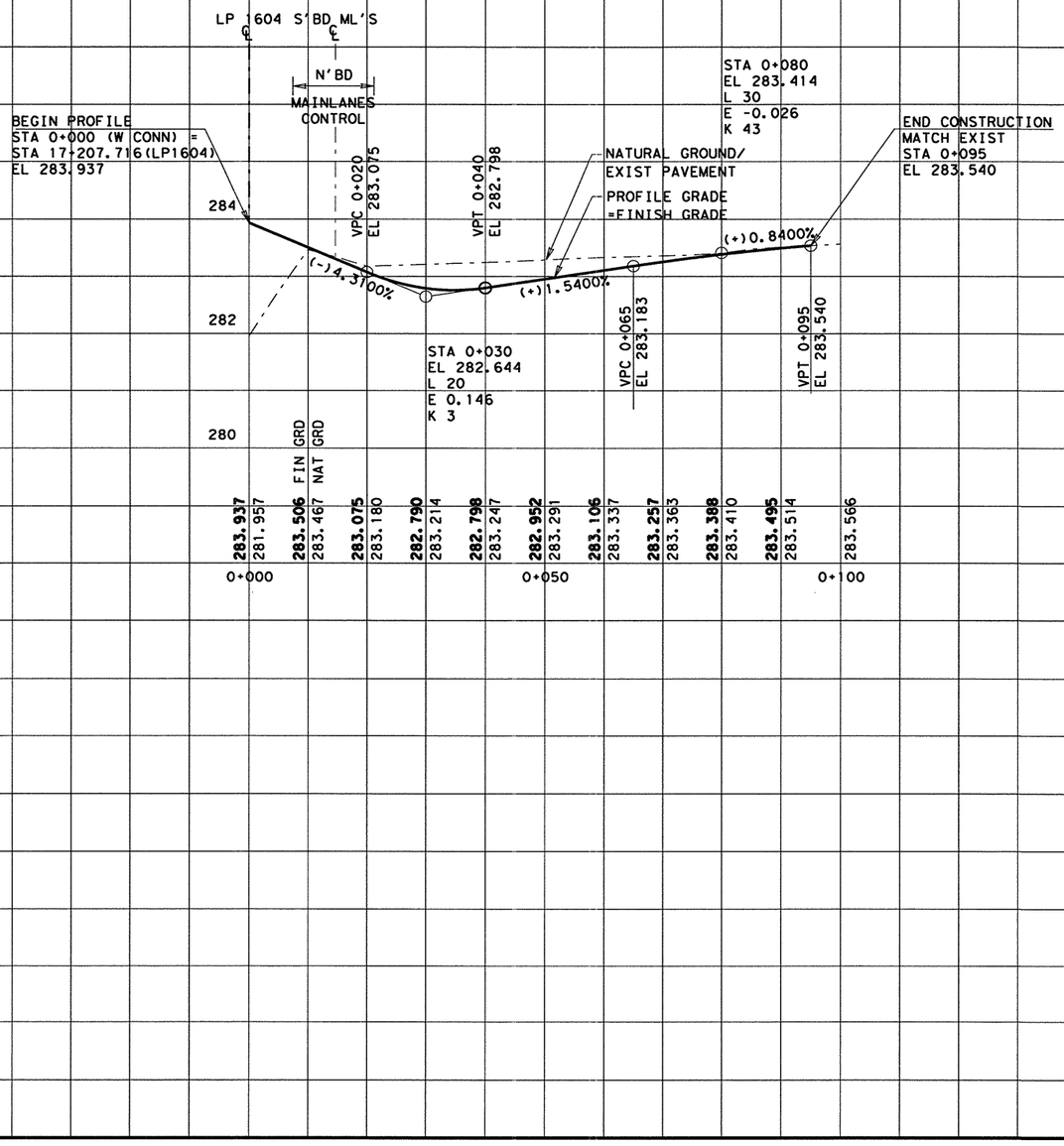


LEVELS DISPLAYED
1 2 3 4 5 6 7 8 9 10 11 12 13 14 15 16
17 18 19 20 21 22 23 24 25 26 27 28 29 30 31 32
33 34 35 36 37 38 39 40 41 42 43 44 45 46 47 48
49 50 51 52 53 54 55 56 57 58 59 60 61 62 63

ACC: lp1604fm471-90\

FILE: prof01.dgn

STATE OF TEXAS
JOEL K. DAVENPORT, JR.
79276
REGISTERED
PROFESSIONAL ENGINEER

Joel K Davenport 9/19/00

Joel K. Davenport, Jr. P.E. 79276 Date

Texas Department of Transportation

# SH 151 WB'D INTERSECTION

**SHEET 1 OF 1**

| FED. RD. DIV. NO. | FEDERAL AID PROJECT NO. | | SHEET NO. |
|---|---|---|---|
| 6 | NH 2000(704), etc. | | 293 |
| STATE | DIST. | COUNTY | |
| TEXAS | SAT | BEXAR | |
| CONT. | SECT. | JOB | HIGHWAY NO. |
| 2452 | 01 | 036, etc. | LP 1604 |

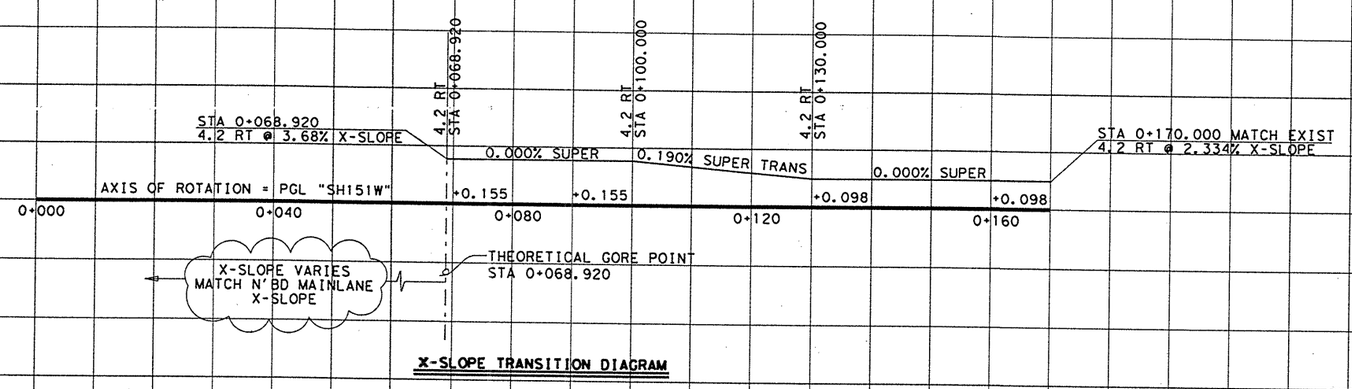


**X-SLOPE TRANSITION DIAGRAM**

STA = 0+060.000
EL = 282.628
L = 30.000
E = -0.083

STA = 0+095.000
EL = 282.278
L1 = 20.000
L2 = 35.000
E = 0.206

STA = 0+150.000
EL = 283.510
L = 40.000
E = -0.075

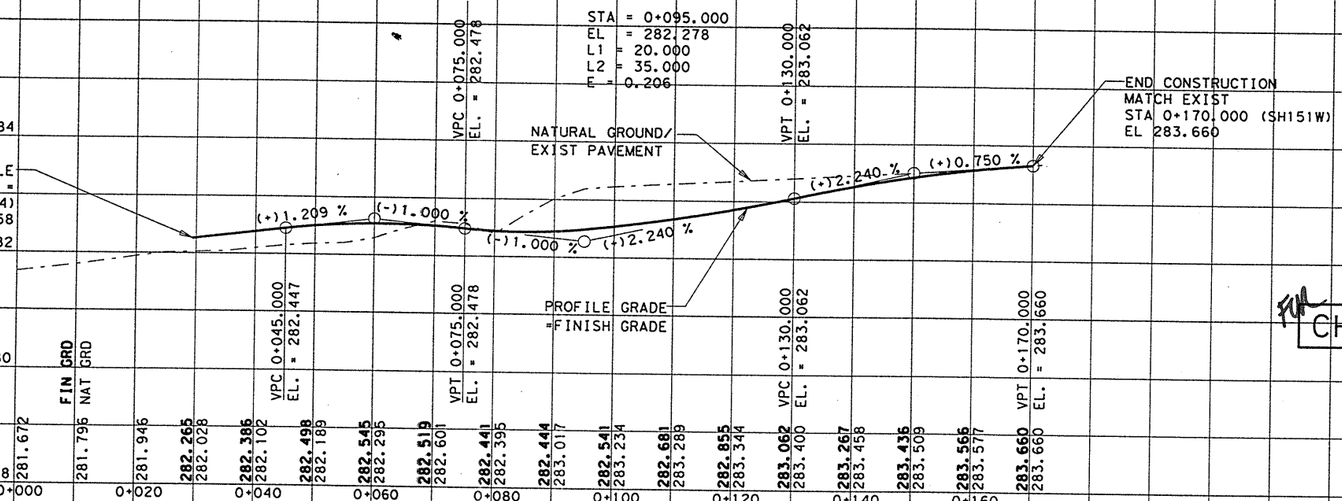


CHANGE ORDER NO. 11
REVISED PROFILE
DATA FOR SH 151 W

FOR CHANGE ORDER # 11

STATE OF TEXAS
JENNIFER L. MOCZYGEMBA
84734
REGISTERED PROFESSIONAL ENGINEER

FOR [signature] P.E. 10-10-01
Jennifer L. Moczygemba, P.E. 84734 Date

© 2001

Texas Department of Transportation

# SH 151 WB'D INTERSECTION

SHEET 1 OF 1

| FED. RD. DIV. NO. | FEDERAL AID PROJECT NO. | SHEET NO. |
|---|---|---|
| 6 | NH 2000(704), etc. | 293A |
| STATE | DIST. | COUNTY |
| TEXAS | SAT | BEXAR |
| CONT. | SECT. | JOB / HIGHWAY NO. |
| 2452 | 01 | 036, etc. / LP 1604 |

LEVELS DISPLAYED
1 2 3 4 5 6 7 8 9 10 11 12 13 14 15 16
17 18 19 20 21 22 23 24 25 26 27 28 29 30 31 32
33 34 35 36 37 38 39 40 41 42 43 44 45 46 47 48
49 50 51 52 53 54 55 56 57 58 59 60 61 62 63

ACC: lp1604fm471-90\
FILE: prof01.dgn

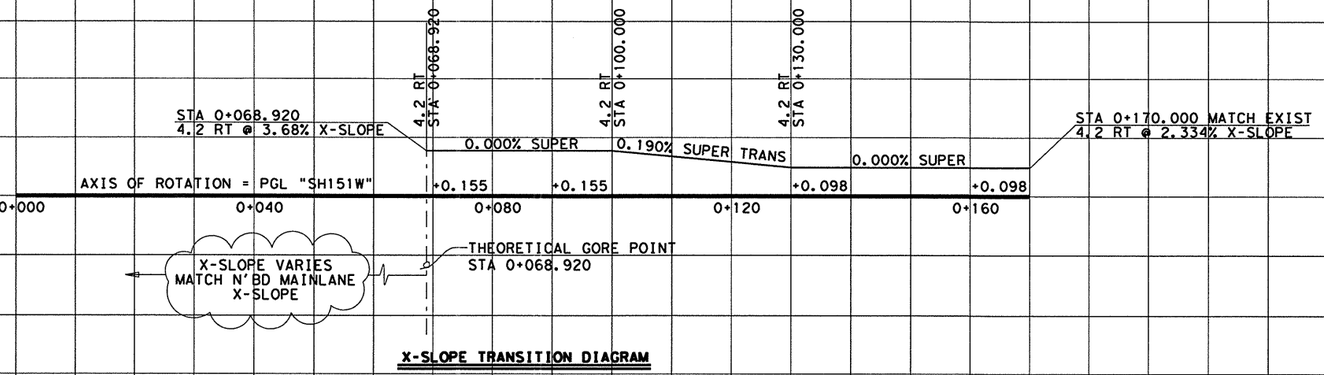


**X-SLOPE TRANSITION DIAGRAM**

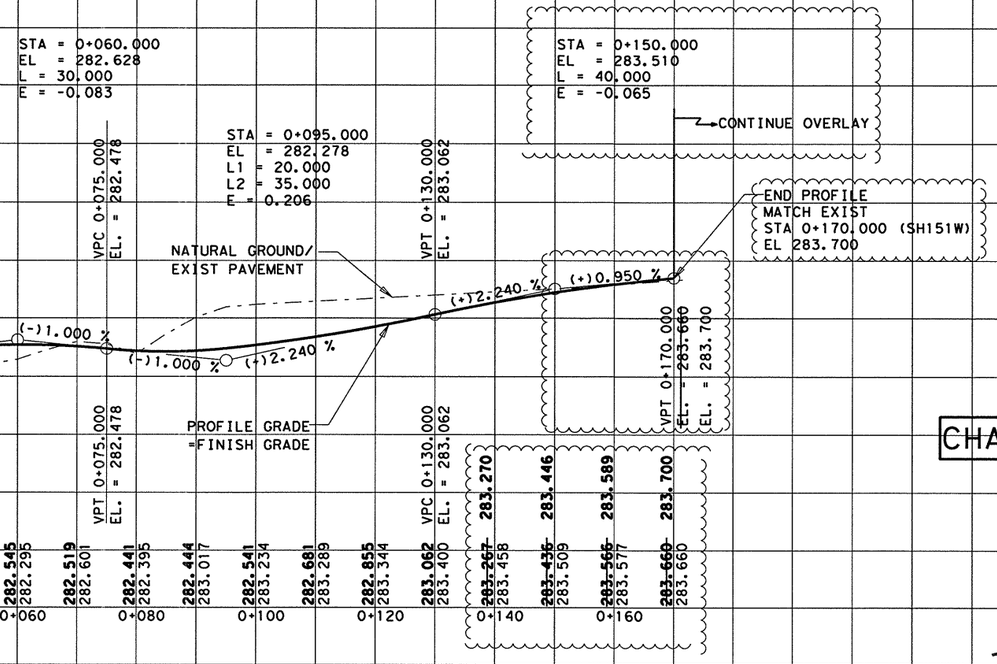


CHANGE ORDER NO. 14
REVISED PROFILE
DATA FOR SH 151 W

CHANGE ORDER 14

STATE OF TEXAS
TERRY G. McCOY
75016
REGISTERED PROFESSIONAL ENGINEER

Terry G. McCoy, P.E.
1-17-02
Date
FOR CO#14 ONLY

© 2001 Texas Department of Transportation

# SH 151 WB'D INTERSECTION

**SHEET 1 OF 1**

| FED. RD. DIV. NO. | FEDERAL AID PROJECT NO. | SHEET NO. |
|---|---|---|
| 6 | NH 2000(704), etc. | 293B |
| STATE | DIST. | COUNTY |
| TEXAS | SAT | BEXAR |
| CONT. | SECT. | JOB / HIGHWAY NO. |
| 2452 | 01 | 036, etc. / LP 1604 |

1-14-02

LEVELS DISPLAYED
1 2 3 4 5 6 7 8 9 10 11 12 13 14 15 16
7 18 19 20 21 22 23 24 25 26 27 28 29 30 31 32
33 34 35 36 37 38 39 40 41 42 43 44 45 46 47 48
49 50 51 52 53 54 55 56 57 58 59 60 61 62 63

ACC: lp1604fm471-90\
FILE: prof01.dgn

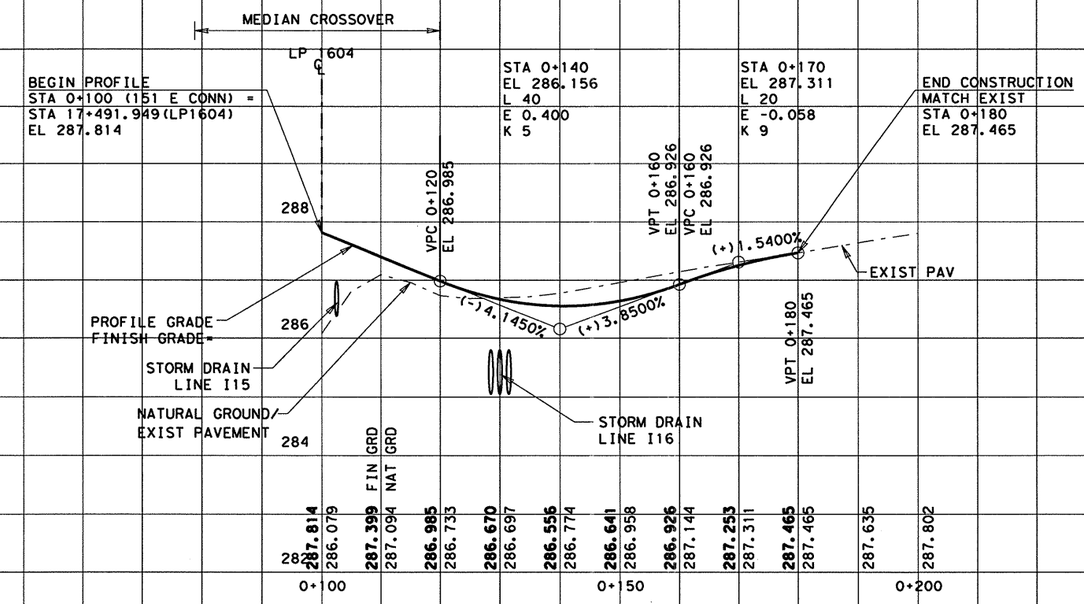


LEVELS DISPLAYED
1 2 3 4 5 6 7 8 9 10 11 12 13 14 15 16
17 18 19 20 21 22 23 24 25 26 27 28 29 30 31 32
33 34 35 36 37 38 39 40 41 42 43 44 45 46 47 48
49 50 51 52 53 54 55 56 57 58 59 60 61 62 63

ACC: lp1604fm471-90\
FILE: prof01.dgn

STATE OF TEXAS
JOEL K. DAVENPORT, JR.
79276
REGISTERED
PROFESSIONAL ENGINEER

Joel K Davenport Jr. 9/19/00
Joel K. Davenport, Jr. P.E. 79276 Date

Texas Department of Transportation

# SH 151 EB'D INTERSECTION

SHEET 1 OF 1

| FED.RD. DIV.NO. | FEDERAL AID PROJECT NO. | | SHEET NO. |
|---|---|---|---|
| 6 | NH 2000(704),etc. | | 294 |
| STATE | DIST. | COUNTY | |
| TEXAS | SAT | BEXAR | |
| CONT. | SECT. | JOB | HIGHWAY NO. |
| 2452 | 01 | 036,etc. | LP 1604 |

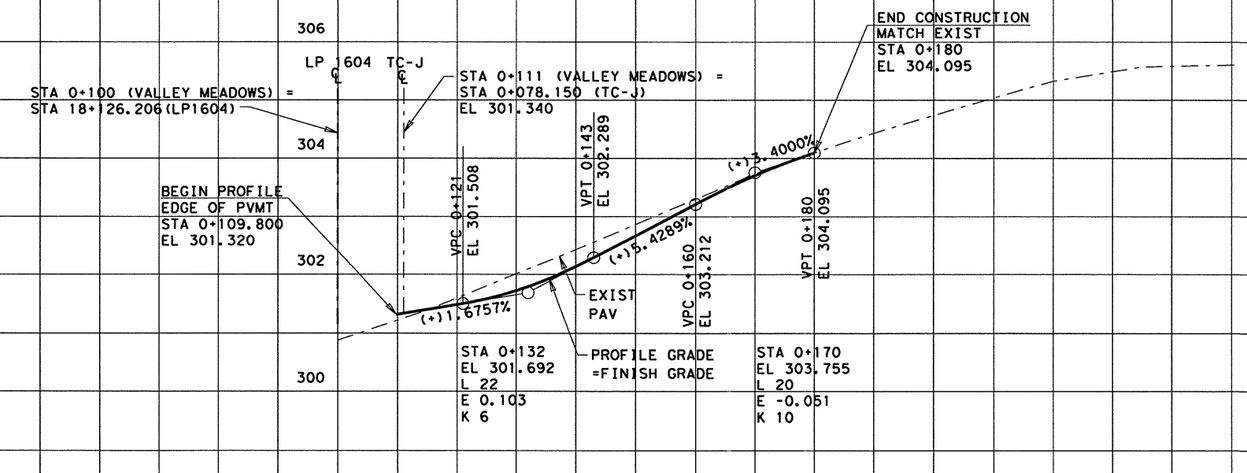


LEVELS DISPLAYED
1 2 3 4 5 6 7 8 9 10 11 12 13 14 15 16
17 18 19 20 21 22 23 24 25 26 27 28 29 30 31 32
33 34 35 36 37 38 39 40 41 42 43 44 45 46 47 48
49 50 51 52 53 54 55 56 57 58 59 60 61 62 63

ACC: lp1604fm471-90\

FILE: prof01.dgn

STATE OF TEXAS
JOEL K. DAVENPORT, JR.
79276
REGISTERED
PROFESSIONAL ENGINEER

Joel K. Davenport, Jr. 9/19/00
Joel K. Davenport, Jr. P.E. 79276 Date

Texas Department of Transportation

# VALLEY MEADOWS PROFILE

**SHEET 1 OF 1**

| FED. RD. DIV. NO. | FEDERAL AID PROJECT NO. | | SHEET NO. |
|---|---|---|---|
| 6 | NH 2000(704), etc. | | 295 |
| STATE | DIST. | COUNTY | |
| TEXAS | SAT | BEXAR | |
| CONT. | SECT. | JOB | HIGHWAY NO. |
| 2452 | 01 | 036, etc. | LP 1604 |

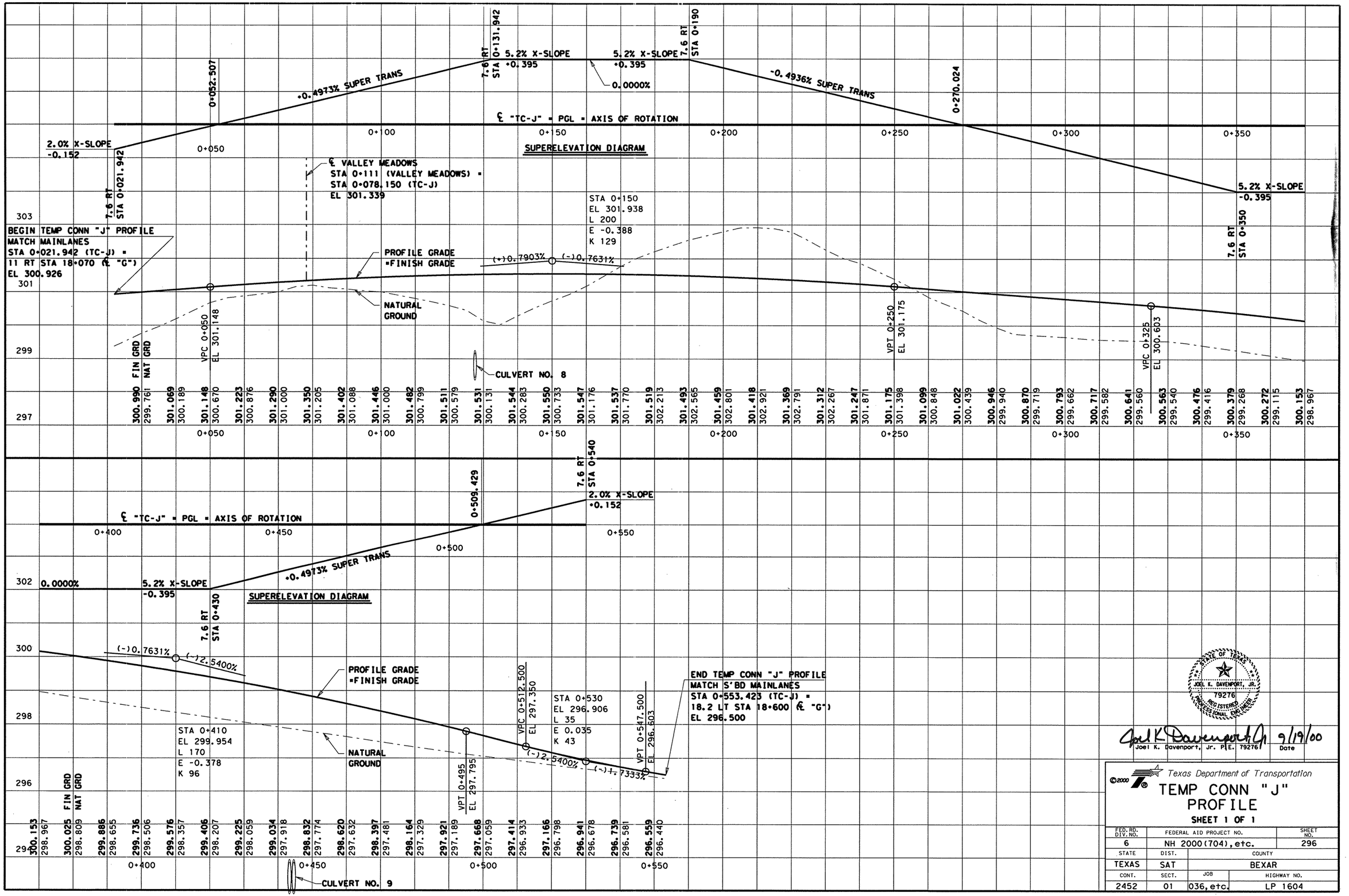


LEVELS DISPLAYED
1 2 3 4 5 6 7 8 9 10 11 12 13 31 41 51 61
71 81 91 92 101 122 123 124 125 126 127 128 129 303 313 2
33 34 35 36 37 38 39 40 41 42 43 44 45 46 47 48
95 105 115 125 135 145 155 165 175 185 195 205 215 225 235

ACC: lp1604fm471-90\
FILE: prof01.dgn

STATE OF TEXAS
JOEL K. DAVENPORT, JR.
79276
REGISTERED
PROFESSIONAL ENGINEER

Joel K Davenport Jr 9/19/00
Joel K. Davenport, Jr. P.E. 79276 Date

©2000
Texas Department of Transportation

# TEMP CONN "J" PROFILE

SHEET 1 OF 1

| FED. RD. DIV. NO. | FEDERAL AID PROJECT NO. | SHEET NO. |
|---|---|---|
| 6 | NH 2000(704), etc. | 296 |
| STATE | DIST. | COUNTY |
| TEXAS | SAT | BEXAR |
| CONT. | SECT. | JOB / HIGHWAY NO. |
| 2452 | 01 | 036, etc. / LP 1604 |

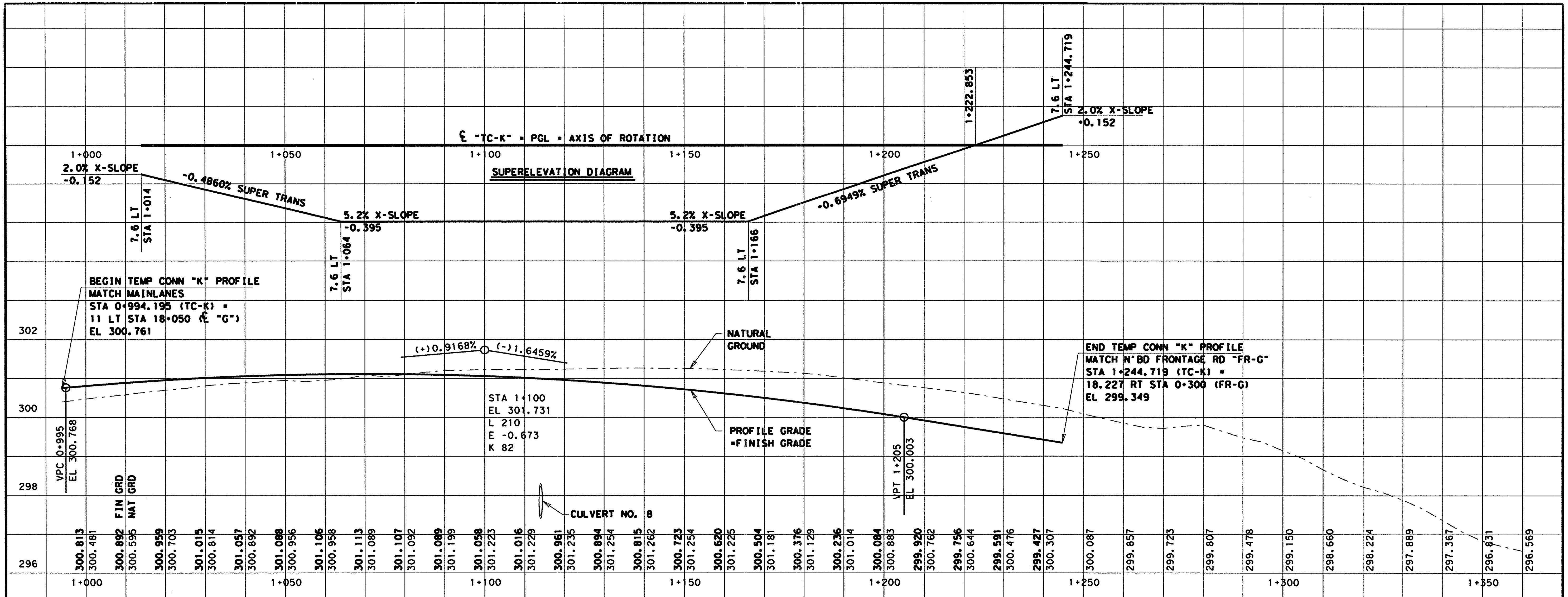


LEVELS DISPLAYED

| | | | | | | | | | | | | | | | |
|---|---|---|---|---|---|---|---|---|---|---|---|---|---|---|---|
| 1 | 2 | 3 | 4 | 5 | 6 | 7 | 8 | 9 | 10 | 11 | 12 | 13 | 14 | 15 | 16 |
| 17 | 18 | 19 | 20 | 21 | 22 | 23 | 24 | 25 | 26 | 27 | 28 | 29 | 30 | 31 | 32 |
| 33 | 34 | 35 | 36 | 37 | 38 | 39 | 40 | 41 | 42 | 43 | 44 | 45 | 46 | 47 | 48 |
| 49 | 50 | 51 | 52 | 53 | 54 | 55 | 56 | 57 | 58 | 59 | 60 | 61 | 62 | 63 | |

ACC: lp1604fm471-90\
FILE: prof01.dgn

STATE OF TEXAS
JOEL K. DAVENPORT, JR.
79276
REGISTERED
PROFESSIONAL ENGINEER

Joel K Davenport Jr 9/19/00
Joel K. Davenport, Jr. P.E. 79276 Date

©2000 Texas Department of Transportation

# TEMP CONN "K" PROFILE

**SHEET 1 OF 1**

| FED. RD. DIV. NO. | FEDERAL AID PROJECT NO. | | SHEET NO. |
|---|---|---|---|
| 6 | NH 2000(704), etc. | | 297 |
| STATE | DIST. | COUNTY | |
| TEXAS | SAT | BEXAR | |
| CONT. | SECT. | JOB | HIGHWAY NO. |
| 2452 | 01 | 036, etc. | LP 1604 |

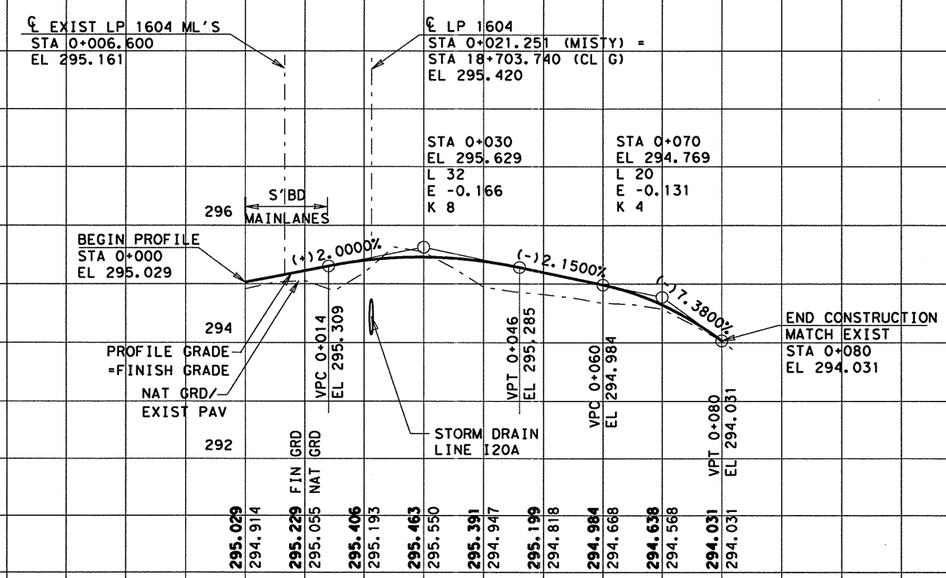


LEVELS DISPLAYED
1 2 3 4 1 5 1 6 1 7 1 8 1 9 1 10 1 11 2 12 1 3 1 4 1 5 1 5 1 6
1 7 1 8 1 9 2 0 2 1 2 2 2 3 2 4 2 5 2 6 2 7 2 8 2 9 3 0 3 3 1 3 2
3 3 3 4 3 5 3 6 3 7 3 8 3 9 4 0 4 1 4 2 4 3 4 4 4 5 4 6 4 7 4 8
4 9 5 0 5 1 5 2 5 3 5 4 5 5 5 6 5 7 5 8 5 9 6 0 6 1 6 2 6 3

ACC: lp1604fm471-90\

FILE: prof01.dgn

STATE OF TEXAS
JOEL K. DAVENPORT, JR.
79276
REGISTERED PROFESSIONAL ENGINEER

Joel K. Davenport, Jr. P.E. 79276 — 9/19/00
Joel K. Davenport, Jr. P.E. 79276 — Date

Texas Department of Transportation

# MISTY WOODS PROFILE

**SHEET 1 OF 1**

| FED. RD. DIV. NO. | FEDERAL AID PROJECT NO. | | SHEET NO. |
|---|---|---|---|
| 6 | NH 2000(704), etc. | | 298 |
| STATE | DIST. | COUNTY | |
| TEXAS | SAT | BEXAR | |
| CONT. | SECT. | JOB | HIGHWAY NO. |
| 2452 | 01 | 036, etc. | LP 1604 |

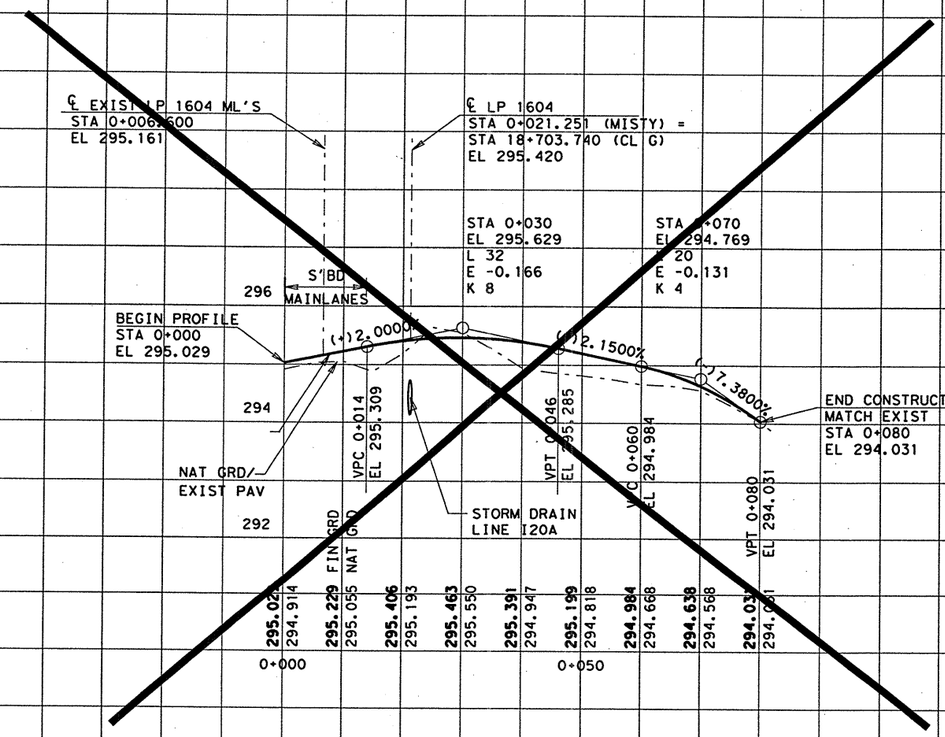


CHANGE ORDER NO. 64

-ELIMINATED ORIGINAL PROFILE (SEE LATEST).

CHANGE ORDER 64

REVISED SHEET

STATE OF TEXAS
JEROME D. PAVLISKA
76075
REGISTERED PROFESSIONAL ENGINEER

Jerome D. Pavliska, P.E. 2/06/04
Jerome D. Pavliska, P.E. Date

©2000 Texas Department of Transportation

# MISTY WOODS PROFILE

SHEET 1 OF 1

| FED. RD. DIV. NO. | FEDERAL AID PROJECT NO. | SHEET NO. |
|---|---|---|
| 6 | NH 2000(704), etc. | 298A |
| STATE | DIST. | COUNTY |
| TEXAS | SAT | BEXAR |
| CONT. | SECT. | JOB / HIGHWAY NO. |
| 2452 | 01 | 036, etc. / LP 1604 |

02-05-04

LEVELS DISPLAYED
1 2 3 4 5 6 7 8 9 10 11 12 13 14 15 16
17 18 19 20 21 22 23 24 25 26 27 28 29 30 31 32
33 34 35 36 37 38 39 40 41 42 43 44 45 46 47 48
49 50 51 52 53 54 55 56 57 58 59 60 61 62 63

ACC: lp1604fm471-90\
FILE: prof01.dgn

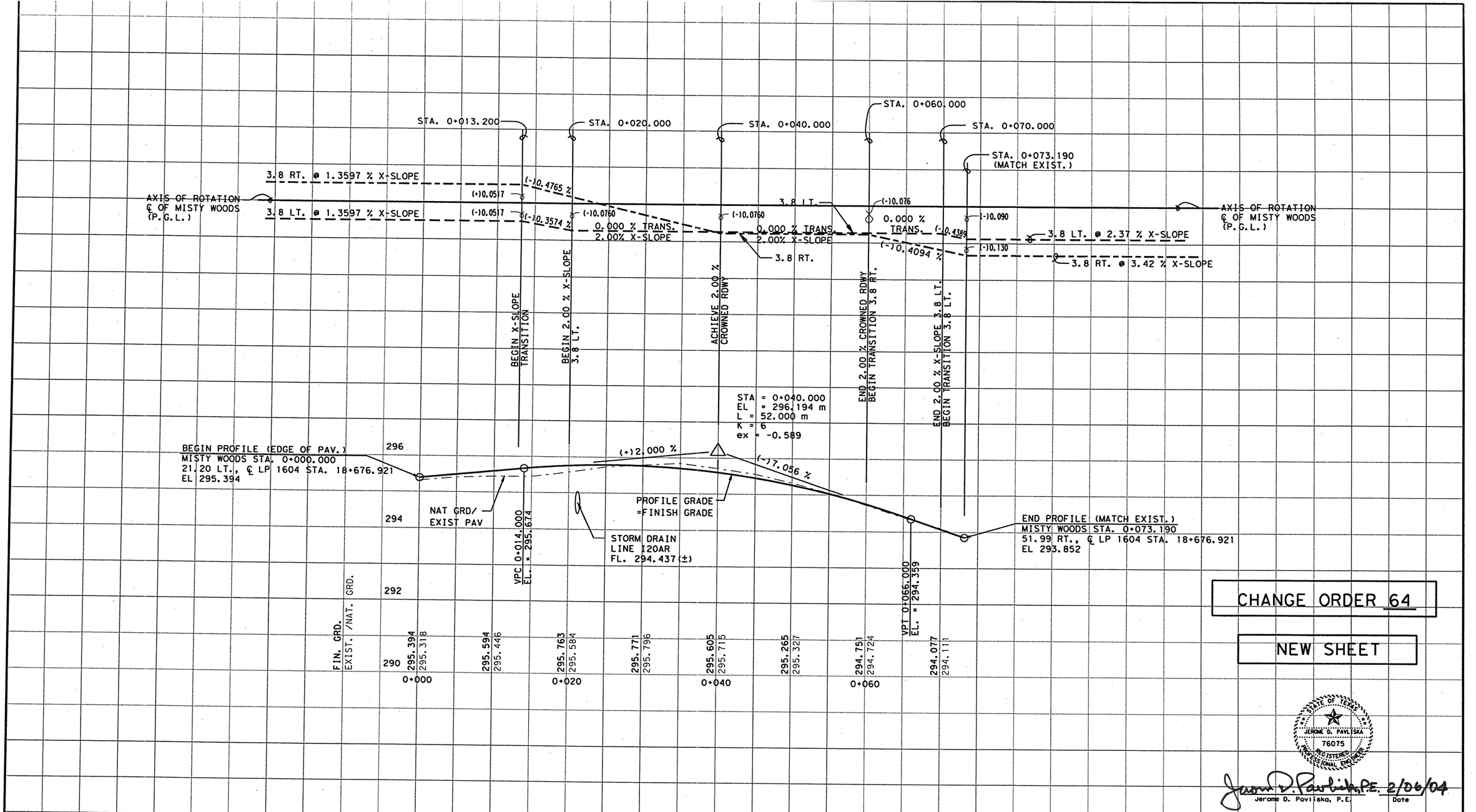


CHANGE ORDER NO. 64

- NEW PROFILE NEEDED DUE TO MISTY WOODS RE-ALIGNMENT

CHANGE ORDER 64

NEW SHEET

STATE OF TEXAS
JEROME D. PAVLISKA
76075
REGISTERED PROFESSIONAL ENGINEER

Jerome D. Pavliska, P.E. 2/06/04
Jerome D. Pavliska, P.E. Date

©2000

Texas Department of Transportation

# MISTY WOODS PROFILE

SHEET 1 OF 1

| FED. RD. DIV. NO. | FEDERAL AID PROJECT NO. | | SHEET NO. |
|---|---|---|---|
| 6 | NH 2000(704), etc. | | 298B |
| STATE | DIST. | COUNTY | |
| TEXAS | SAT | BEXAR | |
| CONT. | SECT. | JOB | HIGHWAY NO. |
| 2452 | 01 | 036, etc. | LP 1604 |

02-05-04

LEVELS DISPLAYED
1 2 3 4 5 6 7 8 9 10 11 12 13 14 15 16
17 18 19 20 21 22 23 24 25 26 27 28 29 30 31 32
33 34 35 36 37 38 39 40 41 42 43 44 45 46 47 48
49 50 51 52 53 54 55 56 57 58 59 60 61 62 63

ACC: lp1604fm471-90\
FILE: prof01.dgn

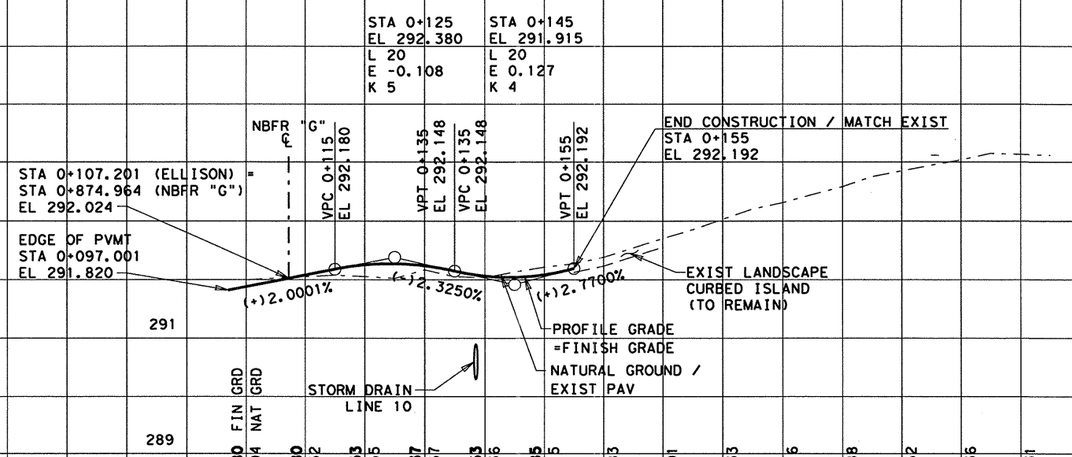


LEVELS DISPLAYED
1 2 3 4 5 6 7 8 9 10 11 12 13 14 15 16
17 18 19 20 21 22 23 24 25 26 27 28 29 30 31 32
33 34 35 36 37 38 39 40 41 42 43 44 45 46 47 48
49 50 51 52 65 54 55 56 57 58 59 60 61 62 63

ACC: lp1604fm471-90\
FILE: prof01.dgn

STATE OF TEXAS
JOEL K. DAVENPORT, JR.
79276
REGISTERED
PROFESSIONAL ENGINEER

Joel K. Davenport, Jr. 9/19/00
Joel K. Davenport, Jr. P.E. 79276 Date

©2000 Texas Department of Transportation

# NORTH ELLISON DR PROFILE

**SHEET 1 OF 1**

| FED. RD. DIV. NO. | FEDERAL AID PROJECT NO. | | SHEET NO. |
|---|---|---|---|
| 6 | NH 2000(704), etc. | | 299 |
| STATE | DIST. | COUNTY | |
| TEXAS | SAT | BEXAR | |
| CONT. | SECT. | JOB | HIGHWAY NO. |
| 2452 | 01 | 036, etc. | LP 1604 |

3.03% X-SLOPE
+0.2182

7.2 RT STA 0+170

+1.1790% SUPER TRANS

0+188.507

5.9 RT ℄ WISEMAN BLVD (PROPOSED GUTTER) = PGL = AXIS OF ROTATION

1.882% X-SLOPE
-0.1355

7.2 RT STA 0+200

7.2 RT STA 0+125.19

7.2 RT STA 0+150

2.46% X-SLOPE
+0.1771

+0.1189% SUPER TRANS

2.87% X-SLOPE
+0.2066

℄ WISEMAN BLVD = PGL = AXIS OF ROTATION

MATCH S'BD FRONT RD "B" X-SLOPE

0+100

0+150

0+200

2.45% X-SLOPE
-0.1764

-0.1238% SUPER TRANS

2.87% X-SLOPE
-0.2066

7.2 LT STA 0+125.6

7.2 LT STA 0+150

6.1 LT ℄ WISEMAN BLVD (PROPOSED GUTTER) = PGL = AXIS OF ROTATION

2.69% X-SLOPE
+0.1937

+0.1800% SUPER TRANS

1.94% X-SLOPE
-0.1397

**SUPERELEVATION DIAGRAMS**

7.2 LT STA 0+170

7.2 LT STA 0+200

℄ STA 1+310.093 (FRT R'D "G")
STA 0+160.447 (WISEMAN) =

292

LP 1604 S'BD ML'S

℄ ℄

STA 0+175
EL 287.904
L 10
E 0.026
K 5

STA 0+195
EL 289.317
L 10
E -0.031
K 4

STA 0+100 (WISEMAN) =
STA 19+310.536 (LP1604)
EL 258.270

STA 0+114.600 (WISEMAN) =
14.6 LT STA 19+310.536 (LP1604)
EL 286.359

290

END ℄ PROFILE
STA 0+170
EL 287.476

BEGIN 5.9 RT PROFILE

VPC 0+170
EL 287.655

VPT 0+180
EL 288.257

VPC 0+190
EL 288.964

VPT 0+200
EL 289.545

(+)4.5600%

(+)7.0650%

(+)5.2600%

NATURAL GROUND / EXIST PAV
5.9 RT
℄ WISEMAN RD
6.1 LT

PROFILE GRADE
=FINISH GRADE
℄ WISEMAN BLVD

288

BEGIN ℄ PROFILE
STA 0+100
EL 285.270

VPC 0+125.078
EL 286.149

VPT 0+151.078
EL. 286.535

(+)4.9800%

(+)4.9800%

(+)2.9850%

END GUTTER PROFILES
5.9 RT
6.1 LT
MATCH EXIST

1:6

286

(-)2.0014%

(+)4.9715%

STORM DRAIN LINE W

STA 0+107.4
EL 286.503
NO CURVE

STA 0+138.078
EL 285.889
L 26
E 0.227
K 4

284

BEGIN 6.1 LT PROFILE

VPC 0+170
EL 287.312

VPT 0+180
EL 287.710

VPC 0+190
EL 288.009

VPT 0+200
EL 288.421

STA 0+175
EL 287.561

STA 0+195
EL 288.158

STORM DRAIN LINE WA

L 10
E -0.025
K 5

L 10
E 0.028
K 4

| | | FIN GRD | | | | | | | | | | | | | | |
|---|---|---|---|---|---|---|---|---|---|---|---|---|---|---|---|---|
| | 6.1 LT | NAT GRD | 284.363 | | 286.014 | | 285.960 | | 285.989 | | 286.059 | | | | | |
| | ℄ | | **285.270** | 284.522 | **286.451** | 286.155 | **286.251** | 286.117 | **286.083** | 286.195 | **286.149** | 286.352 | **286.483** | 286.580 | **286.979** | 287.052 | 286.646 | **287.476** | **287.312** | 287.721 | **287.710** | 288.205 | **288.009** | 288.671 | **288.421** | 289.118 | 288.421 | 289.619 | 288.973 | 290.069 | 289.513 | 290.429 | 290.022 | 290.903 | 290.480 |
| | 5.9 RT | | 284.884 | | 286.310 | | 286.305 | | 286.429 | | 286.648 | | 286.888 | | 287.300 | | **287.655** | 288.066 | **288.257** | 288.611 | **288.964** | 289.081 | **289.545** | 289.544 | | 290.001 | | 290.399 | | 290.787 | | 291.285 | | | |

0+100 ℄ WISEMAN BLVD 0+150 0+200

LEVELS DISPLAYED
1 2 3 4 5 6 7 8 9 10 11 12 13 14 15 16
17 18 19 20 21 22 23 24 25 26 27 28 29 30 31 32
33 34 35 36 37 38 39 40 41 42 43 44 45 46 47 48
49 50 51 52 53 54 55 56 57 58 59 60 61 62 63

ACC: lp1604fm471-90\
FILE: prof01.dgn

STATE OF TEXAS
JOEL K. DAVENPORT, JR.
79276
REGISTERED PROFESSIONAL ENGINEER

Joel K Davenport, Jr. 9/19/00
Joel K. Davenport, Jr. P.E. 79276 Date

©2000

Texas Department of Transportation

# WISEMAN BLVD PROFILE

**SHEET 1 OF 2**

| FED.RD. DIV.NO. | FEDERAL AID PROJECT NO. | SHEET NO. |
|---|---|---|
| 6 | NH 2000(704), etc. | 300 |
| STATE | DIST. | COUNTY |
| TEXAS | SAT | BEXAR |
| CONT. | SECT. | JOB / HIGHWAY NO. |
| 2452 | 01 | 036, etc. / LP 1604 |

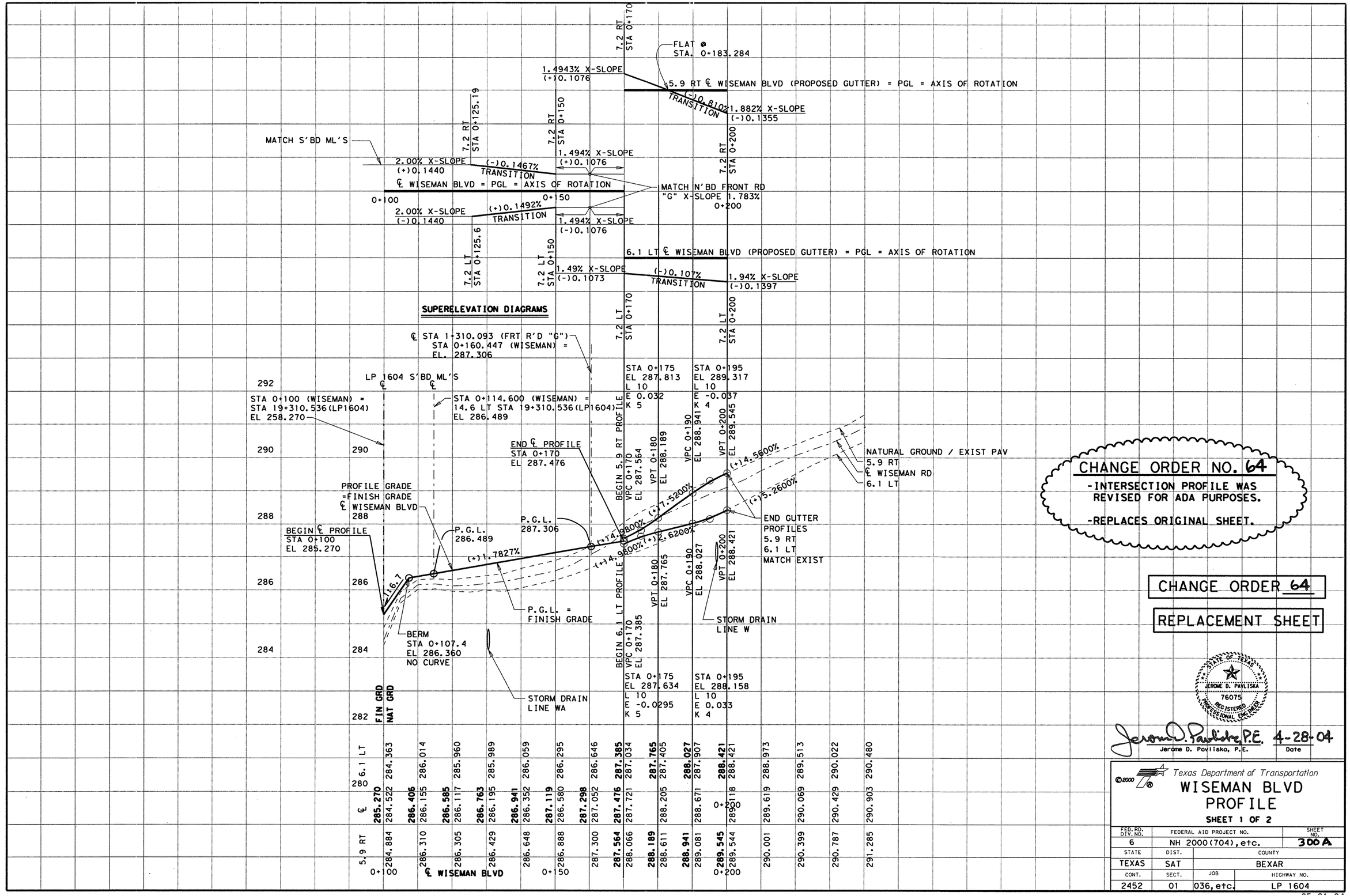


CHANGE ORDER NO. 64

-INTERSECTION PROFILE WAS REVISED FOR ADA PURPOSES.

-REPLACES ORIGINAL SHEET.

CHANGE ORDER 64

REPLACEMENT SHEET

STATE OF TEXAS
JEROME D. PAVLISKA
76075
REGISTERED PROFESSIONAL ENGINEER

Jerome D. Pavliska, P.E. 4-28-04
Jerome D. Pavliska, P.E. Date

©2000 Texas Department of Transportation

# WISEMAN BLVD PROFILE

SHEET 1 OF 2

| FED. RD. DIV. NO. | FEDERAL AID PROJECT NO. | SHEET NO. |
|---|---|---|
| 6 | NH 2000(704), etc. | 300A |
| STATE | DIST. | COUNTY |
| TEXAS | SAT | BEXAR |
| CONT. | SECT. | JOB / HIGHWAY NO. |
| 2452 | 01 | 036, etc. / LP 1604 |

LEVELS DISPLAYED
1 2 3 4 5 6 7 8 9 10 11 12 13 14 15 16
17 18 19 20 21 22 23 24 25 26 27 28 29 30 31 32
33 34 35 36 37 38 39 40 41 42 43 44 45 46 47 48
49 50 51 52 53 54 55 56 57 58 59 60 61 62 63

ACC: lp1604fm471-90\
FILE: prof1*wis.dgn

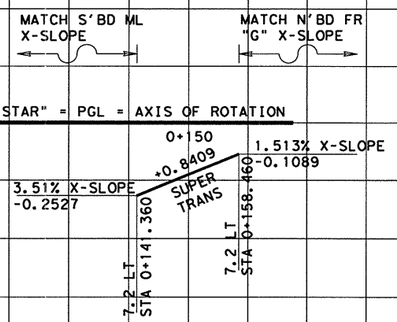


SUPERELEVATION DIAGRAM

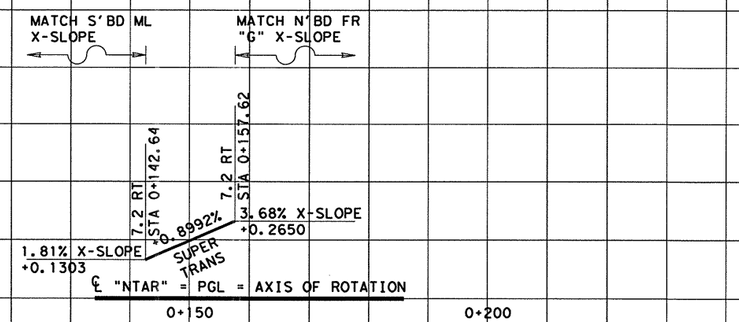


SUPERELEVATION DIAGRAM

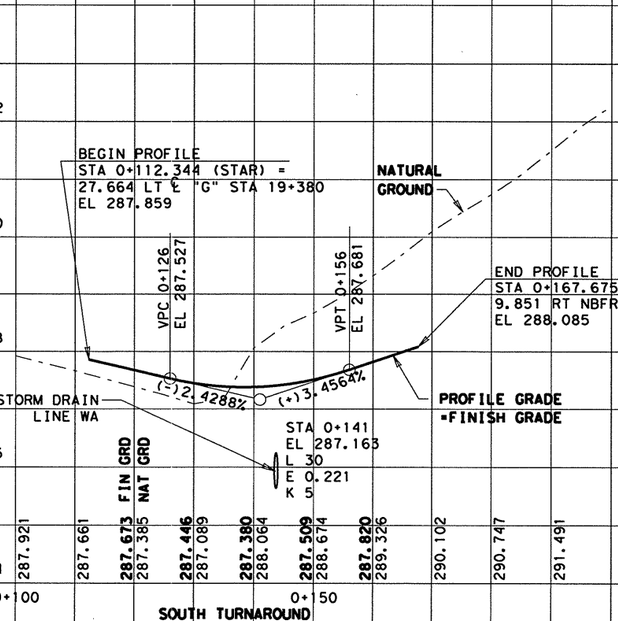


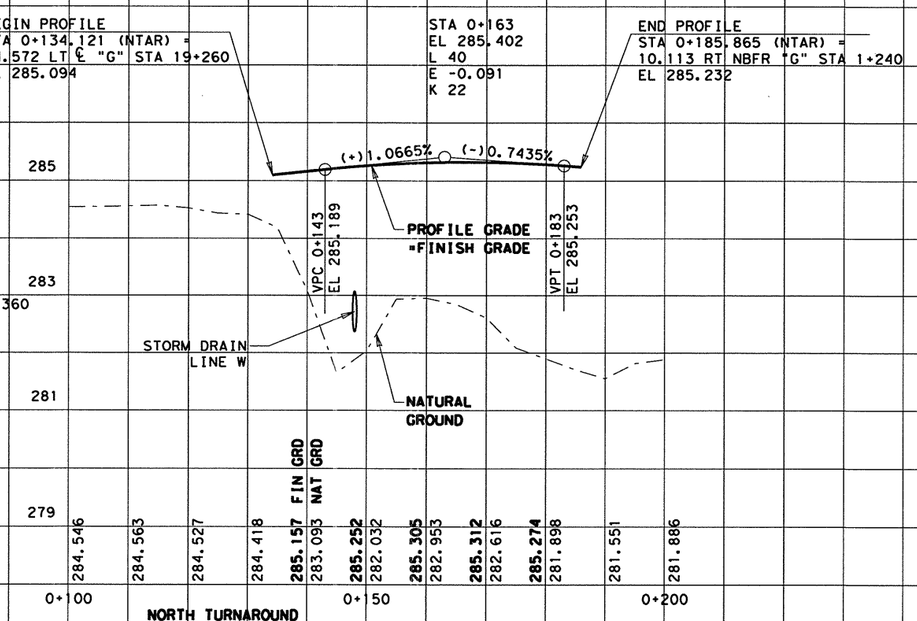


LEVELS DISPLAYED
1 2 3 4 5 6 7 8 9 10 11 12 13 14 15 16
17 18 19 20 21 22 23 24 25 26 27 28 29 30 31 32
33 34 35 36 37 38 39 40 41 42 43 44 45 46 47 48
49 50 51 52 53 54 55 56 57 58 59 60 61 62 63 64
ACC: lp1604fm471-90\
FILE: prof01.dgn

Joel K. Davenport Jr. 9/19/00
Joel K. Davenport, Jr. P.E. 79276 Date

©2000 Texas Department of Transportation

# WISEMAN BLVD
# PROFILE
## SHEET 2 OF 2

| FED. RD. DIV. NO. | FEDERAL AID PROJECT NO. | | SHEET NO. |
|---|---|---|---|
| 6 | NH 2000(704), etc. | | 301 |
| STATE | DIST. | COUNTY | |
| TEXAS | SAT | BEXAR | |
| CONT. | SECT. | JOB | HIGHWAY NO. |
| 2452 | 01 | 036, etc. | LP 1604 |

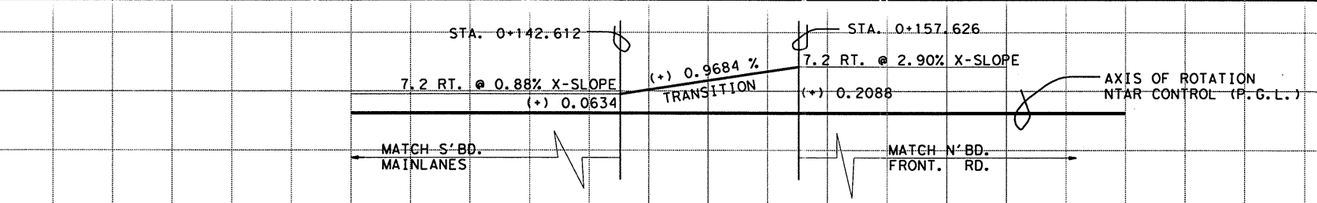


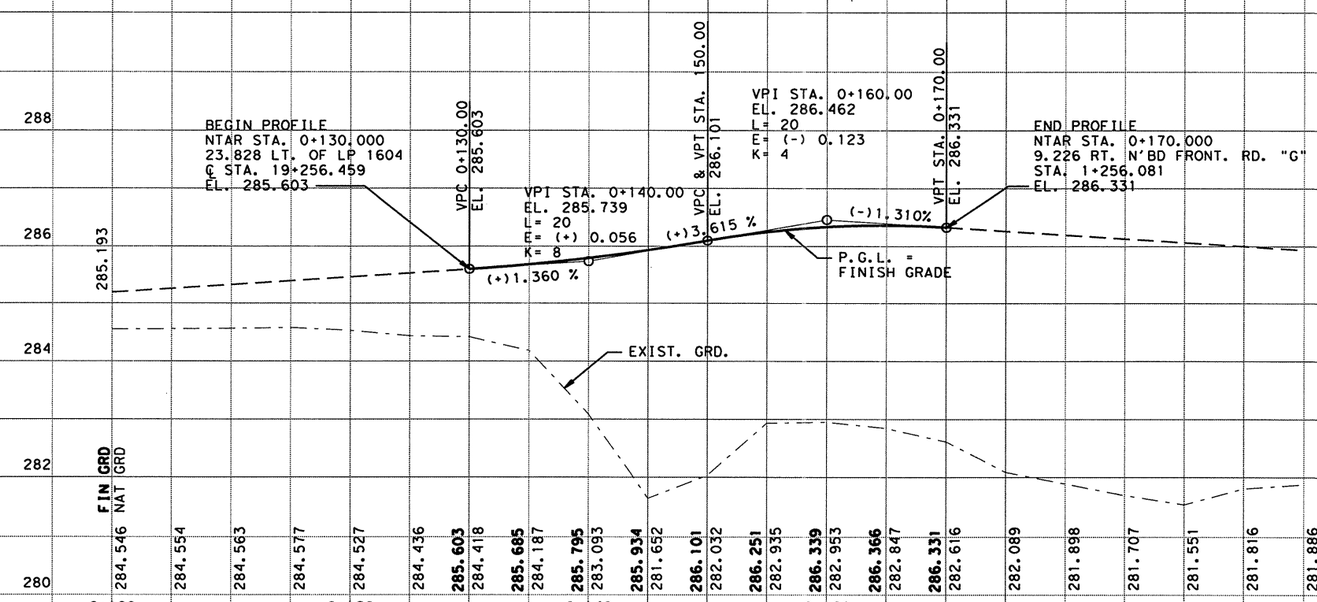


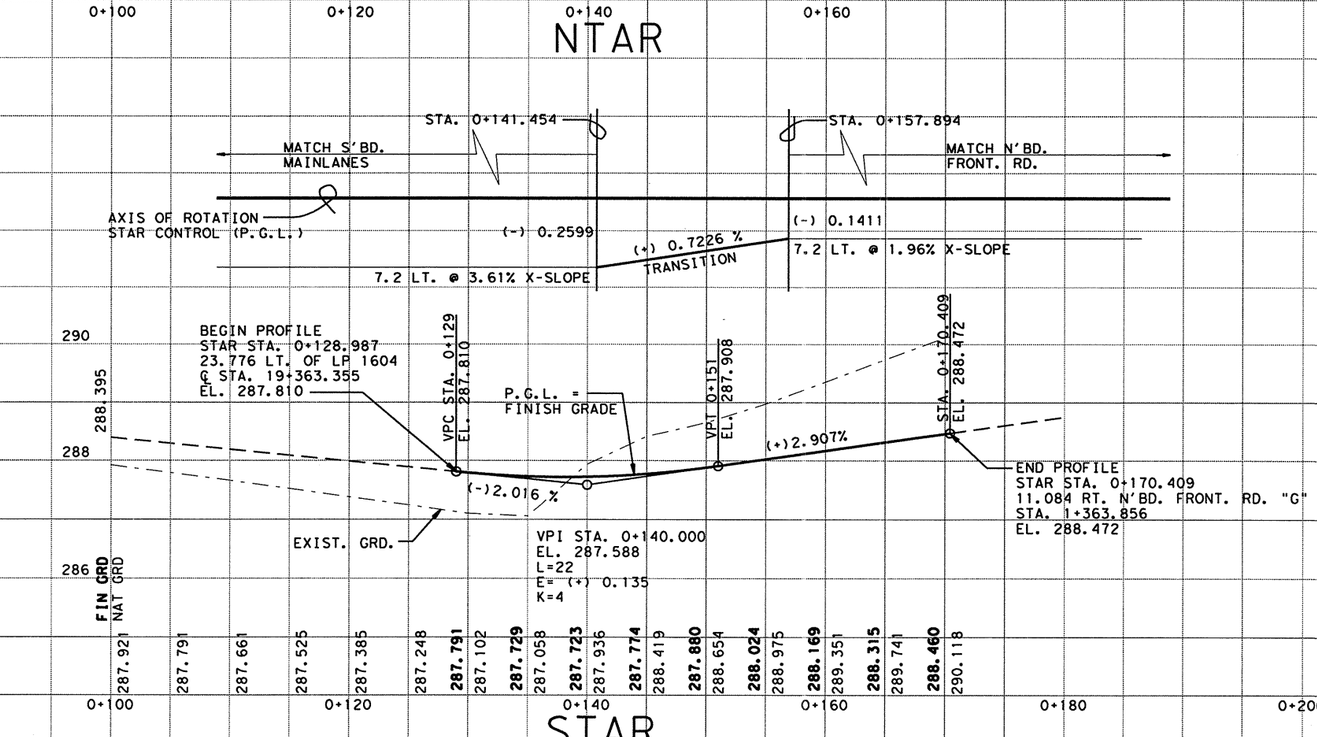


CHANGE ORDER NO. 64
-TAR PROFILES WERE REVISED FOR ADA PURPOSES.
-REPLACES ORIGINAL SHEET.

CHANGE ORDER 64

REPLACEMENT SHEET

STATE OF TEXAS
JEROME D. PAVLISKA
76075
REGISTERED PROFESSIONAL ENGINEER

Jerome D. Pavliska, P.E. 4-28-04
Jerome D. Pavliska, P.E. Date

©2003
Texas Department of Transportation

# WISEMAN BLVD.
# PROFILE
## SHEET 2 OF 2

| FED.RD. DIV.NO. | FEDERAL AID PROJECT NO. | | SHEET NO. |
|---|---|---|---|
| 6 | NH 2000(704), etc. | | 301A |
| STATE | DIST. | COUNTY | |
| TEXAS | SAT | BEXAR | |
| CONT. | SECT. | JOB | HIGHWAY NO. |
| 2452 | 01 | 036, etc. | LP 1604 |

LEVELS DISPLAYED
1 2 3 4 5 6 7 8 9 10 11 12 13 14 15 16 17 18 19 20 21 22 23 24 25 26 27 28 29 30 31 32 33 34 35 36 37 38 39 40 41 42 43 44 45 46 47 48 49 50 51 52 53 54 55 56 57 58 59 60 61 62 63
ACC: lp1604fm471-90\
FILE: profilxwis.dgn

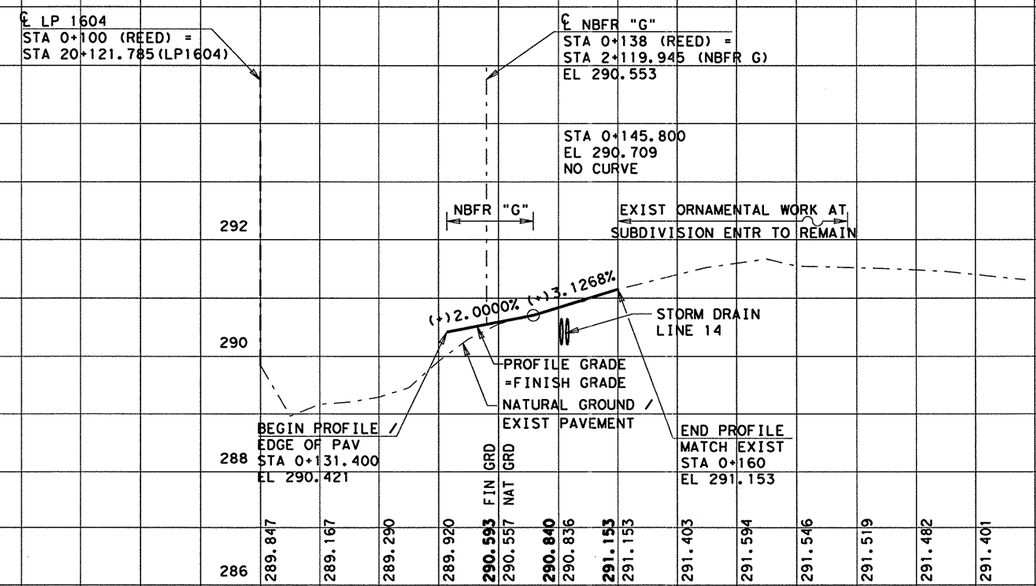


LEVELS DISPLAYED
1 2 3 4 5 6 7 8 9 10 11 12 13 14 15 16
17 18 19 20 21 22 23 24 25 26 27 28 29 30 31 32
33 34 35 36 37 38 39 40 41 42 43 44 45 46 47 48
49 50 51 52 53 54 55 56 57 58 59 60 61 62 63

ACC: lp1604fm471-90\
FILE: prof01.dgn

STATE OF TEXAS
JOEL K. DAVENPORT, JR.
79276
REGISTERED
PROFESSIONAL ENGINEER

Joel K Davenport Jr. 9/19/00
Joel K. Davenport, Jr. P.E. 79276 Date

©2000 Texas Department of Transportation

# REED RD
# PROFILE

**SHEET 1 OF 1**

| FED. RD. DIV. NO. | FEDERAL AID PROJECT NO. | | SHEET NO. |
|---|---|---|---|
| 6 | NH 2000(704), etc. | | 302 |
| STATE | DIST. | COUNTY | |
| TEXAS | SAT | BEXAR | |
| CONT. | SECT. | JOB | HIGHWAY NO. |
| 2452 | 01 | 036, etc. | LP 1604 |

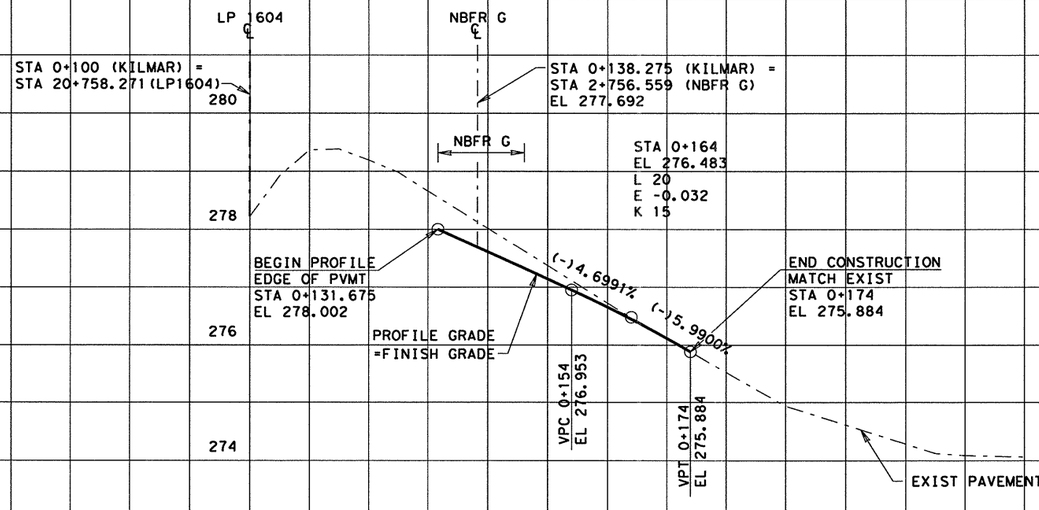


LEVELS DISPLAYED
1 2 3 4 5 6 7 8 9 10 11 12 13 14 15 16
17 18 19 20 21 22 23 24 25 26 27 28 29 30 31 32
33 34 35 36 37 38 39 40 41 42 43 44 45 46 47 48
49 50 51 52 53 54 55 56 57 58 59 60 61 62 63

ACC: lp1604fm471-90\

FILE: prof01.dgn

STATE OF TEXAS
JOEL K. DAVENPORT, JR.
79276
REGISTERED PROFESSIONAL ENGINEER

Joel K Davenport Jr 9/19/00
Joel K. Davenport, Jr. P.E. 79276 Date

© 2000 Texas Department of Transportation

# KILMARNOCH LANE
# PROFILE

**SHEET 1 OF 1**

| FED. RD. DIV. NO. | FEDERAL AID PROJECT NO. | | SHEET NO. |
|---|---|---|---|
| 6 | NH 2000(704), etc. | | 303 |
| STATE | DIST. | COUNTY | |
| TEXAS | SAT | BEXAR | |
| CONT. | SECT. | JOB | HIGHWAY NO. |
| 2452 | 01 | 036, etc. | LP 1604 |

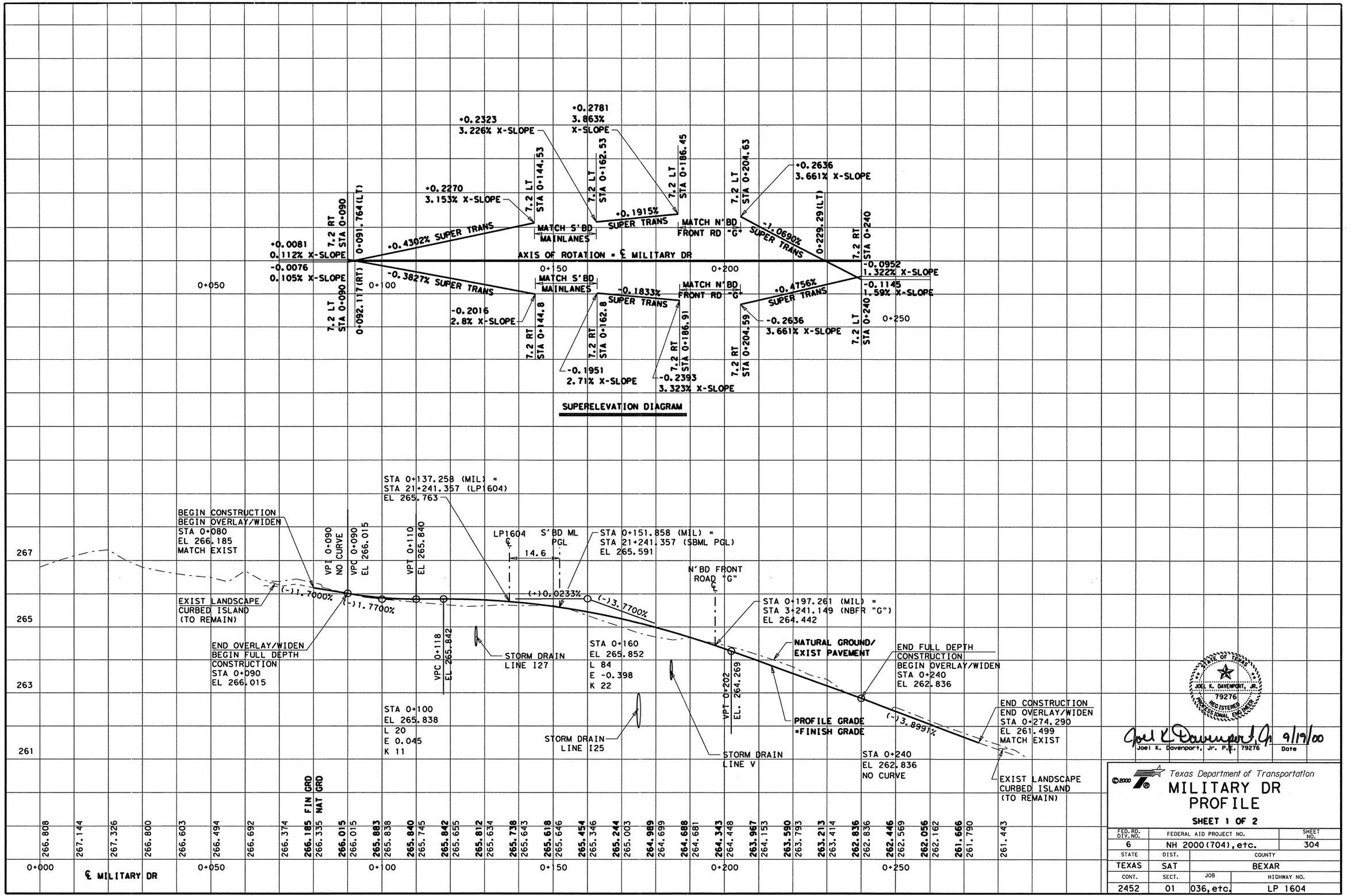


LEVELS DISPLAYED
1 2 3 4 5 6 7 8 9 10 11 12 13 14 15 16
17 18 19 20 21 22 23 24 25 26 27 28 29 30 31 32
33 34 35 36 37 38 39 40 41 42 43 44 45 46 47 48
49 50 51 52 53 54 55 65 75 85 96 06 16 26 3

ACC: lp1604fm471-90\
FILE: prof01.dgn

STATE OF TEXAS
JOEL K. DAVENPORT, JR.
79276
REGISTERED PROFESSIONAL ENGINEER

Joel K. Davenport, Jr. 9/19/00
Joel K. Davenport, Jr. P.E. 79276 Date

Texas Department of Transportation

# MILITARY DR PROFILE

**SHEET 1 OF 2**

| FED.RD. DIV.NO. | FEDERAL AID PROJECT NO. | SHEET NO. |
|---|---|---|
| 6 | NH 2000(704), etc. | 304 |
| STATE | DIST. | COUNTY |
| TEXAS | SAT | BEXAR |
| CONT. | SECT. | JOB / HIGHWAY NO. |
| 2452 | 01 | 036, etc. / LP 1604 |

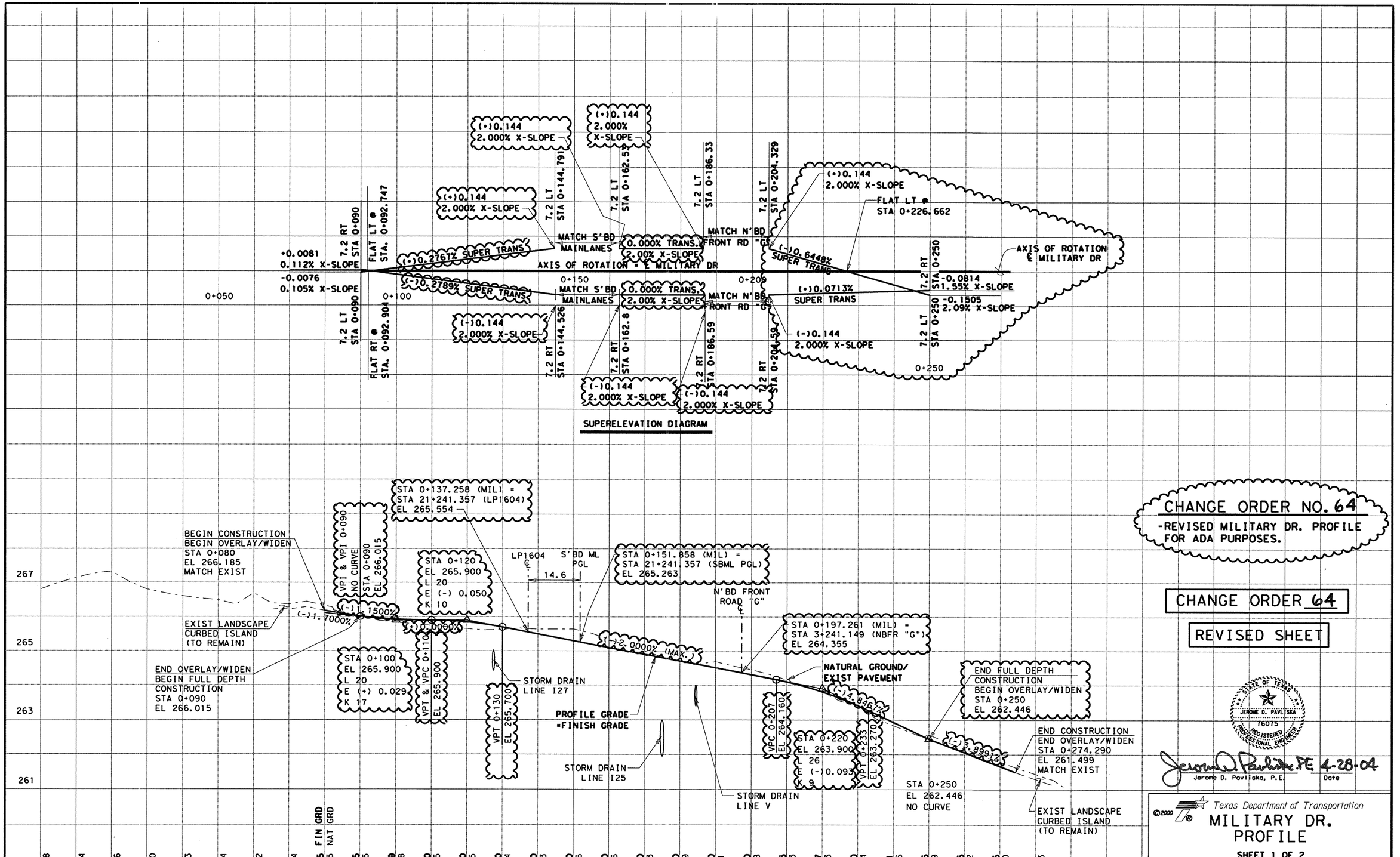


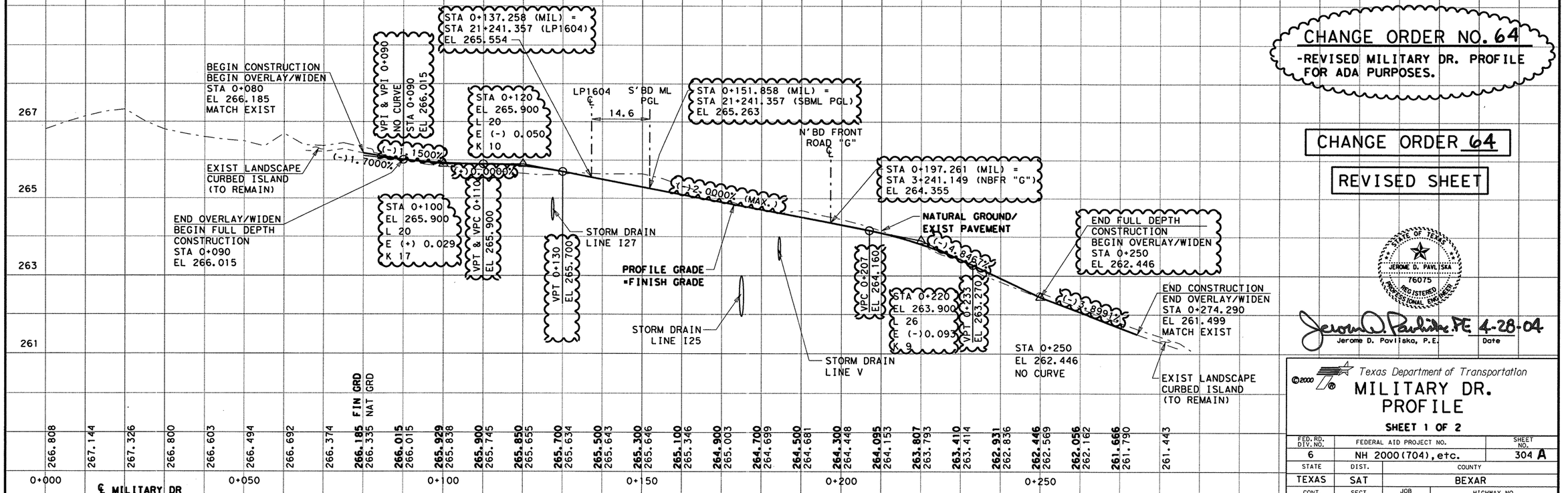


CHANGE ORDER NO. 64
-REVISED MILITARY DR. PROFILE FOR ADA PURPOSES.

CHANGE ORDER 64

REVISED SHEET

STATE OF TEXAS
JEROME D. PAVLISKA
76075
REGISTERED PROFESSIONAL ENGINEER

Jerome D. Pavliska, P.E. 4-28-04
Jerome D. Pavliska, P.E. Date

LEVELS DISPLAYED
1 2 3 4 5 6 7 8 9 10 11 12 13 14 15 16
17 18 19 20 21 22 23 24 25 26 27 28 29 30 31 32
33 34 35 36 37 38 39 40 41 42 43 44 45 46 47 48
49 50 51 52 53 54 55 56 57 58 59 60 61 62 63

ACC: lp1604fm471-90\
FILE: prof01.dgn

©2000

Texas Department of Transportation

# MILITARY DR. PROFILE

SHEET 1 OF 2

| FED. RD. DTY. NO. | FEDERAL AID PROJECT NO. | | SHEET NO. |
|---|---|---|---|
| 6 | NH 2000(704), etc. | | 304 A |
| STATE | DIST. | COUNTY | |
| TEXAS | SAT | BEXAR | |
| CONT. | SECT. | JOB | HIGHWAY NO. |
| 2452 | 01 | 036, etc. | LP 1604 |

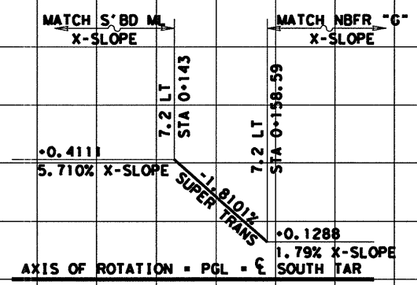


AXIS OF ROTATION = PGL = ℄ NORTH TAR

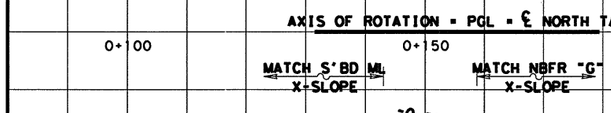


SUPERELEVATION DIAGRAM

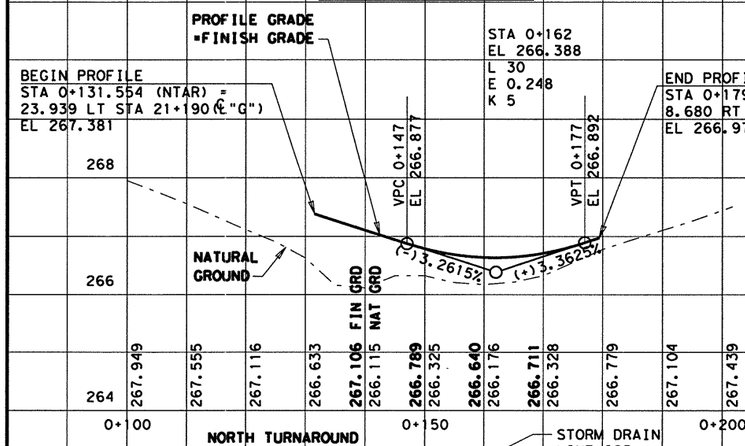


AXIS OF ROTATION = PGL = ℄ SOUTH TAR

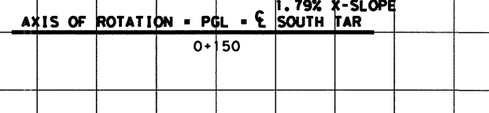


SUPERELEVATION DIAGRAM

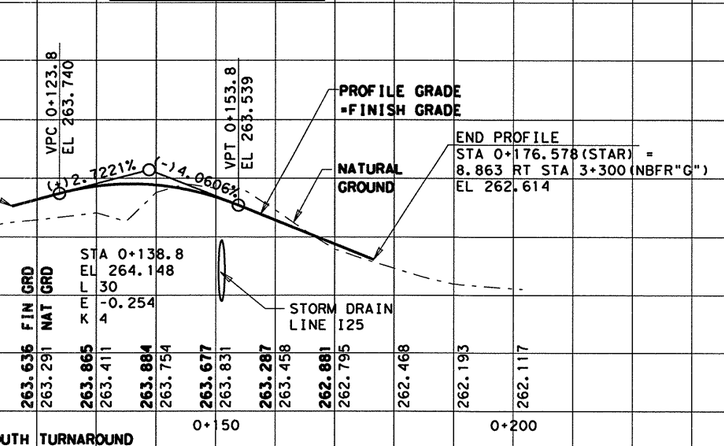

Joel K. Davenport Jr. 9/19/00

Joel K. Davenport, Jr. P.E. 79276 — Date

Texas Department of Transportation

# MILITARY DR
# PROFILE

SHEET 2 OF 2

| FED. RD. DIV. NO. | FEDERAL AID PROJECT NO. | | SHEET NO. |
|---|---|---|---|
| 6 | NH 2000(704), etc. | | 305 |
| STATE | DIST. | COUNTY | |
| TEXAS | SAT | BEXAR | |
| CONT. | SECT. | JOB | HIGHWAY NO. |
| 2452 | 01 | 036, etc. | LP 1604 |

LEVELS DISPLAYED
1 2 3 4 5 6 7 8 9 10 11 12 13 14 15 16
17 18 19 20 21 22 23 24 25 26 27 28 29 30 31 32
33 34 35 36 37 38 39 40 41 42 43 44 45 46 47 48
49 50 51 52 53 54 55 56 57 58 59 60 61 62 63

ACC: lp16604fm471-90\
FILE: prof01.dgn

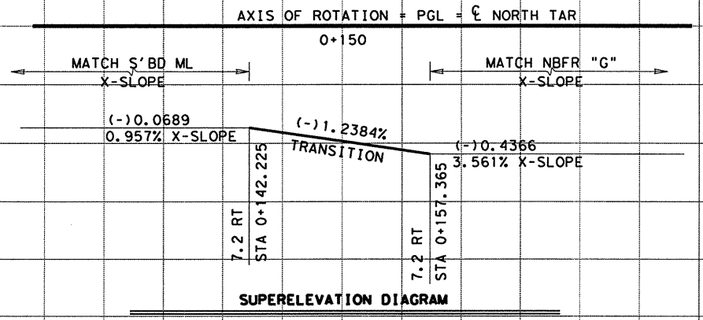


**SUPERELEVATION DIAGRAM**

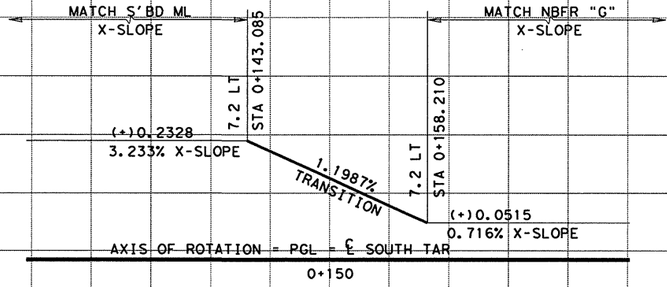


**SUPERELEVATION DIAGRAM**

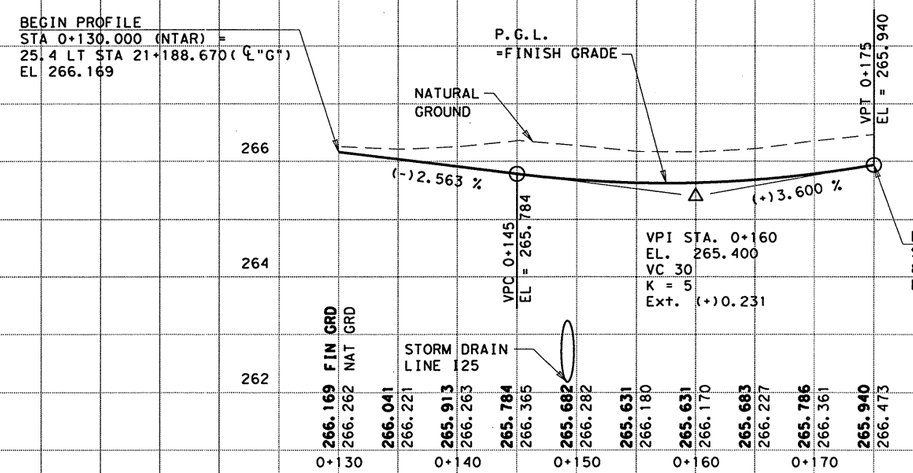


**NORTH TURNAROUND**

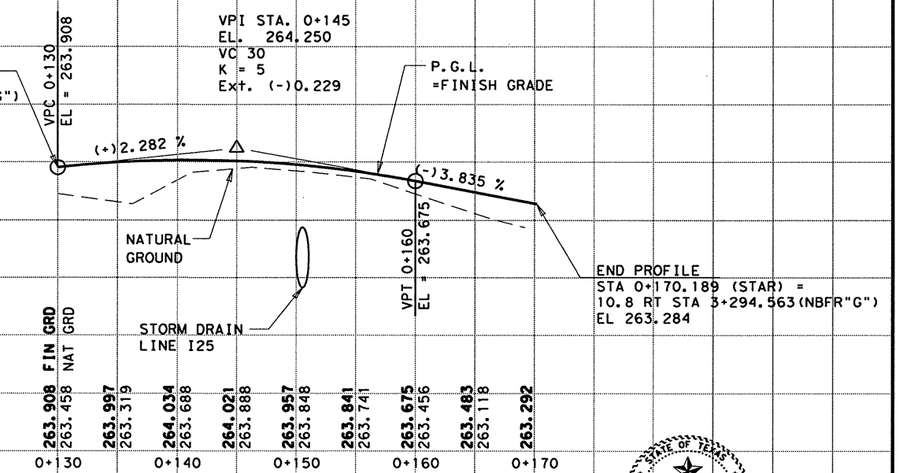


**SOUTH TURNAROUND**

CHANGE ORDER NO. 64

-REVISED TURNAROUND PROFILES FOR ADA PURPOSES.

-REPLACES ORIGINAL SHEET

CHANGE ORDER 64

REPLACEMENT SHEET

STATE OF TEXAS
JEROME D. PAVLISKA
76075
REGISTERED
PROFESSIONAL ENGINEER

Jerome D. Pavliska, P.E. 4-28-04
Jerome D. Pavliska, P.E. — Date

©2003

Texas Department of Transportation

# MILITARY DR. PROFILE

SHEET 2 OF 2

| FED. RD. DIV. NO. | FEDERAL AID PROJECT NO. | | SHEET NO. |
|---|---|---|---|
| 6 | NH 2000(704), etc. | | 305 A |
| STATE | DIST. | COUNTY | |
| TEXAS | SAT | BEXAR | |
| CONT. | SECT. | JOB | HIGHWAY NO. |
| 2452 | 01 | 036, etc. | LP 1604 |

LEVELS DISPLAYED
1 2 3 4 5 6 7 8 9 10 11 12 13 14 15 16
17 18 19 20 21 22 23 24 25 26 27 28 29 30 31 32
33 34 35 36 37 38 39 40 41 42 43 44 45 46 47 48
49 50 51 | 53 54 55 56 57 58 59 60 61 62 63

ACC: lp1604fm471-90\
FILE: prof01.dgn

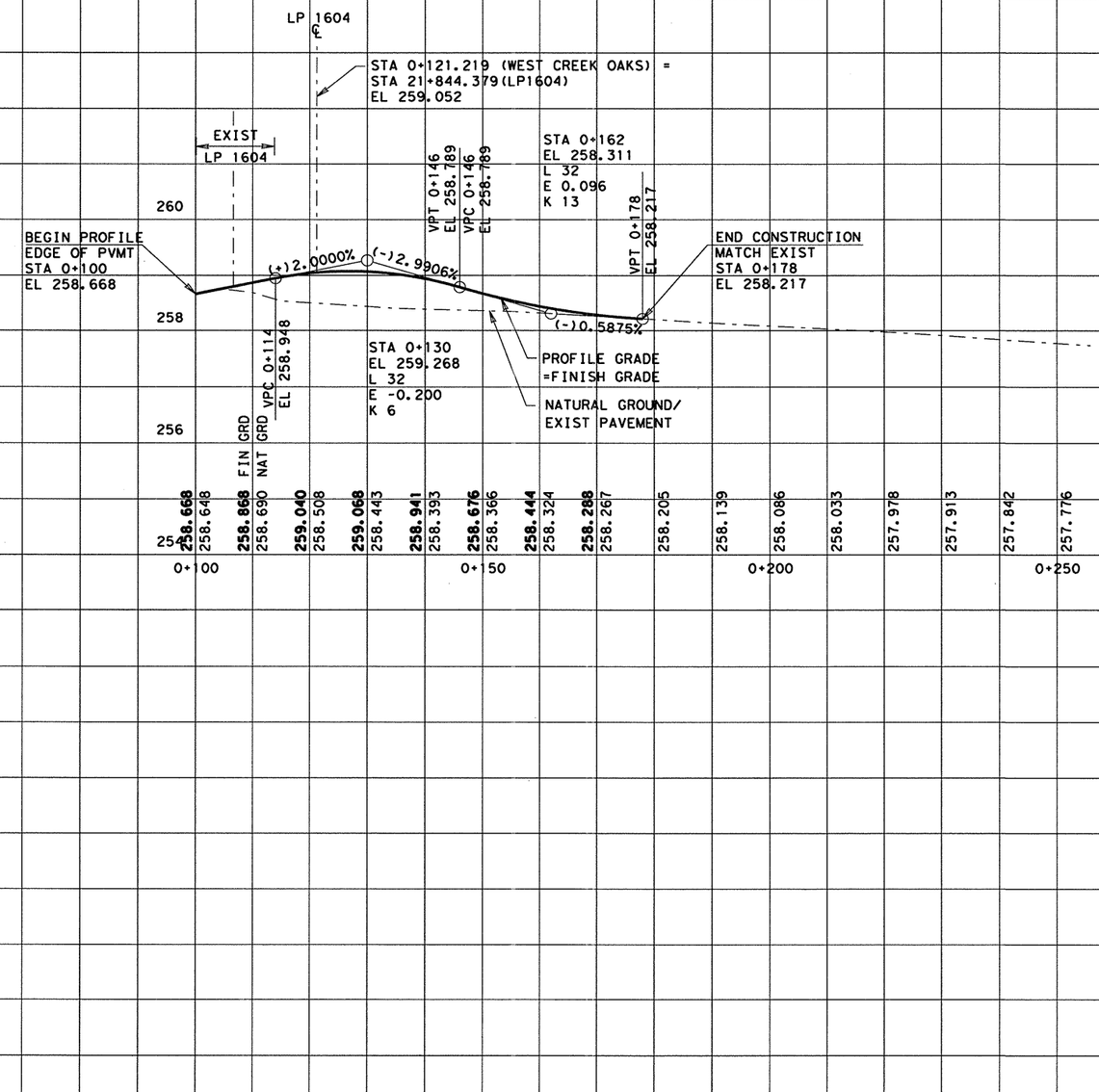


LEVELS DISPLAYED
1 2 3 4 5 6 7 8 9 10 11 12 13 14 15 16
17 18 19 20 21 22 23 24 25 26 27 28 29 30 31 32
33 34 35 36 37 38 39 40 41 42 43 44 45 46 47 48
49 50 51 52 53 54 55 56 57 58 59 60 61 62 63

ACC: lp1604fm471-90\
FILE: prof01.dgn

STATE OF TEXAS
JOEL K. DAVENPORT, JR.
79276
REGISTERED PROFESSIONAL ENGINEER

Joel K Davenport Jr 9/19/00
Joel K. Davenport, Jr. P.E. 79276 Date

Texas Department of Transportation

# WEST CREEK OAKS PROFILE

**SHEET 1 OF 1**

| FED. RD. DIV. NO. | FEDERAL AID PROJECT NO. | | SHEET NO. |
|---|---|---|---|
| 6 | NH 2000(704),etc. | | 306 |
| STATE | DIST. | COUNTY | |
| TEXAS | SAT | BEXAR | |
| CONT. | SECT. | JOB | HIGHWAY NO. |
| 2452 | 01 | 036,etc. | LP 1604 |

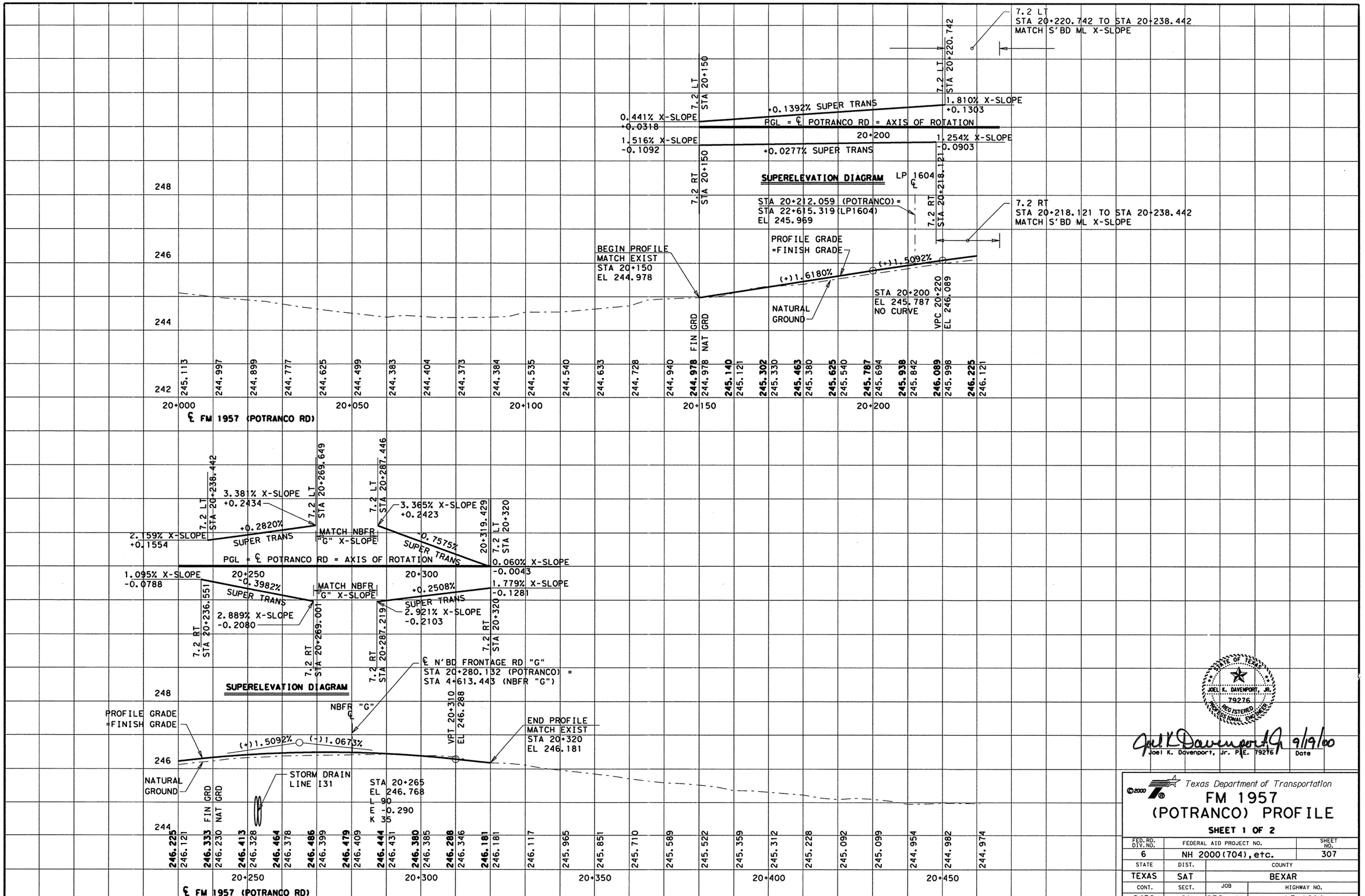


LEVELS DISPLAYED
1 2 3 4 5 6 7 8 9 10 11 12 13 14 15 16
17 18 19 20 21 22 23 24 25 26 27 28 29 30 31 32
33 34 35 36 37 38 39 40 41 42 43 44 45 46 47 48
49 50 51 52 53 54 55 56 57 58 59 60 61 62 63

ACC: lp1604fm471-90\
FILE: prof01.dgn

STATE OF TEXAS
JOEL K. DAVENPORT, JR.
79276
REGISTERED
PROFESSIONAL ENGINEER

Joel K. Davenport, Jr. P.E. 79276 — Date 9/19/00

©2000

Texas Department of Transportation

# FM 1957
# (POTRANCO) PROFILE

**SHEET 1 OF 2**

| FED. RD. DIV. NO. | FEDERAL AID PROJECT NO. | SHEET NO. |
|---|---|---|
| 6 | NH 2000(704), etc. | 307 |

| STATE | DIST. | COUNTY |
|---|---|---|
| TEXAS | SAT | BEXAR |

| CONT. | SECT. | JOB | HIGHWAY NO. |
|---|---|---|---|
| 2452 | 01 | 036, etc. | LP 1604 |

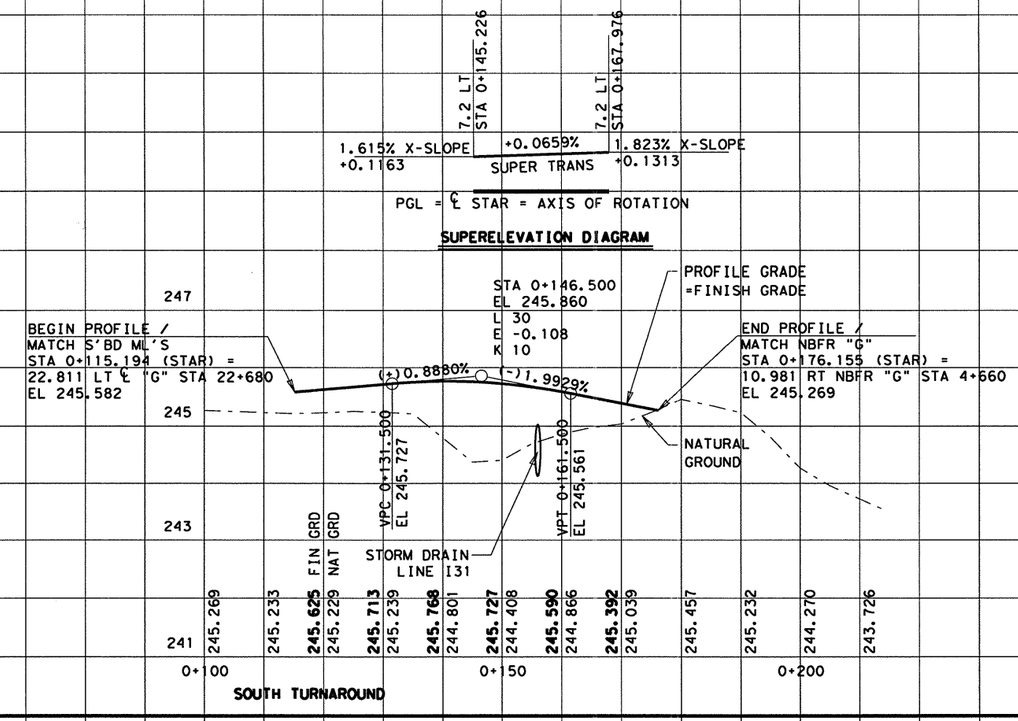


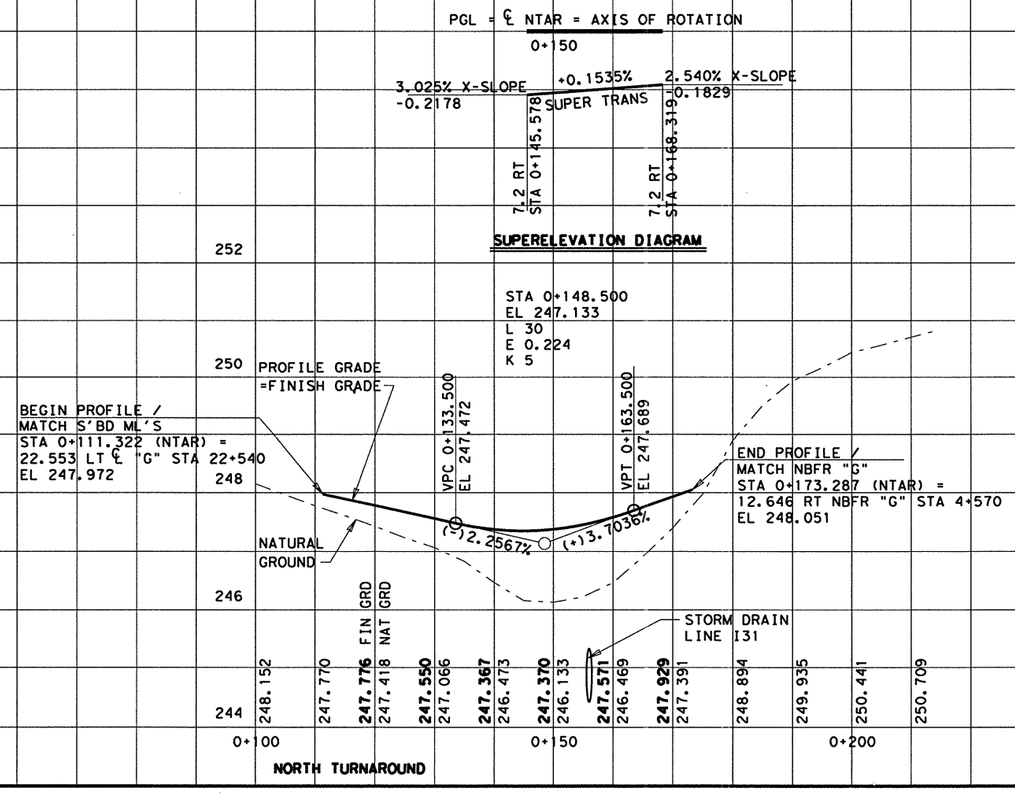


LEVELS DISPLAYED
1 2 3 4 5 6 7 8 9 10 11 12 13 14 15 16
17 18 19 20 21 22 23 24 25 26 27 28 29 30 31 32
33 34 35 36 37 38 39 40 41 42 43 44 45 46 47 48
49 50 51 52 53 54 55 65 75 85 96 06 16 26 3

ACC: lp1604fm471-90\
FILE: prof01.dgn

STATE OF TEXAS
JOEL K. DAVENPORT, JR.
79276
REGISTERED PROFESSIONAL ENGINEER

Joel K. Davenport, Jr. P.E. 79276 — 9/19/00
Joel K. Davenport, Jr. P.E. 79276 — Date

Texas Department of Transportation

# FM 1957 (POTRANCO) PROFILE

**SHEET 2 OF 2**

| FED.RD. DIV.NO. | FEDERAL AID PROJECT NO. | | SHEET NO. |
|---|---|---|---|
| 6 | NH 2000(704), etc. | | 308 |
| STATE | DIST. | COUNTY | |
| TEXAS | SAT | BEXAR | |
| CONT. | SECT. | JOB | HIGHWAY NO. |
| 2452 | 01 | 036, etc. | LP 1604 |

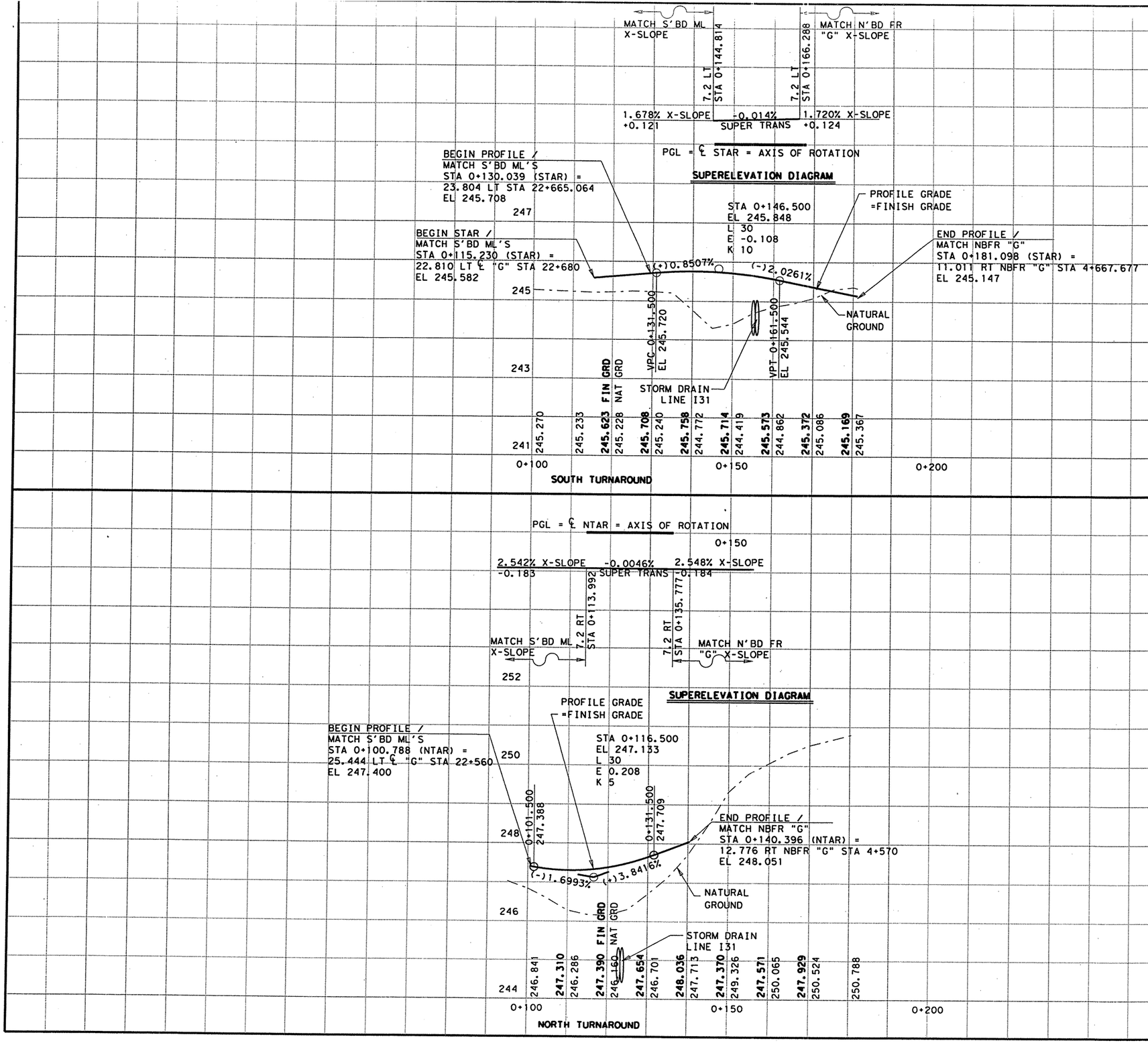


CHANGE ORDER NO. 64
-REVISED TAR PROFILES
-REPLACES SHEET 308

REPLACEMENT SHEET

CHANGE ORDER 64

LEVELS DISPLAYED
1 2 3 4 5 6 7 8 9 10 11 12 13 14 15 16
17 18 19 20 22 23 24 25 26 27 28 29 30 31 32
33 34 35 36 37 38 39 40 41 42 43 44 45 46 47 48
49 50 51 52 53 54 55 56 57 58 59 60 61 62 63

ACC: lp1604fm471-90\
FILE: prof01.dgn

STATE OF TEXAS
JEROME D. PAVLISKA
76075
REGISTERED
PROFESSIONAL ENGINEER

Jerome D. Pavliska, P.E. 4-28-04
Jerome D. Pavliska, P.E. — Date

©2004

Texas Department of Transportation

# FM 1957
# (POTRANCO) PROFILE

SHEET 2 OF 2

| FED.RD. DIV.NO. | FEDERAL AID PROJECT NO. | | SHEET NO. |
|---|---|---|---|
| 6. | NH 2000(704), etc. | | 308A |
| STATE | DIST. | COUNTY | |
| TEXAS | SAT | BEXAR | |
| CONT. | SECT. | JOB | HIGHWAY NO. |
| 2452 | 01 | 036, etc. | LP 1604 |

05-01-04

Plotted on: 01/26/2004

Design Filename: p:\52\20\11\design\civil\plansheets\road\plan-profile\profdov*orig.dgn

ACC: lp1604fm471-90\
FILE: prof01.dgn

**CHANGE ORDER NO. 64**

-NEW DOVE CANYON PROFILE DATA ADDED.
-ADDED NEW UTILITY INFORMATION

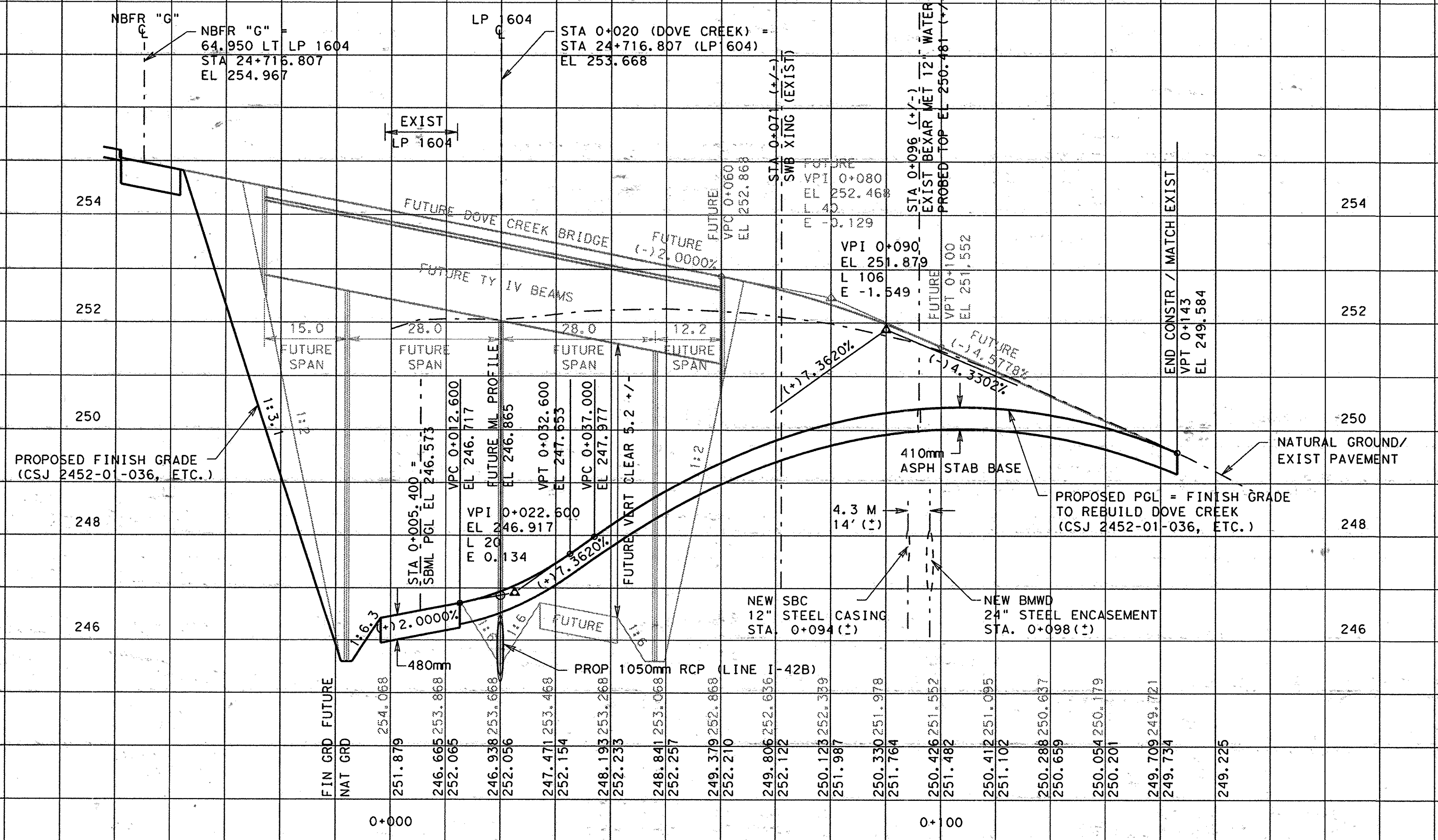


NOTES

1. SEE DOVE CANYON CROSS SECTIONS FOR MORE INFORMATION

**CHANGE ORDER NO. 64** | **NEW SHEET**

SCALE: 1:100 HORIZ
1:10 VERT


555 EAST RAMSEY SAN ANTONIO TEXAS 78216 PHONE (210)375-9000 FAX (210)375-9010

PAPE-DAWSON ENGINEERS
CIVIL & ENVIRONMENTAL

STATE OF TEXAS
J. KENT O'BRIEN
64398
LICENSED
PROFESSIONAL ENGINEER

J. KENT O'BRIEN P.E. 1/27/2004
DATE


©2002

*Texas Department of Transportation*

# DOVE CANYON PROFILE

**SHEET 1 OF 1**

| FED. RD. DIV. NO. | FEDERAL AID PROJECT NO. | | | SHEET NO. |
|---|---|---|---|---|
| 6 | NH 2000(704), etc. | | | 308 B |
| STATE | DIST. | COUNTY | | |
| TEXAS | SAT | BEXAR | | |
| CONT. | SECT. | JOB | HIGHWAY NO. | |
| 2452 | 01 | 036, etc. | LP 1604 | |

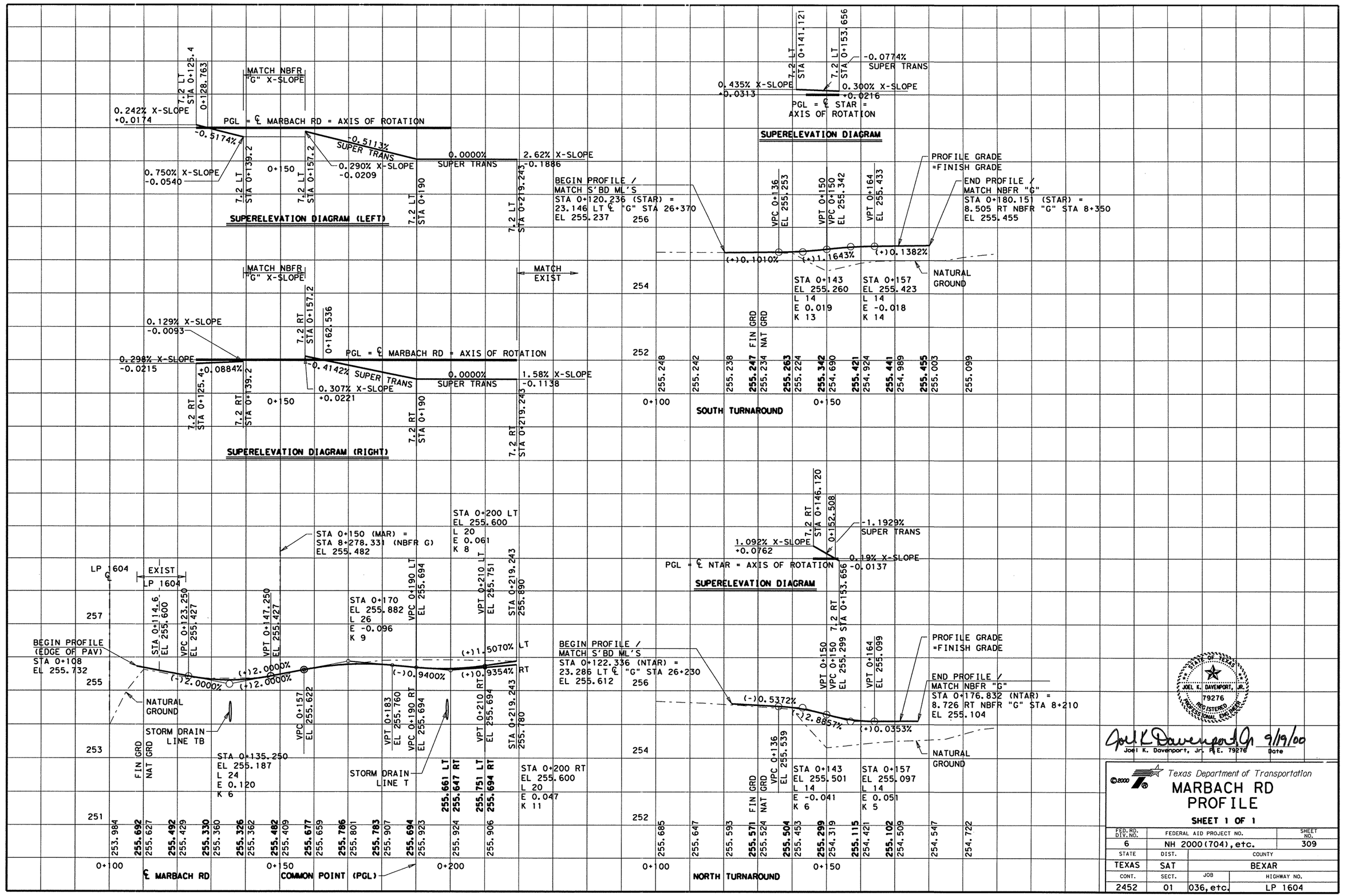
7.2 LT STA 0+125.4
0+128.763
MATCH NBFR "G" X-SLOPE
0.242% X-SLOPE
+0.0174
PGL = ℄ MARBACH RD = AXIS OF ROTATION
-0.5174%
-0.5113% SUPER TRANS
0.750% X-SLOPE
-0.0540
0.290% X-SLOPE
-0.0209
0.0000% SUPER TRANS
2.62% X-SLOPE
-0.1886
7.2 LT STA 0+139.2
0+150
7.2 LT STA 0+157.2
7.2 LT STA 0+190
7.2 LT STA 0+219.243
SUPERELEVATION DIAGRAM (LEFT)
BEGIN PROFILE / MATCH S'BD ML'S
STA 0+120.236 (STAR) =
23.146 LT ℄ "G" STA 26+370
EL 255.237
256
MATCH NBFR "G" X-SLOPE
MATCH EXIST
0.129% X-SLOPE
-0.0093
7.2 RT STA 0+157.2
0+162.536
PGL = ℄ MARBACH RD = AXIS OF ROTATION
0.298% X-SLOPE
-0.0215
+0.0884%
-0.4142% SUPER TRANS
0.307% X-SLOPE
+0.0221
0.0000% SUPER TRANS
1.58% X-SLOPE
-0.1138
7.2 RT STA 0+125.4
7.2 RT STA 0+139.2
0+150
7.2 RT STA 0+190
7.2 RT STA 0+219.243
SUPERELEVATION DIAGRAM (RIGHT)
254
252
0+100
0+150
SOUTH TURNAROUND
FIN GRD
NAT GRD
255.248 255.242 255.238 255.247 255.234 255.263 255.224 255.342 254.690 255.421 254.924 255.441 254.989 255.455 255.003 255.099
7.2 LT STA 0+141.121
7.2 LT STA 0+153.656
-0.0774% SUPER TRANS
0.435% X-SLOPE
+0.0313
0.300% X-SLOPE
+0.0216
PGL = ℄ STAR = AXIS OF ROTATION
SUPERELEVATION DIAGRAM
PROFILE GRADE =FINISH GRADE
END PROFILE / MATCH NBFR "G"
STA 0+180.151 (STAR) =
8.505 RT NBFR "G" STA 8+350
EL 255.455
VPC 0+136 EL 255.253
VPT 0+150 VPC 0+150 EL 255.342
VPT 0+164 EL 255.433
(+)0.1010%
(+)1.1643%
(+)0.1382%
NATURAL GROUND
STA 0+143 EL 255.260 L 14 E 0.019 K 13
STA 0+157 EL 255.423 L 14 E -0.018 K 14
LP 1604 ℄ EXIST LP 1604
STA 0+150 (MAR) = STA 8+278.331 (NBFR G) EL 255.482
STA 0+200 LT EL 255.600 L 20 E 0.061 K 8
STA 0+114.6 EL 255.600
VPC 0+123.250 EL 255.427
VPT 0+147.250 EL 255.427
STA 0+170 EL 255.882 L 26 E -0.096 K 9
VPC 0+190 LT EL 255.694
VPT 0+210 LT EL 255.751
STA 0+219.243 255.890
257
BEGIN PROFILE (EDGE OF PAV) STA 0+108 EL 255.732
(+)2.0000%
(-)2.0000%
(+)2.0000%
(+)1.5070% LT
(-)0.9400%
(+)0.9354% RT
255
NATURAL GROUND
STORM DRAIN LINE TB
VPC 0+157 EL 255.622
VPT 0+183 EL 255.760
VPC 0+190 RT EL 255.694
VPT 0+210 RT EL 255.694
STA 0+219.243 255.780
253
STA 0+135.250 EL 255.187 L 24 E 0.120 K 6
STORM DRAIN LINE T
STA 0+200 RT EL 255.600 L 20 E 0.047 K 11
255.661 LT 255.647 RT 255.751 LT 255.694 RT
251
253.984 255.692 255.627 255.492 255.429 255.330 255.360 255.326 255.362 255.482 255.409 255.677 255.659 255.786 255.801 255.783 255.907 255.694 255.923 255.924 255.647 255.906 255.694
0+100
0+150
0+200
℄ MARBACH RD
COMMON POINT (PGL)
7.2 LT STA 0+146.120
7.2 RT STA 0+152.508
-1.1929% SUPER TRANS
1.092% X-SLOPE
+0.0762
0.19% X-SLOPE
-0.0137
PGL = ℄ NTAR = AXIS OF ROTATION
SUPERELEVATION DIAGRAM
7.2 RT STA 0+153.656
BEGIN PROFILE / MATCH S'BD ML'S
STA 0+122.336 (NTAR) =
23.286 LT ℄ "G" STA 26+230
EL 255.612
256
254
252
(-)0.5372%
(-)2.8857%
(+)0.0353%
PROFILE GRADE =FINISH GRADE
END PROFILE / MATCH NBFR "G"
STA 0+176.832 (NTAR) =
8.726 RT NBFR "G" STA 8+210
EL 255.104
VPT 0+150 VPC 0+150 EL 255.299
VPT 0+164 EL 255.099
VPC 0+136 EL 255.539
NATURAL GROUND
STA 0+143 EL 255.501 L 14 E -0.041 K 6
STA 0+157 EL 255.097 L 14 E 0.051 K 5
255.685 255.647 255.593 255.571 255.524 255.504 255.453 255.299 254.319 255.115 254.421 255.102 254.509 254.547 254.722
0+100
0+150
NORTH TURNAROUND
LEVELS DISPLAYED
1 2 3 4 5 6 7 8 9 10 11 12 13 14 15 16
17 18 19 20 21 22 23 24 25 26 27 28 29 30 31 32
33 34 35 36 37 38 39 40 41 42 43 44 45 46 47 48
49 50 51 52 53 54 55 56 57 58 59 60 61 62 63
ACC: lp1604fm471-90\
FILE: prof01.dgn
STATE OF TEXAS JOEL K. DAVENPORT, JR. 79276 REGISTERED PROFESSIONAL ENGINEER
Joel K. Davenport, Jr. P.E. 79276
9/19/00
Date
©2000
Texas Department of Transportation
MARBACH RD
PROFILE
SHEET 1 OF 1
FED. RD. DIV. NO. 6
FEDERAL AID PROJECT NO. NH 2000(704), etc.
SHEET NO. 309
STATE TEXAS
DIST. SAT
COUNTY BEXAR
CONT. 2452
SECT. 01
JOB 036, etc.
HIGHWAY NO. LP 1604

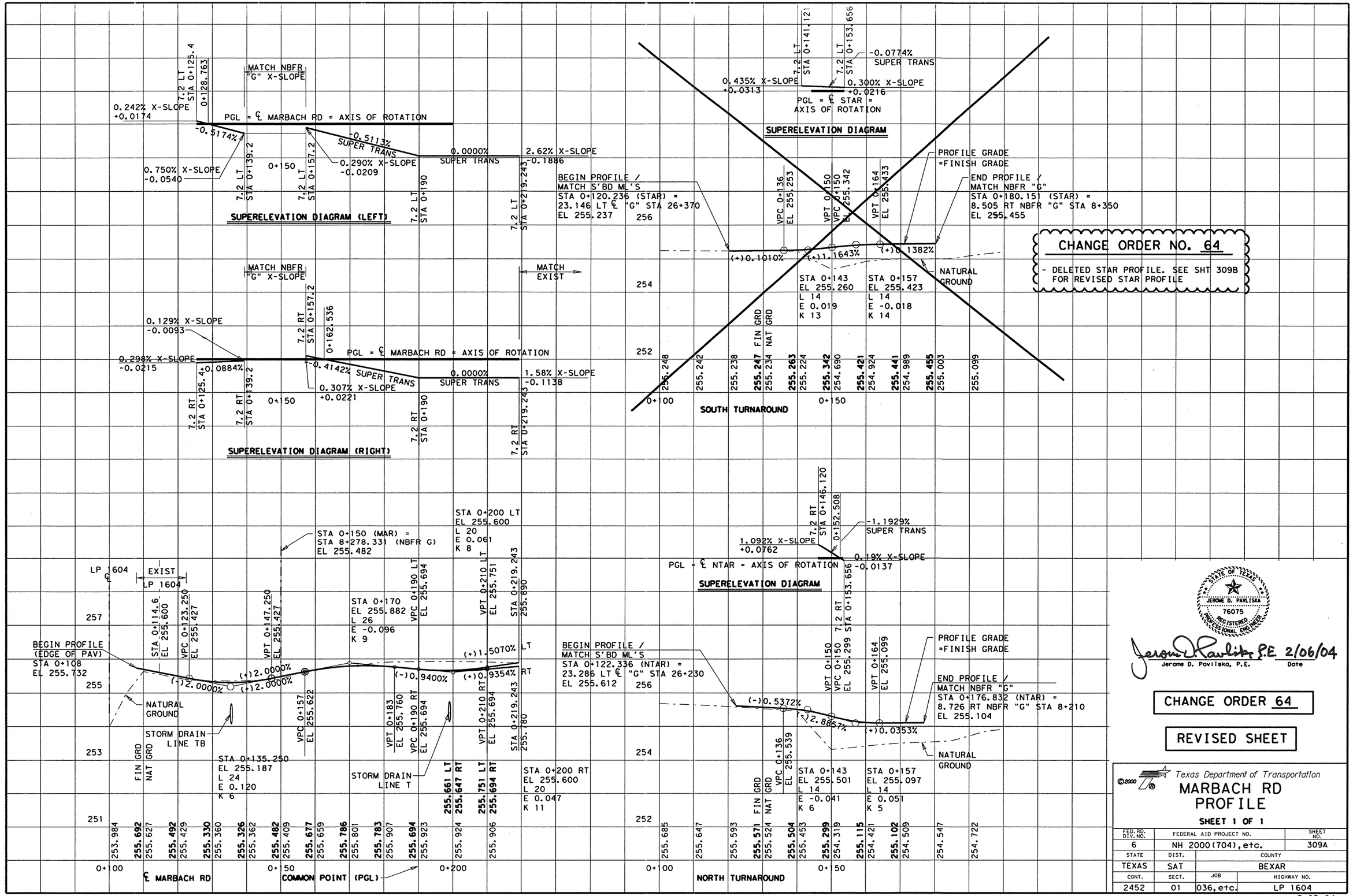


LEVELS DISPLAYED
1 2 3 4 5 6 7 8 9 10 11 12 13 14 15 16
17 18 19 20 21 22 23 24 25 26 27 28 29 30 31 32
33 34 35 36 37 38 39 40 41 42 43 44 45 46 47 48
49 50 51 52 53 54 55 56 57 58 59 60 61 62 63

ACC: lp1604fm471-90\
FILE: prof01.dgn

STATE OF TEXAS
JEROME D. PAVLISKA
76075
REGISTERED PROFESSIONAL ENGINEER

Jerome D. Pavliska, P.E. 2/06/04
Jerome D. Pavliska, P.E. Date

CHANGE ORDER 64

REVISED SHEET

© 2000 TxDOT

Texas Department of Transportation

# MARBACH RD PROFILE

SHEET 1 OF 1

| FED. RD. DIV. NO. | FEDERAL AID PROJECT NO. | SHEET NO. |
|---|---|---|
| 6 | NH 2000(704), etc. | 309A |
| STATE | DIST. | COUNTY |
| TEXAS | SAT | BEXAR |
| CONT. | SECT. | JOB / HIGHWAY NO. |
| 2452 | 01 | 036, etc. / LP 1604 |

2-05-04

Plotted on: 01/26/2004

Design Filename: p:\52\20\11\design\civil\plansheets\road\plan-profile\profmar.dgn

LEVELS DISPLAYED
1 2 3 4 5 6 7 8 9 10 11 12 13 14 15 16
17 18 19 20 21 22 23 24 25 26 27 28 29 30 31 32
33 34 35 36 37 38 39 40 41 42 43 44 45 46 47 48
50 51 52 53 54 55 56 57 58 59 60 61 62

ACC: lp1604fm471-90\

FILE: profmar.dgn

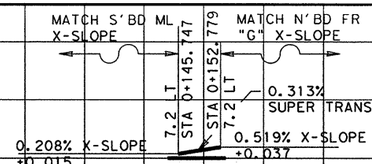


**SUPERELEVATION DIAGRAM**

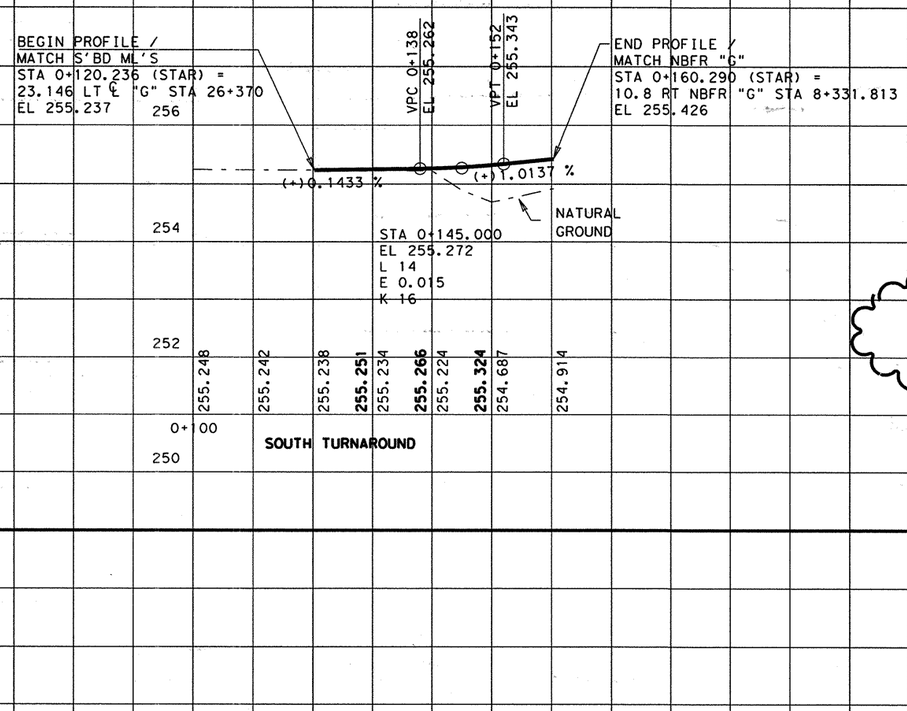


**CHANGE ORDER NO. 64**

-REVISED STAR PROFILE
-REPLACES ORIGINAL STAR PROFILE DATA ON SHEET 309

**REPLACEMENT SHEET**

**CHANGE ORDER NO. 64**

555 EAST RAMSEY SAN ANTONIO TEXAS 78216
PHONE (210)375-9000
FAX (210)375-9010
PAPE-DAWSON ENGINEERS
CIVIL & ENVIRONMENTAL

STATE OF TEXAS
J. KENT O'BRIEN
64398
LICENSED PROFESSIONAL ENGINEER

J. KENT O'BRIEN P.E. 1/27/2004 DATE

©2000

Texas Department of Transportation

# MARBACH RD PROFILE

**SHEET 1 OF 1**

| FED. RD. DIV. NO. | FEDERAL AID PROJECT NO. | | SHEET NO. |
|---|---|---|---|
| 6 | NH 2000(704), etc. | | 309B |
| STATE | DIST. | COUNTY | |
| TEXAS | SAT | BEXAR | |
| CONT. | SECT. | JOB | HIGHWAY NO. |
| 2452 | 01 | 036, etc. | LP 1604 |

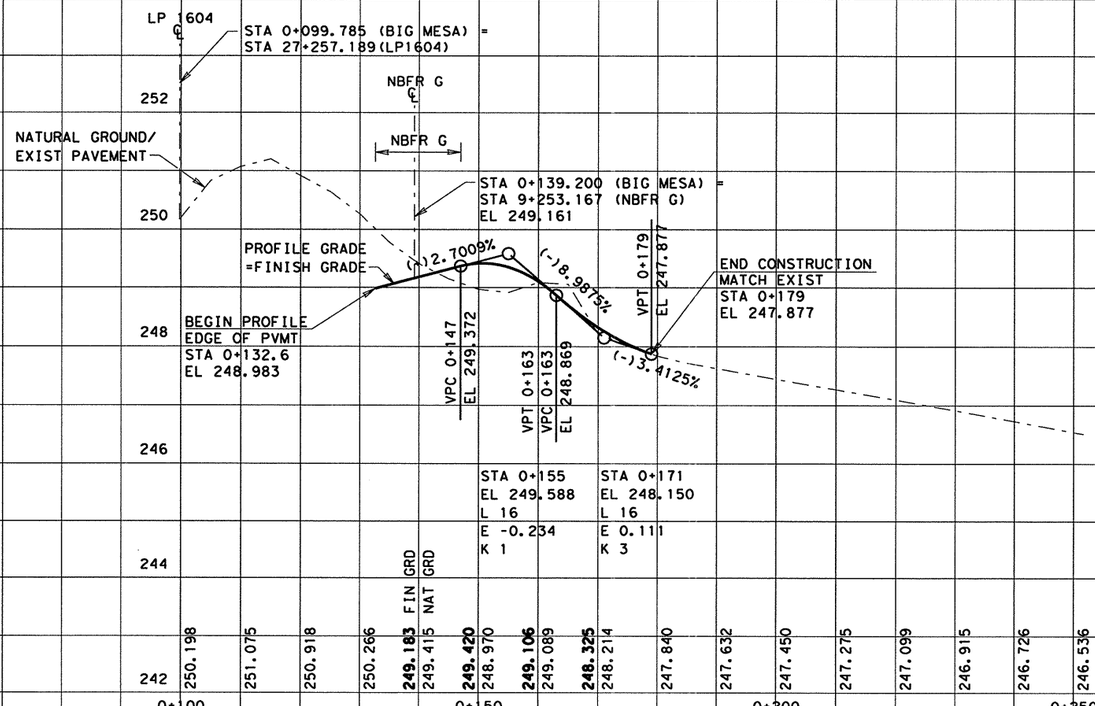


LEVELS DISPLAYED
1 2 3 4 5 6 7 8 9 10 11 12 13 14 15 16
17 18 19 20 21 22 23 24 25 26 27 28 29 30 31 32
33 34 35 36 37 38 39 40 41 42 43 44 45 46 47 48
49 50 51 52 53 54 55 56 57 58 59 60 61 62 63

ACC: lp1604fm471-90\

FILE: prof01.dgn

STATE OF TEXAS
JOEL K. DAVENPORT, JR.
79276
REGISTERED
PROFESSIONAL ENGINEER

Joel K. Davenport Jr. 9/19/00
Joel K. Davenport, Jr. P.E. 79276 Date

©2000

Texas Department of Transportation

# BIG MESA PROFILE

**SHEET 1 OF 1**

| FED. RD. DIV. NO. | FEDERAL AID PROJECT NO. | | SHEET NO. |
|---|---|---|---|
| 6 | NH 2000(704), etc. | | 310 |
| STATE | DIST. | COUNTY | |
| TEXAS | SAT | BEXAR | |
| CONT. | SECT. | JOB | HIGHWAY NO. |
| 2452 | 01 | 036, etc. | LP 1604 |

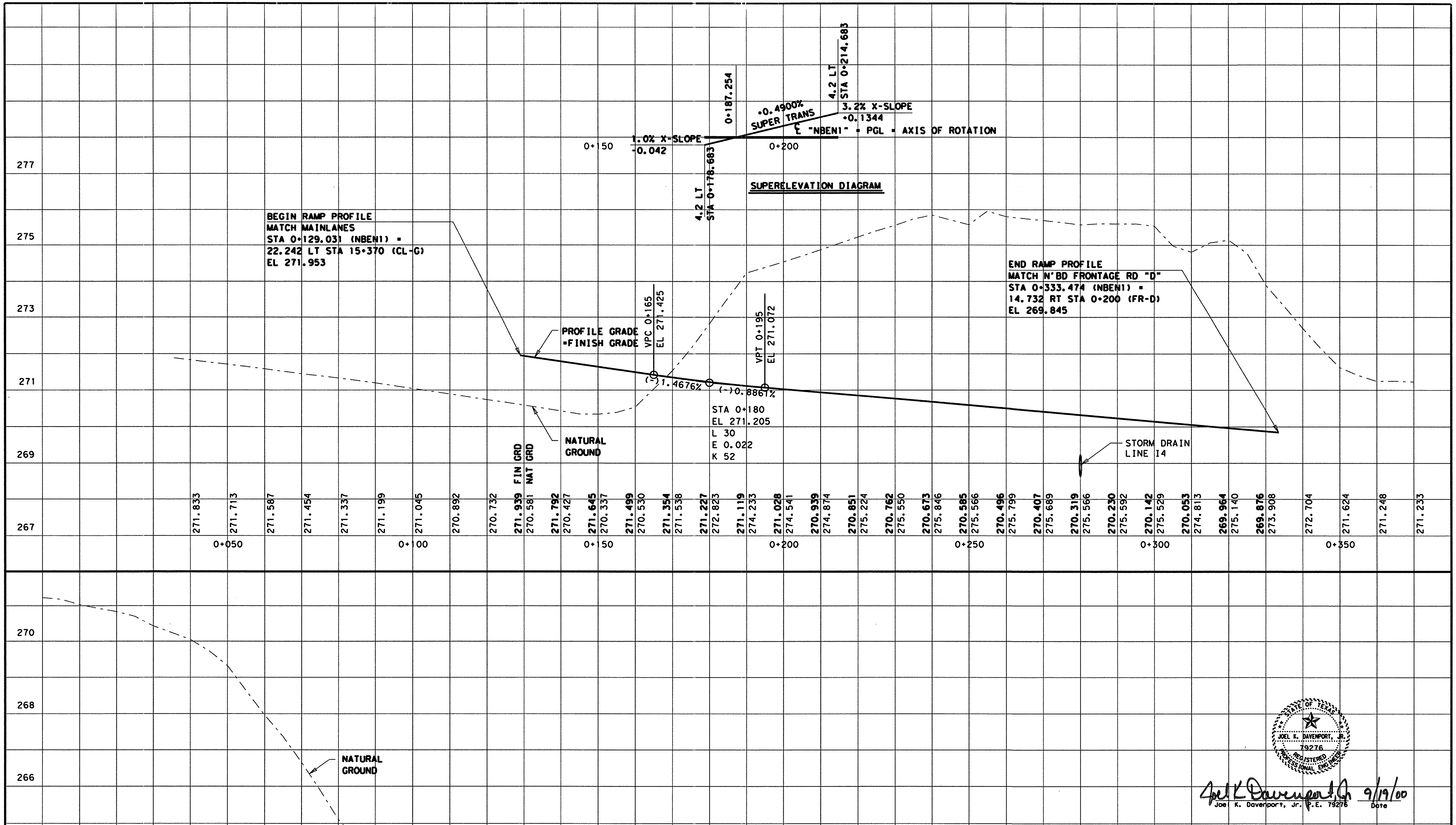


LEVELS DISPLAYED
ACC: lp1604fm471-90\
FILE: prof01.dgn

©2000 Texas Department of Transportation

# NBEN1
# RAMP PROFILE

**SHEET 1 OF 1**

| FED. RD. DIV. NO. | FEDERAL AID PROJECT NO. | | SHEET NO. |
|---|---|---|---|
| 6 | NH 2000(704), etc. | | 311 |
| STATE | DIST. | COUNTY | |
| TEXAS | SAT | BEXAR | |
| CONT. | SECT. | JOB | HIGHWAY NO. |
| 2452 | 01 | 036, etc. | LP 1604 |

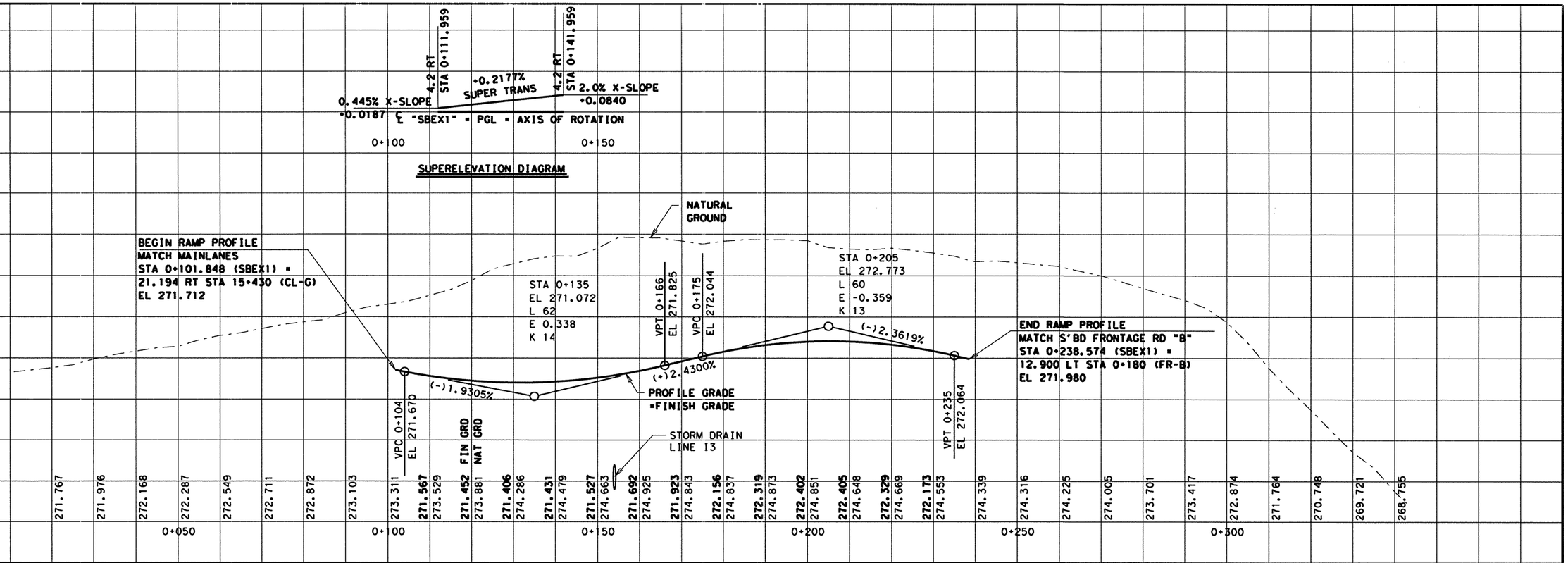


LEVELS DISPLAYED
1 2 3 4 5 6 7 8 9 10 11 12 13 14 15 16 17 18 19 20 21 22 23 24 25 26 27 28 29 30 31 32 33 34 35 36 37 38 39 40 41 42 43 44 45 46 47 48 49 50 51 52 53 54 55 56 57 58 59 60 61 62 63

ACC: lp1604fm471-90\

FILE: prof01.dgn

Joel K. Davenport, Jr. P.E. 79276 — 9/19/00
Joel K. Davenport, Jr. P.E. 79276 — Date

Texas Department of Transportation

# SBEX1
# RAMP PROFILE

**SHEET 1 OF 1**

| FED. RD. DIV. NO. | FEDERAL AID PROJECT NO. | SHEET NO. |
|---|---|---|
| 6 | NH 2000(704), etc. | 312 |
| STATE | DIST. | COUNTY |
| TEXAS | SAT | BEXAR |
| CONT. | SECT. | JOB / HIGHWAY NO. |
| 2452 | 01 | 036, etc. / LP 1604 |

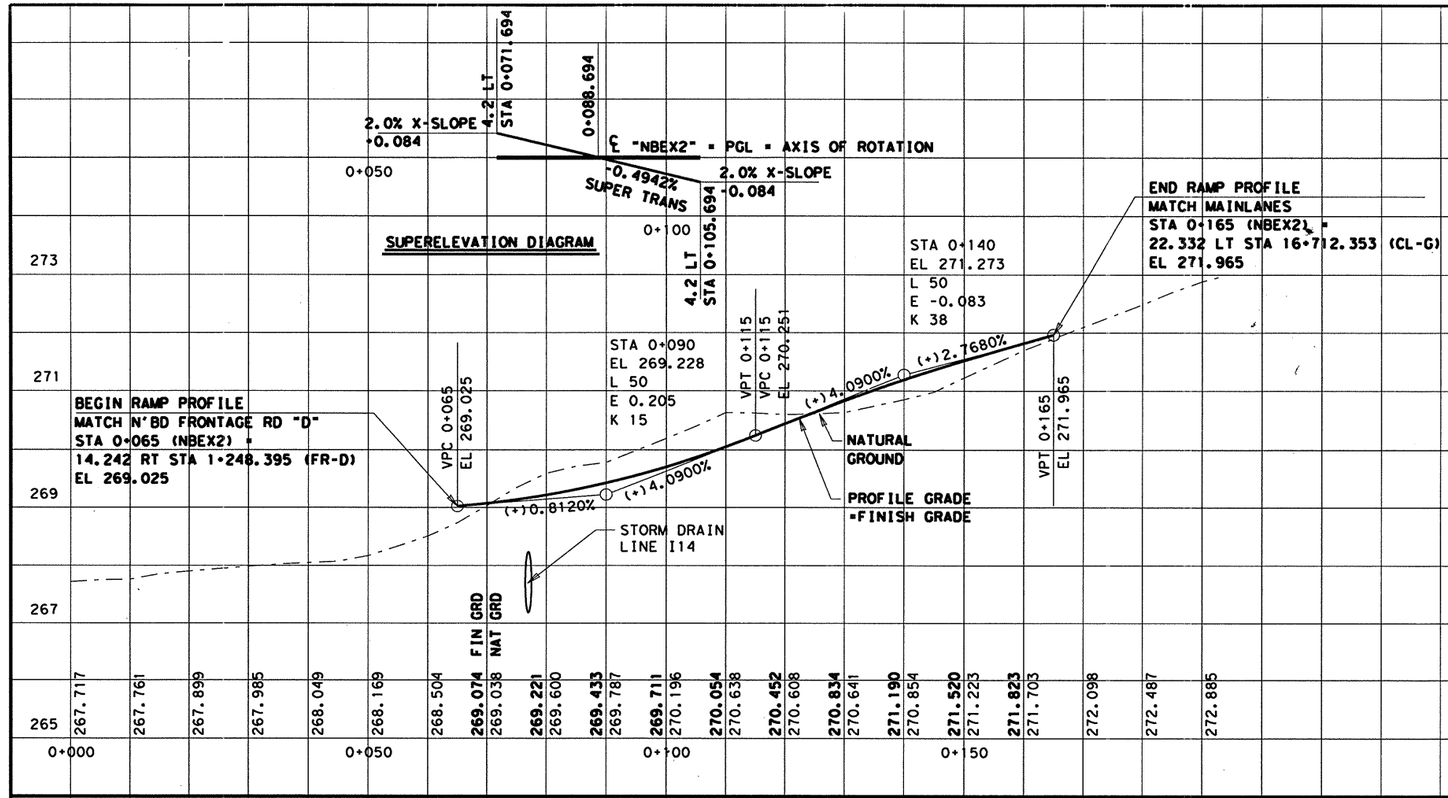


LEVELS DISPLAYED
1 2 3 4 5 6 7 8 9 10 11 12 13 14 15 16
17 18 19 20 21 22 23 24 25 26 27 28 29 30 31 32
33 34 35 36 37 38 39 40 41 42 43 44 45 46 47 48
49 50 51 52 53 54 55 65 75 85 95 06 16 26 36

ACC: lp1604fm471-90\

FILE: prof01.dgn

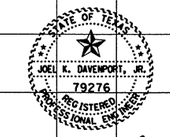


Joel K. Davenport, Jr. P.E. 79276 — 9/19/00
Date

©2000

Texas Department of Transportation

# NBEX2
# RAMP PROFILE

**SHEET 1 OF 1**

| FED. RD. DIV. NO. | FEDERAL AID PROJECT NO. | | SHEET NO. |
|---|---|---|---|
| 6 | NH 2000(704), etc. | | 313 |
| STATE | DIST. | COUNTY | |
| TEXAS | SAT | BEXAR | |
| CONT. | SECT. | JOB | HIGHWAY NO. |
| 2452 | 01 | 036, etc. | LP 1604 |

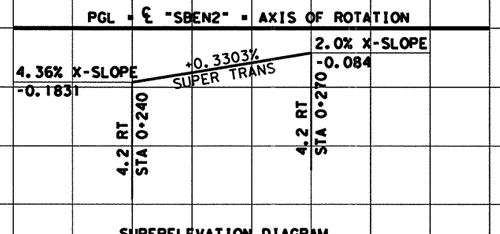


SUPERELEVATION DIAGRAM

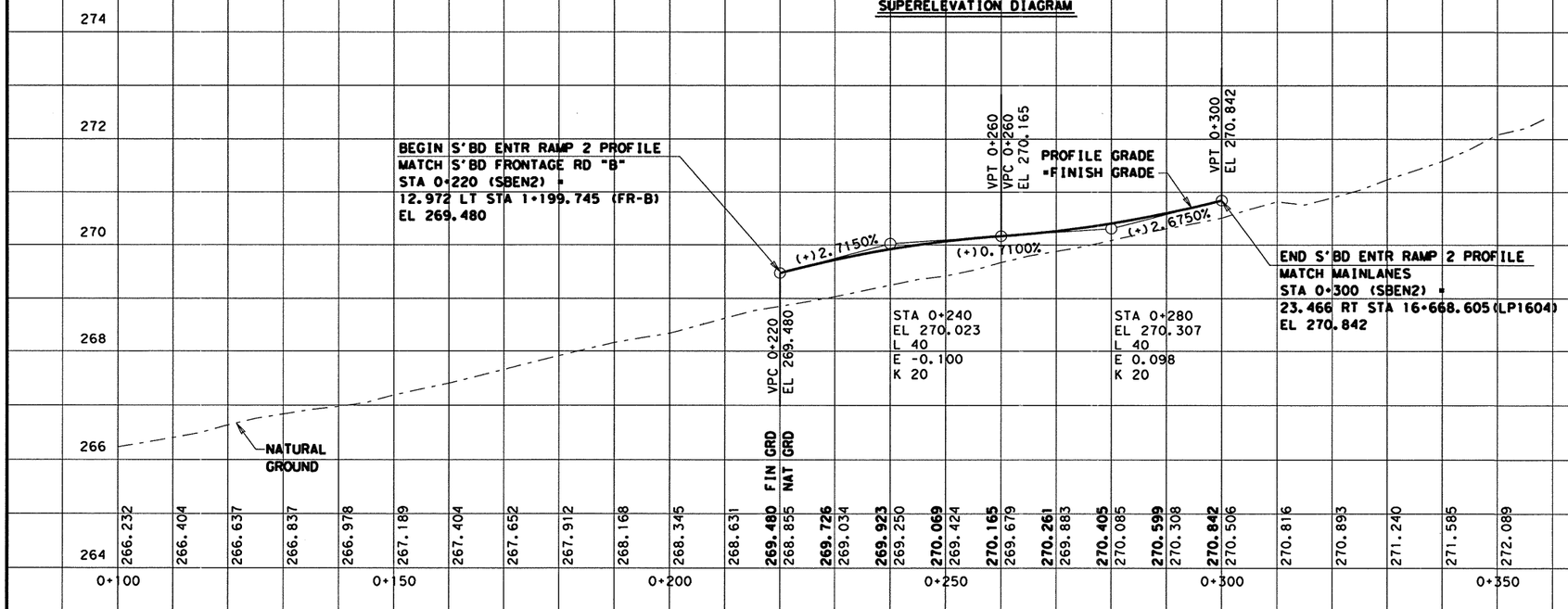


LEVELS DISPLAYED
1 2 3 4 5 6 7 8 9 10 11 12 13 14 15 16
17 18 19 20 21 22 23 24 25 26 27 28 29 30 31 32
33 34 35 36 37 38 39 40 41 42 43 44 45 46 47 48
49 50 51 52 53 54 55 56 57 58 59 60 61 62 63

ACC: lp1604fm471-90\
FILE: prof01.dgn

STATE OF TEXAS
JOEL K. DAVENPORT, JR.
79276
REGISTERED PROFESSIONAL ENGINEER

Joel K. Davenport, Jr. 9/19/00
Joel K. Davenport, Jr. P.E. 79276 Date

©2000
Texas Department of Transportation

# SBEN2
# RAMP PROFILE

SHEET 1 OF 1

| FED.RD. DIV.NO. | FEDERAL AID PROJECT NO. | | SHEET NO. |
|---|---|---|---|
| 6 | NH 2000(704), etc. | | 314 |
| STATE | DIST. | COUNTY | |
| TEXAS | SAT | BEXAR | |
| CONT. | SECT. | JOB | HIGHWAY NO. |
| 2452 | 01 | 036, etc. | LP 1604 |

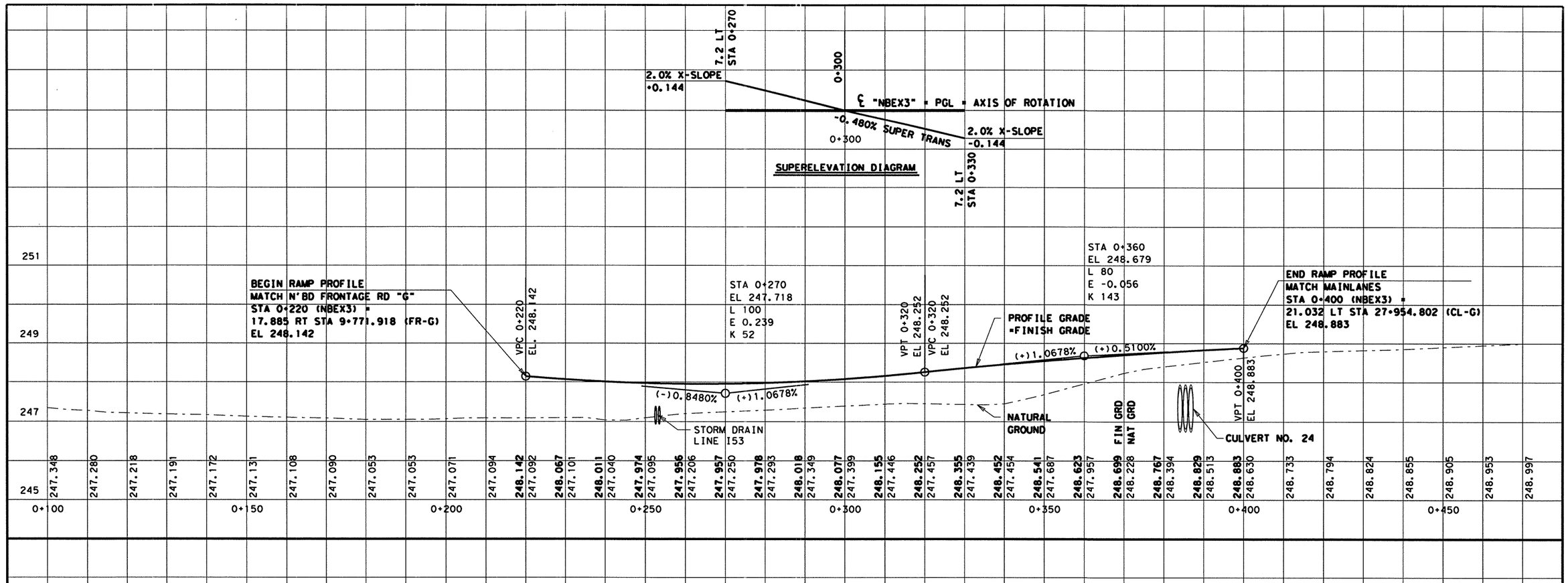


LEVELS DISPLAYED
1 2 3 4 5 6 7 8 9 10 11 12 13 14 15 16
17 18 19 20 21 22 23 24 25 26 27 28 29 30 31 32
33 34 35 36 37 38 39 40 41 42 43 44 45 46 47 48
49 50 51 52 53 54 55 56 57 58 59 60 61 62 63

ACC: lp1604fm471-90\

FILE: prof01.dgn

STATE OF TEXAS
JOEL K. DAVENPORT, JR.
79276
REGISTERED PROFESSIONAL ENGINEER

Joel K. Davenport, Jr. 9/19/00
Joel K. Davenport, Jr. P.E. 79276 Date

Texas Department of Transportation

# NBEX3
# RAMP PROFILE

**SHEET 1 OF 1**

| FED. RD. DIV. NO. | FEDERAL AID PROJECT NO. | | SHEET NO. |
|---|---|---|---|
| 6 | NH 2000(704), etc. | | 315 |
| STATE | DIST. | COUNTY | |
| TEXAS | SAT | BEXAR | |
| CONT. | SECT. | JOB | HIGHWAY NO. |
| 2452 | 01 | 036, etc. | LP 1604 |

CSJ 2452-01-037 | CSJ 2452-01-038

S 17° 45' 14.71" W

PC 15+485.795

15+500

℄ LP 1604

1.2
3.6
3.6
3.0

S.B. MAINLANES

SCALE 1:500

PT 0+152.345

1.2
4.2
3.0

S.B. EXIT RAMP

S 29° 18' 05.20" W

0+200

S.B. FRONTAGE RD.

POT 0+100.000

0+100

PT 0+226.491

S.B. FR. RD STA 0+121.506
WESTWOOD LOOP STA 0+000.000

S 24° 27' 22.01" W

0+000

3.6
4.2

END RETURN
RT 4.2 S.B FR. RD.
STA 0+135.920

273.614

END RETURN
RT 4.2 S.B. FR. RD.
STA 0+107.260

273.634

273.643

273.267

R7.6

LT

R.O.W.

△=89° 34' 30.597"
R=7.6
T=7.56
L=11.85
X=628879.3093
Y=4185306.4782

END RETURN
RT 6.7 WESTWOOD VISTA
STA 0+0+011.714

6.7 6.7

N 65° 58' 05.83" W

WESTWOOD LOOP

△=90° 25' 26.697"
R=7.6
T=7.66
L=11.99
X=628867.4438
Y=4185280.3888

END RETURN
LT 6.7 WESTWOOD VISTA
STA 0+011.926

WESTWOOD LOOP ℄

TIE TO
EXIST. CURB

END CONSTRUCT\
MATCH EXIST.
STA. 0+075.000

0+075

S.B. MAINLANES

SCALE 1:500

BEGIN BRIDGE
STA 411.900

END EDGE TAPER @
BACK OF ABUTMENT
12 LT STA 0+408.300

BEGIN EDGE OF PAV. TAPER
8.4 LT STA 0+354.300

1.2
3.6
3.6
3.6
4.2

8.4

S.B. FR. RD STA 0+370.646
WESTWOOD VISTA STA 0+000.000

S.B. FRONTAGE RD.

4.8
3.6
3.6
4.2
3.6

S 24° 27' 22.01" W

0+000

266.807

END RETURN 0+400
RT 4.2 S.B. FR. RD.
STA 0+385.920

267.164

END RETURN
RT 7.8 S.B. FR. RD.
STA 0+357.480

267.655

267.518

R7.6

1.5 BERM

1.5 BERM

CURB RAMP
HANDRAIL

CURB RAMP
HANDRAIL

R.O.W.

R.O.W.

6.7 6.7

△= 85° 34' 29.720"
R= 7.6
T=7.03
L=11.35
X=628772.4449
Y=4185080.2044

△= 94° 25' 30.090"
R= 7.6
T=8.20
L=12.52
X=628763.9427
Y=4185052.8146

FOR FURTHER
DETAILS SEE
SHEETS 338.

DRAINAGE
EASEMENT

END RETURN
RT 6.7 WESTWOOD VISTA
STA 0+014.358

END RETURN
LT 6.7 WESTWOOD VISTA
STA 0+012.964

N 69° 58' 09.33" W

WESTWOOD VISTA

WESTWOOD VISTA ℄

END CONSTRUCT.\
MATCH EXISTING
STA 0+080.000

0+080

NOTE(S):

-ALL DIMENSIONS ARE IN METERS UNLESS OTHERWISE NOTED.

WHEELCHAIR RAMPS
FOR DETAILS SEE
SHEETS 335, 356, 357.

000.000 = FINISH GRADE ELEVATION.

STATE OF TEXAS
JOEL K. DAVENPORT, JR.
79276
REGISTERED
PROFESSIONAL ENGINEER

Joel K. Davenport, Jr. P.E. 9/18/00
Joel K. Davenport, Jr., P.E. 79276 Date

Texas Department of Transportation

# INTERSECTION LAYOUT
## LOOP 1604 @ WESTWOOD LOOP DR.
## LOOP 1604 @ WESTWOOD VISTA DR.

| FED. RD. DIV. NO. | FEDERAL AID PROJECT NO. | | SHEET NO. |
|---|---|---|---|
| 6 | NH 2000(704), etc. | | 316 |
| STATE | DIST. | COUNTY | |
| TEXAS | SAT | BEXAR | |
| CONT. | SECT. | JOB | HIGHWAY NO. |
| 2452 | 01 | 036, etc. | LP 1604 |

FILE $FILE$ LEVEL DISPLAYED $DATE$

CSJ 2452-01-037 | CSJ 2452-01-038

S 17° 45' 14.71" W

PC 15+485.795

15+500

℄ LP 1604

1.2
3.6
3.6
3.0

S.B. MAINLANES

STORM DRAIN LINE I-3

PT 0+152.345

STORM DRAIN LINE I-5C

SCALE 1:500

1.2
4.2
3.0

S.B. EXIT RAMP

S 29° 18' 05.20" W

0+200

S.B. FRONTAGE RD.

POT 0+100.000

0+100

PT 0+226.491

S.B. FR. RD STA 0+121.653
WESTWOOD LOOP STA 0+000.000

0+000

S 24° 27' 22.01" W

3.6
4.2

END RETURN
RT 4.2 S.B FR. RD.
STA 0+135.920

273.614
273.642
273.482
273.267

EXIST. SAW'S (925mm)

END RETURN
RT 4.2 S.B FR. RD.
STA 0+107.260

R 7.6

RET. WALL NO.1, FOR DETAILS SEE LAYOUTS

EXIST G.F.U.

EXIST SAWS (925mm)

1.5 CONC SIDEWALK

RET. WALL NO.2 ,FOR DETAILS SEE LAYOUTS.

R.O.W.

NEW G.F.U.

EXIST. SAWS TO BE ABANDONED

Δ=89° 36' 8.74"
R=7.6
T=7.67
L=12.02
X=628867.3878
Y=4185280.2657

Δ=90° 23' 51.79"
R=7.6
T=7.57
L=11.92
X=628879.2449
Y=4185306.3368

TIE 100mm G.F.U. (±)

END RETURN
RT 6.7 WESTWOOD VISTA
STA 0+0+011.721

6.7 6.7

WESTWOOD LOOP

0+020
0+040
0+060

29.37'
65° 58'

EXIST. G.F.U. (TO BE ABANDONED)

STORM DRAIN LINE I-5B

END RETURN
LT 6.7 WESTWOOD VISTA
STA 0+011.867

WESTWOOD LOOP ℄

1.5 CONC SIDEWALK

7 JOINT BID SAWS (925mm)

7 JOINT BID SAWS (300mm)

1.5 SIDEWALK

NEW G.F.U.

END CONSTRUCT. MATCH EXIST. STA. 0+080.000

EXIST. SAW'S (300mm) (TO REMAIN IN PLACE)

G.F.U. CROSSING STA. 0+094 (±)

NEW G.F.U.

CONTRACTOR IS ALERTED TO THE NEW GAS UTILITY IN VICINITY.

CHANGE ORDER NO. 28
-REVISED GEOMETRY
-ADDED RET. WALLS #1 & #2
-ADDED STORM DRAIN (I-5B, I-5C)
-ADDED UTILITY INFORMATION
-REVISED SPOT ELEVATIONS

NOTE(S):

ALL DIMENSIONS ARE IN METERS UNLESS OTHERWISE NOTED.

(#) = REFERS TO CHANGES MADE AS PART OF CHANGE ORDER.

= WHEELCHAIR RAMPS, FOR DETAILS SEE SHEETS 335, 356 AND 357.

000.000 = CHANGES MADE AS PER CHANGE ORDER. FINISH GRADE ELEVATION.

G.F.U. = GREY FOREST GAS (100mm).

CHANGE ORDER 28

REVISED SHEET

S.B. MAINLANES

SCALE 1:500

MAINTAIN MINIMUM ADA REQUIREMENT OF 36"(914mm) CLEAR (BETWEEN SGT & PR1 RAIL)

BEGIN BRIDGE STA 0+411.900

END EDGE OF PAV. TRANS. @ END OF WINGWALL 12 LT STA 0+408.300

BEGIN EDGE OF PAV. TRANS. 8.4 LT STA 0+354.300

1.2
3.6
3.6
3.6
4.2
1.5 RIPRAP BERM

8.4

S.B. FR. RD STA 0+372.441
WESTWOOD VISTA STA 0+000.000

EXIST. G.F.U. (TO BE ABANDONED)

REVISED STORM DRAIN LINE I-8

END RETURN
RT 7.8 S.B. FR. RD.
STA 0+359.348

267.597
267.462

RAIL (TY PR1)

EXIST. SAW'S 925mm

Δ= 87° 42' 14.136"
R= 7.6
T=7.30
L=11.63
X=637328.3849
Y=4182452.3364

END RETURN
RT 6.1 WESTWOOD VISTA
STA 0+014.863

DEVELOPERS STORM DRAIN TRUNKLINE

BEGIN RIPRAP STA 0+020 (RT.) (WESTWOOD VISTA)

℄ EXIST. DRAIN STRUCT. STA 0+024.221 (WW VISTA) = 24.201 RT STA 0+373.412 (SBFR)

S 24° 27' 22.01" W

0+000

JOINT BID SAWS 925mm PIPE 15

S.B. FRONTAGE RD.

4.8
3.6
3.6
4.2
3.6

END RETURN 0+400
RT 7.8 S.B. FR. RD.
STA 0+386.770

266.856
267.138

1.5 RIPRAP BERM

END BERM TRANS MATCH END EDGE OF WING WALL

1:12

1:22.4 TRANS.

2.2 M (1:12 SLOPE TRANS)

EXIST G.F.U.

R.O.W.

BEGIN BERM TRANS. 9.53 RT STA 0+400

Δ= 92° 17' 48.686"
R= 7.6
T=7.91
L=12.24
X=637355.8065
Y=4182452.2394

DRAINAGE EASEMENT

END RETURN
LT 6.1 WESTWOOD VISTA
STA 0+015.961

1.5 RIPRAP BERM

1.5 BERM

STORM DRAIN LINE I-8A

WESTWOOD VISTA

N 67° 50' 22.55" W

0+020
0+040
0+060

6.1 6.1

PC 0+045.102

CHANGE ORDER NO. 28
-REVISED LINE I-8
-MODIFIED RIPRAP
-ADDED STORM DRAIN I-8A
-ADDED UTILITY INFO.
-REVISED ALIGNMENT
-REVISED SPOT ELEVATIONS

BEGIN RIPRAP STA 0+050 (LT.) (WESTWOOD VISTA)

END CONSTRUCT. MATCH EXISTING STA 0+080.000

STATE OF TEXAS
JEROME D. PAVLISKA
76075
REGISTERED PROFESSIONAL ENGINEER

Jerome D. Pavliska, P.E. 8-18-03
Jerome D. Pavliska, P.E. Date

© 2001 Texas Department of Transportation

# INTERSECTION LAYOUT
## LOOP 1604 @ WESTWOOD LOOP DR.
## LOOP 1604 @ WESTWOOD VISTA DR.

| FED. RD. DIV. NO. | FEDERAL AID PROJECT NO. | SHEET NO. |
|---|---|---|
| 6 | NH 2000(704), etc. | 316A |
| STATE | DIST. | COUNTY |
| TEXAS | SAT | BEXAR |
| CONT. | SECT. | JOB / HIGHWAY NO. |
| 2452 | 01 | 036, etc. / LP 1604 |

FILE $FILE$ | LEVEL | DISPLAYED | $DATE$

SCALE 1:500

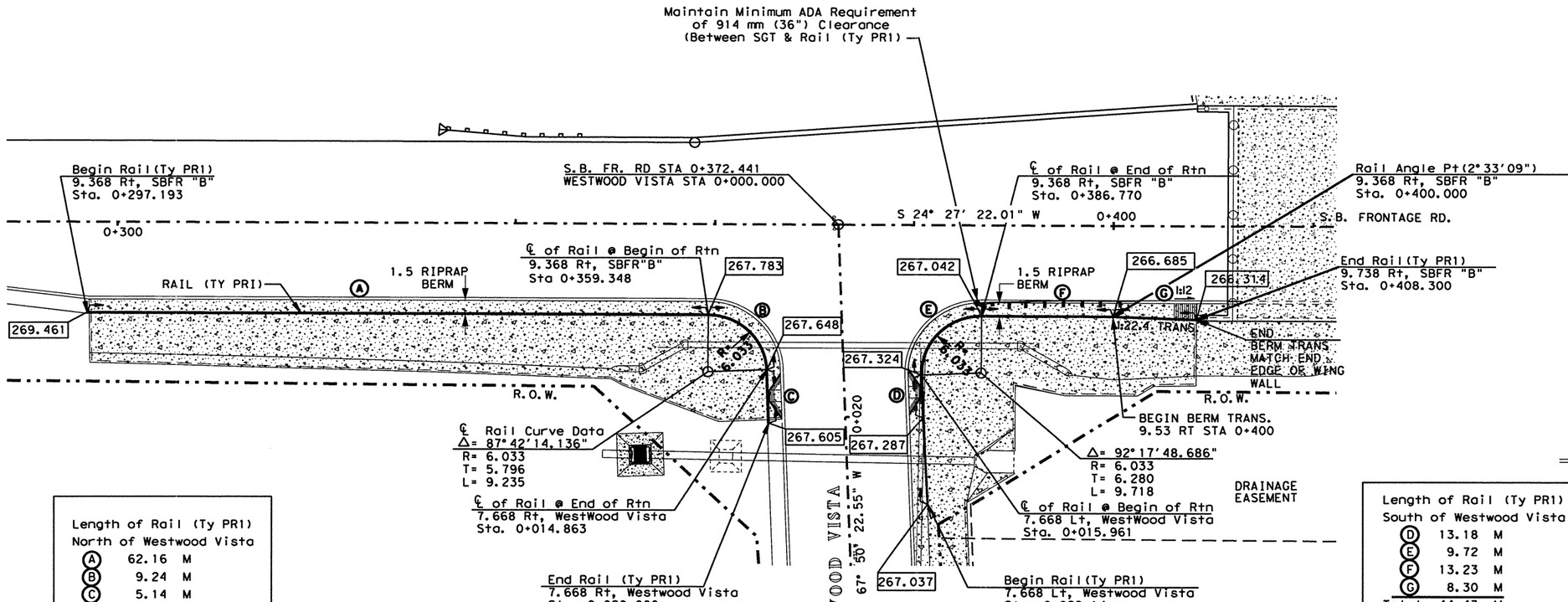


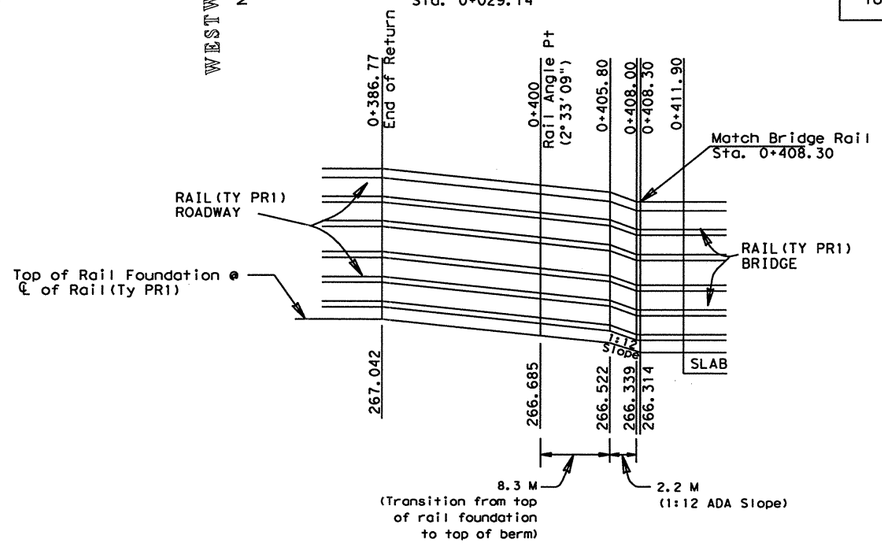


| Length of Rail (Ty PR1) North of Westwood Vista | | |
|---|---|---|
| A | 62.16 | M |
| B | 9.24 | M |
| C | 5.14 | M |
| Total | 76.54 | M |

| Length of Rail (Ty PR1) South of Westwood Vista | | |
|---|---|---|
| D | 13.18 | M |
| E | 9.72 | M |
| F | 13.23 | M |
| G | 8.30 | M |
| Total | 44.43 | M |

## ESTIMATED QUANTITIES

| ITEM # | ITEM | UNIT | QTY. |
|---|---|---|---|
| 450-5060 | RAIL (TY PR1) | M | 120.9 |

NOTE(S):

ALL DIMENSIONS ARE IN METERS UNLESS OTHERWISE NOTED.

= WHEELCHAIR RAMPS, FOR DETAILS SEE SHEETS 335,356 AND 357.

CHANGE ORDER 28

NEW SHEET

STATE OF TEXAS
JEROME D. PAVLISKA
76075
REGISTERED
PROFESSIONAL ENGINEER

Jerome D. Pavliska, P.E. 8-11-03
Jerome D. Pavliska, P.E. — Date

Texas Department of Transportation

# WESTWOOD VISTA
## RAILING DETAILS (NORTH & SOUTH)

| FED. RD. DIV. NO. | FEDERAL AID PROJECT NO. | | SHEET NO. |
|---|---|---|---|
| 6 | NH 2000(704), etc. | | 316B |
| STATE | DIST. | COUNTY | |
| TEXAS | SAT | BEXAR | |
| CONT. | SECT. | JOB | HIGHWAY NO. |
| 2452 | 01 | 036, etc. | LP 1604 |

FILE: t:\roa\design\lp1604fm471-90\intersections\PR1detail(www*loop&vista)*C028.dgn
LEVEL DISPLAYED
1 2 3 4 5 6 7 8 9 10 11 12 13 14 15 16 17 18 19 20 21 22 23 24 25 26 27 28 29 30 31 32 33
333435363738394041424344454647484950515253545556575859606162636

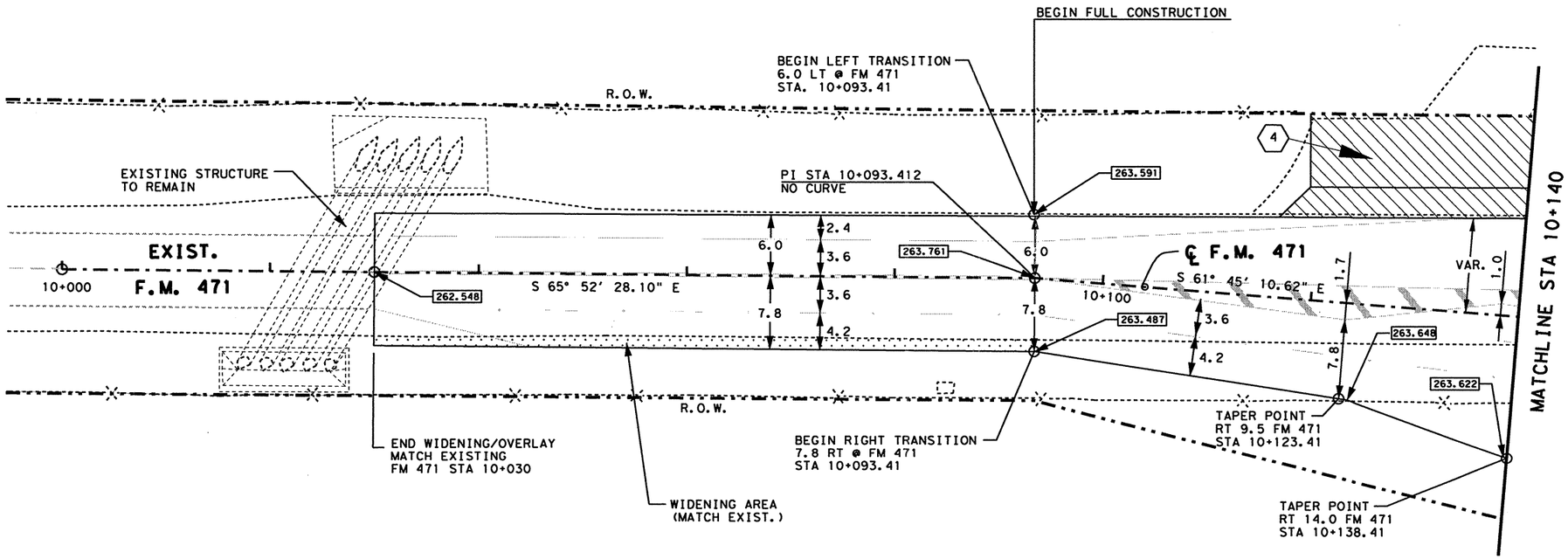


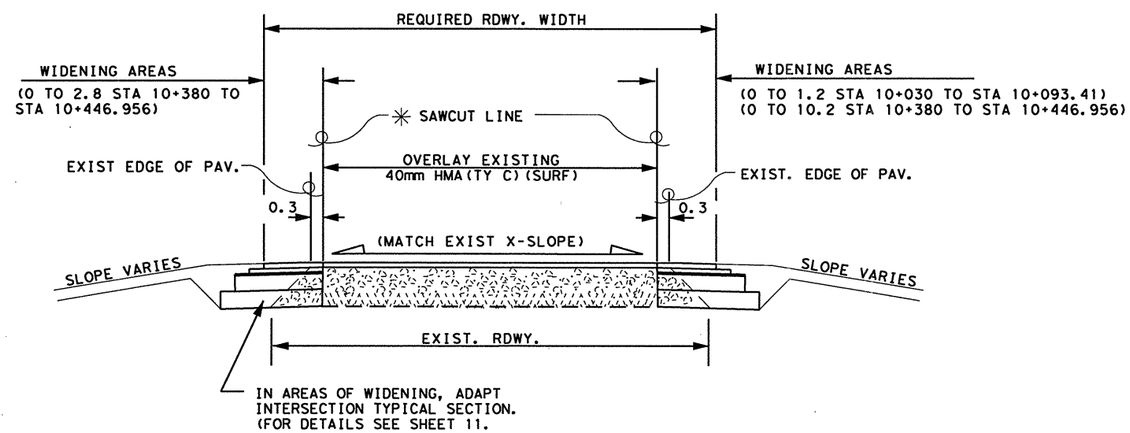


WIDENING/OVERLAY SECTION

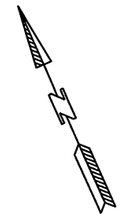

SCALE: 1:500

NOTE(S):

- ALL DIMENSIONS ARE IN METERS UNLESS OTHERWISE NOTED.
- FOR ADDITIONAL HORIZONTAL ALIGNMENT DATA SEE SHEETS 164-171
- FOR PAVEMENT MARKING LAYOUTS \ DETAILS SEE SHEETS 764-765.

(#) = DRIVEWAY #, FOR MORE DETAILS SEE SHEET(S) 27, 28 & 336.

000.000 = FINISH GRADE ELEVATION.

✳ SAWCUTTING SHALL BE CONSIDERED SUBSIDIARY TO VARIOUS PERTINENT BID ITEMS.

Joel K. Davenport, Jr. P.E. 79276 — 9/18/00
Date

Texas Department of Transportation

# INTERSECTION LAYOUT

## LOOP 1604 AT CULEBRA RD. \ F.M. 471

SHEET 1 OF 4

| FED. RD. DIV. NO. | FEDERAL AID PROJECT NO. | | SHEET NO. |
|---|---|---|---|
| 6 | NH 2000(704), etc. | | 317 |
| STATE | DIST. | COUNTY | |
| TEXAS | SAT | BEXAR | |
| CONT. | SECT. | JOB | HIGHWAY NO. |
| 2452 | 01 | 036, ETC | LP 1604 |

FILE f:\tod\design\lp1604fm471-90\intersections\int1*1(culebra).dgn SEP 2000
LEVEL DISPLAYED
1 2 3 4 5 6 7 8 9 10 11 12 13 14 15 16 17 18 19 20 21 22 23 24 25 26 27 28 29 30 31 32
33 34 35 36 37 38 39 40 41 42 43 44 45 46 47 48 49 50 51 52 53 54 55 56 57 58 59 60 61 62 63

(1) △=89°24'36.0645"
T=29.693
L=46.815
R=30.0
X=628770.459
Y=4184901.354

(2) △=40°38'11.9229"
T=9.479
L=18.157
R=25.6
X=628834.104
Y=4184904.114

(3) △=83°1'8.3512"
T=26.551
L=43.469
R=30.0
X=628769.222
Y=4184814.017

(4) △=29°16'35.8303"
T=6.530
L=13.081
R=25.6
X=628829.184
Y=4184810.914

LESLIE RD TO BE REMOVED

END RETURN 7.8 RT SB FR RD STA 0+591.52

END RETURN 11.4 LT FM 471 STA 10+165

END LEFT TRANSITION FM 471 STA 10+193.12

PI STA 10+193.12 NO CURVE

END RIGHT TRANSITION FM 471 STA 10+193.12

END RETURN\SIDEWALK 15.7 RT @ FM 471 STA 10+170

END RETURN\CURB, SIDEWALK LT 7.8 S.B. FR RD. STA. 0+678.87

NORTH TAR PC STA 0+019.12 =12.06 LT SB FR RD STA. 0+589.13

PC 0+019.12

EXISTING CARPOOL PARKING TO BE REMOVED

PT 0+043.53

POT 0+062.41

NTAR

STAR

PI 0+063.31

PT 0+043.94

SOUTH TAR PC STA 0+019.99 =8.48 LT SB FR RD STA 0+680.17

PC 0+019.99

SB FR RD STA 0+634.833 CULEBRA STA 10+203.117

RT 0.20 FM 471 STA 10+225.12

RT 1.4 FM 471 STA 10+243.14

BRIDGE COLUMNS

S.B. FRONTAGE RD. ℄

SB MAINLANES

℄ F.M. 471 \ CULEBRA RD.

MATCHLINE STA. 10+140

MATCHLINE STA. 16+040

LP 1604 ℄

S 24° 27' 22.01" W

S 20° 41' 09.79" W

S 24° 27' 22.03" W

S 61° 45' 10.62" E

S 62° 31' 56.22" E

S 66° 21' 18.93" E

S 66° 21' 18.70" E

S 70° 10' 12.02" E

S 66° 21' 19.06" E

N 28° 08' 11.57" E

R.O.W.

10+200

10+000

0+600

0+640

0+680

263.947 263.877 263.871 263.840 263.825 263.731 263.556 263.481 263.774 263.807 263.821 263.825 263.836 263.848 263.818 263.843 263.820 263.753 263.740 263.682 263.699 263.754 263.768 263.766 263.736 263.722 263.743 263.804 263.713 263.875 263.889 263.622 263.577 263.747 263.742 263.719 263.757 263.602

SCALE: 1:500

NOTE(S):

- ALL DIMENSIONS ARE IN METERS UNLESS OTHERWISE NOTED.
- MAINLANES OVERPASS OF LP 1604 NOT SHOWN FOR CLARITY.
- FOR BRIDGE LAYOUTS \ DETAILS SEE SHEETS 483-506.
- FOR ADDITIONAL HORIZONTAL ALIGNMENT DATA SEE SHEETS 164-171
- FOR TRAFFIC SIGNAL LAYOUTS \ DETAILS SEE SHEETS 557-561.
- FOR ILLUMINATION LAYOUTS \ DETAILS SEE SHEETS 606
- FOR PAVEMENT MARKING LAYOUTS \ DETAILS SEE SHEETS 764-765.

WHEELCHAIR RAMPS FOR DETAILS SEE SHEETS 335,336 & 357.

(#) = DRIVEWAY # ,FOR MORE DETAILS SEE SHEET(S) 27,28 & 336.

000.000 = FINISH GRADE ELEVATION.

LP 1604 ℄ STA. 16+023.703
℄ F.M. 471 STA. 10+269.548

STATE OF TEXAS
JOEL K. DAVENPORT, JR.
79276
REGISTERED PROFESSIONAL ENGINEER

Joel K. Davenport, Jr. 9/18/00
Joel K. Davenport, Jr. P.E. 79276 Date

Texas Department of Transportation

# INTERSECTION LAYOUT

## LOOP 1604 AT CULEBRA RD. \ F.M. 471

SHEET 2 OF 4

| FED. RD. DIV. NO. | FEDERAL AID PROJECT NO. | | SHEET NO. |
|---|---|---|---|
| 6 | NH 2000(704),etc. | | 318 |
| STATE | DIST. | COUNTY | |
| TEXAS | SAT | BEXAR | |
| CONT. | SECT. | JOB | HIGHWAY NO. |
| 2452 | 01 | 036,etc. | LP 1604 |

FILE: t:\oo\design\lp1604fm471-90\intersections\int1x2(culebra).dgn3 SEP 2000
LEVEL DISPLAYED
1 2 3 4 5 15 16 17 18 9 10 11 20 21 31 41 51 61 71 81 91 02 12 22 32 42 52 62 72 82 92 03 13 23
33 34 35 36 37 38 39 40 41 42 43 44 45 46 47 48 49 50 51 52 53 54 55 56 57 58 59 60 61 62 63

CHANGE ORDER NO. 61

-ADDED PEDESTRIAN ACCESS ROUTE DETAILS

(1) △=89° 24' 36.0645"
T=29.693
L=46.815
R=30.0
X=628770.459
Y=4184901.354

(2) △=40° 38' 11.9229"
T=9.479
L=18.157
R=25.6
X=628834.104
Y=4184904.114

(3) △=83° 1' 8.3512"
T=26.551
L=43.469
R=30.0
X=628769.222
Y=4184814.017

(4) △=29° 16' 35.8303"
T=6.530
L=13.081
R=25.6
X=628829.184
Y=4184810.914

LESLIE RD TO BE REMOVED

END RETURN
7.8 RT SB FR RD STA 0+591.52

PROP. ROADWAY CROWN
0.0 @ STA. 10+170
EL. 263.879

END RETURN
11.4 LT FM 471 STA 10+165

EXIST. ROADWAY CROWN
4.4 LT @ STA. 10+150
EL. 263.993

MATCHLINE STA. 10+140

VERT. CONTROL LINE & AXIS OF ROTATION.

℄ F.M. 471\CULEBRA RD.

S 61° 45' 10.62" E

HORZ. CONTROL LINE

PEDESTRIAN ACCESS ROUTE

END LEFT TRANSITION FM 471 STA 10+193.12

R.O.W.

END WIDENING
BEGIN FULL CONSTRUCTION
STA. 10+150.000 (CULEBRA ROAD)

END RETURN\SIDEWALK
15.7 RT @ FM 471 STA 10+170

END RIGHT TRANSITION
17.0 RT FM 471 STA 10+193.12

END RETURN\CURB, SIDEWALK
LT 7.8 S.B. FR RD.
STA. 0+678.87

PI STA 10+193.12
NO CURVE

SB FR RD STA 0+634.833
CULEBRA STA 10+203.117

S.B. FRONTAGE RD. ℄

NORTH TAR PC STA 0+019.12
=12.06 LT SB FR RD STA. 0+589.13

PC 0+019.12

EXISTING CARPOOL PARKING TO BE REMOVED

PT 0+043.53

POT 0+062.41

S 62° 31' 56.22" E

S 66° 21' 18.93" E

7.6 NTAR

℄ PEDESTRIAN ACCESS ROUTE

RT 0.20 FM 471
STA 10+225.12

RT 1.4 FM 471
STA 10+243.14

2.1 STAR

PI 0+063.21

SEE DETAIL

S 70° 10' 12.02" E

S 66° 21' 19.06" E

PT 0+043.94

PC 0+019.99

SOUTH TAR PC STA 0+019.99
=8.48 LT SB FR RD STA 0+680.17

N 28° 08' 11.57" E

SB MAINLANES

MATCHLINE STA. 10+269.548

LP 1604

S 24° 27' 22.01" W

S 20° 41' 09.79" W

S 24° 27' 22.03" W

4.2 3.6 3.6 3.6 VAR.

4.2 3.6 3.6 VAR.

0+600 0+640 0+680 0+720 0+760 0+800 0+840 0+880 0+920 0+960 1+000 1+040 1+080

263.947 263.871 263.877 263.840 263.825 263.731 263.556 263.481 263.807 263.821 263.825 263.836 263.848 263.818 263.843 263.820 263.753 263.740 263.682 263.699 263.754 263.768 263.766 263.736 263.722 263.743 263.719 263.742 263.713 263.804 263.889 263.875 263.577 263.622 263.747 263.757 263.602 263.834

R 16.8 R 25.6 R 30 R 1 R 3 R 0.8

6 1.5 4.2 7.8 12 3.6 13.4 5.6 2.0 11.4 2.1 1.4 2.8 16.8 15.8 30° 7.6

NOTE(S):

WHEELCHAIR RAMPS FOR DETAILS SEE SHEETS 335, 336 & 357.

(#) = DRIVEWAY # , FOR MORE DETAILS SEE SHEET(S) 27, 28 & 336.

000.000 = FINISH GRADE ELEVATION.

SCALE: 1:500

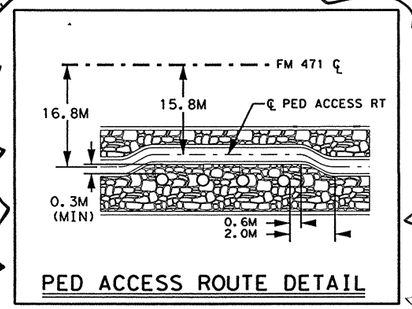


PED ACCESS ROUTE DETAIL

NOTE: PATTERNED OR TEXTURIZED STAMPED CONCRETE ORGINALLY ALLOWED FOR AS PART OF CHANGE ORDER 19. REVISED PER CO #61. SEE SHEET 228E FOR DETAILS.

PED ACCESS ROUTE SHOULD MEET ALL APPLICABLE ADA/TDLR REQUIREMENTS.

FOR CONTRACTOR'S INFORMATION ONLY
PED ACCESS ROUTE AREA = 196 M2

STONE PATTERN (SEE SHEET 228E FOR DETAILS)

LP 1604 ℄ STA. 16+023.703
℄ F.M. 471 STA. 10+269.548

REVISED SHEET

CHANGE ORDER 61

STATE OF TEXAS
JENNIFER L. MOCZYGEMBA
84734
REGISTERED PROFESSIONAL ENGINEER

P.E. 6-18-03
Jennifer L. Moczygemba, P.E. 84734 Date

©2000 Texas Department of Transportation

# INTERSECTION LAYOUT
## LOOP 1604 AT CULEBRA RD. \ F.M. 471
SHEET 2 OF 4

| FED.RD. DIV.NO. | FEDERAL AID PROJECT NO. | | SHEET NO. |
|---|---|---|---|
| 6 | NH 2000(704),etc. | | 228A |
| STATE | DIST. | COUNTY | |
| TEXAS | SAT | BEXAR | |
| CONT. | SECT. | JOB | HIGHWAY NO. |
| 2452 | 01 | 036,etc. | LP 1604 |

FILE: int1*2(culebra)*StoneCO.dgn 06/13/03

LEVEL DISPLAYED 1 2 3 4 5 6 7 8 9 10 11 12 13 14 15 16 17 18 19 20 21 22 23 24 25 26 27 28 29 30 31 32 33 34 35 36 37 38 39 40 41 42 43 44 45 46 47 48 49 50 51 52 53 54 55 56 57 58 59 60 61 62 63

6/13/03

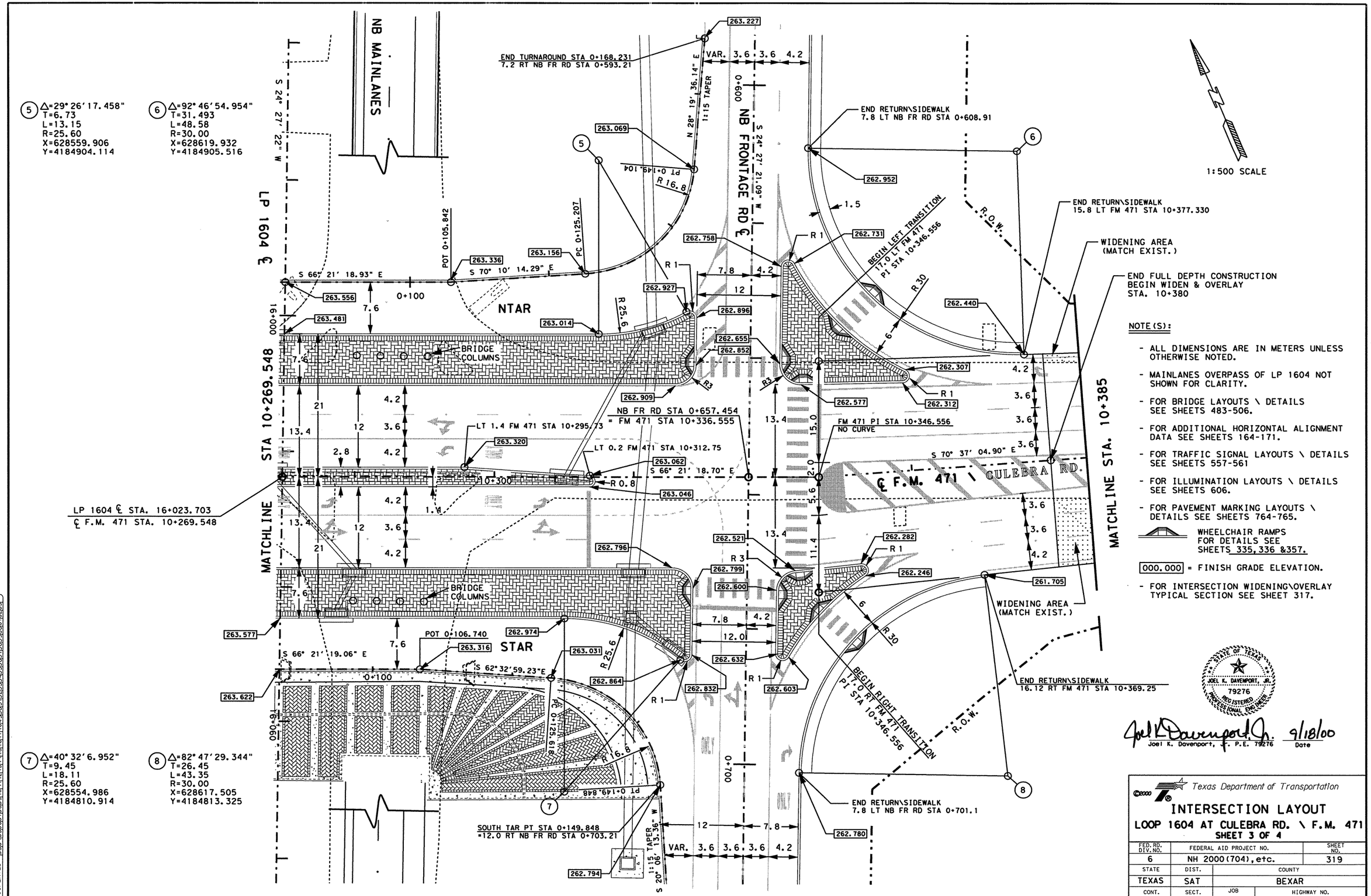


(5) △=29° 26' 17.458"
T=6.73
L=13.15
R=25.60
X=628559.906
Y=4184904.114

(6) △=92° 46' 54.954"
T=31.493
L=48.58
R=30.00
X=628619.932
Y=4184905.516

(7) △=40° 32' 6.952"
T=9.45
L=18.11
R=25.60
X=628554.986
Y=4184810.914

(8) △=82° 47' 29.344"
T=26.45
L=43.35
R=30.00
X=628617.505
Y=4184813.325

NOTE(S):

- ALL DIMENSIONS ARE IN METERS UNLESS OTHERWISE NOTED.
- MAINLANES OVERPASS OF LP 1604 NOT SHOWN FOR CLARITY.
- FOR BRIDGE LAYOUTS \ DETAILS SEE SHEETS 483-506.
- FOR ADDITIONAL HORIZONTAL ALIGNMENT DATA SEE SHEETS 164-171.
- FOR TRAFFIC SIGNAL LAYOUTS \ DETAILS SEE SHEETS 557-561
- FOR ILLUMINATION LAYOUTS \ DETAILS SEE SHEETS 606.
- FOR PAVEMENT MARKING LAYOUTS \ DETAILS SEE SHEETS 764-765.

WHEELCHAIR RAMPS FOR DETAILS SEE SHEETS 335, 336 &357.

000.000 = FINISH GRADE ELEVATION.

- FOR INTERSECTION WIDENING\OVERLAY TYPICAL SECTION SEE SHEET 317.

STATE OF TEXAS
JOEL K. DAVENPORT, JR.
79276
REGISTERED
PROFESSIONAL ENGINEER

Joel K. Davenport, Jr. P.E. 79276 — 9/18/00
Joel K. Davenport, Jr. P.E. 79276 — Date

FILE t:\ao\design\lp1604fm471-90\intersections\int#3culebra1.dgn 3 SEP 2000
LEVEL 1 2 3 4 5 6 7 8 9 10 11 12 13 14 15 16 17 18 19 20 21 22 23 24 25 26 27 28 29 30 31 32
DISPLAYED 33 34 35 36 37 38 39 40 41 42 43 44 45 46 47 48 49 50 51 62 63 35 45 56 65 75 85 96 06 16 26 3

©2000 Texas Department of Transportation

# INTERSECTION LAYOUT

## LOOP 1604 AT CULEBRA RD. \ F.M. 471

SHEET 3 OF 4

| FED. RD. DIV. NO. | FEDERAL AID PROJECT NO. | | SHEET NO. |
|---|---|---|---|
| 6 | NH 2000(704), etc. | | 319 |
| STATE | DIST. | COUNTY | |
| TEXAS | SAT | BEXAR | |
| CONT. | SECT. | JOB | HIGHWAY NO. |
| 2452 | 01 | 036, etc. | LP 1604 |

CHANGE ORDER NO. 61
-ADDED PEDESTRIAN ACCESS ROUTE DETAILS

NOTE: PATTERNED OR TEXTURIZED STAMPED CONCRETE ORIGINALLY ALLOWED FOR AS PART OF CO #19, REVISED BY CO 61. SEE SHEET 33BE FOR DETAILS.

PED ACCESS ROUTE SHOULD MEET ALL APPLICABLE ADA/TDLR REQUIREMENTS.

FOR CONTRACTOR'S INFORMATION ONLY
PED ACCESS ROUTE AREA = 205 M2

1:500 SCALE

(5) △=29° 26' 17.458"
T=6.73
L=13.15
R=25.60
X=628559.906
Y=4184904.114

(6) △=92° 46' 54.954"
T=31.493
L=48.58
R=30.00
X=628619.932
Y=4184905.516

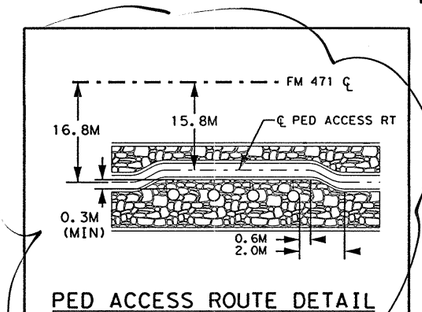

PED ACCESS ROUTE DETAIL

LP 1604 ℄ STA. 16+023.703
℄ F.M. 471 STA. 10+269.548

NB MAINLANES

S 24° 27' 22" W

LP 1604 ℄ STA 10+269.548

END TURNAROUND STA 0+168.231
7.2 RT NB FR RD STA 0+593.21

263.227

N 28° 19' 36.14" E
1:15 TAPER

VAR. 3.6 3.6 4.2

0+600

NB FRONTAGE RD ℄

S 24° 27' 21.09" W

END RETURN\SIDEWALK
7.8 LT NB FR RD STA 0+608.91

263.069

PT 0+149.104
R 16.8

℄ PEDESTRIAN ACCESS ROUTE

POT 0+105.842
PC 0+125.207

263.336
263.156

S 66° 21' 18.93" E
S 70° 10' 14.29" E

263.556

0+100

7.6

NTAR

263.481

16+000

263.014

R 25.6

262.927

R 1

7.8 4.2

12

262.758

262.731

1.5

262.952

BEGIN LEFT TRANSITION
17.0 LT FM 471
PI STA 10+346.556

R.O.W.

END RETURN\SIDEWALK
15.8 LT FM 471 STA 10+377.330

WIDENING AREA
(MATCH EXIST.)

PEDESTRIAN ACCESS ROUTE

R 30

262.440

END FULL DEPTH CONSTRUCTION
BEGIN WIDEN & OVERLAY
STA. 10+380

262.896
262.655
262.852

262.307
262.577
262.312

R 3
R 1

262.909

30°
16.8
2.1
4.2
15.8
12 3.6
13.4
2.8
4.2
1.4

LT 1.4 FM 471 STA 10+295.73
= NB FR RD STA 0+657.454
= FM 471 STA 10+336.555

263.320

LT 0.2 FM 471 STA 10+312.75

263.062
S 66° 21' 18.70" E

R 0.8

263.046

263.390

FM 471 PI STA 10+346.556
NO CURVE

13.4
15.0
2.0
15.6

S 70° 37' 04.90" E

℄ F.M. 471 \ CULEBRA RD.

4.2
3.6
3.6
3.6

MATCHLINE STA. 10+385

MATCHLINE STA.

℄ PEDESTRIAN ACCESS ROUTE

262.521
262.796
262.799
262.600

262.282
262.246
261.705

WIDENING AREA
(MATCH EXIST.)

SEE DETAIL POT 0+106.740

263.577
263.316
262.974

S 66° 21' 19.06" E

7.6

STAR

263.031
263.622

S 62° 32' 59.23" E

0+100

PC 0+125.618

090+91

262.864
262.832
262.632
262.603

7.8 4.2
12.0

PEDESTRIAN ACCESS ROUTE

BEGIN RIGHT TRANSITION
17.0 RT FM 471
PI STA 10+346.556

END RETURN\SIDEWALK
16.12 RT FM 471 STA 10+369.25

0+700

END RETURN\SIDEWALK
7.8 LT NB FR RD STA 0+701.1

262.780

SOUTH TAR PT STA 0+149.848
=12.0 RT NB FR RD STA 0+703.21

262.794

1:15 TAPER
S 20° 06' 13.36" W

12 7.8
VAR. 3.6 3.6 3.6 4.2

(7) △=40° 32' 6.952"
T=9.45
L=18.11
R=25.60
X=628554.986
Y=4184810.914

(8) △=82° 47' 29.344"
T=26.45
L=43.35
R=30.00
X=628617.505
Y=4184813.325

NOTE(S):

- ALL DIMENSIONS ARE IN METERS UNLESS OTHERWISE NOTED.
- MAINLANES OVERPASS OF LP 1604 NOT SHOWN FOR CLARITY.
- FOR BRIDGE LAYOUTS \ DETAILS SEE SHEETS 483-506.
- FOR ADDITIONAL HORIZONTAL ALIGNMENT DATA SEE SHEETS 164-171.
- FOR TRAFFIC SIGNAL LAYOUTS \ DETAILS SEE SHEETS 557-561
- FOR ILLUMINATION LAYOUTS \ DETAILS SEE SHEETS 606.
- FOR PAVEMENT MARKING LAYOUTS \ DETAILS SEE SHEETS 764-765.

WHEELCHAIR RAMPS FOR DETAILS SEE SHEETS 335, 336 &357.

000.000 = FINISH GRADE ELEVATION.

- FOR INTERSECTION WIDENING\OVERLAY TYPICAL SECTION SEE SHEET 317.

REVISED SHEET

CHANGE ORDER 61

STONE PATTERN
(SEE SHEET 33BE FOR DETAILS)

FILE: int*3(culebra)*StoneCO.dgn 06/13/03
LEVEL DISPLAYED
1 2 3 4 5 6 7 7 8 9 10 11 21 31 41 51 61 71 81 91 202 212 222 232 242 252 262 272 282 293 303 313 323
33 34 35 36 37 38 39 40 41 42 43 44 45 46 47 48 49 50 51 52 53 54 55 56 57 58 59 60 61 62 63

Texas Department of Transportation

# INTERSECTION LAYOUT
## LOOP 1604 AT CULEBRA RD. \ F.M. 471
SHEET 3 OF 4

| FED. RD. DIV. NO. | FEDERAL AID PROJECT NO. | | SHEET NO. |
|---|---|---|---|
| 6 | NH 2000(704), etc. | | 319 |
| STATE | DIST. | COUNTY | |
| TEXAS | SAT | BEXAR | |
| CONT. | SECT. | JOB | HIGHWAY NO. |
| 2452 | 01 | 036, etc. | LP 1604 |

STATE OF TEXAS
JENNIFER L. MOCZYGEMBA
84734
REGISTERED PROFESSIONAL ENGINEER

per CO #61

Jennifer L. Moczygemba, P.E. 84734 — Date 6-18-03

6/6/03

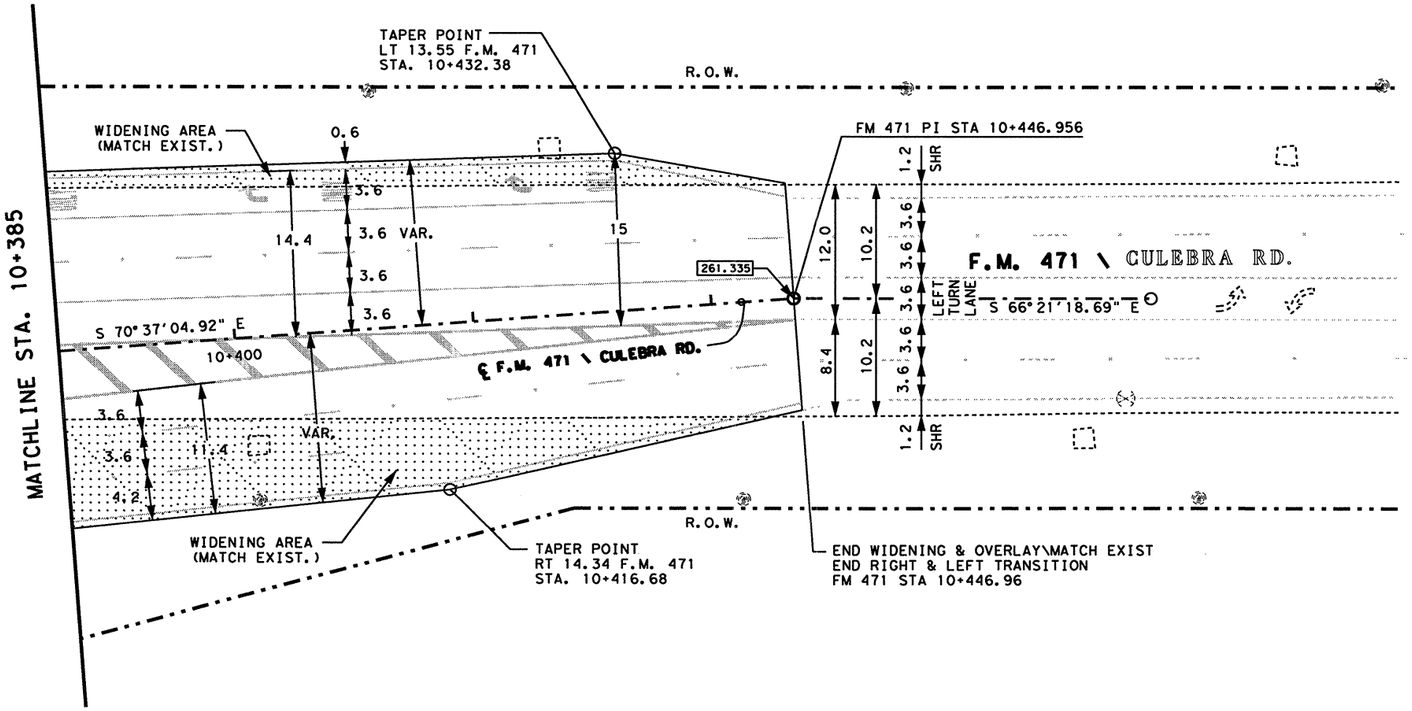


SCALE: 1:500

NOTE(S):

- ALL DIMENSIONS ARE IN METERS UNLESS OTHERWISE NOTED.
- FOR ADDITIONAL HORIZONTAL ALIGNMENT DATA SEE SHEETS 164-171.
- FOR PAVEMENT MARKING LAYOUTS \ DETAILS SEE SHEETS 764-765.

000.000 = FINISH GRADE ELEVATION.

- FOR INTERSECTION WIDENING\OVERLAY TYPICAL SECTION SEE SHEET 317.

FILE: t:\roadesign\lp1604fm471-90\intersections\int1x4(culebra).dgn SEP 2000
LEVEL DISPLAYED
1 2 3 4 5 6 7 8 9 10 11 12 13 14 15 16 17 18 19 20 21 22 23 24 25 26 27 28 29 30 31 32
33 34 35 36 37 38 39 40 41 42 43 44 45 46 47 48 49 50 51 62 53 54 55 56 57 58 59 60 61 62 63

STATE OF TEXAS
JOEL K. DAVENPORT, JR.
79276
REGISTERED
PROFESSIONAL ENGINEER

Joel K. Davenport, Jr. 9/18/00
Joel K. Davenport, Jr. P.E. 79276 Date

©2000 Texas Department of Transportation

# INTERSECTION LAYOUT
## LOOP 1604 AT CULEBRA RD. \ F.M. 471
SHEET 4 OF 4

| FED. RD. DIV. NO. | FEDERAL AID PROJECT NO. | | SHEET NO. |
|---|---|---|---|
| 6 | NH 2000(704), etc. | | 320 |
| STATE | DIST. | COUNTY | |
| TEXAS | SAT | BEXAR | |
| CONT. | SECT. | JOB | HIGHWAY NO. |
| 2452 | 01 | 036, etc. | LP 1604 |

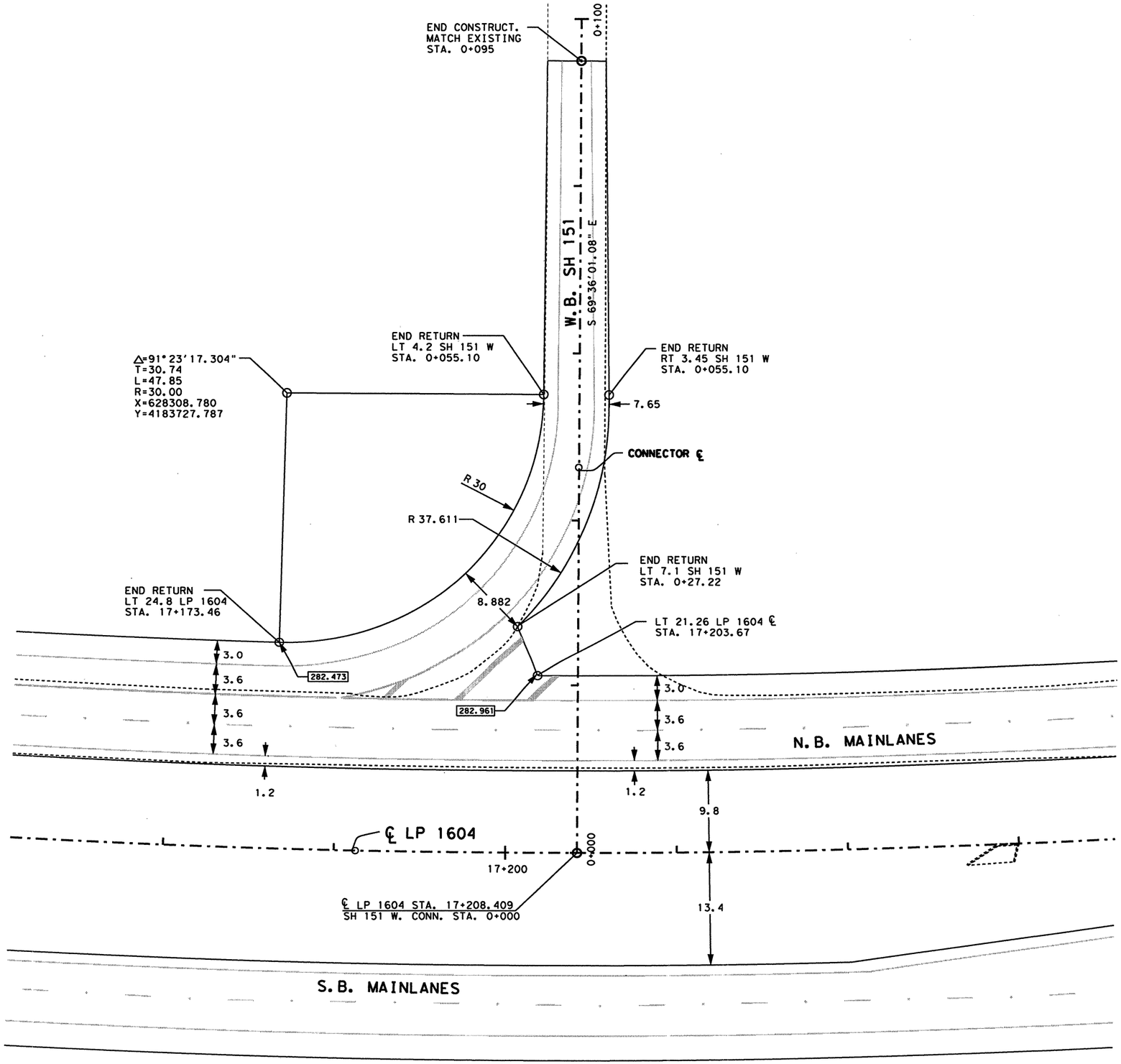


SCALE 1:500

NOTE(S):

-ALL DIMENSIONS ARE IN METERS UNLESS OTHERWISE NOTED.

000.000 = FINISH GRADE ELEVATION.

STATE OF TEXAS
JOEL K. DAVENPORT, JR.
79276
REGISTERED
PROFESSIONAL ENGINEER

Joel K. Davenport, Jr. 9/18/00
Joel K. Davenport, Jr. P.E. 79276 Date

FILE $FILE$ LEVEL DISPLAYED $DATE$

1 2 3 4 5 6 7 8 9 10 11 12 13 14 15 16 17 18 19 20 21 22 23 24 25 26 27 28 29 30 31 32
3 3 4 5 5 5 6 3 7 8 3 9 4 0 4 1 4 2 4 3 4 4 4 5 4 6 4 7 4 8 4 9 5 0 5 1 5 2 5 3 5 4 5 5 5 6 5 7 5 8 5 9 6 0 6 1 6 2 6 3

© 1999
Texas Department of Transportation

# INTERSECTION LAYOUT
## W.B. SH 151 AT LOOP 1604

| FED. RD. DIV. NO. | FEDERAL AID PROJECT NO. | | SHEET NO. |
|---|---|---|---|
| 6 | NH 2000(704), etc. | | 321 |
| STATE | DIST. | COUNTY | |
| TEXAS | SAT | BEXAR | |
| CONT. | SECT. | JOB | HIGHWAY NO. |
| 2452 | 01 | 036, etc. | LP 1604 |

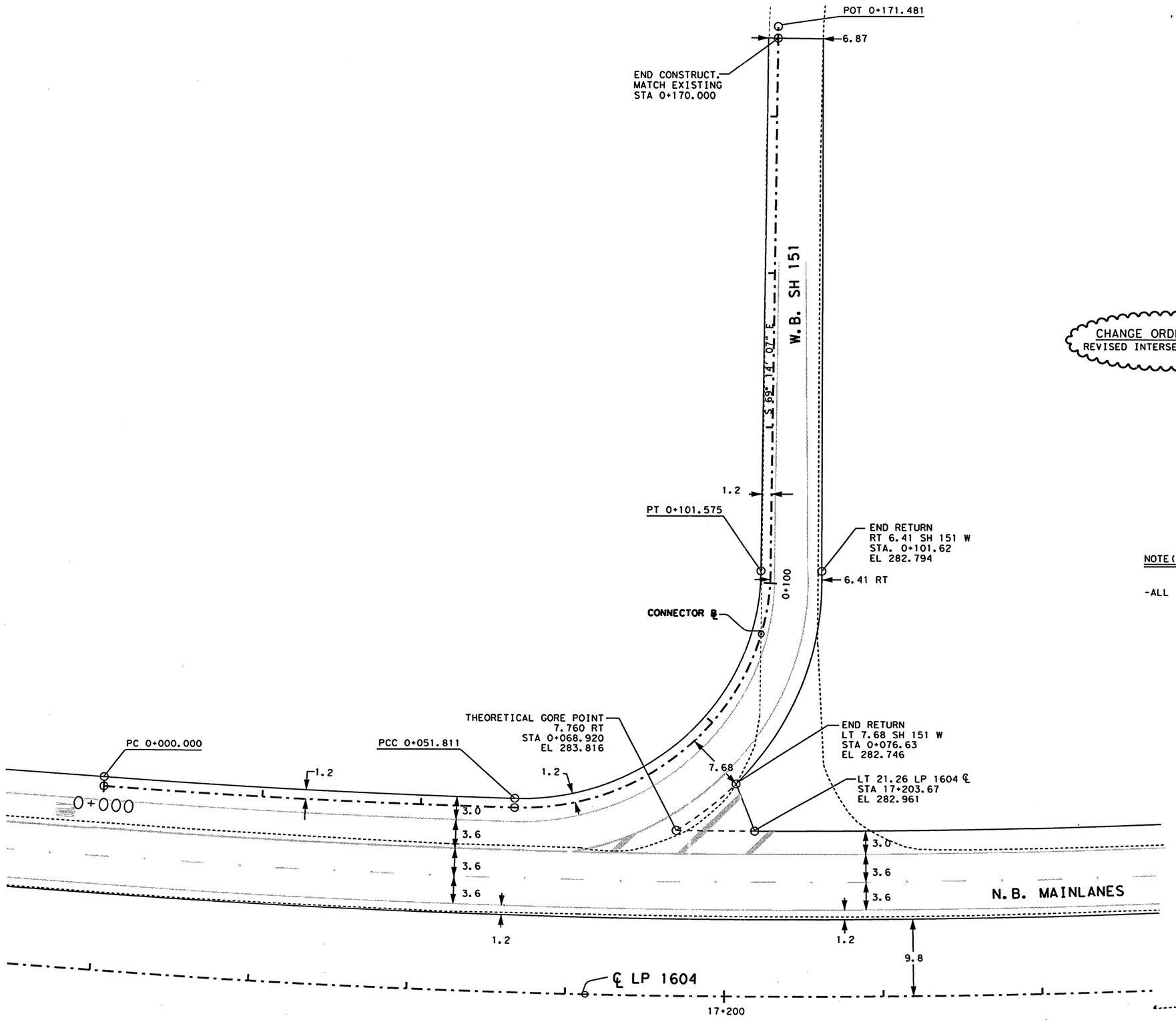


SCALE 1:500

CHANGE ORDER NO. 11
REVISED INTERSECTION LAYOUT

NOTE(S):

-ALL DIMENSIONS ARE IN METERS UNLESS OTHERWISE NOTED.

FOR CHANGE ORDER 11

STATE OF TEXAS
JENNIFER L. MOCZYGEMBA
84734
REGISTERED
PROFESSIONAL ENGINEER

Jennifer L. Moczygemba P.E. 8-8-2002
Jennifer L. Moczygemba, P.E. 84734 Date

© 2001 Texas Department of Transportation

# INTERSECTION LAYOUT
## W.B. SH 151 AT LOOP 1604

| FED. RD. DIV. NO. | FEDERAL AID PROJECT NO. | | SHEET NO. |
|---|---|---|---|
| 6 | NH 2000(704), etc. | | 321A |
| STATE | DIST. | COUNTY | |
| TEXAS | SAT | BEXAR | |
| CONT. | SECT. | JOB | HIGHWAY NO. |
| 2452 | 01 | 036, etc. | LP 1604 |

FILE: dgn\design\lp1604fm471-90\intersection\int3
LEVEL: 1 2 3 4 5 6 7 8 9 10 11 12 13 14 15 16 17 18 19 20 21 22 23 24 25 26 27 28 29 30 31 32
DISPLAYED: 33 34 35 36 37 38 39 40 41 42 43 44 45 46 47 48 49 50 51 52 53 54 55 56 57 58 59 60 61 62 63
08/08/02

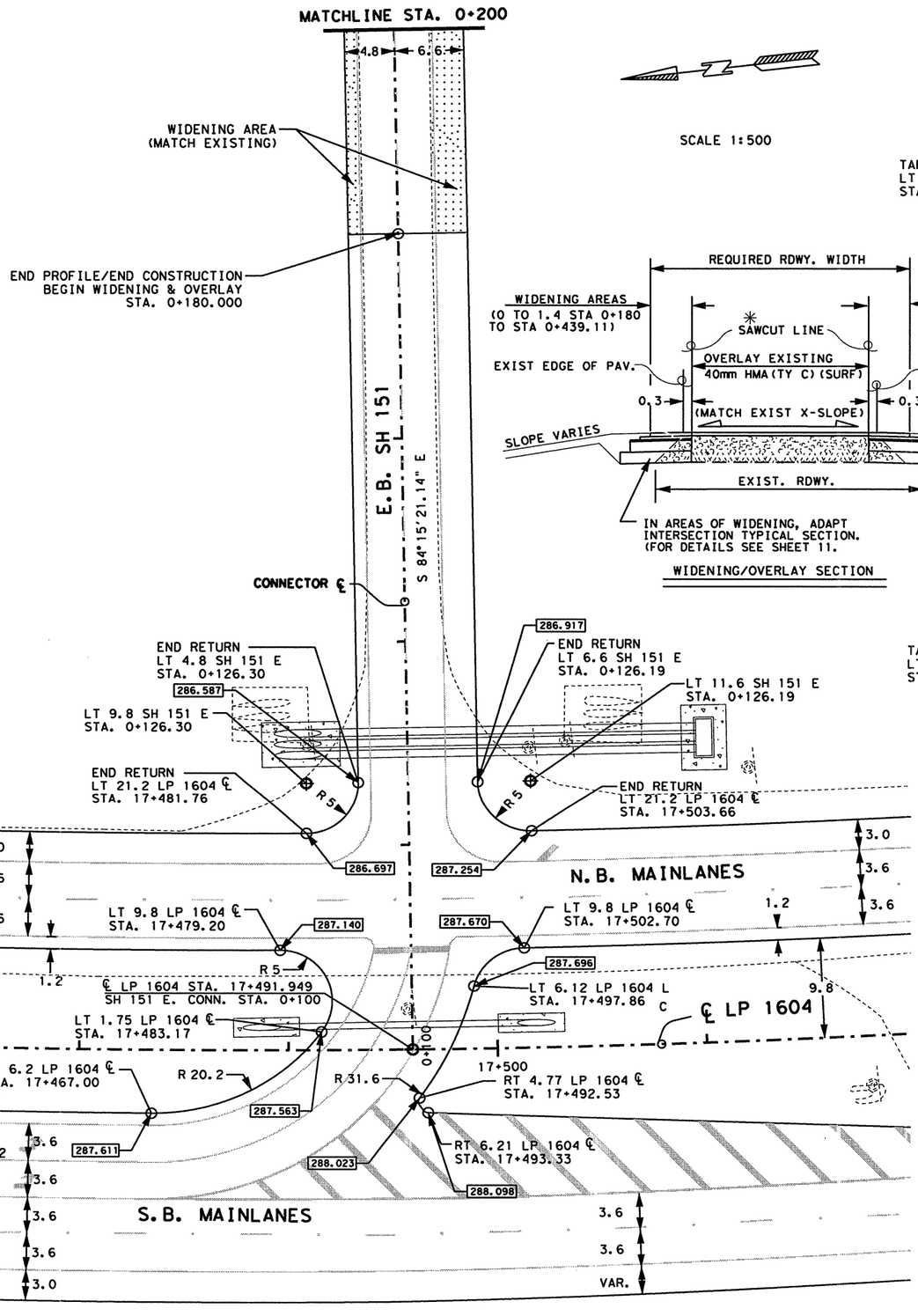


NOTE(S):

-ALL DIMENSIONS ARE IN METERS UNLESS OTHERWISE NOTED.

000.000 = FINISH GRADE ELEVATION.

✳ SAWCUTTING SHALL BE CONSIDERED SUBSIDIARY TO PERTINENT BID ITEMS.

STATE OF TEXAS
JOEL K. DAVENPORT, JR.
79276
REGISTERED
PROFESSIONAL ENGINEER

Joel K. Davenport, Jr. 9/18/00
Joel K. Davenport, Jr., P.E. 79276 Date

FILE $FILE$ $DATE$
LEVEL
DISPLAYED

Texas Department of Transportation

# INTERSECTION LAYOUT
## E.B. SH 151 AT LOOP 1604

| FED. RD. DIV. NO. | FEDERAL AID PROJECT NO. | | SHEET NO. |
|---|---|---|---|
| 6 | NH 2000(704), etc. | | 322 |
| STATE | DIST. | COUNTY | |
| TEXAS | SAT | BEXAR | |
| CONT. | SECT. | JOB | HIGHWAY NO. |
| 2452 | 01 | 036, etc. | LP 1604 |

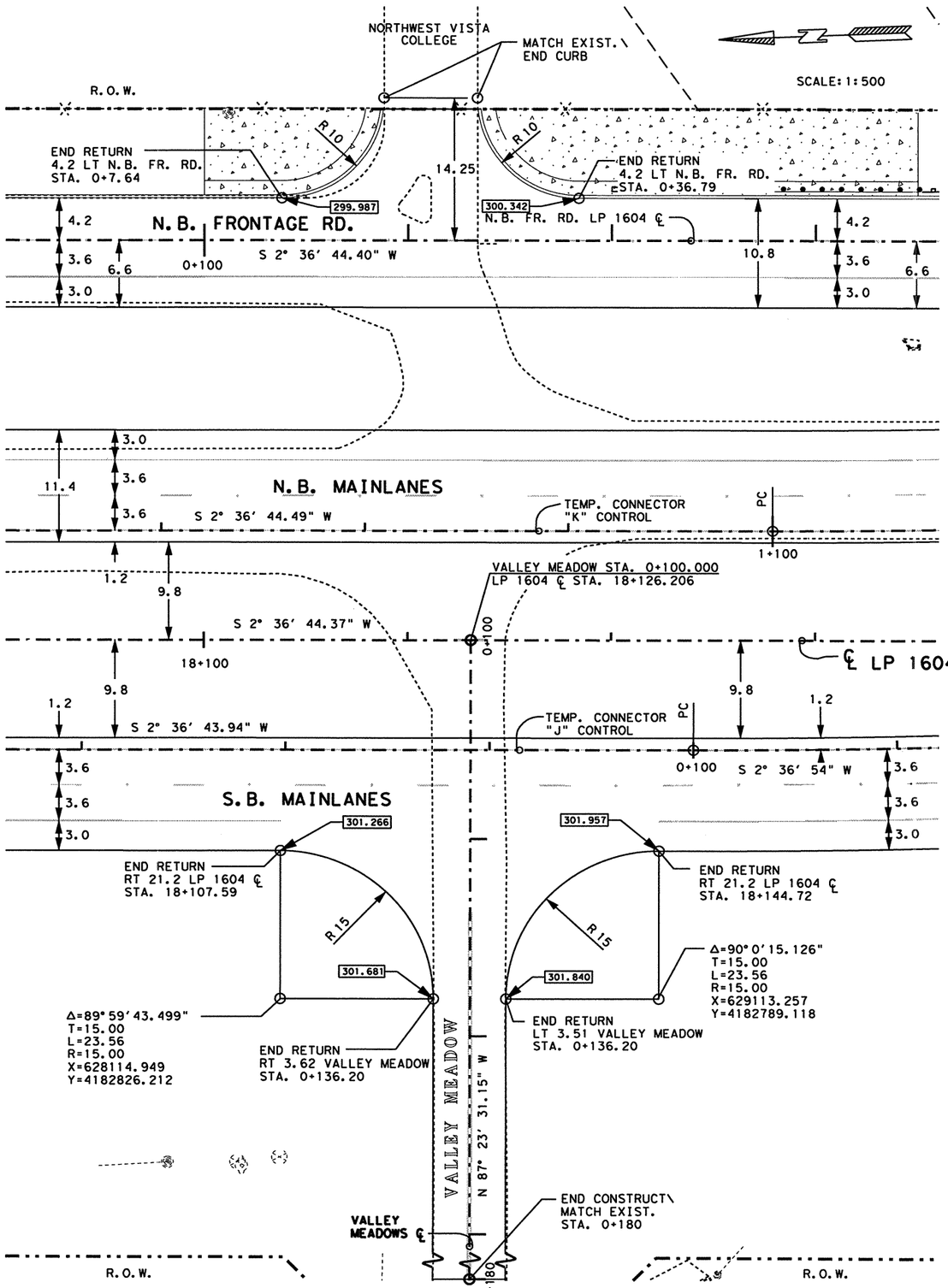


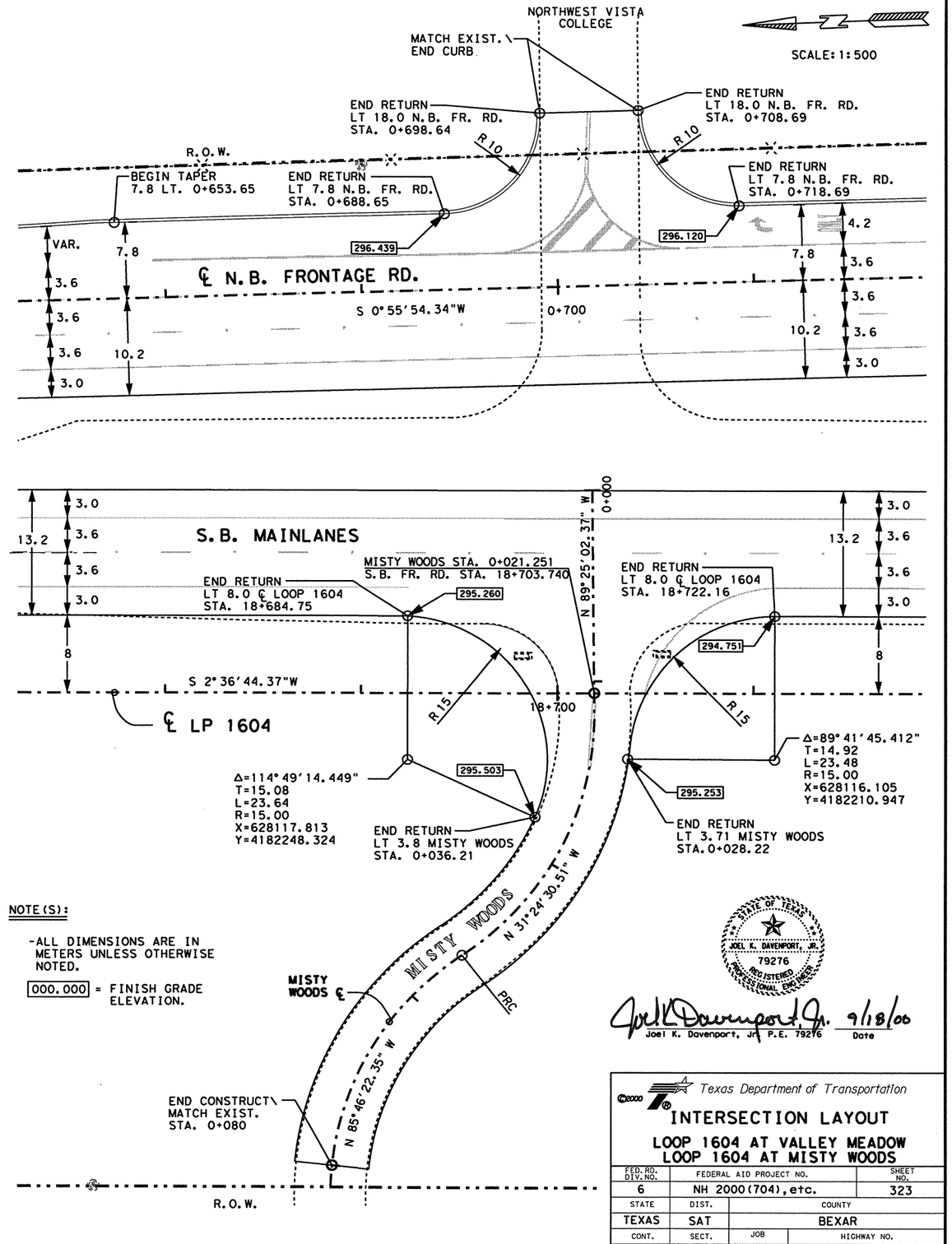


NOTE(S):

-ALL DIMENSIONS ARE IN METERS UNLESS OTHERWISE NOTED.

000.000 = FINISH GRADE ELEVATION.

STATE OF TEXAS
JOEL K. DAVENPORT, JR.
79276
REGISTERED PROFESSIONAL ENGINEER

Joel K. Davenport, Jr. 9/18/00
Joel K. Davenport, Jr. P.E. 79276 Date

©2000 Texas Department of Transportation

# INTERSECTION LAYOUT

## LOOP 1604 AT VALLEY MEADOW
## LOOP 1604 AT MISTY WOODS

| FED. RD. DIV. NO. | FEDERAL AID PROJECT NO. | | SHEET NO. |
|---|---|---|---|
| 6 | NH 2000(704), etc. | | 323 |
| STATE | DIST. | COUNTY | |
| TEXAS | SAT | BEXAR | |
| CONT. | SECT. | JOB | HIGHWAY NO. |
| 2452 | 01 | 036, etc. | LP 1604 |

FILE f:\ao\design\lp1604fm471-90\intersections\int2\valley&mistyl13.dgn 6SEP 2000
LEVEL DISPLAYED 1 2 3 4 5 6 7 8 9 10 11 12 13 14 15 16 17 18 19 20 21 22 23 24 25 26 27 28 29 30 31 32 33 34 35 36 37 38 39 40 41 42 43 44 45 46 47 48 49 50 51 52 53 54 55 56 57 58 59 60 61 62 63

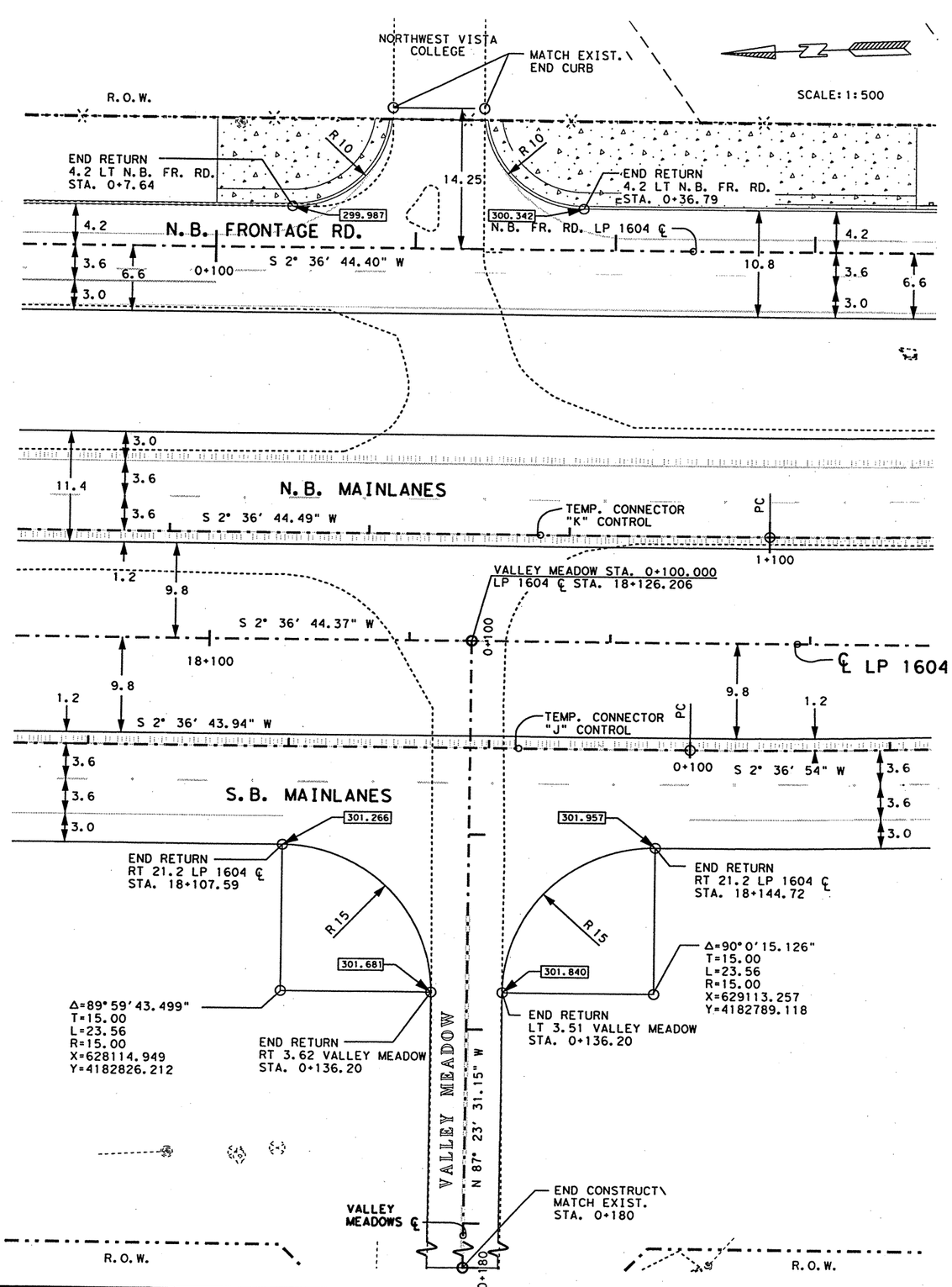


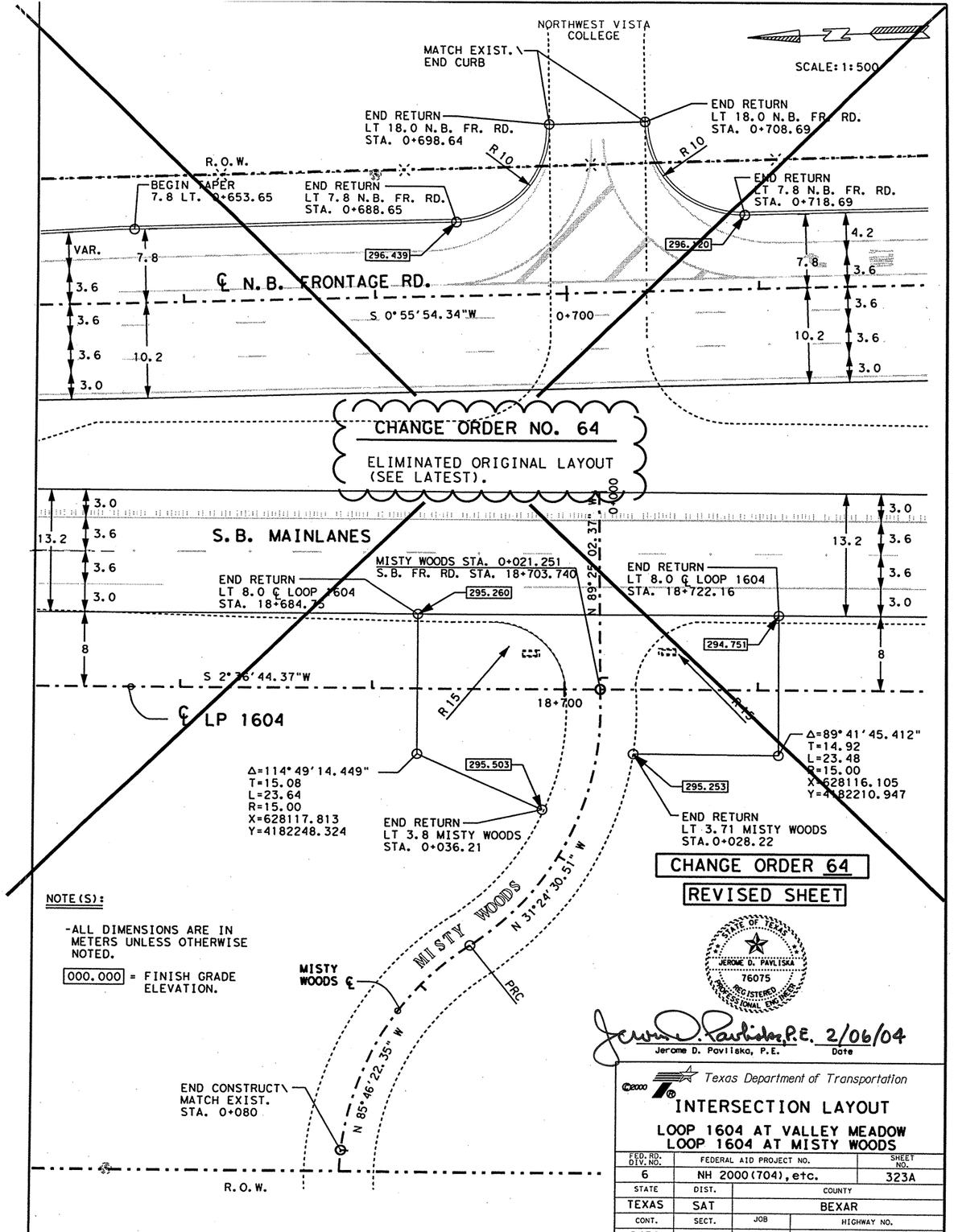


Texas Department of Transportation

# INTERSECTION LAYOUT

## LOOP 1604 AT VALLEY MEADOW
## LOOP 1604 AT MISTY WOODS

| FED. RD. DIV. NO. | FEDERAL AID PROJECT NO. | | SHEET NO. |
|---|---|---|---|
| 6 | NH 2000(704), etc. | | 323A |
| STATE | DIST. | COUNTY | |
| TEXAS | SAT | BEXAR | |
| CONT. | SECT. | JOB | HIGHWAY NO. |
| 2452 | 01 | 036, etc. | LP 1604 |

FILE T:\AO\Design\lp1604fm471-90\inters\int2(valley&misty).dgn 2/5/2004
LEVEL 1 2 3 4 5 6 7 8 9 10 11 12 13 14 15 16 17 18 19 20 21 22 23 24 25 26 27 28 29 30 31 32
DISPLAYED 33 34 35 36 37 38 39 40 41 42 43 44 45 46 47 48 49 50 51 52 53 54 55 56 57 58 59 60 61 62 63

02-05-04

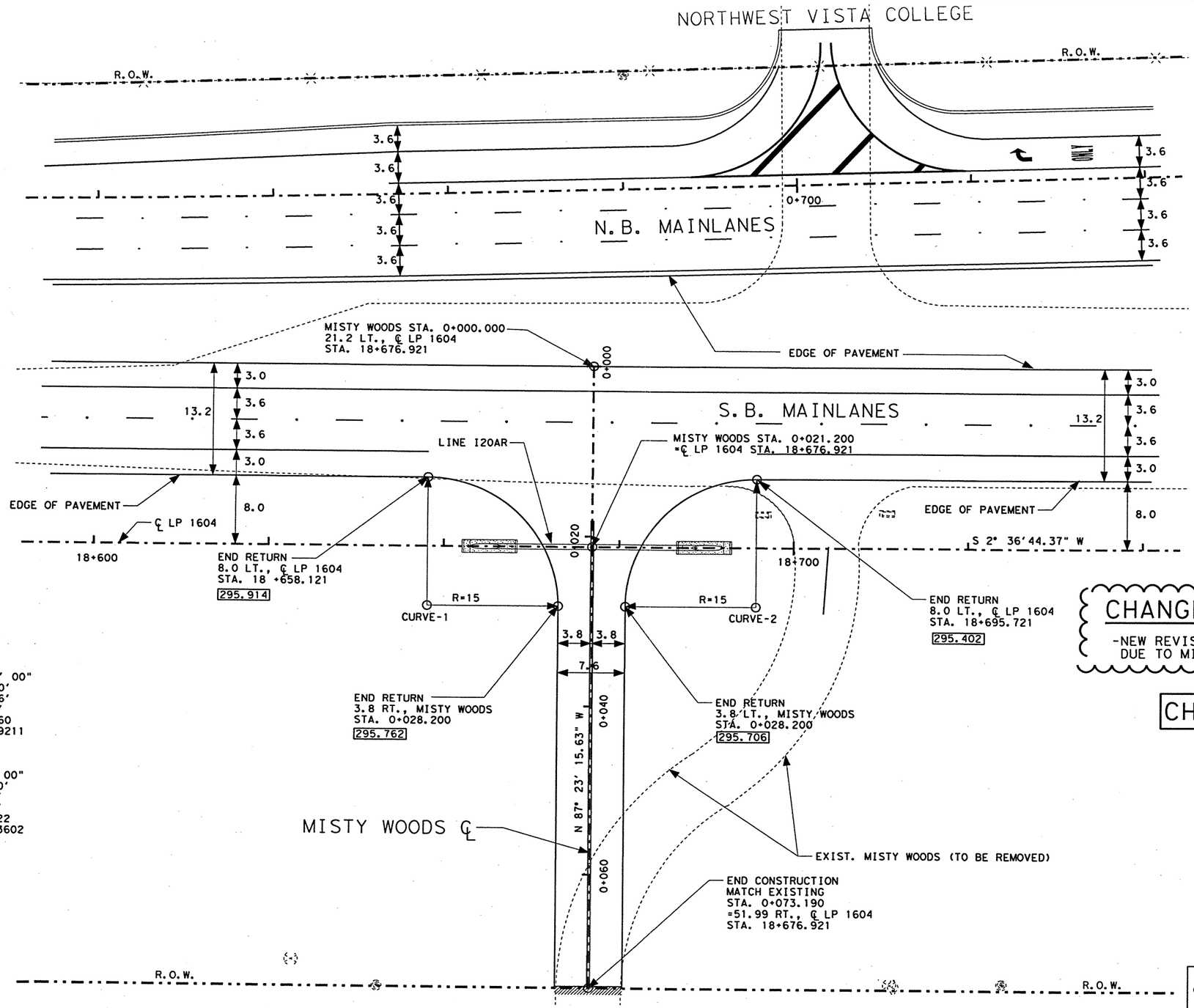


SCALE: 1:500

NOTE(S):

-ALL DIMENSIONS ARE IN METERS UNLESS OTHERWISE NOTED.

000.000 = FINISH GRADE ELEVATION.

## CURVE DATA:

CURVE NO. 1

DELTA= 90° 00' 00"
TANGENT= 15.00'
LENGTH = 23.56'
RADIUS= 15.00'
X= 628,119.0260
Y= 4,182,274.9211

CURVE NO. 2

DELTA= 90°00' 00"
TANGENT= 15.00'
LENGTH= 23.56'
RADIUS= 15.00'
X= 628,117.3122
Y= 4,182,237.3602

## CHANGE ORDER NO. 64

-NEW REVISED INTERSECTION LAYOUT
DUE TO MISTY WOODS RE-ALIGNMENT.

CHANGE ORDER 64

NEW SHEET

STATE OF TEXAS
JEROME D. PAVLISKA
76075
REGISTERED PROFESSIONAL ENGINEER

Jerome D. Pavliska, P.E. 2/06/04
Jerome D. Pavliska, P.E. Date

FILE: T:\AO\DESIGN\lp1604fm471-90\inter\int2a(mistywoods.dgn 2/5/2004

| LEVEL | 1 | 2 | 3 | 4 | 5 | 6 | 7 | 8 | 9 | 10 | 11 | 12 | 13 | 14 | 15 | 16 | 17 | 18 | 19 | 20 | 21 | 22 | 23 | 24 | 25 | 26 | 27 | 28 | 29 | 30 | 31 | 32 |
|---|---|---|---|---|---|---|---|---|---|---|---|---|---|---|---|---|---|---|---|---|---|---|---|---|---|---|---|---|---|---|---|---|
| DISPLAYED | 3 | 3 | 4 | 5 | 3 | 6 | 3 | 6 | 4 | 0 | 6 | 4 | 1 | 2 | 4 | 3 | 4 | 4 | 5 | 4 | 6 | 4 | 8 | 4 | 9 | 5 | 0 | 5 | 1 | 5 | 2 | 5 | 3 | 5 | 4 | 5 | 5 | 5 | 6 | 5 | 7 | 5 | 8 | 5 | 9 | 6 | 0 | 6 | 1 | 6 | 2 | 6 | 3 |

Texas Department of Transportation

INTERSECTION LAYOUT
LOOP 1604 AT MISTY WOODS

| FED. RD. DIV. NO. | FEDERAL AID PROJECT NO. | | SHEET NO. |
|---|---|---|---|
| 6 | NH 2000(704), etc. | | 323B |
| STATE | DIST. | COUNTY | |
| TEXAS | SAT | BEXAR | |
| CONT. | SECT. | JOB | HIGHWAY NO. |
| 2452 | 01 | 036, etc. | LP 1604 |

02-05-04

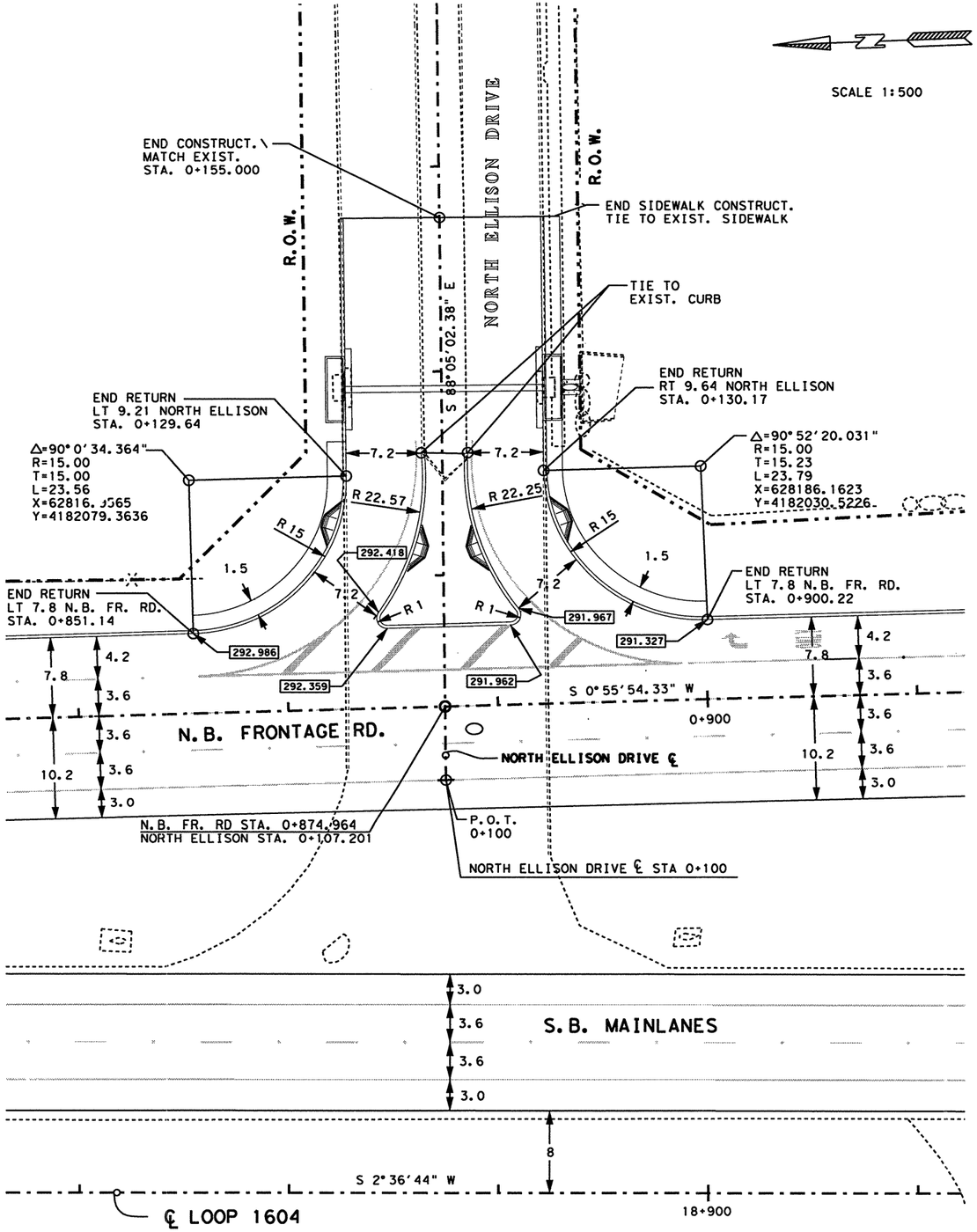


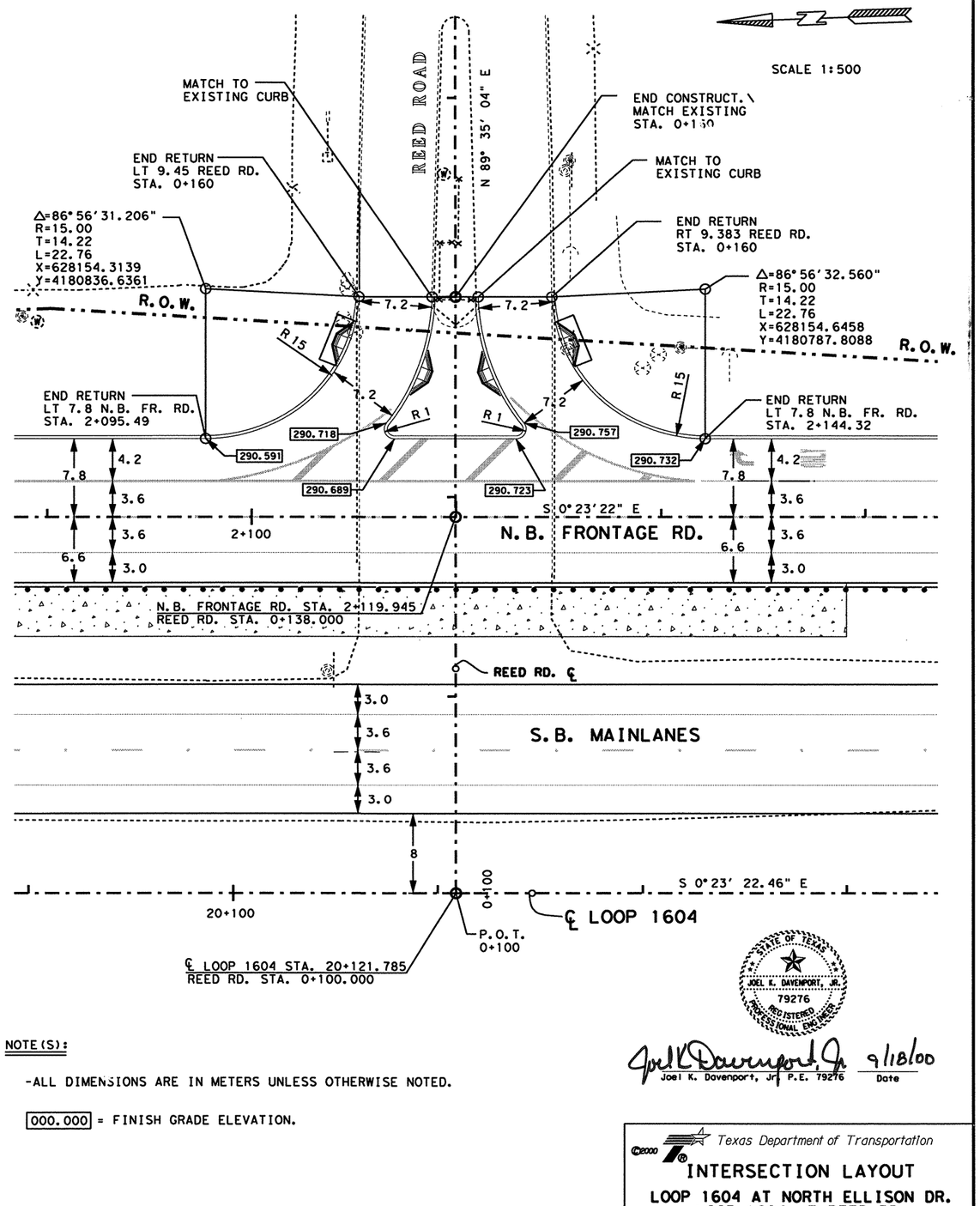


NOTE(S):

-ALL DIMENSIONS ARE IN METERS UNLESS OTHERWISE NOTED.

000.000 = FINISH GRADE ELEVATION.

WHEELCHAIR RAMPS FOR DETAILS SEE SHEET 335, 336 & 357.

STATE OF TEXAS — JOEL K. DAVENPORT, JR. — 79276 — REGISTERED PROFESSIONAL ENGINEER

Joel K. Davenport, Jr. 9/18/00

Joel K. Davenport, Jr. P.E. 79276 — Date

Texas Department of Transportation

# INTERSECTION LAYOUT

## LOOP 1604 AT NORTH ELLISON DR. LOOP 1604 AT REED RD.

| FED. RD. DIV. NO. | FEDERAL AID PROJECT NO. | | SHEET NO. |
|---|---|---|---|
| 6 | NH 2000(704), etc. | | 324 |
| STATE | DIST. | COUNTY | |
| TEXAS | SAT | BEXAR | |
| CONT. | SECT. | JOB | HIGHWAY NO. |
| 2452 | 01 | 036, etc. | LP 1604 |

FILE: I:\ao\design\lp1604fm471-90\intersections\int4(ellison&reed)14@EP 2000
LEVEL DISPLAYED
1 2 3 4 5 6 7 8 9 10 11 12 13 14 15 16 17 18 19 20 21 22 23 24 25 26 27 28 29 30 31 32
33 34 35 36 37 38 39 40 41 42 43 44 45 46 47 48 49 50 51 52 53 54 55 56 57 58 59 60 61 62 63

1 △=89° 18' 34.28"
T=24.70
L=38.97
R 25.00
X=628190.1048
Y=4181658.0235

2 △=29° 13' 19.837"
T=5.95
L=11.64
R=22.82
X=628137.4641
Y=4181675.9052

3 △=29° 13' 19.8368"
T=5.95
L=11.64
R=22.82
X=628133.4714
Y=4181676.0288

4 △=90° 59' 7.66"
T=23.43
L=39.70
R=25.00
X=628188.8617
Y=4181581.6031

5 △=29° 27' 31.947"
T=6.40
L=12.62
R=24.54
X=628134.1188
Y=4181566.4643

6 △=29° 41' 38.3485"
T=6.50
L=12.72
R=24.54
X=628130.1339
Y=4181566.5875

SCALE: 1:500

DRAINAGE EASEMENT

EXIST. WISEMAN BLVD.

END CONSTRUCT\MATCH EXIST.
STA. 0+200

END SIDEWALK\
MATCH EXIST.

END RETURN
LT 13.27 WISEMAN
STA. 1+192.72

END RETURN\SIDEWALK
LT 13.15 WISEMAN
STA. 0+193.91

END RETURN\SIDEWALK
LT 7.8 N.B. FR. RD.
STA. 1+272.38

END RETURN\SIDEWALK
LT 11.4 N.B. FR. RD.
STA. 1+348.41

R.O.W.

N. B. FRONTAGE RD.

WISEMAN BLVD.

S 88° 05' 14.87" E

WISEMAN STA. 0+176.45

N. B. FR. RD. STA. 1+310.093
WISEMAN BLVD. STA. 0+160.447

S 0° 55' 54.33" W

PT STA 0+169.747
N 4° 44' 44.94" E

PT STA 0+171.765
S 2° 52' 56.62" E

1:15 TAPER

END SOUTH TAR STA 0+199.098
=7.2 M RT @ NB FR RD STA 1+391.263

END CURB\FLARE

END NORTH TAR STA 0+200
=7.2 M RT @ NB FR RD STA 1+225.689

NTAR

STAR

BEGIN NORTH TAR STA 0+100
=21.8 M LT @ LP 1604 STA 19+226.04

BEGIN SOUTH TAR STA 0+100
=21.8 M LT @ LP 1604 STA 19+392.278

S 1°12'5.73" E
PC STA 0+130.491

N 6°25'35.06" E
PC STA 0+127.973

NTAR CONTROL & FACE OF CURB

STAR CONTROL & FACE OF CURB

S.B. MAINLANES

WISEMAN BLVD. ℄

S 88° 05' 15.00" E

℄ LP 1604 STA. 19+310.536
WISEMAN BLVD. STA. 0+100.000

S 2° 36' 44.37" W

℄ LOOP 1604

19+300

1+300

0+200

0+100

NOTE(S):
-ALL DIMENSIONS IN ARE METERS UNLESS OTHERWISE NOTED.
-FOR ADDITIONAL HOIZONTAL ALIGNMENT \ DATA SEE SHEET 164-171
-FOR PAVEMENT MARKING LAYOUTS \ DETAILS, SEE SHEET 779.
-FOR ILLUMINATION LAYOUTS\ DETAILS, SEE SHEETS 617.

WHEELCHAIR RAMPS
FOR DETAILS SEE
SHEET 335, 336 & 357.

000.000 = FINISH GRADE ELEVATION.

STATE OF TEXAS
JOEL K. DAVENPORT, JR.
79276
REGISTERED PROFESSIONAL ENGINEER

Joel K Davenport, Jr. 9/18/00
Joel K. Davenport, Jr. P.E. 79276 Date

Texas Department of Transportation

# INTERSECTION LAYOUT
## LOOP 1604 AT WISEMAN BLVD.

| FED. RD. DIV. NO. | FEDERAL AID PROJECT NO. | | SHEET NO. |
|---|---|---|---|
| 6 | NH 2000(704), etc. | | 325 |
| STATE | DIST. | COUNTY | |
| TEXAS | SAT | BEXAR | |
| CONT. | SECT. | JOB | HIGHWAY NO. |
| 2452 | 01 | 036, etc. | LP 1604 |

FILE: t:\co\design\lp1604fm471-90\intersections\int5\(wiseman).dgn 13 SEP 2000
LEVEL DISPLAYED
1 2 3 4 5 6 7 8 9 10 11 12 13 14 15 16 17 18 19 20 21 22 23 24 25 26 27 28 29 30 31 32
33 34 45 53 63 73 80 94 04 14 24 34 44 54 64 74 84 94 05 15 25 35 45 55 65 75 85 96 06 16 26 36

Plotted on: 4/29/2004

Design Filename: t:\AO\Design\lp1604fm471-90\chg*order*files\pd*wiseman\int5(wiseman).dgn

FILE t:\AO\Design\lp1604fm471-90\chg*order*files\pd*wiseman\int5(wiseman).dgn
LEVEL DISPLAYED

1 △=89° 18' 34.28"
T=24.70
L=38.97
R 25.00
X=628190.1048
Y=4181658.0235

2 △=29° 13' 19.837"
T=5.95
L=11.64
R=22.82
X=628137.4641
Y=4181675.9052

3 △=29° 13' 19.8368"
T=5.95
L=11.64
R=22.82
X=628133.4714
Y=4181676.0288

4 △=90° 59' 7.66"
T=23.43
L=39.70
R=25.00
X=628188.8617
Y=4181581.6031

5 △=29° 27' 31.947"
T=6.40
L=12.62
R=24.54
X=628134.1188
Y=4181566.4643

6 △=29° 41' 38.3485"
T=6.50
L=12.72
R=24.54
X=628130.1339
Y=4181566.5875

SCALE: 1:500

**CHANGE ORDER NO. 64**
-REVISED RDWY GEOMETRICS AND LANE CONFIGURATIONS
-DELETED RIPRAP PAVERS ORIGINALLY CALLED FOR AND MODIFIED RIPRAP.
-ADDED TY "C" CURB
-REVISED DIRECTIONAL ISLAND TREATMENTS
-ADDED TWO WHEELCHAIR RAMPS
-REVISED FINISH GRADE ELEVATIONS
-REVISED STORM DRAIN

DRAINAGE EASEMENT
EXIST. WISEMAN BLVD.
END CONSTRUCT\MATCH EXIST. STA. 0+200
END SIDEWALK\ MATCH EXIST.
END RETURN LT 13.27 WISEMAN STA. 0+192.72
END RETURN\SIDEWALK LT 13.15 WISEMAN STA. 0+193.91
END RETURN\SIDEWALK LT 7.8 N.B. FR. RD. STA. 1+272.38
END RETURN\SIDEWALK LT 11.4 N.B. FR. RD. STA. 1+348.41
R.O.W.
TY "C" CURB
1.5 BERM
WISEMAN BLVD.
S 88° 05' 14.87" E
S 88° 05' 15.00" E
0+200
R 25
R 6
R 1
R 2
R 3
287.976
289.100
287.657
287.938
287.823
287.334
287.318
287.682
287.812
287.085
287.223
287.645
287.763
288.339
286.881
286.132
287.634
287.059
N. B. FRONTAGE RD.
WISEMAN STA. 0+176.45
S 0° 55' 54.33" W
1+300
N.B. FR. RD. STA. 1+310.083
WISEMAN BLVD. STA. 0+160.447
286.662
286.913
287.879
286.832
287.395
287.415
287.880
288.472
285.939
286.331
286.623
287.640
PT STA 0+169.747
N 4° 44' 44.94" E
1:15 TAPER
VAR.
4.2
3.6
7.8
15.6
4.8
0+200
10
END CURB\FLARE
EDGE OF PVMNT
END SOUTH TAR PT STA 0+170.409
=11.084 M RT @ NB FR RD STA 1+363.856
END NORTH TAR STA 0+200
=7.2 M RT @ NB FR RD STA 1+225.689
NTAR
STAR
R 22.82
R 24.54
R 13.6
R 12.923
17.761
13.8
16.783
286.348
287.556
286.239
285.960
285.603
285.193
BEGIN NORTH TAR STA 0+100
=21.8 M LT @ LP 1604 STA 19+226.04
END CURB\FLARE
1.2
5
0+100
S 12° 25' 35.73" E
N 6° 25' 35.01" E
287.810
288.395
287.349
287.302
286.891
286.958
286.409
286.286
285.951
NTAR CONTROL & FACE OF CURB
STAR CONTROL & FACE OF CURB
PC STA 0+130.491
PC STA 0+128.987
S.B. MAINLANES
SHLDR VARIES
VARIES
0.6 SHLDR
3.3
3.9
14.4
22.4
27.6
7.2
15
WISEMAN BLVD. ℄
℄ LP 1604 STA. 19+310.536
WISEMAN BLVD. STA. 0+100.000
EDGE OF PVMNT
S 2° 36' 44.37" W
19+300
0+100
℄ LOOP 1604

NOTE(S):
-ALL DIMENSIONS IN ARE METERS UNLESS OTHERWISE NOTED.
-FOR ADDITIONAL HOIZONTAL ALIGNMENT \ DATA SEE SHEET 164-171
-FOR PAVEMENT MARKING LAYOUTS \ DETAILS, SEE SHEET 779.
-FOR ILLUMINATION LAYOUTS\ DETAILS, SEE SHEETS 617.

SEE MISCELLANEOUS RDWY DETAIL SHEET FOR MORE INFORMATION
WHEELCHAIR RAMPS FOR DETAILS SEE SHEET 335, 336 & 357.
000.000 = FINISH GRADE ELEVATION.

STATE OF TEXAS
JEROME D. PAVLISKA
76075
REGISTERED PROFESSIONAL ENGINEER

Jerome D. Pavliska, P.E. 4-28-04
Jerome D. Pavliska, P.E. Date

CHANGE ORDER NO. 64 | REVISED SHEET

Texas Department of Transportation

# INTERSECTION LAYOUT
## LOOP 1604 AT WISEMAN BLVD.

| FED. RD. DIV. NO. | FEDERAL AID PROJECT NO. | SHEET NO. |
|---|---|---|
| 6 | NH 2000(704), etc. | 325A |
| STATE | DIST. | COUNTY |
| TEXAS | SAT | BEXAR |
| CONT. | SECT. | JOB | HIGHWAY NO. |
| 2452 | 01 | 036, etc. | LP 1604 |

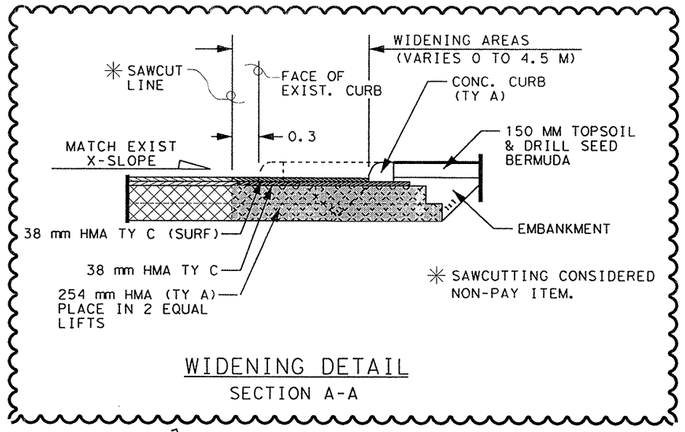


WIDENING DETAIL
SECTION A-A

SCALE: 1:500

BEGIN NEW CURB
END WIDENING/MATCH EXIST.
6.20 LT. STA. 0+240.15

WISEMAN BLVD

20.32 (TAPER)

PT.
1.80 LT., STA. 0+220.15

END SIDEWALK\
MATCH EXIST.

END RETURN\SIDEWALK
LT 13.15 WISEMAN
STA. 0+193.91

END NEW CURB/MATCH EXISTING
6.00 RT., STA. 0+174.60

END RETURN
LT 13.27 WISEMAN
STA. 0+192.72

END RETURN\SIDEWALK
LT 7.8 N.B. FR. RD.
STA. 1+272.38

DRAINAGE EASEMENT

1 △=89° 18' 34.28"
T=24.70
L=38.97
R 25.00
X=628190.1048
Y=4181658.0235

2 △=29° 13' 19.837"
T=5.95
L=11.64
R=22.82
X=628137.4641
Y=4181675.9052

3 △=29° 13' 19.8368"
T=5.95
L=11.64
R=22.82
X=628133.4714
Y=4181676.0288

4 △=90° 59' 7.66"
T=23.43
L=39.70
R=25.00
X=628188.8617
Y=4181581.6031

5 △=29° 27' 31.947"
T=6.40
L=12.62
R=24.54
X=628134.1188
Y=4181566.4643

6 △=29° 41' 38.3485"
T=6.50
L=12.72
R=24.54
X=628130.1339
Y=4181566.5875

S 88° 05' 14.87" E

0+200

1.5 BERM

R 25

R 3.9

R 1

R 3

R 1.66

R 3.6

R 24.54

R.O.W.

N. B. FRONTAGE RD.

TY "C" CURB

WISEMAN
STA. 0+174.56
2.1 RT

S 0° 55' 54.33" W

1+300

N.B. FR. RD. STA. 1+310.093
WISEMAN BLVD. STA. 0+160.447

WISEMAN
0+148.259
0.74 LT

PT STA 0+169.747
N 4° 44' 44.94" E

1:15 TAPER

VAR.

10

END CURB\FLARE

END NORTH TAR STA 0+200
=7.2 M RT @ NB FR RD STA 1+225.689

NTAR

STAR

VARIES

END CURB\FLARE

EDGE OF PVMNT

END SOUTH TAR PT STA 0+170.409
=11.084 M RT @ NB FR RD STA 1+363.856

4.2
3.6
3.6
VAR.
7.8
10.8
15.6
4.8

CHANGE ORDER NO. 144
- REVISED INTERSECTION DETAILS DUE TO WESTWARD EXTENSION BY OTHERS.

CHANGE ORDER #144

REVISED SHEET

NOTE(S):
- -ALL DIMENSIONS IN ARE METERS UNLESS OTHERWISE NOTED.
- -FOR ADDITIONAL HOIZONTAL ALIGNMENT \ DATA SEE SHEET 164-171
- -FOR PAVEMENT MARKING LAYOUTS \ DETAILS, SEE SHEET 779.
- -FOR ILLUMINATION LAYOUTS\ DETAILS, SEE SHEETS 617.
- -SEE TXDOT STANDARD SHEETS TCP (1-1)-98M TO TCP (2-6)-98M FOR CONSTRUCTION OF LEFT TURN LANE.

ROADWAY WIDENING FOR NEW LEFT TURN LANE

SEE MISCELLANEOUS RDWY DETAIL SHEET FOR MORE INFORMATION

WHEELCHAIR RAMPS FOR DETAILS SEE SHEET 335, 336 & 357.

STATE OF TEXAS
MIGUEL G. ROGERIO
96620
LICENSED PROFESSIONAL ENGINEER

Miguel G. Rogerio, P.E.
Miguel G. Rogerio, P.E.
11/14/2006
Date

Texas Department of Transportation

# INTERSECTION LAYOUT
## LOOP 1604 AT WISEMAN BLVD.
SHEET 2b OF 2

| FED. RD. DIV. NO. | FEDERAL AID PROJECT NO. | | SHEET NO. |
|---|---|---|---|
| 6 | NH 2000(704), etc. | | 325B |
| STATE | DIST. | COUNTY | |
| TEXAS | SAT | BEXAR | |
| CONT. | SECT. | JOB | HIGHWAY NO. |
| 2452 | 01 | 036, etc. | LP 1604 |

FILE: T:\AO\Construction\2452-01-036\CO\CO#144 Wiseman Rd LTL\Int5(wiseman)#1.dgn
LEVEL DISPLAYED 1 2 3 4 5 6 7 8 9 10 11 12 13 14 15 16 17 18 19 20 21 22 23 24 25 26 27 28 29 30 31 32 33 34 45 55 63 75 85 94 04 14 24 34 44 54 64 74 84 95 05 15 26 35 45 55 65 75 85 96 06 16 26 36

11/14/2006

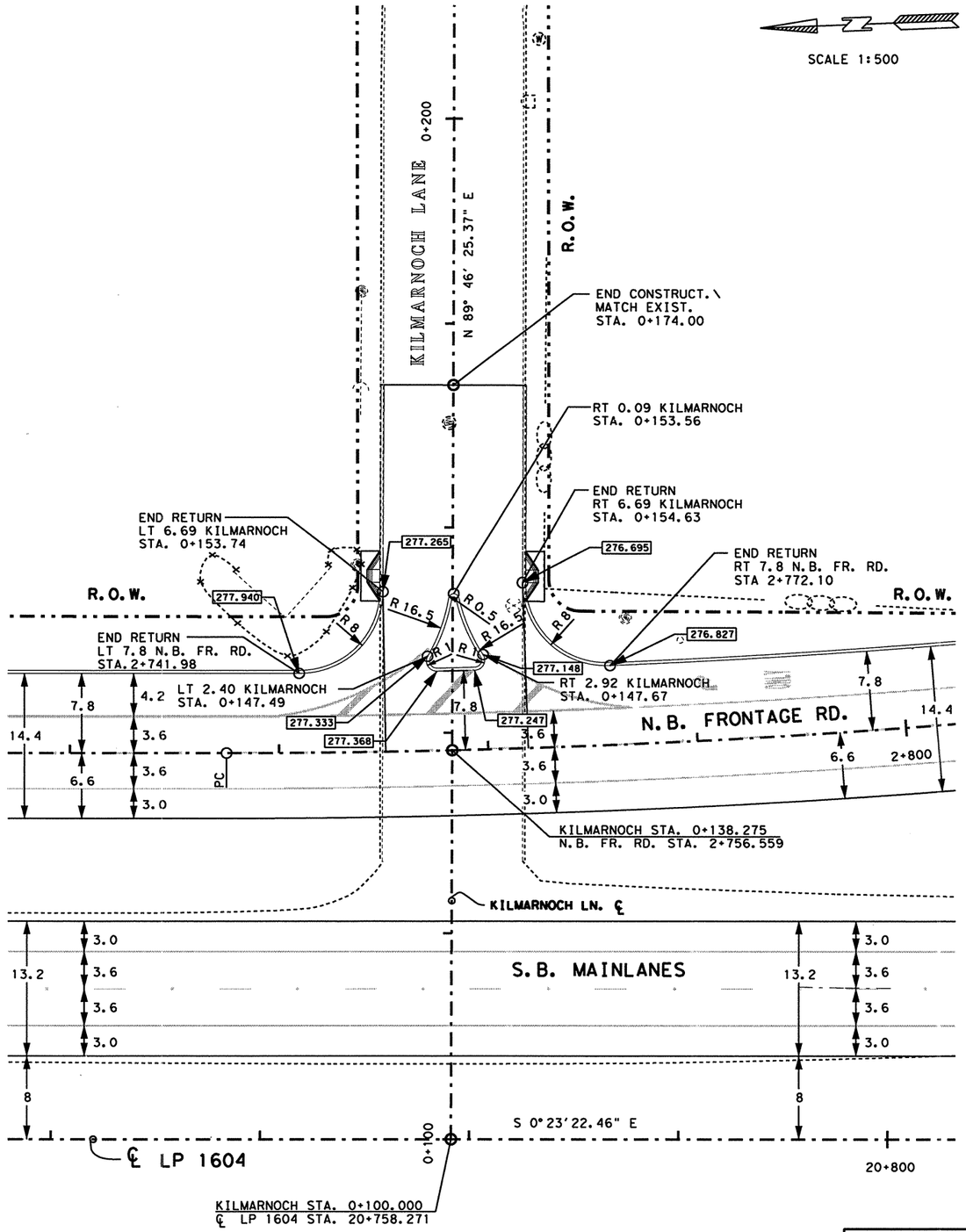


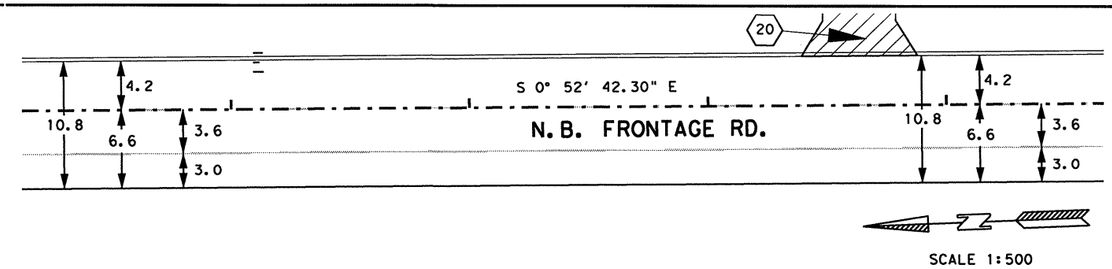


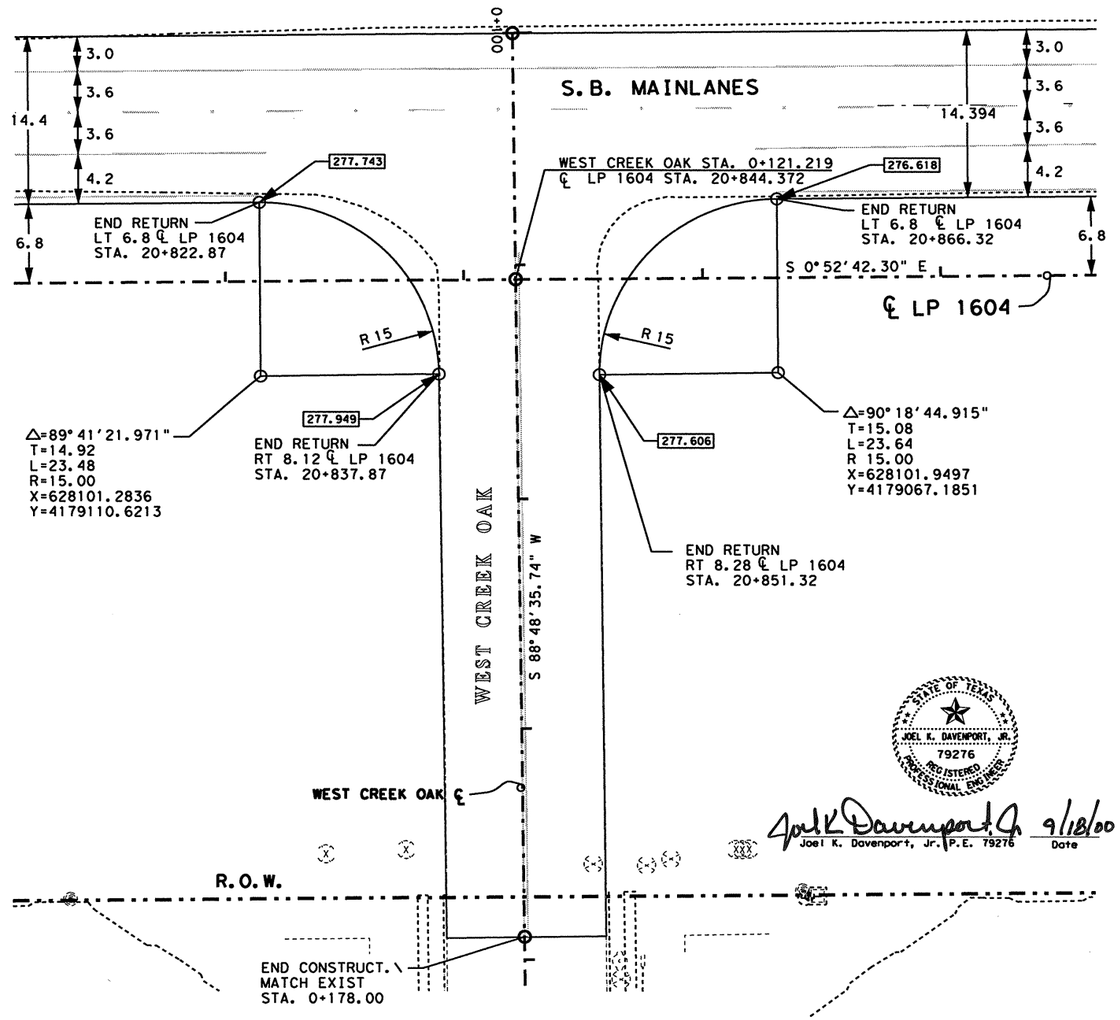


STATE OF TEXAS
JOEL K. DAVENPORT, JR.
79276
REGISTERED PROFESSIONAL ENGINEER

Joel K Davenport Jr 9/18/00
Joel K. Davenport, Jr. P.E. 79276 Date

WHEELCHAIR RAMPS FOR DETAILS SEE SHEET 335, 336 & 357.

NOTE(S):

-ALL DIMENSIONS ARE IN METERS UNLESS OTHERWISE NOTED.

000.000 = FINISH GRADE ELEVATION.

(*) = DRIVEWAY * , FOR MORE DETAILS SEE SHEET(S) 27, 28 & 336.

Texas Department of Transportation

# INTERSECTION LAYOUT

## LOOP 1604 AT KILMARNOCH LANE
## LOOP 1604 AT WEST CREEK OAK

| FED. RD. DIV. NO. | FEDERAL AID PROJECT NO. | | SHEET NO. |
|---|---|---|---|
| 6 | NH 2000(704), etc. | | 326 |
| STATE | DIST. | COUNTY | |
| TEXAS | SAT | BEXAR | |
| CONT. | SECT. | JOB | HIGHWAY NO. |
| 2452 | 01 | 036, etc. | LP 1604 |

FILE: t:\ao\design\lp1604fm471-90\intersections\int7(kilmarnoch&westcreekoak)26.dgn
LEVEL DISPLAYED
1 2 3 4 5 6 7 8 9 10 11 12 13 14 15 16 17 18 19 20 21 22 23 24 25 26 27 28 29 30 31 32
33 34 35 36 37 38 39 40 41 42 43 44 45 46 47 48 49 50 51 52 53 54 55 56 57 58 59 60 61 62 63

(1) △=89° 30' 30.22"
T=24.79
L=39.06
R=25.00
X=628193.8427
Y=4179729.4389

(2) △=29° 14' 6.141"
T=6.09
L=11.92
R=23.37
X=628140.2270
Y=4179745.6219

(3) △=28° 13' 56.886"
T=6.09
L=11.91
R=23.37
X=628136.2360
Y=4179745.5948

(4) △=90° 29' 28.95"
T=25.22
L=39.48
R=25.00
X=628082.2389
Y=4179729.6379

(5) △=86° 55' 7.48"
T=23.69
L=37.93
R=25.00
X=628194.3495
Y=4179654.9256

(6) △=29° 12' 39.476"
T=6.08
L=11.90
R=23.34
X=628140.9905
Y=4179637.8497

(7) △=29° 21' 30.027"
T=6.11
L=11.96
R=23.34
X=628136.9995
Y=4179637.8226

(8) △=86° 43' 16.87"
T=223.61
L=37.84
R=25.00
X=628082.7415
Y=4179655.7134

SCALE 1:500

MATCHLINE STA. 0+240.00

END PROFILE MATCH EXISTING STA. 0+240

END RETURN LT 12.4 MILITARY DR. STA. 0+231.25

END RETURN RT 12.16 MILITARY DR. STA. 0+228.82

R.O.W.

END RETURN LT 7.8 N.B. FR. RD. STA. 3+204.03

END RETURN LT 7.8 N.B. FR. RD. STA. 3+278.54

N.B. FRONTAGE RD.

S 89° 53' 52.35" E

S 0° 23' 22.49" E

MILITARY STA. 0+197.261
N.B. FR. RD. STA. 3+241.149

PT STA 0+171.133

N 3° 25' 28.35" E

1:15 TAPER

END NORTH TAR STA 0+201.592
7.2 M RT @ NB FR RD STA 3+157.8

PC STA 0+171.059

S 4° 12' 13.36" E

END SOUTH TAR STA 0+201.513
7.2 M RT @ NB FR RD STA 3+324.940

NTAR

STAR

END CURB\FLARE

BEGIN NORTH TAR STA 0+100
21.8 M LT @ LP 1604 STA 21+158.519

PC STA 0+130.519

S 4° 12' 12.99" E

BEGIN SOUTH TAR STA 0+100
21.8 M LT @ LP 1604 STA 21+325.778

PT STA 0+130.538

N 3° 25' 27.71 E

℄ MILITARY DRIVE

S.B. MAINLANES

END RETURN LT 6.2 ℄ LP 1604 STA. 21+203.80

END RETURN LT 6.2 ℄ LP 1604. STA. 21+277.72

S 0° 23' 22.46" E

S 0° 52' 42.30" W

℄ LOOP 1604

POT

PI

PC 21+300

MILITARY DR. STA. 0+137.258
℄ LP 1604 STA. 21+241.357

S 87° 06' 38.21" E

END RETURN LT 11.46 MILITARY DR. STA. 0+117.55

MATCHLINE STA. 0+115.000

END RETURN RT 12.4 MILITARY DR. STA. 0+120.57

NOTE(S):

-ALL DIMENSIONS ARE IN METERS UNLESS OTHERWISE NOTED.
-FOR ADDITIONAL HOIZONTAL ALIGNMENT \ DATA SEE SHEET 164-171.
-FOR PAVEMENT MARKING LAYOUTS \ DETAILS, SEE SHEET 787.
-FOR ILLUMINATION LAYOUTS \ DETAILS, SEE SHEETS 620.
-FOR TRAFFIC SIGNAL LAYOUTS \ DETAILS, SEE SHEETS 565-569.

(#) = DRIVEWAY # , FOR MORE DETAILS SEE SHEET(S) 27, 28 & 336.

WHEELCHAIR RAMPS FOR DETAILS SEE SHEET 335, 336 & 357.

000.000 = FINISH GRADE ELEVATION.

FILE: t:\roa\design\p1604fm471-90\intersections\int8x11military1.dgn SEP 2000
LEVEL DISPLAYED: 1 2 3 4 5 6 7 8 9 10 11 12 13 14 15 16 17 18 19 20 21 22 23 24 25 26 27 28 29 30 31 32 33 34 35 36 37 38 39 40 41 42 43 44 45 46 48 49 60 61 62 63

STATE OF TEXAS
JOEL K. DAVENPORT, JR.
79276
REGISTERED PROFESSIONAL ENGINEER

Joel K Davenport, Jr. 9/18/00
Joel K. Davenport, Jr. P.E. 79276 Date

Texas Department of Transportation

# INTERSECTION LAYOUT
## LOOP 1604 AT MILITARY DR.
### SHEET 1 OF 2

| FED. RD. DIV. NO. | FEDERAL AID PROJECT NO. | | SHEET NO. |
|---|---|---|---|
| 6 | NH 2000(704), etc. | | 327 |
| STATE | DIST. | COUNTY | |
| TEXAS | SAT | BEXAR | |
| CONT. | SECT. | JOB | HIGHWAY NO. |
| 2452 | 01 | 036, etc. | LP 1604 |

Plotted on: 4/29/2004

FILE T:\AO\Design\1_fm471-90\mili*temp\int8*1 (military).dgn 4/29/2004
Default 1 2 3 4 5 6 7 8 9 10 11 12 13 14 15 16 17 18 19 20 21 22 23 24 25 26 27 28 29 30 31 32 33 34 35 36 37 38 39 40 41 42 43 44 45 46 47 48 49 50 51 52 53 54 55 56 57 58 59 60 61 62 63
DISPLAYED 335 405 563 703 839 4041 4243 4445 4647 4849 5051 5253 5455 5657 5859 6061 6263

① △=89° 30' 30.22"
T=24.79
L=39.06
R=25.00
X=628193.8427
Y=4179729.4389

② △=29° 14' 6.141"
T=6.09
L=11.92
R=23.37
X=628140.2270
Y=4179745.6219

③ △=28° 13' 56.886"
T=6.09
L=11.91
R=23.37
X=628136.2360
Y=4179745.5948

④ △=90° 29' 28.95"
T=25.22
L=39.48
R=25.00
X=628082.2389
Y=4179729.6379

⑤ △=86° 55' 7.48"
T=23.69
L=37.93
R=25.00
X=628194.3495
Y=4179654.9256

⑥ △=29° 12' 39.476"
T=6.08
L=11.90
R=23.34
X=628140.9905
Y=4179637.8497

⑦ △=29° 21' 30.027"
T=6.11
L=11.96
R=23.34
X=628136.9995
Y=4179637.8226

⑧ △=86° 43' 16.87"
T=223.61
L=37.84
R=25.00
X=628082.7415
Y=4179655.7134

**CHANGE ORDER NO. 64**
-REVISED RDWY GEOMETRICS AND LANE CONFIGURATIONS
-REVISED DIRECTIONAL ISLAND TREATMENTS
-REVISED STORM DRAIN DUE TO ADA REVISIONS
-REVISED FINISH GRADE ELEVATIONS
-ADDED NEW GAS UTILITY INFO.
-ADDED CONC SIDEWALKS

CONTRACTOR IS CAUTIONED ABOUT NEW GAS UTILITY IN VICINITY.

NEW GAS UTILITY

GRADE 5 AGGREGATE (SEE SHEET ___ FOR DETAILS)

SCALE 1:500

MATCHLINE STA. 0+240.00

END PROFILE MATCH EXISTING STA. 0+240

END RETURN LT 12.4 MILITARY DR. STA. 0+231.25

END RETURN RT 12.16 MILITARY DR. STA. 0+228.82

R.O.W.

1.5 SIDEWALK

END RETURN LT 7.8 N.B. FR. RD. STA. 3+204.03

END RETURN / SIDEWALK LT 7.8 N.B. FR. RD. STA. 3+278.54

1.5 BERM

N.B. FRONTAGE RD.

MILITARY DRIVE

PT STA 0+169.200

N 3° 25' 28.20" E
1:15 TAPER

PT STA 0+170.189

MILITARY STA. 0+197.261
N.B. FR. RD. STA. 3+241.149

EDGE OF PVMNT

END NORTH TAR STA 0+200.488
7.2 M RT @ NB FR RD STA 3+157.8

END CURB\FLARE

NTAR

STAR

END SOUTH TAR PT STA 0+170.189
10.8 M RT @ NB FR RD STA 3+294.563

BEGIN NORTH TAR STA 0+100
25.4 M LT @ LP 1604 STA 21+158.668

BEGIN SOUTH TAR STA 0+100
21.8 M LT @ LP 1604 STA 21+325.779

S 0° 20' 02.01" E

PC STA 0+130.219

PC STA 0+131.275

℄ MILITARY DRIVE

S.B. MAINLANES

EDGE OF PVMNT

END RETURN LT 6.2 ℄ LP 1604 STA. 21+203.80

END RETURN LT 6.2 ℄ LP 1604. STA. 21+277.72

℄ LOOP 1604

S 0° 23' 22.46" E

S 0° 52' 42.30" W

POT

PC 21+300

PI

MILITARY DR. STA. 0+137.258
℄ LP 1604 STA. 21+241.357

END RETURN LT 11.46 MILITARY DR. STA. 0+117.55

END RETURN RT 12.4 MILITARY DR. STA. 0+120.57

MATCHLINE STA. 0+115.000

NOTE(S):

-ALL DIMENSIONS ARE IN METERS UNLESS OTHERWISE NOTED.
-FOR ADDITIONAL HOIZONTAL ALIGNMENT \ DATA SEE SHEET 164-171.
-FOR PAVEMENT MARKING LAYOUTS \ DETAILS, SEE SHEET 787.
-FOR ILLUMINATION LAYOUTS \ DETAILS, SEE SHEETS 620.
-FOR TRAFFIC SIGNAL LAYOUTS \ DETAILS, SEE SHEETS 565-569.

(#) = DRIVEWAY # , FOR MORE DETAILS SEE SHEET(S) 27, 28 & 336.

WHEELCHAIR RAMPS FOR DETAILS SEE SHEET 335, 336 & 357.

000.000 = FINISH GRADE ELEVATION.

STATE OF TEXAS
JEROME D. PAVLISKA
76075
REGISTERED PROFESSIONAL ENGINEER

Jerome D. Pavliska P.E 4-28-04
Jerome D. Pavliska, P.E. Date

CHANGE ORDER NO. 64 | REVISED SHEET

Texas Department of Transportation

# INTERSECTION LAYOUT
## LOOP 1604 AT MILITARY DR.
SHEET 1 OF 2

| FED. RD. DIV. NO. | FEDERAL AID PROJECT NO. | | SHEET NO. |
|---|---|---|---|
| 6 | NH 2000(704), etc. | | 327A |
| STATE | DIST. | COUNTY | |
| TEXAS | SAT | BEXAR | |
| CONT. | SECT. | JOB | HIGHWAY NO. |
| 2452 | 01 | 036, etc. | LP 1604 |

NOTE(S):

ALL DIMENSIONS ARE IN METERS UNLESS OTHERWISE NOTED.

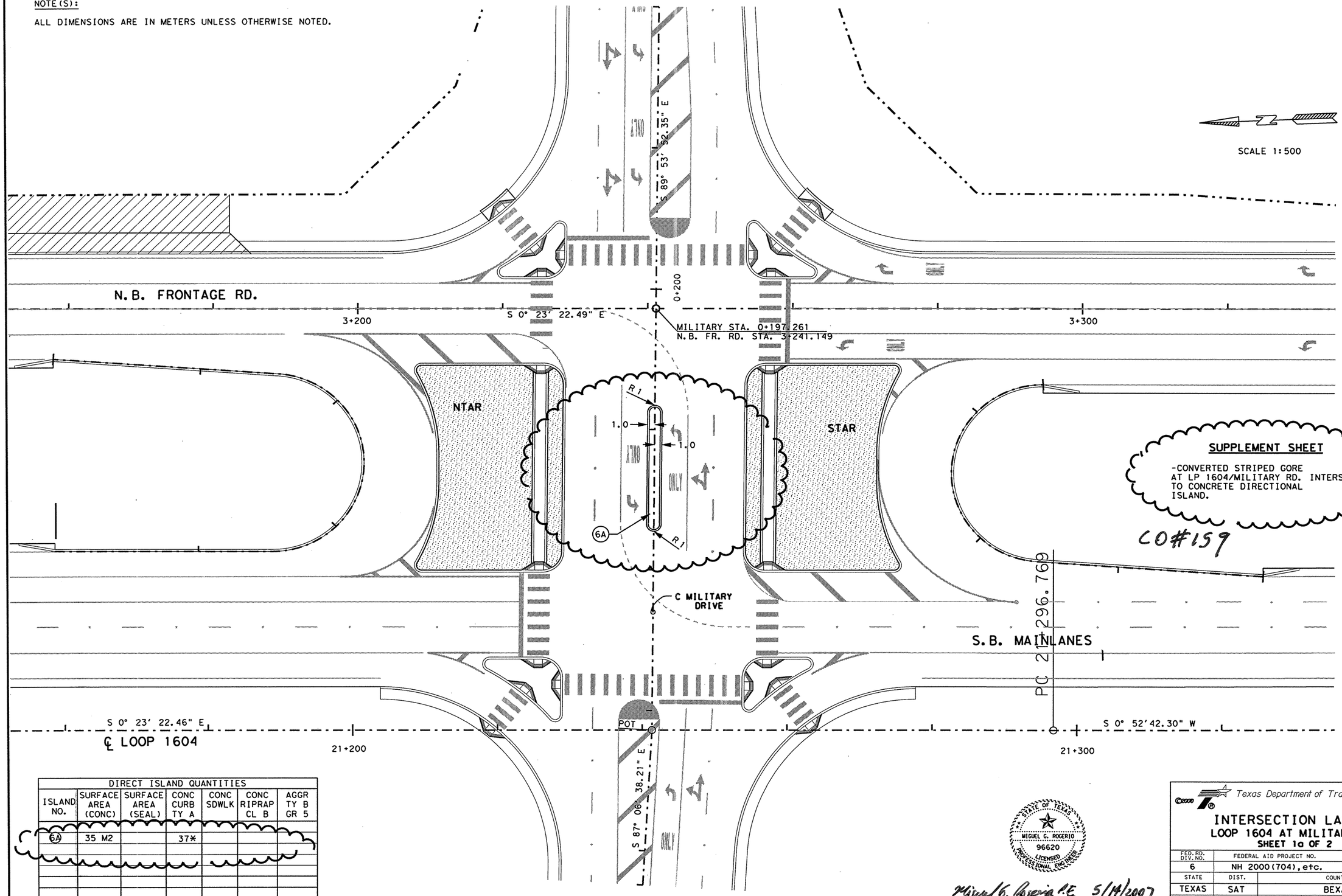


SUPPLEMENT SHEET

-CONVERTED STRIPED CORE AT LP 1604/MILITARY RD. INTERSECTION TO CONCRETE DIRECTIONAL ISLAND.

CO#159

DIRECT ISLAND QUANTITIES

| ISLAND NO. | SURFACE AREA (CONC) | SURFACE AREA (SEAL) | CONC CURB TY A | CONC SDWLK | CONC RIPRAP CL B | AGGR TY B GR 5 |
|---|---|---|---|---|---|---|
| 6A | 35 M2 | | 37* | | | |

*FOR CONTRACTOR'S INFORMATION ONLY.




Miguel G. Rogerio P.E. 5/14/2007
Miguel G. Rogerio, P.E. Date

Texas Department of Transportation

# INTERSECTION LAYOUT
## LOOP 1604 AT MILITARY DR.
### SHEET 1a OF 2

| FED. RD. DIV. NO. | FEDERAL AID PROJECT NO. | | SHEET NO. |
|---|---|---|---|
| 6 | NH 2000(704), etc. | | 327AA |
| STATE | DIST. | COUNTY | |
| TEXAS | SAT | BEXAR | |
| CONT. | SECT. | JOB | HIGHWAY NO. |
| 2452 | 01 | 036, etc. | LP 1604 |

8-01-06

FILE: T:\AO\Design\...4fm471-90\mil**temp\int8*1 (military)aa.dgn 5/14/2007
LEVEL DISPLAYED
1 2 3 4 5 6 7 8 9 10 11 12 13 14 15 16 17 18 19 20 21 22 23 24 25 26 27 28 29 30 31 32
33 34 35 36 37 38 39 40 41 42 43 44 45 46 47 48 49 50 51 52 53 54 55 56 57 58 59 60 61 62 63

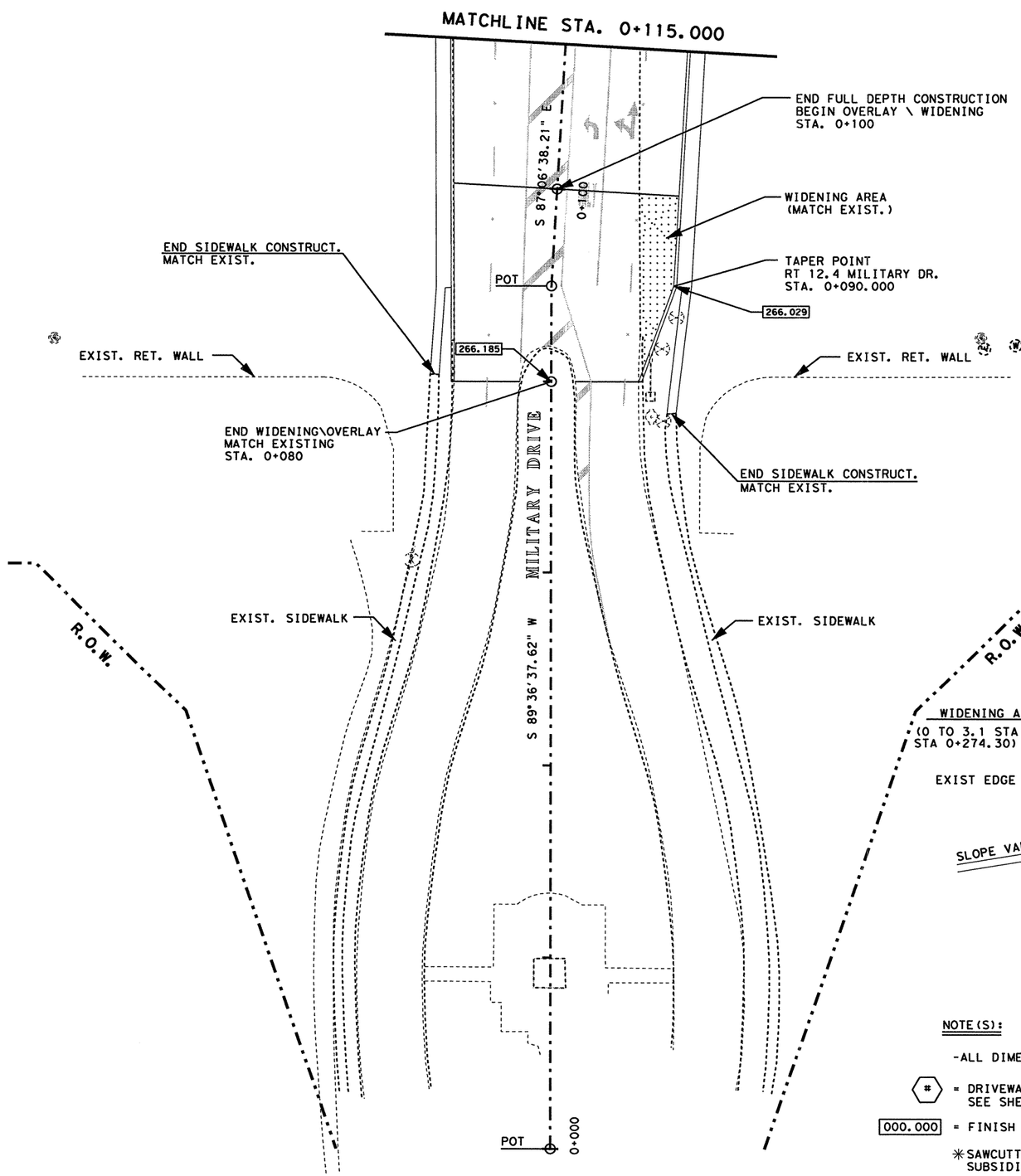


SCALE 1:500

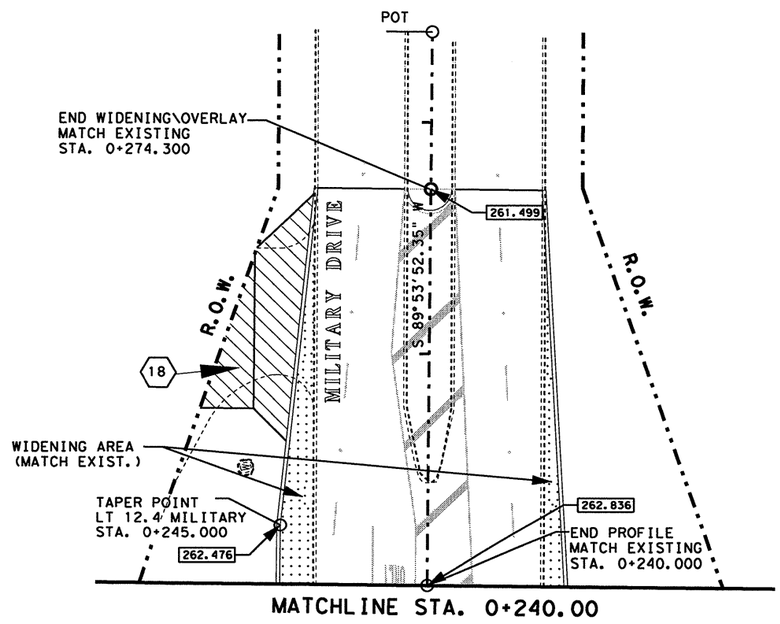


MATCHLINE STA. 0+240.00

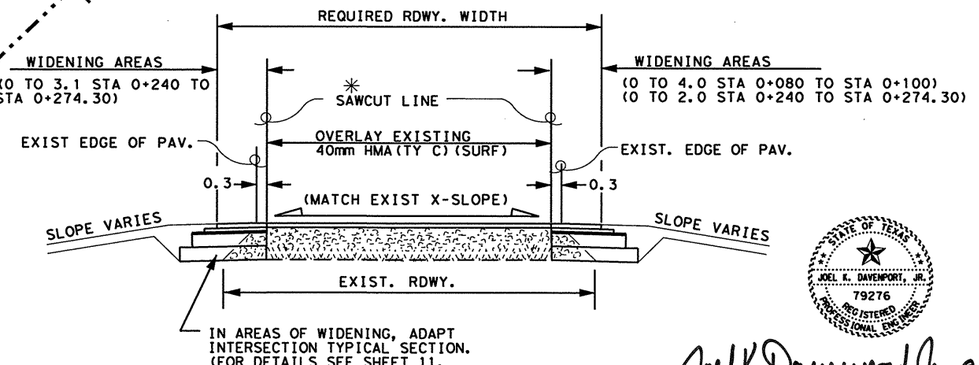


STATE OF TEXAS
JOEL K. DAVENPORT, JR.
79276
REGISTERED
PROFESSIONAL ENGINEER

Joel K Davenport, Jr. 9/18/00
Joel K. Davenport, Jr. P.E. 79276 Date

NOTE(S):

-ALL DIMENSIONS ARE IN METERS UNLESS OTHERWISE NOTED.

(#) = DRIVEWAY #, FOR MORE DETAILS SEE SHEET(S) 27, 28 & 336.

[000.000] = FINISH GRADE ELEVATION.

✳SAWCUTTING SHALL BE CONSIDERED SUBSIDIARY TO PERTINENT BID ITEMS.

Texas Department of Transportation

# INTERSECTION LAYOUT
## LOOP 1604 AT MILITARY DR.
### SHEET 2 OF 2

| FED.RD. DIV.NO. | FEDERAL AID PROJECT NO. | | SHEET NO. |
|---|---|---|---|
| 6 | NH 2000(704),etc. | | 328 |
| STATE | DIST. | COUNTY | |
| TEXAS | SAT | BEXAR | |
| CONT. | SECT. | JOB | HIGHWAY NO. |
| 2452 | 01 | 036,etc. | LP 1604 |

FILE: t:\roo\design\lp1604fm471-90\intersections\int8x2(military).dgn SEP 2000
LEVEL DISPLAYED
1 2 3 4 5 6 7 8 9 10 11 21 31 41 51 61 71 181 202 222 242 252 262 272 282 293 303 312
33 34 45 53 63 73 83 93 104 114 224 234 344 454 564 674 784 894 965 1625 3545 4655 6575 7685 9605 1626 3263

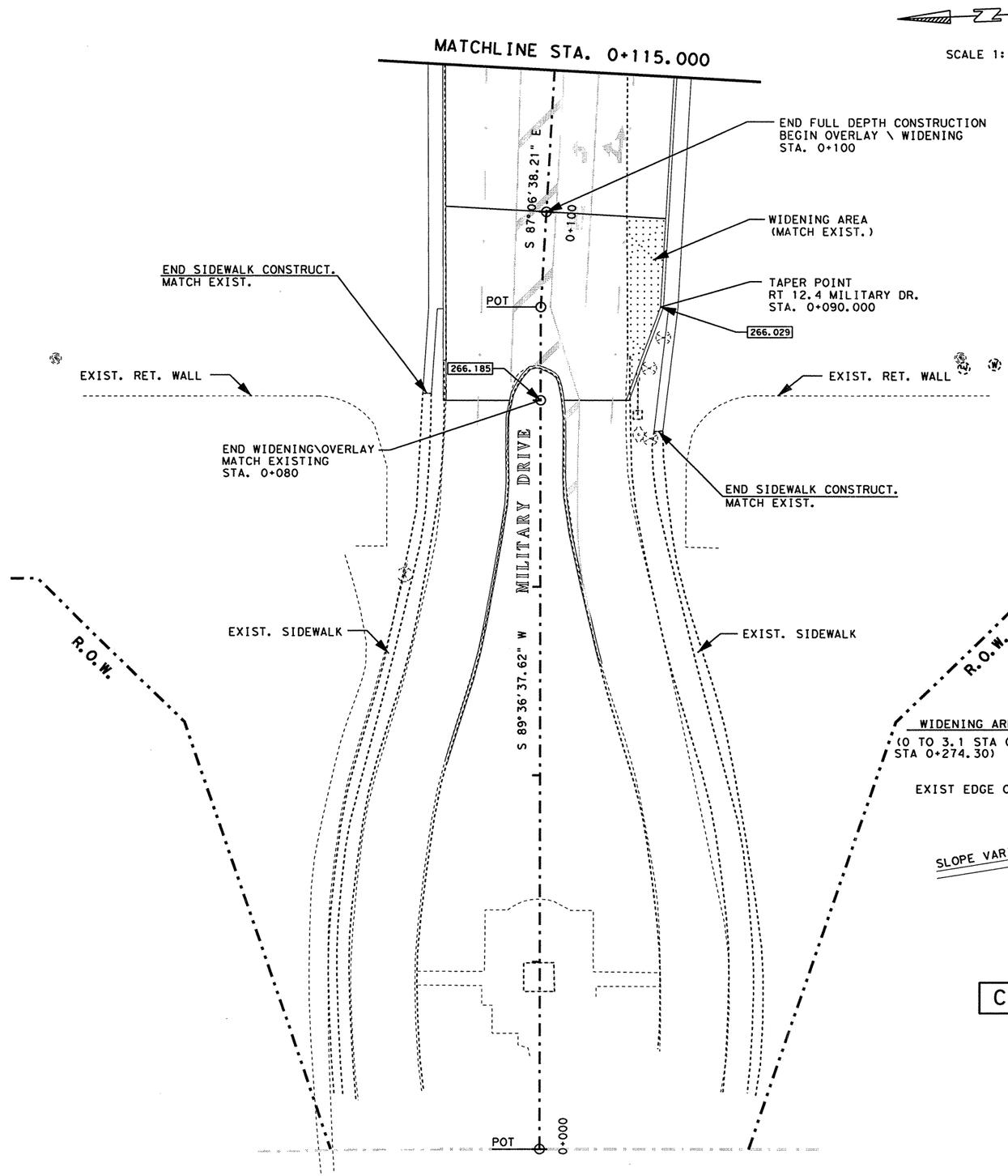


NOTE(S):

-ALL DIMENSIONS ARE IN METERS UNLESS OTHERWISE NOTED.

(#) = DRIVEWAY #, FOR MORE DETAILS SEE SHEET(S) 27, 28 & 336.

000.000 = FINISH GRADE ELEVATION.

✳SAWCUTTING SHALL BE CONSIDERED SUBSIDIARY TO PERTINENT BID ITEMS.

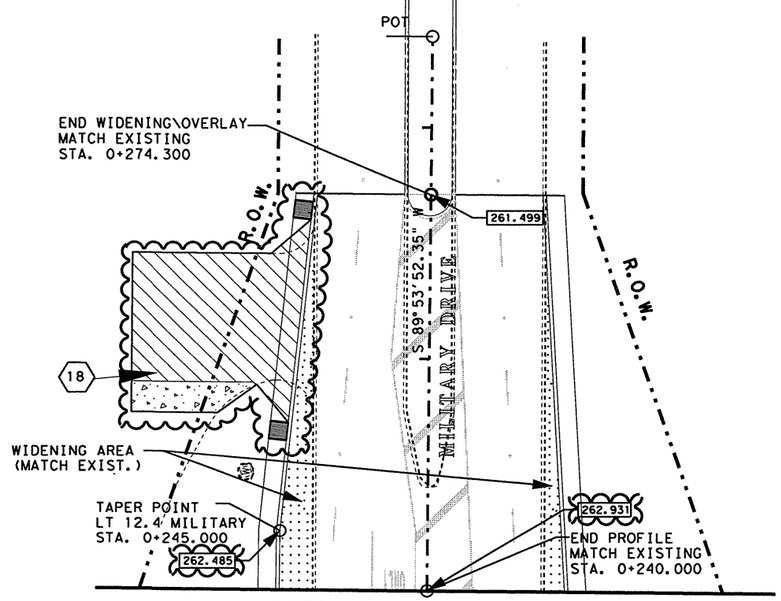


MATCHLINE STA. 0+240.00

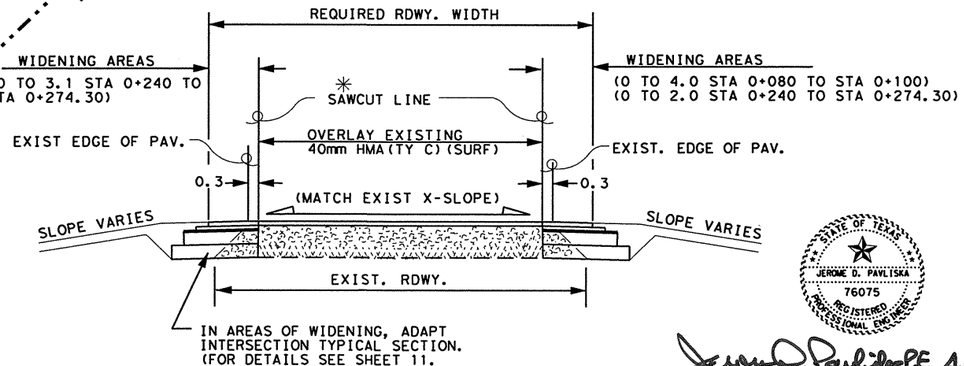


STATE OF TEXAS
JEROME D. PAVLISKA
76075
REGISTERED PROFESSIONAL ENGINEER

Jerome D. Pavliska, P.E. 4-28-04
Jerome D. Pavliska, P.E. Date

CHANGE ORDER 64 | REVISED SHEET

CHANGE ORDER NO. 64

-REVISED SPOT ELEVATIONS DUE TO ADA REVISIONS @ INTERSECTION

-REVISED DRIVE #18

Texas Department of Transportation

# INTERSECTION LAYOUT
## LOOP 1604 AT MILITARY DR.
SHEET 2 OF 2

| FED. RD. DIV. NO. | FEDERAL AID PROJECT NO. | | SHEET NO. |
|---|---|---|---|
| 6 | NH 2000(704), etc. | | 328 A |
| STATE | DIST. | COUNTY | |
| TEXAS | SAT | BEXAR | |
| CONT. | SECT. | JOB | HIGHWAY NO. |
| 2452 | 01 | 036, etc. | LP 1604 |

FILE: T:\AO\Design\lp1604fm471-90\intersections\int8*2 military).dgn 4/29/2004

| LEVEL | 1 | 2 | 3 | 4 | 5 | 6 | 7 | 8 | 9 | 10 | 11 | 12 | 13 | 14 | 15 | 16 | 17 |
|---|---|---|---|---|---|---|---|---|---|---|---|---|---|---|---|---|---|
| DISPLAYED | 33 | 34 | 35 | 36 | 37 | 38 | 39 | 40 | 41 | 42 | 43 | 44 | 45 | 46 | 47 | 48 | 49 |

| LEVEL | 18 | 19 | 20 | 21 | 22 | 23 | 24 | 25 | 26 | 27 | 28 | 29 | 30 | 31 | 32 | 33 | 34 | 35 | 36 | 37 | 38 | 39 | 40 | 41 | 42 | 43 | 44 | 45 | 46 | 47 | 48 | 49 | 50 | 51 | 52 | 53 | 54 | 55 | 56 | 57 | 58 | 59 | 60 | 61 | 62 | 63 |
|---|---|---|---|---|---|---|---|---|---|---|---|---|---|---|---|---|---|---|---|---|---|---|---|---|---|---|---|---|---|---|---|---|---|---|---|---|---|---|---|---|---|---|---|---|---|---|
| DISPLAYED | 50 | 51 | 52 | 53 | 54 | 55 | 56 | 57 | 58 | 59 | 60 | 61 | 62 | 63 | 64 | 65 | 66 | 67 | 68 | 69 | 70 | 71 | 72 | 73 | 74 | 75 | 76 | 77 | 78 | 79 | 80 | 81 | 82 | 83 | 84 | 85 | 86 | 87 | 88 | 89 | 90 | 91 | 92 | 93 | 94 | 95 |

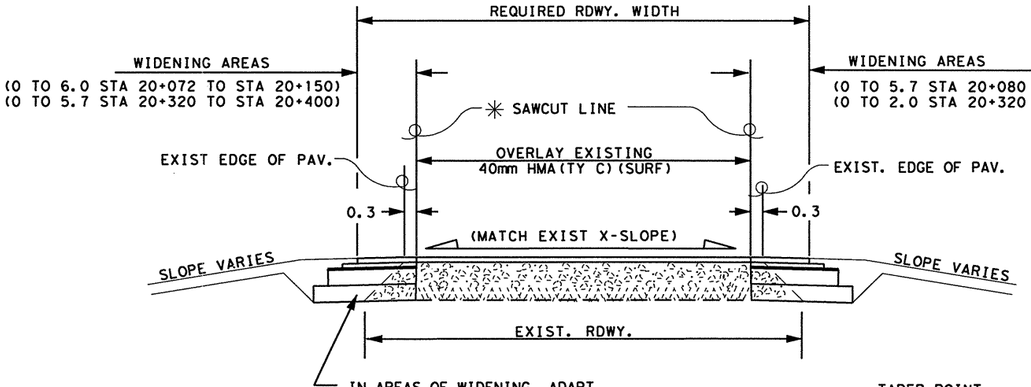


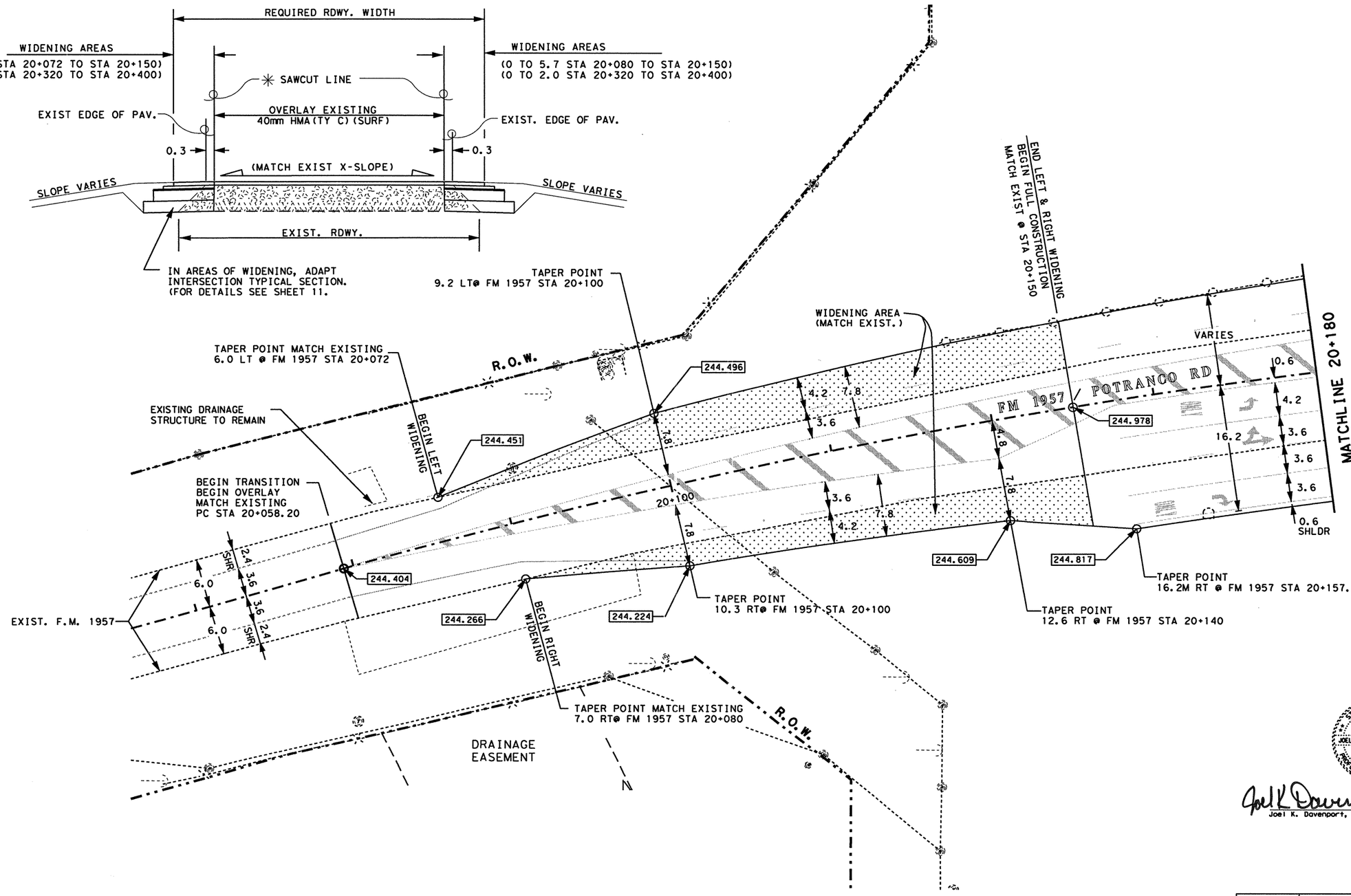


SCALE 1:500

NOTE(S):

-ALL DIMENSIONS ARE IN METERS UNLESS OTHERWISE NOTED.

000.000 = FINISH GRADE ELEVATIONS.

✳SAWCUTTING SHALL BE CONSIDERED SUBSIDIARY TO VARIOUS PERTINENT BID ITEMS.

STATE OF TEXAS
JOEL K. DAVENPORT, JR.
79276
REGISTERED
PROFESSIONAL ENGINEER

Joel K Davenport Jr 9/18/00

Joel K. Davenport, Jr. P.E. 79276 Date

©2000 Texas Department of Transportation

# INTERSECTION LAYOUT
## LOOP 1604 @ POTRANCO RD (FM 1957)

SHEET ' OF 3

| FED. RD. DIV. NO. | FEDERAL AID PROJECT NO. | | SHEET NO. |
|---|---|---|---|
| 6 | NH 2000(704), etc. | | 329 |
| STATE | DIST. | COUNTY | |
| TEXAS | SAT | BEXAR | |
| CONT. | SECT. | JOB | HIGHWAY NO. |
| 2452 | 01 | 036, etc. | LP 1604 |

FILE: t:\ao\design\lp1604fm471-90\intersections\int10#1(potranco).dgn 6:05:52 SEP 2000
LEVEL DISPLAYED
1 2 3 4 5 6 7 8 9 10 11 12 13 14 15 16 17 18 19 20 21 22 23 24 25 26 27 28 29 30 31 32
33 34 35 36 37 38 39 40 41 42 43 44 45 46 47 48 49 50 51 52 53 54 55 56 57 58 59 60 61 62 63

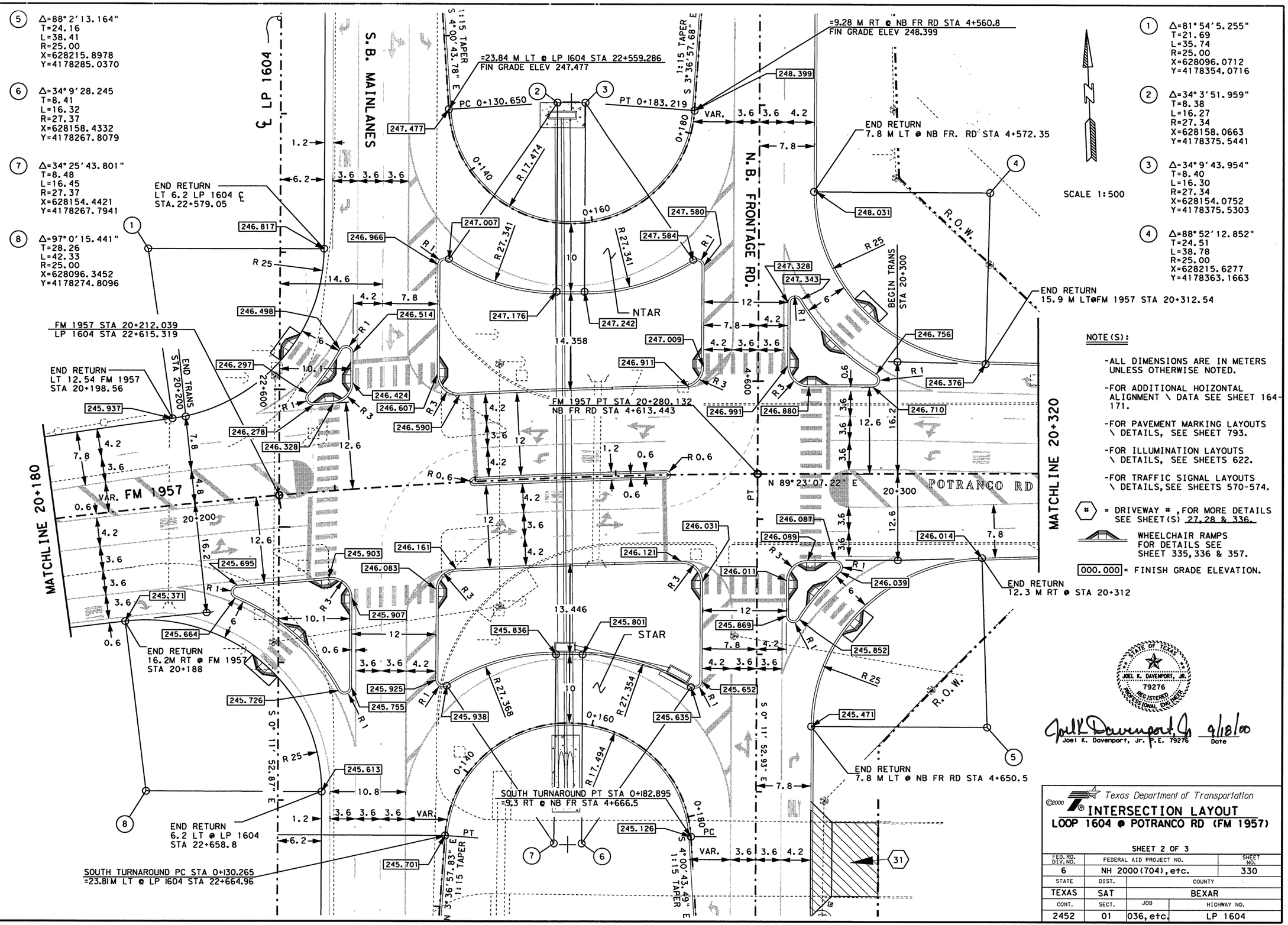


(5) Δ=88°2'13.164"
T=24.16
L=38.41
R=25.00
X=628215.8978
Y=4178285.0370

(6) Δ=34°9'28.245
T=8.41
L=16.32
R=27.37
X=628158.4332
Y=4178267.8079

(7) Δ=34°25'43.801"
T=8.48
L=16.45
R=27.37
X=628154.4421
Y=4178267.7941

(8) Δ=97°0'15.441"
T=28.26
L=42.33
R=25.00
X=628096.3452
Y=4178274.8096

(1) Δ=81°54'5.255"
T=21.69
L=35.74
R=25.00
X=628096.0712
Y=4178354.0716

(2) Δ=34°3'51.959"
T=8.38
L=16.27
R=27.34
X=628158.0663
Y=4178375.5441

(3) Δ=34°9'43.954"
T=8.40
L=16.30
R=27.34
X=628154.0752
Y=4178375.5303

(4) Δ=88°52'12.852"
T=24.51
L=38.78
R=25.00
X=628215.6277
Y=4178363.1663

NOTE(S):

-ALL DIMENSIONS ARE IN METERS UNLESS OTHERWISE NOTED.

-FOR ADDITIONAL HOIZONTAL ALIGNMENT \ DATA SEE SHEET 164-171.

-FOR PAVEMENT MARKING LAYOUTS \ DETAILS, SEE SHEET 793.

-FOR ILLUMINATION LAYOUTS \ DETAILS, SEE SHEETS 622.

-FOR TRAFFIC SIGNAL LAYOUTS \ DETAILS, SEE SHEETS 570-574.

(#) = DRIVEWAY # , FOR MORE DETAILS SEE SHEET(S) 27, 28 & 336.

WHEELCHAIR RAMPS FOR DETAILS SEE SHEET 335, 336 & 357.

000.000 = FINISH GRADE ELEVATION.

STATE OF TEXAS
JOEL K. DAVENPORT, JR.
79276
REGISTERED PROFESSIONAL ENGINEER

Joel K. Davenport Jr. 9/18/00
Joel K. Davenport, Jr. P.E. 79276 Date

FILE: t:\roa\design\lp1604fm471-90\intersections\int10*2potranco1.dgn 8 SEP 2000

LEVEL DISPLAYED
1 2 3 4 5 6 7 8 9 10 11 12 13 14 15 16 17 18 19 20 21 22 23 24 25 26 27 28 29 30 31 32
33 34 35 36 37 38 39 40 41 42 43 44 45 46 47 48 49 50 51 52 53 54 55 56 57 58 59 60 61 62 63

©2000 Texas Department of Transportation

# INTERSECTION LAYOUT
## LOOP 1604 @ POTRANCO RD (FM 1957)

SHEET 2 OF 3

| FED. RD. DIV. NO. | FEDERAL AID PROJECT NO. | SHEET NO. |
|---|---|---|
| 6 | NH 2000(704), etc. | 330 |
| STATE | DIST. | COUNTY |
| TEXAS | SAT | BEXAR |
| CONT. | SECT. | JOB / HIGHWAY NO. |
| 2452 | 01 | 036, etc. / LP 1604 |

**CHANGE ORDER NO. 64**

- -REVISED RDWY GEOMETRICS AND LANE CONFIGURATIONS
- -REVISED DIRECTIONAL ISLAND TREATMENTS
- -ADDED CONC SIDEWALK
- -REVISED N'BD FRONT. RD. SPOT ELEVATIONS DUE TO PROFILE REVISION TO ENHANCE CLEAR OVER BCS #3.

SEE MISCELLANEOUS ROADWAY DETAIL SHEET FOR MORE DETAILS

℄ LP 1604

S.B. MAINLANES

N.B. FRONTAGE RD.

POTRANCO RD

FM 1957

EDGE OF PVMNT

1.2 SHLDR

6.2

3.6 3.6 3.6 3.6

END RETURN LT 6.2 LP 1604 ℄ STA. 22+579.05

NORTH TURNAROUND PC STA 0+100.000
=25.379 M LT @ LP 1604 STA 22+559.215
FIN GRADE ELEV 247.483

PC 0+100.000

PT 0+150.346

R 16.697

=9.282 M RT @ NB FR RD STA 4+560.841
FIN GRADE ELEV 248.397

1.5 CONC SIDEWALKS

0.6 SHLDR

VAR. 3.6 3.6 3.6

7.8

END RETURN 7.8 M LT @ NB FR. RD STA 4+572.35

SCALE 1:500

R.O.W.

R 25

BEGIN TRANS STA 20+300

END RETURN 15.9 M LT@FM 1957 STA 20+312.54

FM 1957 STA 20+212.039
LP 1604 STA 22+615.319

END RETURN LT 12.54 FM 1957 STA 20+198.56

END TRANS STA 20+200

FM 1957 PT STA 20+280.132
NB FR RD STA 4+613.443

MATCHLINE 20+180

MATCHLINE 20+320

VAR. FM 1957

END RETURN 16.2M RT @ FM 1957 STA 20+188

EDGE OF PVMNT

SOUTH TURNAROUND PC STA 0+130.039
=23.794 M LT @ LP 1604 STA 22+665.224

END RETURN 6.2 LT @ LP 1604 STA 22+658.8

SOUTH TURNAROUND PT STA 0+181.098
=11.100 RT @ NB FR STA 4+667.677
FINISH GRADE ELEV 245.147

PC 0+130.039

PC 0+181.098

END RETURN 7.8 M LT N.B. FRONT. RD. STA. 4+650.5

BEGIN REVISED N.B. FRONT. RD. X-SLOPE TRANSITION STA. 4+650

REVISED X-SLOPE TRANSITION TO N.B. FRONT. RD. STA. 4+958

1.5 CONC SIDEWALKS

END RETURN 12.3 M RT @ STA 20+312

(1) Δ=81°54'5.255"
T=21.69
L=35.74
R=25.00
X=628096.0712
Y=4178354.0716

(2) Δ=34°3'51.959"
T=8.38
L=16.27
R=27.34
X=628158.0663
Y=4178375.5441

(3) Δ=34°9'43.954"
T=8.40
L=16.30
R=27.34
X=628154.0752
Y=4178375.5303

(4) Δ=88°52'12.852"
T=24.51
L=38.78
R=25.00
X=628215.6277
Y=4178363.1663

(5) Δ=88°2'13.164"
T=24.16
L=38.41
R=25.00
X=628215.8978
Y=4178285.0370

(6) Δ=34°9'28.245
T=8.41
L=16.32
R=27.37
X=628158.4332
Y=4178267.8079

(7) Δ=34°25'43.801"
T=8.48
L=16.45
R=27.37
X=628154.4421
Y=4178267.7941

(8) Δ=97°0'15.441"
T=28.26
L=42.33
R=25.00
X=628096.3452
Y=4178274.8096

NOTE(S):

- -ALL DIMENSIONS ARE IN METERS UNLESS OTHERWISE NOTED.
- -FOR ADDITIONAL HOIZONTAL ALIGNMENT \ DATA SEE SHEET 164-171.
- -FOR PAVEMENT MARKING LAYOUTS \ DETAILS, SEE SHEET 793.
- -FOR ILLUMINATION LAYOUTS \ DETAILS, SEE SHEETS 622.
- -FOR TRAFFIC SIGNAL LAYOUTS \ DETAILS, SEE SHEETS 570-574.

(#) = DRIVEWAY # , FOR MORE DETAILS SEE SHEET(S) 27, 28 & 336.

WHEELCHAIR RAMPS FOR DETAILS SEE SHEET 335, 336 & 357.

000.000 = FINISH GRADE ELEVATION.

**CHANGE ORDER NO. 64**

**REVISED SHEET**

STATE OF TEXAS
JEROME D. PAVLISKA
76075
REGISTERED PROFESSIONAL ENGINEER

Jerome D. Pavliska, P.E. 4-28-04
Jerome D. Pavliska, P.E. Date

FILE: t:\ao\design\lp1604fm471-90\intersections\int10-2potranco\ppd.dgn
LEVEL 1 2 3 4 5 6 7 8 9 10 11 12 13 14 15 16 17 18 19 20 21 22 23 24 25 26 27 28 29 30 31 32
DISPLAYED 33 34 35 45 56 57 58 59 04 14 24 25 34 44 54 64 74 84 94 95 05 15 25 35 45 55 65 75 85 96 06 16 26 3

Texas Department of Transportation
©2000 INTERSECTION LAYOUT
LOOP 1604 @ POTRANCO RD (FM 1957)

SHEET 2 OF 3

| FED. RD. DIV. NO. | FEDERAL AID PROJECT NO. | SHEET NO. |
|---|---|---|
| 6 | NH 2000(704), etc. | 330A |
| STATE | DIST. | COUNTY |
| TEXAS | SAT | BEXAR |
| CONT. | SECT. | JOB | HIGHWAY NO. |
| 2452 | 01 | 036, etc. | LP 1604 |

05-01-04

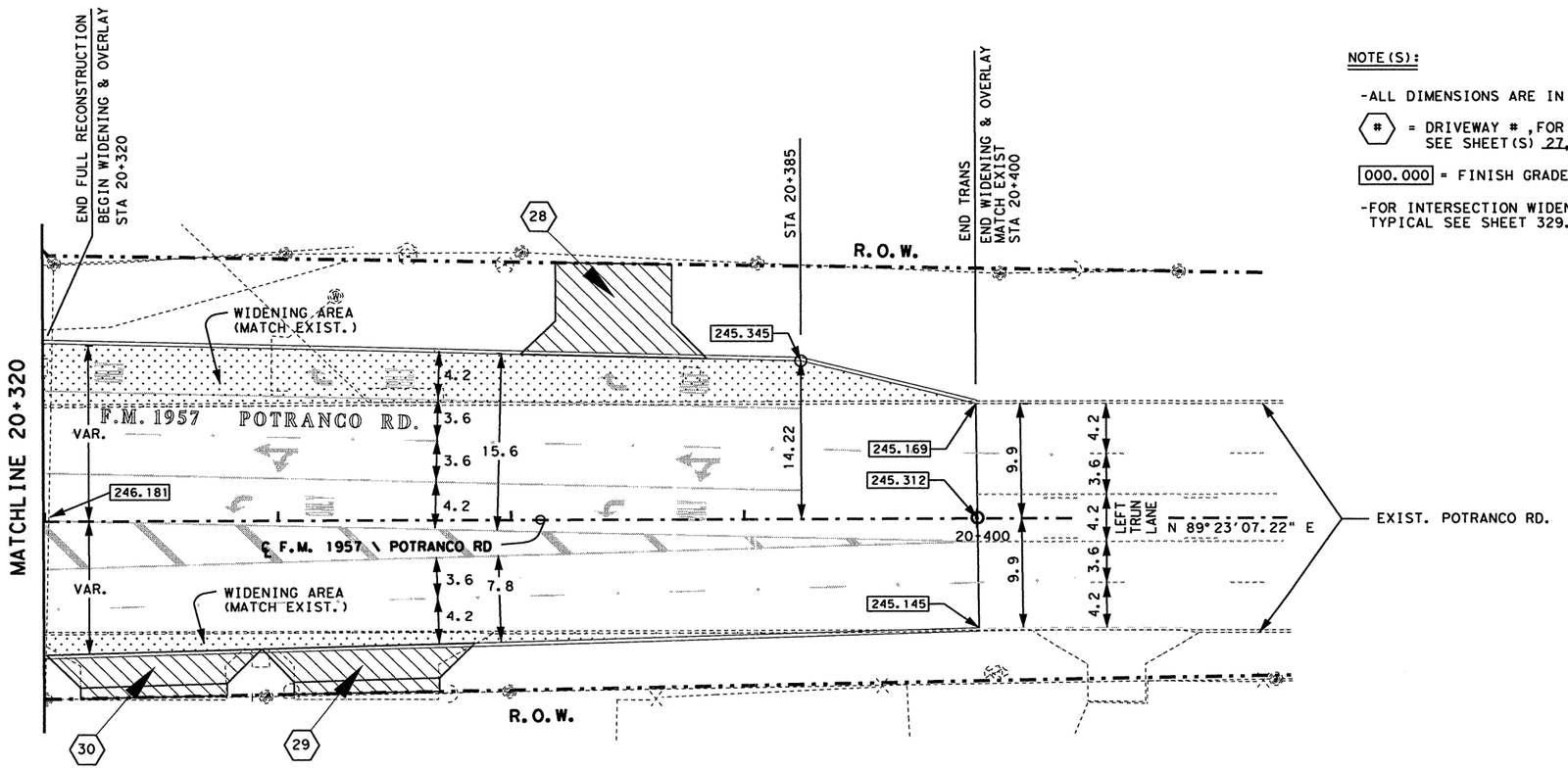


1:500 SCALE

NOTE(S):

-ALL DIMENSIONS ARE IN METERS UNLESS OTHERWISE NOTED.

(#) = DRIVEWAY # ,FOR MORE DETAILS SEE SHEET(S) 27,28 & 336.

000.000 = FINISH GRADE ELEVATION.

-FOR INTERSECTION WIDENING\OVERLAY TYPICAL SEE SHEET 329.

STATE OF TEXAS
JOEL K. DAVENPORT, JR.
79276
REGISTERED
PROFESSIONAL ENGINEER

Joel K. Davenport, Jr. 9/18/00
Joel K. Davenport, Jr. P.E. 79276 Date

©2000 Texas Department of Transportation

# INTERSECTION LAYOUT
## LOOP 1604 @ POTRANCO RD (FM 1957)

SHEET 3 OF 3

| FED. RD. DIV. NO. | FEDERAL AID PROJECT NO. | | SHEET NO. |
|---|---|---|---|
| 6 | NH 2000(704),etc. | | 331 |
| STATE | DIST. | COUNTY | |
| TEXAS | SAT | BEXAR | |
| CONT. | SECT. | JOB | HIGHWAY NO. |
| 2452 | 01 | 036,etc. | LP 1604 |

FILE: t:\ao\design\lp1604fm471-90\intersections\int10x3(potranco) dgn 6EP 2000
LEVEL DISPLAYED
1 2 3 4 5 6 7 8 9 10 11 12 13 14 15 16 17 18 19 20 21 22 23 24 25 26 27 28 29 30 31 32
33 34 35 36 37 38 39 40 41 42 43 44 45 46 47 48 49 50 51 52 53 54 55 56 57 58 59 60 61 62 63

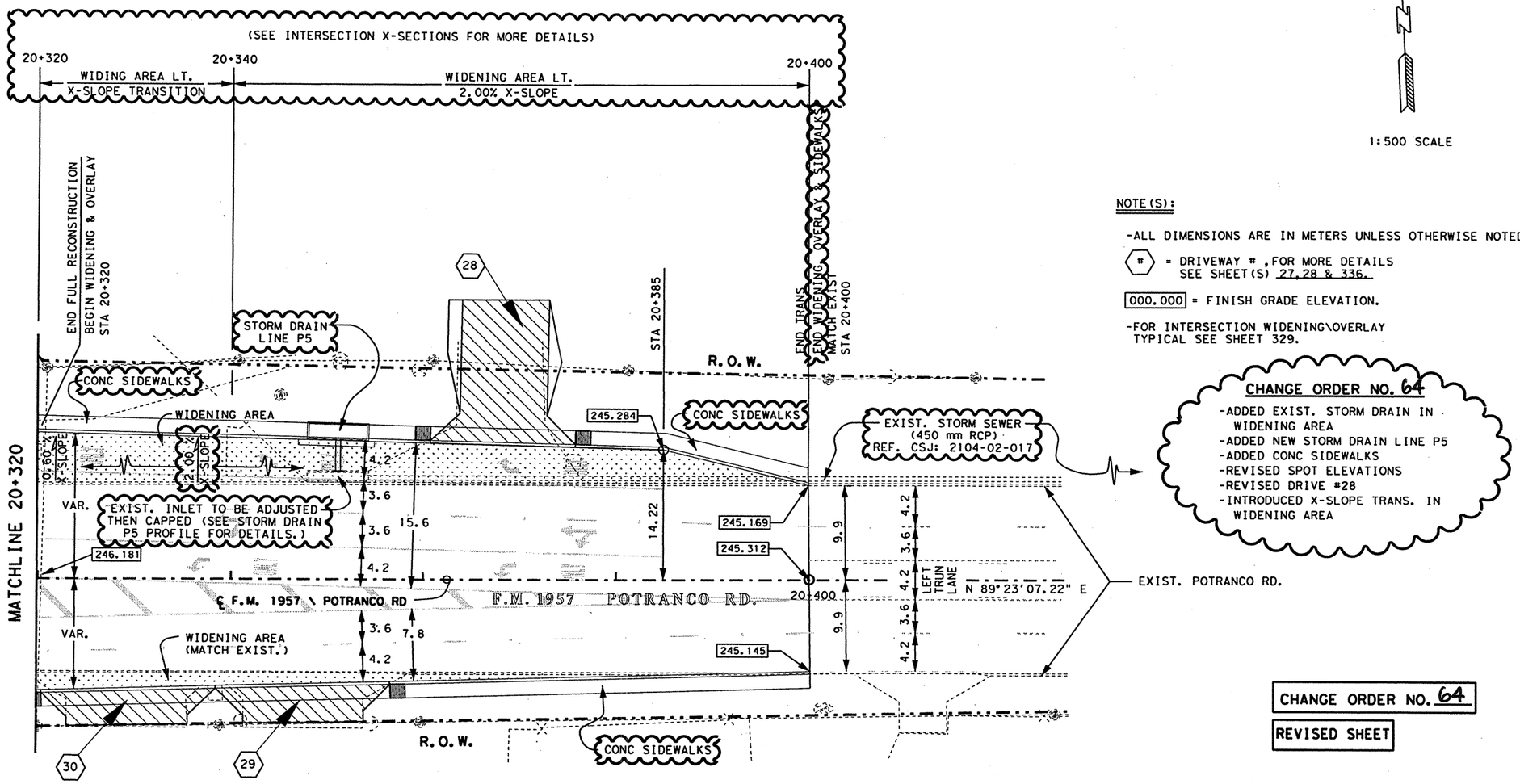


1:500 SCALE

NOTE(S):

-ALL DIMENSIONS ARE IN METERS UNLESS OTHERWISE NOTED.

(#) = DRIVEWAY # , FOR MORE DETAILS SEE SHEET(S) 27, 28 & 336.

[000.000] = FINISH GRADE ELEVATION.

-FOR INTERSECTION WIDENING\OVERLAY TYPICAL SEE SHEET 329.

**CHANGE ORDER NO. 64**

-ADDED EXIST. STORM DRAIN IN WIDENING AREA
-ADDED NEW STORM DRAIN LINE P5
-ADDED CONC SIDEWALKS
-REVISED SPOT ELEVATIONS
-REVISED DRIVE #28
-INTRODUCED X-SLOPE TRANS. IN WIDENING AREA

CHANGE ORDER NO. 64

REVISED SHEET

STATE OF TEXAS
JEROME D. PAVLISKA
76075
REGISTERED
PROFESSIONAL ENGINEER

Jerome D. Pavliska, P.E. 4-28-04
Jerome D. Pavliska, P.E. Date

FILE: t:\AO\Design\p1604fm471-90\intersections\int10w3(potranco).dgn 4/27/2004

LEVEL DISPLAYED: 1 2 3 4 5 6 7 8 9 10 11 12 13 14 15 16 17 18 19 20 21 22 23 24 25 26 27 28 29 30 31 32 33 34 35 36 37 38 39 40 41 42 43 44 45 46 47 48 49 50 51 52 53 54 55 56 57 58 59 60 61 62 63

©2000 Texas Department of Transportation

# INTERSECTION LAYOUT
## LOOP 1604 @ POTRANCO RD (FM 1957)

SHEET 3 OF 3

| FED. RD. DIV. NO. | FEDERAL AID PROJECT NO. | | SHEET NO. |
|---|---|---|---|
| 6 | NH 2000(704), etc. | | 331A |
| STATE | DIST. | COUNTY | |
| TEXAS | SAT | BEXAR | |
| CONT. | SECT. | JOB | HIGHWAY NO. |
| 2452 | 01 | 036, etc. | LP 1604 |

Plotted on: 01/26/2004

Design Filename: p:\52\2011\design\civil\plansheets\road\intersections\int15(dove).dgn

FILE p:\52\2011\design\civil\plansheets\road\intersections\int15(dove).dgn 12/08/2003
LEVEL 1 2 3 4 5 6 7 8 9 10 11 12 13 14 15 16 17 18 19 20 21 22 23 24 25 26 27 28 29 30 31 32
DISPLAYED 33 34 35 36 37 38 39 40 41 42 43 44 45 46 47 48 49 50 51 52 53 54 55 56 57 58 59 60 61 62 63 64

3.0 3.6 3.6 3.6 1.2

S 0° 07' 17.21" E

EDGE OF PVMNT

BEGIN HEADER CURB/
BEGIN RETURN
LT 7.40 LOOP 1604
STA. 24+740.95

247.055

2

END RETURN
LT 6.10 DOVE CANYON RD
STA. 0+030.70

HEADER CURB

END HEADER CURB/
BEGIN CONC CURB (TY 1

EDGE OF PVMNT

89° 46' 06"

247.349

LINE I42B

0+000

S 89° 38' 49" W

247.383

HEADER CURB

END HEADER CURB/
BEGIN CURB (TY 1)
STA 0+06

END RETURN
RT 6.10 DOVE CANYON RD
STA 0+030.50

DOVE CANYON RD. STA. 0+020.00
℄ LOOP 1604 STA. 24+716.81

246.381

1

BEGIN HEADER CURB/
BEGIN RETURN
LT 7.40 LOOP 1604
STA. 24+692.75

EDGE OF PVMNT

S.B. MAINLANES

24+700

℄ LOOP 1604

1 △=89° 40' 57.0146"
T=17.93
L=28.20
R=18.00
X=628259.5202
Y=4176261.4351

2 △=90° 13' 53.4660"
T=17.93
L=28.35
R=18.00
X=628259.6224
Y=4176213.2347

R.O.W.

100mm RIPARP
(CONC) CL B

#6 GA. 150mm X 150mm
WIRE MESH PLACED
@ CENTER OF SLAB

300mm

CONC CURB
TY 1

RIPRAP DETAIL
N.T.S.

150mm

T1 EXIST T1

UGT NEW (SBC)

UGW NEW (BMWD)

TY 1 CURB

1.5M BERM

DOVE CANYON

PC 0+106.243

SEE RIPRAP DETAIL
THIS SHEET

END CONSTRUCT
END CONC CURB (TY A)
MATCH EXIST.
STA. 0+143.00

EXIST.
DOVE
CANYON

0+100

6.1

6.1

1 M TRANSITION

TY 1 CURB

PAVEMENT

HEADER
CURB

TRANSITION DETAIL
N.T.S.

SCALE: 1:500

TY 1 CURB

13mm BAR

480mm

230mm

HEADER CURB
N.T.S.

CHANGE ORDER NO. 64
-DOVE CANYON INTERSECTION LAYOUT

NOTE(S):
-~~HEADER CURB SHALL BE PAID FOR AS RIP-RAP CONC CL(B).~~
-ALL DIMENSIONS IN ARE METERS UNLESS OTHERWISE NOTED.
-FOR ADDITIONAL HOIZONTAL ALIGNMENT \ DATA SEE SHEET _____
-FOR PAVEMENT MARKING LAYOUTS \ DETAILS, SEE SHEET _____
-FOR ILLUMINATION LAYOUTS\ DETAILS, SEE SHEETS _____

WHEELCHAIR RAMPS
FOR DETAILS SEE
SHEET _____

000.000 = FINISH GRADE ELEVATION.

CHANGE ORDER NO. 64 | NEW SHEET

555 EAST RAMSEY SAN ANTONIO TEXAS 78216
PHONE (210)375-9000
FAX (210)375-9010
PAPE-DAWSON ENGINEERS
CIVIL & ENVIRONMENTAL

STATE OF TEXAS
J. KENT O'BRIEN
64398
LICENSED
PROFESSIONAL ENGINEER

J. KENT O'BRIEN P.E. 1/27/2004
DATE

Texas Department of Transportation

# INTERSECTION LAYOUT
## LOOP 1604 AT DOVE CANYON

| FED. RD. DIV. NO. | FEDERAL AID PROJECT NO. | | SHEET NO. |
|---|---|---|---|
| 6 | NH 2000(704),etc. | | 331B |
| STATE | DIST. | COUNTY | |
| TEXAS | SAT | BEXAR | |
| CONT. | SECT. | JOB | HIGHWAY NO. |
| 2452 | 01 | 036,etc. | LP 1604 |

Plotted on: 01/26/2004

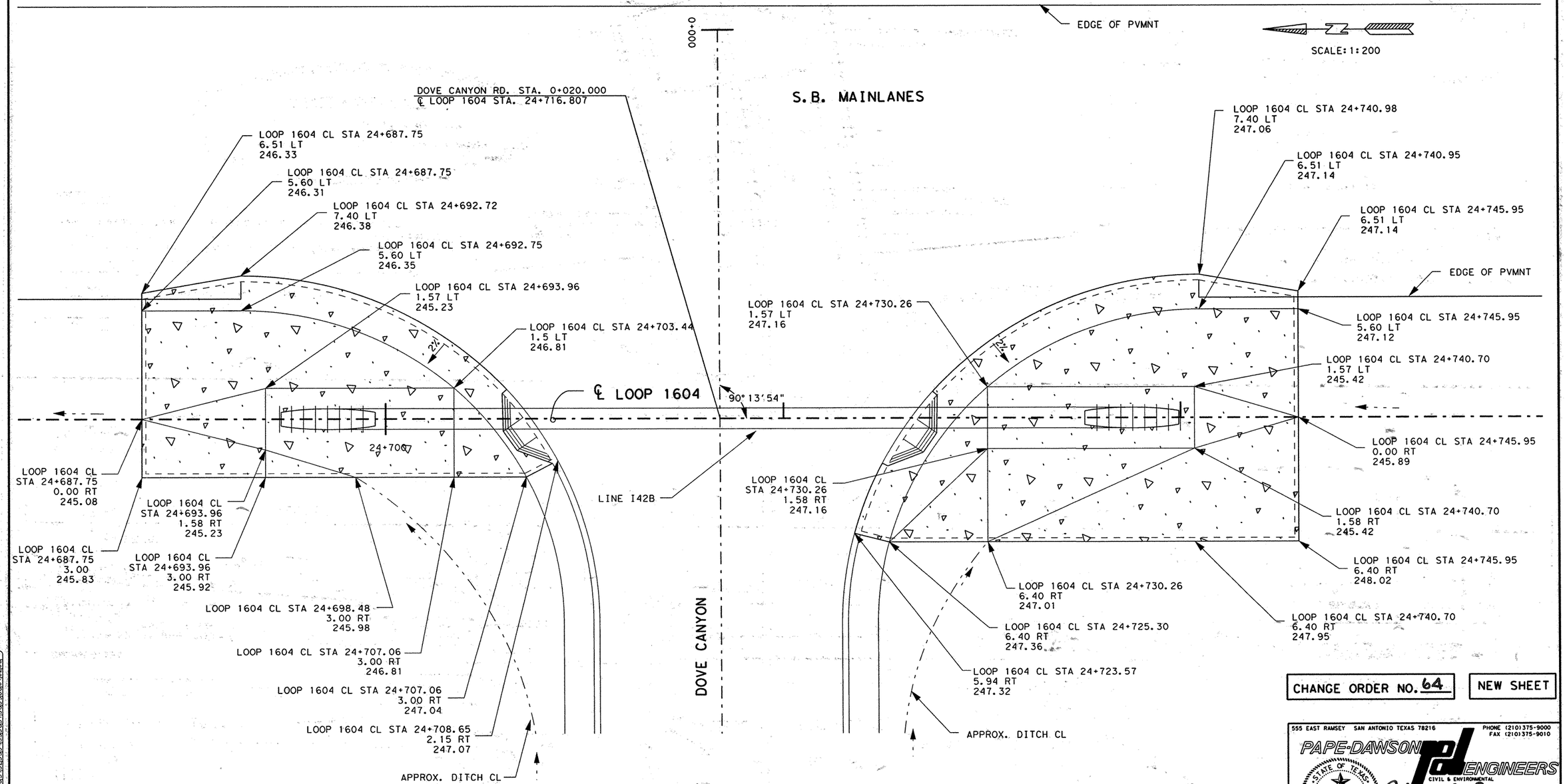


CHANGE ORDER NO. 64

NEW SHEET

CHANGE ORDER NO. 64
-ADDED INTERSECTION DETAILS

NOTES

1. ALL STATION AND OFFSET INFORMATION IS REFERENCED TO THE LOOP 1604 CL UNLESS OTHERWISE NOTED.
2. ELEVATIONS SHOWN REFLECT FINISH GRADE.

LEGEND

DIRECTION OF FLOW

555 EAST RAMSEY SAN ANTONIO TEXAS 78216
PHONE (210)375-9000
FAX (210)375-9010
PAPE-DAWSON ENGINEERS
CIVIL & ENVIRONMENTAL
STATE OF TEXAS
J. KENT O'BRIEN
64398
LICENSED
PROFESSIONAL ENGINEER
J. KENT O'BRIEN P.E.
1/27/2004
DATE

©2000 Texas Department of Transportation

# INTERSECTION DETAILS
## LOOP 1604 AT DOVE CANYON

| FED. RD. DIV. NO. | FEDERAL AID PROJECT NO. | | SHEET NO. |
|---|---|---|---|
| 6 | NH 2000(704), etc. | | 331C |
| STATE | DIST. | COUNTY | |
| TEXAS | SAT | BEXAR | |
| CONT. | SECT. | JOB | HIGHWAY NO. |
| 2452 | 01 | 036, etc. | LP 1604 |

Design Filename: p:\52\2011\design\civil\plansheets\road\intersections\int15(dove)det.dgn
FILE p:\52\2011\design\civil\plansheets\road\intersections\int15(dove)det.dgn
LEVEL 1 1 2 3 4 5 6 7 8 9 10 11 12 13 14 15 16 17 18 19 20 21 22 23 24 25 26 27 28 29 30 31 32
DISPLAYED 33 34 35 36 37 38 39 40 41 42 43 44 45 46 47 48 49 50 51 52 53 54 55 56 57 58 59 60 61 62 63

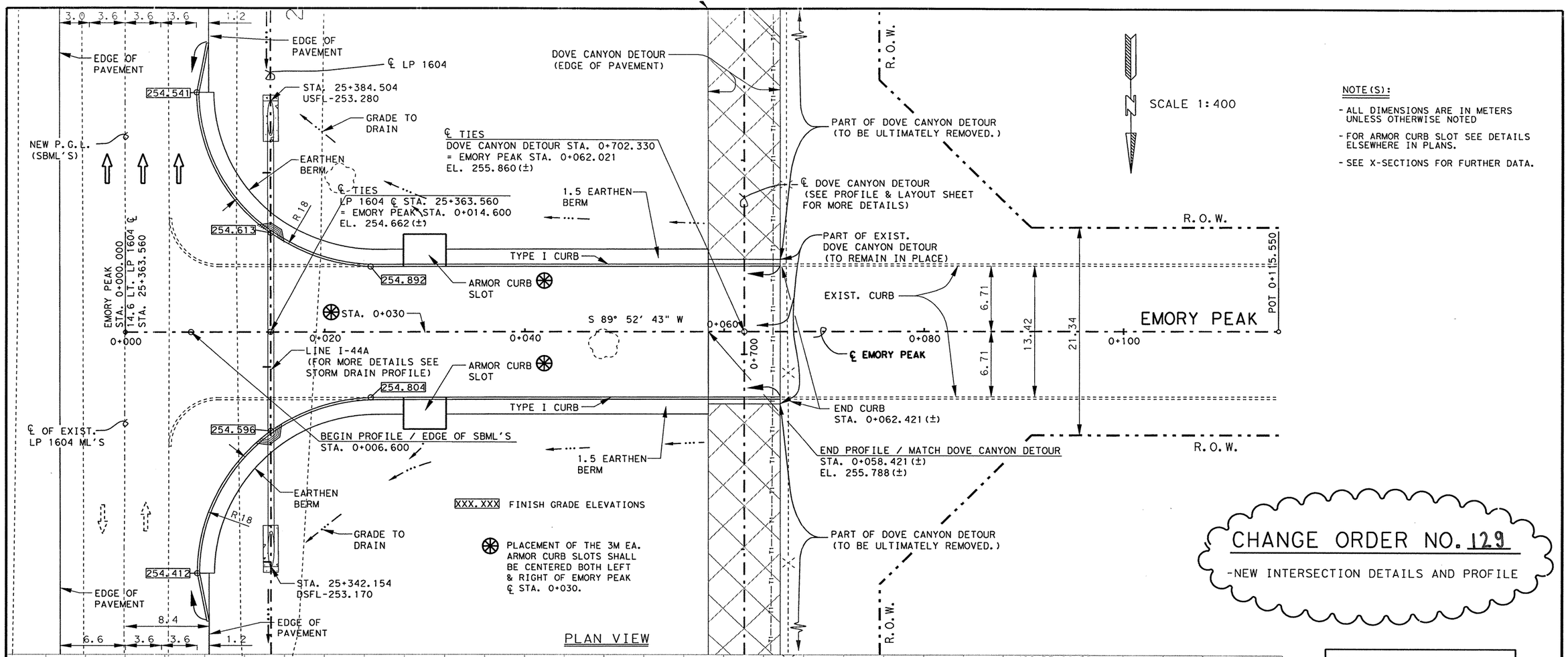


PLAN VIEW

NOTE(S):

- ALL DIMENSIONS ARE IN METERS UNLESS OTHERWISE NOTED
- FOR ARMOR CURB SLOT SEE DETAILS ELSEWHERE IN PLANS.
- SEE X-SECTIONS FOR FURTHER DATA.

CHANGE ORDER NO. 129

-NEW INTERSECTION DETAILS AND PROFILE

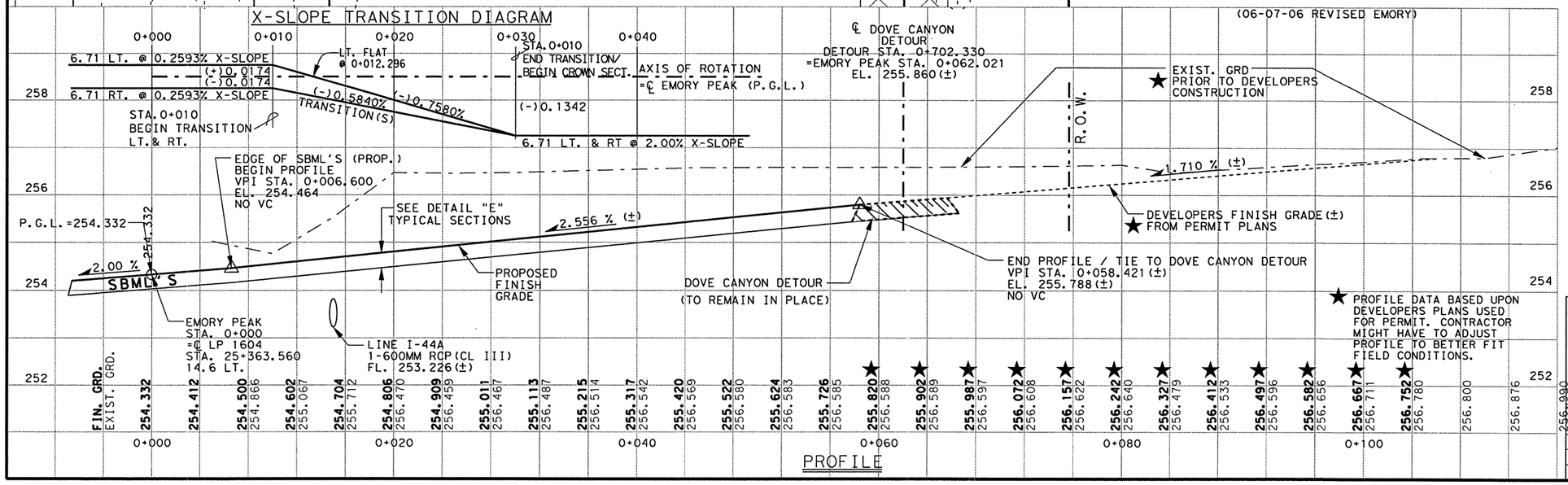


PROFILE

CHANGE ORDER 129

NEW SHEET

STATE OF TEXAS
FITZGERALDO G. SANCHEZ
76084
LICENCED PROFESSIONAL ENGINEER

Fitzgeraldo G. Sanchez 06-15-06
Fitzgeraldo G. Sanchez, P.E. Date

© 2001
Texas Department of Transportation

INTERSECTION LAYOUT/PROFILE
LOOP 1604 @ EMORY PEAK

| FED.RD. DIV.NO. | FEDERAL AID PROJECT NO. | | SHEET NO. |
|---|---|---|---|
| 6 | NH 2000(704), etc | | 331D |
| STATE | DIST. | COUNTY | |
| TEXAS | SAT | BEXAR | |
| CONT. | SECT. | JOB | HIGHWAY NO. |
| 2452 | 01 | 036, etc | LP 1604 |

LEVELS DISPLAYED
1 2 3 4 5 6 7 8 9 10 11 12 21 31 41 51 61
17 18 19 20 21 22 23 24 25 26 27 28 29 30 31 32
33 34 35 36 37 38 39 40 41 42 43 44 45 46 47 48
49 50 51 62 63 64 65 66 75 76 86 96 106 116 263

p1604fm471-90
emory*peak*dr.dgn

06-07-06

# PIPE CALCULATIONS

| LINE NO. | FROM | TO | DA NO. | TOTAL DA ha | TOTAL CA | TIME OF CONCENTRATION (MINUTES) LENGTH M | ALONG SEWER LINE | INLET TIME | USED IN DESIGN | I mm/HR | Q CMS | DESIGN STR. SIZE mm | SLOPE M/M | CAP. CMS | VEL. M/SEC | FREQ. YR | REMARKS |
|---|---|---|---|---|---|---|---|---|---|---|---|---|---|---|---|---|---|
| I-44A | INLET | OUTFALL | I44 | 0.735 | 0.368 | 48.0 | OVERLAND | 10 | 10 | 204.87 | 0.209 | 600 | 0.0026 | 0.340 | 1.34 | 10 | |

## ESTIMATED QUANTITIES

| DESCRIPTION | UNIT | QTY. |
|---|---|---|
| STRUCT EXCAV | M3 | 22 |
| RC PIPE (CL III) (600mm) | M | 35.2 |
| SET (TY II) (600mm) (1:6) | EA | 2 |
| | | |
| | | |

* SUPPLIED FOR CONTRACTORS INFORMATION ONLY.

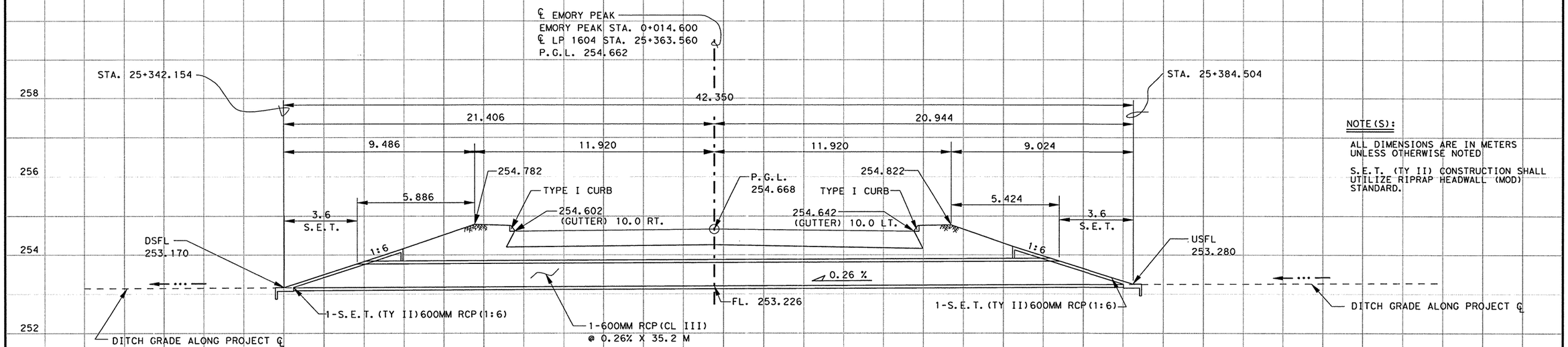


EMORY PEAK / LINE I-44A
(LOOKING BACKSTATION WISE)

NOTE(S):

ALL DIMENSIONS ARE IN METERS UNLESS OTHERWISE NOTED

S.E.T. (TY II) CONSTRUCTION SHALL UTILIZE RIPRAP HEADWALL (MOD) STANDARD.

CHANGE ORDER 129

NEW SHEET

CHANGE ORDER NO. 129

- NEW STORM DRAIN LINE ADDED @ EMORY PEAK.
- ADDED / REVISED PIPE CALCULATIONS
- NEW QUANTITIES

STATE OF TEXAS
FITZGERALDO G. SANCHEZ
76084
LICENCED PROFESSIONAL ENGINEER

Fitzgeraldo G Sanchez 06-15-06
Fitzgeraldo G. Sanchez, P.E. Date

SCALE 1:200 H
1:100 V

© 2001

Texas Department of Transportation

# LP 1604
# STORM DRAIN PROFILE
## LINE I-44A

| FED.RD. DIV.NO. | FEDERAL AID PROJECT NO. | | SHEET NO. |
|---|---|---|---|
| 6 | NH 2000(704), etc. | | 331E |
| STATE | DIST. | COUNTY | |
| TEXAS | SAT | BEXAR | |
| CONT. | SECT. | JOB | HIGHWAY NO. |
| 2452 | 01 | 036, etc. | LP 1604 |

06-07-06

LEVELS DISPLAYED
1 2 3 4 5 6 7 8 9 10 11 12 13 14 15 16
17 18 19 20 21 22 23 24 25 26 27 28 29 30 31 32
33 34 35 36 37 38 39 40 41 42 43 44 45 46 47 48
49 50 51 52 53 54 55 56 57 58 59 60 61 62 63

lp1604fm471-90
emory*peak*dr.dgn

SCALE: 1:400

℄ LP 1604

NEW P.G.L. (SBML'S)

255.667

STA. 25+732.446
USFL 254.429

GRADE TO DRAIN

38A

EDGE OF PAVEMENT

R 16

LINE I-47 A

TY I CURB

1.5 EARTHEN BERM

255.912

256.113

256.117

255.966

255.814

255.646

6.1

12.2

POT 0+000.000

DODGE CITY TRAIL
STA. 0+000.000
=14.6 LT. LP 1604 ℄ STA. 25+712.000

0+000

S 75° 48' 07" W

0+020

0+040

0+050

0+060

℄ DODGE CITY TRAIL

℄ DRIVE
STA. 0+050

256.121

255.882

DODGE CITY TRAIL
STA. 0+014.600
LP 1604 ℄ STA. 25+712.000
EL. 225.953

TY I CURB

1.5 EARTHEN BERM

PC 0+065.005

25+700

℄ OF EXIST. LP 1604 ML'S

255.553

R 16

3.0 SHLDR | 3.6 | 3.6 | 3.6 | 1.2 SHLDR

STA. 25+691.188
DSFL 254.322

GRADE TO DRAIN

END CONSTRUCTION
MATCH EXIST. (±)

3.25 | 3.25

R.O.W.

TRANSITION / END TY 1 CURB

38B

ARMOR CURB SLOT (3M)
18.77 LT., STA. 0+084 .767
GUTTER EL. 255.077

CAGNON RD.

R 30.5

255.077

S 0° 01' 46" W

TRANSITION / END TY 1 CURB

R 4

255.517

255.620

PI 0+080

℄ DRIVE
STA. 0+089.837

PT 0+089.837

N 89° 58' 14" W

0+100

18.2 | 15.0 | 9.1 | 6.1 | 6.1

DODGE CITY TRAIL

ARMOR CURB SLOT (3M)
6.10 RT., STA. 0+084
GUTTER EL. 255.503

255.610

END CONSTRUCTION / MATCH EXIST.
STA. 0+096 (±) @ R.O.W.
EL. 255.670

NOTE(S):

- ALL DIMENSIONS ARE IN METERS UNLESS OTHERWISE NOTED
- FOR ARMOR CURB SLOT SEE DETAILS ELSEWHERE IN PLANS.
- SEE X-SECTIONS FOR FURTHER DATA.

(#) DRIVEWAY #, FOR MORE DETAILS SEE SHEET(S) _____.

XXX.XXX FINISH GRADE ELEVATION

PLAN

CHANGE ORDER NO. 129
-NEW INTERSECTION DETAILS

## X-SLOPE TRANSITION DIAGRAM

0+000 | 0+010 | 0+020 | 0+030 | 0+040 | 0+090

6.1 LT. @ 0.2593% X-SLOPE
(+)0.0158
(-)0.0158
6.1 RT. @ 0.2593% X-SLOPE

6.1 LT. FLAT @ 0+010.293

(-)0.5310%
(-)0.6890%
TRANSITION(S)

BEGIN TRANS LT. & RT.
STA. 0+008

(-)0.1220
END TRANS
BEGIN CROWN SECTION
STA. 0+030
6.1 LT. & RT @ 2.00% X-SLOPE

AXIS OF ROTATION
=℄ DODGE CITY TRAIL (P.G.L.)

AXIS OF ROTATION
=℄ DODGE CITY TRAIL (P.G.L.)
(-)0.072

(+)0.70%
(+)0.62%
(-)0.030
3.6 LT. @ 0.82% X-SLOPE
(-)0.035
3.6 RT. @ 0.98% X-SLOPE
3.6 LT.& RT. @ 2.00% X-SLOPE

STA. 0+096
END CONSTRUCT
MATCH EXIST.

R.O.W.

VPC 0+008.000
EL. = 255.652

VPC 0+050.000
EL. = 256.088

PROFILE GRADE
= FINISH GRADE

END CONSTRUCTION / MATCH EXIST.
STA. 0+096 @ R.O.W.
EL. 255.670

SEE DETAIL "E"
ON TYPICAL SECTIONS

258

256

254

252

P.G.L. LP 1604

℄ LP 1604

255.236

14.6

P.G.L. 255.236

(+)5.20%

(-)2.74%

(+)0.50%(±)

SBML'S

VPI STA. = 0+028
EL. = 256.692
VC = 40
Ext = -0.397
K = 5

VPT 0+048.000
EL. = 256.143

VPI STA. = 0+070
EL. = 255.540
VC = 40
Ext = 0.162
K = 12

VPT 0+096.000
EL. = 255.670

DEVELOPERS FINISH GRADE

BEGIN PROFILE (MATCH SBFR "B")
4.8 LT. LP 1604 ℄ STA. 25+712.000 (SBFR"B")
= STA. 0+008.000 (DODGE CITY TRAIL)
EL. 255.652

LINE I-47A
600mm RCP
FL. 254.377(+/-)

EXIST. GRD.

| 0+000 | 0+020 | 0+040 | 0+060 | 0+080 |
|---|---|---|---|---|
| 255.236 / 255.390 | 255.444 / 255.516 | 255.652 / 255.591 | 255.844 / 255.283 | 256.004 / 255.299 |
| 256.133 / 255.387 | 256.230 / 255.418 | 256.295 / 255.449 | 256.328 / 255.479 | 256.330 / 255.510 |
| 256.299 / 255.541 | 256.237 / 255.545 | 256.143 / 255.536 | 256.035 / 255.518 | 255.939 / 255.498 |
| 255.855 / 255.477 | 255.784 / 255.462 | 255.726 / 255.466 | 255.681 / 255.471 | 255.649 / 255.471 |
| 255.631 / 255.480 | 255.625 / 255.557 | 255.632 / 255.633 | 255.650 / 255.700 | 255.670 / 255.737 |

CHANGE ORDER 129

NEW SHEET

STATE OF TEXAS
FITZGERALDO G. SANCHEZ
76084
LICENCED
PROFESSIONAL ENGINEER

Fitzgeraldo G. Sanchez 06-15-06
Fitzgeraldo G. Sanchez, P.E. Date

©2005

Texas Department of Transportation

# INTERSECTION LAYOUT/PROFILE

**LOOP 1604 @ DODGE CITY TRAIL & CAGNON RD.**

| FED. RD. DIV. NO. | FEDERAL AID PROJECT NO. | | SHEET NO. |
|---|---|---|---|
| 6 | NH 2000(704), etc | | 331F |
| STATE | DIST. | COUNTY | |
| TEXAS | SAT | BEXAR | |
| CONT. | SECT. | JOB | HIGHWAY NO. |
| 2452 | 01 | 036, etc | LP 1604 |

06-07-06

LEVELS DISPLAYED
1 2 3 4 5 6 7 8 9 10 11 12 13 14 15 16
17 18 19 20 21 22 23 24 25 26 27 28 29 30 31 32
33 34 55 56 57 58 59 40 41 42 43 44 45 46 47 48
49 50 51 62 53 54 55 65 57 58 59 60 61 62 63

lp1604fm471-90
dodge*city*trail.dgn

# PIPE CALCULATIONS

| LINE NO. | FROM | TO | DA NO. | TOTAL DA ha | TOTAL CA | LENGTH M | TIME OF CONCENTRATION (MINUTES) ALONG SEWER LINE | INLET TIME | USED IN DESIGN | I mm/HR | Q CMS | DESIGN STR. SIZE mm | SLOPE M/M | CAP. CMS | VEL. M/SEC | FREQ. YR | REMARKS |
|---|---|---|---|---|---|---|---|---|---|---|---|---|---|---|---|---|---|
| I-47A | INLET | OUTFALL | I47A | 0.476 | 0.242 | 41 | OVERLAND | 4 | 10 | 204.87 | 0.138 | 600 | 0.0026 | 0.340 | 1.220 | 10 | |

## ESTIMATED QUANTITIES

| | DESCRIPTION | UNIT | QTY. |
|---|---|---|---|
| * | STRUCT EXCAV | M3 | 20 |
| | RC PIPE (CL III) (600mm) | M | 34.1 |
| | SET (TY II) (600mm) (1:6) | EA | 2 |
| | | | |
| | | | |

* SUPPLIED FOR CONTRACTORS INFORMATION ONLY.

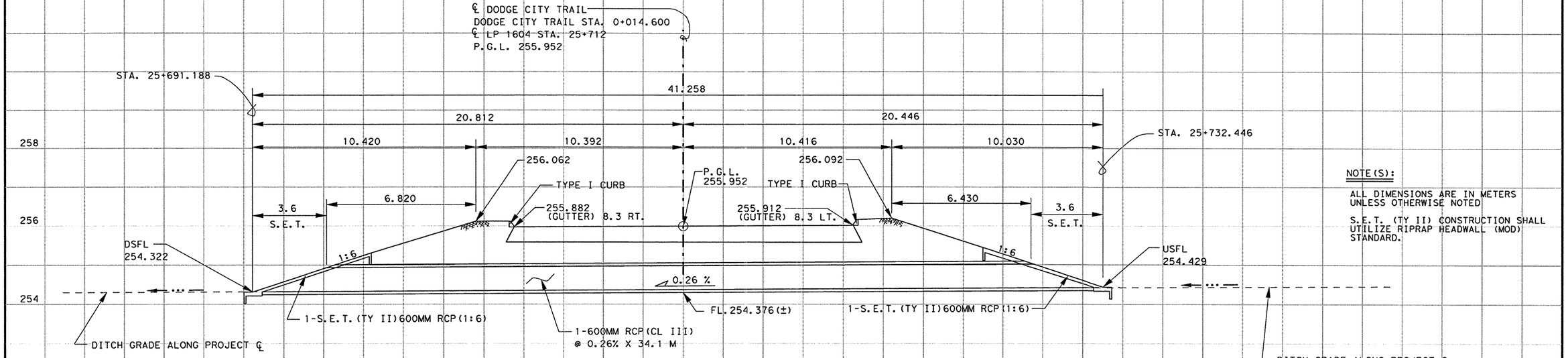


DODGE CITY TRAIL / LINE I-47A
(LOOKING BACK STATION WISE)

NOTE(S):

ALL DIMENSIONS ARE IN METERS UNLESS OTHERWISE NOTED

S.E.T. (TY II) CONSTRUCTION SHALL UTILIZE RIPRAP HEADWALL (MOD) STANDARD.

CHANGE ORDER 129

NEW SHEET

CHANGE ORDER NO. 129
-NEW STORM DRAIN LINE ADDED @ DODGE CITY TRAIL.
-ADDED PIPE CALCULATIONS
-NEW QUANTITIES

STATE OF TEXAS
FITZGERALDO G. SANCHEZ
76084
LICENCED PROFESSIONAL ENGINEER

Fitzgeraldo G. Sanchez, P.E. 06-15-06 Date

SCALE 1:200 H
1:100 V

©2005

Texas Department of Transportation

# LP 1604
# STORM DRAIN PROFILE
## LINE I-47A

| FED.RD. DIV.NO. | FEDERAL AID PROJECT NO. | | SHEET NO. |
|---|---|---|---|
| 6 | NH 2000(704), etc. | | 331G |
| STATE | DIST. | COUNTY | |
| TEXAS | SAT | BEXAR | |
| CONT. | SECT. | JOB | HIGHWAY NO. |
| 2452 | 01 | 036, etc. | LP 1604 |

LEVELS DISPLAYED
1 2 3 4 5 6 7 8 9 10 11 12 13 14 15 16
17 18 19 20 21 22 23 24 25 26 27 28 29 30 31 32
33 34 35 36 37 38 39 40 41 42 43 44 45 46 47 48
49 50 51 52 53 54 55 65 75 85 96 06 16 26 36

p1604fm471-90
dodge*city*trail.dgn

06-07-06

(1) △=95°56'38.317"
T=27.74
L=41.86
R=25.00
X=628616.0661
Y=4174794.4031

(3) △=21°27'9.660"
T=3.38
L=6.69
R=17.87
X=628564.8056
Y=4174786.1542

(4) △=21°27'9.980"
T=3.38
L=6.69
R=17.87
X=628561.3506
Y=4174784.1562

(2) △=84°38'46.756"
T=27.32
L=44.32
R=30.00
X=628657.2208
Y=4174733.2233

(5) △=21°27'7.981"
T=3.38
L=6.69
R=17.87
X=628618.7374
Y=4174692.8914

(6) △=21°27'6.827"
T=3.38
L=6.69
R=17.87
X=628615.2824
Y=4174690.8934

SCALE 1:500

NOTE(S):

-ALL DIMENSIONS ARE IN METERS UNLESS OTHERWISE NOTED.
-FOR ADDITIONAL HOIZONTAL ALIGNMENT \ DATA SEE SHEET 164-171.
-FOR PAVEMENT MARKING LAYOUTS \ DETAILS, SEE SHEET 808.
-FOR ILLUMINATION LAYOUTS \ DETAILS, SEE SHEETS 623.
-FOR TRAFFIC SIGNAL LAYOUTS \ DETAILS, SEE SHEETS 575-577.

WHEELCHAIR RAMPS FOR DETAILS SEE SHEET 335, 336 & 357.

000.000 = FINISH GRADE ELEVATION.

STATE OF TEXAS
JOEL K. DAVENPORT, JR.
79276
REGISTERED PROFESSIONAL ENGINEER

Joel K. Davenport, Jr. P.E. 79276 — 9/18/00 Date

EXIST. MARBACH RD.
END CONSTRUCT \ MATCH EXIST. STA 0+219.243
END RETURN LT 9.35 MARBACH RD. STA. 0+186.40
END RETURN RT 9.35 MARBACH RD. STA. 0+184.16
MARBACH ROAD
MARBACH RD STA 0+150.000 =NB'D FR RD LP 1604 STA 8+278.331
R.O.W.
END RETURN LT 7.8 N.B. FR. RD. STA. 8+243.00
END RETURN LT 7.8 N.B. FR. RD. STA. 8+316.56
PC STA 0+164.295
N.B. FRONTAGE RD.
S.B. MAINLANES
PT STA 0+161.922 N 26°13'32.55" E 1:15 TAPER
END NORTH TAR STA 0+199.772 =7.8 M RT @ NB FR RD STA 8+187.11
END CURB\FLARE
BEGIN NORTH TAR STA 0+100 =21.8 M LT @ LP 1604 STA 26+207.72
S 33°51'13.92" E 1:15 TAPER
PC STA 0+137.855
NTAR
STAR
℄ MARBACH ROAD
N 59° 57' 35.15" E
PT STA 0+161.922 S 33°51'13.89" E 1:15 TAPER
END SOUTH TAR STA 0+199.772 =7.8 M RT @ NB FR RD STA 8+369.58
BEGIN SOUTH TAR STA 0+100 =21.8 M LT @ LP 1604 STA 26+390.19
1:15 TAPER N 26°13'32.63" E
PC STA 0+137.855
23 LT ℄ LP 1604
℄ LP 1604
MARBACH RD STA. 0+100.000 LP 1604 ℄ STA. 26+298.940
S 30° 2' 23.20" E
S 30° 2' 23.18" E

Texas Department of Transportation

# INTERSECTION LAYOUT
## LOOP 1604 AT MARBACH RD.

| FED. RD. DIV. NO. | FEDERAL AID PROJECT NO. | | SHEET NO. |
|---|---|---|---|
| 6 | NH 2000(704), etc. | | 332 |
| STATE | DIST. | COUNTY | |
| TEXAS | SAT | BEXAR | |
| CONT. | SECT. | JOB | HIGHWAY NO. |
| 2452 | 01 | 036, etc. | LP 1604 |

FILE: t:\ao\design\lp1604fm471-90\intersections\int11(marbach).dgn 13 SEP 2000
LEVEL DISPLAYED

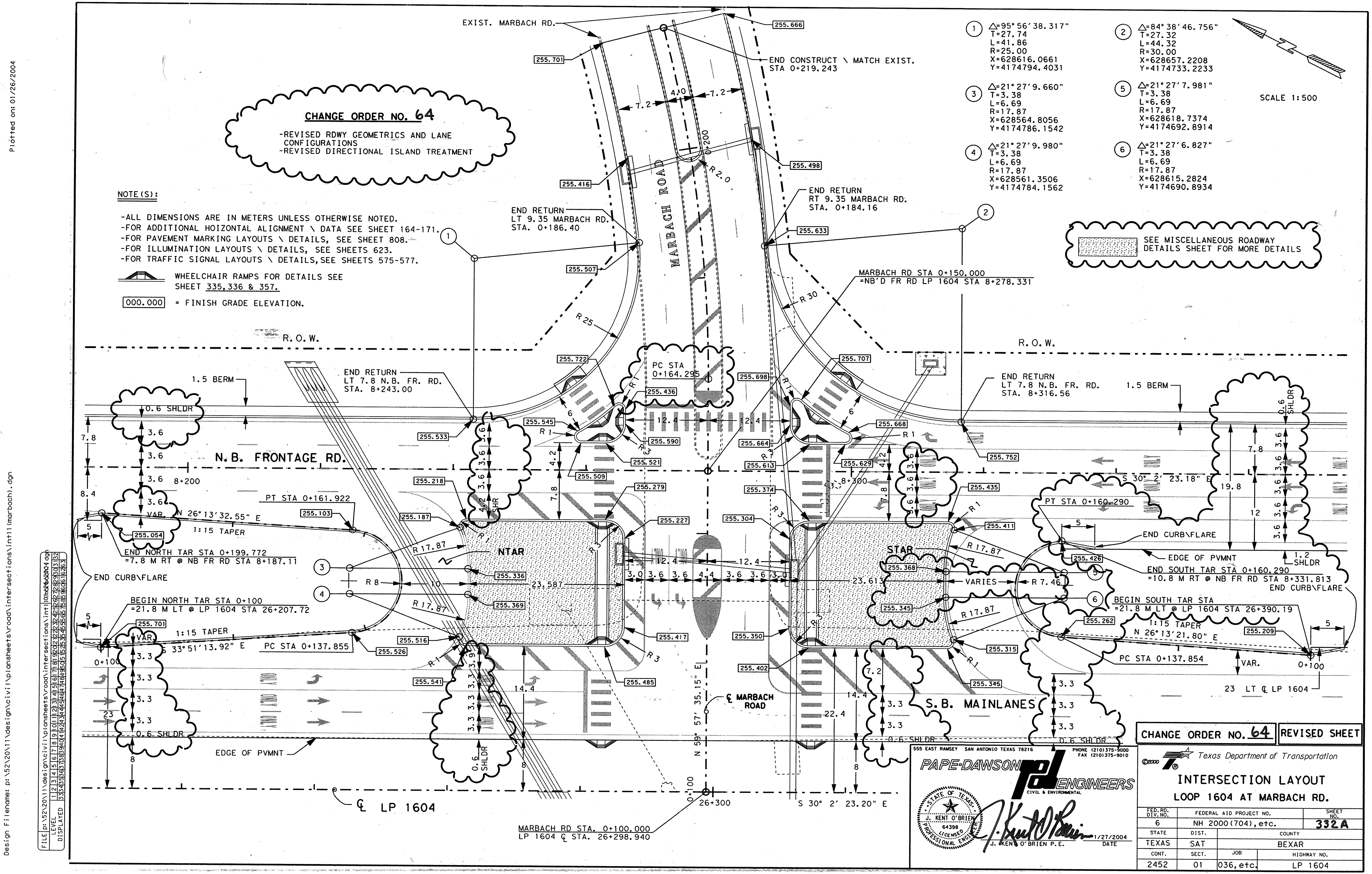
Plotted on: 01/26/2004
Design Filename: p:\52\20\11\design\civil\plansheets\road\intersections\int11(marbach).dgn
FILE p:\52\20\11\design\civil\plansheets\road\intersections\int11(marbach).dgn 1/26/2004
LEVEL DISPLAYED
CHANGE ORDER NO. 64
-REVISED RDWY GEOMETRICS AND LANE CONFIGURATIONS
-REVISED DIRECTIONAL ISLAND TREATMENT
NOTE(S):
-ALL DIMENSIONS ARE IN METERS UNLESS OTHERWISE NOTED.
-FOR ADDITIONAL HOIZONTAL ALIGNMENT \ DATA SEE SHEET 164-171.
-FOR PAVEMENT MARKING LAYOUTS \ DETAILS, SEE SHEET 808.
-FOR ILLUMINATION LAYOUTS \ DETAILS, SEE SHEETS 623.
-FOR TRAFFIC SIGNAL LAYOUTS \ DETAILS, SEE SHEETS 575-577.
WHEELCHAIR RAMPS FOR DETAILS SEE SHEET 335, 336 & 357.
000.000 = FINISH GRADE ELEVATION.
1 △=95° 56′ 38.317" T=27.74 L=41.86 R=25.00 X=628616.0661 Y=4174794.4031
2 △=84° 38′ 46.756" T=27.32 L=44.32 R=30.00 X=628657.2208 Y=4174733.2233
3 △=21° 27′ 9.660" T=3.38 L=6.69 R=17.87 X=628564.8056 Y=4174786.1542
5 △=21° 27′ 7.981" T=3.38 L=6.69 R=17.87 X=628618.7374 Y=4174692.8914
4 △=21° 27′ 9.980" T=3.38 L=6.69 R=17.87 X=628561.3506 Y=4174784.1562
6 △=21° 27′ 6.827" T=3.38 L=6.69 R=17.87 X=628615.2824 Y=4174690.8934
SCALE 1:500
SEE MISCELLANEOUS ROADWAY DETAILS SHEET FOR MORE DETAILS
EXIST. MARBACH RD.
END CONSTRUCT \ MATCH EXIST. STA 0+219.243
MARBACH ROAD
END RETURN LT 9.35 MARBACH RD. STA. 0+186.40
END RETURN RT 9.35 MARBACH RD. STA. 0+184.16
MARBACH RD STA 0+150.000 =NB′D FR RD LP 1604 STA 8+278.331
R.O.W.
PC STA 0+164.295
END RETURN LT 7.8 N.B. FR. RD. STA. 8+243.00
END RETURN LT 7.8 N.B. FR. RD. STA. 8+316.56
N.B. FRONTAGE RD.
PT STA 0+161.922
N 26° 13′ 32.55" E
1:15 TAPER
END NORTH TAR STA 0+199.772 =7.8 M RT @ NB FR RD STA 8+187.11
END CURB\FLARE
BEGIN NORTH TAR STA 0+100 =21.8 M LT @ LP 1604 STA 26+207.72
S 33° 51′ 13.92" E
PC STA 0+137.855
NTAR
STAR
23.587
23.613
EDGE OF PVMNT
℄ LP 1604
℄ MARBACH ROAD
N 59° 57′ 35.15" E
MARBACH RD STA. 0+100.000 LP 1604 ℄ STA. 26+298.940
S 30° 2′ 23.20" E
S 30° 2′ 23.18" E
PT STA 0+160.290
END CURB\FLARE
EDGE OF PVMNT
END SOUTH TAR STA 0+160.290 =10.8 M RT @ NB FR RD STA 8+331.813
END CURB\FLARE
BEGIN SOUTH TAR STA =21.8 M LT @ LP 1604 STA 26+390.19
N 26° 13′ 21.80" E
PC STA 0+137.854
23 LT ℄ LP 1604
S.B. MAINLANES
CHANGE ORDER NO. 64
REVISED SHEET
555 EAST RAMSEY SAN ANTONIO TEXAS 78216
PHONE (210)375-9000 FAX (210)375-9010
PAPE-DAWSON ENGINEERS CIVIL & ENVIRONMENTAL
STATE OF TEXAS J. KENT O'BRIEN 64398 LICENSED PROFESSIONAL ENGINEER
J. KENT O'BRIEN P.E.
1/27/2004 DATE
©2000 Texas Department of Transportation
INTERSECTION LAYOUT
LOOP 1604 AT MARBACH RD.
FED. RD. DIV. NO. 6
FEDERAL AID PROJECT NO. NH 2000(704), etc.
SHEET NO. 332A
STATE TEXAS
DIST. SAT
COUNTY BEXAR
CONT. 2452
SECT. 01
JOB 036, etc.
HIGHWAY NO. LP 1604

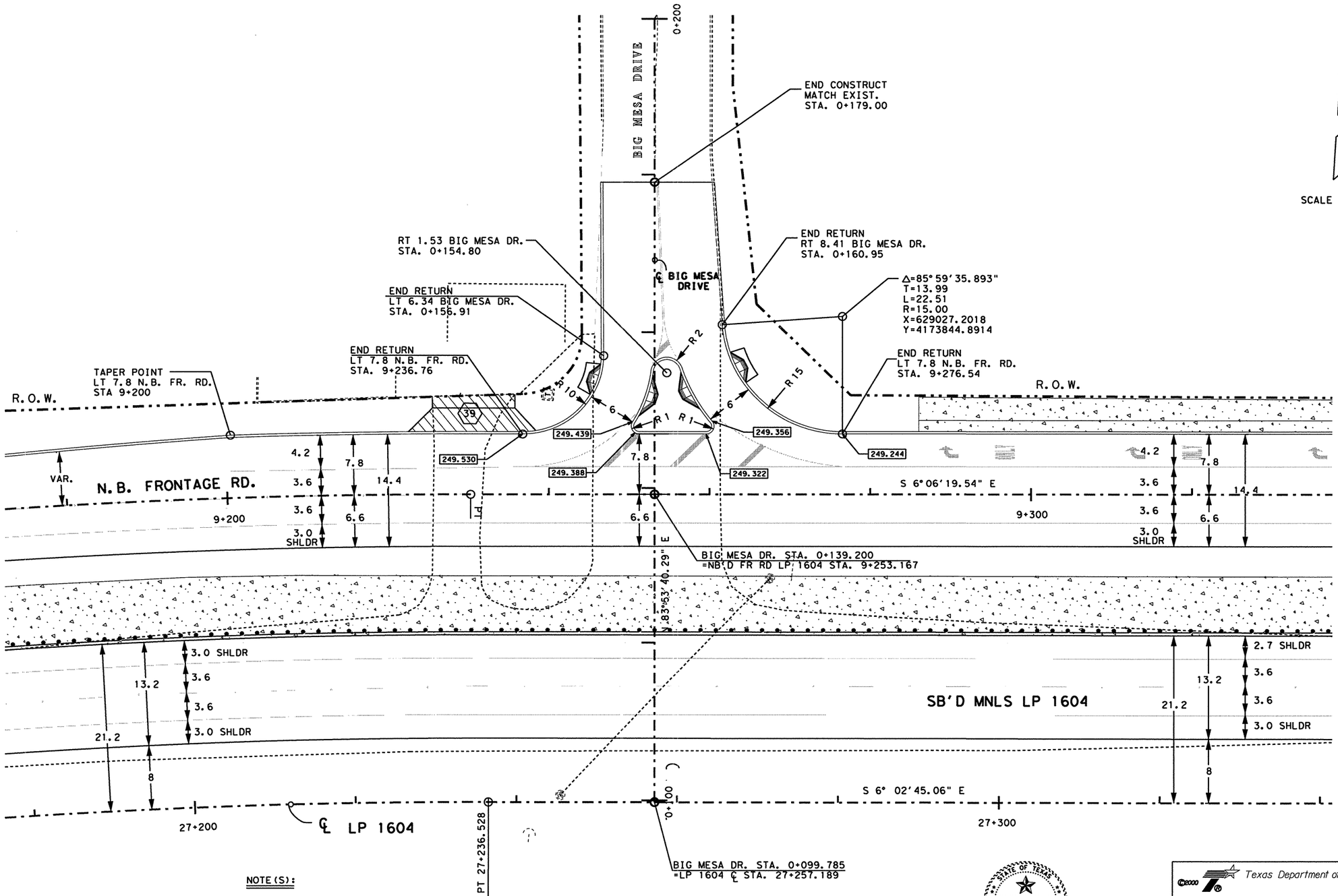


NOTE(S):

-ALL DIMENSIONS ARE IN METERS UNLESS OTHERWISE NOTED.

000.000 = FINISH GRADE ELEVATION.

(#) = DRIVEWAY # ,FOR MORE DETAILS SEE SHEET(S) 27,28 & 336.

WHEELCHAIR RAMPS FOR DETAILS SEE SHEET 335,336 & 357.

STATE OF TEXAS
JOEL K. DAVENPORT, JR.
79276
REGISTERED
PROFESSIONAL ENGINEER

Joel K. Davenport, Jr. P.E. 79276

9/18/00
Date

Texas Department of Transportation

# INTERSECTION LAYOUT
## LOOP 1604 AT BIG MESA DR.

| FED. RD. DIV. NO. | FEDERAL AID PROJECT NO. | | SHEET NO. |
|---|---|---|---|
| 6 | NH 2000(704),etc. | | 333 |
| STATE | DIST. | COUNTY | |
| TEXAS | SAT | BEXAR | |
| CONT. | SECT. | JOB | HIGHWAY NO. |
| 2452 | 01 | 036,etc. | LP 1604 |

FILE t:\oo\design\lp1604fm471-90\intersections\int12(bigmesa).dgn 3 SEP 2000
LEVEL DISPLAYED
1 2 3 4 5 6 7 8 9 10 11 12 13 14 15 16 17 18 19 20 21 22 23 24 25 26 27 28 29 30 31 32
33 34 35 36 37 38 39 40 41 42 43 44 45 46 47 48 49 50 51 52 53 54 55 56 57 58 59 60 61 62 63

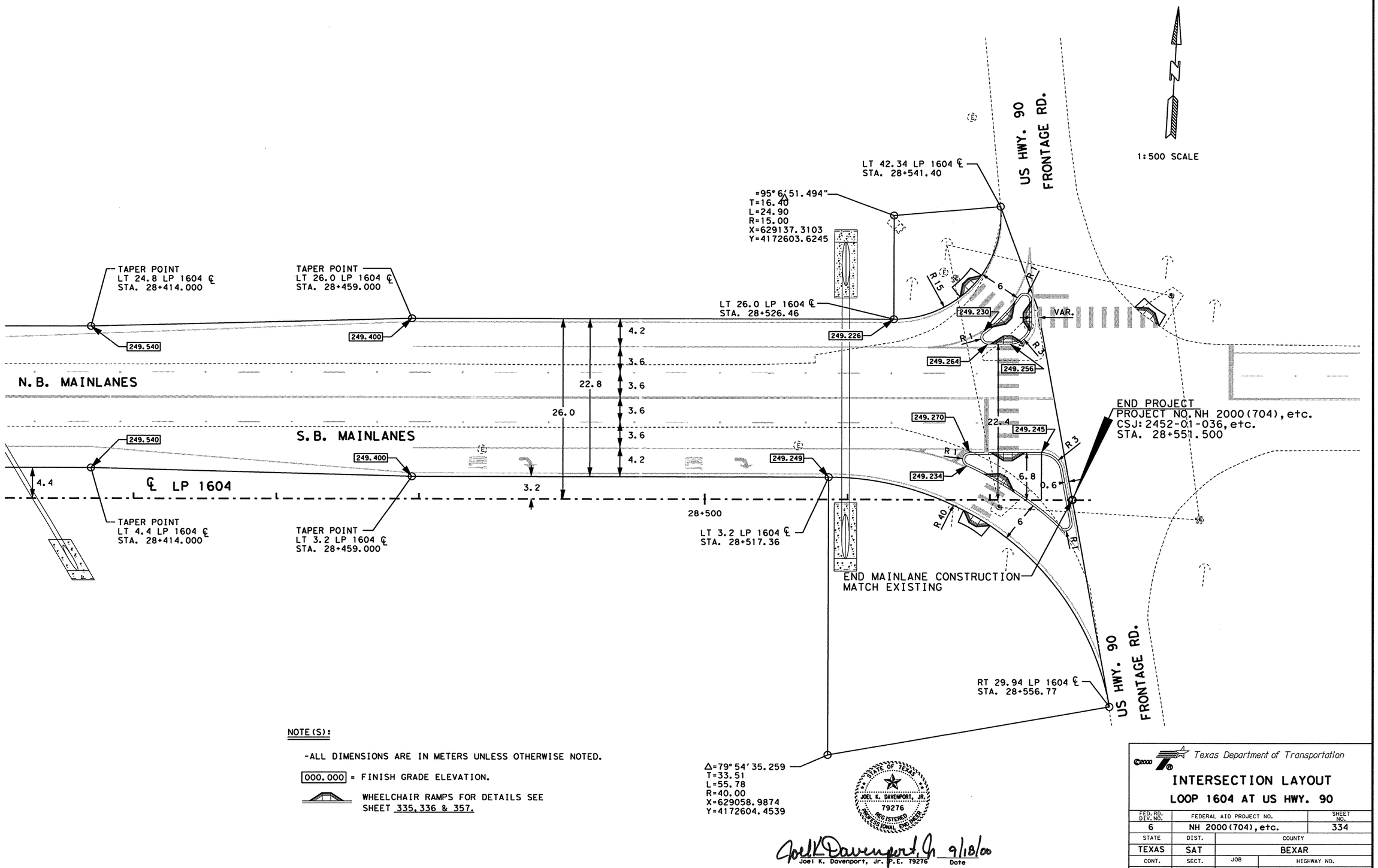


NOTE(S):

-ALL DIMENSIONS ARE IN METERS UNLESS OTHERWISE NOTED.

000.000 = FINISH GRADE ELEVATION.

WHEELCHAIR RAMPS FOR DETAILS SEE SHEET 335, 336 & 357.

STATE OF TEXAS
JOEL K. DAVENPORT, JR.
79276
REGISTERED
PROFESSIONAL ENGINEER

Joel K. Davenport, Jr. 9/18/00
Joel K. Davenport, Jr. P.E. 79276 Date

Texas Department of Transportation

# INTERSECTION LAYOUT
## LOOP 1604 AT US HWY. 90

| FED. RD. DIV. NO. | FEDERAL AID PROJECT NO. | | SHEET NO. |
|---|---|---|---|
| 6 | NH 2000(704), etc. | | 334 |
| STATE | DIST. | COUNTY | |
| TEXAS | SAT | BEXAR | |
| CONT. | SECT. | JOB | HIGHWAY NO. |
| 2452 | 01 | 036, etc. | LP 1604 |

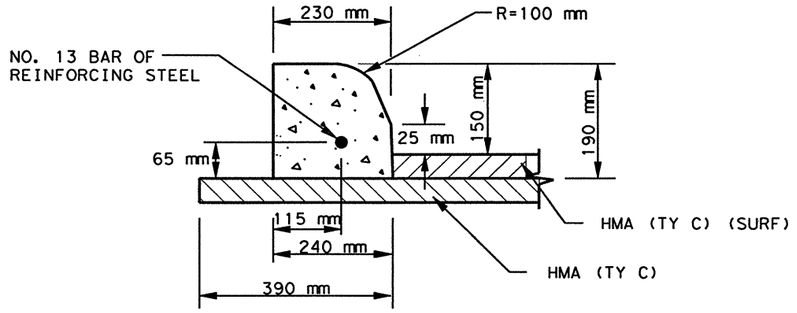


CONC CURB (TY A)

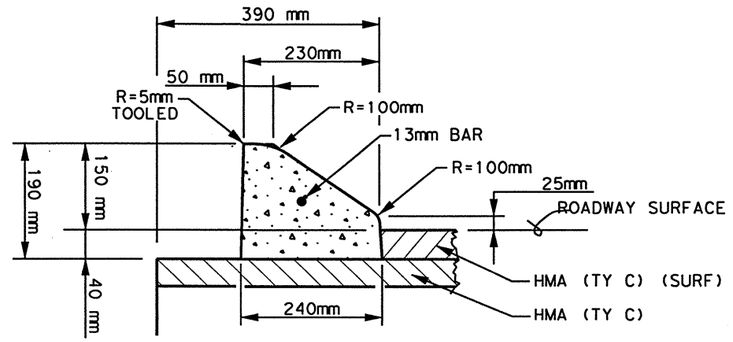


CONCRETE CURB ( TY 1)
( MOUNTABLE)

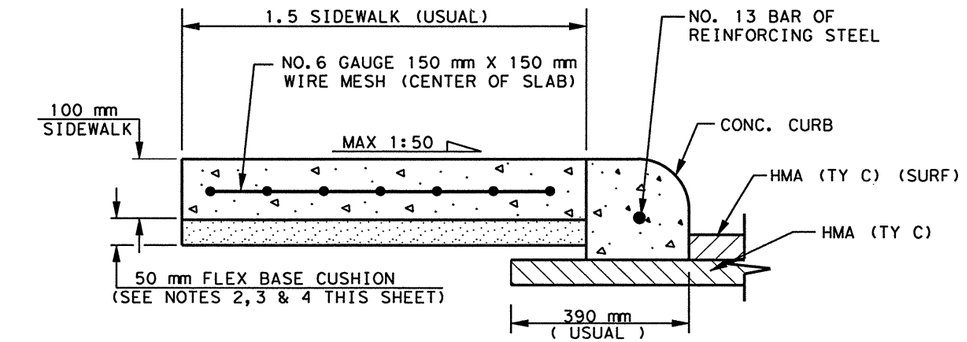


TYPICAL SIDEWALK

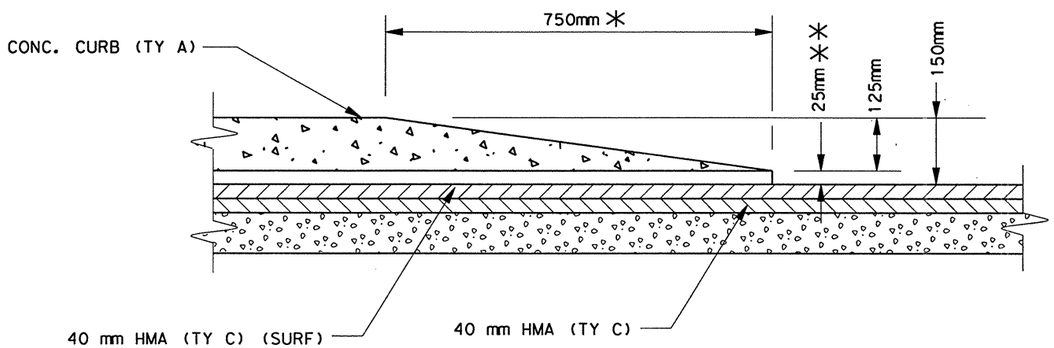


CURB END SECTION
@ INTERSECTING STREET
WITHOUT CURB

SCALE: NTS

NOTE(S): 1. DIMENSIONS ARE SHOWN IN METERS UNLESS OTHERWISE NOTED.

2. THE FLEX BASE CUSHION UNDER CONCRETE SIDEWALKS AND CONCRETE DRIVEWAYS MAY BE OF ANY TYPE AND GRADE APPROVED BY THE ENGINEER.

3. THE FLEX BASE CUSHION PLACED WILL BE SPRINKLED AND ROLLED / TAMPED AS APPROVED BY THE ENGINEER.

4. FURNISHING AND PLACING THE FLEX BASE CUSHION WILL BE SUBSIDIARY TO ITEM 531 "SIDEWALKS".

5. SEE THE RAMP-00B(M) STANDARD SHEETS FOR INFORMATION ON CURB RAMPS AND SIDEWALKS CROSSING DRIVEWAYS.

6. ALL RAMPS SHALL BE TENTED IN TERRA-COTA COLOR AS PER MANUFACTURES DIRECTIONS TO THE SATISFACTION OF THE ENGINEER.

* 1800 mm IF ADJOINING SIDEWALK ON WHEELCHAIR RAMP

** 0 mm IF ADJOINING SIDEWALK ON WHEELCHAIR RAMP

STATE OF TEXAS
JOEL K. DAVENPORT, JR.
79276
REGISTERED
PROFESSIONAL ENGINEER

Joel K. Davenport, Jr. P.E. 79276 — 11/1/00
Joel K. Davenport, Jr. P.E. 79276 — Date

©2000
Texas Department of Transportation

**MISCELLANEOUS ROADWAY DETAILS**

SHEET 1 OF 12

| FED.RD. DIV.NO. | FEDERAL AID PROJECT NO. | | SHEET NO. |
|---|---|---|---|
| 6 | NH 2000(704),etc. | | 335 |
| STATE | DIST. | COUNTY | |
| TEXAS | SAT | BEXAR | |
| CONT. | SECT. | JOB | HIGHWAY NO. |
| 2452 | 01 | 036,etc. | LP 1604 |

LEVELS DISPLAYED
1 2 3 4 5 6 7 8 9 10 11 12 13 14 15 16
17 18 19 20 21 22 23 24 25 26 27 28 29 30 31 32
33 34 35 36 37 38 39 40 41 42 43 44 45 46 47 48
49 50 51 52 53 54 55 56 57 58 59 60 61 62 63 64

ACC: t:\ao\design\lp1604fm471-90\
FILE: misc.dgn

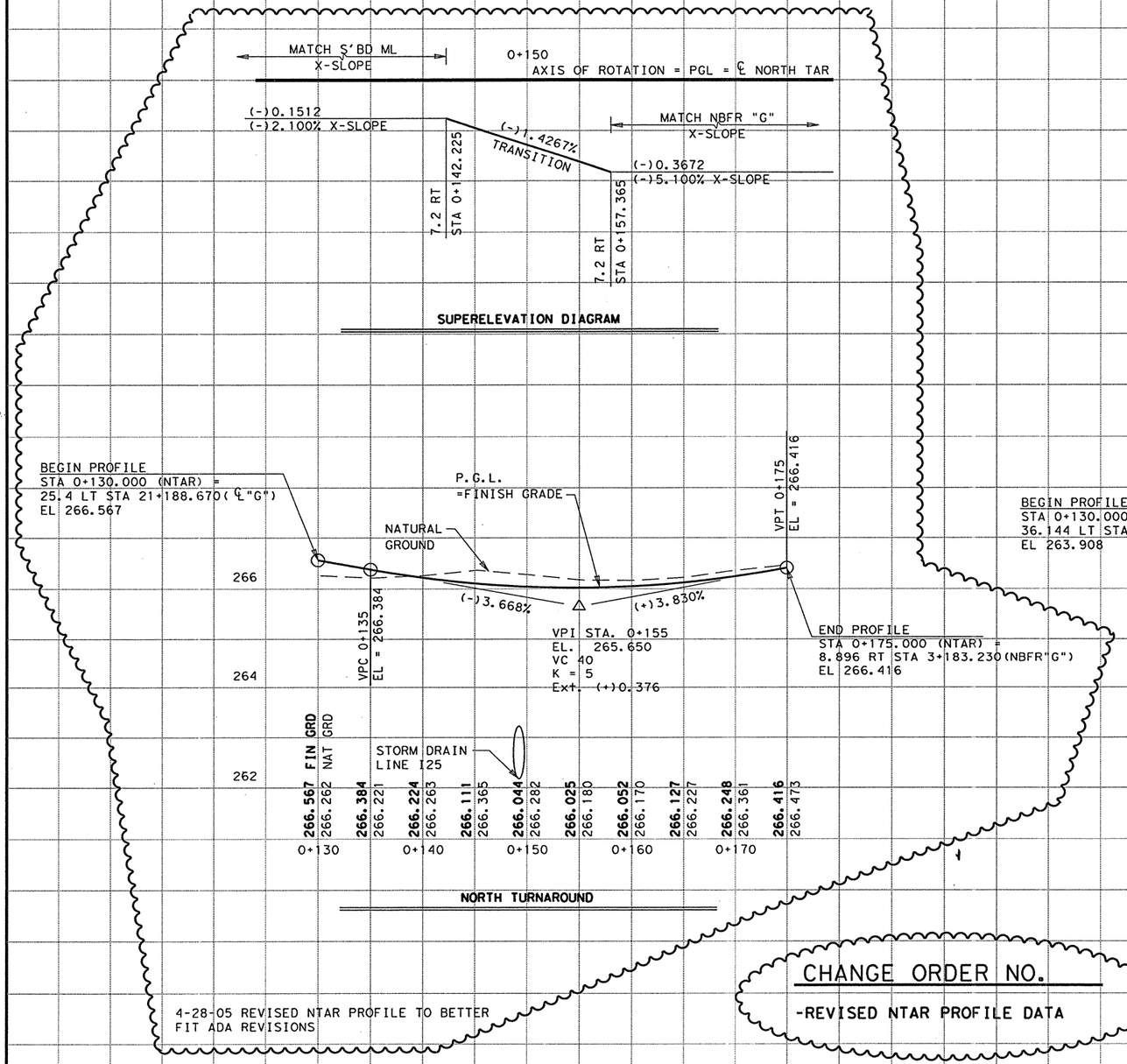


LEVELS DISPLAYED
1 2 3 4 5 6 7 8 9 10 11 12 13 14 15 16
17 18 19 20 21 22 23 24 25 26 27 28 29 30 31 32
33 34 35 36 37 38 39 40 41 42 43 44 45 46 47 48
49 50 51 52 53 54 55 56 57 58 59 60 61 62 63

ACC: lp1604fm471-90\
FILE: prof01.dgn

©2003

Texas Department of Transportation

# MILITARY DR.
# PROFILE

SHEET 2 OF 2

| FED.RD. DIV.NO. | FEDERAL AID PROJECT NO. | SHEET NO. |
|---|---|---|
| 6 | NH 2000(704),etc. | 305AA |
| STATE | DIST. | COUNTY |
| TEXAS | SAT | BEXAR |
| CONT. | SECT. | JOB / HIGHWAY NO. |
| 2452 | 01 | 036,etc. / LP 1604 |

8-01-06

Plotted on: 8/1/2006

MATCHLINE STA. 0+240.00

1 △=89° 30' 30.22" T=24.79 L=39.06 R=25.00 X=628193.8427 Y=4179729.4389

2 △=29° 14' 6.141" T=6.09 L=11.92 R=23.37 X=628140.2270 Y=4179745.6219

3 △=28° 13' 56.886" T=6.09 L=11.91 R=23.37 X=628136.2360 Y=4179745.5948

4 △=90° 29' 28.95" T=25.22 L=39.48 R=25.00 X=628082.2389 Y=4179729.6379

5 △=86° 55' 7.48" T=23.69 L=37.93 R=25.00 X=628194.3495 Y=4179654.9256

6 △=29° 12' 39.476" T=6.08 L=11.90 R=23.34 X=628140.9905 Y=4179637.8497

7 △=29° 21' 30.027" T=6.11 L=11.96 R=23.34 X=628136.9995 Y=4179637.8226

8 △=86° 43' 16.87" T=223.61 L=37.84 R=25.00 X=628082.7415 Y=4179655.7134

**CHANGE ORDER NO. 96**
-REVISED NTAR AND SHEET SPOT ELEV'S.

# REFERS TO CHANGES MADE AS PART OF CHANGE ORDER.

GRADE 5 AGGREGATE (SEE SHEET ___ FOR DETAILS)

SCALE 1:500

CONTRACTOR IS CAUTIONED ABOUT NEW GAS UTILITY IN VICINITY. 64

64 NEW GAS UTILITY

17

END PROFILE MATCH EXISTING STA. 0+240 262.930

END RETURN LT 12.4 MILITARY DR. STA. 0+231.25

END RETURN RT 12.16 MILITARY DR. STA. 0+228.82

263.202 263.249

R.O.W.

G1 G1

R25

1.5 SIDEWALK 64

1.5 SIDEWALK 64

264.330 264.363 263.823

END RETURN LT 7.8 N.B. FR. RD. STA. 3+204.03

END RETURN / SIDEWALK LT 7.8 N.B. FR. RD. STA. 3+278.54 64

1.5 BERM

263.882 263.385

264.698 263.797

265.288 263.960 263.845

264.737 264.461 264.578

N.B. FRONTAGE RD.

S 89° 53' 52.35" E

S 0° 23' 22.49" E

MILITARY DRIVE

0+200 3+200 3+300

MILITARY STA. 0+197.261
N. B. FR. RD. STA. 3+241.149

PT STA 0+170.189

263.962 263.815

264.204 264.320 263.823

265.418 264.821

267.327 266.196 265.486

PT STA 0+169.200

N 3° 25' 28.20" E

1:15 TAPER

END NORTH TAR STA 0+200.488
7.2 M RT @ NB FR RD STA 3+157.8 64

NTAR 264.821

STAR 264.099

R 12.673 R 23.37 R 23.34

EDGE OF PVMNT

263.284

END CURB\FLARE

END CURB\FLARE

END SOUTH TAR PT STA 0+170.189
10.8 M RT @ NB FR RD STA 3+294.563 64

265.647 265.735 264.178

17.67 18.578

BEGIN NORTH TAR STA 0+100
25.4 M LT @ LP 1604 STA. 21+158.668 64

BEGIN SOUTH TAR STA 0+100
21.8 M LT @ LP 1604 STA 21+325.779 64

S 0° 20' 02.01" E

266.567 265.927 265.297 264.796 264.378 263.954 263.223

PC STA 0+130.219

PC STA 0+131.275

0+100

1:15 TAPER

N 3° 25' 27.57" E

267.582 265.935 265.411 264.795 264.426

℄ MILITARY DRIVE

S.B. MAINLANES

266.450 265.855 265.654 265.038 264.921 264.687

EDGE OF PVMNT

EDGE OF PVMNT

END RETURN LT 6.2 ℄ LP 1604 STA. 21+203.80

265.919 265.661 265.736 265.156 264.950

END RETURN LT 6.2 ℄ LP 1604. STA. 21+277.72

S 0° 23' 22.46" E

℄ LOOP 1604

21+200

POT

265.816 265.252 265.237

S 0° 52' 42.30" W

PI

PC 21+300

R25

1.5 SDWLK

MILITARY DR. STA. 0+137.258
℄ LP 1604 STA. 21+241.357

S 87° 06' 38.21" E

265.981 265.844

END RETURN LT 11.46 MILITARY DR. STA. 0+117.55

MATCHLINE STA. 0+115.000

END RETURN RT 12.4 MILITARY DR. STA. 0+120.57

NOTE(S):

-ALL DIMENSIONS ARE IN METERS UNLESS OTHERWISE NOTED.
-FOR ADDITIONAL HOIZONTAL ALIGNMENT \ DATA SEE SHEET 164-171.
-FOR PAVEMENT MARKING LAYOUTS \ DETAILS, SEE SHEET 787.
-FOR ILLUMINATION LAYOUTS \ DETAILS, SEE SHEETS 620.
-FOR TRAFFIC SIGNAL LAYOUTS \ DETAILS, SEE SHEETS 565-569.

(#) = DRIVEWAY # , FOR MORE DETAILS SEE SHEET(S) 27, 28 & 336.

WHEELCHAIR RAMPS FOR DETAILS SEE SHEET 335, 336 & 357.

000.000 = FINISH GRADE ELEVATION.

4-28-05 REVISED SPOT ELEV'S INVOLVING THE NTAR.

CHANGE ORDER NO. 96 | REVISED SHEET

Texas Department of Transportation

# INTERSECTION LAYOUT
## LOOP 1604 AT MILITARY DR.
SHEET 1 OF 2

| FED. RD. DIV. NO. | FEDERAL AID PROJECT NO. | SHEET NO. |
|---|---|---|
| 6 | NH 2000(704), etc. | 327AA |
| STATE | DIST. | COUNTY |
| TEXAS | SAT | BEXAR |
| CONT. | SECT. | JOB / HIGHWAY NO. |
| 2452 | 01 | 036, etc. / LP 1604 |

STATE OF TEXAS — FITZGERALDO G. SANCHEZ — 76084 — LICENCED PROFESSIONAL ENGINEER

Fitzgeraldo G. Sanchez, P.E. 08-02-06 Date

8-01-06

Design Filename: T:\AO\Design\p1604fm471-90\mi1*temp\int8*1 (military).dgn

FILE T:\AO\Design\fm471-90\mi1*temp\int8*1 (military).dgn 8/1/2006
LEVEL 1 2 3 4 5 6 7 8 9 10 11 12 13 14 15 16 17 18 19 20 21 22 23 24 25 26 27 28 29 30 31 32
DISPLAYED 33 34 35 36 37 38 39 40 41 42 43 44 45 46 47 48 49 50 51 52 53 54 55 56 57 58 59 60 61 62 63

PLOTTED ON: 8/1/2006

| ESTIMATED QUANTITIES | | | |
|---|---|---|---|
| DESCRIPTION | UNIT | EST. | FINAL |
| CSJ 2452-01-036 | | | |
| STRUCT EXCAV | M3 | 111.0 | |
| RC PIPE (CL III) (600MM) | M | 64.961 | |
| INLET (COMPL) (CURB) (TY I) | EA | 3 | |
| TRENCH EXCAV PROTECT | M | 33.0 | |
| CL A CONC (COLLAR) | EA | 1 | |

64

* SUPPLIED FOR CONTRACTOR'S INFORMATION ONLY

NOTES:

1. ALL PIPES ARE NORMAL TO AND STRAIGHT FROM STRUCTURE TO STRUCTURE UNLESS OTHERWISE SHOWN ON INTERIOR DRAINAGE LAYOUTS
2. CONTRACTORS SHALL SHAPE INVERTS OF ALL PROPOSED INLETS, DROP INLETS AND MANHOLES TO CE POSITIVE FLOW THROUGH STRUCTURE FROM ALL INLETS TO THE OUTLET OF EACH STRUCTURE.
3. CONTRACTOR SHALL INSTALL ALL STORM DRAIN PIPES INTO MANHOLES, BOXES AND EXISTING STRUCTURES FLUSH WITH INSIDE FACE AND GROUT INTO PLACE, INSURING WATERTIGHT SEAL ALL AROUND.
4. ALL STATION AND OFFSET INFORMATION IS REFERENCED TO THE ℄ LOOP 1604 UNLESS OTHERWISE NOTED.
5. CONTRACTOR SHALL CONSTRUCT MANHOLES TO MINIMIZE CONFLICT WITH UTILITIES.
6. SET (TY II) CONSTRUCTION SHALL UTILIZE RIPRAP HEADWALL (MOD) STANDARD SHEET.

△# REFERS TO CHANGES MADE AS PART OF CHANGE ORDER.

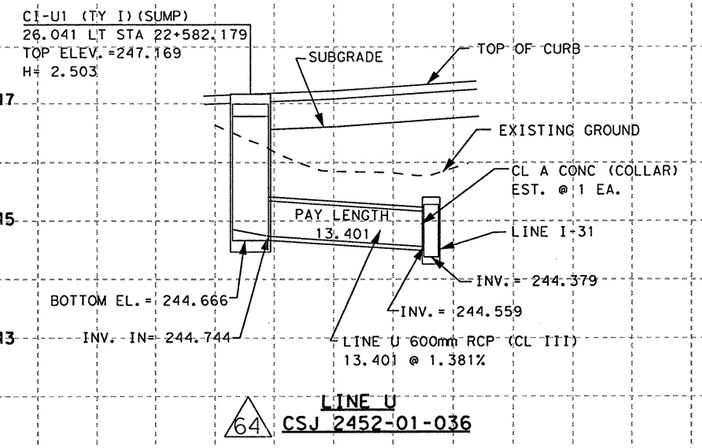


LINE U
CSJ 2452-01-036 64

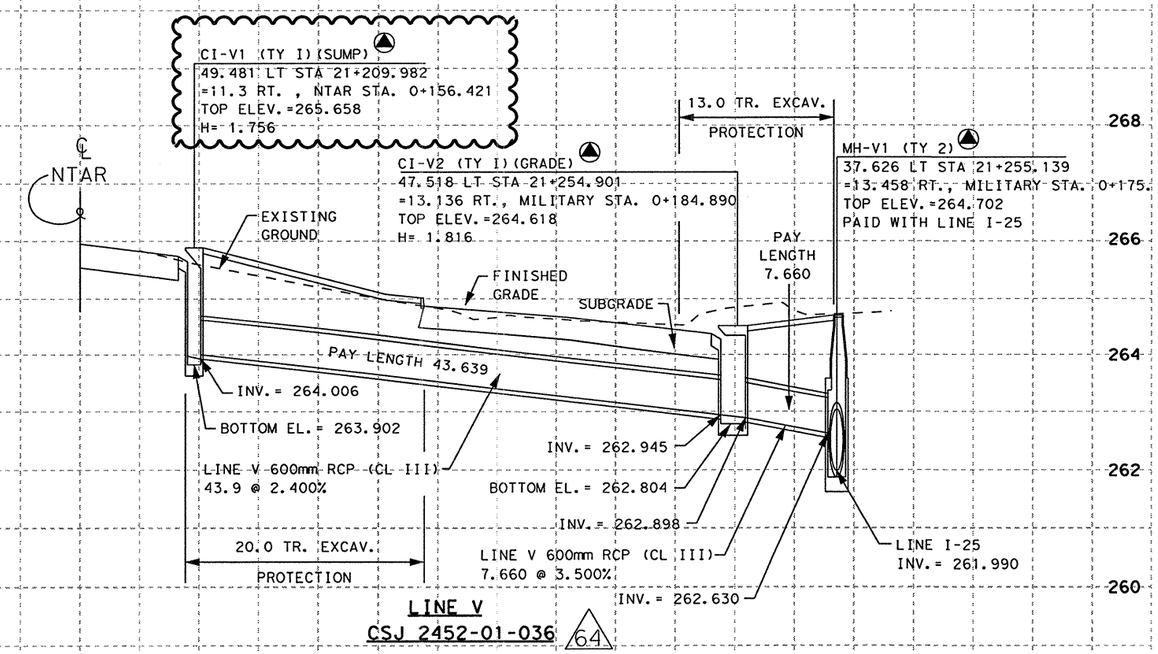


LINE V
CSJ 2452-01-036 64

4-28-05 ADJUSTED CI-V1 DATA TO BETTER FIT NEW NTAR PROFILE AND ADA REVISIONS.

64 ▲ NEW STATION AND OFFSET REFERENCED ARE THOSE TO THE CENTER OF APPERTENANCE FLAGGED.

CHANGE ORDER NO. 96
- REVISED INLET DATA DUE TO NTAR PROFILE REVISION.

CHANGE ORDER 96

REVISED SHEET

SCALE: H: 1:500
V: 1:100

STATE OF TEXAS
FITZGERALDO G. SANCHEZ
76084
LICENCED
PROFESSIONAL ENGINEER

Fitzgeraldo G. Sanchez, P.E. 08-02-06 Date

© 2000 Texas Department of Transportation

LOOP 1604
STORM DRAIN PROFILES
LINES U & V

| DN: | | | | | PROJECT NO. | | |
|---|---|---|---|---|---|---|---|
| CK DN: | | | | | NH 2000 (704), etc. | | |
| DW: | CONTROL | SECTION | JOB | DIST. | COUNTY | HIGHWAY NO. | SHEET NO. |
| CK DW: | 2452 | 01 | 036 etc. | SAT | BEXAR | LOOP 1604 | 467A |

8-01-06

DESIGN FILENAME: T:\AUS\Design\p1604fm471-90-cbg-order-files\d3941165TRM6.dgn

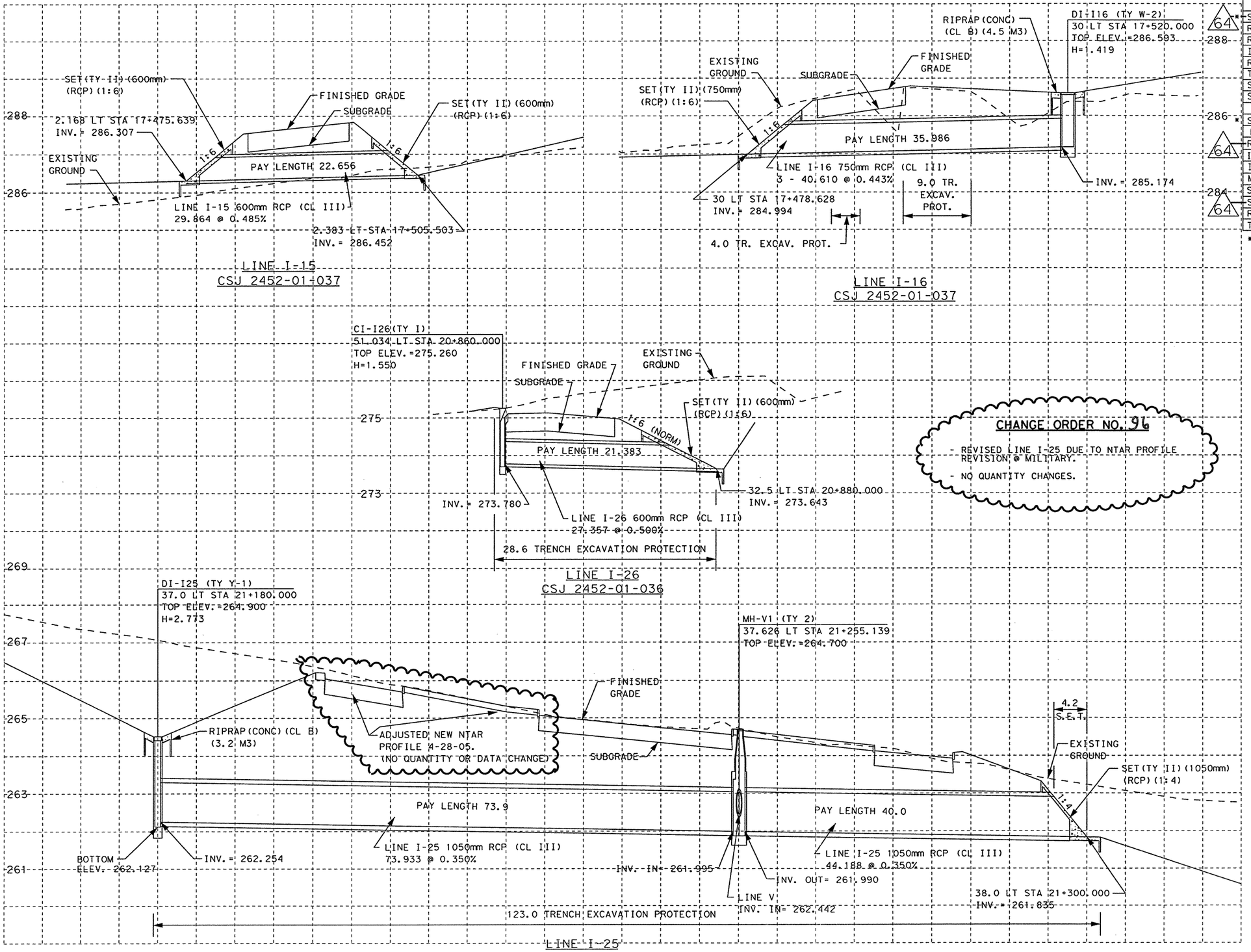


CHANGE ORDER NO. 96

- REVISED LINE I-25 DUE TO NTAR PROFILE REVISION @ MILITARY.
- NO QUANTITY CHANGES.

ESTIMATED QUANTITIES

| DESCRIPTION | UNIT | EST. | FINAL |
|---|---|---|---|
| CSJ 2452-01-037 | | | |
| STRUCT EXCAV | M3 | 612 | |
| RC PIPE (CL III) (600MM) | M | 22.656 | |
| RC PIPE (CL III) (750MM) | M | 107.958 | |
| INLET (COMPL) (DROP) (TY W-2) | EA | 1 | |
| RIPRAP (CONC) (CL B) | M3 | 4.5 | |
| TRENCH EXCAV PROTECTION | M | 13.0 | |
| SET (TY II) (600MM) (RCP) (1:6) | EA | 2 | |
| SET (TY II) (750MM) (RCP) (1:6) | EA | 3 | |
| CSJ 2452-01-036 | | | |
| STRUCT EXCAV | M3 | 812.3 | |
| RC PIPE (CL III) (600MM) | M | 21.383 | |
| RC PIPE (CL III) (1050MM) | M | 113.9 | |
| INLET (COMPL) (CURB) (TY I) | EA | 1 | |
| INLET (COMPL) (DROP) (TY Y-1) | EA | 1 | |
| MANHOLE (COMPL) (TY 2) | EA | 1 | |
| SET (TY II) (600MM) (RCP) (1:6) | EA | 1 | |
| SET (TY II) (1050MM) (RCP) (1:4) | EA | 1 | |
| RIPRAP (CONC) (CL B) | M3 | 3.2 | |
| TRENCH EXCAV PROTECTION | M | 151.6 | |

* SUPPLIED FOR CONTRACTOR'S INFORMATION ONLY

ALL INLETS TO THE OUTLET OF EACH STRUCTURE.

3. CONTRACTOR SHALL INSTALL ALL STORM DRAIN PIPES INTO MANHOLES, BOXES AND EXISTING STRUCTURES FLUSH WITH INSIDE FACE AND GROUT INTO PLACE, INSURING WATERTIGHT SEAL ALL AROUND.

4. ALL STATION AND OFFSET INFORMATION IS REFERENCED TO THE ℄ LOOP 1604 UNLESS OTHERWISE NOTED.

5. CONTRACTOR SHALL CONSTRUCT MANHOLES TO MINIMIZE CONFLICT WITH UTILITIES.

6. SET (TY II) CONSTRUCTION SHALL UTILIZE RIPRAP HEADWALL (MOD) STANDARD SHEET.

△# REFERS TO CHANGES MADE AS PART OF CHANGE ORDER.

CHANGE ORDER 96

REVISED SHEET

SCALE: H: 1:500
V: 1:100

STATE OF TEXAS
FITZGERALDO G. SANCHEZ
76084
LICENCED PROFESSIONAL ENGINEER

Fitzgeraldo G. Sanchez, P.E. 08-02-06 Date

© 2000 Texas Department of Transportation

LOOP 1604
STORM DRAIN PROFILES
LINES I-15, I-16, I-25 & I-26

| DN: | | | | | | PROJECT NO. | | |
|---|---|---|---|---|---|---|---|---|
| CK DN: | | | | | | NH 2000 (704), etc. | | |
| DW: | CONTROL | SECTION | JOB | DIST. | STATE | COUNTY | HIGHWAY NO. | SHEET NO. |
| CK DW: | 2452 | 01 | 036 etc. | SAT | TX | BEXAR | LOOP 1604 | 458 |

8-01-06

PLOTTED ON: 8/1/2006

DESIGN FILENAME: T:\DLO\Design\dp1604fm471-90\chg-order-files\0394116trm2-pd.dgn

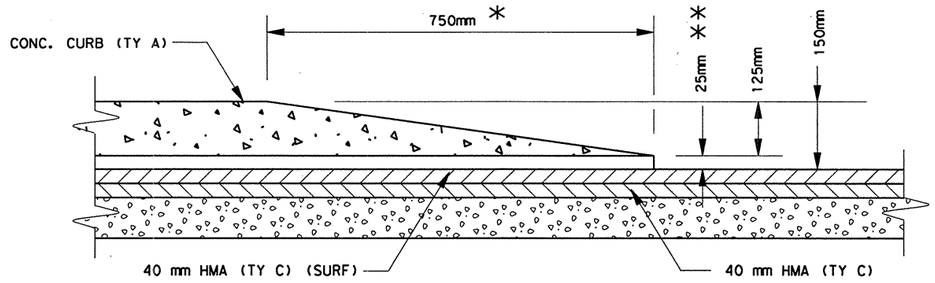


## CURB END SECTION @ INTERSECTING STREET WITHOUT CURB

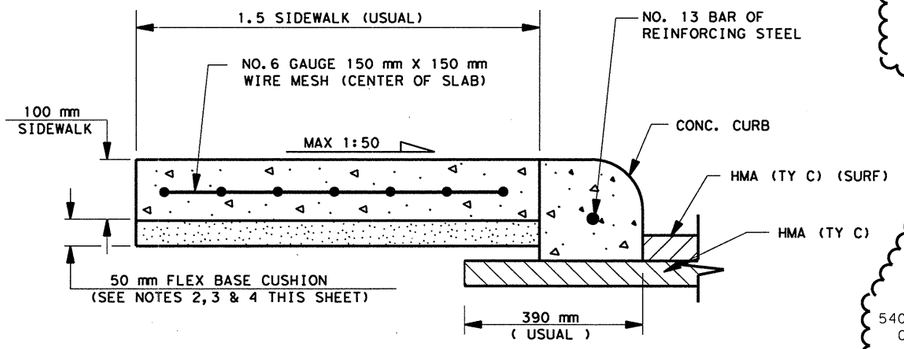


## TYPICAL SIDEWALK

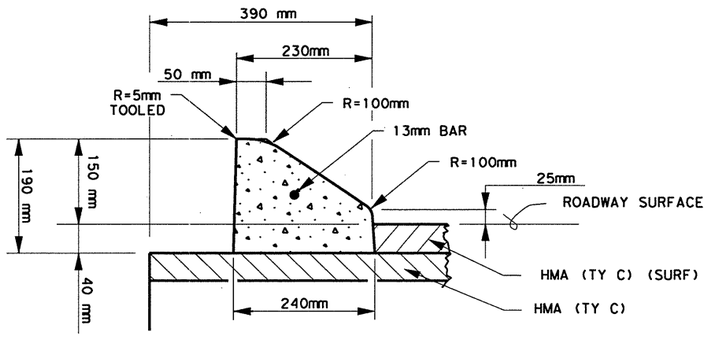


## CONCRETE CURB (TY 1) (MOUNTABLE)

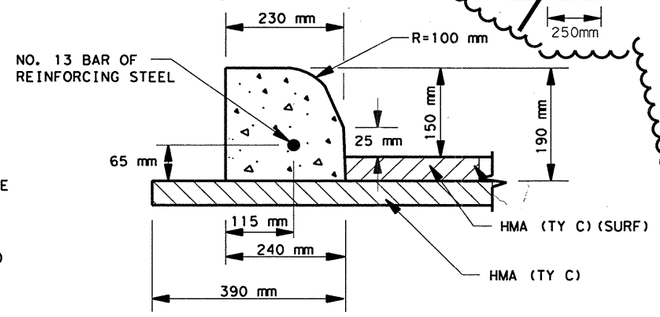


## CONC CURB (TY A)

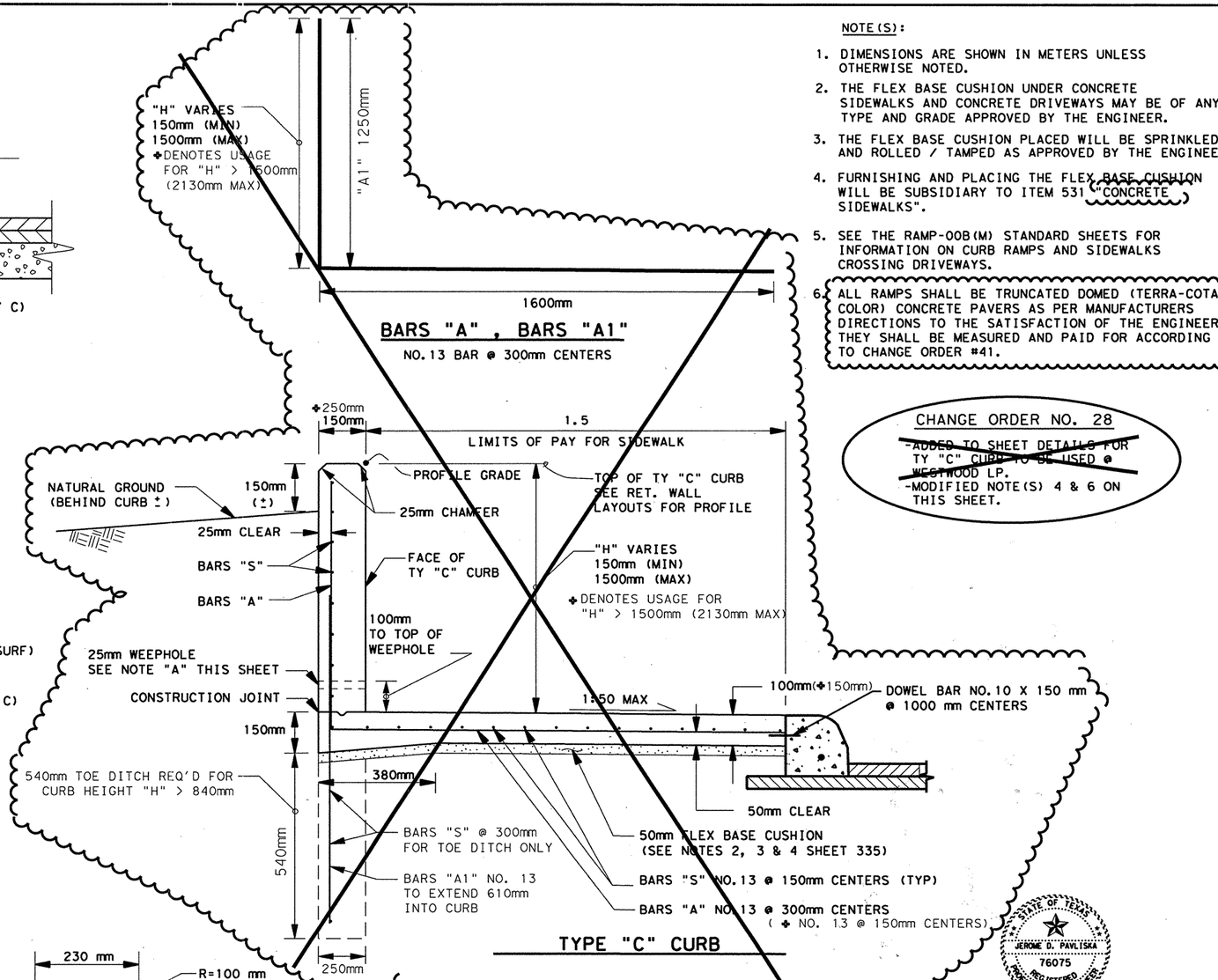


## TYPE "C" CURB

NOTES

A. 25mm WEEP HOLES @ 300mm CENTERS W / HARDWARE CLOTH CENTERED BEHIND HOLE ALLOWANCE

B. ALL MATERIALS & LABOR REQUIRED FOR CURB ALLOWANCE SHALL BE SUBSIDIARY TO TY "C" CURB ITEM

C. FOR TOP OF CURB PROFILES SEE RET WALL NO. 1 & 2 LAYOUTS

NOTE(S):

1. DIMENSIONS ARE SHOWN IN METERS UNLESS OTHERWISE NOTED.
2. THE FLEX BASE CUSHION UNDER CONCRETE SIDEWALKS AND CONCRETE DRIVEWAYS MAY BE OF ANY TYPE AND GRADE APPROVED BY THE ENGINEER.
3. THE FLEX BASE CUSHION PLACED WILL BE SPRINKLED AND ROLLED / TAMPED AS APPROVED BY THE ENGINEER.
4. FURNISHING AND PLACING THE FLEX BASE CUSHION WILL BE SUBSIDIARY TO ITEM 531 "CONCRETE SIDEWALKS".
5. SEE THE RAMP-00B(M) STANDARD SHEETS FOR INFORMATION ON CURB RAMPS AND SIDEWALKS CROSSING DRIVEWAYS.
6. ALL RAMPS SHALL BE TRUNCATED DOMED (TERRA-COTA COLOR) CONCRETE PAVERS AS PER MANUFACTURERS DIRECTIONS TO THE SATISFACTION OF THE ENGINEER. THEY SHALL BE MEASURED AND PAID FOR ACCORDING TO CHANGE ORDER #41.

CHANGE ORDER NO. 28
~~-ADDED TO SHEET DETAILS FOR TY "C" CURB TO BE USED @ WESTWOOD LP.~~
-MODIFIED NOTE(S) 4 & 6 ON THIS SHEET.

SCALE: NTS

✱ 1800 mm IF ADJOINING SIDEWALK ON WHEELCHAIR RAMP
✱✱ 0 mm IF ADJOINING SIDEWALK ON WHEELCHAIR RAMP

STATE OF TEXAS
JEROME D. PAVLISKA
76075
REGISTERED PROFESSIONAL ENGINEER

Jerome D. Pavlisko, P.E. 8-18-03
Jerome D. Pavlisko, P.E. Date

CHANGE ORDER 28

© 2001
Texas Department of Transportation

**MISCELLANEOUS ROADWAY DETAILS**

SHEET 1 OF 12

| FED. RD. DIV. NO. | FEDERAL AID PROJECT NO. | | SHEET NO. |
|---|---|---|---|
| 6 | NH 2000(704), etc. | | 335A |
| STATE | DIST. | COUNTY | |
| TEXAS | SAT | BEXAR | |
| CONT. | SECT. | JOB | HIGHWAY NO. |
| 2452 | 01 | 036, etc. | LP 1604 |

LEVELS DISPLAYED
1|2|3|4|5|6|7|8|9|10|11|12|13|14|15|16|
17|18|19|20|21|22|23|24|25|26|27|28|29|30|31|32|
33|34|35|36|37|38|39|40|41|42|43|44|45|46|47|48|
49|50|51|52|53|54|55|56|57|58|59|60|61|62|63|
ACC: t:\ao\design\lp1604fm471-90\
FILE: misc*rd*detail01.dgn

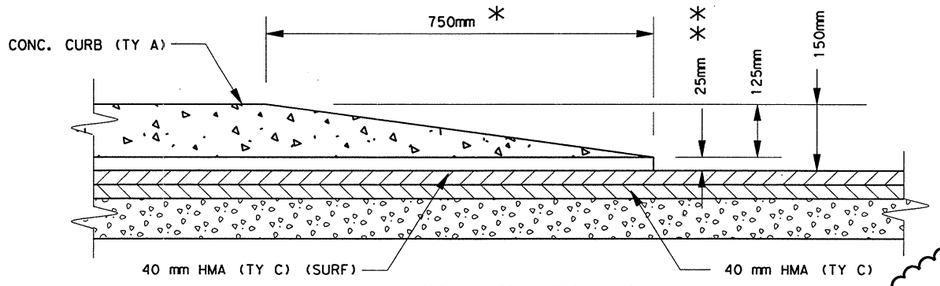


## CURB END SECTION @ INTERSECTING STREET WITHOUT CURB

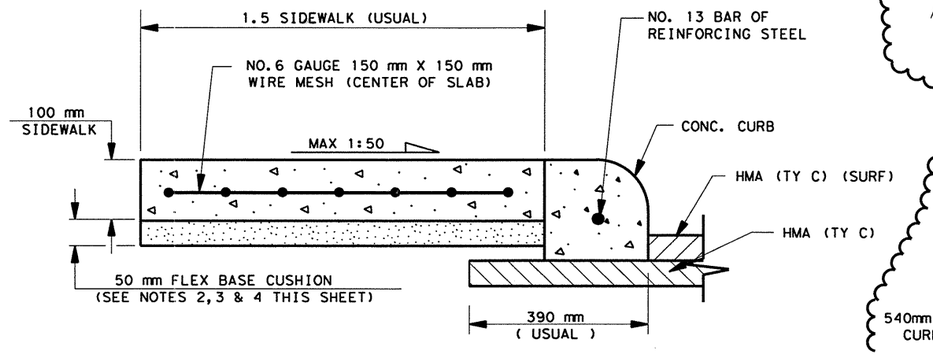


## TYPICAL SIDEWALK

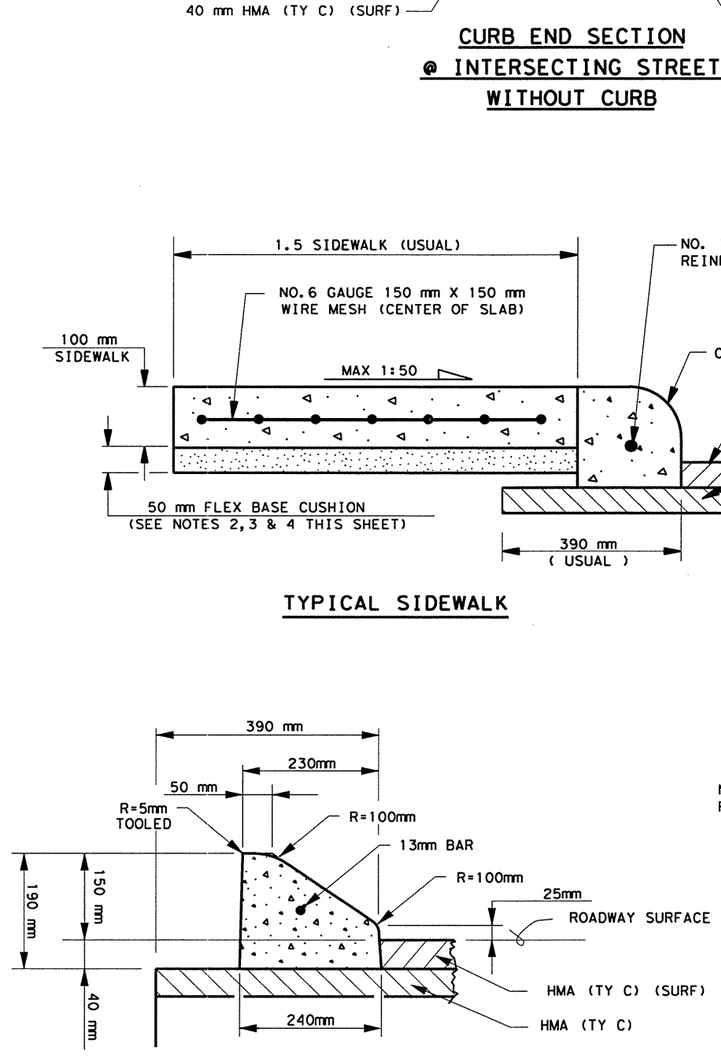


## CONCRETE CURB (TY 1) (MOUNTABLE)

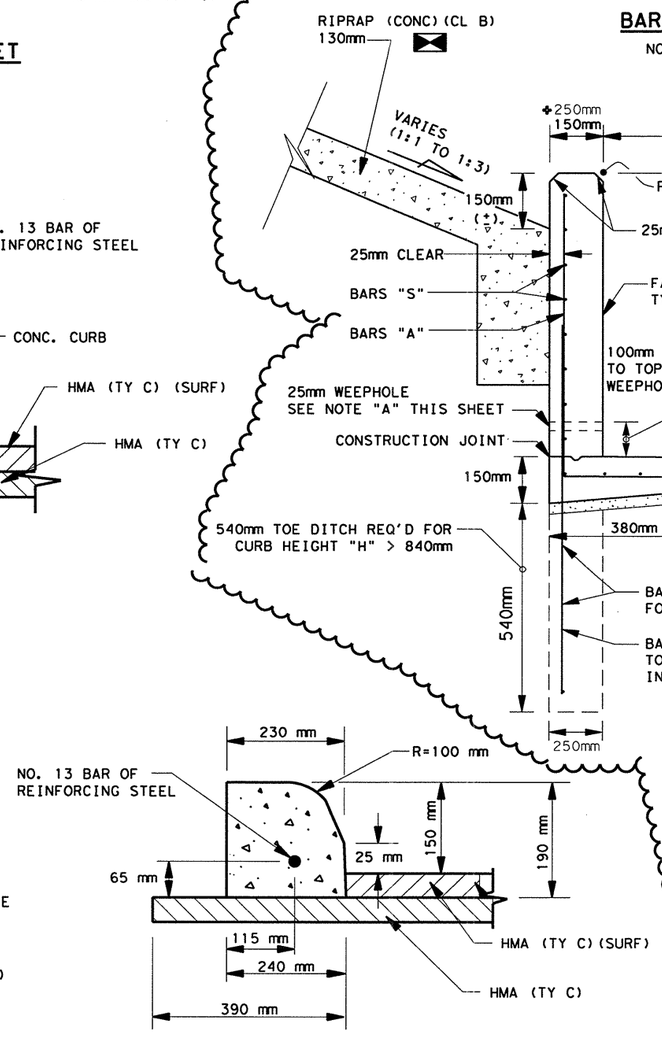


## CONC CURB (TY A)

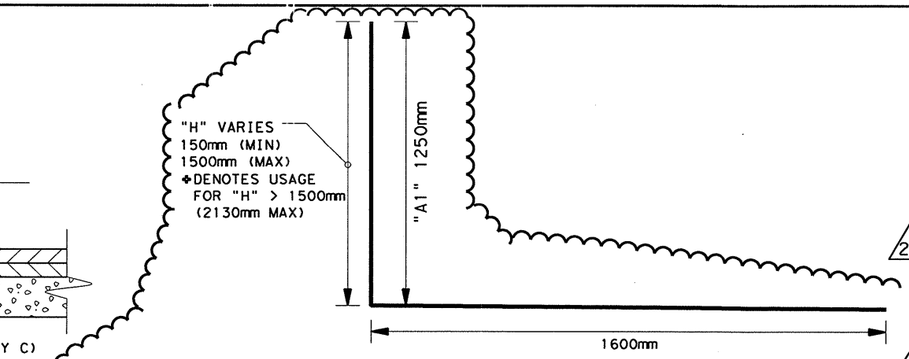


## BARS "A" , BARS "A1"

NO. 13 BAR @ 300mm CENTERS

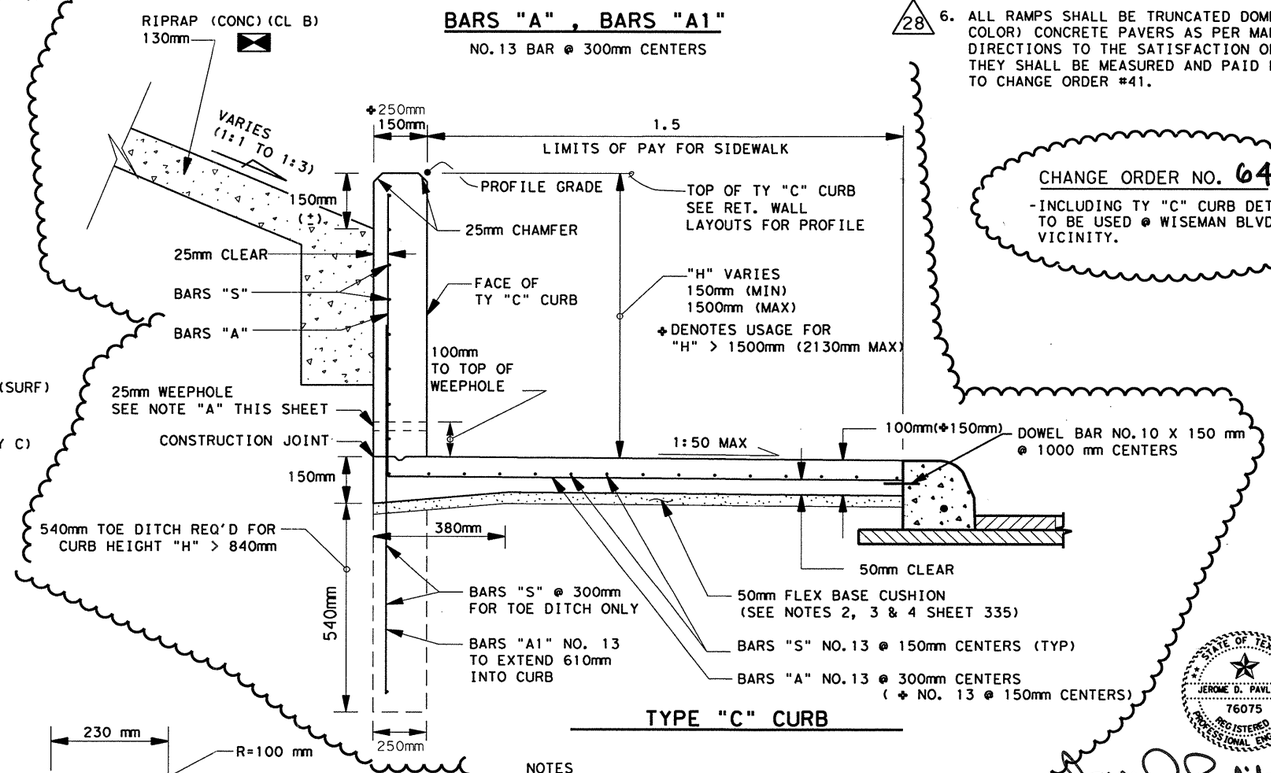


## TYPE "C" CURB

NOTES

A. 25mm WEEP HOLES @ 300mm CENTERS W / HARDWARE CLOTH CENTERED BEHIND HOLE ALLOWANCE

B. ALL MATERIALS & LABOR REQUIRED FOR CURB ALLOWANCE SHALL BE SUBSIDIARY TO TY "C" CURB ITEM

C. SEE TY "C" CURB PLAN & PROFILE FOR MORE INFORMATION

NOTE(S):

1. DIMENSIONS ARE SHOWN IN METERS UNLESS OTHERWISE NOTED.
2. THE FLEX BASE CUSHION UNDER CONCRETE SIDEWALKS AND CONCRETE DRIVEWAYS MAY BE OF ANY TYPE AND GRADE APPROVED BY THE ENGINEER.
3. THE FLEX BASE CUSHION PLACED WILL BE SPRINKLED AND ROLLED / TAMPED AS APPROVED BY THE ENGINEER.
4. (28) FURNISHING AND PLACING THE FLEX BASE CUSHION WILL BE SUBSIDIARY TO ITEM 531 "CONCRETE SIDEWALKS".
5. SEE THE RAMP-00B(M) STANDARD SHEETS FOR INFORMATION ON CURB RAMPS AND SIDEWALKS CROSSING DRIVEWAYS.
6. (28) ALL RAMPS SHALL BE TRUNCATED DOMED (TERRA-COTA COLOR) CONCRETE PAVERS AS PER MANUFACTURERS DIRECTIONS TO THE SATISFACTION OF THE ENGINEER. THEY SHALL BE MEASURED AND PAID FOR ACCORDING TO CHANGE ORDER #41.

CHANGE ORDER NO. 64
-INCLUDING TY "C" CURB DETAILS TO BE USED @ WISEMAN BLVD. VICINITY.

SCALE: NTS

* 1800 mm IF ADJOINING SIDEWALK ON WHEELCHAIR RAMP
** 0 mm IF ADJOINING SIDEWALK ON WHEELCHAIR RAMP

FOR FURTHER INFORMATION SEE TY "C" CURB PLAN & PROFILE, PLAN SHEETS, MISC. RDWY DETAILS AND PROJECT X-SECTIONS.

(#) REFERENCE TO CHANGES MADE AS PART OF CHANGE ORDER.

STATE OF TEXAS — JEROME D. PAVLISKA — 76075 — REGISTERED PROFESSIONAL ENGINEER

Jerome D. Pavliska, P.E. 4-28-04
Jerome D. Pavliska, P.E. — Date

CHANGE ORDER 64

REVISED SHEET

© 2001 Texas Department of Transportation

**MISCELLANEOUS ROADWAY DETAILS**

SHEET 1 OF 12

| FED. RD. DIV. NO. | FEDERAL AID PROJECT NO. | | SHEET NO. |
|---|---|---|---|
| 6 | NH 2000(704), etc. | | 335 B |
| STATE | DIST. | COUNTY | |
| TEXAS | SAT | BEXAR | |
| CONT. | SECT. | JOB | HIGHWAY NO. |
| 2452 | 01 | 036, etc. | LP 1604 |

05-01-04

LEVELS DISPLAYED
1 2 3 4 5 6 7 8 9 10 11 12 31 41 51 6
17 18 19 20 21 22 23 24 25 26 27 28 29 30 31 32
33 34 35 36 37 38 39 40 41 42 43 44 45 46 47 48
49 50 51 52 53 54 55 56 57 58 59 60 61 62 63

ACC: t:\ao\design\lp1604fm471-90\
FILE: miscrd*detail01A.dgn

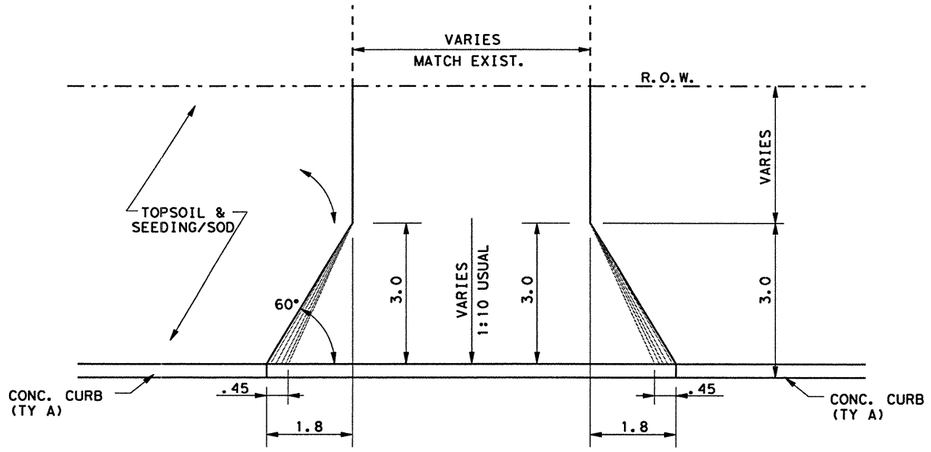


**TYPICAL RESIDENTIAL DRIVEWAY**

**PLAN VIEW**

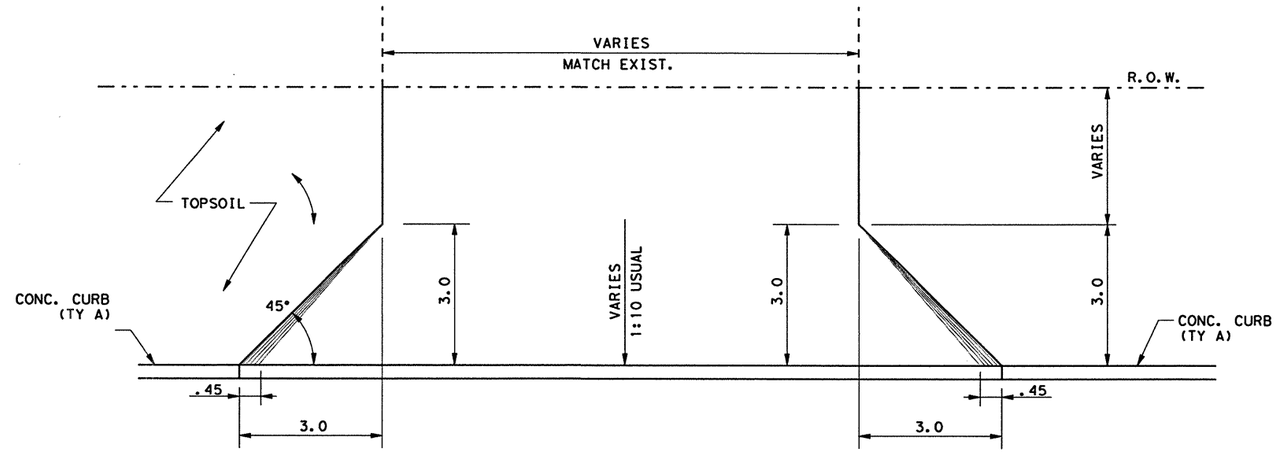


**TYPICAL COMMERCIAL DRIVEWAY**

**PLAN VIEW**

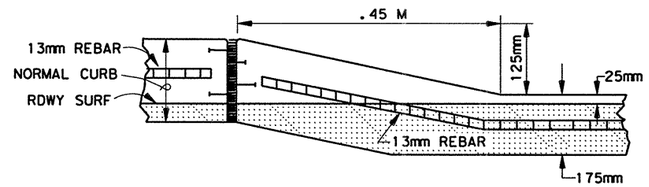


**CURB TRANSITION @ CONCRETE DRIVEWAY**

NOTE(S):

1. THE FLEX BASE CUSHION UNDER CONCRETE SIDEWALKS AND CONCRETE DRIVEWAYS MAY BE OF ANY TYPE AND GRADE APPROVED BY THE ENGINEER.
2. THE FLEX BASE CUSHION PLACED WILL BE SPRINKLED AND ROLLED / TAMPED AS APPROVED BY THE ENGINEER.
3. FURNISHING AND PLACING THE FLEX BASE CUSHION WILL BE SUBSIDIARY TO ITEM 530 "DRIVEWAYS".
4. ALL DIMENSIONS ARE IN METERS UNLESS OTHERWISE NOTED.
5. IN AREAS WITH SIDEWALKS, THE PORTION OF THE DRIVEWAY CROSSING THE SIDEWALK SHALL HAVE A CROSS-SLOPE NO GREATER THAN 1:50.
6. SEE RAMP-00B (M) STANDARD SHEET FOR MORE INFORMATION ON DRIVEWAY DETAILS.
7. FOR DRIVEWAYS WITH DRAINAGE STRUCTURES ASSOCIATED WITH THEM, SEE SHEET(S) 27,28 FOR MORE DETAILS.

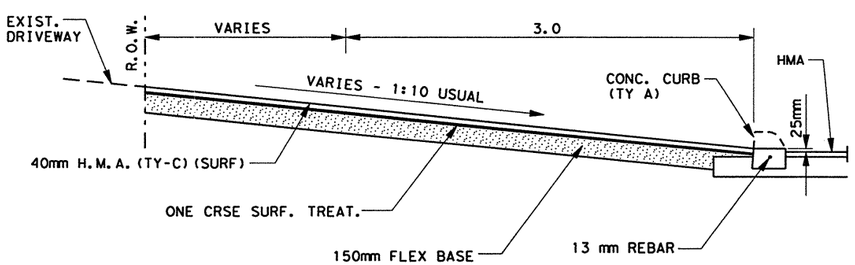


**TYPICAL ASPHALT DRIVEWAY SECTION**

**RESIDENTIAL**

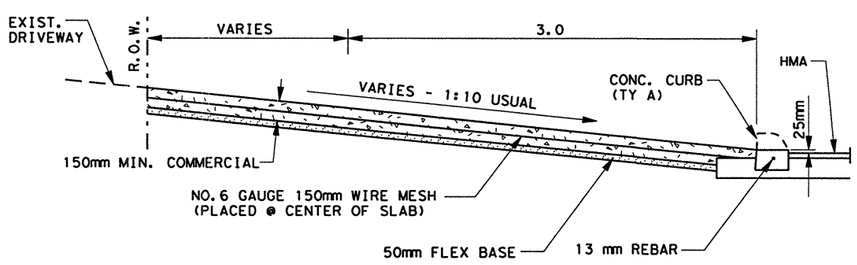


**TYPICAL CONCRETE DRIVEWAY SECTION**

**COMMERCIAL ONLY**

STATE OF TEXAS
JOEL K. DAVENPORT, JR.
79276
REGISTERED
PROFESSIONAL ENGINEER

Joel K. Davenport, Jr. 10/26/00

Joel K. Davenport, Jr. P.E. 79276 — Date

Texas Department of Transportation

**MISCELLANEOUS ROADWAY DETAILS**

SHEET 2 OF 12

| FED. RD. DIV. NO. | FEDERAL AID PROJECT NO. | | SHEET NO. |
|---|---|---|---|
| 6 | NH 2000(704), etc. | | 336 |
| STATE | DIST. | COUNTY | |
| TEXAS | SAT | BEXAR | |
| CONT. | SECT. | JOB | HIGHWAY NO. |
| 2452 | 01 | 036, etc. | LP 1604 |

LEVELS DISPLAYED
1 2 3 4 5 6 7 8 9 10 11 12 13 14 15 16
17 18 19 20 21 22 23 24 25 26 27 28 29 30 31 32
33 34 35 36 37 38 39 40 41 42 43 44 45 46 47 48
49 50 51 52 53 54 55 56 57 58 59 60 61 62 63

ACC: t:\ao\design\lp1604fm471-90\
FILE: misc.dgn

* APPLICABLE WHERE DRIVEWAYS TIE INTO SIDEWALK.

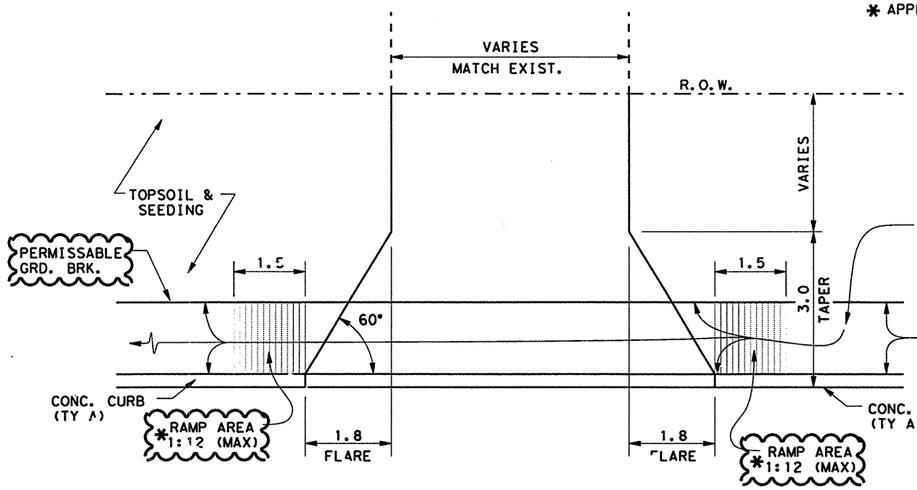


**TYPICAL RESIDENTIAL DRIVEWAY**

**PLAN VIEW**

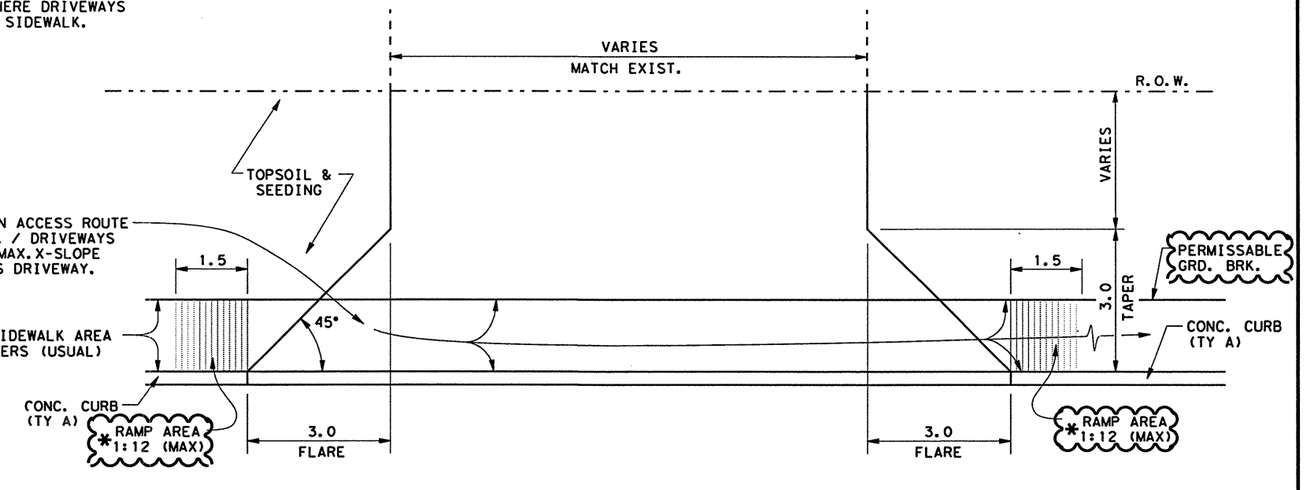


**TYPICAL COMMERCIAL DRIVEWAY**

**PLAN VIEW**

NOTE(S):

1. ALL DIMENSIONS ARE IN METERS UNLESS OTHERWISE NOTED.
2. THE FLEX BASE CUSHION PLACED WILL BE SPRINKLED AND ROLLED / TAMPED AS APPROVED BY THE ENGINEER.
3. FURNISHING AND PLACING THE FLEX BASE CUSHION WILL BE SUBSIDIARY TO ITEM 530 "DRIVEWAYS".
4. THE FLEX BASE CUSHION UNDER CONCRETE SIDEWALKS AND CONCRETE DRIVEWAYS MAY BE OF ANY TYPE AND GRADE APPROVED BY THE ENGINEER.
5. IN AREAS WITH SIDEWALKS, THE PORTION OF THE DRIVEWAY CROSSING THE SIDEWALK SHALL HAVE A CROSS-SLOPE NO GREATER THAN 2.00% (1:50).
6. SEE RAMP-00B (M) STANDARD SHEET FOR MORE INFORMATION ON DRIVEWAY DETAILS.
7. FOR DRIVEWAYS WITH DRAINAGE STRUCTURES ASSOCIATED WITH THEM, SEE SHEET(S) 27,28 FOR MORE DETAILS.
8. FOR SPECIAL DRIVEWAYS AND THEIR DETAILS SEE ELSEWHERE IN THE PLANS.

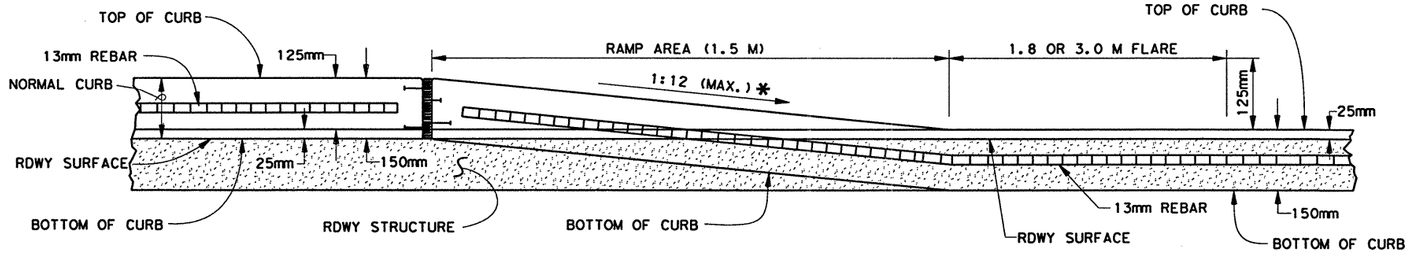


**CURB TRANSITION @ CONCRETE DRIVEWAY**

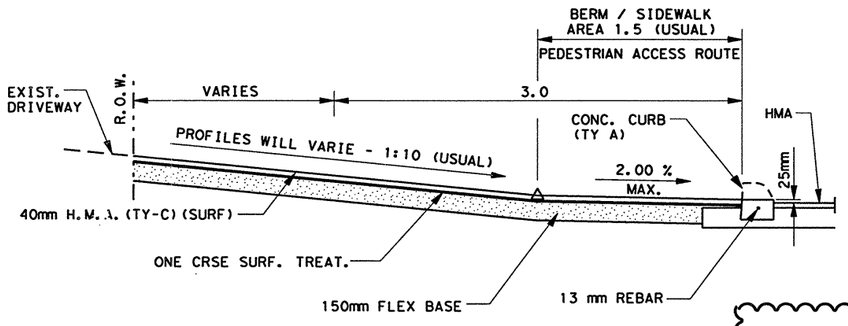


**TYPICAL ASPHALT DRIVEWAY SECTION**

**RESIDENTIAL**

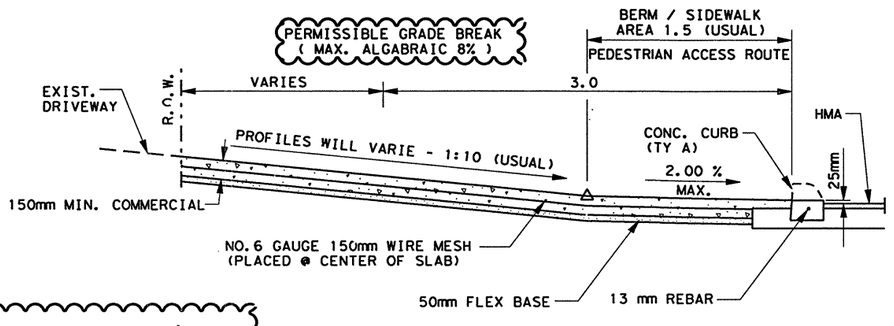


**TYPICAL CONCRETE DRIVEWAY SECTION**

**COMMERCIAL**

**CHANGE ORDER NO. 25**

- MODIFIED DRIVEWAY DETAILS / NOTES TO BETTER ACCOMMODATE ADA REQUIREMENTS.

NOTE: FOR SPECIFIC DRIVEWAY PROFILES AND DETAILS SEE ELSEWHERE IN PLANS.

CHANGE ORDER 25

STATE OF TEXAS
TERRY G. McCOY
75016
REGISTERED PROFESSIONAL ENGINEER

Terry G. McCoy, P.E. 3-20-02 Date

FOR MOD'S ASSOC WITH CO #25 ONLY

© 2000 Texas Department of Transportation

**MISCELLANEOUS ROADWAY DETAILS**

SHEET 2 OF 12

| FED. RD. DIV. NO. | FEDERAL AID PROJECT NO. | | SHEET NO. |
|---|---|---|---|
| 6 | NH 2000(704), etc. | | 3 61 |
| STATE | DIST. | COUNTY | |
| TEXAS | SAT | BEXAR | |
| CONT. | SECT. | JOB | HIGHWAY NO. |
| 2452 | 01 | 036, etc. | LP 1604 |

03-21-02

LEVELS DISPLAYED
1 2 3 4 5 6 7 8 9 10 11 12 13 14 15 16
17 18 19 20 21 22 23 24 25 26 27 28 29 30 31 32
33 34 35 36 37 38 39 40 41 42 43 44 45 46 47 48
49 50 51 52 53 54 55 56 57 58 59 60 61 62 63

ACC: t:\ao\design\lp1604fm471-90\
FILE: misc.dgn

✱ APPLICABLE WHERE DRIVEWAYS TIE INTO SIDEWALK.

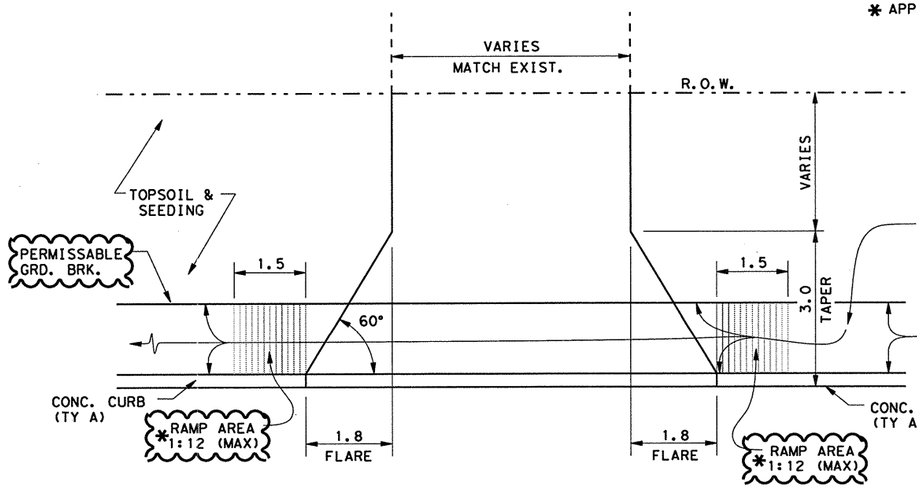


**TYPICAL RESIDENTIAL DRIVEWAY**

**PLAN VIEW**

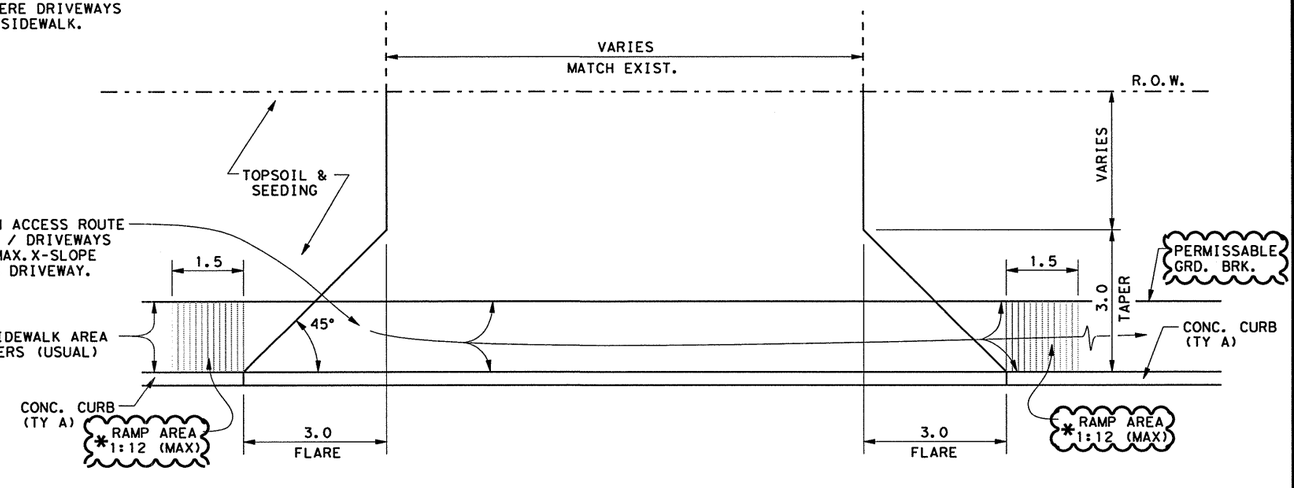


**TYPICAL COMMERCIAL DRIVEWAY**

**PLAN VIEW**

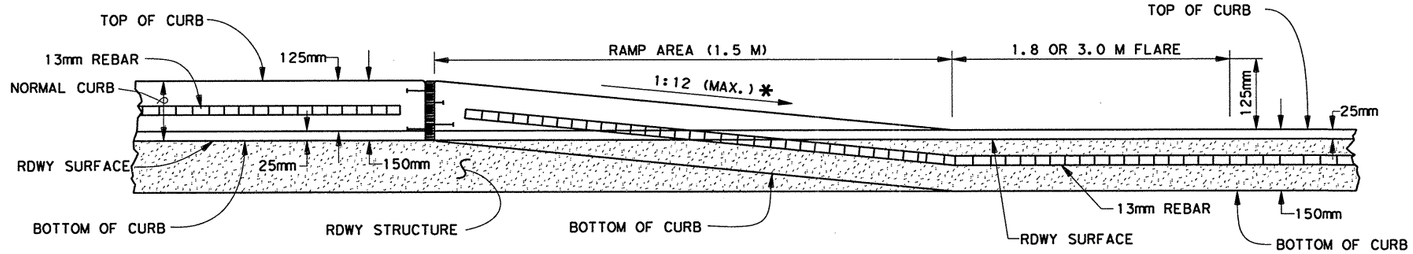


**CURB TRANSITION @ CONCRETE DRIVEWAY**

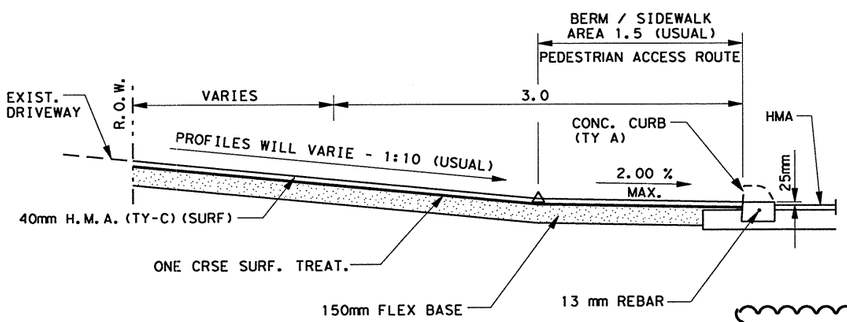


**TYPICAL ASPHALT DRIVEWAY SECTION**

**RESIDENTIAL**

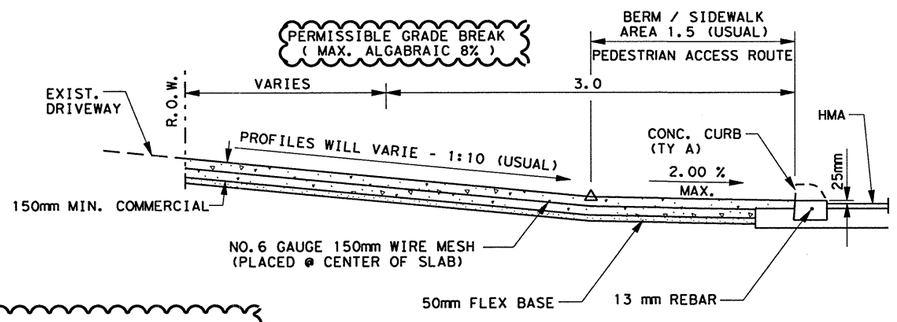


**TYPICAL CONCRETE DRIVEWAY SECTION**

**COMMERCIAL**

**CHANGE ORDER NO. 99**

- MODIFIED DRIVEWAY DETAILS / NOTES TO BETTER ACCOMMODATE ADA REQUIREMENTS.

NOTE: FOR SPECIFIC DRIVEWAY PROFILES AND DETAILS SEE ELSEWHERE IN PLANS.

NOTE(S):

1. ALL DIMENSIONS ARE IN METERS UNLESS OTHERWISE NOTED.
2. THE FLEX BASE CUSHION PLACED WILL BE SPRINKLED AND ROLLED / TAMPED AS APPROVED BY THE ENGINEER.
3. FURNISHING AND PLACING THE FLEX BASE CUSHION WILL BE SUBSIDIARY TO ITEM 530 "DRIVEWAYS".
4. THE FLEX BASE CUSHION UNDER CONCRETE SIDEWALKS AND CONCRETE DRIVEWAYS MAY BE OF ANY TYPE AND GRADE APPROVED BY THE ENGINEER.
5. IN AREAS WITH SIDEWALKS, THE PORTION OF THE DRIVEWAY CROSSING THE SIDEWALK SHALL HAVE A CROSS-SLOPE NO GREATER THAN 2.00% (1:50).
6. SEE RAMP-00B (M) STANDARD SHEET FOR MORE INFORMATION ON DRIVEWAY DETAILS.
7. FOR DRIVEWAYS WITH DRAINAGE STRUCTURES ASSOCIATED WITH THEM, SEE SHEET(S) 27,28 FOR MORE DETAILS.
8. FOR SPECIAL DRIVEWAYS AND THEIR DETAILS SEE ELSEWHERE IN THE PLANS.

CHANGE ORDER 99

STATE OF TEXAS — RUBEN GUERRERO — 95031 — LICENSED PROFESSIONAL ENGINEER

Ruben Guerrero, P.E. 95031 — Date 7-30-08

©2000

Texas Department of Transportation

**MISCELLANEOUS ROADWAY DETAILS**

SHEET 2 OF 12

| FED.RD. DIV.NO. | FEDERAL AID PROJECT NO. | | SHEET NO. |
|---|---|---|---|
| 6 | NH 2000(704), etc. | | 336A |
| STATE | DIST. | COUNTY | |
| TEXAS | SAT | BEXAR | |
| CONT. | SECT. | JOB | HIGHWAY NO. |
| 2452 | 01 | 036, etc. | LP 1604 |

07-22-05

LEVELS DISPLAYED
1 2 3 4 5 6 7 8 9 10 11 12 13 14 15 16
17 18 19 20 21 22 23 24 25 26 27 28 29 30 31 32
33 34 35 36 37 38 39 40 41 42 43 44 45 46 47 48
49 50 51 52 53 54 55 56 57 58 59 60 61 62 63
ACC: t:\ao\design\lp1604fm471-90\
FILE: miscrdwdetail02.dgn

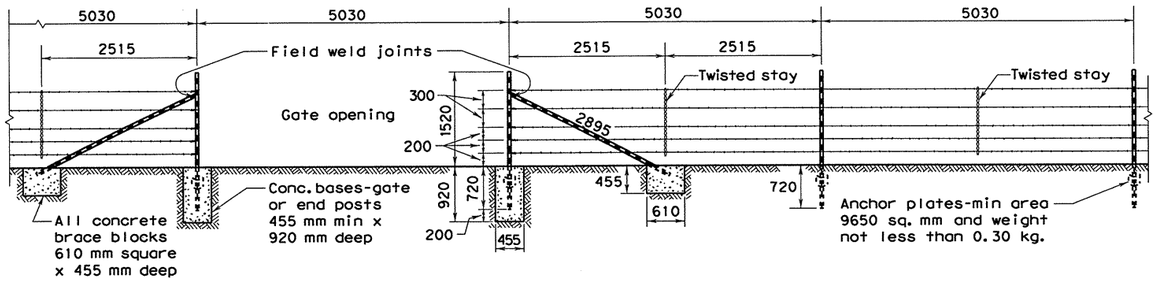


**SECTION GALVANIZED BARBED WIRE FENCE WITH METAL POSTS**
BRACING DETAIL USED AT ENDS AND GATES
**TYPE "C" FENCE**

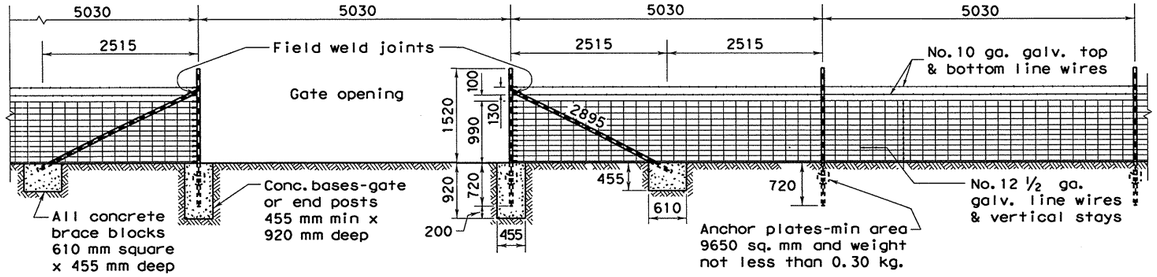


**SECTION GALVANIZED WOVEN WIRE FENCE WITH METAL POSTS**
BRACING DETAIL USED AT ENDS AND GATES
**TYPE "D" FENCE**

Metal gate shall consist of 5 panels not less than 1320 mm high and shall be aluminum or galvanized metal and of good quality. Gate and hardware shall meet the approval of the engineer.

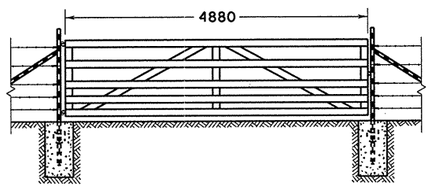


**DETAIL TYPE 1 GATE**

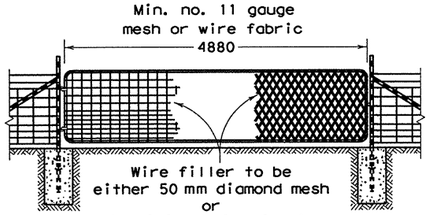


**DETAIL TYPE 2 GATE**

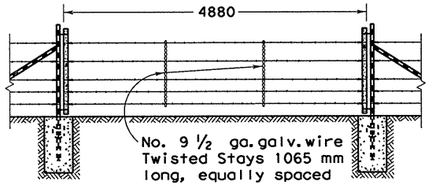


**DETAIL TYPE 3 GATE**

## GENERAL NOTES

1. Any high point which interferes with the placing of wire mesh shall be excavated to provide 50 mm clearance.
2. Latches for Type 1 and Type 2 gates shall be good commercial quality and design latch of the spring, fork or chain type. All latches shall be suitable to the gate and shall be approved by the Engineer.
3. Concrete shall be of the design and consistency approved by the Engineer and shall contain not less than 225 kg of cement per cubic meter.
4. Hinges for Type 2 gates shall be a commercial design approved by the Engineer suitable for post and gate.
5. Anchor plates shall be of a design and thickness sufficient to prevent turning of the post in firm soil. Metal end, corner and pull post shall be a minimum of 50 mm inside diameter pipe minimum (5.43 kg/lin meter) with minimum 32 mm inside diameter pipe brace minimum (3.38 kg/lin meter), minimum 65 mm x 65 mm x 6 mm angle (6.1 kg/lin meter) with minimum 50 mm x 50 mm x 6 mm angle brace (4.75 kg/lin meter) or other section approved by the Engineer. Fasteners for securing barbed wire or wire mesh to metal posts shall be a minimum of 11 gauge galvanized steel wire. Tubular posts shall be fitted with water tight malleable iron caps.
6. Metal line posts shall be not less than 1980 mm in length and shall weigh not less than 1.98 kg/lin meter.
7. The location of gates and corner posts will be as indicated elsewhere in these plans.

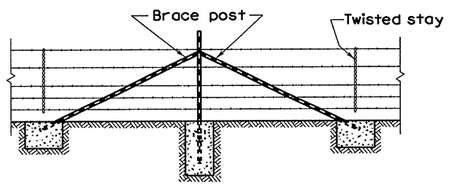


**CORNER OR PULL POST ASSEMBLY**

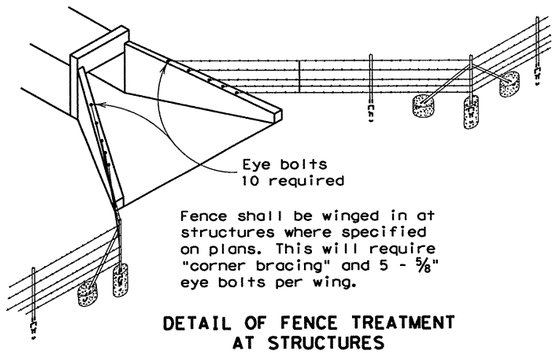


Fence shall be winged in at structures where specified on plans. This will require "corner bracing" and 5 - ⅝" eye bolts per wing.

**DETAIL OF FENCE TREATMENT AT STRUCTURES**

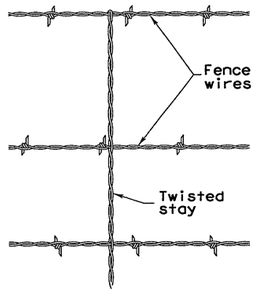


**DETAIL OF STAY**

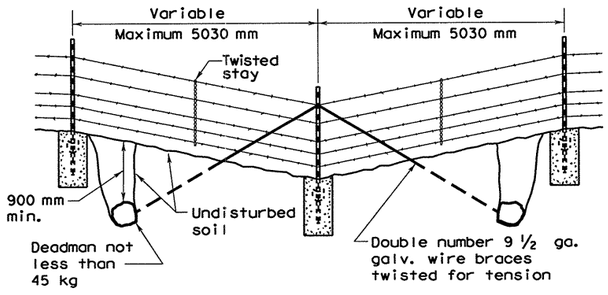


**DETAIL OF FENCE SAG**

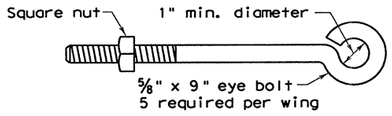


**DETAIL OF EYE BOLT**

DISCLAIMER:
The use of this standard is governed by the "Texas Engineering Practice Act". No warranty of any kind is made by TxDOT for any purpose whatsoever. TxDOT assumes no responsibility for the conversion of this standard to other formats or for incorrect results or damages resulting from its use.

LEVELS DI... FED

| | | | | | | | | | | | | | | | | |
|---|---|---|---|---|---|---|---|---|---|---|---|---|---|---|---|---|
| 1 | 3 | 4 | 5 | 6 | 7 | 8 | 9 | 10 | 11 | 12 | 13 | 14 | 15 | 16 | | |
| 17 | 18 | 19 | 20 | 21 | 22 | 23 | 24 | 25 | 26 | 27 | 28 | 29 | 30 | 31 | 32 | |
| 33 | 34 | 35 | 36 | 37 | 38 | 39 | 40 | 41 | 42 | 43 | 44 | 45 | 46 | 47 | 48 | |
| 49 | 50 | 51 | 52 | 53 | 54 | 55 | 56 | 57 | 58 | 59 | 60 | 61 | 62 | 63 | | |

Texas Department of Transportation
Design Division (Roadway)

# BARBED WIRE FENCE AND WOVEN WIRE FENCE STEEL POSTS

# WF (2) -95 (M)

| FILE: WF295M.DGN | DN: MAM | CK: MAM | DW: RAR | CK: | NEG: | |
|---|---|---|---|---|---|---|
| ©TxDOT 1995 | DIST | FED REG | FEDERAL AID PROJECT • | | | SHEET |
| REVISIONS | SAT | 6 | NH 2000(704), etc. | | | 3360 |
| | COUNTY | | CONTROL | SECT | JOB | HIGHWAY |
| | BEXAR | | 2452 | 01 | 036, etc. | LP1604 |

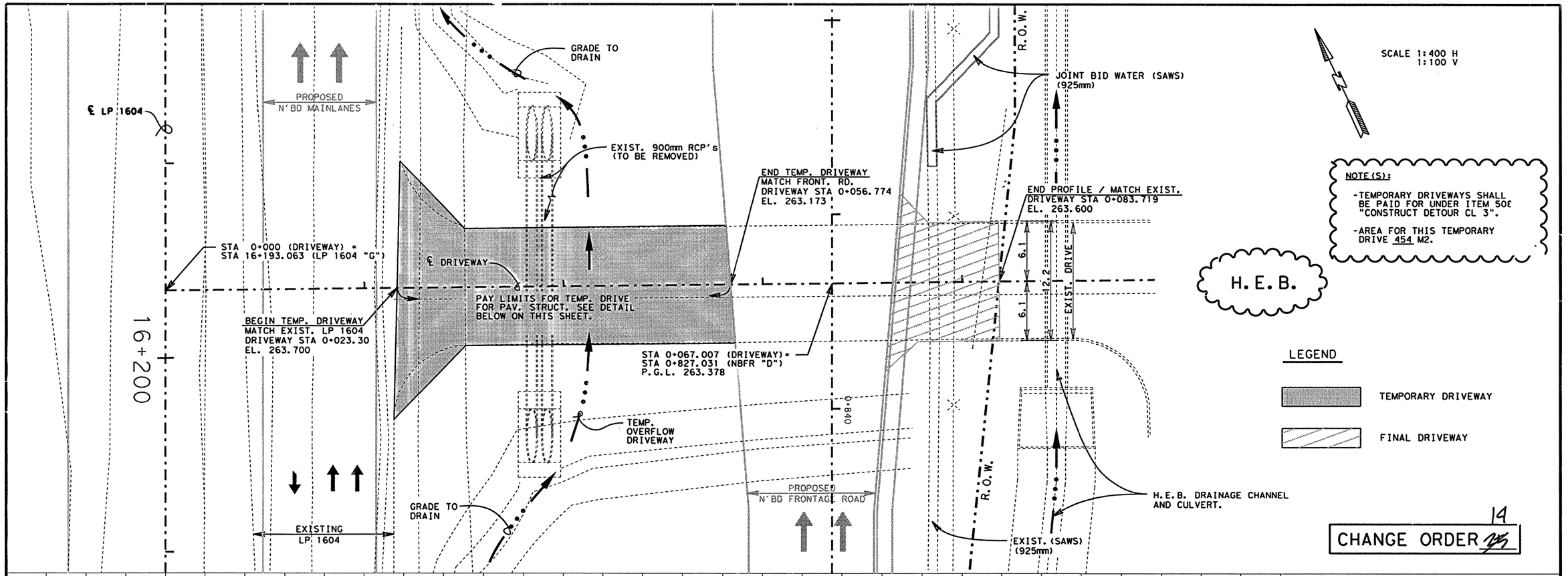


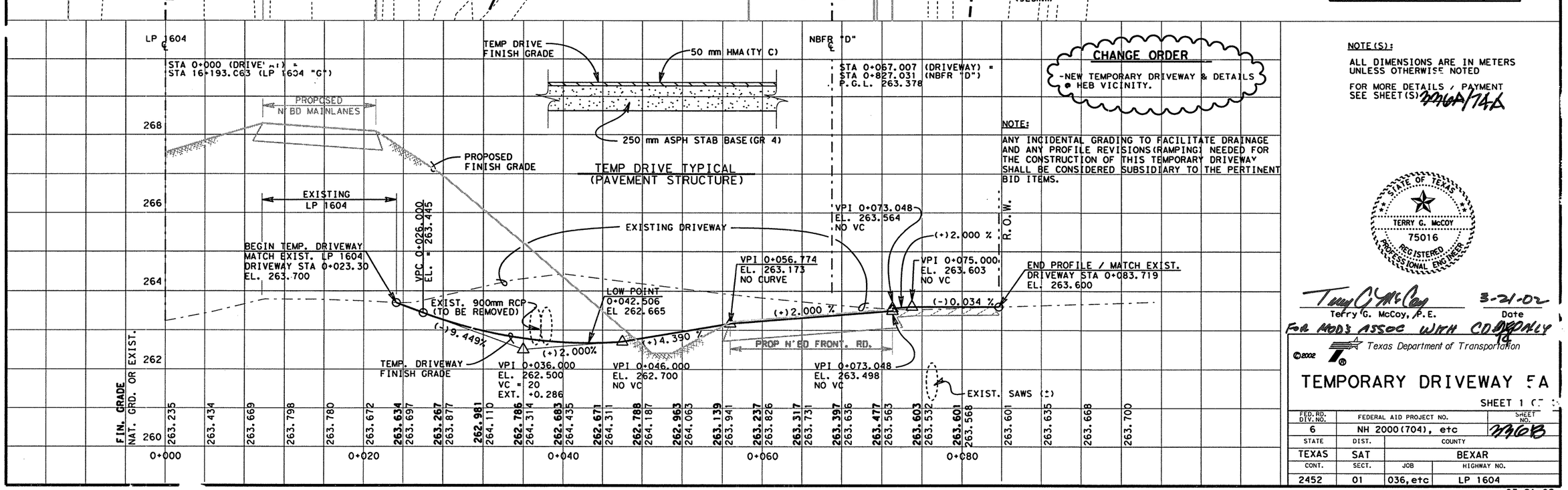


NOTE(S):

ALL DIMENSIONS ARE IN METERS UNLESS OTHERWISE NOTED

FOR MORE DETAILS / PAYMENT SEE SHEET(S) 336A/744

STATE OF TEXAS
TERRY G. McCOY
75016
REGISTERED PROFESSIONAL ENGINEER

Terry G. McCoy 3-21-02
Terry G. McCoy, P.E. Date

FOR MOD'S ASSOC WITH CO ONLY

©2002

Texas Department of Transportation

# TEMPORARY DRIVEWAY FA

SHEET 1 OF

| FED.RD. DIV.NO. | FEDERAL AID PROJECT NO. | | SHEET NO. |
|---|---|---|---|
| 6 | NH 2000(704), etc | | 336B |
| STATE | DIST. | COUNTY | |
| TEXAS | SAT | BEXAR | |
| CONT. | SECT. | JOB | HIGHWAY NO. |
| 2452 | 01 | 036, etc | LP 1604 |

LEVELS DISPLAYED
1 2 3 4 5 6 7 8 9 10 11 12 13 14 15 16
17 18 19 20 21 22 23 24 25 26 27 28 29 30 31 32
33 34 35 36 37 38 39 40 41 42 43 44 45 46 47 48
49 50 51 52 53 54 55 56 57 58 59 60 61 62 63

lp1604fm471-90
driveway heb1.dgn

03-31-03

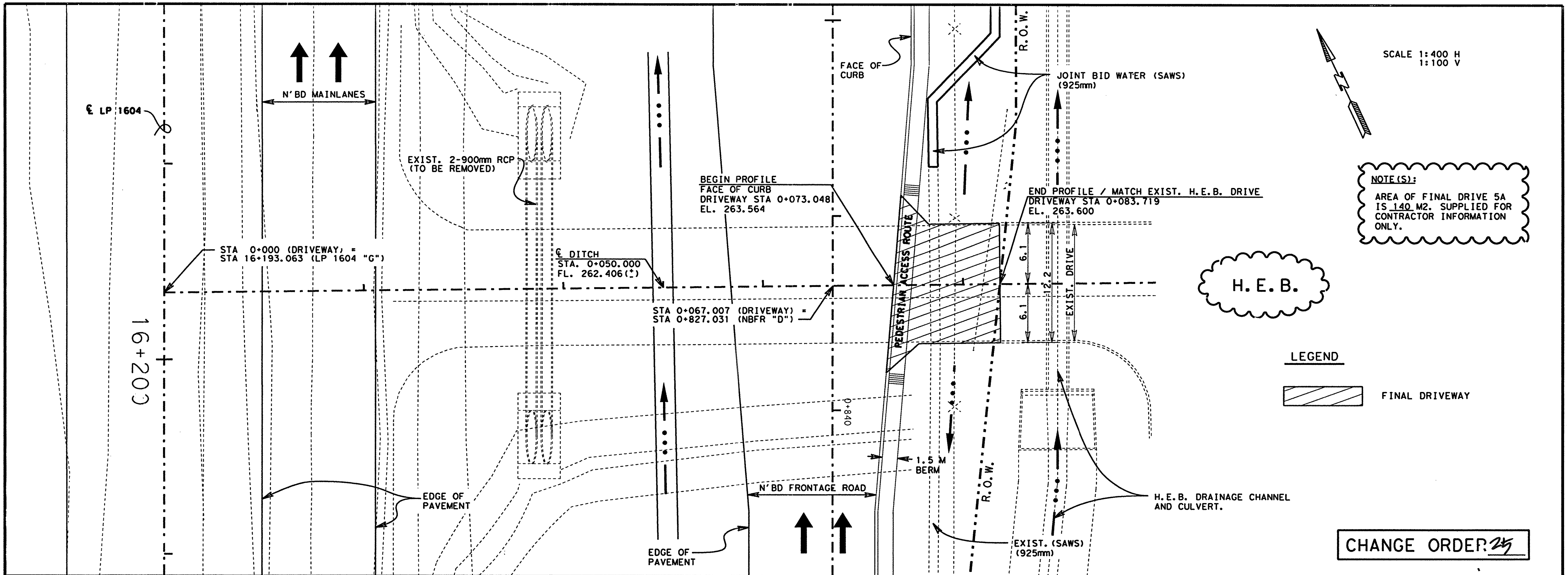


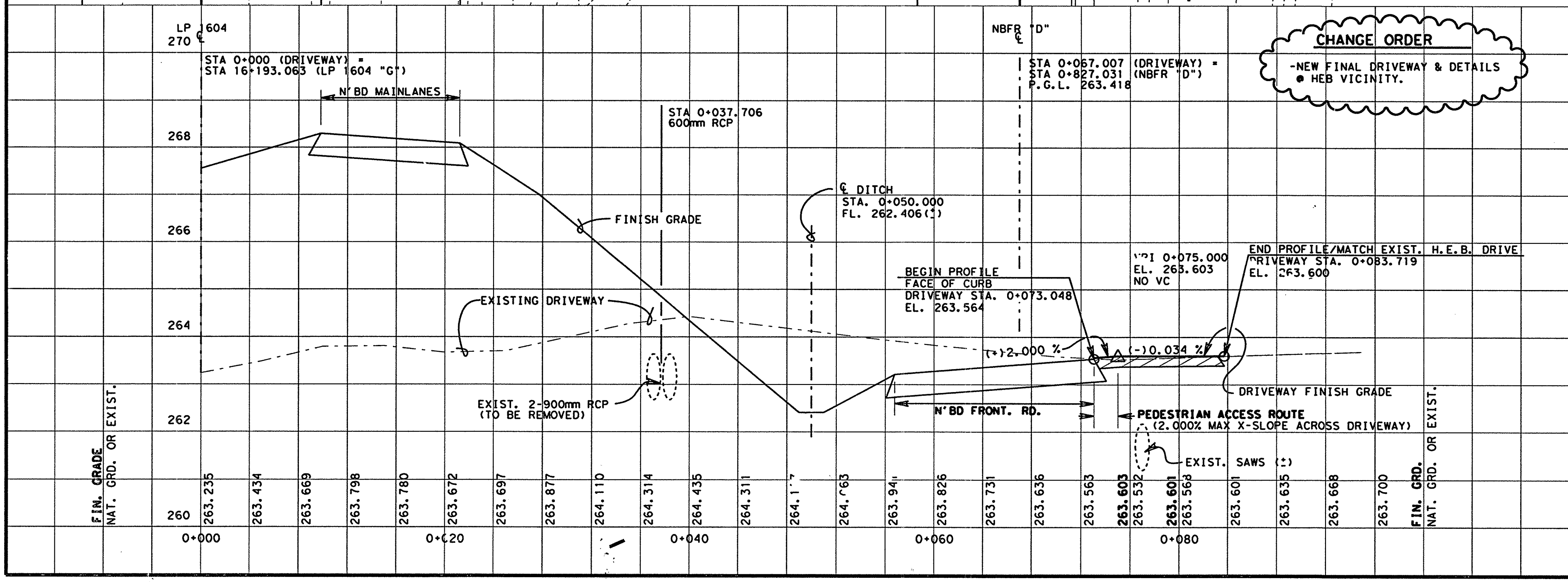


LEVELS DISPLAYED 1-63

lp1604fm471-90
drivewayheb1.dgn

NOTE(S):

ALL DIMENSIONS ARE IN METERS UNLESS OTHERWISE NOTED

FOR PAY ITEMS SEE APPROPRIATE PLAN SHEET(S) 200 A.

FOR MORE DRIVEWAY DETAILS SEE SHEET(S) 200 A.

STATE OF TEXAS
TERRY G. McCOY
75016
REGISTERED PROFESSIONAL ENGINEER

Terry G. McCoy, P.E. — 3-21-02 (Date)

FOR MOD'S ASSOC WITH CO#25 ONLY

©2002 Texas Department of Transportation

# FINAL DRIVEWAY 5A

SHEET 1

| FED. RD. DIV. NO. | FEDERAL AID PROJECT NO. | | SHEET NO. |
|---|---|---|---|
| 6 | NH 2000(704), etc | | 3360 C |
| STATE | DIST. | COUNTY | |
| TEXAS | SAT | BEXAR | |
| CONT. | SECT. | JOB | HIGHWAY NO. |
| 2452 | 01 | 036, etc | LP 1604 |

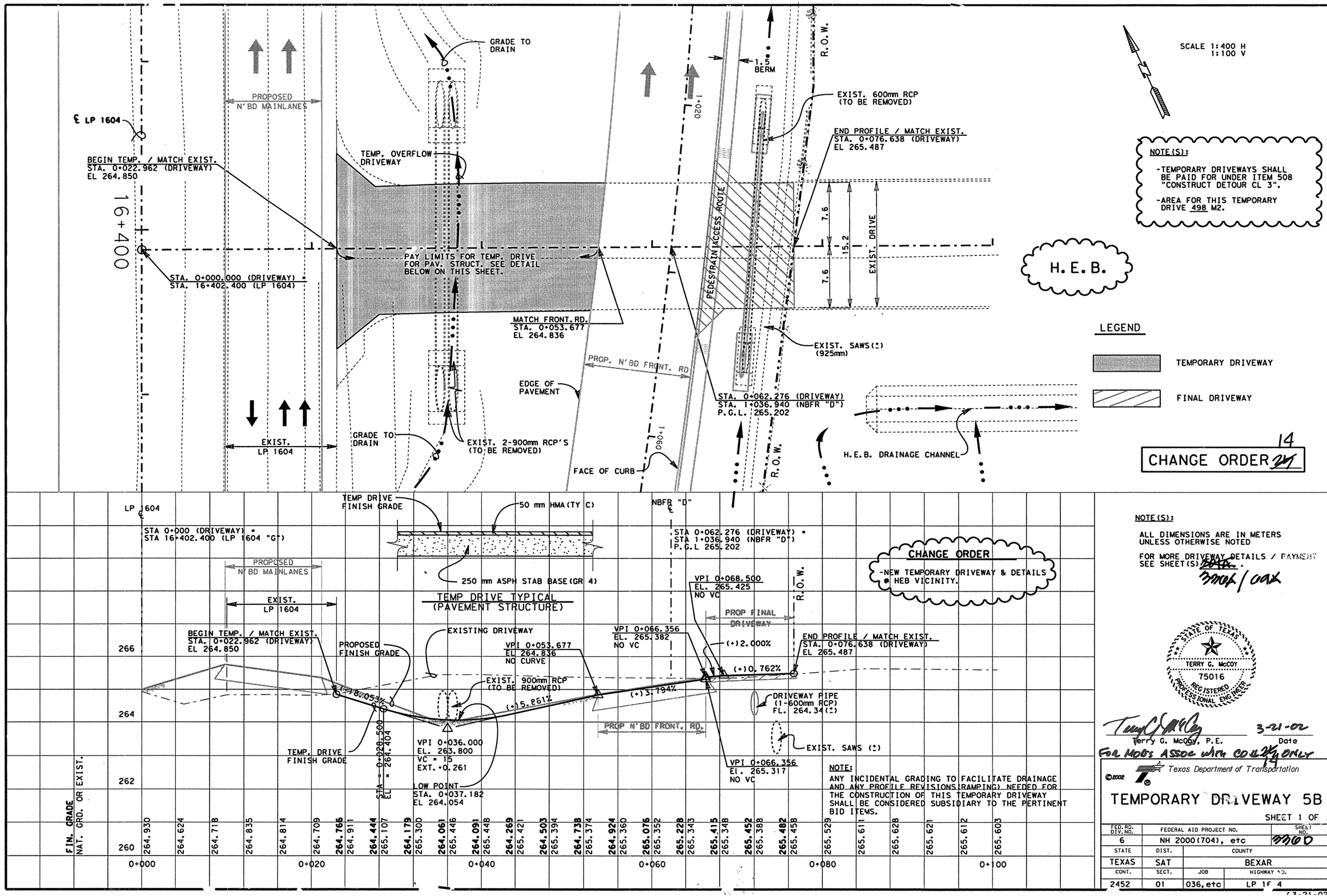


NOTE(S):

ALL DIMENSIONS ARE IN METERS UNLESS OTHERWISE NOTED

FOR MORE DRIVEWAY DETAILS / PAYMENT SEE SHEET(S) ~~204~~ 390A / 404.

STATE OF TEXAS
TERRY G. McCOY
75016
REGISTERED PROFESSIONAL ENGINEER

Terry G. McCoy, P.E. — 3-21-02 Date

FOR MOD'S ASSOC WITH CO #14 ONLY

©2002 Texas Department of Transportation

# TEMPORARY DRIVEWAY 5B

SHEET 1 OF .

| FED. RD. DIV. NO. | FEDERAL AID PROJECT NO. | | SHEET NO. |
|---|---|---|---|
| 6 | NH 2000(704), etc | | 390D |
| STATE | DIST. | COUNTY | |
| TEXAS | SAT | BEXAR | |
| CONT. | SECT. | JOB | HIGHWAY NO. |
| 2452 | 01 | 036, etc | LP 1604 |

3-21-02

LEVELS DISPLAYED
1 2 3 4 5 6 7 8 9 10 11 12 13 14 15 16
17 18 19 20 21 22 23 24 25 26 27 28 29 30 31 32
33 34 35 36 37 38 39 40 41 42 43 44 45 46 47 48
49 50 51 52 53 54 55 56 57 58 59 60 61 62 63

p1604fm471-90
driveway heb2.dgn

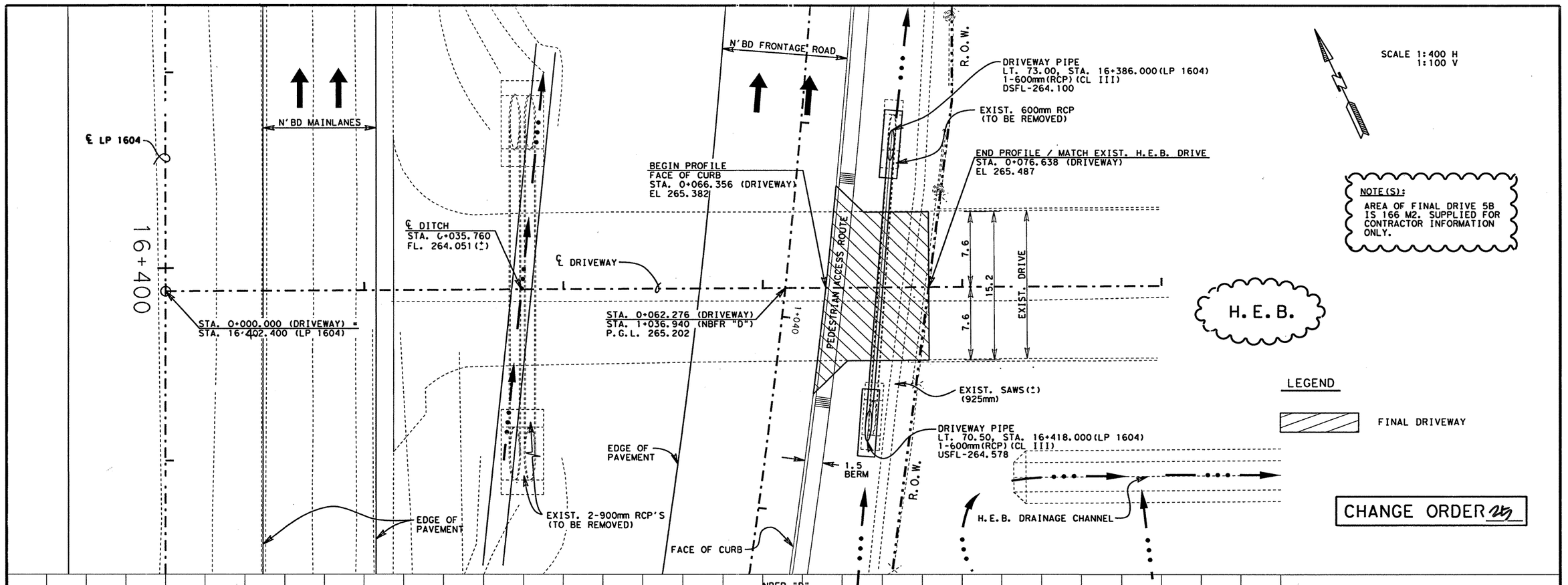


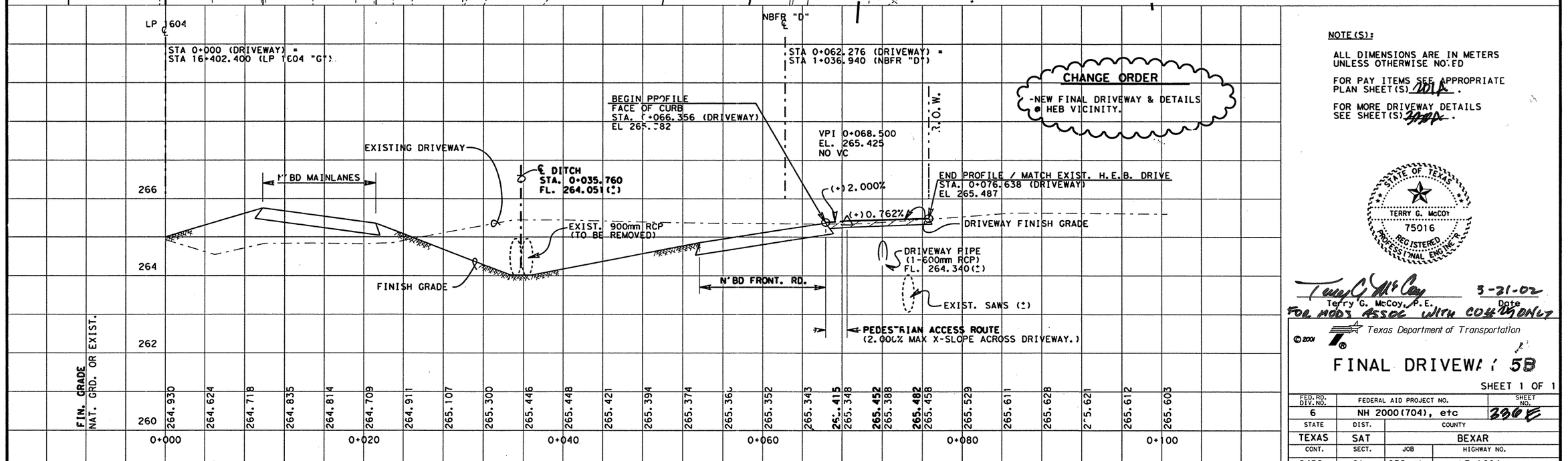


NOTE(S):

ALL DIMENSIONS ARE IN METERS UNLESS OTHERWISE NOTED

FOR PAY ITEMS SEE APPROPRIATE PLAN SHEET(S) 1014 .

FOR MORE DRIVEWAY DETAILS SEE SHEET(S) 1004 .

STATE OF TEXAS
TERRY G. McCOY
75016
REGISTERED PROFESSIONAL ENGINEER

Terry G. McCoy 3-21-02
Terry G. McCoy, P.E. Date
FOR MODS ASSOC WITH CO#25 ONLY

© 2001
Texas Department of Transportation

# FINAL DRIVEWAY 5B

SHEET 1 OF 1

| FED.RD. DIV.NO. | FEDERAL AID PROJECT NO. | | SHEET NO. |
|---|---|---|---|
| 6 | NH 2000(704), etc | | 330E |
| STATE | DIST. | COUNTY | |
| TEXAS | SAT | BEXAR | |
| CONT. | SECT. | JOB | HIGHWAY NO. |
| 2452 | 01 | 036, etc | LP 1604 |

03-21-02

LEVELS DISPLAYED
1 2 3 4 5 6 7 8 9 10 11 12 13 14 15 16
17 18 19 20 21 22 23 24 25 26 27 28 29 30 31 32
33 34 35 36 37 38 39 40 41 42 43 44 45 46 47 48
49 50 51 52 53 54 55 56 57 58 59 60 61 62 63

lp1604fm471-90
drivewayheb2.dgn

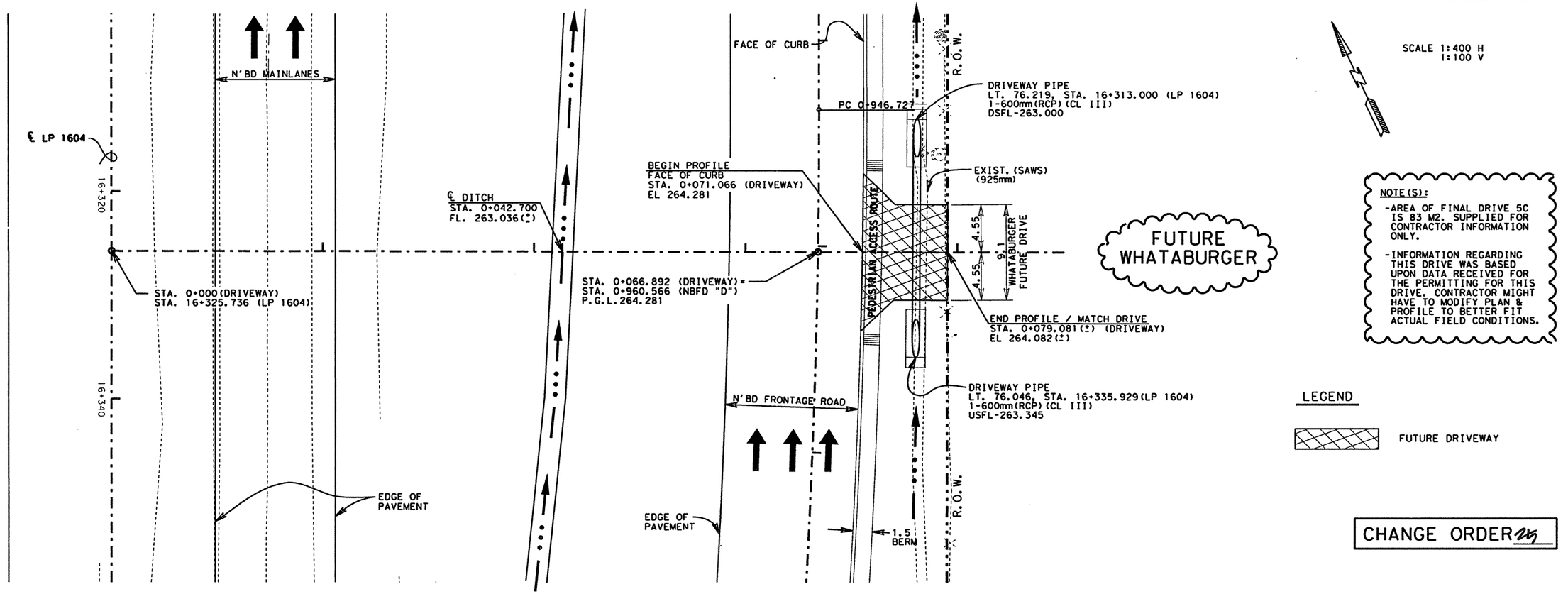


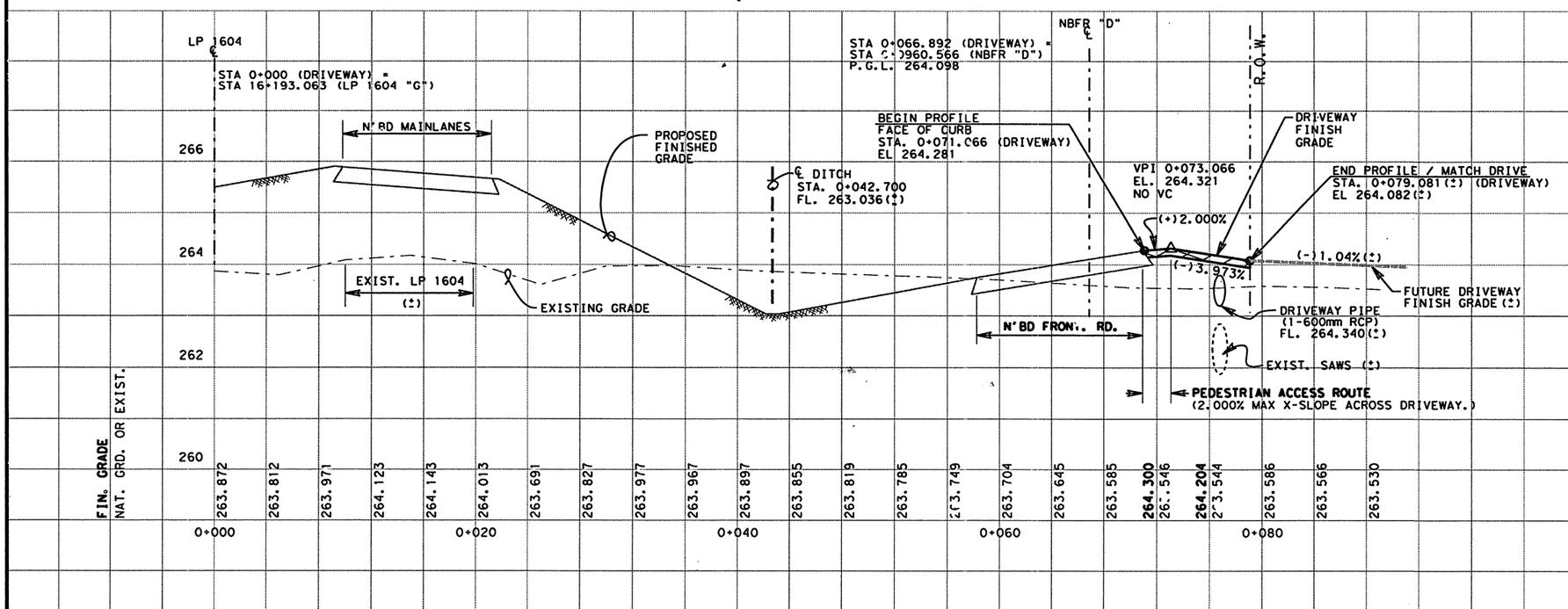


NOTE(S):

ALL DIMENSIONS ARE IN METERS UNLESS OTHERWISE NOTED

FOR PAY ITEMS SEE APPROPRIATE PLAN SHEET(S) 220A .

FOR MORE DRIVEWAY DETAILS SEE SHEET(S) 330A .

STATE OF TEXAS
TERRY G. McCOY
75016
REGISTERED PROFESSIONAL ENGINEER

Terry G. McCoy, P.E. — 3.21.02 Date

FOR MOD'S ASSOC WITH CO #25 ONLY

© 2001

Texas Department of Transportation

# FINAL DRIVEWAY 5C (WHATABURGER)

SHEET 1 OF 1

| FED. RD. DIV. NO. | FEDERAL AID PROJECT NO. | | SHEET NO. |
|---|---|---|---|
| 6 | NH 2000(704), etc | | 330F |
| STATE | DIST. | COUNTY | |
| TEXAS | SAT | BEXAR | |
| CONT. | SECT. | JOB | HIGHWAY NO. |
| 2452 | 01 | 036, etc | LP 1604 |

LEVELS DISPLAYED
1 2 3 4 5 6 7 8 9 10 11 12 13 14 15 16
17 18 19 20 21 22 23 24 25 26 27 28 29 30 31 32
33 34 35 36 37 38 39 40 41 42 43 44 45 46 47 48
49 50 51 52 63 54 55 56 57 58 59 60 61 62 63

p1604fm471-90
dr i:\ewcoy\heb2.dgn

03-21-C

BEGIN DRIVEWAY 8A
STA. 1+390.000 (SBFR "B")
= STA. 0+000.000 (DRIVEWAY 8A)
P.G.L. 275.620

END OF RETURN
4.8 LT., SBFR "B" STA. 1+384.000
EL. 275.224

R =3.5

END OF RETURN
2.5 LT., DRIVEWAY 8A STA. 0+008.300
EL. 275.332

CULVERT I12BA
450mm RCP
FL. 271.794
(FOR CULVERT DETAILS SEE NEXT SHEET.)

AREA OF DRIVEWAY #8A 199M2
PROVIDED FOR CONTRACTORS
INFORMATION ONLY.

S'BD FRONT. RD. "B"

S 31°25'53.21" W

4.000 % X-SLOPE STA. 0+008.300

5.0

0+020

PI

BEGIN PROFILE
STA. 0+004.800
P.G.L. 275.524

P.C. STA.
0+014.961

P.T. STA.
0+030.670

END OF RETURN
2.5 RT., DRIVEWAY 8A STA. 0+008.300
EL. 275.532

R =3.5

℄ TIE TO CULVERT I12BA
DRIVEWAY 8A STA. 0+028.361
38.58 RT., LP 1604 ℄ STA. 16+783.919

END OF RETURN
4.8 LT., SBFR "B" STA. 1+396.000
EL. 275.764

1+400

END SBFR "B"
STA. 1+400.000
=67.15 RT., LP 1604 ℄
STA. 16+787.533

DRIVEWAY #8A CIRCULAR CURVE DATA

P.I. STA. 0+023.000
△ = 30°00'01.12" RT.
T = 8.0386
L = 15.7081
R = 30.0000
E = 1.0583
PC STA. = 0+014.961
PT STA. = 0+030.670

2.500 % X-SLOPE STA. 0+034

0+040

END OF RETURN
2.5 RT., DRIVEWAY 8A STA. 0+041.302
EL. 273.912

R =7.6

END OF RETURN
26.78 RT., LP 1604 ℄ STA. 16+789.569
EL. 273.806

S'BD MAINLANES

END PROFILE MATCH MAINLANES/RAMP
26.748 RT. LP 1604 ℄ STA. 16+792.719
=STA. 0+043.112 (DRIVEWAY 8A)
EL. 273.885

END OF RETURN
26.67 RT., LP 1604 ℄ STA. 16+799.612
EL. 274.059

UPSTREAM END CULVERT I12BA
39 RT., LP 1604 ℄ STA. 16+800.556
EL. 272.114

PLAN

SCALE 1:200 H
1: 20 V

℄ LP 1604

S 24°27'21.91" W

16+800

℄ DRIVEWAY

2.5 | 2.5

0.6 BERM | 5.0 | 0.6 BERM

X-SLOPE VARIES

1:6 | 1:6

P.G.L.

DRIVEWAY #8A
TYPICAL
(NORMAL)

NOTE:
FOR DRIVEWAY PAVEMENT STRUCTURE ADAPT RESIDENTIAL DATA SHOWN ON SHEET 336A.

AXIS OF ROTATION
=℄ OF DRIVEWAY (P.G.L.)

℄ S'BD FRONT. RD. "B"
STA. 1+790.00^
=ST. 0+000 (DRIVEWAY 8A)

2.5 LT. @ 4.000% X-SLOPE (MATCH SBFR "B")

-0.100

STA. 0+008.300

(+) 0.144 %

-0.063

STA. 0+034

2.5 LT. @ 2.500% X-SLOPE (MATCH MAINLANES)

X-SLOPE TRANSITION DIAGRAM

RIGHT SIDE MIRRORS THAT OF THE LEFT SIDE.

CHANGE ORDER NO. -NEW DRIVEWAY AND DETAILS

CHANGE ORDER 25

NOTE(S):

ALL DIMENSIONS ARE IN METERS UNLESS OTHERWISE NOTED

FOR PAY ITEMS RELATED SEE SHEET(S) 27A, 27B, AND 202A.

BEGIN PROFILE (MATCH SBFR "B")
4.8 LT. STA. 1+390.000 (SBFR"B")
= STA. 0+004.800 (DRIVEWAY 8A)
EL. 275.524

VPI 0+014
EL = 275.340
L = 18
E = -0.165

P.G.L. = FINISHED GRADE

NAT. GRD.

(-)2.000 %

S'BD FRONT. RD "B"

VPC 0+005.000
EL. = 275.520

P.G.L.

(-)9.317 %

VPT & VPC 0+023.000
EL. = 274.502

(+)2.000 %

END PROFILE MATCH MAINLANES/RAMP
26.748 RT. LP 1604 ℄ STA. 16+792.719
=STA. 0+043.112 (DRIVEWAY 8A)
EL. 273.885

S'BD ENTRANCE RAMP AND MAINLANES

VPI 0+032
EL = 273.663
L = 18
E = 0.255

VPT 0+041.000
EL. = 273.843

CULVERT I12BA
450mm RCP
FL. 271.794

PROFILE

| | 0+000 | | | | | 0+010 | | | | | 0+020 | | | | | 0+030 | | | | | 0+040 | | | | |
|---|---|---|---|---|---|---|---|---|---|---|---|---|---|---|---|---|---|---|---|---|---|---|---|---|---|
| NG | 276.269 | 275.620 | 276.222 | 275.580 | 276.175 | 275.540 | 276.091 | 275.498 | 275.970 | 275.442 | 275.849 | 275.369 | 275.707 | 275.280 | 275.566 | 275.175 | 275.510 | 275.054 | 275.539 | 274.917 | 275.568 | 274.763 | 275.569 | 274.593 | 275.571 |
| FIN. GRD. | | | | | | | | | | | | | | | | | | | | | | | | | |
| | 274.411 | 275.583 | 274.250 | 275.605 | 274.114 | 275.627 | 274.003 | 275.632 | 273.918 | 275.636 | 273.857 | 275.632 | 273.821 | 275.621 | 273.811 | 275.610 | 273.826 | 275.580 | 273.863 | 275.563 | 273.885 | | | | |

LEVELS DISPLAYED
1 2 3 4 5 6 7 8 9 10 11 12 13 14 15 16
17 18 19 20 21 22 23 24 25 26 27 28 29 30 31 32
33 34 35 36 37 38 39 40 41 42 43 44 45 46 47 48
49 50 51 52 53 54 55 56 57 58 59 60 61 62 63

lp1604fm471-90
driveway8a.dgn

STATE OF TEXAS
TERRY G. McCOY
75016
REGISTERED PROFESSIONAL ENGINEER

Terry G. McCoy, P.E. 3.21.02
Date

FOR MOD'S ASSOC. WITH COLEY ONLY

© 2001
Texas Department of Transportation

# DRIVEWAY #8A

SHEET 1 OF 2

| FED. RD. DIV. NO. | FEDERAL AID PROJECT NO. | | SHEET NO. |
|---|---|---|---|
| 6 | NH 2000(704), etc | | 336A |
| STATE | DIST. | COUNTY | |
| TEXAS | SAT | BEXAR | |
| CONT. | SECT. | JOB | HIGHWAY NO. |
| 245^ | 01 | 036, etc | LP 1604 |

03-21-02

QUANTITIES THIS SHEET
CSJ: 2452-01-038

## ESTIMATED QUANTITIES

| | DESCRIPTION | UNIT | QTY. |
|---|---|---|---|
| * | STRUCT EXCAV | M3 | 58 |
| # | RC PIPE (CL III) (450mm) | M | 34.6 |
| # | SET (TY II) (450mm) (1:6) | EA | 2 |
| # | CEMENT STAB BKFL | M3 | 27.3 |

* SUPPLIED FOR CONTRACTORS INFORMATION ONLY.

\# DRIVEWAY RELATED ITEMS SUPPLIED FOR CONTRACTOR'S INFORMATION ONLY. FOR PAY ITEMS SEE DRIVEWAY AND MAILBOX SUMMARY SHEETS.

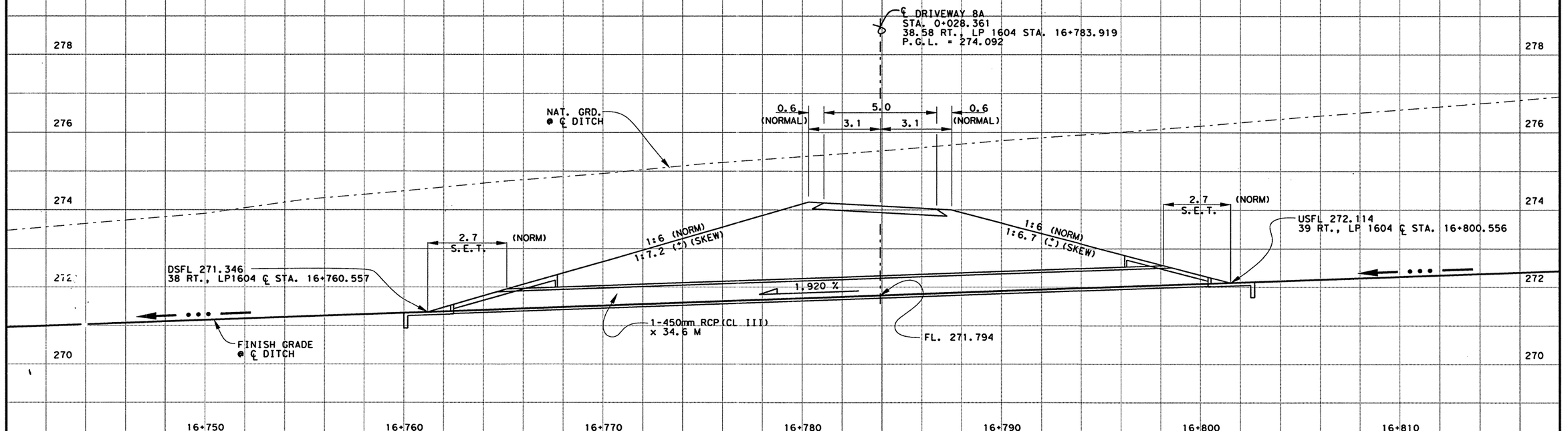


CHANGE ORDER NO. 25
PIPE CULVERT I12BA
NEEDED @ DRIVEWAY 8A.

CHANGE ORDER 25

STATE OF TEXAS
TERRY G. McCOY
75016
REGISTERED PROFESSIONAL ENGINEER

Terry G. McCoy 3-21-02
Terry G. McCoy, P.E. Date
FOR HDR's ASSOC. WITH CONSTRUCTION

© 2001 Texas Department of Transportation

# DRIVEWAY # 8A

SHEET 2 OF 2

| FED.RD. DIV.NO. | FEDERAL AID PROJECT NO. | | SHEET NO. |
|---|---|---|---|
| 6 | NH 2000(704), etc. | | 0201 |
| STATE | DIST. | COUNTY | |
| TEXAS | SAT | BEXAR | |
| CONT. | SECT. | JOB | HIGHWAY NO. |
| 2452 | 01 | 036, etc. | LP 1604 |

03-21-02

LEVELS DISPLAYED
1 2 3 4 5 6 7 8 9 10 11 12 13 14 15 16
17 18 19 20 21 22 23 24 25 26 27 28 29 30 31 32
33 34 35 36 37 38 39 40 41 42 43 44 45 46 47 48
49 50 51 52 53 54 55 56 57 58 59 60 61 62 63

p1604fm471-90
driveway8a.dgn

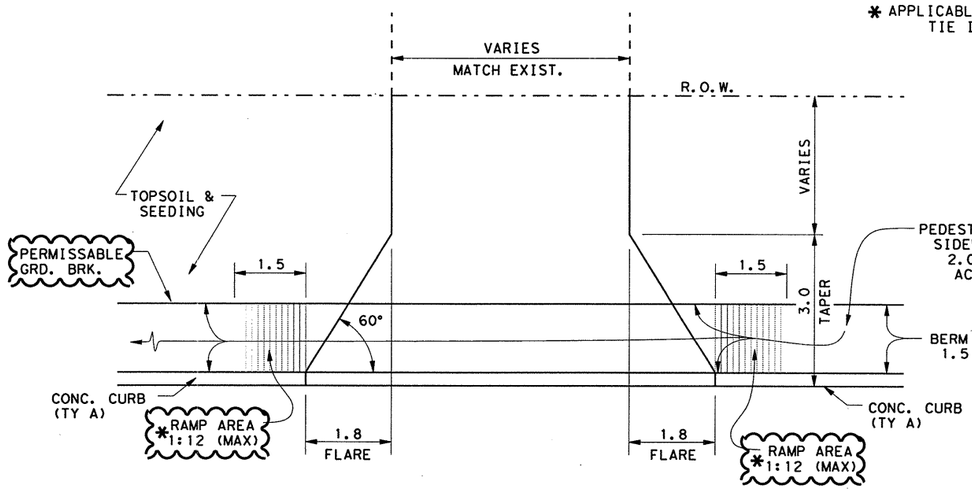


**TYPICAL RESIDENTIAL DRIVEWAY**

**PLAN VIEW**

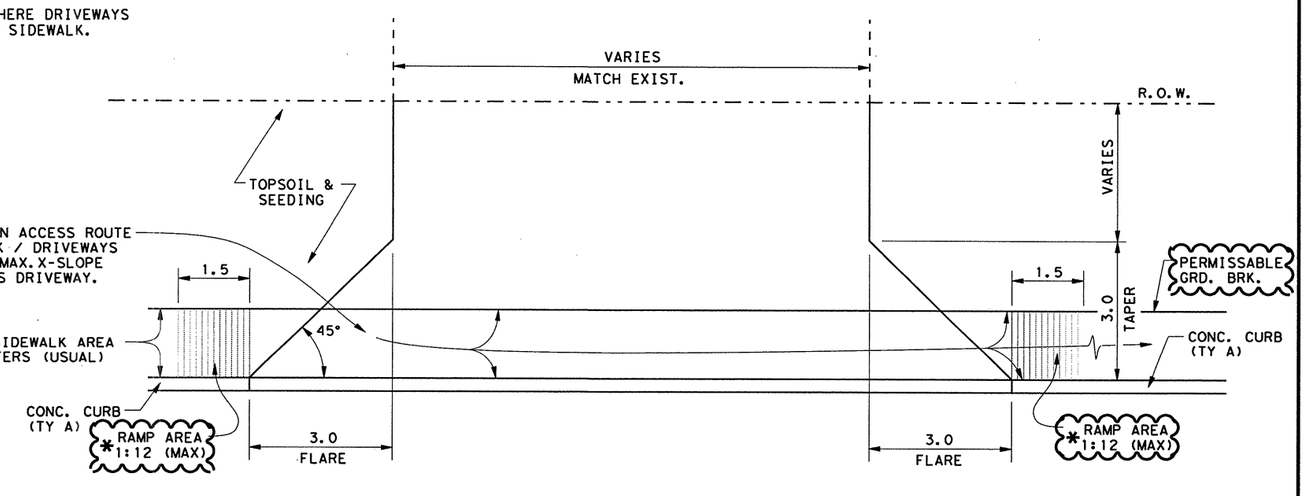


**TYPICAL COMMERCIAL DRIVEWAY**

**PLAN VIEW**

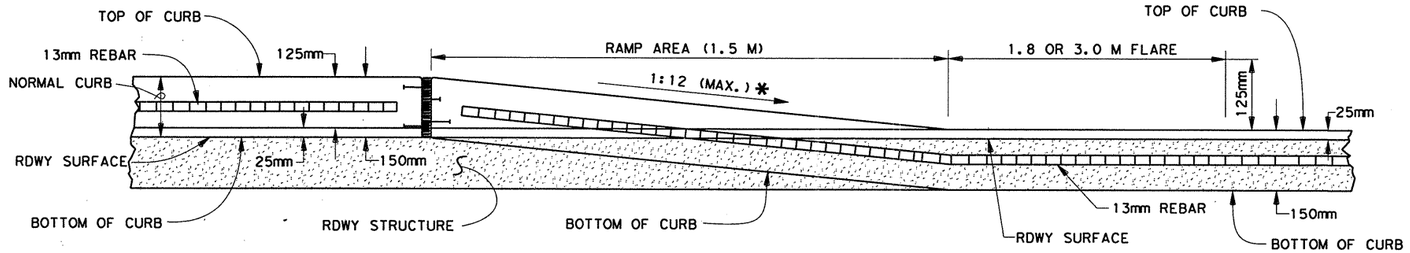


**CURB TRANSITION @ CONCRETE DRIVEWAY**

NOTE(S):

1. ALL DIMENSIONS ARE IN METERS UNLESS OTHERWISE NOTED.
2. THE FLEX BASE CUSHION PLACED WILL BE SPRINKLED AND ROLLED / TAMPED AS APPROVED BY THE ENGINEER.
3. FURNISHING AND PLACING THE FLEX BASE CUSHION WILL BE SUBSIDIARY TO ITEM 530 "DRIVEWAYS".
4. THE FLEX BASE CUSHION UNDER CONCRETE SIDEWALKS AND CONCRETE DRIVEWAYS MAY BE OF ANY TYPE AND GRADE APPROVED BY THE ENGINEER.
5. IN AREAS WITH SIDEWALKS, THE PORTION OF THE DRIVEWAY CROSSING THE SIDEWALK SHALL HAVE A CROSS-SLOPE NO GREATER THAN 2.00% (1:50).
6. SEE RAMP-00B (M) STANDARD SHEET FOR MORE INFORMATION ON DRIVEWAY DETAILS.
7. FOR DRIVEWAYS WITH DRAINAGE STRUCTURES ASSOCIATED WITH THEM, SEE SHEET(S) 27,28 FOR MORE DETAILS.
8. FOR SPECIAL DRIVEWAYS AND THEIR DETAILS SEE ELSEWHERE IN THE PLANS.

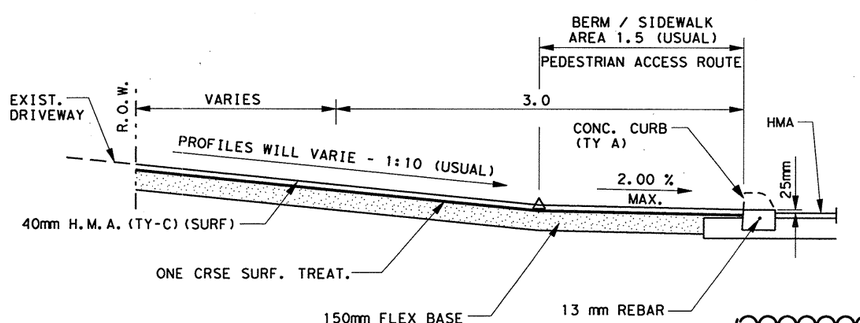


**TYPICAL ASPHALT DRIVEWAY SECTION**

**RESIDENTIAL**

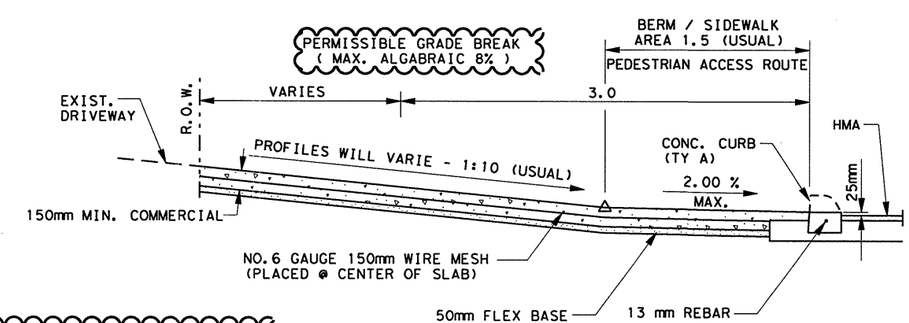


**TYPICAL CONCRETE DRIVEWAY SECTION**

**COMMERCIAL**

CHANGE ORDER NO. 64

- MODIFIED DRIVEWAY DETAILS / NOTES TO BETTER ACCOMMODATE ADA REQUIREMENTS.

NOTE: FOR SPECIFIC DRIVEWAY PROFILES AND DETAILS SEE ELSEWHERE IN PLANS.

CHANGE ORDER 64

STATE OF TEXAS
JEROME D. PAVLISKA
76075
REGISTERED PROFESSIONAL ENGINEER

Jerome D. Pavlisko, P.E. 4-28-04
Jerome D. Pavlisko, P.E. Date

©2000

Texas Department of Transportation

**MISCELLANEOUS ROADWAY DETAILS**

SHEET 2 OF 12

| FED. RD. DIV. NO. | FEDERAL AID PROJECT NO. | | SHEET NO. |
|---|---|---|---|
| 6 | NH 2000(704), etc. | | 336H |
| STATE | DIST. | COUNTY | |
| TEXAS | SAT | BEXAR | |
| CONT. | SECT. | JOB | HIGHWAY NO. |
| 2452 | 01 | 036, etc. | LP 1604 |

LEVELS DISPLAYED
1 2 3 4 5 6 7 8 9 10 11 21 31 41 51 61
71 81 91 02 12 22 32 42 52 62 72 82 92 03 13 23
33 43 53 63 73 83 93 04 14 24 34 44 54 64 74 84
94 05 15 25 35 45 55 65 75 85 95 06 16 26 36

ACC: t:\ao\design\lp1604fm471-90\
FILE: misc\rdxdetail02.dgn

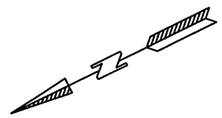


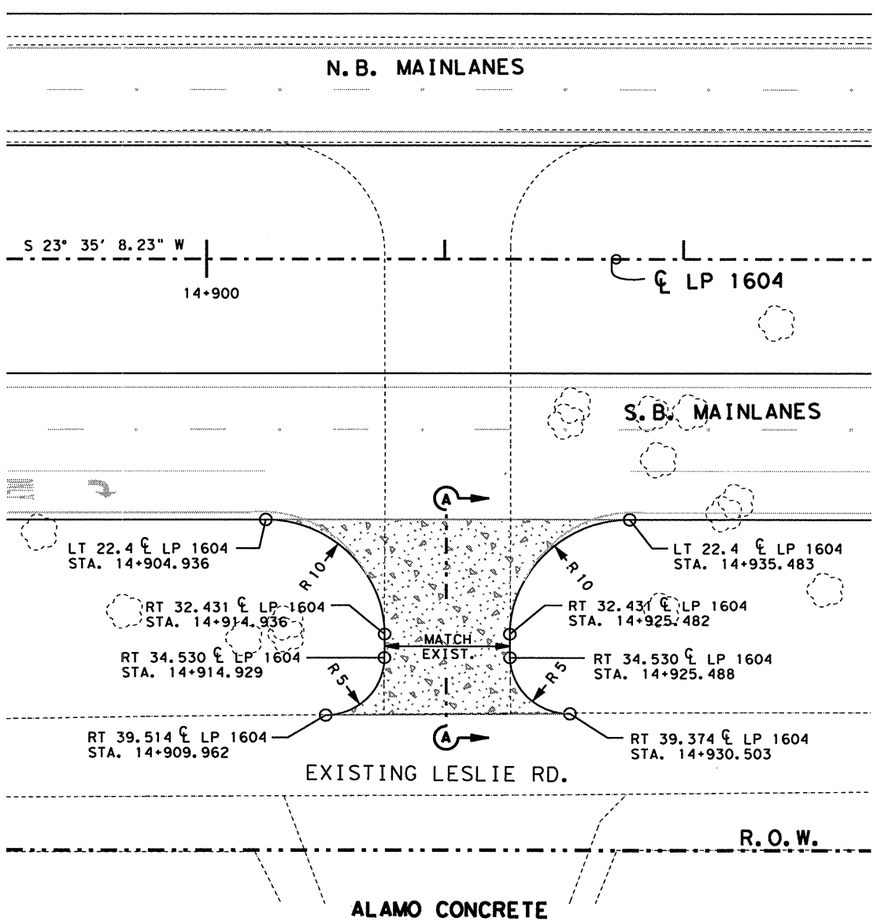


**PLAN VIEW SHOWING DRIVEWAY DETAILS**

LOOP 1604
S.B. MAINLANES

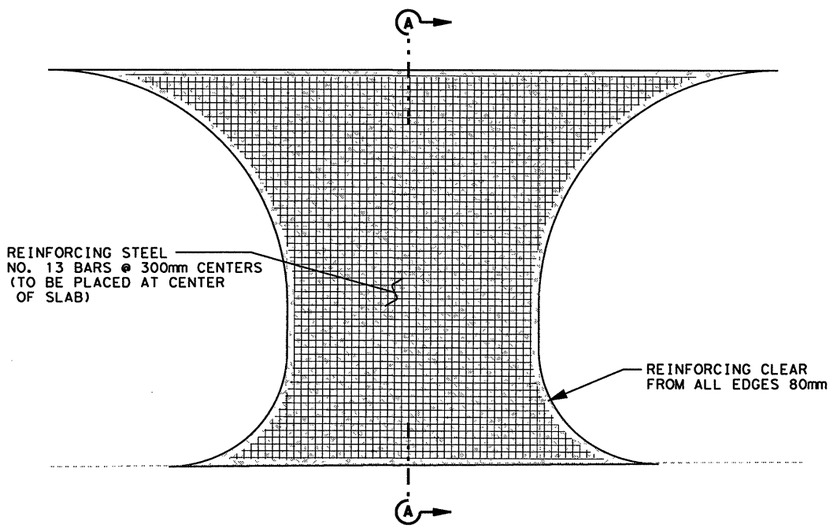


**PLAN VIEW SHOWING REINFORCING STEEL**

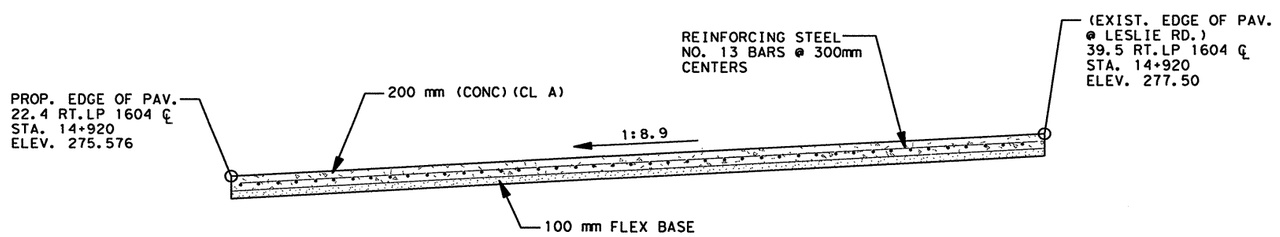


**SECTION A-A**
**(LP 1604 ℄ STA. 14+920)**

SEE NOTES RELATED TO
CONCRETE DRIVES ON SHEET(S) 336.

STATE OF TEXAS
JOEL K. DAVENPORT, JR.
79276
REGISTERED
PROFESSIONAL ENGINEER

Joel K. Davenport, Jr. 9/18/00
Joel K. Davenport, Jr. P.E. 79276 Date

| * BILL OF ESTIMATED QUANTITIES | | |
|---|---|---|
| STEEL REINFORCING | KG | 1182 |
| CONCRETE (CLASS A) | M3 | 93.4 |
| FLEX BASE | M3 | 48.2 |
| | | |
| | | |
| | | |

* QUANTITIES SUPPLIED FOR CONTRACTORS INFO. ONLY.
DRIVEWAY TO BE PAID FOR BY THE M2 COMPLETE IN PLACE,
SEE PLAN SHEETS FOR PAYMENT.

Texas Department of Transportation

**MISCELLANEOUS ROADWAY DETAILS**

SHEET 3 OF 12

| FED. RD. DIV. NO. | FEDERAL AID PROJECT NO. | | SHEET NO. |
|---|---|---|---|
| 6 | NH 2000(704), etc. | | 337 |
| STATE | DIST. | COUNTY | |
| TEXAS | SAT | BEXAR | |
| CONT. | SECT. | JOB | HIGHWAY NO. |
| 2452 | 01 | 036, etc. | LP 1604 |

LEVELS DISPLAYED
1 2 3 4 5 6 7 8 9 10 11 12 13 14 15 16
17 18 19 20 21 22 23 24 25 26 27 28 29 30 31 32
33 34 35 36 37 38 39 40 41 42 43 44 45 46 47 48
49 50 51 52 53 54 55 56 57 58 59 60 61 62 63

ACC: t:\ao\design\lp1604fm471-90\
FILE: misc.dgn

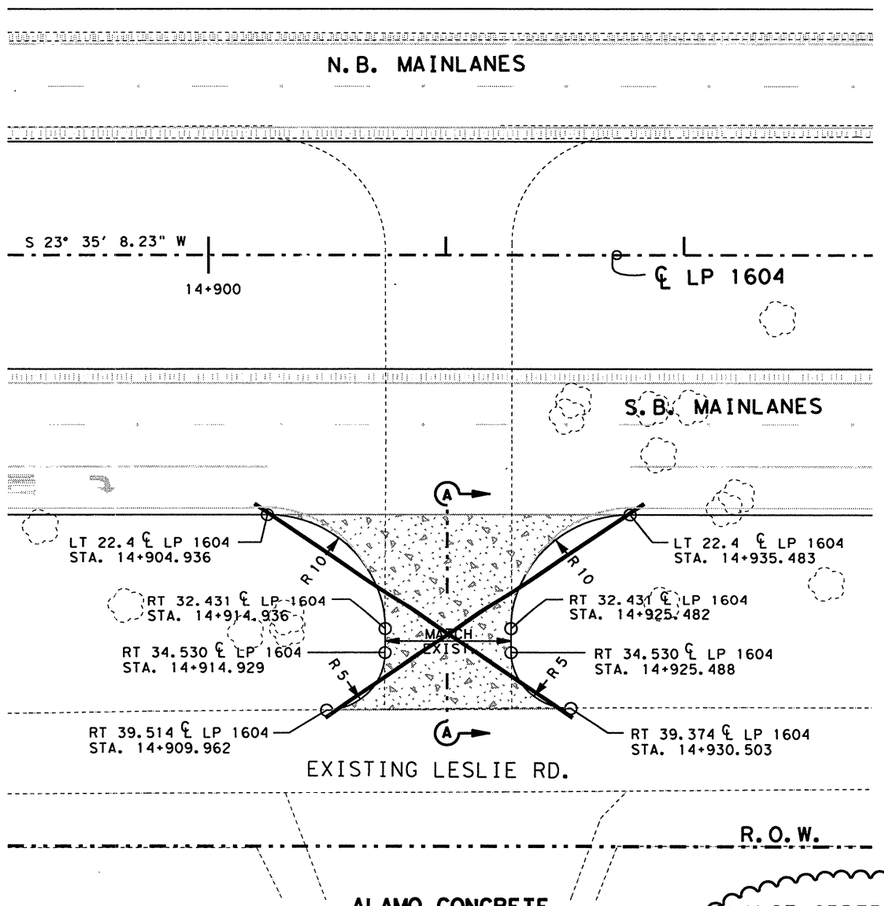


ALAMO CONCRETE

PLAN VIEW SHOWING
DRIVEWAY DETAILS

CHANGE ORDER NO. 12

DETAILS AND QUANTITIES ON THIS SHEET DELETED AS PART OF THIS CHANGE ORDER.

SCALE 1:500

LOOP 1604
S. B. MAINLANES

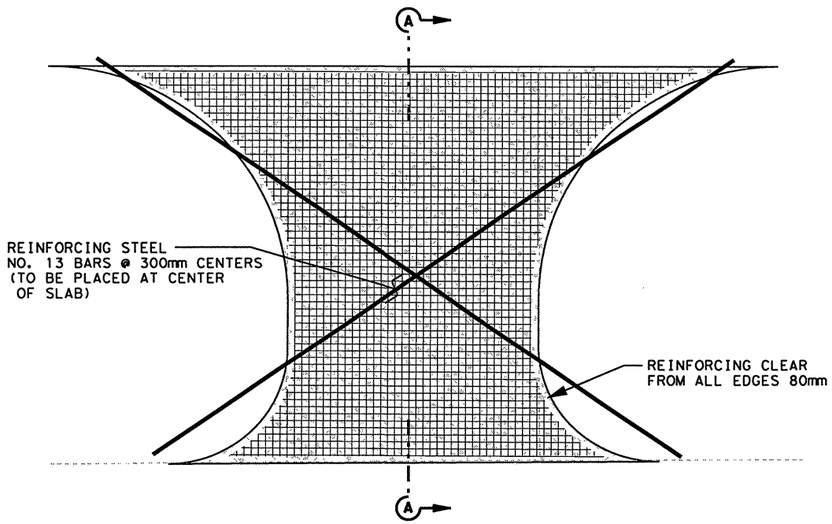


EXISTING LESLIE RD.

PLAN VIEW SHOWING
REINFORCING STEEL

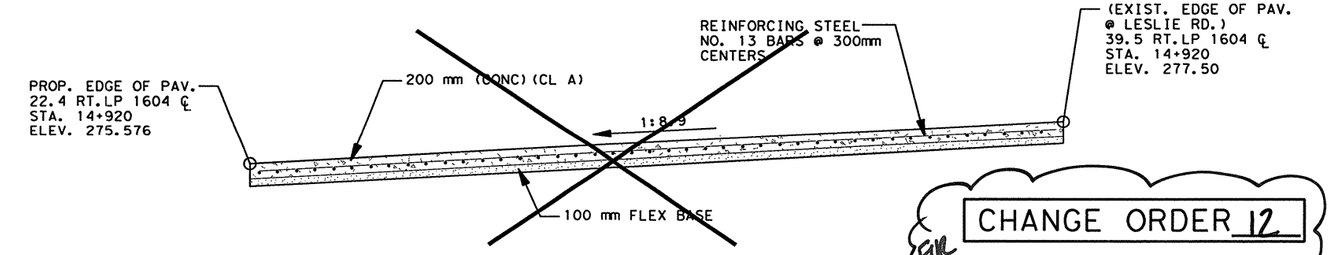


SECTION A-A
(LP 1604 ℄ STA. 14+920)

SEE NOTES RELATED TO
CONCRETE DRIVES ON SHEET(S) 336.

FOR CHANGE ORDER 12

| * BILL OF ESTIMATED QUANTITIES | | |
|---|---|---|
| STEEL REINFORCING | KG | 1182 |
| CONCRETE (CLASS A) | M3 | 93.4 |
| FLEX BASE | M3 | 48.2 |
| | | |
| | | |
| | | |

* QUANTITIES SUPPLIED FOR CONTRACTORS INFO. ONLY.
DRIVEWAY TO BE PAID FOR BY THE M2 COMPLETE IN PLACE,
SEE PLAN SHEETS FOR PAYMENT.

STATE OF TEXAS
JENNIFER L. MOCZYGEMBA
84734
REGISTERED
PROFESSIONAL ENGINEER

Jennifer L. Moczygemba, P.E. 84734 — P.E. — 10-10-01 Date

©2000 Texas Department of Transportation

# MISCELLANEOUS ROADWAY DETAILS

SHEET 3 OF 12

| FED. RD. DIV. NO. | FEDERAL AID PROJECT NO. | | SHEET NO. |
|---|---|---|---|
| 6 | NH 2000(704), etc. | | 337A |
| STATE | DIST. | COUNTY | |
| TEXAS | SAT | BEXAR | |
| CONT. | SECT. | JOB | HIGHWAY NO. |
| 2452 | 01 | 036, etc. | LP 1604 |

10-02-01

LEVELS DISPLAYED
1 2 3 4 5 6 7 8 9 10 11 12 13 14 15 16
17 18 19 20 21 22 23 24 25 26 27 28 29 30 31 32
33 34 35 36 37 38 39 40 41 42 43 44 45 46 47 48
49 50 51 52 53 54 55 56 57 58 59 60 61 62 63

ACC: t:\ao\design\lp1604fm471-90\
FILE: misc.dgn

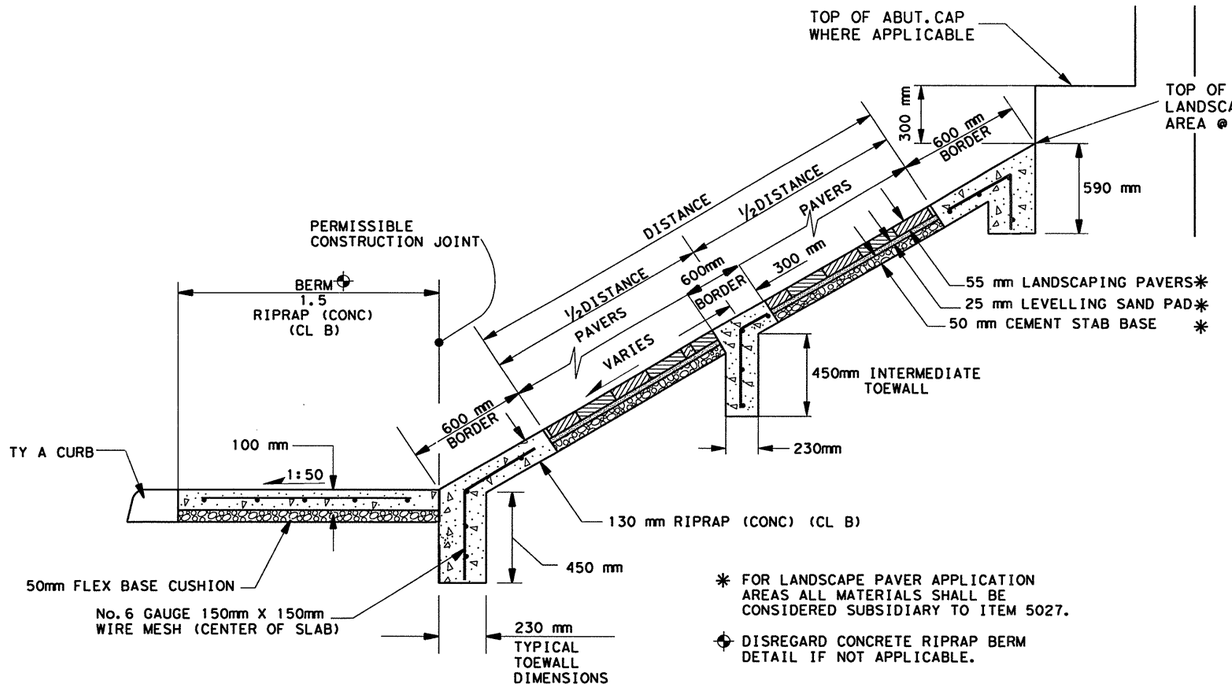


## EMBANKMENT AREA TYPICAL
## (SOUTH ABUTMENT, MAINLANE OVERPASS AT CULEBRA CREEK AND FM 471

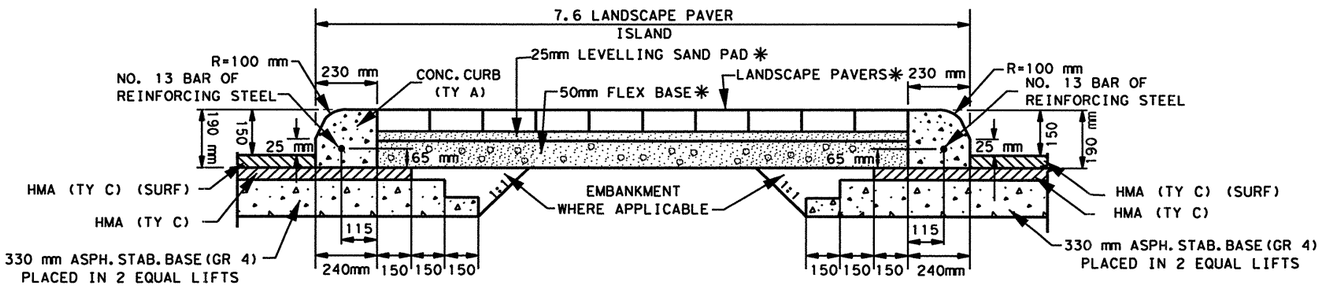


## DIRECTIONAL ISLAND -W- LANDSCAPING PAVERS DETAIL
## (CULEBRA ROAD)

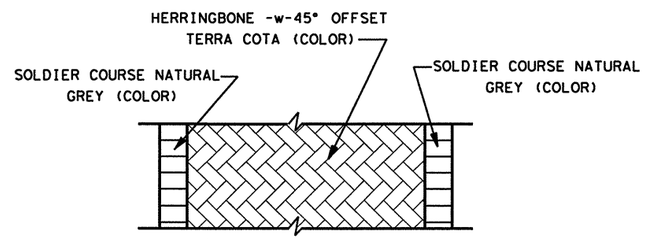


## PATTERN FOR LANDSCAPING PAVERS

NOTE(S):

1. FLEX BASE CAN BE OF ANY TYPE OR GRADE APPROVED BY THE ENGINEER.
2. THE FLEXBASE WILL BE SPRINKLED AND ROLLED/TAMPED AS APPROVED BY THE ENGINEER. FURNISHING AND PLACING THE BASE CUSHION SHALL BE SUBSIDIARY TO THE VARIOUS PERTINENT BID ITEMS.
3. ALL DIMENSIONS ARE IN METERS UNLESS OTHERWISE NOTED.
4. SEE PROJECT X-SECTIONS AND SHEET(S) 339 THRU 346 FOR ADDITIONAL DETAILS.

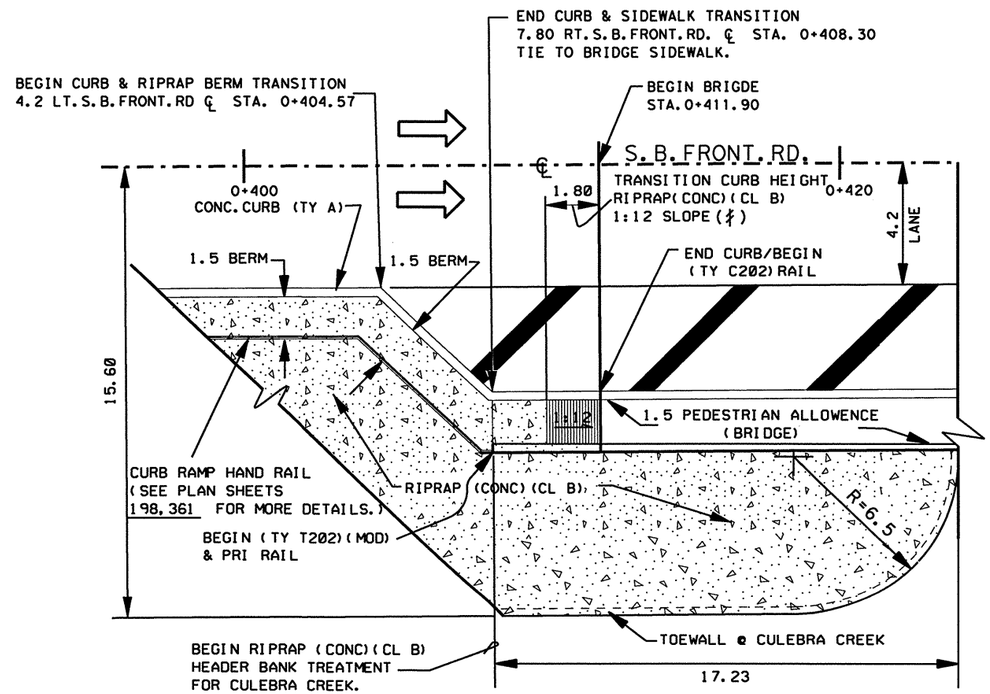


## CURB, RIPRAP TRANSITION DETAIL
## (AT BEGIN OF S.B. FRONTAGE RD. BRIDGE @ CULEBRA CREEK)

(*) APPLY ALSO THE 1:12 SLOPE TREATMENT TO THE RIPRAP (CONC) PROPOSED AT THE N'bd FRONTAGE RD. BRIDGE AT MEDIO CREEK.

STATE OF TEXAS — JOEL K. DAVENPORT, JR. — 79276 — REGISTERED PROFESSIONAL ENGINEER

Joel K. Davenport, Jr. 9/18/00
Joel K. Davenport, Jr., P.E. 79276 — Date

©2000
Texas Department of Transportation

**MISCELLANEOUS ROADWAY DETAILS**

SHEET 4 OF 12

| FED. RD. DIV. NO. | FEDERAL AID PROJECT NO. | | SHEET NO. |
|---|---|---|---|
| 6 | NH 2000(704), etc. | | 338 |
| STATE | DIST. | COUNTY | |
| TEXAS | SAT | BEXAR | |
| CONT. | SECT. | JOB | HIGHWAY NO. |
| 2452 | 01 | 036, etc. | LP 1604 |

LEVELS DISPLAYED
ACC: t:\go\design\lp1604fm471-90\
FILE: misc.dgn

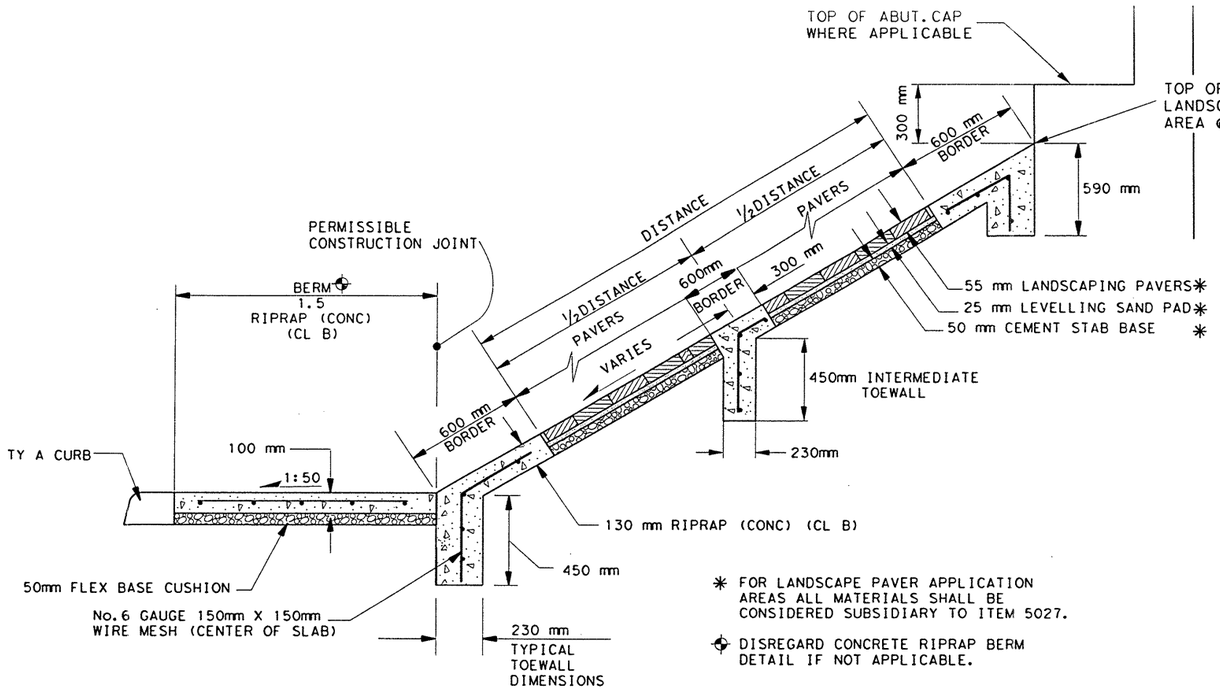


* FOR LANDSCAPE PAVER APPLICATION AREAS ALL MATERIALS SHALL BE CONSIDERED SUBSIDIARY TO ITEM 5027.

⊕ DISREGARD CONCRETE RIPRAP BERM DETAIL IF NOT APPLICABLE.

## EMBANKMENT AREA TYPICAL

(SOUTH ABUTMENT, MAINLANE OVERPASS AT CULEBRA CREEK AND FM 471

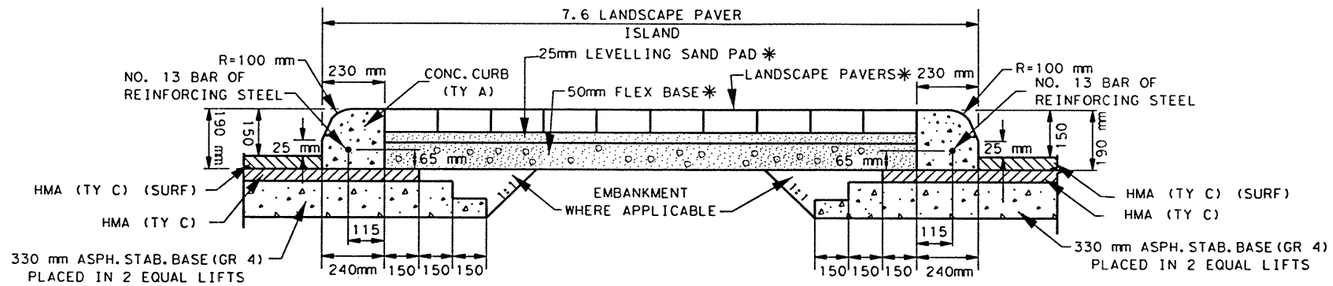


## DIRECTIONAL ISLAND -W- LANDSCAPING PAVERS DETAIL

(CULEBRA ROAD)

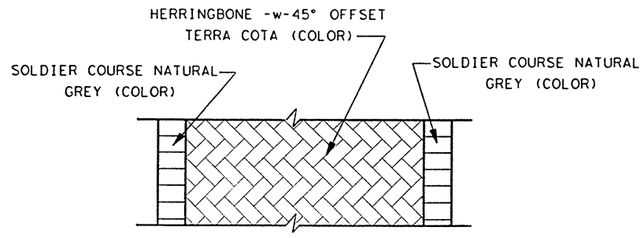


## PATTERN FOR LANDSCAPING PAVERS

NOTE(S):

1. FLEX BASE CAN BE OF ANY TYPE OR GRADE APPROVED BY THE ENGINEER.
2. THE FLEXBASE WILL BE SPRINKLED AND ROLLED/TAMPED AS APPROVED BY THE ENGINEER. FURNISHING AND PLACING THE BASE CUSHION SHALL BE SUBSIDIARY TO THE VARIOUS PERTINENT BID ITEMS.
3. ALL DIMENSIONS ARE IN METERS UNLESS OTHERWISE NOTED.
4. SEE PROJECT X-SECTIONS AND SHEET(S) 339 THRU 346 FOR ADDITIONAL DETAILS.

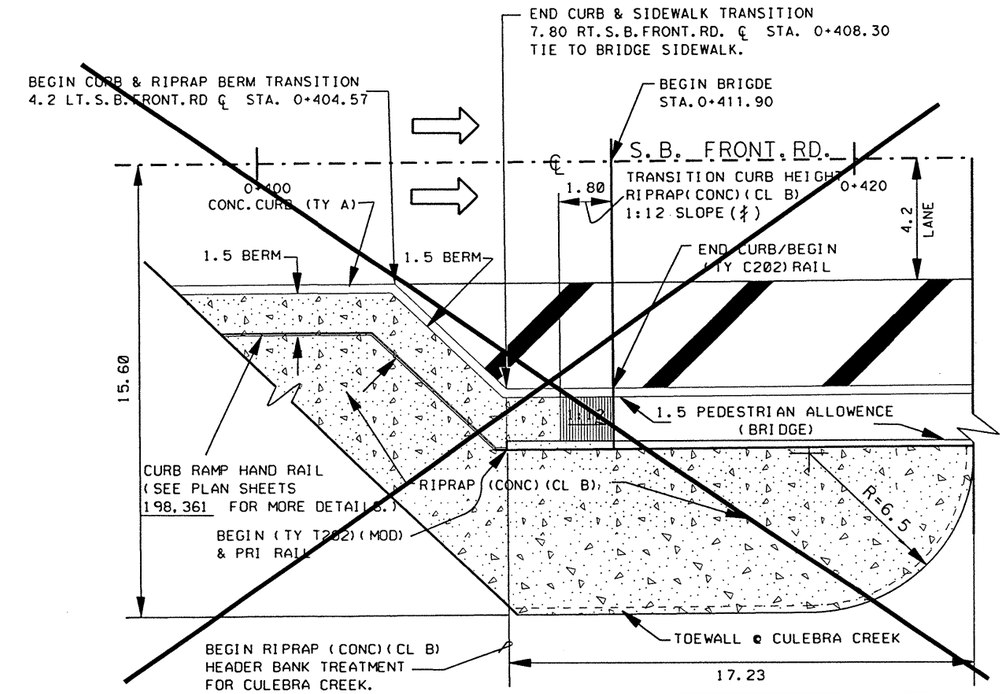


## CURB, RIPRAP TRANSITION DETAIL (AT BEGIN OF S.B. FRONTAGE RD. BRIDGE @ CULEBRA CREEK)

CHANGE ORDER 28

(*) APPLY ALSO THE 1:12 SLOPE TREATMENT TO THE RIPRAP (CONC) PROPOSED AT THE N'bd FRONTAGE RD. BRIDGE AT MEDIO CREEK.

CHANGE ORDER NO. 28

-DELETED DETAIL DUE TO PLAN SHEET REVISIONS

STATE OF TEXAS
JEROME D. PAVLISKA
76075
REGISTERED PROFESSIONAL ENGINEER

Jerome D. Pavliska P.E. 2-7-03
Jerome D. Pavliska, P.E. Date

©2000
Texas Department of Transportation

MISCELLANEOUS ROADWAY DETAILS

SHEET 4 OF 12

| FED. RD. DIV. NO. | FEDERAL AID PROJECT NO. | | SHEET NO. |
|---|---|---|---|
| 6 | NH 2000(704), etc. | | 338A |
| STATE | DIST. | COUNTY | |
| TEXAS | SAT | BEXAR | |
| CONT. | SECT. | JOB | HIGHWAY NO. |
| 2452 | 01 | 036, etc. | LP 1604 |

01-23-03

LEVELS DISPLAYED
1 3 4 5 6 7 8 9 10 11 12 13 14 15 16
17 18 19 20 21 22 23 24 25 26 27 28 29 30 31 32
33 34 35 36 37 38 39 40 41 42 43 44 45 46 47 48
49 50 51 52 53 54 55 56 57 58 59 60 61 62 63
ACC: t:\oo\design\lp1604fm471-90\
FILE: misc*rd*detail04-c028.dgn

**CHANGE ORDER NO. 19**
- -VOID PLAN SHT 338C
- -NEW DETAIL FOR STAMPED CONCRETE
- -NEW PLAN SHT

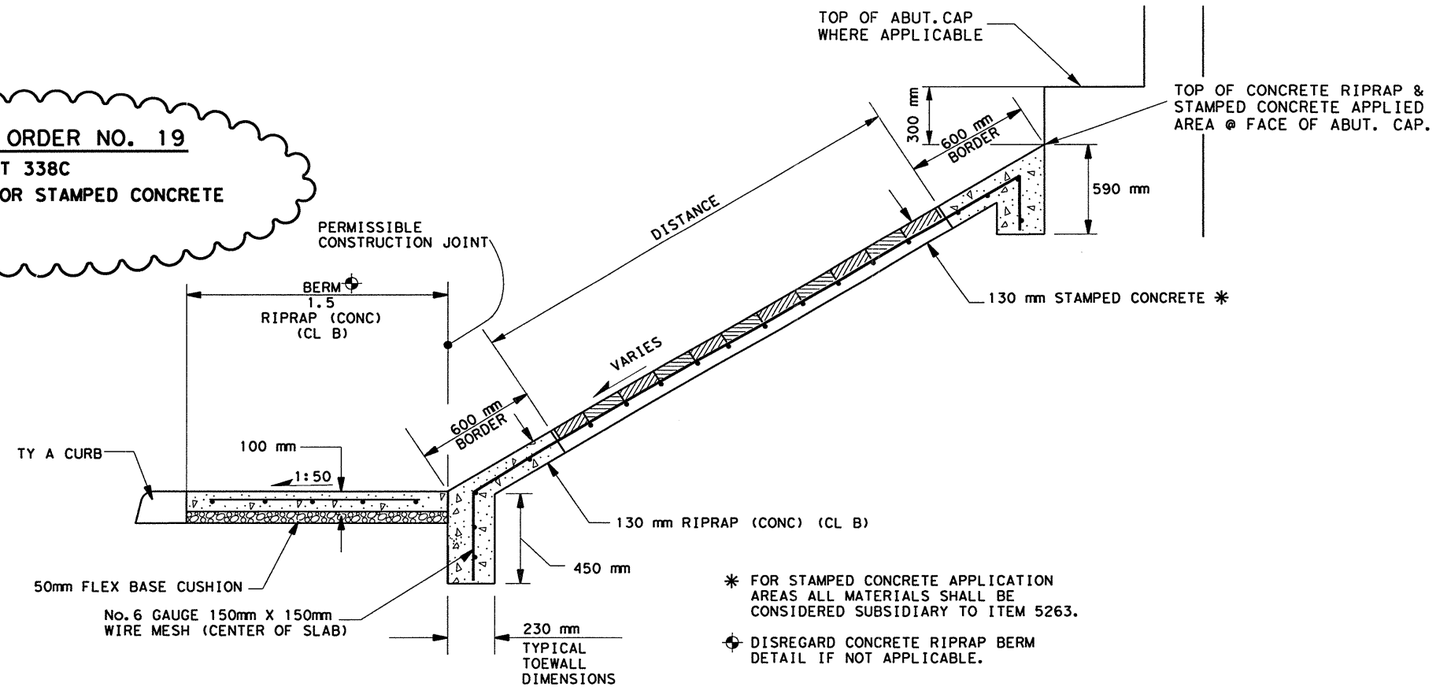


✳ FOR STAMPED CONCRETE APPLICATION AREAS ALL MATERIALS SHALL BE CONSIDERED SUBSIDIARY TO ITEM 5263.

⊕ DISREGARD CONCRETE RIPRAP BERM DETAIL IF NOT APPLICABLE.

## EMBANKMENT AREA TYPICAL
(SOUTH ABUTMENT, MAINLANE OVERPASS AT CULEBRA CREEK AND FM 471

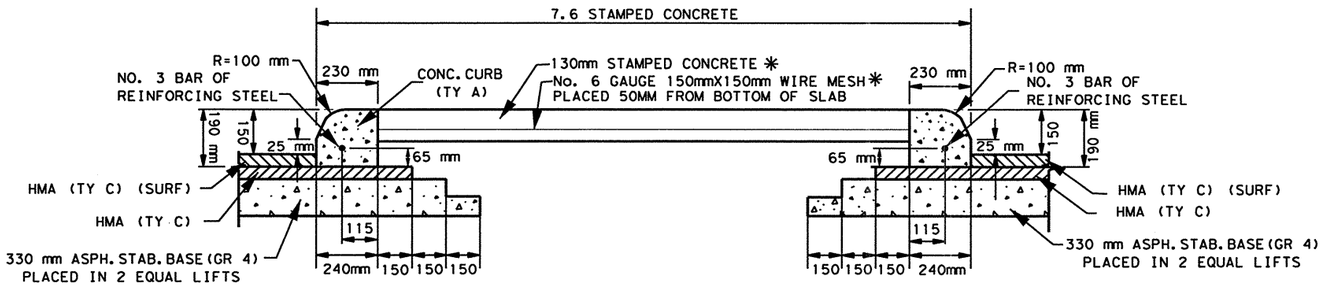


## DIRECTIONAL ISLAND -W- STAMPED CONCRETE DETAIL
(CULEBRA ROAD)

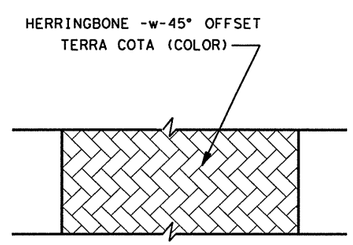


## PATTERN FOR STAMPED CONCRETE

NOTE(S):

1. THE FLEXBASE CAN BE OF ANY TYPE OR GRADE APPROVED BY THE ENGINEER.
2. THE FLEXBASE WILL BE SPRINKLED AND ROLLED/TAMPED AS APPROVED BY THE ENGINEER. FURNISHING AND PLACING THE BASE CUSHION SHALL BE SUBSIDIARY TO THE VARIOUS PERTINENT BID ITEMS.
3. ALL DIMENSIONS ARE IN METERS UNLESS OTHERWISE NOTED.
4. SEE PROJECT X-SECTIONS AND SHEET(S) 339B, 340B, 341B THRU 346 FOR ADDITIONAL DETAILS.
5. 75MM DIA WEEP HOLES SHALL BE PLACED 600MM FROM TOE OF SLOPE AND 300MM FROM TOP OF SLOPE AT 1500MM C-C.

   PROVIDE WEEP HOLES WHEN GRANULAR MATERIAL IS SPECIFIED OR IF DIRECTED BY THE ENGINEER. LOWER LEVEL OF WEEP

   HOLES SHALL BE BACKED BY 0.03M3 PACKET OF GRAVEL AND HARDWARE CLOTH.

   HARDWARE CLOTH, LOOSE GRADED STONE BEHIND WEEP HOLES, FLASHING, OR OTHER SEALING MATERIAL SHALL NOT BE PAID FOR DIRECTLY BUT SHALL BE SUBSIDIARY TO THE BID ITEM, 5263

CHANGE ORDER 19

STATE OF TEXAS — TERRY G. McCOY — 75016 — REGISTERED PROFESSIONAL ENGINEER

Terry G. McCoy, P.E. — 1-17-02 Date

©2000
Texas Department of Transportation

**MISCELLANEOUS ROADWAY DETAILS**

SHEET 4 OF 12

| FED. RD. DIV. NO. | FEDERAL AID PROJECT NO. | | SHEET NO. |
|---|---|---|---|
| 6 | NH 2000(704), etc. | | 338D |
| STATE | DIST. | COUNTY | |
| TEXAS | SAT | BEXAR | |
| CONT. | SECT. | JOB | HIGHWAY NO. |
| 2452 | 01 | 036, etc. | LP 1604 |

1-15-02

LEVELS DISPLAYED
1 2 3 4 5 6 7 8 9 10 11 12 13 14 15 16
17 18 19 20 21 22 23 24 25 26 27 28 29 30 31 32
33 34 35 36 37 38 39 40 41 42 43 44 45 46 47 48
49 50 51 52 53 54 55 56 57 58 59 60 61 62 63

ACC: t:\oo\design\lp1604fm471-90\
FILE: misc/miscrdvdetail04*C019ii.dgn

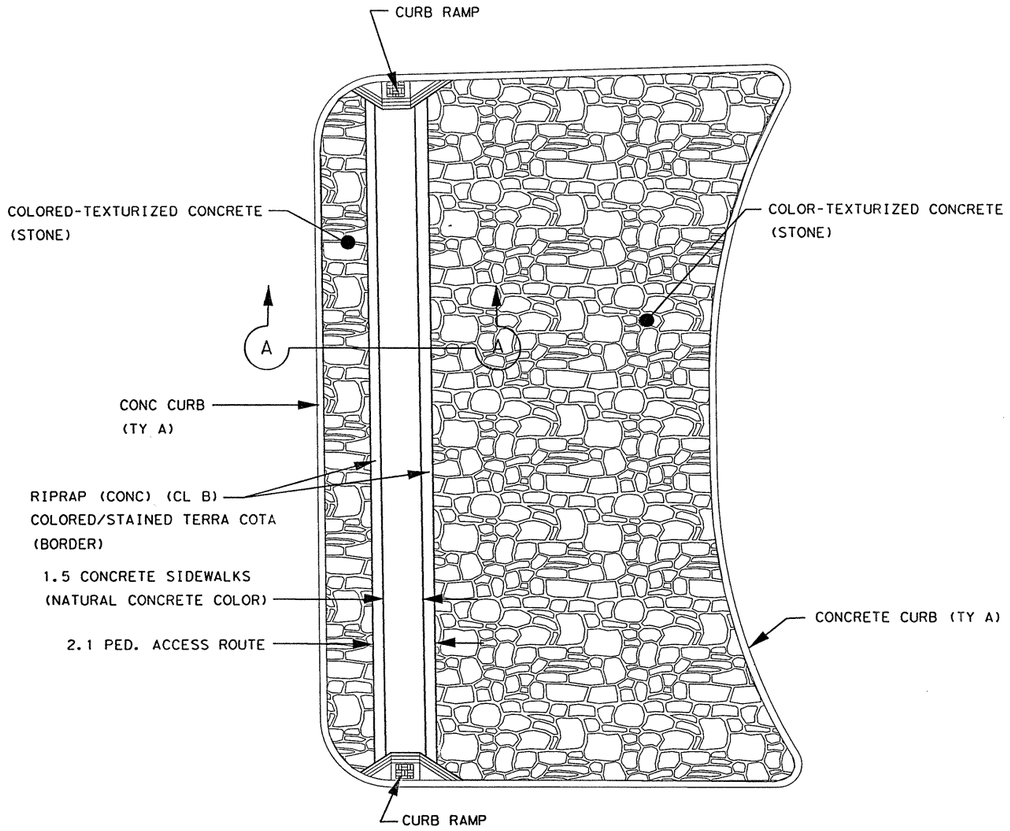


PLAN VIEW

TURN AROUND ISLAND DETAILS

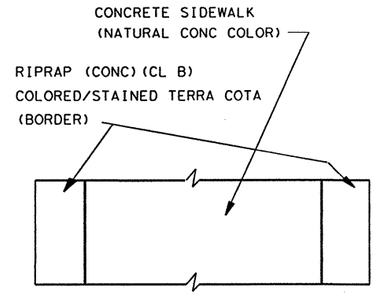


PATTERN(S)/COLOR(S)
FOR PED. ACCESS ROUTE

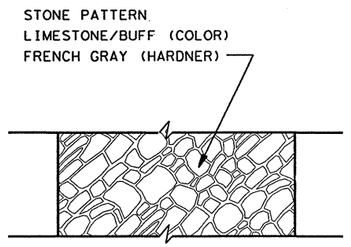


PATTERN(S)/COLOR(S)
FOR COLORED-TEXTURIZED CONCRETE

NOTES:
1. ALL DIMENSIONS ARE IN METERS UNLESS OTHERWISE NOTED.
2. FOR MORE DETAILS SEE LATEST/REVISED CULEBRA ROAD INTERSECTION CROSS SECTIONS.
3. FOR PAY ITEMS SEE APPROPRIATE PLAN SHEETS.
4. OBSTRUCTIONS (SUCH AS SIGNS, COLUMNS) NEAR ACCESS ROUTE SHALL MEET ADA STANDARDS.
5. PATTERN AND COLORS FOR STAMPED CONCRETE SHALL BE WHAT IS CALLED OUT ON THE PLANS OR THE APPROVED EQUAL.
6. CONCRETE IMPRINT SHALL BE UNIFORM IN DEPTH AND SURFACE TEXTURE. IRREGULAR JOINT SPACES BETWEEN TOOL ALIGNMENT SHALL BE HAND TOOLED.
7. COLORED/STAINING OF RIPRAP (CONC) (CL B) CALLED FOR ON THIS SHEET SHALL BE CONSIDERED SUBSIDIARY TO THE RIPRAP CONCRETE PLACED.
8. SAMPLES OF TEXTURE/COLORS TO BE USED SHALL BE SUBMITTED FOR APPROVAL BY THE ENGINEER PRIOR TO STARTING THIS WORK. NO DIRECT PAYMENT WILL BE MADE FOR SAMPLES REQUIRED.

CHANGE ORDER NO. 61
-NEW DETAILS FOR TURN AROUND ISLANDS @ CULEBRA RD.

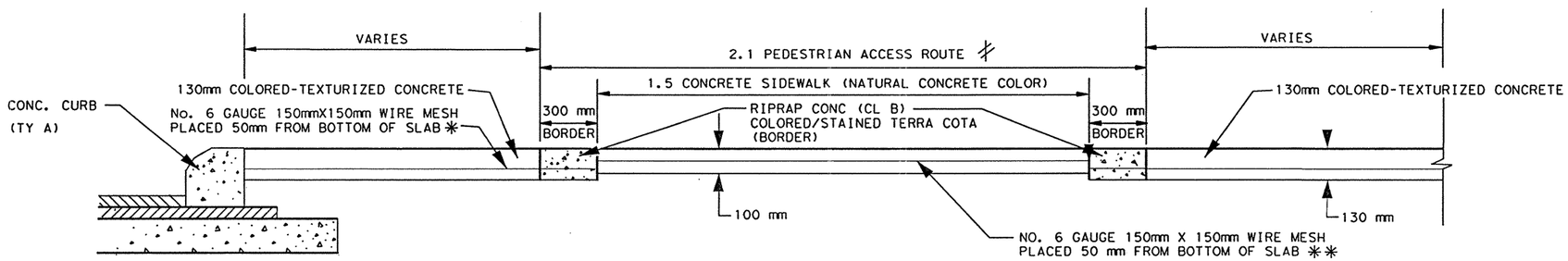


✳ FOR COLORED-TEXTURIZED CONCRETE APPLICATION AREAS, MATERIALS SHALL BE CONSIDERED SUBSIDIARY TO ITEM 5263

✳✳ CONSIDERED SUBSIDIARY TO ITEM 531 "CONCRETE SIDEWALKS"

⫽ 2.00% MAX CROSS SLOPE

SECTION A-A

TURN AROUND ISLAND TREATMENT DETAILS
(CULEBRA ROAD)

CHANGE ORDER 61

NEW SHEET

STATE OF TEXAS
JENNIFER L. MOCZYGEMBA
84734
REGISTERED
PROFESSIONAL ENGINEER

Jennifer L. Moczygemba, P.E. 84734 — 6-13-03 Date

©2003
Texas Department of Transportation

MISCELLANEOUS ROADWAY DETAILS
SHEET 1 OF 1

| FED.RD. DIV.NO. | FEDERAL AID PROJECT NO. | | SHEET NO. |
|---|---|---|---|
| 6 | NH 2000(704),etc. | | |
| STATE | DIST. | COUNTY | |
| TEXAS | SAT | BEXAR | |
| CONT. | SECT. | JOB | HIGHWAY NO. |
| 2452 | 01 | 036,etc. | LP 1604 |

6/12/03

LEVELS DISPLAYED
1 2 3 4 5 6 7 8 9 10 11 12 13 14 15 16
17 18 19 20 21 22 23 24 25 26 27 28 29 30 31 32
33 34 35 36 37 38 39 40 41 42 43 44 45 46 47 48
49 50 51 52 53 54 55 56 57 58 59 60 61 62 63

ACC: h:\ao\design\lp1604fm471-90\misc\miscvrdetail04+0061+
FILE: Stampedislands.dgn

| ESTIMATED QUANTITIES | | |
|---|---|---|
| ITEM | UNIT | QTY. |
| RIPRAP (CONC)(CL B) | M3 | 62 |
| LANDSCAPE PAVERS | M2 | 436 |
| | | |

QUANTITIES SHOWN ON THIS SHEET ARE FOR CONTRACTORS INFO ONLY SEE LARGE STRUCTURE SUMMARY FOR PAY QUANTITIES.

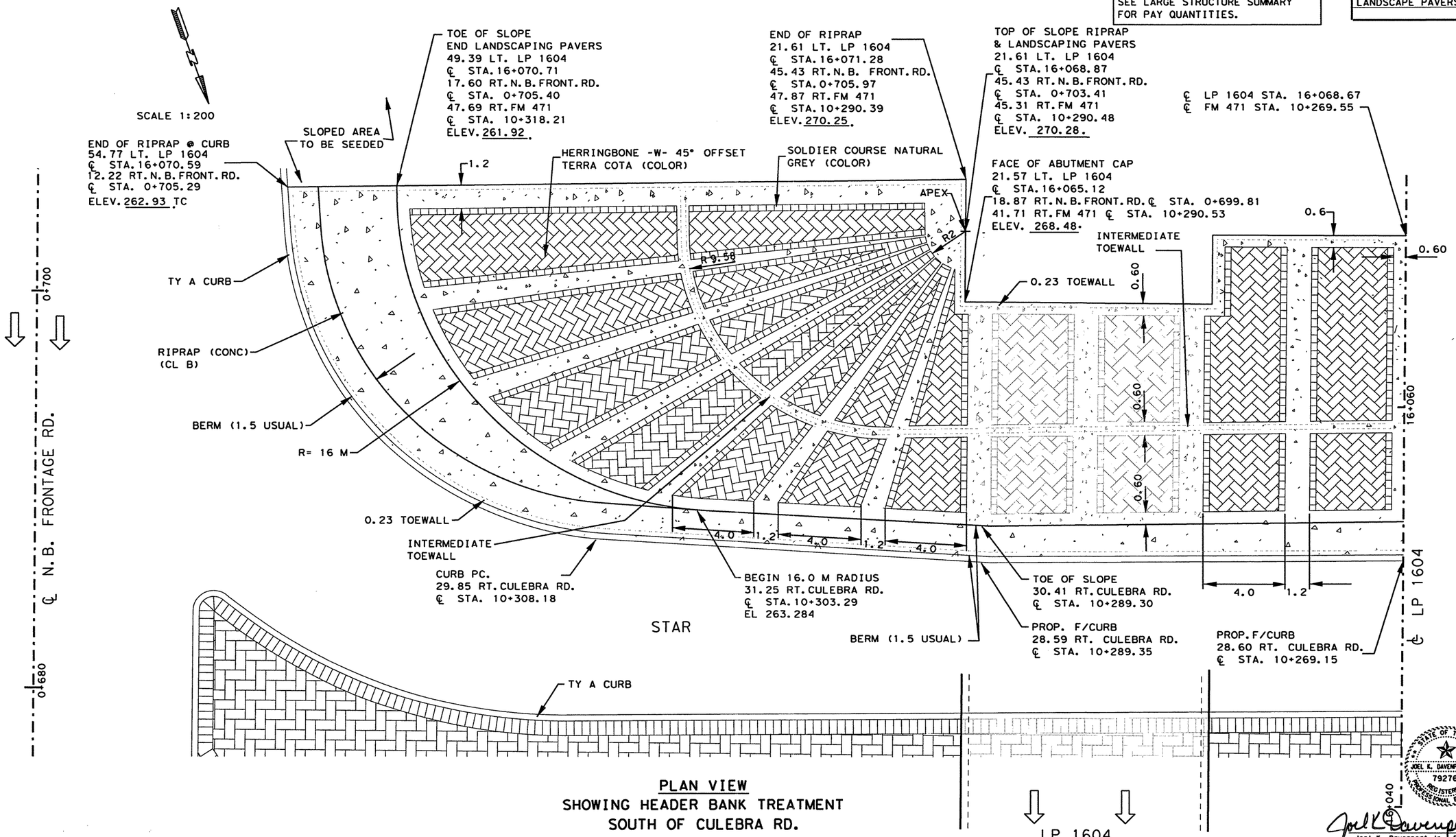


## PLAN VIEW
## SHOWING HEADER BANK TREATMENT SOUTH OF CULEBRA RD.

NOTE(S):
FOR ADDITIONAL DETAILS SEE PROJECT X-SECTIONS & SHEET(S) 338, 340 THRU 342.

ALL DIMENSIONS ARE IN METERS UNLESS OTHERWISE NOTED.

STATE OF TEXAS
JOEL K. DAVENPORT, JR.
79276
REGISTERED
PROFESSIONAL ENGINEER

Joel K. Davenport Jr. 10/24/00
Joel K. Davenport Jr., P.E. Date

LEVELS DISPLAYED
1 2 4 5 6 8 10 11 12 13 14 15 16
17 18 19 20 21 22 23 24 25 26 27 28 29 30 31 32
33 34 35 36 37 38 39 40 41 42 43 44 45 46 47 48
49 50 51 52 53 54 55 56 57 58 59 60 61 62 63
ACC:
misc rd detail05.dgn

©2000
Texas Department of Transportation

# MISCELLANEOUS ROADWAY DETAILS
SHEET 5 OF 12

| FED. RD. DIV. NO. | FEDERAL AID PROJECT NO. | | SHEET NO. |
|---|---|---|---|
| 6 | NH 2000(704), etc. | | 339 |
| STATE | DIST. | COUNTY | |
| TEXAS | SAT | BEXAR | |
| CONT. | SECT. | JOB | HIGHWAY NO. |
| 2452 | 01 | 036, etc. | LP 1604 |

QUANTITIES SHOWN ON THIS SHEET ARE FOR CONTRACTORS INFO ONLY SEE LARGE STRUCTURE SUMMARY FOR PAY QUANTITIES.

## ESTIMATED QUANTITIES

| ITEM | UNIT | QTY. |
|---|---|---|
| RIPRAP (CONC) (CL B) | M3 | ~~62~~ 56 |
| STAMPED CONCRETE | M2 | ~~436~~ 452 |

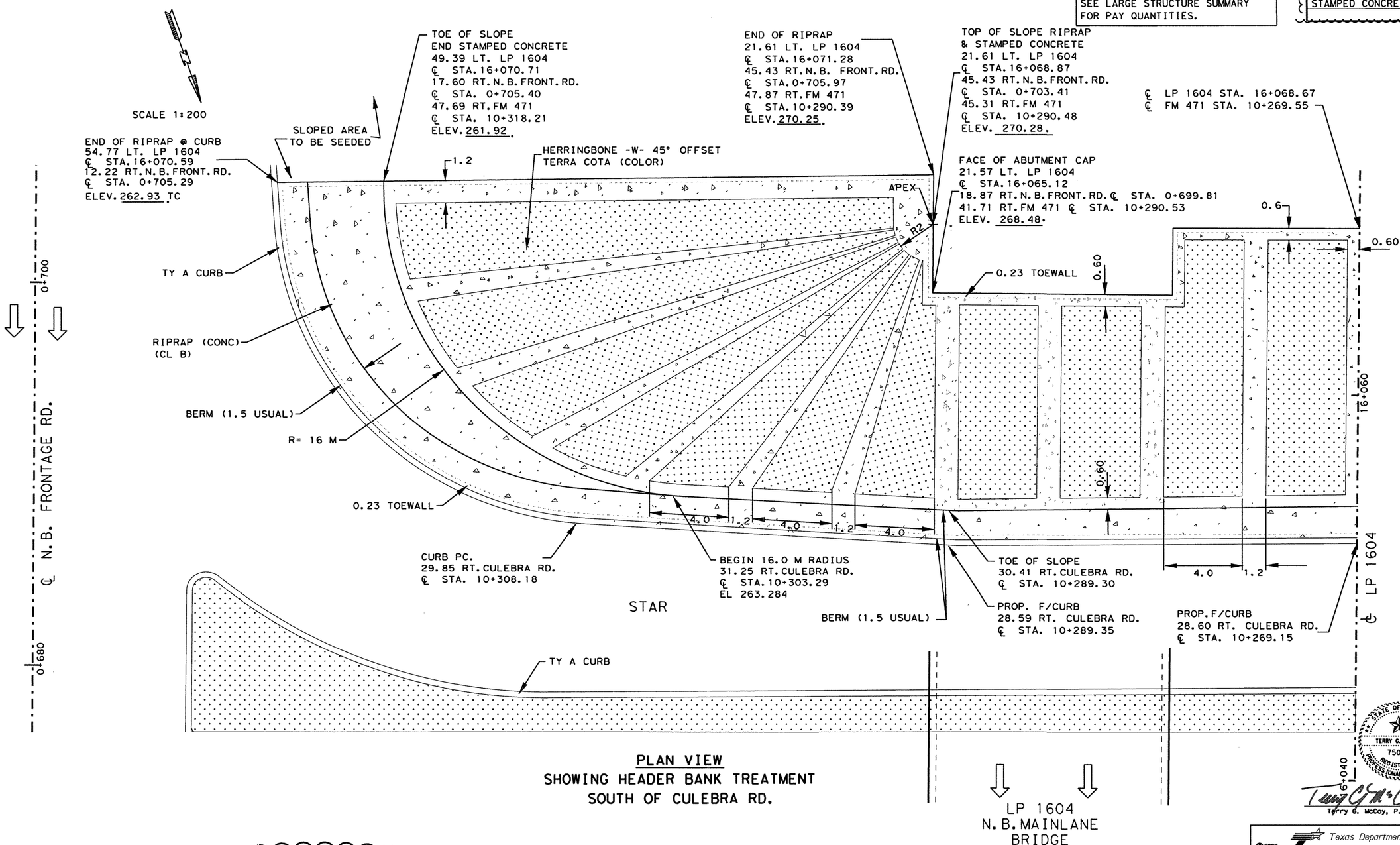


**PLAN VIEW**
**SHOWING HEADER BANK TREATMENT**
**SOUTH OF CULEBRA RD.**

CHANGE ORDER NO. 19
-REVISED DETAIL FOR STAMPED CONCRETE

NOTE(S):
FOR ADDITIONAL DETAILS SEE PROJECT X-SECTIONS & SHEET(S) 338C, 341B THRU 342.

ALL DIMENSIONS ARE IN METERS UNLESS OTHERWISE NOTED.

CHANGE ORDER 19

STATE OF TEXAS
TERRY G. McCOY
75016
REGISTERED PROFESSIONAL ENGINEER

Terry G. McCoy, P.E. 1-10-02
Date

©2000
Texas Department of Transportation

**MISCELLANEOUS ROADWAY DETAILS**
SHEET 5 OF 12

| FED. RD. DIV. NO. | FEDERAL AID PROJECT NO. | | SHEET NO. |
|---|---|---|---|
| 6 | NH 2000(704), etc. | | 339B |
| STATE | DIST. | COUNTY | |
| TEXAS | SAT | BEXAR | |
| CONT. | SECT. | JOB | HIGHWAY NO. |
| 2452 | 01 | 036, etc. | LP 1604 |

LEVELS DISPLAYED
1 2 | 4 5 6 | 18 | 1 10 11 21 31 41 51 61
7 11 81 92 102 122 132 142 152 162 172 182 192 202 212 222 232 242 252 262 273 283 293 303 313 323
33 343 353 363 373 383 393 403 413 423 433 443 453 463 473 483
495 505 515 525 535 545 555 565 575 585 596 606 616 626 636 648

ACC:
misc rd detail05.dgn

| ESTIMATED QUANTITIES | | |
|---|---|---|
| ITEM | UNIT | QTY. |
| RIPRAP (CONC) (CL B) | M3 | 62 |
| LANDSCAPE PAVERS | M2 | 436 |
| | | |

QUANTITIES SHOWN ON THIS SHEET ARE FOR CONTRACTORS INFO ONLY SEE LARGE STRUCTURE SUMMARY FOR PAY QUANTITIES.

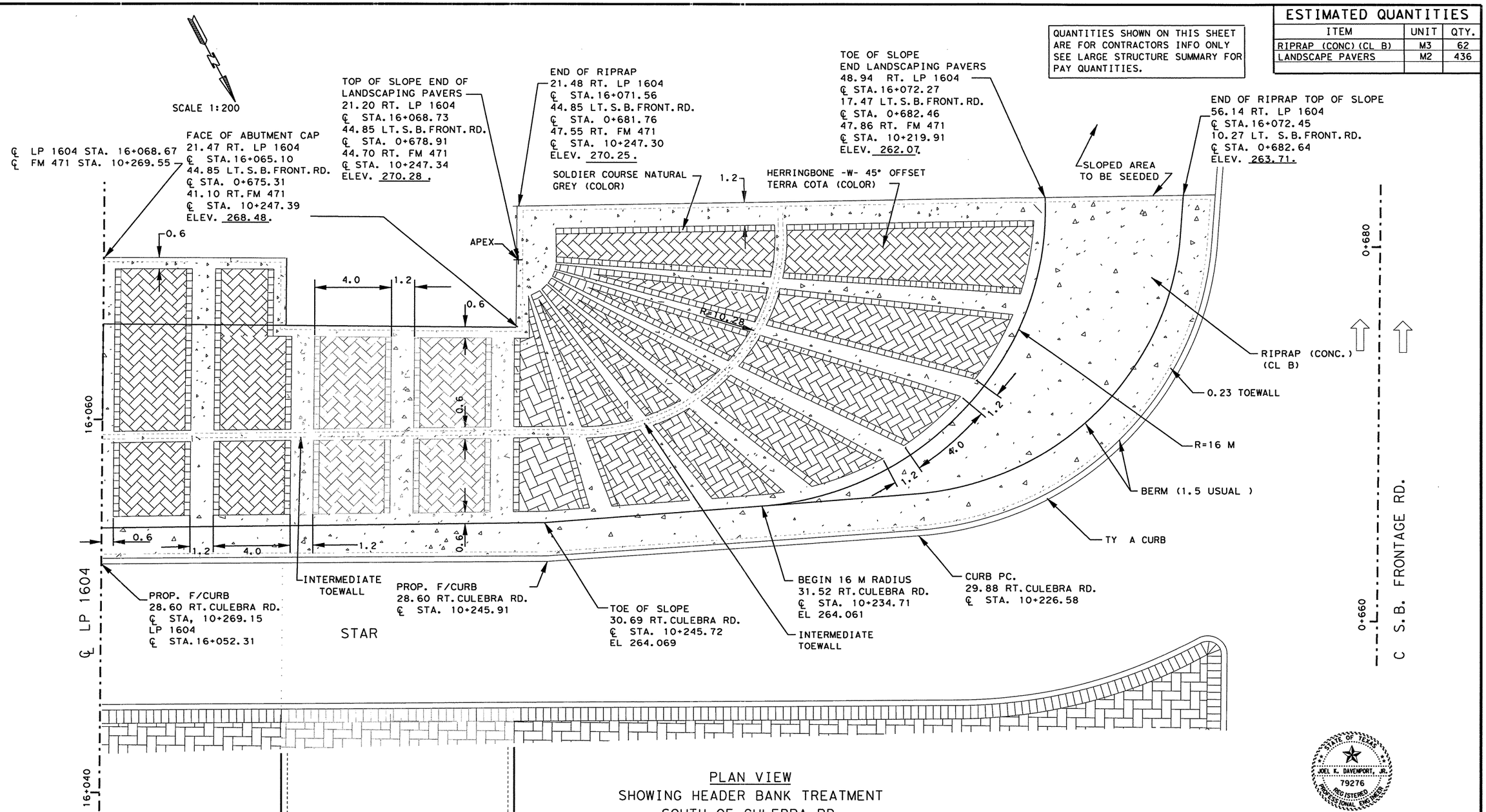


PLAN VIEW
SHOWING HEADER BANK TREATMENT
SOUTH OF CULEBRA RD.

NOTE(S):
FOR ADDITIONAL DETAILS SEE PROJECT X-SECTIONS & SHEET(S) 339,341-342.

ALL DIMENSIONS ARE IN METERS UNLESS OTHERWISE NOTED.

STATE OF TEXAS
JOEL K. DAVENPORT, JR.
79276
REGISTERED PROFESSIONAL ENGINEER

Joel K Davenport Jr. 9/19/00
Joel K. Davenport, Jr. P.E. 79276 Date

LEVELS DISPLAYED 1 | 2 | 11 | 21
ACC:
FILE: .DGN

©2000 Texas Department of Transportation

**MISCELLANEOUS ROADWAY DETAILS**
SHEET 6 OF 12

| FED.RD. DIV.NO. | FEDERAL AID PROJECT NO. | | SHEET NO. |
|---|---|---|---|
| 6 | NH 2000(704), etc. | | 340 |
| STATE | DIST. | COUNTY | |
| TEXAS | SAT | BEXAR | |
| CONT. | SECT. | JOB | HIGHWAY NO. |
| 2452 | 01 | 036, etc. | LP 1604 |

SCALE 1:200

| ESTIMATED QUANTITIES | | |
|---|---|---|
| ITEM | UNIT | QTY. |
| RIPRAP (CONC) (CL B) | M3 | ~~62~~ 56 |
| LANDSCAPE PAVERS | M2 | ~~436~~ 452 |

QUANTITIES SHOWN ON THIS SHEET ARE FOR CONTRACTORS INFO ONLY SEE LARGE STRUCTURE SUMMARY FOR PAY QUANTITIES.

℄ LP 1604 STA. 16+068.67
℄ FM 471 STA. 10+269.55

FACE OF ABUTMENT CAP
21.47 RT. LP 1604
℄ STA. 16+065.10
44.85 LT. S.B. FRONT. RD.
℄ STA. 0+675.31
41.10 RT. FM 471
℄ STA. 10+247.39
ELEV. 268.48.

TOP OF SLOPE END OF STAMPED CONCRETE
21.20 RT. LP 1604
℄ STA. 16+068.73
44.85 LT. S.B. FRONT. RD.
℄ STA. 0+678.91
44.70 RT. FM 471
℄ STA. 10+247.34
ELEV. 270.28.

END OF RIPRAP
21.48 RT. LP 1604
℄ STA. 16+071.56
44.85 LT. S.B. FRONT. RD.
℄ STA. 0+681.76
47.55 RT. FM 471
℄ STA. 10+247.30
ELEV. 270.25.

TOE OF SLOPE
END STAMPED CONCRETE
48.94 RT. LP 1604
℄ STA. 16+072.27
17.47 LT. S.B. FRONT. RD.
℄ STA. 0+682.46
47.86 RT. FM 471
℄ STA. 10+219.91
ELEV. 262.07.

END OF RIPRAP TOP OF SLOPE
56.14 RT. LP 1604
℄ STA. 16+072.45
10.27 LT. S.B. FRONT. RD.
℄ STA. 0+682.64
ELEV. 263.71.

SLOPED AREA TO BE SEEDED

HERRINGBONE -W- 45° OFFSET
TERRA COTA (COLOR)

APEX

0.6
4.0
1.2
0.6
1.2
4.0
1.2
0.6
0.6
1.2
4.0
1.2
0.6

16+060

0+680

RIPRAP (CONC.) (CL B)

0.23 TOEWALL

R=16 M

BERM (1.5 USUAL )

TY A CURB

PROP. F/CURB
28.60 RT. CULEBRA RD.
℄ STA, 10+269.15
LP 1604
℄ STA. 16+052.31

PROP. F/CURB
28.60 RT. CULEBRA RD.
℄ STA. 10+245.91

TOE OF SLOPE
30.69 RT. CULEBRA RD.
℄ STA. 10+245.72
EL 264.069

BEGIN 16 M RADIUS
31.52 RT. CULEBRA RD.
℄ STA. 10+234.71
EL 264.061

CURB PC.
29.88 RT. CULEBRA RD.
℄ STA. 10+226.58

℄ LP 1604

STAR

0+660

C S.B. FRONTAGE RD.

16+040

LP 1604
S.B. MAINLANE
BRIDGE

PLAN VIEW
SHOWING HEADER BANK TREATMENT
SOUTH OF CULEBRA RD.

CHANGE ORDER NO. 19
-REVISED DETAIL FOR STAMPED CONCRETE

NOTE(S):
FOR ADDITIONAL DETAILS SEE PROJECT X-SECTIONS & SHEET(S) 338C, 339C, 341B-342.

ALL DIMENSIONS ARE IN METERS UNLESS OTHERWISE NOTED.

CHANGE ORDER 19

STATE OF TEXAS
TERRY G. McCOY
75016
REGISTERED PROFESSIONAL ENGINEER

Terry G. McCoy, P.E.
1-10-02
Date

LEVELS DISPLAYED 1:1 2:1 1:2
ACC:
FILE: .DGN

©2000
Texas Department of Transportation

MISCELLANEOUS ROADWAY DETAILS
SHEET 6 OF 12

| FED. RD. DIV. NO. | FEDERAL AID PROJECT NO. | | SHEET NO. |
|---|---|---|---|
| 6 | NH 2000(704), etc. | | 340B |
| STATE | DIST. | COUNTY | |
| TEXAS | SAT | BEXAR | |
| CONT. | SECT. | JOB | HIGHWAY NO. |
| 2452 | 01 | 036, etc. | LP 1604 |

SCALE: 1:200

NOTES:

- FOR ADDITIONAL DETAILS SEE PROJECT X-SECTIONS AND SHEET(S) 338-340.

ALL DIMENSIONS ARE IN METERS UNLESS OTHERWISE NOTED.

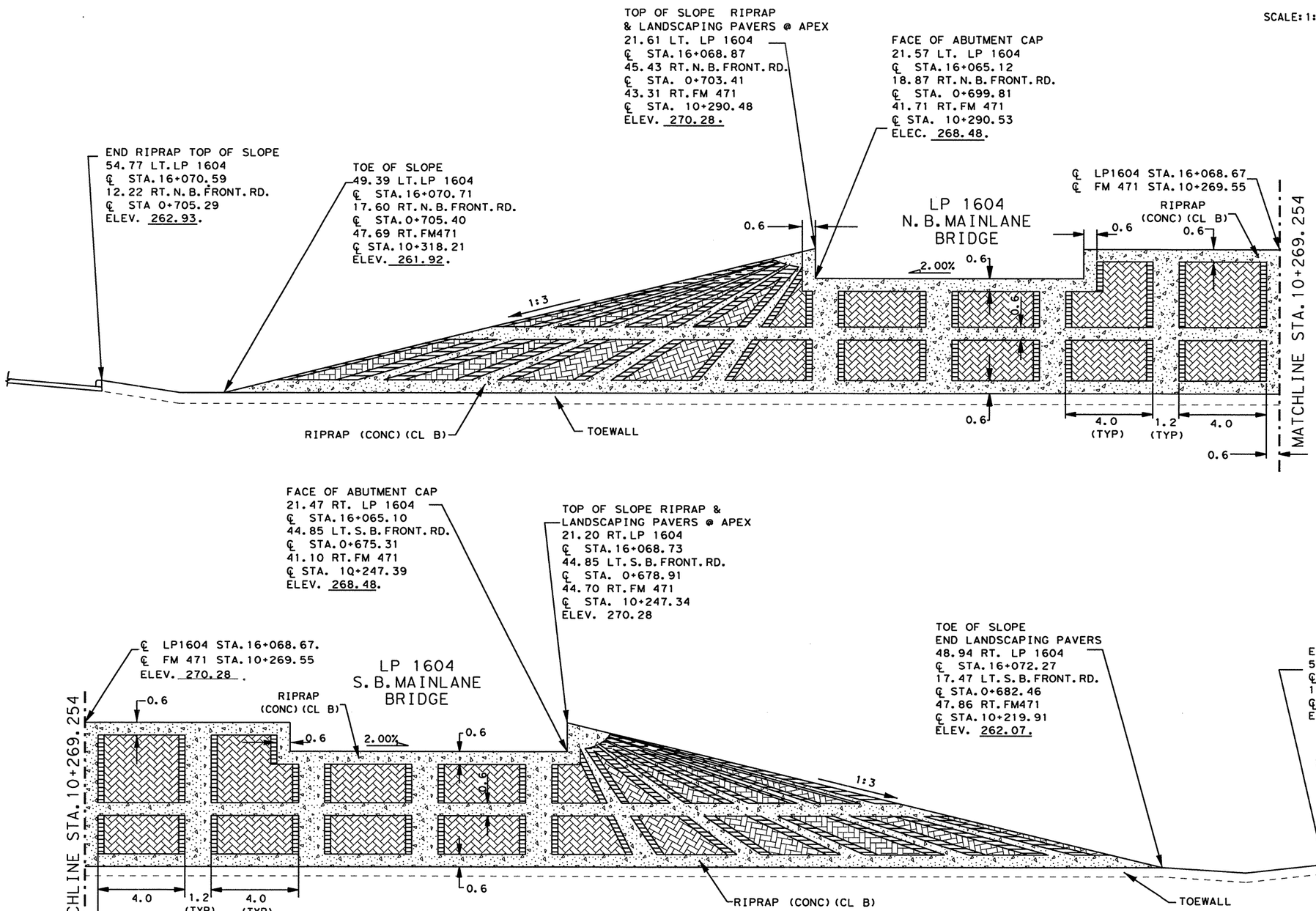


ELEVATION
SHOWING HEADER BANK TREATMENT
SOUTH OF CULEBRA RD.

STATE OF TEXAS
JOEL K. DAVENPORT, JR.
79276
REGISTERED PROFESSIONAL ENGINEER

Joel K. Davenport Jr 9/18/00
Joel K. Davenport, Jr P.E. 79276 Date

©2000

Texas Department of Transportation

**MISCELLANEOUS ROADWAY DETAILS**
SHEET 7 OF 12

| FED. RD. DIV. NO. | FEDERAL AID PROJECT NO. | SHEET NO. |
|---|---|---|
| 6 | NH 2000(704), etc. | 341 |
| STATE | DIST. | COUNTY |
| TEXAS | SAT | BEXAR |
| CONT. | SECT. | JOB / HIGHWAY NO. |
| 2452 | 01 | 036, etc. / LP 1604 |

LEVELS DISPLAYED
1 2 3 4 5 6 7 8 9 10 11 12 13 14 15 16
17 18 19 20 21 22 23 24 25 26 27 28 29 30 31 32
33 34 35 36 37 38 39 40 41 42 43 44 45 46 47 48
49 50 51 52 53 54 55 56 57 58 59 60 61 62 63
ACC:
FILE: .DGN

SCALE: 1:200

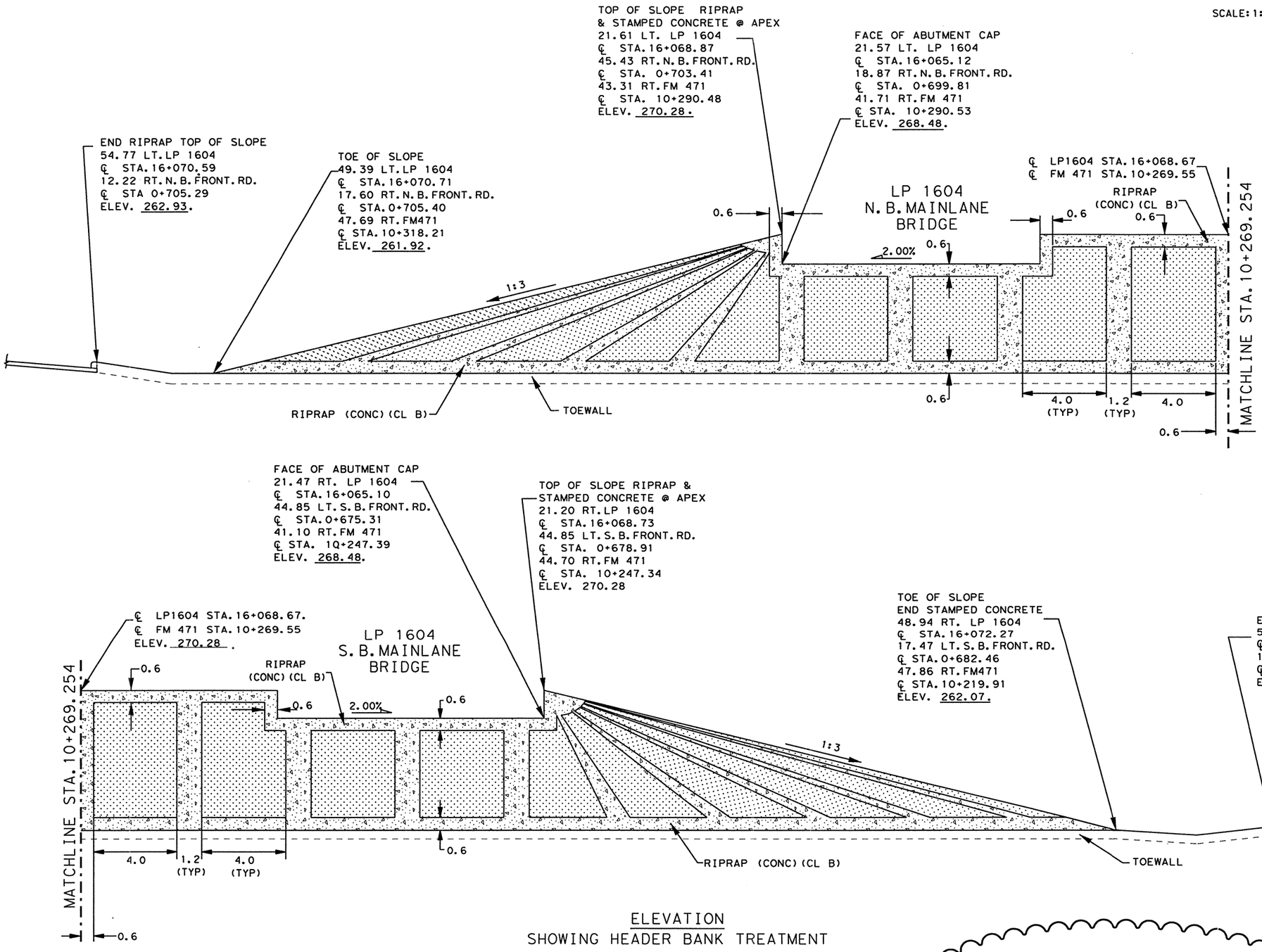


ELEVATION
SHOWING HEADER BANK TREATMENT
SOUTH OF CULEBRA RD.

NOTES:

- FOR ADDITIONAL DETAILS SEE PROJECT X-SECTIONS AND SHEET(S) 338C, 339B, 340B.

ALL DIMENSIONS ARE IN METERS UNLESS OTHERWISE NOTED.

CHANGE ORDER 19

STATE OF TEXAS
TERRY G. McCOY
75016
REGISTERED PROFESSIONAL ENGINEER

Terry G. McCoy, P.E. — Date 1-10-02

CHANGE ORDER NO. 19
-REVISED DETAIL FOR STAMPED CONCRETE

©2000
Texas Department of Transportation

**MISCELLANEOUS ROADWAY DETAILS**
SHEET 7 OF 12

| FED. RD. DIV. NO. | FEDERAL AID PROJECT NO. | | SHEET NO. |
|---|---|---|---|
| 6 | NH 2000(704), etc. | | 341B |
| STATE | DIST. | COUNTY | |
| TEXAS | SAT | BEXAR | |
| CONT. | SECT. | JOB | HIGHWAY NO. |
| 2452 | 01 | 036, etc. | LP 1604 |

LEVELS DISPLAYED
1 2 3 4 5 6 7 8 9 10 11 12 13 14 15 16
17 18 19 20 21 22 23 24 25 26 27 28 29 30 31 32
33 34 35 36 37 38 39 40 41 42 43 44 45 46 47 48
49 50 51 52 53 54 55 56 57 58 59 60 61 62 63

ACC:
FILE: .DGN

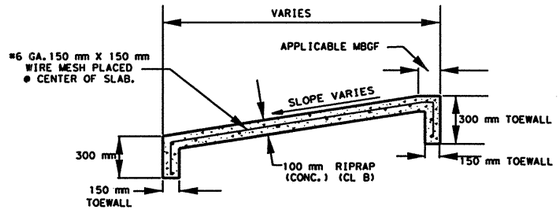


CONCRETE RIPRAP DETAIL
RT. STA. 14+780 TO STA. 14+840
RT. STA. 15+380 TO STA. 15+480

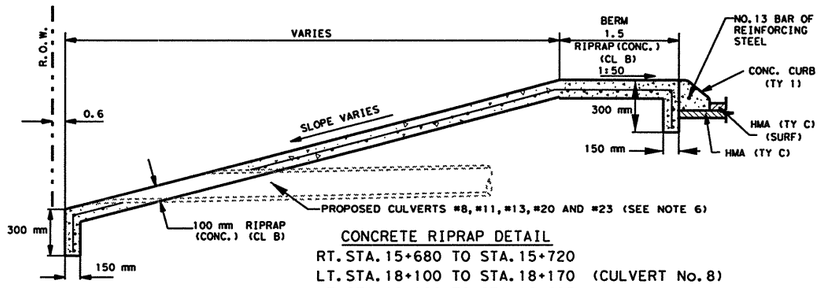


CONCRETE RIPRAP DETAIL
RT. STA. 15+680 TO STA. 15+720
LT. STA. 18+100 TO STA. 18+170 (CULVERT No. 8)
LT. STA. 19+190 TO STA. 19+295 (CULVERT No. 11)
LT. STA. 19+830 TO STA. 19+890 (CULVERT No. 13)
LT. STA. 24+050 TO STA. 24+265
LT. STA. 25+100 TO STA. 25+200
LT. STA. 25+450 TO STA. 25+515 (CULVERT No. 20)
LT. STA. 27+290 TO STA. 27+390 (CULVERT No. 23)
LT. STA. 27+540 TO STA. 27+802

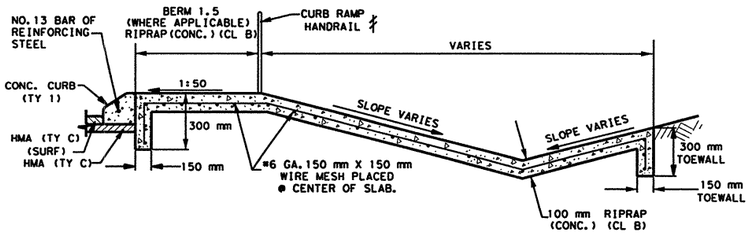


CONCRETE RIPRAP DETAIL
RT. STA. 15+680 TO STA. 15+750

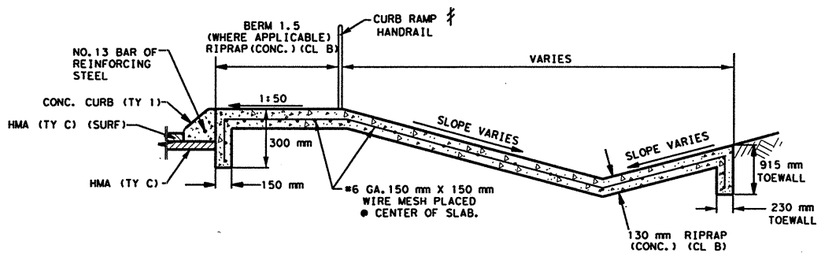


CONCRETE RIPRAP DETAIL
RT. STA. 15+765 TO CULEBRA CREEK

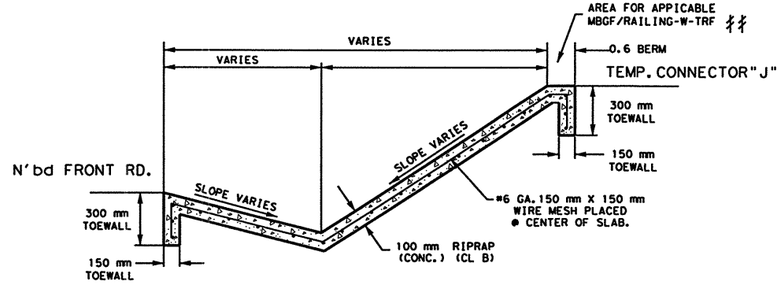


CONCRETE RIPRAP DETAIL
LT. STA. 18+380 TO STA. 18+560

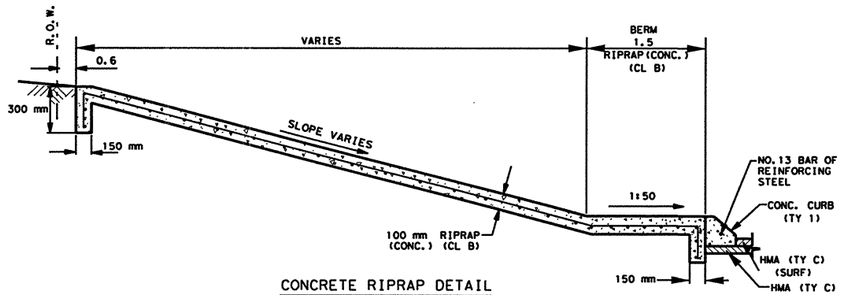


CONCRETE RIPRAP DETAIL
LT. STA. 18+750 TO STA. 18+810

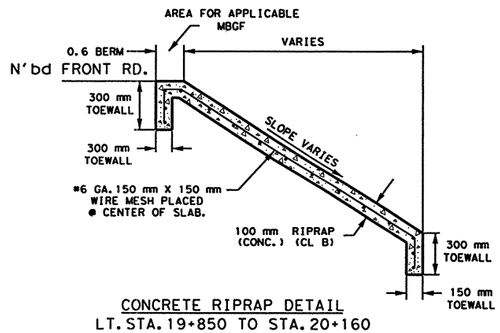


CONCRETE RIPRAP DETAIL
LT. STA. 19+850 TO STA. 20+160
LT. STA. 21+590 TO STA. 21+760

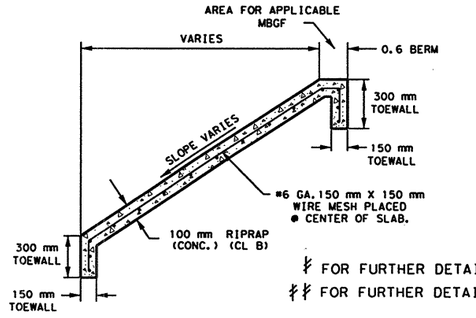


CONCRETE RIPRAP DETAIL
LT. STA. 27+100 TO STA. 27+400

NOTE(S):

1. SLOPE RATE VARIES WITHIN SECTIONS DETAILED, SEE PROJECT X-SECTIONS FOR MORE DETAILS.
2. ALL DIMENSIONS ARE IN METERS UNLESS OTHERWISE NOTED.
3. FOR PAYMENT OF CONCRETE RIPRAP AREAS, SEE PLAN SHEETS.
4. FLEXBASE CAN BE OF ANY TYPE OR GRADE APPROVED BY THE ENGINEER.
5. THE FLEXBASE WILL BE SPRINKLED AND ROLLED/TAMPED AS APPROVED BY THE ENGINEER. FURNISHING AND PLACING THE BASE CUSHION SHALL BE SUBSIDIARY TO THE VARIOUS PERTINENT BID ITEMS.
6. THE CONTRACTOR SHALL ALLOW FOR CROSS DRAINAGE STRUCTURES SHOWN, WORK LABOR AND MATERIALS SHALL BE CONSIDERED SUBSIDIARY TO PERTINENT BID ITEMS. SEE SPECIFIC CULVERT LAYOUTS FOR ADDITIONAL DETAILS.
7. ALL STATIONS REFERENCED ARE APPROXIMATE AND THOSE ALONG THE ℄ OF LP 1604

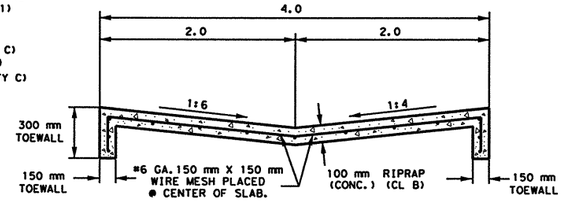


℄ STA. 24+460
(THIS SECTION TRANSITIONS INTO BELOW SECTION @ STA. 24+440

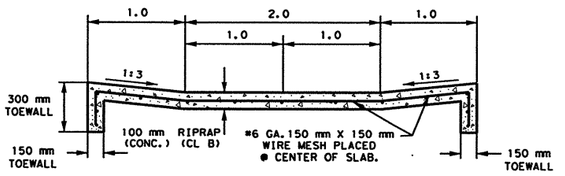


CONCRETE RIPRAP DETAIL
LT. STA. 24+340 TO STA. 24+440

‡ FOR FURTHER DETAILS SEE SHEET 198, 338 & 361.
‡‡ FOR FURTHER DETAILS SEE SHEET 208, 209, 352 & 551-552.

STATE OF TEXAS
JOEL K. DAVENPORT, JR.
79276
REGISTERED PROFESSIONAL ENGINEER

Joel K Davenport, Jr 11/1/00
Joel K. Davenport, JR. P.E. 79276 Date

©2000 Texas Department of Transportation

# MISCELLANEOUS ROADWAY DETAILS

SHEET 8 OF 12

| FED. RD. DIV. NO. | FEDERAL AID PROJECT NO. | | SHEET NO. |
|---|---|---|---|
| 6 | NH 2000(704), etc. | | 342 |
| STATE | DIST. | COUNTY | |
| TEXAS | SAT | BEXAR | |
| CONT. | SECT. | JOB | HIGHWAY NO. |
| 5452 | 01 | 036, etc. | LP 1604 |

LEVELS DISPLAYED
1 2 3 I 4 I 5 I 6 I 7 I 8 I 9 I 10 I 11 I 12 I 31 I 41 I 51 I 52
17 I 18 I 32 I 42 I 52 I 62 I 72 I 82 I 83 I 131 I 132
33 I 34 I 35 I 63 I 75 I 83 I 94 I 104 I 144 I 244 I 444 I 464 I 744
495 I 515 I 525 I 535 I 545 I 555 I 575 I 595 I 606 I 616 I 626 I

ACC:
FILE: .DGN

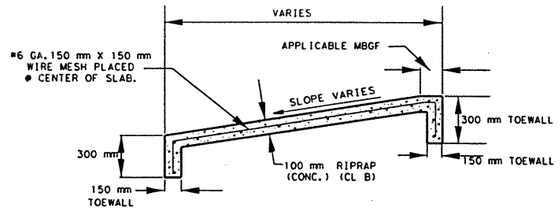


CONCRETE RIPRAP DETAIL

~~RT. STA. 14+780 TO STA. 14+840~~ △12

RT. STA. 15+380 TO STA. 15+480

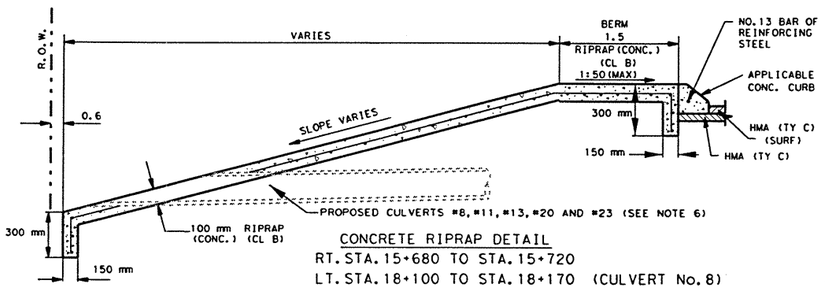


CONCRETE RIPRAP DETAIL

RT. STA. 15+680 TO STA. 15+720

LT. STA. 18+100 TO STA. 18+170 (CULVERT No. 8)

LT. STA. 19+190 TO STA. 19+295 (CULVERT No. 11)

LT. STA. 19+830 TO STA. 19+890 (CULVERT No. 13)

LT. STA. 21+535 TO STA. 21+635

LT. STA. 24+050 TO STA. 24+265

LT. STA. 25+100 TO STA. 25+200

LT. STA. 25+450 TO STA. 25+515 (CULVERT No. 20)

LT. STA. 27+290 TO STA. 27+390 (CULVERT No. 23)

LT. STA. 27+540 TO STA. 27+802

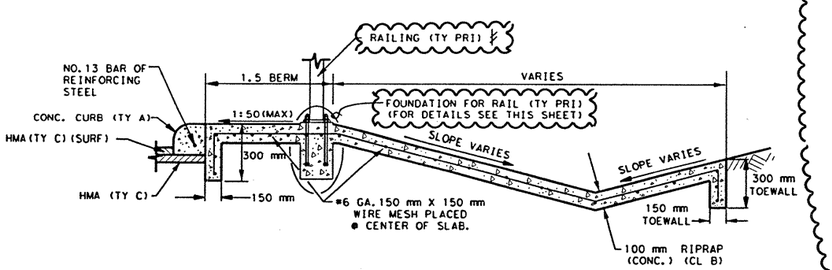


CONCRETE RIPRAP DETAIL

RT. STA. 15+680 TO STA. 15+750

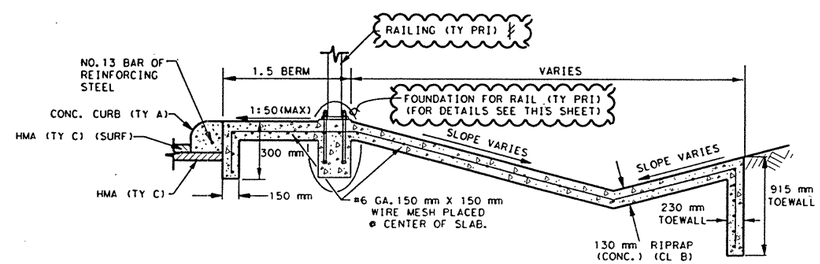


CONCRETE RIPRAP DETAIL

RT. STA. 15+775 TO CULEBRA CREEK

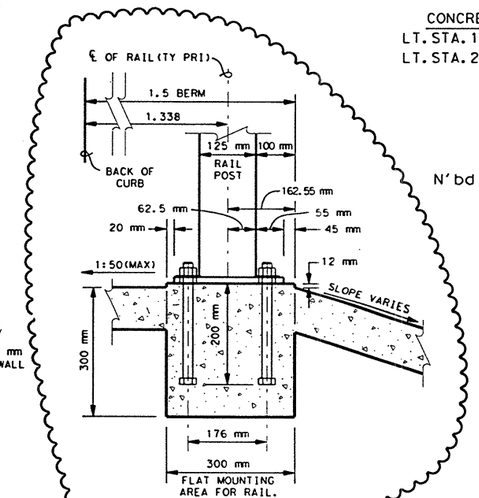


RAIL FOUNDATION DETAIL

NOTE:

RAIL FOUNDATION SHALL BE PROVIDED FOR THE LENGTH OF RAIL REQUIRED SHOWN ELSEWHERE IN THE PLANS

FOR ADDITIONAL ♯ RAILING (TY PRI) DETAILS SEE SHEET 556.

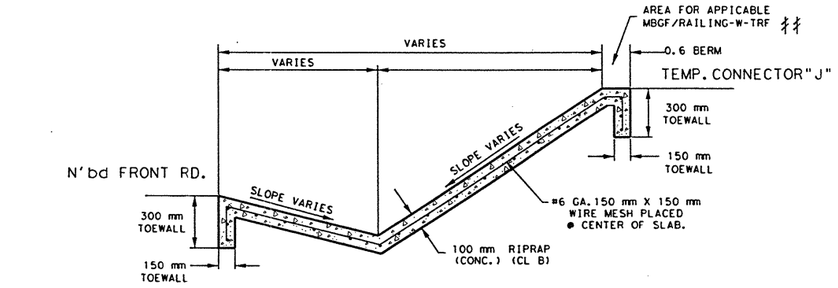


CONCRETE RIPRAP DETAIL

LT. STA. 18+380 TO STA. 18+560

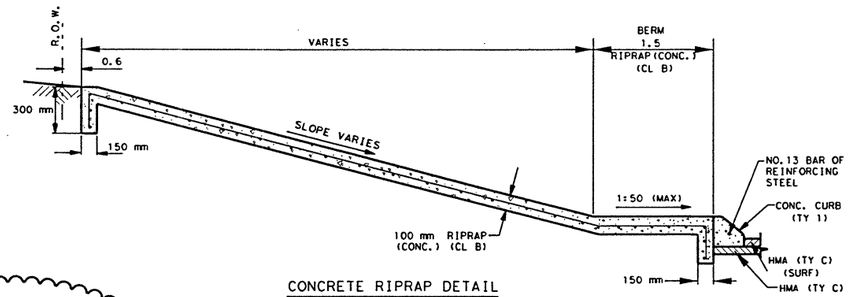


CONCRETE RIPRAP DETAIL

LT. STA. 18+750 TO STA. 18+810

LT. STA. 21+720 TO STA. 21+760 △

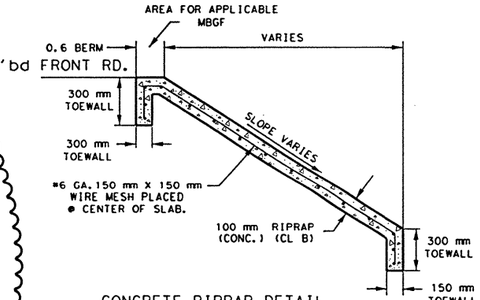


CONCRETE RIPRAP DETAIL

LT. STA. 19+850 TO STA. 20+160

LT. STA. 21+580 TO STA. 21+760 △




CONCRETE RIPRAP DETAIL

LT. STA. 27+100 TO STA. 27+400

♯ FOR FURTHER DETAILS SEE SHEET 198A & 556.

♯♯ FOR FURTHER DETAILS SEE SHEET 208, 209, 352 & 551-552.

NOTE(S):

1. SLOPE RATE VARIES WITHIN SECTIONS DETAILED, SEE PROJECT X-SECTIONS FOR MORE DETAILS.
2. ALL DIMENSIONS ARE IN METERS UNLESS OTHERWISE NOTED.
3. FOR PAYMENT OF CONCRETE RIPRAP AREAS, SEE PLAN SHEETS.
4. FLEXBASE CAN BE OF ANY TYPE OR GRADE APPROVED BY THE ENGINEER.
5. THE FLEXBASE WILL BE SPRINKLED AND ROLLED/TAMPED AS APPROVED BY THE ENGINEER. FURNISHING AND PLACING THE BASE CUSHION SHALL BE SUBSIDIARY TO THE VARIOUS PERTINENT BID ITEMS.
6. THE CONTRACTOR SHALL ALLOW FOR CROSS DRAINAGE STRUCTURES SHOWN, WORK LABOR AND MATERIALS SHALL BE CONSIDERED SUBSIDIARY TO PERTINENT BID ITEMS. SEE SPECIFIC CULVERT LAYOUTS FOR ADDITIONAL DETAILS.
7. ALL STATIONS REFERENCED ARE APPROXIMATE AND THOSE ALONG THE ℄ OF LP 1604

△# REFERS TO CHANGES MADE AS PART OF CHANGE ORDER.

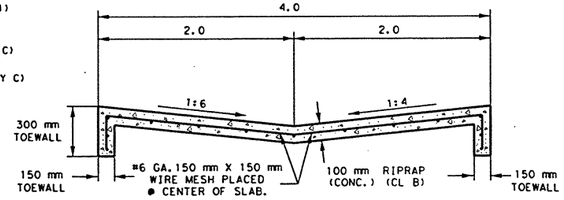


℄ STA. 24+460

(THIS SECTION TRANSITIONS INTO BELOW SECTION @ STA. 24+440

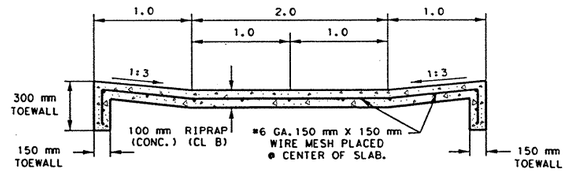


CONCRETE RIPRAP DETAIL

LT. STA. 24+340 TO STA. 24+440

CHANGE ORDER NO. 28

-REVISED DETAILS/NOTES ON THIS SHEET.

-ADDED RAIL FOUNDATION DETAILS FOR WESTWOOD VISTA AREA

STATE OF TEXAS
JEROME D. PAVLISKA
76075
REGISTERED PROFESSIONAL ENGINEER

Jerome D. Pavlisko, P.E. 2-7-03
Jerome D. Pavlisko, P.E. Date

© 2001

Texas Department of Transportation

MISCELLANEOUS ROADWAY DETAILS

SHEET 8 OF 12

| FED. RD. DIV. NO. | FEDERAL AID PROJECT NO. | | SHEET NO. |
|---|---|---|---|
| 6 | NH 2000(704), etc. | | 342A |
| STATE | DIST. | COUNTY | |
| TEXAS | SAT | BEXAR | |
| CONT. | SECT. | JOB | HIGHWAY NO. |
| 5452 | 01 | 036, etc. | LP 1604 |

CHANGE ORDER 28

01-23-03

LEVELS DISPLAYED: 1 2 3 4 5 6 7 8 9 10 11 12 13 14 15 16 17 18 19 20 21 22 23 24 25 26 27 28 29 30 31 32 33 34 35 36 37 38 39 40 41 42 43 44 45 46 47 48 49 50 51 52 53 54 55 56 57 58 59 60 61 62 63

ACC:

FILE: misc\rd\detail08CO#11.dgn

SCALE 1:250

S'BD FRONT RD "B"
S 24°27'22.01" W

STA 0+372.441 (SBFR"B") =
STA 0+000 (WW VISTA)

END SIDEWALK
BEGIN RIPRAP / RAIL (TY PRI)
73.33 RT "G" STA. 15+684.685
8.1 RT SBFR "B" STA 0+297.193

CONC. SIDEWALK

EL. 269.567(+/-)
74.136 RT. "G"

EL. 268.136(+/-)
79 RT. "G"

EL. 268.803(+/-)
81.5 RT. "G"

R.O.W.

EL 269.455
74.831 RT. "G"

EL 269.054
75.251 RT. "G"

CURB

EL 268.531
75.651 RT. "G"

EL 268.010
75.885 RT. "G"

1.5 RIPRAP BERM

EXIST. SAWS
(925MM)

EL 267.880
79.0 RT. "G"

EL 267.069
79.83 RT. "G"

TOP SLOPE OF BERM

EL 266.041
80.67 RT. "G"

℄ DITCH
(TOE OF SLOPE)

REVISED LINE I-8
USFL 264.778
81.5 RT. "G"
STA. 15+738.920

EL 265.20(+/-)
80.6 RT. "G"

STORM DRAIN LINE I-8

EXIST. G.F.U.
(TO BE ABANDONED)

EL 268.440(+/-)
80.0 RT. "G"

TOE WALL
(PERIMETER)

EL 267.488
80.83 RT. "G"

EL 266.35(+/-)
83.0 RT. "G"

EL 266.300
81.67 RT. "G"

NEW P.
POLE

EL 265.20(+/-)
82.4 RT. "G"

EL 266.000
82.5 RT. "G"
STA. 15+738.800

EL 266.000
83.17 RT. "G"
STA. 15+740.000

EL 266.000
21.0 RT. WW VISTA

EL 266.900
12.8 RT. WW VISTA

EL 267.590
7.83 RT. (WW VISTA)
STA. 0+020

EL 268.80 (+/-)
82.0 RT. "G"

EL 267.60 (+/-)
82.5 RT. "G"

EL 267.00(+/-)
88.0 RT. "G"

DEVELOPERS STORM DRAIN
TRUNKLINE (EXIST.)
(TO REMAIN IN PLACE)

END RIPRAP / RAIL TY (PRI)
RT.STA. 0+020
(WW VISTA)

15+680 RDWY "G"

15+700

0+010

0+020

0+030

0+040

EL 268.00 (+/-)
91.1 RT. "G"

EL 266.13 (+/-)
91.5 RT. "G"

TOP OF SLOPE

TOP OF SLOPE

TOP SLOPE OF
INCIDENTAL GRADING
(LIMITS OF CONSTRUCTION).

EL 267.07 (+/-)
94.3 RT. "G"

FLOWLINE
OF DITCH

R.O.W.

TOP OF INLET
EL 265.20(+/-)

EXIST DRAIN STRUCTURE
(TO REMAIN IN PLACE)

EL 267.70 (+/-)
95.0 RT. "G"

EL 267.310
7.83 RT. (WW VISTA)
STA. 0+030

EL 269.00 (+/-)
97.0 RT. "G"

EL 268.00 (+/-)
98.0 RT. "G"

15+720

APPROX. LIMITS OF INCIDENTAL
AND CONSTRUCTION GRADING
WHICH OCCURS TO STATION
0+080 (WESTWOOD VISTA).

15+740

EL 265.53 (+/-)
13.2 RT. WW VISTA

1.5 BERM

TOP SLOPE OF BERM

EL 265.73 (+/-)
11.15 RT. WW VISTA

WESTWOOD VISTA

N 67° 50' 23" W

15+760

EL 266.840
7.83 RT. ( WW VISTA)
STA. 0+040

WESTWOOD VISTA

TOP SLOPE OF
INCIDENTAL GRADING
(LIMITS OF CONSTRUCTION).

INCIDENTAL GRADING
(FOR INTERIM DRAINAGE).

FLOWLINE OF DITCH

FOR MORE DETAILS ON EXIST. DRAINAGE
STRUCTURE CROSSING WESTWOOD VISTA
SEE SHEET(S) 456C .

⚠ REFERS TO CHANGES MADE AS PART OF CHANGE ORDER.

NOTES:

ALL DIMENSIONS ARE IN METERS UNLESS OTHERWISE NOTED.

SAFETY END TREATMENTS (S.E.T.) SHALL BE SHAPED TO CONFORM TO SLOPES OR GRADES SHOWN.

RIPRAP (CONC) (CL B) ASSOCIATED WITH S.E.T..

RDWY "G" = LP 1604 PROJECT CENTERLINE

ELEVATIONS BASED UPON LATEST AVAILABLE INFORMATION INCIDENTAL GRADING MIGHT NEED TO BE ADJUSTED TO ACCOMMODATE ACTUAL FIELD CONDITIONS.

SHADED AREA REPRESENTS APPROX. LIMITS OF CONSTRUCTION GRADING OUTSIDE R.O.W..

EXIST. G.F.U. = GREY FOREST GAS (100mm)

CHANGE ORDER NO. 28

-REVISED RIPRAP AND GRADING DETAILS.
-REVISED LINE I-8
-UPDATED VIEW
-CONSTRUCTION AGREEMENT REQUIRED FOR GRADING ACTIVITIES OUTSIDE OF R.O.W..
-ADDED UTILITY INFORMATION.

FOR ADDITIONAL DETAILS
SEE PROJECT X-SECTIONS AND
SHEET(S) 198C, 316A, 342A.

SHEET SHOWN FOR CONTRACTORS INFORMATION ONLY.

CHANGE ORDER
NO. 28

NEW SHEET

STATE OF TEXAS
JEROME D. PAVLISKA
76075
REGISTERED
PROFESSIONAL ENGINEER

Jerome D. Pavliska, P.E. 8-11-03
Jerome D. Pavliska, P.E. Date

© 2001

Texas Department of Transportation

# MISCELLANEOUS ROADWAY DETAILS

| FED.RD. DIV.NO. | FEDERAL AID PROJECT NO. | | SHEET NO. |
|---|---|---|---|
| 6 | NH 2000(704), etc. | | 342B |
| STATE | DIST. | COUNTY | |
| TEXAS | SAT | BEXAR | |
| CONT. | SECT. | JOB | HIGHWAY NO. |
| 2452 | 01 | 036, etc. | LP 1604 |

FILE T:\Ao\Design\LP1604FM471-90\misc\detail\wwvistamrail.dgn $DATE$
LEVEL 1 2 3 4 5 6 7 8 9 10 11 12 31 45 61 71 81 82 222 232 242 252 262 282 283 313 323
DISPLAYED 335 355 365 375 385 395 404 414 424 434 444 454 464 474 484 495 505 515 525 535 545 555 565 575 585 595 606 616 626 636

STA 0+372.441 (SBFR"B") =
STA 0+000 (WW VISTA)

S'BD FRONT RD "B"
S 24°27'22.01" W

0+000

0+400

BEGIN BRIDGE
STA 0+411.900

SCALE 1:250

REVISED LINE I-8
82.0 RT. "G" STA 15+785.700
DSFL 263.018
(MITER CUT END OF PIPE TO
CONFORM TO SIDE SLOPE)

BEGIN BERM TRANSITION
RT STA 0+400 "B"

EL 266.275(+/-)
76.325 RT. "G"

TOP SLOPE OF BERM
CURB

1.5 RIPRAP BERM

BERM
TRANSITION
1:22.4

EL 2634(+/-)
76.324 RT. "G" (FACING WINGWALL)

EXIST SAWS
(925mm) PIPE
(TO REMAIN)

EL 266.944
75.954 RT. "G"

EL 266.674
75.954 RT. "G"

END BERM TRANSITION
EDGE & END OF WINGWALL
RT STA 0+408.300

STORM DRAIN LINE I-8

TOE OF SLOPE
FL. DITCH

EL 262.850
82.46 RT. "G"

EL 263.800
81.23 RT. "G"

BEGIN BRIDGE RIPRAP
(RT STA 0+408.300)

EL 263.800
83.00 RT. "G"

FL. EL 262.000
82.00 RT. "G"

EL 262.000 82.0 RT "G"

EXIST. G.F.U.
(TO BE ABANDONED)

EL 263.55(+/-)
84.10 RT. "G"

EL 262.330
83.00 RT. "G"

EL 267.280
7.83 LT. (WW VISTA)
STA. 0+020

0+020

NEW P.
POLE

0.6 CLEAR(+/-)

EL 262.566
83.70 RT. "G"

EL 263.30
84.10 RT. "G"

TOP OF SLOPE
NATURAL GROUND BERM

EL 263.800(+/-)
87.30 RT. "G"

EL 263.300
88.60 RT. "G"

EL 262.570
89.30 RT. "G"

EXIST DRAIN STRUCTURE
(TO REMAIN IN PLACE)

REMOVE EXIST
RAILING *

EL 262.400(+/-)
89.70 RT. "G"

EL 262.400(+/-)
90.00 RT. "G"

EL 263.100(+/-)
90.30 RT. "G"

EL 262.570 (+/-)

TOE OF SLOPE
DITCH

STORM DRAIN
LINE I-8A

EL 263.620+/-
TOP OF HDWALL

EL 262.400(+/-)
92.00 RT. "G"

EL 262.100(+/-)
92.30 RT. "G"

END PEDESTRIAN
RAIL (TY PR1)
LT STA 0+029.14
(WW VISTA)

EL 262.250(+/-)
92.30 RT. "G"

0+030

EXIST TOP SLOPE
NATURAL GROUND

EL 263.000
94.00 RT. "G"

EXIST RIPRAP *
(TO REMAIN IN PLACE)

EL 263.550
94.7 RT. "G"

EL 264.100(+/-)
92.3 RT. "G"

EL 264.350 +/-
11.8 LT (WW VISTA)

EL 266.990
7.83 LT. (WW VISTA)
STA. 0+030

WESTWOOD VISTA
N 67° 50' 23" W

0.3

COSA CONSERVATION EASEMENT

0+040

EL 266.520
7.83 RT. (WW VISTA)
STA. 0+040

EL 264.770 +/-
11.8 LT (WW VISTA)

TOE WALL
(PERIMETER)

15+780

15+790

15+800

PC 0+045.102

TOP SLOPE
OF BERM

1.5
RIPRAP
BERM

0+050 WESTWOOD VISTA

EL 266.170
7.83 RT. (WW VISTA)
STA. 0+050

EL 265.000 +/-
END RIPRAP
11.8 LT STA 0+050 (WW VISTA)

1.5
BERM

R.O.W.

RIPRAP(CONC)(CL B) PLACEMENT AND
CONSTRUCTION GRADING OCCURS OUTSIDE
OF R.O.W. TO STATION 0+060 (WESTWOOD
VISTA) CONSTRUCTION AGREEMENT REQUIRED.

FOR ADDITIONAL DETAILS
SEE PROJECT X-SECTIONS AND
SHEET(S) 198C, 316A, 342A.

FOR ADDITIONAL GRADING
INFORMATION SEE SHEET 519A.

R.O.W.

15 JOINT BID WATER
925 mm (SAW'S)

15.2 METER
GENERAL DRAINAGE &
UTILITY EASEMENT

FUTURE
DRAIN.
EASM'T.

15+820

RDWY "G"

15+840

CULEBRA CREEK

NOTES:

ALL DIMENSIONS ARE IN METERS UNLESS OTHERWISE NOTED.

* RAILING REMOVAL SHALL BE CONSIDERED SUBSIDIARY TO ITEM 432.

SAFETY END TREATMENTS (S.E.T.) SHALL BE SHAPED TO CONFORM TO SLOPES OR GRADES SHOWN.

⫽ EXIST CONCRETE RIPRAP AND ENERGY DISSIPATORS ON THE DOWNSTREAM END OF EXISTING STRUCTURE FLAGGED SHALL REMAIN IN PLACE AND BE INCORPORATED WITH DETAILS SHOWN ON THIS SHEET.

RDWY "G" = LP 1604 PROJECT CENTERLINE

SHADED AREA REPRESENTS APPROX. LIMITS OF CONSTRUCTION GRADING OUTSIDE R.O.W.

(#) REFERS TO CHANGES MADE AS PART OF CHANGE ORDER..

EXIST. G.F.U. = GREY FOREST GAS (100mm)

CHANGE ORDER NO. 28

-REVISED RIPRAP AND GRADING DETAILS.
-REVISED LINE I-8
-UPDATED VIEW
-CONSTRUCTION AGREEMENT REQUIRED
FOR GRADING ACTIVITIES OUTSIDE OF R.O.W..
-ADDED UTILITY INFORMATION.

FOR MORE DETAILS ON EXIST. DRAINAGE
STRUCTURE CROSSING WESTWOOD VISTA
SEE SHEET(S) 456C .

CHANGE ORDER 28

NEW SHEET

SHEET SHOWN FOR CONTRACTORS INFORMATION ONLY.

STATE OF TEXAS
JEROME D. PAVLISKA
76075
REGISTERED
PROFESSIONAL ENGINEER

Jerome D. Pavliska, P.E. 8-11-03
Jerome D. Pavliska, P.E. Date

Texas Department of Transportation

# MISCELLANEOUS ROADWAY DETAILS

| FED.RD. DIV.NO. | FEDERAL AID PROJECT NO. | | SHEET NO. |
|---|---|---|---|
| 6 | NH 2000(704), etc. | | 342C |
| STATE | DIST. | COUNTY | |
| TEXAS | SAT | BEXAR | |
| CONT. | SECT. | JOB | HIGHWAY NO. |
| 2452 | 01 | 036, etc. | LP 1604 |

01-23-03

FILE $FILE$
LEVEL
DISPLAYED
$DATE$

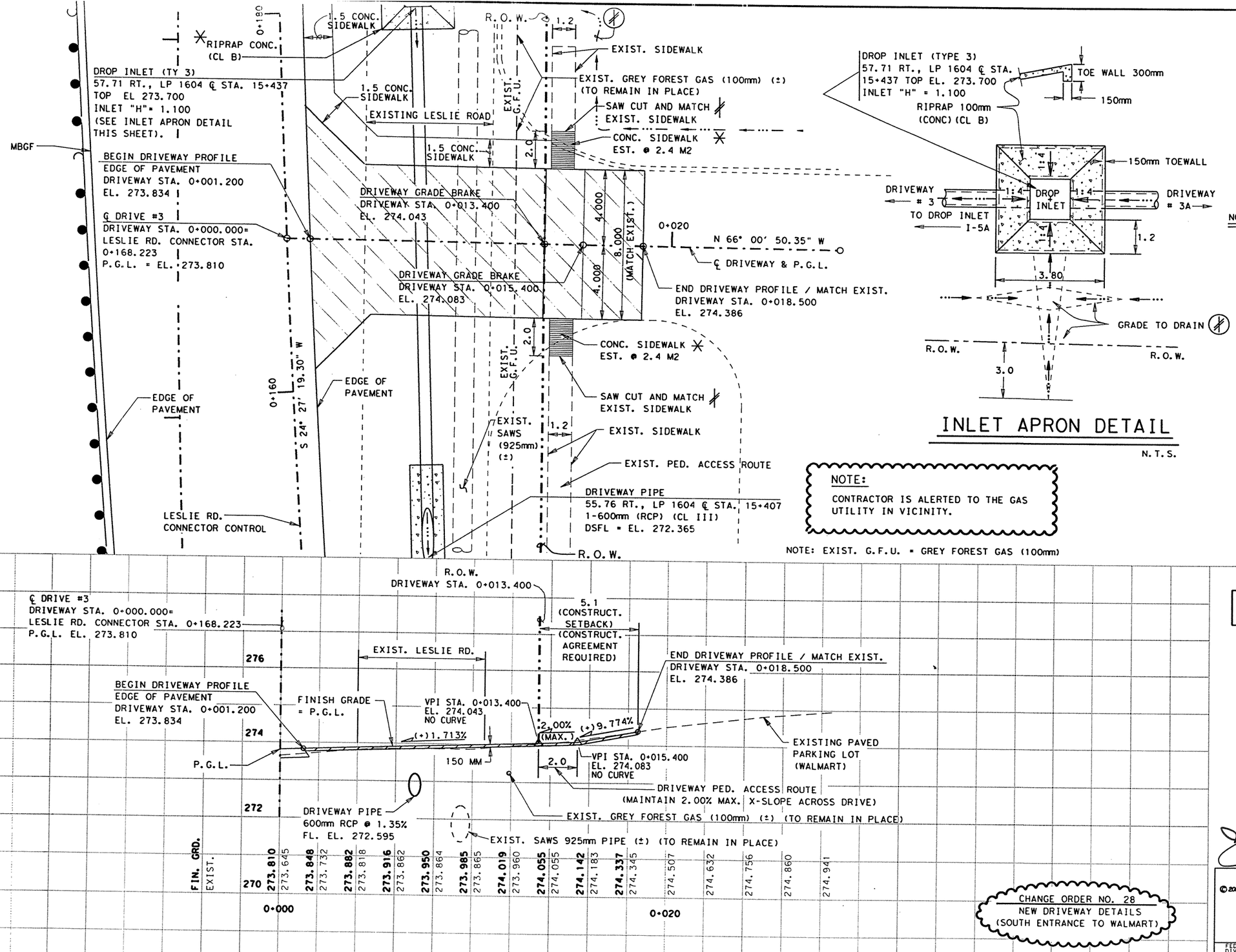





## INLET APRON DETAIL

N.T.S.

SCALE 1:200 H
1:100 V

NOTE(S):

ALL DIMENSIONS ARE IN METERS UNLESS OTHERWISE NOTED.

FOR MORE DRIVEWAY DETAILS SEE DRIVEWAY SUMMARY SHEETS.

✳ SHOWN FOR CONTRACTORS INFORMATION ONLY.

SHOWN FOR CONTRACTORS INFORMATION ONLY AND CONSIDERED SUBSIDIARY TO PERTINENT BID ITEMS.

FOR PAY ITEMS SEE APPROPRIATE PLAN SHEETS AND DRIVEWAY SUMMARY.

CONTRACTOR SHALL GRADE TO DRAIN TO THE SATISFACTION OF THE ENGINEER. GRADING PERFORMED SHALL BE CONSIDERED SUBSIDIARY TO THE VARIOUS PERTINENT BID ITEMS.

NOTE:
CONTRACTOR IS ALERTED TO THE GAS UTILITY IN VICINITY.

NOTE: EXIST. G.F.U. = GREY FOREST GAS (100mm)

CHANGE ORDER NO. 28
NEW DRIVEWAY DETAILS
(SOUTH ENTRANCE TO WALMART)

CHANGE ORDER 28

NEW SHEET

STATE OF TEXAS
JEROME D. PAVLISKA
76075
REGISTERED PROFESSIONAL ENGINEER

Jerome D. Pavlisko, P.E. 2-7-03
Jerome D. Pavlisko, P.E. Date

© 2001
Texas Department of Transportation

# DRIVEWAY #3

| FED. RD. DIV. NO. | FEDERAL AID PROJECT NO. | | SHEET NO. |
|---|---|---|---|
| 6 | NH 2000(704), etc | | 342D |
| STATE | DIST. | COUNTY | |
| TEXAS | SAT | BEXAR | |
| CONT. | SECT. | JOB | HIGHWAY NO. |
| 2452 | 01 | 036, etc | LP 1604 |

LEVELS DISPLAYED
1 2 3 4 5 6 7 8 9 10 11 12 13 14 15 16
17 18 19 20 21 22 23 24 25 26 27 28 29 30 31 32 33
33 34 35 36 37 38 39 40 41 42 43 44 45 46 47 48
49 50 51 52 53 54 55 56 57 58 59 60 61 62 63

lp1604fm471-90
drive#3.dgn

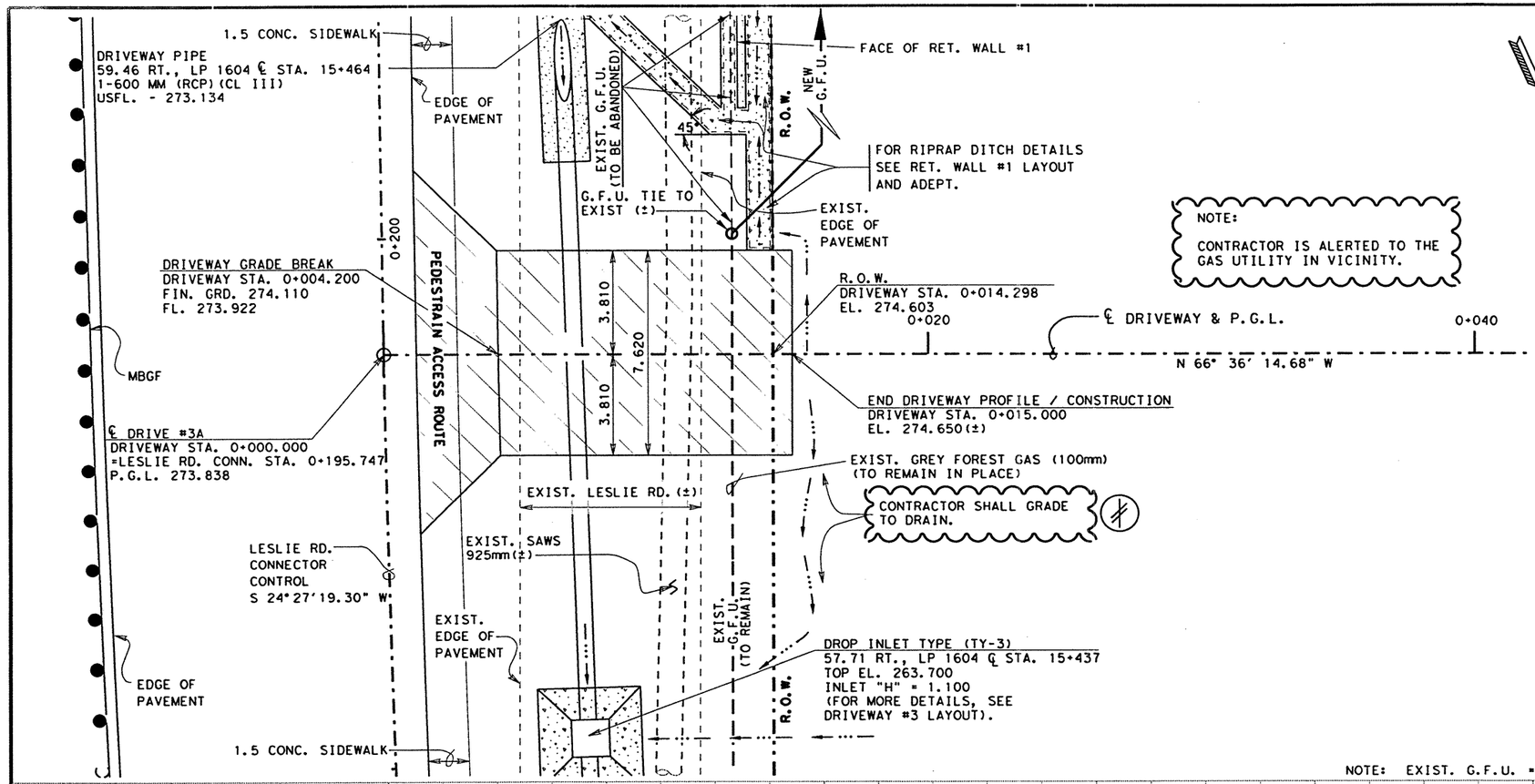


NOTE: EXIST. G.F.U. = GREY FOREST GAS (100mm)

SCALE 1:200 H
1:100 V

NOTE:
CONTRACTOR IS ALERTED TO THE GAS UTILITY IN VICINITY.

NOTE(S): ALL DIMENSIONS ARE IN METERS UNLESS OTHERWISE NOTED.

FOR PAY ITEMS SEE APPROPRIATE PLAN SHEET(S) AND DRIVEWAY SUMMARY.

FOR MORE DRIVEWAY DETAILS, SEE DRIVEWAY SUMMARY SHEETS.

FOR MORE RET. WALL DETAILS SEE LAYOUTS.

CONTRACTOR SHALL GRADE TO DRAIN TO THE SATISFACTION OF THE ENGINEER. GRADING PERFORMED SHALL BE CONSIDERED SUBSIDIARY TO THE VARIOUS PERTINENT BID ITEMS

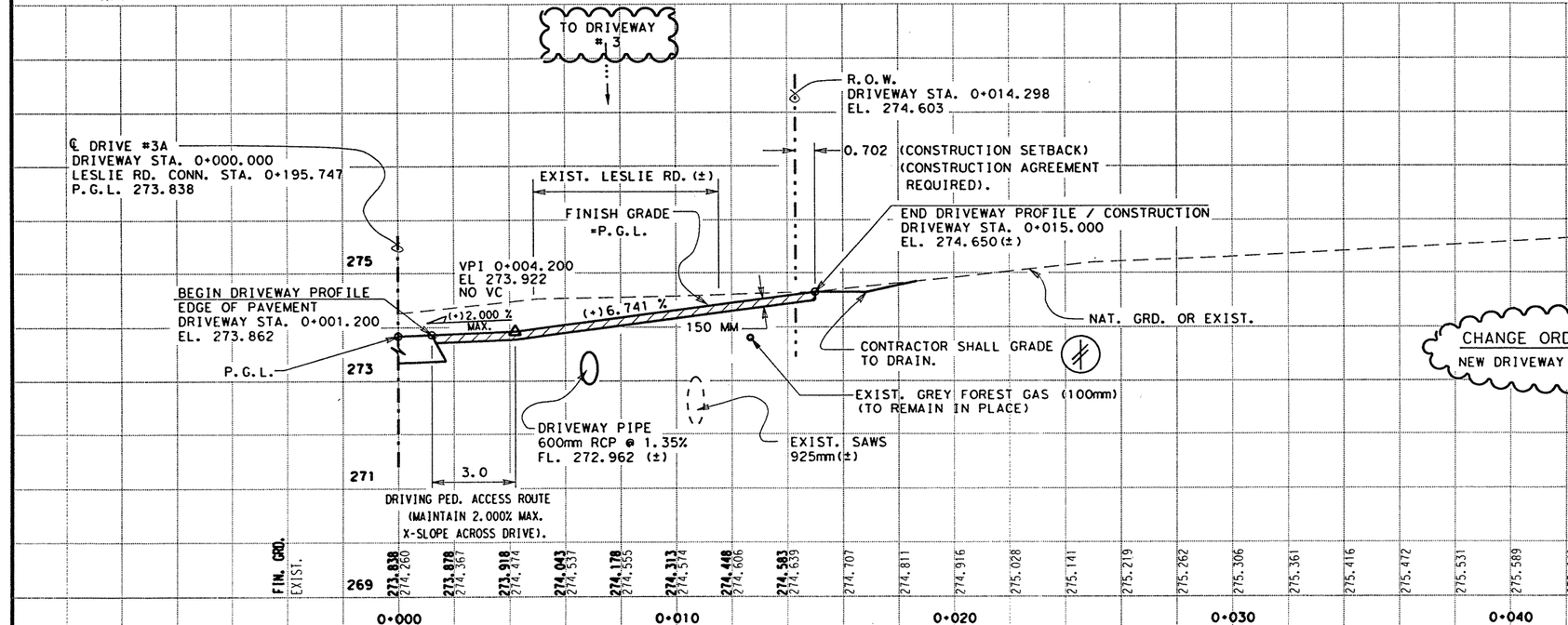


CHANGE ORDER NO. 28
NEW DRIVEWAY DETAILS

CHANGE ORDER 28

NEW SHEET

STATE OF TEXAS
JEROME D. PAVLISKA
76075
REGISTERED PROFESSIONAL ENGINEER

Jerome D. Pavliska, P.E. 2-7-03
Jerome D. Pavliska, P.E. Date

©2002 Texas Department of Transportation

# DRIVEWAY #3A

| FED. RD. DIV. NO. | FEDERAL AID PROJECT NO. | | SHEET NO. |
|---|---|---|---|
| 6 | NH 2000(704), etc | | 342 E |
| STATE | DIST. | COUNTY | |
| TEXAS | SAT | BEXAR | |
| CONT. | SECT. | JOB | HIGHWAY NO. |
| 2452 | 01 | 036, etc | LP 1604 |

LEVELS DISPLAYED
1 2 3 4 5 6 7 8 9 10 11 12 13 14 15 16 17 18 19 20 21 22 23 24 25 26 27 28 29 30 31 32 33 34 35 36 37 38 39 40 41 42 43 44 45 46 47 48 49 50 51 52 53 54 55 56 57 58 59 60 61 62 63
lp1604fm471-90
drive#3A.dgn

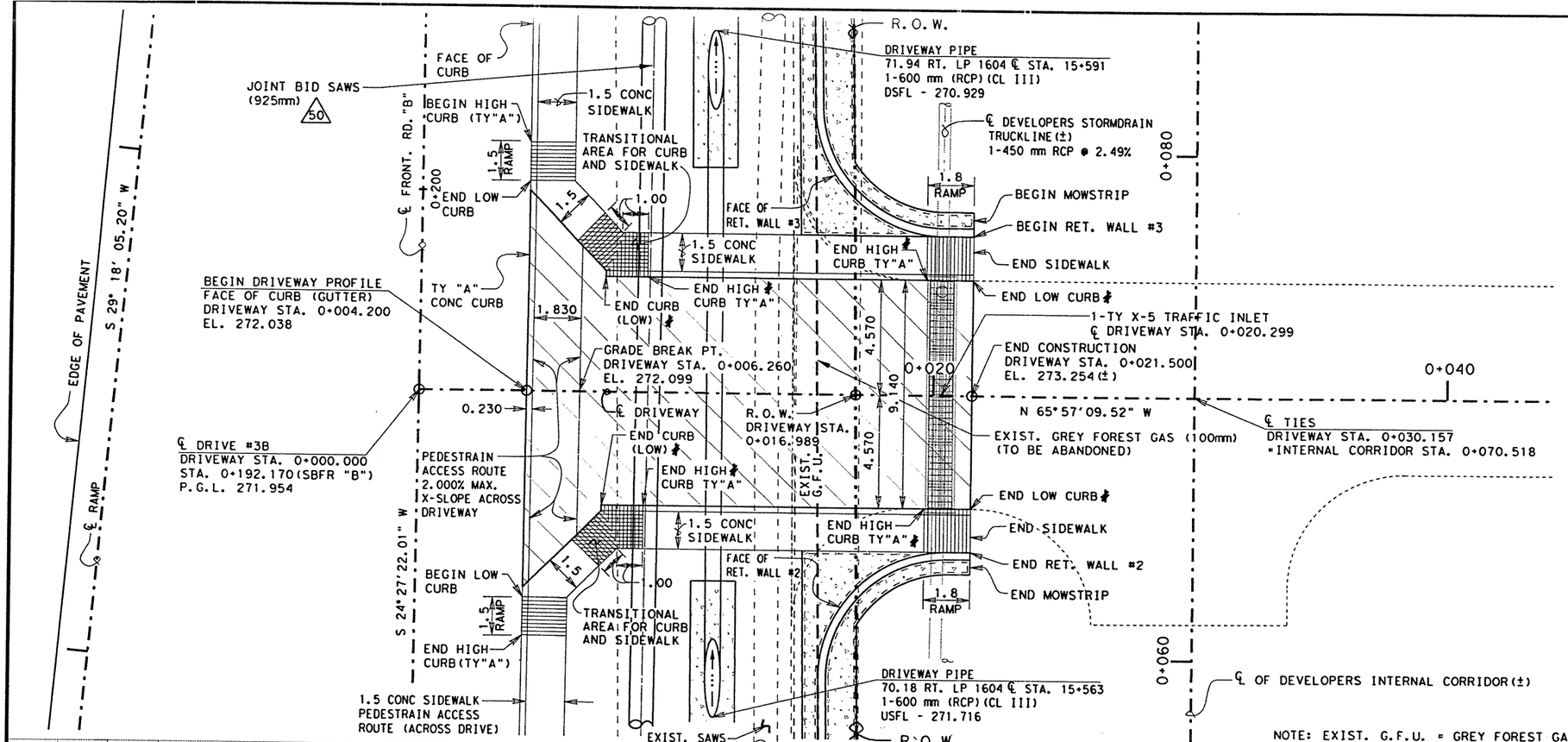


NOTE: EXIST. G.F.U. = GREY FOREST GAS (100mm)

SCALE 1:200 H
1:100 V

NOTE(S):

-ALL DIMENSIONS ARE IN METERS UNLESS OTHERWISE NOTED.

-FOR PAY ITEMS SEE APPROPRIATE PLAN SHEET(S) AND DRIVEWAY SUMMARY.

-FOR MORE DRIVEWAY DETAILS SEE DRIVEWAY SUMMARY SHEETS.

-FOR MORE RET. WALL DETAILS SEE LAYOUTS.

(#) -REFERS TO CHANGES MADE AS PART OF CHANGE ORDER.

℄ -SHOWN FOR CONTRACTORS INFORMATION ONLY AND CONSIDERED SUBSIDIARY TO THE PERTINENT BID ITEMS.

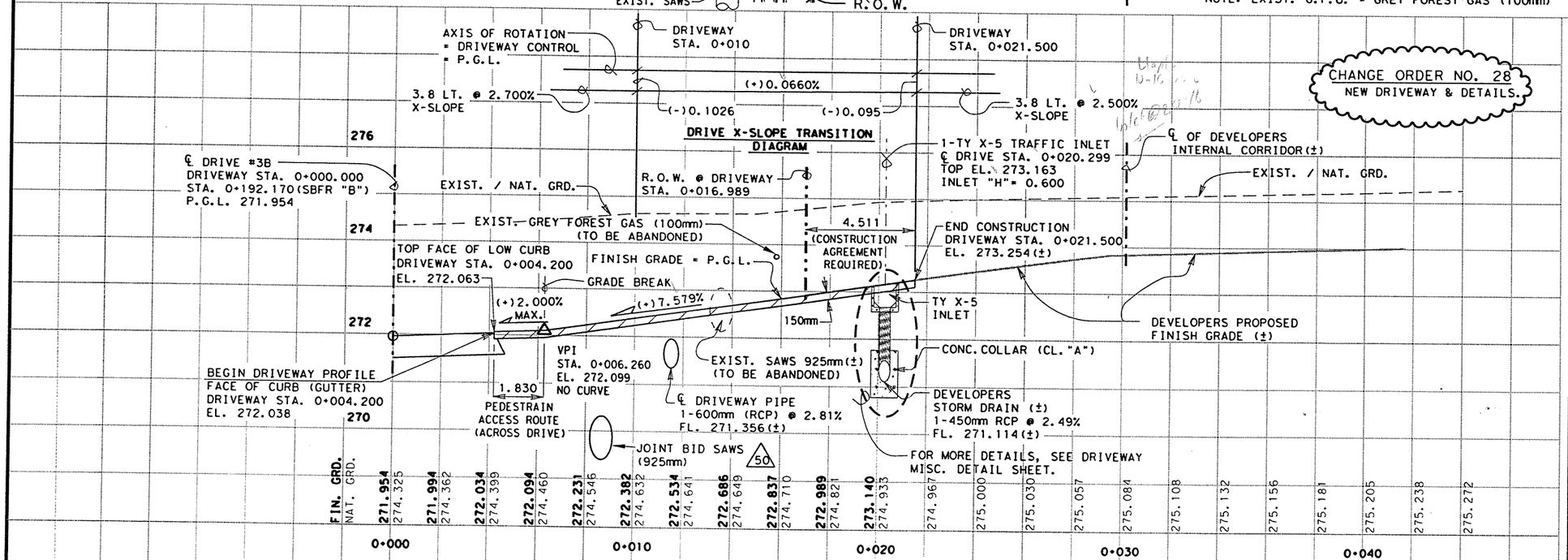


CHANGE ORDER NO. 28
NEW DRIVEWAY & DETAILS.

CHANGE ORDER 28

NEW SHEET

STATE OF TEXAS
JEROME D. PAVLISKA
76075
REGISTERED PROFESSIONAL ENGINEER

Jerome D. Pavlisko, P.E. 2-07-03
Jerome D. Pavlisko, P.E. Date

© 2001 Texas Department of Transportation

# DRIVEWAY #3B

| FED. RD. DIV. NO. | FEDERAL AID PROJECT NO. | | SHEET NO. |
|---|---|---|---|
| 6 | NH 2000(704), etc | | 342F |
| STATE | DIST. | COUNTY | |
| TEXAS | SAT | BEXAR | |
| CONT. | SECT. | JOB | HIGHWAY NO. |
| 2452 | 01 | 036, etc | LP 1604 |

LEVELS DISPLAYED
1 2 3 4 5 6 7 8 9 10 11 12 13 14 15 16
17 18 19 20 21 22 23 24 25 26 27 28 29 30 31 32
33 34 35 36 37 38 39 40 41 42 43 44 45 46 47 48
49 50 51 52 53 54 55 56 57 58 59 60 61 62 63

lp1604fm471-90
drive#3B.dgn

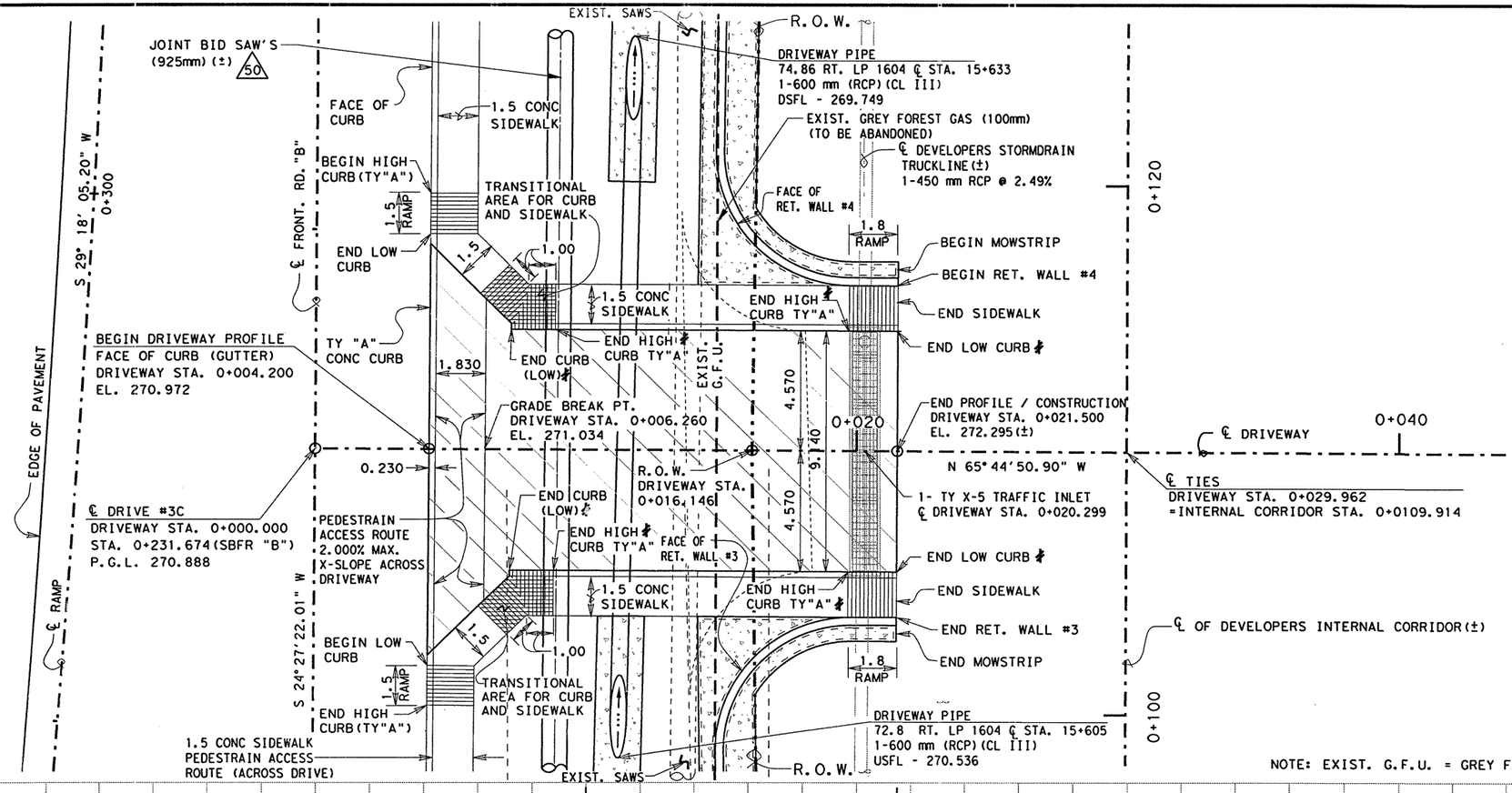


SCALE 1:200 H
1:100 V

NOTE(S):

-ALL DIMENSIONS ARE IN METERS UNLESS OTHERWISE NOTED.

-FOR PAY ITEMS SEE APPROPRIATE PLAN SHEET(S) AND DRIVEWAY SUMMARY.

-FOR MORE DRIVEWAY DETAILS SEE DRIVEWAY SUMMARY SHEETS.

-FOR MORE RET. WALL DETAILS SEE LAYOUTS.

△# -REFERS TO CHANGES MADE AS PART OF CHANGE ORDER.

℄ -SHOWN FOR CONTRACTORS INFORMATION ONLY AND CONSIDERED SUBSIDIARY TO THE PERTINENT BID ITEMS.

NOTE: EXIST. G.F.U. = GREY FOREST GAS (100mm)

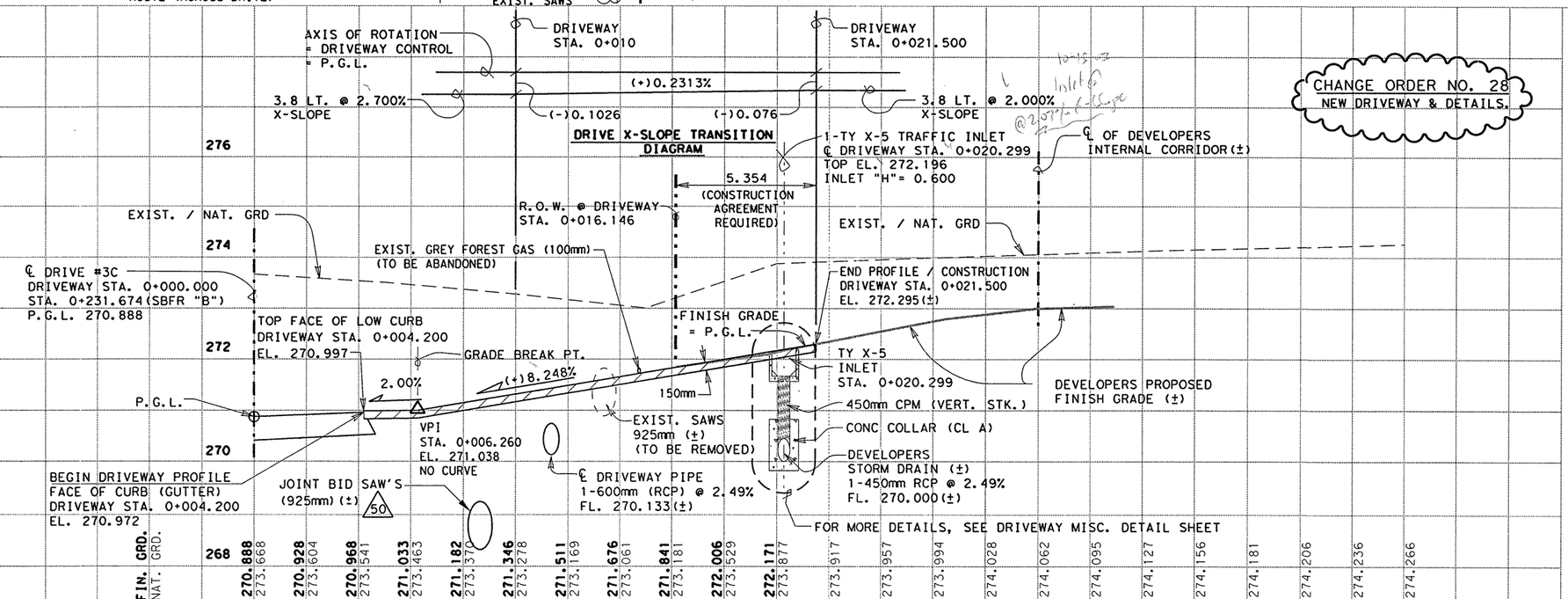


CHANGE ORDER NO. 28
NEW DRIVEWAY & DETAILS.

CHANGE ORDER 28

NEW SHEET

STATE OF TEXAS
JEROME D. PAVLISKA
76075
REGISTERED PROFESSIONAL ENGINEER

Jerome D. Pavliska, P.E. 08-11-03
Jerome D. Pavliska, P.E. Date

©2003
Texas Department of Transportation

# DRIVEWAY #3C

| FED. RD. DIV. NO. | FEDERAL AID PROJECT NO. | | SHEET NO. |
|---|---|---|---|
| 6 | NH 2000(704), etc | | 342G |
| STATE | DIST. | COUNTY | |
| TEXAS | SAT | BEXAR | |
| CONT. | SECT. | JOB | HIGHWAY NO. |
| 2452 | 01 | 036, etc | LP 1604 |

LEVELS DISPLAYED
1 2 3 4 5 6 7 8 9 10 11 12 13 14 15 16
17 18 19 20 21 22 23 24 25 26 27 28 29 30 31 32
33 34 35 36 37 38 39 40 41 42 43 44 45 46 47 48
49 50 51 52 53 54 55 56 57 58 59 60 61 62 63

lp1604fm471-90
dr1ve*3c.dgn

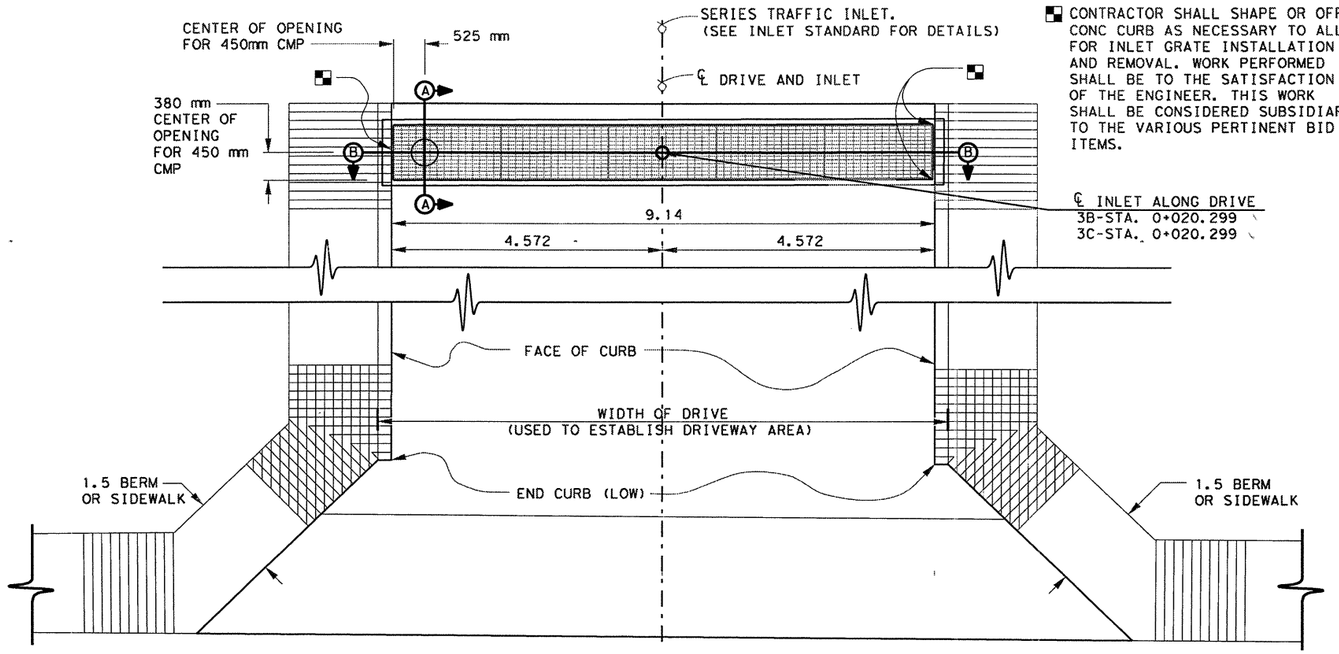


**PLAN**

■ CONTRACTOR SHALL SHAPE OR OFFSET CONC CURB AS NECESSARY TO ALLOW FOR INLET GRATE INSTALLATION AND REMOVAL. WORK PERFORMED SHALL BE TO THE SATISFACTION OF THE ENGINEER. THIS WORK SHALL BE CONSIDERED SUBSIDIARY TO THE VARIOUS PERTINENT BID ITEMS.

℄ INLET ALONG DRIVE
3B-STA. 0+020.299
3C-STA. 0+020.299

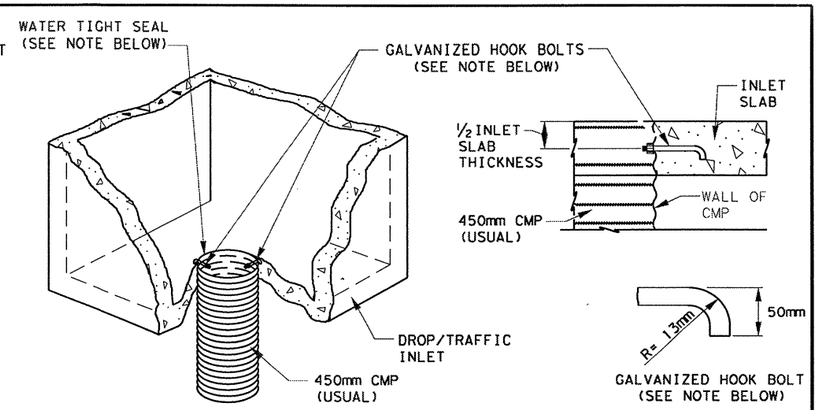


## CMP CONNECTION DETAIL

NOTES: -THE CONTRACTOR SHALL MAKE A WATER TIGHT SEAL BETWEEN CMP INSTALLED AND INLET TO THE SATISFACTION OF THE ENGINEER.

-16mm X 200mm GALVANIZED HOOK BOLTS TO BE TIED INTO INLET SLAB REINF. STEEL (4 EA. REQUIRED PER INLET) WORK & MATERIALS CONSIDERED SUBSIDIARY TO ITEM 460 "CORRUGATED METAL PIPE"

**CHANGE ORDER NO. 28**
-NEW SHEET
-SPECIAL DRIVEWAY DETAILS.

NOTE(S)

-ALL DIMENSIONS ARE IN METERS UNLESS ITHERWISE SHOWN.

-DETAILS & QUANTITIES SHOWN ON THIS SHEET ARE FOR CONTRACTORS INFORMATION ONLY . FOR PAY ITEMS SEE APPROPRIATE PLAN SHEET AND SUMMARIES.

Slope
3B 2.5% ←
3C 2.07% ←

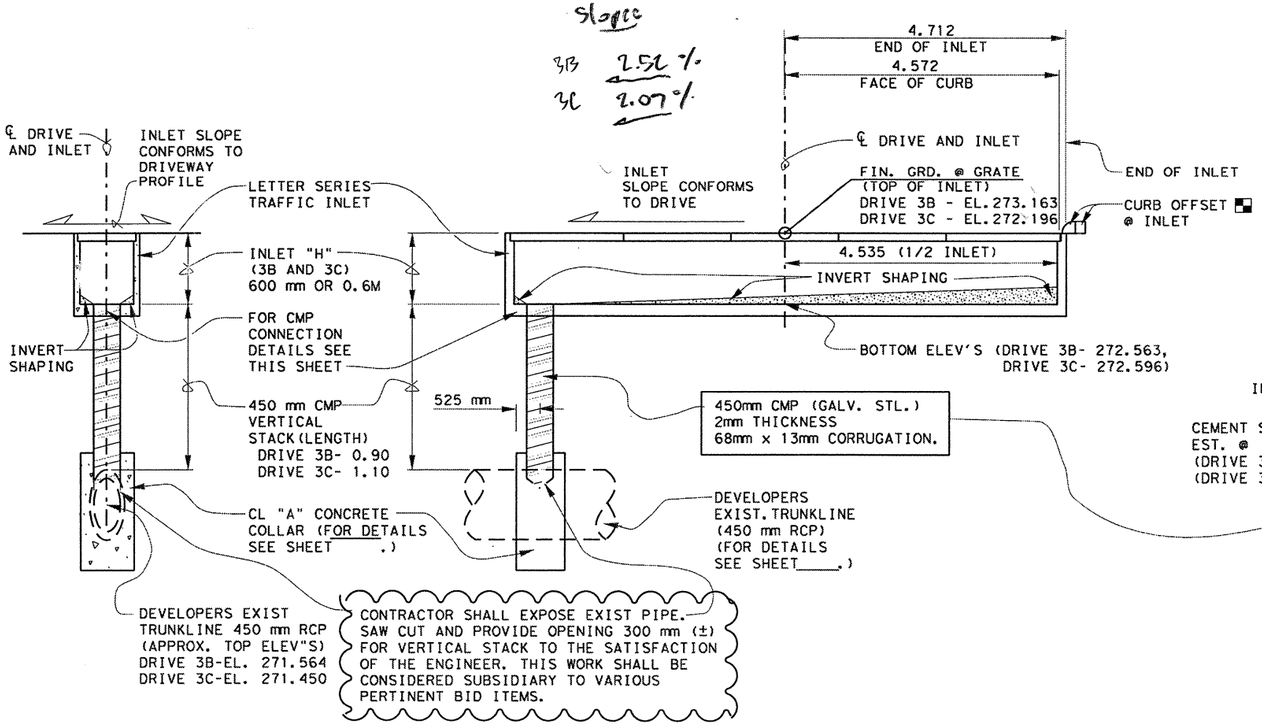


**SECTION A-A** **SECTION B-B**

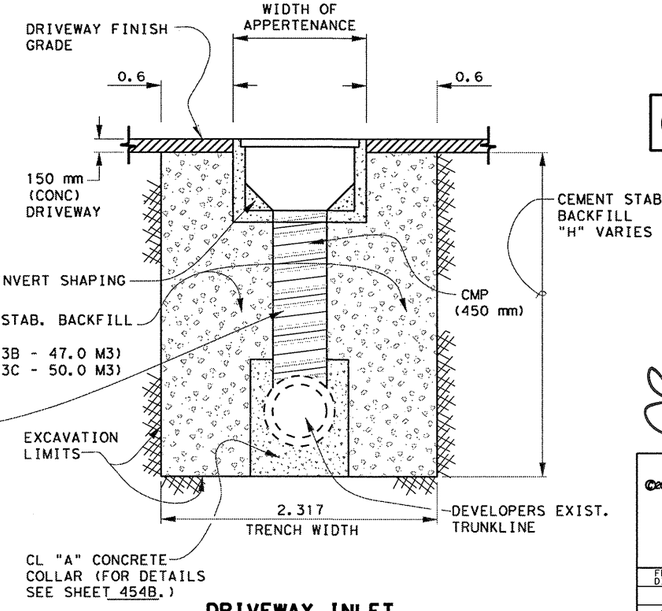


**DRIVEWAY INLET BACKFILL DIAGRAM**

**CHANGE ORDER 28**

**NEW SHEET**

STATE OF TEXAS
JEROME D. PAVLISKA
76075
REGISTERED PROFESSIONAL ENGINEER

Jerome D. Pavliska P.E. 08-11-03
Jerome D. Pavliska, P.E. Date

Texas Department of Transportation

# DRIVEWAY 3B & 3C SPECIAL DETAILS

| FED.RD. DIV.NO. | FEDERAL AID PROJECT NO. | | SHEET NO. |
|---|---|---|---|
| 6 | NH 2000(704),etc. | | 342H |
| STATE | DIST. | COUNTY | |
| TEXAS | SAT | BEXAR | |
| CONT. | SECT. | JOB | HIGHWAY NO. |
| 2452 | 01 | 036,etc. | LP 1604 |

04-04-03

LEVELS DISPLAYED
1 2 3 4 5 6 7 8 9 10 11 12 13 14 15 16 17 18 19 20 21 22 23 24 25 26 27 28 29 30 31 32 33 34 35 36 37 38 39 40 41 42 43 44 45 46 47 48 49 50 51 52 53 54 55 56 57 58 59 60 61 62 63
ACC: t:\ao\design\lp1604fm471-90\
FILE: spec*detail.dgn

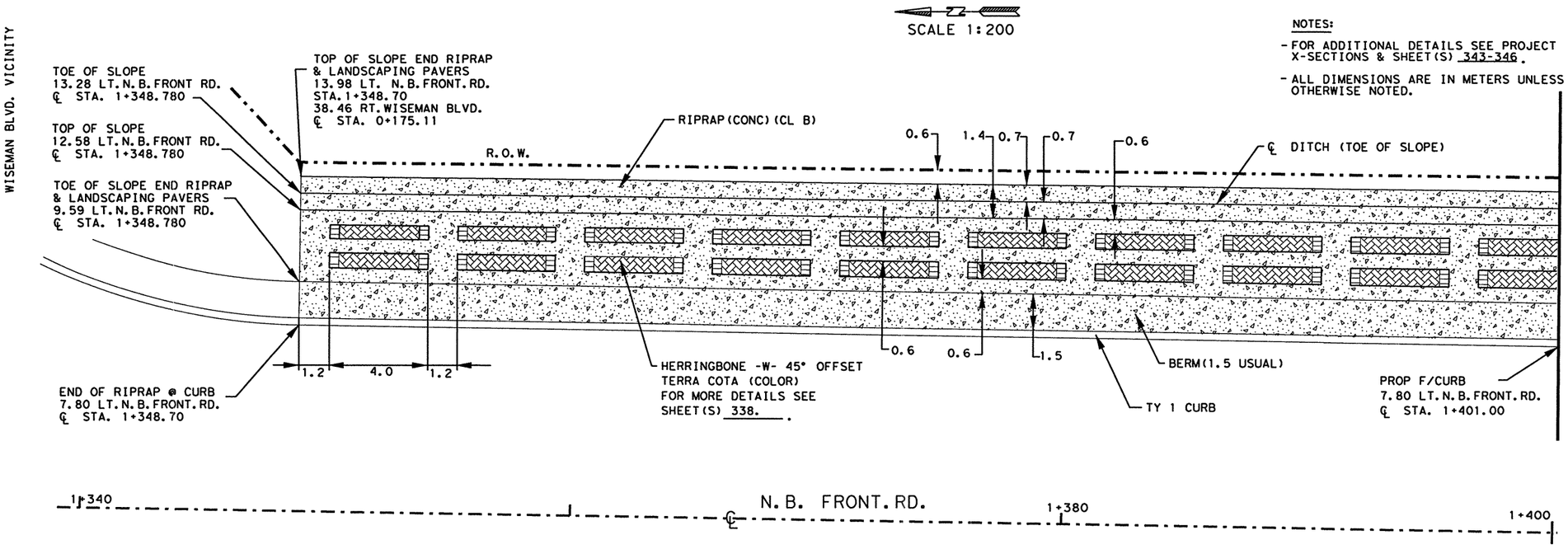


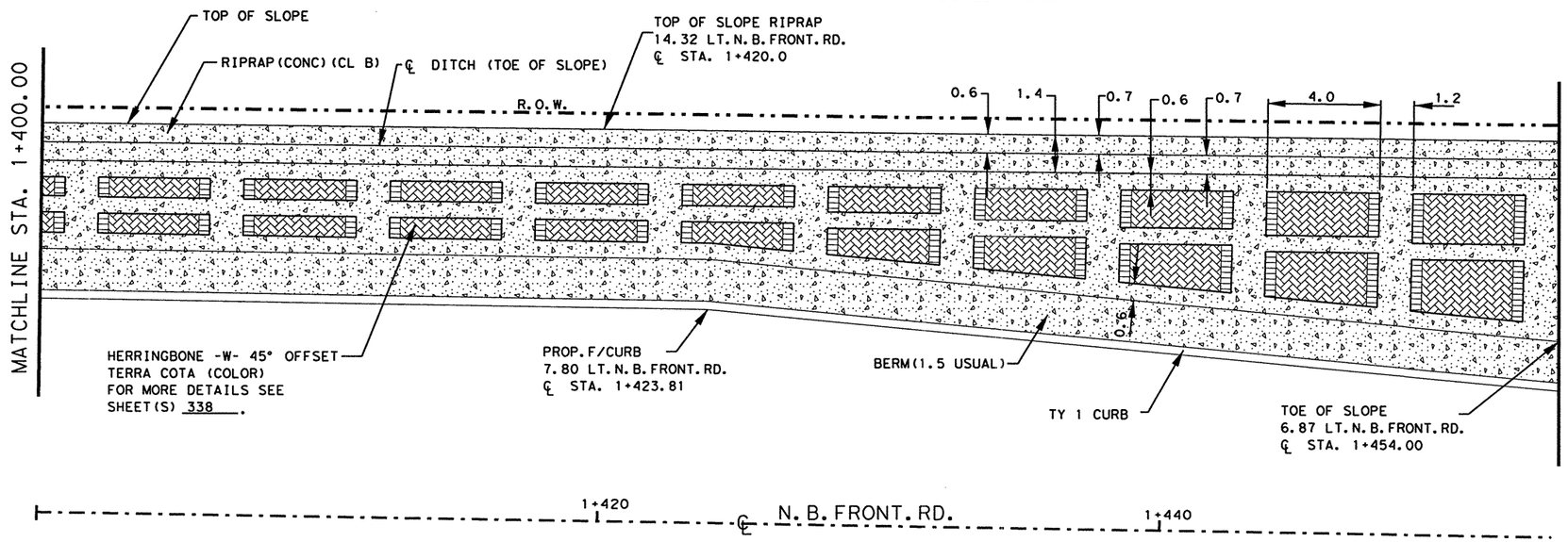


PLAN VIEW
SHOWING LANDSCAPING PAVERS AND RIPRAP (CONC) (CL B) TREATMENT SOUTHEAST OF WISEMAN BLVD. ALONG N.B. FRONTAGE ROAD.

## ESTIMATED QUANTITIES

| ITEM | UNIT | QTY. |
|---|---|---|
| RIPRAP (CONC) (CL B) | M3 | 146 |
| LANDSCAPE PAVERS | M2 | 181 |
| | | |

QUANTITIES SHOWN ON THIS SHEET ARE FOR CONTRACTORS INFO ONLY SEE PLAN SHEETS FOR PAY QUANTITIES.

STATE OF TEXAS
JOEL K. DAVENPORT, JR.
79276
REGISTERED PROFESSIONAL ENGINEER

Joel K. Davenport Jr. 11/1/00
Joel K. Davenport Jr., P.E. Date

LEVELS DISPLAYED
1 2 3 4 5 6 7 8 9 10 11 12 21 31 41 51 61
17 18 19 20 21 22 23 24 25 26 27 28 29 30 33 132
33 34 35 36 37 38 39 40 41 42 43 44 45 46 47 48
49 50 51 52 53 54 55 56 57 58 59 60 61 62 63
ACC:
FILE: .DGN

©2000
Texas Department of Transportation

# MISCELLANEOUS ROADWAY DETAILS

SHEET 9 OF 12

| FED. RD. DIV. NO. | FEDERAL AID PROJECT NO. | | SHEET NO. |
|---|---|---|---|
| 6 | NH 2000(704), etc. | | 343 |
| STATE | DIST. | COUNTY | |
| TEXAS | SAT | BEXAR | |
| CONT. | SECT. | JOB | HIGHWAY NO. |
| 2452 | 01 | 036, etc. | LP 1604 |

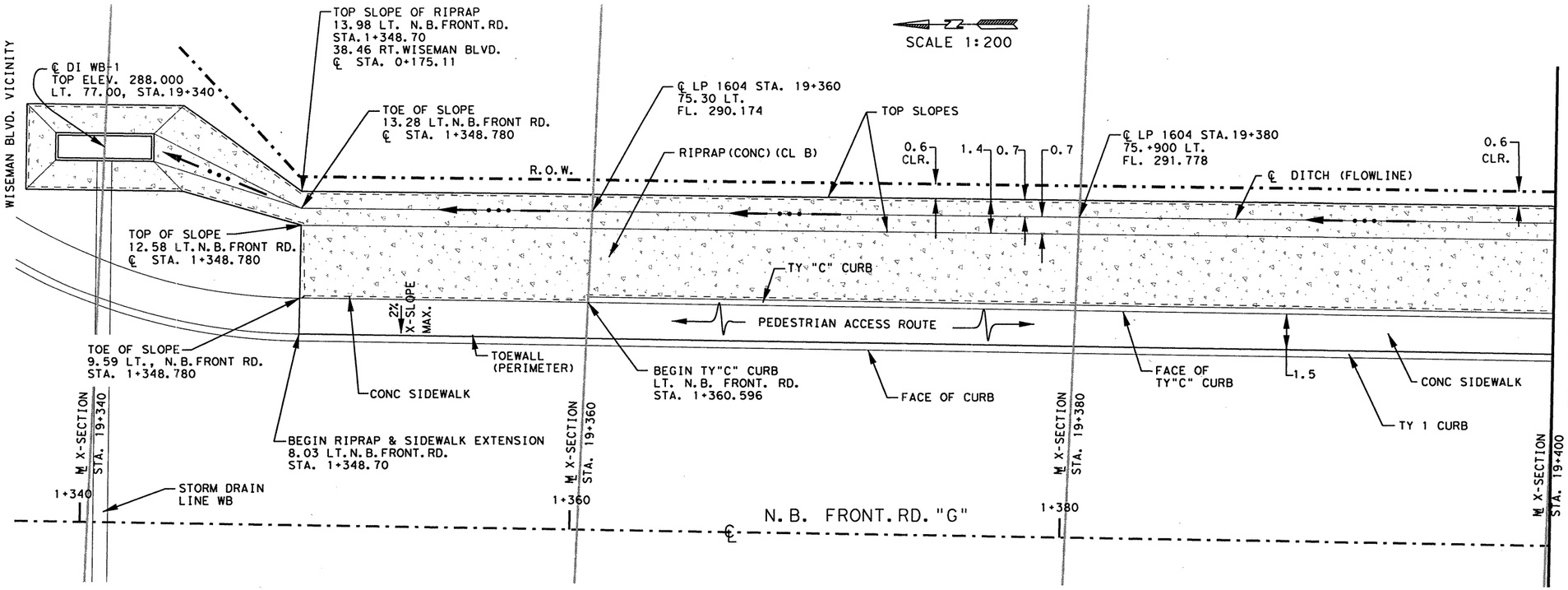


PLAN VIEW
SHOWING RIPRAP (CONC) (CL B) TREATMENT
SOUTHEAST OF WISEMAN BLVD. ALONG
N.B. FRONT RD.

**CHANGE ORDER NO. 64**
- -MODIFIED RIPRAP DETAILS
- -ADDED TY "C" CURB
- -EXTENDED / ADDED CONC. SIDEWALK
- -ADDED / REVISED NOTES
- -REVISED QUANTITIES

## ESTIMATED QUANTITIES

| ITEM | UNIT | QTY. |
|---|---|---|
| RIPRAP (CONC) (CL B) | M3 | 94 |

QUANTITIES SHOWN ON THIS SHEET ARE FOR CONTRACTORS INFO ONLY SEE PLAN SHEETS FOR PAY QUANTITIES.

LEGEND

DIRECTION OF FLOW

NOTES:

- FOR ADDITIONAL DETAILS SEE PROJECT X-SECTIONS & OTHER RELATED ROADWAY MISC. DETAIL SHEETS.
- ALL DIMENSIONS ARE IN METERS UNLESS OTHERWISE NOTED.

CHANGE ORDER 64

REVISED SHEET

STATE OF TEXAS
JEROME D. PAVLISKA
76075
REGISTERED PROFESSIONAL ENGINEER

Jerome D. Pavliska, P.E. 4-28-04
Jerome D. Pavliska, P.E. Date

©2000

Texas Department of Transportation

**MISCELLANEOUS ROADWAY DETAILS**
SHEET 9 OF 12

| FED. RD. DIV. NO. | FEDERAL AID PROJECT NO. | | SHEET NO. |
|---|---|---|---|
| 6 | NH 2000(704), etc. | | 343A |
| STATE | DIST. | COUNTY | |
| TEXAS | SAT | BEXAR | |
| CONT. | SECT. | JOB | HIGHWAY NO. |
| 2452 | 01 | 036, etc. | LP 1604 |

LEVELS DISPLAYED
1 2 3 4 5 6 7 8 9 10 11 12 13 14 15 16
17 18 19 20 21 22 23 24 25 26 27 28 29 30 31 32
33 34 35 55 56 57 58 59 40 41 42 43 44 45 46 47 48
49 50 51 52 53 54 55 56 57 58 59 60 61 62 63
ACC:
FILE: misc rd detail09 pd.dgn

| ESTIMATED QUANTITIES | | |
|---|---|---|
| ITEM | UNIT | QTY. |
| RIPRAP (CONC) (CL B) | M3 | 104 |
| LANDSCAPE PAVERS | M2 | 420 |
| | | |

QUANTITIES SHOWN ON THIS SHEET ARE FOR CONTRACTORS INFO ONLY SEE PLAN SHEETS FOR PAY QUANTITIES.

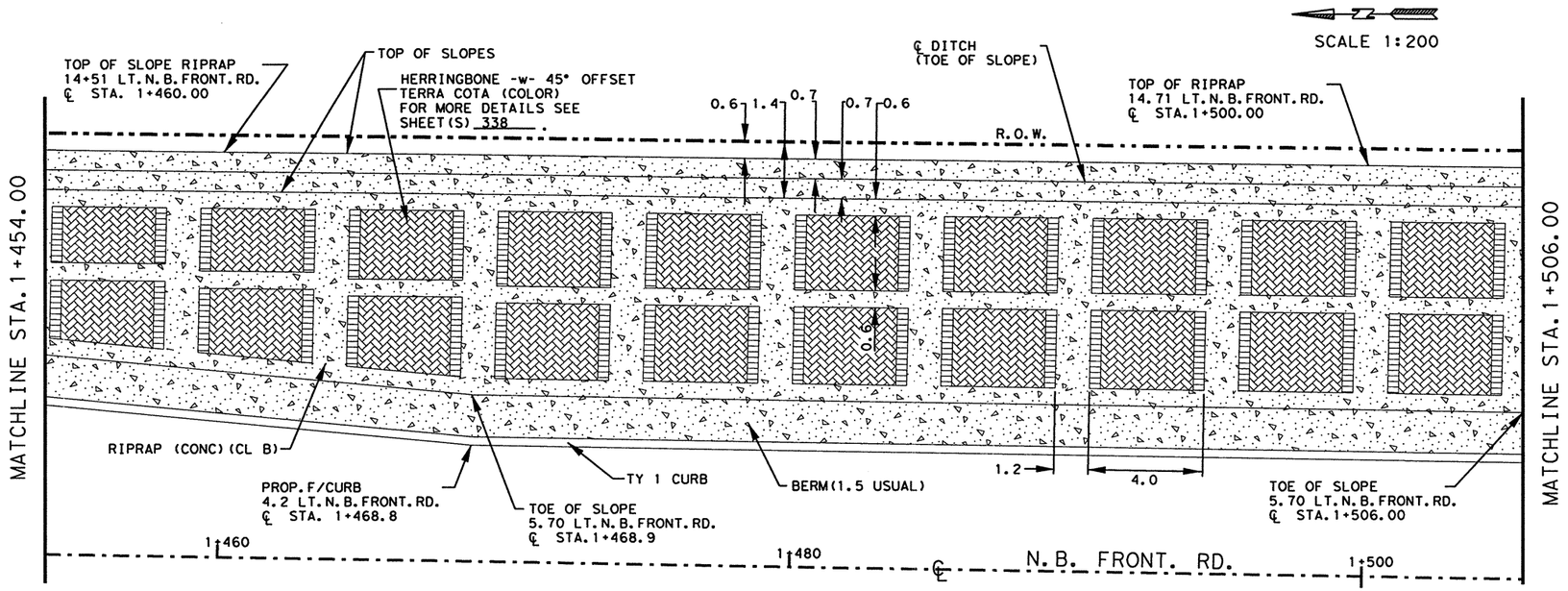


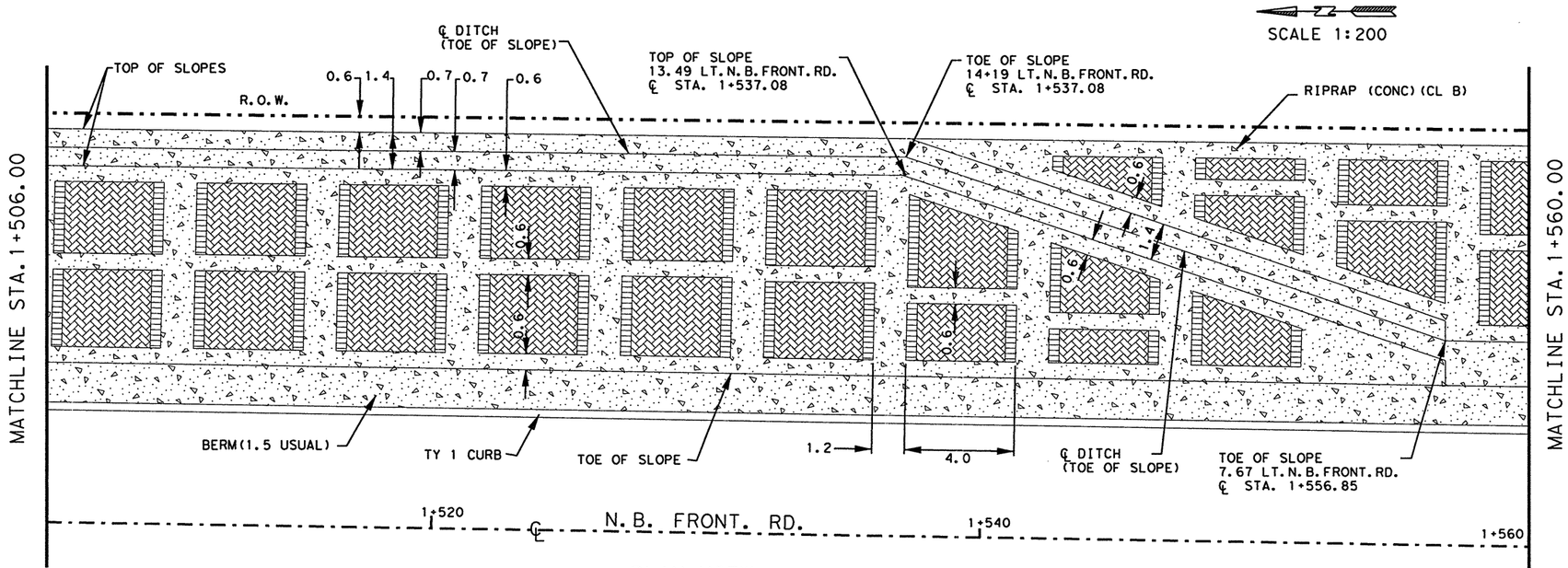


PLAN VIEW
SHOWING LANDSCAPING PAVERS AND RIPRAP (CONC) (CL B) TREATMENT SOUTHEAST OF WISEMAN BLVD. ALONG N.B. FRONTAGE ROAD.

NOTES:
- FOR ADDITIONAL DETAILS SEE PROJECT X-SECTIONS & SHEET(S) 343-346.
- ALL DIMENSIONS ARE IN METERS UNLESS OTHERWISE NOTED.

STATE OF TEXAS
JOEL K. DAVENPORT, JR.
79276
REGISTERED
PROFESSIONAL ENGINEER

Joel K Davenport Jr 11/1/00
Joel K. Davenport Jr., P.E. Date

©2000
Texas Department of Transportation

**MISCELLANEOUS ROADWAY DETAILS**
SHEET 10 OF 12

| FED. RD. DIV. NO. | FEDERAL AID PROJECT NO. | | SHEET NO. |
|---|---|---|---|
| 6 | NH 2000(704), etc. | | 344 |
| STATE | DIST. | COUNTY | |
| TEXAS | SAT | BEXAR | |
| CONT. | SECT. | JOB | HIGHWAY NO. |
| 2452 | 01 | 036, etc. | LP 1604 |

LEVELS DISPLAYED
1 2 13 15 16 17 18 19 101 111 212 313 414 515 616 717 818 919 2021 2223 2425 2627 2829 3031 3233 3435 3536 3738 3940 4142 43 45 46 47 48 495051 52 53 54 55 56 57 58 59 60 61 62 63
ACC:
FILE: .DGN

| ESTIMATED QUANTITIES | | |
|---|---|---|
| ITEM | UNIT | QTY. |
| RIPRAP (CONC) (CL B) | M3 | 144 |

QUANTITIES SHOWN ON THIS SHEET ARE FOR CONTRACTORS INFO ONLY SEE PLAN SHEETS FOR PAY QUANTITIES.

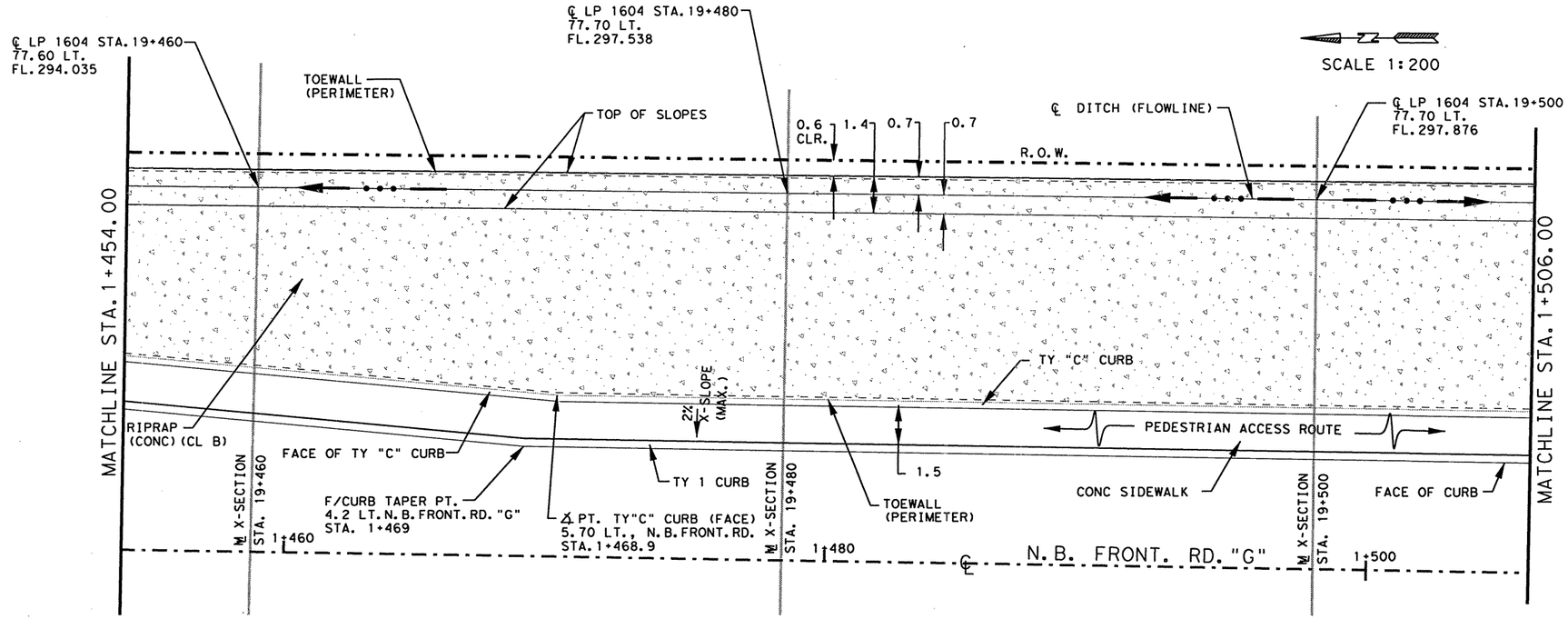


LEGEND

DIRECTION OF FLOW

NOTES:

- FOR ADDITIONAL DETAILS SEE PROJECT X-SECTIONS & OTHER RELATED ROADWAY MISC. DETAIL SHEETS.
- ALL DIMENSIONS ARE IN METERS UNLESS OTHERWISE NOTED.

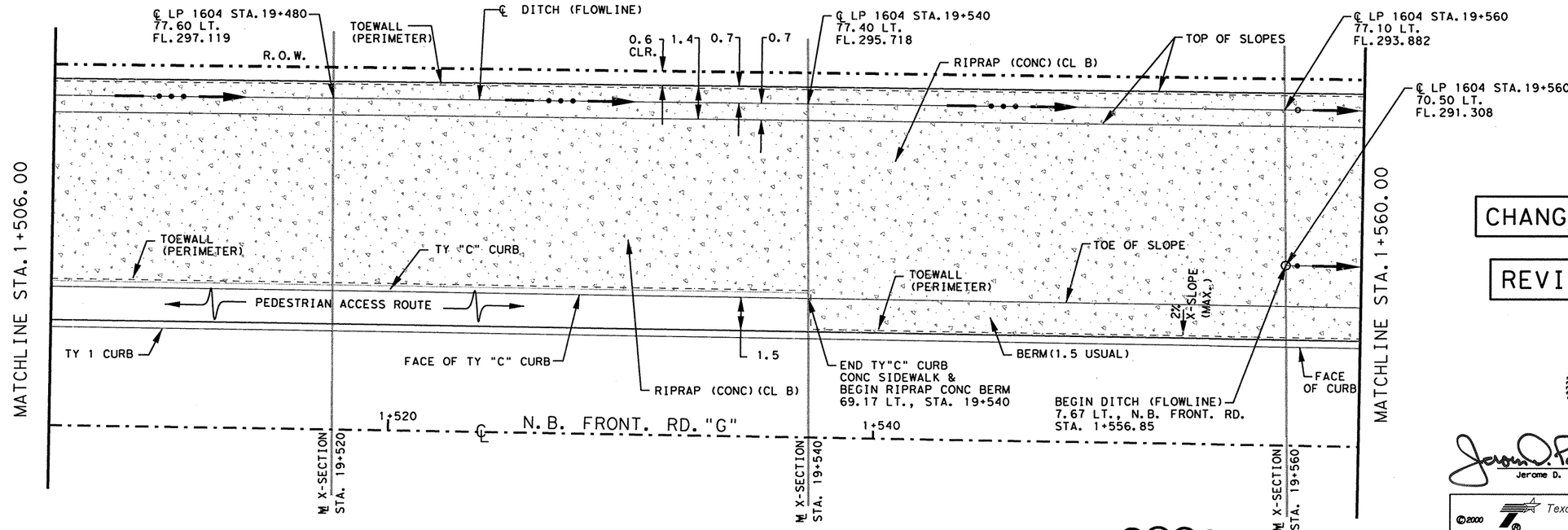


PLAN VIEW
SHOWING RIPRAP (CONC) (CL B) TREATMENT
SOUTHEAST OF WISEMAN BLVD. ALONG
N.B. FRONTAGE ROAD.

CHANGE ORDER 64

REVISED SHEET

CHANGE ORDER NO. 64

- -MODIFIED RIPRAP DETAILS
- -ADDED TY "C" CURB
- -EXTENDED / ADDED CONC SIDEWALK
- -ADDED / REVISED NOTES
- -REVISED QUANTITIES

STATE OF TEXAS
JEROME D. PAVLISKA
76075
REGISTERED PROFESSIONAL ENGINEER

Jerome D. Pavlisko, P.E. 4-28-04
Jerome D. Pavlisko, P.E. Date

©2000
Texas Department of Transportation

MISCELLANEOUS ROADWAY DETAILS
SHEET 10 OF 12

| FED. RD. DIV. NO. | FEDERAL AID PROJECT NO. | | SHEET NO. |
|---|---|---|---|
| 6 | NH 2000(704), etc. | | 344A |
| STATE | DIST. | COUNTY | |
| TEXAS | SAT | BEXAR | |
| CONT. | SECT. | JOB | HIGHWAY NO. |
| 2452 | 01 | 036, etc. | LP 1604 |

LEVELS DISPLAYED
1 2 3 4 5 6 7 8 9 10 11 12 13 14 15 16
17 18 19 20 21 22 23 24 25 26 27 28 29 30 31 32
33 34 35 36 37 38 39 40 41 42 43 44 45 46 47 48
49 50 51 52 53 54 55 56 57 58 59 60 61 62 63

ACC:
FILE: misc rd detail10 pd.dgn

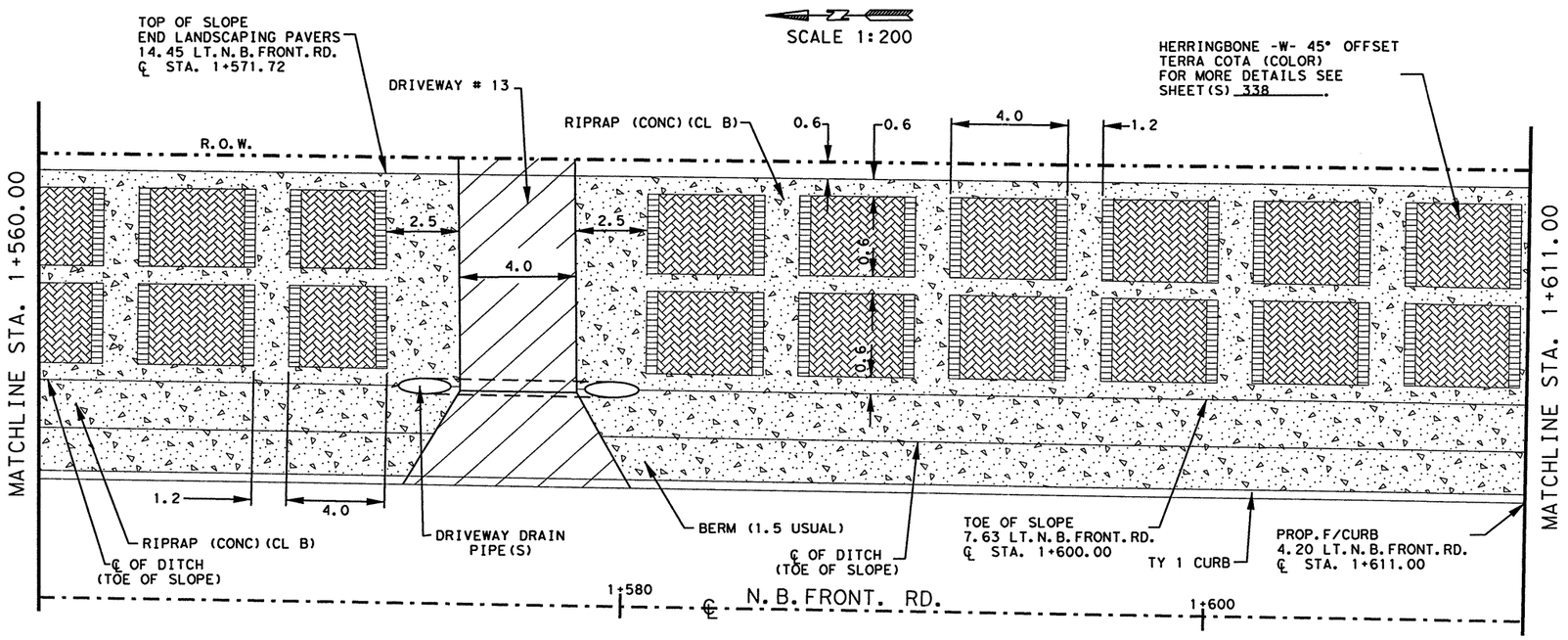


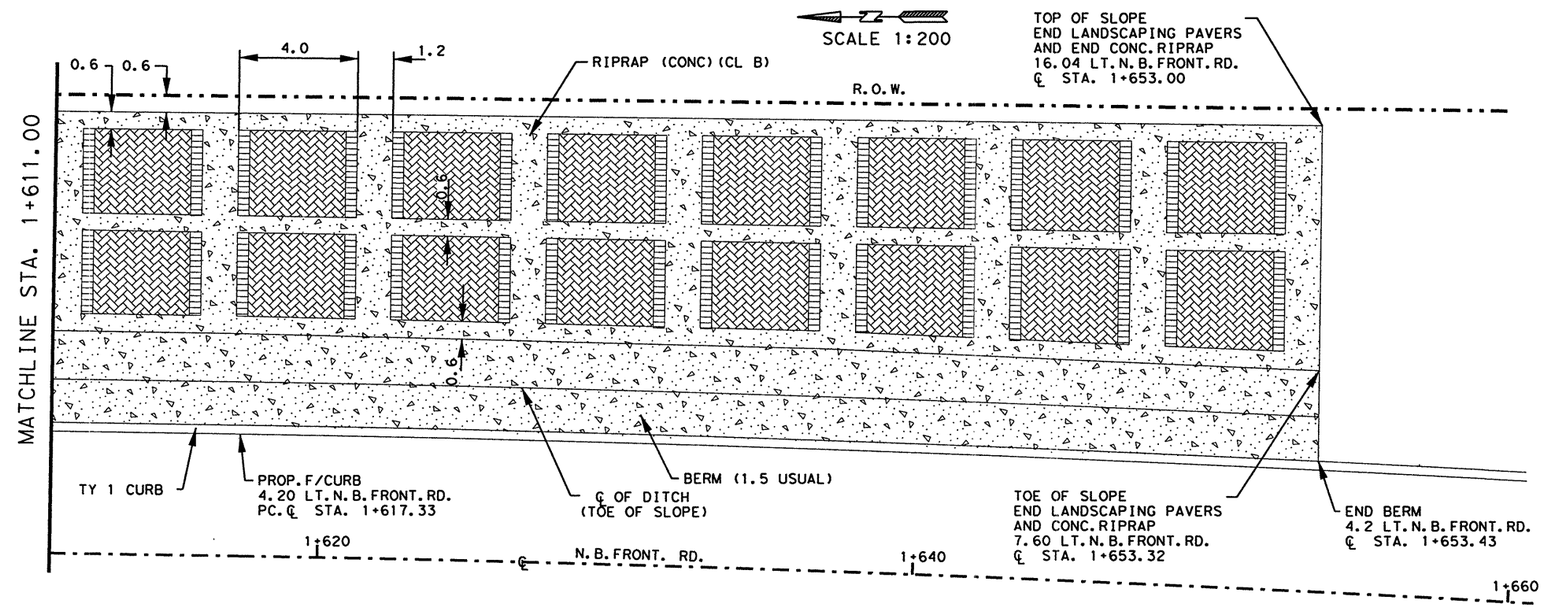


PLAN VIEW
SHOWING LANDSCAPING PAVERS AND RIPRAP (CONC) (CL B) TREATMENT SOUTHEAST OF WISEMAN BLVD. ALONG N.B. FRONTAGE ROAD.

| ESTIMATED QUANTITIES | | |
|---|---|---|
| ITEM | UNIT | QTY. |
| RIPRAP (CONC) (CL B) | M3 | 72 |
| LANDSCAPE PAVERS | M2 | 385 |
| | | |

QUANTITIES SHOWN ON THIS SHEET ARE FOR CONTRACTORS INFO ONLY SEE PLAN SHEETS FOR PAY QUANTITIES.

NOTES:

- FOR ADDITIONAL DETAILS SEE PROJECT X-SECTIONS & SHEET(S) 343-346.
- ALL DIMENSIONS ARE IN METERS UNLESS OTHERWISE NOTED.
- FOR ADDITIONAL DRIVEWAY DETAILS SEE SHEET(S) 27,28 & 336.

STATE OF TEXAS
JOEL K. DAVENPORT, JR.
79276
REGISTERED
PROFESSIONAL ENGINEER

Joel K Davenport Jr. 11/1/00
Joel K. Davenport Jr., P.E. Date

LEVELS DISPLAYED
1 2 13 5 16 7 18 9 19 11 11 21 31 41 51 61
17 81 92 02 12 22 32 42 52 62 72 82 93 03 13 23
33 53 43 53 63 73 83 94 04 14 24 34 45 46 47 48
49 60 51 52 62 53 54 55 65 75 85 96 06 16 26 36
ACC:
FILE: .DGN

©2000
Texas Department of Transportation

**MISCELLANEOUS ROADWAY DETAILS**
SHEET 11 OF 12

| FED. RD. DIV. NO. | FEDERAL AID PROJECT NO. | | SHEET NO. |
|---|---|---|---|
| 6 | NH 2000(704), etc. | | 345 |
| STATE | DIST. | COUNTY | |
| TEXAS | SAT | BEXAR | |
| CONT. | SECT. | JOB | HIGHWAY NO. |
| 2452 | 01 | 036, etc. | LP 1604 |

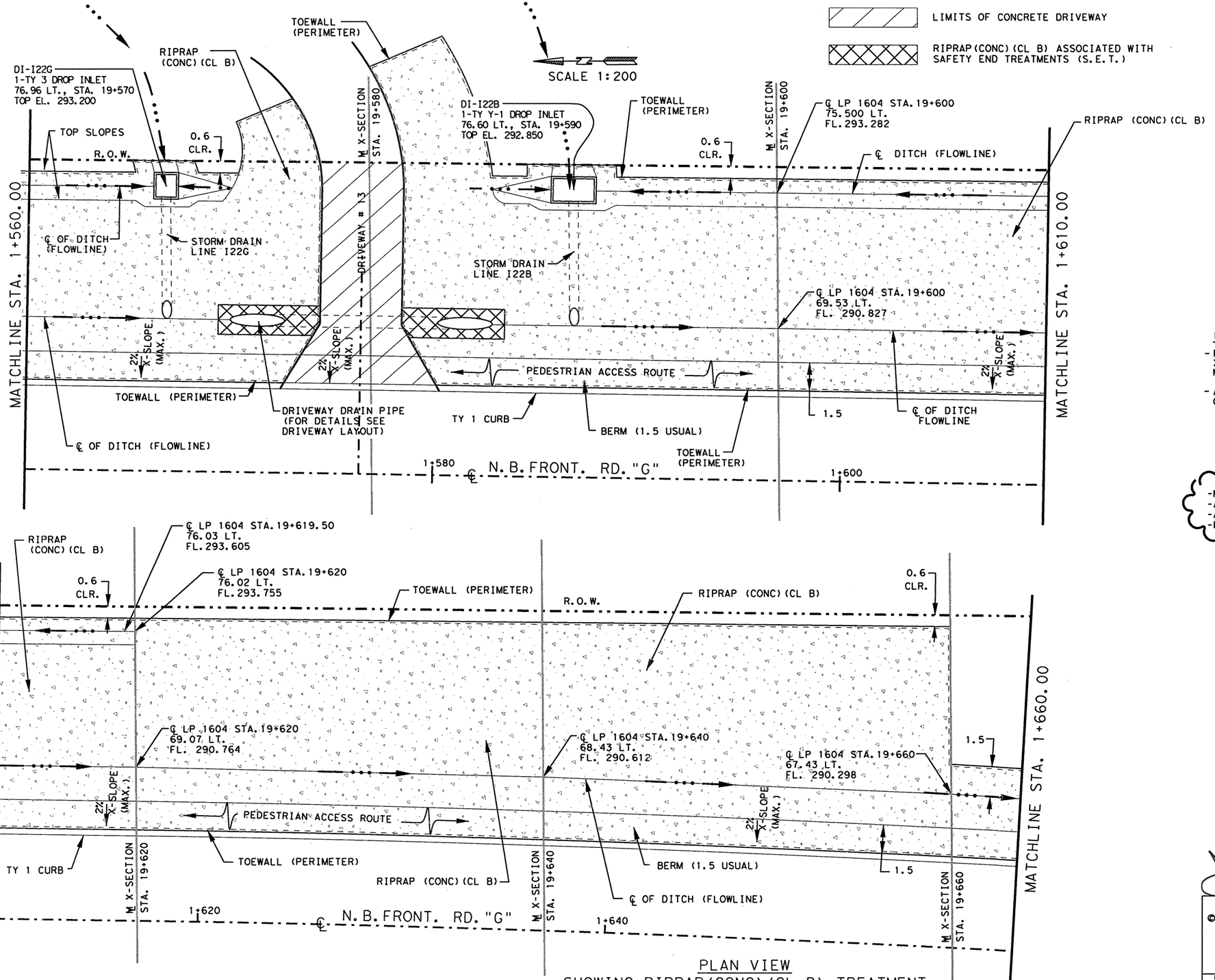


PLAN VIEW
SHOWING RIPRAP (CONC) (CL B) TREATMENT
SOUTHEAST OF WISEMAN BLVD. ALONG
N.B. FRONTAGE ROAD.

## ESTIMATED QUANTITIES

| ITEM | UNIT | QTY |
|---|---|---|
| RIPRAP (CONC) (CL B) | M3 | 162 |

QUANTITIES SHOWN ON THIS SHEET ARE FOR CONTRACTORS INFO ONLY SEE PLAN SHEETS FOR PAY QUANTITIES.

NOTES:

- FOR ADDITIONAL DETAILS SEE PROJECT X-SECTIONS & OTHER RELATED ROADWAY MISC. DETAIL SHEETS.
- ALL DIMENSIONS ARE IN METERS UNLESS OTHERWISE NOTED.

**CHANGE ORDER NO. 64**

- MODIFIED RIPRAP DETAILS
- ADDED STORM DRAIN LINES I22B & I22G
- ADDED / REVISED NOTES
- REVISED QUANTITIES

LEGEND

DIRECTION OF FLOW

CHANGE ORDER 64

REVISED SHEET

STATE OF TEXAS
JEROME D. PAVLISKA
76075
REGISTERED PROFESSIONAL ENGINEER

Jerome D. Pavliska, P.E. 4-28-04
Jerome D. Pavliska, P.E. Date

©2000
Texas Department of Transportation

**MISCELLANEOUS ROADWAY DETAILS**
SHEET 11 OF 12

| FED. RD. DIV. NO. | FEDERAL AID PROJECT NO. | | SHEET NO. |
|---|---|---|---|
| 6 | NH 2000(704), etc. | | 345A |
| STATE | DIST. | COUNTY | |
| TEXAS | SAT | BEXAR | |
| CONT. | SECT. | JOB | HIGHWAY NO. |
| 2452 | 01 | 036, etc. | LP 1604 |

LEVELS DISPLAYED
1 2 3 4 5 6 7 8 9 10 11 12 21 31 41 51 61
7 18 19 20 22 23 24 25 26 27 28 29 30 31 32
33 34 45 53 63 78 89 90 91 41 42 43 44 45 46 47 48
49 50 51 62 53 54 55 56 57 58 59 60 61 62 63
ACC:
FILE: misc rd details11 pd.dgn

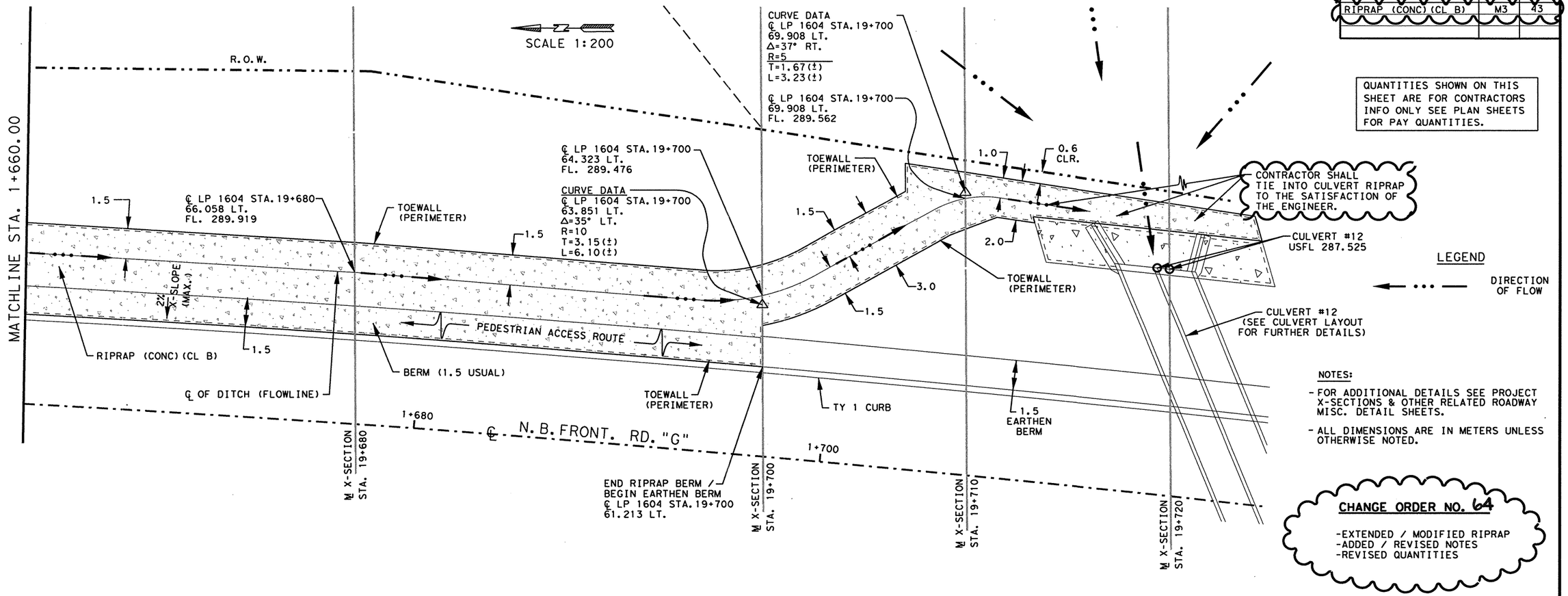


## ESTIMATED QUANTITIES

| ITEM | UNIT | QTY |
|---|---|---|
| RIPRAP (CONC)(CL B) | M3 | 43 |

QUANTITIES SHOWN ON THIS SHEET ARE FOR CONTRACTORS INFO ONLY SEE PLAN SHEETS FOR PAY QUANTITIES.

LEGEND

DIRECTION OF FLOW

NOTES:

- FOR ADDITIONAL DETAILS SEE PROJECT X-SECTIONS & OTHER RELATED ROADWAY MISC. DETAIL SHEETS.
- ALL DIMENSIONS ARE IN METERS UNLESS OTHERWISE NOTED.

**CHANGE ORDER NO. 64**

-EXTENDED / MODIFIED RIPRAP
-ADDED / REVISED NOTES
-REVISED QUANTITIES

CHANGE ORDER 64

NEW SHEET

PLAN VIEW
SHOWING RIPRAP(CONC)(CL B) TREATMENT
SOUTHEAST OF WISEMAN BLVD. ALONG
N.B. FRONTAGE ROAD.

STATE OF TEXAS
JEROME D. PAVLISKA
76075
REGISTERED PROFESSIONAL ENGINEER

Jerome D. Pavliska, P.E. 4-28-04
Jerome D. Pavliska, P.E. — Date

©2000
Texas Department of Transportation

**MISCELLANEOUS ROADWAY DETAILS**
SHEET 12 OF 12

| FED. RD. DIV. NO. | FEDERAL AID PROJECT NO. | | SHEET NO. |
|---|---|---|---|
| 6 | NH 2000(704),etc. | | 345B |
| STATE | DIST. | COUNTY | |
| TEXAS | SAT | BEXAR | |
| CONT. | SECT. | JOB | HIGHWAY NO. |
| 2452 | 01 | 036,etc. | LP 1604 |

05.01.04

LEVELS DISPLAYED
1 2 3 4 5 6 7 8 9 10 11 12 13 14 15 16
17 18 19 20 21 22 23 24 25 26 27 28 29 30 31 32
33 34 35 36 37 38 39 40 41 42 43 44 45 46 47 48
49 50 51 52 53 54 55 56 57 58 59 60 61 62 63

ACC:
FILE: misc rd detail11B pd.dgn

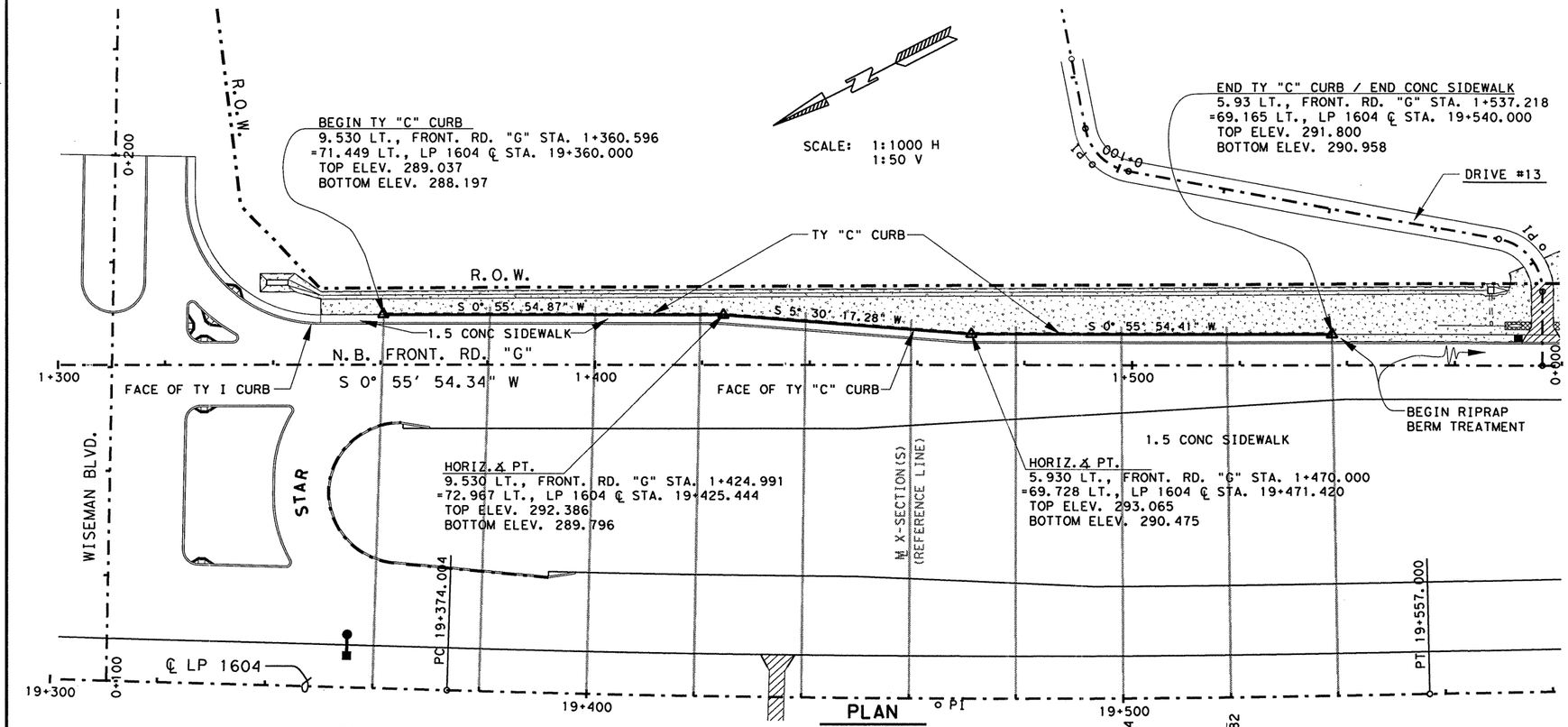


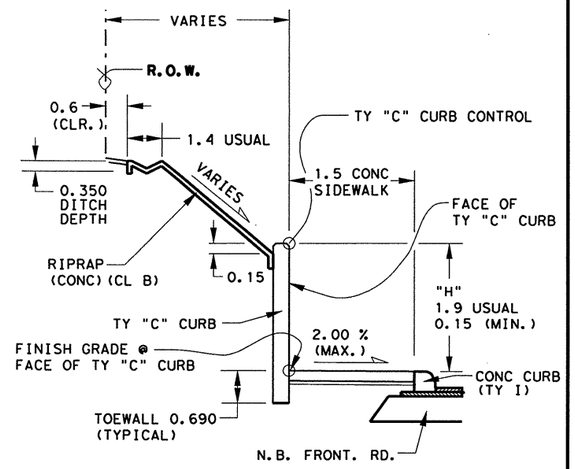


## TYPICAL

FOR ADDITIONAL INFORMATION ON RIPRAP, CONC CURB & SIDEWALK SEE RDWY MISC. DETAILS.

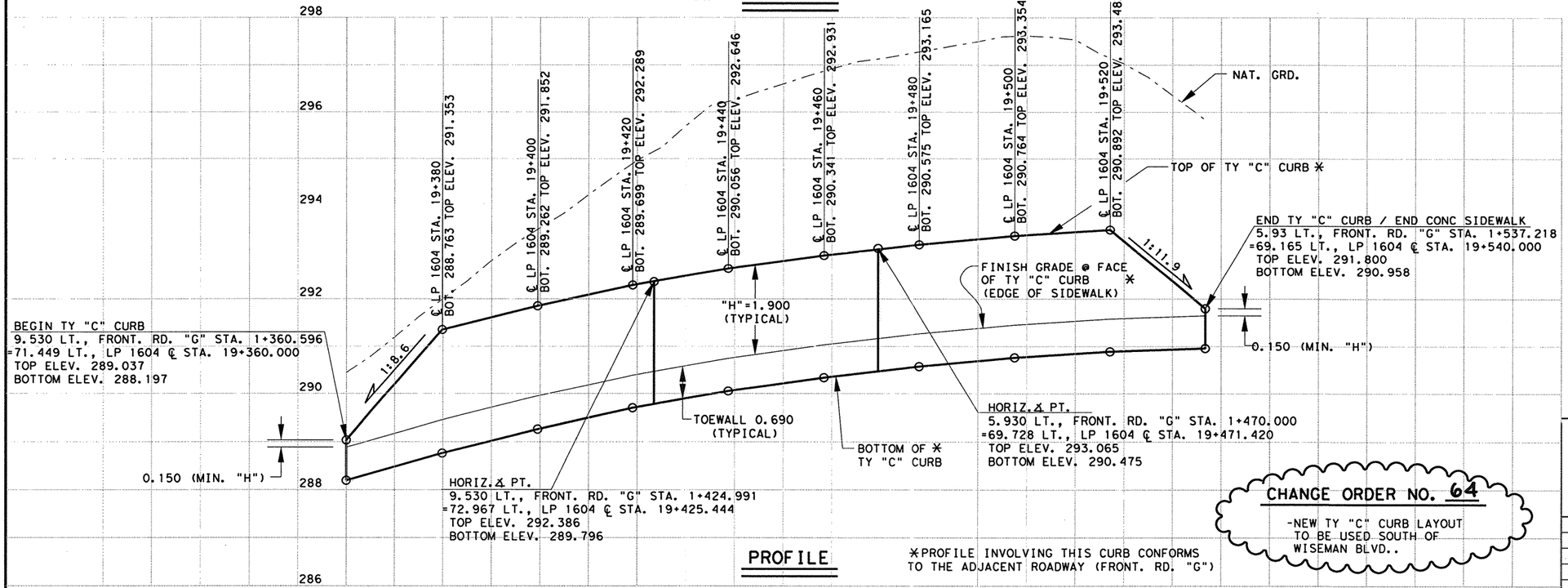


## PROFILE

*PROFILE INVOLVING THIS CURB CONFORMS TO THE ADJACENT ROADWAY (FRONT. RD. "G")

**CHANGE ORDER NO. 64**

-NEW TY "C" CURB LAYOUT TO BE USED SOUTH OF WISEMAN BLVD..

NOTE(S):

-ALL DIMENSIONS ARE IN METERS UNLESS OTHERWISE NOTED.

-FOR MORE INFORMATION SEE RDWY MISC. DETAILS AND PROJECT X-SECTIONS.

-FOR PAYMENT OF TY "C" CURB SEE APPROPRIATE PLAN SHEET(S).

**CHANGE ORDER 64**

**NEW SHEET**

STATE OF TEXAS
JEROME D. PAVLISKA
76075
REGISTERED PROFESSIONAL ENGINEER

Jerome D. Pavliska, P.E. 4-28-04
Jerome D. Pavliska, P.E. Date

©2004 Texas Department of Transportation

# TY "C" CURB PLAN & PROFILE

| FED.RD. DIV.NO. | FEDERAL AID PROJECT NO. | | SHEET NO. |
|---|---|---|---|
| 6 | NH 2000(704), etc. | | 345C |
| STATE | DIST. | COUNTY | |
| TEXAS | SAT | BEXAR | |
| CONT. | SECT. | JOB | HIGHWAY NO. |
| 2452 | 01 | 036, etc | LP 1604 |

LEVELS DISPLAYED
1 2 3 4 5 6 7 8 9 10 11 12 13 14 15 16
17 18 19 20 21 22 23 24 25 26 27 28 29 30 31 32
33 34 35 36 37 38 39 40 41 42 43 44 45 46 47 48
49 50 51 52 53 54 55 56 57 58 59 60 61 62 63

ACC: t:\oo\design\lp1604fm471-90\
FILE: wisetiprap.dgn

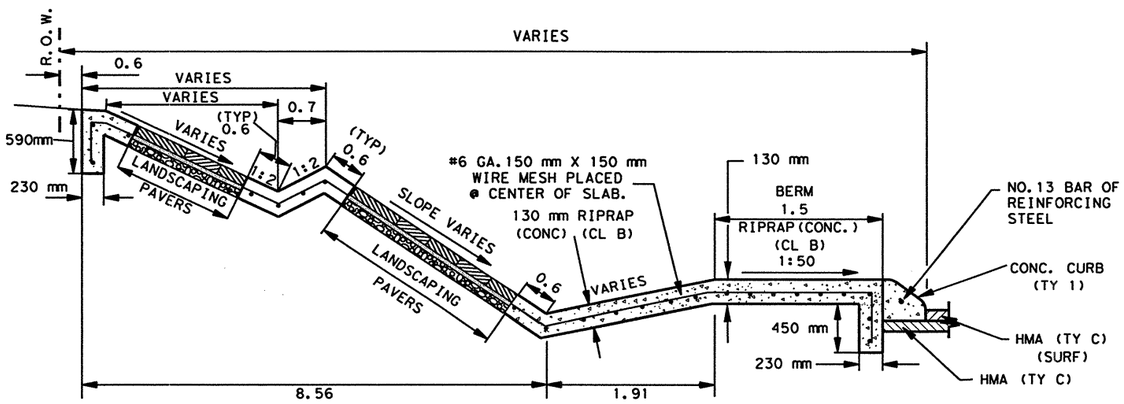


CONCRETE RIPRAP & PAVER DETAIL
LT. STA. 19+540 TO STA. 19+560

NOTE(S):

1. SLOPE RATE VARIES WITHIN SECTION DETAIL SEE PROJECT X-SECTION FOR MORE DETAILS.
2. ALL DIMENSIONS ARE IN METERS UNLESS OTHERWISE NOTED.
3. FOR PAYMENT OF LANDSCAPE PAVERS & CONCRETE RIPRAP AREAS, SEE PLAN SHEETS.
4. THE FLEX BASE WILL BE SPRINKLED AND ROLLED/TAMPED AS APPROVED BY THE ENGINEER. FURNISHING AND PLACING THE BASE CUSHION SHALL BE SUBSIDIARY TO THE VARIOUS PERTINENT BID ITEMS.
5. FOR MORE DETAILS ON LANDSCAPING PAVERS SEE SHEET(S) 338, 343-345.
6. ALL STATIONS REFERENCED ARE APPROXIMATE AND THOSE ALONG THE ℄ OF LP 1604.

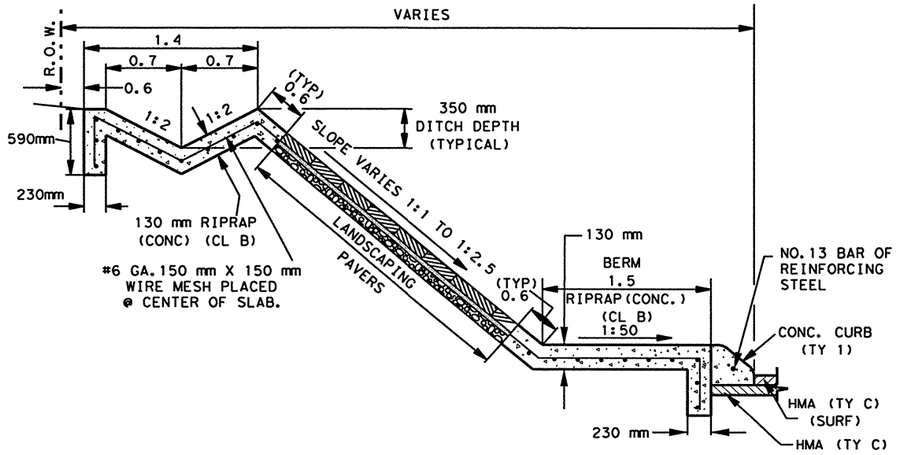


CONCRETE RIPRAP & PAVER DETAIL
LT. STA. 19+350 TO STA. 19+540

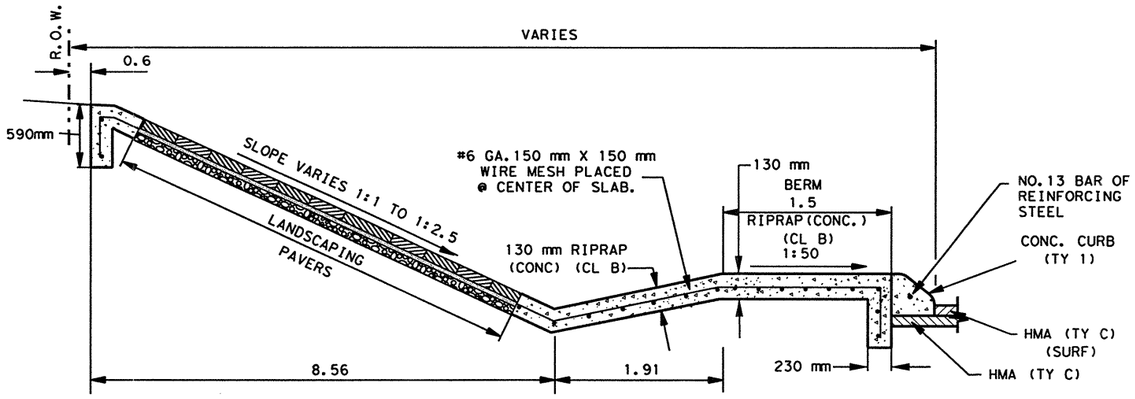


CONCRETE RIPRAP & PAVER DETAIL
LT. STA. 19+560 TO STA. 19+657

TYPICAL SECTIONS
SHOWING LANDSCAPING PAVERS AND RIPRAP (CONC) (CL B)
TREATMENT SOUTHEAST OF WISEMAN BLVD. ALONG
N. B. FRONTAGE RD.

STATE OF TEXAS
JOEL K. DAVENPORT, JR.
79276
REGISTERED PROFESSIONAL ENGINEER

Joel K. Davenport, Jr. 11/1/00
Joel K. Davenport, Jr., P.E. 79276 Date

©2000
Texas Department of Transportation

**MISCELLANEOUS ROADWAY DETAILS**
SHEET 12 OF 12

| FED. RD. DIV. NO. | FEDERAL AID PROJECT NO. | | SHEET NO. |
|---|---|---|---|
| 6 | NH 2000(704), etc. | | 346 |
| STATE | DIST. | COUNTY | |
| TEXAS | SAT | BEXAR | |
| CONT. | SECT. | JOB | HIGHWAY NO. |
| 2452 | 01 | 036, etc. | LP 1604 |

LEVELS DISPLAYED
1 2 3 4 5 6 7 8 9 10 11 12 13 14 15 16
17 18 19 20 21 22 23 24 25 26 27 28 29 30 31 32
33 34 35 36 37 38 39 40 41 42 43 44 45 46 47 48
49 50 51 52 53 54 55 56 57 58 59 60 61 62 63 64

ACC: t:\ao\design\lp1604fm471-90\
FILE: pfm01.dgn misc.dgn

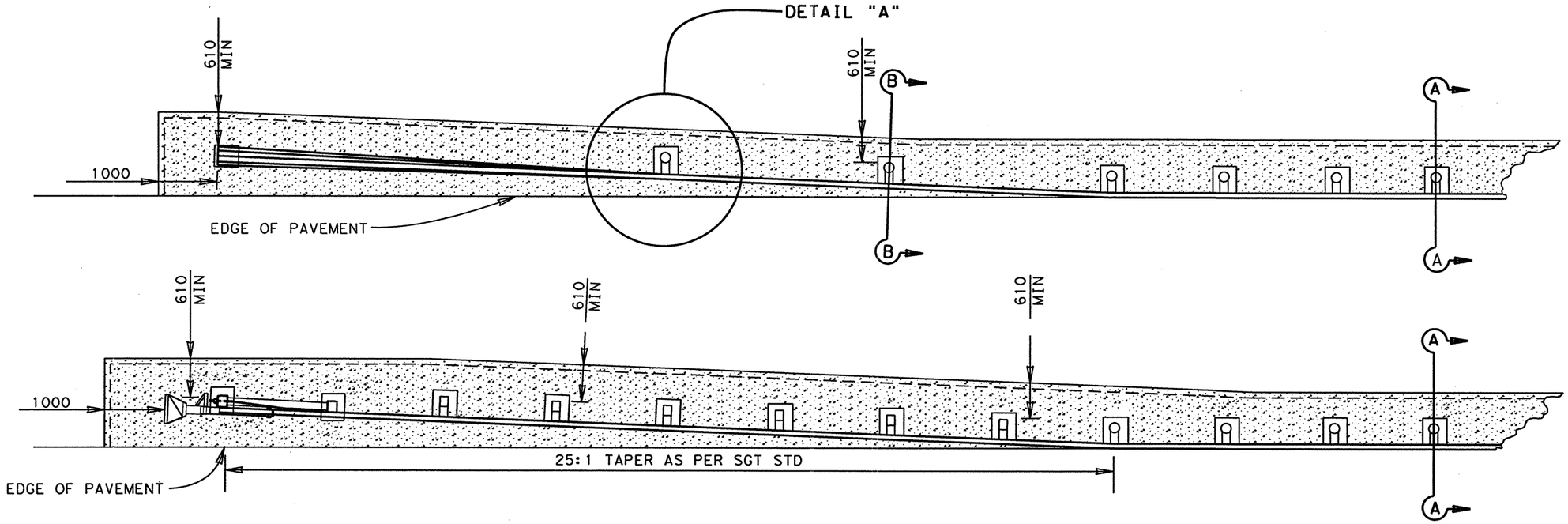


NOTES:

A BLOCKED OUT AREA AT LEAST 300mm LARGER THAN THE POST SHALL BE PLACED AROUND ALL POSTS.

IF REQUIRED, POSTS ON THE SINGLE GUARDRAIL TERMINALS WHICH HAVE SOIL PLATES SHALL BE 760mm BY AT LEAST 300mm LARGER THAN THE POST. THE 760mm DIMENSION IS FOR SOIL PLATE ACCESS.

AFTER THE GUARDRAIL IS INSTALLED, THE BLOCKED OUT AREA SHALL BE BACKFILLED WITH LOW STRENGTH GROUT AS APPROVED BY THE ENGINEER, FOR A DEPTH EQUAL TO THE CONCRETE DEPTH. LOW STRENGTH GROUT WILL BE SUBSIDIARY TO MOW STRIP. LOW STRENGTH GROUT WILL CONSIST OF TWO BAGS OF TY I HYDRAULIC CEMENT PER CUBIC YARD OF SAND.

CONCRETE SHALL BE CLASS B, RIPRAP.

RIPRAP SHALL BE PLACED TO A MINIMUM WIDTH OF 610mm FROM THE BACK OF THE POST.

ALL MEASUREMENTS ARE IN MILLIMETERS UNLESS OTHERWISE NOTED.

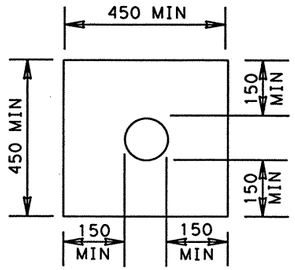


DETAIL "A"
BLOCK OUT

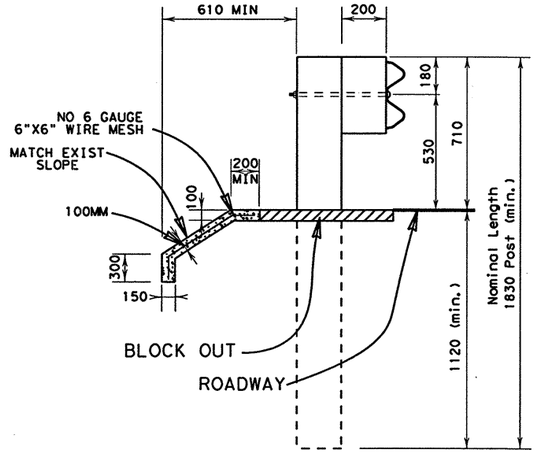


SECTION A-A

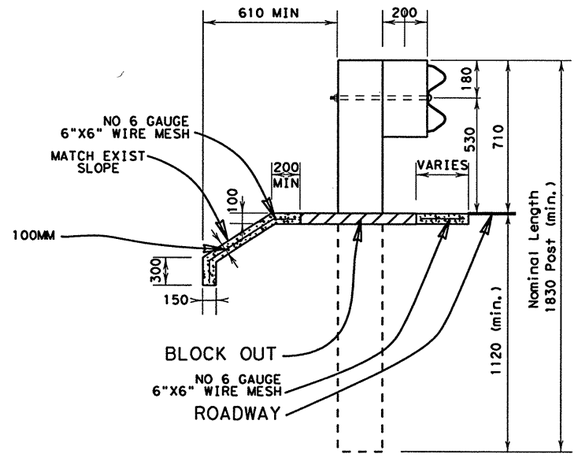


SECTION B-B

New Sheet CO#20

# RIPRAP DETAIL SHEET

## MOW STRIP

LEVELS DISPLAYED
1 2 3 4 5 6 7 8 9 10 11 12 13 14 15 16
17 18 19 20 21 22 23 24 25 26 27 28 29 30 31 32
33 34 35 36 37 38 39 40 41 42 43 44 45 46 47 48
49 50 51 52 53 54 55 56 57 58 59 60 61 62 63
ACC:
FILE: .DGN

STATE OF TEXAS
JENNIFER L. MOCZYGEMBA
84734
REGISTERED
PROFESSIONAL ENGINEER

Jennifer L. Moczygemba, P.E. 84734 — 6-4-02 Date

© 2002 Texas Department of Transportation

| FED. RD. DIV. NO. | FEDERAL AID PROJECT NO. | | SHEET NO. |
|---|---|---|---|
| 6 | NH 2000 (704), etc | | 24 of 24 |
| STATE | DIST. | COUNTY | |
| TEXAS | SAT | BEXAR | |
| CONT. | SECT. | JOB | HIGHWAY NO. |
| 2452 | 01 | 036, etc | LP 1604 |

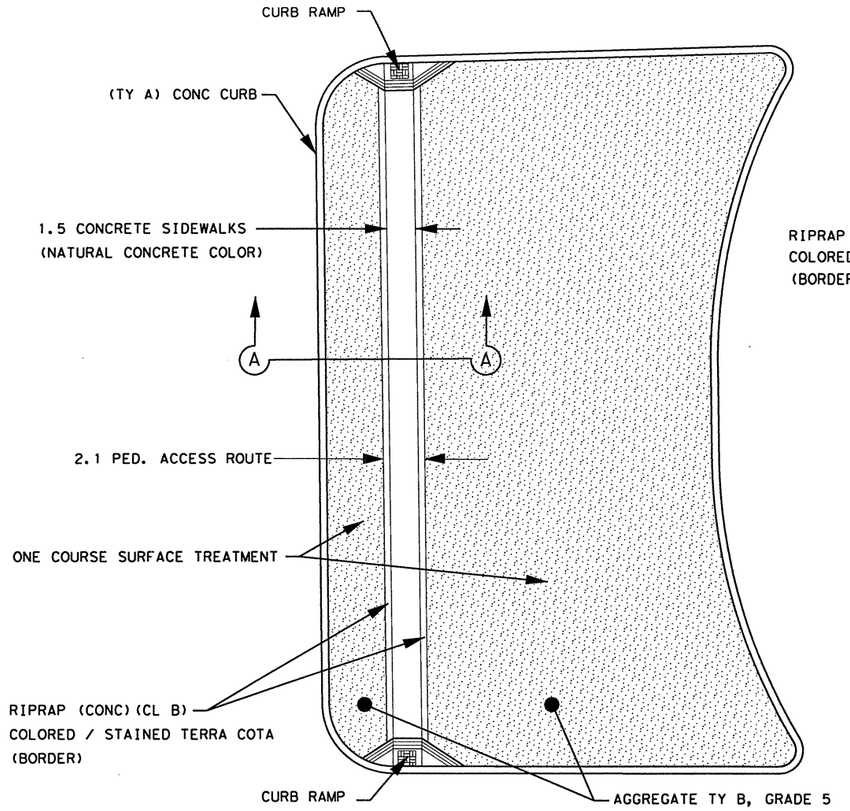


PLAN VIEW

TURN AROUND ISLAND DETAILS

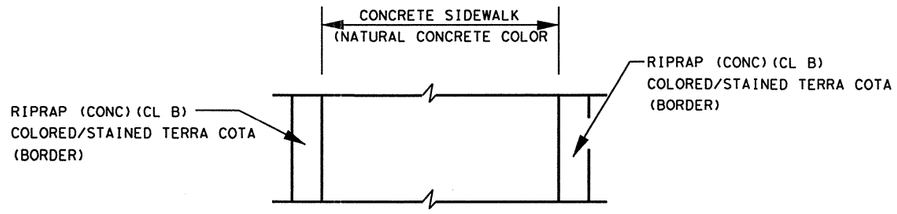


PATTERN(S)/COLOR(S)
FOR PED. ACCESS ROUTE

CHANGE ORDER NO. 64
-NEW DETAILS FOR TURN AROUND (TAR) ISLANDS AT MILITARY, POTRANCO, WISEMAN, & MARBACH

NOTE(S):

1. ALL DIMENSIONS ARE IN METERS UNLESS OTHERWISE NOTED.
2. THE FLEX BASE CUSHION CAN BE OF ANY TYPE OR GRADE APPROVED BY THE ENGINEER.
3. THE FLEX BASE WILL BE SPRINKLED AND ROLLED/TAMPED AS APPROVED BY THE ENGINEER. FURNISHING AND PLACING THE FLEX BASE CUSHION SHALL BE SUBSIDIARY TO ITEM 531 "CONCRETE SIDEWALKS".
4. THE ONE COURSE SURFACE TREATMENT SHALL CONSIST OF AN EMULSIFIED ASPHALT (AE-P) LAYER APPLIED TO THE TOP OF FINISHED FLEX BASE AT A RATE OF 0.9 L/M2 THEN HAVE AN ASPHALT LAYER APPLIEDAT A RATE OF 1.58 L / M2 THEN BE FOLLOWED BY THE AGGREGATE SPECIFIED AT A RATE OF 1 M3 / 153 M2. EMULSION SHALL CONFORM TO THE SPECIFICATIONS UNDER ITEM 300.
5. FOR PAY ITEMS SEE APPROPRIATE PLAN SHEET.
6. OBSTRUCTIONS (SUCH AS SIGNS, COLUMNS, ETC) NEAR ACCESS ROUTE SHALL MEET ADA STANDARDS.
7. COLOR/STAINING OF THE RIPRAP (CONC)(CL B) CALLED FOR ON THIS SHEET SHALL BE CONSIDERED SUBSIDIARY TO THE RIPRAP CONCRETE PLACED.
8. SAMPLES OF TEXTURE/COLORS TO BE USED SHALL BE SUBMITTED FOR APPROVAL BY THE ENGINEER PRIOR TO STARTING THIS WORK. NO DIRECT PAYMENT WILL BE MADE FOR SAMPLES REQUIRED.

CHANGE ORDER 64

NEW SHEET

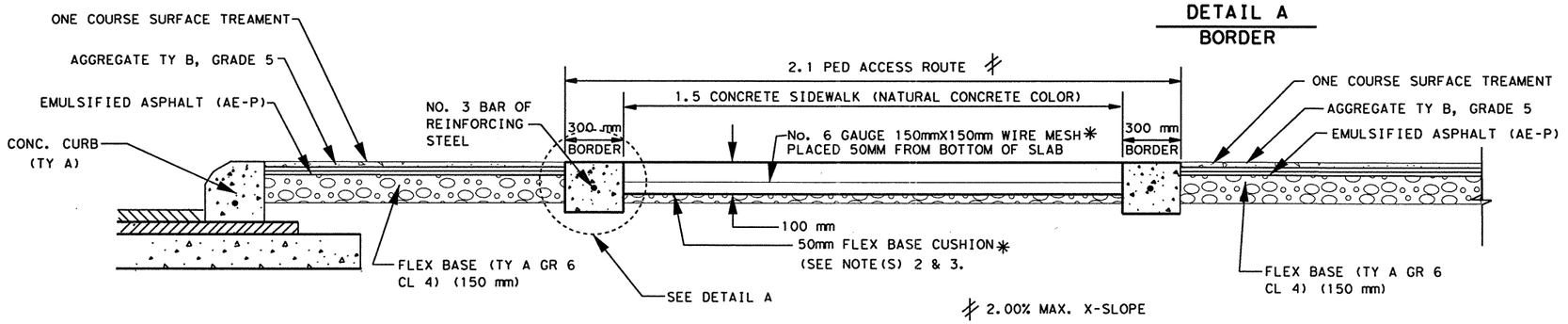


*ALL MATERIALS SHALL BE CONSIDERED SUBSIDIARY TO ITEM 531.

SECTION A-A

TURN AROUND ISLAND TREATMENT DETAILS
(MILITARY, POTRANCO, WISEMAN, MARBACH ROAD)

⋕ 2.00 % MAX. X-SLOPE
SEE INTERSECTION X-SECTIONS
FOR MORE DETAILS.

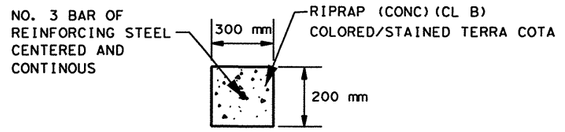


DETAIL A

BORDER

STATE OF TEXAS
JEROME D. PAWLISKA
76075
REGISTERED
PROFESSIONAL ENGINEER

Jerome D. Pawliska, P.E. 4-28-04
Jerome D. Pawliska, P.E. Date

©2003

Texas Department of Transportation

MISCELLANEOUS ROADWAY DETAILS

| FED. RD. DIV. NO. | FEDERAL AID PROJECT NO. | | SHEET NO. |
|---|---|---|---|
| 6 | NH 2000(704), etc. | | 346 B |
| STATE | DIST. | COUNTY | |
| TEXAS | SAT | BEXAR | |
| CONT. | SECT. | JOB | HIGHWAY NO. |
| 2452 | 01 | 036, etc. | LP 1604 |

LEVELS DISPLAYED
1 3 4 5 6 7 8 9 10 11 12 13 14 15 16
17 18 19 20 21 22 23 24 25 26 27 28 29 30 31 32
33 34 35 36 37 38 39 40 41 42 43 44 45 46 47 48
49 50 51 52 53 54 55 56 57 58 59 60 61 62 63

ACC: t:\ao\design\lp1604fm471-90\
FILE: misc\misc-rd-detail04+phase1+PAPEDAWSON

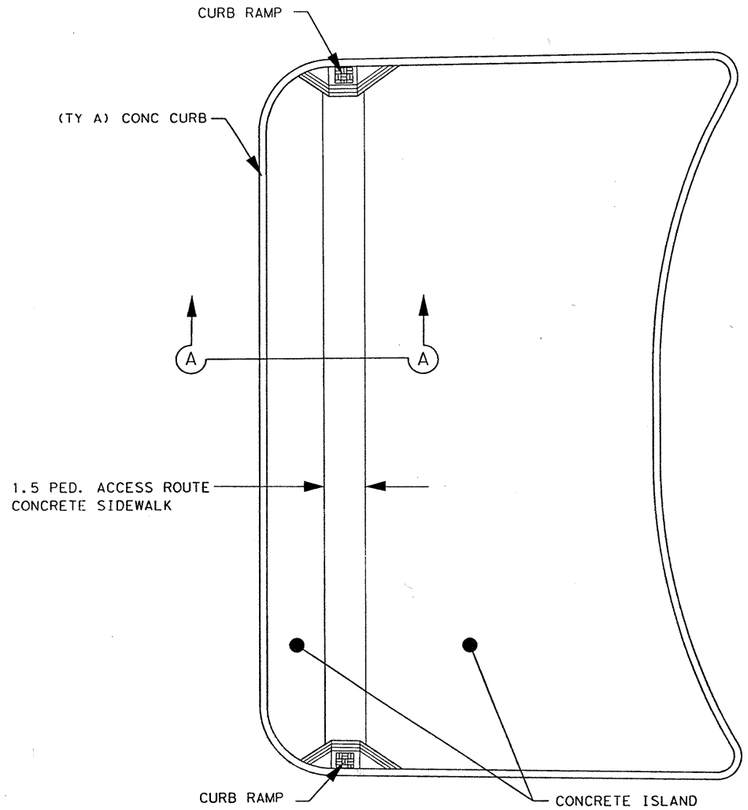


PLAN VIEW

## TURN AROUND ISLAND DETAILS

NOTE(S):

1. ALL DIMENSIONS ARE IN METERS UNLESS OTHERWISE NOTED.
2. THE FLEX BASE CUSHION CAN BE OF ANY TYPE OR GRADE APPROVED BY THE ENGINEER.
3. THE FLEX BASE WILL BE SPRINKLED AND ROLLED/TAMPED AS APPROVED BY THE ENGINEER. FURNISHING AND PLACING THE FLEX BASE CUSHION SHALL BE SUBSIDIARY TO THE PERTINENT BID ITEMS IN THE CONTRACT.
4. OBSTRUCTIONS (SUCH AS SIGNS, COLUMNS, ETC.) NEAR PED ACCESS ROUTE SHALL MEET ADA STANDARDS.
5. USE CONCRETE CL B FOR ISLANDS.

CHANGE ORDER NO. 149
-NEW DETAILS FOR TURN AROUND (TAR) ISLANDS AT MILITARY, POTRANCO, WISEMAN & MARBACH.

⋕ 2.00% MAX. X-SLOPE
SEE INTERSECTION X-SECTIONS FOR MORE DETAILS.

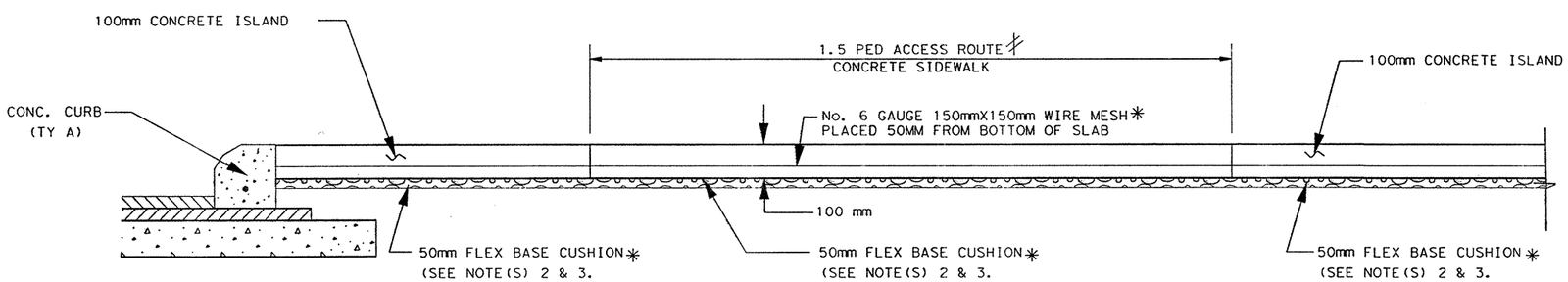


✳ALL MATERIALS SHALL BE CONSIDERED SUBSIDIARY TO ITEM 531.

SECTION A-A

## TURN AROUND ISLAND TREATMENT DETAILS (MILITARY, POTRANCO, WISEMAN & MARBACH ROAD)

STATE OF TEXAS
MIGUEL G. ROGERIO
96620
LICENSED
PROFESSIONAL ENGINEER

Miguel G. Rogerio, P.E. 1/17/2007
Miguel G. Rogerio, P.E. Date

©2003
Texas Department of Transportation

## MISCELLANEOUS ROADWAY DETAILS

| FED. RD. DIV. NO. | FEDERAL AID PROJECT NO. | | SHEET NO. |
|---|---|---|---|
| 6 | NH 2000(704), etc. | | 346B |
| STATE | DIST. | COUNTY | |
| TEXAS | SAT | BEXAR | |
| CONT. | SECT. | JOB | HIGHWAY NO. |
| 2452 | 01 | 036, etc. | LP 1604 |

LEVELS DISPLAYED
1 3 4 5 6 7 8 9 10 11 12 13 14 15 16
17 18 19 20 21 22 23 24 25 26 27 28 29 30 31 32
33 34 55 56 57 58 59 40 41 42 43 44 45 46 47 48
49 50 51 52 53 54 55 65 75 85 96 01 62 63
ACC: t:\ao\design\lp1604fm471-90\
FILE: T:\AO\Design\lp1604fm471-90\PS+Phase2 changeorder mylors\submittal\plansheets\vcad\miscv1604 islands.dgn

SCALE 1:500 H
1:100 V

RESIDENCE
EXIST. PAV.

MATCH EXIST\
END CONSTRUCTION
STA. 0+123.3
ELEV. 300.760
FROM FRONT. RD. "G"
STA. 1+488.766
LT. 57.699

(#) EXISTING GATE REMOVED ALONG R.O.W. SHALL BE RELOCATED OR PLACED AT THIS LOCATION.

(##) FENCE ALLOWANCE TO REPAIR\REPLACE EXISTING FENCE DUE TO GATE REMOVAL IN VICINITY.

150mm CONCRETE DRIVEWAY
(FOR DETAILS SEE SHEET 336.)

ASPH CONCRETE PAVEMENT DRIVEWAY
(FOR DETAILS SEE SHEET 336.)

DITCH DIVERTOR (BERM)
DRAINAGE AREA BRAKE
RT. STA. 0+040
(SEE X-SECTIONS)

(#) TY I GATE
EST. @ 1 EA.

PT STA. 0+110.064

GRADING LIMITS

EXIST.
PASTURE
FENCE

PT STA. 0+028.061

℄ OF INTERCEPTOR DITCH

TY I GATE (##)
EST. @ 1 EA

TY C FENCE (##)
EST. @ 10.6 M

2.0

4.0

GRADING LIMITS

℄ OF DITCH

2%

PC STA. 0+098.077

N 11° 19' 23.65" E

GRADING LIMITS

℄ OF DRIVEWAY (PGL)

BERM AREA

R.O.W.

BERM AREA

TY C FENCE (##)
EST. @ 10.6 M

TY C FENCE (##)
EST. @ 10.6 M

0.6 CLR.

INTERCEPTOR DITCH
(CONTRACTOR SHALL GRADE
TO FACILITATE DRAINAGE)

TY C FENCE (##)
EST. @ 10.6 M EA

STORM DRAIN
LINE I22G

PC STA.
0+014.167

STORM DRAIN
LINE I22B

0.6 CLR.

1.5 BERM (PEDESTRIAN ACCESS ROUTE)
( 2% MAX. X-SLOPE ACROSS DRIVEWAY
& PROPOSED RIPRAP AREA)

PEDESTRIAN ACCESS ROUTE

FACE OF CURB

4.2

DRIVEWAY PIPE
(FOR DETAILS
SEE NEXT SHEET.)

STA. 0+004.2 (BEGIN PROFILE)

1+500

FRONTAGE RD. "G" CONTROL

DRIVEWAY STA. 0+000
=FRONT. RD. "G" STA. 1+576.379

1+600

## DRIVEWAY ALIGNMENT DATA

POT Sta 0+000.000 X 628,152.366 Y 4,181,354.596

S 89° 04' 05.33" E Dist 14.167

PI Sta 0+022.500 X 628,174.863 Y 4,181,354.230
Delta 79° 36' 31.02" (LT)
Tangent 8.333
Length 13.894
Radius 10.000
External 3.017
Long Chord 12.803
Mid. Ord. 2.318
PC Sta 0+014.167 X 628,166.531 Y 4,181,354.366
PT Sta 0+028.061 X 628,176.499 Y 4,181,362.401
CC X 628,166.694 Y 4,181,364.365
Chord Bear N 51° 07' 39.16" E

N 11° 19' 23.65" E Dist 70.016

PI Sta 0+104.909 X 628,191.588 Y 4,181,437.753
Delta 68° 40' 49.70" (RT)
Tangent 6.832
Length 11.987
Radius 10.000
External 2.111
Long Chord 11.282
Mid. Ord. 1.743
PC Sta 0+098.077 X 628,190.246 Y 4,181,431.054
PT Sta 0+110.064 X 628,198.316 Y 4,181,438.939
CC X 628,200.052 Y 4,181,429.091
Chord Bear N 45° 39' 48.50" E

N 80° 00' 13.35" E Dist 13.236

POT Sta 0+123.3 X 628,211.482 Y 4,181,441.260

STA. 0+004.2
2 LT. @ 0.35% X-SLOPE
+0.007
AXIS OF ROTATION
℄ OF DRIVEWAY (PGL)
0.810% TRANS.
-0.040
FLAT @ STA. 0+005.064
STA. 0+010
OBTAIN 2%
X-SLOPE
0.000%
2 LT. @ (+) 2.00% X-SLOPE
STA. 0+080
END 2%
X-SLOPE
-0.040
STA. 0+100
OBTAIN (-) 2%
X-SLOPE
+0.040
+0.400% TRANS.
FLAT @ STA.
0+005.064
STA. 0+123.300
EL 300.760(±)
MATCH EXIST.
PAVEMENT @ DRIVEWAY
+4.985%
EXIST. PAVED PARKING
@ RESIDENCE
STA. 0+123.3
2 LT @ (-) 2.00%
X-SLOPE
+0.040
-0.301% TRANS.
2 LT. @ 0.00%
X-SLOPE
AXIS OF ROTATION
℄ OF DRIVEWAY (PGL)
STA. 0+110.0
END (-) 2%
X-SLOPE
VPI 0+088
EL 299.000
L 15
E -0.061
VPT 0+095.500
EL 299.374
VPC 0+080.500
EL 298.380
VPI 0+065
EL 297.100
L 10
E -0.011
VPT 0+070
EL 297.513
VPC 0+060
EL 296.643
VPI 0+035
EL 294.360
L 10
E -0.0100
VPT 0+040
EL 294.817
VPC 0+030
EL 293.863
VPI 0+005.930
EL 291.472
NO CURVE
+9.935%
+9.133%
+8.261%
+2.000%
STA 0+050.3(±)
EXIST. PASTURE FENCE
(FENCE & GATE)
PGL=FINISH GRD.
(#) GATE (TY I)
NAT. GRD.
PEDESTRIAN ACCESS ROUTE
1.5 BERM
( 2% MAX. X-SLOPE ACROSS DRIVEWAY)
DRIVEWAY STA. 0+000 =
N.B. FRONT RD "G"
STA 1+576.379
PGL. 291.333
FRONT RD "G" ℄
STA 0+015.5(±)
R.O.W. (FENCE & GATE)
END CONC DRIVE &
BEGIN ASPH CONC PAV
GATE (TY I)
TOP FACE OF LOW CURB
STA. 0+004.200
EL. 291.442
BEGIN DRIVEWAY PROFILE
STA 0+004.200 (GUTTER)
EL 291.417
200 mm (±) MIN.
DRIVEWAY PIPE
(RCP (CL III),450MM)
FL. 290.953

| | FIN. GRD. | NAT. GRD. |
|---|---|---|
| 0+000 | 291.333 | 292.625 |
| 0+020 | 291.876 | 293.241 |
| 0+040 | 292.870 | 293.815 |
| 0+060 | 293.863 | 294.212 |
| 0+080 | 294.817 | 294.779 |
| 0+100 | 295.730 | 295.621 |
| | 296.643 | 296.587 |
| | 297.513 | 297.510 |
| | 298.339 | 298.278 |
| | 299.067 | 299.024 |
| | 299.598 | 299.593 |
| | 300.097 | 300.053 |
| | 300.595 | 300.597 |
| | 301.176 | |

NOTE(S)
(#), (##) ALL WORK PERFORMED SHALL BE TO THE DIRECTION\SATISFACTION OF THE ENGINEER.

CHANGE ORDER NO. 64
-DRIVEWAY #13 PLAN / PROFILE.

LEVELS DISPLAYED
1 2 3 4 5 6 7 8 9 10 11 12 13 14 15 16
17 18 19 20 21 22 23 24 25 26 27 28 29 30 31 32
33 34 35 36 37 38 39 40 41 42 43 44 45 46 47 48
49 50 51 52 53 54 55 56 57 58 59 60 61 62 63

lp1604fm471-90
driveway#13.dgn

CHANGE ORDER 64

NEW SHEET

CONSTRUCTION
AGREEMENT
REQUIRED

NOTE(S)

-ALL DIMENSIONS ARE IN METERS UNLESS OTHERWISE NOTED

-FOR PAY ITEMS SEE APPROPRIATE PLAN SHEET(S) & SUMMARIES.

-FOR MORE DETAILS SEE PROJECT X-SECTIONS AND MISCELLANEOUS RDWY DETAILS.

STATE OF TEXAS
JEROME D. PAVLISKA
76075
REGISTERED
PROFESSIONAL ENGINEER

Jerome D. Pavliska P.E 5-3-04
Jerome D. Pavliska, P.E. Date

©2001
Texas Department of Transportation

# DRIVEWAY #13
# PLAN, PROFILE & DETAILS

SHEET 1 OF 2

| FED. RD. DIV. NO. | FEDERAL AID PROJECT NO. | | SHEET NO. |
|---|---|---|---|
| 6 | NH 2000(704), etc | | 346C |
| STATE | DIST. | COUNTY | |
| TEXAS | SAT | BEXAR | |
| CONT. | SECT. | JOB | HIGHWAY NO. |
| 2452 | 01 | 036, etc | LP 1604 |

NOTE(S):

-DIMENSIONS ARE IN METERS UNLESS OTHERWISE NOTED.

-FOR ADDITIONAL INFORMATION SEE PROJECT X-SECTIONS AND DRIVEWAY PLAN/PROFILES AND MISCELLANEOUS RDWY DETAILS.

# REPRESENTS FINISH GRADE DATA @ ℄ OF DRAIN PIPE AT DRIVEWAY STA. 0+007.60

QUANTITIES THIS SHEET
CSJ 2452-01-037

## ESTIMATED QUANTITIES

| ITEM | UNIT | QTY |
|---|---|---|
| CEMENT STAB BKFL | M3 | 5.1 |
| RC PIPE (CL III) 450mm | M | 7.8 |
| SET TY II (450mm) (1:6) | EA | 2 |
| STRUCT EXCAV | M3 | 13.0 |

* SUPPLIED FOR CONTRACTOR'S INFORMATION ONLY.

# DRIVEWAY RELATED ITEMS SUPPLIED FOR CONTRACTOR'S INFORMATION ONLY. FOR PAY ITEMS SEE DRIVEWAY AND MAILBOX SUMMARY SHEETS.

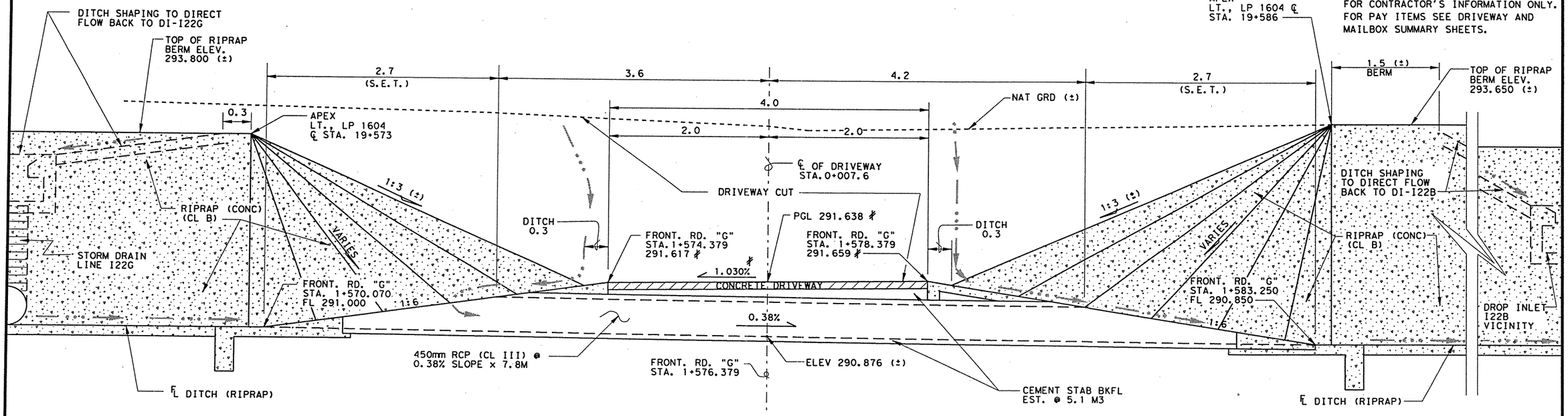


## DRIVEWAY #13

(PIPE/CUT AREA PERSPECTIVE (±))

S.E.T. = SAFETY END TREATMENT TY II (450mm) (1:6)

CHANGE ORDER 64

NEW SHEET

STATE OF TEXAS
JEROME D. PAVLISKA
76075
REGISTERED PROFESSIONAL ENGINEER

Jerome D. Pavliska, P.E. 5-3-04
Jerome D. Pavliska, P.E. — Date

CHANGE ORDER NO. 64

-DRIVEWAY #13 DRAINAGE AND RIPRAP DETAILS.
-NEW QUANTITIES

© 2001

Texas Department of Transportation

# DRIVEWAY #13 PLAN, PROFILE & DETAILS

SHEET 2 OF 2

| FED. RD. DIV. NO. | FEDERAL AID PROJECT NO. | | SHEET NO. |
|---|---|---|---|
| 6 | NH 2000(704), etc | | 346D |
| STATE | DIST. | COUNTY | |
| TEXAS | SAT | BEXAR | |
| CONT. | SECT. | JOB | HIGHWAY NO. |
| 2452 | 01 | 036, etc | LP 1604 |

LEVELS DISPLAYED
1 2 3 4 5 6 7 8 9 10 11 12 13 14 15 16
17 18 19 20 21 22 23 24 25 26 27 28 29 30 31 32
33 34 35 36 37 38 39 40 41 42 43 44 45 46 47 48
49 50 51 52 53 54 55 56 57 58 59 60 61 62 63

lp1604fm471-90
driveway#13.dgn

## DRIVEWAY ALIGNMENT DATA

POT STA. 0+000.000
X628,134.1586 Y4,181,113.8626

S 85°23' 18.96" E DIST. 10.0386

PI STA. 0+015.497
X 628,149.6053 Y4,181,112.6167

DELTA 39°59'27.64 (RT)

| | |
|---|---|
| TANGENT | 5.4582 |
| LENGTH | 10.4696 |
| RADIUS | 15.0000 |
| EXTERNAL | 0.9622 |
| LONG CHORD | 10.2584 |
| MID. ORD. | 0.9042 |

P.C. STA. 0+010.039
X 628,144.1647 Y4,181,113.0555

P.T. STA. 0+020.508
X 628,153.4915 Y4,181,108.7840

C.C. X628,142.9588 Y 4,181,098.1041
BACK S 85°23'18.97" E
AHEAD S 45°23'51.33" E
CHORD BEAR S 65°23'35.15" E

S 45° 23' 51.33" E Dist 6.9766

P.I. STA. 0+034.099
X628,163.1037 Y4,181,099.3044

| | |
|---|---|
| DELTA | 47° 00' 33.62" (RT) |
| TANGENT | 6.5236 |
| LENGTH | 12.3070 |
| RADIUS | 15.0000 |
| EXTERNAL | 1.3572 |
| LONG CHORD | 11.9647 |
| MID. ORD. | 1.2446 |

P.C. STA. 0+027.485
X 628,158.4588 Y4,181,103.8852

P.T. STA. 0+039.792
X628,162.9202 Y4,181,092.7833

| | | |
|---|---|---|
| BACK | S | 45° 23' 51.33" E |
| AHEAD | S | 1° 36' 42.29" W |
| CHORD BEAR | S | 21° 53' 34.52" E |

## ESTIMATED QUANTITIES

| | ITEM | UNIT | QTY. |
|---|---|---|---|
| * | STRUCTURAL EXCAVATION. | M3 | 13 |
| * | R.C. PIPE (CL III) 600mm | M | 9.8 |
| * | S.E.T. (TY II)(600mm)(RCP)(1:6) | EA | 2 |
| * | DRVWYS (CONC) (150 mm) | M2 | 132 |
| * | SAW CUT EXIST. DRIVEWAY | M | 14 |
| * | CONCRETE STAB BACKFILL | M3 | 12 |

*SUPPLIED FOR CONTRACTORS INFORMATION ONLY, SEE APPROPRIATE PLAN SHEET(S) OR SUMMARY SHEET FOR PAYMENT.

SCALE: 1:500 H
1:100 V

CONSTRUCTION AGREEMENT REQUIRED

CHANGE ORDER 99

NEW SHEET

NOTE(S):
ALL DIMENSIONS ARE IN METERS UNLESS OTHERWISE NOTED.

RIPRAP CONCRETE SUBSIDIARY TO S.E.T.

(#) REFERS TO CHANGES MADE AS PART OF CHANGE ORDER.

FOR ADDITIONAL DRIVEWAY/DETAILS SEE SHEET 336 H

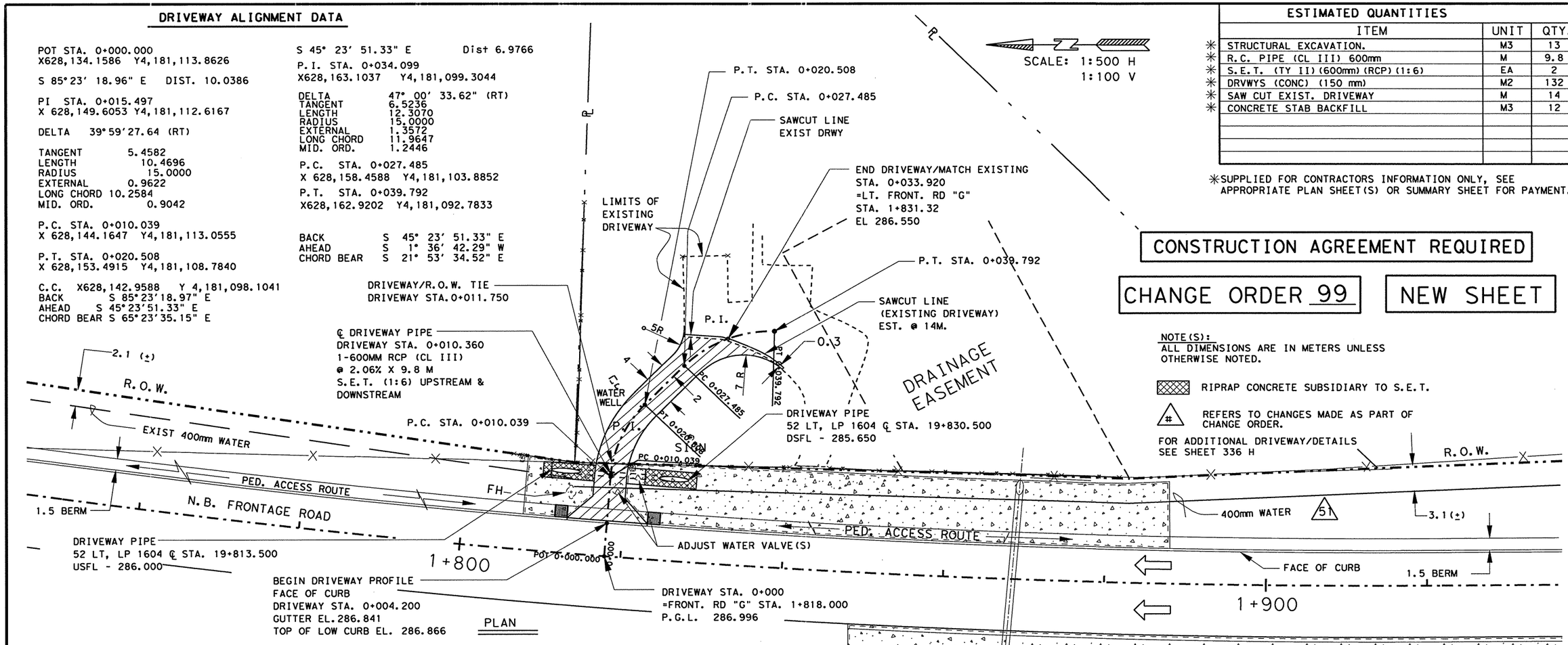


PLAN

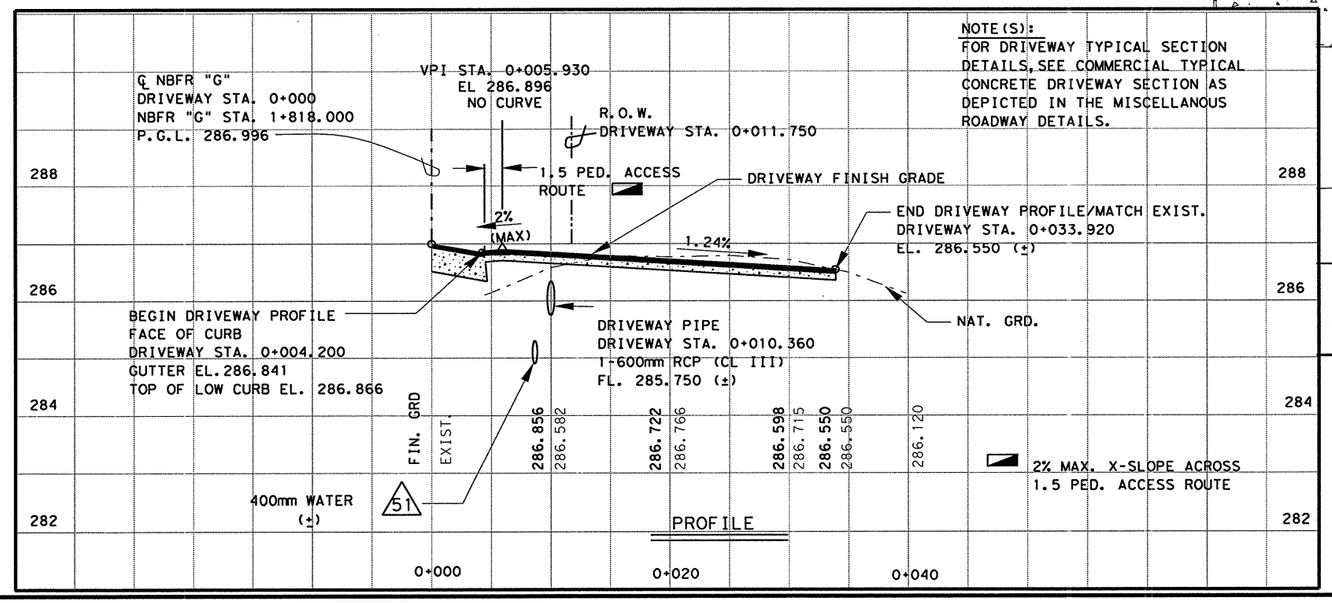


PROFILE

NOTE(S):
FOR DRIVEWAY TYPICAL SECTION DETAILS, SEE COMMERCIAL TYPICAL CONCRETE DRIVEWAY SECTION AS DEPICTED IN THE MISCELLANOUS ROADWAY DETAILS.

CONTRACTOR IS CAUTIONED OF NEW AND EXISTING UTILITIES IN AREA OF DRIVE

CHANGE ORDER 99

REVISED SHEET

STATE OF TEXAS
RUBEN GUERRERO
95031
LICENCED PROFESSIONAL ENGINEER

Ruben Guerrero, P.E. 95031 — 7-30-05 Date

©2005

Texas Department of Transportation

# DRIVEWAY # 15

SHEET 1 OF 1

| FED.RD. DIV.NO. | FEDERAL AID PROJECT NO. | SHEET NO. |
|---|---|---|
| 6 | NH 2000 (704), etc. | 346E |
| STATE | DIST. | COUNTY |
| TEXAS | SAT | BEXAR |
| CONT. | SECT. | JOB / HIGHWAY NO. |
| 2452 | 01 | 031g, etc / LP 1604 |

7-22-05

T:\AO\Design\lp1604fm471-90\DR#15A.dgn

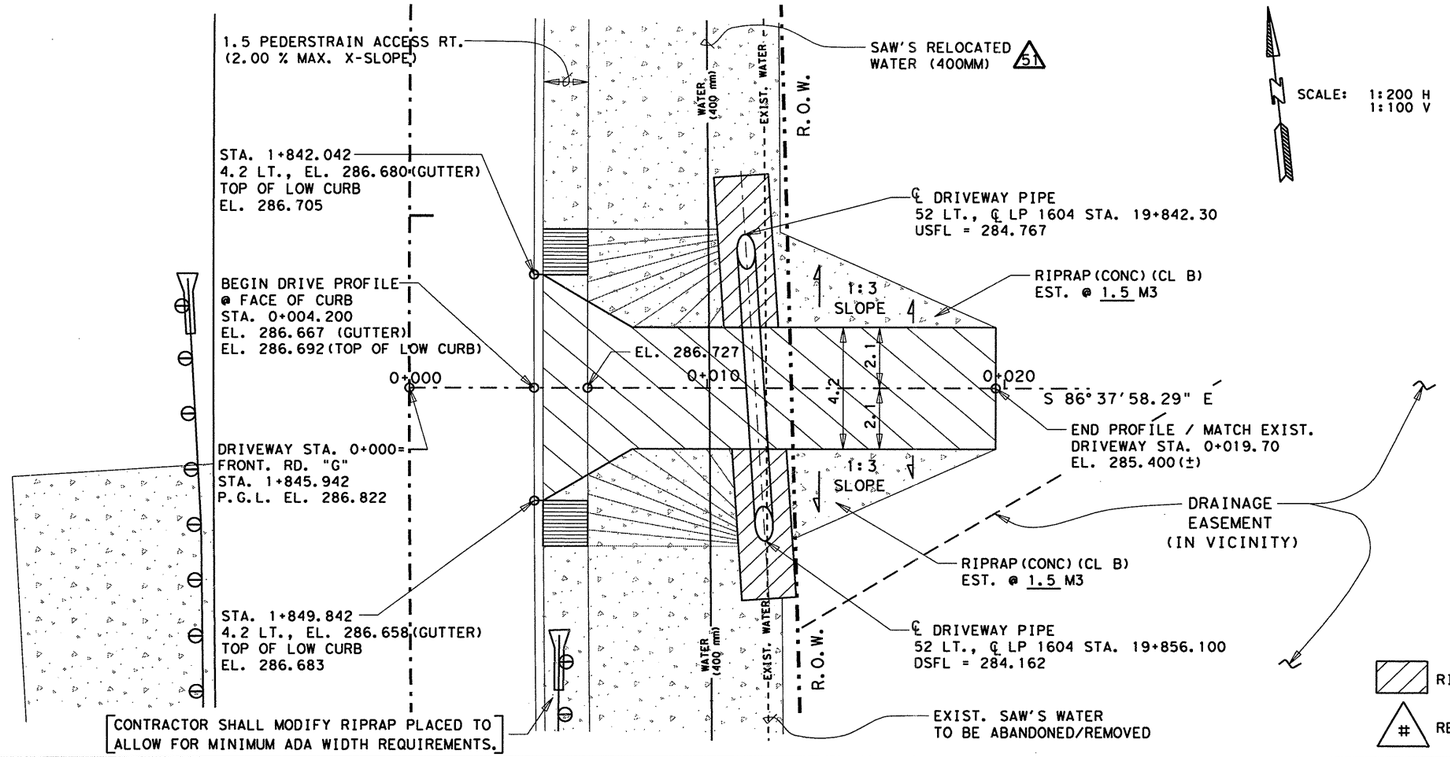


NOTE(S):

ALL DIMENSIONS ARE IN METERS UNLESS OTHERWISE NOTED.

CONTACT PROPERTY OWNER 48 HOURS PRIOR TO WORKING ON DRIVEWAY.

DURING CONSTRUCTION OF DRIVEWAY, THE EXISTING FENCE WILL HAVE TO BE REMOVED AND THEN RESET.

FOR PAY ITEMS SEE APPROPRIATE PLAN SHEET(S).

FOR MORE DRIVEWAY DETAILS SEE SHEET(S) 27A, 28A & 336A

RIPRAP (CONC) (CL B) CONSIDERED SUBSIDIARY TO SAFETY END TREATMENT.

# REFERS TO CHANGES MADE AS PART OF CHANGE ORDER.

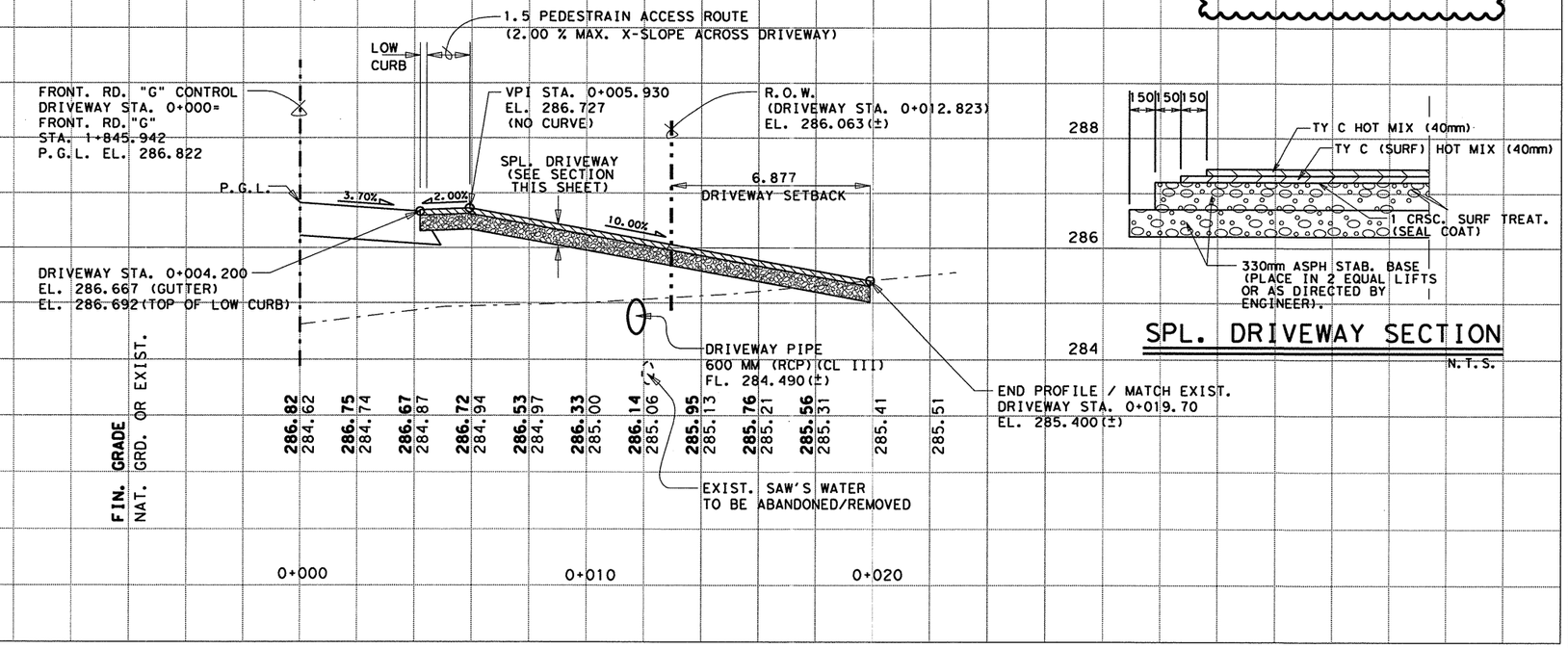


CHANGE ORDER NO. 64
-ADDED DRIVEWAY DETAILS




SPL. DRIVEWAY SECTION
N.T.S.

CHANGE ORDER 64

NEW SHEET

CONSTRUCTION AGREEMENT REQUIRED

STATE OF TEXAS
JEROME D. PAVLISKA
76075
REGISTERED PROFESSIONAL ENGINEER

Jerome D. Pavliska, P.E. 12-9-04
Jerome D. Pavliska, P.E. — Date

©2004
Texas Department of Transportation

DRIVEWAY #15

SHEET 1 OF 1

| FED. RD. DIV. NO. | FEDERAL AID PROJECT NO. | | SHEET NO. |
|---|---|---|---|
| 6 | NH 2000(704), etc | | 346E |
| STATE | DIST. | COUNTY | |
| TEXAS | SAT | BEXAR | |
| CONT. | SECT. | JOB | HIGHWAY NO. |
| 2452 | 01 | 036, etc | LP 1604 |

LEVELS DISPLAYED
1 2 3 4 5 6 7 8 9 10 11 12 13 14 15 16
17 18 19 20 21 22 23 24 25 26 27 28 29 30 31 32
33 34 35 36 37 38 39 40 41 42 43 44 45 46 47 48
49 50 51 52 53 54 55 56 57 58 59 60 61 62 63

p1604fm471-90
drive#15.dgn

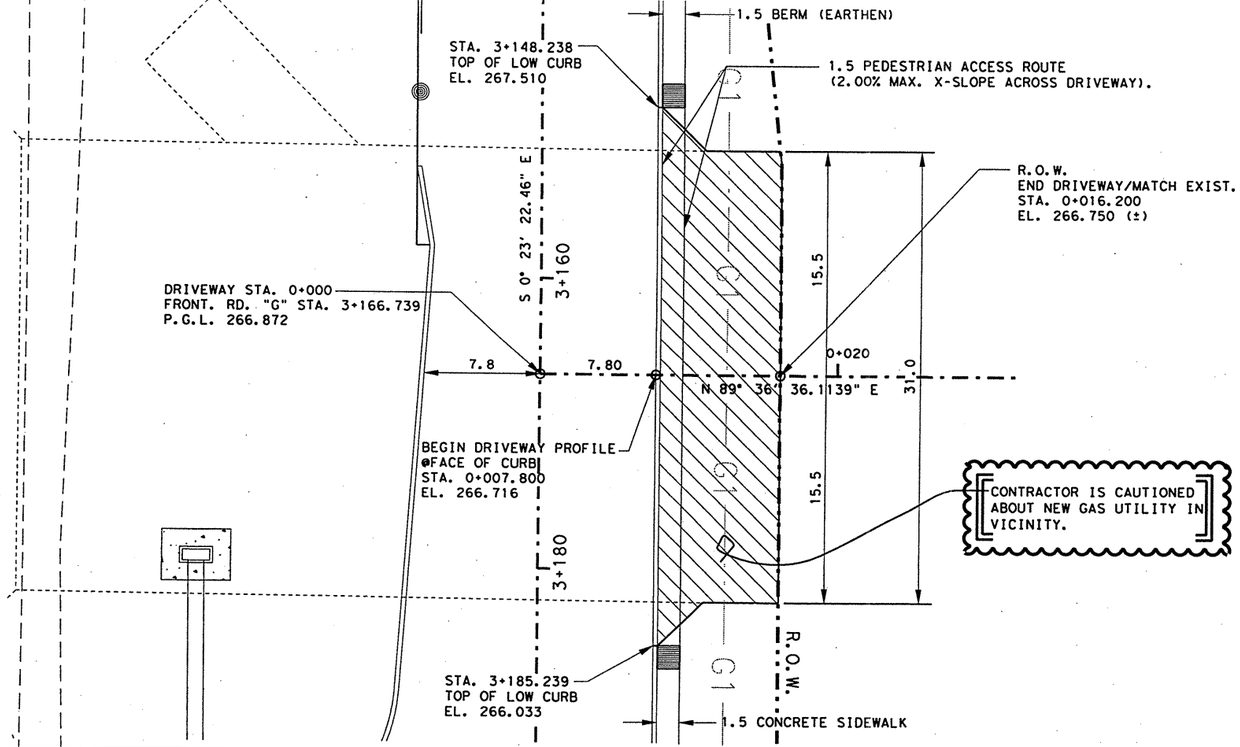


SCALE: 1:400 H
1:100 V

NOTE(S):

ALL DIMENSIONS ARE IN METERS UNLESS OTHERWISE NOTED.

FOR PAY ITEMS SEE APPROPRIATE PLAN SHEET(S).

FOR MORE DRIVEWAY DETAILS SEE SHEET(S) 27A, 28A & 336A.

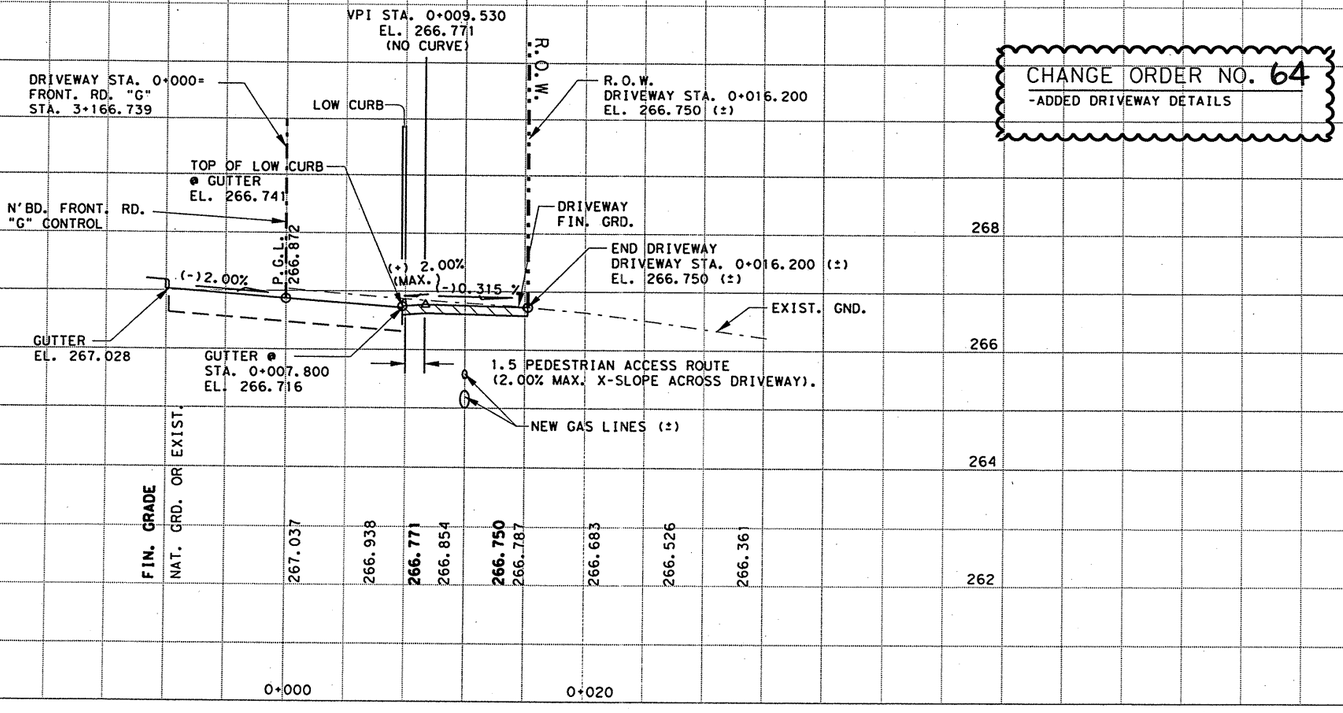


CHANGE ORDER NO. 64
-ADDED DRIVEWAY DETAILS

CHANGE ORDER 64

NEW SHEET

STATE OF TEXAS
JEROME D. PAVLISKA
76075
REGISTERED
PROFESSIONAL ENGINEER

Jerome D. Pavliska, P.E. 5-3-04
Jerome D. Pavliska, P.E. Date

©2003
Texas Department of Transportation

# DRIVEWAY #17
(TEXACO/SHELL)
SHEET 1 OF 1

| FED. RD. DIV. NO. | FEDERAL AID PROJECT NO. | | SHEET NO. |
|---|---|---|---|
| 6 | NH 2000(704), etc | | 346F |
| STATE | DIST. | COUNTY | |
| TEXAS | SAT | BEXAR | |
| CONT. | SECT. | JOB | HIGHWAY NO. |
| 2452 | 01 | 036, etc | LP 1604 |

LEVELS DISPLAYED
1 2 3 4 5 6 7 8 9 10 11 12 13 14 15 16
17 18 19 20 21 22 23 24 25 26 27 28 29 30 31 32
33 34 35 36 37 38 39 40 41 42 43 44 45 46 47 48
49 50 51 52 53 54 55 56 57 58 59 60 61 62 63

lp1604fm471-90
drive17.dgn

05-01-04

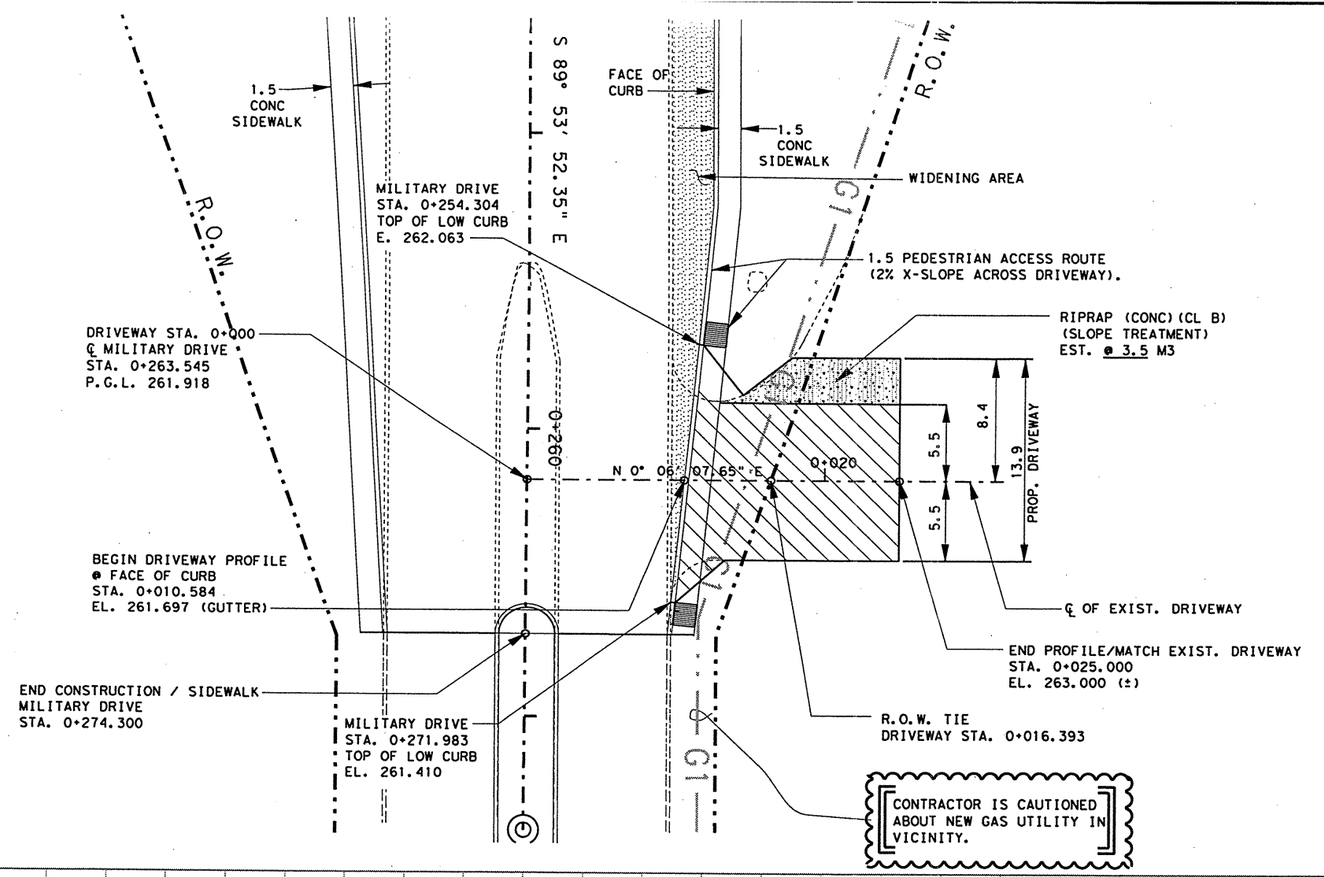


SCALE: 1:400 H
1:100 V

NOTE(S):

ALL DIMENSIONS ARE IN METERS UNLESS OTHERWISE NOTED.

FOR PAY ITEMS SEE APPROPRIATE PLAN SHEET(S).

FOR MORE DRIVEWAY DETAILS SEE SHEETS(S) 27A, 28A & 336A.

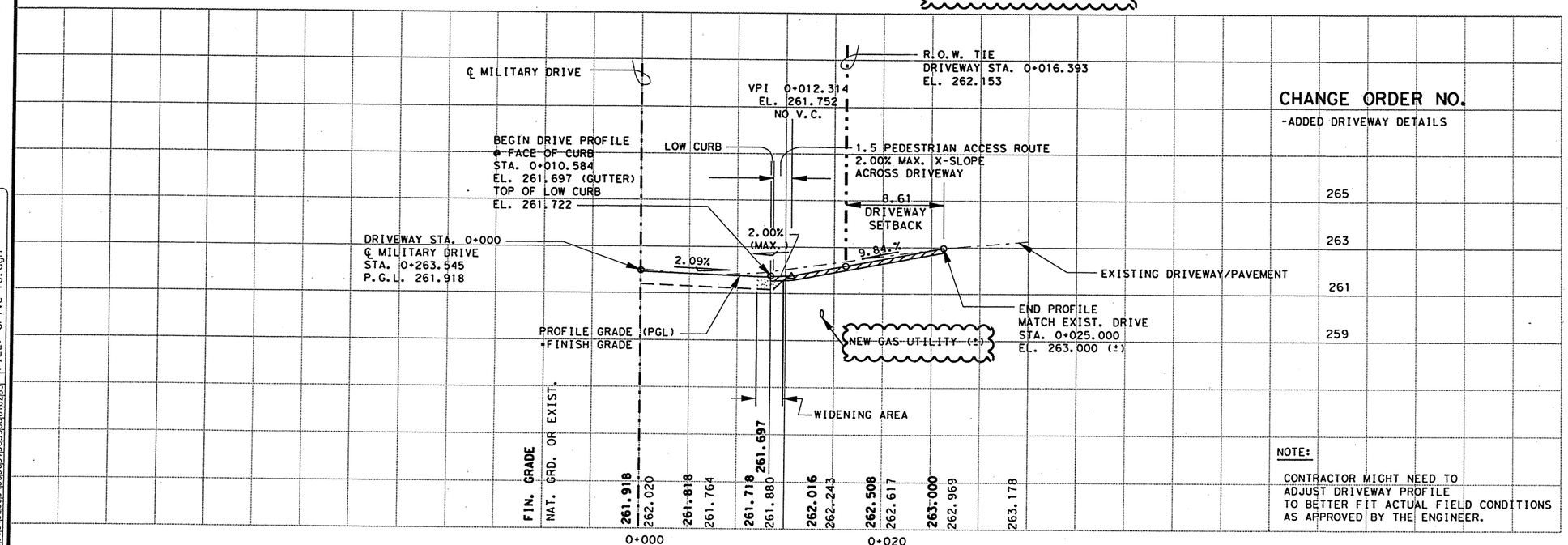


NOTE:

CONTRACTOR MIGHT NEED TO ADJUST DRIVEWAY PROFILE TO BETTER FIT ACTUAL FIELD CONDITIONS AS APPROVED BY THE ENGINEER.

CHANGE ORDER

NEW SHEET

CONSTRUCTION AGREEMENT REQUIRED

CHANGE ORDER NO.

-ADDED DRIVEWAY DETAILS

STATE OF TEXAS
JEROME D. PAVLISKA
76075
REGISTERED PROFESSIONAL ENGINEER

Jerome D. Pavliska P.E. 5-3-04
Jerome D. Pavliska, P.E. Date

© 2000 Texas Department of Transportation

# DRIVEWAY #18

(TEXACO/SHELL - MILITARY DRIVE)
SHEET 1 OF 1

| FED.RD. DIV.NO. | FEDERAL AID PROJECT NO. | | SHEET NO. |
|---|---|---|---|
| 6 | | | 346 G |
| STATE | DIST. | COUNTY* | |
| TEXAS | SAT | BEXAR | |
| CONT. | SECT. | JOB | HIGHWAY NO. |
| 2452 | 01 | 036, ETC | LP 1604 |

LEVELS DISPLAYED
1 2 3 4 5 6 7 8 9 10 11 12 13 14 15 16
17 18 19 20 21 22 23 24 25 26 27 28 29 30 31 32
33 34 45 56 63 78 59 04 14 24 34 44 54 64 74 84
49 50 51 62 53 54 55 66 57 68 59 60 61 62 63
ACC: oo\des\lp1604fm471-90
FILE: drive 18.dgn

SCALE: 1:500 H
1:100 V

POT HOLE #1
EXIST. SAW'S (400mm)
STA. 21+628.634
55.815 LT.
TOP OF PIPE EL. 258.436

SET (TY II) (600mm) (RCP) (1:4)
EST @ 1 EA

N'BD FR RD "G" CONTROL

R.O.W.

MAINTAIN MIN. 48" (1200mm) CLEAR
(ADA REQUIREMENT) @ SGT VICINITY

PEDESTRIAN ACCESS ROUTE
( 2% MAX. X-SLOPE ACROSS DRIVEWAY)

CONC CURB (SPL)
EST @ 18 M

MATCH EXIST. CURB/DRIVE
(EXIST. CURB OPENING TO
REMAIN)

STA. 3+633.90
TOP OF LOW CURB
EL. 261.020
EL. 260.995 (GUTTER)

4.2

0+020.183

R=5

7.717 LT
0+030.319

262.918 MATCH EXIST. DRIVE

STA. 0+009.000
RCP (CL III) (600mm)
EST @ 28.9 M

21+640

261.113

261.784

8.8

17.6

℄ DRIVEWAY

STA 0+000.000 (DRIVEWAY) =
STA 3+645.714 (FR RD "G")
40.014LT, STA 21+645.921 (℄ LP 1604)
EL. 261.000

0+000

N 89° 29' 56" E

BEGIN DRIVE PROFILE
@ FACE OF CURB
STA. 0+004.200
EL. 261.109 (TOP OF LOW CURB)
EL. 261.084 (GUTTER)

END PROFILE/MATCH EXIST DRIVE
STA 0+030.000
EL 263.158

8.8

261.208

261.953

STA. 3+657.452
TOP OF LOW CURB
EL. 261.173
EL. 261.148 (GUTTER)

CONC CURB (SPL)
EST @ 35 M

SAWCUT EXISTING DRVWY

S'BD MAINLANES

B

R=4

0+017.044

263.150 MATCH EXIST. DRIVE
13.901 RT. STA 0+021.442
MATCH EXIST. CURB/DRIVE
℄ 1.2 M CURB OPENING
RT 13.901 DRIVEWAY ℄ STA 0+021.442

POT HOLE #2
EXIST. SAW'S (400mm)
STA. 21+655.532
52.696 LT.
TOP OF PIPE EL. 260.120

4.2

RIPRAP (CONC) (CL B)
EST @ 2.4 M3

RIPRAP (CONC) (CL B)
EST @ 1.7 M3

INLET (DROP) (COMPL) (TY 3)
EST @ 1 EA

1.5
BERM

FACE OF
CURB

EXIST. SAWS
400mm LINE

℄ LP 1604

QUANTITIES THIS SHEET
CSJ 2452-01-036

△# REFERS TO CHANGES MADE AS PART OF CHANGE ORDER.

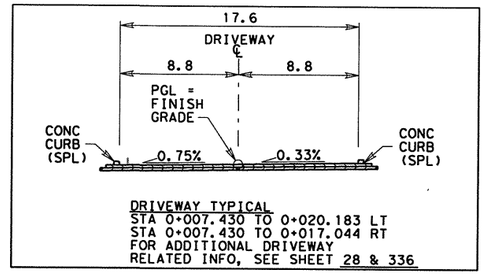


DRIVEWAY TYPICAL
STA 0+007.430 TO 0+020.183 LT
STA 0+007.430 TO 0+017.044 RT
FOR ADDITIONAL DRIVEWAY
RELATED INFO, SEE SHEET 28 & 336

## ESTIMATED QUANTITIES

| | ITEM | UNIT | QTY. |
|---|---|---|---|
| # | RIPRAP (CONC) (CL B) | M3 | 4.1 |
| # | * STRUCT EXCAV | M3 | 67 |
| # | CEMENT STAB BKFILL | M3 | 44 |
| # | RC PIPE (CL III) (600mm) | M | 28.9 |
| # | INLET (COMPL) (TY 3) | EA | 1 |
| # | SET (TY II) (600mm) (RCP) (1:4) | EA | 1 |
| | * CONC CURB (SPL) | M | 35 |
| △ | DRVWY (ASPH-CONC PAV) (SPL) | M2 | 479 |
| | * SAWCUT EXIST DRVWY | M | 35 |

* FOR CONTRACTOR'S INFORMATION ONLY
SUBSIDIARY TO VARIOUS BID ITEM(S)

△ SUPPIED FOR CONTRACTORS INFO ONLY.
FOR PAYMENT SEE PLAN SHEET.

# FOR CONTRACTORS INFORMATION ONLY
FOR PAY ITEMS SEE DRIVEWAY AND
MAILBOX SUMMARY SHEETS.

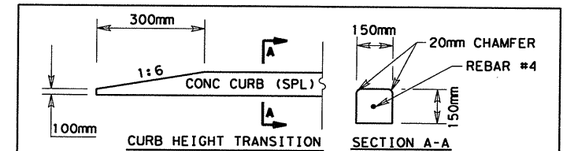


CURB HEIGHT TRANSITION SECTION A-A

-BEGIN CONC CURB (SPL) LT & RT. DRIVEWAY ℄ STA. 0+047.484
-TIE TO EXIST. CURB TO THE SATISFACTION OF THE ENGINEER.

CONC CURB (SPL) DETAILS ≠

≠ CURB PLACED SHALL BE CONSIDERED SUBSIDIARY TO
VARIOUS PERTINENT BID ITEMS.

NOTE(S):

ALL DIMENSIONS ARE IN METERS
UNLESS OTHERWISE NOTED

FOR ADDITIONAL DETAILS ON
DRIVEWAY PIPE SEE NEXT SHEET.

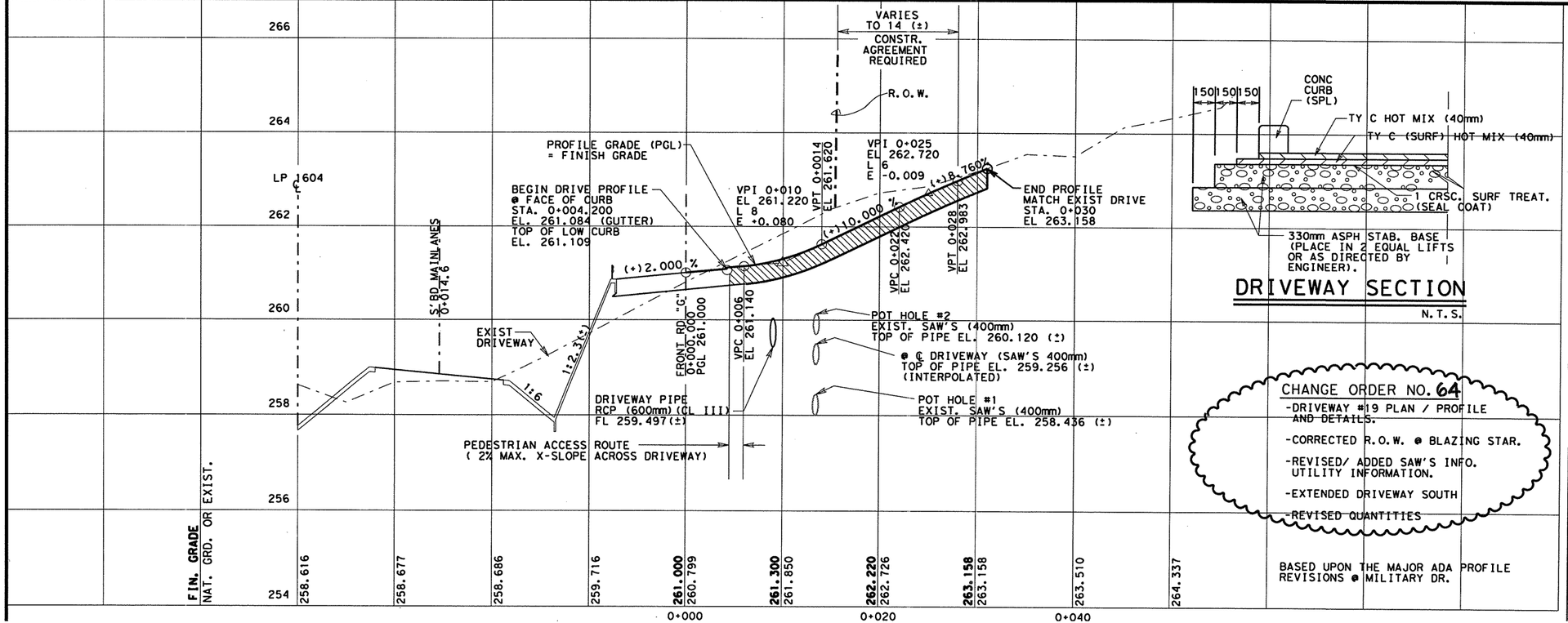





DRIVEWAY SECTION
N.T.S.

CHANGE ORDER NO. 64
-DRIVEWAY #19 PLAN / PROFILE AND DETAILS.
-CORRECTED R.O.W. @ BLAZING STAR.
-REVISED/ ADDED SAW'S INFO. UTILITY INFORMATION.
-EXTENDED DRIVEWAY SOUTH
-REVISED QUANTITIES

BASED UPON THE MAJOR ADA PROFILE
REVISIONS @ MILITARY DR.

CHANGE ORDER 64

NEW SHEET

CONSTRUCTION
AGREEMENT
REQUIRED

STATE OF TEXAS
JEROME D. PAVLISKA
76075
REGISTERED
PROFESSIONAL ENGINEER

Jerome D. Pavliska, P.E. 12-9-04
Jerome D. Pavliska, P.E. Date

© 2001
Texas Department of Transportation

# DRIVEWAY #19
# PLAN, PROFILE, & DETAILS
SHEET 1 OF 2

| FED. RD. DIV. NO. | FEDERAL AID PROJECT NO. | SHEET NO. |
|---|---|---|
| 6 | NH 2000(704), etc | 346H |
| STATE | DIST. | COUNTY |
| TEXAS | SAT | BEXAR |
| CONT. | SECT. | JOB / HIGHWAY NO. |

LEVELS DISPLAYED
1 2 3 4 5 6 7 8 9 10 11 12 13 14 15 16
17 18 19 20 21 22 23 24 25 26 27 28 29 30 31 32
33 34 35 36 37 38 39 40 41 42 43 44 45 46 47 48
49 50 51 62 63 64 65 66 67 68 69 70 71 72 73 74
p1604fm471-90
blazestar*layout3.dgn

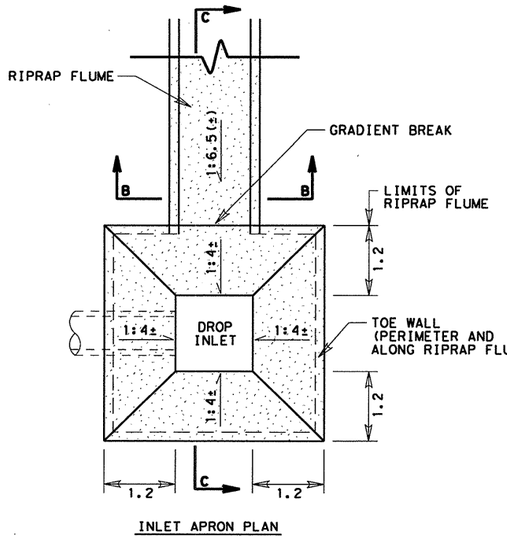


INLET APRON PLAN

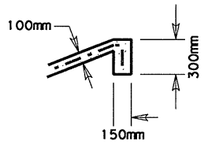


TOE WALL DETAIL

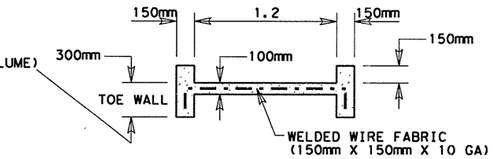


SECTION B-B

RIPRAP FLUME

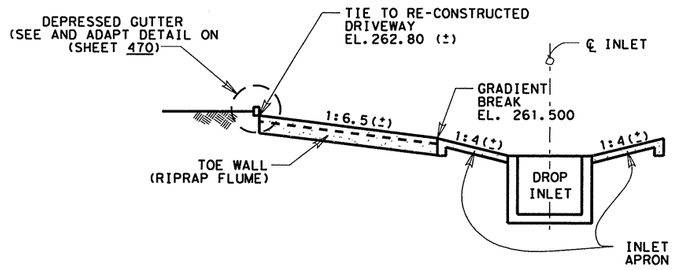


SECTION C-C

RIPRAP FLUME & RIPRAP APRON @ DROP INLET

NOTE(S)

-FOR RELATED QUANTITES SEE PRIOR SHEET.

-ALL DIMENSIONS ARE IN METERS UNLESS OTHERWISE NOTED.

-SET(TY II) CONSTRUCTION SHALL UTILIZE RIPRAP HEADWALL (MOD) STANDARD SHEET.

CHANGE ORDER 64

NEW SHEET

STATE OF TEXAS
JEROME D. PAVLISKA
76075
REGISTERED PROFESSIONAL ENGINEER

Jerome D. Pavliska P.E 12-9-04

Jerome D. Pavliska, P.E. — Date

## MISCELLANEOUS DRIVEWAY RELATED DETAILS

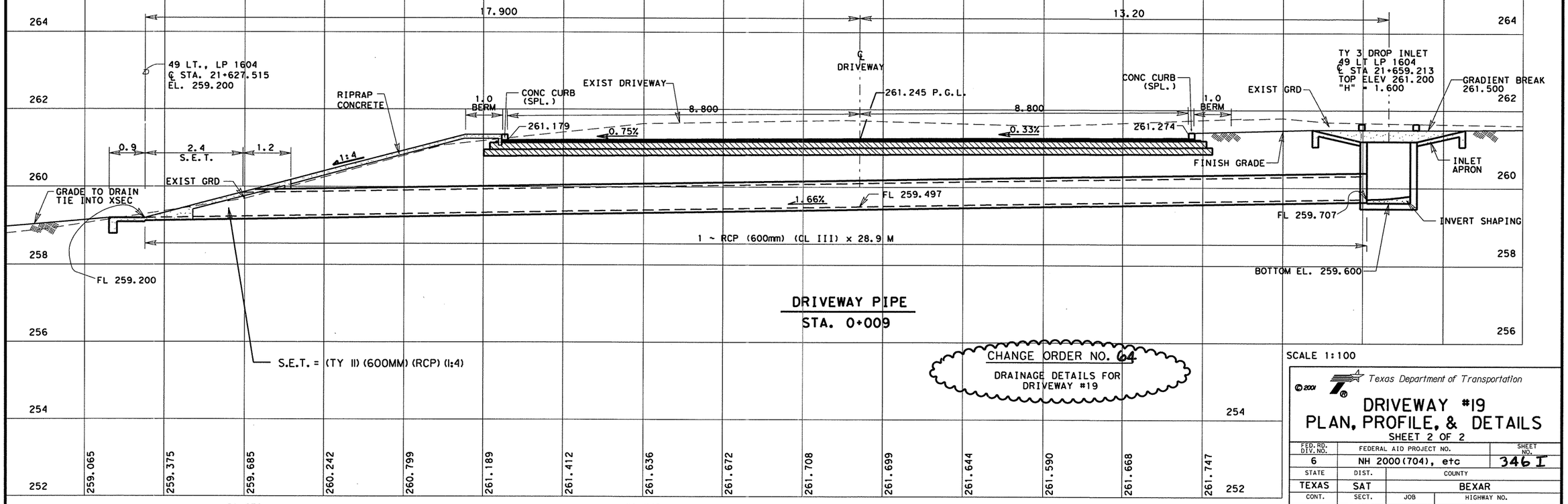


## DRIVEWAY PIPE
STA. 0+009

CHANGE ORDER NO. 64

DRAINAGE DETAILS FOR DRIVEWAY #19

SCALE 1:100

© 2001

Texas Department of Transportation

# DRIVEWAY #19
# PLAN, PROFILE, & DETAILS
SHEET 2 OF 2

| FED. RD. DIV. NO. | FEDERAL AID PROJECT NO. | | SHEET NO. |
|---|---|---|---|
| 6 | NH 2000(704), etc | | 346 I |
| STATE | DIST. | COUNTY | |
| TEXAS | SAT | BEXAR | |
| CONT. | SECT. | JOB | HIGHWAY NO. |
| 2452 | 01 | 036, etc | LP 1604 |

LEVELS DISPLAYED
1 2 3 4 5 6 7 8 9 10 11 12 31 41 51 61
17 18 19 20 21 22 23 24 25 56 57 58 29 30 31 32
33 34 35 36 37 38 39 40 41 42 43 44 45 46 47 48
49 50 51 52 53 54 55 56 57 58 59 60 61 62 63

lp1604fm471-90
b1oz*star*layout3.dgn

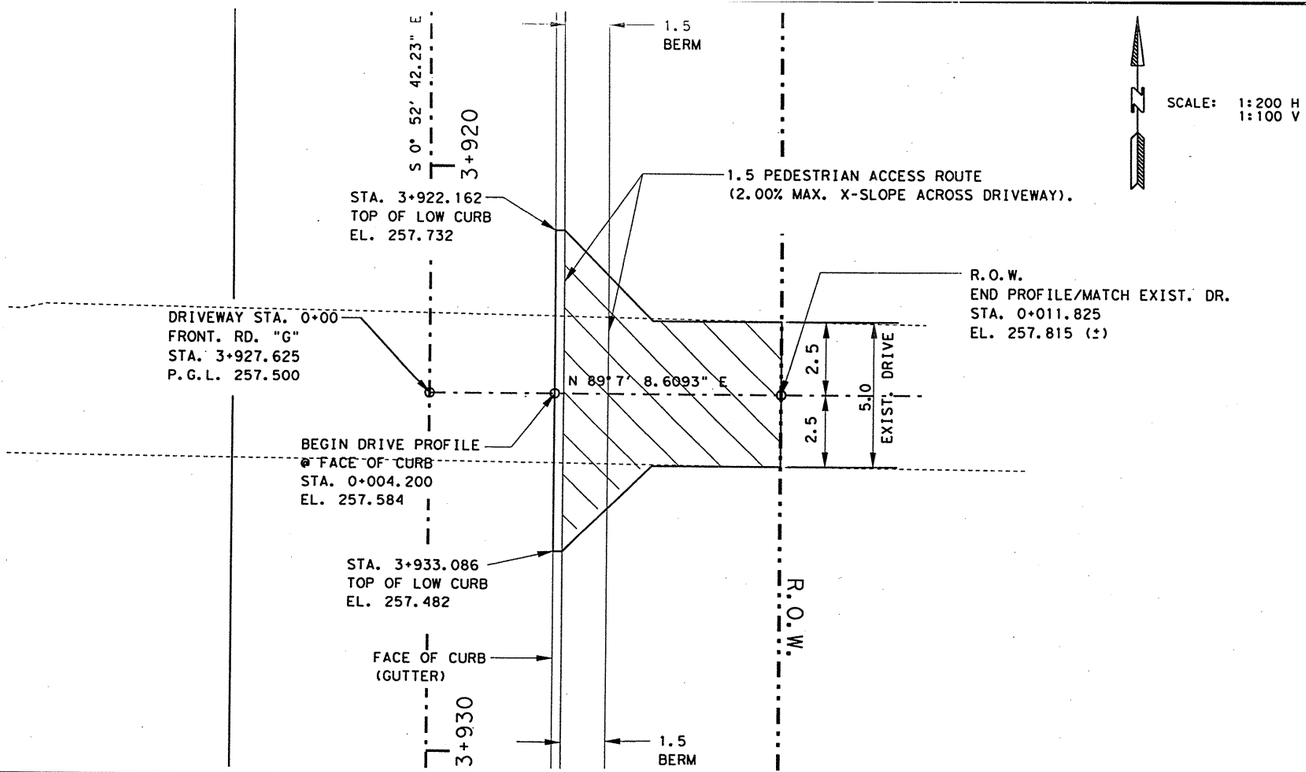


SCALE: 1:200 H
1:100 V

NOTE(S):

ALL DIMENSIONS ARE IN METERS UNLESS OTHERWISE NOTED.

FOR PAY ITEMS SEE APPROPRIATE PLAN SHEET(S).

FOR MORE DRIVEWAY DETAILS SEE SHEET(S) 27A, 28A & 336A .

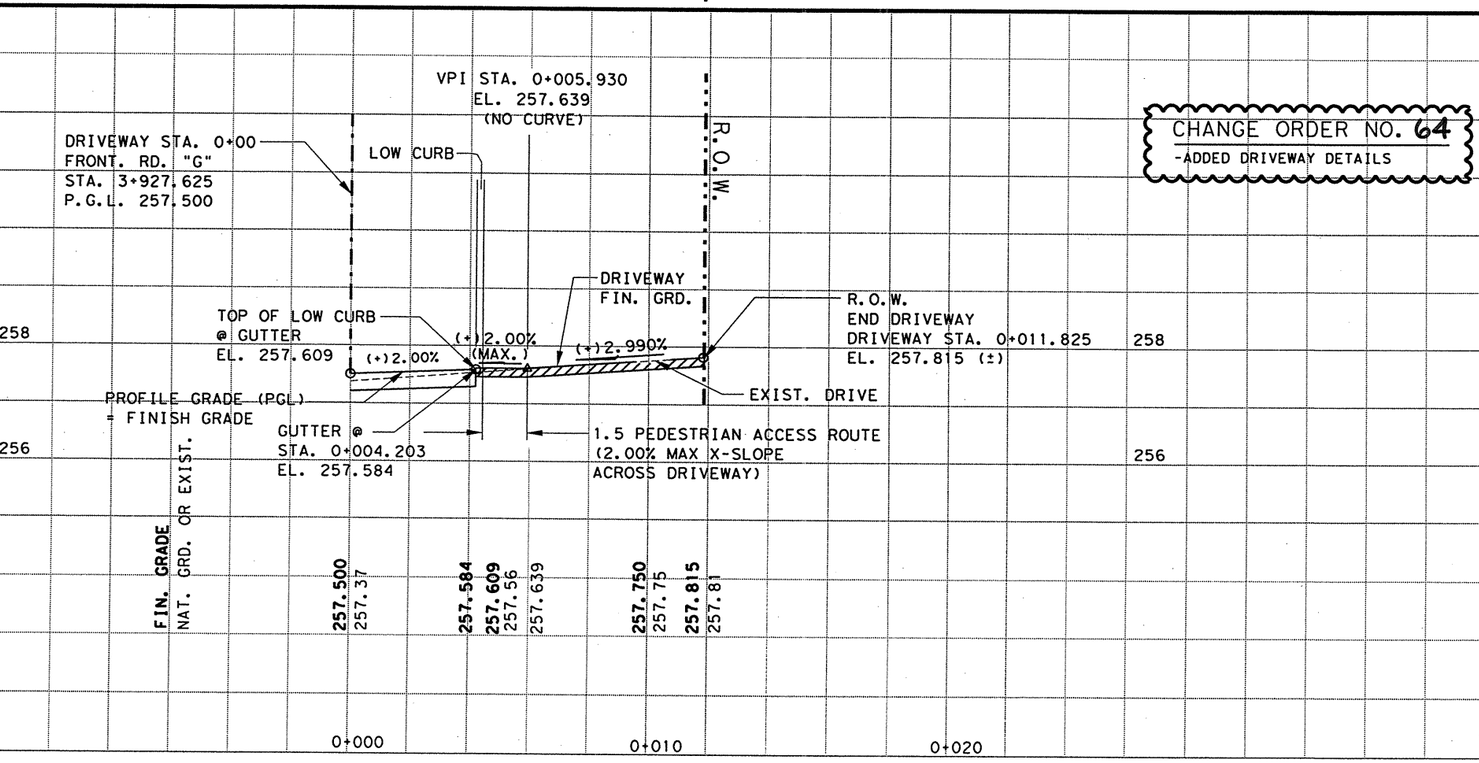


CHANGE ORDER NO. 64
-ADDED DRIVEWAY DETAILS

CHANGE ORDER 64

NEW SHEET

STATE OF TEXAS
JEROME D. PAVLISKA
76075
REGISTERED
PROFESSIONAL ENGINEER

Jerome D. Pavliska P.E 5-3-04
Jerome D. Pavliska, P.E. Date

©2003

Texas Department of Transportation

# DRIVEWAY #21

(CALVARY HILLS BAPTIST CHURCH)

SHEET 1 OF 1

| FED. RD. DIV. NO. | FEDERAL AID PROJECT NO. | | SHEET NO. |
|---|---|---|---|
| 6 | NH 2000(704), etc | | 346 J |
| STATE | DIST. | COUNTY | |
| TEXAS | SAT | BEXAR | |
| CONT. | SECT. | JOB | HIGHWAY NO. |
| 2452 | 01 | 036, etc | LP 1604 |

LEVELS DISPLAYED
1 2 3 4 5 6 7 8 9 10 11 12 13 14 15 16
17 18 19 20 21 22 23 24 25 26 27 28 29 30 31 32
33 34 35 36 37 38 39 40 41 42 43 44 45 46 47 48
49 50 51 52 53 54 55 56 57 58 59 60 61 62 63

lp1604fm471-90
druve*21.dgn

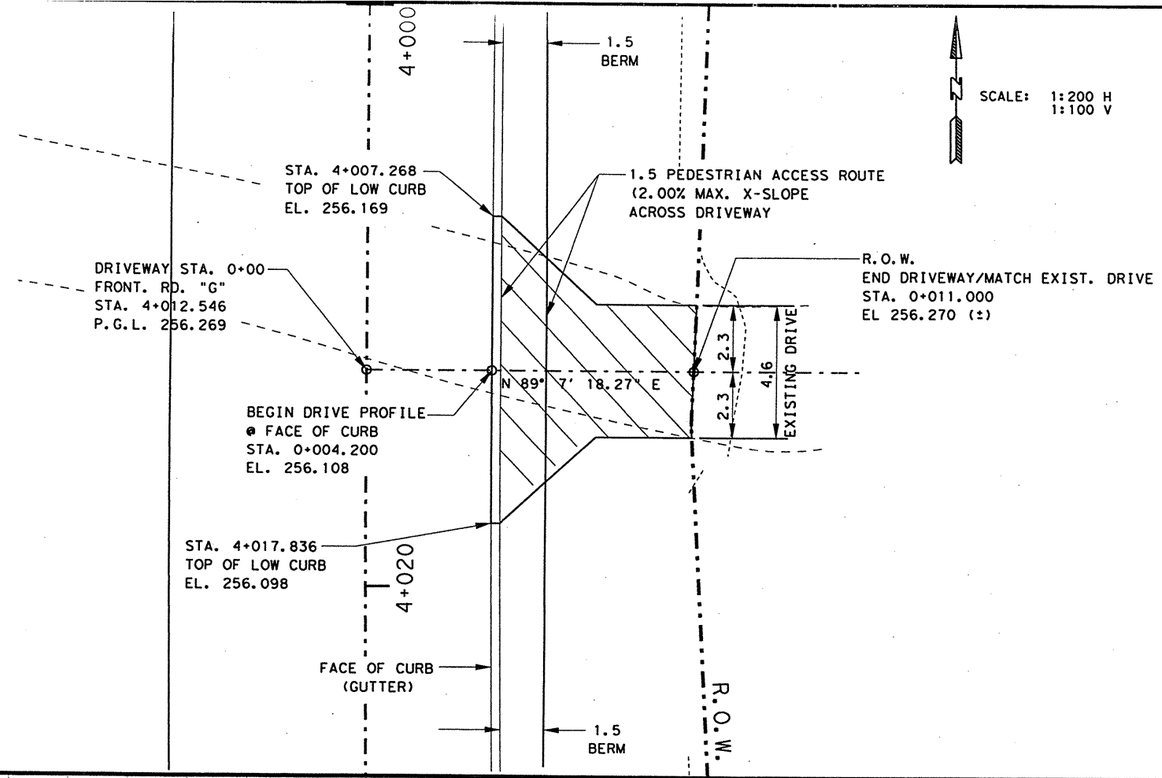


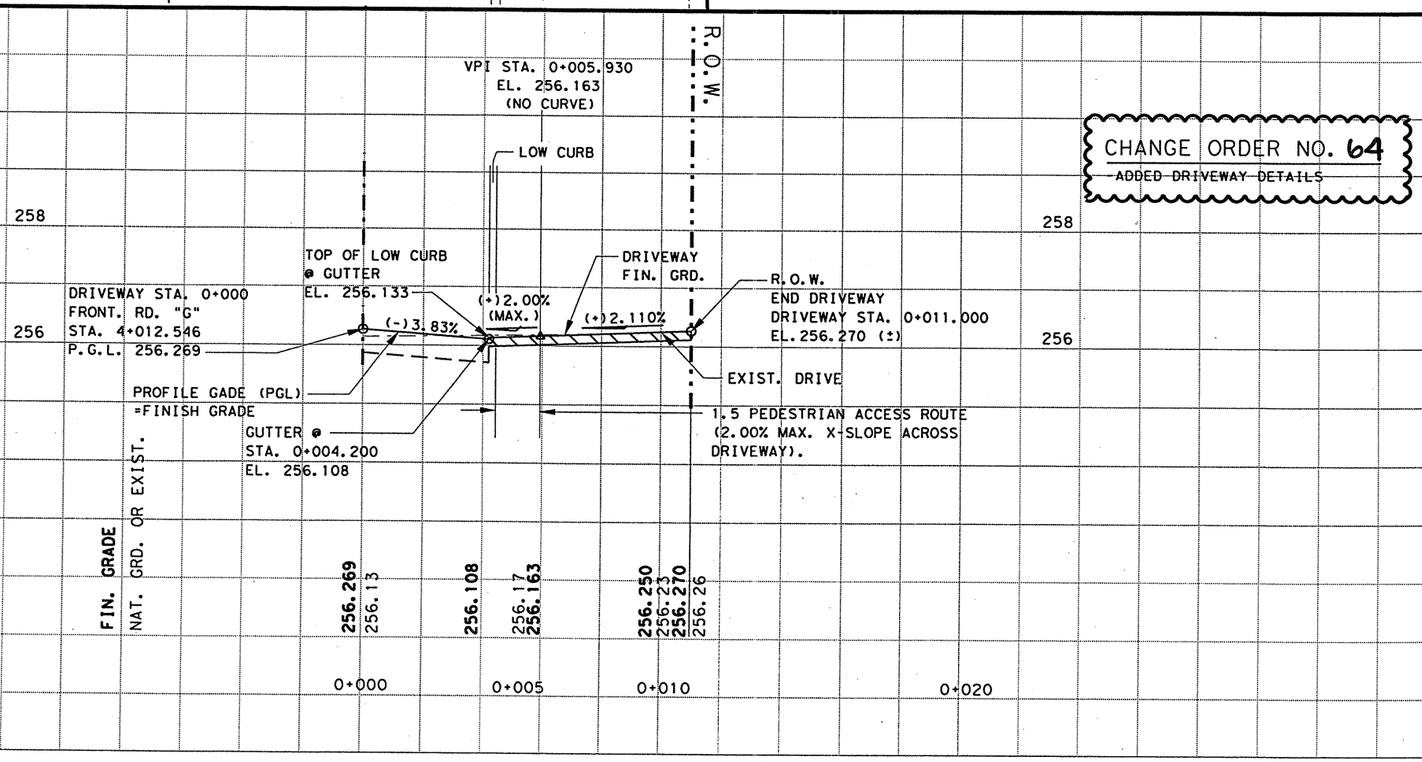


NOTE(S):

ALL DIMENSIONS ARE IN METERS UNLESS OTHERWISE NOTED.

FOR PAY ITEMS SEE APPROPRIATE PLAN SHEET(S).

FOR MORE DRIVEWAY DETAILS SEE SHEET(S) 27A, 28A & 336A.

CHANGE ORDER 64

NEW SHEET

STATE OF TEXAS
JEROME D. PAVLISKA
76075
REGISTERED PROFESSIONAL ENGINEER

Jerome D. Pavliska, P.E. 5-3-04
Jerome D. Pavliska, P.E. Date

©2003
Texas Department of Transportation

# DRIVEWAY #22

(CALVARY HILLS BAPTIST CHURCH)

SHEET 1 OF 1

| FED. RD. DIV. NO. | FEDERAL AID PROJECT NO. | | SHEET NO. |
|---|---|---|---|
| 6 | NH 2000(704), etc | | 346 K |
| STATE | DIST. | COUNTY | |
| TEXAS | SAT | BEXAR | |
| CONT. | SECT. | JOB | HIGHWAY NO. |
| 2452 | 01 | 036, etc | LP 1604 |

LEVELS DISPLAYED
1 2 3 4 5 6 7 8 9 10 11 12 13 14 15 16
17 18 19 20 21 22 23 24 25 26 27 28 29 30 31 32
33 34 35 36 37 38 39 40 41 42 43 44 45 46 47 48
49 50 51 52 53 54 55 56 57 58 59 60 61 62 63

lp1604fm471-90
drive*22.dgn

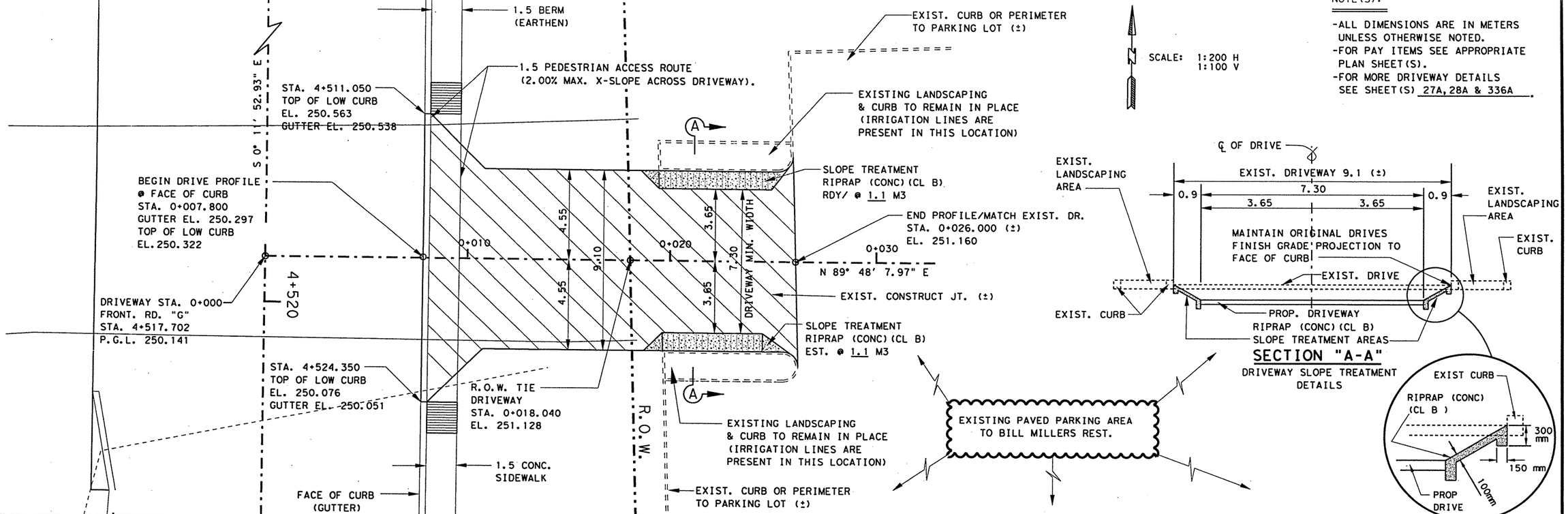


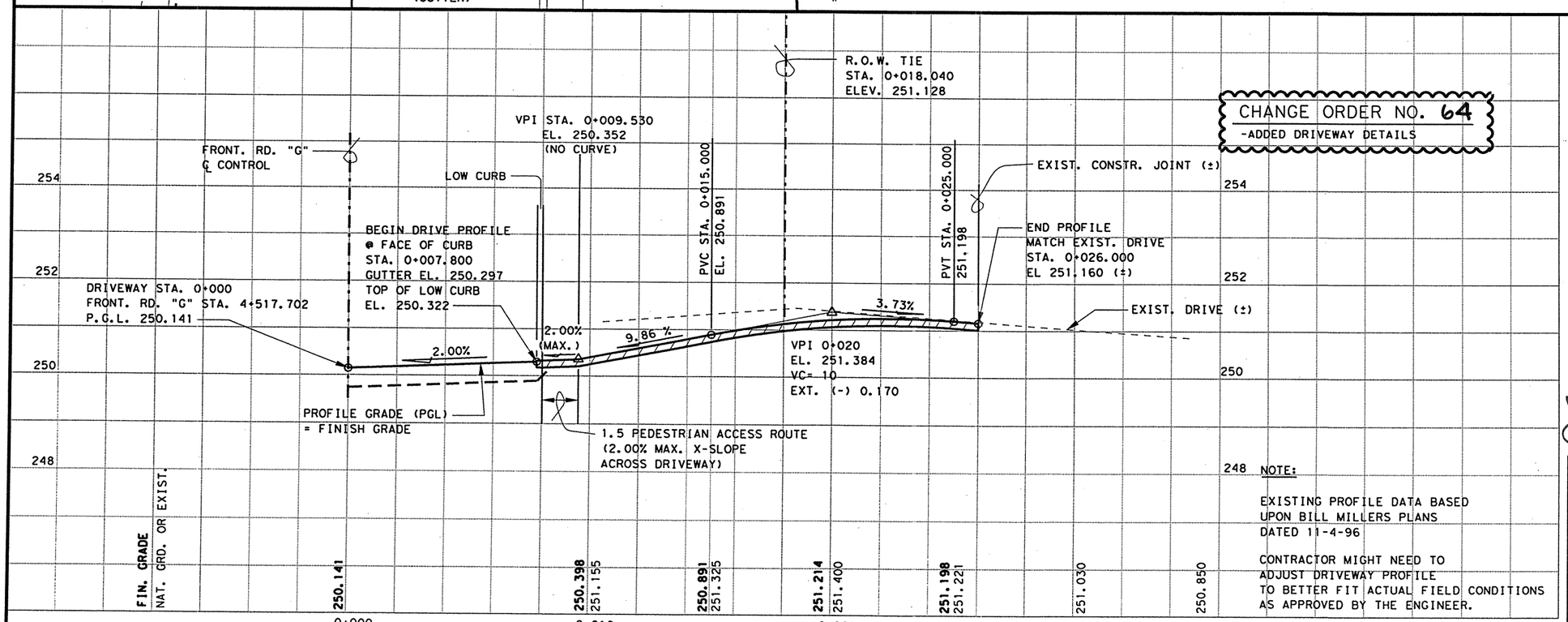


CHANGE ORDER NO. 64
-ADDED DRIVEWAY DETAILS

NOTE:

EXISTING PROFILE DATA BASED UPON BILL MILLERS PLANS DATED 11-4-96

CONTRACTOR MIGHT NEED TO ADJUST DRIVEWAY PROFILE TO BETTER FIT ACTUAL FIELD CONDITIONS AS APPROVED BY THE ENGINEER.

CHANGE ORDER 64

NEW SHEET

CONSTRUCTION AGREEMENT REQUIRED

STATE OF TEXAS
JEROME D. PAVLISKA
76075
REGISTERED PROFESSIONAL ENGINEER

Jerome D. Pavliska, P.E. 5-3-04
Jerome D. Pavliska, P.E. Date

©2004

Texas Department of Transportation

# DRIVEWAY #27

(BILL MILLERS - FRONT. RD.)

SHEET 1 OF 1

| FED. RD. DIV. NO. | FEDERAL AID PROJECT NO. | | SHEET NO. |
|---|---|---|---|
| 6 | NH 2000(704), etc | | 346 L |
| STATE | DIST. | COUNTY | |
| TEXAS | SAT | BEXAR | |
| CONT. | SECT. | JOB | HIGHWAY NO. |
| 2452 | 01 | 036, etc | LP 1604 |

LEVELS DISPLAYED
1 2 3 4 5 6 7 8 9 10 12 20 30 40 50 60
1 7 8 18 19 20 21 22 32 42 52 62 72 82 92 93 103 152
33 34 55 56 57 58 59 94 104 124 134 144 154 464 748
95 105 152 253 545 555 565 575 585 596 606 1626 3
lp1604fm471-90
drive27A.dgn

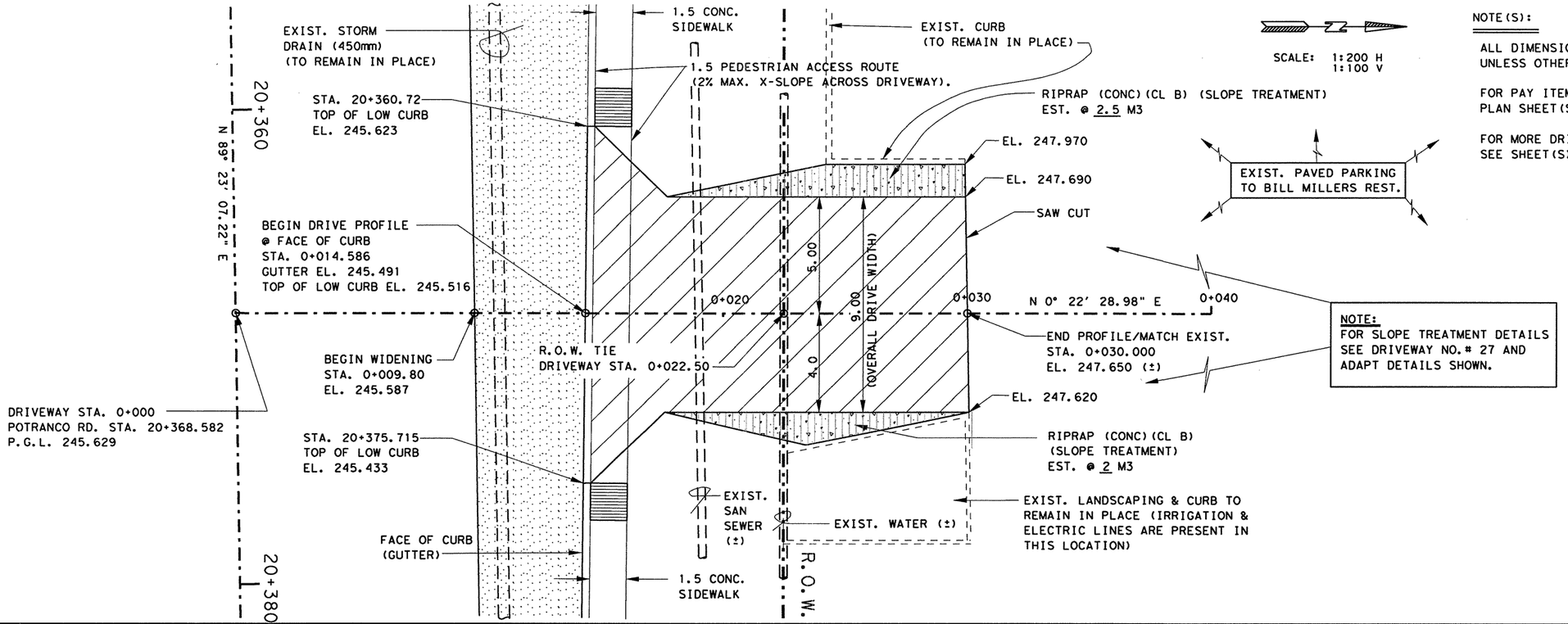


NOTE(S):

ALL DIMENSIONS ARE IN METERS UNLESS OTHERWISE NOTED.

FOR PAY ITEMS SEE APPROPRIATE PLAN SHEET(S).

FOR MORE DRIVEWAY DETAILS SEE SHEET(S) 27A, 28A & 336A.

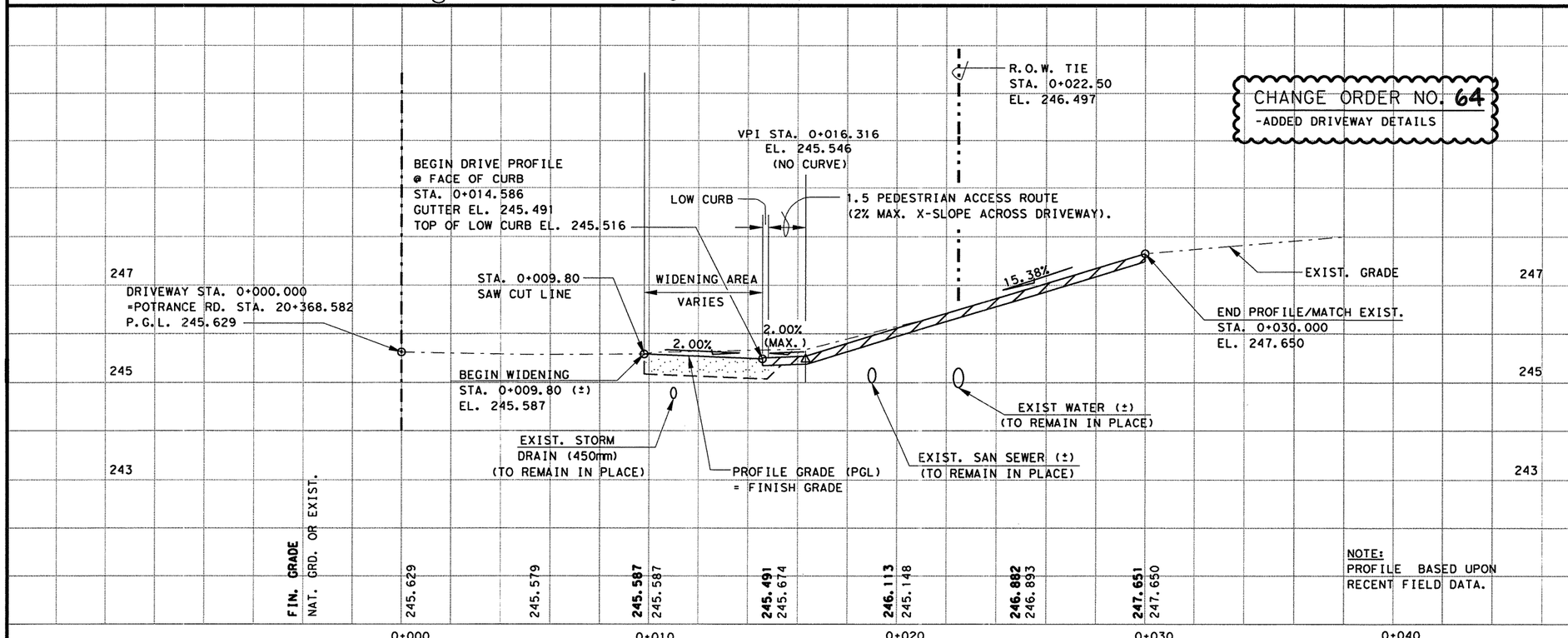


CHANGE ORDER 64

NEW SHEET

CONSTRUCTION AGREEMENT REQUIRED

STATE OF TEXAS
JEROME D. PAVLISKA
76075
REGISTERED PROFESSIONAL ENGINEER

Jerome D. Pavliska, P.E. 5-3-04
Jerome D. Pavliska, P.E. Date

©2003

Texas Department of Transportation

# DRIVEWAY #28

(BILL MILLERS-POTRANCO RD.)

SHEET 1 OF 1

| FED. RD. DIV. NO. | FEDERAL AID PROJECT NO. | | SHEET NO. |
|---|---|---|---|
| 6 | NH 2000(704), etc | | 346 M |
| STATE | DIST. | COUNTY | |
| TEXAS | SAT | BEXAR | |
| CONT. | SECT. | JOB | HIGHWAY NO. |
| 2452 | 01 | 036, etc | LP 1604 |

5-01-04

LEVELS DISPLAYED
1 2 3 4 5 6 7 8 9 10 11 12 13 14 15 16
17 18 19 20 21 22 23 24 25 26 27 28 29 30 31 32
33 34 35 36 37 38 39 40 41 42 43 44 45 46 47 48
49 50 51 52 53 54 55 56 57 58 59 60 61 62 63

lp1604fm471-90
drive*28A.dgn

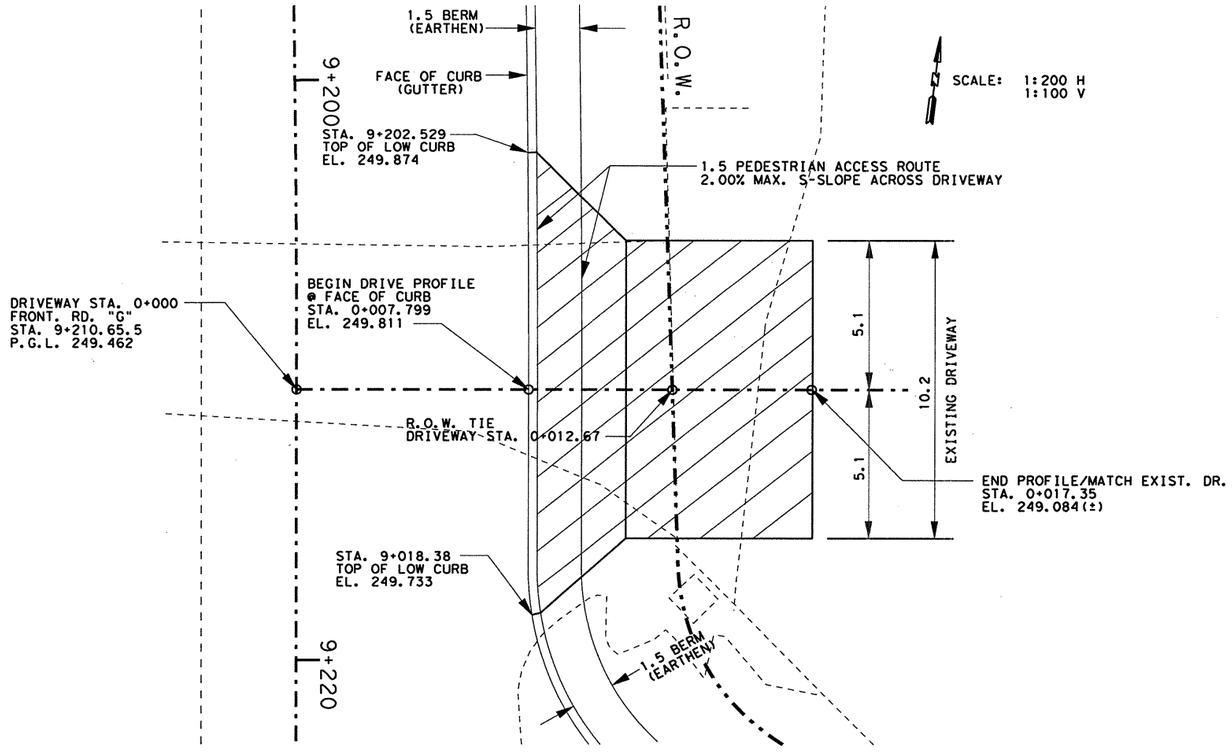


NOTE(S):

ALL DIMENSIONS ARE IN METERS UNLESS OTHERWISE NOTED.

FOR PAY ITEMS SEE APPROPRIATE PLAN SHEET(S).

FOR MORE DRIVEWAY DETAILS SEE SHEET(S) 27A, 28A & 336A .

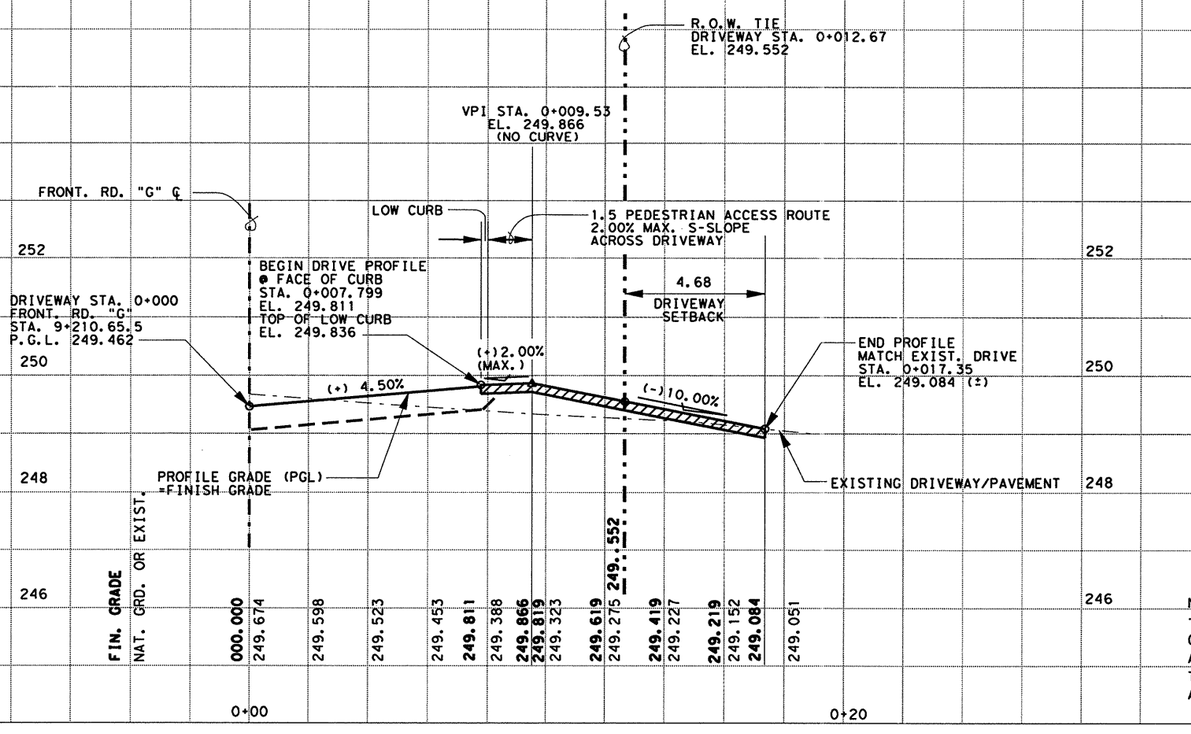


CHANGE ORDER NO. 64
-ADDED DRIVEWAY DETAILS

CHANGE ORDER 64

NEW SHEET

CONSTRUCTION AGREEMENT REQUIRED

STATE OF TEXAS
JEROME D. PAVLISKA
76075
REGISTERED PROFESSIONAL ENGINEER

Jerome D. Pavliska, P.E. 1-03-05
Jerome D. Pavliska, P.E. Date

©2003
Texas Department of Transportation

# DRIVEWAY #39

SHEET 1 OF1

| FED. RD. DIV. NO. | FEDERAL AID PROJECT NO. | | SHEET NO. |
|---|---|---|---|
| 6 | NH 2000(704), etc | | 346Q |
| STATE | DIST. | COUNTY | |
| TEXAS | SAT | BEXAR | |
| CONT. | SECT. | JOB | HIGHWAY NO. |
| 2452 | 01 | 036, etc | LP 1604 |

1-03-05

NOTE:

CONTRACTOR MIGHT NEED TO ADJUST DRIVEWAY PROFILE TO BETTER FIT ACTUAL FIELD CONDITIONS AS APPROVED BY THE ENGINEER.

LEVELS DISPLAYED
1 2 3 4 5 6 7 8 9 10 11 12 13 14 15 16
17 18 19 20 21 22 23 24 25 26 27 28 29 30 31 32
33 34 35 36 37 38 39 40 41 42 43 44 45 46 47 48
49 50 51 52 53 54 55 56 57 58 59 60 61 62 63

lp1604fm471-90
drive39.dgn

* FOR CONTRACTOR'S INFORMATION.

| NO. | STA FROM | STA TO | LENGTH (m) | WIDTH (m) | AREA (m2) |
|---|---|---|---|---|---|
| 1 | 27522 | 27540 | 18 | 3.0 | 54 |
| 2 | 27398 | 27425 | 27 | 5.0 | 135 |
| 3 | 27354 | 27390 | 36 | 4.0 | 144 |
| 4 | 27138 | 27165 | 27 | 4.0 | 108 |
| 5 | 27006 | 27060 | 54 | 3.5 | 189 |
| 6 | 26852 | 26885 | 33 | 7.0 | 231 |
| 7 | 26827 | 26845 | 18 | 3.0 | 54 |
| 8 | 26419 | 26440 | 21 | 3.0 | 63 |
| 9 | 25962 | 26015 | 53 | 4.0 | 212 |
| 10 | 21027 | 21123 | 96 | 7.0 | 672 |
| 11 | 21009 | 21027 | 18 | 4.0 | 72 |
| | | | | TOTAL = | 1,934 |

NOTES:

1) LOCATIONS ABOVE ARE IN REFERENCE TO THE INSIDE LANE ON THE PROPOSED LP 1604 NBFR.

2) STATIONS ARE TAKEN FROM THE LP 1604 MAINLANE CL.

* FOR CONTRACTOR'S INFORMATION.

| NO. | STA FROM | STA TO | LENGTH (m) | WIDTH (m) | AREA (m2) |
|---|---|---|---|---|---|
| 1 | 0250 | 0265 | 15 | 3.5 | 53 |
| 2 | 9610 | 9644 | 34 | 5.0 | 170 |
| 3 | 9500 | 9530 | 30 | 5.0 | 150 |
| 4 | 9362 | 9385 | 23 | 6.0 | 138 |
| 5 | 9062 | 9255 | 193 | 6.0 | 1,158 |
| 6 | 8580 | 8600 | 20 | 4.5 | 90 |
| 7 | 8400 | 8415 | 15 | 4.5 | 68 |
| 8 | 8190 | 8205 | 15 | 3.4 | 51 |
| 9 | 8055 | 8095 | 40 | 4.3 | 172 |
| 10 | 7954 | 8008 | 54 | 4.5 | 243 |
| 11 | 7901 | 7916 | 15 | 4.5 | 68 |
| 12 | 7450 | 7540 | 90 | 3.4 | 306 |
| 13 | 7180 | 7208 | 28 | 4.3 | 120 |
| 14 | 7060 | 7078 | 18 | 3.4 | 61 |
| 15 | 7010 | 7030 | 20 | 3.4 | 68 |
| 16 | 6600 | 6615 | 15 | 3.4 | 51 |
| 17 | 6400 | 6426 | 26 | 3.4 | 88 |
| 18 | 6260 | 6273 | 13 | 5.0 | 65 |
| 19 | 6125 | 6140 | 15 | 4.5 | 68 |
| 20 | 3746 | 3761 | 15 | 3.0 | 45 |
| 21 | 3585 | 3635 | 50 | 3.0 | 150 |
| 22 | 3471 | 3526 | 55 | 3.0 | 165 |
| 23 | 3405 | 3449 | 44 | 3.0 | 132 |
| 24 | 1856 | 1871 | 15 | 3.4 | 51 |
| 25 | 1513 | 1624 | 111 | 4.0 | 444 |
| | | | | TOTAL = | 4,174 |

NOTES:

1) LOCATIONS ABOVE ARE IN REFERENCE TO THE OUTSIDE LANE ON THE PROPOSED LP 1604 NBFR.

2) STATIONS ARE TAKEN FROM ALIGN "G" ON THE LP 1604 NBFR.

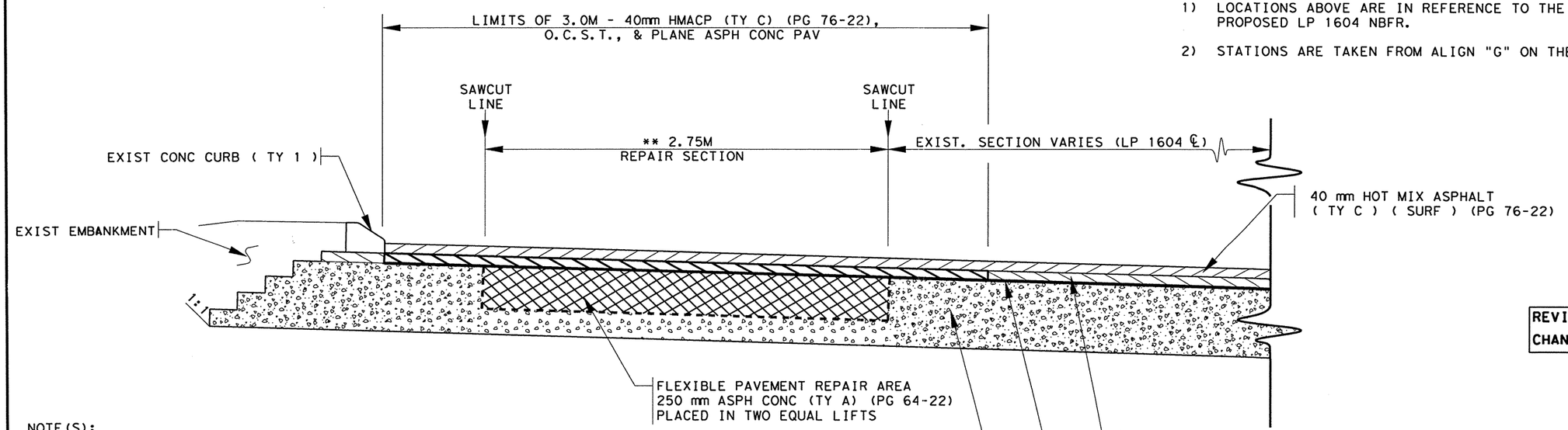


NOTE(S):

**THE TYPICAL REPAIR DIMENSION WILL BE A MINIMUM WIDTH OF 2.75M AND LENGTH BASED UPON THE AREA THAT IS IN NEED OF REPAIR. THE REPAIR DIMENSION WILL BE THE SAME FOR THE INSIDE LANE. EDGES OF THE REPAIR SHALL BE SAWCUT TO A MIMIMUM DEPTH OF 102mm.

1.) THE USE OF ROTOMILL WILL BE USED FOR THE REMOVAL OF THE EXISTING PAVEMENT STRUCTURE, AND WILL BE SUBSIDIARY TO ITEM 351, "FLEXIBLE PAVEMENT STRUCTURE REPAIR."

2.) ASPH CONC (TY A)(PG 64-22), O.C.S.T., & 40mm HMACP (TY C) (PG 76-22) WILL NOT BE PAID FOR DIRECTLY, BUT WILL BE SUBSIDIARY TO ITEM 351. O.C.S.T. MAY BE ASPH (AC-15P, HFRS-2P, OR CRS-2P) AND AGGR (TY B, GR 4). THE 40mm HMACP (TY C) (PG 76-22) LAYER WILL BE SPREAD ON THE PREPARED SURFACE WITH A SPREADING AND FINISHING MACHINE.

3.) THE FINAL LIFT OF 40mm HMACP (TY C) (SURF) (PG 76-22) WILL BE PAID FOR DIRECTLY UNDER BID ITEM 3117-5084.

REVISED SHEET
CHANGE ORDER NO. 157

STATE OF TEXAS
MIGUEL G. ROGERIO
96620
LICENSED
PROFESSIONAL ENGINEER

Miguel G. Rogerio, P.E. 5/3/2007
Miguel G. Rogerio, P.E. Date

©2007
Texas Department of Transportation

**MISCELLANEOUS ROADWAY DETAILS**

N. T. S. **PAVEMENT REPAIR DETAIL**

| FED.RD. DIV.NO. | FEDERAL AID PROJECT NO. | | SHEET NO. |
|---|---|---|---|
| 6 | NH 2000(704),etc. | | 346Z |
| STATE | DIST. | COUNTY | |
| TEXAS | SAT | BEXAR | |
| CONT. | SECT. | JOB | HIGHWAY NO. |
| 2452 | 01 | 036,etc. | LP 1604 |

LEVELS DISPLAYED
1 2 3 4 5 6 7 8 9 10 11 12 13 14 15 16 17 18 19 20 21 22 23 24 25 26 27 28 29 30 31 32 33 34 35 36 37 38 39 40 41 42 43 44 45 46 47 48 49 50 51 52 53 54 55 56 57 58 59 60 61 62 63

ACC: lp1604fm471-90\misc\detail

FILE: misc\rd\detail14.dgn

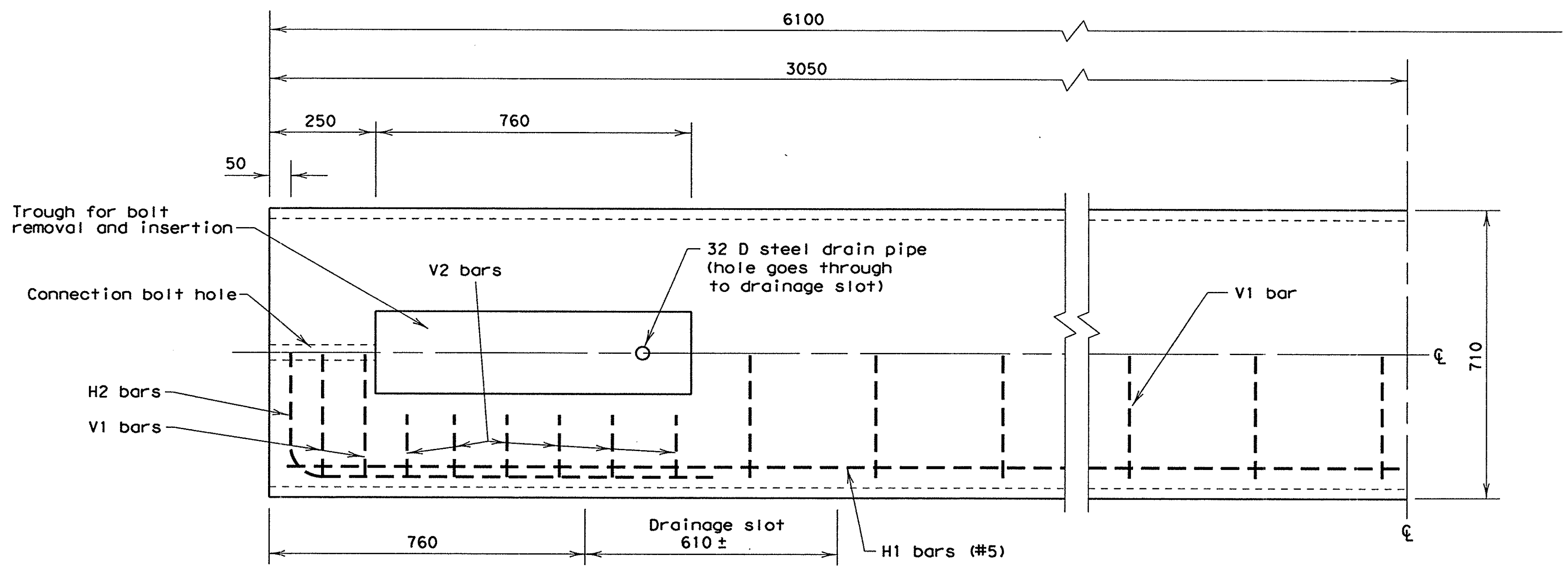


## PLAN VIEW - TYPE 1

(Symmetrical about center line)

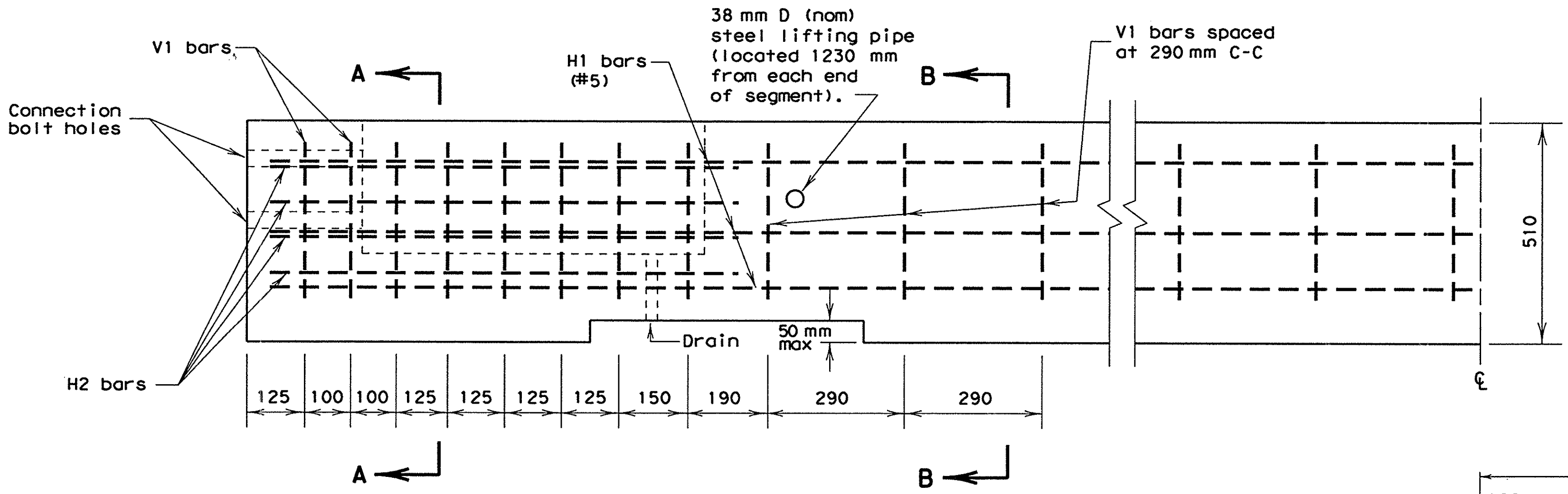


## ELEVATION - TYPE 1

(Symmetrical about center line)

Note: All bending of shear rebar is at 45 mm radius unless specified otherwise.

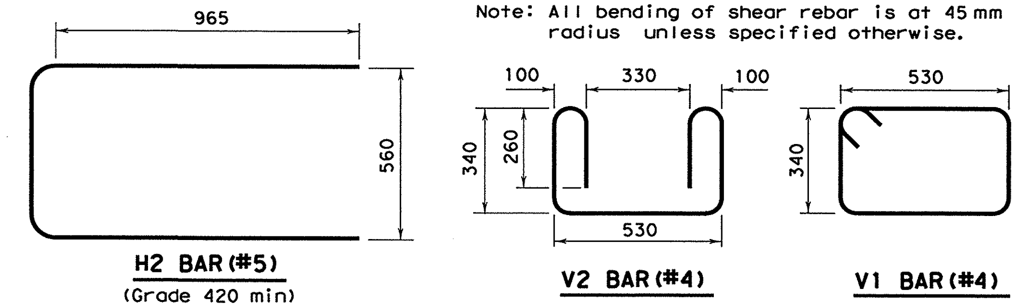


**H2 BAR (#5)**

(Grade 420 min)

Note: H2 Rebar is to be bent at a 65 mm radius.

**V2 BAR (#4)**

**V1 BAR (#4)**

## REINFORCING STEEL DETAILS

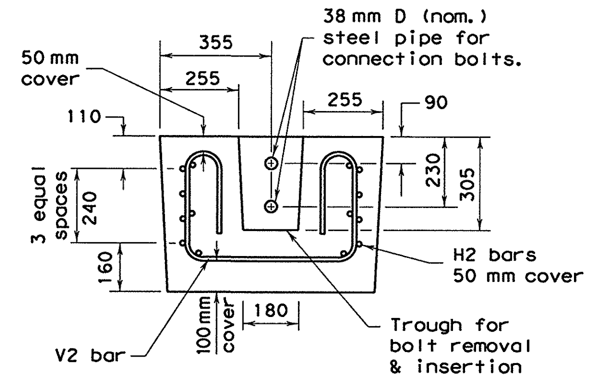


## SECTION A-A

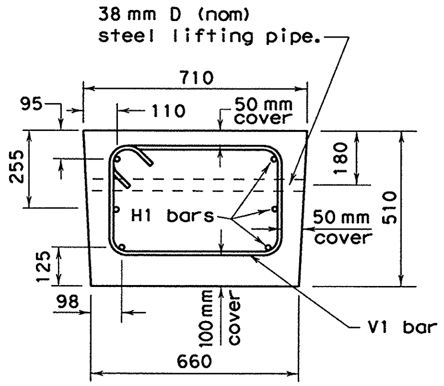


## SECTION B-B

## GENERAL NOTES

1. Barrier length shall be 6100 mm (± 25 mm) unless otherwise specified in the plans.
2. All concrete, reinforcement, anchor bolts, blocking, and etc., as shown are considered as part of the barrier for payment.
3. All concrete shall be Class C or H, unless otherwise specified.
4. All reinforcing steel shall be Grade 300, unless otherwise specified.
5. Chamfer all edges 20 mm, as directed by the Engineer.
6. Steel pipe shall be hot dip galvanized in conformance to ASTM designation A123. Bolts, nuts and washers shall be hot-dip galvanized to ASTM designation A153.
7. Bolts shall conform to ASTM A36. Threads for bolts shall have a Class 2A tolerance and nuts shall have a Class 2B tolerance in accordance with ANSI B1.1.
8. The barrier should be light in color and should be supplemented by delineation as detailed elsewhere in the plans.

DISCLAIMER:
The use of this standard is governed by the "Texas Engineering Practice Act". No warranty of any kind is made by TxDOT for any purpose whatsoever. TxDOT assumes no responsibility for the conversion of this standard to other formats or for incorrect results or damages resulting from its use.

Welded wire fabric
76 x 305-MD130 x MD130
420 MPa min yield
strength (ASTM A497)

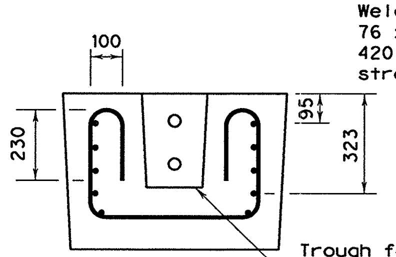


**SECTION A-A**

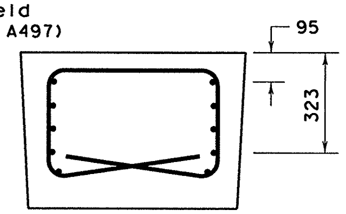


**SECTION B-B**

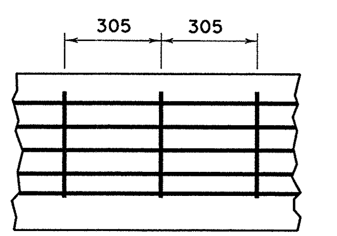


**SIDE VIEW**

Note: This fabric option can be used in place of V1, V2 and H1 bars. The H2 bars specified are still required.

## WELDED WIRE FABRIC OPTIONAL REINFORCING

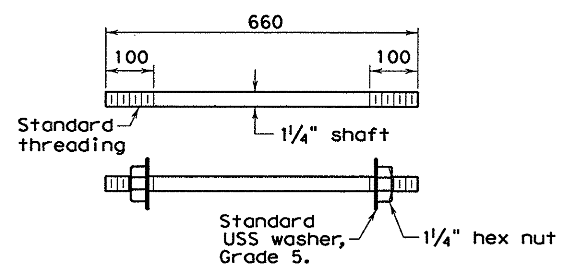


## CONNECTION BOLT

**FOR CONTRACTORS INFORMATION ONLY**

| (Type 1) Approx. quantities 6100 mm section | | |
|---|---|---|
| Concrete | $m^3$ | 2.1 |
| Reinforcing steel | kg | 140 |
| Total barrier wt. | kg | 5060 |

R = Radius
D = Diameter

All unit-less dimensions are millimeters

*Texas Department of Transportation*
*Design Division (Roadway)*

©2000

# LOW PROFILE CONCRETE BARRIER

**(PORTABLE AND PRECAST)**

# LPCB(1)-95(M)

**SHEET 1 OF 2**

| FILE: LPCB195M.DGN | DN: GTH | CK: GTH | DW: BGD | CK: TGM | NEG: |
|---|---|---|---|---|---|
| ©TxDOT 1995 | DIST | FED REG | FEDERAL AID PROJECT • | | SHEET |
| REVISIONS | SAT | 6 | NH 2000(704),etc. | | 347 |
| | COUNTY | | CONTROL | SECT / JOB | HIGHWAY |
| | BEXAR | | 2452 | 01 / 036,etc. | LP 1604 |

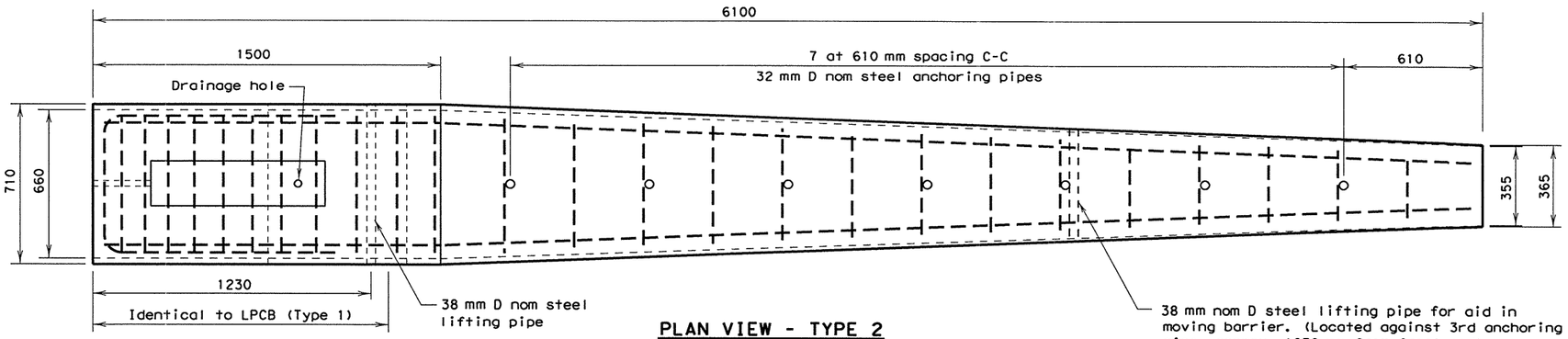


PLAN VIEW - TYPE 2

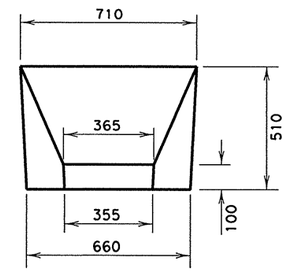


APPROACH VIEW

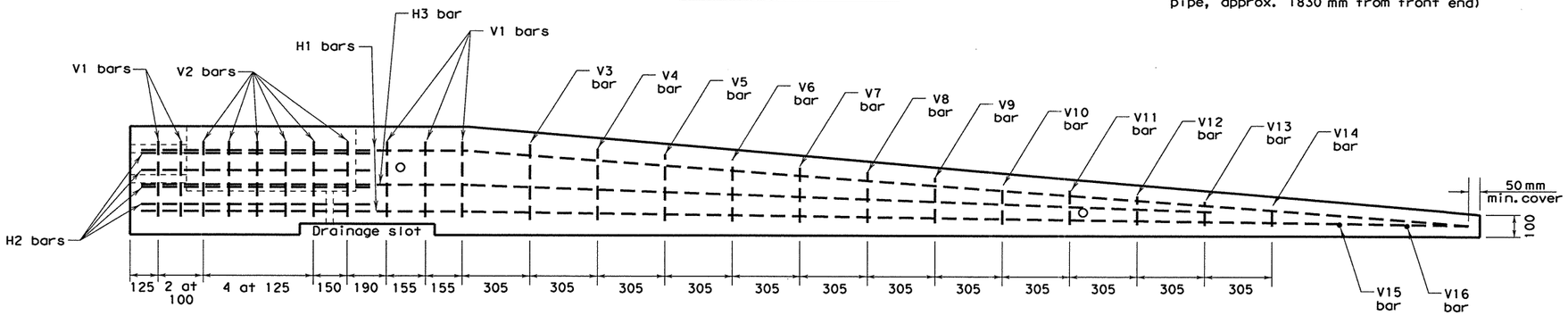


Note: Anchoring pipes not shown in elevation.

ELEVATION - TYPE 2

## GENERAL NOTES

1. Type 2 barrier shall be used as an end treatment for LPCB Type 1 barrier when appropriate.
2. The anchorage pins are all the same length and are intended to be driven flush with the top of the barrier surface.
3. The bends in the H3 and H1 bars are slight, no formal bend is necessary.
4. Type 2 barrier must be lifted from rear first to prevent cracking of sloped section.
5. See sheet 1 of 2 for additional information.

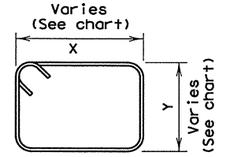


V3-11 BARS (#4)

| Bar | X (mm) | Y (mm) |
|---|---|---|
| V3 bar | 515 | 370 |
| V4 bar | 495 | 345 |
| V5 bar | 470 | 310 |
| V6 bar | 445 | 285 |
| V7 bar | 430 | 260 |
| V8 bar | 415 | 230 |
| V9 bar | 395 | 205 |
| V10 bar | 370 | 180 |
| V11 bar | 350 | 150 |

Note: All bending of shear rebar is at a 45 mm radius, unless specified otherwise.

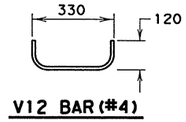


V12 BAR (#4)

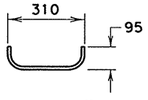


V13 BAR (#4)

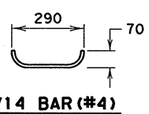


V14 BAR (#4)

V15 BAR (#4)

V16 BAR (#4)

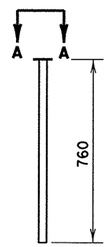


ANCHORING PIN
(32 mm D, A36 stl.)

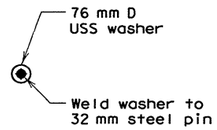


A-A
(Head of anchoring pin)

FOR CONTRACTORS INFORMATION ONLY

| (Type 2) Approx. quantities 6100 mm section | | |
|---|---|---|
| Concrete | $m^3$ | 1.2 |
| Reinforcing steel | kg | 92 |
| Total barrier Wt. | kg | 2850 |

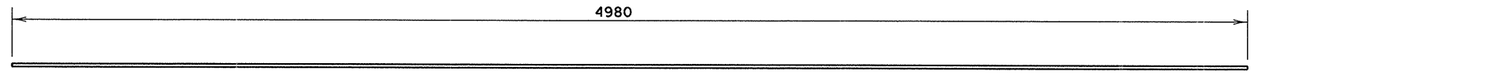


H3 BARS (#5)
(Grade 420)

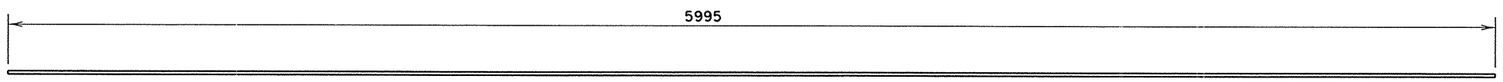


H1 BARS (#5)
(Grade 420)

R = Radius
D = Diameter

All unit-less dimensions are millimeters

DISCLAIMER:
The use of this standard is governed by the "Texas Engineering Practice Act". No warranty of any kind is made by TxDOT for any purpose whatsoever. TxDOT assumes no responsibility for the conversion of this standard to other formats or for incorrect results or damages resulting from its use.

LEVELS DISP.....0

| | | | | | | | | | | | | | | | | | | | | | | | | | | | | | | | | |
|---|---|---|---|---|---|---|---|---|---|---|---|---|---|---|---|---|---|---|---|---|---|---|---|---|---|---|---|---|---|---|---|---|
| 1 | | 3 | 4 | 5 | 6 | 7 | 8 | 9 | 10 | 11 | 12 | 13 | 14 | 15 | 16 | | | | | | | | | | | | | | | | | |
| 17 | 18 | 19 | 20 | 21 | 22 | 23 | 24 | 25 | 26 | 27 | 28 | 29 | 30 | 31 | 32 | | | | | | | | | | | | | | | | | |
| 33 | 34 | 35 | 36 | 37 | 38 | 39 | 40 | 41 | 42 | 43 | 44 | 45 | 46 | 47 | 48 | | | | | | | | | | | | | | | | | |
| 49 | 50 | 51 | 52 | 53 | 54 | 55 | 56 | 57 | 58 | 59 | 60 | 61 | 62 | 63 | | | | | | | | | | | | | | | | | | |

© 2000

Texas Department of Transportation
Design Division (Roadway)

# LOW PROFILE CONCRETE BARRIER
(PORTABLE AND PRECAST)

# LPCB(2)-95(M)

SHEET 2 OF 2

| FILE: LPCB295M.DGN | DN: GTH | CK: GTH | DW: BGD | CK: TGM | NEG: | |
|---|---|---|---|---|---|---|
| ©TxDOT 1995 | DIST | FED REG | FEDERAL AID PROJECT | | | SHEET |
| REVISIONS | SAT | 6 | NH 2000(704), etc. | | | 348 |
| | COUNTY | | CONTROL | SECT | JOB | HIGHWAY |
| | BEXAR | | 2452 | 01 | 036, etc. | LP 1604 |

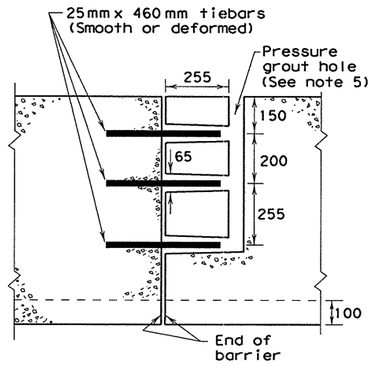


SECTION THROUGH ℄ AT JOINT
MALE-FEMALE DESIGN OPTION

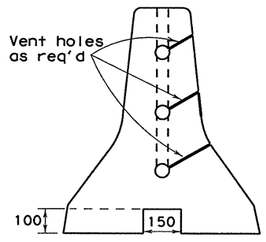


END VIEW
MALE-FEMALE DESIGN OPTION

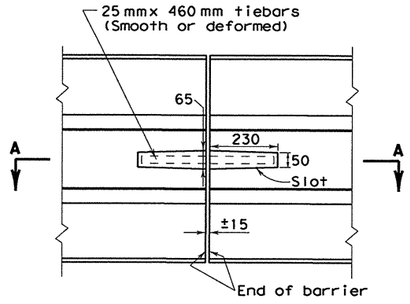


PLAN
SLOTTED DESIGN OPTION

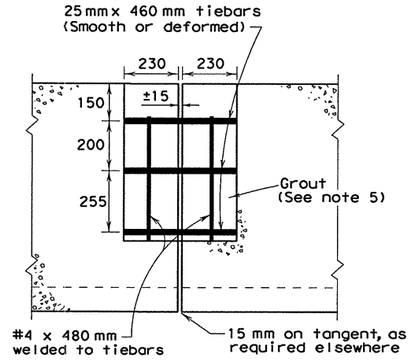


SECTION A-A (THROUGH ℄ AT JOINT)
SLOTTED DESIGN OPTION

## JOINT TYPE A

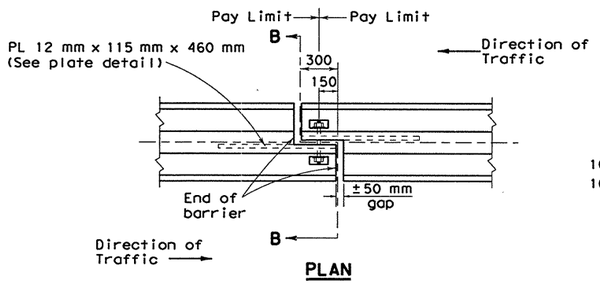


PLAN
END DETAIL

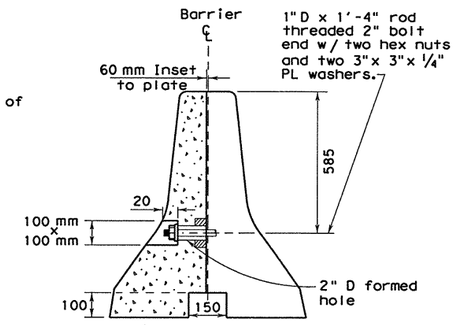


SECTION B-B

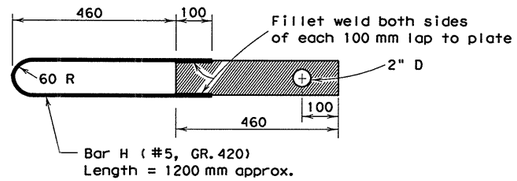


Note: Plates conform to
ASTM A36 steel

PLATE DETAIL

## JOINT TYPE B

### GENERAL NOTES

1. Where illumination is to be placed on concrete traffic barrier, a 3050 mm cast-in-place section shall be provided at each light pole location as shown on sheet CTBI(3). Ploe, anchor bolt, and other illumination details are shown on sheet CTBI(4).
2. Concrete shall be class C or H.
3. Regardless of the method of handling, barrier section lifting points shall be 1905 mm from the ends of the barrier. Lifting devices and attachments to barrier sections shall be as approved by the Engineer.
4. For joint Type A barrier that is installed in a temporary location, tiebars should be placed in the slot when the slot design option is used or, for the male-female design option, the male-female connections should be mated. Neither of the optional joint types should be grouted for temporary locations of barrier.
5. When installed in a permanent roadway location, end connections of the joint Type A barrier shall be grouted with a mixture of two parts sand and one part cement with enough water to make the mixture plastic. Grouting shall be done in a manner that will assure a smoth surface at the joint.
6. Surface finishing and grouting (where required) shall be considered subsidiary to the various bid items involved.
7. All steel fittings for Type B barrier shall be galvanized after fabrication.
8. Barrier length shall be 9140 mm ± unless specified elsewhere in the plans.
9. Forms shall be constructed of steel. Edges of barrier shall be rounded or chamfered as shown on sheet PCTB(2).
10. The contractor has the option of placing precast (joint Type A or B) or cast-in-place Type 2 Concrete Traffic Barrier as shown on sheet CTB(2) unless otherwise shown in the plans.

R = Radius
D = Diameter

All unit-less dimensions are millimeters

DISCLAIMER:
The use of this standard is governed by the "Texas Engineering Practice Act". No warranty of any kind is made by TxDOT for any purpose whatsoever. TxDOT assumes no responsibility for the conversion of this standard to other formats or for incorrect results or damages resulting from its use.

LEVELS DISPLAYED
11 13 14 15 16 17 18 19 10 11 12 13 14 15 16
17 18 19 20 21 22 23 24 25 26 27 28 29 30 31 32
33 34 35 36 37 38 39 40 41 42 43 44 45 46 47 48
49 50 51 52 53 54 55 56 57 58 59 60 61 62 63

Texas Department of Transportation
Design Division (Roadway)

© 2000

# PRECAST CONCRETE TRAFFIC BARRIER TYPE 2

## PCTB(1)-95(M)

| FILE: PCTB195M.DGN | DN: GTH | CK: GTH | DW: BGD | CK: TGM | NEG: | |
|---|---|---|---|---|---|---|
| © TxDOT 1995 | DIST | FED REG | FEDERAL AID PROJECT # | | | SHEET |
| REVISIONS | SAT | 6 | NH 2000(704),etc. | | | 349 |
| | COUNTY | | CONTROL | SECT | JOB | HIGHWAY |
| | BEXAR | | 2452 | 01 | 035,etc | LP 1604 |

Configurations of welded wire fabric other than as shown in the WWF Detail will be permitted when the conditions tabulated below are satisfied.

| DESCRIPTION | LONGITUDINAL WIRES | VERTICAL WIRES |
|---|---|---|
| 1. Wire type | Deformed | Smooth or Deformed |
| 2. Minimum (cumulative total) wire area | 800 sq. mm | 80 sq. mm per longitudinal 305 mm (req'd only in end 1015 mm of precast sections) |
| 3. No. of wires<br>Minimum<br>Maximum | <br>6<br>14 | <br>4 at 305 mm CC ea. precast end<br>12 at 102 mm CC ea. precast end |
| 4. Bending radius | n/a | Minimum radius = two vertical wire diameters |
| 5. Wire placement<br>a. Top wire | Not less than 4 nor more than 5 vertical wire dia. from the upper bends in the vertical wires | n/a |
| b. Bottom wire | 100 mm (±10 mm) from bottom of barrier | n/a |
| c. Other wires | Uniformly and symmetrically spaced along faces of barrier | Minimum spacing 102 mm<br>Maximum spacing 305 mm |
| 6. Maximum wire size differential | The smaller wire shall have an area of 40% or more of the larger wire. | |

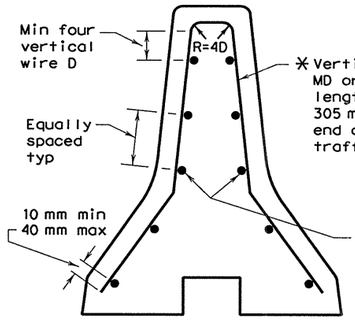


END VIEW

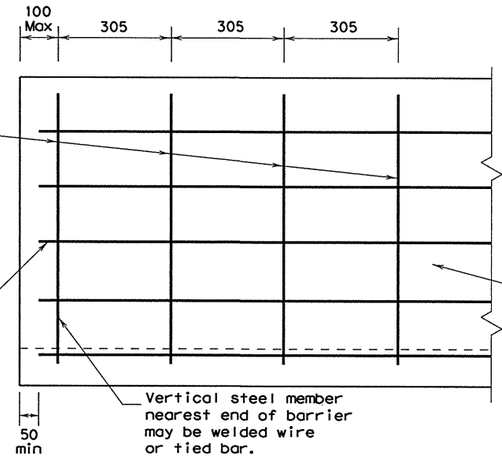


ELEVATION VIEW

Note: Detail shown is for MD80 longitudinal wires and MD or MW 90 vertical wires. Other size and spacing combinations meeting the tabulated conditions may be used.

Sufficient welded wire or auxiliary tied bar shall be placed vertically at locations as necessary to provide for cage stability. Minimally, one additional vertical steel reinforcement shall be located at the midpoint (±25 mm) of the barrier.

## DETAILS OF WELDED WIRE FABRIC OPTION

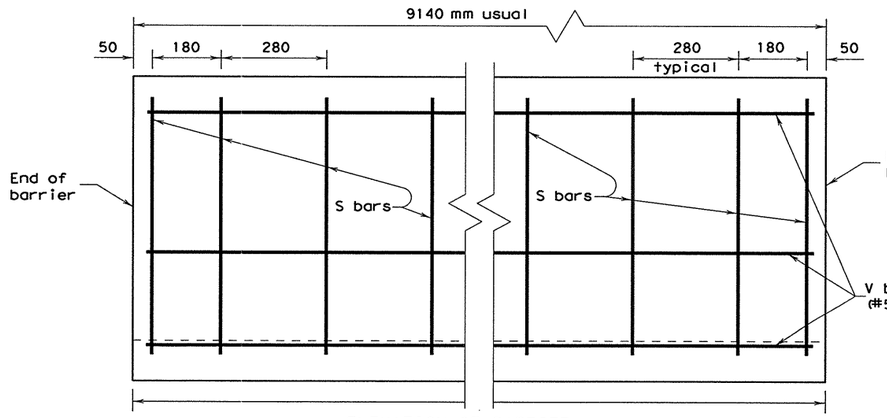


ELEVATION OF BARRIER

Additional vertical steel shall be provided as necessary to properly position steel and stabilize rebar cage.

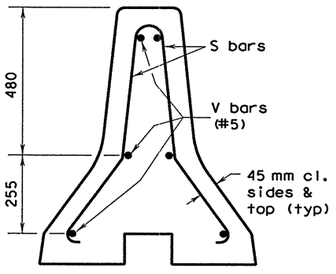


SECTION NEAR END OF BARRIER

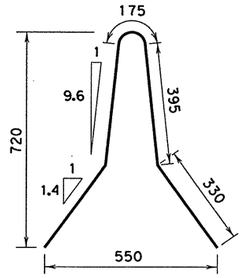


BARS S (#4) (Grade 300)

## DETAILS OF REBAR OPTION

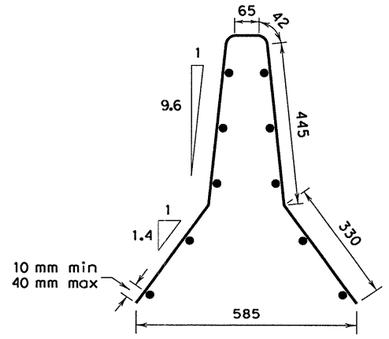


VERTICAL WIRE DETAILS

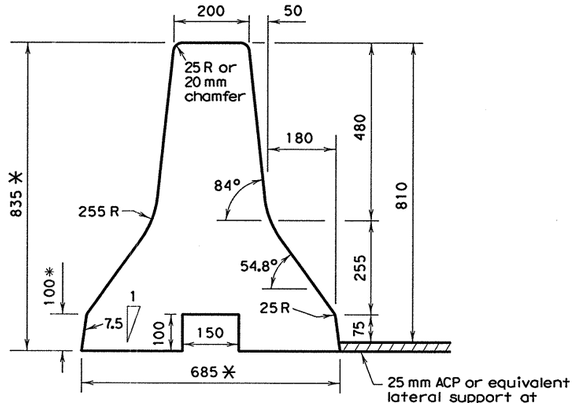


DETAIL OF BARRIER SHAPE

* When 25 mm ACP is not used for lateral support, these dimensions shall be adjusted accordingly.

R = Radius
D = Diameter

All unit-less dimensions are millimeters

## GENERAL NOTES

1. Where used, rebar reinforcement shall conform to ASTM A-615 (Grade 300).
2. Barrier length shall be 9140 mm ± unless otherwise specified in plans.
3. All concrete, reinforcement, joint connection systems, grout, and etc. as shown are considered as part of the barrier for payment.

| # Approximate P.L.M. quantities | | |
|---|---|---|
| Concrete | $m^3$ | 0.3 |
| Rebar | kg | 10 |
| Welded wire fabric | kg | 7 |

# For Contractor's information only
Weight of one 9140 mm unit = approximately 6500 kg

Texas Department of Transportation
Design Division (Roadway)

©2000

# PRECAST CONCRETE TRAFFIC BARRIER TYPE 2

# PCTB(2)-95(M)

| FILE: PCTB295M.DGN | DN: GTH | CK: GTH | DW: RAR | CK: TGM | NEG: | |
|---|---|---|---|---|---|---|
| ©TxDOT 1995 | DIST | FED REG | FEDERAL AID PROJECT • | | | SHEET |
| REVISIONS | SAT | 6 | NH 2000(704),etc. | | | 350 |
| | COUNTY | | CONTROL | SECT | JOB | HIGHWAY |
| | BEXAR | | 2452 | 01 | 036,etc. | LP 1604 |

DISCLAIMER:
The use of this standard is governed by the "Texas Engineering Practice Act". No warranty of any kind is made by TxDOT for any purpose whatsoever. TxDOT assumes no responsibility for the conversion of this standard to other formats or for incorrect results or damages resulting from its use.

LEVELS DISP... 0
1 3 4 5 6 7 8 9 10 11 12 13 14 15 16
1 71 81 91 02 12 22 32 42 52 62 72 82 93 03 13 23
33 43 53 63 73 83 94 04 14 24 34 44 54 64 74 84 8
49 50 51 52 53 54 55 56 57 58 59 60 61 62 63

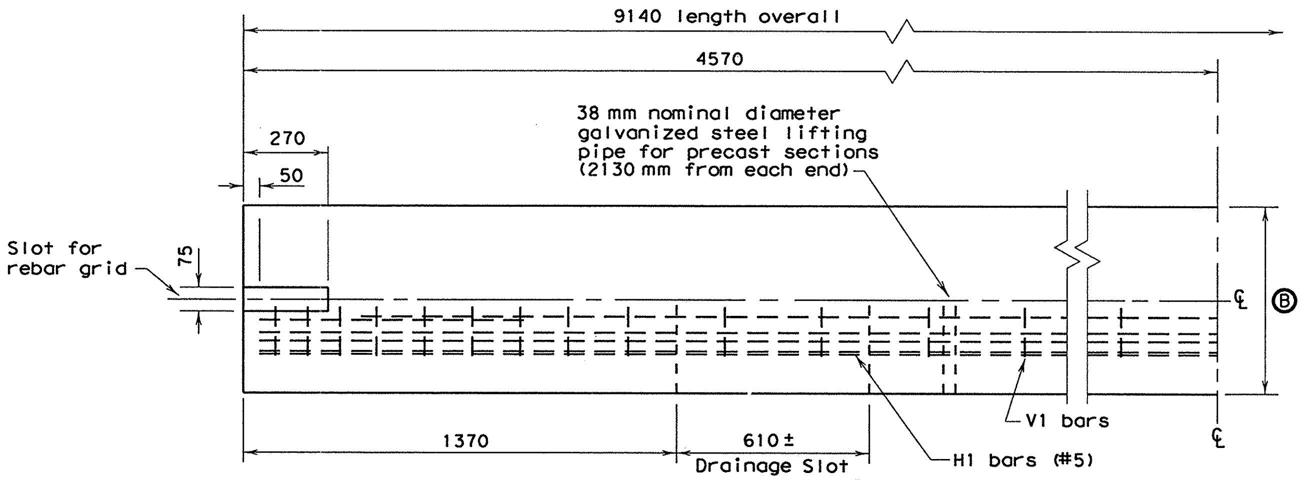


**PLAN VIEW**

**(SYMMETRICAL ABOUTCENTER LINE)**

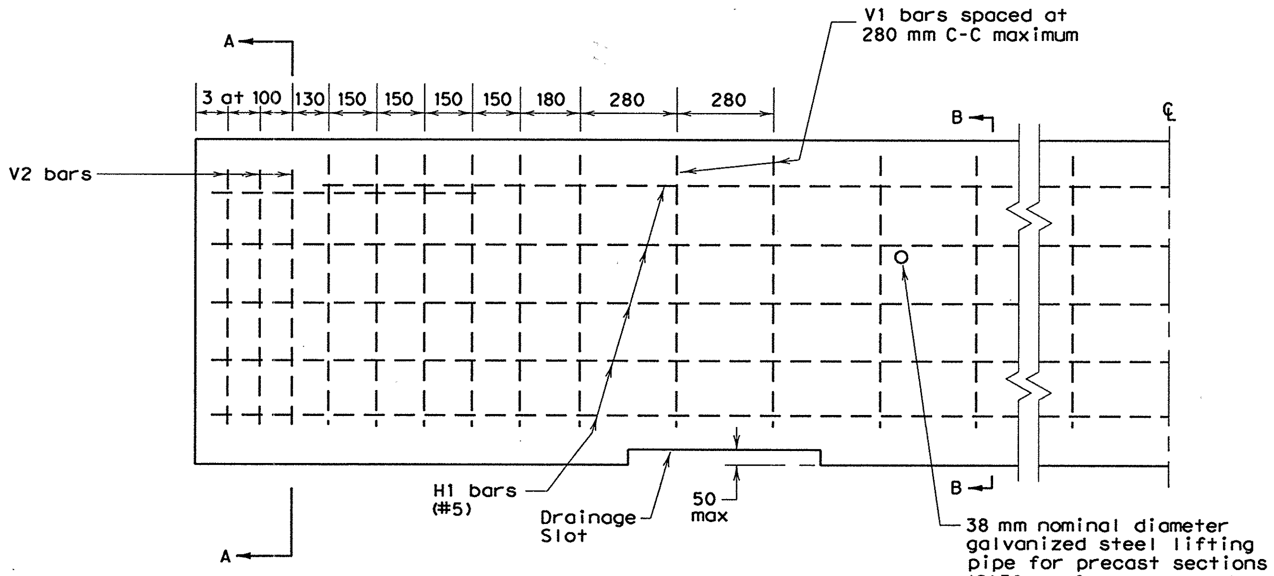


**ELEVATION**

**(SYMMETRICAL ABOUT CENTERLINE)**

When precast barrier is to be used with the welded wire fabric option, conventional bar reinforcement will be required within 610 mm, plus a development length of 460 mm, from the ends of each barrier segment.

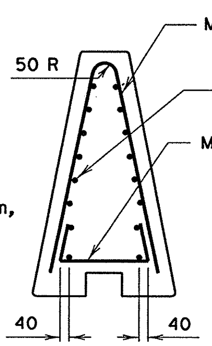


Welded wire fabric
P x 305-MD130 x MD90
420 MPa minimum yield strength

**END VIEW**

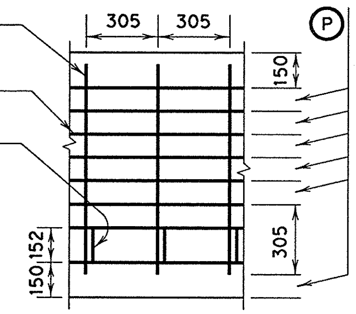


**SIDE VIEW**

**WELDED WIRE FABRIC OPTIONAL REINFORCING**

## GENERAL NOTES

1. Barrier length shall be 9140 mm (±25 mm) unless otherwise specified in the plans.
2. The usual temporary installation will require the placement of the rebar grid in the ungrouted slot. The usual permanent installation using precast barrier will connect the barrier segments with the rebar grid placed in the slot and grouted in place.
3. When installed in a permanent roadway location, the end connections of the precast barrier shall be grouted with a mixture of two parts sand and one part cement with enough water to make the mixture plastic. Grouting shall be done in a manner that will assure a smooth surface at the joint.
4. All concrete shall be class C or H, unless otherwise specified.
5. All reinforcing steel shall be Grade 420, unless otherwise specified.
6. Each precast barrier to be installed in a temporary location shall be delivered with a rebar grid.
7. Chamfer top and end edges 20 mm.
8. Unless otherwise shown in the plans, the Contractor has the option of placing either precast or cast-in-place permanent concrete barrier. Cast-in-place barrier may be slip formed. Additional reinforcement may be tack welded to the upper two-thirds of the reinforcing cage to provide bracing. Additional vertical bars shall be provided only to the extent necessary to position longitudinal steel within tolerances. Lifting pipe, rebar grid and slot shall be omitted for cast-in-place construction.
9. Bar splices for roadway barrier shall be a minimum of 24 times the nominal diameter of the bar.
10. Any method devised by the Contractor and approved by the Engineer that will assure the longitudinal roadway steel will be positioned ±10 mm as dimensioned will be satisfactory.
11. Welded wire fabric may be used as an option to conventional reinforcement for precast or cast-in-place barrier. Welded wire fabric shall be made in accordance with ASTM A 497.
12. Conduit will be provided only when called for elsewhere in the plans. The position of the conduit or conduit passageway may be adjusted to facilitate construction, subject to approval of the Engineer.
13. Transitions to barrier height, as needed, shall be determined by the Engineer. Changes in barrier height should not normally exceed 50 mm per 9140 mm. Vertical steel shall be uniformly transitioned throughout the variation in barrier height as directed by the Engineer.
14. A 920 mm minimum height differential between top of barrier and top of ACP shall be required at placement in order to allow for up to 150 mm of future overlays while maintaining a 770 mm minimum future effective height of barrier. Total minimal barrier height for design is therefore dictated by allowance for future overlays plus existing stairstep dimension "S". Minimums typically rounded to 1070 mm, 1220 mm, or 1370 mm to facilitate precasting.

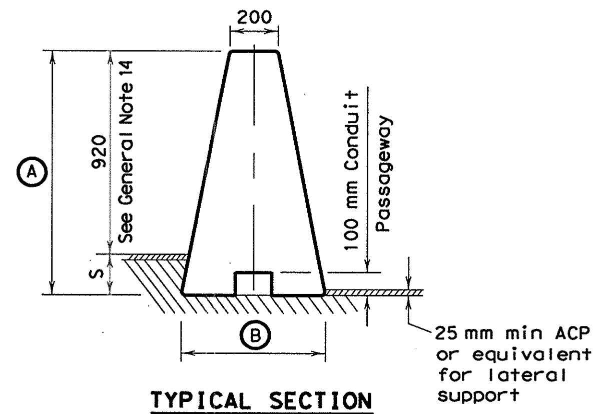


**TYPICAL SECTION**

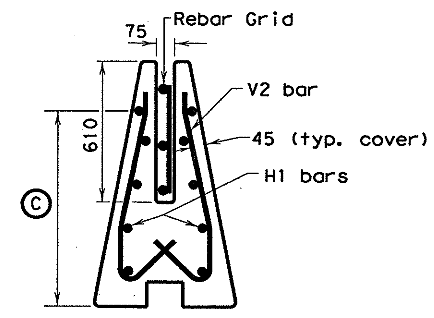


**SECTION A-A**

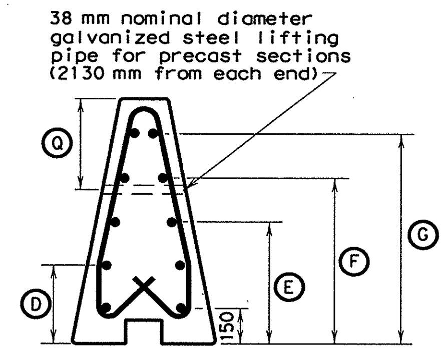


**SECTION B-B**

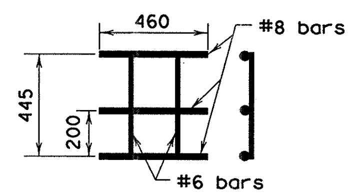


**REBAR GRID**

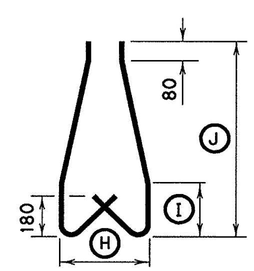


**V2 BAR (#4)**

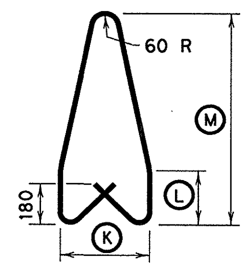


**V1 BAR (#4)**

**REINFORCING DETAILS**

R = Radius
D = Diameter

All unit-less dimensions are millimeters

| BARRIER HEIGHT | DIMENSIONS | | | | | | | | | | | | | | | |
|---|---|---|---|---|---|---|---|---|---|---|---|---|---|---|---|---|
| Ⓐ | Ⓑ | Ⓒ | Ⓓ | Ⓔ | Ⓕ | Ⓖ | Ⓗ | Ⓘ | Ⓙ | Ⓚ | Ⓛ | Ⓜ | Ⓝ | Ⓞ | Ⓟ | Ⓠ |
| 1070 | 608 | 850 | 345 | 535 | 720 | 920 | 380 | 235 | 845 | 380 | 235 | 920 | 1830 | 710 | 102 | 395 |
| 1220 | 665 | 1000 | 385 | 610 | 835 | 1070 | 435 | 275 | 995 | 435 | 275 | 1070 | 2140 | 800 | 102 | 430 |
| 1370 | 722 | 1150 | 425 | 685 | 950 | 1220 | 490 | 315 | 1145 | 490 | 315 | 1220 | 2440 | 890 | 152 | 380 |

DISCLAIMER:
The use of this standard is governed by the "Texas Engineering Practice Act". No warranty of any kind is made by TxDOT for any purpose whatsoever. TxDOT assumes no responsibility for the conversion of this standard to other formats or for incorrect results or damages resulting from its use.

*Texas Department of Transportation*
*Design Division (Roadway)*

© 2000

# SINGLE SLOPE CONCRETE BARRIER TYPE 2

# SSCB(2)-99(M)

| FILE: SSCB299M.DGN | DN: GTH | CK: GTH | DW: BGD | CK: TGM | NEG: |
|---|---|---|---|---|---|
| © TxDOT 1995 | DIST | FED REG | FEDERAL AID PROJECT • | | SHEET |
| REVISIONS | SAT | 6 | NH 2000(704),etc. | | 351 |
| | COUNTY | | CONTROL / SECT / JOB | | HIGHWAY |
| | BEXAR | | 2452 / 01 / 036.etc. | | LP 1604 |

DISCLAIMER:
The use of this standard is governed by the "Texas Engineering Practice Act". No warranty of any kind is made by TxDOT for any purpose whatsoever. TxDOT assumes no responsibility for the conversion of this standard to other formats or for incorrect results or damages resulting from its use.

ACC: (LV=1,2 for English; 1,3 for Metric)

LEVELS DISC: 1 | 3

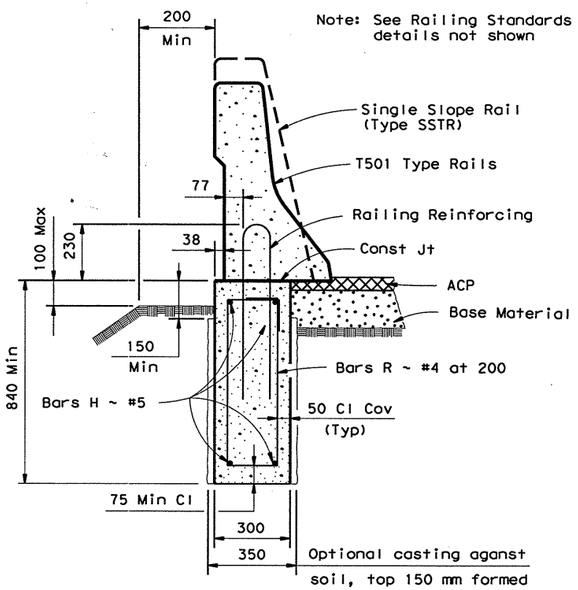


## WIDE BASE RAILING
## T501, T502, C501, C502 & SSTR

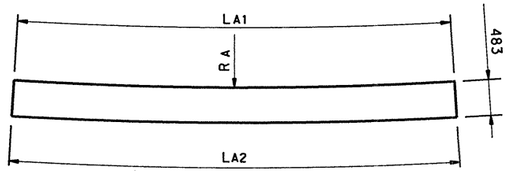


DEVELOPED SURFACE - A
(T501 TYPE)

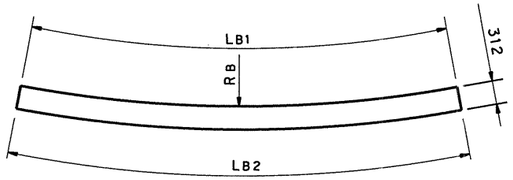


DEVELOPED SURFACE - B
(T501 TYPE)

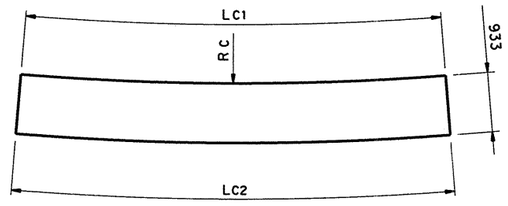


DEVELOPED SURFACE - C
(SSTR)

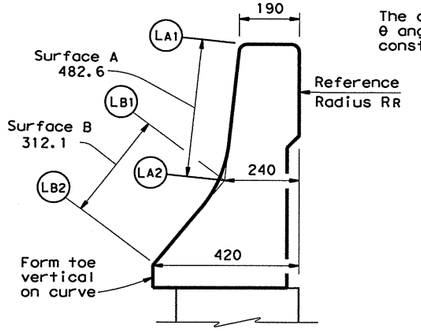


SECTION A-A
(T501 TYPE RAILS)

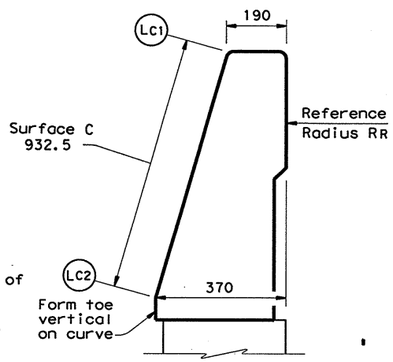


SECTION A-A
(SSTR)

## TABLE OF DEVELOPED SURFACES
### DIMENSIONS FOR θ = 90°

| Reference Radius R (mm) to back of Rail | T501 TYPE RAILS | | | | | | SSTR | | |
|---|---|---|---|---|---|---|---|---|---|
| | Radius | Arc Length | | Radius | Arc Length | | Radius | Arc Length | |
| | RA mm | LA1 mm | LA2 mm | RB mm | LB1 mm | LB2 mm | RB mm | LB1 mm | LB2 mm |
| 3,000 | 30,790 | 5,011 | 5,089 | 5,618 | 5,089 | 5,372 | 16,527 | 5,011 | 5,294 |
| 4,500 | 45,268 | 7,367 | 7,446 | 8,219 | 7,446 | 7,728 | 24,298 | 7,367 | 7,650 |
| 6,000 | 59,746 | 9,723 | 9,802 | 10,820 | 9,802 | 10,084 | 32,069 | 9,723 | 10,006 |
| 7,500 | 74,223 | 12,079 | 12,158 | 13,421 | 12,158 | 12,441 | 39,840 | 12,709 | 12,362 |
| 9,000 | 88,701 | 14,436 | 14,514 | 16,022 | 14,514 | 14,797 | 47,611 | 14,436 | 14,718 |

RA = 9.65194 (RR+190) RB = 1.7340 (RR+240) RC = 5.1808 (RR+190)
LA1 = 1.5708 (RR+190) LB1 = 1.5708 (RR+240) LC1 = 1.5708 (RR+190)
LA2 = 1.5708 (RR+240) LB2 = 1.5708 (RR+420) LC2 = 1.5708 (RR+370)

The above arc length dimensions may be linearly ratioed for included θ angles other than 90°. The dimensions are intended as an aid in constructing forms for curved SSTR & Type T501 Railing.

Example: For RR = 3,000 mm & 80° ~ LA1 = 5,011 (8/9)

**DESIGN NOTES:**
The curved end treatment at bridge ends should only be used in areas where traffic speed is 64 km/h or less.

**GENERAL NOTES:**

The foundations indicated are suitable for mounting typical concrete bridge barrier type railings. The design resistance is based on the current AASHTO bridge railing requirements with the assumption of fair to good soil support conditions. Poor soil conditions will require suitably deeper foundations.

The primary use of the curved railing detail is to avoid the necessity of curved MBGF at the ends of bridges adjacent to grade intersections.

All concrete shall be Class C or better and all reinforcement shall be Grade 420.

This detail is intended for use as a guide to unusual railing anchorage situations but may be included in the plans, modified as necessary to apply to specific installations required on the project.

Payment for railing foundations will be by cubic meters of Class C concrete.

The associated bridge railing will be paid for by the linear meter which includes the concrete and reinforcement.

Excavation will be considered subsidiary to other items.

All dimensions are in millimeters unless otherwise shown.

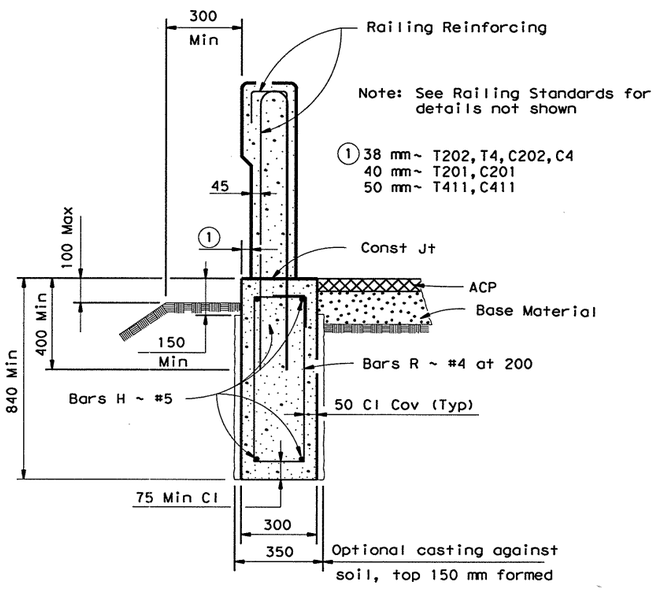


## NARROW BASE RAILING
## T201, T202, T4, T411, C201, C202, C4 & C411

Note: The above footings have approximately 0.25 m³/m of concrete and 16.03 Kg/m of reinforcement

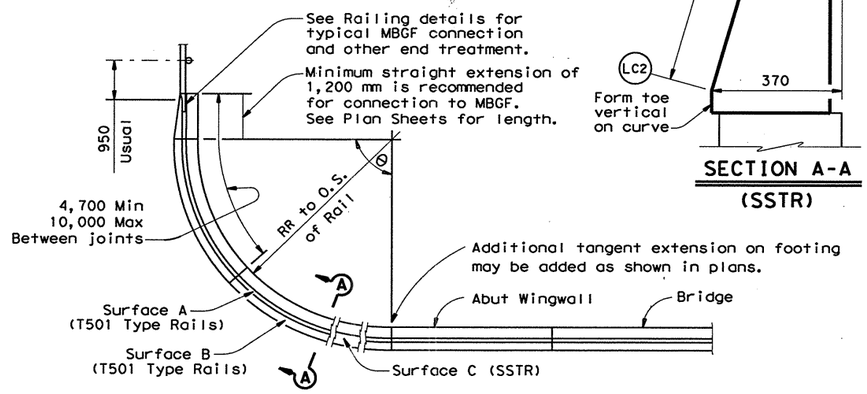


## CURVED SSTR & T501 TYPE RAILING AT BRIDGE ENDS

Texas Department of Transportation
Design Division (Bridge)

©2000

# TRAFFIC RAILING FOUNDATIONS AND MISCELLANEOUS DETAILS

## TRF (M)

| FILE: rlstd023.dgn | DN: JJP | CK: MPM | DW: DRG | CK: LDS | STD: BS88M |
|---|---|---|---|---|---|
| ©TxDOT January 1996 | DIST | FED REG | FEDERAL AID PROJECT • | | SHEET |
| REVISIONS | SAT | 6 | NH 2000(704), etc. | | 32 |
| | COUNTY | | CONTROL | SECT | JOB | HIGHWAY |
| | BEXAR | | 2452 | 01 | 036, etc. | LP 1604 |

✱ Post spacing of 1905 may be used on the downstream (from a traffic flow standpoint) end of MBGF placed on roadways with one-way traffic operations.

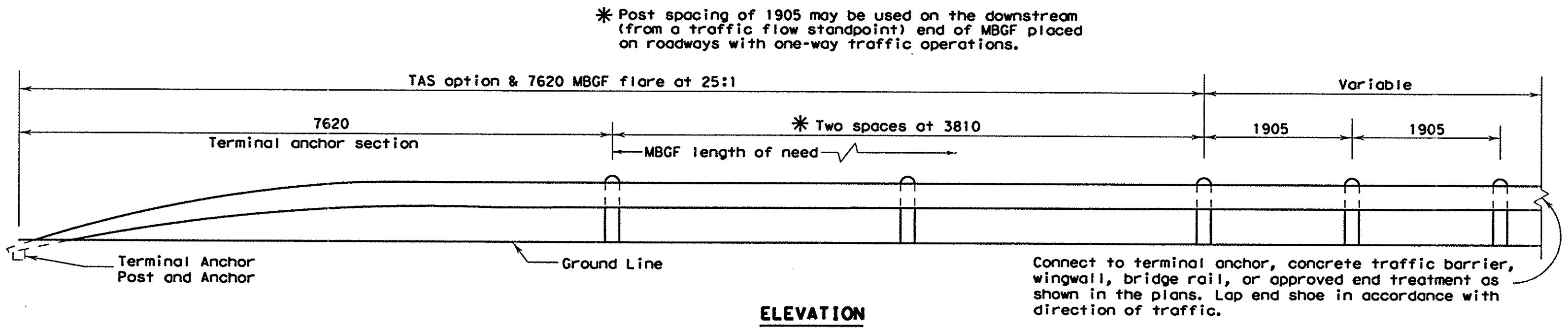


**ELEVATION**

Note ①: Where a nominal length of 1830 is specified as acceptable elsewhere in the plans, these dimensions shall be increased by 135. The additional length should be specified only on roadways where future ACP overlays and adjustments of the rail height on the same posts are likely.

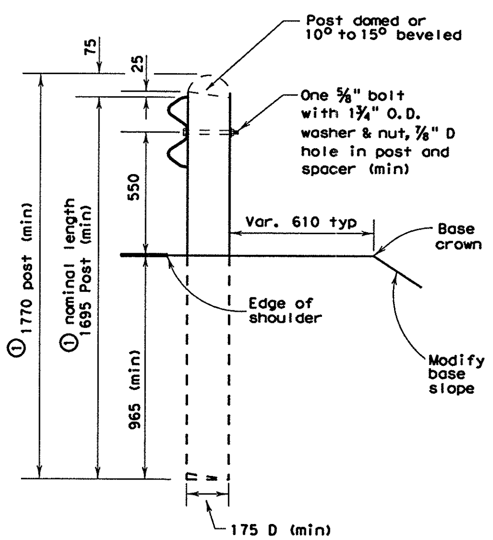


**WOOD POST**

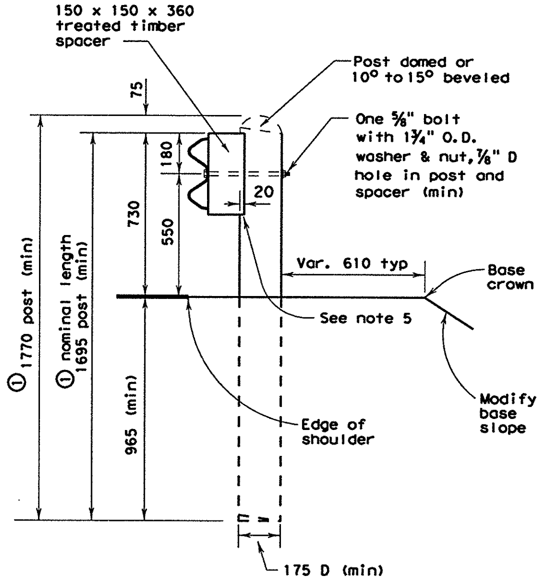


**WOOD POST (Blockout)**

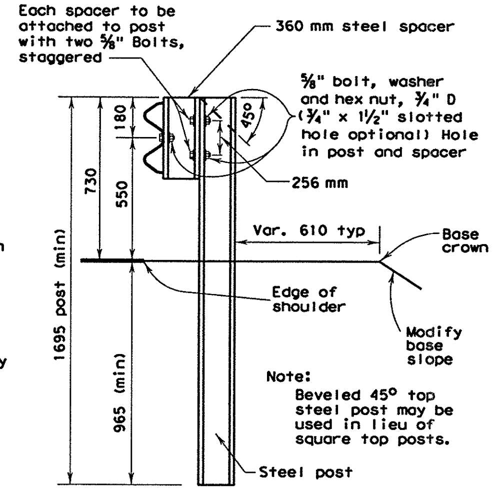


**STEEL POST (Blockout)**

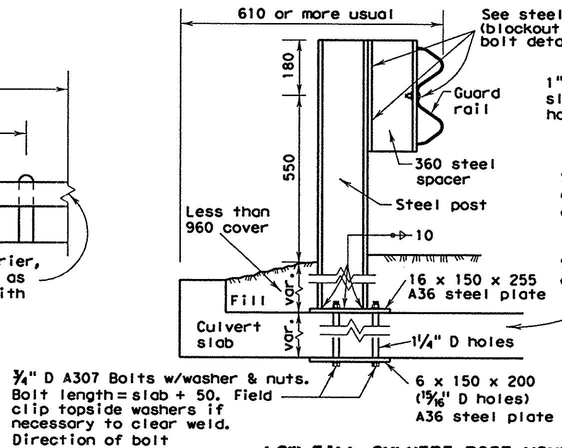


**LOW FILL CULVERT POST MOUNTING OPTION**

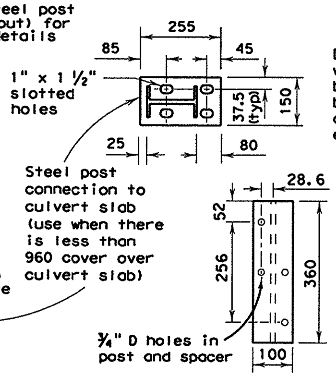


**SPACER**

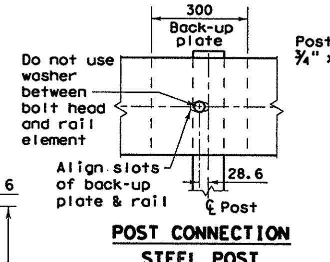


**POST CONNECTION STEEL POST**

Non-splice steel post only

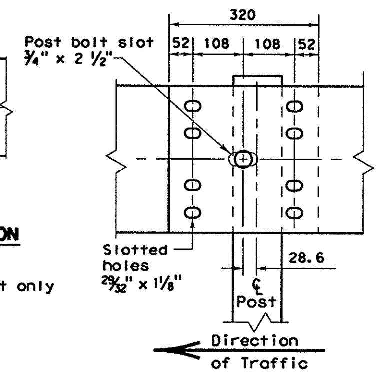


**RAIL SPLICE**

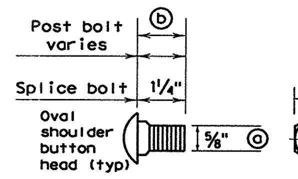


**CONNECTOR DETAIL**

ⓐ ⅞" hex bolts required for terminal connector

ⓑ 1¼" spacer to steel post hex bolt. 2" rail to spacer button head bolt.

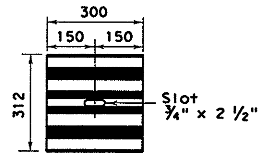


**BACK-UP PLATE**

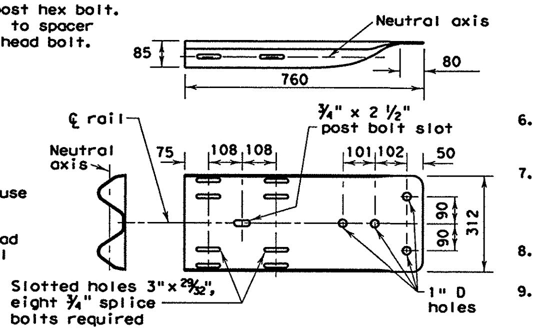


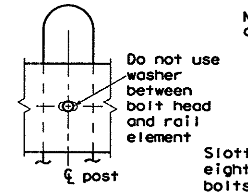


**POST CONNECTION WOOD POST**

**TERMINAL CONNECTOR**

(3.43 Section Width)

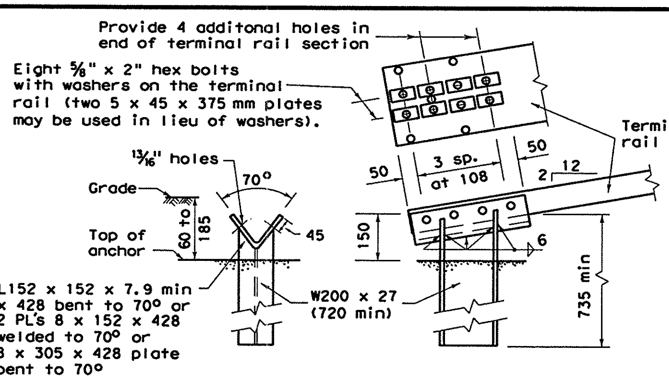


Note: This post requires four additional holes (shop or field) in the terminal rail member with eight ⅝" bolts and washer plates as shown for attachment.

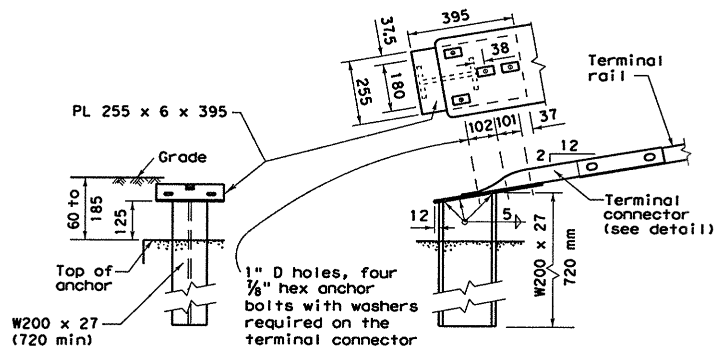


Note: This optional post requires the use of the 10 gauge terminal connector with four ⅞" hex bolts for attachment to the anchor post.

**TERMINAL ANCHOR POST OPTIONS**

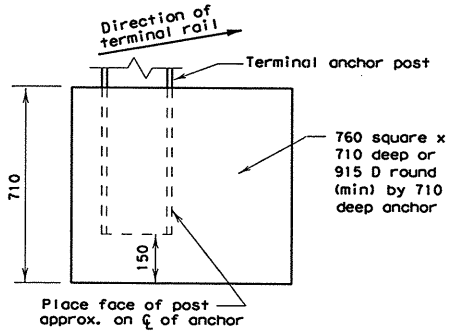


Notes: Either post may be used with either anchor.

No construction joint is allowed in the concrete anchor.

Terminal rail may be bolted to post and in twist position prior to placing concrete anchor.

If concrete anchor is precast, the area should be compacted as directed by the Engineer, when placed in the field.

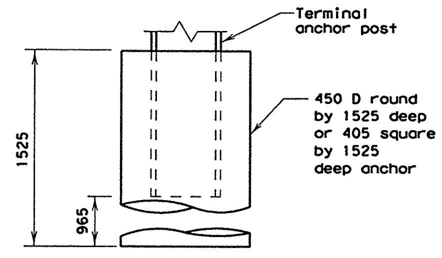


**TERMINAL CONCRETE ANCHOR OPTIONS**

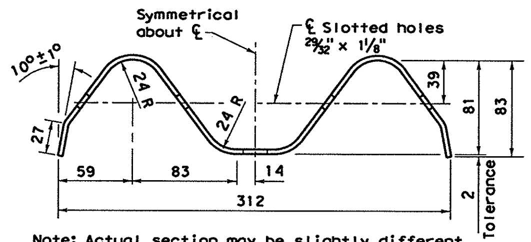


Note: Actual section may be slightly different depending upon the manufacturer.

**SECTION THRU GUARD RAIL**

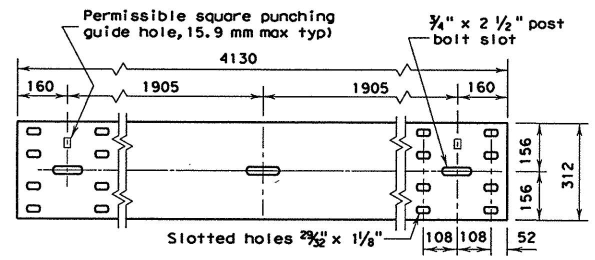


**ELEVATION OF NOMINAL 3810 mm GUARD RAIL**

(7620 mm sections may also be supplied)

GENERAL NOTES

1. The exact position of guard fence shall be as shown elsewhere on the plans or as directed by the Engineer. Guard fence shall be transitioned to a smooth connection with other guard fence or structure railing as shown elsewhere on plans.
2. Unless otherwise shown in the plans, guard fence placed in the vicinity of curbs shall be blocked out so that the face of curb is located directly below or behind the face of rail. Rail placed over curbs shall be installed so that the post bolt is located approximately 550 mm above the gutter pan or roadway surface.
3. Unless otherwise shown in the plans, MBGF shall be placed with the face of rail directly above the shoulder edge (or curbface) except the 7620 mm Terminal Anchor Section and adjacent 7620 mm of MBGF shall be flared at 25:1 (longitudinal:lateral) to provide a 600 mm offset between buried anchor and shoulder edge (or curbface). Flaring the 7620 mm Terminal Anchor and adjacent 7620 mm MBGF is optional for one-way traffic conditions on the downstream end of guard fence.
4. At the option of the Contractor, the rail elements for the guard fence may be be furnished in either 3810 mm or 7620 mm nominal lengths with post bolt slots for connection to posts.
5. Timber posts may be beveled from 10 to 15 degrees on the top of both ends with high side of top of post placed toward the roadway or they may be domed. When blockout guard fence is specified elsewhere in the plans, a 150 mm x 150 mm x 360 mm treated timber spacer of yellow pine shall be used with wood posts. When "blocked out", the upper portion of the post shall be notched 20 mm to provide flat surface for timber spacer. A tolerance of ±3 mm will be permitted on the notched portion of the post. Routing the timber spacer may be used in lieu of notching the post. The depth of routing shall be 20 mm at the center of radius ±3 mm.
6. Steel posts shall be blocked out. Steel posts and spacers shall meet the requirements of ASTM A-36 (W150 x 13.5 or W150 x 12.6). Bolt holes shall be placed as indicated on Spacer detail.
7. Post spacing will be 1905 mm except that the first post will be 7620 mm from the terminal anchor post and the next two posts spaced at 3810 mm with a minimum of 8 posts adjacent to structures spaced at 952.5 mm and posts adjacent to Type T6 bridge rail are spaced at 1905 mm. Post spacing adjacent to structures may vary as shown on bridge rail details or as directed by the Engineer.
8. The upper 250 mm (minimum) of the terminal anchor post and all steel fittings thereon shall be galvanized.
9. The terminal anchor post shall be set in Class "A" concrete (unless otherwise shown on plans) in accordance with Item, "Portland Cement Concrete". Concrete shall be subsidiary to the bid item requiring construction of the terminal rail section and anchorage system.
10. An anchor other than to a terminal anchor post shall consist of a connection similar to the rail splice or similar to the terminal connector.
11. Back-up plates shall be provided at intermediate (non-splice) steel posts. Back-up plates shall conform to the materials and galvanizing requirements specified for the rail element, and shall be of the same nominal thickness as the rail element used.
12. Washers used with the eight ⅝" splice bolts and nuts that are provided for terminal connectors and/or anchor posts shall be ¾" x 3" x 3/16" rectangular washers (ASTM A 36) or as designated by the Engineer.
13. The 10 Gauge terminal connectors must be used with the optional terminal anchor post. Either anchor post may be used with either concrete anchor.
14. Welded steel posts and spacers shall meet the requirements of ASTM A-36. The flange width and thickness, web thickness, and depth of welded posts and spacers shall equal or exceed the dimensions of a standard rolled W150 x 13.5 or W150 x 12.6.
15. Special fabrication will be required at installations having a curvature of less than 45 meter radius.
16. Bolts shall be of sufficient length to extend through the full thickness of the nut and no more than 20 mm beyond it. (Button head bolts may be used instead of hex bolts when specified by the Engineer.) Fittings (bolts, nuts, and washers) shall be in accodance with Item, "Metal For Structures". Fittings shall be subsidiary to the bid item requiring construction of MBGF or Terminal Anchor Section.
17. Crown will be widened to accommodate guard fence.
18. Where solid rock is encountered or where shown on the plans, the diameter of the holes shall be approximately 305 mm, the backfilling shall be with a cohesionless material, and embedment depth shall be 460 mm or more as directed by the Engineer. Timber posts shall not be set in concrete.

R = Radius
D = Diameter

All unit-less dimensions are millimeters

DISCLAIMER:
The use of this standard is governed by the "Texas Engineering Practice Act". No warranty of any kind is made by TxDOT for any purpose whatsoever. TxDOT assumes no responsibility for the conversion of this standard to other formats or for incorrect results or damages resulting from its use.

Texas Department of Transportation
Design Division (Roadway)

© 2000

# METAL BEAM GUARD FENCE

# MBGF-95A(M)

| FILE: MBGF95AM.DGN | DN: GTH | CK: GTH | DW: RAR | CK: TGM | NEG: |
|---|---|---|---|---|---|
| © TxDOT 1995 | DIST | FED REG | FEDERAL AID PROJECT • | | SHEET |
| REVISIONS | SAT | 6 | NH 2000(704), etc. | | 353 |
| | COUNTY | | CONTROL / SECT / JOB | | HIGHWAY |
| | BEXAR | | 2452 / 01 / 036, etc. | | LP 1604 |

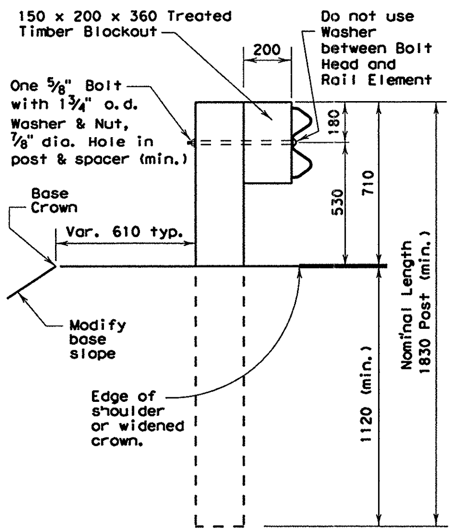


**TYPICAL POST**

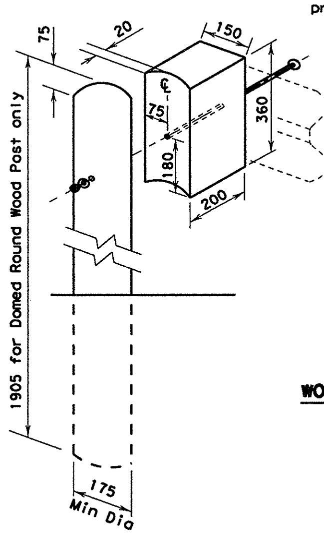


**WOOD BLOCKOUT TO ROUND WOOD POST DETAIL**

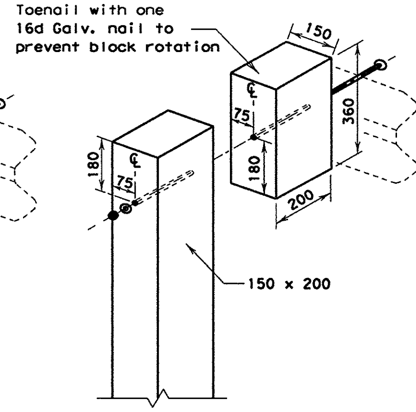


**WOOD BLOCKOUT TO RECTANGULAR WOOD POST DETAIL**

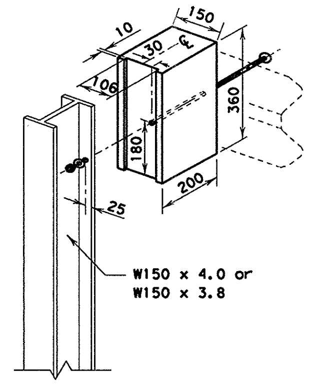


**WOOD BLOCKOUT TO STEEL POST DETAIL**

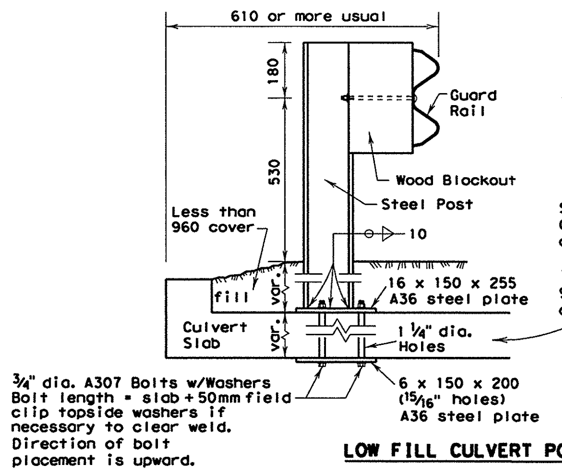


**LOW FILL CULVERT POST MOUNTING OPTION**

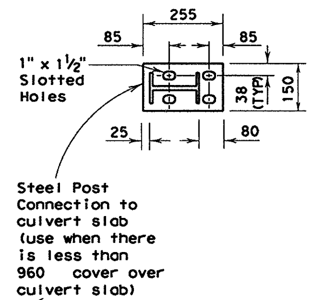


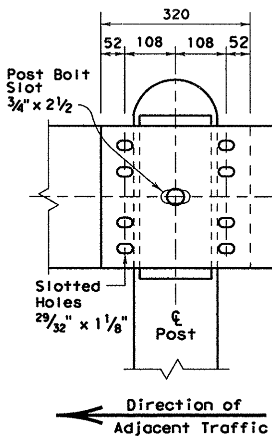


**RAIL SPLICE**

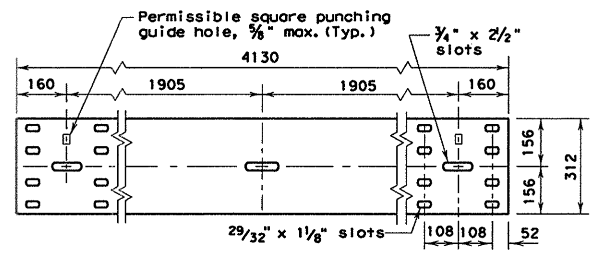


**ELEVATION OF NOMINAL 3810 mm FOOT GUARD RAIL**

(7620 mm sections may also be supplied)

## GENERAL NOTES

1. The exact position of guard fence shall be as shown elsewhere on the plans or as directed by the Engineer. Guard fence shall be transitioned to a smooth connection with other guard fence or structure railing as shown elsewhere on plans.
2. Rail element shall meet all requirements of AASHTO M-180 except as modified on the plans. The terminal connectors shall be of the same material, but shall not be less than 10 gauge.
   Contractor shall verify that the locations of bolt holes match those in the Terminal Connector prior to ordering of materials.
3. Unless otherwise shown in the plans, guard fence placed in the vicinity of curbs shall be blocked out so that the face of curb is located directly below or behind the face of the blockout. Rail placed over curbs shall be installed so that the post bolt is located approximately 550 mm above the gutter pan or roadway surface.
4. Unless otherwise shown in the plans, MBGF shall be placed with the face of rail directly above the shoulder edge (or curbface) except for upstream end treatments.
5. At the option of the Contractor, the rail elements for the guard fence may be furnished in either 3810 mm or 7620 mm nominal lengths with post bolt slots for connection to posts.
6. The terminal anchor post shall be set in Class "A" concrete in (unless otherwise shown on plans) in accordance with Item, "Portland Cement Concrete". Concrete shall be subsidiary to the bid item requiring construction of the terminal rail section and anchorage system.
7. An anchor other than to a terminal anchor post shall consist of a connection similar to the rail splice or similar to the terminal connector.
8. Galvanized washers used with the eight ⅝" splice bolts and nuts that are provided for terminal connectors and/or terminal anchor posts shall be 1 ¾" x 3" x 3/16", or 1" i.d. and 2" o.d. x 0.134" (ANSI B27.2) narrow Type A plain washers.
9. Special fabrication will be required at installations having a curvature of less than 45 meter radius.
10. Bolts shall be of sufficient length to extend through the full thickness of the nut and no more than 20 mm beyond it. (Button head bolts may be used instead of hex bolts when specified by the Engineer.) Fittings (bolts, nuts, and washers) shall be in accordance with Item, "Metal For Structures". Fittings shall be subsidiary.
11. Crown will be widened to accommodate guard fence.
12. If guardrail is placed on a side slope away from the pavement edge, then the slope rate between the edge of the pavement and the face of the barrier will be 1V:10H or flatter.
13. Posts shall not be set full depth in concrete.
14. Where solid rock is encountered or where shown on the plans, the diameter of the holes shall be approximately 305 mm, the backfilling shall be with a cohesionless material, and embedment depth shall be 460 mm or more as directed by the Engineer.
15. Unless otherwise directed by the Engineer, a composite material post and/or blockout from the Department approved list of suppliers may be substituted for a post or blockout of similar dimensions. The list of approved suppliers of blockouts will be maintained by the Construction Division, TxDOT.

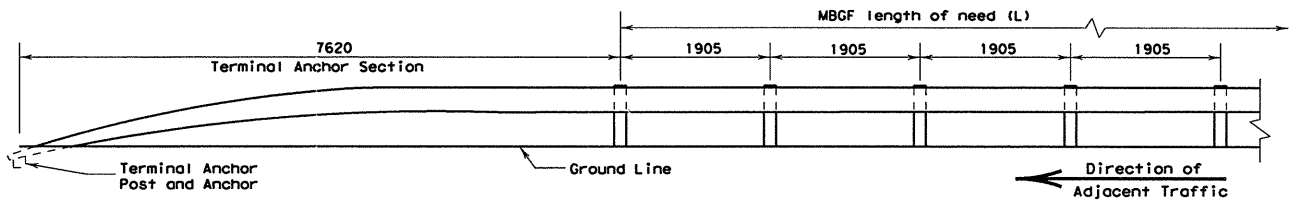


**ELEVATION FOR TERMINAL ANCHOR SECTION**

(Terminal anchor sections are only for downstream guardrail end anchorage usage outside the horizontal clearance area of opposing traffic)

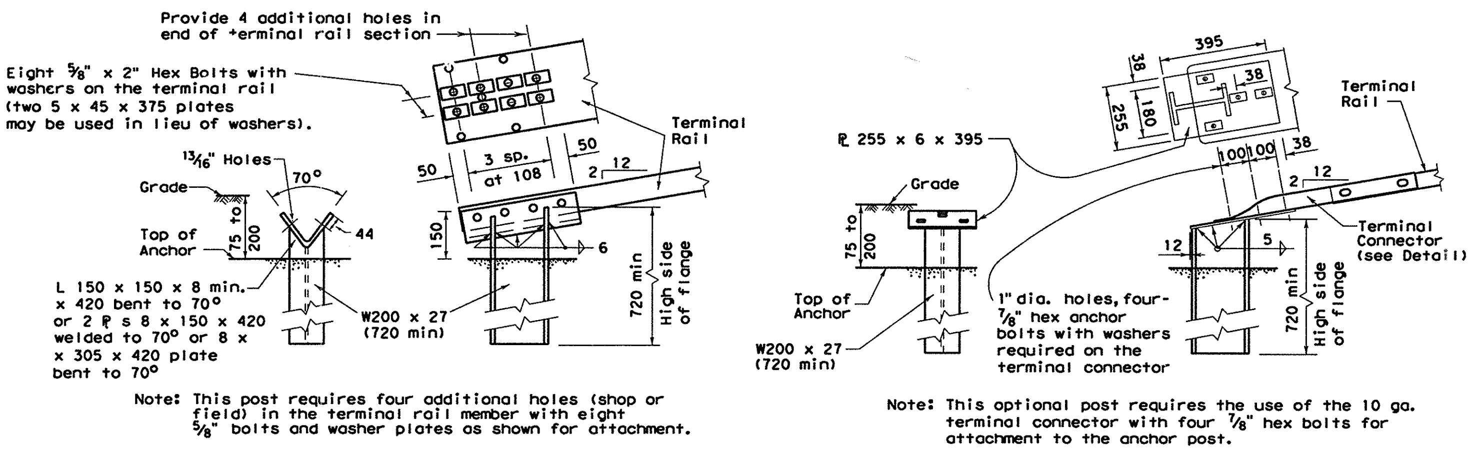


**TERMINAL ANCHOR POST OPTIONS**

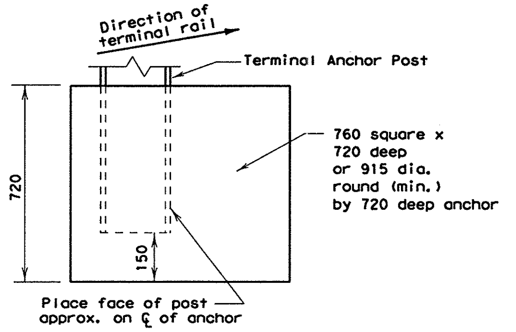


Notes: Either post may be used with either anchor.

No construction joint is allowed in the concrete anchor.

Terminal rail may be bolted to post and in twist position prior to placing concrete anchor.

If concrete anchor is precast, the area should be compacted as directed by the Engineer, when placed in the field.

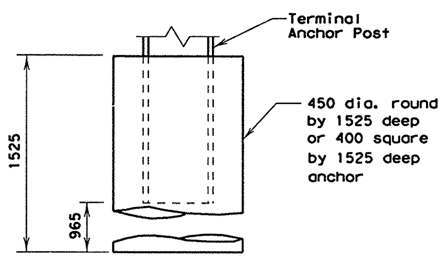


**TERMINAL CONCRETE ANCHOR OPTIONS**

Ⓐ 1 ¼" spacer to steel post hex bolt. 2" rail to spacer button head bolt.

Ⓑ (⅞" hex bolts required for terminal connector)

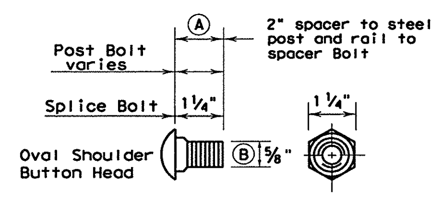


**CONNECTOR DETAIL**

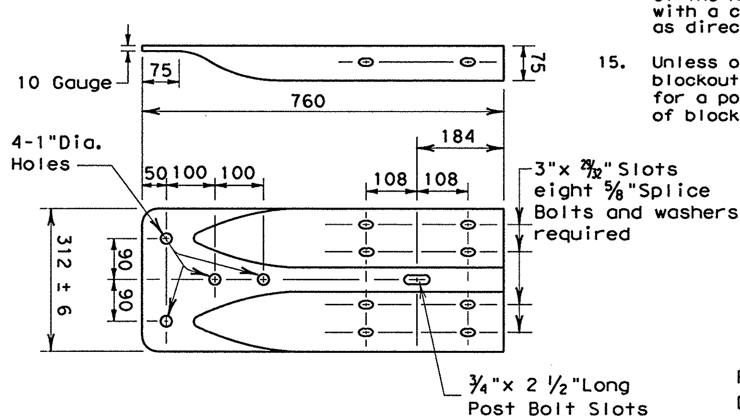


**TERMINAL CONNECTOR**

R = Radius
D = Diameter

All unit-less dimensions are millimeters

DISCLAIMER:
The use of this standard is governed by the "Texas Engineering Practice Act". No warranty of any kind is made by TxDOT for any purpose whatsoever. TxDOT assumes no responsibility for the conversion of this standard to other formats or for incorrect results or damages resulting from its use.

| LEVELS DISPLAYED | | | | | | | | | | | | | | | |
|---|---|---|---|---|---|---|---|---|---|---|---|---|---|---|---|
| 1 | | 3 | 4 | 5 | 6 | 7 | 8 | 9 | 10 | 11 | 12 | 13 | 14 | 15 | 16 |
| 17 | 18 | 19 | 20 | 21 | 22 | 23 | 24 | 25 | 26 | 27 | 28 | 29 | 30 | 31 | 32 |
| 33 | 34 | 35 | 36 | 37 | 38 | 39 | 40 | 41 | 42 | 43 | 44 | 45 | 46 | 47 | 48 |
| 49 | 50 | 51 | 52 | 53 | 54 | 55 | 56 | 57 | 58 | 59 | 60 | 61 | 62 | 63 | |

Texas Department of Transportation
Design Division (Roadway)

# METAL BEAM GUARD FENCE

# MBGF-01 (M)

| FILE: mbgf01m.DGN | DN: MAM | CK: MAM | DW: RAR | CK: MAM | NEG: |
|---|---|---|---|---|---|
| © TxDOT 1995 | DIST | FED REG | FEDERAL AID PROJECT • | | SHEET |
| REVISIONS | 15 | 6 | NH 2000 (704), etc | | 353A |
| | COUNTY | | CONTROL | SECT | JOB / HIGHWAY |
| | BEXAR | | 2452 | 01 | 036,etc / LP1604 |

DISCLAIMER:
The use of this standard is governed by the "Texas Engineering Practice Act". No warranty of any kind is made by TxDOT for any purpose whatsoever. TxDOT assumes no responsibility for the conversion of this standard to other formats or for incorrect results or damages resulting from its use.

LEVELS Disabled

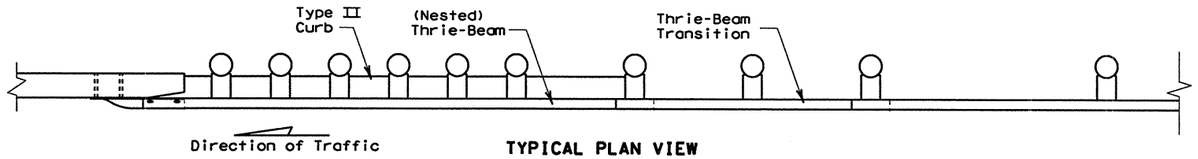


## TYPICAL PLAN VIEW

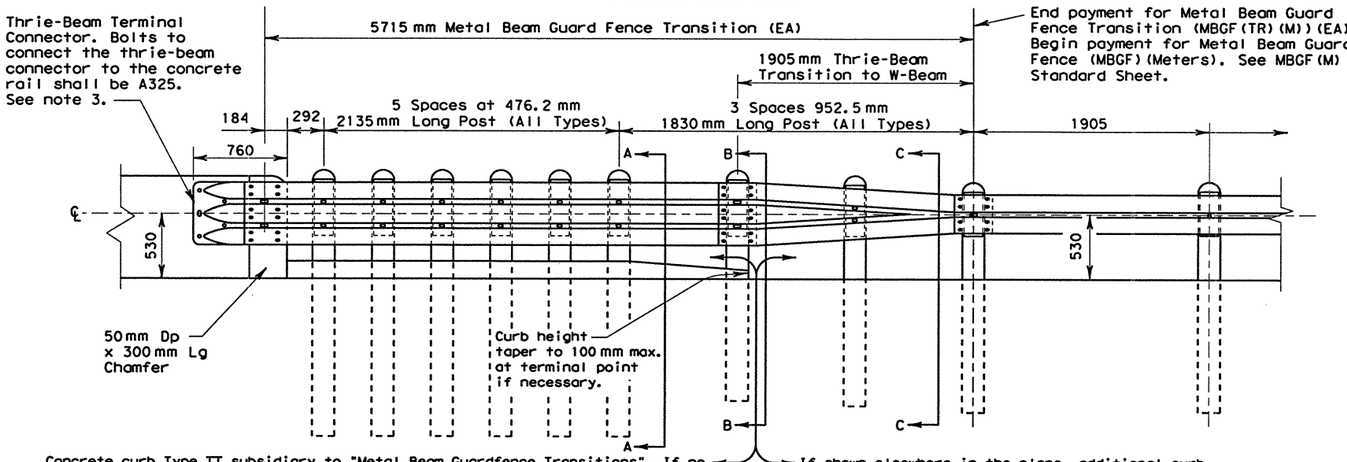


Concrete curb Type II subsidiary to "Metal Beam Guardfence Transitions". If no additional curb is indicated beyond the transition, then any curb height greater than 100mm will be tapered down beginning at the last 2135mm post to a maximum height of 100mm at the first 1830mm post.

If shown elsewhere in the plans, additional curb underneath guardrail will be paid for by the linear foot.

## TYPICAL ELEVATION VIEW

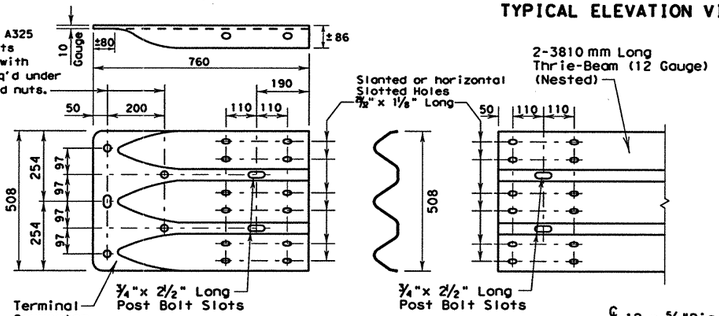


## THRIE-BEAM TERMINAL CONNECTION

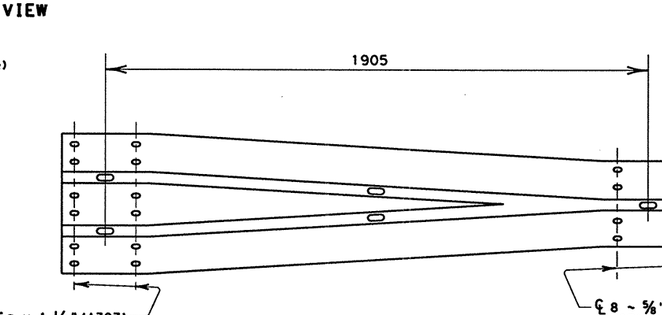





## THRIE-BEAM TRANSITION TO W-BEAM (10 Gauge)

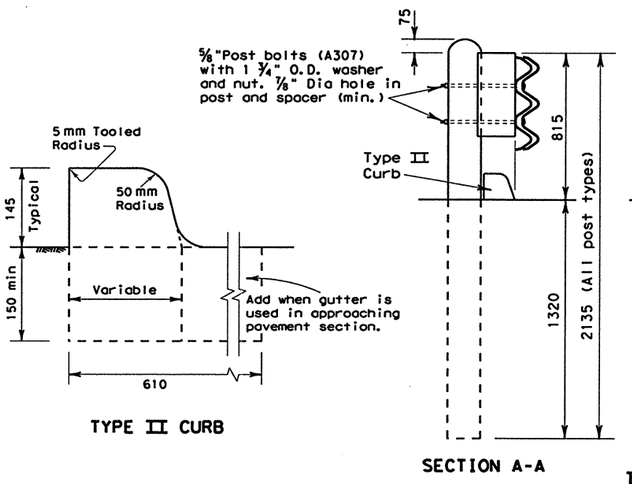


TYPE II CURB

SECTION A-A

SECTION B-B

SECTION C-C

TRANSITION SECTIONS

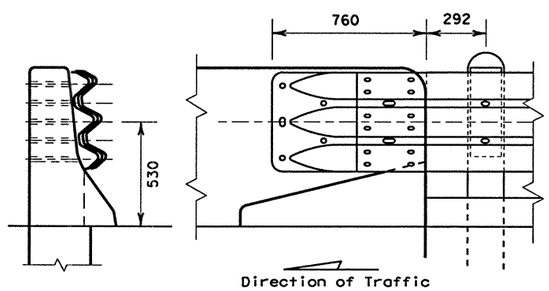


## CONNECTION TO T5, SSTR, & HT SERIES BRIDGE RAILS AND CTB & SSCB TRAFFIC BARRIERS

Washers (FWR03)(3"x 1 ¾"x 3/16" with 1"x ¾" slotted hole) under the head and nut will be required for the terminal connector to nested thrie beam splice bolts for these series rails.
See typical views and T5, SSTR, HT, CTB & SSCB Series Standard Sheets for additional details.

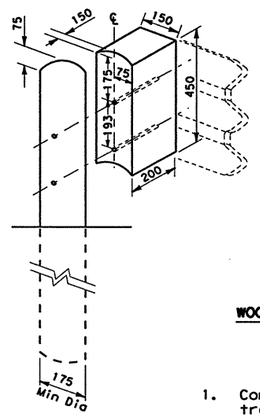


WOOD BLOCKOUT TO ROUND WOOD POST DETAIL

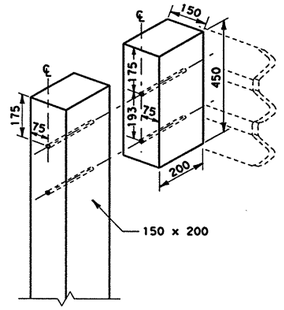


WOOD BLOCKOUT TO RECTANGULAR WOOD POST DETAIL

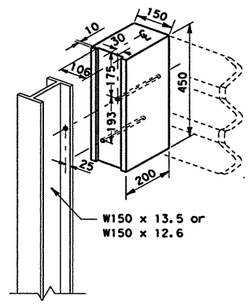


WOOD BLOCKOUT TO STEEL POST DETAIL

## GENERAL NOTES

1. Concrete curbs used in conjunction with thrie-beam guardfence transitions shall be Type II (typically 20mm height above surface; see CCCG standard sheet) unless otherwise shown in the plans. If other curb heights are shown in the plans in conjunction with the transition, this curb height may be from 100 mm to 200 mm with a relatively vertical face.
2. The type of post (round wood post, rectangular wood post, or steel post) will be shown elsewhere in the plans. The exact position of transitions shall be shown elsewhere in the plans or as directed by the Engineer. See MBGF standard sheet for additional details and information.
3. Rail element shall meet all requirements of AASHTO M-180 except as modified on the plans. The terminal connector and the thrie-beam transition to w-beam shall be of the same material, but shall not be less than 10 gauge.

   Contractor shall verify that the locations of bolt holes match those in the Terminal Connector prior to ordering of materials.
4. Unless otherwise shown in the plans, transitions shall be placed with the blockout face in front of or directly above the curbface.
5. Galvanized washers used with the ⅝" splice bolts and nuts that are provided for terminal connectors shall be (FWR03)(3"x 1 ¾"x 3/16" with 1"x ¾" slotted hole).
6. Button head post bolts (A307) shall be of sufficient length to extend through the full thickness of the nut and no more than 20mm beyond it. Button head spice bolts (A307) are ⅝" x 1 ¼" with a ⅝" double recessed nut. Galvanized fittings (bolts, nuts, and washers) shall be in accordance with Item, "Metal For Structures". Fittings shall be subsidiary to the bid item requiring construction of transition.
7. Crown will be widened to accommodate transitions.
8. Where solid rock is encountered or where shown on the plans, the diameter of the holes shall be approximately 305 mm, the backfilling shall be with a cohesionless material, and embedment depth shall be 450 mm or more as directed by the Engineer.
9. Posts shall not be set full depth in concrete.
10. Unless otherwise directed by the Engineer, a composite material post and/or blockout from the Department approved list of suppliers may be substituted for a post and/or blockout of similar dimensions. The list of approved suppliers of posts and blockouts will be maintained by the Construction Division, TxDOT.
11. Refer to MBGF Standard Sheet for additional details.

R = Radius
D = Diameter

All unit-less dimensions are millimeters

*Texas Department of Transportation*
*Design Division (Roadway)*

# METAL BEAM GUARD FENCE TRANSITION

## MBGF(TR)-02(M)

| FILE: mbgtr02m.dgn | DN: MAM | CK: MAM | DW: BGD | CK: | |
|---|---|---|---|---|---|
| ©TxDOT DECEMBER 2001 | DIST | FED REG | FEDERAL AID PROJECT • | | SHEET |
| REVISIONS | 15 | 6 | NH 2000(704), etc | | 353B |
| | COUNTY | | CONTROL | SECT | JOB | HIGHWAY |
| | BEXAR | | 2452 | 01 | 035, etc | LP 1604 |

DISCLAIMER:
The use of this standard is governed by the "Texas Engineering Practice Act". No warranty of any kind is made by TxDOT for any purpose whatsoever. TxDOT assumes no responsibility for the conversion of this standard to other formats or for incorrect results or damages resulting from its use.

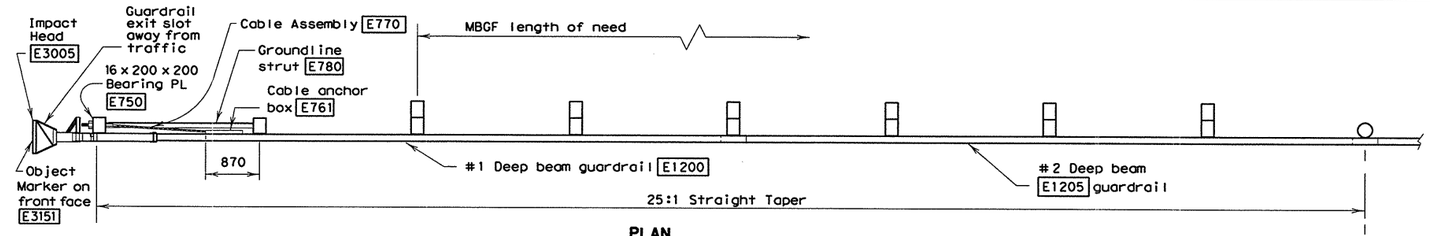


**PLAN**

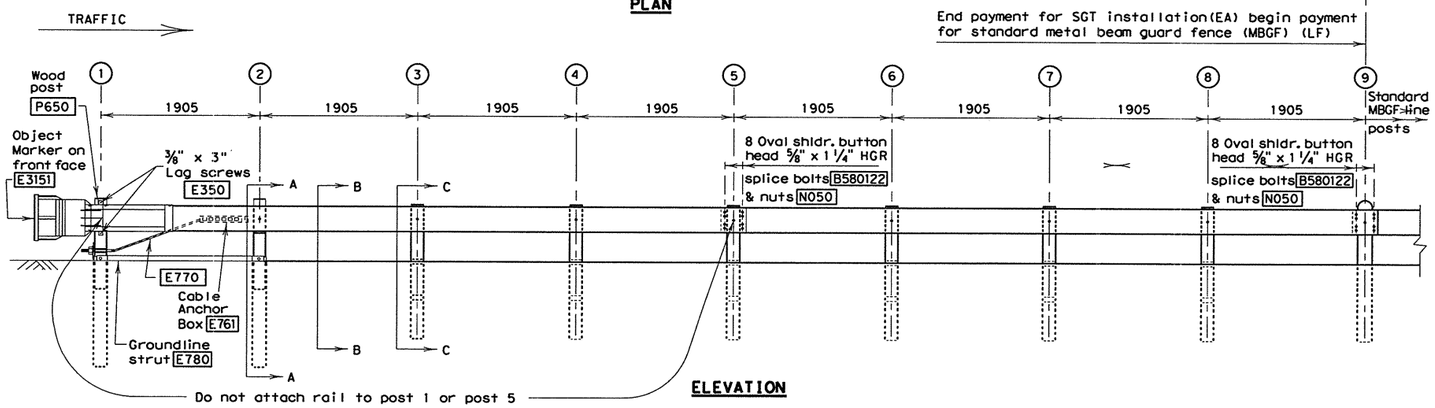


**ELEVATION**

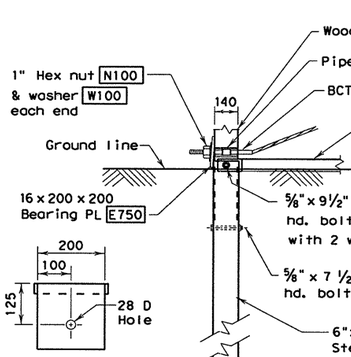


**BEARING PLATE**

**PARTIAL VIEW AT POST #1**

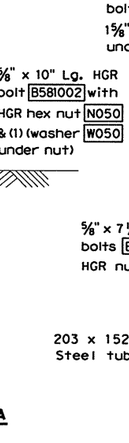


**SECTION A-A**
(at post #2)

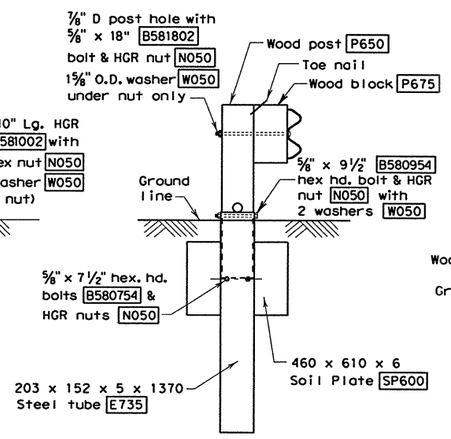


**SECTION B-B**
(Typ. at post and tube positions)

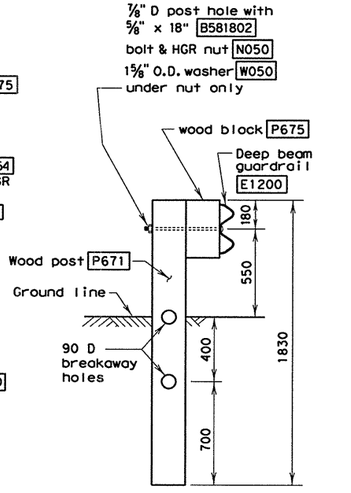


**SECTION C-C**
(Typ. at post only positions)

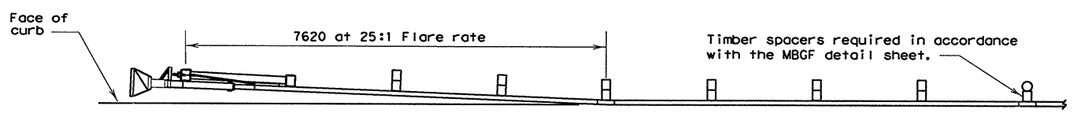


**DETAIL A**
Placement at curbed locations

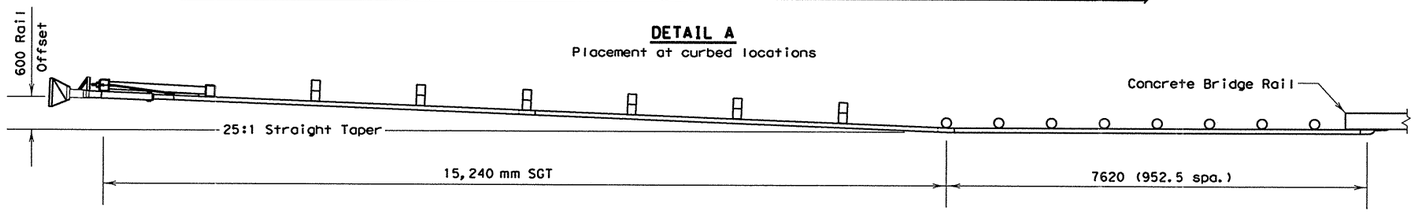


**DETAIL B**
Usual minimum placement to protect concrete bridge ends

## GENERAL NOTES

1. The type of SGT unit will be specified elsewhere in the plans. (Numbers in circles indicate post position.)

| | Post & Tube | Post Only |
|---|---|---|
| Type I | Posts ① thru ② | Posts ③ thru ⑧ |
| Type II | Posts ① thru ④ | Posts ⑤ thru ⑧ |
| Type III | Posts ① thru ⑧ | None |

2. Wood posts are required with this guardrail end treatment.
3. All bolts, nuts, cable assemblies, cable anchors, steel tubes & bearing plates shall be galvanized.
4. For non-curb installations, the MBGF will be flared at a rate of 25:1 over the first 15240 mm of the system to prevent the terminal head from encroaching on the shoulder. The flare may be decreased or eliminated for specific installations if directed by the Engineer. A 25:1 flare rate will be used at curb sections, beginning at post number 5 and ending at post number one.
5. The steel tubes shall not protrude more than 100 mm above ground. Site grading may be necessary to meet this requirement.
6. The steel tubes may be driven with an approved driving head. They shall not be driven with the wood post in the tube. If the steel tubes are placed in drilled holes, the backfill material must be satisfactorily compacted to prevent tube settlement.
7. When rock excavation is encountered, a 305 mm diameter post hole, 510 mm deep may be used if approved by the Engineer. Granular material will be placed in the bottom of the hole approximately 65 mm deep to provide drainage. The steel tube sleeves will be field cut to 510 mm in length, placed in the hole and backfilled with adequately compacted material excavated from the hole.
8. The breakaway cable assembly must be taut. A locking device, (vice grips or channel lock pliers) should be used to prevent the cable from twisting when tightening the nuts.
9. The wood blockouts shall be "toe nailed" to the rectangular wood posts to prevent them from turning when the wood shrinks.
10. For curb installations, the soil tubes and posts shall be installed at the proper ground elevation behind the curb. The posts will then require field drilling new holes to accommodate the rail to post connection bolt to maintain the proper height of the rail above the gutter pan. The excess post length above the rail will be removed if directed by the Engineer.
11. An object marker shall be installed on the front of the impact head as detailed on D&OM(VIA).
12. A special site evaluation should be considered, prior to using this end treatment where there is less than 7620 mm between the outlet side of the end treatment and any adjacent driving lane.

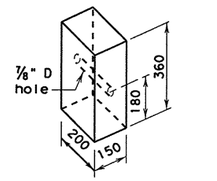


**WOOD BLOCKOUT**
P675

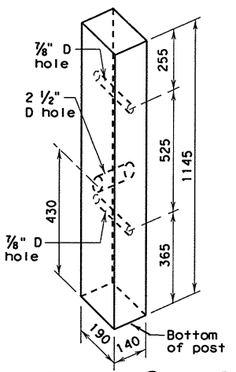


Type I - post ① thru ②
Type II - post ① thru ④
Type III - post ① thru ⑧
All measurements should be taken from bottom of posts.

**BILL OF MATERIAL**

| Code # | Type I Qty. | Type II Qty. | Type III Qty. | DESCRIPTION |
|---|---|---|---|---|
| E1200 | 1 | 1 | 1 | #1 Deep Beam Guardrail (8090 mm)(12 Ga.) |
| E1205 | 1 | 1 | 1 | #2 Deep Beam Guardrail (7938 mm)(12 Ga.) |
| E730 | 2 | 2 | 2 | Steel Tube - 203 x 152 x 5 x 1980 |
| E735 | 0 | 2 | 6 | Steel Tube - 203 x 152 x 5 x 1370 |
| SP600 | 0 | 2 | 6 | Soil Plate - 460 x 610 x 6 |
| P650 | 2 | 4 | 8 | Wood Posts - 140 x 190 x 1145 |
| P671 | 6 | 4 | 0 | Wood CRT Posts - 150 x 200 x 1830 |
| P675 | 6 | 6 | 6 | Wood Blockouts - 150 x 200 x 360 |
| E740 | 1 | 1 | 1 | Pipe Sleeve - 50 mm Std. Pipe x 140 mm |
| E750 | 1 | 1 | 1 | Bearing Plate - 16 x 200 x 200 |
| E761 | 1 | 1 | 1 | Cable Anchor Box |
| E770 | 1 | 1 | 1 | Cable Assembly |
| E780 | 1 | 1 | 1 | Groundline Strut |
| E3005 | 1 | 1 | 1 | Impact Head |
| | | | | HARDWARE |
| B580754 | 2 | 6 | 14 | 5/8" x 7 1/2" Hex Hd. Bolt |
| B580954 | 2 | 4 | 8 | 5/8" x 9 1/2" Hex Hd. Bolt (Top of Tubes) |
| W050 | 11 | 15 | 23 | 5/8" Washers |
| B581002 | 1 | 1 | 1 | 5/8" x 10" HGR Post Bolt (Post 2) |
| B580122 | 16 | 16 | 16 | 5/8" x 1 1/4" HGR Splice Bolt |
| B581802 | 6 | 6 | 6 | 5/8" x 18" HGR Post Bolt (Posts ③ thru ⑧) |
| N050 | 27 | 33 | 45 | 5/8" HGR Nut (16-Spl, 7-Posts, 2-Strut, 2 ea. at Tube ③ thru ⑧) |
| E350 | 2 | 2 | 2 | 3/8" x 3" Lag Screw |
| N100 | 2 | 2 | 2 | 1" Hex Nut (Anchor Cable) |
| W100 | 2 | 2 | 2 | 1" Washer (Anchor Cable) |
| E3151 | 1 | 1 | 1 | Object Marker - (450 x 450) |

R = Radius
D = Diameter
All unit-less dimensions are millimeters

Texas Department of Transportation
©2000 Design Division (Roadway)

# SINGLE GUARDRAIL TERMINAL
## (BEST 350)

# SGT(5)-97(M)

| FILE: SGT597M.dgn | DN: MAM | CK: MAM | DW: BR | CK: MAM | NEG: | |
|---|---|---|---|---|---|---|
| ©TxDOT FEBRUARY 1997 | DIST | FED REG | FEDERAL AID PROJECT • | | | SHEET |
| REVISIONS | SAT | 6 | NH 2000(704),etc. | | | 354 |
| | COUNTY | | CONTROL | SECT | JOB | HIGHWAY |

LEVELS DISPLAYED
1 2 3 4 5 6 7 8 9 10 11 12 13 14 15 16 17 18 19 20 21 22 23 24 25 26 27 28 29 30 31 32 33 34 35 36 37 38 39 40 41 42 43 44 45 46 47 48 49 50 51 52 53 54 55 56 57 58 59 60 61 62 63

DISCLAIMER:
The use of this standard is governed by the "Texas Engineering Practice Act". No warranty of any kind is made by TxDOT for any purpose whatsoever. TxDOT assumes no responsibility for the conversion of this standard to other formats or for incorrect results or damages resulting from its use.

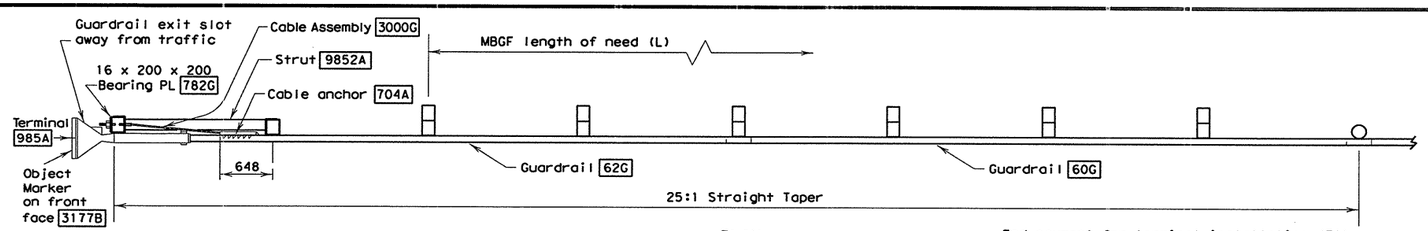


**PLAN**

End payment for terminal installation (EA) begin payment for standard metal beam guard fence (MBGF) (LM)

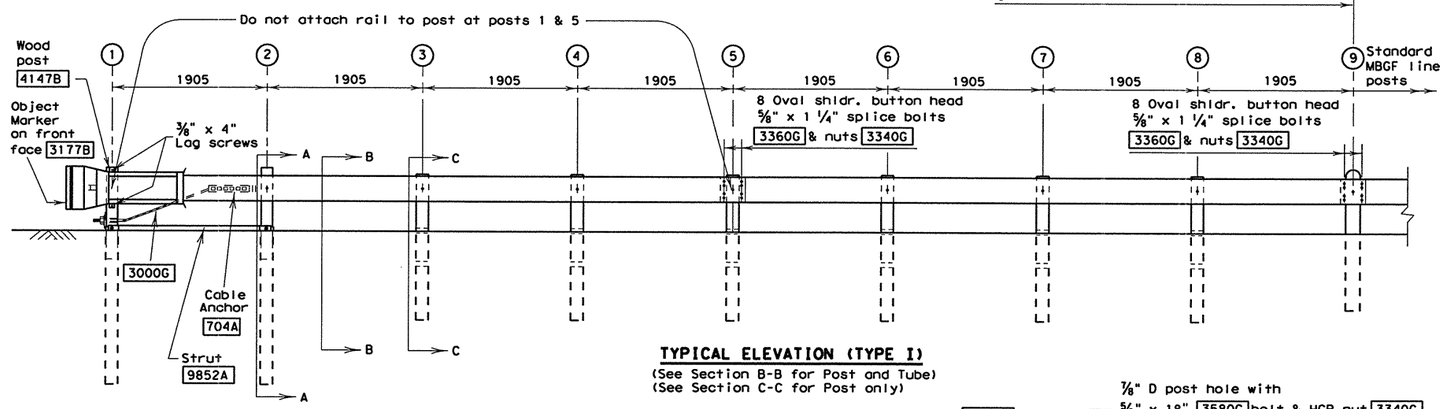


**TYPICAL ELEVATION (TYPE I)**
(See Section B-B for Post and Tube)
(See Section C-C for Post only)

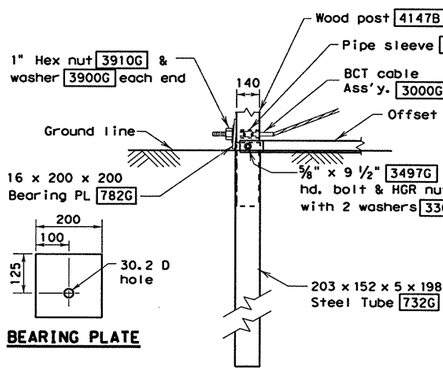


**BEARING PLATE**

**LET PARTIAL VIEW AT POST #1**

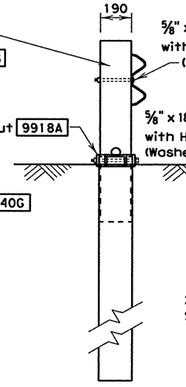


**LET SECTION A-A**
(at post #2)

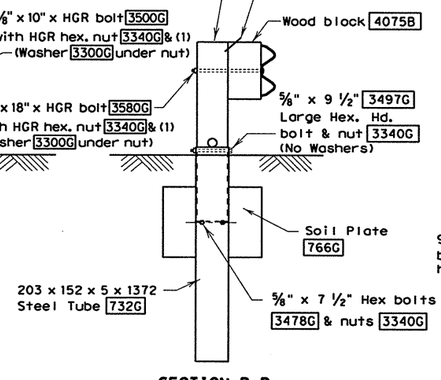


**SECTION B-B**
(Typ. at post and tube positions)

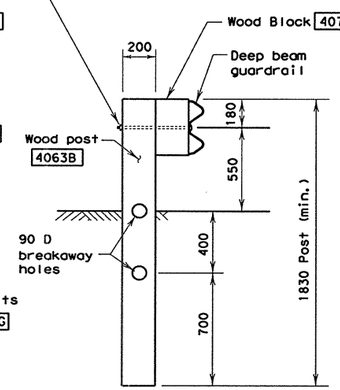


**SECTION C-C**
(Typ. at post only positions)

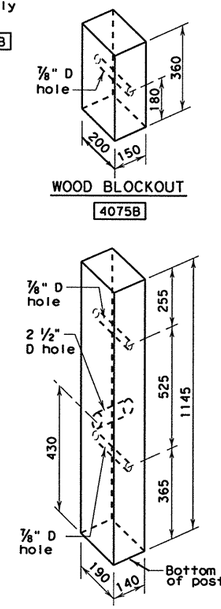


Type I - post ① thru ②
Type II - post ① thru ④
Type III - post ① thru ⑧

All measurements should be taken from bottom of posts.

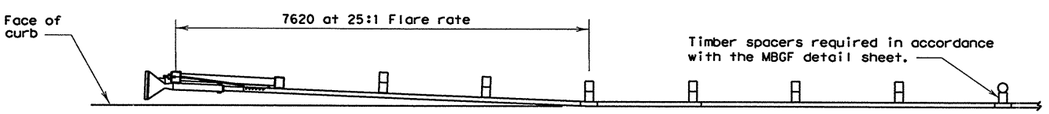


**DETAIL A**
Placement at curbed locations

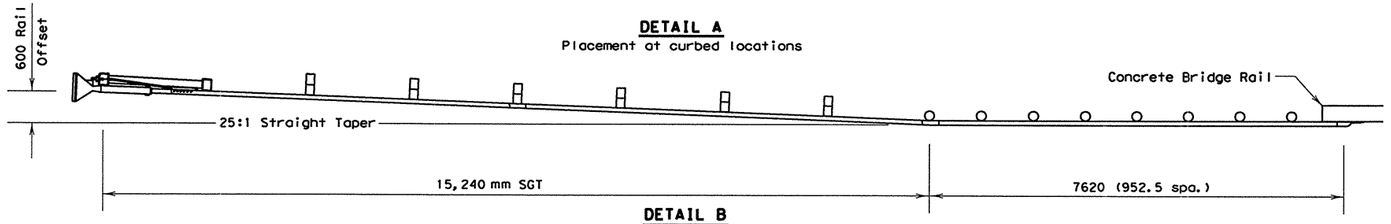


**DETAIL B**
Usual minimum placement to protect concrete bridge ends

## GENERAL NOTES

1. The type of SGT unit will be specified elsewhere in the plans. (Numbers in circles indicate post position.)

| | Post & Tube | Post Only |
|---|---|---|
| Type I | Posts ① thru ② | Posts ③ thru ⑧ |
| Type II | Posts ① thru ④ | Posts ⑤ thru ⑧ |
| Type III | Posts ① thru ⑧ | None |

2. Wood posts are required with this guardrail end treatment.
3. All bolts, nuts, cable assemblies, cable anchors, steel tubes & bearing plates shall be galvanized.
4. For non-curb installations, the MBGF will be flared at a rate of 25:1 over the first 15240 mm of the system to prevent the terminal head from encroaching on the shoulder. The flare may be decreased or eliminated for specific installations if directed by the Engineer. A 25:1 flare rate will be used at curb sections, beginning at post number 5 and ending at post number one.
5. The steel tubes shall not protrude more than 100 mm above ground. Site grading may be necessary to meet this requirement.
6. The steel tubes may be driven with an approved driving head. They shall not be driven with the wood post in the tube. If the steel tubes are placed in drilled holes, the backfill material must be satisfactorily compacted to prevent tube settlement.
7. When rock excavation is encountered, a 305 mm diameter post hole, 510 mm deep may be used if approved by the Engineer. Granular material will be placed in the bottom of the hole approximately 65 mm deep to provide drainage. The steel tube sleeves will be field cut to 510 mm in length, placed in the hole and backfilled with adequately compacted material excavated from the hole.
8. The breakaway cable assembly must be taut. A locking device, (vice grips or channel lock pliers) should be used to prevent the cable from twisting when tightening the nuts.
9. The wood blockouts shall be "toe nailed" to the rectangular wood posts to prevent them from turning when the wood shrinks.
10. For curb installations, the soil tubes and posts shall be installed at the proper ground elevation behind the curb. The posts will then require field drilling new holes to accommodate the rail to post connection bolt to maintain the proper height of the rail above the gutter pan. The excess post length above the rail will be removed if directed by the Engineer.
11. An object marker shall be installed on the front of the impact head as detailed on D&OM(VIA).
12. A special site evaluation should be considered, prior to using this end treatment where there is less than 7620 mm between the extrusion side of the end treatment and any adjacent driving lane.

## BILL OF MATERIAL

| Code # | LET-2000 Type I Qty. | LET-2000 Type II Qty. | LET-2000 Type III Qty. | ET-2000 Type II Qty. | ET-2000 Type III Qty. | DESCRIPTION |
|---|---|---|---|---|---|---|
| 62G | 1 | 1 | 1 | 1 | 1 | #1 Deep Beam Guardrail (12 Ga) at 7620 mm |
| 60G | 1 | 1 | 1 | 1 | 1 | #2 Deep Beam Guardrail (12 Ga) at 7620 mm |
| 732G | 2 | 2 | 2 | - | - | Steel Tube - 203 x 152 x 5 x 1981 |
| 740G | 0 | 2 | 6 | 4 | 8 | Steel Tube - 203 x 152 x 5 x 1372 |
| 766G | 0 | 2 | 6 | 4 | 8 | Soil Plate - 460 x 610 x 6 |
| 4147B | 2 | 4 | 8 | 4 | 8 | Wood Posts - 140 x 190 x 1145 |
| 4063B | 6 | 4 | 0 | 4 | 0 | Wood CRT Posts - 150 x 200 x 1830 |
| 4075B | 6 | 6 | 6 | 7 | 7 | Wood Block - 150 x 200 x 360 |
| 705G | 1 | 1 | 1 | 1 | 1 | Pipe Sleeve - 50 mm std. pipe x 140 mm |
| 782G | 1 | 1 | 1 | 1 | 1 | Bearing Plate - 16 x 200 x 200 |
| 704A | 1 | 1 | 1 | 1 | 1 | Cable Anchor |
| 3000G | 1 | 1 | 1 | 1 | 1 | Cable Assembly (19 x 1981) |
| 9852A | 1 | 1 | 1 | - | - | Inline Strut |
| 9918A | - | - | - | 1 | 1 | Offset Strut |
| 985A | 1 | 1 | 1 | 1 | 1 | ET-2000 Guardrail Terminal |
| | | | HARDWARE | | | |
| 3497G | 2 | 4 | 8 | 4 | 8 | 5/8" x 9 1/2" Hex Hd. Bolt (Top of tubes) |
| 3300G | 11 | 11 | 11 | 11 | 11 | 5/8" Washers |
| 3478G | 2 | 4 | 8 | 8 | 16 | 5/8" x 7 1/2" Hex Bolt |
| 3500G | 1 | 1 | 1 | - | - | 5/8" x 10" Post Bolt (Post 2 of LET) |
| 3580G | 6 | 6 | 6 | 7 | 7 | 5/8" x 18" HGR Post Bolt (posts ③ thru ⑧) |
| 3360G | 16 | 16 | 16 | 16 | 16 | 5/8" x 1 1/4" HGR Splice Bolt |
| 3340G | 27 | 31 | 39 | 35 | 47 | 5/8" HGR Nut (16-spl, 7-posts, 2-strut, 2 each at tube ③ thru ⑧) |
| 4228G | 2 | 2 | 2 | 2 | 2 | 3/8" x 4" Lag Screw |
| 3910G | 2 | 2 | 2 | 2 | 2 | 1" Hex Nut (Anchor Cable) |
| 3900G | 2 | 2 | 2 | 2 | 2 | 1" Washer (Anchor Cable) |
| 3177B | 1 | 1 | 1 | 1 | 1 | Object Marker (450 x 450) |

R = Radius
D = Diameter
All unit-less dimensions are millimeters

Texas Department of Transportation
Design Division (Roadway)
©2000

# SINGLE GUARDRAIL TERMINAL
## (LET-2000 & ET-2000)
## SGT (6)-97 (M)

| FILE: sgt697m.dgn | DN: GTH | CK: GTH | DW: BGD | CK: MAM | NEG: |
|---|---|---|---|---|---|
| ©TxDOT APRIL 1997 | DIST | FED REG | FEDERAL AID PROJECT • | | SHEET |
| REVISIONS | SAT | 6 | NH 2000(704), etc. | | 355 |
| | COUNTY | | CONTROL | SECT | JOB | HIGHWAY |
| | BEXAR | | 2452 | 01 | 036, etc. | LP 1604 |

LEVELS DIS.
1 2 3 4 5 6 7 8 9 10 11 12 13 14 15 16
17 18 19 20 21 22 23 24 25 26 27 28 29 30 31 32
33 34 35 36 37 38 39 40 41 42 43 44 45 46 47 48
49 50 51 52 53 54 55 56 57 58 59 60 61 62 63

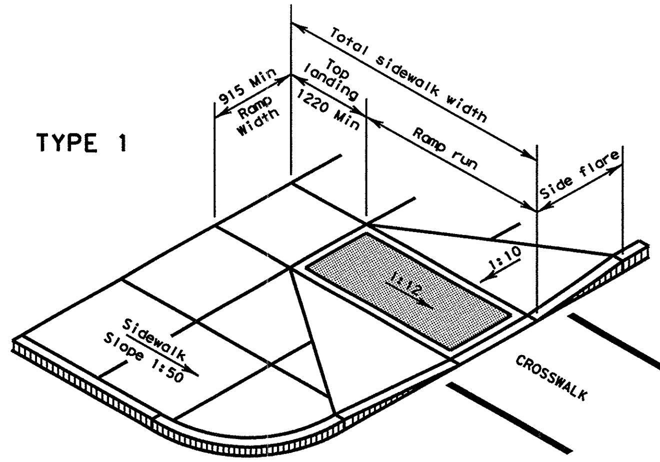


PERPENDICULAR CURB RAMPS

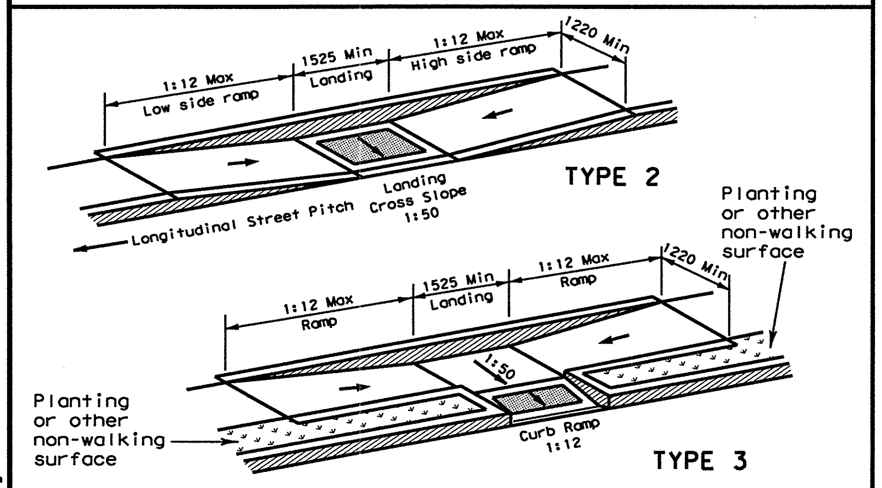


PARALLEL CURB RAMPS

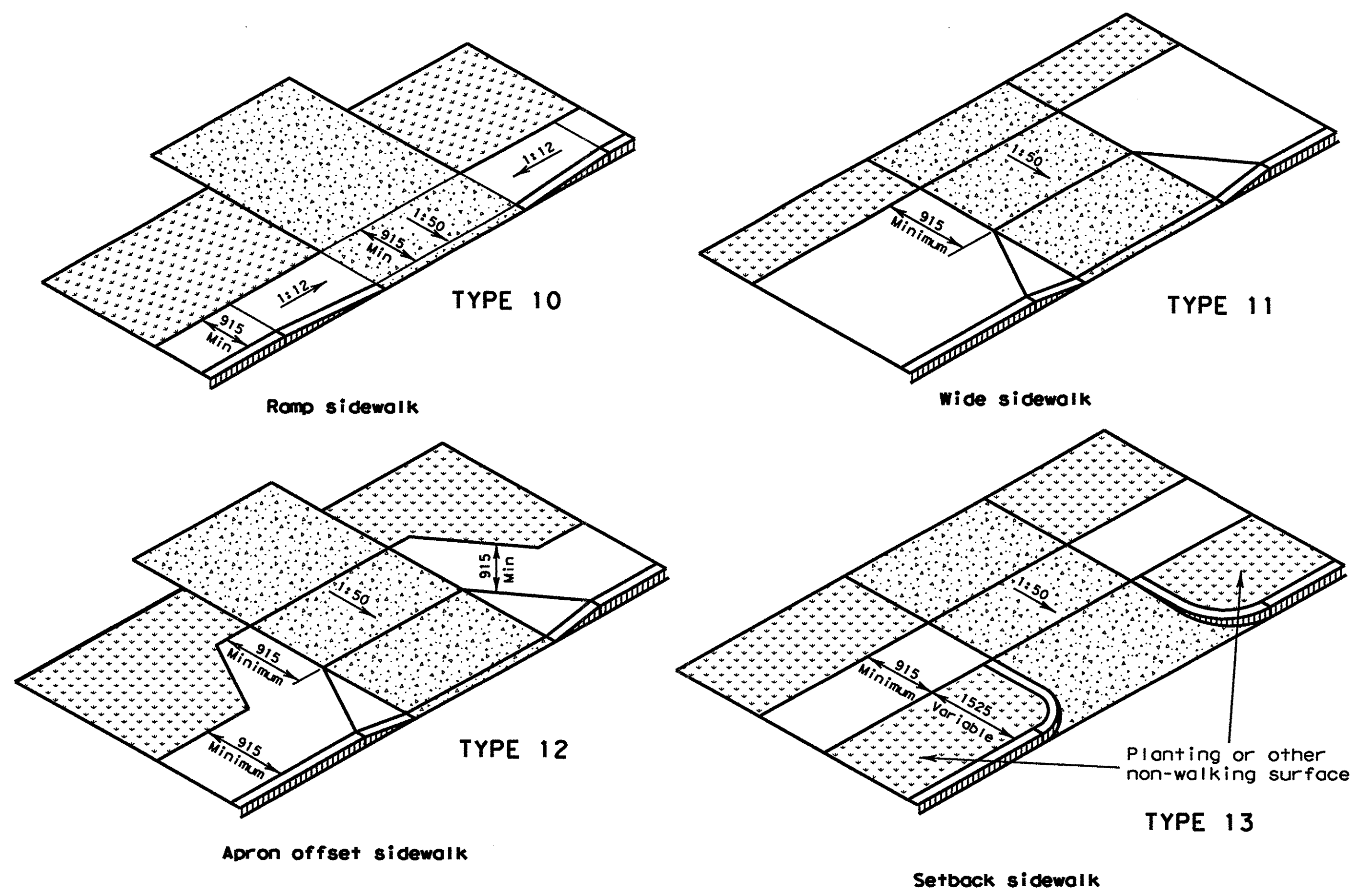


DRIVEWAY APRONS

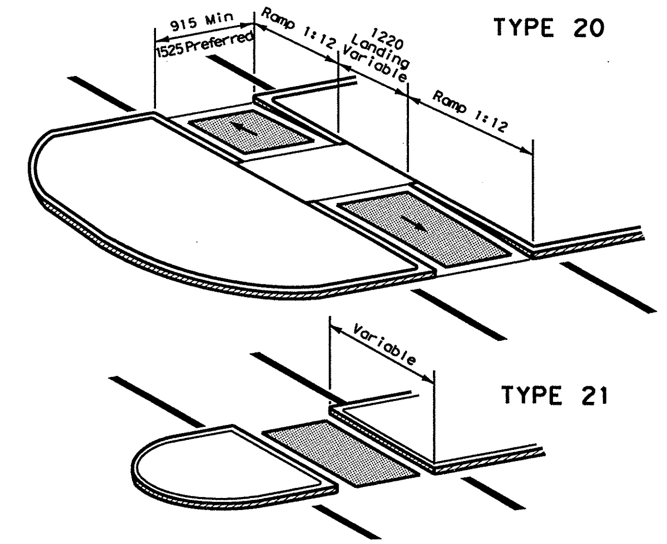


CURB RAMPS AT MEDIAN ISLANDS

## General Notes

A 1525 mm sidewalk width is preferred.

All slopes are maximum allowable. Flatter slopes that will still drain properly are encouraged.

All concrete surfaces shall receive a light broom finish unless noted otherwise in the plans.

For purposes of warning, the curb ramps shall have a light reflective value and texture that significantly contrasts with that of adjoining pedestrian routes.

Textures may consist of pavers with truncated domed surfaces or grooves. Textures are required to be detectable underfoot. Surfaces that would allow water to accumulate are prohibited.

Color contrast, for example, can be accomplished with colored concrete pavers that have truncated domes or by colored stained concrete with grooves, either of which would provide a contrast with typically light colored concrete.

Additional information on curb ramp location, design, visibility and texture may be found in the current edition of the Texas Accessibility Standards (TAS) prepared and administered by the Texas Department of Licensing and Regulation (TDLR).

Raised medians separate opposing directions of traffic and provide a refuge area for pedestrians if they are unable to cross the entire roadway in the allotted signal phase. To serve as a refuge area, the median should be a minimum of 1220 mm wide. Medians should be designed to provide accessible passage over or through them.

Any part of the accessible route with a slope greater than 1:20 (5%) shall be considered a ramp. If a ramp has a rise greater than 150 mm or a horizontal projection greater than 1800 mm, then it shall have handrails on both sides, with the following exceptions.

- Handrails are not required on curb ramps. Curb ramps shall be provided wherever an accessible route crosses (penetrates) a curb.
- The least possible grade should be used to maximize accessibility. The running slope of sidewalks, within the public right of way, may follow the grade of the adjacent roadway without invoking Texas Accessibility Standards (TAS) variances. Where a continuous grade greater than 5% must be provided, handrails may be desirable on one or both sides of the sidewalk to improve accessibility. Handrails may also be needed to protect pedestrians from potentially hazardous conditions.

Traffic signal or illumination poles, ground boxes, controller boxes, signs, drainage facilities and other items shall be placed so not to obstruct the accessible route.

For on-system new construction, reconstruction and rehabilitation projects where pedestrian facilities are newly constructed or substantially altered, construction of single diagonal ramps is not permitted.

For on-system projects such as restoration, seal coat and overlay projects, placement of curb ramps should be evaluated in the following order of preference: perpendicular, parallel or combination, and single diagonal. The most preferable option that is feasible at each corner shall be provided.

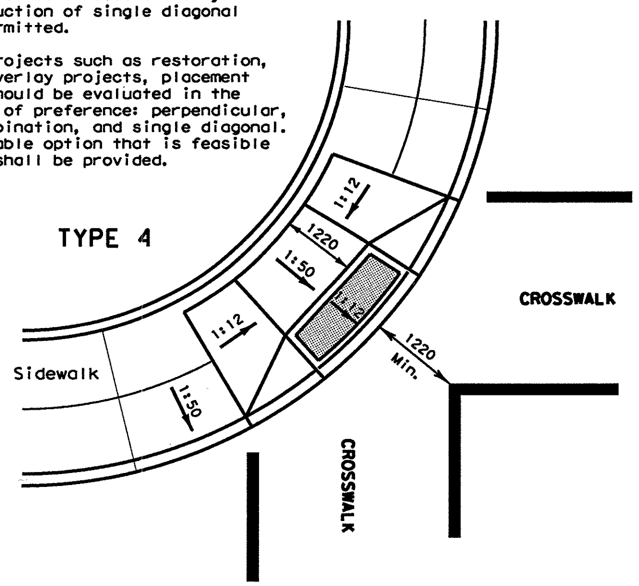


SINGLE DIAGONAL CURB RAMP

Perpendicular to the Tangent of the Curb Radius and Contained in Crosswalk

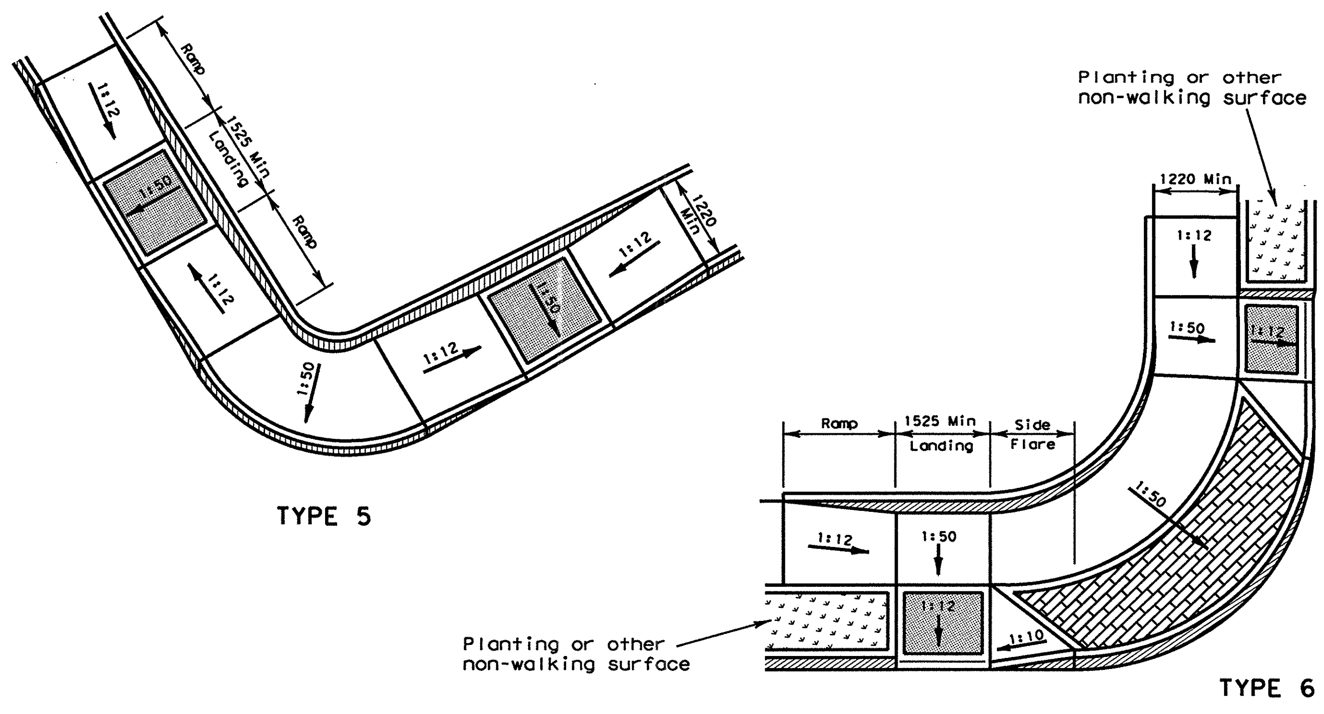


COMBINATION (PERPENDICULAR / PARALLEL) CURB RAMPS

All unit-less dimensions are millimeters


DISCLAIMER:
The use of this standard is governed by the "Texas Engineering Practice Act". No warranty of any kind is made by TxDOT for any purpose whatsoever. TxDOT assumes no responsibility for the conversion of this standard to other formats or for incorrect results or damages resulting from its use.


LEVELS D[illegible]ED

| | | | | | | | | | | | | | | | |
|---|---|---|---|---|---|---|---|---|---|---|---|---|---|---|---|
| 1 | | 3 | 4 | 5 | 6 | 7 | 8 | 9 | 10 | 11 | 12 | 13 | 14 | 15 | 16 |
| 17 | 18 | 19 | 20 | 21 | 22 | 23 | 24 | 25 | 26 | 27 | 28 | 29 | 30 | 31 | 32 |
| 33 | 34 | 35 | 36 | 37 | 38 | 39 | 40 | 41 | 42 | 43 | 44 | 45 | 46 | 47 | 48 |
| 49 | 50 | 51 | 52 | 53 | 54 | 55 | 56 | 57 | 58 | 59 | 60 | 61 | 62 | 63 | |

*Texas Department of Transportation*
*Design Division (Roadway)*

# PEDESTRIAN RAMPS

# RAMP-00B(M)

**SHEET 1 OF 2**

| FILE: ramp00bm.dgn | DN: MAM | CK: MAM | DW: BGD | | CK: | |
|---|---|---|---|---|---|---|
| © TxDOT March 2000 | DIST | FED REG | FEDERAL AID PROJECT • | | | SHEET |
| REVISIONS | SAT | 6 | NH 2000(704), etc. | | | 356 |
| | COUNTY | | CONTROL | SECT | JOB | HIGHWAY |
| | BEXAR | | 2452 | 01 | 036, etc. | LP 1604 |

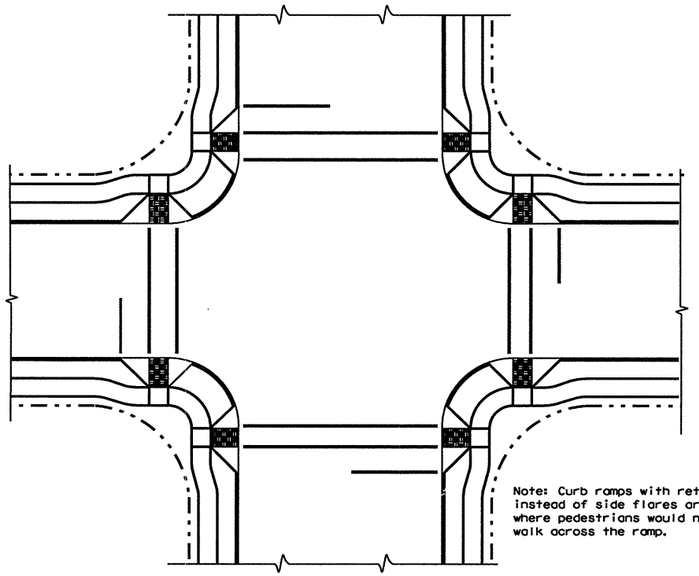

Note: Curb ramps with returned curbs instead of side flares are permitted where pedestrians would not normally walk across the ramp.

## TYPICAL INTERSECTION LAYOUT WITH OFFSET SIDEWALKS

### Single Diagonal Curb Ramp

For on-system new construction, reconstruction and rehabilitation projects where pedestrian facilities are newly constructed or substantially altered, construction of single diagonal ramps is not permitted.

For on-system projects such as restoration, seal coat and overlay projects, placement of curb ramps should be evaluated in the following order of preference: perpendicular, parallel or combination, and single diagonal. The most preferable option that is feasible at each corner shall be provided.

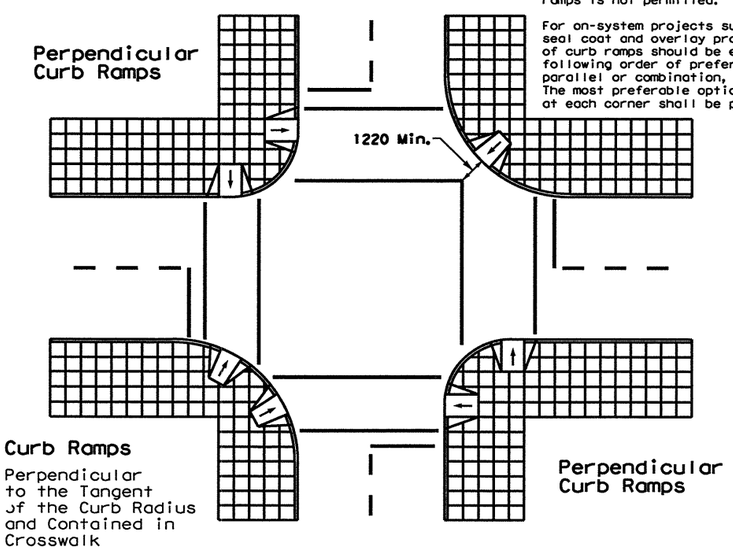


## TYPICAL CURB RAMP PLACEMENTS AT INTERSECTIONS

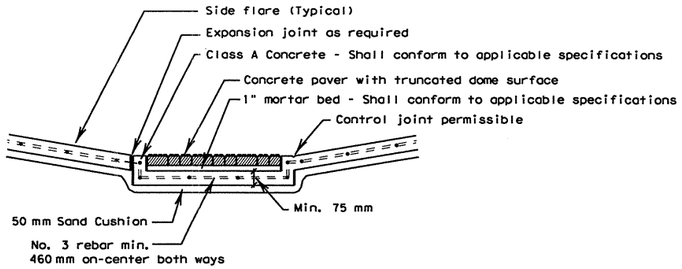


Section A-A

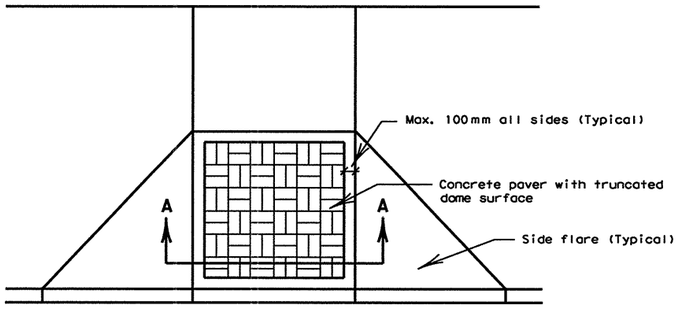


TYPE A

Truncated Dome Pattern Curb Ramp

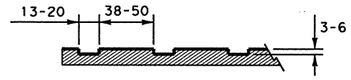


Groove pattern

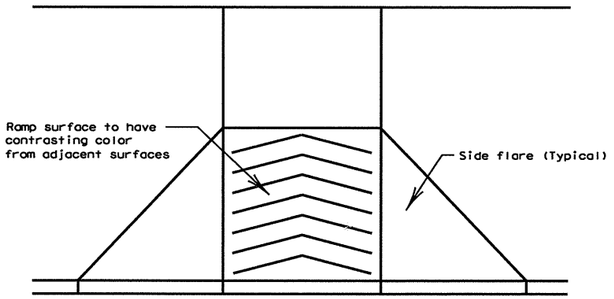


TYPE B

Groove Pattern Curb Ramp
(15 Degree to Horizontal)

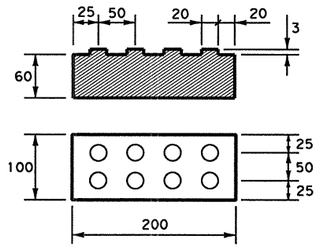


Concrete paver with truncated dome surface

### General Notes

Concrete paver units shall meet all requirements of ASTM C-936, C-33, and shall be laid in a two by two unit basket weave pattern, unless shown otherwise in the plans.

Concrete paver units shall have a truncated dome top surface for detectable warning to pedestrians.

Concrete paver unit color for the ramp shall be a contrasting color to the adjacent surfaces. The color of the concrete paver units shall be shown elsewhere in the plans. (Adjacent surfaces include side flares).

Concrete paver units shall be saw cut only and any cut unit shall be not less than 25 percent of a full unit.

## CURB RAMP TEXTURING

### General Notes

Concrete surface areas that are identified in the plans to receive sealer/stain treatment, shall not be treated w/ curing compound (retardant) and shall be allowed to cure a minimum of 30 days prior to application of the sealer/stain.

The sealer/stain for the ramp shall be a contrasting color to the adjacent surfaces (adjacent surfaces include the side flares). The color of the sealer/stain shall be shown elsewhere in the plans.

Sealer/stain shall be applied in accordance with applicable specifications.

Areas receiving sealer/stain treatment shall be cleaned using a "dry" (sand) blast cleaning method in accordance with applicable specifications.

All unit-less dimensions are millimeters

DISCLAIMER:
The use of this standard is governed by the "Texas Engineering Practice Act". No warranty of any kind is made by TxDOT for any purpose whatsoever. TxDOT assumes no responsibility for the conversion of this standard to other formats or for incorrect results or damages resulting from its use.

LEVELS DISPLAYED

| | | | | | | | | | | | | | | | | |
|---|---|---|---|---|---|---|---|---|---|---|---|---|---|---|---|---|
| 1 | 3 | 4 | 5 | 6 | 7 | 8 | 9 | 10 | 11 | 12 | 31 | 41 | 51 | 61 | 62 | 63 |
| 17 | 18 | 19 | 20 | 21 | 22 | 23 | 24 | 25 | 26 | 27 | 28 | 29 | 30 | 31 | 32 | |
| 33 | 34 | 35 | 36 | 37 | 38 | 39 | 40 | 41 | 42 | 43 | 44 | 45 | 46 | 47 | 48 | |
| 49 | 50 | 51 | 52 | 53 | 54 | 55 | 56 | 57 | 58 | 59 | 60 | 61 | 62 | 63 | | |

Texas Department of Transportation
Design Division (Roadway)

# PEDESTRIAN RAMPS

# RAMP-00B(M)

SHEET 2 OF 2

| FILE: ramp00bm.dgn | DN: MAM | CK: MAM | DW: BGD | CK: |
|---|---|---|---|---|
| ©TxDOT March 2000 | DIST | FED REG | FEDERAL AID PROJECT # | SHEET |
| REVISIONS | SAT | 6 | NH 2000(704), etc. | 357 |
| | COUNTY | | CONTROL SECT JOB | HIGHWAY |
| | BEXAR | | 2452 01 036, etc. | LP 1604 |

DISCLAIMER:
The use of this standard is governed by the "Texas Engineering Practice Act". No warranty of any kind is made by TxDOT for any purpose whatsoever. TxDOT assumes no responsibility for the conversion of this standard to other formats or for incorrect results or damages resulting from its use.

TYPE 1

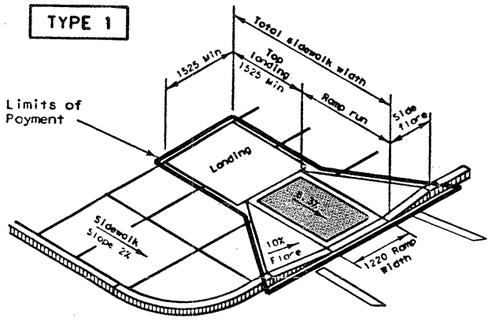


PERPENDICULAR CURB RAMP

TYPE 7

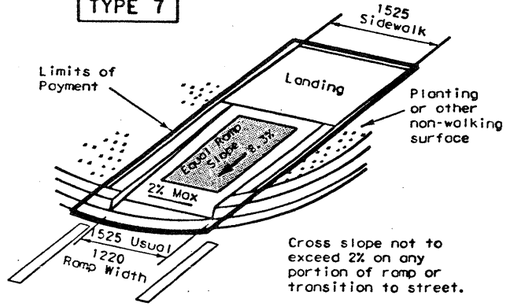


Cross slope not to exceed 2% on any portion of ramp or transition to street.

DIRECTIONAL RAMP WITHIN RADIUS

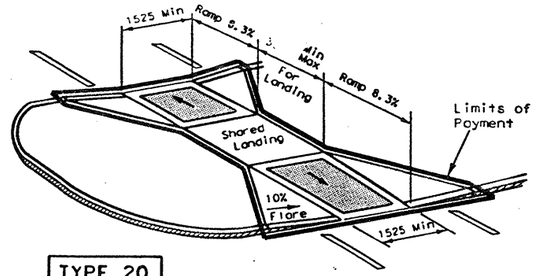


TYPE 20

610 mm strip if cut through is greater than 220 mm in length. Otherwise place detectable warning on the tire surface of cut through.

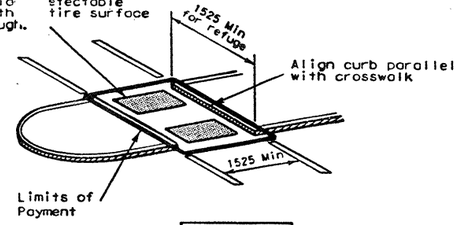


TYPE 21

CURB RAMPS AT MEDIAN ISLANDS

TYPE 2

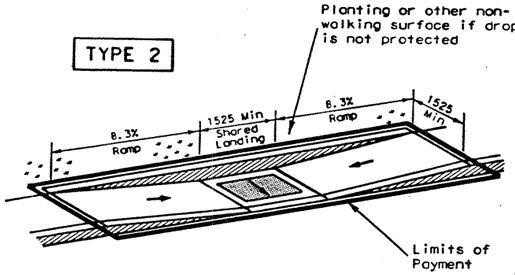


PARALLEL CURB RAMP

TYPE 8

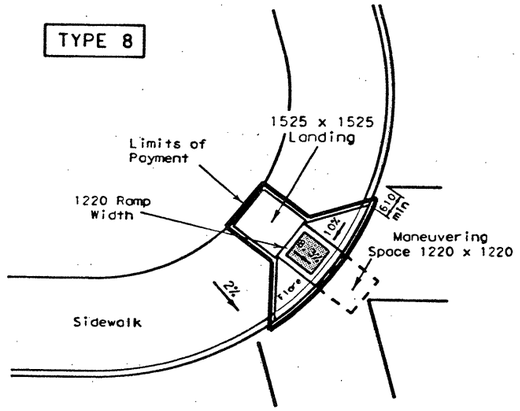


DIAGONAL CURB RAMP (FLARED SIDES)

TYPE 4

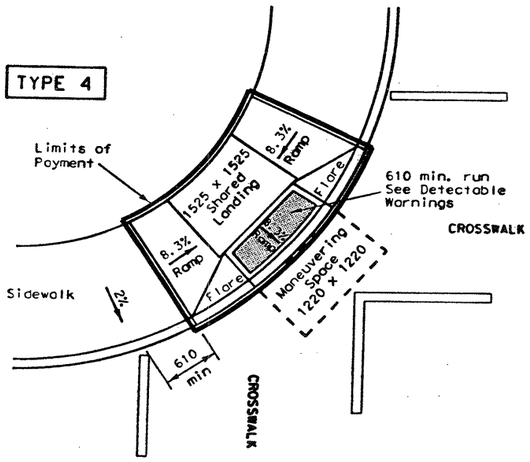


DIAGONAL COMBINATION CURB RAMP

Perpendicular to the Tangent of the Curb Radius and Contained in Crosswalk

TYPE 9

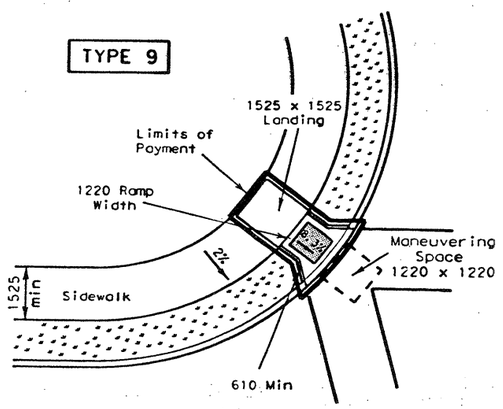


DIAGONAL CURB RAMP (RETURNED CURB)

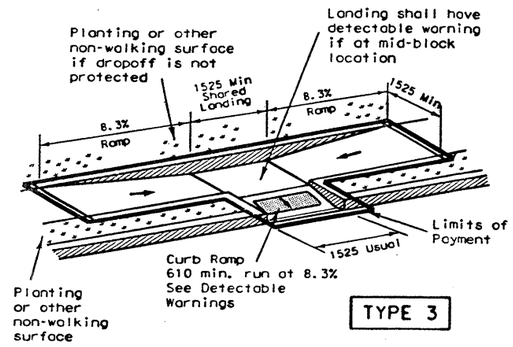


TYPE 3

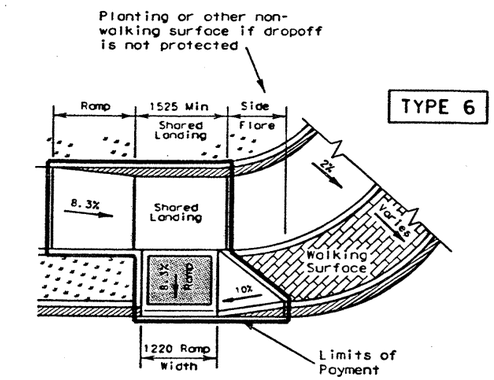


TYPE 6

COMBINATION CURB RAMPS

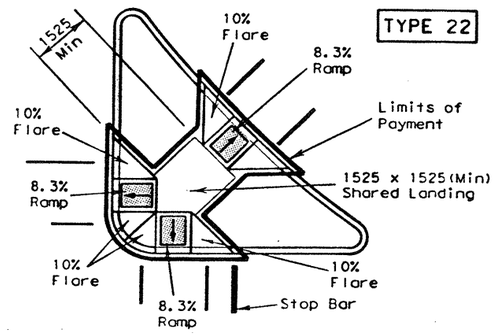


TYPE 22

COMBINATION ISLAND RAMPS

## General Notes

All slopes are maximum allowable. The least possible slope that will still drain properly should be used. Ramp length or grade of approach sidewalks may be adjusted as directed by the Engineer.

The minimum sidewalk width is 1525mm. Where a 1525 mm sidewalk can not be provided due to site constraints, a minimum 915 mm sidewalk with 1525 x 1525 passing areas at intervals not to exceed 61 meters is required.

Landings shall be 1525 x 1525 minimum with a maximum 2% slope in any direction.

Maneuvering space at the bottom of curb ramps shall be a minimum of 1220 x 1220 wholly contained within the crosswalk and wholly outside the parallel vehicular travel path.

Maximum allowable cross slope on sidewalk and ramp surfaces is 2%.

Curb ramps with returned curbs may be used only where pedestrians would not normally walk across the ramp. Otherwise, flared sides shall be provided.

All concrete surfaces shall receive a light broom finish unless noted otherwise in the plans.

Ramp textures must consist of truncated domed surfaces. Textures are required to be detectable underfoot. Surfaces that would allow water to accumulate are prohibited.

Additional information on curb ramp location, design, light reflective value and texture may be found in the current edition of the Texas Accessibility Standards (TAS) prepared and administered by the Texas Department of Licensing and Regulation (TDLR).

Raised medians separate opposing directions of traffic and provide a refuge area for pedestrians unable to cross the entire roadway in the allotted signal phase. To serve as a refuge area, the median should be a minimum of 1525 mm wide. Medians should be designed to provide accessible passage over or through them.

Small channelization islands, which can not provide a minimum 1525 x 1525 landing at the top of ramps, shall be cut through level with the surface of the street.

Crosswalk dimensions, crosswalk markings and stop bar locations shall be as shown elsewhere in the plans. At intersections where crosswalk markings are not required, ramps shall be aligned with theoretical crosswalks, or as directed by the Engineer.

Existing features that comply with TAS may remain in place unless otherwise shown on the plans.

Handrails are not required on curb ramps. Curb ramps shall be provided wherever an accessible route crosses (penetrates) a curb.

Shaded areas indicate locations of detectable warnings. (Color / light reflective value and texture contrast)

Curb ramps and landings shall be constructed and paid for in accordance with Item, "Curb ramp and Landing". Street curb transitions and curb bevels will be paid for in accordance with Item, "Concrete Curb, Gutter and Combined Curb and Gutter".

R = Radius
D = Diameter

All unit-less dimensions are millimeters

*Texas Department of Transportation*
*Design Division (Roadway)*

# PEDESTRIAN FACILITIES
## CURB RAMPS
## PED-02 (M)

SHEET 1 OF 3

| FILE: ped02m.dgn | DN: MAM | CK: MAM | DW: BGD | CK: |
|---|---|---|---|---|
| © TxDOT March 2002 | DIST | FED REG | FEDERAL AID PROJECT # | SHEET |
| REVISIONS | | 6 | | 3574 |
| | COUNTY | | CONTROL | SECT | JOB | HIGHWAY |
| | | | | | | |

DISCLAIMER:
The use of this standard is governed by the "Texas Engineering Practice Act". No warranty of any kind is made by TxDOT for any purpose whatsoever. TxDOT assumes no responsibility for the conversion of this standard to other formats or for incorrect results or damages resulting from its use.

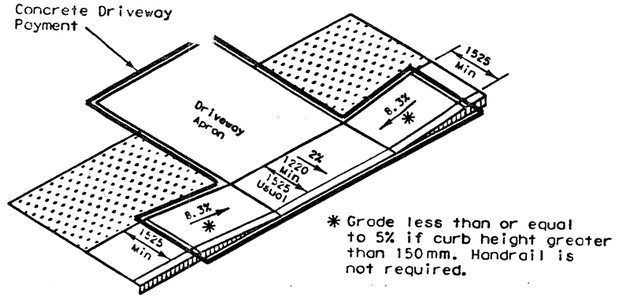


* Grade less than or equal to 5% if curb height greater than 150mm. Handrail is not required.

**Ramp sidewalk**

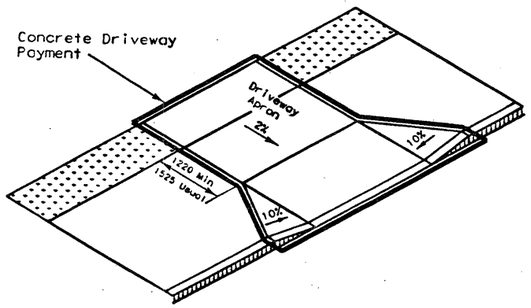


**Wide sidewalk**

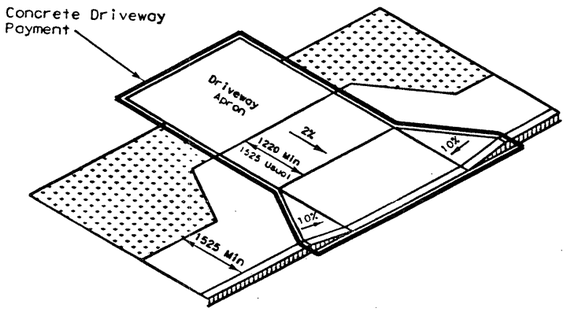


**Apron offset sidewalk**

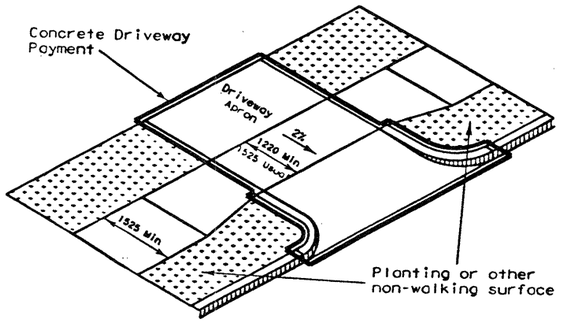


**Setback sidewalk**

## SIDEWALK TREATMENT AT DRIVEWAYS

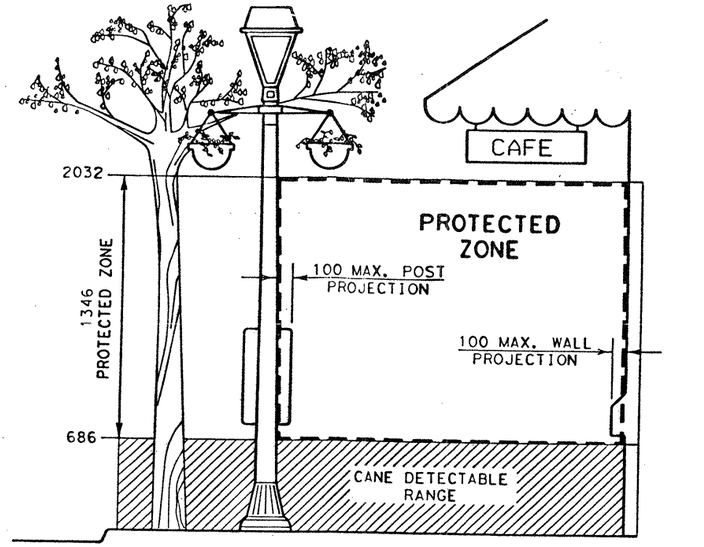


## PROTECTED ZONE

In pedestrian circulation area, maximum 100 mm projection for post or wall mounted objects between 686 mm and 2032 mm above the surface.

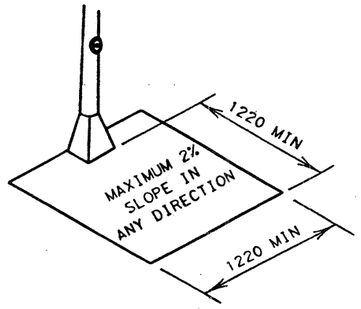


## CLEAR GROUND SPACE AT PEDESTRIAN PUSH BUTTON

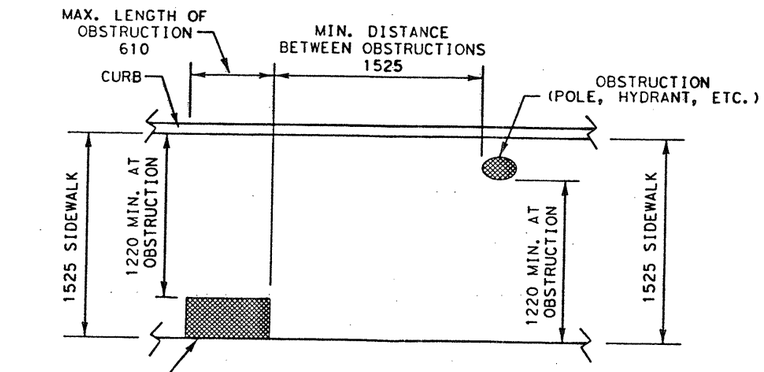


PLAN VIEW

## PLACEMENT OF STREET FIXTURES

(ITEMS NOT INTENDED FOR PUBLIC USE. MINIMUM 1220 x 1220 CLEAR GROUND SPACE REQUIRED AT PUBLIC USE FIXTURES.)

### General Notes

All slopes are maximum allowable. The least possible slope that will still drain properly should be used.

Traffic signal or illumination poles, ground boxes, controller boxes, signs, drainage facilities and other items shall be placed so not to obstruct the accessible route.

Usual sidewalk cross slope equals 1.5%. The maximum allowable sidewalk cross slope equals 2%.

Street grades and cross slopes shall be as shown elsewhere in the plans.

Existing features that comply with TAS may remain in place unless otherwise shown on the plans.

Changes in level greater than 6.35 mm are not permitted.

Any part of the accessible route with a slope greater than 1:20 (5%) shall be considered a ramp. If a ramp has a rise greater than 150 mm or a horizontal projection greater than 1830 mm, then it shall have handrails on both sides, with the following exceptions:

At ramp sidewalks shown at far left.

Handrails are not required on curb ramps. Curb ramps shall be provided wherever an accessible route crosses (penetrates) a curb.

The least possible grade should be used to maximize accessibility. Where structurally impractical to achieve TAS compliance, the running slope of sidewalks and crosswalks, within the public right of way, may follow the grade of the parallel roadway without invoking Texas Accessibility Standards (TAS) variances for landings or handrails. Where a continuous grade greater than 5% must be provided, handrails may be desirable on one or both sides of the sidewalk to improve accessibility. Handrails may also be needed to protect pedestrians from potentially hazardous conditions.

Parabolic crowns may require adjustment in crosswalk areas to limit the crosswalk grade to 5%.

Driveways and turnouts shall be constructed and paid for in accordance with Item, "Driveways and Turnouts". Sidewalks shall be constructed and paid for in accordance with Item, "Sidewalks".

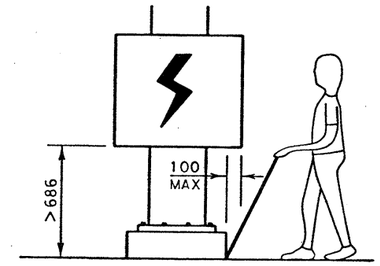


When an obstruction of a height greater than 686 mm from the surface would create a protrusion of more than 100 mm into the pedestrian circulation area, construct additional curb or foundation at the bottom to provide a maximum 100 mm overhang.

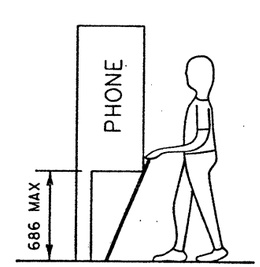


Protruding objects of a height ≤ 686 mm are detectable by cane and do not require additional treatment.

## DETECTION BARRIER FOR VERTICAL CLEARANCE < 2032

R = Radius
D = Diameter

All unit-less dimensions are millimeters

Texas Department of Transportation
Design Division (Roadway)

# PEDESTRIAN FACILITIES
## SIDEWALKS

## PED-02 (M)

SHEET 2 OF 3

| FILE: ped02m.dgn | DN: MAM | CK: MAM | DW: BGD | CK: |
|---|---|---|---|---|
| ©TxDOT March 2002 | DIST | FED REG | FEDERAL AID PROJECT | SHEET |
| REVISIONS | | 6 | | 3578 |
| | COUNTY | | CONTROL SECT JOB | HIGHWAY |

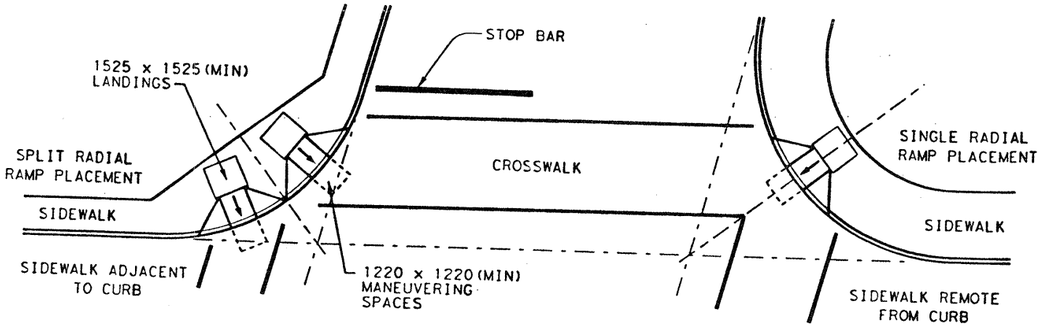


SKEWED INTERSECTION WITH "LARGE" RADIUS

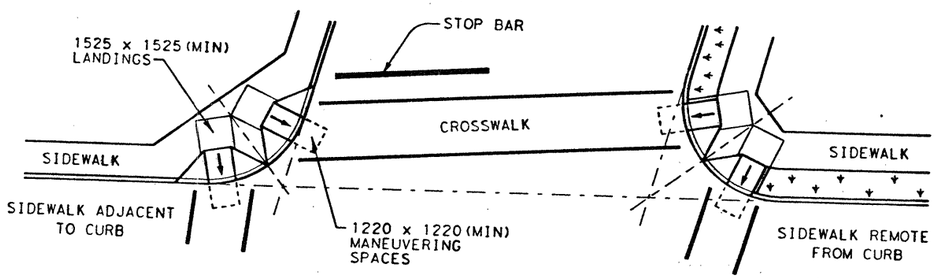


SKEWED INTERSECTION WITH "SMALL" RADIUS

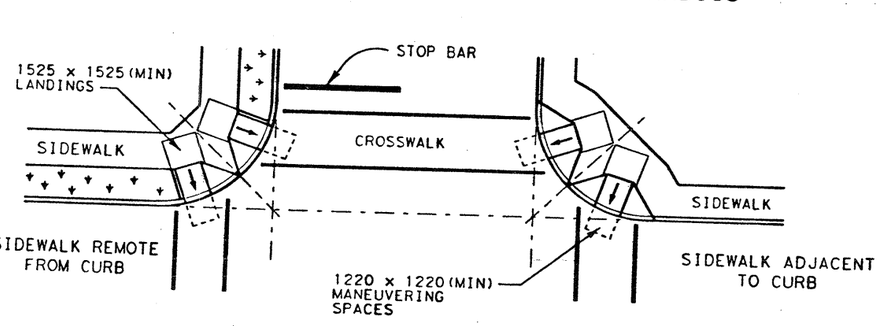


NORMAL INTERSECTION WITH "SMALL" RADIUS

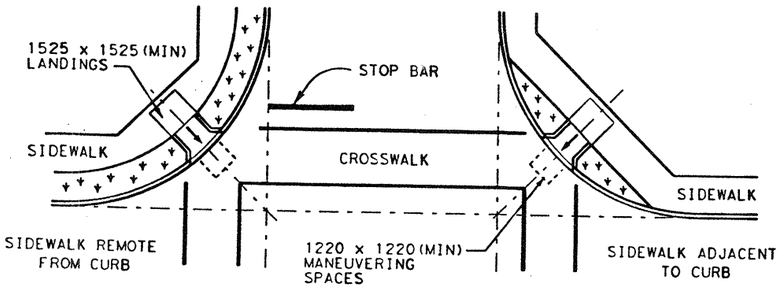


NORMAL INTERSECTION WITH "LARGE" RADIUS

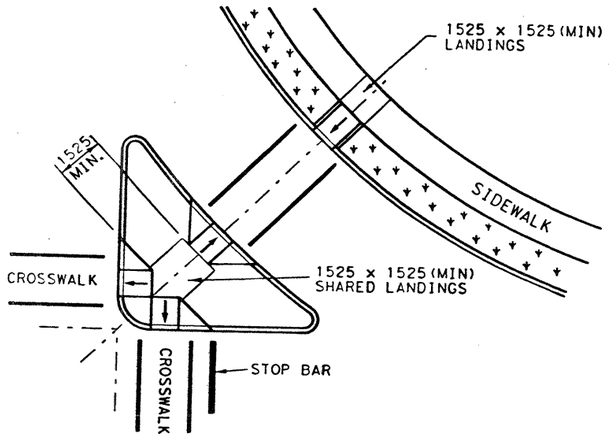


AT INTERSECTION
W/FREE RIGHT TURN & ISLAND

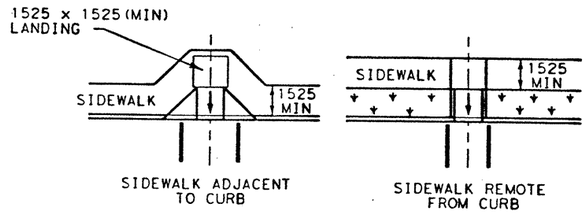


MID-BLOCK PLACEMENT
PERPENDICULAR RAMPS

## TYPICAL CROSSING LAYOUTS

SEE SHEET 1 OF 3 FOR DETAILS AND DIMENSIONS

### General Notes

Street grades and cross slopes shall be as shown elsewhere in the plans.

Ramps are shown here without detectable warnings for simplicity. Detectable warnings are required at the locations shown on the PED Standard (Sheet 1 of 3) and in accordance with the details shown below.

Small channelization islands, which can not provide a minimum 1525 x 1525 landing at the top of ramps, shall be cut through level with the surface of the street.

R = Radius
D = Diameter

All unit-less dimensions are millimeters

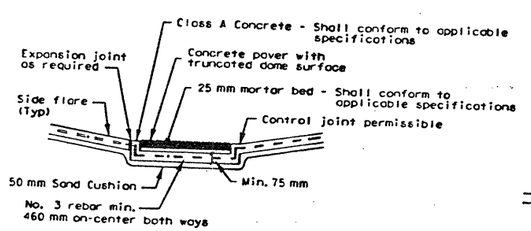


Section A-A

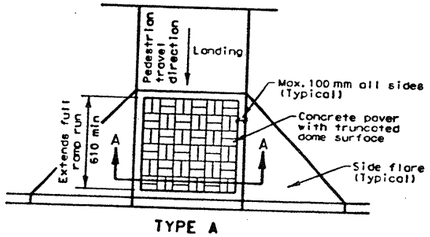


TYPE A
Truncated Dome Pattern Curb Ramp

DETECTABLE WARNINGS

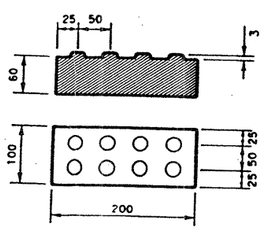


Concrete paver with truncated dome surface

### General Notes

Concrete paver units shall meet all requirements of ASTM C-936, C-33, and shall be laid in a two by two unit basket weave pattern, unless shown otherwise in the plans.

Domes shall be aligned in the direction of pedestrian travel.

Concrete paver units shall have a truncated dome top surface for detectable warning to pedestrians.

Concrete paver unit color for the ramp shall be a contrasting color that provides a light reflective value that significantly contrasts with the adjacent surfaces. The color of the concrete paver units shall be shown elsewhere in the plans. (Adjacent surfaces include side flares).

Concrete paver units shall be saw cut only and any cut unit shall not be less than 25 percent of a full unit.

Texas Department of Transportation
Design Division (Roadway)

# PEDESTRIAN FACILITIES
## INTERSECTION LAYOUTS AND DETECTABLE WARNINGS
## PED-02 (M)

SHEET 3 OF 3

| FILE: ped02m.dgn | DN: MAM | CK: MAM | DW: BGD | CK: |
|---|---|---|---|---|
| ©TxDOT March 2002 | DIST | FED REG | FEDERAL AID PROJECT # | SHEET |
| REVISIONS | | 6 | | 357C |
| | COUNTY | | CONTROL | SECT | JOB | HIGHWAY |

DISCLAIMER:
The use of this standard is governed by the "Texas Engineering Practice Act". No warranty of any kind is made by TxDOT for any purpose whatsoever. TxDOT assumes no responsibility for the conversion of this standard to other formats or for incorrect results or damages resulting from its use.

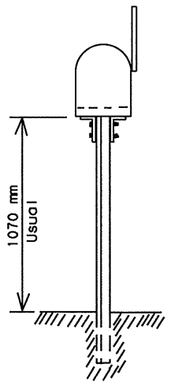


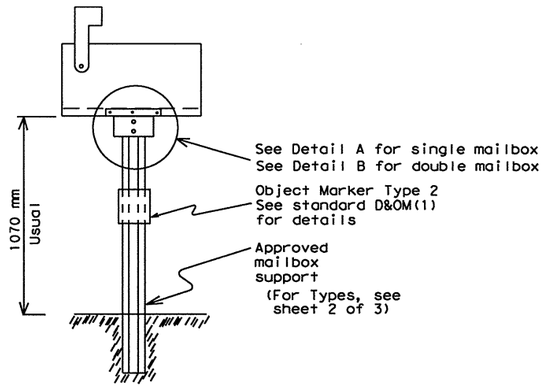


## SINGLE AND DOUBLE MAILBOX MOUNT

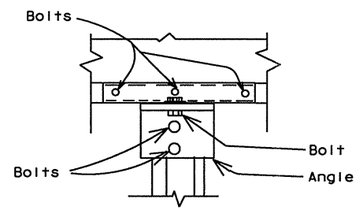


For bolt sizes see notes for
Standard Mailbox Attachment Details

DETAIL A

## SINGLE MAILBOX MOUNT

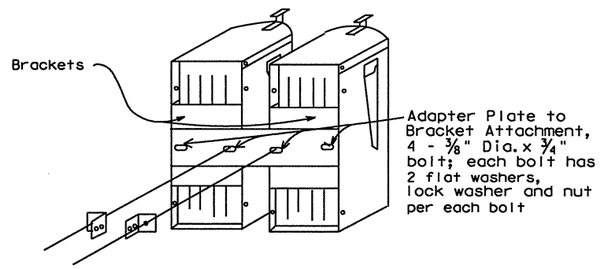


DETAIL B

## DOUBLE MAILBOX MOUNT

(Not permitted for No. 2 Mailboxes)

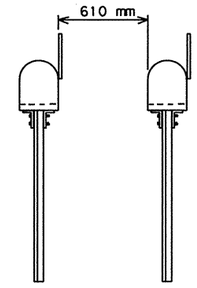


## TWO SINGLE MAILBOX INSTALLATIONS

610 mm Clear Distance
between installations

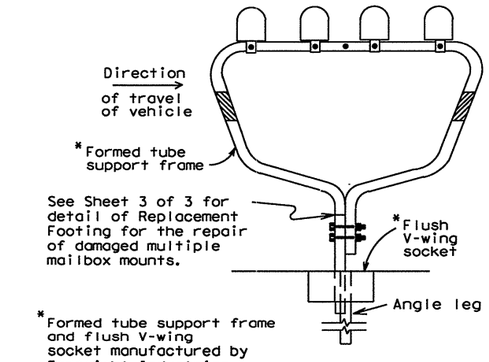


*Formed tube support frame and flush V-wing socket manufactured by Foresight Industries or equivalent.

FRONT

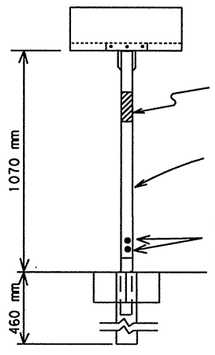


SIDE

Maximum insertion depth of formed tube support frame into V-wing socket is 230 mm. Minimum insertion depth is 180 mm.

| Permissible Number of Mailboxes on Multiple Support: | |
|---|---|
| All Size No. 1 | - 5 Maximum |
| Combination Various Sizes with no more than 2 Size No. 2 | - 4 Maximum |
| All Size No. 2 | - 3 Maximum |

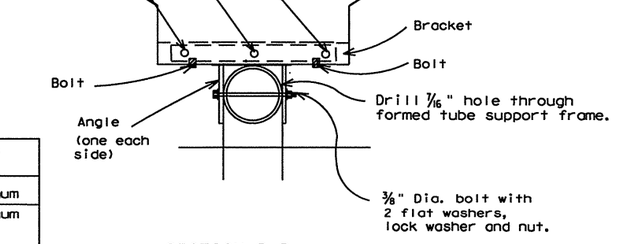


SECTION B-B

For bolt sizes see notes for
Standard Mailbox Attachments Details

## MULTIPLE MAILBOX MOUNT

## TWO OR MORE MULTIPLE MAILBOX INSTALLATIONS

1220 mm Clear Distance
between installations.

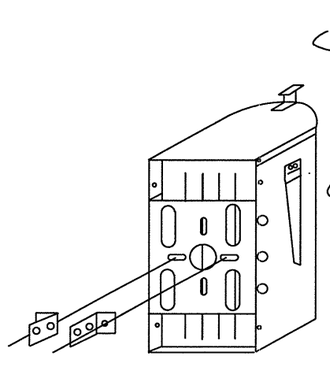


SIZE NO. 1 MAILBOX

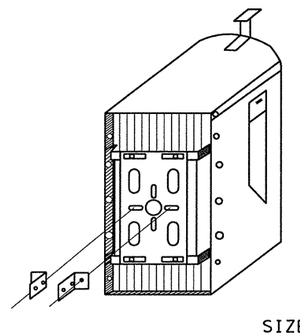

SIZE NO. 1 1/2 AND NO. 2 MAILBOX

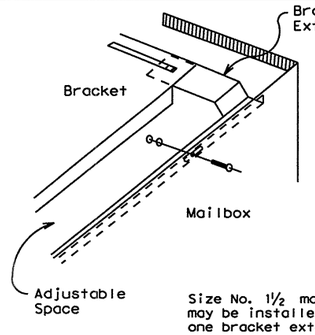


Size No. 1½ mailbox may be installed using one bracket extension.

Bracket to mailbox attachment:
6 - 1/4" Dia. x 3/4" bolt w/2 flat
washers and nut per each bolt.

Bracket to bracket extension attachment:
2 - 1/4" Dia. x 3/4" carriage bolt w/
flat washer, lock washer and
nut per bolt (4 bolts required if 2
bracket extensions are used).

Angle to bracket attachment:
2 - 3/8" Dia. x 3/4" bolt w/2 flat
washers, lock washer and nut per each
bolt.

Angle to mailbox support attachment:
2 - 3/8" Dia. x 2 1/2" bolt w/2 flat
washers, lock washer, and nut per each
bolt.

## STANDARD MAILBOX ATTACHMENT DETAILS

For General Notes See sheet 2 of 3.

See Sheet 3 of 3 for Adapter Plate, Angle Bracket and Bracket Extension Hardware Details.

Bracket may be installed with edge down on size No. 1 mailboxes.

DISCLAIMER:
The use of this standard is governed by the "Texas Engineering Practice Act". No warranty of any kind is made by TxDOT for any purpose whatsoever. TxDOT assumes no responsibility for the conversion of this standard to other formats or for incorrect results or damages resulting from its use.

LEVELS D: FED
1 3 4 5 6 7 8 9 10 11 12 13 14 15 16
17 18 19 20 21 22 23 24 25 26 27 28 29 30 31 32
33 34 35 36 37 38 39 40 41 42 43 44 45 46 47 48
49 50 51 52 53 54 55 56 57 58 59 60 61 62 63

Texas Department of Transportation
Construction & Maintenance Division (Maintenance)

©2000

# MAILBOX MOUNTING DETAILS

# MB-96(M)

Sheet 1 of 3

| FILE: MB96M.DGN | DN: | CK: | DW: | CK: | NEG: | |
|---|---|---|---|---|---|---|
| ©TxDOT 1996 | DIST | FED REG | FEDERAL AID PROJECT • | | | SHEET |
| REVISIONS | SAT | 6 | NH 2000(704), etc. | | | 358 |
| | COUNTY | | CONTROL | SECT | JOB | HIGHWAY |
| | BEXAR | | 2452 | 01 | 036, etc. | LP 1604 |

DISCLAIMER:
The use of this standard is governed by the "Texas Engineering Practice Act". No warranty of any kind is made by TxDOT for any purpose whatsoever. TxDOT assumes no responsibility for the conversion of this standard to other formats or for incorrect results or damages resulting from its use.

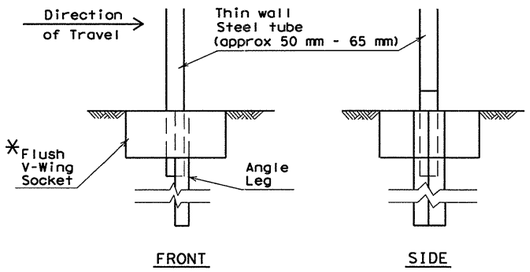


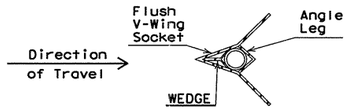


*See General Note 6.

## TYPE 1 SUPPORT/FOUNDATION

THIN WALL STEEL TUBE w/ V-LOC ANCHORAGE

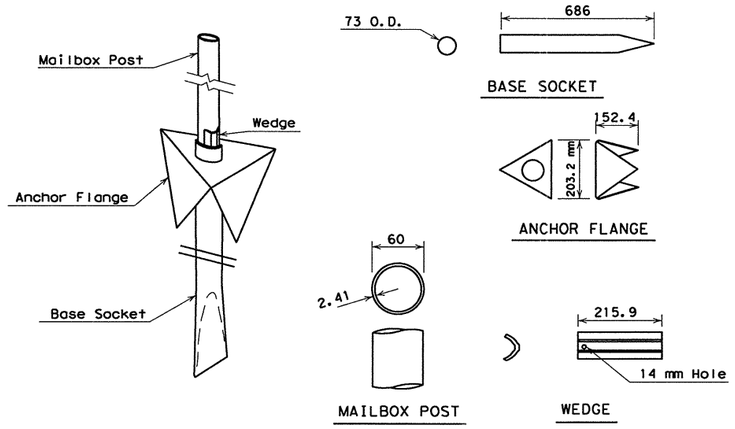


All dimensions may be varied to fit 60 mm thin wall steel tube post if approved by Engineer

## TYPE 2 SUPPORT/FOUNDATION

THIN WALL STEEL TUBE w/ANCHOR FLANGE

NOTES FOR TYPE 2 SUPPORT/FOUNDATION

1. The Base Socket is formed from 73 mm O.D. x 12 gauge galvanized pipe.
2. The Anchor Flange is formed from 12 gauge galvanized steel made to A-525. Only needed for soft soils as determined by the Engineer.
3. The Wedge is formed from 11 gauge galvanized steel made to ASTM A-525.
4. The Mailbox Post is 60 mm O. D. 2.41 mm thin wall steel tubing.
5. Steel Support Foundation unit shall be made from new material and shall be corrosion resistant. The unit shall be galvanized in accordance with ASTM designation A-123, A-525, G-90 or better. In addition, steel members of the support that are in direct contact with earth must be galvanized to ASTM Designation G-90 and coated with one mil of clear approved coating, or galvanized in accordance with ASTM Designation A-123.

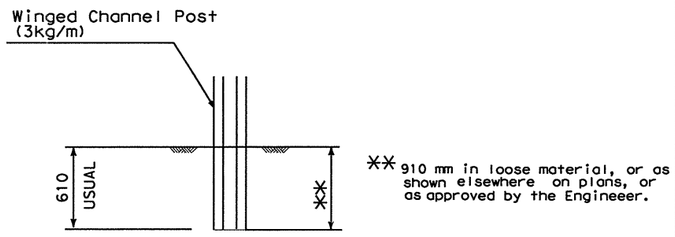


** 910 mm in loose material, or as shown elsewhere on plans, or as approved by the Engineeer.

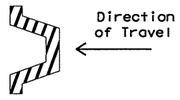


Recommended orientation to facilitate attachment of Object Marker.

DELINEATOR POST
3 kg/m

## TYPE 3 SUPPORT/FOUNDATION

DELINEATOR POST

GENERAL NOTES

1. Bolts, nuts, washers and other miscellaneous hardware shall be galvanized in accordance to ASTM Designation: A-153, Class C or D, or B-454, Class 40. All bolts shall meet ASTM designation A-307.
2. Foundation and post must be driven plumb. Recommended procedure is to drive post or foundation about 280 mm, stop and check for straightness, front to back, side to side. Make adjustments, continue to drive an additional 280 mm, repeat check, make final adjustments, complete installation.
3. The 3 kg./m. winged channel posts for the Type 3 support shall conform to the requirements of departmental materials specification D-9-7130.
4. Hardware for mounting mailboxes to support/foundation furnished by Foresight Industries or equivalent may be used when approved by the Engineer.
5. Where more than two mailboxes are to be mounted at one location a multiple mailbox mount shall be used.
6. The formed tube support frame for the multiple mailbox mount and the Type 1 mailbox support system are patented and manufactured by Foresight Products Inc.
7. Any support or foundation on these standards may be used for mounting single or double mailboxes.

Texas Department of Transportation
Construction & Maintenance Division (Maintenance)

© 2000

# MAILBOX SUPPORT/ FOUNDATION DETAILS

# MB-96(M)



| FILE: MB96M.DGN | DN: | CK: | DW: | CK: | NEG: | |
|---|---|---|---|---|---|---|
| ©TxDOT 1996 | DIST | FED REG | FEDERAL AID PROJECT • | | | SHEET |
| REVISIONS | SAT | 6 | NH 2000(704),etc. | | | 359 |
| | COUNTY | | CONTROL | SECT | JOB | HIGHWAY |
| | BEXAR | | 2452 | 01 | 036,etc. | LP 1604 |

LEVELS DISPLAYED
1 2 3 4 5 6 7 8 9 10 11 12 13 14 15 16
17 18 19 20 21 22 23 24 25 26 27 28 29 30 31 32
33 34 35 36 37 38 39 40 41 42 43 44 45 46 47 48
49 50 51 52 53 54 55 56 57 58 59 60 61 62 63

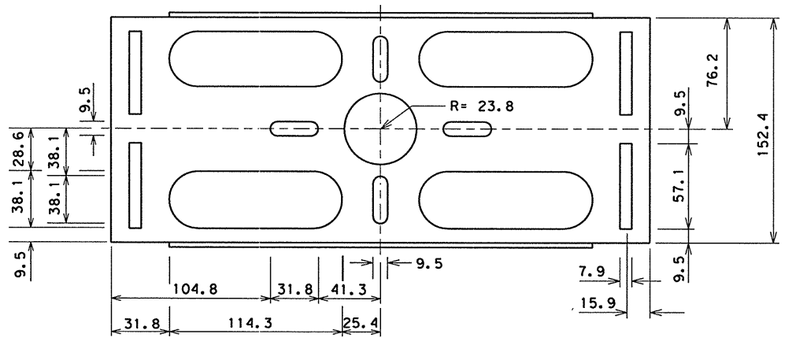


PLAN VIEW

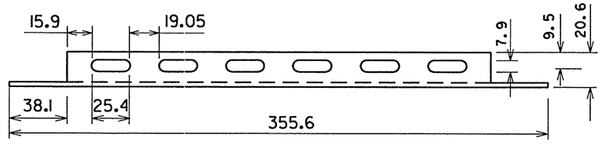


SIDE VIEW

## BRACKET

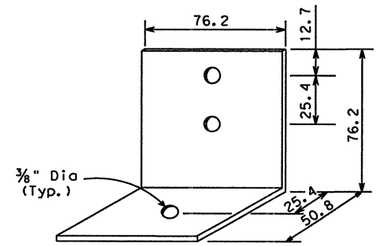


## ANGLE

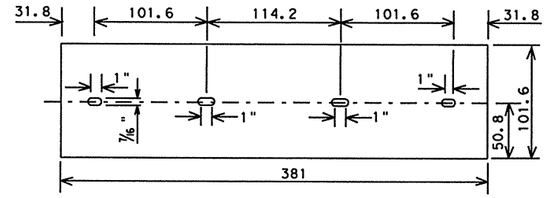


Holes Shall Have a Diameter of 7/16".

## ADAPTER PLATE

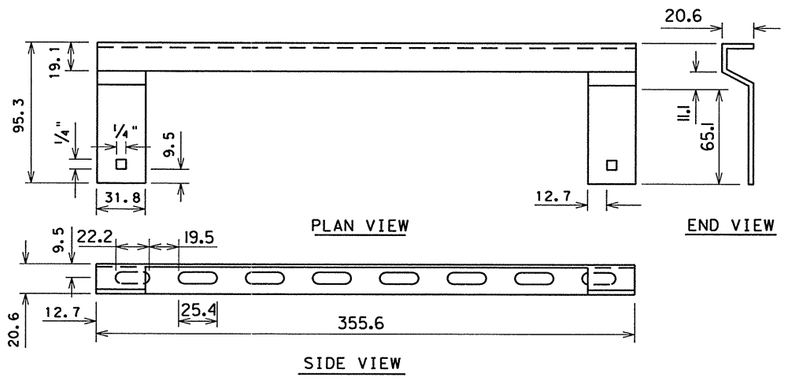


SIDE VIEW

## BRACKET EXTENSION

Object Marker Notes:

Object Markers for mailbox support should be the OM-2SR or OM-2VP (152.4 mm x 304.8 mm). Object markers shall conform to Department Material Specification D-9-8600. Attachment of Object Marker to support may be:

1) For round or tubular support, with pressure sensitive adhesive.
2) For winged channel support, with reflective material on aluminum or plastic substrate and attached by nut/bolt with washers or pop rivet.

The marker is to be placed between 150 mm and 300 mm below the bottom of the mailbox.

On two-way two lane highways, a marker is to be placed on each side of the support.

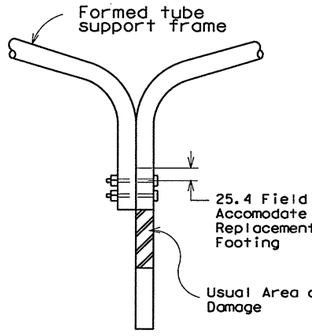


TYPICAL MULTIPLE MAILBOX MOUNT

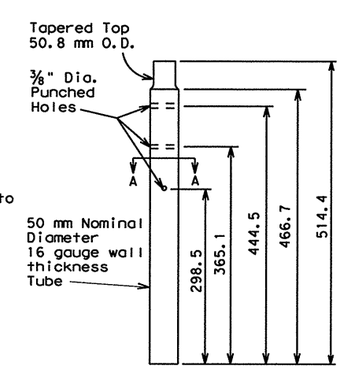


REPLACEMENT FOOTING

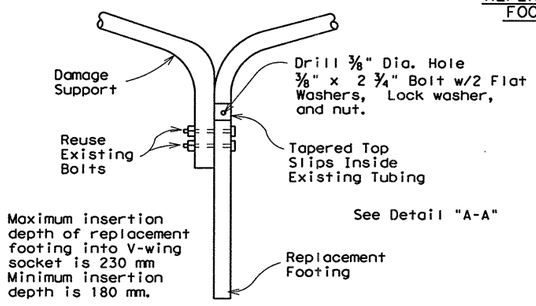


REPAIR DETAIL

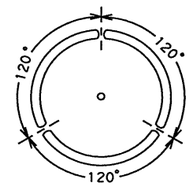


DETAIL "A-A"

3 - 9.5 mm Dia. Punched Holes to Create Weakened Section

NOTES:

Only damaged multiple mailbox mounts having no visible damage other than to the portion of the footing that is to be discarded may be repaired.

Material for the repair footing is to be AISI-1008 hot rolled carbon steel. The unit shall be galvanized.

Hardware for mounting mailboxes to support/foundation furnished by Foresight Industries or equivalent may be used when approved by the Engineer.

The bracket and bracket extension shall be constructed of 14 gauge galvanized steel sheet conforming to ASTM A-525(G-90).

The angle shall be constructed of 14 gauge steel sheet and the adapter plate shall be constructed of 12 gauge steel sheet. The angle and adapter plate shall be fabricated in accordance with ASTM A-123 or constructed of galvanized steel sheet conforming to ASTM A-525(G-90).

Items with evidence of damage to the galvanized coating or wet storage stains (white rust) will not be accepted.

All unit-less dimensions are in millimeters.

## DETAIL OF REPLACEMENT FOOTING
FOR REPAIR OF MULTIPLE MAILBOX MOUNT

Texas Department of Transportation
Construction & Maintenance Division (Maintenance)

©2000

## STANDARD MAILBOX HARDWARE

# MB-96(M)

Sheet 3 of 3

| FILE: MB96M.DGN | DN: | CK: | DW: | CK: | NEG: | |
|---|---|---|---|---|---|---|
| ©TxDOT 1996 | DIST | FED REG | FEDERAL AID PROJECT # | | | SHEET |
| REVISIONS | SAT | 6 | NH 2000(704),etc. | | | 360 |
| | COUNTY | | CONTROL | SECT | JOB | HIGHWAY |
| | BEXAR | | 2452 | 01 | 036,etc. | LP 1604 |

DISCLAIMER:
The use of this standard is governed by the "Texas Engineering Practice Act". No warranty of any kind is made by TxDOT for any purpose whatsoever. TxDOT assumes no responsibility for the conversion of this standard to other formats or for incorrect results or damages resulting from its use.

LEVELS D... KYED
1 | 3 4 5 6 7 8 9 10 11 12 13 14 15 16
17 18 19 20 21 22 23 24 25 26 27 28 29 30 31 32
33 34 35 36 37 38 39 40 41 42 43 44 45 46 47 48
49 50 51 52 53 54 55 56 57 58 59 60 61 62 63

DISCLAIMER:
The use of this standard is governed by the "Texas Engineering Practice Act". No warranty of any kind is made by TxDOT for any purpose whatsoever. TxDOT assumes no responsibility for the conversion of this standard to other formats or for incorrect results or damages resulting from its use.

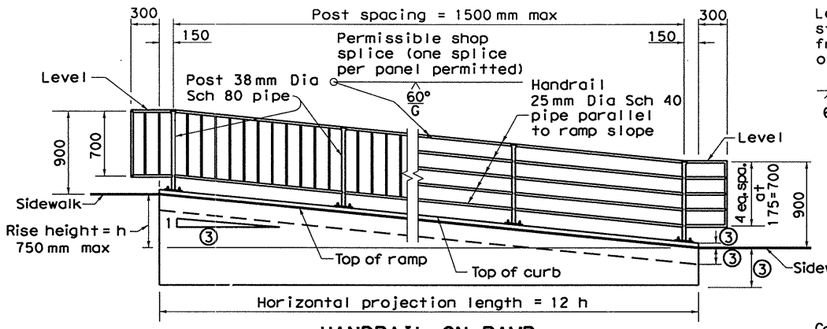


## HANDRAIL ON RAMP

(Used where ramp or sidewalk is more than 750 mm above adjacent surface.)

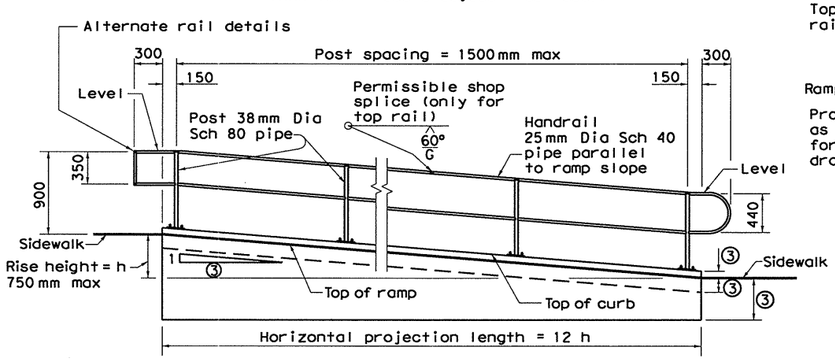


## HANDRAIL ON RAMP

(Used in single-level ramp or lowest part in multi-level ramp.)

③ See Ramp Details, located elsewhere in plans, for ramp slope and dimensions.

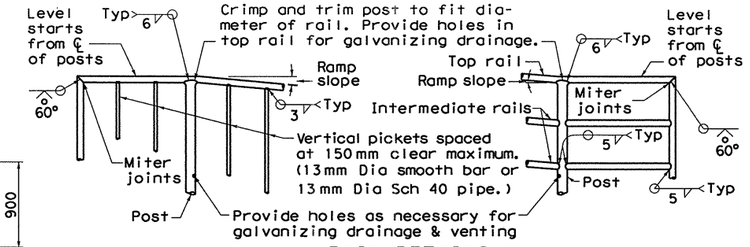


## RAIL DETAILS

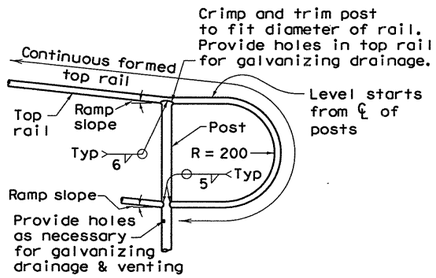


## RAIL DETAILS

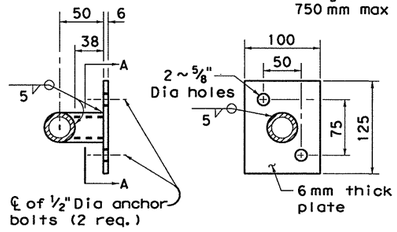


## WALL MOUNT DETAILS

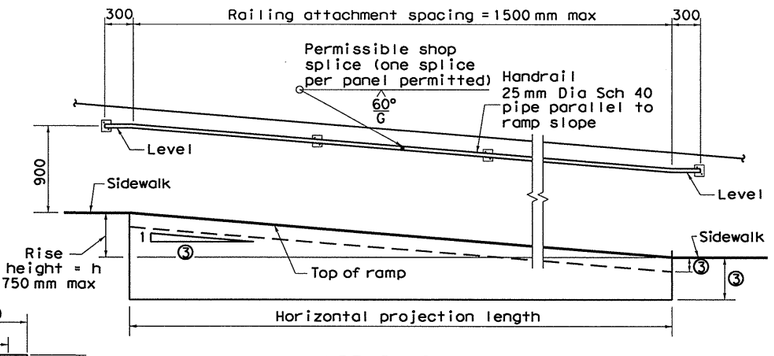


## HANDRAIL ON WALL

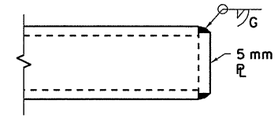


## PIPE END DETAILS

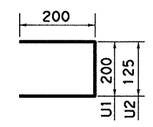


## BARS U (#4)

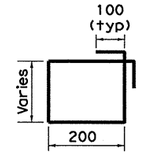


## BARS S (#4)

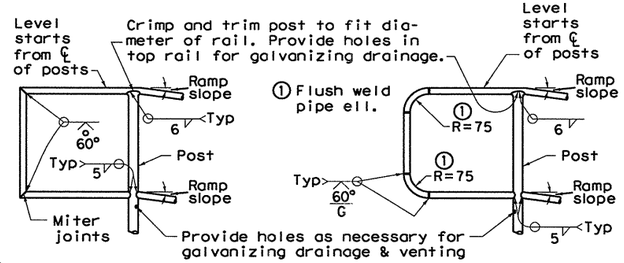


## ALTERNATE RAIL DETAILS

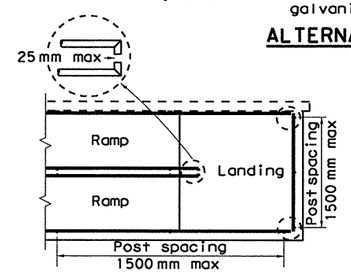


## MULTI-LEVEL RAMP

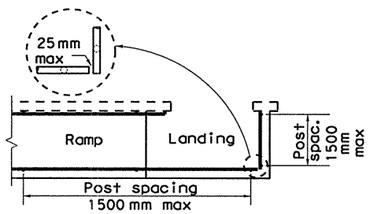


## SINGLE-LEVEL RAMP

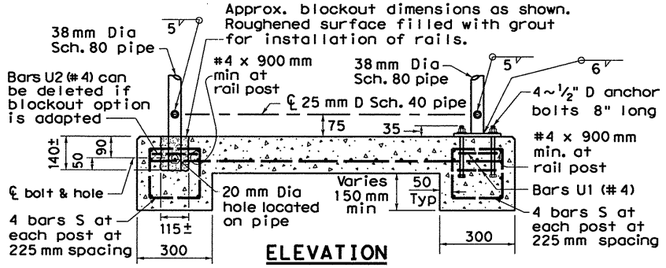


## ELEVATION

Rail posts, may be cast into sidewalk or anchored in blockout after sidewalk concrete has cured.

## OPTIONAL RAIL POST WITHOUT CURB

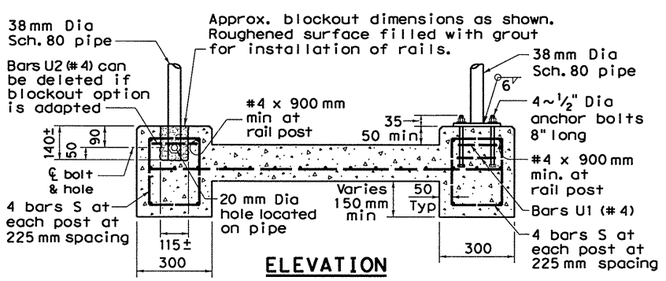


## ELEVATION

Rail posts, may be cast into sidewalk or anchored in blockout after sidewalk concrete has cured.

## RAIL POST WITH CURB

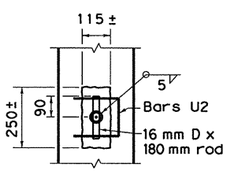


## EMBEDDED POST ANCHOR

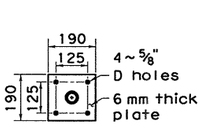


## BASE PLATE DETAILS

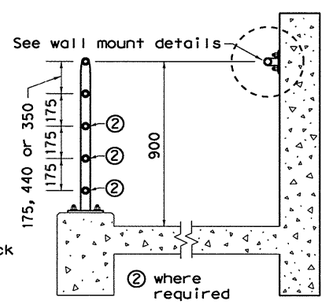


## COMBINATION OF HANDRAIL ON WALL AND RAMP

GENERAL NOTES:

Design conforms to Texas Accessibility Standards and AASHTO 1993 Standard and current Interim Specifications.

See Sidewalk and Ramp details for ramp slope, dimensions and typical concrete and reinforcing steel. This sheet shows additional reinforcing steel required for handrail only.

Material for posts and handrails shall be ASTM A53 Gr B, or A501. Base plates shall be A36. All parts shall be galvanized in accordance with the specifications.

Square tubing of equivalent outside dimensions and strength may be substituted for the round shapes shown, as directed by the Engineer.

Anchor bolts for handrails attached to the wall shall be placed using an adhesive doweling system approved by the Engineer. Anchor bolts shall have an allowable capacity of 10.68 kN in tension and 10.23 kN in shear. Installation of the anchor bolts, including hole depth and diameter, shall be in accordance with the manufacturer's recommendation. If required by the Engineer, 3 of the first 10 anchors, and 5% of the remaining anchors shall be tested to 70% of minimum specified capacity. The contractor shall provide a suitable ram, pump, pressure gauge and reaction system.

Anchor bolts for posts attached on the ramps shall conform to ASTM A36 or approved equal. Nuts for anchor bolts shall conform to ASTM A563 Gr A or better heavy hex. Threads for anchor bolts and nuts shall be rolled or cut threads of unified national coarse (UNC) thread series. Bolts and nuts shall have class 2A and 2B fit tolerances. Anchor bolts and exposed nuts shall be galvanized or coated with zinc-rich paint. Washers shall be galvanized. Anchor bolts in ramp and sidewalk may be anchored using a drill and grout system.

Exposed edges of handrail and handrail posts shall be rounded or chamfered to approximately 3 mm by grinding.

Anchor bolts, nuts and washers to be included in unit price bid for railing.

Erection drawings showing panel lengths, splice locations, rail post spacing and anchor bolts setting shall be submitted to the Engineer for approval.

R = Radius
D = Diameter

All unit-less dimensions are millimeters

Texas Department of Transportation
Design Division (Roadway)

©2000

# RAMP HANDRAIL DETAILS

# RHD-97 (M)

| FILE: RHD97M.DGN | DN: JSY | CK: | DW: BR | CK: | NEG: | |
|---|---|---|---|---|---|---|
| ©TxDOT 1997 | DIST | FED REG | FEDERAL AID PROJECT • | | | SHEET |
| REVISIONS | SAT | 6 | NH 2000(704),etc. | | | 361 |
| | COUNTY | | CONTROL | SECT | JOB | HIGHWAY |
| | BEXAR | | 2452 | 01 | 036,etc. | LP 1604 |

LEVELS DIS... 0
1 2 3 4 5 6 7 8 9 10 11 12 13 14 15 16
17 18 19 20 21 22 23 24 25 26 27 28 29 30 31 32
33 34 35 36 37 38 39 40 41 42 43 44 45 46 47 48
49 50 51 52 53 54 55 56 57 58 59 60 61 62 63

℄ DRIVEWAY #3A STA. 0+000.000
LESLIE RD. CONN. STA. 0+195.747

℄ LESLIE RD CONN

0+200

0+220

FACE OF CURB

0.230 CURB

1.5 SIDEWALK

EDGE OF PAVEMENT

PT 0+226.491

℄ WESTWOOD LOOP
N 65°58'05.83"W

S.E.T. TO DRIVEWAY 3A

NOTE: EXIST. G.F.U. = GREY FOREST GAS (100mm)

BEGIN RET WALL 1
STA 0+000.000 (RW 1) =
65.571 RT STA 15+460 (℄ LP 1604) =
13.155 RT STA 0+204.884 (LESLIE)
EL 275.000
X= 628,885.8791
Y= 4,185,334.9354

RET WALL 1 ANGLE POINT
STA 0+019.122 (RW 1) =
67.451 RT STA 15+479.030 (℄ LP 1604) =
13.066 RT STA 0+224.007 (LESLIE RD) =
24.018 RT STA 0+017.101 (WW LOOP)
EL 275.541
X= 628,878.2859
Y= 4,185,317.3851

EXIST SAW'S (925mm)

45°

1.0 DITCH

FACE OF RET WALL 1
=RET WALL CONTROL

RIPRAP (CONC) (CL B) EXTEND TO RIPRAP HEADWALL (S.E.T.)

3.8

EXIST. G.F.U.

S 23° 23' 45.22" W

NEW POWER POLE (±)

R.O.W.

1.0 DITCH

1.0 DITCH

1.25 M (+/-)

NEW G.F.U.

EXIST./NEW G.F.U. TIE (±)

EXIST. GREY FOREST GAS (100mm) (TO REMAIN IN PLACE)

℄ DRIVEWAY #3A
(FOR MORE DETAILS SEE DRIVEWAY LAYOUT.)

-SHADED AREAS REPRESENTS APPROX. LIMITS OF RET. WALL. STRAPPING AND STRUCTURAL EXCAVATION.

-CONSTRUCTION AGREEMENT REQUIRED FOR WORK OUTSIDE R.O.W..

CONTRACTOR IS CAUTIONED ABOUT GAS UTILITY IN VICINITY.

MOWSTRIP / DITCH RIPRAP (CONC) (CL B) EST. @ 5.1 M3.

EXIST. SAW'S (925mm) (TO BE ABANDONED)

EXIST EDGE OF PAV (LESLIE RD)

EXIST. G.F.U.

EXIST. GREY FOREST GAS (100mm) (TO BE ABANDONED)

JOINT BID SAW'S (925mm)

7

STORM DRAIN LINE I-5B

0+020

MOWSTRIP / DITCH RIPRAP (CONC) (CL B) 3.6 (±) EST. @ 8.5 M3.

S 68° 42' 05.51" W

1.0 (±) MOWSTRIP / DITCH

1.25 M (+/-)

EXIST. G.F.U.

4.0 R.O.W.

0.6 MOWSTRIP

NEW G.F.U.

3.6 (±)

RET WALL 1 ANGLE POINT
STA 0+041.031 (RW 1) =
84.453 RT., STA. 15+493.098 (℄ LP 1604)
32.553 RT., STA. 0+113.452 (SBFR "B")
8.430 RT., STA. 0+032.495 (WW LOOP)
EL 276.095
X= 628,857.8741
Y= 4,185,309.4275

FOR CONTINUATION OF RET WALL 1 SEE NEXT SHEET

QUANTITIES THIS SHEET
CSJ 2452-01-037

NOTE(S): ALL DIMENSIONS ARE IN METERS UNLESS OTHERWISE NOTED.

SCALE: 1:200 H
1:100 V

## ESTIMATED QUANTITIES

| ITEM | UNIT | QTY. |
|---|---|---|
| RET WALL (CONC BLOCK) | M2 | 146.0 |
| RIPRAP (CONC) (CL B) | M3 | 19.0 |
| PIPE UNDERDRAIN (TY 6)(100 MM) | M | 91.0 |

-QUANTITIES FOR CONTRACTOR INFO. ONLY.
-FOR PAY QUANTITIES SEE SHEET 197A.
-FOR RET. WALL TYPICAL SECTION & COPING DETAIL, SEE MISCELLANEOUS RETAINING WALL DETAILS SHEET.

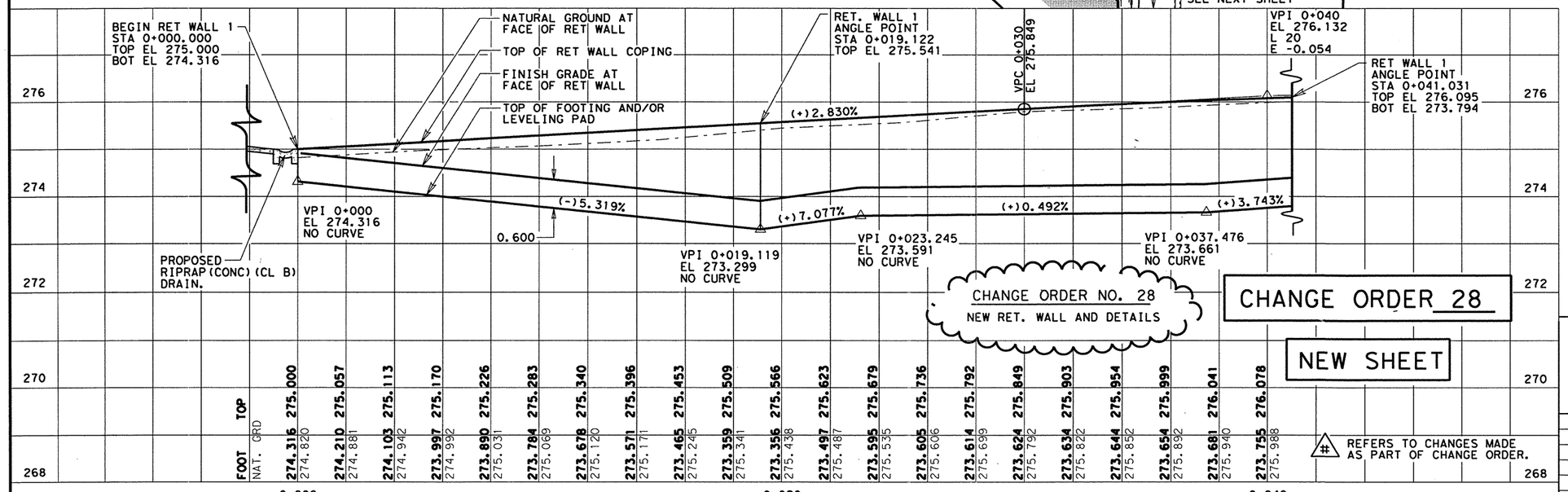


CHANGE ORDER NO. 28
NEW RET. WALL AND DETAILS

CHANGE ORDER 28

NEW SHEET

# refers to changes made as part of change order.

STATE OF TEXAS
JEROME D. PAVLISKA
76075
REGISTERED PROFESSIONAL ENGINEER

Jerome D. Pavliska, P.E. 8-11-03
Jerome D. Pavliska, P.E. Date

© 2001 Texas Department of Transportation

# RETAINING WALL 1 PLAN & PROFILE
(STA 0+000 TO STA 0+041.031)
SHEET 1 OF 2

| FED.RD. DIV.NO. | FEDERAL AID PROJECT NO. | | SHEET NO. |
|---|---|---|---|
| 6 | NH 2000(704), etc. | | 361A |
| STATE | DIST. | COUNTY | |
| TEXAS | SAT | BEXAR | |
| CONT. | SECT. | JOB | HIGHWAY NO. |
| 2452 | 01 | 036, etc | LP 1604 |

01-23-03

LEVELS DISPLAYED
ACC: t:\oo\design\lp1604fm471-90\
FILE: rw1o#new.dgn

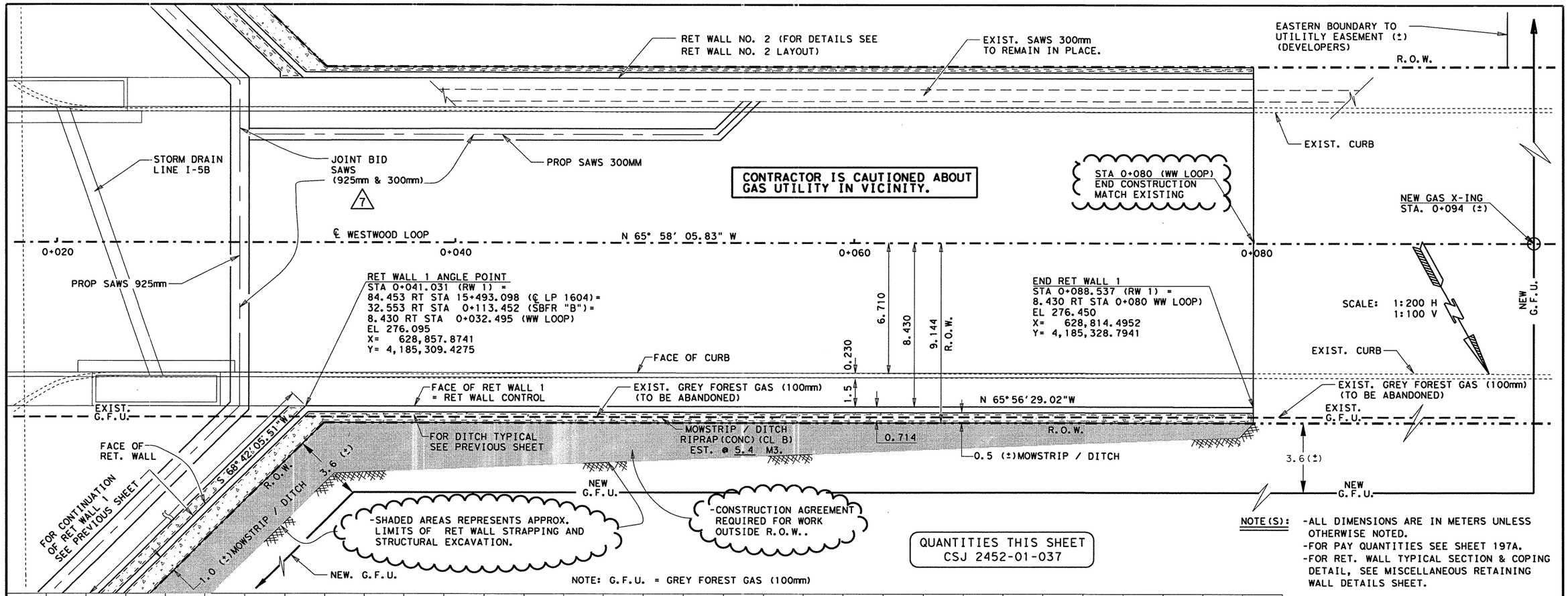


QUANTITIES THIS SHEET
CSJ 2452-01-037

NOTE(S):
- -ALL DIMENSIONS ARE IN METERS UNLESS OTHERWISE NOTED.
- -FOR PAY QUANTITIES SEE SHEET 197A.
- -FOR RET. WALL TYPICAL SECTION & COPING DETAIL, SEE MISCELLANEOUS RETAINING WALL DETAILS SHEET.

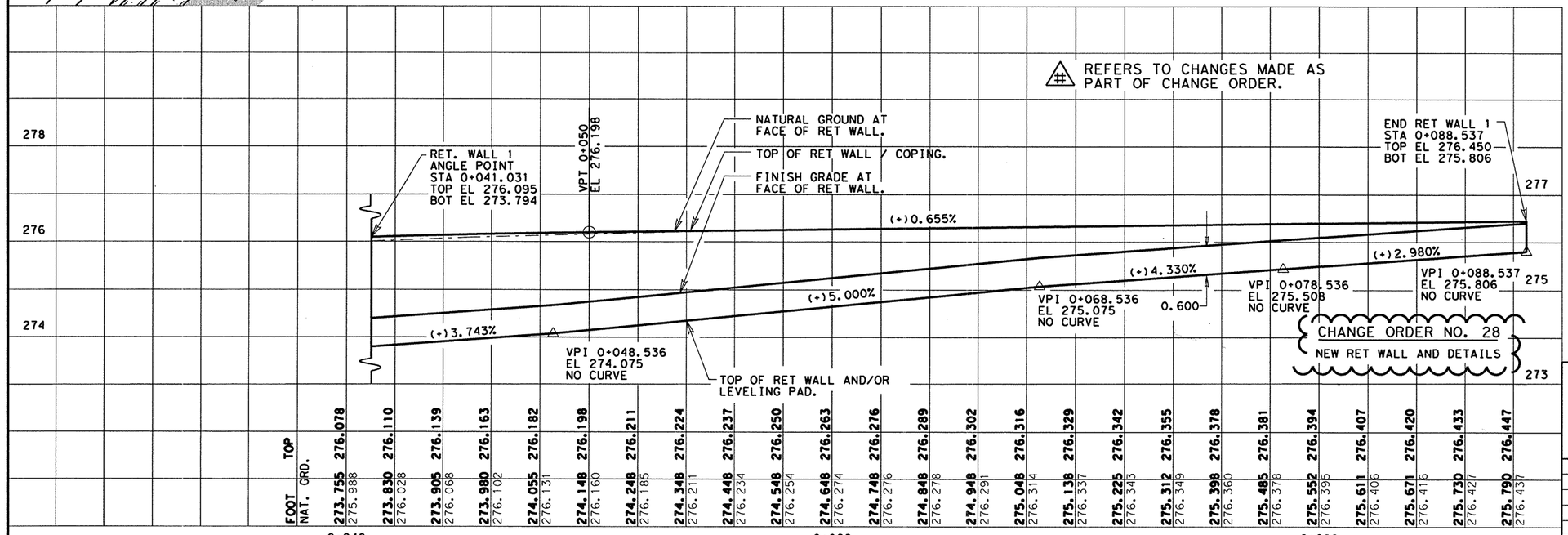


CHANGE ORDER 28

NEW SHEET

STATE OF TEXAS
JEROME D. PAVLISKA
76075
REGISTERED PROFESSIONAL ENGINEER

Jerome D. Pavliska, P.E. 8-11-03
Jerome D. Pavliska, P.E. Date

© 2001 Texas Department of Transportation

# RETAINING WALL 1 PLAN & PROFILE
(STA 0+041.031 TO STA 0+083.537)
SHEET 2 OF 2

| FED.RD. DIV.NO. | FEDERAL AID PROJECT NO. | | SHEET NO. |
|---|---|---|---|
| 6 | NH 2000(704),etc. | | 361B |
| STATE | DIST. | COUNTY | |
| TEXAS | SAT | BEXAR | |
| CONT. | SECT. | JOB | HIGHWAY NO. |
| 2452 | 01 | 036,etc | LP 1604 |

LEVELS DISPLAYED
1 2 3 4 6 7 8 9 10 11 12 13 14 15 16
17 18 19 20 22 23 24 25 26 28 29 31 32
33 34 35 36 38 40 41 42 43 44 45 46 48
49 50 51 52 53 54 55 56 57 58 59 60 61 62 63
ACC: t:\oo\design\lp1604fm471-90\
FILE: rwlbsnew.dgn

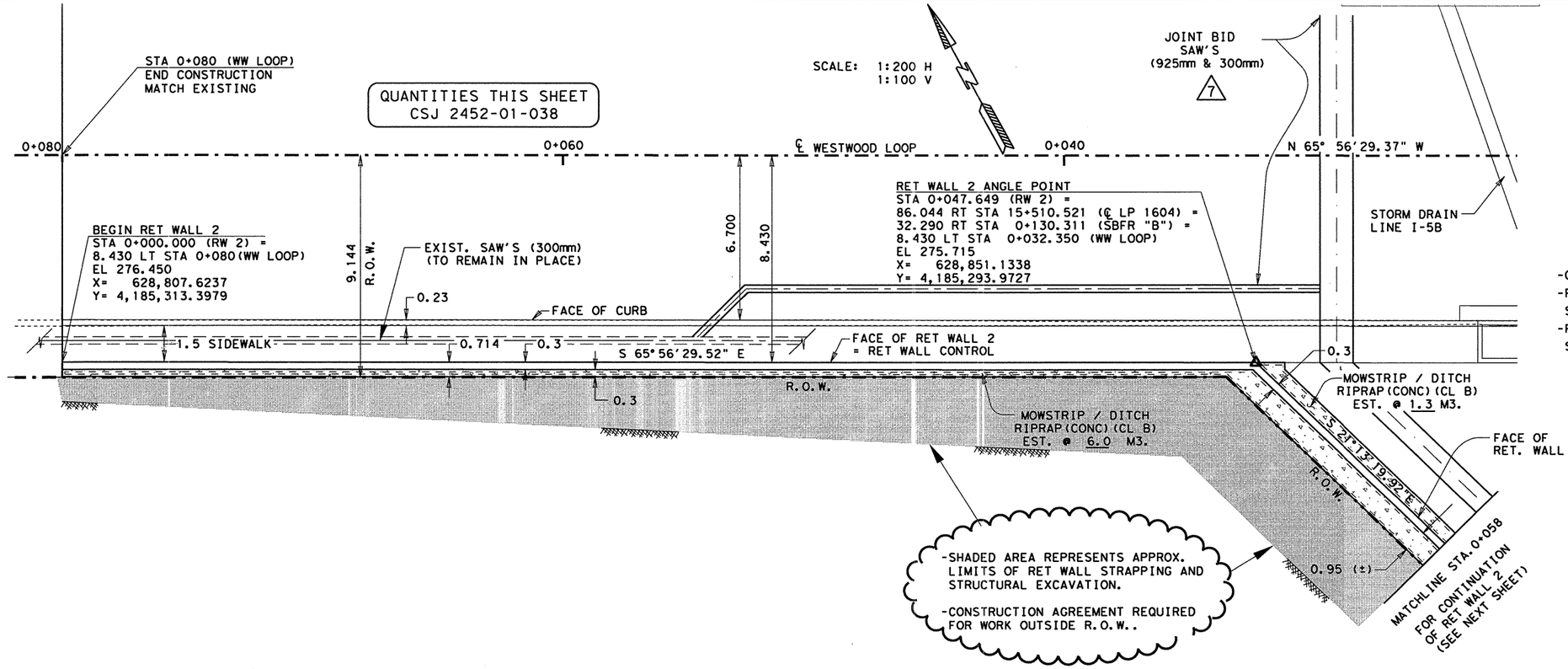


NOTE(S): ALL DIMENSIONS ARE IN METERS UNLESS OTHERWISE NOTED.

## ESTIMATED QUANTITIES

| ITEM | UNIT | QTY. |
|---|---|---|
| RET WALL (CONC BLOCK) | M2 | 210.5 |
| RIPRAP (CONC) (CL B) | M3 | 23.0 |
| PIPE UNDERDRAIN (TY 6)(100 MM) | M | 116.0 |

-QUANTITIES SHOWN FOR CONTRACTOR INFO. ONLY.
-FOR PAY QUANTITIES SEE APPROPRIATE PLAN SHEET(S) 197A.
-FOR RET. WALL TYPICAL SECTION & COPING DETAIL, SEE MISCELLANEOUS RETAINING WALL DETAILS SHEET.

# (#) REFERS TO CHANGES MADE AS PART OF CHANGE ORDER.

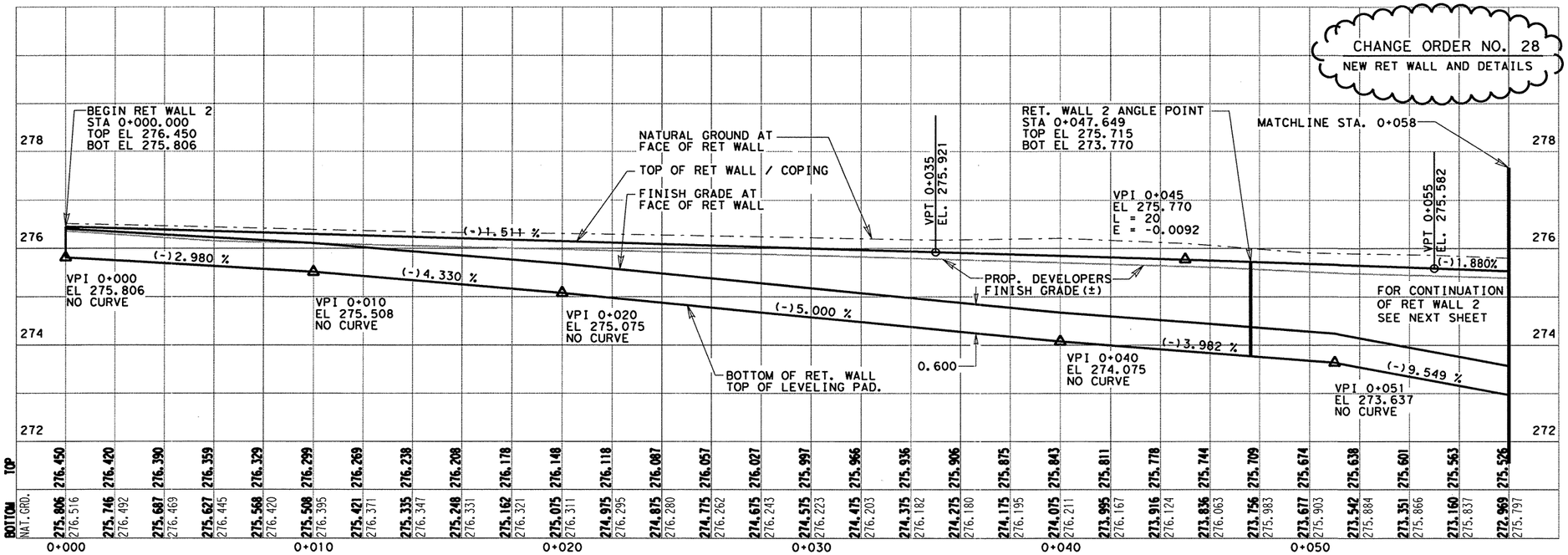


CHANGE ORDER 28

NEW SHEET

STATE OF TEXAS
JEROME D. PAVLISKA
76075
REGISTERED
PROFESSIONAL ENGINEER

Jerome D. Pavliska, P.E. 8-11-03
Jerome D. Pavliska, P.E. Date

© 2001 Texas Department of Transportation

# RETAINING WALL 2
## PLAN & PROFILE
(STA 0+000 TO STA 0+058.000)
SHEET 1 OF 2

| FED. RD. DIV. NO. | FEDERAL AID PROJECT NO. | | SHEET NO. |
|---|---|---|---|
| 6 | NH 2000(704), etc. | | 361C |
| STATE | DIST. | COUNTY | |
| TEXAS | SAT | BEXAR | |
| CONT. | SECT. | JOB | HIGHWAY NO. |
| 2452 | 01 | 036, etc | LP 1604 |

LEVELS DISPLAYED
1 2 3 4 5 6 7 8 9 10 11 12 13 14 15 16 17 18 19 20 21 22 23 24 25 26 27 28 29 30 31 32 33 34 35 36 37 38 39 40 41 42 43 44 45 46 47 48 49 50 51 52 53 54 55 56 57 58 59 60 61 62 63 64
ACC: lp1604fm471-90\
FILE: rw2a*new.dgn

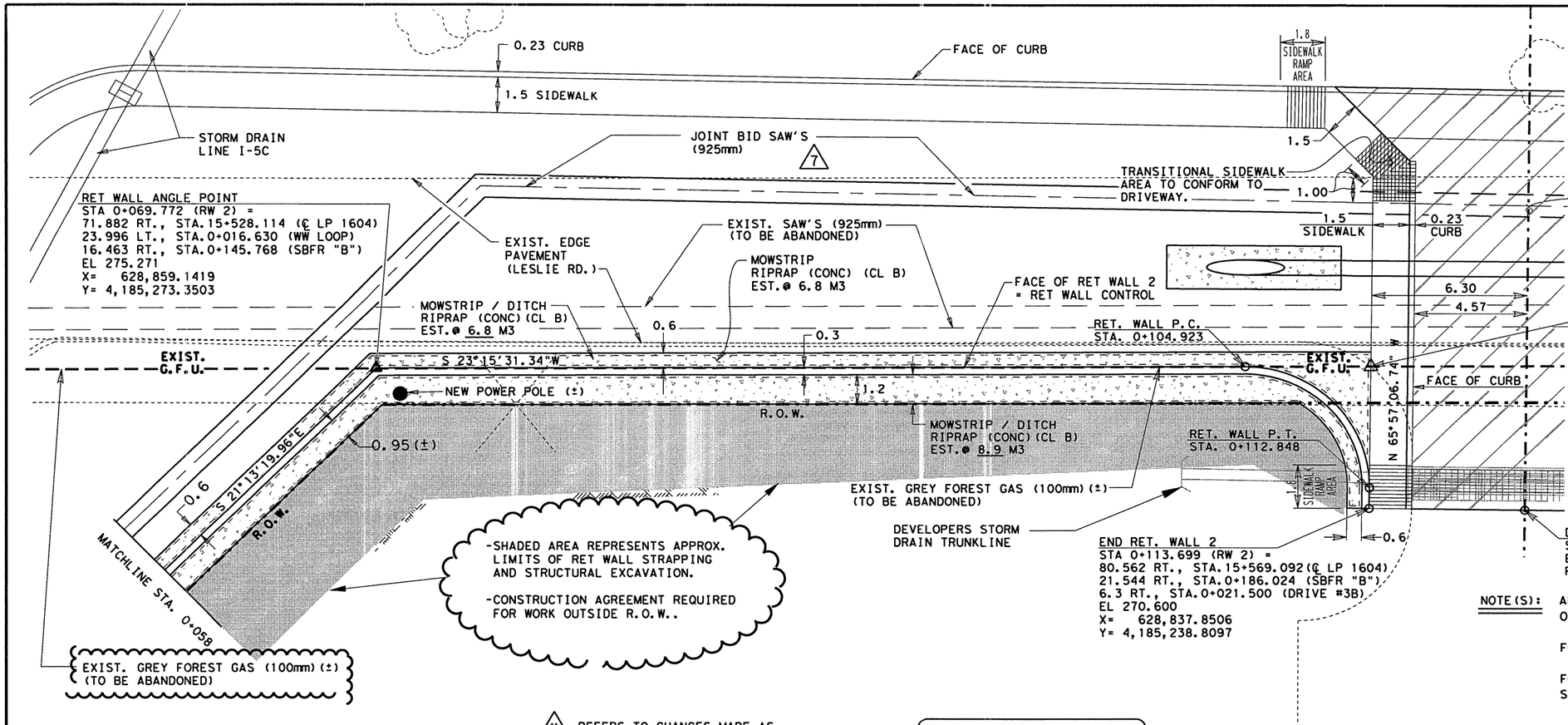


SCALE: 1:200 H
1:100 V

NOTE(S): ALL DIMENSIONS ARE IN METERS UNLESS OTHERWISE NOTED.

FOR ESTIMATED QUANTITIES SEE PREVIOUS SHEET.

FOR RET. WALL TYPICAL SECTION & COPING DETAIL, SEE MISCELLANEOUS RETAINING WALL DETAILS SHEET.

# CHANGE ORDER 28

NEW SHEET

#1 REFERS TO CHANGES MADE AS PART OF CHANGE ORDER.

QUANTITIES THIS SHEET
CSJ 2452-01-038

NOTE: EXIST. G.F.U. = GREY FOREST GAS (100mm)

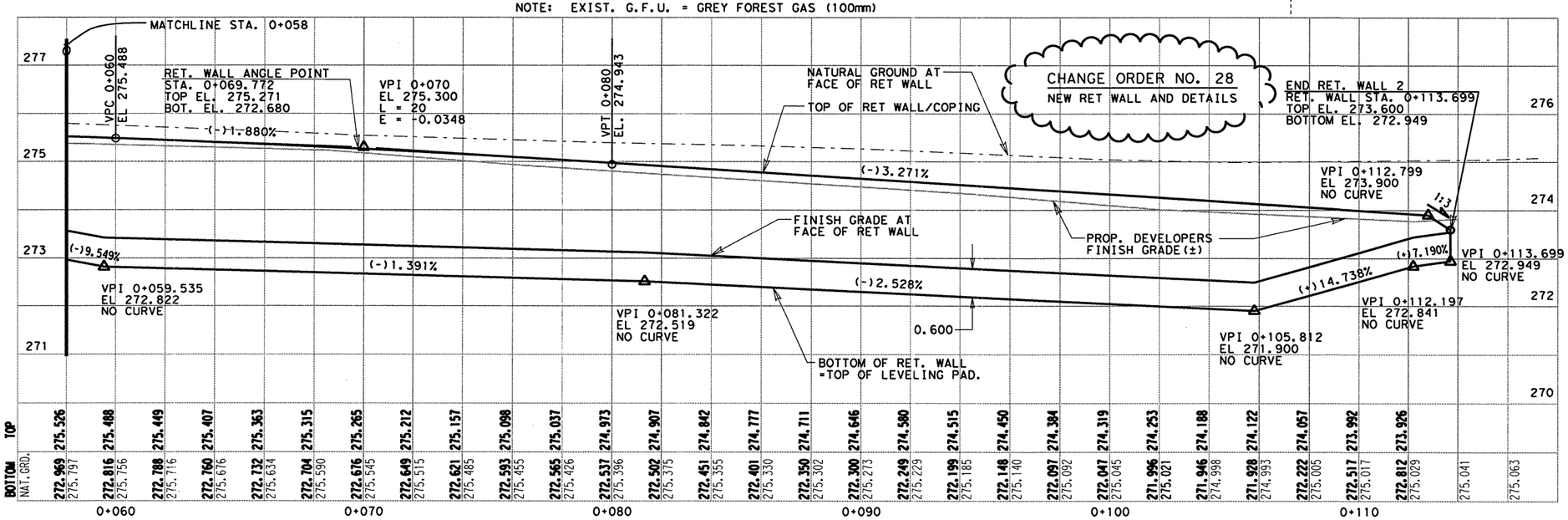


LEVELS DISPLAYED
1 | 13 | 4 | 5 | 6 | 7 | 8 | 9 | 10 | 11 | 21 | 31 | 41 | 51 | 61
17 | 18 | 19 | 20 | 22 | 23 | 24 | 25 | 26 | 27 | 28 | 29 | 30 | 31 | 32
33 | 34 | 35 | 55 | 63 | 75 | 83 | 94 | 04 | 14 | 24 | 34 | 44 | 54 | 64 | 74 | 84
95 | 105 | 115 | 125 | 135 | 145 | 155 | 165 | 175 | 185 | 196 | 206 | 216 | 263
ACC: lp1604fm471-90\
FILE: rw2b+new.dgn

STATE OF TEXAS
JEROME D. PAVLISKA
76075
REGISTERED PROFESSIONAL ENGINEER

Jerome D. Pavliska, P.E. 8-11-03
Jerome D. Pavliska, P.E. Date

©2002
Texas Department of Transportation

# RETAINING WALL 2 PLAN & PROFILE

(STA 0+058.000 TO STA 0+113.699)
SHEET 2 OF 2

| FED.RD. DIV.NO. | FEDERAL AID PROJECT NO. | | SHEET NO. |
|---|---|---|---|
| 6 | NH 2000(704), ETC. | | 361D |
| STATE | DIST. | COUNTY | |
| TEXAS | SAT | BEXAR | |
| CONT. | SECT. | JOB | HIGHWAY NO. |
| 2452 | 01 | 036, ETC | LP 1604 |

01-23-03

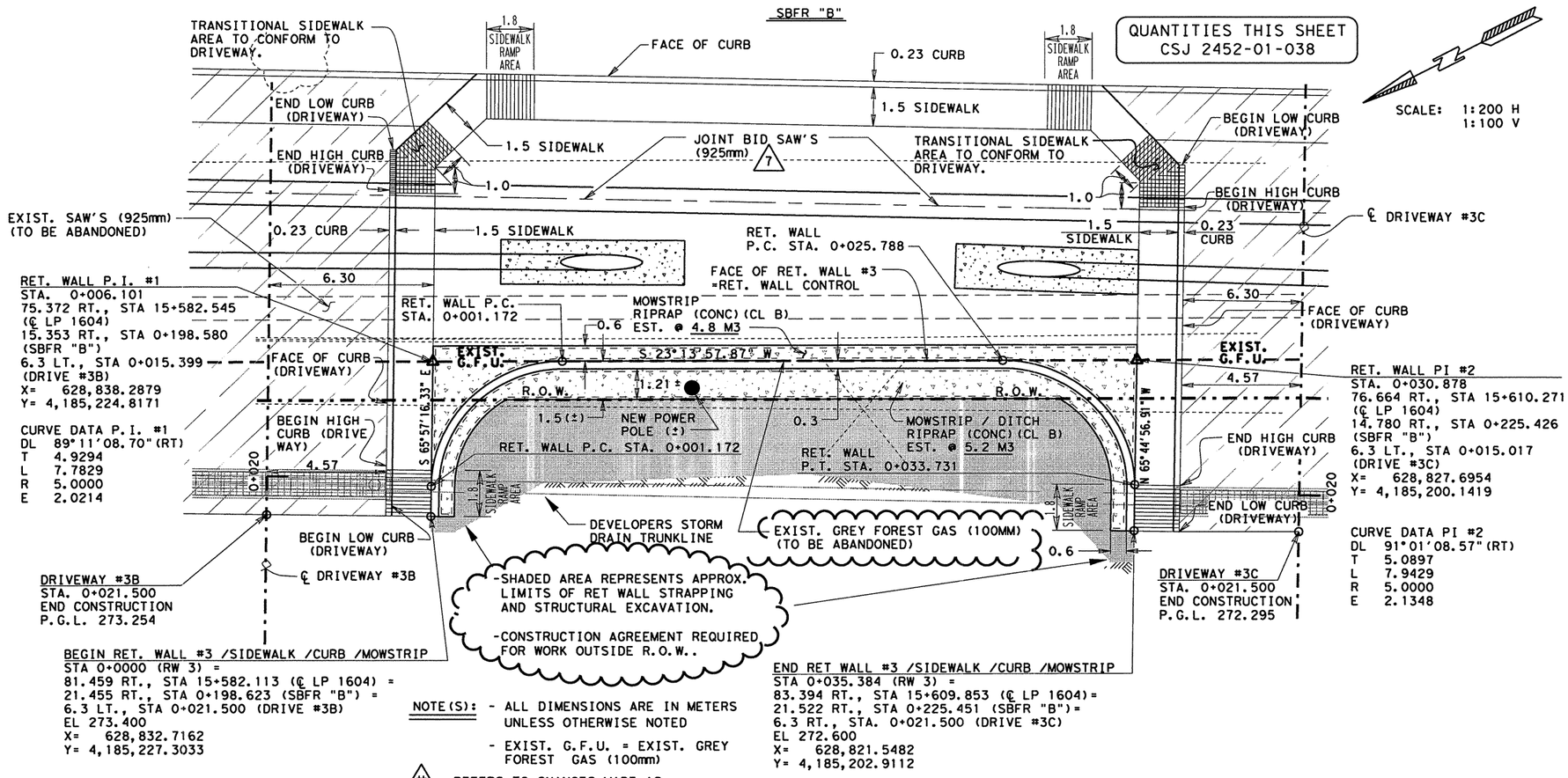


QUANTITIES THIS SHEET
CSJ 2452-01-038

SCALE: 1:200 H
1:100 V

| ESTIMATED QUANTITIES | | |
|---|---|---|
| ITEM | UNIT | QTY. |
| RET WALL (CONC BLOCK) | M2 | 74.3 |
| RIPRAP (CONC)(CL B) | M3 | 10.0 |
| PIPE UNDERDRAIN (TY 6)(100 MM) | M | 38.0 |

-QUANTITIES SHOWN FOR CONTRACTORS INFORMATION ONLY.
-FOR PAY QUANTITIES SEE PLAN SHEET 198C.
-FOR RET. WALL TYPICAL SECTION & COPING DETAILS, SEE MISCELLANEOUS RETAINING WALL DETAILS SHEET.

NOTE(S): - ALL DIMENSIONS ARE IN METERS UNLESS OTHERWISE NOTED

- EXIST. G.F.U. = EXIST. GREY FOREST GAS (100mm)

⚠# REFERS TO CHANGES MADE AS PART OF CHANGE ORDER.

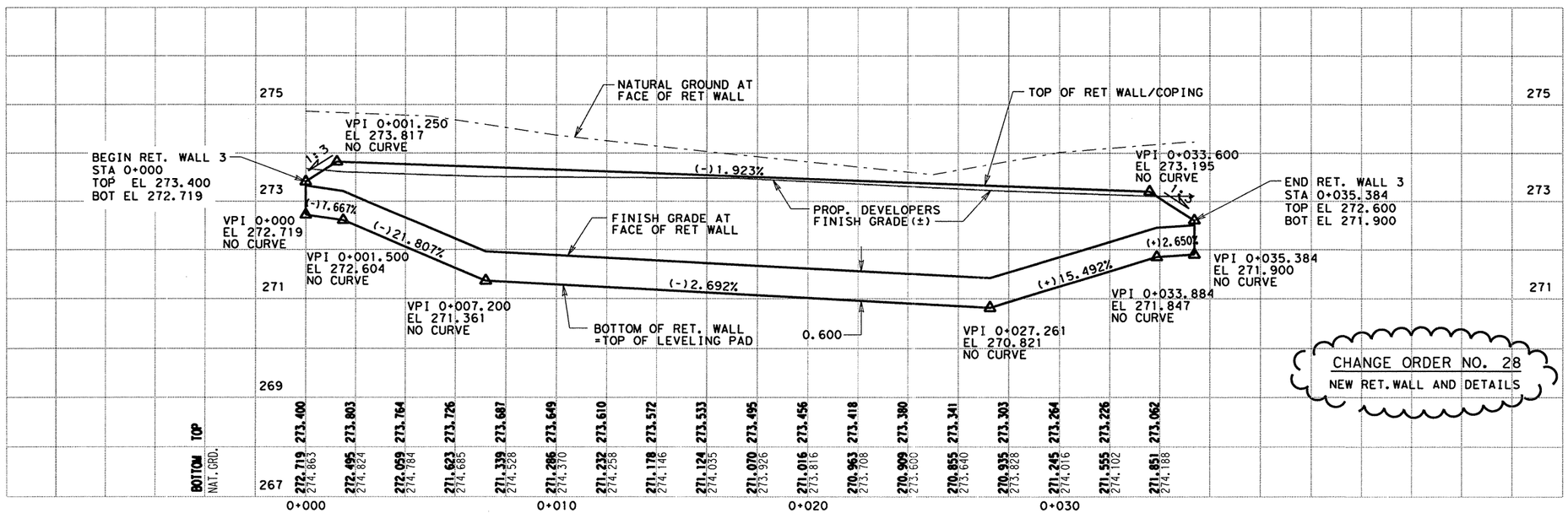


CHANGE ORDER NO. 28
NEW RET. WALL AND DETAILS

CHANGE ORDER 28

NEW SHEET

STATE OF TEXAS
JEROME D. PAVLISKA
76075
REGISTERED PROFESSIONAL ENGINEER

Jerome D. Pavliska P.E. 8-11-03
Jerome D. Pavliska, P.E. Date

Texas Department of Transportation

# RETAINING WALL 3 PLAN & PROFILE

(STA 0+000 TO STA 0+035.384)

| FED.RD. DIV.NO. | FEDERAL AID PROJECT NO. | | SHEET NO. |
|---|---|---|---|
| 6 | NH 2000(704),ETC. | | 361E |
| STATE | DIST. | COUNTY | |
| TEXAS | SAT | BEXAR | |
| CONT. | SECT. | JOB | HIGHWAY NO. |
| 2452 | 01 | 036,ETC | LP 1604 |

01-23-03

LEVELS DISPLAYED
1 2 3 4 5 6 7 8 9 10 11 12 13 14 15 16
17 18 19 20 21 22 23 24 25 26 27 28 29 30 31 32
33 34 35 36 37 38 39 40 41 42 43 44 45 46 47 48
49 50 51 52 53 54 55 56 57 58 59 60 61 62 63

ACC: lp1604fm471-90\
FILE: rw3xnew.dgn

QUANTITIES THIS SHEET
CSJ 2452-01-038

SCALE: 1:200 H
1:100 V

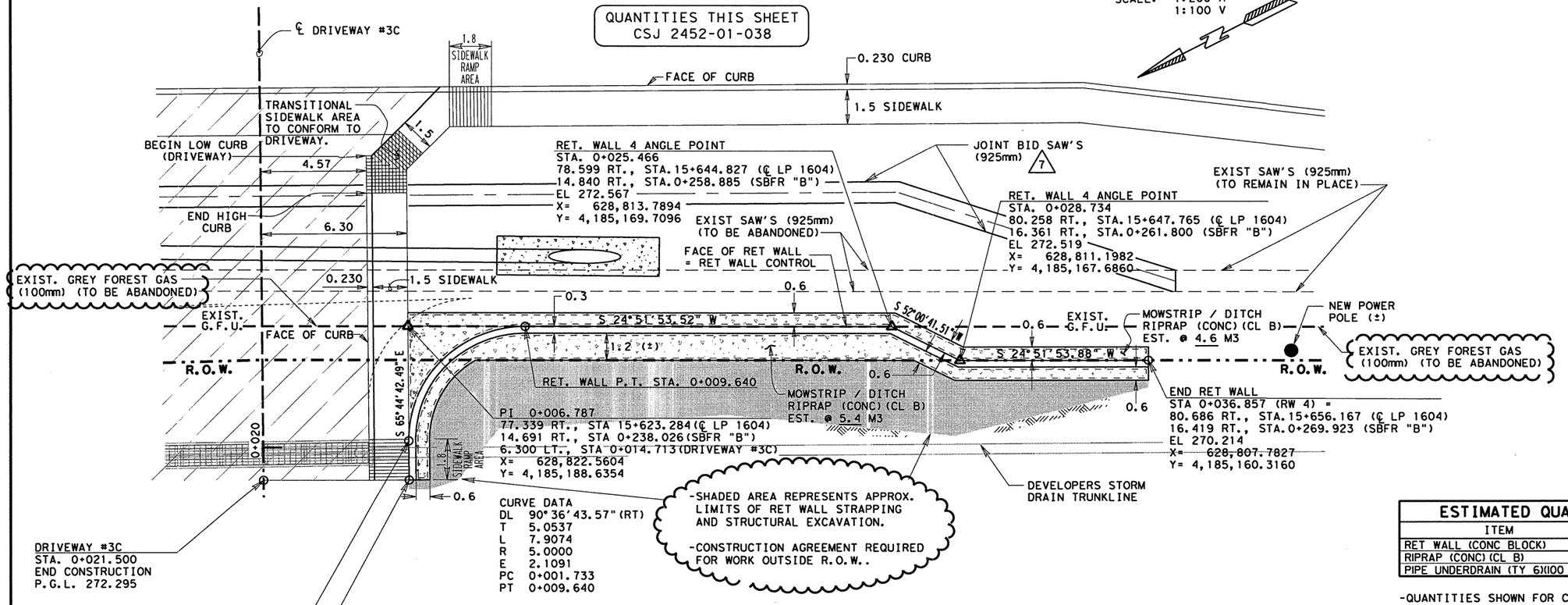


| ESTIMATED QUANTITIES | | |
|---|---|---|
| ITEM | UNIT | QTY. |
| RET WALL (CONC BLOCK) | M2 | 74.3 |
| RIPRAP (CONC)(CL B) | M3 | 10.0 |
| PIPE UNDERDRAIN (TY 6)(100 MM) | M | 39.0 |

-QUANTITIES SHOWN FOR CONTRACTORS INFORMATION ONLY.
-FOR PAY QUANTITIES SEE PLAN SHEET 198C.
-FOR RET. WALL TYPICAL SECTION & COPING DETAIL, SEE MISCELLANEOUS RETAINING WALL DETAILS SHEET.

NOTE(S):
ALL DIMENSIONS ARE IN METERS UNLESS OTHERWISE NOTED
EXIST. G.F.U. = EXIST. GREY FOREST (100mm)

# REFERS TO CHANGES MADE AS PART OF CHANGE ORDER.

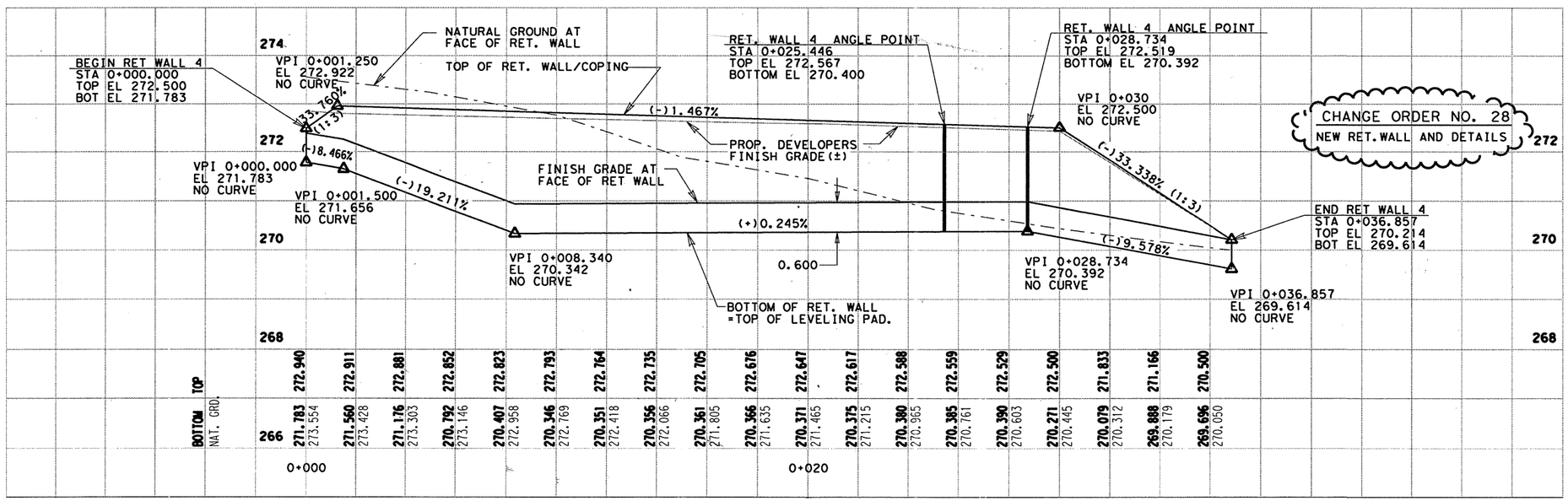


CHANGE ORDER 28

NEW SHEET

STATE OF TEXAS
JEROME D. PAVLISKA
76075
REGISTERED PROFESSIONAL ENGINEER

Jerome D. Pavliska P.E. 8-11-03
Jerome D. Pavliska, P.E. Date

©2002
Texas Department of Transportation

# RETAINING WALL 4 PLAN & PROFILE
(STA 0+000 TO STA 0+036.857)
SHEET 1 OF 1

| FED.RD. DIV.NO. | FEDERAL AID PROJECT NO. | | SHEET NO. |
|---|---|---|---|
| 6 | NH 2000(704), ETC. | | 361F |
| STATE | DIST. | COUNTY | |
| TEXAS | SAT | BEXAR | |
| CONT. | SECT. | JOB | HIGHWAY NO. |
| 2452 | 01 | 036, ETC | LP 1604 |

LEVELS DISPLAYED
1 2 3 4 5 6 7 8 9 10 11 12 13 14 15 16
17 18 19 20 21 22 23 24 25 26 27 28 29 30 31 32
33 34 35 36 37 38 39 40 41 42 43 44 45 46 47 48
95 96 97 98 99 100 101 102 103 104 105 106 107 108 109 110
ACC: lp1604fm471-90\
FILE: rw4.dgn

DISCLAIMER:
The use of this standard is governed by the "Texas Engineering Practice Act". No warranty of any kind is made by TxDOT for any purpose whatsoever. TxDOT assumes no responsibility for the conversion of this standard to other formats or for incorrect results or damages resulting from its use.

ACC:t:oo/design/1604/bridge
FILE: RWMSTD11.DGN
(LV=1,3 for Metric)
LEVELS DIS. 26
1 3

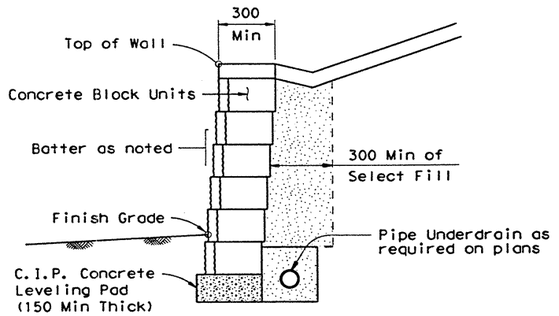


**SECTION**

(No Earth Reinforcements)

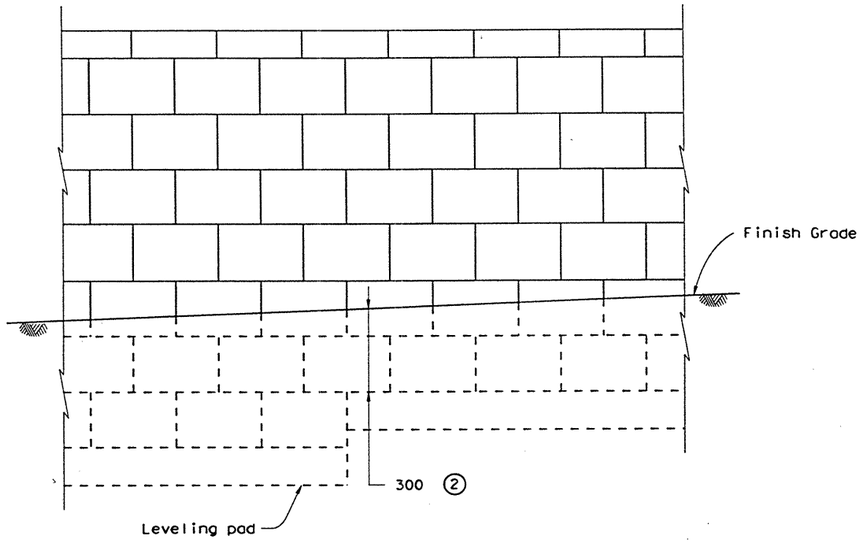


**TYPICAL ELEVATION**

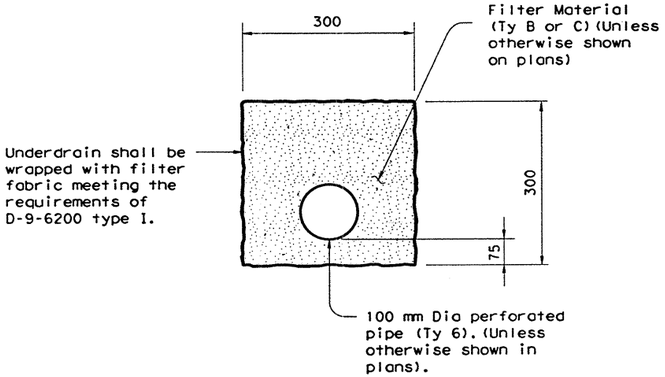


**UNDERDRAIN DETAIL**

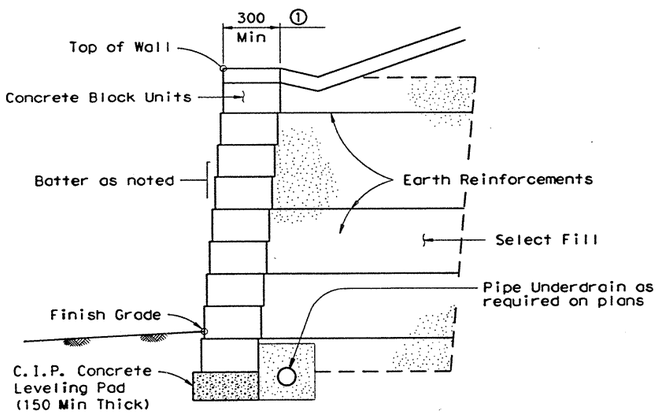


**SECTION**

(With Earth Reinforcements)

① For systems utilizing continuous structural pins passing thru a minimum of 3 block layers, the minimum block depth shall be 200 mm. The maximum vertical spacing of primary reinforcement on these systems shall be 600 mm, and intermediate reinforcement will not be required.

② Unless noted elsewhere in the plans, 300 mm minimum cover shall be provided from the top of leveling pad to finish grade.

③ For walls which are designated as landscape walls and are less than 1,800 mm tall, the following modifications to the design criteria will be allowed:

Factor of safety in sliding > 1.2.
Factor of safety in overturning > 1.5.
Connection strength factor of safety of 1.0 at 20 mm strain.
Minimum earth reinforcement length of 1,200 mm.

The above modified criteria does not apply to walls over 1,800 mm tall regardless of designation.

EARTH REINFORCEMENTS:

Walls may be constructed without earth reinforcements if all stability criteria are met with the blocks alone. If all stability criteria are not satisfied, earth reinforcements shall be provided.

The long term design strength (LTDS) of earth reinforcement shall be calculated in accordance with AASHTO 1992 Standard and current Interim Specifications.

Soil-geogrid pullout coefficient values shall be determined in accordance with Geosynthetics Research Institute (GRI) Method GG-5, "Guidelines for Evaluating Geogrid Pullout".

For the combination of concrete block and geogrid chosen, connection strength data shall be provided. The allowable connection load shall be limited to the connection strength developed at 20 mm displacement, divided by a 1.5 safety factor. ③

For internal stability calculations, the failure plane will be assumed to originate at the back of the concrete blocks.

The factor of safety against pullout of the earth reinforcements shall be determined from test data evaluated at 20 mm strain.

The maximum vertical spacing of primary earth reinforcement layers shall be 1,000 mm. ①
The minimum length of primary earth reinforcements shall be 2,400 mm, measured from the front of the blocks. ③

A layer of intermediate reinforcement shall be provided between primary reinforcements when the spacing between primary layers exceeds twice the horizontal depth of the concrete block unit. Intermediate reinforcement shall have a minimum length of 1,200 mm, and shall provide local stability for the concrete block units. ①

STABILITY CRITERIA:

Factor of safety in sliding along the base of the structure shall be greater than or equal to 1.5. ③

Factor of safety in overturning shall be greater than or equal to 2.0. ③

The base pressure resultant shall fall within the middle third of the retaining wall.

DESIGN PARAMETERS:

Structure shall be based on the following design parameters:

Random Backfill: Unit weight = 18.8 kN/m³
(Embankment or Existing Soils) ø = 30° c = 0 kPa
Select Backfill: Unit weight = 18.8 kN/m³
ø = 34° c = 0 kPa

GENERAL NOTES:

Sections and Typical Elevation shown are for informational purposes only. Specific geometry is to be determined based on wall layouts and other plan information.

Unless otherwise shown in the plans, wall batter shall be a maximum of 250 mm per meter. Blocks shall be placed horizontally, and a positive means of obtaining batter such as pins, keyways, or concrete lips shall be provided.

All dimensions are in millimeters unless otherwise shown.

CHANGE ORDER 28

NEW SHEET

*Texas Department of Transportation*
*Design Division (Bridge)*

# CONCRETE BLOCK RETAINING WALL

## RW(CB)(M)

| FILE: rwmstd11.dgn | DN: MPM | CK: JGG | DW: KDK | CK: LDS | STD: B480M |
|---|---|---|---|---|---|
| ©TxDOT March 1996 | DIST | FED REG | FEDERAL AID PROJECT • | | SHEET |
| REVISIONS | | 6 | NH 2000(704), etc. | | 361G |
| | COUNTY | | CONTROL | SECT | JOB | HIGHWAY |
| | BEXAR | | 2452 | 01 | 036,etc | LP1604 |

01-23-03

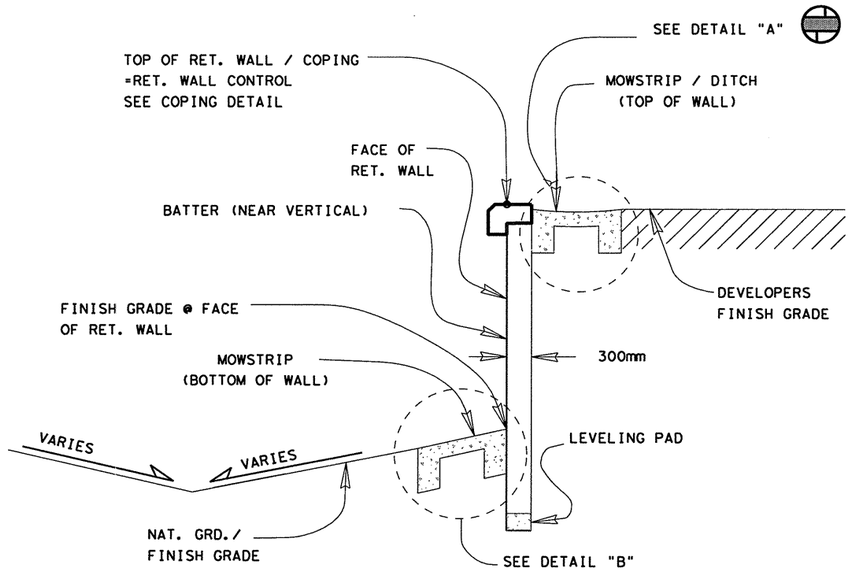


## RET. WALL TYPICAL

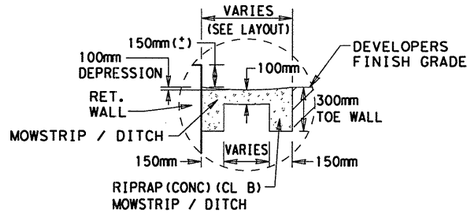


DETAIL "A"

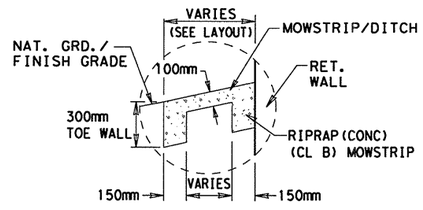


DETAIL "B"

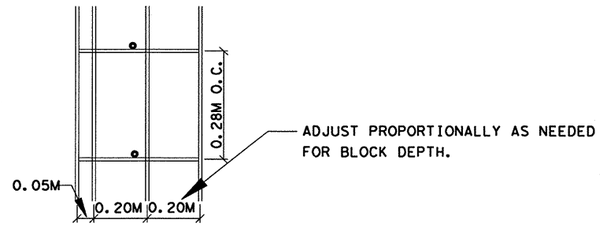


DETAIL "C"

MOWSTRIP / DITCH SHALL CONFORM TO TOP OF RETAINING WALL AND DEVELOPERS FINISH GRADE AS SHOWN IN DETAILS OR AS DIRECTED BY THE ENGINEER.

NOTE(S):

1. DIMENSIONS ARE SHOWN IN METERS UNLESS OTHERWISE NOTED.
2. FURNISHING AND PLACING COPING ON RETAINING WALL WILL BE SUBSIDIARY TO RETAINING WALL.

ALL REINFORCEMENT BARS ARE # 3 BARS AND SHALL BE FIELD BENT TO MEET FIELD CONDITIONS.

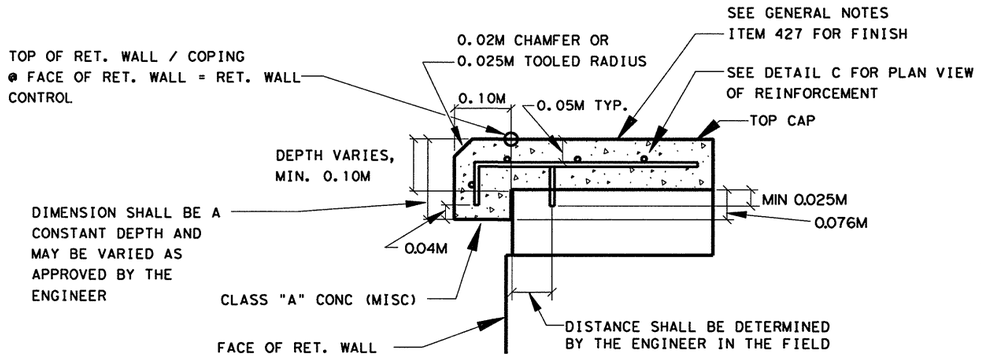


## COPING DETAIL

NOT TO SCALE

NEW SHEET

STATE OF TEXAS
JEROME D. PAVLISKA
76075
REGISTERED
PROFESSIONAL ENGINEER

Jerome D. Pavliska, P.E. 8-11-07
Jerome D. Pavliska, P.E. — Date

CHANGE ORDER 28

©2003
Texas Department of Transportation

**MISCELLANEOUS RETAINING WALL DETAILS**

| FED.RD. DIV.NO. | FEDERAL AID PROJECT NO. | | SHEET NO. |
|---|---|---|---|
| 6 | NH 2000(704),etc. | | 361H |
| STATE | DIST. | COUNTY | |
| TEXAS | SAT | BEXAR | |
| CONT. | SECT. | JOB | HIGHWAY NO. |
| 2452 | 01 | 036,etc. | LP 1604 |

LEVELS DISPLAYED
1 2 3 4 5 6 7 8 9 10 11 12 13 14 15 16
17 18 19 20 21 22 23 24 25 26 27 28 29 30 31 33
33 34 35 36 37 38 39 40 41 42 43 44 45 46 47 48
49 50 51 52 53 54 55 56 57 58 59 60 61 62 63
ACC: t:\ao\design\lp1604fm471-90\
FOLDER: misc*detail\
FILE: misc*rd*detail*rtgwallcoping.dgn

Plotted on: 09/19/00

| LARGE DRAINAGE AREAS - HEC 1 METHOD - 20 YEAR FORECAST | | | | | | | | | |
|---|---|---|---|---|---|---|---|---|---|
| DRAINAGE AREA | STRUCTURE LOCATION (STATION) | STRUCTURE DESCRIPTION (PROPOSED) | AREA (HA) | CURVE NUMBER | % IMPERVIOUS | LAG TIME (hr) | Q25 CMS | Q50 CMS | Q100 CMS |
| 3A | | | 2980 | 88 | 25 | 1.09 | 425 | 490 | 546 |
| 3B | | | 376 | 88 | 25 | 0.44 | 92 | 105 | 117 |
| 3C | | | 484 | 88 | 25 | 0.54 | 104 | 119 | 133 |
| 3D | | | 667 | 70 | 25 | 0.43 | 127 | 152 | 174 |
| | C40 | | | | | | 549 | 636 | 709 |
| 3E | | | 181 | 70 | 30 | 0.34 | 40 | 48 | 54 |
| | CA50C | | | | | | 544 | 631 | 703 |
| 3F | | | 1893 | 70 | 25 | 0.76 | 262 | 314 | 357 |
| | C50 | | | | | | 679 | 797 | 891 |
| 3G | | | 192 | 70 | 35 | 0.36 | 43 | 50 | 57 |
| | CA60C | | | | | | 672 | 791 | 885 |
| 3H | | | 1313 | 70 | 40 | 0.65 | 217 | 256 | 289 |
| | C60 | | | | | | 747 | 885 | 994 |
| 3I | | | 1240 | 70 | 45 | 0.83 | 182 | 215 | 242 |
| | C70 | | | | | | 845 | 1004 | 1129 |
| 3J | | | 703 | 70 | 50 | 0.35 | 156 | 182 | 205 |
| | CULEBRA CREEK | 4-SPAN BRIDGES | | | | | 847 | 1009 | 1134 |
| 16 | 21+578.290 | 4-3000mmX2400mmX95.854 MBC | 233 | 75 | 80 | 0.319 | 78 | 88 | 99 |
| 17 | 22+793.878 | 10-3000mmX3000mmX88.332 MBC | 1220 | 75 | 45 | 0 | 183 | 215 | 243 |
| 18 | MEDIO CREEK | 2-SPAN BRIDGES | 5633 | 75 | 30 | 0 | 557 | 643 | 714 |

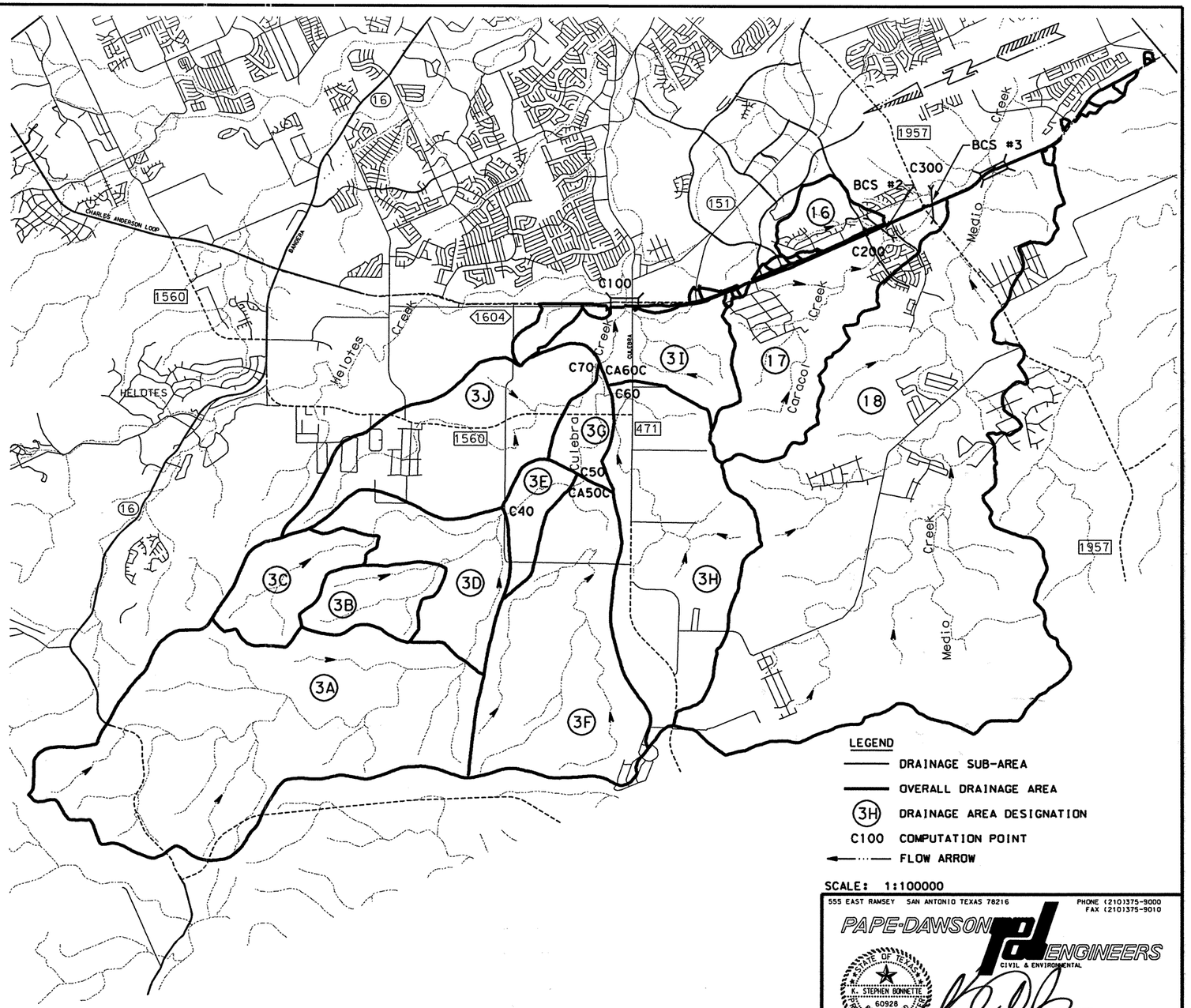


LEGEND

- DRAINAGE SUB-AREA
- OVERALL DRAINAGE AREA
- (3H) DRAINAGE AREA DESIGNATION
- C100 COMPUTATION POINT
- FLOW ARROW

SCALE: 1:100000

NOTES:

1. DRAINAGE AREAS 3A - 3I COMPRISE THE OVERALL DRAINAGE AREA FOR THE CULEBRA CREEK BRIDGE CROSSING.
2. DRAINAGE AREA 16 COMPRISE THE OVERALL DRAINAGE AREA FOR BRIDGE CLASS STRUCTURE #2 AT STA. 21+578.144
3. DRAINAGE AREAS 16 AND 17 COMPRISE THE OVERALL DRAINAGE AREA FOR BRIDGE CLASS STRUCTURE #3 AT STA. 22+793.871
4. DRAINAGE AREA 18 IS THE OVERALL DRAINAGE AREA FOR MEDIO CREEK BRIDGE CROSSING.
5. FLOW FOR OVERALL DRAINAGE AREAS ARE COMPUTED AT POINTS DESIGNATED C100, C200, C300.
6. FOR SMALLER DRAINAGE AREAS SEE SMALL EXTERIOR DRAINAGE AREA MAP.


555 EAST RAMSEY SAN ANTONIO TEXAS 78216
PHONE (210)375-9000
FAX (210)375-9010
PAPE-DAWSON ENGINEERS
CIVIL & ENVIRONMENTAL
STATE OF TEXAS K. STEPHEN BONNETTE 60928 REGISTERED PROFESSIONAL ENGINEER
9/20/00
K. STEPHEN BONNETTE, P.E. DATE



© 2000 Texas Department of Transportation


# LOOP 1604
# LARGE EXTERIOR DRAINAGE AREA MAP

SHEET 1 OF 1

| DN: | | | | | | PROJECT NO. | |
|---|---|---|---|---|---|---|---|
| CK DN: | | | | | | NH 2000 (704), etc. | |
| DW: | CONTROL | SECTION | JOB | DIST. | STATE | COUNTY | HIGHWAY NO. | SHEET NO. |
| CK DW: | 2452 | 01 | 036 etc. | SAT | TX | BEXAR | LOOP 1604 | 362 |

Design Filename: j:\3941\16\civil\design\plansheets\3941160a01.dgn

Plotted on: 02/10/2003

| LARGE DRAINAGE AREAS - HEC 1 METHOD - 20 YEAR FORECAST | | | | | | | | | |
|---|---|---|---|---|---|---|---|---|---|
| DRAINAGE AREA | STRUCTURE LOCATION (STATION) | STRUCTURE DESCRIPTION (PROPOSED) | AREA (HA) | CURVE NUMBER | % IMPERVIOUS | LAG TIME (hr) | Q25 CMS | Q50 CMS | Q100 CMS |
| 3A | | | 2980 | 88 | 25 | 1.09 | 425 | 490 | 546 |
| 3B | | | 376 | 88 | 25 | 0.44 | 92 | 105 | 117 |
| 3C | | | 484 | 88 | 25 | 0.54 | 104 | 119 | 133 |
| 3D | | | 667 | 70 | 25 | 0.43 | 127 | 152 | 174 |
| | C40 | | | | | | 549 | 636 | 709 |
| 3E | | | 181 | 70 | 30 | 0.34 | 40 | 48 | 54 |
| | CA50C | | | | | | 544 | 631 | 703 |
| 3F | | | 1893 | 70 | 25 | 0.76 | 262 | 314 | 357 |
| | C50 | | | | | | 679 | 797 | 891 |
| 3G | | | 192 | 70 | 35 | 0.36 | 43 | 50 | 57 |
| | CA60C | | | | | | 672 | 791 | 885 |
| 3H | | | 1313 | 70 | 40 | 0.65 | 217 | 256 | 289 |
| | C60 | | | | | | 747 | 885 | 994 |
| 3I | | | 1240 | 70 | 45 | 0.83 | 182 | 215 | 242 |
| | C70 | | | | | | 845 | 1004 | 1129 |
| 3J | | | 703 | 70 | 50 | 0.35 | 156 | 182 | 205 |
| | CULEBRA CREEK | 4-SPAN BRIDGES | | | | | 847 | 1009 | 1134 |
| 16 | 21+578.290 | 4-3000mmX2400mmX95.854 MBC | 233 | 75 | 80 | 0.319 | 78 | 88 | 99 |
| 17 | 22+793.878 | 10-3000mmX3000mmX88.332 MBC | 1220 | 75 | 45 | 0 | 183 | 215 | 243 |
| 18 | MEDIO CREEK | 2-SPAN BRIDGES | 5633 | 75 | 30 | 0 | 557 | 643 | 714 |

36 CHANGE ORDER NO. 36

REVISED AREA FOR DA#1
AS SHOWN ON SMALL EXTERIOR
DA MAP SHT 1 OF 2

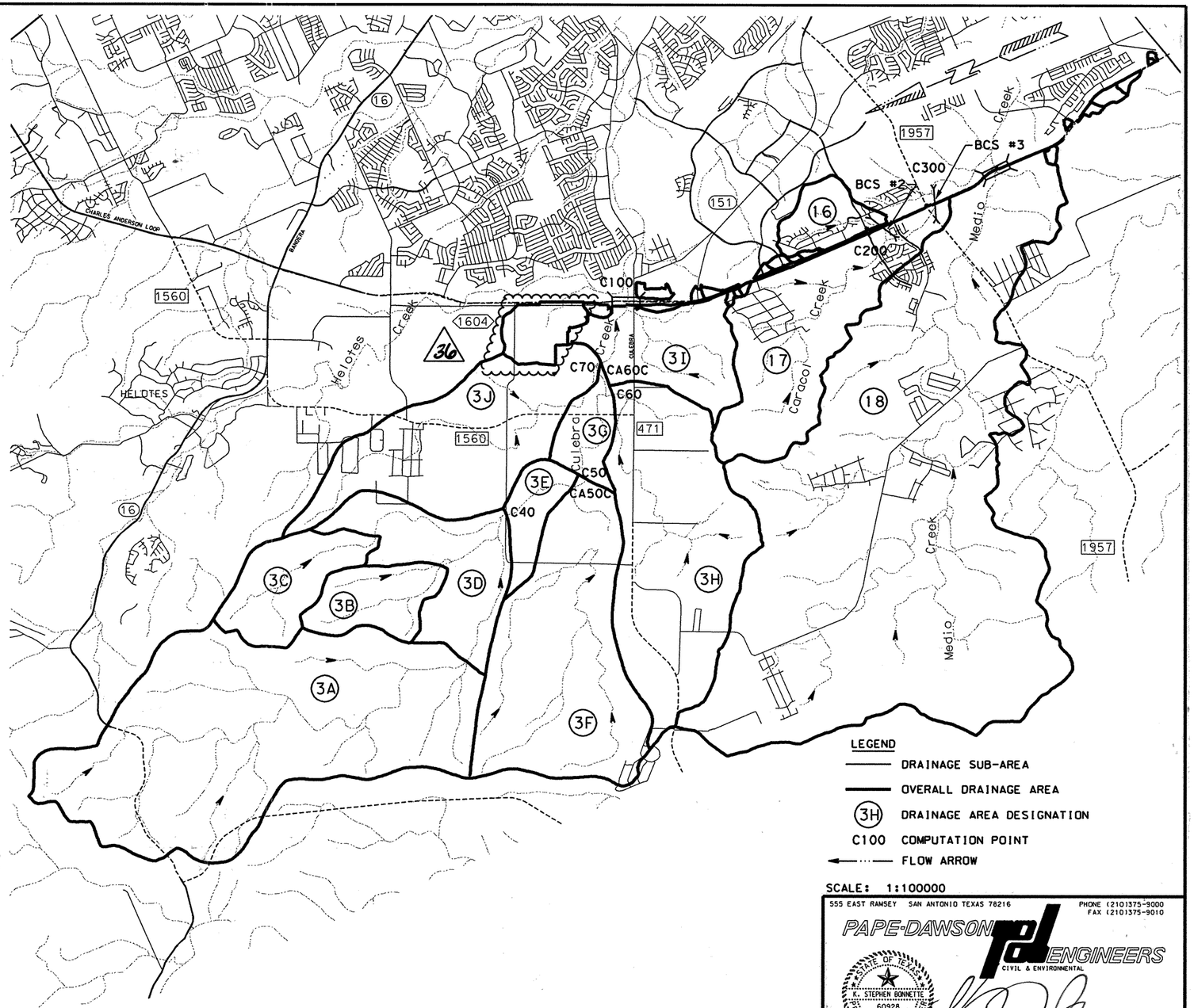


SCALE: 1:100000

NOTES:

1. DRAINAGE AREAS 3A - 3I COMPRISE THE OVERALL DRAINAGE AREA FOR THE CULEBRA CREEK BRIDGE CROSSING.
2. DRAINAGE AREA 16 COMPRISE THE OVERALL DRAINAGE AREA FOR BRIDGE CLASS STRUCTURE #2 AT STA. 21+578.144
3. DRAINAGE AREAS 16 AND 17 COMPRISE THE OVERALL DRAINAGE AREA FOR BRIDGE CLASS STRUCTURE #3 AT STA. 22+793.871
4. DRAINAGE AREA 18 IS THE OVERALL DRAINAGE AREA FOR MEDIO CREEK BRIDGE CROSSING.
5. FLOW FOR OVERALL DRAINAGE AREAS ARE COMPUTED AT POINTS DESIGNATED C100, C200, C300.
6. FOR SMALLER DRAINAGE AREAS SEE SMALL EXTERIOR DRAINAGE AREA MAP.


555 EAST RAMSEY SAN ANTONIO TEXAS 78216
PHONE (210)375-9000
FAX (210)375-9010
PAPE-DAWSON ENGINEERS
CIVIL & ENVIRONMENTAL


STATE OF TEXAS
K. STEPHEN BONNETTE
60928
REGISTERED
PROFESSIONAL ENGINEER

K. STEPHEN BONNETTE, P.E. 02/10/03
DATE


© 2000 Texas Department of Transportation


# LOOP 1604
# LARGE EXTERIOR
# DRAINAGE AREA MAP

SHEET 1 OF 1

| | | | | | | | | |
|---|---|---|---|---|---|---|---|---|
| DN: | | | | | PROJECT NO. | | | |
| CK DN: | | | | | NH 2000 (704), etc. | | | |
| DW: | CONTROL | SECTION | JOB | DIST. | STATE | COUNTY | HIGHWAY NO. | SHEET NO. |
| CK DW: | 2452 | 01 | 036 | SAT | TX | BEXAR | LOOP 1604 | 362A |

Design Filename: j:\3941\16\change*order*bcs1\3941117da01.dgn

Plotted on: 09/19/00

## SMALL DRAINAGE AREAS - RATIONAL METHOD - 20 YEAR FORECAST

| DRAINAGE AREA | STRUCTURE LOCATION (STATION) | STRUCTURE DESCRIPTION (PROPOSED) | AREA (HA) | REACH (M) | SLOPE (M / M) | VEL. (M / S) | TC (min) | RUNOFF C | ADJUSTED **C | INTENSITY (I 25) mm / hr | INTENSITY (I50) mm / hr | INTENSITY (I 100) mm / hr | Q25 CMS | Q50 CMS | Q100 CMS |
|---|---|---|---|---|---|---|---|---|---|---|---|---|---|---|---|
| 2 | 15+189.169 | 3-1500mmX900mm MBC | 16.32 | 351 | 0.022 | 1.8 | 13.00 | 0.65 | 0.72 | 209.69 | 233.13 | 260.52 | 6.80 | 7.56 | 8.45 |
| 5 | 16+017.008 | 1-1500mmX900mm SBC | 10.95 | 1052 | 0.023 | 1.8 | 20.00 | 0.60 | 0.64 | 169.12 | 188.71 | 210.53 | 3.26 | 3.64 | 4.06 |
| 6A & 6B | 17+258.686 | 2-1500mmX900mm MBC | 12.35 | 940 | 0.038 | 1.8 | 19.00 | 0.59 | 0.66 | 173.80 | 193.84 | 216.30 | 3.85 | 4.39 | 4.90 |
| 6B | | | 5.68 | 790 | 0.042 | 1.8 | 17.00 | 0.59 | 0.66 | 184.11 | 205.14 | 227.01 | 1.88 | 2.14 | 2.36 |
| 7 | 18+039.195 | 1-1800mmX900mm SBC | 6.15 | 320 | 0.029 | 1.8 | 13.00 | 0.59 | 0.66 | 209.69 | 233.13 | 260.52 | 2.35 | 2.61 | 2.92 |
| 8 | 18+172.634 | 1-750mm RCP | 2.61 | 351 | 0.009 | 1.8 | 13.00 | 0.58 | 0.66 | 209.69 | 233.13 | 260.52 | 0.99 | 1.10 | 1.23 |
| 9 | 18+485.369 | 2-900mm RCP | 3.60 | 305 | 0.030 | 1.8 | 13.00 | 0.59 | 0.67 | 209.69 | 233.13 | 260.52 | 1.39 | 1.54 | 1.72 |
| 10 | 19+024.824 | 1-1500mmX1200mm SBC | 6.71 | 381 | 0.032 | 1.8 | 13.00 | 0.59 | 0.67 | 209.69 | 233.13 | 260.52 | 2.59 | 2.87 | 3.21 |
| 11 | 19+257.771 | 2-1200mm RCP | 13.94 | 442 | 0.028 | 1.8 | 14.00 | 0.59 | 0.66 | 202.55 | 225.32 | 251.72 | 5.15 | 5.72 | 6.40 |
| 12 | 19+745.630 | 2-1500mmX900mm MBC | 8.01 | 411 | 0.047 | 1.8 | 14.00 | 0.60 | 0.68 | 202.55 | 225.32 | 251.72 | 3.03 | 3.37 | 3.76 |
| 13 | 19+866.572 | 1-900mm RCP | 4.18 | 366 | 0.038 | 1.8 | 13.00 | 0.57 | 0.65 | 209.69 | 233.13 | 260.52 | 1.56 | 1.74 | 1.94 |
| 13 & 14 | 19+866.572 | 1-900mm RCP | 5.16 | 366 | 0.038 | 1.8 | 13.00 | 0.57 | 0.65 | 209.69 | 233.13 | 260.52 | 1.94 | 2.16 | 2.41 |

## LARGE DRAINAGE AREAS - S.C.S. TR55 - 20 YEAR FORECAST

| | DRAINAGE AREA | STRUCTURE LOCATION (STATION) | STRUCTURE DESCRIPTION (PROPOSED) | AREA (HA) | CURVE NUMBER | Tc (MIN) | Q25 CMS | Q50 CMS | Q100 CMS |
|---|---|---|---|---|---|---|---|---|---|
| * | 1 | 14+509.737 | 7-1800mm X 1200mm MBC | 87.8 | 72 | 27 | 24 | 28 | 34 |

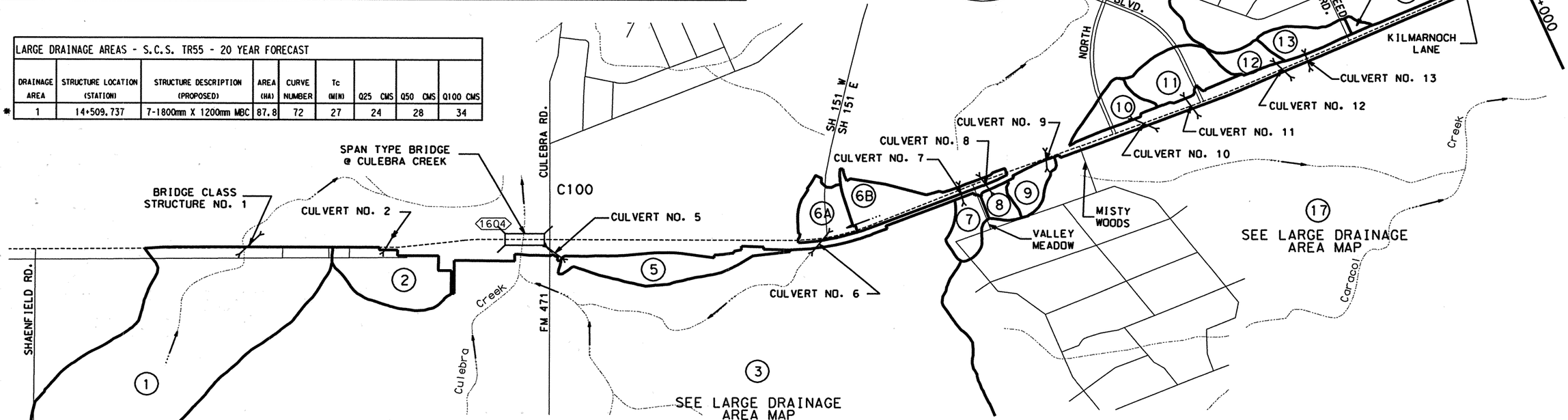


SCALE: 1:20000

LEGEND

- DRAINAGE SUB-AREA
- OVERALL DRAINAGE AREA
- (3H) DRAINAGE AREA DESIGNATION
- C100 COMPUTATION POINT
- FLOW ARROW

NOTE:

1.) TIME OF CONCENTRATION VALUES ARE EQUAL TO TRAVEL TIME + ASSUMED LAG TIME OF 10 MINUTES.

2.) D.A. No. 4 HAS BEEN OMMITTED

*3.) INITIAL ABSTRACTION RATIO USED FOR ALL 3 STORMS IS 0.10

**4.) RUNOFF CORRECTION FACTOR OF 1.2 USED PER TXDOT HYDRAULIC MANUAL.


555 EAST RAMSEY SAN ANTONIO TEXAS 78216 PHONE (210)375-9000 FAX (210)375-9010

PAPE-DAWSON ENGINEERS CIVIL & ENVIRONMENTAL

STATE OF TEXAS K. STEPHEN BONNETTE 60928 REGISTERED PROFESSIONAL ENGINEER

K. STEPHEN BONNETTE, P.E. 9/20/00 DATE



© 2000 Texas Department of Transportation


# LOOP 1604
# SMALL EXTERIOR DRAINAGE AREA MAP

SHEET 1 OF 2

| DN: | | | | | PROJECT NO. | | |
|---|---|---|---|---|---|---|---|
| CK DN: | | | | | NH 2000 (704), etc. | | |
| DW: | CONTROL | SECTION | JOB | DIST. | COUNTY | HIGHWAY NO. | SHEET NO. |
| CK DW: | 2452 | 01 | 036 etc. | SAT | BEXAR | LOOP 1604 | 363 |

Design Filename: J:\3941\16\civil\design\plansheets\394116da02.dgn

Plotted on: 07/02/01

Design Filename: J:\3941\16\change order\design\civil\plansheets\4337166d002.dgn

## SMALL DRAINAGE AREAS - RATIONAL METHOD - 20 YEAR FORECAST

| DRAINAGE AREA | STRUCTURE LOCATION (STATION) | STRUCTURE DESCRIPTION (PROPOSED) | AREA (HA) | REACH (M) | SLOPE (M / M) | VEL. (M / S) | TC (min) | RUNOFF C | ADJUSTED **C | INTENSITY (I 25) mm / hr | INTENSITY (I50) mm / hr | INTENSITY (I 100) mm / hr | Q25 CMS | Q50 CMS | Q100 CMS |
|---|---|---|---|---|---|---|---|---|---|---|---|---|---|---|---|
| 2 | 15+189.169 | 3-1500mmX900mm MBC | 16.32 | 351 | 0.022 | 1.8 | 13.00 | 0.65 | 0.72 | 209.69 | 233.13 | 260.52 | 6.80 | 7.56 | 8.45 |
| 5 | 16+017.008 | 1-1500mmX900mm SBC | 10.95 | 1052 | 0.023 | 1.8 | 20.00 | 0.60 | 0.64 | 169.12 | 188.71 | 210.53 | 3.26 | 3.64 | 4.06 |
| 6A & 6B | 17+258.686 | 2-1500mmX900mm MBC | 12.35 | 940 | 0.038 | 1.8 | 19.00 | 0.59 | 0.66 | 173.80 | 193.84 | 216.30 | 3.85 | 4.39 | 4.90 |
| 6B | | | 5.68 | 790 | 0.042 | 1.8 | 17.00 | 0.59 | 0.66 | 184.11 | 205.14 | 227.01 | 1.88 | 2.14 | 2.36 |
| 7 | 18+039.195 | 1-1800mmX900mm SBC | 6.15 | 320 | 0.029 | 1.8 | 13.00 | 0.59 | 0.66 | 209.69 | 233.13 | 260.52 | 2.35 | 2.61 | 2.92 |
| 8 | 18+172.634 | 1-750mm RCP | 2.61 | 351 | 0.009 | 1.8 | 13.00 | 0.58 | 0.66 | 209.69 | 233.13 | 260.52 | 0.99 | 1.10 | 1.23 |
| 9 | 18+485.369 | 2-900mm RCP | 3.60 | 305 | 0.030 | 1.8 | 13.00 | 0.59 | 0.67 | 209.69 | 233.13 | 260.52 | 1.39 | 1.54 | 1.72 |
| 10 | 19+024.824 | 1-1500mmX1200mm SBC | 6.71 | 381 | 0.032 | 1.8 | 13.00 | 0.59 | 0.67 | 209.69 | 233.13 | 260.52 | 2.59 | 2.87 | 3.21 |
| 11 | 19+257.771 | 2-1200mm RCP | 13.94 | 442 | 0.028 | 1.8 | 14.00 | 0.59 | 0.66 | 202.55 | 225.32 | 251.72 | 5.15 | 5.72 | 6.40 |
| 12 | 19+745.630 | 2-1500mmX900mm MBC | 8.01 | 411 | 0.047 | 1.8 | 14.00 | 0.60 | 0.68 | 202.55 | 225.32 | 251.72 | 3.03 | 3.37 | 3.76 |
| 13 | 19+866.572 | 1-900mm RCP | 4.18 | 366 | 0.038 | 1.8 | 13.00 | 0.57 | 0.65 | 209.69 | 233.13 | 260.52 | 1.56 | 1.74 | 1.94 |
| 13 & 14 | 19+866.572 | 1-900mm RCP | 5.16 | 366 | 0.038 | 1.8 | 13.00 | 0.57 | 0.65 | 209.69 | 233.13 | 260.52 | 1.94 | 2.16 | 2.41 |

## LARGE DRAINAGE AREAS - S.C.S. TR55 - 20 YEAR FORECAST

| | DRAINAGE AREA | STRUCTURE LOCATION (STATION) | STRUCTURE DESCRIPTION (PROPOSED) | AREA (HA) | CURVE NUMBER | Tc (MIN) | Q25 CMS | Q50 CMS | Q100 CMS |
|---|---|---|---|---|---|---|---|---|---|
| * | 1 | 14+509.737 | 7-1800mm X 1200mm MBC | 87.8 | 72 | 27 | 24 | 28 | 34 |

## SMALL DRAINAGE AREAS - RATIONAL METHOD - 20 YEAR FORECAST (CONT.)

| DRAINAGE AREA | STRUCTURE LOCATION (STATION) | STRUCTURE DESCRIPTION (PROPOSED) | ‡ AREA (HA) | REACH (M) | SLOPE (M / M) | VEL. (M / S) | TC (min) | RUNOFF C | ADJUSTED **C | INTENSITY (I 10) mm / hr | INTENSITY (I50) mm / hr | INTENSITY (I 100) mm / hr | Q10 CMS | Q50 CMS | Q100 CMS |
|---|---|---|---|---|---|---|---|---|---|---|---|---|---|---|---|
| 27 | 16+021.988 | 1-3000mmX2100mm SBC | 39.97 | 2085 | 0.050 | 1.8 | 29.00 | 0.78 | --- | 118.71 | 153.55 | 157.73 | 10.28 | 13.30 | 13.66 |

‡ AREA INCLUDES INTERNAL DRAINAGE AREAS I10, I11, I14, I15

1

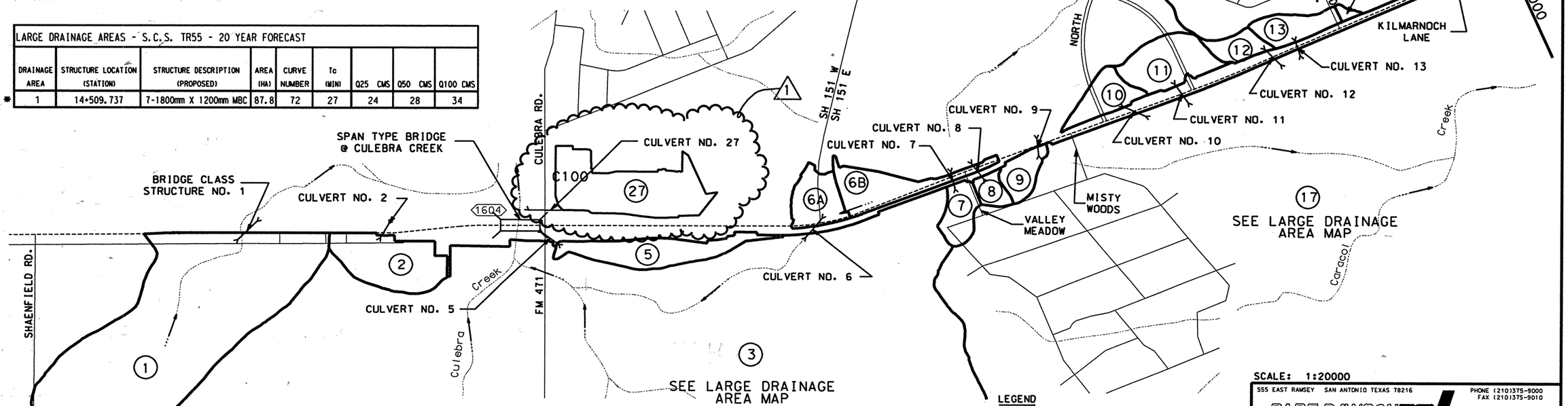


SCALE: 1:20000

### CHANGE ORDER #1 REVISIONS

DA #27 AND CLVT NO. 27 ADDED
REVISIONS ARE SHOWN CLOUDED
AND MARKED WITH 1.

STATE OF TEXAS · K. STEPHEN BONNETTE · 60928 · REGISTERED PROFESSIONAL ENGINEER

K. STEPHEN BONNETTE, P.E. 7/2/2001 DATE

LEGEND

- DRAINAGE SUB-AREA
- OVERALL DRAINAGE AREA
- (3H) DRAINAGE AREA DESIGNATION
- C100 COMPUTATION POINT
- FLOW ARROW

NOTE:

1.) TIME OF CONCENTRATION VALUES ARE EQUAL TO TRAVEL TIME + ASSUMED LAG TIME OF 10 MINUTES.

2.) D.A. No. 4 HAS BEEN OMMITTED

* 3.) INITIAL ABSTRACTION RATIO USED FOR ALL 3 STORMS IS 0.10

** 4.) RUNOFF CORRECTION FACTOR OF 1.2 USED PER TXDOT HYDRAULIC MANUAL.


555 EAST RAMSEY SAN ANTONIO TEXAS 78216 PHONE (210)375-9000 FAX (210)375-9010

PAPE-DAWSON ENGINEERS CIVIL & ENVIRONMENTAL

STATE OF TEXAS · K. STEPHEN BONNETTE · 60928 · REGISTERED PROFESSIONAL ENGINEER

K. STEPHEN BONNETTE, P.E. 9/20/00 DATE



© 2000 Texas Department of Transportation


# LOOP 1604
# SMALL EXTERIOR DRAINAGE AREA MAP

SHEET 1 OF 2

| DN: | | | | | | PROJECT NO. | |
|---|---|---|---|---|---|---|---|
| CK DN: | | | | | | NH 2000 (704), etc. | |
| DW: | CONTROL | SECTION | JOB | DIST. | STATE | COUNTY | HIGHWAY NO. | SHEET NO. |
| CK DW: | 2452 | Ø1 | Ø36 | SAT | TX | BEXAR | LOOP 1604 | 363A |
| | | etc. | | | | | |

Plotted on: 02/10/2003

## SMALL DRAINAGE AREAS - RATIONAL METHOD - 20 YEAR FORECAST

| DRAINAGE AREA | STRUCTURE LOCATION (STATION) | STRUCTURE DESCRIPTION (PROPOSED) | AREA (HA) | REACH (M) | SLOPE (M / M) | VEL. (M / S) | TC (min) | RUNOFF C | ADJUSTED **C | INTENSITY (I 25) mm / hr | INTENSITY (I 50) mm / hr | INTENSITY (I 100) mm / hr | Q25 CMS | Q50 CMS | Q100 CMS |
|---|---|---|---|---|---|---|---|---|---|---|---|---|---|---|---|
| 2 | 15+189.169 | 3-1500mmX900mm MBC | 16.32 | 351 | 0.022 | 1.8 | 13.00 | 0.65 | 0.72 | 209.69 | 233.13 | 260.52 | 6.80 | 7.56 | 8.45 |
| 5 | 16+017.008 | 1-1500mmX900mm SBC | 10.95 | 1052 | 0.023 | 1.8 | 20.00 | 0.60 | 0.64 | 169.12 | 188.71 | 210.53 | 3.26 | 3.64 | 4.06 |
| 6A & 6B | 17+258.686 | 2-1500mmX900mm MBC | 12.35 | 940 | 0.038 | 1.8 | 19.00 | 0.59 | 0.66 | 173.80 | 193.84 | 216.30 | 3.85 | 4.39 | 4.90 |
| 6B | | | 5.68 | 790 | 0.042 | 1.8 | 17.00 | 0.59 | 0.66 | 184.11 | 205.14 | 227.01 | 1.88 | 2.14 | 2.36 |
| 7 | 18+039.195 | 1-1800mmX900mm SBC | 6.15 | 320 | 0.029 | 1.8 | 13.00 | 0.59 | 0.66 | 209.69 | 233.13 | 260.52 | 2.35 | 2.61 | 2.92 |
| 8 | 18+172.634 | 1-750mm RCP | 2.61 | 351 | 0.009 | 1.8 | 13.00 | 0.58 | 0.66 | 209.69 | 233.13 | 260.52 | 0.99 | 1.10 | 1.23 |
| 9 | 18+485.369 | 2-900mm RCP | 3.60 | 305 | 0.030 | 1.8 | 13.00 | 0.59 | 0.67 | 209.69 | 233.13 | 260.52 | 1.39 | 1.54 | 1.72 |
| 10 | 19+024.824 | 1-1500mmX1200mm SBC | 6.71 | 381 | 0.032 | 1.8 | 13.00 | 0.59 | 0.67 | 209.69 | 233.13 | 260.52 | 2.59 | 2.87 | 3.21 |
| 11 | 19+257.771 | 2-1200mm RCP | 13.94 | 442 | 0.028 | 1.8 | 14.00 | 0.59 | 0.66 | 202.55 | 225.32 | 251.72 | 5.15 | 5.72 | 6.40 |
| 12 | 19+745.630 | 2-1500mmX900mm MBC | 8.01 | 411 | 0.047 | 1.8 | 14.00 | 0.60 | 0.68 | 202.55 | 225.32 | 251.72 | 3.03 | 3.37 | 3.76 |
| 13 | 19+866.572 | 1-900mm RCP | 4.18 | 366 | 0.038 | 1.8 | 13.00 | 0.57 | 0.65 | 209.69 | 233.13 | 260.52 | 1.56 | 1.74 | 1.94 |
| 13 & 14 | 19+866.572 | 1-900mm RCP | 5.16 | 366 | 0.038 | 1.8 | 13.00 | 0.57 | 0.65 | 209.69 | 233.13 | 260.52 | 1.94 | 2.16 | 2.41 |

## LARGE DRAINAGE AREAS - S.C.S. TR55 - 20 YEAR FORECAST

| | DRAINAGE AREA | STRUCTURE LOCATION (STATION) | STRUCTURE DESCRIPTION (PROPOSED) | AREA (HA) | CURVE NUMBER | Tc (MIN) | Q25 CMS | Q50 CMS | Q100 CMS |
|---|---|---|---|---|---|---|---|---|---|
| * | 1 | 14+509.737 | 7-1800mm X 1200mm & 1-2400mm X 1200mm MBC | 177.6 | 70 | 32 | 42.3 | 54.4 | 61.4 |

## SMALL DRAINAGE AREAS - RATIONAL METHOD - 20 YEAR FORECAST (CONT.)

| DRAINAGE AREA | STRUCTURE LOCATION (STATION) | STRUCTURE DESCRIPTION (PROPOSED) | + AREA (HA) | REACH (M) | SLOPE (M / M) | VEL. (M / S) | TC (min) | RUNOFF C | ADJUSTED **C | INTENSITY (I 10) mm / hr | INTENSITY (I 50) mm / hr | INTENSITY (I 100) mm / hr | Q10 CMS | Q50 CMS | Q100 CMS |
|---|---|---|---|---|---|---|---|---|---|---|---|---|---|---|---|
| 27 | 16+021.988 | 1-3000mmX2100mm SBC | 39.97 | 2085 | 0.050 | 1.8 | 29.00 | 0.78 | --- | 118.71 | 153.55 | 157.73 | 10.28 | 13.30 | 13.66 |

+ AREA INCLUDES INTERNAL DRAINAGE AREAS 110. 111. 114. 115

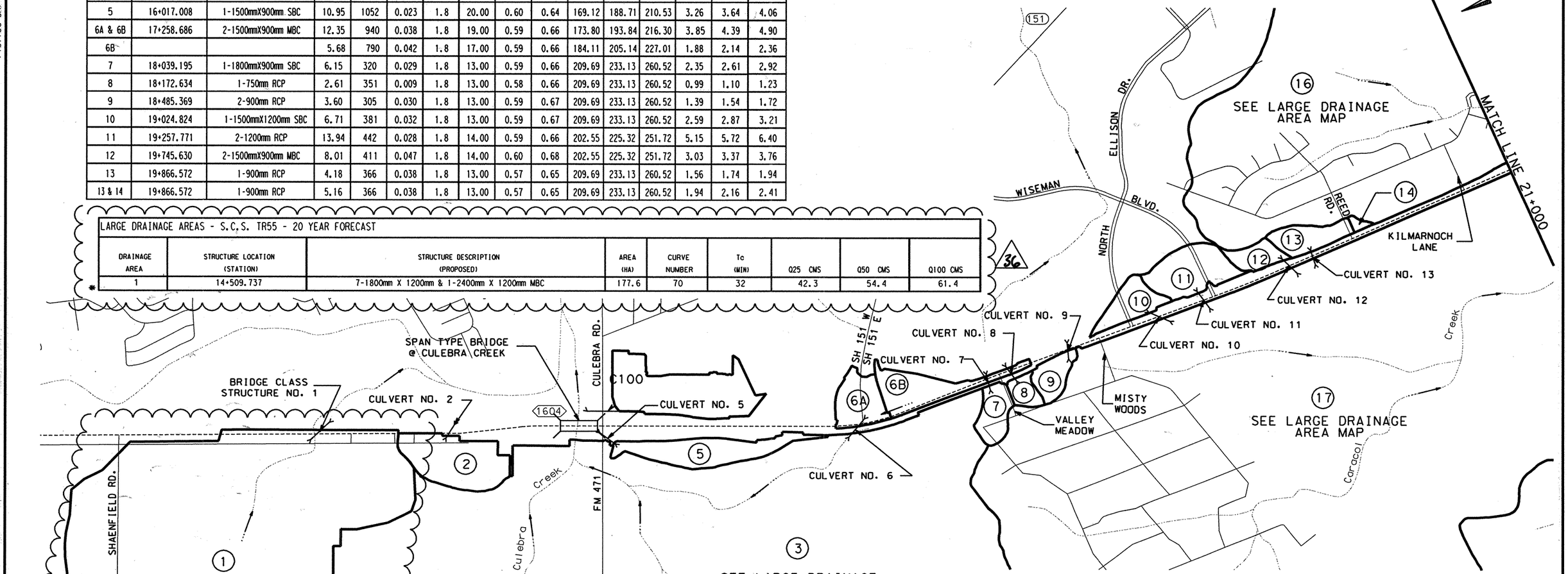


36 CHANGE ORDER NO. 36

REVISED AREA & HYDROLOGY FOR DA#1

LEGEND

- DRAINAGE SUB-AREA
- OVERALL DRAINAGE AREA
- (3H) DRAINAGE AREA DESIGNATION
- C100 COMPUTATION POINT
- FLOW ARROW

NOTE:

1.) TIME OF CONCENTRATION VALUES ARE EQUAL TO TRAVEL TIME + ASSUMED LAG TIME OF 10 MINUTES.

2.) D.A. No. 4 HAS BEEN OMMITTED

*3.) INITIAL ABSTRACTION RATIO USED FOR ALL 3 STORMS IS 0.10

**4.) RUNOFF CORRECTION FACTOR OF 1.2 USED PER TXDOT HYDRAULIC MANUAL.

SCALE: 1:20000

555 EAST RAMSEY SAN ANTONIO TEXAS 78216 PHONE (210)375-9000 FAX (210)375-9010

PAPE-DAWSON ENGINEERS CIVIL & ENVIRONMENTAL

STATE OF TEXAS K. STEPHEN BONNETTE 60928 REGISTERED PROFESSIONAL ENGINEER

K. STEPHEN BONNETTE, P.E. 02/10/03 DATE

© 2000 Texas Department of Transportation

# LOOP 1604 SMALL EXTERIOR DRAINAGE AREA MAP

SHEET 1 OF 2

| | | | | | | | | |
|---|---|---|---|---|---|---|---|---|
| DN: | | | | | PROJECT NO. | | | |
| CK DN: | | | | | NH 2000 (704), etc. | | | |
| DW: | CONTROL | SECTION | JOB | DIST. | STATE | COUNTY | HIGHWAY NO. | SHEET NO. |
| CK DW: | 2452 | 01 | 036 | SAT | TX | BEXAR | LOOP 1604 | 363 |
| | | | etc. | | | | | |

Design Filename: j:\3941\16\changeorder*bcs1\3941170d02.dgn

Plotted on: 09/19/00

| SMALL DRAINAGE AREAS - RATIONAL METHOD - 20 YEAR FORECAST | | | | | | | | | | | | | | | |
|---|---|---|---|---|---|---|---|---|---|---|---|---|---|---|---|
| DRAINAGE AREA | STRUCTURE LOCATION (STATION) | STRUCTURE DESCRIPTION (PROPOSED) | AREA (HA) | REACH (M) | SLOPE (M / M) | VEL. (M / S) | TC (min) | RUNOFF C | RUNOFF ADJUSTED *C | INTENSITY (I 25) mm / hr | INTENSITY (I50) mm / hr | INTENSITY (I 100) mm / hr | Q25 CMS | Q50 CMS | Q100 CMS |
| 20 | 25+508.364 | 2-1200 RCP | 8.36 | 411 | 0.026 | 1.8 | 14.00 | 0.60 | 0.68 | 202.55 | 225.32 | 251.72 | 3.16 | 3.51 | 3.92 |
| 21 | 26+275.758 | 1 - 760mm CMP | 2.76 | 190 | 0.006 | 1.8 | 12.00 | 0.57 | 0.65 | 217.44 | 241.60 | 270.05 | 0.99 | 1.13 | 1.29 |
| 22 | 26+843.216 | 2-1500mmX900mm MBC | 12.31 | 457 | 0.007 | 1.8 | 14.00 | 0.60 | 0.67 | 202.55 | 225.32 | 251.72 | 4.61 | 5.13 | 5.73 |
| 23 | 27+374.290 | 2-1800mmX900mm MBC | 20.35 | 472 | 0.013 | 1.8 | 14.00 | 0.60 | 0.68 | 202.55 | 225.32 | 251.72 | 7.68 | 8.55 | 9.55 |
| 24 | 27+940.509 | 3-1050mm RCP | 14.35 | 732 | 0.008 | 1.8 | 17.00 | 0.60 | 0.67 | 184.11 | 205.14 | 229.01 | 4.89 | 5.45 | 6.08 |
| 25 | 28+406.130 | 1-900mm RCP | 1.05 | 152 | 0.011 | 1.8 | 11.00 | 0.62 | 0.67 | 225.88 | 250.81 | 280.44 | 0.42 | 0.49 | 0.55 |
| 26 | 28+519.714 | 1-1050mm RCP | 2.80 | 229 | 0.077 | 1.8 | 12.00 | 0.66 | 0.71 | 217.44 | 241.60 | 270.05 | 1.06 | 1.22 | 1.39 |

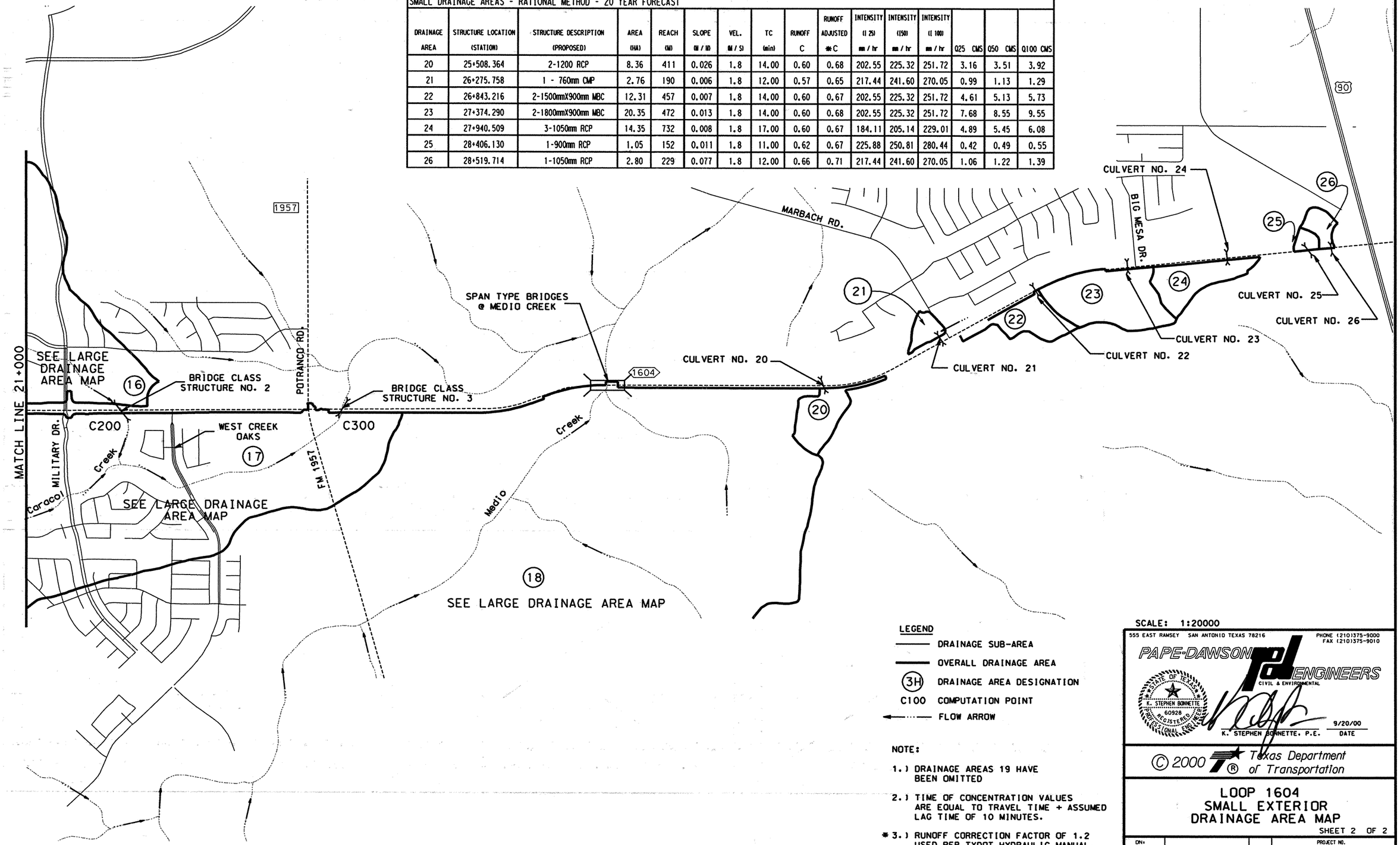


LEGEND

- DRAINAGE SUB-AREA
- OVERALL DRAINAGE AREA
- (3H) DRAINAGE AREA DESIGNATION
- C100 COMPUTATION POINT
- FLOW ARROW

NOTE:

1.) DRAINAGE AREAS 19 HAVE BEEN OMITTED

2.) TIME OF CONCENTRATION VALUES ARE EQUAL TO TRAVEL TIME + ASSUMED LAG TIME OF 10 MINUTES.

*3.) RUNOFF CORRECTION FACTOR OF 1.2 USED PER TXDOT HYDRAULIC MANUAL.

SCALE: 1:20000

555 EAST RAMSEY SAN ANTONIO TEXAS 78216 PHONE (210)375-9000 FAX (210)375-9010
PAPE-DAWSON ENGINEERS CIVIL & ENVIRONMENTAL
K. STEPHEN BONNETTE 60928 REGISTERED PROFESSIONAL ENGINEER STATE OF TEXAS
K. STEPHEN BONNETTE, P.E. 9/20/00 DATE

© 2000 Texas Department of Transportation

# LOOP 1604
# SMALL EXTERIOR DRAINAGE AREA MAP

SHEET 2 OF 2

| DN: | | | | | PROJECT NO. | | |
|---|---|---|---|---|---|---|---|
| CK DN: | | | | | NH 2000 (704), etc. | | |
| DW: | CONTROL | SECTION | JOB | DIST. | COUNTY | HIGHWAY NO. | SHEET NO. |
| CK DW: | 2452 | 01 | 036 etc. | SAT | BEXAR | LOOP 1604 | 364 |
| | | | | STATE | TX | | |

Design Filenames: j:\3941\f6\civil\design\plansheets\3941f6da03.dgn

Plotted on: 6/20/2004

## SMALL DRAINAGE AREAS - RATIONAL METHOD - 20 YEAR FORECAST

| DRAINAGE AREA | STRUCTURE LOCATION (STATION) | STRUCTURE DESCRIPTION (PROPOSED) | AREA (HA) | REACH (M) | SLOPE (M / M) | VEL. (M / S) | TC (min) | RUNOFF C | RUNOFF ADJUSTED *C | INTENSITY (I 25) mm / hr | INTENSITY (I50) mm / hr | INTENSITY (I 100) mm / hr | Q25 CMS | Q50 CMS | Q100 CMS |
|---|---|---|---|---|---|---|---|---|---|---|---|---|---|---|---|
| 20 | 25+508.364 | 2-1200 RCP | 12.1 | 411 | 0.026 | 1.8 | 14.00 | 0.60 | 0.68 | 202.55 | 225.32 | 251.72 | 4.63 | 5.15 | 5.75 |
| 21 | 26+275.758 | 1 - 760mm CMP | 2.76 | 190 | 0.006 | 1.8 | 12.00 | 0.57 | 0.65 | 217.44 | 241.60 | 270.05 | 0.99 | 1.10 | 1.23 |
| 22 | 26+843.216 | 2-1500mmX900mm MBC | 12.31 | 457 | 0.007 | 1.8 | 14.00 | 0.60 | 0.67 | 202.55 | 225.32 | 251.72 | 4.61 | 5.13 | 5.73 |
| 23 | 27+374.290 | 2-1800mmX900mm MBC | 20.35 | 472 | 0.013 | 1.8 | 14.00 | 0.60 | 0.68 | 202.55 | 225.32 | 251.72 | 7.68 | 8.55 | 9.55 |
| 24 | 27+940.509 | 3-1050mm RCP | 14.35 | 732 | 0.008 | 1.8 | 17.00 | 0.60 | 0.67 | 184.11 | 205.14 | 229.01 | 4.89 | 5.45 | 6.08 |
| 25 | 28+406.130 | 1-900mm RCP | 1.05 | 152 | 0.011 | 1.8 | 11.00 | 0.62 | 0.67 | 225.88 | 250.81 | 280.44 | 0.42 | 0.49 | 0.55 |
| 26 | 28+519.714 | 1-1050mm RCP | 2.80 | 229 | 0.077 | 1.8 | 12.00 | 0.66 | 0.71 | 217.44 | 241.60 | 270.05 | 1.06 | 1.22 | 1.39 |

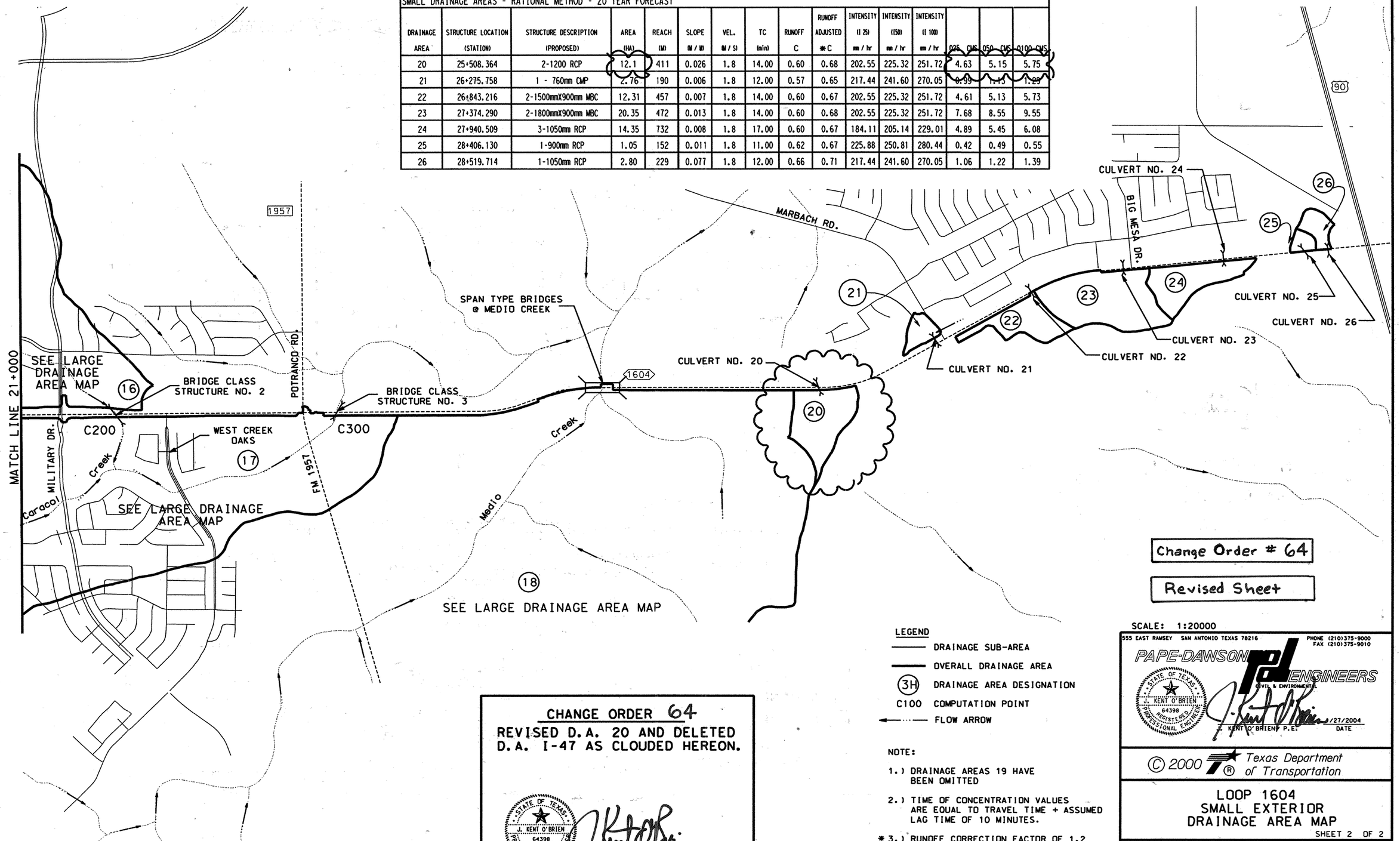


CHANGE ORDER 64

REVISED D.A. 20 AND DELETED D.A. I-47 AS CLOUDED HEREON.

STATE OF TEXAS · J. KENT O'BRIEN · 64398 · LICENSED PROFESSIONAL ENGINEER

08/20/2004
J. KENT O'BRIEN, P.E. — DATE

LEGEND

- DRAINAGE SUB-AREA
- OVERALL DRAINAGE AREA
- (3H) DRAINAGE AREA DESIGNATION
- C100 COMPUTATION POINT
- FLOW ARROW

NOTE:

1.) DRAINAGE AREAS 19 HAVE BEEN OMITTED

2.) TIME OF CONCENTRATION VALUES ARE EQUAL TO TRAVEL TIME + ASSUMED LAG TIME OF 10 MINUTES.

* 3.) RUNOFF CORRECTION FACTOR OF 1.2 USED PER TXDOT HYDRAULIC MANUAL.

Change Order # 64

Revised Sheet

SCALE: 1:20000

555 EAST RAMSEY SAN ANTONIO TEXAS 78216 PHONE (210)375-9000 FAX (210)375-9010
PAPE-DAWSON ENGINEERS CIVIL & ENVIRONMENTAL
STATE OF TEXAS · J. KENT O'BRIEN · 64398 · REGISTERED PROFESSIONAL ENGINEER
6/27/2004
J. KENT O'BRIEN P.E. — DATE

© 2000 Texas Department of Transportation

# LOOP 1604 SMALL EXTERIOR DRAINAGE AREA MAP

SHEET 2 OF 2

| DN: | | | | | PROJECT NO. | | |
|---|---|---|---|---|---|---|---|
| CK DN: | | | | | NH 2000 (704), etc. | | |
| DW: | CONTROL | SECTION | JOB | DIST. | STATE | COUNTY | HIGHWAY NO. | SHEET NO. |
| CK DW: | 2452 | 01 | 036 etc. | SAT | TX | BEXAR | LOOP 1604 | 364 A |

Design Filename: J:\39411\16\change order 040817\sheets\394116d003b.dgn

# HYDRAULIC DATA SHEET FOR BCS GREATER THAN 42.5 CMS
## (PIPES, PIPE ARCHES, BOX CULVERTS & FREE SPAN BRIDGES)

LOCATION: APPROX 0.146 KM NORTH OF CULEBRA RD. (FM 471) @ STA 15+844 TO 15+889 STRUCT.: EXIST BRIDGE @ CULEBRA CR. (SW (15.0 X 15.0 X 15.0) 3 SPAN BRIDGE DES ADT: 35,000

| ITEMS | DESIGN Q | | DESIGN Q (UD) | | ANAL. Q (UD) | |
|---|---|---|---|---|---|---|
| FREQUENCY | 25 | YR | 50 | YR | 100 | YR |
| METHOD USED TO DETERMINE Q | HEC-1 USING THE SCS METHOD | | | | | |
| DRAINAGE AREA (HA) | 10029 | | 10029 | | 10029 | |
| DRAINAGE AREA SLOPE (IN M/KM BTWN 10% & 85% PTS.) | 8.959 | M/KM | 8.959 | M/KM | 8.959 | M/KM |
| Q | 847 | CMS | 1009 | CMS | 1134 | CMS |
| CHANNEL SLOPE | 0.0060 | M/M | 0.0060 | M/M | 0.0060 | M/M |
| ALLOW HW (ELEV AT SITE) | N/A | | N/A | | N/A | |
| CALC TW (ELEV AT SITE) | 262.18 | M | 262.60 | M | 262.97 | M |
| CALC HW OR BACKWATER (ELEV AT SITE) | 263.15 | M | 264.41 | M | 265.17 | M |
| VEL THRU STR OR VEL OUT | 6.00 | MPS | 4.89 | MPS | 5.31 | MPS |
| VEL THRU NATURAL CHANNEL | 3.39 | MPS | 3.29 | MPS | 4.11 | MPS |
| MAX ALLOW VEL OUT | 3.05 | MPS | 3.05 | MPS | 3.05 | MPS |
| AREA BELOW DESIGN HW UNDER SPAN BR | 245.36 | SM | N/A | | N/A | |

EFFECTS OF Q 100 (EXIST)
DEPTH OF OVERFLOW OF ROAD: 0.80 M
WIDTH OF OVERFLOW OF ROAD: 252.40 M
Q OVER ROAD: 3.37 %
Q THRU STRUCTURE: 96.63 %

OTHER COMMENTS:
-THE 25 YR, 50 YR AND 100 YR. FLOODS ARE BASED ON 20 YR. FORECASTED CONDITIONS.

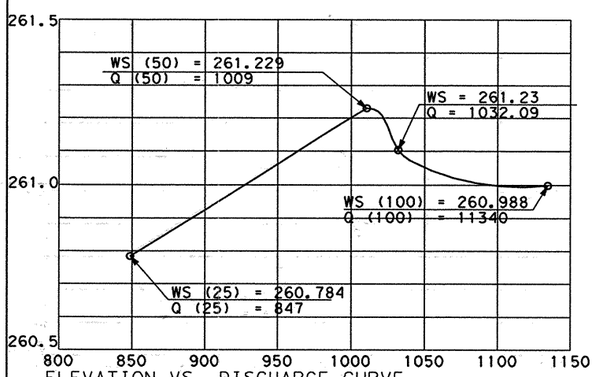

ELEVATION VS. DISCHARGE CURVE
LOCATION: APPROX. 145 METERS DOWNSTREAM OF END OF STRUCTURE

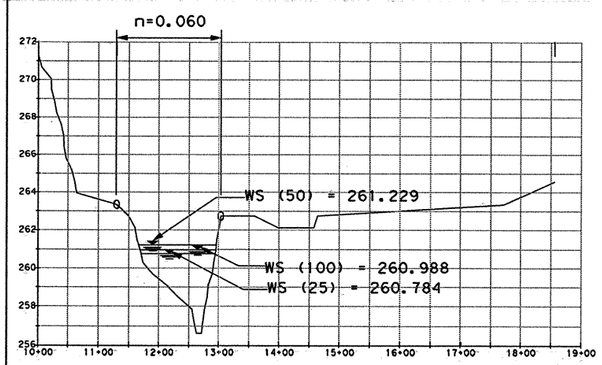

NATURAL STREAM CROSS-SECTION WITH "n" VALUES
LOCATION: APPROX. 145 METERS DOWNSTREAM OF END OF STRUCTURE (AT HEC-2 STA 25900)

LOCATION: _____ PROP STR: _____ DES ADT: _____

| ITEMS | | |
|---|---|---|
| FREQUENCY | | |
| METHOD USED TO DETERMINE Q | | |
| DRAINAGE AREA (HA) | | |
| DRAINAGE AREA SLOPE (IN M/KM BTWN 10% & 85% PTS.) | | |
| Q | | |
| CHANNEL SLOPE | | |
| ALLOW HW (ELEV AT SITE) | | |
| CALC TW (ELEV AT SITE) | | |
| CALC HW OR BACKWATER (ELEV AT SITE) | | |
| VEL THRU STR OR VEL OUT | | |
| VEL THRU NATURAL CHANNEL | | |
| MAX ALLOW VEL OUT | | |
| AREA BELOW DESIGN HW UNDER SPAN BR | | |

EFFECTS OF Q 100
DEPTH OF OVERFLOW OF ROAD: _____ M
WIDTH OF OVERFLOW OF ROAD: _____ M
Q OVER ROAD: _____ %
Q THRU STRUCTURE: _____ %

OTHER COMMENTS: _____

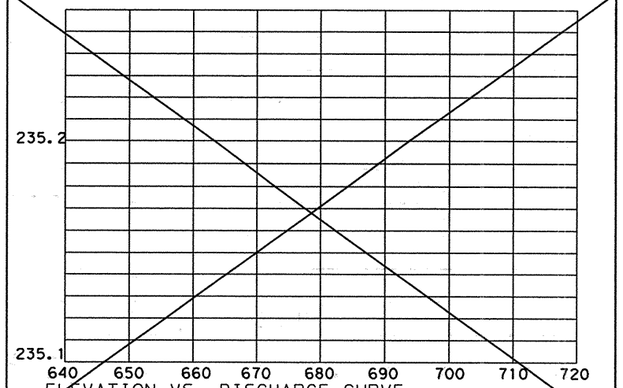

ELEVATION VS. DISCHARGE CURVE
LOCATION: _____

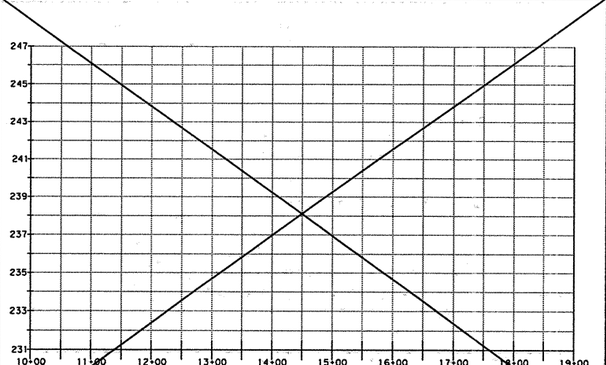

NATURAL STREAM CROSS-SECTION WITH " n" VALUES
LOCATION: _____

LOCATION: _____ PROP STR: _____ DES ADT: _____

| ITEMS | | |
|---|---|---|
| FREQUENCY | | |
| METHOD USED TO DETERMINE Q | | |
| DRAINAGE AREA (HA) | | |
| DRAINAGE AREA SLOPE (IN M/KM BTWN 10% & 85% PTS.) | | |
| Q | | |
| CHANNEL SLOPE | | |
| ALLOW HW (ELEV AT SITE) | | |
| CALC TW (ELEV AT SITE) | | |
| CALC HW OR BACKWATER (ELEV AT SITE) | | |
| VEL THRU STR OR VEL OUT | | |
| VEL THRU NATURAL CHANNEL | | |
| MAX ALLOW VEL OUT | | |
| AREA BELOW DESIGN HW UNDER SPAN BR | | |

EFFECTS OF Q 100
DEPTH OF OVERFLOW OF ROAD: _____ M
WIDTH OF OVERFLOW OF ROAD: _____ M
Q OVER ROAD: _____ %
Q THRU STRUCTURE: _____ %

OTHER COMMENTS: _____

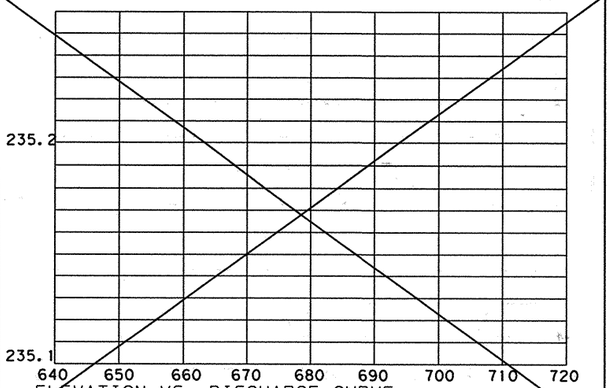

ELEVATION VS. DISCHARGE CURVE
LOCATION: _____

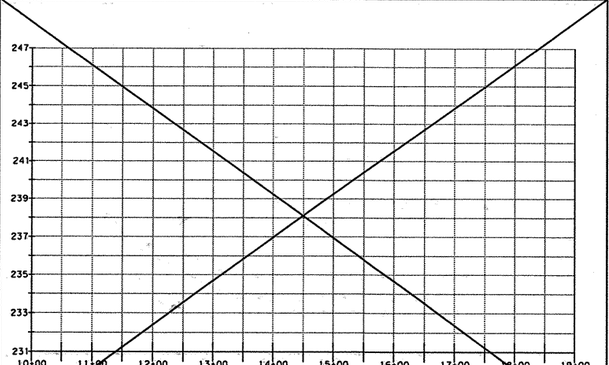

NATURAL STREAM CROSS-SECTION WITH " n" VALUES
LOCATION: _____

**GENERAL NOTES:**

1. ALL FREE SPAN BRIDGES AND BCS #2 AND #3 WERE HYDRAULICALLY ANALYZED AND DESIGNED USING THE BOSS RMS HEC-2 AND HEC-RAS COMPUTER SOFTWARE.


555 EAST RAMSEY SAN ANTONIO TEXAS 78216 PHONE (210)375-9000 FAX (210)375-9010
PAPE-DAWSON ENGINEERS CIVIL & ENVIRONMENTAL
STATE OF TEXAS K. STEPHEN BONNETTE 60928 REGISTERED PROFESSIONAL ENGINEER
9/20/00
K. STEPHEN BONNETTE, P.E. DATE


© 2000 Texas Department of Transportation

LOOP 1604
HYDRAULIC DATA SHEET
BCS OVER 42.5 CMS

SHEET 1 OF 5

| DN: | | | | | PROJECT NO. | | |
|---|---|---|---|---|---|---|---|
| CK DN: | | | | | NH 2000 (704), etc. | | |
| DW: | CONTROL | SECTION | JOB | DIST. | STATE | COUNTY | HIGHWAY NO. | SHEET NO. |
| CK DW: | 2452 | 01 | 036 etc. | SAT | TX | BEXAR | LOOP 1604 | 365 |

Plotted on: 09/19/00

Design Filename: j:\3941\16\civil\design\plansheets\394116hd01m.dgn

# HYDRAULIC DATA SHEET FOR BCS GREATER THAN 42.5 CMS

(PIPES, PIPE ARCHES, BOX CULVERTS & FREE SPAN BRIDGES)

LOCATION: APPROX 0.146 KM NORTH OF CULEBRA RD. (FM 471) @ STA 15+844 TO 15+889 — STRUCT.: EXIST BRIDGE @ CULEBRA CR. @ FM 115.0 X 15.0 X 15.0) 3 SPAN BRIDGE — DES ADT: 35,000

| ITEMS | DESIGN Q | | DESIGN Q (UD) | | ANAL. Q (UD) | |
|---|---|---|---|---|---|---|
| FREQUENCY | 25 | YR | 50 | YR | 100 | YR |
| METHOD USED TO DETERMINE Q | HEC-1 USING THE SCS METHOD | | | | | |
| DRAINAGE AREA (HA) | 10029 | | 10029 | | 10029 | |
| DRAINAGE AREA SLOPE (IN M/KM BTWN 10% & 85% PTS.) | 8.959 | M/KM | 8.959 | M/KM | 8.959 | M/KM |
| Q | 847 | CMS | 1009 | CMS | 1134 | CMS |
| CHANNEL SLOPE | 0.0060 | M/M | 0.0060 | M/M | 0.0060 | M/M |
| ALLOW HW (ELEV AT SITE) | N/A | | N/A | | N/A | |
| CALC TW (ELEV AT SITE) | 262.18 | M | 262.60 | M | 262.97 | M |
| CALC HW OR BACKWATER (ELEV AT SITE) | 263.15 | M | 264.41 | M | 265.17 | M |
| VEL THRU STR OR VEL OUT | 6.00 | MPS | 4.89 | MPS | 5.31 | MPS |
| VEL THRU NATURAL CHANNEL | 3.39 | MPS | 3.29 | MPS | 4.11 | MPS |
| MAX ALLOW VEL OUT | 3.05 | MPS | 3.05 | MPS | 3.05 | MPS |
| AREA BELOW DESIGN HW UNDER SPAN BR | 245.36 | SM | N/A | | N/A | |

EFFECTS OF Q 100 (EXIST)

DEPTH OF OVERFLOW OF ROAD: 0.80 M
WIDTH OF OVERFLOW OF ROAD: 252.40 M
Q OVER ROAD: 3.37 %
Q THRU STRUCTURE: 96.63 %

OTHER COMMENTS:

-THE 25 YR, 50 YR AND 100 YR. FLOODS ARE BASED ON 20 YR. FORECASTED CONDITIONS.

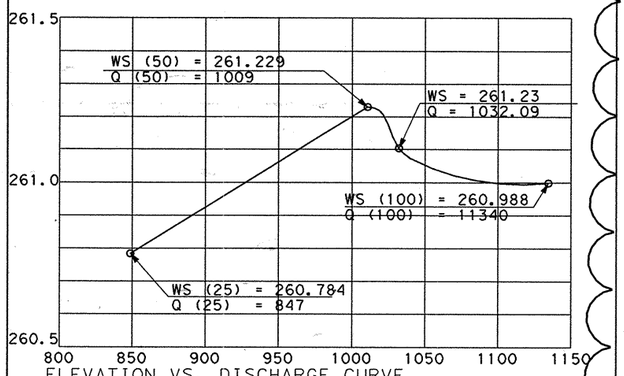


ELEVATION VS. DISCHARGE CURVE
LOCATION: APPROX. 145 METERS DOWNSTREAM OF END OF STRUCTURE

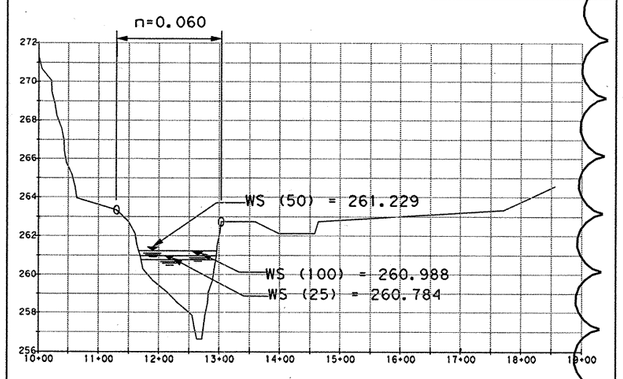


NATURAL STREAM CROSS-SECTION WITH "n" VALUES
LOCATION: APPROX. 145 METERS DOWNSTREAM OF END OF STRUCTURE (AT HEC-2 STA 25900)

LOCATION: BRIDGE CLASS STRUCT #1 LOOP 1604 @ NO NAME CREEK APPROX. 1.51 KM NORTH OF FM 471 @ STA 14+500.060 TO STA 14+523.813 — PROP STR: 7-1800mm X 1200mm X 77.607 & 1-2400mm X 1200mm X 77.607 MBC — DES ADT: 35,000

| ITEMS | DESIGN Q | | ANAL. Q 100 | |
|---|---|---|---|---|
| FREQUENCY | 50 | YR | 100 | YR |
| METHOD USED TO DETERMINE Q | TR55 USING THE SCS METHOD | | | |
| DRAINAGE AREA (HA) | 177.6 | | 177.6 | |
| DRAINAGE AREA SLOPE (IN M/KM BTWN 10% & 85% PTS.) | 8.181 | M/KM | 8.181 | M/KM |
| Q | 54.4 | CMS | 61.4 | CMS |
| CHANNEL SLOPE | 0.0042 | M/M | 0.0042 | M/M |
| ALLOW HW (ELEV AT SITE) | 271.08 | M | 271.08 | M |
| CALC TW (ELEV AT SITE) | 269.40 | M | 269.45 | M |
| CALC HW OR BACKWATER (ELEV AT SITE) | 270.83 | M | 271.13 | M |
| VEL THRU STR OR VEL OUT | * 3.31 | MPS | 3.48 | MPS |
| VEL THRU NATURAL CHANNEL | 1.24 | MPS | 1.29 | MPS |
| MAX ALLOW VEL OUT | 3.05 | MPS | 3.05 | MPS |
| AREA BELOW DESIGN HW UNDER SPAN BR | N/A | | N/A | |

EFFECTS OF Q 100

DEPTH OF OVERFLOW OF ROAD: 0.00 M
WIDTH OF OVERFLOW OF ROAD: 0.00 M
Q OVER ROAD: 0.00 %
Q THRU STRUCTURE: 100 %

OTHER COMMENTS:

-THE 50 YR AND 100 YR. FLOODS ARE BASED ON 20 YR. FORECASTED CONDITIONS.
-ALLOW 50YR & 100YR HW= EDGE OF PAVEMENT

* DOWNSTREAM VELOCITY REDUCES TO 1.5 MPS WITHIN LIMITS OF PROPOSED RIPRAP.

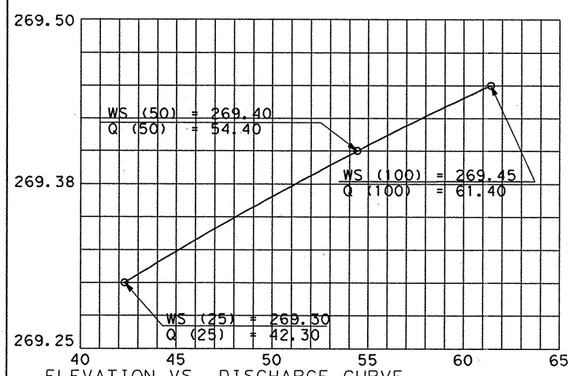


ELEVATION VS. DISCHARGE CURVE
LOCATION: APPROX. 38 METERS DOWNSTREAM OF END OF STRUCTURE

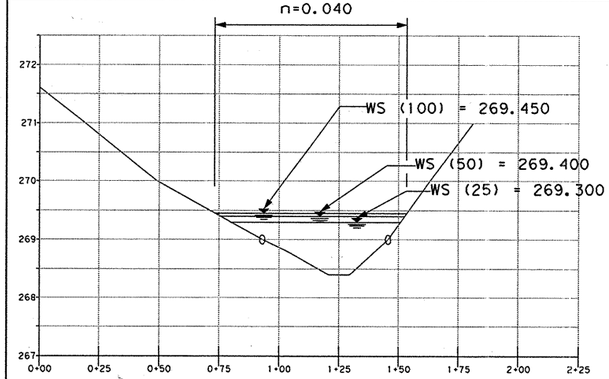


NATURAL STREAM CROSS-SECTION WITH " n" VALUES
LOCATION: APPROX. 38 METERS DOWNSTREAM OF END OF STRUCTURE (AT HEC-RAS STA 100)

LOCATION: BRIDGE CLASS STRUCT #1 LOOP 1604 @ NO NAME CREEK APPROX. 1.51 KM NORTH OF FM 471 @ STA 14+500.060 TO STA 14+513.851 — PROP STR: EXISTING 5-1800mm X 1200mm X 33.448 MBC — DES ADT: 35,000

| ITEMS | DESIGN Q | | ANAL. Q 100 | |
|---|---|---|---|---|
| FREQUENCY | 50 | YR | 100 | YR |
| METHOD USED TO DETERMINE Q | TR55 USING THE SCS METHOD | | | |
| DRAINAGE AREA (HA) | 177.6 | | 177.6 | |
| DRAINAGE AREA SLOPE (IN M/KM BTWN 10% & 85% PTS.) | 8.181 | M/KM | 8.181 | M/KM |
| Q | 54.4 | CMS | 61.4 | CMS |
| CHANNEL SLOPE | 0.0042 | M/M | 0.0042 | M/M |
| ALLOW HW (ELEV AT SITE) | 271.08 | M | 271.08 | M |
| CALC TW (ELEV AT SITE) | 269.40 | M | 269.45 | M |
| CALC HW OR BACKWATER (ELEV AT SITE) | 271.41 | M | 271.50 | M |
| VEL THRU STR OR VEL OUT | 4.22 | MPS | 4.34 | MPS |
| VEL THRU NATURAL CHANNEL | 1.24 | MPS | 1.29 | MPS |
| MAX ALLOW VEL OUT | 3.05 | MPS | 3.05 | MPS |
| AREA BELOW DESIGN HW UNDER SPAN BR | N/A | | N/A | |

EFFECTS OF Q 100

DEPTH OF OVERFLOW OF ROAD: 0.44 M
WIDTH OF OVERFLOW OF ROAD: 60.79 M
Q OVER ROAD: 23.63 %
Q THRU STRUCTURE: 76.37 %

OTHER COMMENTS:

-THE 50 YR AND 100 YR. FLOODS ARE BASED ON 20 YR. FORECASTED CONDITIONS.
-ALLOW 50YR & 100YR HW= EDGE OF PAVEMENT

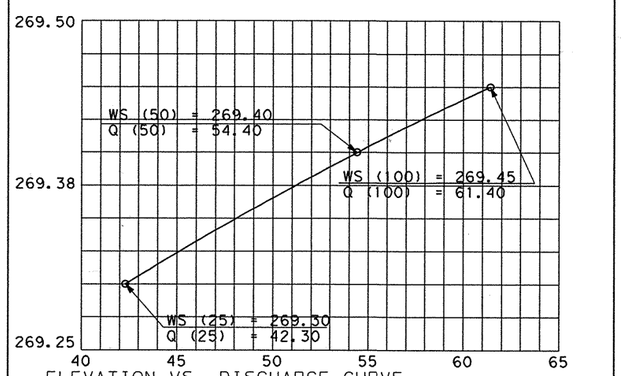


ELEVATION VS. DISCHARGE CURVE
LOCATION: APPROX. 38 METERS DOWNSTREAM OF END OF STRUCTURE

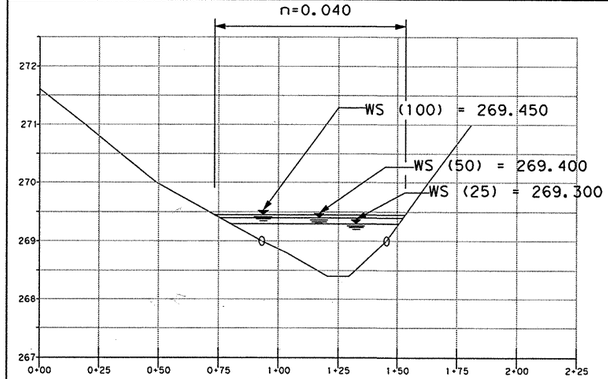


NATURAL STREAM CROSS-SECTION WITH " n" VALUES
LOCATION: APPROX. 38 METERS DOWNSTREAM OF END OF STRUCTURE (AT HEC-RAS STA 100)

GENERAL NOTES:

1. ALL FREE SPAN BRIDGES AND BCS #1 #2 AND #3 WERE HYDRAULICALLY ANALYZED AND DESIGNED USING THE BOSS RMS HEC-2 AND HEC-RAS COMPUTER SOFTWARE.

36 CHANGE ORDER NO. 36

REVISED HYDRAULIC DATA SHEET BCS OVER 42.5 CMS SHT 1 OF 5


555 EAST RAMSEY SAN ANTONIO TEXAS 78216 PHONE (210)375-9000 FAX (210)375-9010
PAPE-DAWSON ENGINEERS CIVIL & ENVIRONMENTAL
STATE OF TEXAS K. STEPHEN BONNETTE 60928 REGISTERED PROFESSIONAL ENGINEER
K. STEPHEN BONNETTE, P.E. 02/10/03 DATE


© 2000 Texas Department of Transportation

LOOP 1604
HYDRAULIC DATA SHEET
BCS OVER 42.5 CMS
SHEET 1 OF 5

| | | | | | | | |
|---|---|---|---|---|---|---|---|
| DN: | | | | | PROJECT NO. | | |
| CK DN: | | | | | NH 2000 (704), etc. | | |
| DW: | CONTROL | SECTION | JOB | DIST. | COUNTY | HIGHWAY NO. | SHEET NO. |
| CK DW: | 2452 | Ø1 | Ø36 | SAT | BEXAR | LOOP 1604 | 365A |


Plotted on: 02/10/2003
Design Filename: j:\3941\16\change*order*bcs1\hydraulic*data*bcs1.dgn

# HYDRAULIC DATA SHEET FOR BCS GREATER THAN 42.5 CMS
(PIPES, PIPE ARCHES, BOX CULVERTS & FREE SPAN BRIDGES)

LOCATION: APPROX 0.146 KM NORTH OF CULEBRA RD. (FM 471) @ STA 0+437.500 TO STA 0+538.000 — PROP STR: NB FRONTAGE RD. BRIDGE @ CULEBRA CR. 100.5M (33.5 X 33.5 X 33.5) 3 SPAN BRIDGE — DES ADT: 35,000

| ITEMS | DESIGN Q | | DESIGN Q (UD) | | ANAL. Q (UD) | |
|---|---|---|---|---|---|---|
| FREQUENCY | 25 | YR | **50 | YR | **100 | YR |
| METHOD USED TO DETERMINE Q | HEC-1 USING THE SCS METHOD | | | | | |
| DRAINAGE AREA (HA) | 10029 | | 10029 | | 10029 | |
| DRAINAGE AREA SLOPE (IN M/KM BTWN 10% & 85% PTS.) | 8.959 | M/KM | 8.959 | M/KM | 8.959 | M/KM |
| Q | 847 | CMS | 1009 | CMS | 1134 | CMS |
| CHANNEL SLOPE | 0.0018 | M/M | 0.0018 | M/M | 0.0018 | M/M |
| ALLOW HW (ELEV AT SITE) | 261.90 | M | 261.90 | M | 262.98 | M |
| CALC TW (ELEV AT SITE) | 261.60 | M | 261.93 | M | 262.10 | M |
| CALC HW OR BACKWATER (ELEV AT SITE) | 261.63 | M | 262.11 | M | 262.37 | M |
| VEL THRU STR OR VEL OUT | 2.50 | MPS | 2.52 | MPS | 2.83 | MPS |
| VEL THRU NATURAL CHANNEL | 2.34 | MPS | 2.47 | MPS | 2.61 | MPS |
| MAX ALLOW VEL OUT | 3.05 | MPS | 3.05 | MPS | 3.05 | MPS |
| AREA BELOW DESIGN HW UNDER SPAN BR | 352.85 | SM | 398.09 | SM | 423.45 | SM |

EFFECTS OF Q 100 (UD)
DEPTH OF OVERFLOW OF ROAD: 0.00 M
WIDTH OF OVERFLOW OF ROAD: 0.00 M
Q OVER ROAD: 0.00 %
Q THRU STRUCTURE: 100 %

OTHER COMMENTS:
-THE 25 YR, 50 YR AND 100 YR. FLOODS ARE BASED ON 20 YR. FORECASTED CONDITIONS.
-ALLOW 50YR HW= 600mm BELOW BRIDGE LOW CHORD
-ALLOW 100YR HW= EDGE OF PAVEMENT

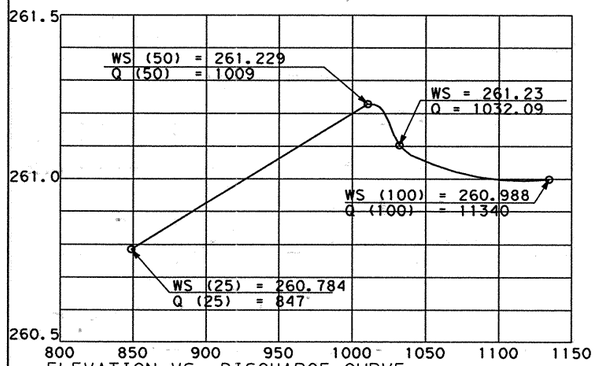


ELEVATION VS. DISCHARGE CURVE
LOCATION: APPROX. 93 METERS DOWNSTREAM OF END OF STRUCTURE

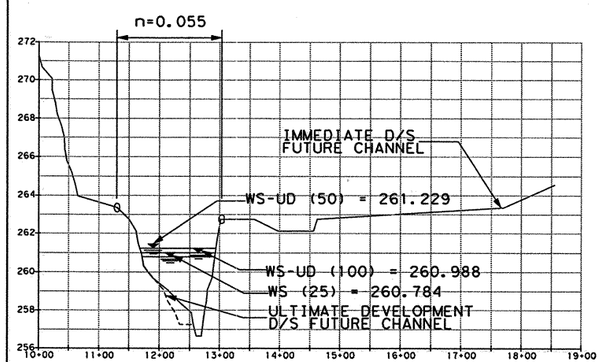


NATURAL STREAM CROSS-SECTION WITH "n" VALUES
LOCATION: APPROX. 93 METERS DOWNSTREAM OF END OF STRUCTURE (AT HEC-2 STA 25900)

LOCATION: APPROX 0.146 KM NORTH OF CULEBRA RD. (FM 471) @ STA 15+795.900 TO STA 16+065.100 — PROP STR: *MAINLANE BRIDGES @ CULEBRA CR. 269.2m (16 SPANS @ 34.5, 1 SPAN @ 36.8, & 1 SPAN @ 23.0) 8 SPAN BRIDGE — DES ADT: 35,000

| ITEMS | DESIGN Q | | DESIGN Q (UD) | | ANAL. Q (UD) | |
|---|---|---|---|---|---|---|
| FREQUENCY | 25 | YR | **50 | YR | **100 | YR |
| METHOD USED TO DETERMINE Q | HEC-1 USING THE SCS METHOD | | | | | |
| DRAINAGE AREA (HA) | 10029 | | 10029 | | 10029 | |
| DRAINAGE AREA SLOPE (IN M/KM BTWN 10% & 85% PTS.) | 8.959 | M/KM | 8.959 | M/KM | 8.959 | M/KM |
| Q | 847 | CMS | 1009 | CMS | 1134 | CMS |
| CHANNEL SLOPE | 0.0018 | M/M | 0.0018 | M/M | 0.0018 | M/M |
| ALLOW HW (ELEV AT SITE) | 262.40 | M | 262.40 | M | 262.40 | M |
| CALC TW (ELEV AT SITE) | 261.66 | M | 262.14 | M | 262.41 | M |
| CALC HW OR BACKWATER (ELEV AT SITE) | 261.69 | M | 262.17 | M | 262.44 | M |
| VEL THRU STR OR VEL OUT | 2.52 | MPS | 2.65 | MPS | 2.80 | MPS |
| VEL THRU NATURAL CHANNEL | 2.34 | MPS | 2.47 | MPS | 2.61 | MPS |
| MAX ALLOW VEL OUT | 3.05 | MPS | 3.05 | MPS | 3.05 | MPS |
| AREA BELOW DESIGN HW UNDER SPAN BR | 344.95 | SM | 390.01 | SM | 415.74 | SM |

EFFECTS OF Q 100 (UD)
DEPTH OF OVERFLOW OF ROAD: 0.00 M
WIDTH OF OVERFLOW OF ROAD: 0.00 M
Q OVER ROAD: 0.00 %
Q THRU STRUCTURE: 100 %

OTHER COMMENTS:
-THE 25 YR, 50 YR AND 100 YR. FLOODS ARE BASED ON 20 YR. FORECASTED CONDITIONS.
-ALLOW 50YR HW= 600mm BELOW CHANNEL OVERBANK
-ALLOW 100YR HW= 600mm BELOW CHANNEL OVERBANK

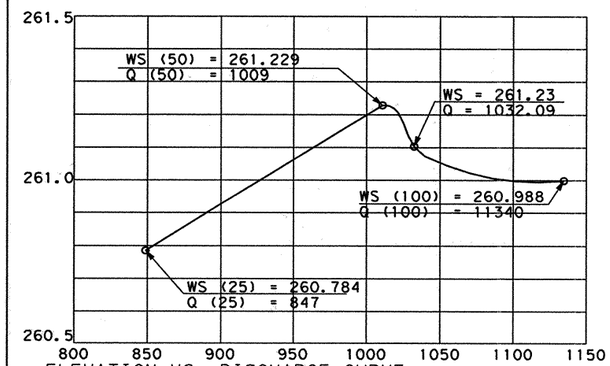


ELEVATION VS. DISCHARGE CURVE
LOCATION: APPROX. 143 METERS DOWNSTREAM OF END OF STRUCTURE

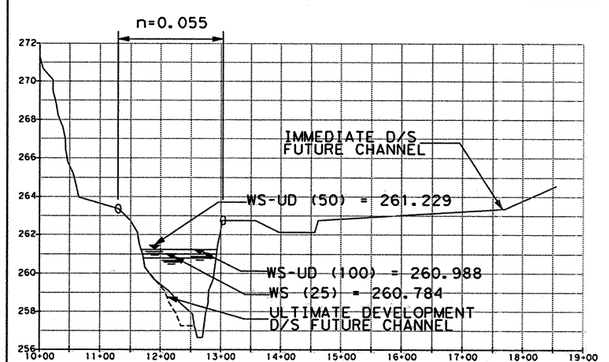


NATURAL STREAM CROSS-SECTION WITH "n" VALUES
LOCATION: APPROX. 143 METERS DOWNSTREAM OF END OF STRUCTURE (AT HEC-2 STA 25900)

LOCATION: APPROX 0.146 KM NORTH OF CULEBRA RD. (FM 471) @ STA 0+411.800 TO STA 0+511.500 — PROP STR: SB FRONTAGE RD. BRIDGE @ CULEBRA CR. 99.5M (33.2 X 33.2 X 33.2) 3 SPAN BRIDGE — DES ADT: 35,000

| ITEMS | DESIGN Q | | DESIGN Q (UD) | | ANAL. Q (UD) | |
|---|---|---|---|---|---|---|
| FREQUENCY | 25 | YR | **50 | YR | **100 | YR |
| METHOD USED TO DETERMINE Q | HEC-1 USING THE SCS METHOD | | | | | |
| DRAINAGE AREA (HA) | 10029 | | 10029 | | 10029 | |
| DRAINAGE AREA SLOPE (IN M/KM BTWN 10% & 85% PTS.) | 8.959 | M/KM | 8.959 | M/KM | 8.959 | M/KM |
| Q | 847 | CMS | 1009 | CMS | 1134 | CMS |
| CHANNEL SLOPE | 0.0018 | M/M | 0.0018 | M/M | 0.0018 | M/M |
| ALLOW HW (ELEV AT SITE) | 261.90 | M | 261.90 | M | 264.298 | M |
| CALC TW (ELEV AT SITE) | 261.73 | M | 262.21 | M | 262.48 | M |
| CALC HW OR BACKWATER (ELEV AT SITE) | 261.75 | M | 262.46 | M | 262.88 | M |
| VEL THRU STR OR VEL OUT | 2.58 | MPS | 2.64 | MPS | 2.97 | MPS |
| VEL THRU NATURAL CHANNEL | 2.34 | MPS | 2.47 | MPS | 2.61 | MPS |
| MAX ALLOW VEL OUT | 3.05 | MPS | 3.05 | MPS | 3.05 | MPS |
| AREA BELOW DESIGN HW UNDER SPAN BR | 342.91 | SM | 408.68 | SM | 448.63 | SM |

EFFECTS OF Q 100 (UD)
DEPTH OF OVERFLOW OF ROAD: 0.00 M
WIDTH OF OVERFLOW OF ROAD: 0.00 M
Q OVER ROAD: 0.00 %
Q THRU STRUCTURE: 100 %

OTHER COMMENTS:
-THE 25 YR, 50 YR AND 100 YR. FLOODS ARE BASED ON 20 YR. FORECASTED CONDITIONS.
-ALLOW 50YR HW= 600mm BELOW BRIDGE LOW CHORD
-ALLOW 100YR HW= EDGE OF PAVEMENT

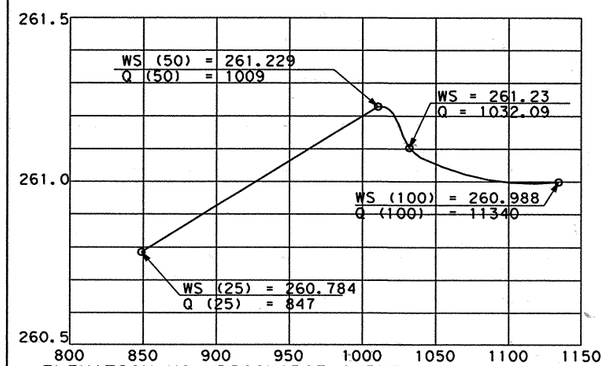


ELEVATION VS. DISCHARGE CURVE
LOCATION: APPROX. 225 METERS DOWNSTREAM OF END OF STRUCTURE

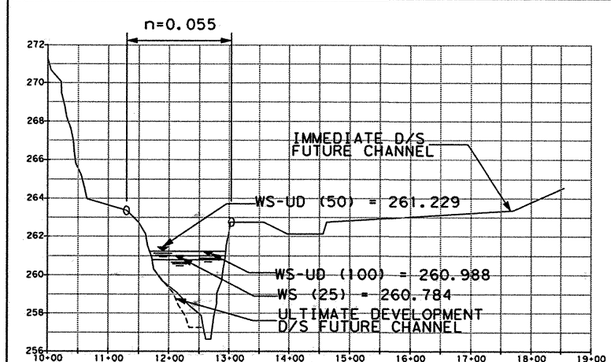


NATURAL STREAM CROSS-SECTION WITH "n" VALUES
LOCATION: APPROX. 225 METERS DOWNSTREAM OF END OF STRUCTURE (AT HEC-2 STA 25900)

**GENERAL NOTES:**

1. ALL FREE SPAN BRIDGES AND BCS *2 AND *3 WERE HYDRAULICALLY ANALYZED AND DESIGNED USING THE BOSS RMS HEC-2 AND HEC-RAS COMPUTER SOFTWARE.
2. ALLOWABLE HW ELEV. 600 MM BELOW THE LOW CHORD ELEV. OF THE BRIDGE.
* 3. CULEBRA CREEK MAINLANE BRIDGES MODELED AS ONE BRIDGE
** 4. DATA PRESENTED FOR CULEBRA CREEK FOR 50 YR. AND 100 YR. FLOODS ARE FOR ULTIMATE DEVELOPMENT BRIDGE DESIGNS WITH IMPROVED CHANNEL EXTENDING DOWNSTREAM FROM R.O.W. ULTIMATE CHANNEL IMPROVEMENTS DOWNSTREAM ARE NOT PART OF THIS PROJECT, BUT ARE CONSIDERED PART OF FUTURE IMPROVEMENT PROJECTS.
5. DATA PRESENTED FOR 25 YR. FLOOD FOR CULEBRA CREEK IS THE PROPOSED DESIGN FOR THIS PROJECT. ALL DATA SHOWN IS FOR THE 25 YR. FLOOD MODEL, UNLESS STATED OTHERWISE (SEE NOTE 4)

555 EAST RAMSEY SAN ANTONIO TEXAS 78216
PHONE (210)375-9000
FAX (210)375-9010
PAPE-DAWSON ENGINEERS
CIVIL & ENVIRONMENTAL

STATE OF TEXAS — K. STEPHEN BONNETTE — 50928 — REGISTERED PROFESSIONAL ENGINEER

K. STEPHEN BONNETTE, P.E. — 9/20/00 DATE

© 2000 Texas Department of Transportation

LOOP 1604
HYDRAULIC DATA SHEET
BCS OVER 42.5 CMS
SHEET 2 OF 5

| DN: | | | | | PROJECT NO. | | |
|---|---|---|---|---|---|---|---|
| CK DN: | | | | | NH 2000 (704), etc. | | |
| DW: | CONTROL | SECTION | JOB | DIST. | STATE | COUNTY | HIGHWAY NO. | SHEET NO. |
| CK DW: | 2452 | 01 | 036 etc. | SAT | TX | BEXAR | LOOP 1604 | 366 |

Plotted on: 09/19/00

Design Filenames: j:\3941\16\civil\design\plansheets\3941116hd01m.dgn

# HYDRAULIC DATA SHEET FOR BCS GREATER THAN 42.5 CMS
(PIPES, PIPE ARCHES, BOX CULVERTS & FREE SPAN BRIDGES)

LOCATION: APPROX 0.146 KM NORTH OF CULEBRA RD. (FM 471) @ STA 0+437.500 TO STA 0+538.000 — PROP STR: NB FRONTAGE RD. BRIDGE @ CULEBRA CR. 100.5M (33.5 X 33.5 X 33.5) 3 SPAN BRIDGE — DES ADT: 35,000

| ITEMS | DESIGN Q | | DESIGN Q (UD) | | ANAL. Q (UD) | |
|---|---|---|---|---|---|---|
| FREQUENCY | 25 | YR | **50 | YR | **100 | YR |
| METHOD USED TO DETERMINE Q | HEC-1 USING THE SCS METHOD | | | | | |
| DRAINAGE AREA (HA) | 10029 | | 10029 | | 10029 | |
| DRAINAGE AREA SLOPE (IN M/KM BTWN 10% & 85% PTS.) | 8.959 | M/KM | 8.959 | M/KM | 8.959 | M/KM |
| Q | 847 | CMS | 1009 | CMS | 1134 | CMS |
| CHANNEL SLOPE | 0.0018 | M/M | 0.0018 | M/M | 0.0018 | M/M |
| ALLOW HW (ELEV AT SITE) | 261.90 | M | 261.90 | M | 262.38 | M |
| CALC TW (ELEV AT SITE) | 261.60 | M | 261.43 | M | 261.38 | M |
| CALC HW OR BACKWATER (ELEV AT SITE) | 261.63 | M | 261.49 | M | 261.45 | M |
| VEL THRU STR OR VEL OUT | 2.50 | MPS | 2.52 | MPS | 2.83 | MPS |
| VEL THRU NATURAL CHANNEL | 2.34 | MPS | 2.47 | MPS | 2.61 | MPS |
| MAX ALLOW VEL OUT | 3.05 | MPS | 3.05 | MPS | 3.05 | MPS |
| AREA BELOW DESIGN HW UNDER SPAN BR | 352.85 | SM | 398.09 | SM | 423.45 | SM |

EFFECTS OF Q 100 (UD)
DEPTH OF OVERFLOW OF ROAD: 0.00 M
WIDTH OF OVERFLOW OF ROAD: 0.00 M
Q OVER ROAD: 0.00 %
Q THRU STRUCTURE: 100 %

OTHER COMMENTS:
-THE 25 YR, 50 YR AND 100 YR. FLOODS ARE BASED ON 20 YR. FORECASTED CONDITIONS.
-ALLOW 50YR HW= 600mm BELOW BRIDGE LOW CHORD
-ALLOW 100YR HW= EDGE OF PAVEMENT

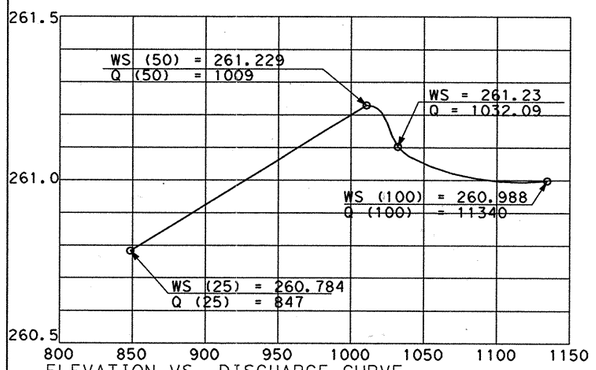

ELEVATION VS. DISCHARGE CURVE
LOCATION: APPROX. 93 METERS DOWNSTREAM OF END OF STRUCTURE

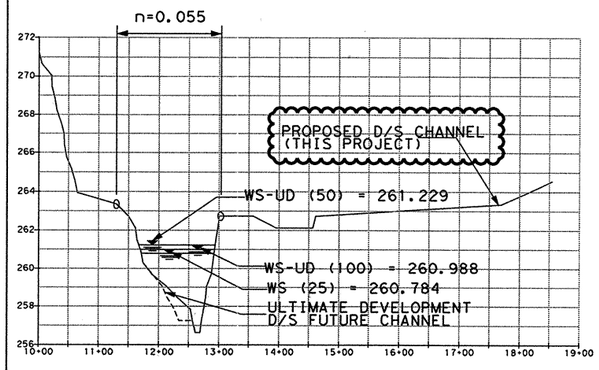

NATURAL STREAM CROSS-SECTION WITH "n" VALUES
LOCATION: APPROX. 93 METERS DOWNSTREAM OF END OF STRUCTURE (AT HEC-2 STA 25900)

LOCATION: APPROX 0.146 KM NORTH OF CULEBRA RD. (FM 471) @ STA 15+795.900 TO STA 16+065.100 — PROP STR: *MAINLANE BRIDGES @ CULEBRA CR. 269.2m (16 SPANS @ 24.0, 1 SPAN @ 36.0, & 1 SPAN @ 23.0) 8 SPAN BRIDGE — DES ADT: 35,000

| ITEMS | DESIGN Q | | DESIGN Q (UD) | | ANAL. Q (UD) | |
|---|---|---|---|---|---|---|
| FREQUENCY | 25 | YR | **50 | YR | **100 | YR |
| METHOD USED TO DETERMINE Q | HEC-1 USING THE SCS METHOD | | | | | |
| DRAINAGE AREA (HA) | 10029 | | 10029 | | 10029 | |
| DRAINAGE AREA SLOPE (IN M/KM BTWN 10% & 85% PTS.) | 8.959 | M/KM | 8.959 | M/KM | 8.959 | M/KM |
| Q | 847 | CMS | 1009 | CMS | 1134 | CMS |
| CHANNEL SLOPE | 0.0018 | M/M | 0.0018 | M/M | 0.0018 | M/M |
| ALLOW HW (ELEV AT SITE) | 262.40 | M | 262.40 | M | 262.40 | M |
| CALC TW (ELEV AT SITE) | 261.66 | M | 261.54 | M | 261.55 | M |
| CALC HW OR BACKWATER (ELEV AT SITE) | 261.69 | M | 261.59 | M | 261.62 | M |
| VEL THRU STR OR VEL OUT | 2.52 | MPS | 2.66 | MPS | 2.80 | MPS |
| VEL THRU NATURAL CHANNEL | 2.34 | MPS | 2.47 | MPS | 2.61 | MPS |
| MAX ALLOW VEL OUT | 3.05 | MPS | 3.05 | MPS | 3.05 | MPS |
| AREA BELOW DESIGN HW UNDER SPAN BR | 344.95 | SM | 390.01 | SM | 415.74 | SM |

EFFECTS OF Q 100 (UD)
DEPTH OF OVERFLOW OF ROAD: 0.00 M
WIDTH OF OVERFLOW OF ROAD: 0.00 M
Q OVER ROAD: 0.00 %
Q THRU STRUCTURE: 100 %

OTHER COMMENTS:
-THE 25 YR, 50 YR AND 100 YR. FLOODS ARE BASED ON 20 YR. FORECASTED CONDITIONS.
-ALLOW 50YR HW= 600mm BELOW CHANNEL OVERBANK
-ALLOW 100YR HW= 600mm BELOW CHANNEL OVERBANK

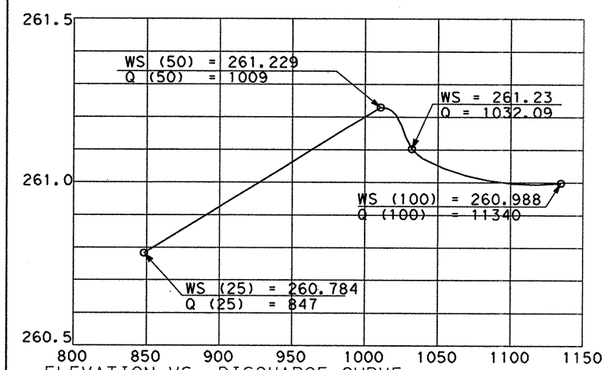

ELEVATION VS. DISCHARGE CURVE
LOCATION: APPROX. 143 METERS DOWNSTREAM OF END OF STRUCTURE

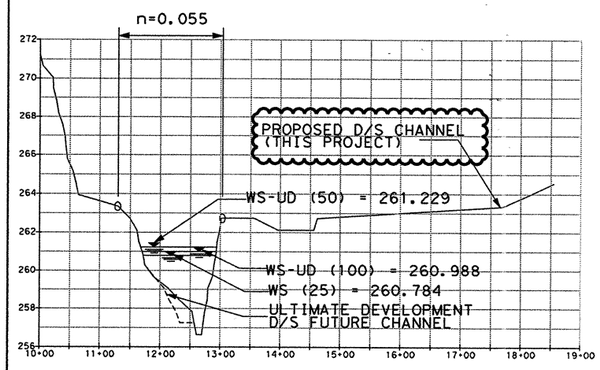

NATURAL STREAM CROSS-SECTION WITH "n" VALUES
LOCATION: APPROX. 143 METERS DOWNSTREAM OF END OF STRUCTURE (AT HEC-2 STA 25900)

LOCATION: APPROX 0.146 KM NORTH OF CULEBRA RD. (FM 471) @ STA 0+411.900 TO STA 0+511.500 — PROP STR: SB FRONTAGE RD. BRIDGE @ CULEBRA CR. 99.50M (33.2 X 33.2 X 33.2) 3 SPAN BRIDGE — DES ADT: 35,000

| ITEMS | DESIGN Q | | DESIGN Q (UD) | | ANAL. Q (UD) | |
|---|---|---|---|---|---|---|
| FREQUENCY | 25 | YR | **50 | YR | **100 | YR |
| METHOD USED TO DETERMINE Q | HEC-1 USING THE SCS METHOD | | | | | |
| DRAINAGE AREA (HA) | 10029 | | 10029 | | 10029 | |
| DRAINAGE AREA SLOPE (IN M/KM BTWN 10% & 85% PTS.) | 8.959 | M/KM | 8.959 | M/KM | 8.959 | M/KM |
| Q | 847 | CMS | 1009 | CMS | 1134 | CMS |
| CHANNEL SLOPE | 0.0018 | M/M | 0.0018 | M/M | 0.0018 | M/M |
| ALLOW HW (ELEV AT SITE) | 261.90 | M | 261.90 | M | 261.90 | M |
| CALC TW (ELEV AT SITE) | 261.73 | M | 261.65 | M | 261.71 | M |
| CALC HW OR BACKWATER (ELEV AT SITE) | 261.75 | M | 261.70 | M | 261.89 | M |
| VEL THRU STR OR VEL OUT | 2.58 | MPS | 2.64 | MPS | 2.97 | MPS |
| VEL THRU NATURAL CHANNEL | 2.34 | MPS | 2.47 | MPS | 2.61 | MPS |
| MAX ALLOW VEL OUT | 3.05 | MPS | 3.05 | MPS | 3.05 | MPS |
| AREA BELOW DESIGN HW UNDER SPAN BR | 342.91 | SM | 408.68 | SM | 448.63 | SM |

EFFECTS OF Q 100 (UD)
DEPTH OF OVERFLOW OF ROAD: 0.00 M
WIDTH OF OVERFLOW OF ROAD: 0.00 M
Q OVER ROAD: 0.00 %
Q THRU STRUCTURE: 100 %

OTHER COMMENTS:
-THE 25 YR, 50 YR AND 100 YR. FLOODS ARE BASED ON 20 YR. FORECASTED CONDITIONS.
-ALLOW 50YR HW= 600mm BELOW BRIDGE LOW CHORD
-ALLOW 100YR HW= EDGE OF PAVEMENT

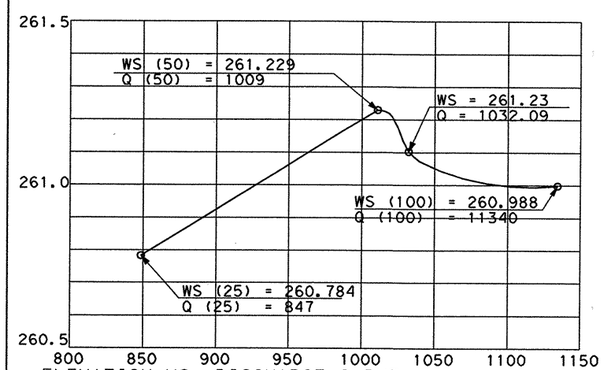

ELEVATION VS. DISCHARGE CURVE
LOCATION: APPROX. 225 METERS DOWNSTREAM OF END OF STRUCTURE

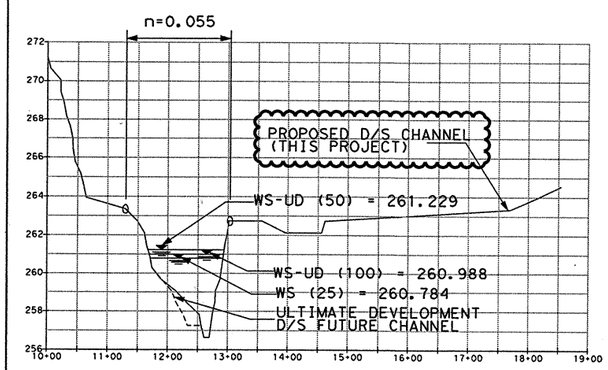

NATURAL STREAM CROSS-SECTION WITH "n" VALUES
LOCATION: APPROX. 225 METERS DOWNSTREAM OF END OF STRUCTURE (AT HEC-2 STA 25900)

GENERAL NOTES:

1. ALL FREE SPAN BRIDGES AND BCS #2 AND #3 WERE HYDRAULICALLY ANALYZED AND DESIGNED USING THE BOSS RMS HEC-2 AND HEC-RAS COMPUTER SOFTWARE.
2. ALLOWABLE HW ELEV. 600 MM BELOW THE LOW CHORD ELEV. OF THE BRIDGE.
* 3. CULEBRA CREEK MAINLANE BRIDGES MODELED AS ONE BRIDGE
**4. DATA PRESENTED FOR CULEBRA CREEK FOR 50 YR. AND 100 YR. FLOODS ARE FOR ULTIMATE DEVELOPMENT BRIDGE DESIGNS WITH IMPROVED CHANNEL EXTENDING DOWNSTREAM FROM R.O.W. ULTIMATE CHANNEL IMPROVEMENTS DOWNSTREAM ARE NOT PART OF THIS PROJECT. BUT ARE CONSIDERED PART OF FUTURE IMPROVEMENT PROJECTS.
5. DATA PRESENTED FOR 25 YR. FLOOD FOR CULEBRA CREEK IS THE PROPOSED DESIGN FOR THIS PROJECT. ALL DATA SHOWN IS FOR THE 25 YR. FLOOD MODEL, UNLESS STATED OTHERWISE (SEE NOTE 4)

CHANGE ORDER NO. 34
- REVISED CALCULATED WATER SURFACE ELEVATIONS.
- REVISED NOTES.

CHANGE ORDER NO. 34

555 EAST RAMSEY SAN ANTONIO TEXAS 78216 PHONE (210)375-9000 FAX (210)375-9010
PAPE-DAWSON ENGINEERS CIVIL & ENVIRONMENTAL
STATE OF TEXAS K. STEPHEN BONNETTE 60928 REGISTERED PROFESSIONAL ENGINEER
K. STEPHEN BONNETTE, P.E. DATE 4/8/02

© 2000 Texas Department of Transportation

LOOP 1604
HYDRAULIC DATA SHEET
BCS OVER 42.5 CMS

SHEET 2 OF 5

| DN: | | | | | PROJECT NO. | |
|---|---|---|---|---|---|---|
| CK DN: | | | | | NH 2000 (704), etc. | |
| DW: | CONTROL | SECTION | JOB | DIST. | COUNTY | HIGHWAY NO. |
| CK DW: | 2452 | 01 | 036 | SAT | BEXAR | LOOP 1604 |

STATE: TX — SHEET NO.: 2

etc.

Plotted on: $DATE$
Design Filename: $FILE$

# HYDRAULIC DATA SHEET FOR BCS GREATER THAN 42.5 CMS
## (PIPES, PIPE ARCHES, BOX CULVERTS & FREE SPAN BRIDGES)

LOCATION: APPROX 1.700 KM SOUTH OF POTRANCO. (FM 1957) @ STA 6+272.75 TO STA 6+359.75 — PROP STR: NB FRONTAGE RD. BRIDGE @ MEDIO CR. 67.00M (29.0 X 29.0 X 29.0) 3 SPAN BRIDGE — DES ADT: 35,000

| ITEMS | DESIGN Q | ANAL. Q 100 |
|---|---|---|
| FREQUENCY | 50 YR | 100 YR |
| METHOD USED TO DETERMINE Q | HEC-1 USING THE SCS METHOD | |
| DRAINAGE AREA (HA) | 5633 | 5633 |
| DRAINAGE AREA SLOPE (IN M/KM BTWN 10% & 85% PTS.) | 3.650 M/KM | 3.650 M/KM |
| Q | 643 CMS | 714 CMS |
| CHANNEL SLOPE | 0.0036 M/M | 0.0036 M/M |
| ALLOW HW (ELEV AT SITE) | 238.40 M | 240.42 M |
| CALC TW (ELEV AT SITE) | 235.22 M | 235.34 M |
| CALC HW OR BACKWATER (ELEV AT SITE) | 235.25 M | 235.37 M |
| VEL THRU STR OR VEL OUT | 2.80 MPS | 3.01 MPS |
| VEL THRU NATURAL CHANNEL | 2.98 MPS | 3.09 MPS |
| MAX ALLOW VEL OUT | 3.05 MPS | 3.05 MPS |
| AREA BELOW DESIGN HW UNDER SPAN BR | 235.00 SM | 244.00 SM |

EFFECTS OF Q 100
DEPTH OF OVERFLOW OF ROAD: 0.00 M
WIDTH OF OVERFLOW OF ROAD: 0.00 M
Q OVER ROAD: 0.00 %
Q THRU STRUCTURE: 100 %

OTHER COMMENTS:
-THE 50 YR AND 100 YR. FLOODS ARE BASED ON 20 YR. FORECASTED CONDITIONS.
-ALLOW 50YR HW= 600mm BELOW BRIDGE LOW CHORD
-ALLOW 100YR HW= EDGE OF PAVEMENT
-SEE NOTE #2

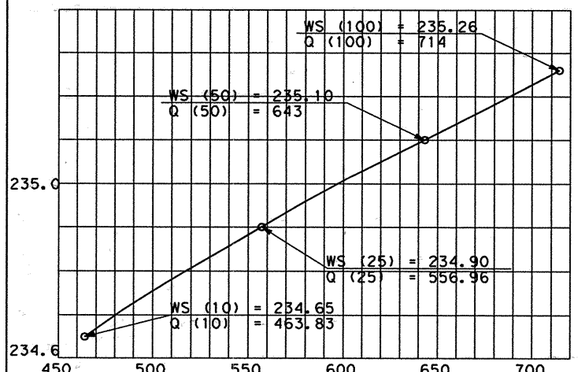


ELEVATION VS. DISCHARGE CURVE
LOCATION: APPROX. 25 METERS DOWNSTREAM OF END OF STRUCTURE

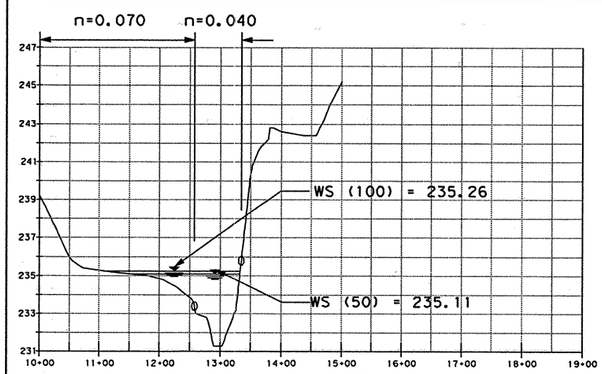


NATURAL STREAM CROSS-SECTION WITH "n" VALUES
LOCATION: APPROX. 25 METERS DOWNSTREAM OF END OF STRUCTURE (AT HEC-2 STA 900)

LOCATION: APPROX 1.700 KM SOUTH OF POTRANCO. (FM 1957) @ STA 24+267.50 TO STA 24+353.00 — PROP STR: SB MAINLANE BRIDGE @ MEDIO CR. 92.70M (28.5 X 28.5 X 28.5) 3 SPAN BRIDGE — DES ADT: 35,000

| ITEMS | DESIGN Q | ANAL. Q 100 |
|---|---|---|
| FREQUENCY | 50 YR | 100 YR |
| METHOD USED TO DETERMINE Q | HEC-1 USING THE SCS METHOD | |
| DRAINAGE AREA (HA) | 5633 | 5633 |
| DRAINAGE AREA SLOPE (IN M/KM BTWN 10% & 85% PTS.) | 3.650 M/KM | 3.650 M/KM |
| Q | 643 CMS | 714 CMS |
| CHANNEL SLOPE | 0.0036 M/M | 0.0036 M/M |
| ALLOW HW (ELEV AT SITE) | 238.15 M | 240.50 M |
| CALC TW (ELEV AT SITE) | 235.18 M | 235.29 M |
| CALC HW OR BACKWATER (ELEV AT SITE) | 235.18 M | 235.29 M |
| VEL THRU STR OR VEL OUT | 2.98 MPS | 3.09 MPS |
| VEL THRU NATURAL CHANNEL | 3.35 MPS | 3.62 MPS |
| MAX ALLOW VEL OUT | 3.05 MPS | 3.05 MPS |
| AREA BELOW DESIGN HW UNDER SPAN BR | 226.00 SM | 235.00 SM |

EFFECTS OF Q 100
DEPTH OF OVERFLOW OF ROAD: 0.00 M
WIDTH OF OVERFLOW OF ROAD: 0.00 M
Q OVER ROAD: 0.00 %
Q THRU STRUCTURE: 100 %

OTHER COMMENTS:
-THE 50 YR AND 100 YR. FLOODS ARE BASED ON 20 YR. FORECASTED CONDITIONS.
-ALLOW 50YR HW= 600mm BELOW BRIDGE LOW CHORD
-ALLOW 100YR HW= EDGE OF PAVEMENT
-SEE NOTE #2

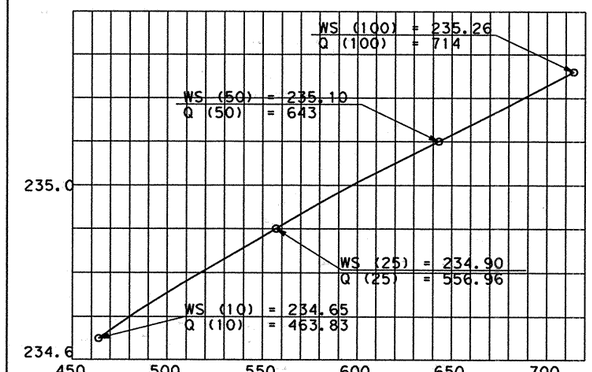


ELEVATION VS. DISCHARGE CURVE
LOCATION: APPROX. 53 METERS DOWNSTREAM OF END OF STRUCTURE

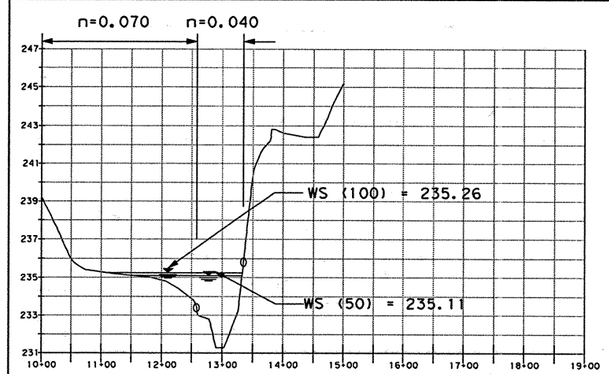


NATURAL STREAM CROSS-SECTION WITH " n" VALUES
LOCATION: APPROX. 53 METERS DOWNSTREAM OF END OF STRUCTURE (AT HEC-2 STA 900)

LOCATION: APPROX 1.700 KM SOUTH OF POTRANCO. (FM 1957) @ STA 24+284.8 TO STA 24+332.8 — STRUCT.: EXIST BRIDGE @ MEDIO CR. 18.00M (12.0 X 12.0 X 12.0 X 12.0) 4 SPAN BRIDGE — DES ADT: 35,000

| ITEMS | DESIGN Q | ANAL. Q 100 |
|---|---|---|
| FREQUENCY | 50 YR | 100 YR |
| METHOD USED TO DETERMINE Q | HEC-1 USING THE SCS METHOD | |
| DRAINAGE AREA (HA) | 5633 | 5633 |
| DRAINAGE AREA SLOPE (IN M/KM BTWN 10% & 85% PTS.) | 3.650 M/KM | 3.650 M/KM |
| Q | 643 CMS | 714 CMS |
| CHANNEL SLOPE | 0.0118 M/M | 0.0118 M/M |
| ALLOW HW (ELEV AT SITE) | N/A | N/A |
| CALC TW (ELEV AT SITE) | 235.68 M | 235.95 M |
| CALC HW OR BACKWATER (ELEV AT SITE) | 237.02 M | 237.35 M |
| VEL THRU STR OR VEL OUT | 5.80 MPS | 5.93 MPS |
| VEL THRU NATURAL CHANNEL | 3.70 MPS | 3.90 MPS |
| MAX ALLOW VEL OUT | 3.05 MPS | 3.05 MPS |
| AREA BELOW DESIGN HW UNDER SPAN BR | 157.00 SM | 167.00 SM |

EFFECTS OF Q 100
DEPTH OF OVERFLOW OF ROAD: 0.00 M
WIDTH OF OVERFLOW OF ROAD: 0.00 M
Q OVER ROAD: 0.00 %
Q THRU STRUCTURE: 100 %

OTHER COMMENTS:
-THE 50 YR AND 100 YR. FLOODS ARE BASED ON 20 YR. FORECASTED CONDITIONS.
-SEE NOTE #2

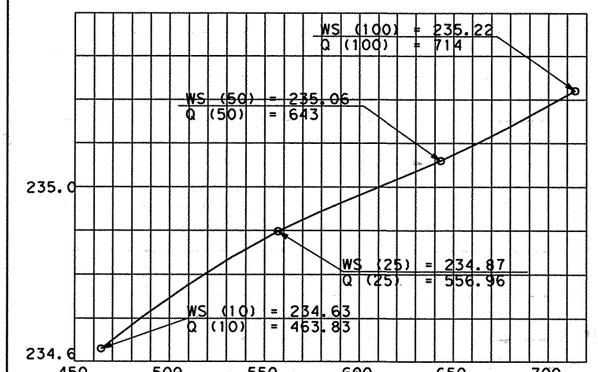


ELEVATION VS. DISCHARGE CURVE
LOCATION: APPROX. 53 METERS DOWNSTREAM OF END OF STRUCTURE

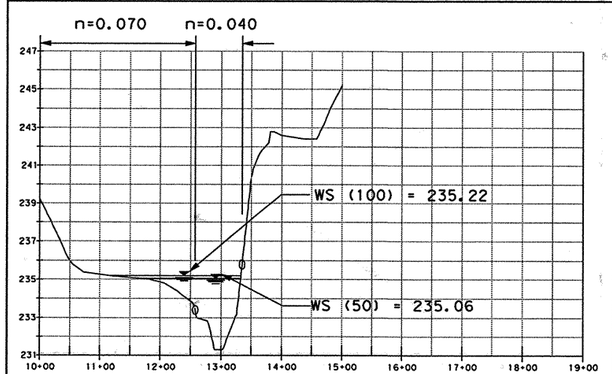


NATURAL STREAM CROSS-SECTION WITH "n" VALUES
LOCATION: APPROX. 53 METERS DOWNSTREAM OF END OF STRUCTURE (AT HEC-2 STA 900)

GENERAL NOTES:
1. ALL FREE SPAN BRIDGES AND BCS #2 AND #3 WERE HYDRAULICALLY ANALYZED AND DESIGNED USING THE BOSS RMS HEC-2 AND HEC-RAS COMPUTER SOFTWARE.
2. MEDIO CREEK BRIDGES WERE DESIGNED FOR ULTIMATE 4-BRIDGE DESIGN.


555 EAST RAMSEY SAN ANTONIO TEXAS 78216 PHONE (210)375-9000 FAX (210)375-9010
PAPE-DAWSON ENGINEERS CIVIL & ENVIRONMENTAL
STATE OF TEXAS K. STEPHEN BONNETTE 60928 REGISTERED PROFESSIONAL ENGINEER
K. STEPHEN BONNETTE, P.E. 9/20/00 DATE


© 2000 Texas Department of Transportation

LOOP 1604
HYDRAULIC DATA SHEET
BCS OVER 42.5 CMS
SHEET 3 OF 5

| DN: | | | | | PROJECT NO. | | |
|---|---|---|---|---|---|---|---|
| CK DN: | | | | | NH 2000 (704), etc. | | |
| DW: | CONTROL | SECTION | JOB | DIST. | STATE | COUNTY | HIGHWAY NO. | SHEET NO. |
| CK DW: | 2452 | 01 | 036 etc. | SAT | TX | BEXAR | LOOP 1604 | 367 |

Plotted on: 09/19/00
Design Filename: j:\3941\16\civil\design\plansheets\394116hd01m.dgn

# HYDRAULIC DATA SHEET FOR BCS GREATER THAN 42.5 CMS
## (PIPES, PIPE ARCHES, BOX CULVERTS & FREE SPAN BRIDGES)

**GENERAL NOTES:**

1. ALL FREE SPAN BRIDGES AND BCS #2 AND #3 WERE HYDRAULICALLY ANALYZED AND DESIGNED USING THE BOSS RMS HEC-2 AND HEC-RAS COMPUTER SOFTWARE.

LOCATION: BRIDGE CLASS STRUCT #2 LOOP 1604 @ TRIBUTARY TO CARACOL CR. APPROX. 0.13 KM SOUTH OF MILITARY DR. @ STA 21+569.394 TO STA 21+587.187 PROP STR: 4-3000mm X 2400mm X 82.594MBC DES ADT: 35,000

| ITEMS | DESIGN Q | ANAL. Q 100 |
|---|---|---|
| FREQUENCY | 50 YR | 100 YR |
| METHOD USED TO DETERMINE Q | HEC-1 USING THE SCS METHOD | |
| DRAINAGE AREA (HA) | 232.71 | 232.71 |
| DRAINAGE AREA SLOPE (IN M/KM BTWN 10% & 85% PTS.) | 17.50 M/KM | 17.50 M/KM |
| Q | 88 CMS | 99 CMS |
| CHANNEL SLOPE | 0.011 M/M | 0.011 M/M |
| ALLOW HW (ELEV AT SITE) | 257.42 M | 257.42 M |
| CALC TW (ELEV AT SITE) | 254.49 M | 254.61 M |
| CALC HW OR BACKWATER (ELEV AT SITE) | 256.58 M | 256.82 M |
| VEL THRU STR OR VEL OUT | 2.33 MPS | 2.41 MPS |
| VEL THRU NATURAL CHANNEL | 2.11 MPS | 1.85 MPS |
| MAX ALLOW VEL OUT | 3.05 MPS | 3.05 MPS |
| AREA BELOW DESIGN HW UNDER SPAN BR | N/A | N/A |

EFFECTS OF Q 100
DEPTH OF OVERFLOW OF ROAD: 0.00 M
WIDTH OF OVERFLOW OF ROAD: 0.00 M
Q OVER ROAD: 0.00 %
Q THRU STRUCTURE: 100 %

OTHER COMMENTS:
-THE 50 YR AND 100 YR. FLOODS ARE BASED ON 20 YR. FORECASTED CONDITIONS.
-ALLOW 50YR & 100YR HW= EDGE OF PAVEMENT

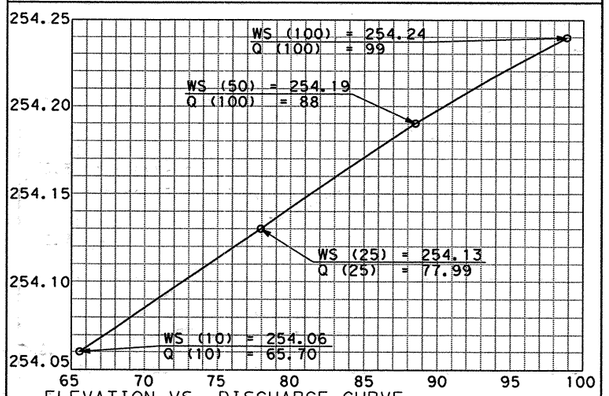


ELEVATION VS. DISCHARGE CURVE
LOCATION: APPROX. 50 METERS DOWNSTREAM OF END OF STRUCTURE

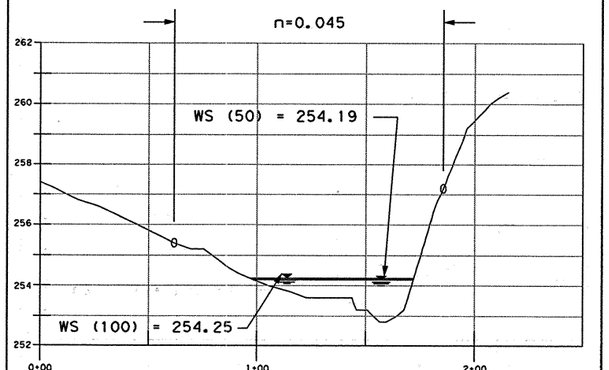


NATURAL STREAM CROSS-SECTION WITH " n" VALUES
LOCATION: APPROX. 50 METERS DOWNSTREAM OF END OF STRUCTURE (AT HEC-2 STA 100)

LOCATION: BRIDGE CLASS STRUCT #2 LOOP 1604 @ TRIBUTARY TO CARACOL CR. APPROX. 0.33 KM SOUTH OF MILITARY DR. @ STA 21+568.329 STRUCT. EXISTING 1-2700mm X 2400mm X 35.357MBC DES ADT: 35,000

| ITEMS | DESIGN Q | ANAL. Q 100 |
|---|---|---|
| FREQUENCY | 50 YR | 100 YR |
| METHOD USED TO DETERMINE Q | HEC-1 USING THE SCS METHOD | |
| DRAINAGE AREA (HA) | 232.71 | 232.71 |
| DRAINAGE AREA SLOPE (IN M/KM BTWN 10% & 85% PTS.) | 17.50 M/KM | 17.50 M/KM |
| Q | 88 CMS | 99 CMS |
| CHANNEL SLOPE | 0.011 M/M | 0.011 M/M |
| ALLOW HW (ELEV AT SITE) | N/A | N/A |
| CALC TW (ELEV AT SITE) | 255.68 M | 255.73 M |
| CALC HW OR BACKWATER (ELEV AT SITE) | 258.51 M | 258.55 M |
| VEL THRU STR OR VEL OUT | 0.32 MPS | 0.35 MPS |
| VEL THRU NATURAL CHANNEL | 3.38 MPS | 3.48 MPS |
| MAX ALLOW VEL OUT | 3.05 MPS | 3.05 MPS |
| AREA BELOW DESIGN HW UNDER SPAN BR | N/A | N/A |

EFFECTS OF Q 100
DEPTH OF OVERFLOW OF ROAD: 0.44 M
WIDTH OF OVERFLOW OF ROAD: 132.80 M
Q OVER ROAD: 60.20 %
Q THRU STRUCTURE: 39.80 %

OTHER COMMENTS:
-THE 50 YR AND 100 YR. FLOODS ARE BASED ON 20 YR. FORECASTED CONDITIONS.

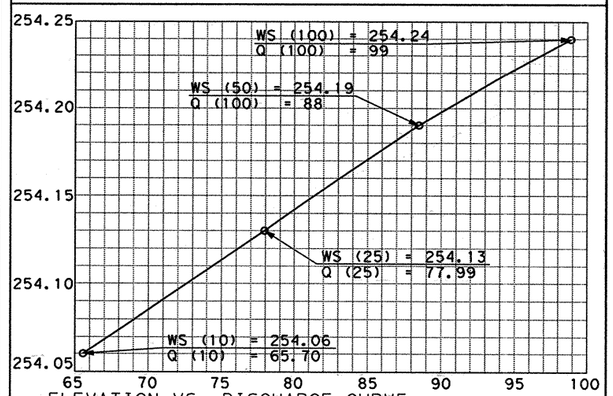


ELEVATION VS. DISCHARGE CURVE
LOCATION: APPROX. 54 METERS DOWNSTREAM OF END OF STRUCTURE

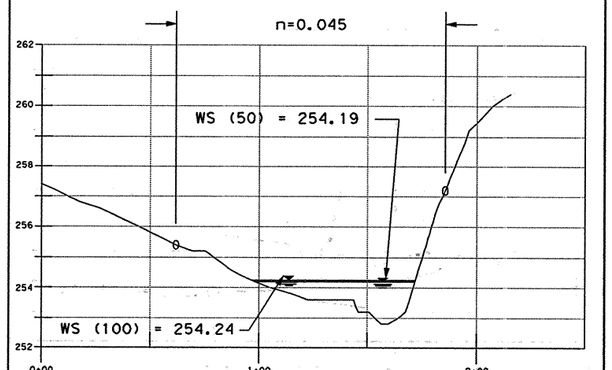


NATURAL STREAM CROSS-SECTION WITH " n" VALUES
LOCATION: APPROX. 54 METERS DOWNSTREAM OF END OF STRUCTURE (AT HEC-2 STA 100)

LOCATION: PROP STR: DES ADT:

| ITEMS | | |
|---|---|---|
| FREQUENCY | | |
| METHOD USED TO DETERMINE Q | | |
| DRAINAGE AREA (HA) | | |
| DRAINAGE AREA SLOPE (IN M/KM BTWN 10% & 85% PTS.) | | |
| Q | | |
| CHANNEL SLOPE | | |
| ALLOW HW (ELEV AT SITE) | | |
| CALC TW (ELEV AT SITE) | | |
| CALC HW OR BACKWATER (ELEV AT SITE) | | |
| VEL THRU STR OR VEL OUT | | |
| VEL THRU NATURAL CHANNEL | | |
| MAX ALLOW VEL OUT | | |
| AREA BELOW DESIGN HW UNDER SPAN BR | | |

EFFECTS OF Q 100
DEPTH OF OVERFLOW OF ROAD: M
WIDTH OF OVERFLOW OF ROAD: M
Q OVER ROAD: %
Q THRU STRUCTURE: %

OTHER COMMENTS:

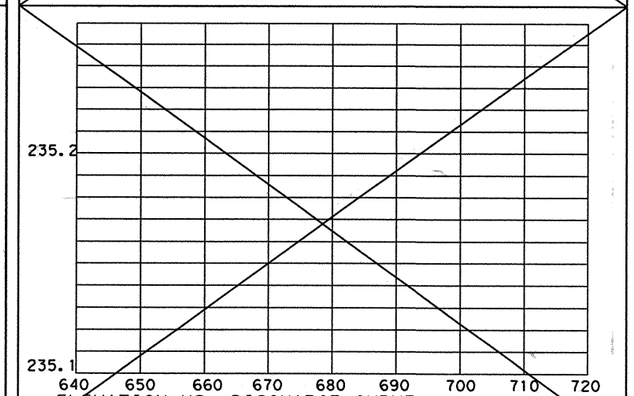


ELEVATION VS. DISCHARGE CURVE
LOCATION:

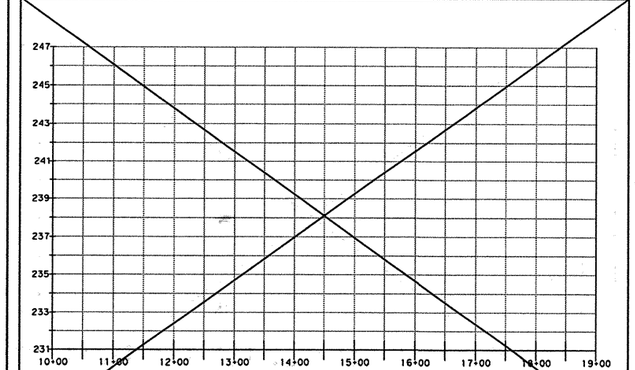


NATURAL STREAM CROSS-SECTION WITH " n" VALUES
LOCATION:

555 EAST RAMSEY SAN ANTONIO TEXAS 78216
PHONE (210)375-9000
FAX (210)375-9010
PAPE-DAWSON ENGINEERS
CIVIL & ENVIRONMENTAL

STATE OF TEXAS — K. STEPHEN BONNETTE — 60928 — REGISTERED PROFESSIONAL ENGINEER

9/20/00
K. STEPHEN BONNETTE, P.E. DATE

© 2000 Texas Department of Transportation

**LOOP 1604**
**HYDRAULIC DATA SHEET**
**BCS OVER 42.5 CMS**
SHEET 4 OF 5

| | | | | | | | | |
|---|---|---|---|---|---|---|---|---|
| DN: | | | | | | PROJECT NO. | | |
| CK DN: | | | | | | NH 2000 (704), etc. | | |
| DW: | CONTROL | SECTION | JOB | DIST. | STATE | COUNTY | HIGHWAY NO. | SHEET NO. |
| CK DW: | 2452 | 01 | 036 etc. | SAT | TX | BEXAR | LOOP 1604 | 368 |

Plotted on: 09/19/00

Design Filename: j:\3941\16\civil\design\plansheets\394116hd01m.dgn

# HYDRAULIC DATA SHEET FOR BCS GREATER THAN 42.5 CMS
## (PIPES, PIPE ARCHES, BOX CULVERTS & FREE SPAN BRIDGES)

**GENERAL NOTES:**

1. ALL FREE SPAN BRIDGES AND BCS #2 AND #3 WERE HYDRAULICALLY ANALYZED AND DESIGNED USING THE BOSS RMS HEC-2 AND HEC-RAS COMPUTER SOFTWARE.

LOCATION: BRIDGE CLASS STRUCT #3 LOOP 1604 AT CARACOL CR APPROX 0.20 KM SOUTH OF POTRANCO (FM 1957). @ STA 22+775.366 TO STA 22+812.374 | PROP STR: 10-3000mm X 3000mm X 75.081MBC | DES ADT: 35,000

| ITEMS | DESIGN Q | ANAL. Q 100 |
|---|---|---|
| FREQUENCY | 50 YR | 100 YR |
| METHOD USED TO DETERMINE Q | HEC-1 USING THE SCS METHOD | |
| DRAINAGE AREA (HA) | 1220 | 1220 |
| DRAINAGE AREA SLOPE (IN M/KM BTWN 10% & 85% PTS.) | 7.33 M/KM | 7.33 M/KM |
| Q | 215 CMS | 243 CMS |
| CHANNEL SLOPE | 0.002 M/M | 0.002 M/M |
| ALLOW HW (ELEV AT SITE) | 245.00 M | 245.00 M |
| CALC TW (ELEV AT SITE) | 243.01 M | 243.06 M |
| CALC HW OR BACKWATER (ELEV AT SITE) | 244.43 M | 244.65 M |
| VEL THRU STR OR VEL OUT | 2.27 MPS | 2.36 MPS |
| VEL THRU NATURAL CHANNEL | 1.51 MPS | 1.56 MPS |
| MAX ALLOW VEL OUT | 3.05 MPS | 3.05 MPS |
| AREA BELOW DESIGN HW UNDER SPAN BR | N/A | N/A |

EFFECTS OF Q 100
DEPTH OF OVERFLOW OF ROAD: 0.00 M
WIDTH OF OVERFLOW OF ROAD: 0.00 M
Q OVER ROAD: 0.00 %
Q THRU STRUCTURE: 100 %

OTHER COMMENTS:
-THE 50 YR AND 100 YR. FLOODS ARE BASED ON 20 YR. FORECASTED CONDITIONS.
-ALLOW 50YR & 100YR HW= EDGE OF PAVEMENT

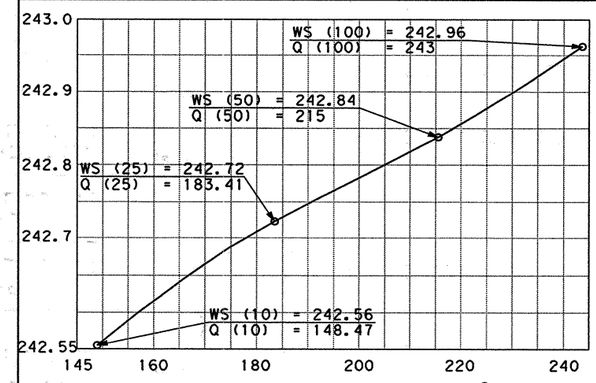


ELEVATION VS. DISCHARGE CURVE
LOCATION: APPROX. 143 METERS DOWNSTREAM OF END OF STRUCTURE

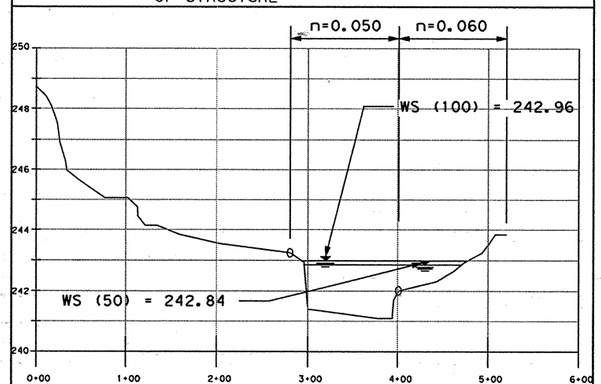


NATURAL STREAM CROSS-SECTION WITH "n" VALUES
LOCATION: APPROX. 143 METERS DOWNSTREAM OF END OF STRUCTURE (AT HEC-2 STA 100)

LOCATION: BRIDGE CLASS STRUCT #3 LOOP 1604 AT CARACOL CR APPROX 0.20 KM SOUTH OF POTRANCO (FM 1957). @ STA 22+794.683 TO STA 22+809.529 | STRUCT.: EXISTING 4-3000mm X 3000mm X 15.478MBC | DES ADT: 35,000

| ITEMS | DESIGN Q | ANAL. Q 100 |
|---|---|---|
| FREQUENCY | 50 YR | 100 YR |
| METHOD USED TO DETERMINE Q | HEC-1 USING THE SCS METHOD | |
| DRAINAGE AREA (HA) | 1220 | 1220 |
| DRAINAGE AREA SLOPE (IN M/KM BTWN 10% & 85% PTS.) | 7.33 M/KM | 7.33 M/KM |
| Q | 215 CMS | 243 CMS |
| CHANNEL SLOPE | 0.002 M/M | 0.002 M/M |
| ALLOW HW (ELEV AT SITE) | N/A | N/A |
| CALC TW (ELEV AT SITE) | 244.36 M | 245.22 M |
| CALC HW OR BACKWATER (ELEV AT SITE) | 245.72 M | 245.81 M |
| VEL THRU STR OR VEL OUT | 3.66 MPS | 3.75 MPS |
| VEL THRU NATURAL CHANNEL | 1.35 MPS | 1.61 MPS |
| MAX ALLOW VEL OUT | 3.05 MPS | 3.05 MPS |
| AREA BELOW DESIGN HW UNDER SPAN BR | N/A | N/A |

EFFECTS OF Q 100
DEPTH OF OVERFLOW OF ROAD: 0.87 M
WIDTH OF OVERFLOW OF ROAD: 380.49 M
Q OVER ROAD: 65.33 %
Q THRU STRUCTURE: 34.67 %

OTHER COMMENTS:
-THE 50 YR AND 100 YR. FLOODS ARE BASED ON 20 YR. FORECASTED CONDITIONS.

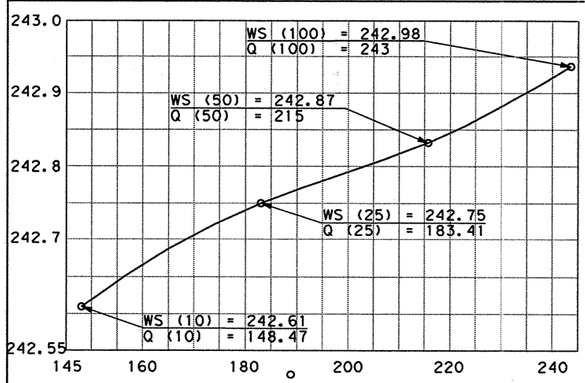


ELEVATION VS. DISCHARGE CURVE
LOCATION: APPROX. 143 METERS DOWNSTREAM OF END OF STRUCTURE

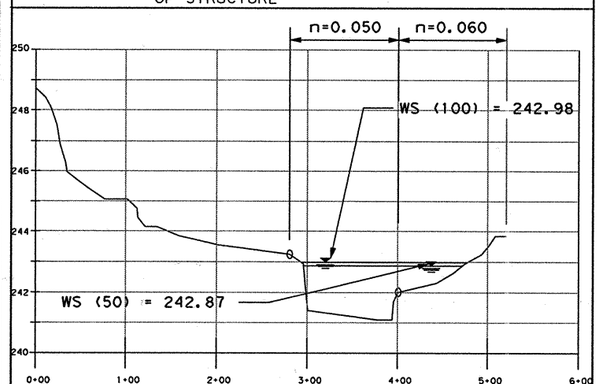


NATURAL STREAM CROSS-SECTION WITH "n" VALUES
LOCATION: APPROX. 180 METERS DOWNSTREAM OF END OF STRUCTURE (AT HEC-2 STA 100)

LOCATION: _____ PROP STR: _____ DES ADT: _____

| ITEMS | | |
|---|---|---|
| FREQUENCY | | |
| METHOD USED TO DETERMINE Q | | |
| DRAINAGE AREA (HA) | | |
| DRAINAGE AREA SLOPE (IN M/KM BTWN 10% & 85% PTS.) | | |
| Q | | |
| CHANNEL SLOPE | | |
| ALLOW HW (ELEV AT SITE) | | |
| CALC TW (ELEV AT SITE) | | |
| CALC HW OR BACKWATER (ELEV AT SITE) | | |
| VEL THRU STR OR VEL OUT | | |
| VEL THRU NATURAL CHANNEL | | |
| MAX ALLOW VEL OUT | | |
| AREA BELOW DESIGN HW UNDER SPAN BR | | |

EFFECTS OF Q 100
DEPTH OF OVERFLOW OF ROAD: _____ M
WIDTH OF OVERFLOW OF ROAD: _____ M
Q OVER ROAD: _____ %
Q THRU STRUCTURE: _____ %

OTHER COMMENTS:

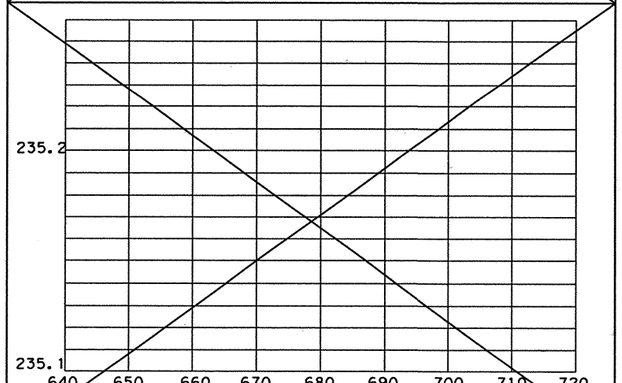


ELEVATION VS. DISCHARGE CURVE
LOCATION: _____

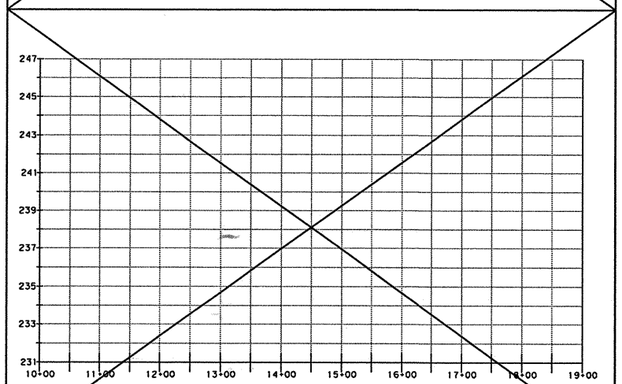


NATURAL STREAM CROSS-SECTION WITH " n" VALUES
LOCATION: _____


555 EAST RAMSEY SAN ANTONIO TEXAS 78216 PHONE (210)375-9000 FAX (210)375-9010
PAPE-DAWSON ENGINEERS CIVIL & ENVIRONMENTAL
STATE OF TEXAS K. STEPHEN BONNETTE 60928 REGISTERED PROFESSIONAL ENGINEER
K. STEPHEN BONNETTE, P.E. 9/20/00 DATE


© 2000 Texas Department of Transportation

**LOOP 1604**
**HYDRAULIC DATA SHEET**
**BCS OVER 42.5 CMS**
SHEET 5 OF 5

| DN: | | | | | PROJECT NO. | | |
|---|---|---|---|---|---|---|---|
| CK DN: | | | | | NH 2000 (704), etc. | | |
| DW: | CONTROL | SECTION | JOB | DIST. | STATE | COUNTY | HIGHWAY NO. | SHEET NO. |
| CK DW: | 2452 | 01 | 036 etc. | SAT | TX | BEXAR | LOOP 1604 | 369 |

Plotted on: 03/19/00

Design Filename: j:\3941\16\civil\design\plansheets\3941l6hd01m.dgn

# HYDRAULIC DATA SHEET FOR STRUCTURES UNDER 42.5 C.M.S.

(PIPES, PIPE ARCHES & BOX CULVERTS)

| STATION | FREQ. YEAR | "Q" CMS | ALLOW HW (ELEV) | OUTLET CHANNEL W | SS | N | S M/M | TW (ELEV) | CULVERTS LESS THAN 6m SPAN LENGTH SIZE, LENGTH & DESCRIPTION | SLOPE M/M | KE | HW (ELEV) | V-OUT M/SEC | REMARKS |
|---|---|---|---|---|---|---|---|---|---|---|---|---|---|---|
| CLVT NO. 2<br>15+189.169 | 50(DES)<br>100 | 7.56 | 272.00 | EXIST NATURAL GROUND | | | | 270.80 | 3-1500mm X 900mm X 76.851 MBC @ 30° LF SKEW WITH FW-30(M) UPSTRM & DNSTRM | BRKN BCK<br>0.01000<br>0.00533 | 0.40 | 271.58 | 2.54 | ALLOW HW: DITCH BLOCK @ STA 15+260 RT |
| CLVT NO. 5<br>0+627.197<br>(SBFR) | 25(DES)<br>100 | 3.26 | 263.83 | CULEBRA CREEK | | | | 261.73 | 1-1500mm X 900mm X 165.768 SBC @ 53°48'50" RF SKEW WITH FW-0(M) UPSTRM | 0.00346 | 0.40 | 263.31 | 2.77 | ALLOW HW: EP @ STA 10+170.82 RT<br>FM471 (CULEBRA RD) ℄ |
| CLVT NO. 6<br>17+258.686 | 50(DES)<br>100 | 4.39 | 283.03 | EXIST NATURAL GROUND | | | | 281.10 | 2-1500mm X 900mm X 123.401 MBC @ 45° LF SKEW WITH FW-45(M) UPSTRM & DNSTRM | 0.01568 | 0.40 | 281.98 | 1.74 | ALLOW HW: EP @ STA 17+208.409 LT |
| CLVT NO. 7<br>18+039.195 | 50(DES)<br>100 | 2.61 | 299.27 | EXIST NATURAL GROUND | | | | 296.95 | 1-1800mm X 900mm X 80.574 SBC @ 7° LF SKEW WITH FW-0(M) UPSTRM & DNSTRM | BRKN BCK<br>0.04473<br>0.00650 | 0.40 | 298.62 | 2.42 | ALLOW HW: DESIGN DITCH @ STA 18+000 RT |
| CLVT NO. 8<br>18+172.639 | 50(DES)<br>100 | 1.10 | 300.79 | EXIST NATURAL GROUND | | | | 297.30 | 1-750mm X 88.842 RCP (CL III) @ 15° RF SKEW WITH RIPRAP (CONC) (CL B) DNSTRM & SET (TY II) UPSTRM | BRKN BCK<br>0.04270<br>0.00174 | 0.70 | 300.76 | 2.49 | ALLOW HW: DESIGN DITCH @ STA 18+200 RT |
| CLVT NO. 9<br>18+485.369 | 50(DES)<br>100 | 1.54 | 296.70 | EXIST NATURAL GROUND | | | | 293.15 | 2- 900mm X 71.874 RCP (CL III) @ 15° LF SKEW WITH 2-SET(TY II) DNSTRM & 2 SET(TY II) UPSTRM | BRKN BCK<br>0.03640<br>0.00883 | 0.70 | 295.07 | 2.04 | ALLOW HW: DITCH BLOCK @ STA 18+600 RT |
| CLVT NO. 10<br>19+024.824 | 50(DES)<br>100 | 2.87 | 288.50 | EXIST NATURAL GROUND | | | | 282.61 | 1-1500mm X 1200mm X 117.369 MBC @ 45° RF SKEW WITH FW-45(M) UPSTRM & DNSTRM | BRKN BCK<br>0.00408<br>0.10106<br>0.00352 | 0.40 | 288.10 | 2.13 | ALLOW HW: TOE OF SLOPE @ STA 18+980 LT |
| CLVT NO. 11<br>19+257.771 | 50(DES)<br>100 | 5.72 | 284.80 | EXIST NATURAL GROUND | | | | 280.51 | 2-1200mm X 99.337 RCP (CL III) @ 15° RF SKEW WITH CONC RIPRAP UPSTRM & 2-SET(TY II) DNSTRM | BRKN BCK<br>0.05993<br>0.02170 | 0.70 | 283.99 | 2.53 | ALLOW HW: DITCH BLOCK @ STA 19+160 LT |
| CLVT NO. 12<br>19+754.630 | 50(DES)<br>100 | 3.37 | 288.42 | EXIST NATURAL GROUND | | | | 283.24 | 2-1500mm X 900mm X 94.915 MBC @ 21°45' RF SKEW WITH FW-15(M) UPSTRM & DNSTRM | BRKN BCK<br>0.08498<br>0.00497 | 0.40 | 288.19 | 2.23 | ALLOW HW: DESIGN DITCH @ STA 19+740 LT |
| CLVT NO. 13<br>19+866.572 | 50(DES)<br>100 | 2.16 | 286.65 | EXIST NATURAL GROUND | | | | 279.73 | 1-900mm X 73.774 RCP (CL III) @ 5° 30' LF SKEW WITH RIPRAP (CONC) (CL B) UPSTRM & SET (TY II) DNSTRM | BRKN BCK<br>0.14809<br>0.00631 | 0.70 | 285.20 | 3.40 | ALLOW HW: EP @ NBFR STA 1+857.639 LT |
| CLVT NO. 20<br>25+508.364 | 50(DES)<br>100 | 3.51 | 254.25 | EXIST NATURAL GROUND | | | | 252.80 | 2-1200mm X 27.147 RCP (CL III) @ 20° RF SKEW WITH SET (TY II) W/ PIPE RUNNERS UPSTRM & SET (TY II) W/PIPE RUNNERS DNSTRM AND 2-1200MM X 25.768 RCP (CL II) @ 20° RF SKEW WITH SET (TY II) UPSTRM W/ PIPE RUNNERS & RIPRAP (CONC) (CL B) DNSTRM | 0.0027 | 0.70 | 253.67 | 2.45 | ALLOW HW: DITCH BLOCK @ STA 25+480 RT |
| CLVT NO. 21<br>26+275.758 | 50(DES)<br>100 | 1.13 | 255.449 | EXIST NATURAL GROUND | | | | 254.26 | 3-600mm X 73.915 RCP (CL III) @ 30° RF SKEW WITH 3-SET(TY II) UPSTRM & DNSTRM | BRKN BCK<br>0.08000<br>0.00350 | 0.70 | 255.03 | 1.33 | ALLOW HW: CURB BERM @ STA 26+180 LT |
| CLVT NO. 22<br>26+843.216 | 50(DES)<br>100 | 5.13 | 252.50 | EXIST NATURAL GROUND | | | | 252.00 | 2-1500mm X 900mm X 50.592 MBC WITH SETB-0-3(M) DNSTRM & SETB-0-6(M) UPSTRM | 0.0200 | 0.40 | 252.04 | 1.90 | ALLOW HW: DITCH BLOCK @ STA 26+860 RT |
| CLVT NO. 23<br>27+374.290 | 50(DES)<br>100 | 8.55 | 250.56 | EXIST NATURAL GROUND | | | | 249.70 | 2-1800mm X 900mm X 49.756 MBC WITH FW-0(M) UPSTRM & SET(B)-0-3(M) DNSTRM | BRKN BCK<br>0.02869<br>0.00323 | 0.40 | 249.91 | 2.64 | ALLOW HW: DITCH BLOCK @ STA 27+400 RT |
| CLVT NO. 24<br>27+940.509 | 50(DES)<br>100 | 5.45 | 248.65 | EXIST NATURAL GROUND | | | | 247.54 | 3-1050mm X 41.171 RCP (CL III) WITH 3-SET (TY II) UPSTRM & 3-SET (TYII) W/PIPE RUNNERS DNSTRM | 0.00392 | 0.70 | 248.29 | 2.62 | ALLOW HW: EP @ STA 27+902.257 RT |
| CLVT NO. 25<br>28+406.130 | 50(DES)<br>100 | 0.49 | 249.00 | EXIST NATURAL GROUND | | | | 247.82 | 1-600mm X 48.597 RCP (CL III) @ 30° RF SKEW WITH SET (TY II) UPSTRM & DNSTRM | 0.00304 | 0.70 | 248.35 | 1.73 | ALLOW HW: PROP DITCH BLOCK @ STA 28+420 LT |
| CLVT NO. 26<br>28+519.714 | 50(DES)<br>100 | 1.22 | 248.60 | EXIST NATURAL GROUND | | | | 248.37 | 1-1050mm X 33.117 RCP (CL III) WITH SET (TY II) W/PIPE RUNNERS UPSTRM & DNSTRM | 0.00450 | 0.70 | 248.60 | 1.05 | ALLOW HW: EP @ STA 28+552 LT |

| STATION | FREQ. YEAR | "Q" CMS | ALLOW HW (ELEV) | OUTLET CHANNEL W | SS | N | S M/M | TW (ELEV) | CULVERTS MORE THAN 6m SPAN LENGTH SIZE, LENGTH & DESCRIPTION | SLOPE M/M | KE | HW (ELEV) | V-OUT M/SEC | REMARKS |
|---|---|---|---|---|---|---|---|---|---|---|---|---|---|---|
| BR CL STR NO. 1<br>14+509.737 | 50(DES)<br>100 | 28<br>34 | 271.10 | EXIST NATURAL GROUND | | | | 269.81<br>269.81 | 7-1800mm X 1200mm X 77.607 MBC @ 45° LF SKEW WITH FW-45(M) UPSTRM & DNSTRM | 0.00131 | 0.40 | 270.16<br>270.40 | 1.88<br>2.27 | TW ASSSUMED AT THE DNSTRM SOFFIT OF BOX<br>ALLOW HW: EP @ STA 14+436.321 RT |

NOTE:

1.) ALL DIMENSIONS ARE IN METERS UNLESS NOTED OTHERWISE.

2.) THE FOLLOWING CULVERT NOS. ARE NOT USED AS STRUCTURE DESIGNATIONS: #1. #3. #4. #14. #15. #16. #17. #18. #19. (FOR CULVERTS. DRAINAGE AREA AND STRUCTURE NO.'S ARE THE SAME.)

555 EAST RAMSEY SAN ANTONIO TEXAS 78216
PHONE (210)375-9000
FAX (210)375-9010
PAPE-DAWSON ENGINEERS
CIVIL & ENVIRONMENTAL
STATE OF TEXAS K. STEPHEN BONNETTE 60928 REGISTERED PROFESSIONAL ENGINEER
K. STEPHEN BONNETTE, P.E. 9/20/00 DATE

© 2000 Texas Department of Transportation

**LOOP 1604**
**HYDRAULIC DATA SHEET**
**STRUCTURES UNDER 42.5 CMS**

SHEET 1 OF 1

| | | | | | | | | | |
|---|---|---|---|---|---|---|---|---|---|
| DN: | | | | | | PROJECT NO. | | | |
| CK DN: | | | | | | NH 2000 (704), etc. | | | |
| DW: | CONTROL | SECTION | JOB | DIST. | STATE | COUNTY | HIGHWAY NO. | | SHEET NO. |
| CK DW: | 2452 | 01 | 036 etc. | SAT | TX | BEXAR | LOOP 1604 | | 370 |

Plotted on: 09/19/00
Design Filename: J:\3941\16\Civil\Design\PlanSheets\394116H002M.dgn

# HYDRAULIC DATA SHEET FOR STRUCTURES UNDER 42.5 C.M.S.

(PIPES, PIPE ARCHES & BOX CULVERTS)

| STATION | FREQ. YEAR | "Q" CMS | ALLOW HW (ELEV) | OUTLET CHANNEL W | SS | N | S M/M | TW (ELEV) | CULVERTS LESS THAN 6m SPAN LENGTH SIZE, LENGTH & DESCRIPTION | SLOPE M/M | KE | HW (ELEV) | V-OUT M/SEC | REMARKS |
|---|---|---|---|---|---|---|---|---|---|---|---|---|---|---|
| CLVT NO. 2<br>15+189.169 | 50(DES)<br>100 | 7.56 | 272.00 | EXIST NATURAL GROUND | | | | 270.80 | 3-1500mm X 900mm X 76.851 MBC @ 30° LF SKEW WITH FW-30(M) UPSTRM & DNSTRM | BRKN BCK<br>0.01000<br>0.00533 | 0.40 | 271.58 | 2.54 | ALLOW HW: DITCH BLOCK @ STA 15+260 RT |
| CLVT NO. 5<br>0+627.197<br>(SBFR) | 25(DES)<br>100 | 3.26 | 263.83 | CULEBRA CREEK | | | | 261.73 | 1-1500mm X 900mm X 165.768 SBC @ 53°48'50" RF SKEW WITH FW-0(M) UPSTRM | 0.00346 | 0.40 | 263.31 | 2.77 | ALLOW HW: EP @ STA 10+170.82 RT<br>FM471 (CULEBRA RD) ℄ |
| CLVT NO. 6<br>17+258.686 | 50(DES)<br>100 | 4.39 | 283.03 | EXIST NATURAL GROUND | | | | 281.10 | 2-1500mm X 900mm X 123.401 MBC @ 45° LF SKEW WITH FW-45(M) UPSTRM & DNSTRM | 0.01568 | 0.40 | 281.98 | 1.74 | ALLOW HW: EP @ STA 17+208.409 LT |
| CLVT NO. 7<br>18+039.195 | 50(DES)<br>100 | 2.61 | 299.27 | EXIST NATURAL GROUND | | | | 296.95 | 1-1800mm X 900mm X 80.574 SBC @ 7° LF SKEW WITH FW-0(M) UPSTRM & DNSTRM | BRKN BCK<br>0.04473<br>0.00650 | 0.40 | 298.62 | 2.42 | ALLOW HW: DESIGN DITCH @ STA 18+000 RT |
| CLVT NO. 8<br>18+172.639 | 50(DES)<br>100 | 1.10 | 300.79 | EXIST NATURAL GROUND | | | | 297.30 | 1-750mm X 88.842 RCP (CL III) @ 15° RF SKEW WITH RIPRAP (CONC) (CL B) DNSTRM & SET (TY II) UPSTRM | BRKN BCK<br>0.04270<br>0.00174 | 0.70 | 300.76 | 2.49 | ALLOW HW: DESIGN DITCH @ STA 18+200 RT |
| CLVT NO. 9<br>18+485.369 | 50(DES)<br>100 | 1.54 | 296.70 | EXIST NATURAL GROUND | | | | 293.15 | 2- 900mm X 71.874 RCP (CL III) @ 15° LF SKEW WITH 2-SET(TY II) DNSTRM & 2 SET(TY II) UPSTRM | BRKN BCK<br>0.03640<br>0.00883 | 0.70 | 295.07 | 2.04 | ALLOW HW: DITCH BLOCK @ STA 18+600 RT |
| CLVT NO. 10<br>19+024.824 | 50(DES)<br>100 | 2.87 | 288.50 | EXIST NATURAL GROUND | | | | 282.61 | 1-1500mm X 1200mm X 117.369 MBC @ 45° RF SKEW WITH FW-45(M) UPSTRM & DNSTRM | BRKN BCK<br>0.00408<br>0.10106<br>0.00352 | 0.40 | 288.10 | 2.13 | ALLOW HW: TOE OF SLOPE @ STA 18+980 LT |
| CLVT NO. 11<br>19+257.771 | 50(DES)<br>100 | 5.72 | 284.80 | EXIST NATURAL GROUND | | | | 280.51 | 2-1200mm X 99.337 RCP (CL III) @ 15° RF SKEW WITH CONC RIPRAP UPSTRM & 2-SET(TY II) DNSTRM | BRKN BCK<br>0.05993<br>0.02170 | 0.70 | 283.99 | 2.53 | ALLOW HW: DITCH BLOCK @ STA 19+160 LT |
| CLVT NO. 12<br>19+754.630 | 50(DES)<br>100 | 3.37 | 288.42 | EXIST NATURAL GROUND | | | | 283.24 | 2-1500mm X 900mm X 94.915 MBC @ 21°45' RF SKEW WITH FW-15(M) UPSTRM & DNSTRM | BRKN BCK<br>0.08498<br>0.00497 | 0.40 | 288.19 | 2.23 | ALLOW HW: DESIGN DITCH @ STA 19+740 LT |
| CLVT NO. 13<br>19+866.572 | 50(DES)<br>100 | 2.16 | 286.65 | EXIST NATURAL GROUND | | | | 279.73 | 1-900mm X 73.774 RCP (CL III) @ 5° 30' LF SKEW WITH RIPRAP (CONC) (CL B) UPSTRM & SET (TY II) DNSTRM | BRKN BCK<br>0.14809<br>0.00631 | 0.70 | 285.20 | 3.40 | ALLOW HW: EP @ NBFR STA 1+857.639 LT |
| CLVT NO. 20<br>25+508.364 | 50(DES)<br>100 | 3.51 | 254.25 | EXIST NATURAL GROUND | | | | 252.80 | 2-1200mm X 27.147 RCP (CL III) @ 20° RF SKEW WITH SET (TY II) W/ PIPE RUNNERS UPSTRM & SET (TY II) W/PIPE RUNNERS DNSTRM AND 2-1200MM X 25.768 RCP (CL II) @ 20° RF SKEW WITH SET (TY II) UPSTRM W/ PIPE RUNNERS & RIPRAP (CONC) (CL B) DNSTRM | 0.0027 | 0.70 | 253.67 | 2.45 | ALLOW HW: DITCH BLOCK @ STA 25+480 RT |
| CLVT NO. 21<br>26+275.758 | 50(DES)<br>100 | 1.13 | 255.449 | EXIST NATURAL GROUND | | | | 254.26 | 3-600mm X 73.915 RCP (CL III) @ 30° RF SKEW WITH 3-SET(TY II) UPSTRM & DNSTRM | BRKN BCK<br>0.08000<br>0.00350 | 0.70 | 255.03 | 1.33 | ALLOW HW: CURB BERM @ STA 26+180 LT |
| CLVT NO. 22<br>26+843.216 | 50(DES)<br>100 | 5.13 | 252.50 | EXIST NATURAL GROUND | | | | 252.00 | 2-1500mm X 900mm X 50.592 MBC WITH SETB-0-3(M) DNSTRM & SETB-0-6(M) UPSTRM | 0.0200 | 0.40 | 252.04 | 1.90 | ALLOW HW: DITCH BLOCK @ STA 26+860 RT |
| CLVT NO. 23<br>27+374.290 | 50(DES)<br>100 | 8.55 | 250.56 | EXIST NATURAL GROUND | | | | 249.70 | 2-1800mm X 900mm X 49.756 MBC WITH FW-0(M) UPSTRM & SET(B)-0-3(M) DNSTRM | BRKN BCK<br>0.02869<br>0.00323 | 0.40 | 249.91 | 2.64 | ALLOW HW: DITCH BLOCK @ STA 27+400 RT |
| CLVT NO. 24<br>27+940.509 | 50(DES)<br>100 | 5.45 | 248.65 | EXIST NATURAL GROUND | | | | 247.54 | 3-1050mm X 41.171 RCP (CL III) WITH 3-SET (TY II) UPSTRM & 3-SET (TYII) W/PIPE RUNNERS DNSTRM | 0.00392 | 0.70 | 248.29 | 2.62 | ALLOW HW: EP @ STA 27+902.257 RT |
| CLVT NO. 25<br>28+406.130 | 50(DES)<br>100 | 0.49 | 249.00 | EXIST NATURAL GROUND | | | | 247.82 | 1-600mm X 48.597 RCP (CL III) @ 30° RF SKEW WITH SET (TY II) UPSTRM & DNSTRM | 0.00304 | 0.70 | 248.35 | 1.73 | ALLOW HW: PROP DITCH BLOCK @ STA 28+420 LT |
| CLVT NO. 26<br>28+519.714 | 50(DES)<br>100 | 1.22 | 248.60 | EXIST NATURAL GROUND | | | | 248.37 | 1-1050mm X 33.117 RCP (CL III) WITH SET (TY II) W/PIPE RUNNERS UPSTRM & DNSTRM | 0.00450 | 0.70 | 248.60 | 1.05 | ALLOW HW: EP @ STA 28+552 LT |

| STATION | FREQ. YEAR | "Q" CMS | ALLOW HW (ELEV) | OUTLET CHANNEL W | SS | N | S M/M | TW (ELEV) | CULVERTS MORE THAN 6m SPAN LENGTH SIZE, LENGTH & DESCRIPTION | SLOPE M/M | KE | HW (ELEV) | V-OUT M/SEC | REMARKS |
|---|---|---|---|---|---|---|---|---|---|---|---|---|---|---|
| BR CL STR NO. 1<br>14+509.737 | 50(DES)<br>100 | 28<br>34 | 271.10 | EXIST NATURAL GROUND | | | | 269.81<br>269.81 | 7-1800mm X 1200mm X 77.607 MBC @ 45° LF SKEW WITH FW-45(M) UPSTRM & DNSTRM | 0.00131 | 0.40 | 270.16<br>270.40 | 1.88<br>2.27 | TW ASSSUMED AT THE DNSTRM SOFFIT OF BOX<br>ALLOW HW: EP @ STA 14+436.321 RT |

NOTE:

1.) ALL DIMENSIONS ARE IN METERS UNLESS NOTED OTHERWISE.

2.) THE FOLLOWING CULVERT NOS. ARE NOT USED AS STRUCTURE DESIGNATIONS: #1, #3, #4, #14, #15, #16, #17, #18, #19. (FOR CULVERTS, DRAINAGE AREA AND STRUCTURE NO.'S ARE THE SAME.)

**CHANGE ORDER #1 REVISIONS**

CHANGED FROM SHEET 1 OF 1
TO SHEET 1 OF 2
REVISIONS ARE SHOWN CLOUDED AND MARKED WITH 1.

STATE OF TEXAS · K. STEPHEN BONNETTE · 60928 · REGISTERED PROFESSIONAL ENGINEER

K. STEPHEN BONNETTE, P.E. 7/2/2001 DATE

555 EAST RAMSEY SAN ANTONIO TEXAS 78216 PHONE (210)375-9000 FAX (210)375-9010
PAPE-DAWSON ENGINEERS CIVIL & ENVIRONMENTAL

STATE OF TEXAS · K. STEPHEN BONNETTE · 60928 · REGISTERED PROFESSIONAL ENGINEER

K. STEPHEN BONNETTE, P.E. 9/20/00 DATE

© 2000 Texas Department of Transportation

**LOOP 1604**
**HYDRAULIC DATA SHEET**
**STRUCTURES UNDER 42.5 CMS**

1 SHEET 1 OF 2

| | | | | | | | | |
|---|---|---|---|---|---|---|---|---|
| DN: | | | | | | PROJECT NO. | | |
| CK DN: | | | | | | NH 2000 (704), etc. | | |
| DW: | CONTROL | SECTION | JOB | DIST. | STATE | COUNTY | HIGHWAY NO. | SHEET NO. |
| CK DW: | 2452 | 01 | 036 etc. | SAT | TX | BEXAR | LOOP 1604 | 370A |

Plotted on: 07/02/01

Design Filename: j:\3941\16\change order\design\civil\plansheets\433716hd02m.dgn

# HYDRAULIC DATA SHEET FOR STRUCTURES UNDER 42.5 C.M.S.

(PIPES, PIPE ARCHES & BOX CULVERTS)

| STATION | FREQ. YEAR | "Q" CMS | ALLOW HW (ELEV) | OUTLET CHANNEL W | SS | N | S M/M | TW (ELEV) | CULVERTS LESS THAN 6m SPAN LENGTH SIZE, LENGTH & DESCRIPTION | SLOPE M/M | KE | HW (ELEV) | V-OUT M/SEC | REMARKS |
|---|---|---|---|---|---|---|---|---|---|---|---|---|---|---|
| | ___(DES) | | | | | | | | | | | | | |
| | 100 | | | | | | | | | | | | | |
| DRIVEWAY 8A RT., STA. 16+780 | 10(DES) | 0.145 | 273.811 | - | 1:6 LT. 1:5 LT. | 0.040 | 0.0232 | 271.527 | 1 - 450mm RCP (CL III) x 34.6 M -W- S.E.T. UPSTREAM & DOWNSTREAM | 0.192 | 0.70 | 272.470 | 2.47 | ALLOWABLE HEADWATER 2.5 RT., OF DRIVEWAY STA. 0+038 (±) |
| | 100 | - | - | - | - | - | - | | | | | | | |
| | ___(DES) | | | | | | | | | | | | | |
| | 100 | | | | | | | | | | | | | |
| DRIVEWAY 5B LT., STA. 16+402 | 10(DES) | 0.161 | 265.70 | - | 1:5 | 0.040 | 0.0150 | 264.310 | 1 - 600mm RCP (CL III) x 24.9 M -W- S.E.T. UPSTREAM DOWNSTREAM | 0.0150 | 0.70 | 264.900 | 2.23 | ALLOWABLE HEADWATER 265.200 BERM TO HEB. DETENTION BASIN LT., STA. 16+420 |
| | 100 | - | - | - | - | - | - | | | | | | | |
| DRIVEWAY 5C LT., STA. 16+323 | 10(DES) | 0.173 | 264.00 | - | 1:3 | 0.040 | 0.0150 | 263.470 | 1 - 600mm RCP (CL III) x 15.7 M -W- S.E.T. UPSTREAM DOWNSTREAM | 0.0150 | 0.70 | 263.660 | 0.83 | ALLOWABLE HEADWATER 264.00 BERM TO END OF DRIVEWAY @ WHATABURGER LT., STA. 16+325(±) |
| | 100 | - | - | - | - | - | - | | | | | | | |
| | ___(DES) | | | | | | | | | | | | | |
| | 100 | | | | | | | | | | | | | |
| | ___(DES) | | | | | | | | | | | | | |
| | 100 | | | | | | | | | | | | | |
| | ___(DES) | | | | | | | | | | | | | |
| | 100 | | | | | | | | | | | | | |
| | ___(DES) | | | | | | | | | | | | | |
| | 100 | | | | | | | | | | | | | |
| | ___(DES) | | | | | | | | | | | | | |
| | 100 | | | | | | | | | | | | | |
| | ___(DES) | | | | | | | | | | | | | |
| | 100 | | | | | | | | | | | | | |
| | ___(DES) | | | | | | | | | | | | | |
| | 100 | | | | | | | | | | | | | |
| | 50(DES) | | | | | | | | | | | | | |
| | 100 | | | | | | | | | | | | | |
| | 50(DES) | | | | | | | | | | | | | |
| | 100 | | | | | | | | | | | | | |
| | 50(DES) | | | | | | | | | | | | | |
| | 100 | | | | | | | | | | | | | |
| | 50(DES) | | | | | | | | | | | | | |
| | 100 | | | | | | | | | | | | | |

| STATION | FREQ. YEAR | "Q" CMS | ALLOW HW (ELEV) | OUTLET CHANNEL W | SS | N | S M/M | TW (ELEV) | CULVERTS MORE THAN 6m SPAN LENGTH SIZE, LENGTH & DESCRIPTION | SLOPE M/M | KE | HW (ELEV) | V-OUT M/SEC | REMARKS |
|---|---|---|---|---|---|---|---|---|---|---|---|---|---|---|
| | 50(DES) | | | | | | | | | | | | | |
| | 100 | | | | | | | | | | | | | |

NOTE(S):

ALL DIMENSIONS ARE IN METERS UNLESS OTHERWISE NOTED,

New Sheet

CHANGE ORDER 25

CHANGE ORDER NO. 25

HYDRAULIC DATA ASSOCIATED WITH VARIOUS DRIVEWAYS & CHANGE ORDERS.

STATE OF TEXAS
JENNIFER L. MOCZYGEMBA
84734
REGISTERED
PROFESSIONAL ENGINEER

Jennifer L. Moczygemba, P.E. 84734 — P.E. — 5-29-02 Date

© 2002 Texas Department of Transportation

LOOP 1604
HYDRAULIC DATA SHEET
STRUCTURES UNDER 42.5 CMS

SHEET 1 OF 1

| DN: | | | | | PROJECT NO. | | |
|---|---|---|---|---|---|---|---|
| CK DN: | | | | | NH 2000 (704), etc. | | |
| DW: | CONTROL | SECTION | JOB | DIST. | STATE | COUNTY | HIGHWAY NO. | SHEET NO. |
| CK DW: | 2452 | 01 | 036 | SAT | TX | BEXAR | LOOP 1604 | 370 |

lp1604fm471-90\chgorder*files\hdata.dgn

Plotted on: 07/02/01

# HYDRAULIC DATA SHEET FOR STRUCTURES UNDER 42.5 C.M.S.

(PIPES, PIPE ARCHES & BOX CULVERTS)

| STATION | FREQ. YEAR | "Q" CMS | ALLOW HW (ELEV) | OUTLET CHANNEL W | SS | N | S M/M | TW (ELEV) | CULVERTS LESS THAN 6m SPAN LENGTH SIZE, LENGTH & DESCRIPTION | SLOPE M/M | KE | HW (ELEV) | V-OUT M/SEC | REMARKS |
|---|---|---|---|---|---|---|---|---|---|---|---|---|---|---|
| CLVT NO. 27<br>10+353.617,<br>CULEBRA RD. | 10 (DES)<br>100 | 10.28 | N/A* | CULEBRA CREEK | | | | 261.23 | 1-3000mm X 2100mm X 165.139 SBC<br>@ 04°25'45" RF SKEW USING SCP-3.0(M)<br>OR SCC-3.0(M) WITH SW-0(M) DNSTRM | 0.00855 | N/A | N/A | 1.58 | DES Q INCLUDES DA #27 & INTERIOR DRAINAGE AREAS I10, I11, I14, I15<br>ENERGY DISSIPATORS AT OUTLET @ CULEBRA CRK. |
| | (DES) | | | | | | | | | | | | | |
| | (DES) | | | | | | | | | | | | | |
| | (DES) | | | | | | | | | | | | | |
| | (DES) | | | | | | | | | | | | | |
| | (DES) | | | | | | | | | | | | | |
| | (DES) | | | | | | | | | | | | | |
| | (DES) | | | | | | | | | | | | | |
| | (DES) | | | | | | | | | | | | | |
| | (DES) | | | | | | | | | | | | | |

* NOTE: TxDOT WILL BE CONSTRUCTING THE DOWNSTREAM PORTION OF A PROPOSED STORM DRAIN SYSTEM FOR THE HEB MARKET PLACE IN ORDER TO PROVIDE AN OUTLET STRUCTURE TO CULEBRA CREEK.

NOTE:

1.) ALL DIMENSIONS ARE IN METERS UNLESS NOTED OTHERWISE.

2.) THE FOLLOWING CULVERT NOS. ARE NOT USED AS STRUCTURE DESIGNATIONS: #1, #3, #4, #14, #15, #16, #17, #18, #19. (FOR CULVERTS, DRAINAGE AREA AND STRUCTURE NO.'S ARE THE SAME.)

**CHANGE ORDER #1 REVISIONS**
**CULVERT #27 ADDED**

555 EAST RAMSEY SAN ANTONIO TEXAS 78216 PHONE (210)375-9000 FAX (210)375-9010
PAPE-DAWSON ENGINEERS CIVIL & ENVIRONMENTAL

STATE OF TEXAS K. STEPHEN BONNETTE 60928 REGISTERED PROFESSIONAL ENGINEER

7/2/2001
K. STEPHEN BONNETTE, P.E. DATE

© 2000 Texas Department of Transportation

**LOOP 1604 CHANGE ORDER #1**
**HYDRAULIC DATA SHEET**
**STRUCTURES UNDER 42.5 CMS**

SHEET 2 OF 2

| DN: | | | | | | PROJECT NO. |
|---|---|---|---|---|---|---|
| CK DN: | | | | | | NH 2000 (704), etc. |
| DW: | CONTROL | SECTION | JOB | DIST. | STATE | COUNTY | HIGHWAY NO. | SHEET NO. |
| CK DW: | 2452 | 01 | 036 etc. | SAT | TX | BEXAR | LOOP 1604 | 370B |

Design Filename: j:\3941\16\change order\design\civil\plansheets\433716hd03m.dgn

# HYDRAULIC DATA SHEET FOR STRUCTURES UNDER 42.5 C.M.S.

(PIPES, PIPE ARCHES & BOX CULVERTS)

| STATION | FREQ. YEAR | "Q" CMS | ALLOW HW (ELEV) | OUTLET CHANNEL W | SS | N | S M/M | TW (ELEV) | CULVERTS LESS THAN 6m SPAN LENGTH SIZE, LENGTH & DESCRIPTION | SLOPE M/M | KE | HW (ELEV) | V-OUT M/SEC | REMARKS |
|---|---|---|---|---|---|---|---|---|---|---|---|---|---|---|
| | ___(DES) | | | | | | | | | | | | | |
| | 100 | | | | | | | | | | | | | |
| DRIVEWAY 8A RT., STA. 16+780 | 10(DES) | 0.145 | 273.811 | - | 1:6 LT. 1:5 LT. | 0.040 | 0.0232 | 271.527 | 1 - 450mm RCP (CL III) x 34.6 M -W- S.E.T. UPSTREAM & DOWNSTREAM | 0.192 | 0.70 | 272.470 | 2.47 | ALLOWABLE HEADWATER 2.5 RT., OF DRIVEWAY STA. 0+038 (±) △25 |
| | 100 | - | - | - | - | - | - | | | | | | | |
| | ___(DES) | | | | | | | | | | | | | |
| | 100 | | | | | | | | | | | | | |
| DRIVEWAY 5B LT., STA. 16+402 | 10(DES) | 0.161 | 265.70 | - | 1:5 | 0.040 | 0.0150 | 264.310 | 1 - 600mm RCP (CL III) x 24.9 M -W- S.E.T. UPSTREAM & DOWNSTREAM | 0.0150 | 0.70 | 264.900 | 2.23 | ALLOWABLE HEADWATER 265.200 BERM TO HEB. DETENTION BASIN LT., STA. 16+420 △25 |
| | 100 | - | - | - | - | - | - | | | | | | | |
| DRIVEWAY 5C LT., STA. 16+323 | 10(DES) | 0.173 | 264.00 | - | 1:3 | 0.040 | 0.0150 | 263.470 | 1 - 600mm RCP (CL III) x 15.7 M -W- S.E.T. UPSTREAM & DOWNSTREAM | 0.0150 | 0.70 | 263.660 | 0.83 | ALLOWABLE HEADWATER 264.00 BERM TO END OF DRIVEWAY @ WHATABURGER LT., STA. 16+325(±) △25 |
| | 100 | - | - | - | - | - | - | | | | | | | |
| | ___(DES) | | | | | | | | | | | | | |
| | 100 | | | | | | | | | | | | | |
| DRIVEWAY 3B RT., STA. 15+576 | 10(DES) | 0.023 | 272.00 | - | 1:6, 1:4 | 0.040 | 0.0281 | 271.030 | 1 - 600mm RCP (CL III) x 20.8 M -W- S.E.T. UPSTREAM & DOWNSTREAM | 0.0281 | 0.70 | 271.91 | 1.51 | ALLOWABLE HEADWATER 272.00 RT., STA. 15+560 (±) |
| | 100 | - | - | - | - | - | - | | | | | | | |
| DRIVEWAY 3C RT., STA. 15+617 | 10(DES) | 0.032 | 270.80 | - | 1:5, 1:3 | 0.040 | 0.0296 | 270.072 | 1 - 600mm RCP (CL III) x 20.8 M -W- S.E.T. UPSTREAM & DOWNSTREAM | 0.0281 | 0.70 | 270.73 | 1.76 | ALLOWABLE HEADWATER 270.80 RT., STA. 15+600 (±) |
| | 100 | - | - | - | - | - | - | | | | | | | |
| | ___(DES) | | | | | | | | | | | | | |
| | 100 | | | | | | | | | | | | | |
| | ___(DES) | | | | | | | | | | | | | |
| | 100 | | | | | | | | | | | | | |
| | ___(DES) | | | | | | | | | | | | | |
| | 100 | | | | | | | | | | | | | |
| | ___(DES) | | | | | | | | | | | | | |
| | 100 | | | | | | | | | | | | | |
| | ___(DES) | | | | | | | | | | | | | |
| | 100 | | | | | | | | | | | | | |
| | 50(DES) | | | | | | | | | | | | | |
| | 100 | | | | | | | | | | | | | |
| | 50(DES) | | | | | | | | | | | | | |
| | 100 | | | | | | | | | | | | | |
| | 50(DES) | | | | | | | | | | | | | |
| | 100 | | | | | | | | | | | | | |
| | 50(DES) | | | | | | | | | | | | | |
| | 100 | | | | | | | | | | | | | |

| STATION | FREQ. YEAR | "Q" CMS | ALLOW HW (ELEV) | OUTLET CHANNEL W | SS | N | S M/M | TW (ELEV) | CULVERTS MORE THAN 6m SPAN LENGTH SIZE, LENGTH & DESCRIPTION | SLOPE M/M | KE | HW (ELEV) | V-OUT M/SEC | REMARKS |
|---|---|---|---|---|---|---|---|---|---|---|---|---|---|---|
| | 50(DES) | | | | | | | | | | | | | |
| | 100 | | | | | | | | | | | | | |

△# REFERS TO CHANGES MADE AS PART OF CHANGE ORDER.

NOTE(S):

ALL DIMENSIONS ARE IN METERS UNLESS OTHERWISE NOTED,

CHANGE ORDER 28

NEW SHEET

CHANGE ORDER NO. 28

HYDRAULIC DATA ASSOCIATED WITH VARIOUS DRIVEWAYS & CHANGE ORDERS.

STATE OF TEXAS
JEROME D. PAVLISKA
76075
REGISTERED PROFESSIONAL ENGINEER

Jerome D. Pavliska P.E. 2-7-03

Jerome D. Pavliska, P.E. — Date

© 2002 Texas Department of Transportation

LOOP 1604
HYDRAULIC DATA SHEET
STRUCTURES UNDER 42.5 CMS

SHEET 1 OF 1

| DN: | | | | | | PROJECT NO. |
|---|---|---|---|---|---|---|
| CK DN: | | | | | | NH 2000 (704), etc. |
| DW: | CONTROL | SECTION | JOB | DIST. | STATE | COUNTY | HIGHWAY NO. | SHEET NO. |
| CK DW: | 2452 | 01 | 036 etc. | SAT | TX | BEXAR | LOOP 1604 | 370D |

01-23-03

lp1604fm471-90\chgeorder\files\hdata.dgn

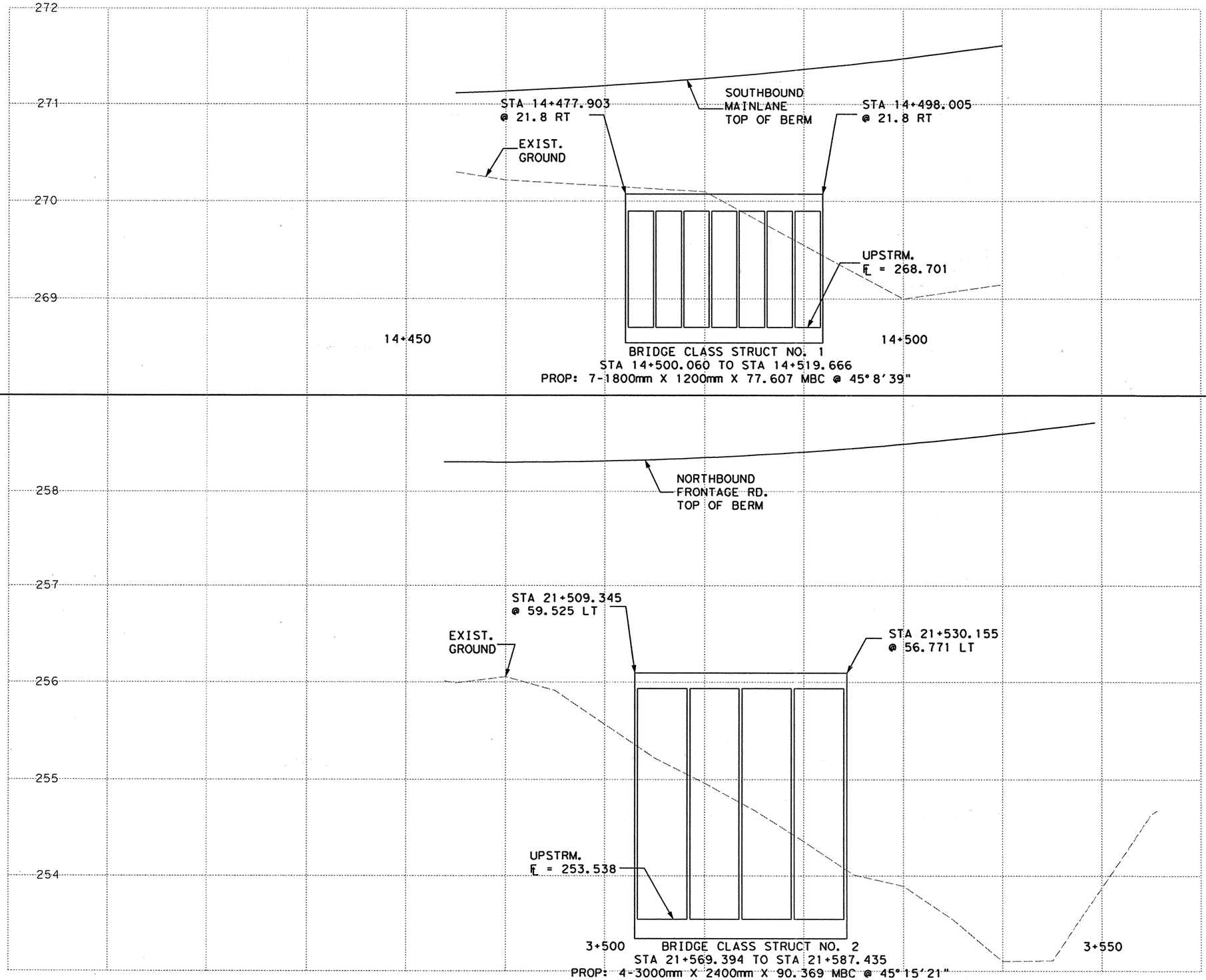


NOTE: 1.) ALL DIMENSIONS ARE IN METERS UNLESS NOTED OTHERWISE.

2.) FOR BRIDGE CLASS STRUCTURE DETAILS SEE PERTINENT BRIDGE CLASS STRUCTURE SHEET

SCALE: 1:400 HORIZ
1:40 VERT

555 EAST RAMSEY SAN ANTONIO TEXAS 78216
PHONE (210)375-9000
FAX (210)375-9010
PAPE-DAWSON ENGINEERS
CIVIL & ENVIRONMENTAL

STATE OF TEXAS
K. STEPHEN BONNETTE
60928
REGISTERED
PROFESSIONAL ENGINEER

K. STEPHEN BONNETTE, P.E. 9/20/00
DATE

© 2000 Texas Department of Transportation

# LOOP 1604
## BCS UPSTREAM HEADWALL PROFILES

SHEET 1 OF 2

| DN: | | | | | PROJECT NO. | | |
|---|---|---|---|---|---|---|---|
| CK DN: | | | | | NH 2000 (704), etc. | | |
| DW: | CONTROL | SECTION | JOB | DIST. | COUNTY | HIGHWAY NO. | SHEET NO. |
| CK DW: | 2452 | 01 | 036 | SAT | BEXAR | LOOP 1604 | 371 |

Plotted on: 9/20/00
Design Filename: J:\6\civil\Design\plansheets\394116pr01.dgn

Plotted on: 02/10/2003

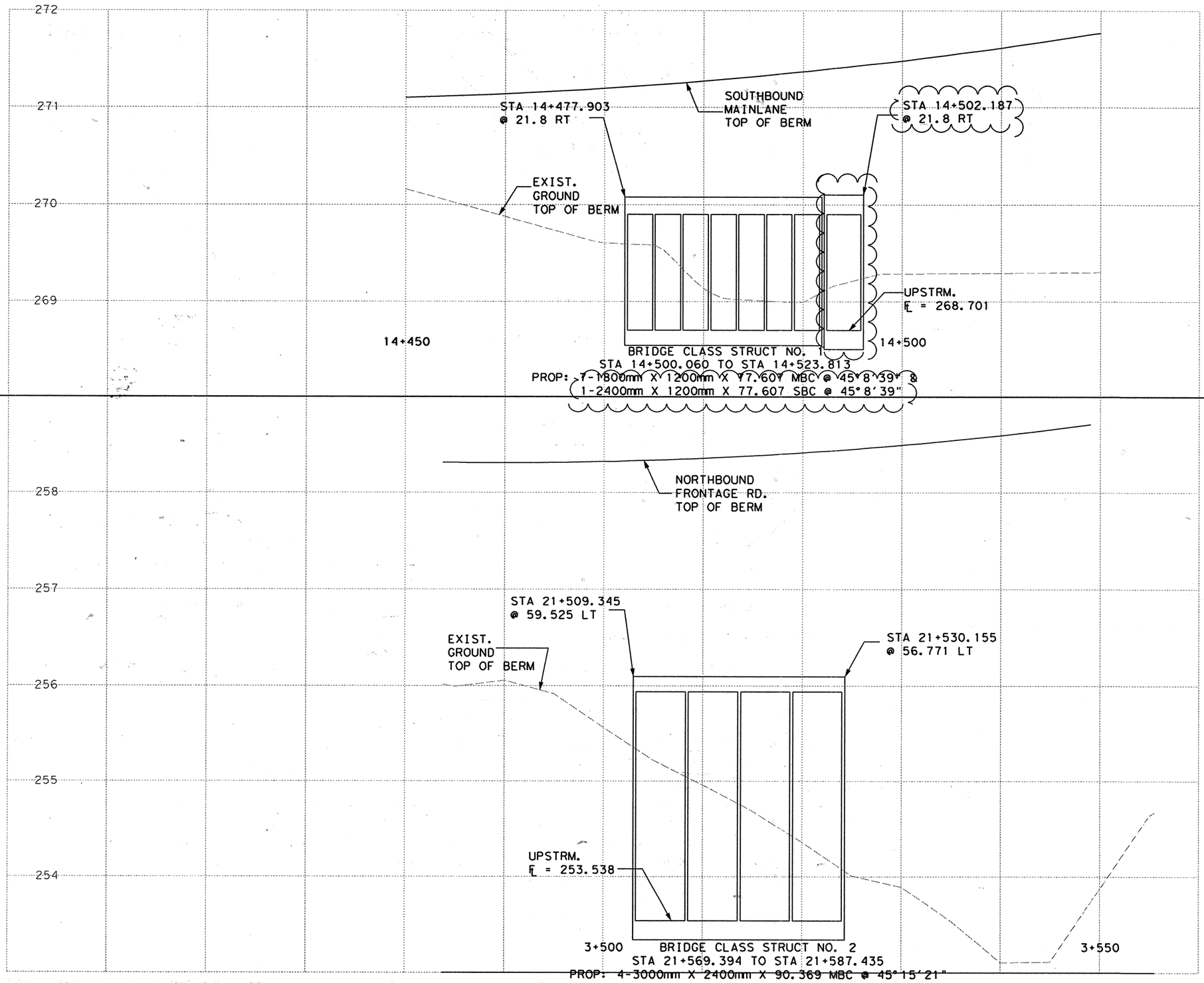


16 CHANGE ORDER NO. 36

-Revised upstream profile associated with BCS #1
-ADDED 1-2400mm X 1200mm SBC

NOTE: 1.) ALL DIMENSIONS ARE IN METERS UNLESS NOTED OTHERWISE.

2.) FOR BRIDGE CLASS STRUCTURE DETAILS SEE PERTINENT BRIDGE CLASS STRUCTURE SHEET

SCALE: 1:400 HORIZ
1:40 VERT

555 EAST RAMSEY SAN ANTONIO TEXAS 78216
PHONE (210)375-9000
FAX (210)375-9010
PAPE-DAWSON ENGINEERS
CIVIL & ENVIRONMENTAL
STATE OF TEXAS K. STEPHEN BONNETTE 60928 REGISTERED PROFESSIONAL ENGINEER
K. STEPHEN BONNETTE, P.E. 01/06/03 DATE

© 2000 Texas Department of Transportation

# LOOP 1604
## BCS UPSTREAM HEADWALL PROFILES

SHEET 1 OF 2

| DN: | | | | | PROJECT NO. | | |
|---|---|---|---|---|---|---|---|
| CK DN: | | | | | NH 2000 (704), etc. | | |
| DW: | CONTROL | SECTION | JOB | DIST. | STATE | COUNTY | HIGHWAY NO. | SHEET NO. |
| CK DW: | 2452 | Ø1 | Ø36 | SAT | TX | BEXAR | LOOP 1604 | 371 |

etc.

Design Filename: j:\3941\16\changeorder*BCS1\394117PR01.dgn

Plotted on: 9/21/00

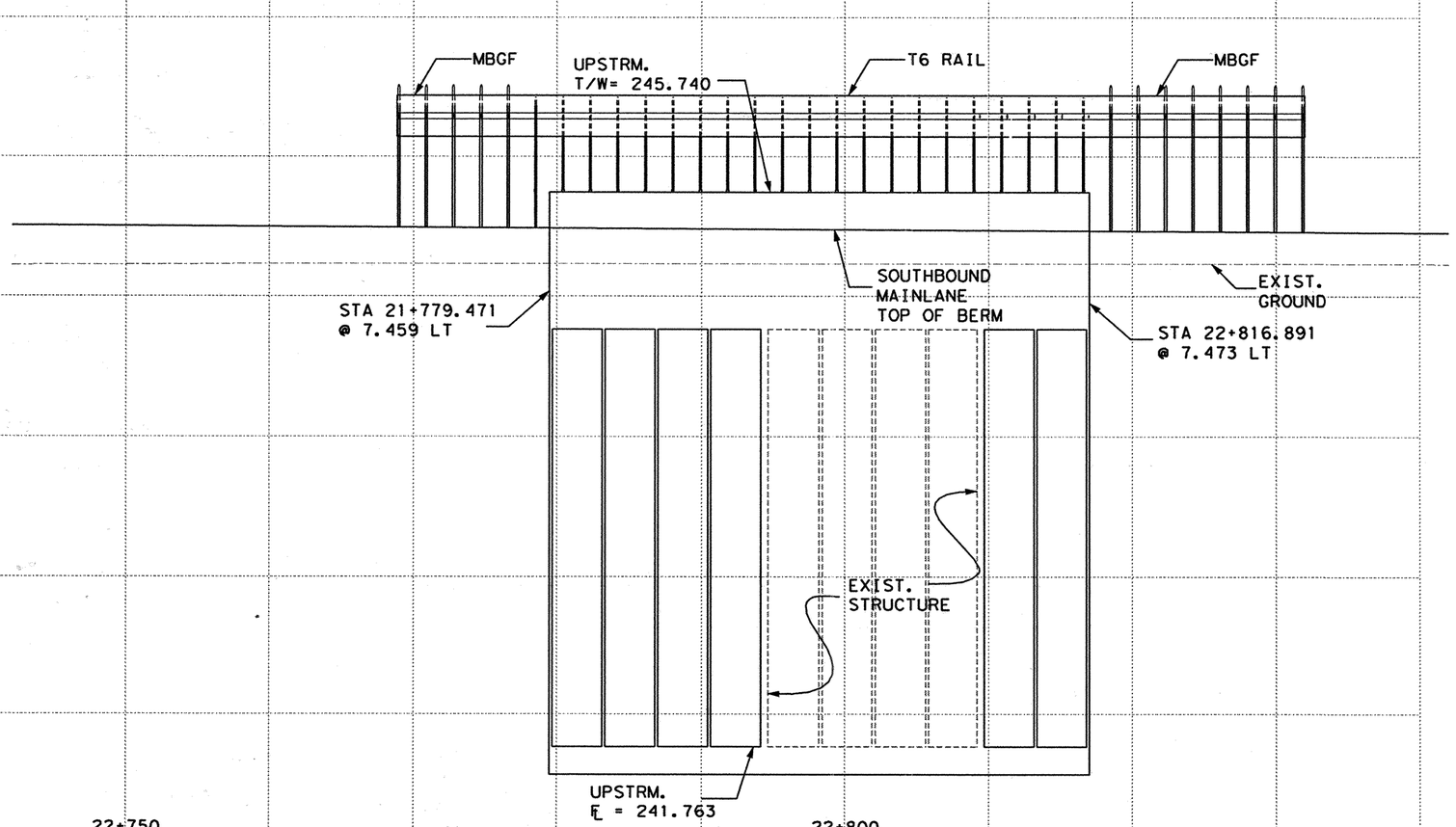


BRIDGE CLASS STRUCT NO. 3
STA 22+775.164 TO STA 22+812.576
PROP: 10-3000mm X 3000mm X 79.710 MBC @ 30°

NOTE: 1.) ALL DIMENSIONS ARE IN METERS UNLESS NOTED OTHERWISE.

2.) FOR BRIDGE CLASS STRUCTURE DETAILS SEE PERTINENT BRIDGE CLASS STRUCTURE SHEET

SCALE: 1:400 HORIZ
1:40 VERT

555 EAST RAMSEY SAN ANTONIO TEXAS 78216
PHONE (210)375-9000
FAX (210)375-9010
PAPE-DAWSON ENGINEERS
CIVIL & ENVIRONMENTAL
K. STEPHEN BONNETTE 60928 REGISTERED PROFESSIONAL ENGINEER STATE OF TEXAS
K. STEPHEN BONNETTE, P.E. 9/20/00 DATE

© 2000 Texas Department of Transportation

# LOOP 1604
# BCS UPSTREAM HEADWALL
# PROFILES

SHEET 2 OF 2

| | | | | | | | | |
|---|---|---|---|---|---|---|---|---|
| DN: | | | | | | PROJECT NO. | | |
| CK DN: | | | | | | NH 2000 (704), etc. | | |
| DW: | CONTROL | SECTION | JOB | DIST. | STATE | COUNTY | HIGHWAY NO. | SHEET NO. |
| CK DW: | 2452 | Ø1 | Ø36 | SAT | TX | BEXAR | LOOP 1604 | 372 |

Design Filename: .\16\civil\design\plansheets\39411bpr02.dgn

Plotted on: 09/19/00

| ESTIMATED QUANTITIES | | | |
|---|---|---|---|
| DESCRIPTION | UNIT | EST. | FINAL |
| RIPRAP (CONC) (CL B) | M3 | 89.6 | |
| CONC BOX CULV (1800MM X 1200MM) | M | 378.069 | |
| WINGWALL (FW-45) (H=1200MM) | EA | 1.5 | |
| * STRUCT EXCAV (CULV LARGE) | M3 | 758.1 | |
| TRENCH EXCAVATION PROTECTION | M | 33.0 | |
| | | | |
| | | | |
| | | | |

*SUPPLIED FOR CONTRACTOR'S INFORMATION ONLY

QUANTITIES THIS SHEET
CSJ 2452-01-037

PERM STR NO. 015-2452-01-036

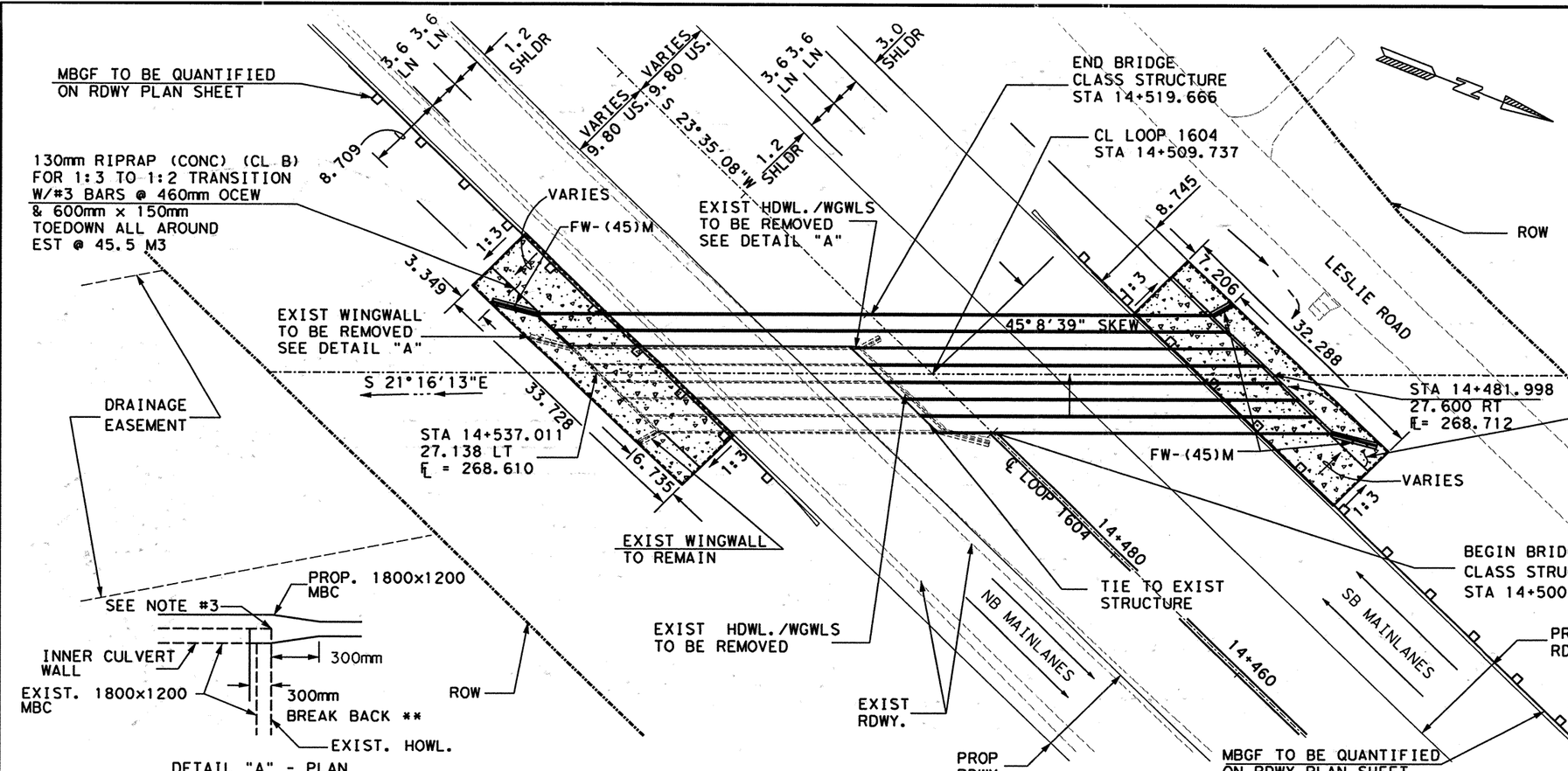


DETAIL "A" - PLAN
N.T.S.

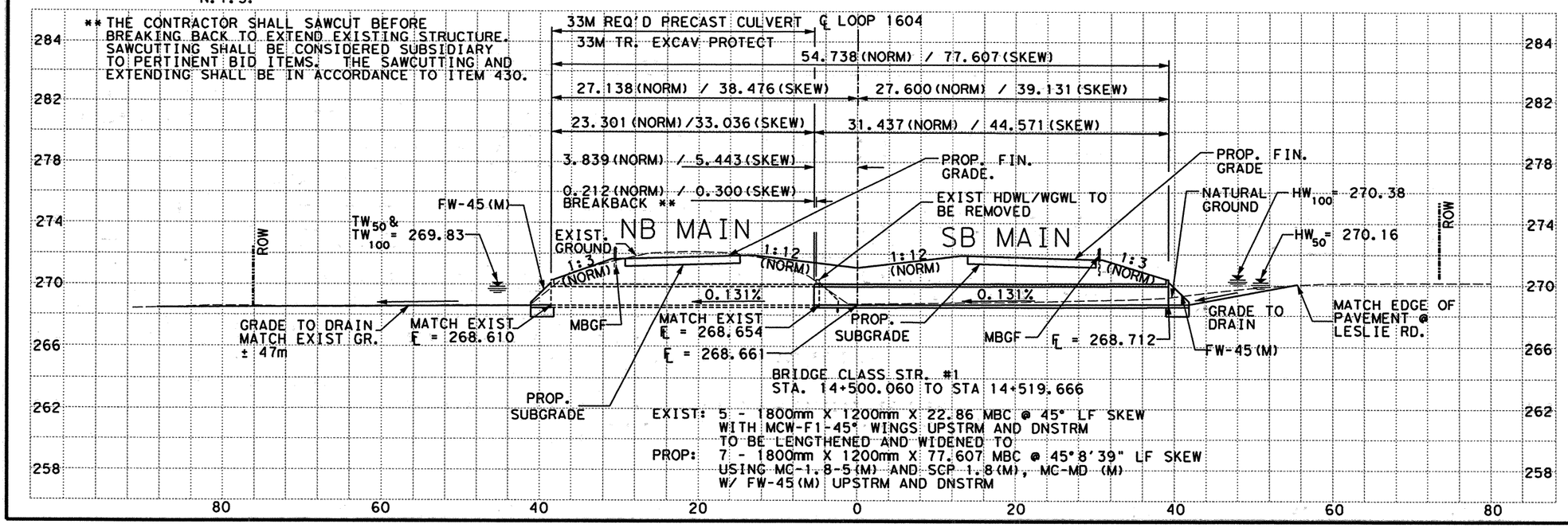


NOTES:
1.) ALL DIMENSIONS ARE IN METERS UNLESS NOTED OTHERWISE.
2.) CONTRACTOR TO ADJUST HEADWALL AND WINGWALL STEEL DIMENSIONS TO MATCH FIELD CONDITIONS. ANY ADJUSTMENTS SHALL BE SUBSIDIARY TO THE PERTINENT BID ITEM.
3.) EXIST. WINGWALLS TO BE REMOVED AS SHOWN ON LAYOUT. A MIN. OF 300mm OF EXIST. MBC SHALL BE REMOVED TO BE RECONSTRUCTED WITH THE END TREATMENT OF THE PROP. MBC WIDENING. A MIN. OF 300mm OF EXIST. REINF. STEEL FROM EXIST. MBC AND HEADWALL SHALL REMAIN. BE CLEANED OF ALL LOOSE CONCRETE AND INCORPORATED INTO PROP. WIDENING. SEE DETAIL "A".
4.) MAX FILL HEIGHT ENCOUNTERED ± 2.0 M
5.) BRIDGE CLASS CULVERT DESIGNED TO BE BOTH CAST-IN-PLACE AND PRECAST AS SHOWN.
6.) FOR UPSTREM HEADWALL PROFILE SEE UPSTREAM HEADWALL PROFILE SHEETS.
7.) CONTRACTOR IS TO PRESENT A PLAN TO THE ENGINEER FOR APPROVAL TO TIE-IN THE CAST-IN-PLACE CULV. TO THE PRECAST CULV.

SCALE: 1:600 HORIZ
1:300 VERT

555 EAST RAMSEY SAN ANTONIO TEXAS 78216
PHONE (210)375-9000
FAX (210)375-9010
PAPE-DAWSON ENGINEERS
CIVIL & ENVIRONMENTAL
STATE OF TEXAS K. STEPHEN BONNETTE 60928 REGISTERED PROFESSIONAL ENGINEER
K. STEPHEN BONNETTE, P.E. 9/20/00 DATE

© 2000 Texas Department of Transportation

# LOOP 1604 @ NO NAME CREEK BRIDGE LAYOUTS
## BR. CLASS STRUCTURE NO.1
## STA 14+500.060 TO 14+519.666

| DN: | | | | | PROJECT NO. | | |
|---|---|---|---|---|---|---|---|
| CK DN: | | | | | NH 2000 (704), etc. | | |
| DW: | CONTROL | SECTION | JOB | DIST. | STATE | COUNTY | HIGHWAY NO. | SHEET NO. |
| CK DW: | 2452 | 01 | 036 etc. | SAT | TX | BEXAR | LOOP 1604 | 373 |

Design Filenames: j:\39411\16\Civil\Design\PlanSheets\3941116CL01.dgn

| ESTIMATED QUANTITIES | | | |
|---|---|---|---|
| DESCRIPTION | UNIT | EST. | FINAL |
| RIPRAP (CONC) (CL B) | M3 | 89.6 | |
| CONC BOX CULV (1800MM X 1200MM) | M | 178.069 | |
| WINGWALL (MCW-F1-45) | EA | 1.5 | |
| STRUCT EXCAV (CULV LARGE) | M3 | 758.1 | |
| TRENCH EXCAVATION PROTECTION | M | 33.0 | |
| Wingwall (FW-45) (H=1200MM) | EA | 0 | |

* SUPPLIED FOR CONTRACTOR'S INFORMATION ONLY

# QUANTITIES THIS SHEET
# CSJ 2452-01-037

PERM STR NO. 015-2452-01-036

MBGF TO BE QUANTIFIED ON RDWY PLAN SHEET

130mm RIPRAP (CONC) (CL B) FOR 1:3 TO 1:2 TRANSITION W/#3 BARS @ 460mm OCEW & 600mm x 150mm TOEDOWN ALL AROUND EST @ 45.5 M3

3.6 3.6 LN LN 1.2 SHLDR

VARIES 9.80 US: 9.80 US: VARIES

3.6 3.6 LN LN 3.0 SHLDR 1.2 SHLDR

8.709

VARIES MCW-F1-45

EXIST HDWL./WGWLS TO BE REMOVED SEE DETAIL "A"

1:3

3.349

EXIST WINGWALL TO BE REMOVED SEE DETAIL "A"

S 21°16'13"E

33.728

STA 14+537.011
27.138 LT
℄ = 268.610

16.735

1:2

EXIST WINGWALL TO REMAIN

DRAINAGE EASEMENT

END BRIDGE CLASS STRUCTURE STA 14+519.666

CL LOOP 1604 STA 14+509.737

8.745

7.206

1:3

45°8'39" SKEW

32.288

LESLIE ROAD

ROW

STA 14+481.998
27.600 RT
℄ = 268.712

MCW-F1-45

VARIES

1:2

℄ LOOP 1604

14+480

TIE TO EXIST STRUCTURE

14+460

130mm RIPRAP (CONC) (CL B) FOR 1:3 TO 1:2 TRANSITION W/#3 BARS @ 460mm OCEW & 600mm x 150mm TOEDOWN ALL AROUND EST @ 44.1 M3

EXIST RDWY.

BEGIN BRIDGE CLASS STRUCTURE STA 14+500.060

NB MAINLANES

SB MAINLANES

PROP RDWY.

EXIST HDWL./WGWLS TO BE REMOVED

EXIST RDWY.

PROP RDWY.

MBGF TO BE QUANTIFIED ON RDWY PLAN SHEET

SEE NOTE #3

PROP. 1800x1200 MBC

INNER CULVERT WALL

300mm

EXIST. 1800x1200 MBC

300mm BREAK BACK **

ROW

EXIST. HOWL.

DETAIL "A" - PLAN
N.T.S.

** THE CONTRACTOR SHALL SAWCUT BEFORE BREAKING BACK TO EXTEND EXISTING STRUCTURE. SAWCUTTING SHALL BE CONSIDERED SUBSIDIARY TO PERTINENT BID ITEMS. THE SAWCUTTING AND EXTENDING SHALL BE IN ACCORDANCE TO ITEM 430.

33M TR. EXCAV PROTECT

℄ LOOP 1604

54.738 (NORM) / 77.607 (SKEW)

27.138 (NORM) / 38.476 (SKEW)

27.600 (NORM) / 39.131 (SKEW)

23.301 (NORM) / 33.036 (SKEW)

31.437 (NORM) / 44.571 (SKEW)

3.839 (NORM) / 5.443 (SKEW)

0.212 (NORM) / 0.300 (SKEW)

BREAKBACK **

CHANGE ORDER 35

MCW-F1-45

TW50 & TW100 = 269.83

EXIST. GROUND

NB MAIN

SB MAIN

PROP. F.I.N. GRADE.

EXIST HDWL/WGWL TO BE REMOVED

NATURAL GROUND

HW100 = 270.38

HW50 = 270.16

ROW

ROW

1:3 (NORM)

1:2 (NORM)

1:2 (NORM)

1:3 (NORM)

0.131%

0.131%

GRADE TO DRAIN MATCH EXIST GR. ± 47m

MATCH EXIST ℄ = 268.610

MBGF

MATCH EXIST ℄ = 268.654

℄ = 268.661

PROP. SUBGRADE

PROP. SUBGRADE

MBGF

℄ = 268.712

GRADE TO DRAIN

MCW-F1-45

MATCH EDGE OF PAVEMENT @ LESLIE RD.

BRIDGE CLASS STR. #1
STA. 14+500.060 TO STA 14+519.666

EXIST: 5 - 1800mm X 1200mm X 22.86 MBC @ 45° LF SKEW WITH MCW-F1-45° WINGS UPSTRM AND DNSTRM TO BE LENGTHENED AND WIDENED TO

PROP: 7 - 1800mm X 1200mm X 77.607 MBC @ 45°8'39" LF SKEW USING MC 6.2 MC-MK W/ MCW-F1-45 UPSTRM AND DNSTRM

CHANGE ORDER #35
-DELETED METRIC STANDARDS
-ALLOWED USAGE OF ENGLISH STDS
-CAST-IN-PLACE DESIGN

284 282 278 274 270 266 262 258

80 60 40 20 0 20 40 60 80

NOTES:
1.) ALL DIMENSIONS ARE IN METERS UNLESS NOTED OTHERWISE.
2.) CONTRACTOR TO ADJUST HEADWALL AND WINGWALL STEEL DIMENSIONS TO MATCH FIELD CONDITIONS. ANY ADJUSTMENTS SHALL BE SUBSIDIARY TO THE PERTINENT BID ITEM.
3.) EXIST. WINGWALLS TO BE REMOVED AS SHOWN ON LAYOUT. A MIN. OF 300mm OF EXIST. MBC SHALL BE REMOVED TO BE RECONSTRUCTED WITH THE END TREATMENT OF THE PROP. MBC WIDENING. A MIN. OF 300mm OF EXIST. REINF. STEEL FROM EXIST. MBC AND HEADWALL SHALL REMAIN, BE CLEANED OF ALL LOOSE CONCRETE AND INCORPORATED INTO PROP. WIDENING. SEE DETAIL "A".
4.) MAX FILL HEIGHT ENCOUNTERED ± 2.0 M
5.) ~~BRIDGE CLASS CULVERT DESIGNED TO BE BOTH CAST-IN-PLACE AND PRECAST AS SHOWN.~~
6.) FOR UPSTREAM HEADWALL PROFILE SEE UPSTREAM HEADWALL PROFILE SHEETS.
7.) ~~CONTRACTOR IS TO PRESENT A PLAN TO THE ENGINEER FOR APPROVAL TO TIE-IN THE CAST-IN-PLACE CULV. TO THE PRECAST CULV.~~

SCALE: 1:600 HORIZ
1:300 VERT

FOR CONSTRUCTION ONLY

STATE OF TEXAS
JENNIFER L. MOCZYGEMBA
84734
REGISTERED PROFESSIONAL ENGINEER

Jennifer A. Moczygemba, P.E. 84734 — P.E. — 10-10-01 Date

© 2001 Texas Department of Transportation

LOOP 1604 @ NO NAME CREEK
BRIDGE LAYOUTS
BR. CLASS STRUCTURE NO. 1
STA 14+500.060 TO 14+519.666

| DN: | | | | | PROJECT NO. | | | |
|---|---|---|---|---|---|---|---|---|
| CK DN: | | | | | NH 2000 (704), etc. | | | |
| DW: | CONTROL | SECTION | JOB | DIST. | STATE | COUNTY | HIGHWAY NO. | SHEET NO. |
| CK DW: | 2452 | 01 | 036 | SAT | TX | BEXAR | LOOP 1604 | 373A |

8-10-01

39411 01.dgn

Plotted on: 04/22/2003

Design Filename: j:\3941\16\change*order*BCS1\3941170L01.dgn

130mm RIPRAP (CONC) (CL B)
FOR 1:3 TO 1:2 TRANSITION
W/#3 BARS @ 460mm OCEW
& 600mm x 150mm
TOEDOWN ALL AROUND
EST @ 16.4 M3

DRAINAGE EASEMENT

ROW

3.6 3.6 LN LN

1.2 SHLDR

8.709

8.745

1:3

3.107

7.680

MCW-F1-45

13.612

END BRIDGE CLASS STRUCTURE STA 14+523.813

VARIES | VARIES 9.80 US | 9.80 US

S 23°35'08"W

CUT & RESTORE PVMT EST @ 55.0 M2 EACH

EXIST WINGWALL & RIPRAP TO BE REMOVED

† SAWCUT EXIST CONC.

45°08'39" SKEW

℄ LOOP 1604 STA 14+509.737

EXIST WINGWALL TO REMAIN

BEGIN BRIDGE CLASS STRUCTURE STA 14+500.060

EXIST TRAFFIC MANAGEMENT SYSTEM CONDUIT, SEE NOTE 5

3.6 3.6 LN LN

3.0 SHLDR

9.100

℄ SBML

1.2 SHLDR

SEE CLOSURE POUR DETAIL THIS SHEET

MCW-F1-45

1:3

8.680

4.147

11.219

5.347

† SAWCUT EXIST CONC.

EXIST WINGWALL TO REMAIN

14+480

℄ LOOP 1604

14+460

LINE I1

NB MAINLANES

SB MAINLANES

ROW

130mm RIPRAP (CONC) (CL B)
FOR 1:3 TO 1:2 TRANSITION
W/#3 BARS @ 460mm OCEW
& 600mm x 150mm
TOEDOWN ALL AROUND
EST @ 14.3 M3

EXIST WINGWALL & RIPRAP TO BE REMOVED

LESLIE ROAD

EXIST RDWY.

PROP RDWY.

EXIST RDWY.

PROP RDWY.

MBGF TO BE QUANTIFIED ON RDWY PLAN SHEET

Segments mitered on skew of box & rdwy alignment. See SEQUENCE OF WORK Shts of this change order.

Cast In Place Section Phase B

Cast In Place Section Phase C

DIRECTION OF FLOW

℄ Box

+1.2 W SBML ℄

## CLOSURE POUR DETAIL

NTS

THE CONTRACTOR SHALL ESTABLISH THE ACTUAL LIMITS OF EACH PHASE OF CONSTRUCTION BASED UPON THE LIMIT OF PHASE B AS APPROVED BY THE ENGINEER. SEE SEQ. OF WORK SHTS. OF THIS CHG. ORDER FOR ADD'L DETAILS.

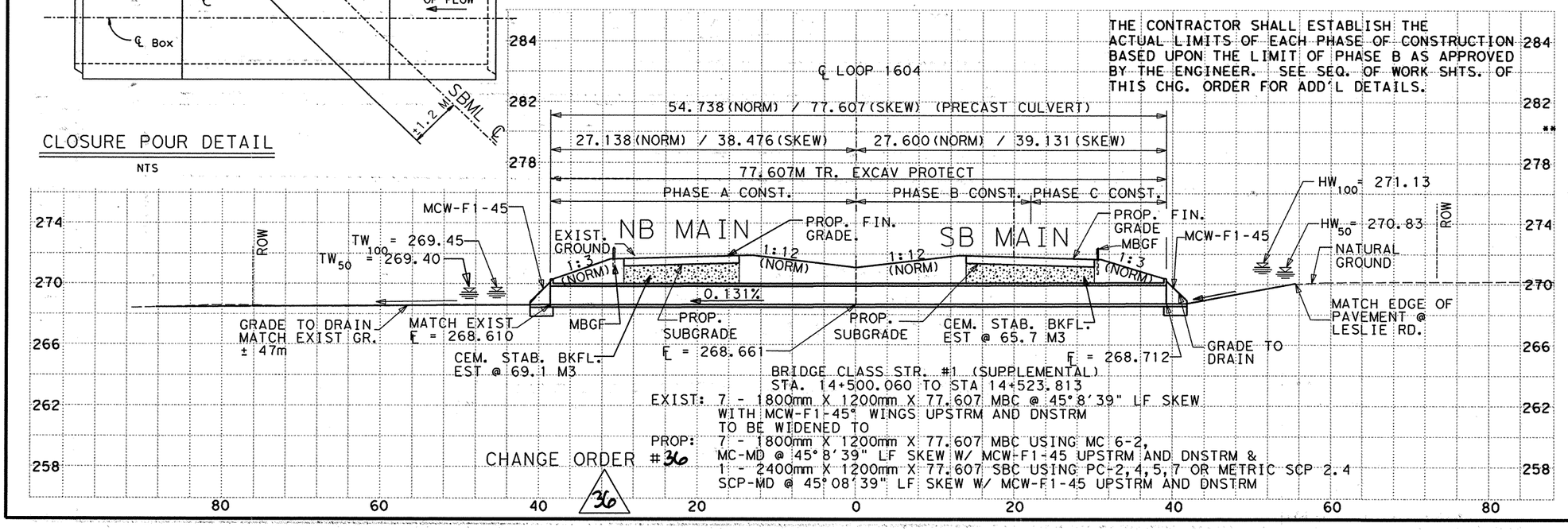


BRIDGE CLASS STR. #1 (SUPPLEMENTAL)
STA. 14+500.060 TO STA 14+523.813

EXIST: 7 - 1800mm X 1200mm X 77.607 MBC @ 45°8'39" LF SKEW
WITH MCW-F1-45° WINGS UPSTRM AND DNSTRM
TO BE WIDENED TO

PROP: 7 - 1800mm X 1200mm X 77.607 MBC USING MC 6-2,
MC-MD @ 45°8'39" LF SKEW W/ MCW-F1-45 UPSTRM AND DNSTRM &
1 - 2400mm X 1200mm X 77.607 SBC USING PC-2,4,5,7 OR METRIC SCP 2.4
SCP-MD @ 45°08'39" LF SKEW W/ MCW-F1-45 UPSTRM AND DNSTRM

CHANGE ORDER #36

| ESTIMATED QUANTITIES | | | |
|---|---|---|---|
| DESCRIPTION | UNIT | EST. | FINAL |
| RIPRAP (CONC) (CL B) | M3 | 30.7 | |
| CONC BOX CULV (2400MM X 1200MM) | M | 77.6 | |
| WINGWALL (MCW-F1-45) | EA | 1.0 | |
| * STRUCT EXCAV (CULV LARGE) | M3 | 828.0 | |
| TRENCH EXCAVATION PROTECTION | M | 77.6 | |
| ** CEMENT STAB BKFL | M3 | 152.8 | |
| CUT & RESTORE PVMNT | M2 | 110.0 | |
| REMOVE (CONC) (WINGWALL) | M3 | 2.7 | |
| REMOVE (CONC) (RIPRAP) | M2 | 85.0 | |
| | | | |

*SUPPLIED FOR CONTRACTOR'S INFORMATION ONLY

# QUANTITIES THIS SHEET
# CSJ 2452-01-037

PERM STR NO. 015-2452-01-036

36 CHANGE ORDER NO. 36

-NEW SHEET
-ADDED 1-2400mm X 1200mm SBC

BOX SIZES
①-⑦ 1800mm X 1200mm
⑧ 2400mm X 1200mm

NOTES:
1.) ALL DIMENSIONS ARE IN METERS UNLESS NOTED OTHERWISE.
2.) CONTRACTOR TO ADJUST HEADWALL AND WINGWALL STEEL DIMENSIONS TO MATCH FIELD CONDITIONS. ANY ADJUSTMENTS SHALL BE SUBSIDIARY TO THE PERTINENT BID ITEM.
3.) MAX FILL HEIGHT ENCOUNTERED + 2.0 M
4.) FOR UPSTREAM HEADWALL PROFILE SEE UPSTREAM HEADWALL PROFILE SHEETS.
5.) CONTRACTOR TO VERIFY VERTICAL & HORIZONTAL LOCATION OF TMS CONDUITS PRIOR TO COMMENCEMENT OF EXCAVATION.
6.) TEMPORARY SHORING SHALL BE UTILIZED ONLY AS APPROVED BY THE ENGINEER.
7.) FOR TEMPORARY SHORING DETAILS. SEE TCP.
**8.) QUANTITY FOR CEMENT STABILIZED BACKFILL INCLUDES FILL IN BETWEEN EXISTING BOX AND NEW PRECAST BOX. ESTIMATED @ 18 M3.
†9.) SAW CUTTING AND EXTENDING STRUCTURE SHALL BE IN ACCORDANCE WITH ITEM 430.

SCALE: 1:600 HORIZ
1:300 VERT


555 EAST RAMSEY SAN ANTONIO TEXAS 78216
PHONE (210)375-9000
FAX (210)375-9010
PAPE-DAWSON ENGINEERS
CIVIL & ENVIRONMENTAL
STATE OF TEXAS K. STEPHEN BONNETTE 60928 REGISTERED PROFESSIONAL ENGINEER
K. STEPHEN BONNETTE, P.E. 02/10/03 DATE


© 2000 Texas Department of Transportation

# LOOP 1604 @ NO NAME CREEK
# BRIDGE LAYOUTS (SUPPLEMENTAL)
# BR. CLASS STRUCTURE NO. 1
# STA 14+500.060 TO 14+523.813

| DN: | | | | | PROJECT NO. | | |
|---|---|---|---|---|---|---|---|
| CK DN: | | | | | NH 2000 (704), etc. | | |
| DW: | CONTROL | SECTION | JOB | DIST. | STATE | COUNTY | HIGHWAY NO. | SHEET NO. |
| CK DW: | 2452 | 01 | 036 | SAT | TX | BEXAR | LOOP 1604 | 373 |

Plotted on: 03/07/2003

Design Filename: p:\52\20\11\design\civil\plansheets\BCS #1 C.O\chphm1bst*kb1*A.dgn

FILE p:\52\20\11\design\civil\plansheets\BCS #1 C.O\chphm1bst+kb1340703003
LEVEL 1 2 3 4 5 6 7 8 9 10 11 12 13 14 15 16 17 18 19 20 21 22 23 24 25 26 27 28 29 30 31 32 33
DISPLAYED 33 34 35 36 37 38 39 40 41 42 43 44 45 46 47 48 49 50 51 52 53 54 55 56 57 58 59 60 61 62 63

NOTES:
REFER TO TCP (2-4)98 FOR REQUIRED TEMPORARY SIGNING FOR LANE REDUCTION

PAVEMENT MARKINGS SHALL COMPLY TO T.M.U.T.C.D. OR AS DIRECTED BY THE ENGINEER

USE WORK ZONE CHANNELING DEVICES TO DELINEATE TRAFFIC AS PER T.M.U.T.C.D. OR AS DIRECTED BY THE ENGINEER

## LEGEND

- DRAINAGE & ROADWAY CHG ORDER CONSTRUCTION
- PORT. CONCRETE TRAFFIC BARRIER
- TRAFFIC FLOW DIRECTION
- V.I.A. ASSEMBLY (14 BARRELS EACH LOCATION )

PAVEMENT MARKING ESTIMATED QUANTITES 2452-01-037

| ITEM | UNIT | QTY |
|---|---|---|
| NO QUANTITIES THIS SHEET | | |

SEQUENCE OF WORK ESTIMATED QUANTITIES 2452-01-037

| ITEM | UNIT | QTY |
|---|---|---|
| NO QUANTITIES THIS SHEET | | |

QUANTITIES THIS SHEET CSJ 2452-01-037

✳ CONTRACTOR SHALL ESTABLISH ACTUAL LIMITS OF BOX CULVERT CONSTRUCTION IN THIS PHASE BASED UPON LIMITS OF CONST. IN PHASE B AS APPROVED BY THE ENGINEER. SEE BCS #1 LAYOUT OT THIS CHANGE ORDER FOR MORE DETAILS. SUFFICIENT LENGTH OF BOX SHALL BE CONSTRUCTED TO INSURE ADEQUATE CLEAR ZONE FOR PHASE A AND PHASE B.

⚠# REFERS TO CHANGES AS PART OF NOTED CHANGE ORDERS.

SCALE 1:2000

BEGIN PROJECT
STA 14+420
CSJ: 2452-01-037

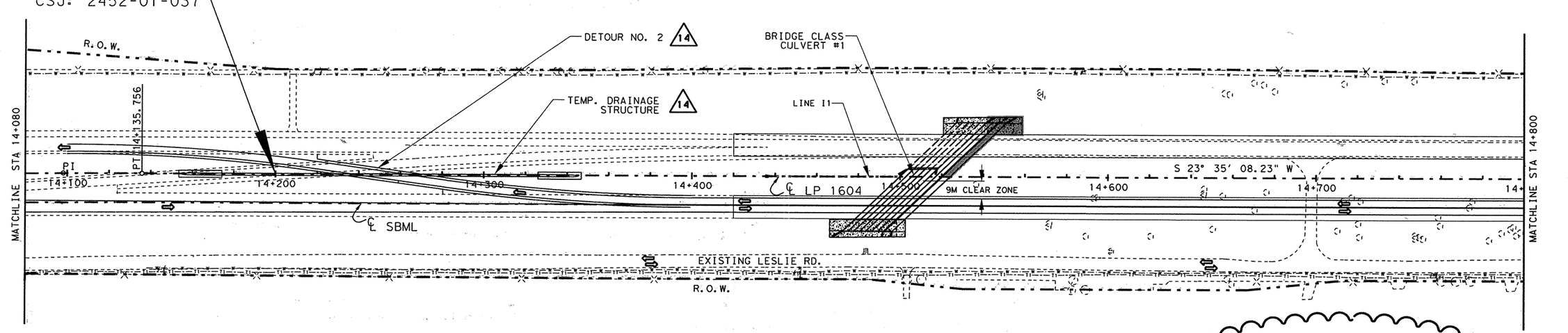


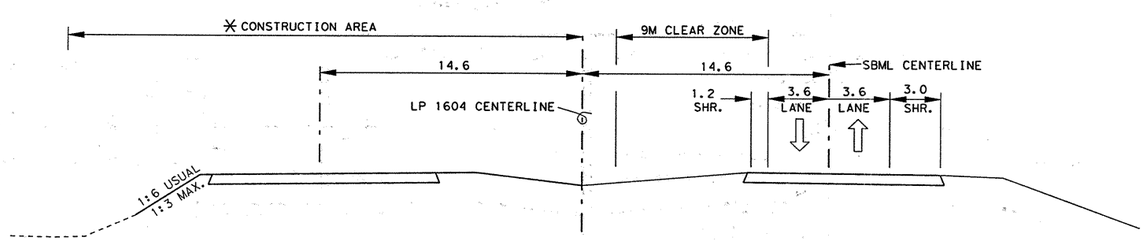


PHASE IB STAGE A
TYPICAL SECTION ON LP 1604

⚠20 CHANGE ORDER NO. 36
-NEW SHEET
-ADDED 1-2400mm X 1200mm SBC

555 EAST RAMSEY SAN ANTONIO TEXAS 78216
PHONE (210)375-9000
FAX (210)375-9010
PAPE-DAWSON ENGINEERS
CIVIL & ENVIRONMENTAL
STATE OF TEXAS
E. STEPHEN BONNETTE
60928
LICENSED
PROFESSIONAL ENGINEER
E. STEPHEN BONNETTE, P.E. 03/07/2003 DATE
FOR CHANGE ORDER ⚠20 ONLY

© 2001
Texas Department of Transportation

# SEQUENCE OF WORK BCS #1 PHASE A

SHEET 1 OF 1

| FED.RD. DIV.NO. | FEDERAL AID PROJECT NO. | | SHEET NO. |
|---|---|---|---|
| 6 | NH 2000(704), ETC. | | 37BC |
| STATE | DIST. | COUNTY | |
| TEXAS | SAT | BEXAR | |
| CONT. | SECT. | JOB | HIGHWAY NO. |
| 2452 | 01 | 036, ETC | LP 1604 |

Plotted on: 03/07/2003

NOTES:
REFER TO TCP (2-4)98 FOR REQUIRED TEMPORARY SIGNING FOR LANE REDUCTION

PAVEMENT MARKINGS SHALL COMPLY TO T.M.U.T.C.D. OR AS DIRECTED BY THE ENGINEER

USE WORK ZONE CHANNELING DEVICES TO DELINEATE TRAFFIC AS PER T.M.U.T.C.D. OR AS DIRECTED BY THE ENGINEER

## LEGEND

- DRAINAGE & ROADWAY CHG ORDER CONSTRUCTION
- PORT. CONCRETE TRAFFIC BARRIER
- TRAFFIC FLOW DIRECTION
- V.I.A. ASSEMBLY (14 BARRELS EACH LOCATION )
- PORT. CHANGEABLE MESSAGE SIGN (N. ELLISON DR USE WISEMAN BLVD)

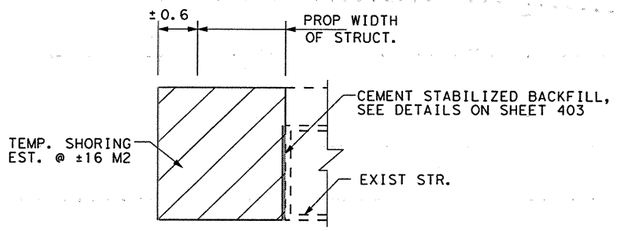


ACTUAL LIMITS OF SHORING TO BE DETERMINED IN FIELD. ACTUAL USAGE OF TEMP SHORING SHALL BE APPROVED BY THE ENGINEER PRIOR TO CONSTRUCTION.

### TEMP. SHORING DETAIL
NTS

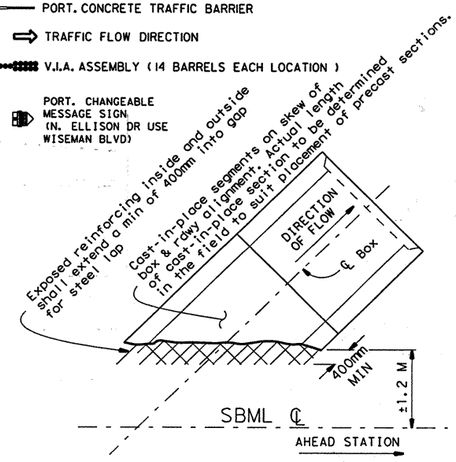


### PHASE LIMITS DETAIL
NTS

| PAVEMENT MARKING ESTIMATED QUANTITES | | 2452-01-037 |
|---|---|---|
| ITEM | UNIT | QTY |
| WK ZN PAV MRK | | |
| REMOV (CL B) TY I-C | EA | 50 |
| REMOV (CL B) TY II-A-A | EA | 54 |
| REMOV (CL C) TY W | EA | 150 |
| REMOV (CL C) TY Y | EA | 162 |

| SEQUENCE OF WORK ESTIMATED QUANTITIES | | 2452-01-037 |
|---|---|---|
| ITEM | UNIT | QTY |
| PORT CONC TRAF BAR (MOVE & RESET) | M | 154.7 |
| † VEH IMP ATTN ASSEM BRLS (MOVE & RESET) | EA | 28 |
| TEMPORARY SHORING | M2 | 16 |
| PORT CHANGE MES SGN (TYPE 1) | DAY | 7 |

QUANTITIES THIS SHEET CSJ 2452-01-037

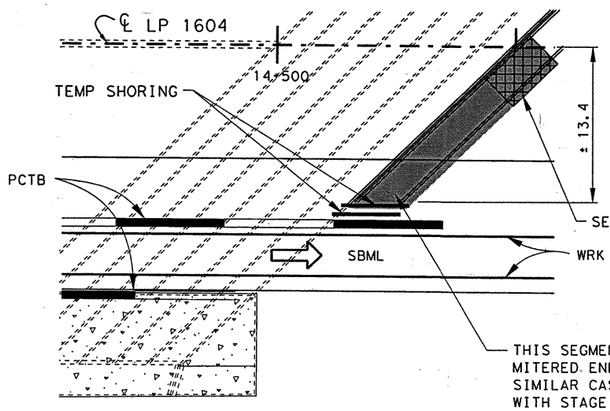


THIS SEGMENT OF PROP SBC TO BE INSTALLED WITH CAST-IN-PLACE MITERED END TO MATCH SKEW OF BOX AND ROADWAY ALIGNMENT. A SIMILAR CAST-IN-PLACE SEGMENT SHALL BE USED TO TIE THIS STAGE WITH STAGE C DURING STAGE C. SEE CLOSURE POUR DETAIL ON BCS #1 SHEET OF THIS CHANGE ORDER.

✳ ACTUAL LIMITS OF PHASE B CONSTRUCTION AS APPROVED BY THE ENGINEER SHALL BE ESTABLISHED IN THE FIELD BASED UPON THE LOCATION OF THE MITERED END SBC SEGMENT AS SHOWN AT LEFT. THIS LOCATION SHALL BE UTILIZED TO ESTABLISH THE ACTUAL LIMITS OF CONSTRUCTION FOR PHASE A & PHASE C. SUFFICIENT LENGTH OF BOX SHALL BE CONSTRUCTED TO INSURE ADEQUATE CLEAR ZONE FOR PHASE A AND PHASE B.

† EACH VIA ASSEMBLY SHOWN SHALL CONTAIN 14 BARRELS.

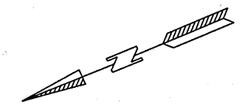

SCALE 1:2000

BEGIN PROJECT
STA 14+420
CSJ: 2452-01-037

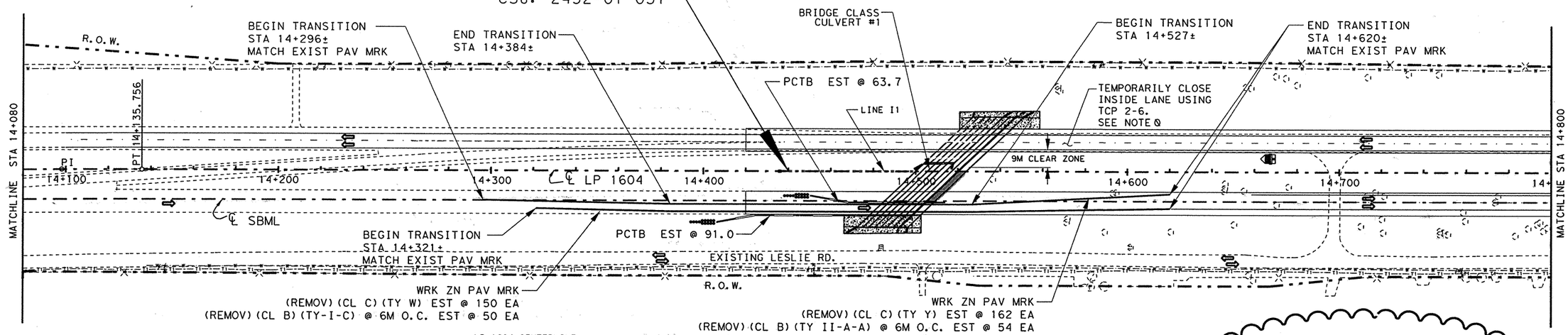


⊘ CONTRACTOR SHALL CLOSE INSIDE NB LANE TO TRAFFIC DURING INITIAL STAGES OF PLACEMENT AND BACKFILL OF PRECAST SEGMENTS TO ALLOW CONSTRUCTION WITHIN CLEAR ZONE OF THIS LANE. THE CONTRACTOR SHALL STRIVE TO COMPLETE THE BACKFILL OPERATIONS WITHIN THIS CLEAR ZONE (LIMITS TO BE DETERMINED IN THE FIELD) IN ONE DAY TO EXPEDITE RE-OPENING OF THE CLOSED LANE.

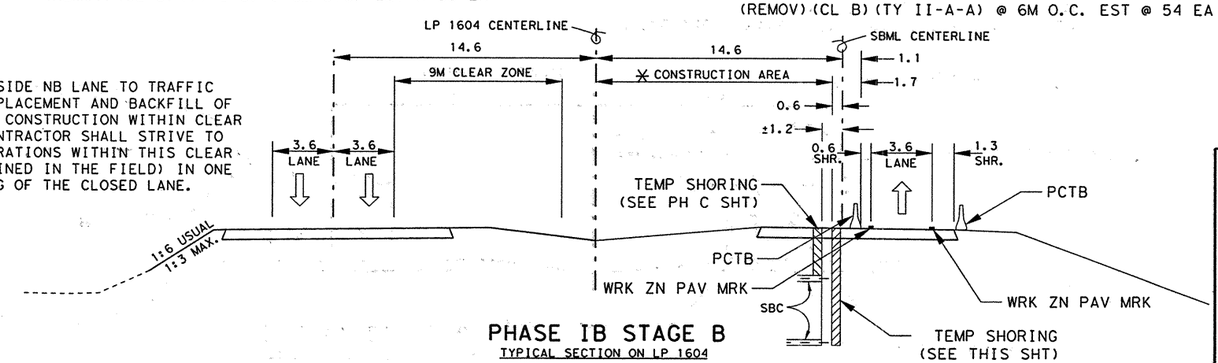


### PHASE IB STAGE B
TYPICAL SECTION ON LP 1604

30 CHANGE ORDER NO. 36
-NEW SHEET
-ADDED 1-2400mm X 1200mm SBC

555 EAST RAMSEY SAN ANTONIO TEXAS 78216
PHONE (210)375-9000
FAX (210)375-9010
PAPE-DAWSON ENGINEERS
CIVIL & ENVIRONMENTAL
STATE OF TEXAS K. STEPHEN BONNETTE 60928 LICENSED PROFESSIONAL ENGINEER
K. STEPHEN BONNETTE P.E.
03707/2003
DATE
FOR CHANGE ORDER 36 ONLY

© 2001
Texas Department of Transportation

## SEQUENCE OF WORK
## BCS #1 PHASE B
SHEET 1 OF 1

| FED.RD. DIV.NO. | FEDERAL AID PROJECT NO. | | SHEET NO. |
|---|---|---|---|
| 6 | NH 2000(704), ETC. | | 313D |
| STATE | DIST. | COUNTY | |
| TEXAS | SAT | BEXAR | |
| CONT. | SECT. | JOB | HIGHWAY NO. |
| 2452 | 01 | 036, ETC | LP 1604 |

Design Filename: pt\52\2011\design\civil\plansheets\bcs #1 c.o\ch*ph*1b\st*b1*b.dgn
FILE pt\52\2011\design\civil\plansheets\bcs #1 c.o\ch*ph*1b\st*b1*b 03/07/2003
LEVEL DISPLAYED

Plotted on: 03/07/2003

Design Filename: p:\52\20\11\design\civil\plansheets\bcs #1 c.o\ch*ph*1b*st*b1*c.dgn

FILE p:\52\20\11\design\civil\plansheets\bcs #1 c.o\ch*ph*1b*st*b1*c.dgn
LEVEL DISPLAYED

NOTES:
REFER TO TCP (2-4)98 FOR REQUIRED TEMPORARY SIGNING FOR LANE REDUCTION

PAVEMENT MARKINGS SHALL COMPLY TO T.M.U.T.C.D. OR AS DIRECTED BY THE ENGINEER

USE WORK ZONE CHANNELING DEVICES TO DELINEATE TRAFFIC AS PER T.M.U.T.C.D. OR AS DIRECTED BY THE ENGINEER

## LEGEND

- DRAINAGE & ROADWAY CONSTRUCTION
- PORT. CONCRETE TRAFFIC BARRIER
- TRAFFIC FLOW DIRECTION
- V.I.A. ASSEMBLY (14 BARRELS EACH LOCATION )

| PAVEMENT MARKING ESTIMATED QUANTITIES 2452-01-037 | | |
|---|---|---|
| ITEM | UNIT | QTY |
| WK ZN PAV MRK | | |
| REMOV (CL B) TY I-C | EA | 137 |
| REMOV (CL B) TY II-A-A | EA | 129 |
| REMOV (CL C) TY W | EA | 411 |
| REMOV (CL C) TY Y | EA | 387 |

| SEQUENCE OF WORK ESTIMATED QUANTITIES 2452-01-037 | | |
|---|---|---|
| ITEM | UNIT | QTY |
| CONSTRUCT DETOURS (CL 3) | M2 | 401 |
| PORT CONC TRAF BAR (MOVE & RESET) | M | 91.0 |
| † VEH IMP ATTN ASSEM BRLS (MOVE & RESET) | EA | 14 |
| TEMPORARY SHORING | M2 | 11 |

QUANTITIES THIS SHEET CSJ 2452-01-037

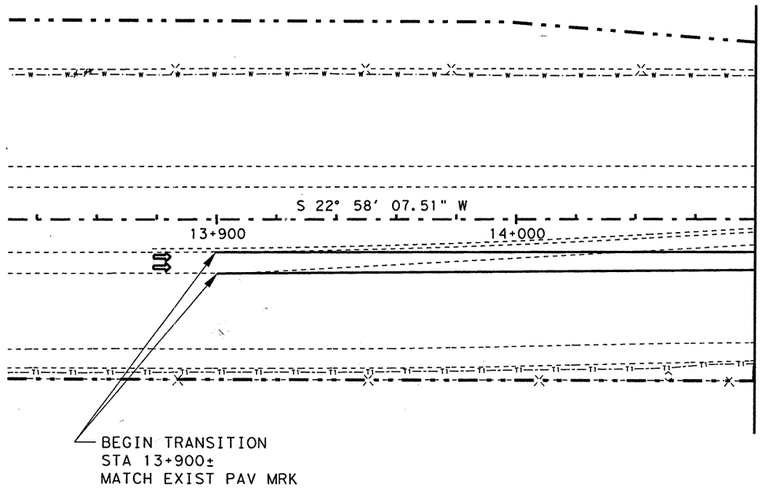


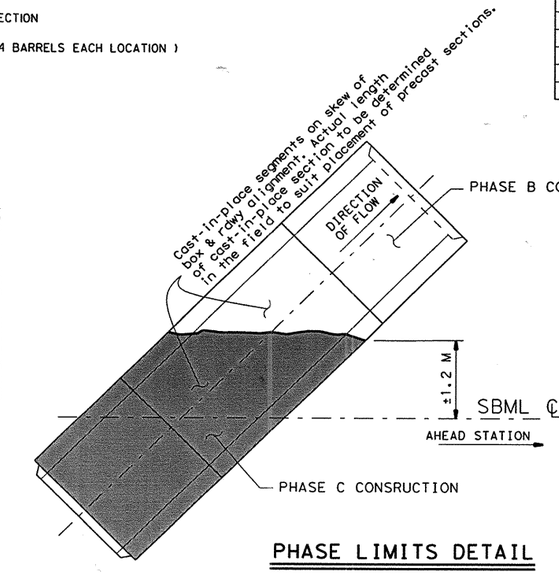


PHASE LIMITS DETAIL
NTS

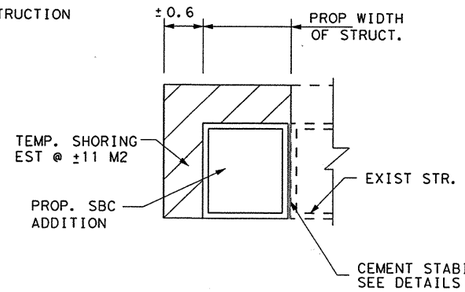


ACTUAL LIMITS OF SHORING TO BE DETERMINED IN FIELD. ACTUAL USAGE OF TEMP SHORING SHALL BE APPROVED BY THE ENGINEER PRIOR TO CONSTRUCTION.

TEMP. SHORING DETAIL
NTS

✳ LIMITS OF CONSTRUCTION FOR THIS PHASE SHALL BE BASED UPON ACTUAL LIMITS ESTABLISHED FOR PHASE B AS APPROVED BY THE ENGINEER. SEE BCS#1 SHEET OF THIS CHANGE ORDER FOR CLOSURE POUR DETAILS.

† EACH VIA ASSEMBLY SHOWN SHALL CONTAIN 14 BARRELS. ONE VIA ASSEMBLY (14 BARRELS ) WILL BE REMOVED AND ONE VIA ASSEMBLY (14 BARRELS) WILL BE MEOVED AND RESET BETWEEN PHASE B & PHASE C CONSTRUCTION. THE OTHER VIA ASSEMBLY (14 BARRELS) WILL BE REMOVED AFTER PHASE C IS COMPLETE.

SCALE 1:2000

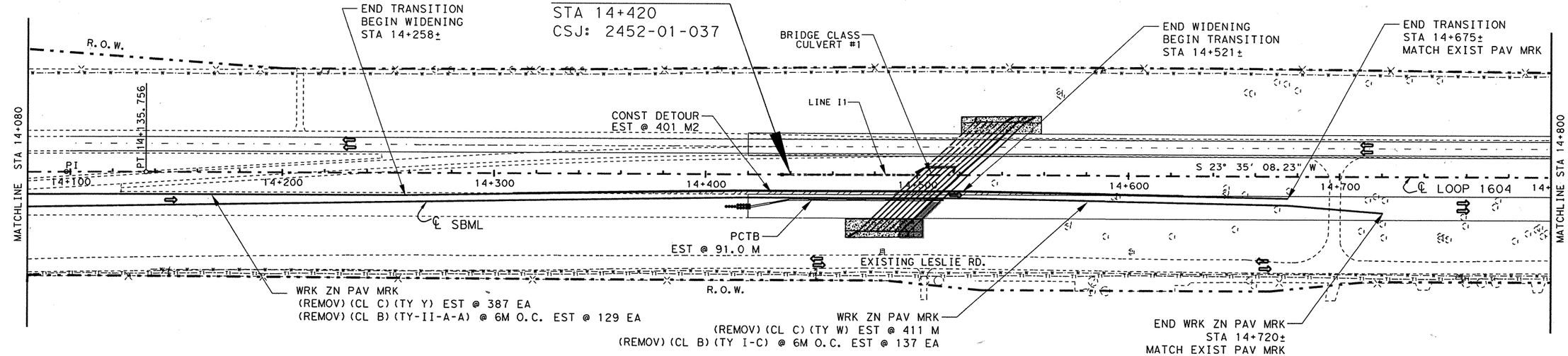


36 CHANGE ORDER NO. 36
-NEW SHEET
-ADDED 1-2400mm X 1200mm SBC

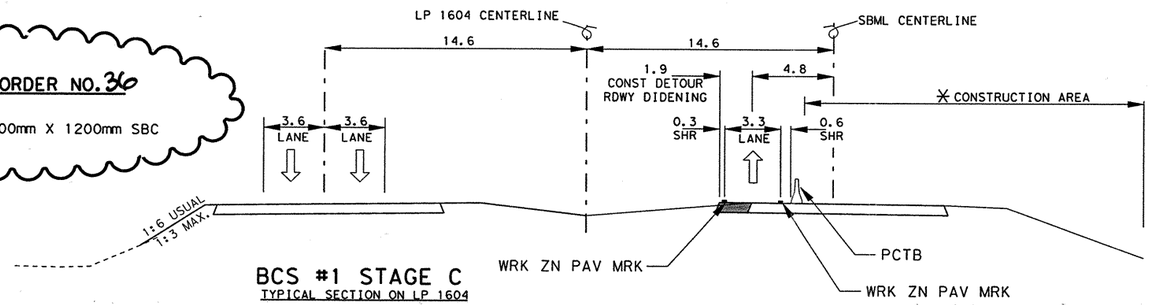


BCS #1 STAGE C
TYPICAL SECTION ON LP 1604

555 EAST RAMSEY SAN ANTONIO TEXAS 78216
PHONE (210)375-9000
FAX (210)375-9010
PAPE-DAWSON ENGINEERS
CIVIL & ENVIRONMENTAL
K. STEPHEN BONNETTE 60928 LICENSED PROFESSIONAL ENGINEER STATE OF TEXAS
K. STEPHEN BONNETTE P.E. 03/07/2003 DATE
FOR CHANGE ORDER 36 ONLY

© 2001
Texas Department of Transportation

# SEQUENCE OF WORK BCS #1 PHASE C

SHEET 1 OF 1

| FED.RD. DIV.NO. | FEDERAL AID PROJECT NO. | | SHEET NO. |
|---|---|---|---|
| 6 | NH 2000(704), ETC. | | 373E |
| STATE | DIST. | COUNTY | |
| TEXAS | SAT | BEXAR | |
| CONT. | SECT. | JOB | HIGHWAY NO. |
| 2452 | 01 | 036,ETC | LP 1604 |

Plotted on: 09/19/00

| ESTIMATED QUANTITIES | | | |
|---|---|---|---|
| DESCRIPTION | UNIT | EST. | FINAL |
| RIPRAP (CONC) (CL B) | M3 | 171.1 | |
| CONC BOX CULV (3000MM X 2400MM) | M | 362.752 | |
| WINGWALL (FW-45) (H=2400MM) | EA | 2 | |
| * STRUCT EXCAV (CULV LARGE) | M3 | 4092.0 | |
| CEMENT STAB BKFL | M3 | 315.3 | |
| CUT & RESTORE PVMNT | M2 | 170.8 | |

*SUPPLIED FOR CONTRACTOR'S INFORMATION ONLY

# QUANTITIES THIS SHEET
# CSJ 2452-01-036

PERM STR NO. 15-015-2452-01-170

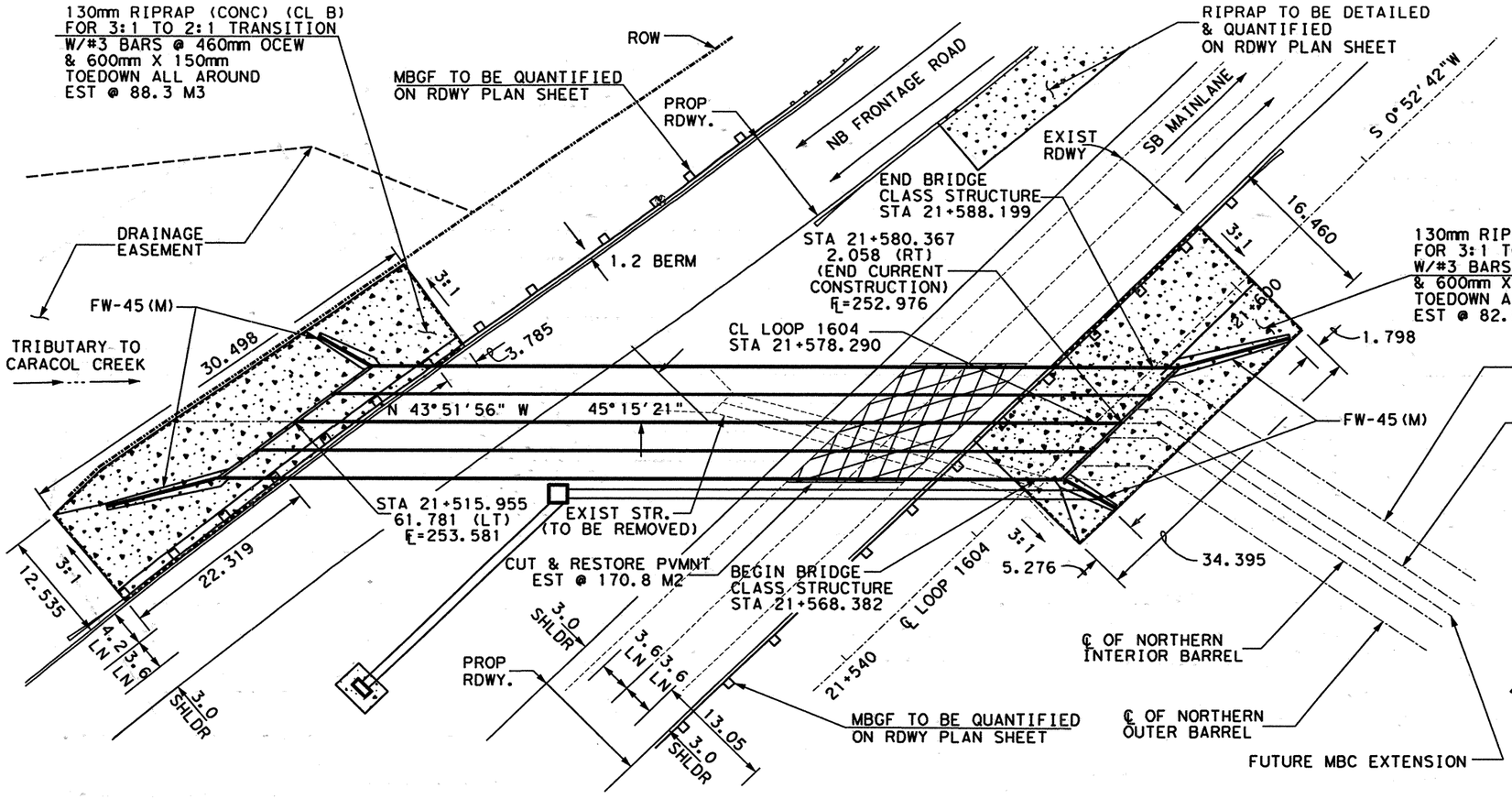


NOTES:
1.) ALL DIMENSIONS ARE IN METERS UNLESS NOTED OTHERWISE.
2.) CONTRACTOR TO ADJUST HEADWALL AND WINGWALL STEEL DIMENSIONS TO MATCH FIELD CONDITIONS. ANY ADJUSTMENTS SHALL BE SUBSIDIARY TO THE PERTINENT BID ITEM.
3.) MAX FILL HEIGHT ENCOUNTERED + 3 M
4.) BRIDGE CLASS CULVERT DESIGNED TO BE BOTH CAST-IN-PLACE AND PRECAST AS SHOWN.
5.) FOR UPSTREM HEADWALL PROFILE SEE UPSTREAM HEADWALL PROFILE SHEETS.
6.) CONTRACTOR IS TO PRESENT A PLAN TO THE ENGINEER FOR APPROVAL TO TIE-IN THE CAST-IN-PLACE CULV. TO THE PRECAST CULV.

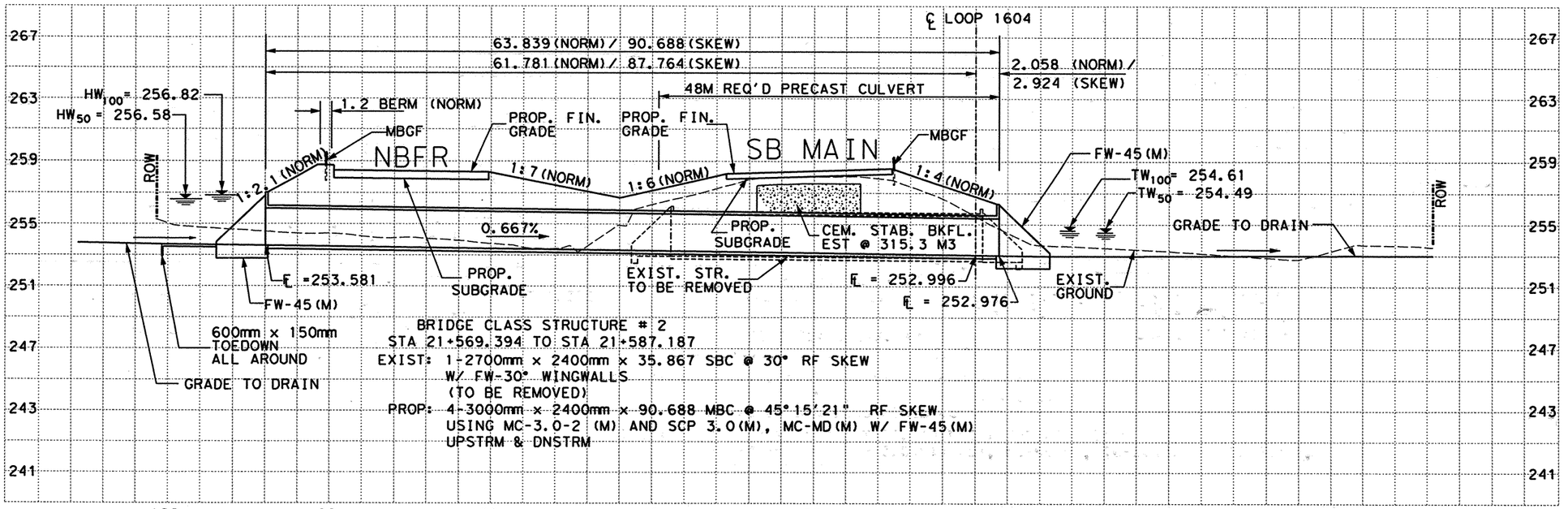


BRIDGE CLASS STRUCTURE # 2
STA 21+569.394 TO STA 21+587.187
EXIST: 1-2700mm x 2400mm x 35.867 SBC @ 30° RF SKEW W/ FW-30° WINGWALLS (TO BE REMOVED)
PROP: 4-3000mm x 2400mm x 90.688 MBC @ 45°15'21" RF SKEW USING MC-3.0-2 (M) AND SCP 3.0(M), MC-MD(M) W/ FW-45(M) UPSTRM & DNSTRM

SCALE: 1:600 HORIZ
1:300 VERT


555 EAST RAMSEY SAN ANTONIO TEXAS 78216
PHONE (210)375-9000
FAX (210)375-9010
PAPE-DAWSON ENGINEERS
CIVIL & ENVIRONMENTAL
K. STEPHEN BONNETTE 60928 REGISTERED PROFESSIONAL ENGINEER
K. STEPHEN BONNETTE, P.E. 9/20/00 DATE


© 2000 Texas Department of Transportation

# LOOP 1604 @ TRIB TO CARACOL CR
# BRIDGE LAYOUT
# BR. CLASS STRUCTURE NO. 2
# STA 21+568.382 TO 21+588.199

| | | | | | | | | |
|---|---|---|---|---|---|---|---|---|
| DN: | | | | | PROJECT NO. | | | |
| CK DN: | | | | | NH 2000 (704), etc. | | | |
| DW: | CONTROL | SECTION | JOB | DIST. | STATE | COUNTY | HIGHWAY NO. | SHEET NO. |
| CK DW: | 2452 | 01 | 036 etc. | SAT | TX | BEXAR | LOOP 1604 | 374 |

Design Filename: j:\3941\16\civil\design\plonsheets\394116c116.dgn

| ESTIMATED QUANTITIES | | | |
|---|---|---|---|
| DESCRIPTION | UNIT | EST. | FINAL |
| RIPRAP (CONC) (CL B) | M3 | 171.1 | |
| CONC BOX CULV (3000MM X 2400MM) | M | 362.752 | |
| WINGWALL (FW-45) (H=2400MM) | EA | 2 | |
| * STRUCT EXCAV (CULV LARGE) | M3 | 4092.0 | |
| CEMENT STAB BKFL | M3 | 315.3 | |
| CUT & RESTORE PVMNT | M2 | 170.8 | |
| | | | |
| | | | |

* SUPPLIED FOR CONTRACTOR'S INFORMATION ONLY

## QUANTITIES THIS SHEET
## CSJ 2452-01-036

PERM STR NO. 15-015-2452-01-170

130mm RIPRAP (CONC) (CL B)
FOR 3:1 TO 2:1 TRANSITION
W/#3 BARS @ 460mm OCEW
& 600mm X 150mm
TOEDOWN ALL AROUND
EST @ 88.3 M3

ROW

MBGF TO BE QUANTIFIED
ON RDWY PLAN SHEET

PROP RDWY.

NB FRONTAGE ROAD

RIPRAP TO BE DETAILED
& QUANTIFIED
ON RDWY PLAN SHEET

EXIST RDWY

SB MAINLANE

S 0°52'42"W

DRAINAGE EASEMENT

NO GRADING WITHIN DRAINAGE EASEMENT

1.2 BERM

END BRIDGE CLASS STRUCTURE STA 21+588.199

STA 21+580.367
2.058 (RT)
(END CURRENT CONSTRUCTION)
℄=252.976

16.460

3:1

21.600

130mm RIPRAP (CONC) (CL B)
FOR 3:1 TO 2:1 TRANSITION
W/#3 BARS @ 460mm OCEW
& 600mm X 150mm
TOEDOWN ALL AROUND
EST @ 82.8 M3

1.798

FW-45 (M)

TRIBUTARY TO CARACOL CREEK

FW-45 (M)

30.498

3.785

CL LOOP 1604
STA 21+578.290

N 43°51'56" W

45°15'21"

℄ OF SOUTHERN OUTER BARREL

℄ OF SOUTHERN INTERIOR BARREL

STA 21+515.955
61.781 (LT)
℄=253.581

EXIST STR.
(TO BE REMOVED)

CUT & RESTORE PVMNT
EST @ 170.8 M2

BEGIN BRIDGE CLASS STRUCTURE STA 21+568.382

12.55

3:1

2.319

4.2 LN

3.6 LN

3.0 SHLDR

3.0 SHLDR

PROP RDWY.

3.6 LN

3.6 LN

21.540

℄ LOOP 1604

5.276

34.395

MBGF TO BE QUANTIFIED
ON RDWY PLAN SHEET

℄ OF NORTHERN INTERIOR BARREL

℄ OF NORTHERN OUTER BARREL

13.05

3.0 SHLDR

FUTURE MBC EXTENSION

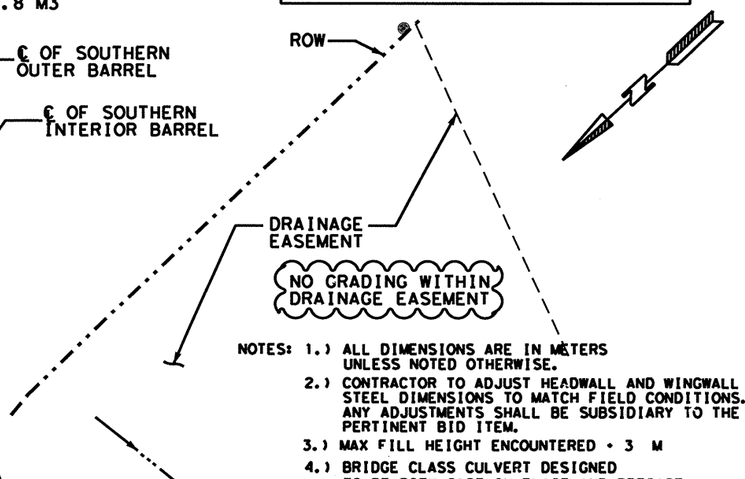


NOTES:
1.) ALL DIMENSIONS ARE IN METERS UNLESS NOTED OTHERWISE.
2.) CONTRACTOR TO ADJUST HEADWALL AND WINGWALL STEEL DIMENSIONS TO MATCH FIELD CONDITIONS. ANY ADJUSTMENTS SHALL BE SUBSIDIARY TO THE PERTINENT BID ITEM.
3.) MAX FILL HEIGHT ENCOUNTERED = 3 M
4.) BRIDGE CLASS CULVERT DESIGNED TO BE BOTH CAST-IN-PLACE AND PRECAST AS SHOWN.
5.) FOR UPSTREAM HEADWALL PROFILE SEE UPSTREAM HEADWALL PROFILE SHEETS.
6.) CONTRACTOR IS TO PRESENT A PLAN TO THE ENGINEER FOR APPROVAL TO TIE-IN THE CAST-IN-PLACE CULV. TO THE PRECAST CULV.

℄ LOOP 1604

63.839 (NORM) / 90.688 (SKEW)
61.781 (NORM) / 87.764 (SKEW)

2.058 (NORM) / 2.924 (SKEW)

1.2 BERM (NORM)

48M REQ'D PRECAST CULVERT

$W_{100}$ = 256.82
$HW_{50}$ = 256.58

MBGF

PROP. FIN. GRADE

NBFR

PROP. FIN. GRADE

SB MAIN

MBGF

NO GRADING WITHIN DRAINAGE EASEMENT

FW-45 (M)
$TW_{100}$ = 254.61
$TW_{50}$ = 254.49

ROW

1:2 (NORM)

1:6 (NORM)

1:6 (NORM)

1:4 (NORM)

0.3 CLEAR

PROP. SUBGRADE

0.667%

PROP. SUBGRADE

CEM. STAB. BKFL. EST @ 315.3 M3

℄ =253.581

EXIST. STR. TO BE REMOVED

℄ = 252.996
℄ = 252.976

EXIST. GROUND

GRADE TO DRAIN

VARIES

23.934 (NORM) / 34.000 (SKEW)
MC-3.0-4 (M)

39.905 (NORM) / 56.688 (SKEW)
MC-3.0-SPL (M)

FUTURE FILL ALLOWANCE

FW-45 (M)

600mm x 150mm TOEDOWN ALL AROUND

BRIDGE CLASS STRUCTURE # 2
STA 21+569.394 .0 STA 21+587.187
EXIST: 1-2700mm x 2400mm x 35.867 SBC @ 3° RF SKEW
W/ FW-30° WINGWALLS
(TO BE REMOVED)
PROP. 4-3000mm x 2400mm x 90.688 MBC @ 45°15'21" RF SKEW
USING MC-3.0-2 (M), SCP-3.0(M), MC-MD(M) W/ FW-45(M)
UPSTRM & DNSTRM

NO GRADING WITHIN DRAINAGE EASEMENT

CHANGE ORDERS # 36

# 8 - REVISED GRADING PLAN, ALL GRADING TO STAY WITHIN R.O.W. AND OUT OF DRAINAGE EASEMENTS (USACE MITIGATION).

267 263 259 255 251 247 243 239

100 80 60 40 20 0 20 40 60

SCALE: 1:600 HORIZ
1:300 VERT

FOR MOD'S WITH COST ONLY

STATE OF TEXAS
TERRY C. McCOY
75016
REGISTERED PROFESSIONAL ENGINEER

Terry C. McCoy, P.E. — 10-17-01 Date

© 2001 Texas Department of Transportation

LOOP 1604 @ TRIB TO CARACOL CR
BRIDGE LAYCUT
BR. CLASS STRUCTURE NO. 2
STA 21+568.382 TO 21+588.199

| DN: | | | | | PROJECT NO. | | |
|---|---|---|---|---|---|---|---|
| CK DN: | | | | | NH 2000 (704), etc. | | |
| DN: | CONTROL | SECTION | JOB | DIST. | COUNTY | HIGHWAY NO. | SHEET NO. |
| CK DN: | 2452 | 01 | 036 | SAT | BEXAR | LOOP 1604 | 374A |

394116c116.dgn

| ESTIMATED QUANTITIES | | | |
|---|---|---|---|
| DESCRIPTION | UNIT | EST. | FINAL |
| RIPRAP (CONC) (CL B) | M3 | 183 | |
| CONC BOX CULV (3000MM X 2400MM) | M3 | 362.752 | |
| WINGWALL (FW-45) (H=2400MM) | EA | 2 | |
| STRUCT EXCAV (CULV LARGE) | M | 5060 | |
| CEMENT STAB BKFL | M3 | 931 | |
| CUT & RESTORE PVMNT | M2 | 260 | |
| | | | |
| | | | |

* SUPPLIED FOR CONTRACTOR'S INFORMATION ONLY

## QUANTITIES THIS SHEET
## CSJ 2452-01-036

PERM STR NO. 15-015-2452-01-170

130mm RIPRAP (CONC) (CL B) FOR 3:1 TO 2:1 TRANSITION W/#3 BARS @ 460mm OCEW & 600mm X 150mm TOEDOWN ALL AROUND EST @ 10 M3

ROW

MBGF AND RIPRAP TO BE QUANTIFIED ON RDWY PLAN SHEET.

RIPRAP TO BE DETAILED & QUANTIFIED ON RDWY PLAN SHEET

NB FRONT. RD. ≠

SB MAINLANE

EXIST. RDWY

PROP. RDWY.

DRAINAGE EASEMENT

SLOPE/DIST. VARIES

0.6 CLEAR

1.5 BERM

END BRIDGE CLASS STRUCT. STA. 21+597.099

℄ TIE TO CULVERT STA. 21+589.189

130mm RIPRAP (CONC) (CL B) FOR 3:1 TO 2:1 TRANSITION W/#3 BARS @ 460mm OCEW & 600mm X 150mm TOEDOWN ALL AROUND EST @ 82 M3

16.566

1.798

TOP SLOPE (±) (MATCH EXIST.

TOE SLOPE

△35 NO GRADING WITHIN DRAINAGE EASEMENT

FW-45(M)

TRIBUTARY TO CARACOL CREEK

N 44°07'18" E

45°

21+600

34.395

5.276

FW-45(M)

0.32 % (±) GRADE TO DRAIN

LIMITS OF DOWNSTREAM GRADING

FACE OF HEADWALL 2.058 RT. STA. 21+590.247 DSFL = 252.593

EXIST STR. (TO BE REMOVED)

FACE OF HEADWALL 62.068 LT. STA. 21+526.121 USFL = 253.200

CUT & RESTORE PVMNT EST. @ 260 M2

BEGIN BRIDGE CLASS STRUCT. STA. 21+579.279

GRADING PT. STA. 21+589(27.5 LT.) EL. 252.500(±)

ROW

GRADING PT. STA. 21+636(53.5 LT.) EL. 252.400(±)

MATCH / TIE INTO EXIST. CHANNEL (±)

GRADING PT. STA. 21+632(53.5 LT.) EL. 252.400(±)

SCALE: 1:600 HORIZ
1:300 VERT

3.0 SHLDR

1.727

△51

NEW WATER & WW WORK

WW

3.0 SHLDR

3.6 LN

3.6 LN

0.6 SHLDR

REVISED LINE I-28

PROP RDWY.

3.6 LN

3.6 LN

3.0 SHLDR

21+540

℄ LOOP 1604

[CONTRACTOR IS ALERTED TO THE NEW GAS LINES IN VICINITY]

NEW GAS LINE (2 LINES COMMON TRENCH) TOP EL. 252.06 (±)

DRAINAGE EASEMENT

REVISED LANE CONFIGURATION

THE N'BD. FRONTAGE RD. PROFILE IN VICINITY OF THIS STRUCTURE WAS REVISED TO BETTER ACCOMMODATE DRIVEWAY #19 ADA REVISIONS @ MILITARY AND IS INCLUDED AS PART OF THIS CHANGE ORDER.

△35 NO GRADING WITHIN DRAINAGE EASEMENT

NOTES:
1.) ALL DIMENSIONS ARE IN METERS UNLESS NOTED OTHERWISE.
2.) CONTRACTOR TO ADJUST HEADWALL AND WINGWALL STEEL DIMENSIONS TO MATCH FIELD CONDITIONS. ANY ADJUSTMENTS SHALL BE SUBSIDIARY TO THE PERTINENT BID ITEM.
3.) MAX FILL HEIGHT ENCOUNTERED 4.0 M(±)
4.) BRIDGE CLASS CULVERT DESIGNED TO BE CAST-IN-PLACE.
5.) FOR UPSTREAM HEADWALL PROFILE SEE UPSTREAM HEADWALL PROFILE SHEETS.

℄ LP 1604

△51 NEW WATER 400MM STL ENCASED TOP EL. 252.431 (±)

64.127 (NORM) / 90.688 (SKEW)

62.059 (NORM) / 87.764 (SKEW)

2.068 (NORM) / 2.924 (SKEW)

1.5 BERM (NORM)

MBGF

PROP. FIN. GRADE

CEMENT STAB. BKFL EST. @ 931 M3

NBFR≠

SB MAIN

MBGF

R.O.W.

0.6 CLEAR

1:1.7(N)(±) 1:2.8(S)(±)

1:4.3(N) 1:1.6(S)(±)

1:5.9(N)(±) 1:8.3(S)(±)

1:4(N) 1:5.7(S)(±)

PROP. SUBGRADE

PROP. SUBGRADE

FW-45(M)

△35 NO GRADING WITHIN DRAINAGE EASEMENT

R.O.W.

CONTRACTOR IS ALERTED TO THE NEW GAS LINES IN VICINITY TOP EL. 252.06 (±)

0.3 (NORMAL) CLEAR

VARIES

USFL-253.200

0.667 %

GRADE TO DRAIN 0.32 % (±)

EXIST STR. (TO BE REMOVED)

DSFL-252.593

EXIST. GROUND ALONG ℄ CULVERT

MATCH / TIE INTO EXIST. CHANNEL FL. 252.400(±)

SLOPE/DIST. VARIES

FW-45(M)

600mm x 150mm TOEDOWN ALL AROUND

△35 NO GRADING WITHIN DRAINAGE EASEMENT

BRIDGE CLASS STRUCTURE # 2
STA 21+579.279 TO STA 21+597.099
EXIST: 1-2700mm x 2400mm x 35.867 SBC @ 30° RF SKEW W/ FW-30° WINGWALLS (TO BE REMOVED)
PROP: 4-3000mm x 2400mm x 90.688 MBC @ 45° RF SKEW USING MC-3.0-4 (M) MC-MD(M) W/ FW-45(M) UPSTRM & DNSTRM

264 260 256 252 248 244 266 262 258 254 250 246 242

100 80 60 40 20 0 20 40 60

△ REFERS TO CHANGE MADE AS PART OF CHANGE ORDER.

### CHANGE ORDER # 74

- RELOCATED STRUCTURE, UPDATED UTILITY INFO. ADDED DOWNSTREAM GRADING PLAN
- REVISED NOTES
- REVISED QUANTITIES

## CHANGE ORDER 74

## REVISED SHEET

STATE OF TEXAS — JEROME D. PAVLISKA — 76075 — REGISTERED PROFESSIONAL ENGINEER

Jerome D. Pavliska, P.E. 12-5-03
Jerome D. Pavliska, P.E. — Date

©2003 Texas Department of Transportation

LOOP 1604 @ TRIB. TO CARACOL CREEK
BRIDGE LAYOUT
BRIDGE CLASS STRUCTURE NO. 2
STA. 21+579.279 TO STA. 21+597.099

| DN: | | | | | PROJECT NO. | | |
|---|---|---|---|---|---|---|---|
| CK DN: | | | | | NH 2000 (704), etc. | | |
| DW: | CONTROL | SECTION | JOB | DIST | STATE | COUNTY | HIGHWAY NO. | SHEET NO. |
| CK DW: | 2452 | 01 | 036 | SAT | TX | BEXAR | LOOP 1604 | 374B |

t:\Ao\Design\lp1604fm471-90\chgord\files\pdsheets\sht#374b.dgn

Plotted on: 09/19/00

| ESTIMATED QUANTITIES | | | |
|---|---|---|---|
| DESCRIPTION | UNIT | EST. | FINAL |
| RIPRAP (CONC) (CL B) | M3 | 143.5 | |
| CONC BOX CULV (3000MM X 3000MM) | M | 732.12 | |
| WINGWALL (FW-30) (H=3000MM) | EA | 2 | |
| RAIL (TY-T6) | M | 38 | |
| * STRUCT EXCAV (CULV LARGE) | M3 | 1911.2 | |
| CUT & RESTORE PVMNT | M2 | 206.3 | |
| | | | |
| | | | |

*SUPPLIED FOR CONTRACTOR'S INFORMATION ONLY

QUANTITIES THIS SHEET
CSJ 2452-01-036

PERM STR NO. 015-2452-01-029

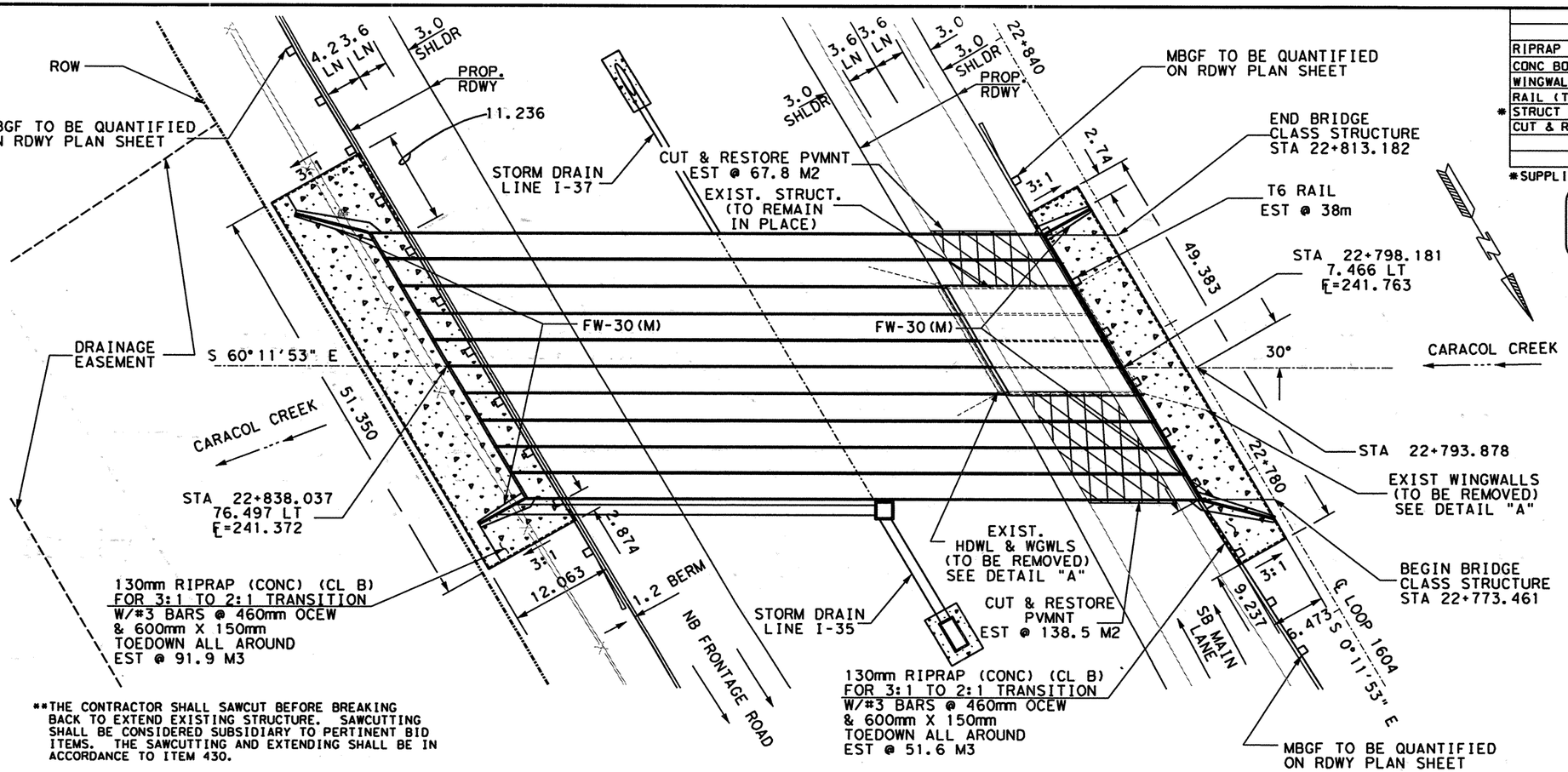


**THE CONTRACTOR SHALL SAWCUT BEFORE BREAKING BACK TO EXTEND EXISTING STRUCTURE. SAWCUTTING SHALL BE CONSIDERED SUBSIDIARY TO PERTINENT BID ITEMS. THE SAWCUTTING AND EXTENDING SHALL BE IN ACCORDANCE TO ITEM 430.

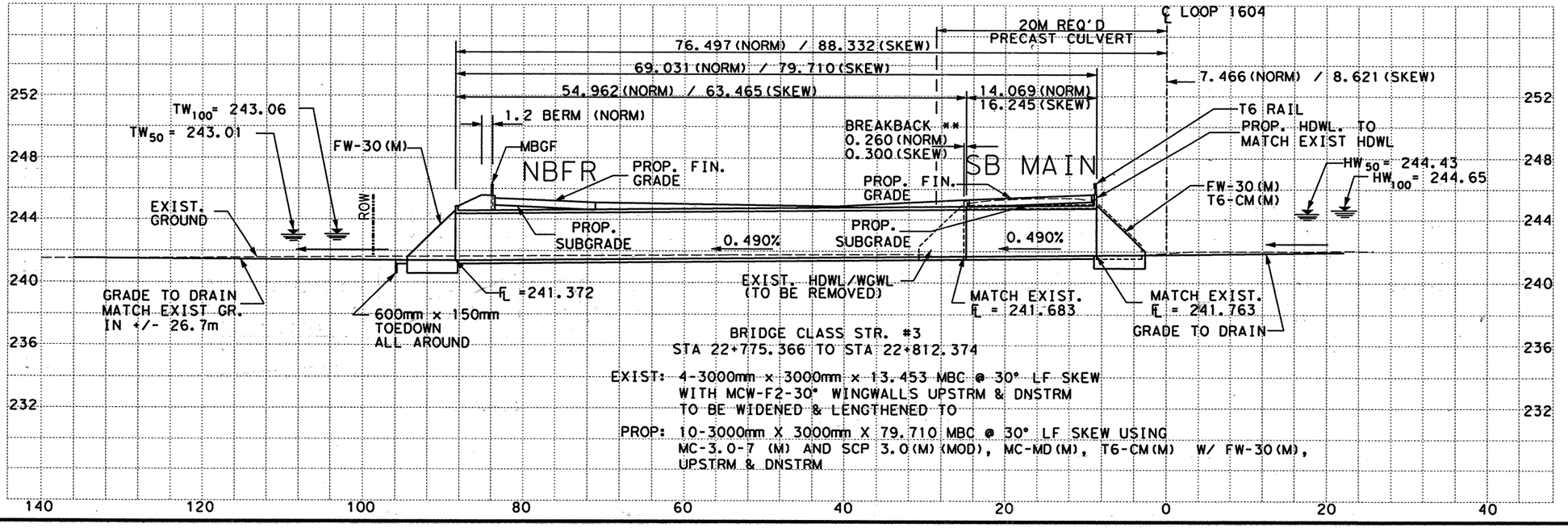


BRIDGE CLASS STR. #3
STA 22+775.366 TO STA 22+812.374

EXIST: 4-3000mm x 3000mm x 13.453 MBC @ 30° LF SKEW WITH MCW-F2-30° WINGWALLS UPSTRM & DNSTRM TO BE WIDENED & LENGTHENED TO

PROP: 10-3000mm X 3000mm X 79.710 MBC @ 30° LF SKEW USING MC-3.0-7 (M) AND SCP 3.0(M)(MOD), MC-MD(M), T6-CM(M) W/ FW-30(M), UPSTRM & DNSTRM

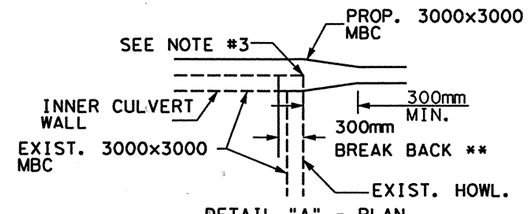


DETAIL "A" - PLAN
N.T.S.

NOTES:
1.) ALL DIMENSIONS ARE IN METERS UNLESS NOTED OTHERWISE.
2.) CONTRACTOR TO ADJUST HEADWALL AND WINGWALL STEEL DIMENSIONS TO MATCH FIELD CONDITIONS. ANY ADJUSTMENTS SHALL BE SUBSIDIARY TO THE PERTINENT BID ITEM.
3.) EXIST. WINGWALLS TO BE REMOVED AS SHOWN ON LAYOUT. A MIN. OF 300mm OF EXIST. MBC SHALL BE REMOVED TO BE RECONSTRUCTED WITH THE END TREATMENT OF THE PROP. MBC WIDENING. A MIN. OF 300mm OF EXIST. REINF. STEEL FROM EXIST. MBC AND HEADWALL SHALL REMAIN. BE CLEANED OF ALL LOOSE CONCRETE AND INCORPORATED INTO PROP. WIDENING. SEE DETAIL "A".
4.) MAX FILL HEIGHT ENCOUNTERED ± 1.0 M
5.) BRIDGE CLASS CULVERT DESIGNED TO BE BOTH CAST-IN-PLACE AND PRECAST AS SHOWN.
6.) FOR UPSTREAM HEADWALL PROFILE SEE UPSTREAM HEADWALL PROFILE SHEETS.
7.) CONTRACTOR IS TO PRESENT A PLAN TO THE ENGINEER FOR APPROVAL TO TIE-IN THE CAST-IN-PLACE CULV. TO THE PRECAST CULV.

SCALE: 1:600 HORIZ
1:300 VERT

555 EAST RAMSEY SAN ANTONIO TEXAS 78216
PHONE (210)375-9000
FAX (210)375-9010
PAPE-DAWSON ENGINEERS
CIVIL & ENVIRONMENTAL
STATE OF TEXAS K. STEPHEN BONNETTE 60928 REGISTERED PROFESSIONAL ENGINEER
K. STEPHEN BONNETTE, P.E. 9/20/00
DATE

© 2000 Texas Department of Transportation

# LOOP 1604 @ CARACOL CREEK BRIDGE LAYOUT
## BR. CLASS STRUCTURE NO.3
## STA 22+773.461 TO 22+813.182

| ON: | | | | | PROJECT NO. | | |
|---|---|---|---|---|---|---|---|
| CK ON: | | | | | NH 2000 (704), etc. | | |
| DW: | CONTROL | SECTION | JOB | DIST. | STATE | COUNTY | HIGHWAY NO. | SHEET NO. |
| CK DW: | 2452 | 01 | 036 etc. | SAT | TX | BEXAR | LOOP 1604 | 375 |

Design Filename: j:\39411\16\Civil\Design\PlanSheets\3941116CL17.dgn

| ESTIMATED QUANTITIES | | | |
|---|---|---|---|
| DESCRIPTION | UNIT | EST. | FINAL |
| RIPRAP (CONC) (CL B) | M3 | 143.5 | |
| CONC BOX CULV (3000MM X 3000MM) (SPL) | M | 797.10 | |
| WINGWALL (MCW-F2-30) | EA | 2 | |
| RAIL (T1-T6) | M | 38 | |
| * STRUCT EXCAV (CULV LARGE) | M3 | 191.2 | |
| CUT & RESTORE PVMNT | M2 | 345 | |

* SUPPLIED FOR CONTRACTOR'S INFORMATION ONLY

**QUANTITIES THIS SHEET**
**CSJ 2452-01-036**

PERM STR NO. 015-2452-01-029

ROW

MBGF TO BE QUANTIFIED ON RDWY PLAN SHEET

4.2 LN | 3.6 LN | 3.0 SHLDR

PROP. RDWY

11.236

STORM DRAIN LINE I-37

3:1

DRAINAGE EASEMENT

S 60°11'53" E

51.350

CARACOL CREEK

STA 22+838.037
76.497 LT
℄=241.372

MCW-F2-30

MCW-F2-30

130mm RIPRAP (CONC) (CL B)
FOR 3:1 TO 2:1 TRANSITION
W/#3 BARS @ 460mm OCEW
& 600mm X 150mm
TOEDOWN ALL AROUND
EST @ 91.9 M3

2.874

12.063

1.2 BERM

NB FRONTAGE ROAD

**THE CONTRACTOR SHALL SAWCUT BEFORE BREAKING BACK TO EXTEND EXISTING STRUCTURE. SAWCUTTING SHALL BE CONSIDERED SUBSIDIARY TO PERTINENT BID ITEM. THE SAWCUTTING AND EXTENDING SHALL BE IN ACCORDANCE TO ITEM 430.

3.6 LN | 3.6 LN | 3.0 SHLDR | 3.0 SHLDR

22.840

PROP. RDWY

MBGF TO BE QUANTIFIED ON RDWY PLAN SHEET

END BRIDGE CLASS STRUCTURE
STA 22+813.182

2.74

3:1

T6 RAIL
EST @ 38m

49.383

STA 22+798.181
7.466 LT
℄=241.763

30°

CARACOL CREEK

STA 22+793.878

22.780

EXIST WINGWALLS (TO BE REMOVED) SEE DETAIL "A"

EXIST. STRUCTURE (TO BE REMOVED)

CUT & RESTORE PVMNT
EST @ 345 M2

BEGIN BRIDGE CLASS STRUCTURE
STA 22+773.461

STORM DRAIN LINE I-35

9.237

SB MAIN LANE

℄ LOOP 1604

N 0°11'53" S

130mm RIPRAP (CONC) (CL B)
FOR 3:1 TO 2:1 TRANSITION
W/#3 BARS @ 460mm OCEW
& 600mm X 150mm
TOEDOWN ALL AROUND
EST @ 51.6 M3

MBGF TO BE QUANTIFIED ON RDWY PLAN SHEET

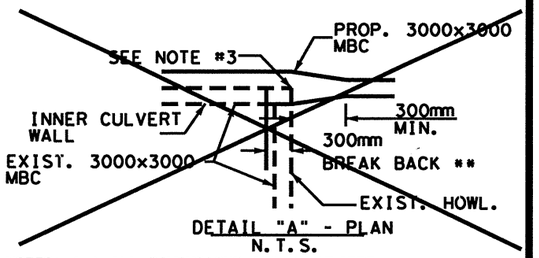


DETAIL "A" - PLAN
N.T.S.

NOTES:
1.) ALL DIMENSIONS ARE IN METERS UNLESS NOTED OTHERWISE.
2.) CONTRACTOR TO ADJUST HEADWALL AND WINGWALL STEEL DIMENSIONS TO MATCH FIELD CONDITIONS. ANY ADJUSTMENTS SHALL BE SUBSIDIARY TO THE PERTINENT BID ITEM.
3.) EXIST. WINGWALLS TO BE REMOVED AS SHOWN ON LAYOUT. A MIN. OF 300mm OF EXIST. MBC SHALL BE REMOVED TO BE RECONSTRUCTED WITH THE END TREATMENT OF THE PROP. MBC WIDENING. A MIN. OF 300mm OF EXIST. REINF. STEEL FROM EXIST. MBC AND HEADWALL SHALL REMAIN, BE CLEANED OF ALL LOOSE CONCRETE AND INCORPORATED INTO PROP. WIDENING. SEE DETAIL "A".
4.) MAX FILL HEIGHT ENCOUNTERED = 1.0 M
5.) BRIDGE CLASS CULVERT DESIGNED TO BE CAST-IN-PLACE AS SHOWN.
6.) FOR UPSTREAM HEADWALL PROFILE SEE UPSTREAM HEADWALL PROFILE SHEETS.
7.) CONTRACTOR IS TO PRESENT A PLAN TO THE ENGINEER FOR APPROVAL TO TIE-IN THE CAST-IN-PLACE CULV. TO THE PRECAST CULV.

SCALE: 1:600 HORIZ
1:300 VERT

℄ LOOP 1604

76.497 (NORM) / 88.332 (SKEW)

69.031 (NORM) / 79.710 (SKEW)

7.466 (NORM) / 8.621 (SKEW)

252 | 248 | 244 | 241 | 240 | 236 | 232

$TW_{100}$ = 243.06
$TW_{50}$ = 243.01

1.2 BERM (NORM)

MBGF

NBFR

PROP. FIN. GRADE

SB MAIN

PROP. FIN. GRADE

T6 RAIL (CULVERT MOUNTED)

PROP. HDWL. TO MATCH EXIST HDWL

$HW_{50}$ = 244.43
$HW_{100}$ = 244.65

MCW-F2-30

MCW-F2-30

EXIST. GROUND

ROW

PROP. SUBGRADE

0.490%

PROP. SUBGRADE

0.490%

EXIST. STRUCTURE (TO BE REMOVED)

GRADE TO DRAIN MATCH EXIST GR. IN +/- 26.7m

600mm x 150mm TOEDOWN ALL AROUND

℄ =241.372

MATCH EXIST. ℄ = 241.683

MATCH EXIST. ℄ = 241.763

GRADE TO DRAIN

BRIDGE CLASS STR. #3
STA 22+775.366 TO STA 22+812.374

EXIST: 4-3000mm x 3000mm x 13.453 MBC @ 30° LF SKEW WITH MCW-F2-30° WINGWALLS UPSTRM & DNSTRM TO BE REMOVED

PROP: 1C-3000mm X 3000mm X 79.710 MBC @ 30° LF SKEW US'NG ML-1.0-25(MOD) / T6-CM W/MCW-F2-30 UPSTRM & DNSTRM

140 | 120 | 100 | 80 | 60 | 40 | 20 | 0 | 20 | 40

CHANGE ORDER # 1370

- DELETED METRIC STANDARDS
- ALLOWED USAGE OF ENGLISH STDS
- CAST-IN-PLACE DESIGN
-REVISED QUANTITIES

37
10

CHANGE ORDER 13

FOR MODIFICATIONS WITH CO # 13 ONLY 10 37

STATE OF TEXAS — TERRY G. McCOY — 75016 — REGISTERED PROFESSIONAL ENGINEER

Terry G. McCoy 10-17-01
Terry G. McCoy, P.E. Date

© 2001 Texas Department of Transportation

LOOP 1604 @ CARACOL CREEK
BRIDGE LAYOUT
BR. CLASS STRUCTURE NO. 3
STA 22+773.461 TO 22+813.182

| DN: | | | | | PROJECT NO. | | |
|---|---|---|---|---|---|---|---|
| CK DN: | | | | | NH 2000 (704), etc. | | |
| DW: | CONTROL | SECTION | JOB | DIST. | STATE | COUNTY | HIGHWAY NO. | SHEET NO. |
| CK DW: | 2452 | 01 | 036 | SAT | TX | BEXAR | LOOP 1604 | 375A |

394116c117.dgn

9-24-01

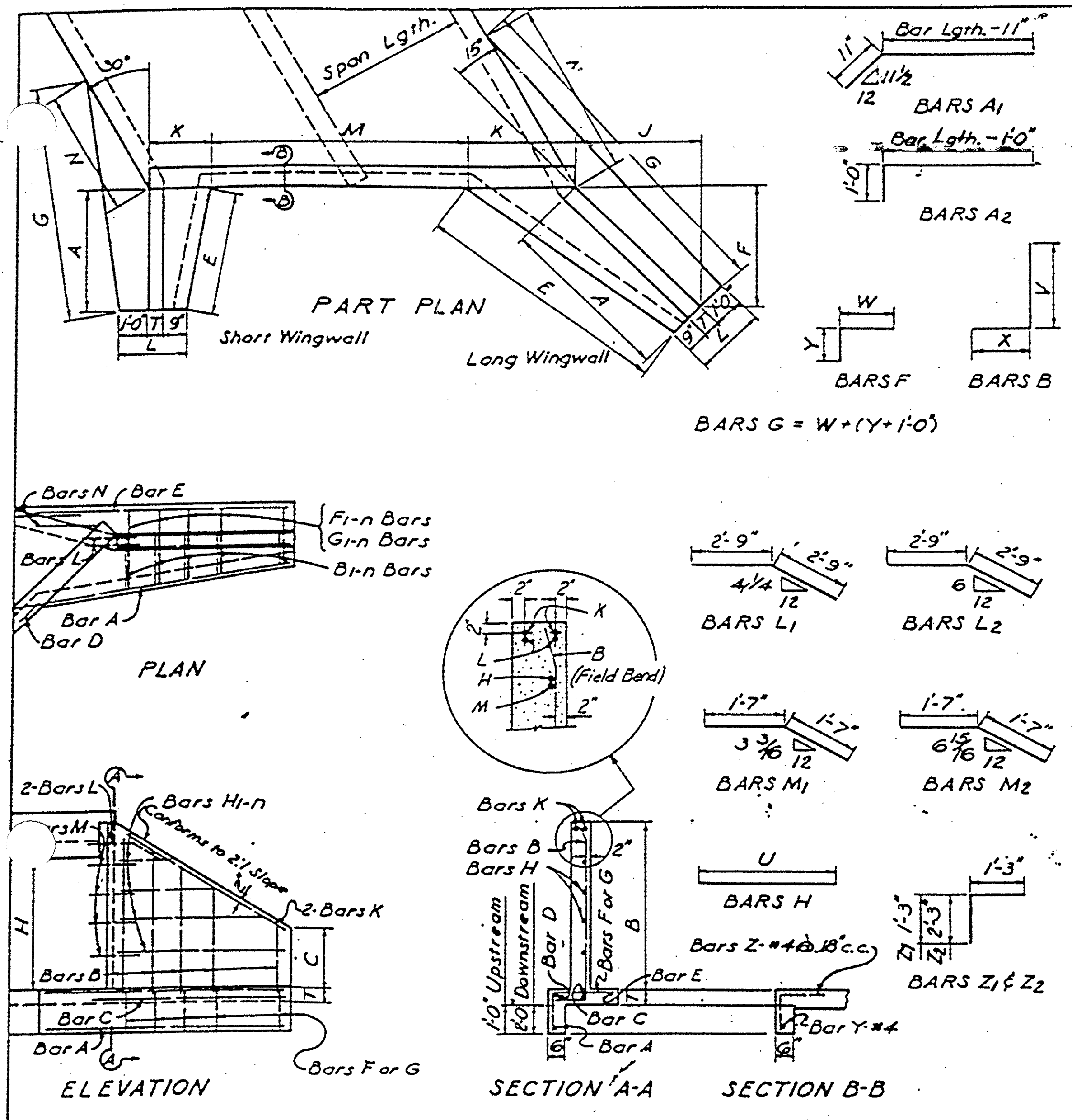


Note: Length of Y Bar equals dimension M plus 4" plus 12" Laps as required.

## QUANTITIES FOR TWO M.B.C. TOEWALLS

| H | SPAN LGTH. | 2 SPANS CONC. C.Y. | 2 SPANS REINF. Lbs. | 3 SPANS CONC. C.Y. | 3 SPANS REINF. Lbs. | 4 SPANS CONC. C.Y. | 4 SPANS REINF. Lbs. | 5 SPANS CONC. C.Y. | 5 SPANS REINF. Lbs. | 6 SPANS CONC. C.Y. | 6 SPANS REINF. Lbs. |
|---|---|---|---|---|---|---|---|---|---|---|---|
| 8' | 8'-0" | 0.88 | 64 | 1.44 | 90 | 2.00 | 147 | 2.55 | 186 | 3.11 | 227 |
| | 9'-0" | 1.01 | 75 | 1.63 | 118 | 2.32 | 165 | 2.94 | 213 | 3.49 | 252 |
| | 10'-0" | 1.14 | 82 | 1.82 | 132 | 2.51 | 185 | 3.19 | 233 | 3.88 | 281 |
| 9' | 9'-0" | 0.98 | 70 | 1.60 | 117 | 2.21 | 160 | 2.84 | 209 | 3.46 | 251 |
| | 10'-0" | 1.44 | 82 | 1.79 | 130 | 2.47 | 180 | 3.16 | 228 | 3.84 | 281 |
| 10' | 10'-0" | 1.06 | 77 | 1.75 | 129 | 2.43 | 179 | 3.11 | 227 | 3.80 | 276 |

## DIMENSION M FOR TOEWALLS

| H | SPAN LGTH. | 2 SPANS M | 3 SPANS M | 4 SPANS M | 5 SPANS M | 6 SPANS M |
|---|---|---|---|---|---|---|
| 8' | 8'-0" | 14'-9¼" | 24'-9 7/16" | 34'-9¼" | 44'-9 7/8" | 54'-9 7/16" |
| | 9'-0" | 17'-0 7/16" | 28'-2¾" | 39'-4 1/16" | 50'-6 5/8" | 61'-8 9/16" |
| | 10'-0" | 19'-4½" | 31'-8 5/16" | 44'-0 1/8" | 56'-3 15/16" | 68'-7 1/16" |
| 9' | 9'-0" | 16'-5 1/8" | 27'-7" | 38'-9" | 49'-10 5/8" | 61'-0 7/8" |
| | 10'-0" | 18'-8 13/16" | 31'-0 3/8" | 43'-4 7/16" | 55'-8¼" | 68'-0" |
| 10' | 10'-0" | 18'-1 5/16" | 30'-5 1/8" | 42'-8 7/8" | 55'-0 1/16" | 67'-4½" |

## TABLE OF DIMENSIONS FOR WINGWALLS

| | H | A | B | C | E | F | G | J | K | L | N | T |
|---|---|---|---|---|---|---|---|---|---|---|---|---|
| LONG WINGWALL | 8' | 20'-3¼" | 9'-2" | 2'-0" | 22'-10 5/16" | 14'-4" | 32'-6 3/8" | 14'-4" | 3'-7 5/16" | 2'-4" | 12'-7 5/8" | 7" |
| | 9' | 23'-1 7/16" | 10'-2" | 2'-0" | 25'-11 7/8" | 16'-4" | 36'-9 7/8" | 16'-4" | 4'-0" | 2'-4" | 14'-1 5/16" | 7" |
| | 10' | 25'-11 1/8" | 11'-2" | 2'-0" | 29'-0 7/8" | 18'-4" | 41'-0 5/16" | 18'-4" | 4'-4 9/16" | 2'-5" | 15'-6 7/8" | 8" |
| SHORT WINGWALL | 8' | 14'-4" | 9'-2" | 2'-0" | 14'-4½" | – | 19'-5¾" | – | 2'-5" | 2'-4" | 5'-10" | 7" |
| | 9' | 16'-4" | 10'-2" | 2'-0" | 16'-4 3/8" | – | 22'-0¼" | – | 2'-8" | 2'-4" | 6'-5¾" | 7" |
| | 10' | 18'-4" | 11'-2" | 2'-0" | 18'-4¾" | – | 24'-7 5/8" | – | 2'-11" | 2'-5" | 7'-1½" | 8" |

## BAR DIMENSIONS - LONG WINGWALL

### BARS B

| H | BAR | V | X | BAR | V | X |
|---|---|---|---|---|---|---|
| 8' | B1 | 2'-4" | 1'-1" | B5 | 4'-4" | 1'-4" |
| | B6 | 4'-6" | 1'-5" | B9 | 6'-1" | 1'-8" |
| | B10 | 6'-5" | 1'-8" | B13 | 7'-6" | 1'-10" |
| | B14 | 7'-9" | 1'-11" | B17 | 8'-6" | 2'-0" |
| | B18 | 8'-9" | 2'-0" | B22 | 9'-6" | 2'-2" |
| 9' | B1 | 2'-4" | 1'-1" | B6 | 4'-10" | 1'-6" |
| | B7 | 5'-3" | 1'-8" | B11 | 7'-0" | 1'-11" |
| | B12 | 7'-4" | 2'-0" | B17 | 8'-10" | 2'-2" |
| | B18 | 9'-1" | 2'-2" | B24 | 10'-5" | 2'-5" |
| 10' | B1 | 2'-5" | 1'-2" | B6 | 4'-11" | 1'-7" |
| | B7 | 5'-4" | 1'-8" | B11 | 7'-1" | 1'-11" |
| | B12 | 7'-5" | 2'-0" | B17 | 8'-11" | 2'-3" |
| | B18 | 9'-1" | 2'-3" | B23 | 10'-3" | 2'-6" |
| | B24 | 10'-6" | 2'-6" | B29 | 11'-5" | 2'-8" |

### BARS F

| H | BAR | W | Y | BAR | W | Y |
|---|---|---|---|---|---|---|
| 8' | F1 | 2'-1" | 1'-4" | F5 | 2'-9" | 1'-4" |
| | F6 | 2'-10" | 1'-4" | F9 | 3'-5" | 1'-4" |
| | F10 | 3'-6" | 1'-4" | F13 | 3'-11" | 1'-4" |
| | F14 | 4'-0" | 1'-4" | F17 | 4'-3" | 1'-4" |
| | F18 | 4'-4" | 1'-4" | F22 | 4'-7" | 1'-4" |
| 9' | F1 | 2'-1" | 1'-4" | F6 | 3'-0" | 1'-4" |
| | F7 | 3'-2" | 1'-4" | F11 | 3'-10" | 1'-4" |
| | F12 | 3'-11" | 1'-4" | F17 | 4'-6" | 1'-4" |
| | F18 | 4'-7" | 1'-4" | F24 | 5'-1" | 1'-4" |
| 10' | F1 | 2'-2" | 1'-5" | F6 | 3'-1" | 1'-5" |
| | F7 | 3'-3" | 1'-5" | F11 | 3'-11" | 1'-5" |
| | F12 | 4'-1" | 1'-5" | F17 | 4'-7" | 1'-5" |
| | F18 | 4'-8" | 1'-5" | F23 | 5'-2" | 1'-5" |
| | F24 | 5'-3" | 1'-5" | F29 | 5'-7" | 1'-5" |

### BARS H

| H | BAR | DIMENSION U | BAR | DIMENSION U |
|---|---|---|---|---|
| 8' | H1 | 3'-10" | H4 | 16'-6" |
| 9' | H1 | 3'-10" | H5 | 20'-10" |
| 10' | H1 | 3'-10" | H6 | 25'-0" |

## BAR DIMENSIONS - SHORT WINGWALL

### BARS B

| H | BAR | V | X | BAR | V | X |
|---|---|---|---|---|---|---|
| 8' | B1 | 2'-5" | 1'-1" | B4 | 4'-8" | 1'-5" |
| | B5 | 5'-2" | 1'-6" | B7 | 6'-2" | 1'-8" |
| | B8 | 6'-8" | 1'-9" | B12 | 8'-6" | 2'-0" |
| | B13 | 8'-10" | 2'-1" | B15 | 9'-6" | 2'-2" |
| 9' | B1 | 2'-6" | 1'-1" | B4 | 4'-3" | 1'-6" |
| | B5 | 5'-2" | 1'-7" | B7 | 6'-2" | 1'-9" |
| | B8 | 6'-8" | 1'-10" | B11 | 8'-2" | 2'-0" |
| | B12 | 8'-6" | 2'-1" | B14 | 9'-2" | 2'-2" |
| | B15 | 9'-5" | 2'-3" | B20 | 10'-5" | 2'-5" |
| 10' | B1 | 2'-6" | 1'-2" | B4 | 4'-9" | 1'-7" |
| | B5 | 5'-3" | 1'-8" | B7 | 6'-3" | 1'-10" |
| | B8 | 6'-9" | 1'-11" | B11 | 8'-3" | 2'-1" |
| | B12 | 8'-7" | 2'-2" | B17 | 10'-3" | 2'-5" |
| | B18 | 10'-6" | 2'-6" | B22 | 11'-6" | 2'-8" |

### BARS F

| H | BAR | W | Y | BAR | W | Y |
|---|---|---|---|---|---|---|
| 8' | F1 | 2'-1" | 1'-4" | F4 | 2'-11" | 1'-4" |
| | F5 | 3'-1" | 1'-4" | F7 | 3'-5" | 1'-4" |
| | F8 | 3'-7" | 1'-4" | F12 | 4'-3" | 1'-4" |
| | F13 | 4'-4" | 1'-4" | F15 | 4'-7" | 1'-4 |
| 9' | F1 | 2'-1" | 1'-4" | F4 | 2'-11" | 1'-4" |
| | F5 | 3'-2" | 1'-4" | F7 | 3'-6" | 1'-4" |
| | F8 | 3'-8" | 1'-4" | F11 | 4'-3" | 1'-4" |
| | F12 | 4'-4" | 1'-4" | F14 | 4'-7" | 1'-4" |
| | F15 | 4'-8" | 1'-4" | F20 | 5'-1" | 1'-4" |
| 10' | F1 | 2'-2" | 1'-5" | F4 | 3'-0" | 1'-5" |
| | F5 | 3'-3" | 1'-5" | F7 | 3'-7" | 1'-5" |
| | F8 | 3'-9" | 1'-5" | F11 | 4'-4" | 1'-5" |
| | F12 | 4'-6" | 1'-5" | F17 | 5'-1" | 1'-5" |
| | F18 | 5'-2" | 1'-5" | F22 | 5'-7" | 1'-5" |

### BARS H

| H | BAR | DIMENSION U | BAR | DIMENSION U |
|---|---|---|---|---|
| 8' | H1 | 2'-8" | H4 | 11'-8" |
| 9' | H1 | 2'-8" | H5 | 14'-8" |
| 10' | H1 | 2'-8" | H6 | 17'-8" |

## BILLS OF REINFORCING STEEL FOR H=8'-0"

### TWO LONG WINGWALLS

| Bar | No. | Size | Spac. | Length | Weight |
|---|---|---|---|---|---|
| A1 | 2 | 4 | – | 23'-10" | 32 |
| B1-5 | 10 | 4 | 17" | Av. 4'-6½" | 30 |
| B6-9 | 8 | 5 | 15" | Av. 6'-10" | 57 |
| B10-13 | 8 | 5 | 12" | Av. 8'-8½" | 73 |
| B14-17 | 8 | 5 | 9" | Av. 10'-2" | 85 |
| B18-22 | 10 | 5 | 6" | Av. 11'-2½" | 117 |
| C | 2 | 5 | – | 21'-7" | 45 |
| D | 2 | 5 | – | 24'-2" | 50 |
| E | 2 | 6 | – | 33'-11" | 102 |
| F1-5 | 5 | 4 | 17" | Av. 3'-9" | 13 |
| F6-9 | 4 | 5 | 15" | Av. 4'-5½" | 19 |
| F10-13 | 4 | 5 | 12" | Av. 5'-0½" | 21 |
| F14-17 | 4 | 5 | 9" | Av. 5'-5½" | 23 |
| F18-22 | 5 | 5 | 6" | Av. 5'-9½" | 30 |
| G1-5 | 5 | 4 | 17" | Av. 4'-9" | 16 |
| G6-9 | 4 | 5 | 15" | Av. 5'-5½" | 23 |
| G10-13 | 4 | 5 | 12" | Av. 6'-0½" | 25 |
| G14-17 | 4 | 5 | 9" | Av. 6'-5½" | 27 |
| G18-22 | 5 | 5 | 6" | Av. 6'-9½" | 35 |
| H1-4 | 8 | 4 | 18" | Av. 10'-2" | 54 |
| H5 | 2 | 4 | 12" | 19'-5" | 26 |
| H6 | 2 | 4 | 12" | 19'-11" | 27 |
| K | 4 | 6 | – | 21'-3" | 128 |
| L1 | 4 | 7 | – | 5'-6" | 45 |
| M1 | 12 | 5 | 18&12 | 3'-2" | 40 |
| N | 4 | 5 | – | 3'-2" | 13 |
| P | 4 | 5 | 6" | 4'-8" | 19 |
| Reinforcing Steel | | | | Lbs. | 1175 |
| Concrete | | | | C.Y. | 10.06 |

### TWO SHORT WINGWALLS

| Bar | No. | Size | Spac. | Length | Weight |
|---|---|---|---|---|---|
| A2 | 2 | 4 | – | 15'-6" | 21 |
| B1-4 | 8 | 4 | 18" | Av. 4'-10" | 26 |
| B5-7 | 6 | 4 | 12" | Av. 6'-11" | 28 |
| B8-12 | 10 | 5 | 11" | Av. 9'-5½" | 99 |
| B13-15 | 6 | 5 | 8" | Av. 11'-3½" | 71 |
| C | 2 | 5 | – | 15'-11" | 33 |
| D | 2 | 5 | – | 15'-10" | 33 |
| E | 2 | 5 | – | 20'-10" | 43 |
| F1-4 | 4 | 4 | 18" | Av. 3'-10" | 10 |
| F5-7 | 3 | 4 | 12" | Av. 4'-7" | 9 |
| F8-12 | 5 | 5 | 11" | Av. 5'-3" | 27 |
| F13-15 | 3 | 5 | 8" | Av. 5'-9½" | 18 |
| G1-4 | 4 | 4 | 18" | Av. 4'-10" | 13 |
| G5-7 | 3 | 4 | 12" | Av. 5'-7" | 11 |
| G8-12 | 5 | 5 | 11" | Av. 6'-3" | 33 |
| G13-15 | 3 | 5 | 8" | Av. 6'-9½" | 21 |
| H1-4 | 8 | 4 | 18" | Av. 7'-2" | 38 |
| H5 | 2 | 4 | 12" | 13'-8" | 18 |
| H6 | 2 | 4 | 12" | 14'-0" | 19 |
| K | 4 | 5 | – | 15'-9" | 66 |
| L2 | 4 | 7 | – | 5'-6" | 45 |
| M2 | 12 | 5 | 18&12 | 3'-2" | 40 |
| N | 4 | 5 | – | 3'-2" | 13 |
| Reinforcing Steel | | | | Lbs. | 735 |
| Concrete | | | | C.Y. | 6.81 |

## BILLS OF REINFORCING STEEL FOR H=9'-0"

### TWO LONG WINGWALLS

| Bar | No. | Size | Spac. | Length | Weight |
|---|---|---|---|---|---|
| A1 | 2 | 4 | – | 27'-0" | 36 |
| B1-6 | 12 | 4 | 17" | Av. 4'-10½" | 39 |
| B7-11 | 10 | 5 | 15" | Av. 7'-11" | 83 |
| B12-17 | 12 | 5 | 10" | Av. 10'-2" | 127 |
| B18-24 | 14 | 5 | 7½" | Av. 12'-0½" | 176 |
| C | 2 | 5 | – | 24'-5" | 51 |
| D | 2 | 6 | – | 27'-4" | 82 |
| E | 2 | 6 | – | 38'-2" | 115 |
| F1-6 | 6 | 4 | 17" | Av. 3'-10½" | 16 |
| F7-11 | 5 | 5 | 15" | Av. 4'-10" | 25 |
| F12-17 | 6 | 5 | 10" | Av. 5'-6½" | 35 |
| F18-24 | 7 | 5 | 7½" | Av. 6'-2" | 45 |
| G1-6 | 6 | 4 | 17" | Av. 4'-10½" | 20 |
| G7-11 | 5 | 5 | 15" | Av. 5'-10" | 30 |
| G12-17 | 6 | 5 | 10" | Av. 6'-6½" | 41 |
| G18-24 | 7 | 5 | 7½" | Av. 7'-2" | 52 |
| H1-5 | 10 | 4 | 18" | Av. 12'-4" | 82 |
| H6 | 4 | 4 | 12" | 22'-9" | 61 |
| K | 4 | 6 | – | 24'-3" | 146 |
| L1 | 4 | 8 | – | 5'-6" | 59 |
| M1 | 14 | 5 | 18&12 | 3'-2" | 46 |
| N | 4 | 6 | – | 3'-9" | 23 |
| P | 4 | 5 | 7½" | 5'-2" | 22 |
| Reinforcing Steel | | | | Lbs. | 1412 |
| Concrete | | | | C.Y. | 12.28 |

### TWO SHORT WINGWALLS

| Bar | No. | Size | Spac. | Length | Weight |
|---|---|---|---|---|---|
| A2 | 2 | 4 | – | 17'-6" | 23 |
| B1-4 | 8 | 4 | 18" | Av. 4'-10½" | 26 |
| B5-7 | 6 | 4 | 12" | Av. 7'-4" | 29 |
| B8-11 | 8 | 5 | 12" | Av. 9'-4" | 78 |
| B12-14 | 6 | 5 | 8" | Av. 10'-11½" | 69 |
| B15-20 | 12 | 5 | 6" | Av. 12'-3" | 153 |
| C | 2 | 5 | – | 17'-11" | 37 |
| D | 2 | 5 | – | 17'-11" | 37 |
| E | 2 | 6 | – | 23'-5" | 70 |
| F1-4 | 4 | 4 | 18" | Av. 3'-10" | 10 |
| F5-7 | 3 | 4 | 12" | Av. 4'-8" | 9 |
| F8-11 | 4 | 5 | 12" | Av. 5'-3½" | 22 |
| F12-14 | 3 | 5 | 8" | Av. 5'-9½" | 17 |
| F15-20 | 6 | 5 | 6" | Av. 6'-2½" | 39 |
| G1-4 | 4 | 4 | 18" | Av. 4'-10" | 13 |
| G5-7 | 3 | 4 | 12" | Av. 5'-8" | 11 |
| G8-11 | 4 | 5 | 12" | Av. 6'-3½" | 26 |
| G12-14 | 3 | 5 | 8" | Av. 6'-9½" | 21 |
| G15-20 | 6 | 5 | 6" | Av. 7'-2½" | 45 |
| H1-5 | 10 | 4 | 18" | Av. 8'-8" | 58 |
| H6 | 4 | 4 | 12" | 16'-0" | 43 |
| K | 4 | 6 | – | 18'-0" | 108 |
| L2 | 4 | 8 | – | 5'-6" | 59 |
| M2 | 14 | 5 | 18&12 | 3'-2" | 46 |
| N | 4 | 6 | – | 3'-9" | 23 |
| Reinforcing Steel | | | | Lbs. | 1072 |
| Concrete | | | | C.Y. | 8.26 |

## BILLS OF REINFORCING STEEL FOR H=10'-0"

### TWO LONG WINGWALLS

| Bar | No. | Size | Spac. | Length | Weight |
|---|---|---|---|---|---|
| A1 | 2 | 4 | – | 30'-1" | 40 |
| B1-6 | 12 | 4 | 17" | Av. 5'-0½" | 40 |
| B7-11 | 10 | 5 | 15" | Av. 8'-0" | 83 |
| B12-17 | 12 | 5 | 10" | Av. 10'-3½" | 129 |
| B18-23 | 12 | 5 | 8" | Av. 12'-0½" | 151 |
| B24-29 | 12 | 5 | 6½" | Av. 13'-6½" | 169 |
| C | 2 | 6 | – | 27'-3" | 82 |
| D | 2 | 6 | – | 30'-5" | 91 |
| E | 2 | 6 | – | 43'-8" | 131 |
| F1-6 | 6 | 4 | 17" | Av. 4'-0½" | 16 |
| F7-11 | 5 | 5 | 15" | Av. 5'-0" | 26 |
| F12-17 | 6 | 5 | 10" | Av. 5'-9" | 36 |
| F18-23 | 6 | 5 | 8" | Av. 6'-4" | 40 |
| F24-29 | 6 | 5 | 6½" | Av. 6'-10" | 43 |
| G1-6 | 6 | 4 | 17" | Av. 5'-0½" | 20 |
| G7-11 | 5 | 5 | 15" | Av. 6'-0" | 31 |
| G12-17 | 6 | 5 | 10" | Av. 6'-9" | 42 |
| G18-23 | 6 | 5 | 8" | Av. 7'-4" | 46 |
| G24-29 | 6 | 5 | 6½" | Av. 7'-10" | 49 |
| H1-6 | 12 | 4 | 18" | Av. 14'-5" | 116 |
| H7 | 2 | 4 | 12" | 25'-7" | 34 |
| K | 4 | 6 | – | 27'-3" | 164 |
| L1 | 4 | 8 | – | 5'-6" | 59 |
| M1 | 14 | 5 | 18&12 | 3'-2" | 46 |
| N | 4 | 6 | – | 3'-9" | 23 |
| P | 4 | 5 | 6½" | 5'-8" | 24 |
| Reinforcing Steel | | | | Lbs. | 1731 |
| Concrete | | | | C.Y. | 16.56 |

### TWO SHORT WINGWALLS

| Bar | No. | Size | Spac. | Length | Weight |
|---|---|---|---|---|---|
| A2 | 2 | 4 | – | 18'-6" | 25 |
| B1-4 | 8 | 4 | 18" | Av. 5'-0" | 27 |
| B5-7 | 6 | 4 | 12" | Av. 7'-6" | 30 |
| B8-11 | 8 | 5 | 12" | Av. 9'-6" | 79 |
| B12-17 | 12 | 5 | 8" | Av. 11'-8½" | 147 |
| B18-22 | 10 | 5 | 6" | Av. 13'-7" | 142 |
| C | 2 | 5 | – | 19'-11" | 42 |
| D | 2 | 5 | – | 19'-11" | 42 |
| E | 2 | 6 | – | 26'-0" | 78 |
| F1-4 | 4 | 4 | 18" | Av. 4'-0" | 11 |
| F5-7 | 3 | 4 | 12" | Av. 4'-10" | 10 |
| F8-11 | 4 | 5 | 12" | Av. 5'-5½" | 23 |
| F12-17 | 6 | 5 | 8" | Av. 6'-2½" | 39 |
| F18-22 | 5 | 5 | 6" | Av. 6'-9½" | 35 |
| G1-4 | 4 | 4 | 18" | Av. 5'-0" | 13 |
| G5-7 | 3 | 4 | 12" | Av. 5'-10" | 12 |
| G8-11 | 4 | 5 | 12" | Av. 6'-5½" | 27 |
| G12-17 | 6 | 5 | 8" | Av. 7'-2½" | 45 |
| G18-22 | 5 | 5 | 6" | Av. 7'-9½" | 40 |
| H1-6 | 12 | 4 | 18" | Av. 10'-2" | 81 |
| H7 | 2 | 4 | 12" | 18'-0" | 24 |
| K | 4 | 6 | – | 20'-3" | 122 |
| L2 | 4 | 8 | – | 5'-6" | 59 |
| M2 | 14 | 5 | 18&12 | 3'-2" | 46 |
| N | 4 | 6 | – | 3'-9" | 23 |
| Reinforcing Steel | | | | Lbs. | 1222 |
| Concrete | | | | C.Y. | 11.16 |

Note: 20 bar diameter laps have been provided where required for the reinforcing steel lengths as given in the tables.

GENERAL NOTES:

DESIGN: Wingwall designed in accordance with Rankine's theory of retaining wall design.

Chamfer exposed corners ¾" unless specified otherwise.

All dimensions relating to reinforcing steel are to centers of bars.

The toewalls for wingwalls and culverts shall be omitted when structure is founded on solid rock.

TEXAS HIGHWAY DEPARTMENT

# FLARED WINGWALLS

FOR 30° SKEWED MULTIPLE BOX CULVERTS
H= 8'-0" TO 10'-0" INCLUSIVE

MCW-F2-30°

| DN. J.M.G. | DRAWING | DATE | FED. AD. DIV. NO. | STATE | FEDERAL PROJECT NO. | | | SHEET NO. |
|---|---|---|---|---|---|---|---|---|
| CK. DN. H.W.W. | original | 11-26-56 | 6 | TEXAS | NH 2000 (704), etc. | | | 375B |
| DW. H.W.W. | | | STATE DIST. NO. | COUNTY | CONT. | SECT. | JOB | HIGHWAY NO. |
| CK. DW. C.K.D. | Rev. Nov. 1967 | | SAT | Bexar | 2452 | 01 | 036 | Lp1604 etc. |

CO#37

# BILLS OF REINFORCING STEEL (For Box Length = 40 feet)

| NUMBER OF SPANS | SECTION DIMENSIONS | | | | ⑥Bars B | | | | | Bars C & D | | | | | | | ⑥Bars E | | | | | Bars $F_1$ ~#4 | | | | Bars $F_2$ ~#4 at 1'-6" Max | | | Bars M~#4 at 1'-3" Max | | | Bars Y & Z~#4 at 1'-3" Max | | | | | ⑥Bars H 4~#4 | | Bars K | | QUANTITIES Per foot of Barrel | | Curb | | Total | |
|---|---|---|---|---|---|---|---|---|---|---|---|---|---|---|---|---|---|---|---|---|---|---|---|---|---|---|---|---|---|---|---|---|---|---|---|---|---|---|---|---|---|---|---|---|
| | | | | | | | | | | | | | Bar C | | Bar D | | | | | | | | | | | | | | | | | | | | | | | | | | | | | | | | |
| | S | H | T | U | No. | Size | Spa | Length | Wt | No. | Size | Spa | Length | Wt | Length | Wt | No. | Size | Spa | Length | Wt | No. | Spa | Length | Wt | No. | Length | Wt | No. | Length | Wt | No. | Bar Y Length | Bar Y Wt | Bar Z Length | Bar Z Wt | Length | Weight | No. | Weight | Conc (CY) | Reinf (Lb) | Conc (CY) | Reinf (Lb) | Conc (CY) | Reinf (Lb) |
| 10 | 10'-0" | 10'-0" | 13" | 11" | 194 | #6 | 5" | 112'-5" | 32,757 | 194 | #6 | 5" | 18'-11" | 5,512 | 11'-1" | 3,230 | 194 | #8 | 5" | 107'-3" | 55,554 | 170 | 7" | 39'-9" | 4,514 | 386 | 39'-9" | 10,250 | 66 | 10'-0" | 441 | 297 | 5'-8" | 1,124 | 22'-2" | 4,398 | 111'-10" | 299 | 222 | 630 | 12.57 | 2,944.5 | 8.2 | 929 | 511.0 | 118,709 |

| H | Bar Dimensions | |
|---|---|---|
| | "X" | "Y" |
| 5'-0" | 5'-11" | 3'-1" |
| 6'-0" | 6'-11" | 3'-1" |
| 7'-0" | 7'-11" | 3'-1" |
| 8'-0" | 8'-11" | 3'-1" |
| 9'-0" | 9'-11" | 3'-1" |
| 10'-0" | 10'-11" | 3'-1" |

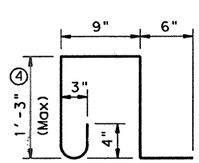


BARS K ~ #4
(Spa = 1'-0" Max)
(Length = 4'-3")

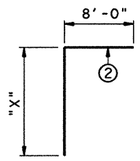


BARS C

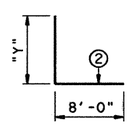


BARS D

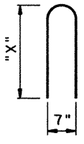


BARS Z

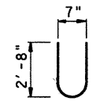


BARS Y

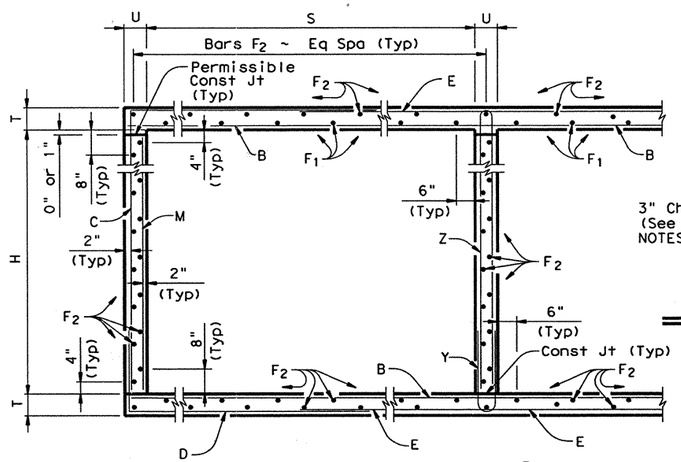


TYPICAL SECTION③

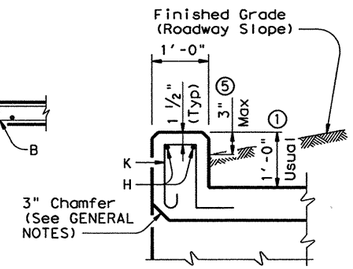


SECTION THRU CURB

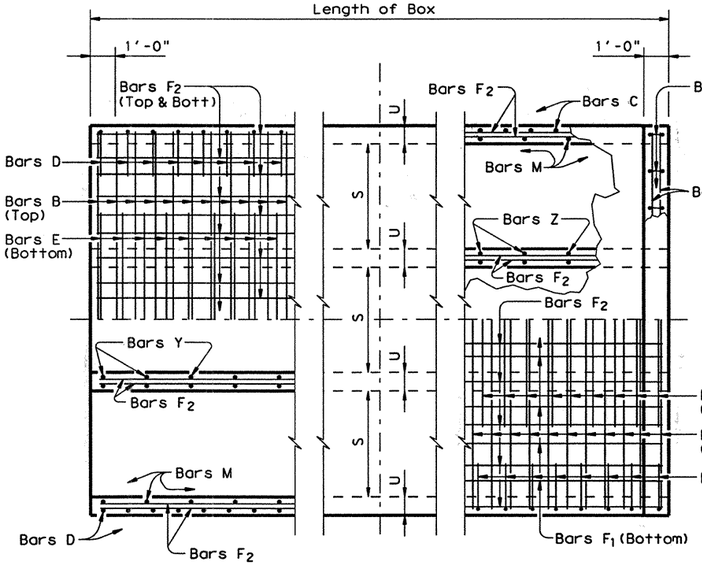


BOTTOM SLAB — PART PLANS③ — TOP SLAB

Glenn P. Grisham P.E. 9-21-2001
Glenn P. Grisham — Date

CHANGE ORDER No. 37 ~~13~~

Change Order No. 10
Special Conc. Box Culvert
Design For Bridge Class
Culvert No. 3.

① 0" min to 5'-0" max. For T6 or C6 Rail, see T6-CM standard for additional details. For curbs without rail and greater than 1'-0" high, see ECD standard for additional details.

② Extend into slab.

③ Reinforcing shown for orientation purposes only. See table for number and spacing of bars.

④ For curbs less than 1'-0" high, tilt bars K or reduce bar height as necessary to maintain cover. For curbs less than 3" high, bars K may be omitted.

⑤ For vehicle safety, curb heights shall be reduced, if necessary, to provide a maximum 3" projection above finished grade. No changes will be made in quantities and no additional compensation will be allowed for this work.

⑥ Bar lengths over 60' include one bar lap as follows: #4 = 1'-9", #5 = 2'-2", #6 = 2'-7"& #8 = 4'-6"

## GENERAL NOTES:

Designed according to 1996 AASHTO Standard and Interim Specifications.
Designed for HS20 Loading and to the maximum fill height shown.
All reinforcing steel shall be Grade 60.
All concrete shall be Class "C" concrete with a minimum 28 day compressive strength of 3600 psi.
The bottom edge of the top slab shall be chamfered 3" at the entrance.
Reinforcing bars shall be adjusted to provide a minimum of 1 ¼" clear cover.
Construction joints shown at the flow line may be raised a maximum of 6" at the Contractor's option. If this option is used, Bars M may be cut off or raised, Bars C and D may be reversed, and Bars Y and Z may be reversed.
See standard MC-MD for skewed ends, angle sections and lengthening details.

HS20 LOADING

Texas Department of Transportation

# MULTIPLE BOX CULVERTS
## 10'-0" SPAN
## 25' FILL

## MC-10-25 (MOD)

| FILE: mc123gpg.dgn | DN: GPC | CK: MWM | DW: MRM | CK: GPG |
|---|---|---|---|---|
| ©TxDOT Sept. 2001 | DISTRICT | FEDERAL AID PROJECT | | SHEET |
| REVISIONS | SAT | | | 35C |
| | COUNTY | CONTROL | SECT | JOB | HIGHWAY |
| | BEXAR | 2452 | 01 | 036 | LP1604 |

CO#37

DISCLAIMER:
The use of this standard is governed by the "Texas Engineering Practice Act". No warranty of any kind is made by TxDOT for any purpose whatsoever. TxDOT assumes no responsibility for the conversion of this standard to other formats or for incorrect results or damages resulting from its use.

ACC:
LEVELS DISPLAYED
1

DISCLAIMER:
The use of this standard is governed by the "Texas Engineering Practice Act". No warranty of any kind is made by TxDOT for any purpose whatsoever. TxDOT assumes no responsibility for the conversion of this standard to other formats or for incorrect results or damages resulting from its use.

ACC: (LY=1,2 for English; 1,3 for Metric)
LEVELS DI... FED 1 2

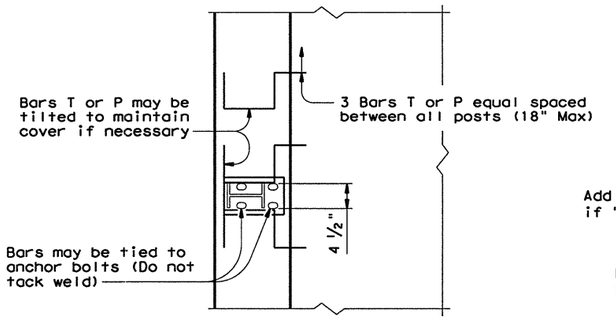


PLAN

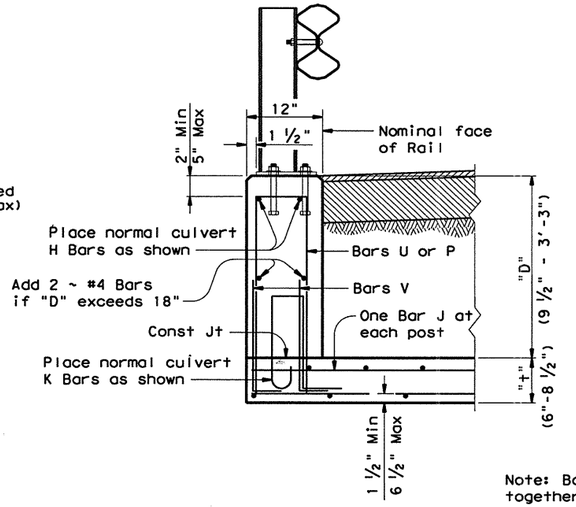


ELEVATION

## CULVERT FILL 9 ½" to 3'-3"

Note: Bars U and V are always used together and must lap a minimum of 9"

Note: Place bars T, P or U as high as possible within the ranges shown.

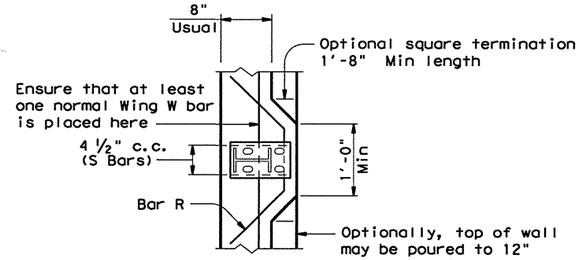


PLAN

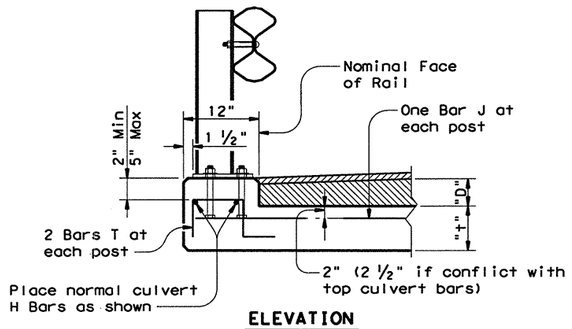


ELEVATION

"D"= 2" to 9"
"+"= 6" to 8 ½"

## DIRECT TRAFFIC TO 9" FILL

Standard Culvert "K" Bars may be tilted as necessary to maintain cover.

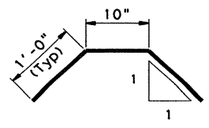


BARS R (#5)

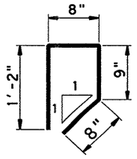


BARS S (#5)

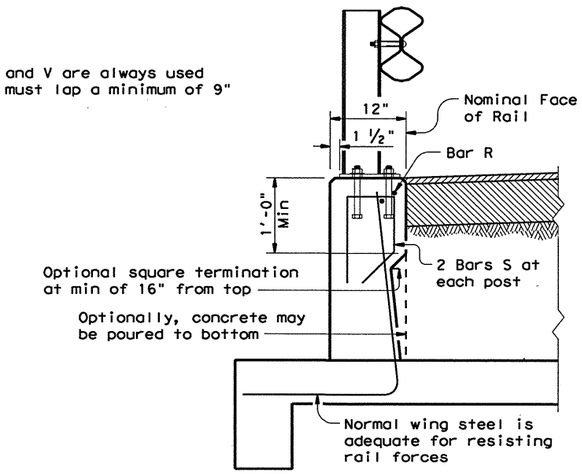


ELEVATION

## CULVERT WINGWALLS

Note:
See standard sheet titled: Traffic Rail Type T6 for railing, post and anchor bolt details. These culvert mounting details are not suitable for mounting other rail types.
All reinforcing shall be Grade 60.

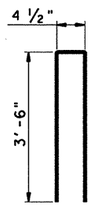


BARS J (#5)

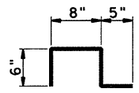


BARS T (#5)
("D" = 2"TO 9")

2 at 4 ½" c.c. at each post
3 at 18" Max between all posts

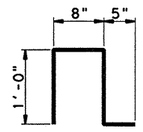


BARS P (#5)
("D" = 9 ½"to 1'-3")

2 at 4 ½" c.c. at each post
3 at 18" Max between all posts

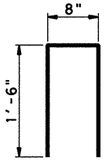


BARS U (#5)
("D" = 1'-3 ½"to 3'-3")

2 at 4 ½" c.c. at each post
3 at 18" Max between all posts

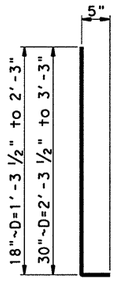


BARS V (#5)

2 pairs at 4 ½" c.c. at each post
3 pairs at 18" Max between all posts

Texas Department of Transportation
Design Division (Bridge)

# CULVERT MOUNTING FOR T6 TRAFFIC RAIL

## T6-CM

| FILE: ristd022.dgn | DN: JJP | CK: THD | DW: KDK | CK: LDS | STD: B584 |
|---|---|---|---|---|---|
| ©TxDOT January 1996 | DIST | FED REG | FEDERAL AID PROJECT • | | SHEET |
| REVISIONS | SAT | 6 | NH 2000 (704), etc. | | 3150 |
| | COUNTY | | CONTROL | SECT | JOB | HIGHWAY |
| | BEXAR | | 2452 | 01 | 036 | LP 1604 |

Cont37

DISCLAIMER:
The use of this standard is governed by the "Texas Engineering Practice Act". No warranty of any kind is made by TxDOT for any purpose whatsoever. TxDOT assumes no responsibility for the conversion of this standard to other formats or for incorrect results or damages resulting from its use.

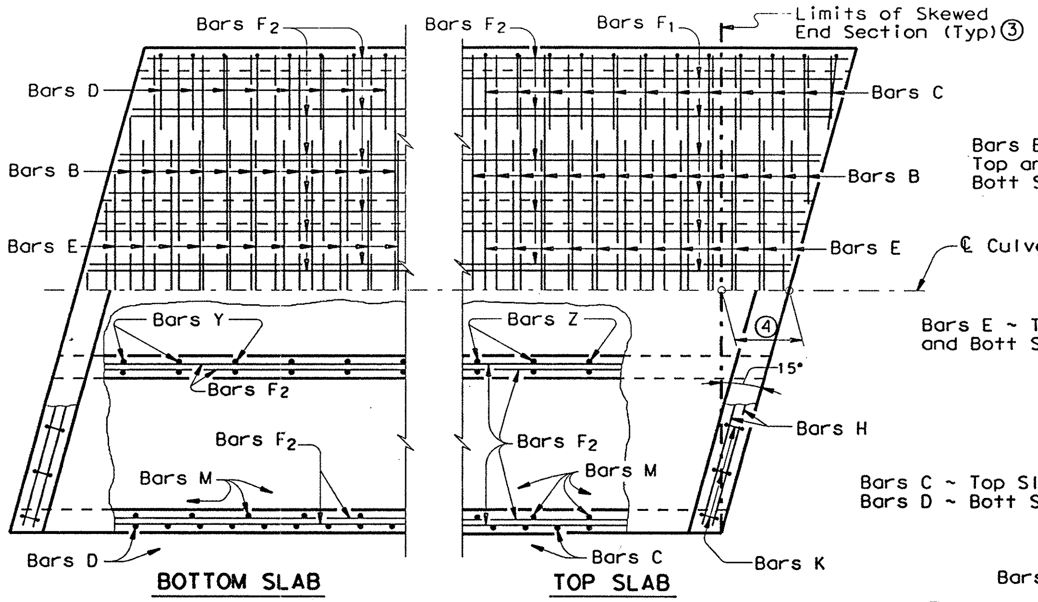


PLAN OF SKEWED ENDS ~ 15° ⑦

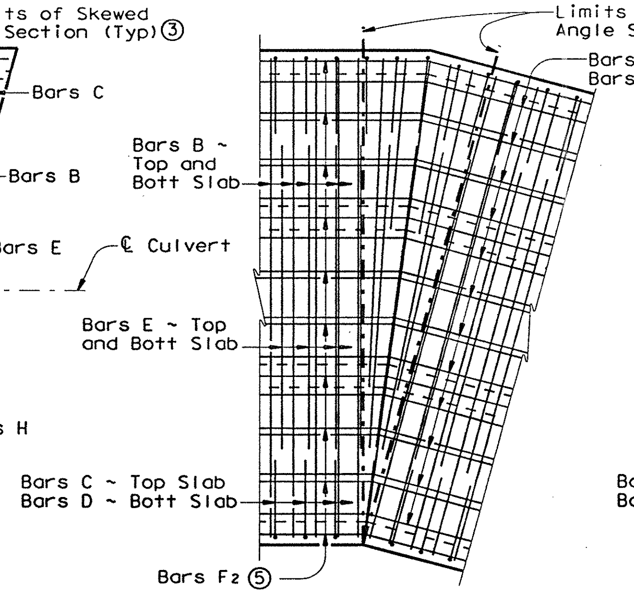


PLAN OF ANGLE SECTION ~ 15°

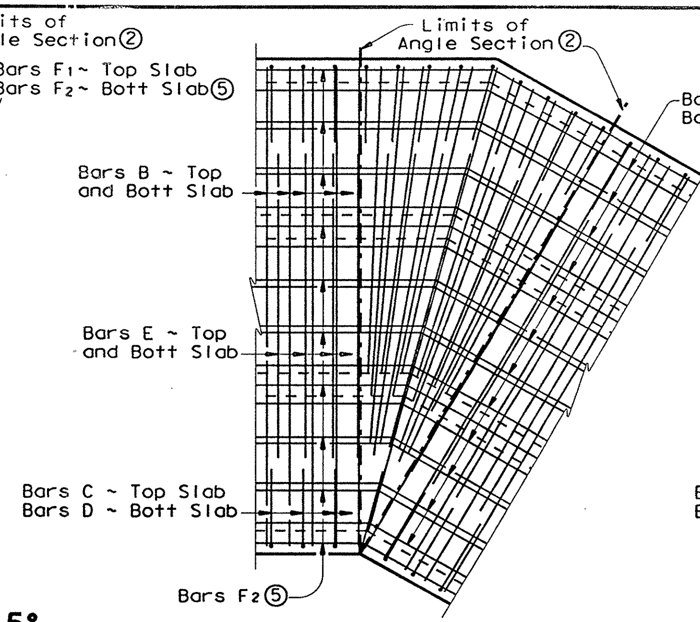


PLAN OF ANGLE SECTION ~ 30°

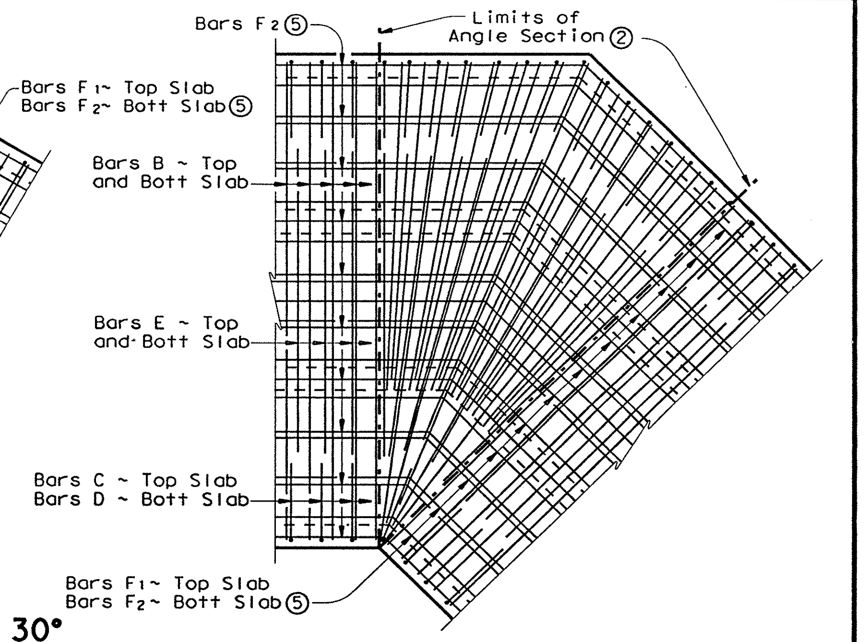


PLAN OF ANGLE SECTION ~ 45°

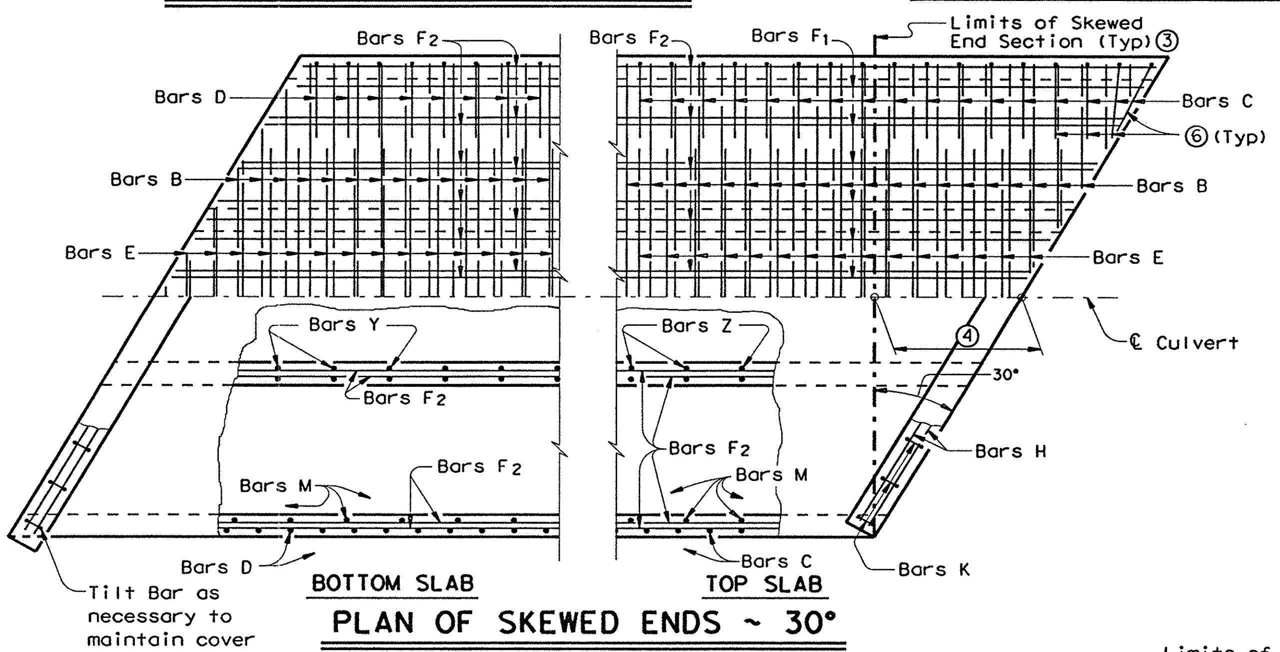


PLAN OF SKEWED ENDS ~ 30°

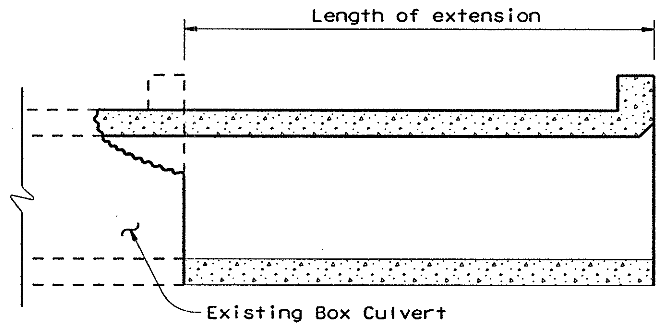


LENGTHENING DETAIL ①

① For box culverts with less than 2'-0" of fill, the top slab shall be broken back to provide a minimum 1'-10" lap of the existing longitudinal bars with the longitudinal bars in the extension. If the depth of fill is 2'-0" or greater, the top slab shall be broken back to provide a 1'-0" minimum embedment of existing longitudinal reinforcing into the extension. Alternatively, if the fill height is greater than 2'-0", the existing curb may be left in place and 2'-0" long #6 bars shall be drilled and grouted 1'-0" into the existing top slab at 1'-6" center to center spacing. Wings and apron shall be broken back as necessary to install the extension. Exposed wingwall and apron reinforcing may be removed or cleaned and included in the extension. When lengthening existing box culverts with dimensions different than current standard dimensions, horizontal and vertical transitions shall be formed as directed by the Engineer. Bottom slabs shall match to maintain an uninterrupted flow line. Existing and new reinforcing shall be field bent into transition maintaining specified cover requirements. For direct traffic culverts, the "H" dimension may be adjusted to provide a smooth riding surface.

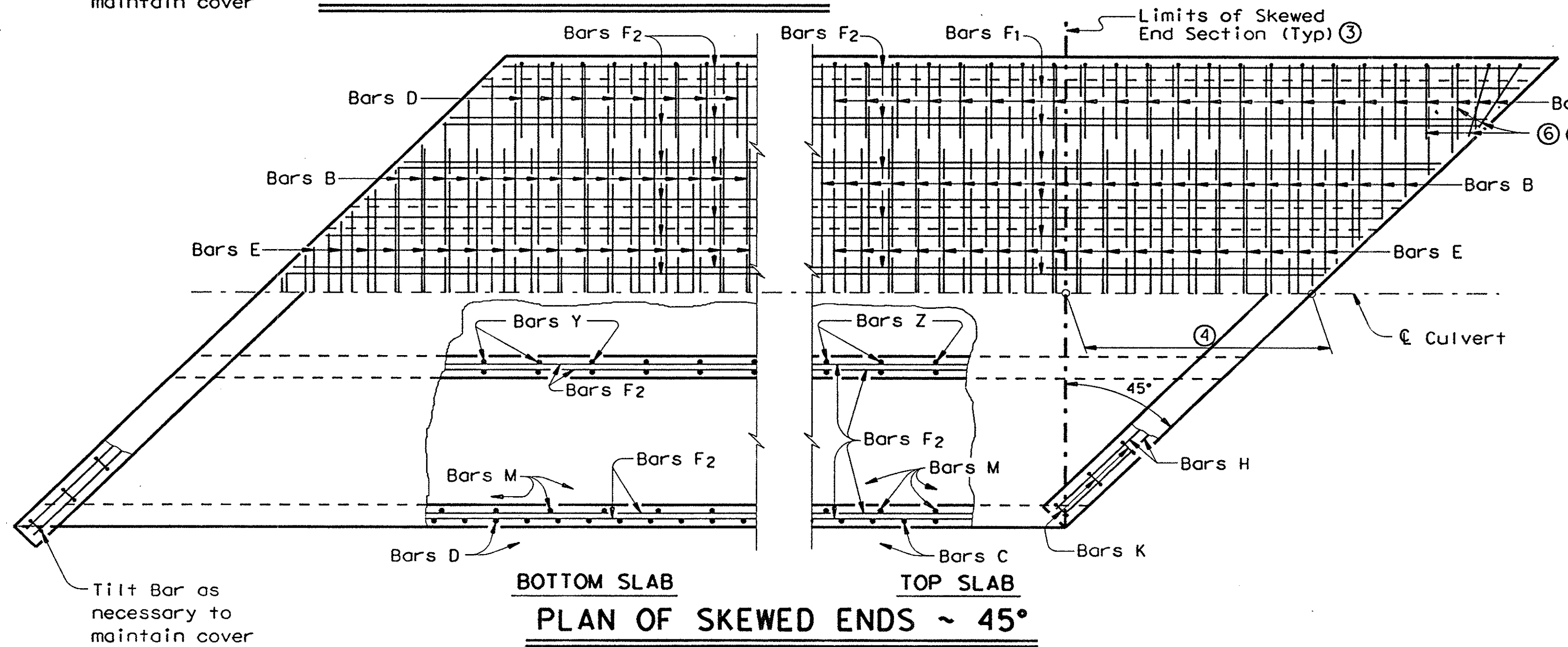


PLAN OF SKEWED ENDS ~ 45°

② When the spacing between Bars B or Bars E becomes less than half of the normal spacing, bars shall be cut to avoid fouling
③ The length of Bars B and E will vary in the skewed end sections
④ [One half of overall width] x [Tan of the skew angle]
⑤ Bars F1 and F2 shall be continuous through the angle section. They shall be bent to remain parallel to the walls of the Box Culvert.
⑥ When necessary to avoid fouling in acute corners, the slab extension leg of Bars C and Bars D may be shortened to a minimum of 1'-6" for skews of 30° and 45°.
⑦ For skews of 15° or less, the contractor has the option of placing Bars B, C, D and E parallel to the skewed end while maintaining spacing along centerline box. Lengths of Bars B and E shown on the standards shall be increased to accommodate the skew.

## GENERAL NOTES:

Designed according to current AASHTO Standard and Interim Specifications.
Designed for HS20 loading.
All reinforcing steel shall be Grade 60.
All concrete shall be Class "C" concrete with a minimum 28 day compressive strength of 3600 psi; except for the top slab of direct traffic culverts, which shall be Class "S" concrete with a minimum 28 day compressive strength of 4000 psi.
Refer to Multiple Box Culverts Cast-in-Place standard for details of straight sections of culvert. For skewed sections and angle sections refer to Multiple Box Culverts Cast- in-Place standard for slab and wall dimensions, bar sizes, maximum bar spacing, and any other details not shown. For Skewed ends with curbs, adjust length of Bars H, number of Bars K, curb concrete volume and reinforcing steel weight by dividing the values shown on the culvert standards by the cosine of the skew angle.
Laps for Bars H, when required, shall be 1'-9" for uncoated bars and 2'-7" for epoxy coated.

HS20 LOADING

Texas Department of Transportation
Bridge Division

# MULTIPLE BOX CULVERTS MISCELLANEOUS DETAILS

MC-MD

| FILE: mc-mdste.dgn | DN: GAF | CK: MAS | DW: MCB | CK: GAF |
|---|---|---|---|---|
| ©TxDOT September 2000 | DISTRICT 15 | FEDERAL AID PROJECT NH 2000(704) | | SHEET 315E |
| REVISIONS | COUNTY Bexar | CONTROL 2452 | SECT 01 | JOB 036 HIGHWAY LP 1604 |

cd#37

LEVELS.OL ED ACC:

Plotted on: 09/19/00

| ESTIMATED QUANTITIES | | | |
|---|---|---|---|
| DESCRIPTION | UNIT | EST. | FINAL |
| * STRUCT. EXCAV. (CULV. SMALL) | M3 | 704.1 | |
| RIPRAP (CONC) (CL B) | M3 | 10.8 | |
| CONC BOX CULV (1500MM X 900MM) | M | 230.553 | |
| WINGWALL (FW-30) (H=900MM) | EA | 2 | |

*SUPPLIED FOR CONTRACTOR'S INFORMATION ONLY

QUANTITIES THIS SHEET
CSJ 2452-01-038

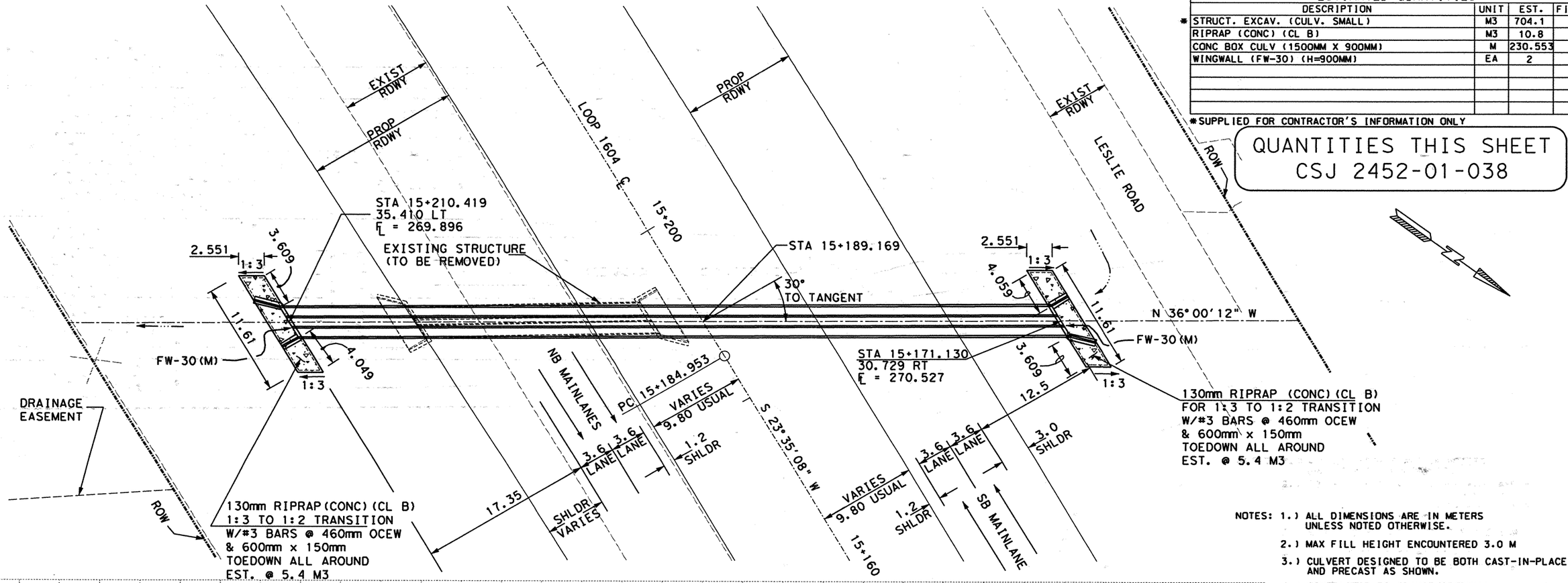


NOTES:
1.) ALL DIMENSIONS ARE IN METERS UNLESS NOTED OTHERWISE.
2.) MAX FILL HEIGHT ENCOUNTERED 3.0 M
3.) CULVERT DESIGNED TO BE BOTH CAST-IN-PLACE AND PRECAST AS SHOWN.
4.) CONTRACTOR TO ADJUST HEADWALL AND WINGWALL STEEL DIMENSIONS TO MATCH FIELD CONDITIONS. ANY ADJUSTMENTS SHALL BE SUBSIDIARY TO THE PERTINENT BID ITEM.
5.) CONTRACTOR IS TO PRESENT A PLAN TO THE ENGINEER FOR APPROVAL TO TIE-IN THE CAST-IN-PLACE CULV. TO THE PRECAST CULV.

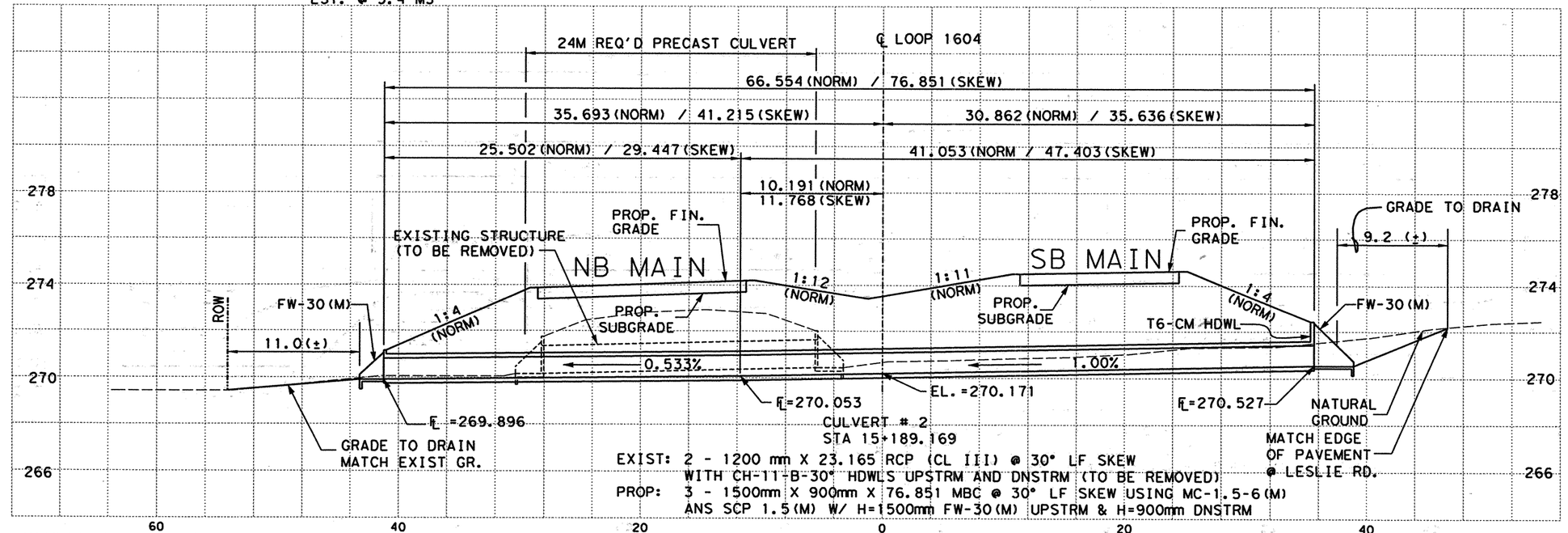


EXIST: 2 - 1200 mm X 23.165 RCP (CL III) @ 30° LF SKEW
WITH CH-11-B-30° HDWLS UPSTRM AND DNSTRM (TO BE REMOVED)
PROP: 3 - 1500mm X 900mm X 76.851 MBC @ 30° LF SKEW USING MC-1.5-6(M)
ANS SCP 1.5(M) W/ H=1500mm FW-30(M) UPSTRM & H=900mm DNSTRM

SCALE: 1:400 HORIZ
1:200 VERT

555 EAST RAMSEY SAN ANTONIO TEXAS 78216
PHONE (210)375-9000
FAX (210)375-9010
PAPE-DAWSON ENGINEERS
CIVIL & ENVIRONMENTAL
K. STEPHEN BONNETTE 60928 REGISTERED PROFESSIONAL ENGINEER
K. STEPHEN BONNETTE, P.E. 9/20/00 DATE

© 2000 Texas Department of Transportation

LOOP 1604
CULVERT LAYOUT
CULVERT # 2 STA 15+189.169

| DN: | | | | | | PROJECT NO. | | |
|---|---|---|---|---|---|---|---|---|
| CK DN: | | | | | | NH 2000 (704), etc. | | |
| DW: | CONTROL | SECTION | JOB | DIST. | STATE | COUNTY | HIGHWAY NO. | SHEET NO. |
| CK DW: | 2452 | 01 | 036 etc. | SAT | TX | BEXAR | LOOP 1604 | 376 |

Design Filename: J:\3941\16\civil\design\plansheets\3941116c102.dgn

Plotted on: 09/19/00

| ESTIMATED QUANTITIES | | | |
|---|---|---|---|
| DESCRIPTION | UNIT | EST. | FINAL |
| STRUCT EXCAV (CULV SMALL) | M3 | 744.9 | |
| RIPRAP (CONC) (CL B) | M3 | 0.90 | |
| WINGWALL (FW-0) (H=900MM) | EA | 1 | |
| CONC BOX CULV (1500MM X 900MM) | M | 165.768 | |
| TRENCH EXCAVATION PROTECTION | M2 | 137.6 | |
| CEMENT STAB BKFL | M3 | 85.3 | |
| CUT & RESTORE PVMNT | M2 | 40.2 | |

*SUPPLIED FOR CONTRACTOR'S INFORMATION ONLY

**QUANTITIES THIS SHEET**
**CSJ 2452-01-038**

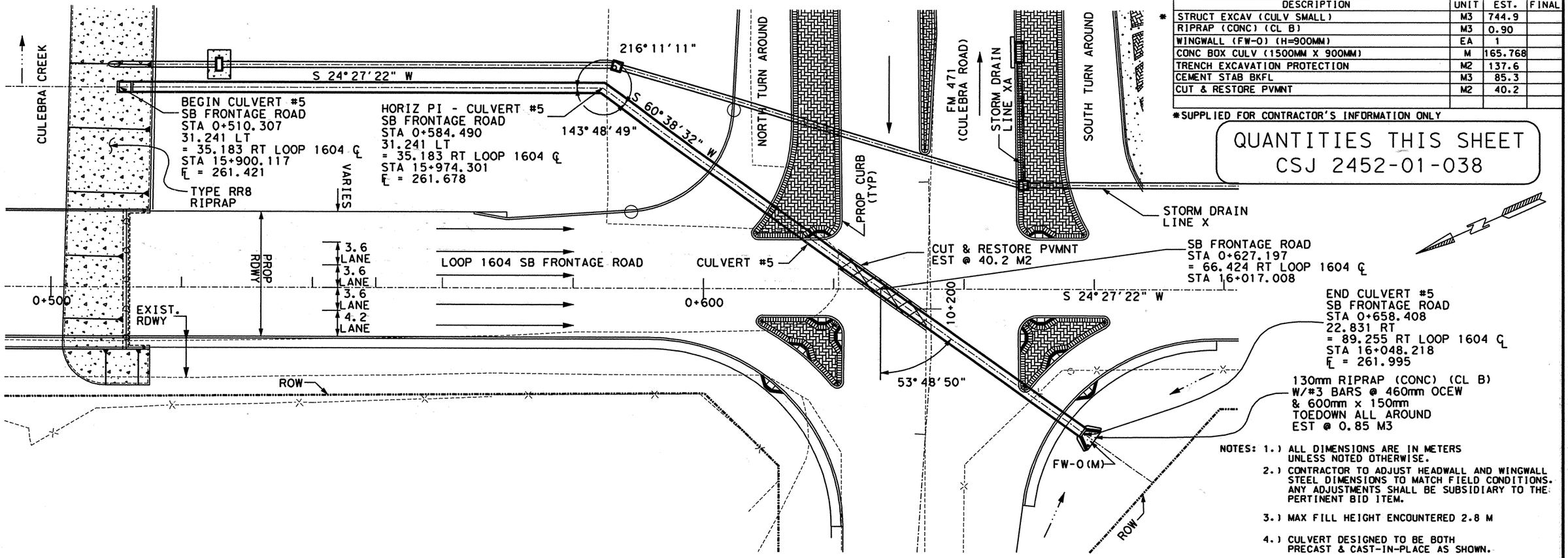


NOTES:
1.) ALL DIMENSIONS ARE IN METERS UNLESS NOTED OTHERWISE.
2.) CONTRACTOR TO ADJUST HEADWALL AND WINGWALL STEEL DIMENSIONS TO MATCH FIELD CONDITIONS. ANY ADJUSTMENTS SHALL BE SUBSIDIARY TO THE PERTINENT BID ITEM.
3.) MAX FILL HEIGHT ENCOUNTERED 2.8 M
4.) CULVERT DESIGNED TO BE BOTH PRECAST & CAST-IN-PLACE AS SHOWN.
5.) CONTRACTOR IS TO PRESENT A PLAN TO THE ENGINEER FOR APPROVAL TO TIE-IN THE CAST-IN-PLACE CULV. TO THE PRECAST CULV.

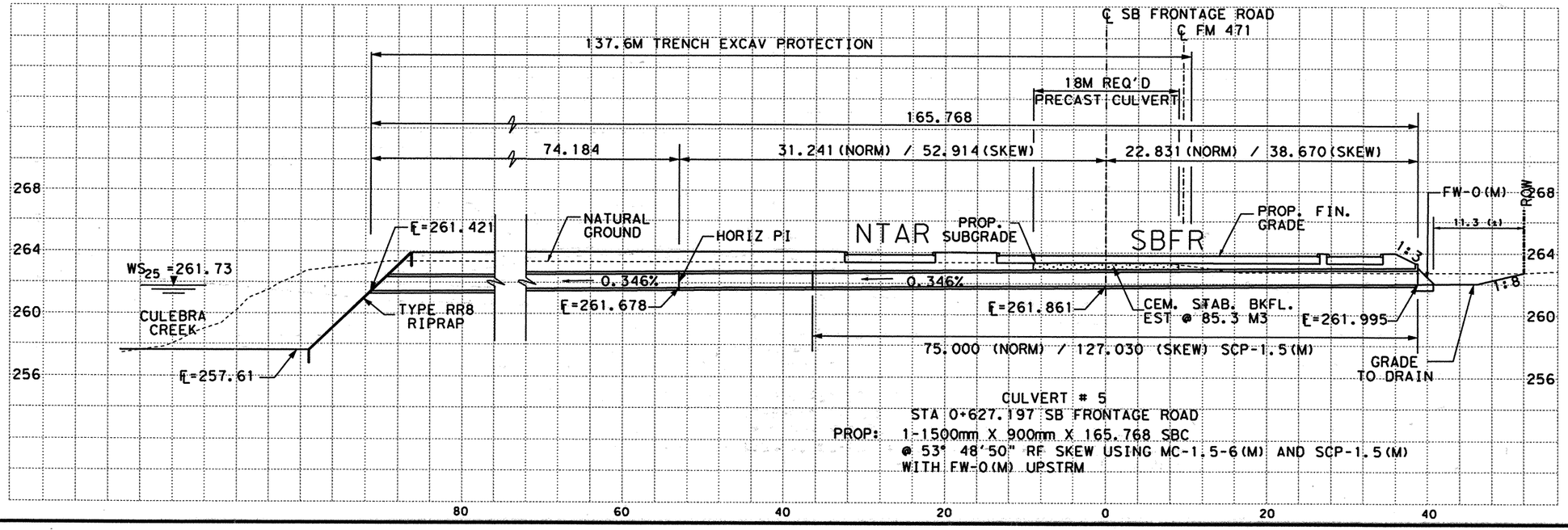


CULVERT # 5
STA 0+627.197 SB FRONTAGE ROAD
PROP: 1-1500mm X 900mm X 165.768 SBC
@ 53° 48'50" RF SKEW USING MC-1.5-6(M) AND SCP-1.5(M)
WITH FW-0(M) UPSTRM

SCALE: 1:600 HORIZ
1:300 VERT


555 EAST RAMSEY SAN ANTONIO TEXAS 78216
PHONE (210)375-9000
FAX (210)375-9010
PAPE-DAWSON ENGINEERS
CIVIL & ENVIRONMENTAL
STATE OF TEXAS K. STEPHEN BONNETTE 60928 REGISTERED PROFESSIONAL ENGINEER
K. STEPHEN BONNETTE, P.E. 9/20/00
DATE



© 2000 Texas Department of Transportation


# LOOP 1604
# CULVERT LAYOUT
## CULVERT # 5
## STA 0+627.197 SB FRONTAGE ROAD

| DN: | | | | | PROJECT NO. | | | |
|---|---|---|---|---|---|---|---|---|
| CK DN: | | | | | NH 2000 (704), etc. | | | |
| DW: | CONTROL | SECTION | JOB | DIST. | STATE | COUNTY | HIGHWAY NO. | SHEET NO. |
| CK DW: | 2452 | 01 | 036 etc. | SAT | TX | BEXAR | LOOP 1604 | 377 |

Design Filename: j:\3941\16\civil\design\plansheets\3941116c105.dgn

Plotted on: 07/02/01

| ESTIMATED QUANTITIES | | | |
|---|---|---|---|
| DESCRIPTION | UNIT | EST. | FINAL |
| STRUCT EXCAV (CULV SMALL) | M3 | 744.9 | |
| RIPRAP (CONC) (CL B) | M3 | 0.90 | |
| WINGWALL (FW-0) (H=900MM) | EA | 1 | |
| CONC BOX CULV (1500MM X 900MM) | M | 165.768 | |
| TRENCH EXCAVATION PROTECTION | M2 | 137.6 | |
| CEMENT STAB BKFL | M3 | 85.3 | |
| CUT & RESTORE PVMNT | M2 | 40.2 | |

*SUPPLIED FOR CONTRACTOR'S INFORMATION ONLY

## QUANTITIES THIS SHEET
## CSJ 2452-01-038

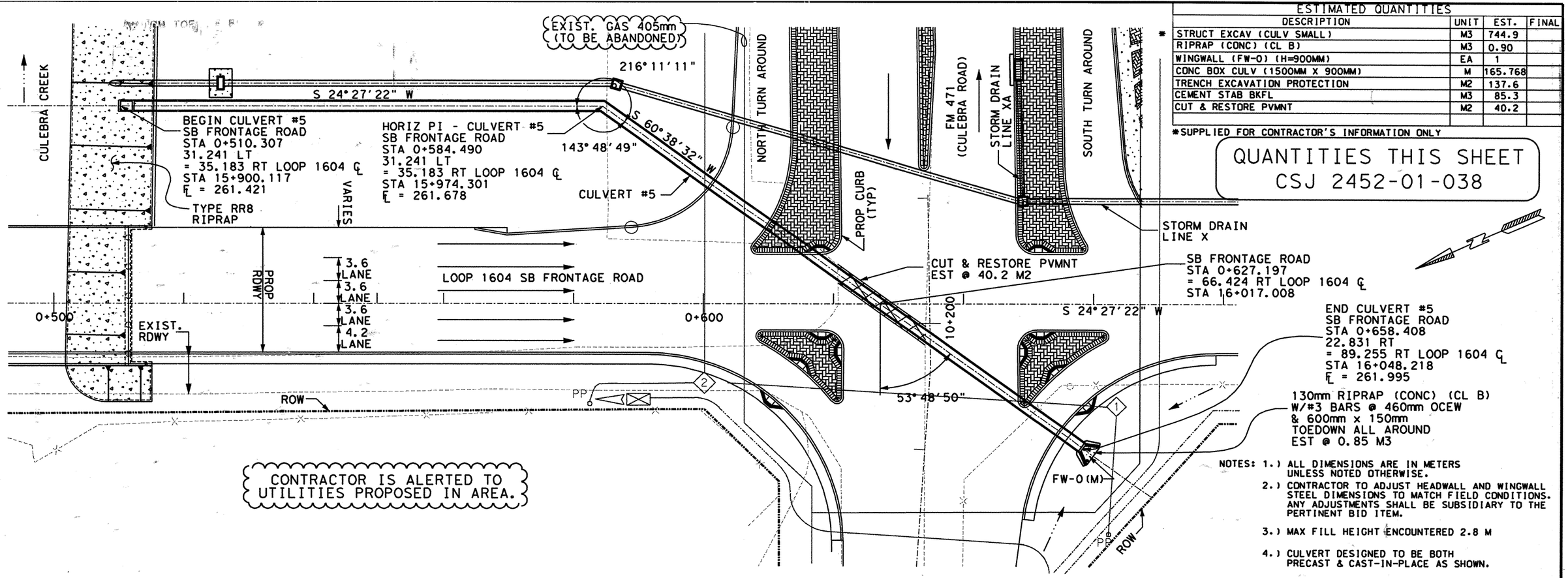


CONTRACTOR IS ALERTED TO UTILITIES PROPOSED IN AREA.

NOTES:
1.) ALL DIMENSIONS ARE IN METERS UNLESS NOTED OTHERWISE.
2.) CONTRACTOR TO ADJUST HEADWALL AND WINGWALL STEEL DIMENSIONS TO MATCH FIELD CONDITIONS. ANY ADJUSTMENTS SHALL BE SUBSIDIARY TO THE PERTINENT BID ITEM.
3.) MAX FILL HEIGHT ENCOUNTERED 2.8 M
4.) CULVERT DESIGNED TO BE BOTH PRECAST & CAST-IN-PLACE AS SHOWN.
5.) CONTRACTOR IS TO PRESENT A PLAN TO THE ENGINEER FOR APPROVAL TO TIE-IN THE CAST-IN-PLACE CULV. TO THE PRECAST CULV.

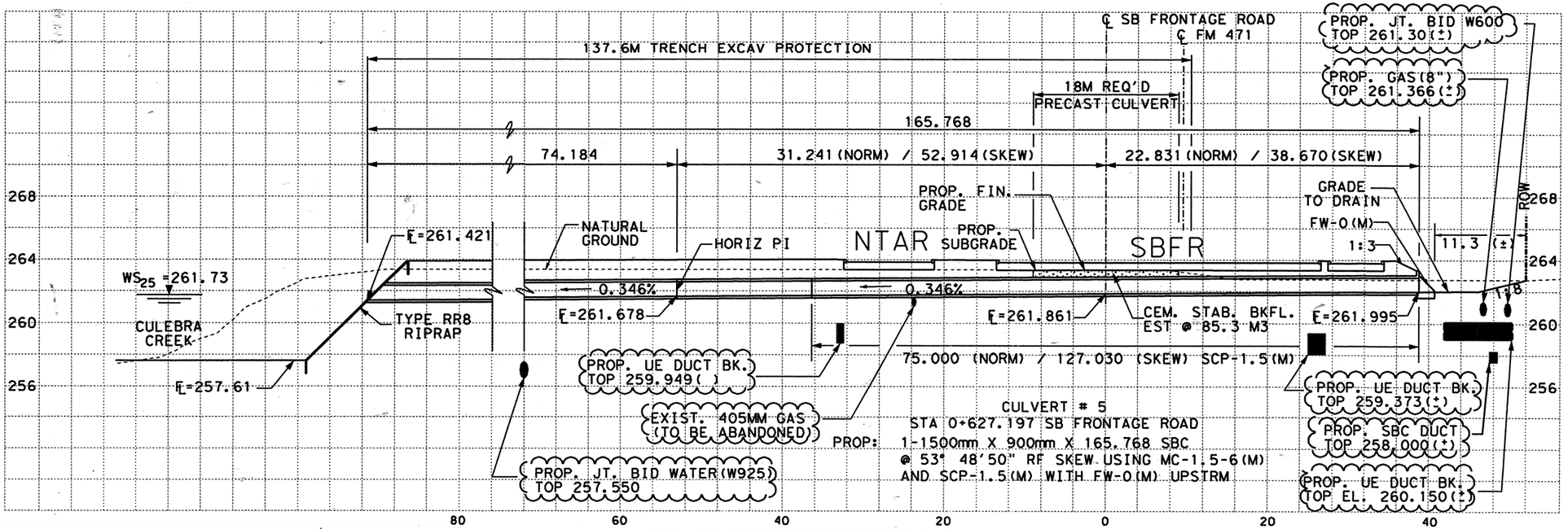


SCALE: 1:600 HORIZ
1:300 VERT

New Sht

555 EAST RAMSEY SAN ANTONIO TEXAS 78216
PHONE (210)375-9000
FAX (210)375-9010
PAPE-DAWSON ENGINEERS
CIVIL & ENVIRONMENTAL
K. STEPHEN BONNETTE 60928 REGISTERED PROFESSIONAL ENGINEER
K. STEPHEN BONNETTE, P.E. 7/2/2001 DATE

© 2000 Texas Department of Transportation

# LOOP 1604
# CULVERT LAYOUT
## CULVERT # 5
## STA 0+627.197 SB FRONTAGE ROAD

| DN: | | | | | | PROJECT NO. | | |
|---|---|---|---|---|---|---|---|---|
| CK DN: | | | | | | NH 2000 (704), etc. | | |
| DW: | CONTROL | SECTION | JOB | DIST. | STATE | COUNTY | HIGHWAY NO. | SHEET NO. |
| CK DW: | 2452 | 01 | 036 etc. | SAT | TX | BEXAR | LOOP 1604 | 377A |

Design Filename: j:\3941\16\civil\design\plonsheets\3941160105.dgn

Plotted on: 09/19/00

| ESTIMATED QUANTITIES | | | |
|---|---|---|---|
| DESCRIPTION | UNIT | EST. | FINAL |
| * STRUCT EXCAV (CULV SMALL) | M3 | 388.7 | |
| RIPRAP (CONC) (CL B) | M3 | 15.8 | |
| CONC BOX CULV (1500MM X 900MM) | M | 246.802 | |
| WINGWALL (FW-45) (H=900MM) | EA | 2 | |
| TRENCH EXCAVATION PROTECTION | M | 47.0 | |
| | | | |
| | | | |
| | | | |

*SUPPLIED FOR CONTRACTOR'S INFORMATION ONLY

QUANTITIES THIS SHEET
CSJ 2452-01-037

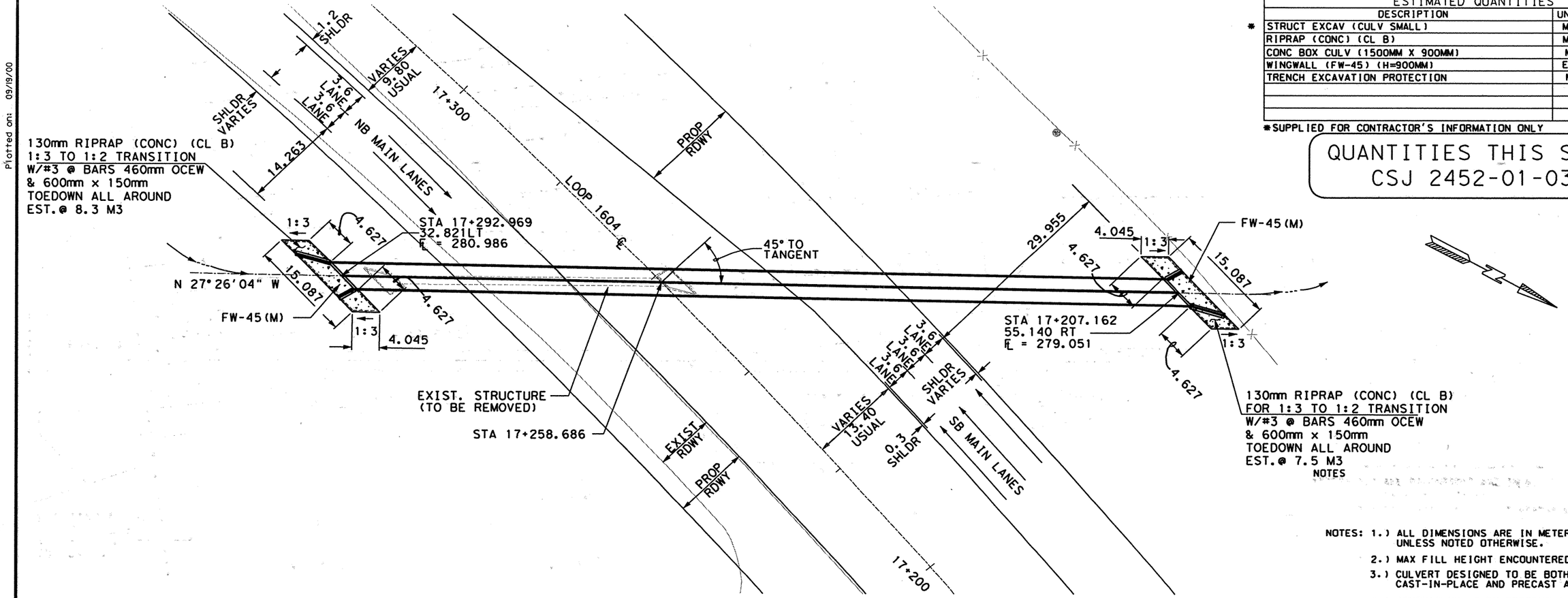


NOTES

NOTES: 1.) ALL DIMENSIONS ARE IN METERS UNLESS NOTED OTHERWISE.

2.) MAX FILL HEIGHT ENCOUNTERED 4.5 M

3.) CULVERT DESIGNED TO BE BOTH CAST-IN-PLACE AND PRECAST AS SHOWN.

4.) CONTRACTOR IS TO PRESENT A PLAN TO THE ENGINEER FOR APPROVAL TO TIE-IN THE CAST-IN-PLACE CULV. TO THE PRECAST CULV.

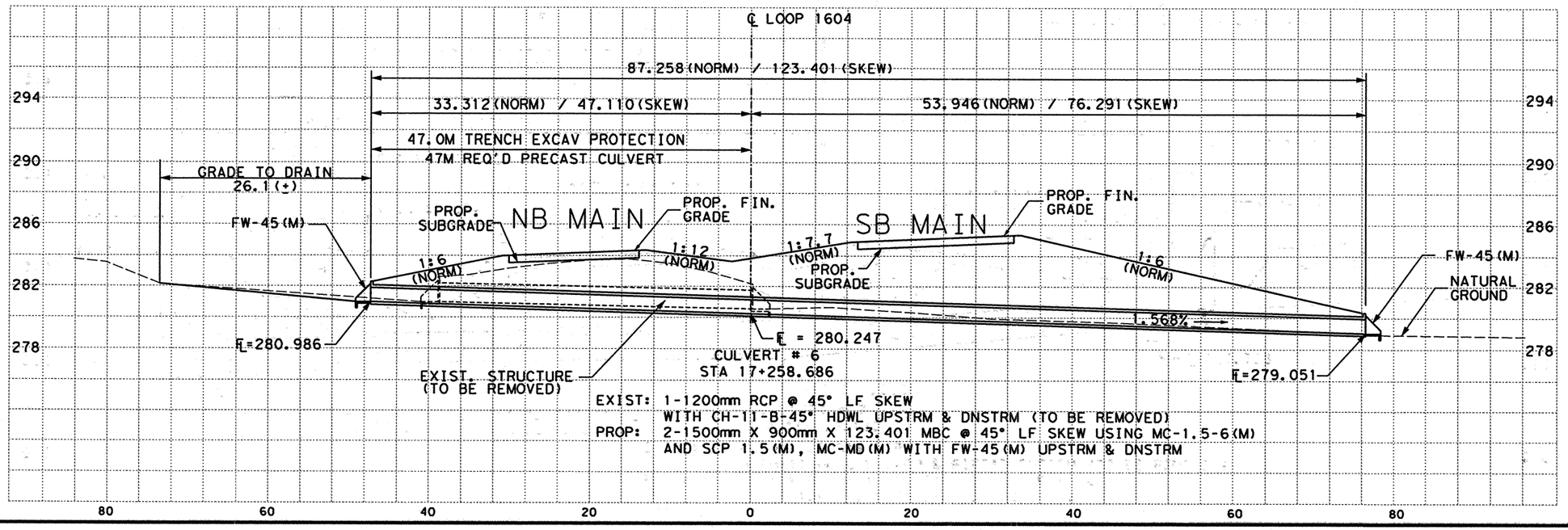


EXIST: 1-1200mm RCP @ 45° LF SKEW
WITH CH-11-B-45° HDWL UPSTRM & DNSTRM (TO BE REMOVED)
PROP: 2-1500mm X 900mm X 123.401 MBC @ 45° LF SKEW USING MC-1.5-6(M)
AND SCP 1.5(M), MC-MD(M) WITH FW-45(M) UPSTRM & DNSTRM

SCALE: 1:600 HORIZ
1:300 VERT

555 EAST RAMSEY SAN ANTONIO TEXAS 78216 PHONE (210)375-9000 FAX (210)375-9010
PAPE-DAWSON ENGINEERS
CIVIL & ENVIRONMENTAL
STATE OF TEXAS K. STEPHEN BONNETTE 60928 REGISTERED PROFESSIONAL ENGINEER
9/20/00
K. STEPHEN BONNETTE, P.E. DATE

© 2000 Texas Department of Transportation

LOOP 1604
CULVERT LAYOUT

CULVERT # 6 STA 17+258.686

| DN: | | | | | | PROJECT NO. | |
|---|---|---|---|---|---|---|---|
| CK DN: | | | | | | NH 2000 (704), etc. | |
| DW: | CONTROL | SECTION | JOB | DIST. | STATE | COUNTY | HIGHWAY NO. | SHEET NO. |
| CK DW: | 2452 | 01 | 036 etc. | SAT | TX | BEXAR | LOOP 1604 | 378 |

Design Filenames: J:\3941\16\civil\design\plansheets\3941116c106.dgn

Plotted on: 09/19/00

| ESTIMATED QUANTITIES | | | |
|---|---|---|---|
| DESCRIPTION | UNIT | EST. | FINAL |
| STRUCT EXCAV (CULV SMALL) | M3 | 664.7 | |
| RIPRAP (CONC) (CL B) | M3 | 8.8 | |
| CONC BOX CULV (1800MM X 900MM) | M | 80.574 | |
| WINGWALL (FW-0) (H=900MM) | EA | 2 | |
| TRENCH EXCAVATION PROTECTION | M | 53.5 | |
| CEMENT STAB BKFL | M3 | 269.1 | |
| CUT & RESTORE PVMNT | M | 51.6 | |

*SUPPLIED FOR CONTRACTOR'S INFORMATION ONLY

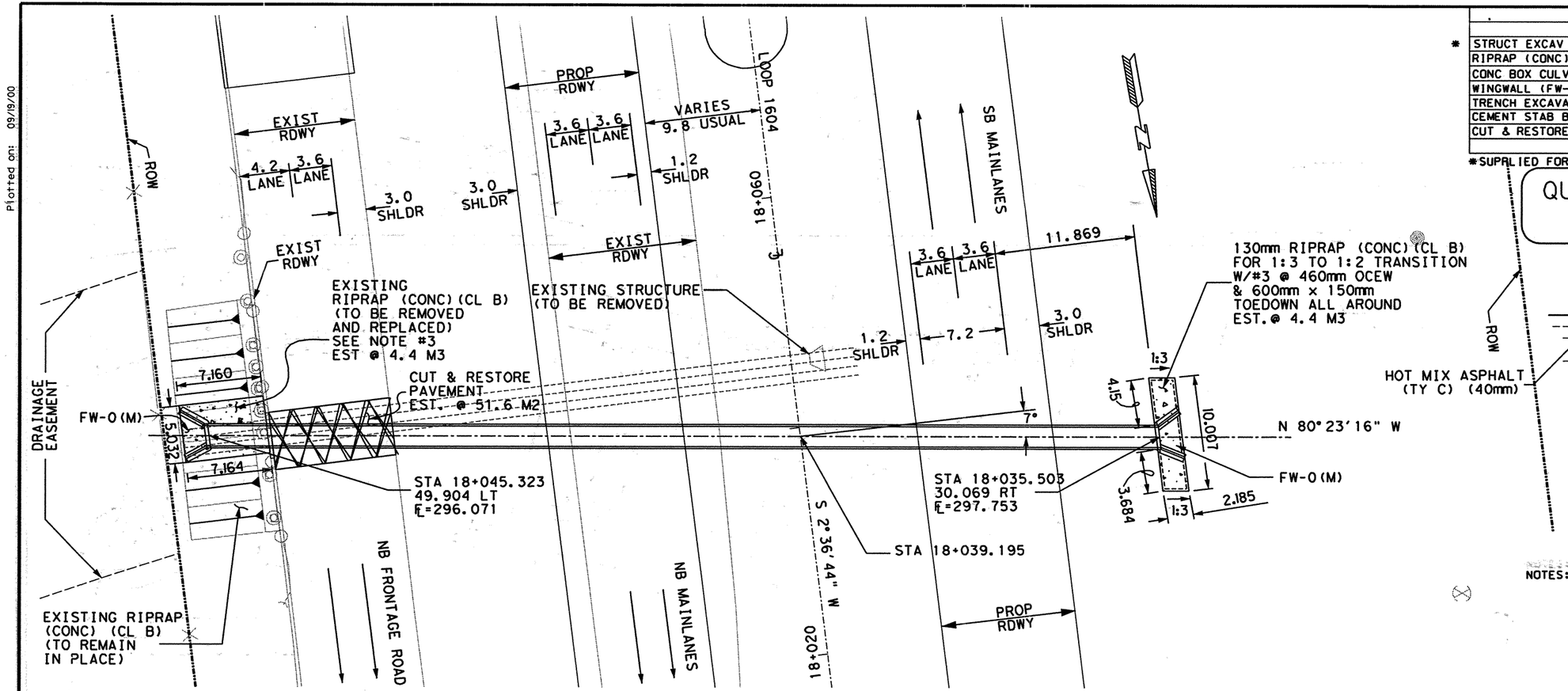


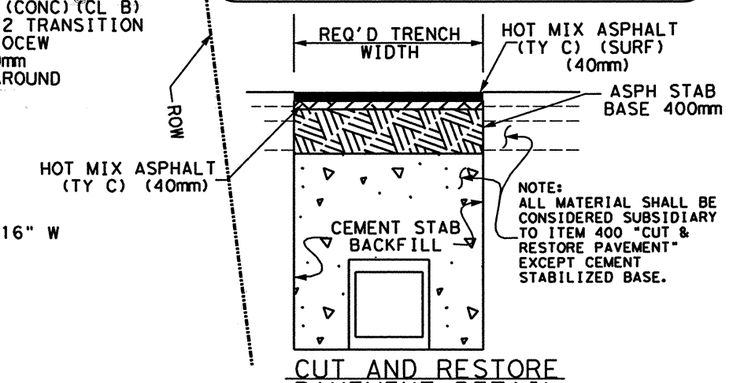


## QUANTITIES THIS SHEET
## CSJ 2452-01-037

## CUT AND RESTORE PAVEMENT DETAIL

NOTES:
1.) ALL DIMENSIONS ARE IN METERS UNLESS NOTED OTHERWISE.
2.) CONTRACTOR TO ADJUST HEADWALL AND WINGWALL STEEL DIMENSIONS TO MATCH FIELD CONDITIONS. ANY ADJUSTMENTS SHALL BE SUBSIDIARY TO THE PERTINENT BID ITEM.
3.) CONTRACTOR SHALL SAWCUT EXIST. CONC. ALONG REMOVAL LINES. #3 DOWEL BARS SHALL BE DRILLED & GROUTED 150mm INTO EXIST CONC AT 500mm OCEW ALL AROUND OR A MIN. OF 300mm OF EXIST STL. SHALL REMAIN. BE CLEANED OF LOOSEND CONC & INCORPORATED INTO PROP RIPRAP (CONC)(CL B) AS DIRECTED BY THE ENGINEER. PROP RIPRAP (CONC)(CL B) SHALL BE 130mm W/#3 @ 460mm OCEW.
4.) MAX FILL HEIGHT ENCOUNTERED 3.3 M
5.) CULVERT DESIGNED TO BE BOTH CAST-IN-PLACE AND PRECAST AS SHOWN.
6.) CONTRACTOR IS TO PRESENT A PLAN TO THE ENGINEER FOR APPROVAL TO TIE-IN THE CAST-IN-PLACE CULV. TO THE PRECAST CULV.

SCALE: 1:400 HORIZ
1:200 VERT

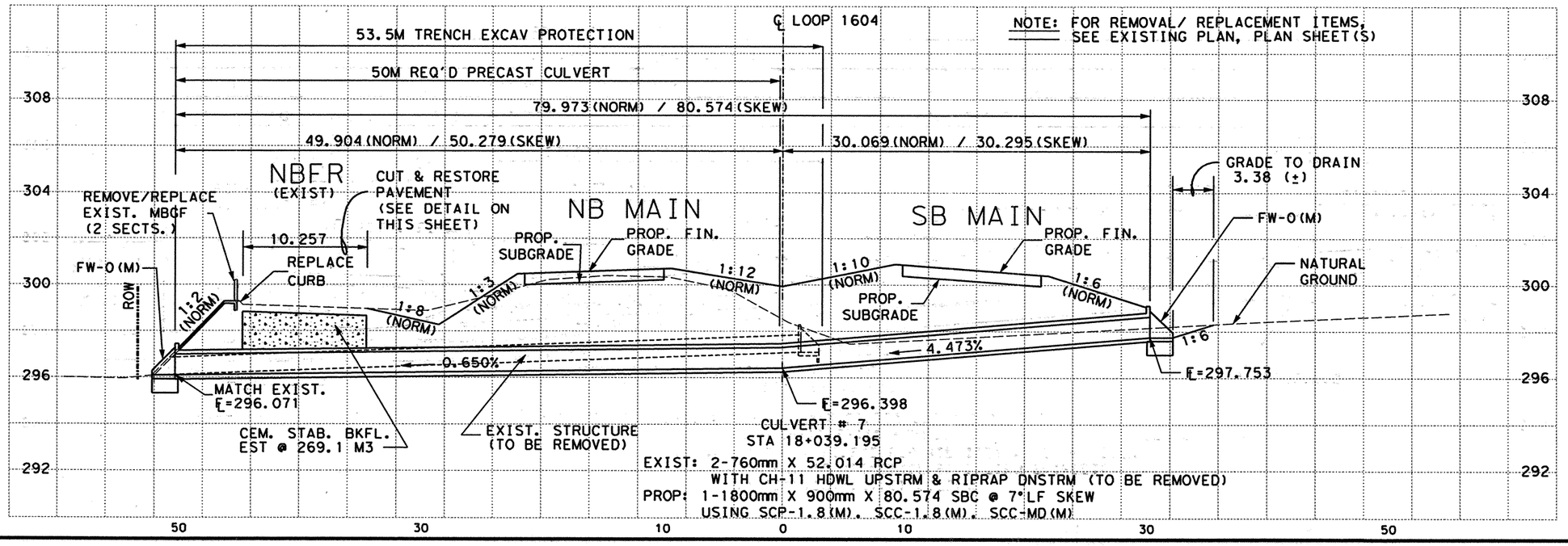


555 EAST RAMSEY SAN ANTONIO TEXAS 78216
PHONE (210)375-9000
FAX (210)375-9010
PAPE-DAWSON ENGINEERS
CIVIL & ENVIRONMENTAL
K. STEPHEN BONNETTE 60928 REGISTERED PROFESSIONAL ENGINEER
9/20/00
K. STEPHEN BONNETTE P.E. DATE

© 2000 Texas Department of Transportation

# LOOP 1604
# CULVERT LAYOUT

CULVERT #7 STA 18+039.195

| DN: | | | | | PROJECT NO. | | |
|---|---|---|---|---|---|---|---|
| CK DN: | | | | | NH 2000 (704), etc. | | |
| DW: | CONTROL | SECTION | JOB | DIST. | COUNTY | HIGHWAY NO. | SHEET NO. |
| CK DW: | 2452 | 01 | 036 etc. | SAT | BEXAR | LOOP 1604 | 379 |

Design Filename: J:\3941\16\civil\design\plansheets\3941l6cl07.dgn

Plotted on: 09/19/00

| ESTIMATED QUANTITIES | | | |
|---|---|---|---|
| DESCRIPTION | UNIT | EST. | FINAL |
| * STRUCT EXCAV (CULV SMALL) | M3 | 329.6 | |
| RC PIPE (CL III) (750MM) | M | 88.842 | |
| SET (TY II) (750MM) (RCP) (1:6) | EA | 1 | |
| TRENCH EXCAVATION PROTECTION | M | 69.8 | |
| CEMENT STAB BKFL | M3 | 93.0 | |
| CUT & RESTORE PVMNT | M2 | 31.5 | |
| | | | |
| | | | |

*SUPPLIED FOR CONTRACTOR'S INFORMATION ONLY

## QUANTITIES THIS SHEET
## CSJ 2452-01-037

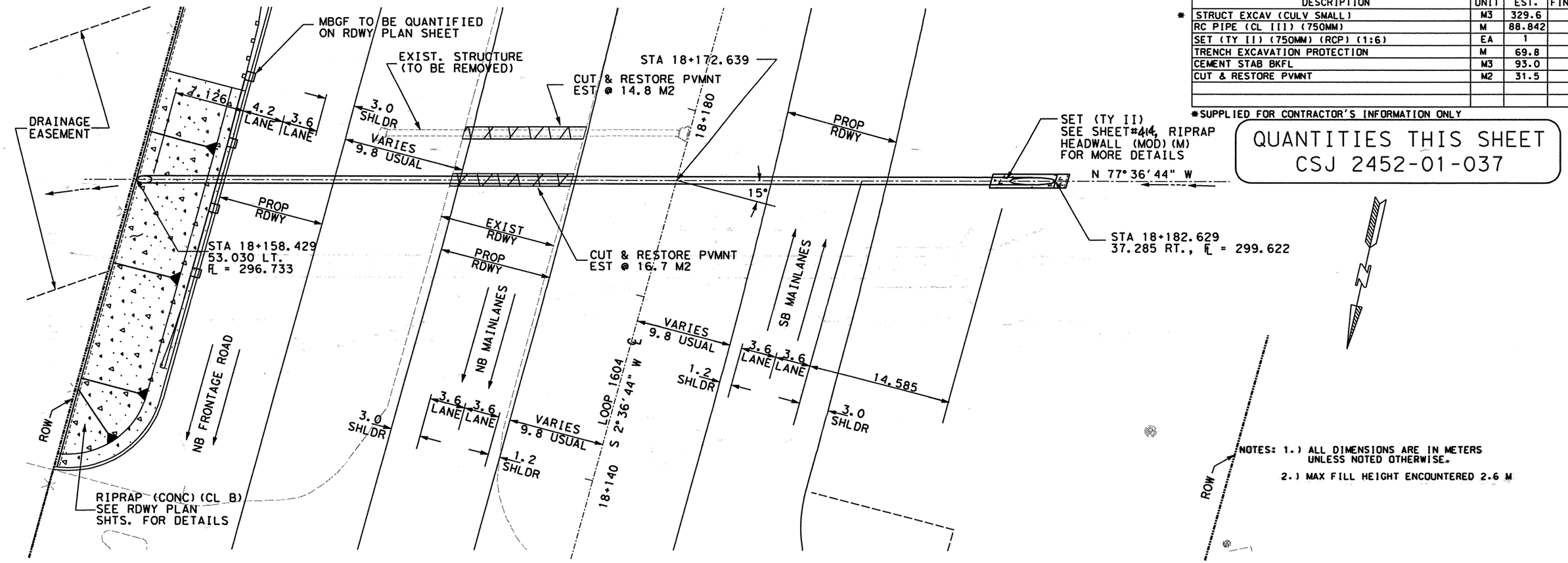


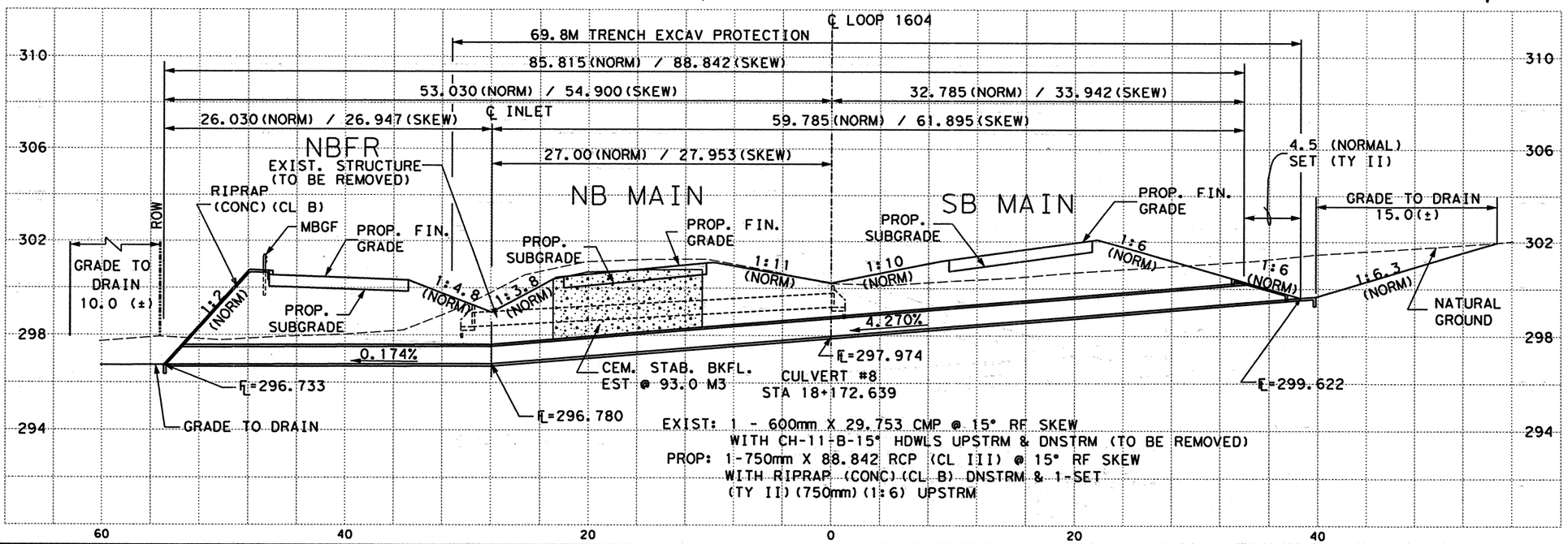


EXIST: 1 - 600mm X 29.753 CMP @ 15° RF SKEW
WITH CH-11-B-15° HDWLS UPSTRM & DNSTRM (TO BE REMOVED)
PROP: 1-750mm X 88.842 RCP (CL III) @ 15° RF SKEW
WITH RIPRAP (CONC) (CL B) DNSTRM & 1-SET
(TY II) (750mm) (1:6) UPSTRM

SCALE: 1:400 HORIZ
1:200 VERT

555 EAST RAMSEY SAN ANTONIO TEXAS 78216 PHONE (210)375-9000 FAX (210)375-9010
PAPE-DAWSON ENGINEERS CIVIL & ENVIRONMENTAL
STATE OF TEXAS K. STEPHEN BONNETTE 60928 REGISTERED PROFESSIONAL ENGINEER
K. STEPHEN BONNETTE, P.E. 9/20/00 DATE

© 2000 Texas Department of Transportation

## LOOP 1604
## CULVERT LAYOUT

CULVERT #8 STA 18+172.639

| | | | | | | | | |
|---|---|---|---|---|---|---|---|---|
| DN: | | | | | | PROJECT NO. | | |
| CK DN: | | | | | | NH 2000 (704), etc. | | |
| DW: | CONTROL | SECTION | JOB | DIST. | STATE | COUNTY | HIGHWAY NO. | SHEET NO. |
| CK DW: | 2452 | Ø1 | Ø36 etc. | SAT | TX | BEXAR | LOOP 1604 | 38Ø |

Design Filename: J:\3941\16\civil\design\plansheets\3941160108.dgn

Plotted on: 09/19/00

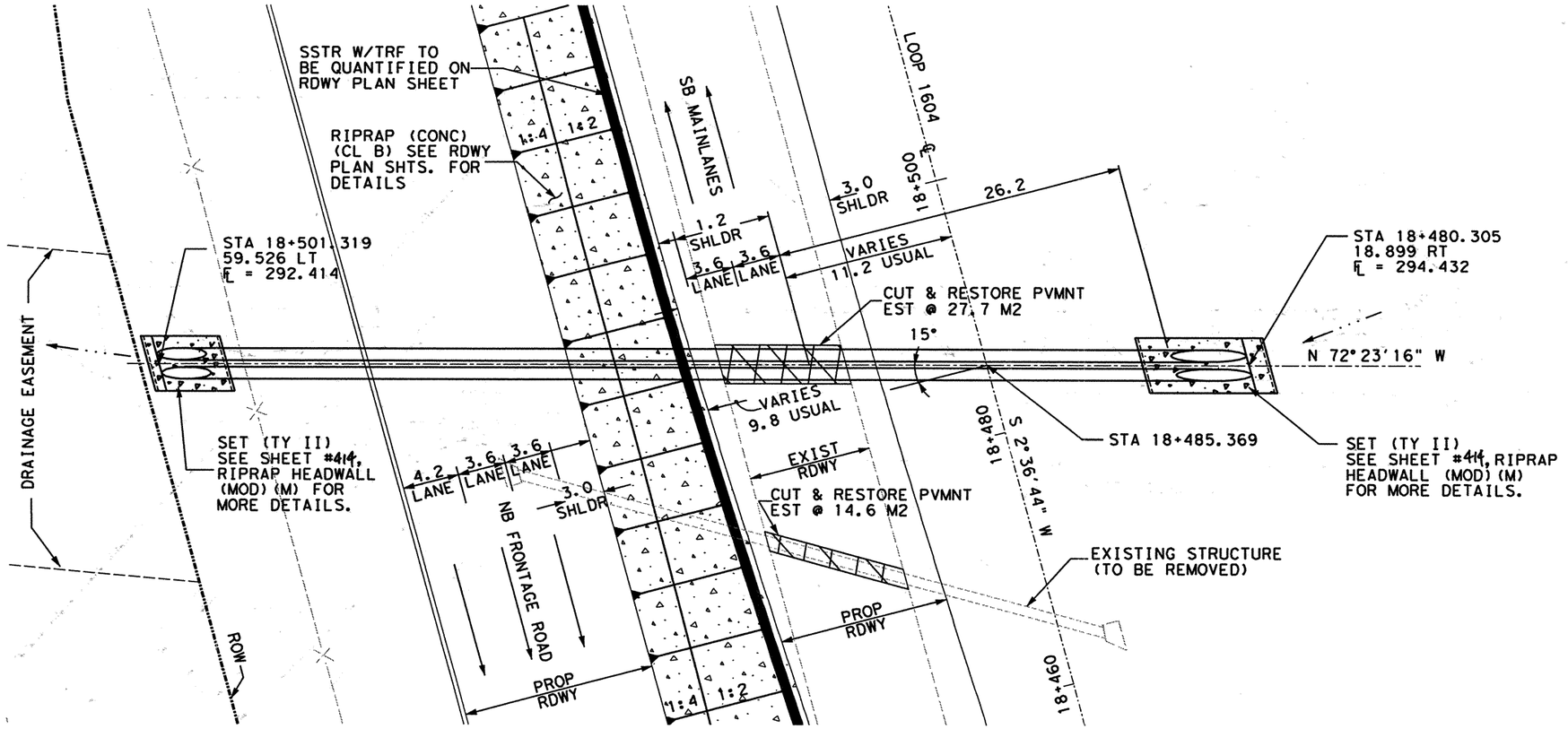


| ESTIMATED QUANTITIES | | | |
|---|---|---|---|
| DESCRIPTION | UNIT | EST. | FINAL |
| * STRUCT EXCAV (CULV SMALL) | M3 | 814.0 | |
| RC PIPE (CL III) (900MM) | M | 143.748 | |
| SET (TY II) (900MM) (RCP) (1:4) | EA | 2 | |
| SET (TY II) (900MM) (RCP) (1:6) | EA | 2 | |
| TRENCH EXCAVATION PROTECTION | M | 43.2 | |
| CEMENT STAB BKFL | M3 | 146.0 | |
| CUT & RESTORE PVMNT | M2 | 42.3 | |
| | | | |

*SUPPLIED FOR CONTRACTOR'S INFORMATION ONLY

QUANTITIES THIS SHEET
CSJ 2452-01-037

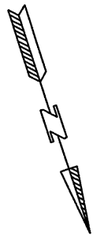

NOTES: 1.) ALL DIMENSIONS ARE IN METERS UNLESS NOTED OTHERWISE.

2.) MAX FILL HEIGHT ENCOUNTERED 5.2 M

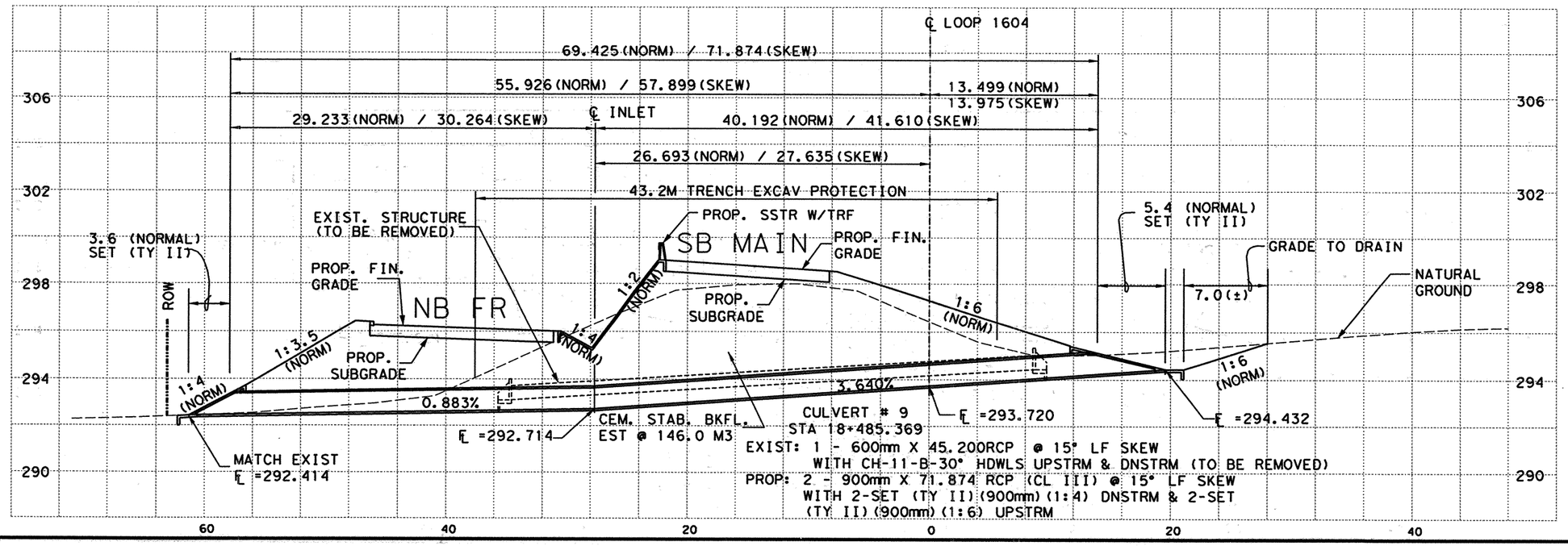


SCALE: 1:400 HORIZ
1:200 VERT

555 EAST RAMSEY SAN ANTONIO TEXAS 78216
PHONE (210)375-9000
FAX (210)375-9010
PAPE-DAWSON ENGINEERS
CIVIL & ENVIRONMENTAL
STATE OF TEXAS K. STEPHEN BONNETTE 60928 REGISTERED PROFESSIONAL ENGINEER
K. STEPHEN BONNETTE, P.E. 9/20/00 DATE

© 2000 Texas Department of Transportation

# LOOP 1604
# CULVERT LAYOUT

CULVERT # 9 STA 18+485.369

| DN: | | | | | | PROJECT NO. | |
|---|---|---|---|---|---|---|---|
| CK DN: | | | | | | NH 2000 (704), etc. | |
| DW: | CONTROL | SECTION | JOB | DIST. | STATE | COUNTY | HIGHWAY NO. | SHEET NO. |
| CK DW: | 2452 | 01 | 036 etc. | SAT | TX | BEXAR | LOOP 1604 | 381 |

Design Filename: j:\3941\16\civil\design\plansheets\3941160109.dgn

Plotted on: 01/26/2004
Design Filename: p:\52\2011\design\civil\plansheets\drainage\cross-drain\394116c109.dgn

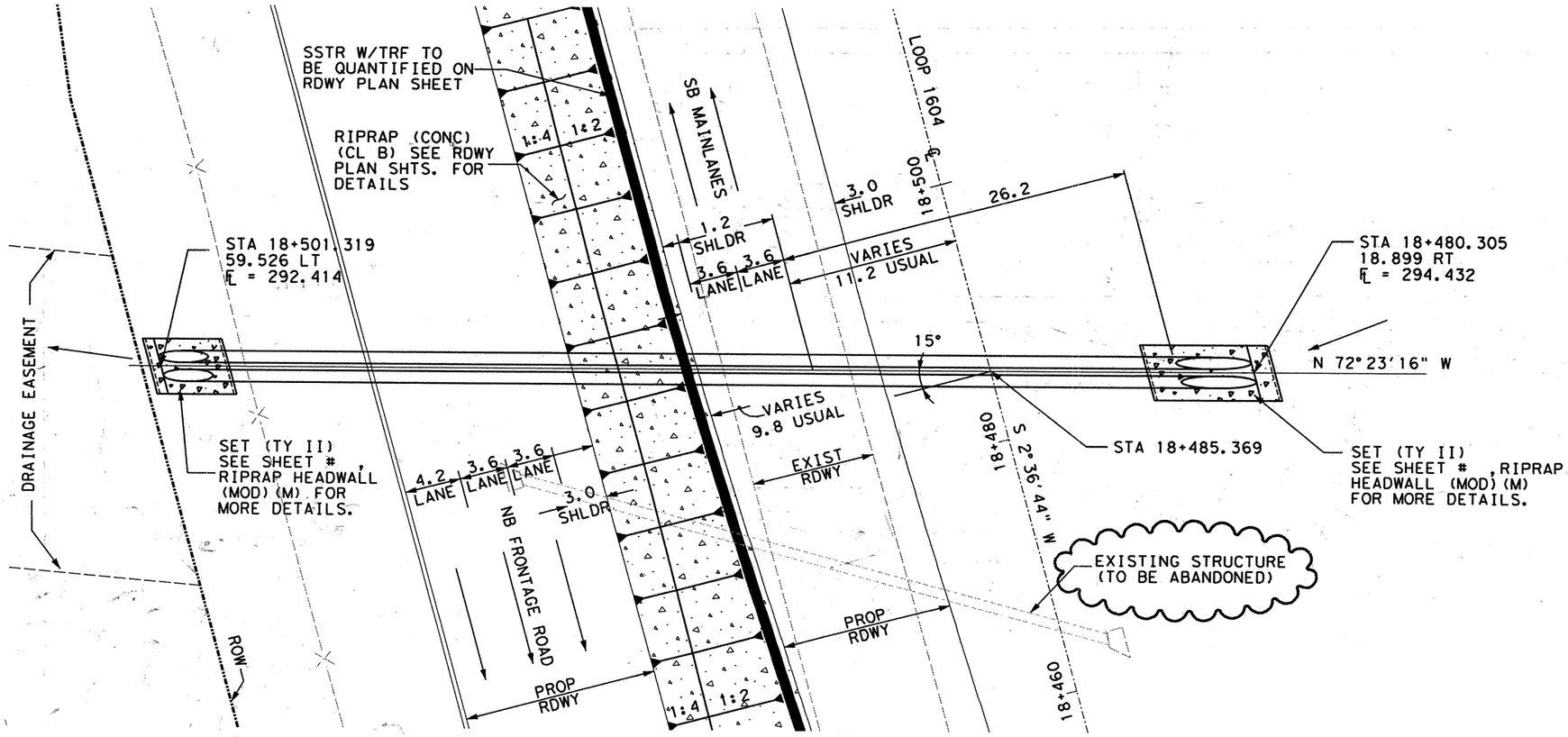


| ESTIMATED QUANTITIES | | | |
|---|---|---|---|
| DESCRIPTION | UNIT | EST. | FINAL |
| * STRUCT EXCAV (CULV SMALL) | M3 | 814.0 | |
| RC PIPE (CL III) (900MM) | M | 43.748 | |
| SET (TY II) (900MM) (RCP) (1:4) | EA | 2 | |
| SET (TY II) (900MM) (RCP) (1:6) | EA | 2 | |
| TRENCH EXCAVATION PROTECTION | M | 43.2 | |
| CEMENT STAB BKFL | M3 | 146.0 | |
| ~~CUT & RESTORE PVMNT~~ | ~~M2~~ | ~~42.3~~ | |
| | | | |

* SUPPLIED FOR CONTRACTOR'S INFORMATION ONLY

QUANTITIES THIS SHEET
CSJ 2452-01-037

NOTES: 1.) ALL DIMENSIONS ARE IN METERS UNLESS NOTED OTHERWISE.

2.) MAX FILL HEIGHT ENCOUNTERED 5.2 M

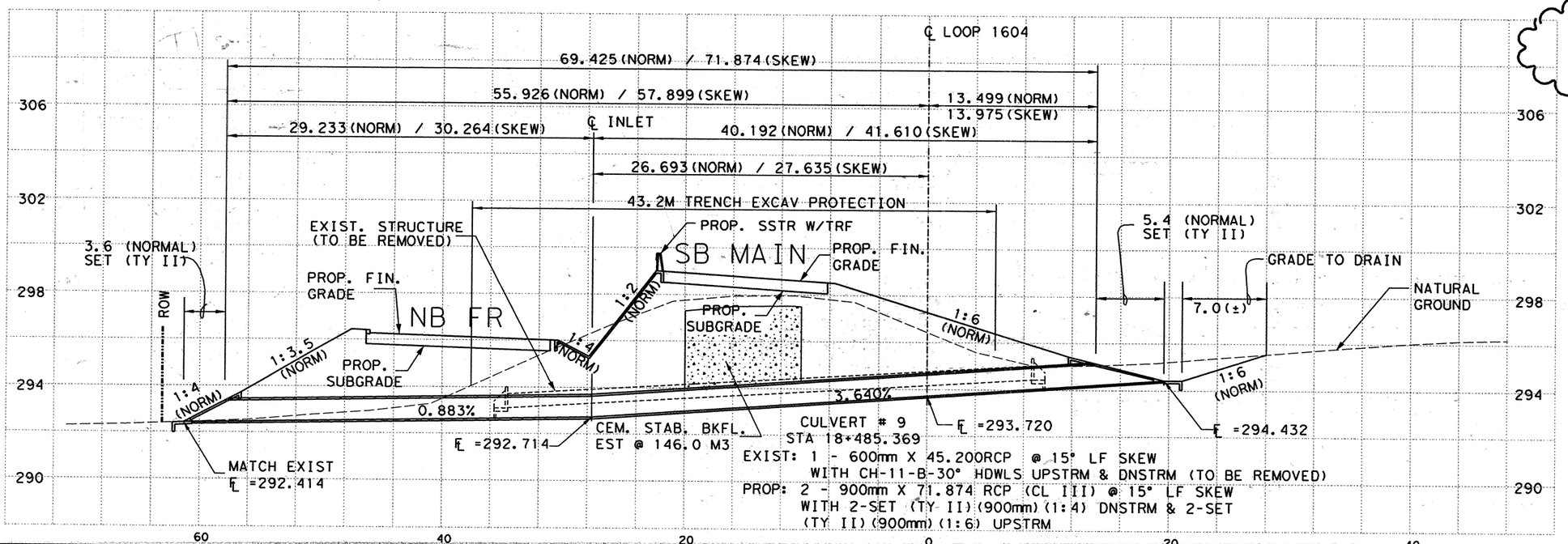


CHANGE ORDER NO. 64

-REMOVED CUT & RESTORE PVMNT
-REVISED QUANTITIES

CHANGE ORDER NO. 64 | REVISED SHEET

SCALE: 1:400 HORIZ
1:200 VERT

555 EAST RAMSEY SAN ANTONIO TEXAS 78216
PHONE (210)375-9000
FAX (210)375-9010
PAPE-DAWSON ENGINEERS
CIVIL & ENVIRONMENTAL
STATE OF TEXAS J. KENT O'BRIEN 64398 REGISTERED PROFESSIONAL ENGINEER
J. KENT O'BRIEN, P.E. 1/21/2004 DATE

© 2000 Texas Department of Transportation

# LOOP 1604
# CULVERT LAYOUT

CULVERT # 9 STA 18+485.369

| DN: | | | | | PROJECT NO. | | | |
|---|---|---|---|---|---|---|---|---|
| CK DN: | | | | | NH 2000 (704), etc. | | | |
| DW: | CONTROL | SECTION | JOB | DIST. | STATE | COUNTY | HIGHWAY NO. | SHEET NO. |
| CK DW: | 2452 | 01 | 036 | SAT | TX | BEXAR | LOOP 1604 | 381A |

Plotted on: 09/19/00

| ESTIMATED QUANTITIES | | | |
|---|---|---|---|
| DESCRIPTION | UNIT | EST. | FINAL |
| STRUCT EXCAV (CULV SMALL) | M3 | 950.7 | |
| RIPRAP (CONC) (CL B) | M3 | 14.6 | |
| CONC BOX CULV (1500MM X 1200MM) | M | 117.369 | |
| WINGWALL (FW-45) (H=1200MM) | EA | 2 | |
| TRENCH EXCAVATION PROTECTION | M | 51.2 | |
| CEMENT STAB BKFL | M3 | 390.5 | |
| CUT & RESTORE PVMNT | M2 | 99.2 | |
| | | | |

*SUPPLIED FOR CONTRACTOR'S INFORMATION ONLY

QUANTITIES THIS SHEET
CSJ 2452-01-037

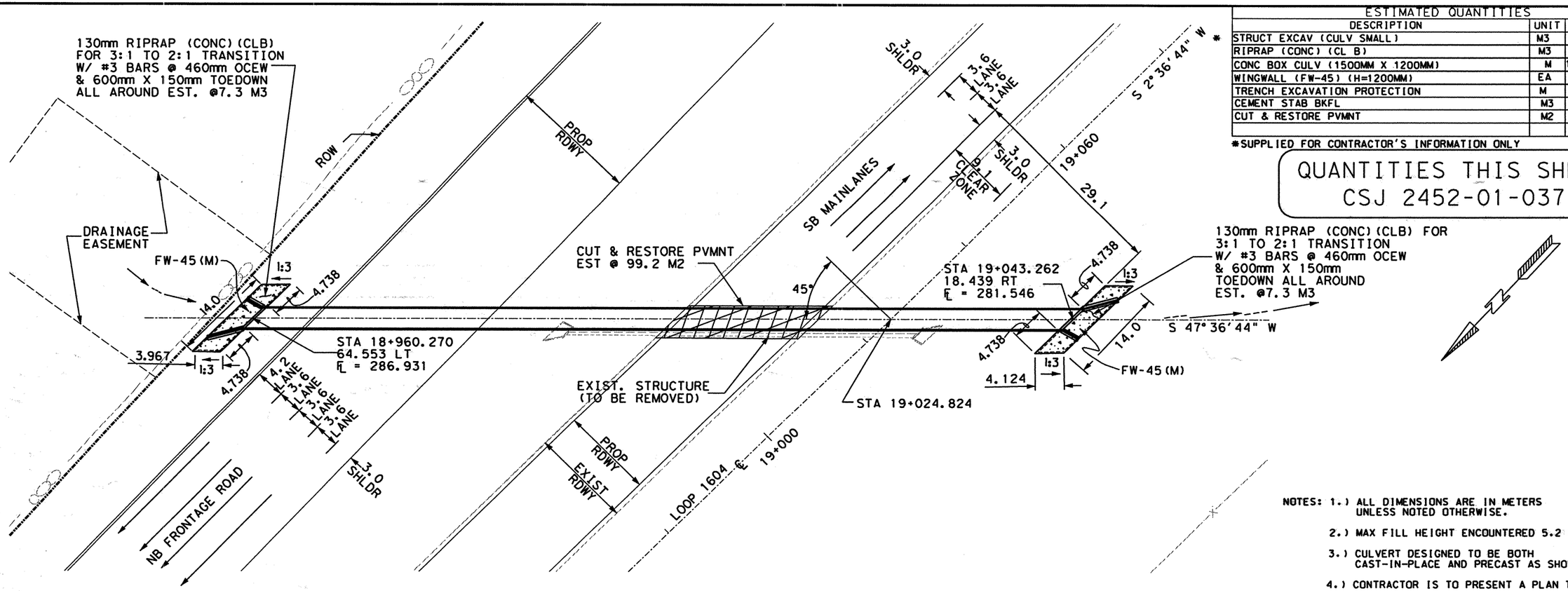


NOTES: 1.) ALL DIMENSIONS ARE IN METERS UNLESS NOTED OTHERWISE.

2.) MAX FILL HEIGHT ENCOUNTERED 5.2 M

3.) CULVERT DESIGNED TO BE BOTH CAST-IN-PLACE AND PRECAST AS SHOWN.

4.) CONTRACTOR IS TO PRESENT A PLAN TO THE ENGINEER FOR APPROVAL TO TIE-IN THE CAST-IN-PLACE CULV. TO THE PRECAST CULV.

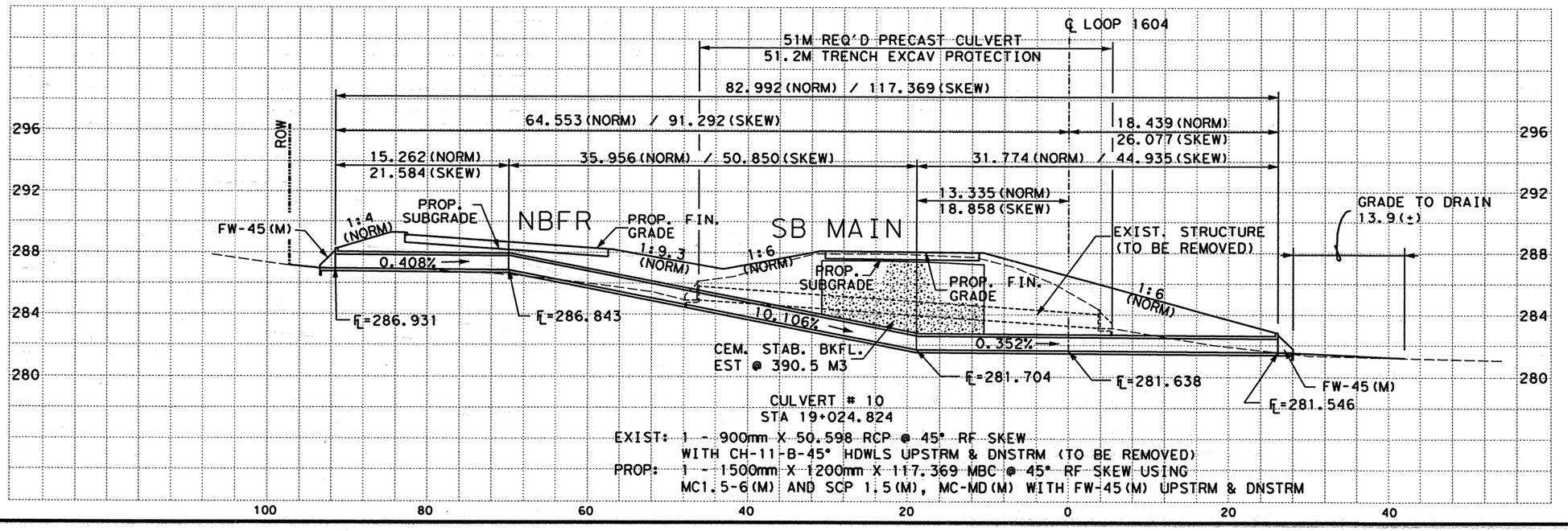


CULVERT # 10
STA 19+024.824
EXIST: 1 - 900mm X 50.598 RCP @ 45° RF SKEW
WITH CH-11-B-45° HDWLS UPSTRM & DNSTRM (TO BE REMOVED)
PROP: 1 - 1500mm X 1200mm X 117.369 MBC @ 45° RF SKEW USING
MC1.5-6(M) AND SCP 1.5(M), MC-MD(M) WITH FW-45(M) UPSTRM & DNSTRM

SCALE: 1:600 HORIZ
1:300 VERT


555 EAST RAMSEY SAN ANTONIO TEXAS 78216 PHONE (210)375-9000 FAX (210)375-9010
PAPE-DAWSON ENGINEERS CIVIL & ENVIRONMENTAL
STATE OF TEXAS K. STEPHEN BONNETTE 60928 REGISTERED PROFESSIONAL ENGINEER
K. STEPHEN BONNETTE, P.E. 9/20/00 DATE


© 2000 Texas Department of Transportation

LOOP 1604
CULVERT LAYOUT

CULVERT # 10 STA 19+024.824

| DN: | | | | | | PROJECT NO. | | |
|---|---|---|---|---|---|---|---|---|
| CK DN: | | | | | | NH 2000 (704), etc. | | |
| DW: | CONTROL | SECTION | JOB | DIST. | STATE | COUNTY | HIGHWAY NO. | SHEET NO. |
| CK DW: | 2452 | 01 | 036 etc. | SAT | TX | BEXAR | LOOP 1604 | 382 |

Design Filename: j:\3941\16\civil\design\plansheets\3941116c110.dgn

Plotted on: 09/19/00

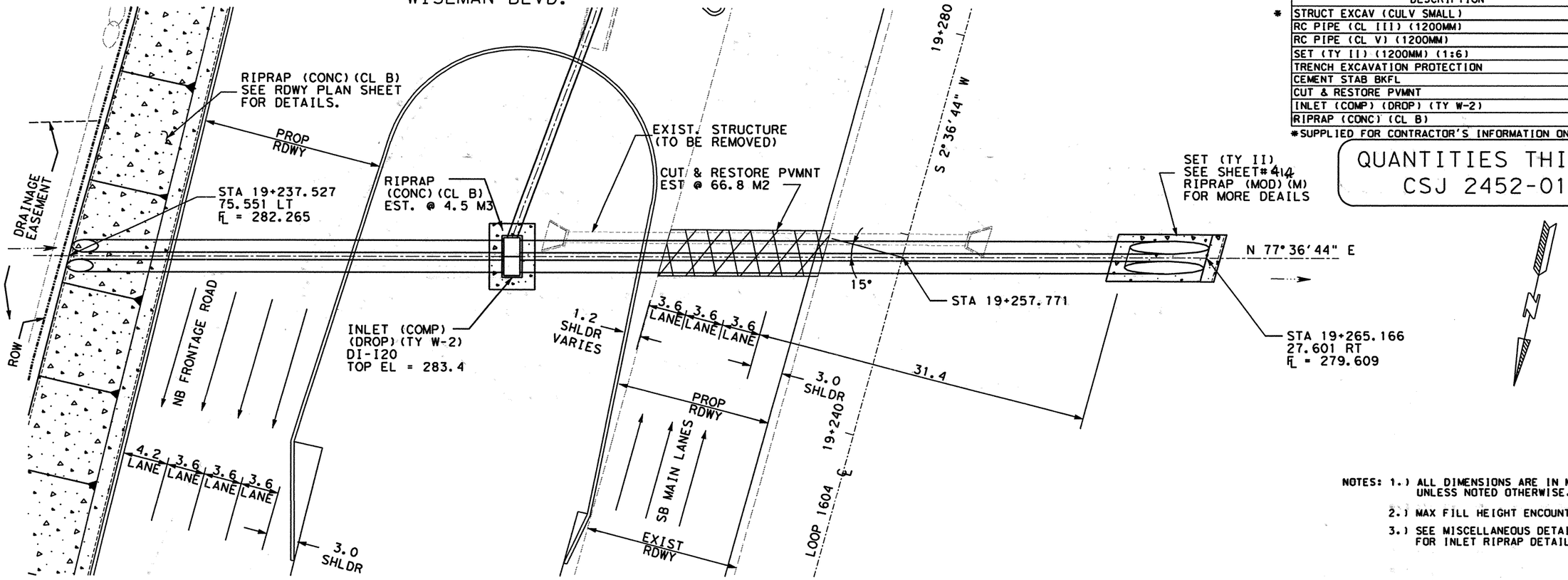


| ESTIMATED QUANTITIES | | | |
|---|---|---|---|
| DESCRIPTION | UNIT | EST. | FINAL |
| STRUCT EXCAV (CULV SMALL) | M3 | 819.5 | |
| RC PIPE (CL III) (1200MM) | M | 83.928 | |
| RC PIPE (CL V) (1200MM) | M | 114.746 | |
| SET (TY II) (1200MM) (1:6) | EA | 2 | |
| TRENCH EXCAVATION PROTECTION | M | 53.0 | |
| CEMENT STAB BKFL | M3 | 287.1 | |
| CUT & RESTORE PVMNT | M2 | 66.8 | |
| INLET (COMP) (DROP) (TY W-2) | EA | 1 | |
| RIPRAP (CONC) (CL B) | M3 | 4.5 | |

*SUPPLIED FOR CONTRACTOR'S INFORMATION ONLY

QUANTITIES THIS SHEET
CSJ 2452-01-037

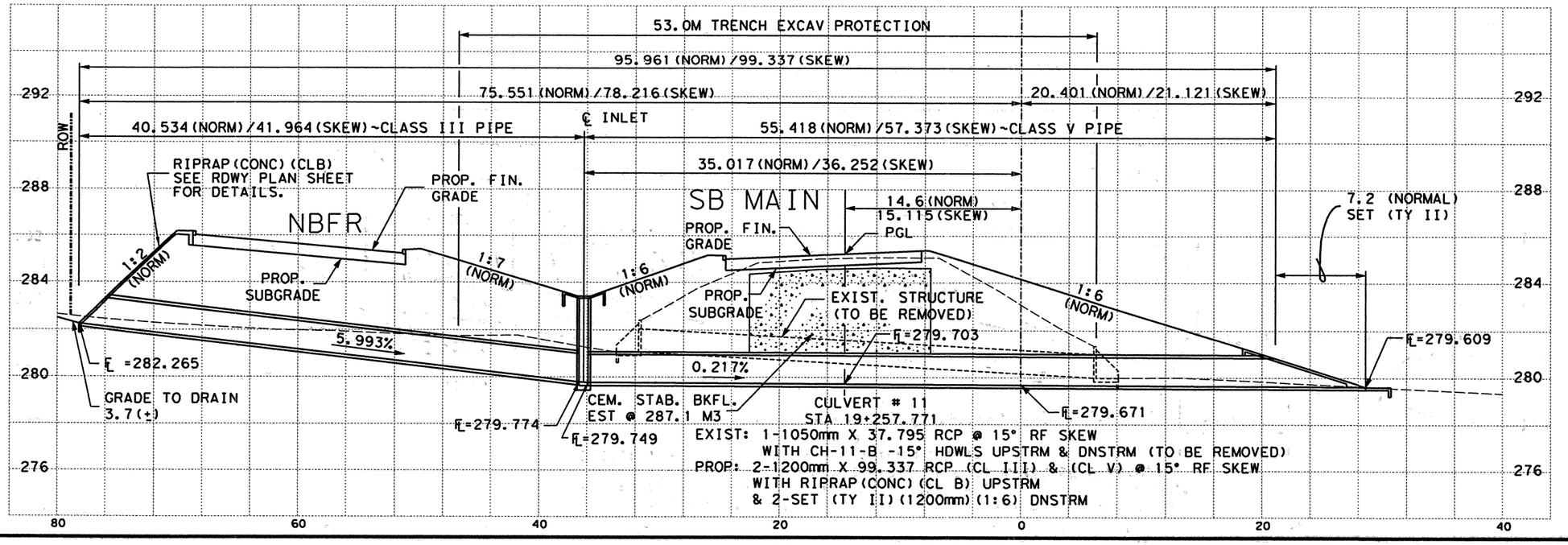


NOTES: 1.) ALL DIMENSIONS ARE IN METERS UNLESS NOTED OTHERWISE.

2.) MAX FILL HEIGHT ENCOUNTERED 4.4 M

3.) SEE MISCELLANEOUS DETAIL SHEET FOR INLET RIPRAP DETAILS.

SCALE: 1:400 HORIZ
1:200 VERT

555 EAST RAMSEY SAN ANTONIO TEXAS 78216
PHONE (210)375-9000
FAX (210)375-9010
PAPE-DAWSON ENGINEERS
CIVIL & ENVIRONMENTAL
STATE OF TEXAS K. STEPHEN BONNETTE 60928 REGISTERED PROFESSIONAL ENGINEER
K. STEPHEN BONNETTE, P.E. 9/20/00 DATE

© 2000 Texas Department of Transportation

# LOOP 1604
# CULVERT LAYOUT

CULVERT # 11 STA 19+257.771

| DN: | | | | | | PROJECT NO. | |
|---|---|---|---|---|---|---|---|
| CK DN: | | | | | | NH 2000 (704), etc. | |
| DW: | CONTROL | SECTION | JOB | DIST. | STATE | COUNTY | HIGHWAY NO. | SHEET NO. |
| CK DW: | 2452 | 01 | 036 etc. | SAT | TX | BEXAR | LOOP 1604 | 383 |

Design Filename: j:\394116\civil\design\plonsheets\394116c111.dgn

Plotted on: $DATE$

Design Filename: $FILE$

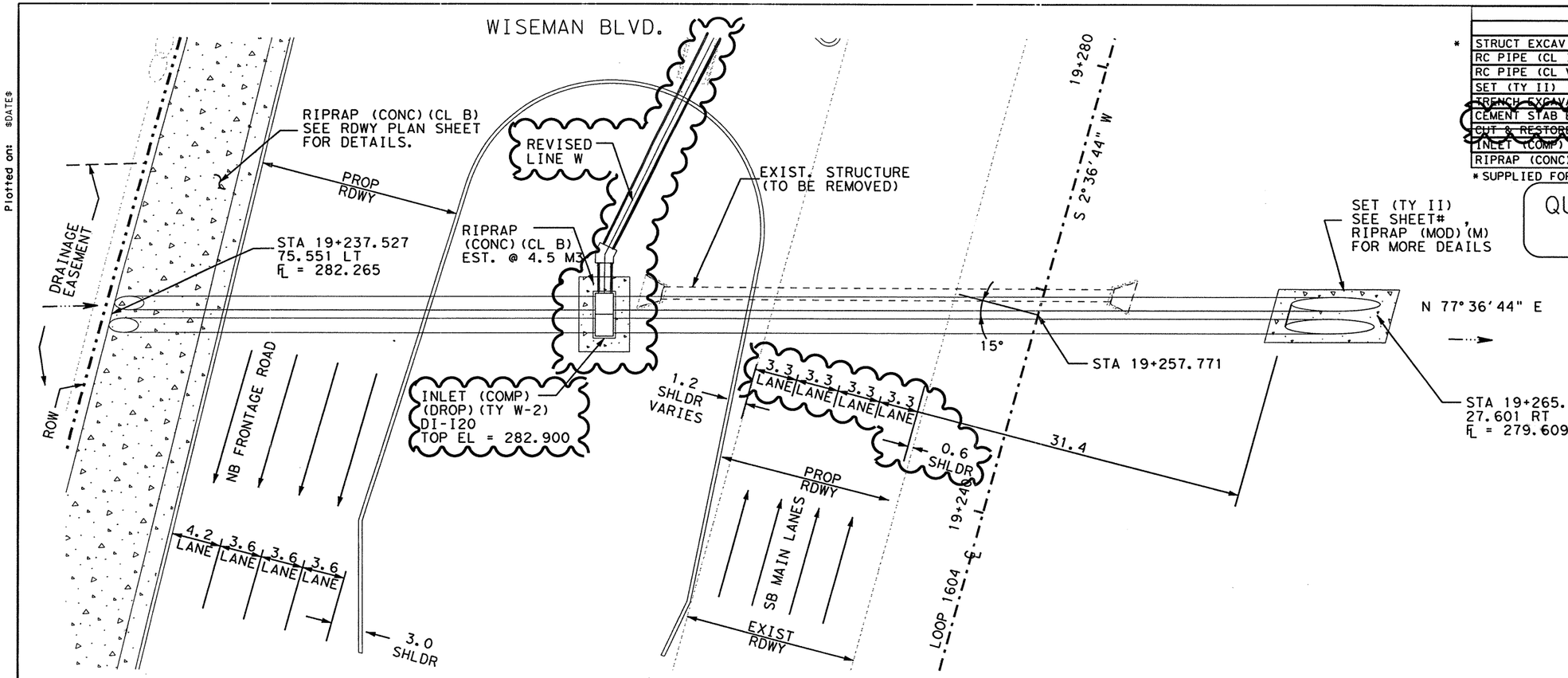


| ESTIMATED QUANTITIES | | | |
|---|---|---|---|
| DESCRIPTION | UNIT | EST. | FINAL |
| * STRUCT EXCAV (CULV SMALL) | M3 | 819.5 | |
| RC PIPE (CL III) (1200MM) | M | 83.928 | |
| RC PIPE (CL V) (1200MM) | M | 114.746 | |
| SET (TY II) (1200MM) (1:6) | EA | 2 | |
| TRENCH EXCAVATION PROTECTION | M | 53.0 | |
| CEMENT STAB BKFL | M3 | 276.3 | |
| CUT & RESTORE PVMNT | M2 | 66.8 | |
| INLET (COMP) (DROP) (TY W-2) | EA | 1 | |
| RIPRAP (CONC) (CL B) | M3 | 4.5 | |

* SUPPLIED FOR CONTRACTOR'S INFORMATION ONLY

## QUANTITIES THIS SHEET
## CSJ 2452-01-037

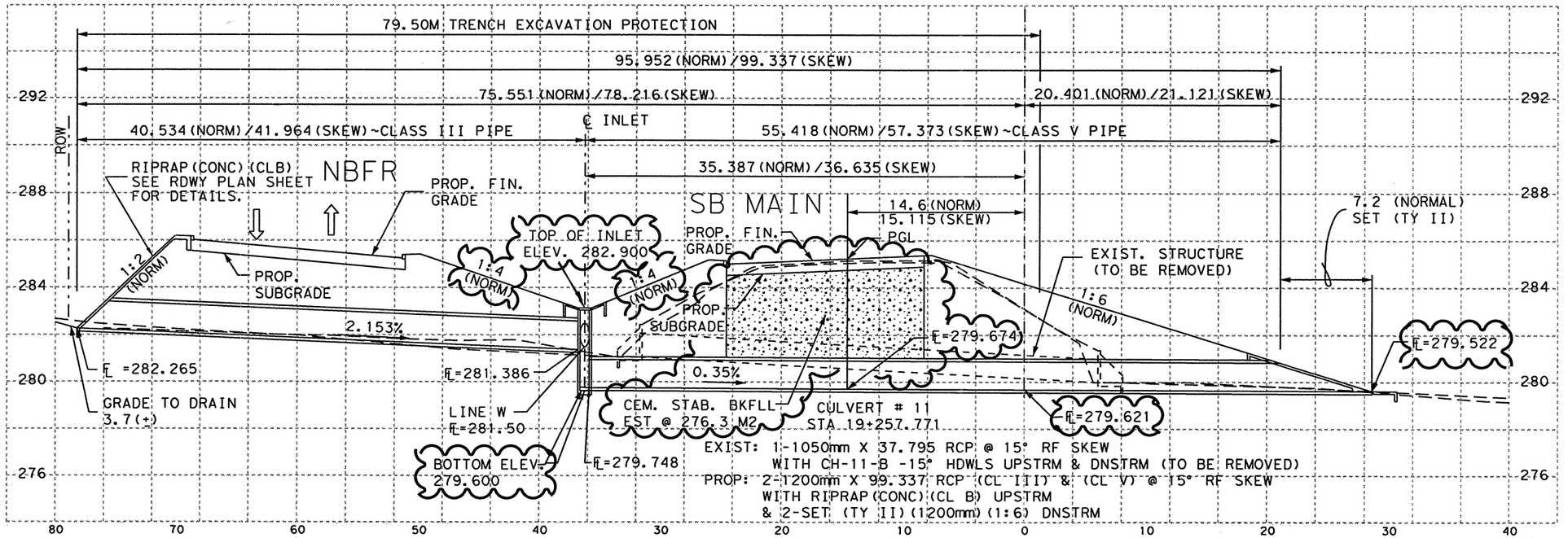


EXIST: 1-1050mm X 37.795 RCP @ 15° RF SKEW
WITH CH-11-B -15° HDWLS UPSTRM & DNSTRM (TO BE REMOVED)
PROP: 2-1200mm X 99.337 RCP (CL III) & (CL V) @ 15° RF SKEW
WITH RIPRAP (CONC) (CL B) UPSTRM
& 2-SET (TY II) (1200mm) (1:6) DNSTRM

1.) ALL DIMENSIONS ARE IN METERS UNLESS NOTED OTHERWISE.

2.) MAX FILL HEIGHT ENCOUNTERED 4.4 M

3.) SEE MISCELLANEOUS DETAIL SHEET FOR INLET RIPRAP DETAILS.

CHANGE ORDER NO. 64
-REVISED LINE W.
-REVISED DI-I20 ELEVS.
-REMOVED CUT & RESTORE PVMNT
-MODIFIED CEM. STAB. BKFLL.
-REVISED LANE CONFIGURATION.
-REVISED CULVERT PROFILE.
-REVISED QUANTITIES

CHANGE ORDER NO. 64 | REVISED SHEET

SCALE: 1:400 HORIZ
1:200 VERT

STATE OF TEXAS
JEROME D. PAVLISKA
76075
REGISTERED PROFESSIONAL ENGINEER

Jerome D. Pavliska, P.E. 4-13-04
Jerome D. Pavliska, P.E. Date

©2000 Texas Department of Transportation

# LOOP 1604
# CULVERT LAYOUT

CULVERT # 11 STA 19+257.771

| DN: | | | | | | PROJECT NO. | | |
|---|---|---|---|---|---|---|---|---|
| CK DN: | | | | | | NH 2000 (704), etc. | | |
| DW: | CONTROL | SECTION | JOB | DIST. | STATE | COUNTY | HIGHWAY NO. | SHEET NO. |
| CK DW: | 2452 | 01 | 036 | SAT | TX | BEXAR | LOOP 1604 | 383B |

Plotted on: 09/19/00

| ESTIMATED QUANTITIES | | | |
|---|---|---|---|
| DESCRIPTION | UNIT | EST. | FINAL |
| * STRUCTURE EXCAV (CULV SMALL) | M3 | 1296.7 | |
| RIPRAP (CONC) (CL B) | M3 | 9.6 | |
| CONC BOX CULV (1500MM X 900MM) | M | 189.830 | |
| WINGWALL (FW-15) (H=900MM) | EA | 2 | |
| TRENCH EXCAVATION PROTECTION | M | 80.3 | |
| CEMENT STAB BKFL | M3 | 152.4 | |
| CUT & RESTORE PVMNT | M2 | 53.4 | |
| | | | |

*SUPPLIED FOR CONTRACTOR'S INFORMATION ONLY

QUANTITIES THIS SHEET
CSJ 2452-01-037

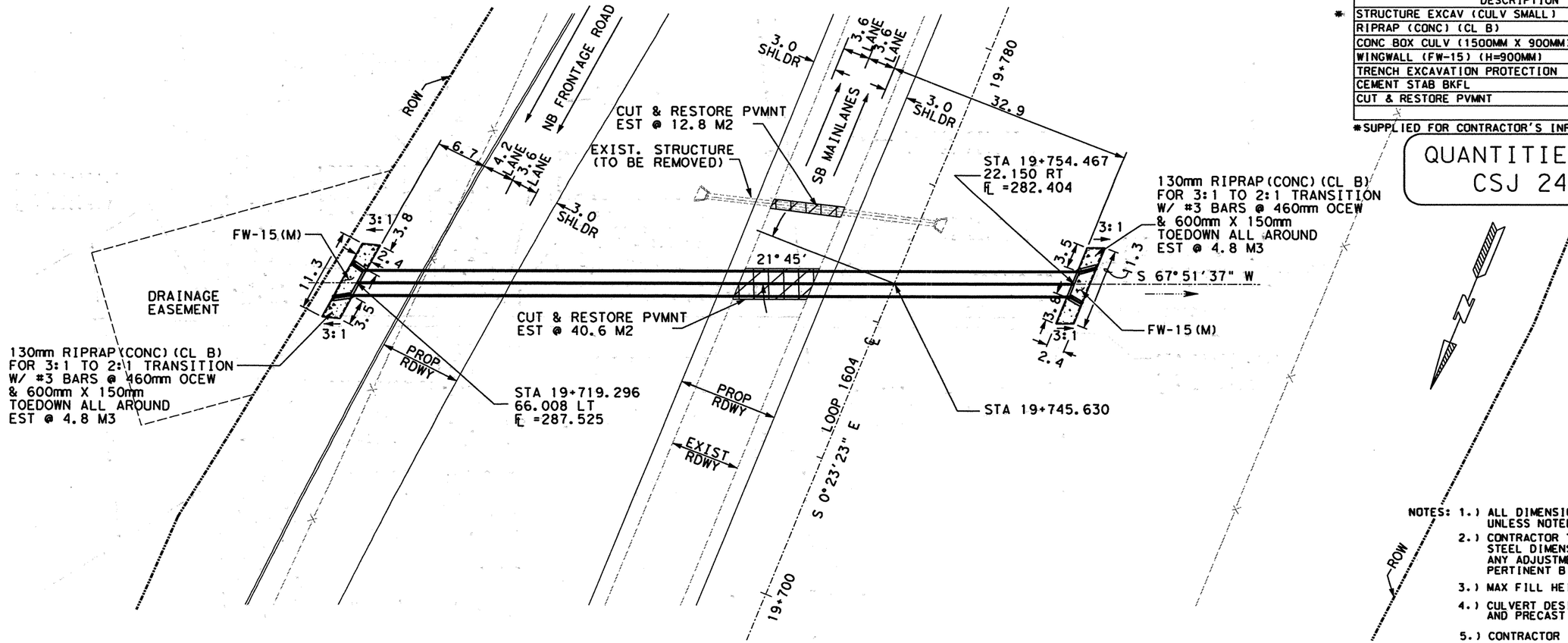


NOTES:
1.) ALL DIMENSIONS ARE IN METERS UNLESS NOTED OTHERWISE.
2.) CONTRACTOR TO ADJUST HEADWALL AND WINGWALL STEEL DIMENSIONS TO MATCH FIELD CONDITIONS. ANY ADJUSTMENTS SHALL BE SUBSIDIARY TO THE PERTINENT BID ITEM.
3.) MAX FILL HEIGHT ENCOUNTERED 4.0 M
4.) CULVERT DESIGNED TO BE BOTH CAST-IN-PLACE AND PRECAST AS SHOWN.
5.) CONTRACTOR IS TO PRESENT A PLAN TO THE ENGINEER FOR APPROVAL TO TIE-IN THE CAST-IN-PLACE CULV. TO THE PRECAST CULV.

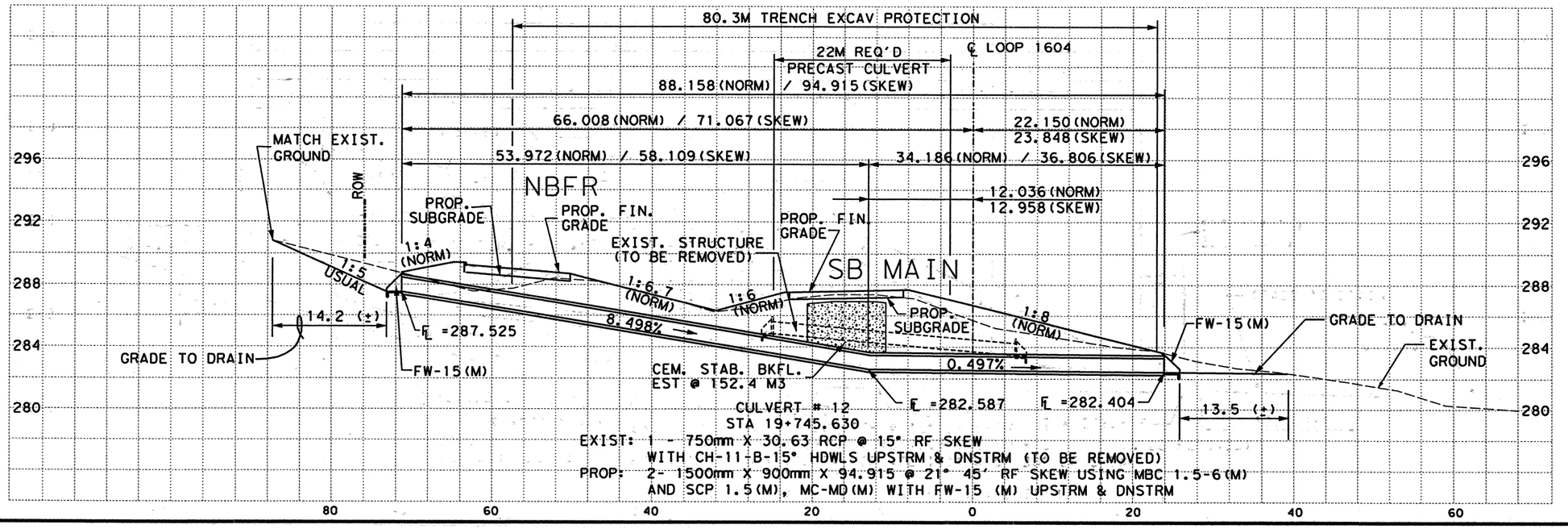


EXIST: 1 - 750mm X 30.63 RCP @ 15° RF SKEW WITH CH-11-B-15° HDWLS UPSTRM & DNSTRM (TO BE REMOVED)
PROP: 2- 1500mm X 900mm X 94.915 @ 21° 45' RF SKEW USING MBC 1.5-6(M) AND SCP 1.5(M), MC-MD(M) WITH FW-15 (M) UPSTRM & DNSTRM

SCALE: 1:600 HORIZ
1:300 VERT

555 EAST RAMSEY SAN ANTONIO TEXAS 78216
PHONE (210)375-9000
FAX (210)375-9010
PAPE-DAWSON ENGINEERS
CIVIL & ENVIRONMENTAL
STATE OF TEXAS K. STEPHEN BONNETTE 60928 REGISTERED PROFESSIONAL ENGINEER
K. STEPHEN BONNETTE, P.E. 9/20/00
DATE

© 2000 Texas Department of Transportation

# LOOP 1604
# CULVERT LAYOUT

CULVERT # 12 STA 19+745.630

| DN: | | | | | | PROJECT NO. | | |
|---|---|---|---|---|---|---|---|---|
| CK DN: | | | | | | NH 2000 (704), etc. | | |
| DW: | CONTROL | SECTION | JOB | DIST. | STATE | COUNTY | HIGHWAY NO. | SHEET NO. |
| CK DW: | 2452 | 01 | 036 | SAT | TX | BEXAR | LOOP 1604 | 384 |
| | | | etc. | | | | | |

Design Filename: j:\3941\16\civil\design\plansheets\3941l6cl12.dgn

Plotted on: 01/26/2004

Design Filename: p:\52\20\11\design\civil\plansheets\drainage\cross-drain\394116c112.dgn

| ESTIMATED QUANTITIES | | | |
|---|---|---|---|
| DESCRIPTION | UNIT | EST. | FINAL |
| STRUCTURE EXCAV (CULV SMALL) | M3 | 1296.7 | |
| RIPRAP (CONC) (CL B) | M3 | 9.6 | |
| CONC BOX CULV (1500MM X 900MM) | M | 89.830 | |
| WINGWALL (FW-15) (H=900MM) | EA | 2 | |
| ~~TRENCH EXCAVATION PROTECTION~~ | ~~M~~ | ~~80.3~~ | |
| CEMENT STAB BKFL | M3 | 131.8 | |
| ~~CUT & RESTORE PVMNT~~ | ~~M2~~ | ~~41.0~~ | |

* SUPPLIED FOR CONTRACTOR'S INFORMATION ONLY

QUANTITIES THIS SHEET
CSJ 2452-01-037

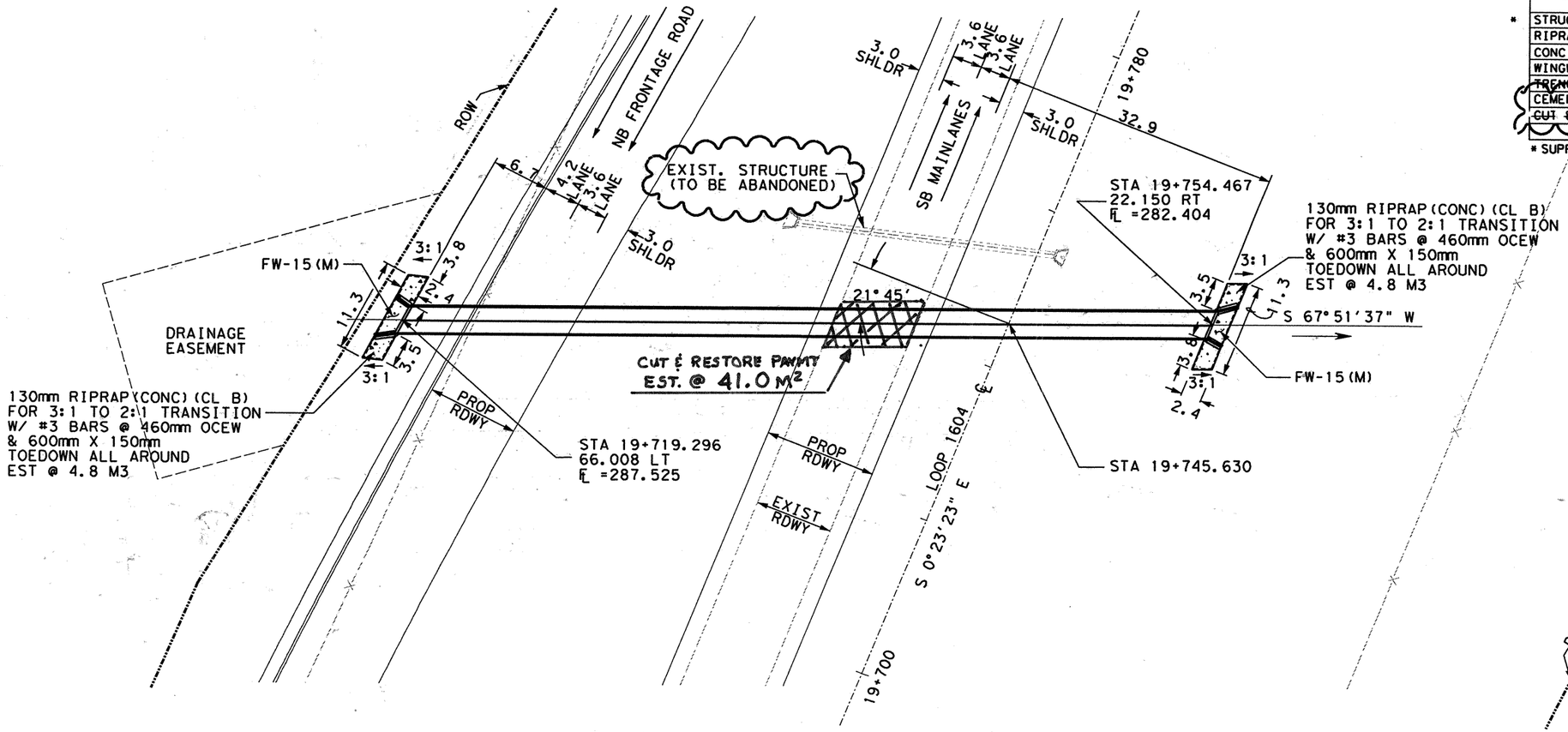


CHANGE ORDER NO. 64

-REMOVED CUT & RESTORE PVMNT
-MODIFIED CEM. STAB. BKFLL.
-REVISED QUANTITIES

NOTES:
1.) ALL DIMENSIONS ARE IN METERS UNLESS NOTED OTHERWISE.
2.) CONTRACTOR TO ADJUST HEADWALL AND WINGWALL STEEL DIMENSIONS TO MATCH FIELD CONDITIONS. ANY ADJUSTMENTS SHALL BE SUBSIDIARY TO THE PERTINENT BID ITEM.
3.) MAX FILL HEIGHT ENCOUNTERED 4.0 M
4.) CULVERT DESIGNED TO BE BOTH CAST-IN-PLACE AND PRECAST AS SHOWN.
5.) CONTRACTOR IS TO PRESENT A PLAN TO THE ENGINEER FOR APPROVAL TO TIE-IN THE CAST-IN-PLACE CULV. TO THE PRECAST CULV.

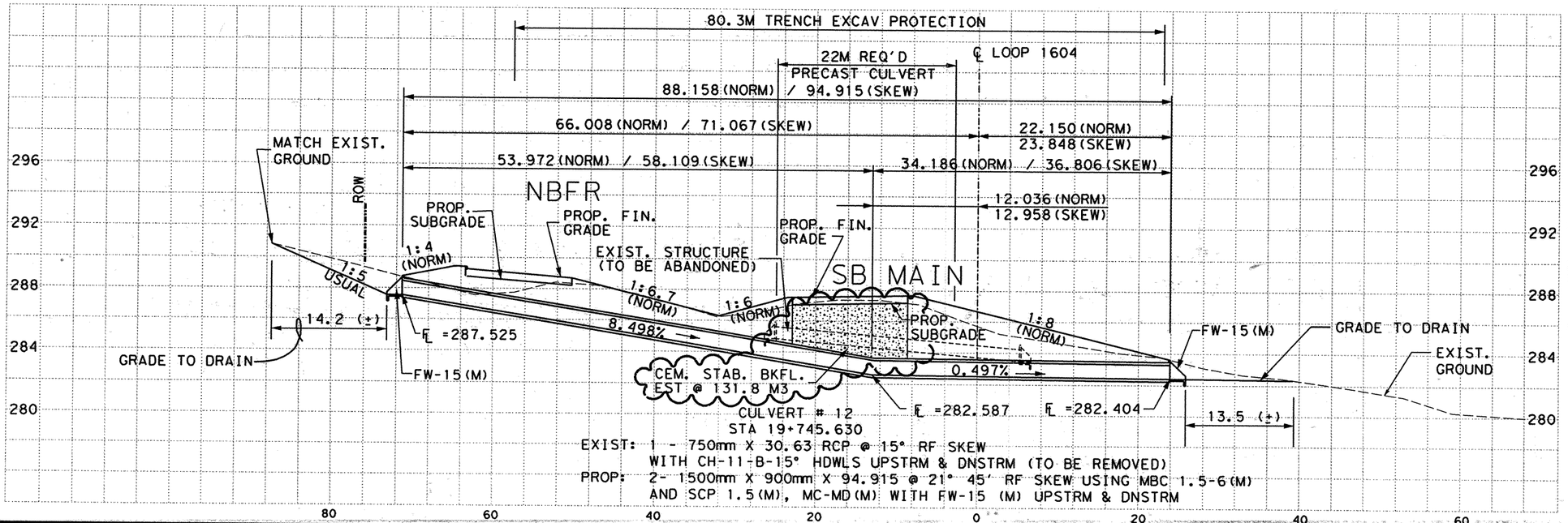


EXIST: 1 - 750mm X 30.63 RCP @ 15° RF SKEW
WITH CH-11-B-15° HDWLS UPSTRM & DNSTRM (TO BE REMOVED)
PROP: 2- 1500mm X 900mm X 94.915 @ 21° 45' RF SKEW USING MBC 1.5-6(M)
AND SCP 1.5(M), MC-MD(M) WITH FW-15 (M) UPSTRM & DNSTRM

CHANGE ORDER NO. 64 | REVISED SHEET

SCALE: 1:600 HORIZ
1:300 VERT

555 EAST RAMSEY SAN ANTONIO TEXAS 78216
PHONE (210)375-9000
FAX (210)375-9010
PAPE-DAWSON ENGINEERS
CIVIL & ENVIRONMENTAL
STATE OF TEXAS J. KENT O'BRIEN 64398 REGISTERED PROFESSIONAL ENGINEER
J. KENT O'BRIEN, P.E. 1/27/2004 DATE

© 2000 Texas Department of Transportation

LOOP 1604
CULVERT LAYOUT

CULVERT # 12 STA 19+745.630

| DN: | | | | | | PROJECT NO. | |
|---|---|---|---|---|---|---|---|
| CK DN: | | | | | | NH 2000 (704), etc. | |
| DW: | CONTROL | SECTION | JOB | DIST. | STATE | COUNTY | HIGHWAY NO. | SHEET NO. |
| CK DW: | 2452 | 01 | 036 etc. | SAT | TX | BEXAR | LOOP 1604 | 384A |

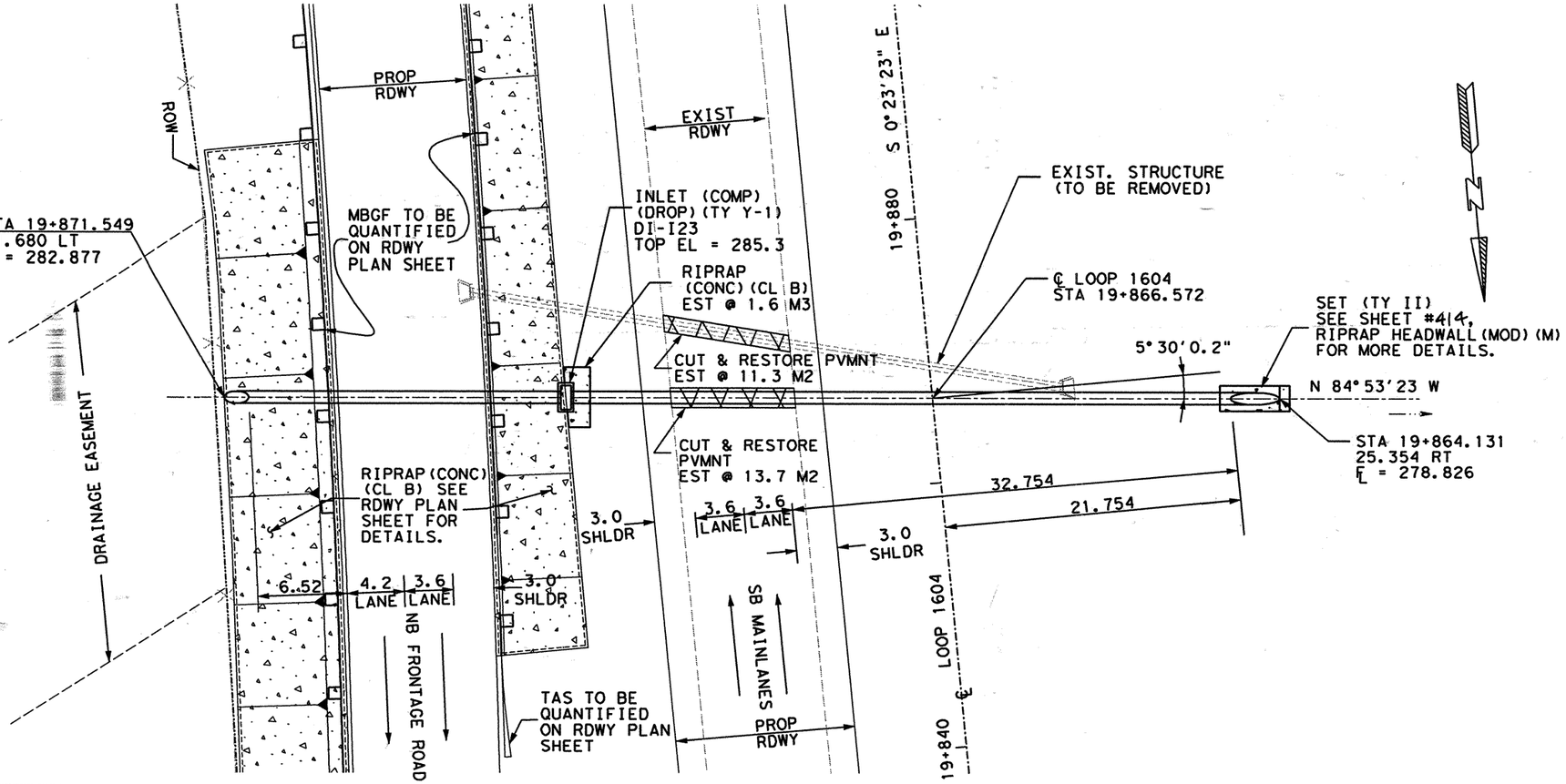


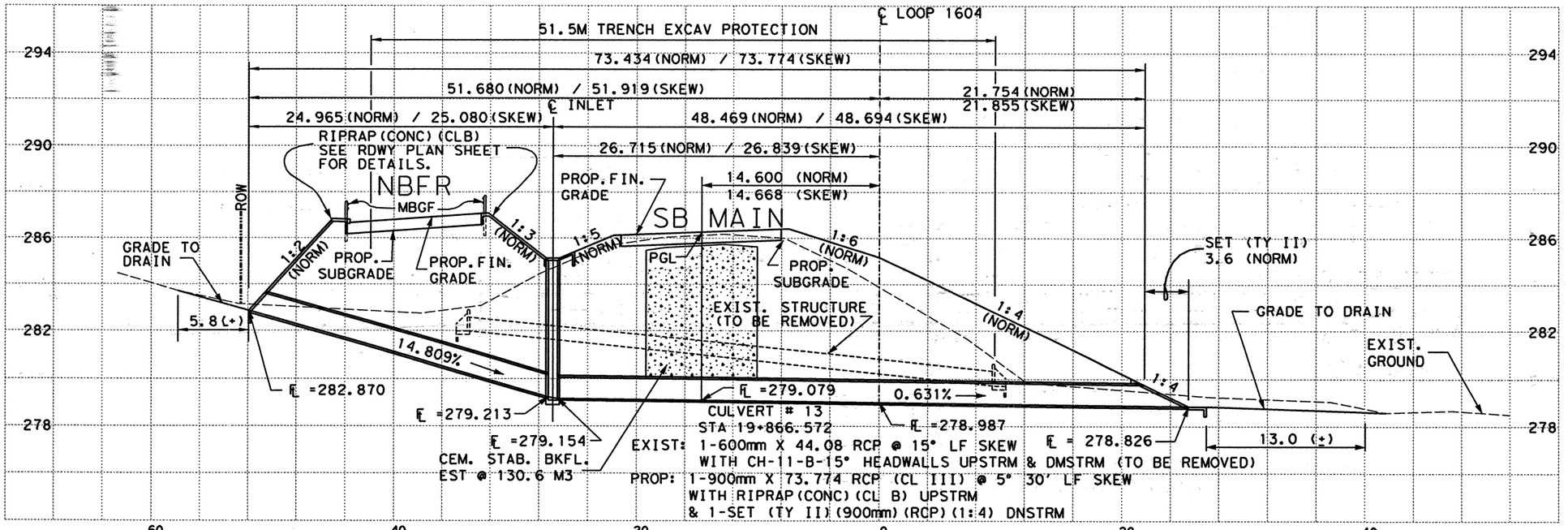


| ESTIMATED QUANTITIES | | | |
|---|---|---|---|
| DESCRIPTION | UNIT | EST. | FINAL |
| * STRUCTURE EXCAV (CULV SMALL) | M3 | 424.2 | |
| RC PIPE (CL III) (900MM) | M | 73.774 | |
| SET (TY II) (900MM) (RCP) (1:4) | EA | 1 | |
| TRENCH EXCAVATION PROTECTION | M | 51.5 | |
| CEMENT STAB BKFL | M3 | 130.6 | |
| CUT & RESTORE PVMNT | M2 | 25.0 | |
| INLET (COMP) (DROP) (TY Y-1) | EA | 1 | |
| RIPRAP (CONC) (CL B) | M3 | 1.6 | |

*SUPPLIED FOR CONTRACTOR'S INFORMATION ONLY

QUANTITIES THIS SHEET
CSJ 2452-01-037

NOTES: 1.) ALL DIMENSIONS ARE IN METERS UNLESS NOTED OTHERWISE.

2.) CONTRACTOR TO ADJUST HEADWALL AND WINGWALL STEEL DIMENSIONS TO MATCH FIELD CONDITIONS. ANY ADJUSTMENTS SHALL BE SUBSIDIARY TO THE PERTINENT BID ITEM.

3.) MAX FILL HEIGHT ENCOUNTERED 6.4 M

4.) SEE MISCELLANEOUS DETAIL SHEET FOR INLET RIPRAP DETAILS.

SCALE: 1:400 HORIZ
1:200 VERT

555 EAST RAMSEY SAN ANTONIO TEXAS 78216
PHONE (210)375-9000
FAX (210)375-9010
PAPE-DAWSON ENGINEERS
CIVIL & ENVIRONMENTAL
STATE OF TEXAS K. STEPHEN BONNETTE 60928 REGISTERED PROFESSIONAL ENGINEER
K. STEPHEN BONNETTE, P.E. 9/20/00 DATE

© 2000 Texas Department of Transportation

# LOOP 1604
# CULVERT LAYOUT

CULVERT # 13 STA 19+866.572

| DN: | | | | | PROJECT NO. | | |
|---|---|---|---|---|---|---|---|
| CK DN: | | | | | NH 2000 (704), etc. | | |
| DW: | CONTROL | SECTION | JOB | DIST. | STATE | COUNTY | HIGHWAY NO. | SHEET NO. |
| CK DW: | 2452 | 01 | 036 etc. | SAT | TX | BEXAR | LOOP 1604 | 385 |

Plotted on: 09/19/00

Design Filename: j:\3941\16\civil\design\plonsheets\394116cl13.dgn

Plotted on: 09/19/00

| ESTIMATED QUANTITIES | | | |
|---|---|---|---|
| DESCRIPTION | UNIT | EST. | FINAL |
| STRUCTURE EXCAV (CULV SMALL) | M3 | 446.6 | |
| RC PIPE (CL III) (1200MM) | M | 105.830 | |
| SET (TY I) (1200MM) (1:6) C | EA | 2 | |
| SET (TY I) (1200MM) (1:4) C | EA | 4 | |
| TRENCH EXCAVATION PROTECTION | M | 33.6 | |
| | | | |
| | | | |
| | | | |

*SUPPLIED FOR CONTRACTOR'S INFORMATION ONLY

QUANTITIES THIS SHEET
CSJ 2452-01-036

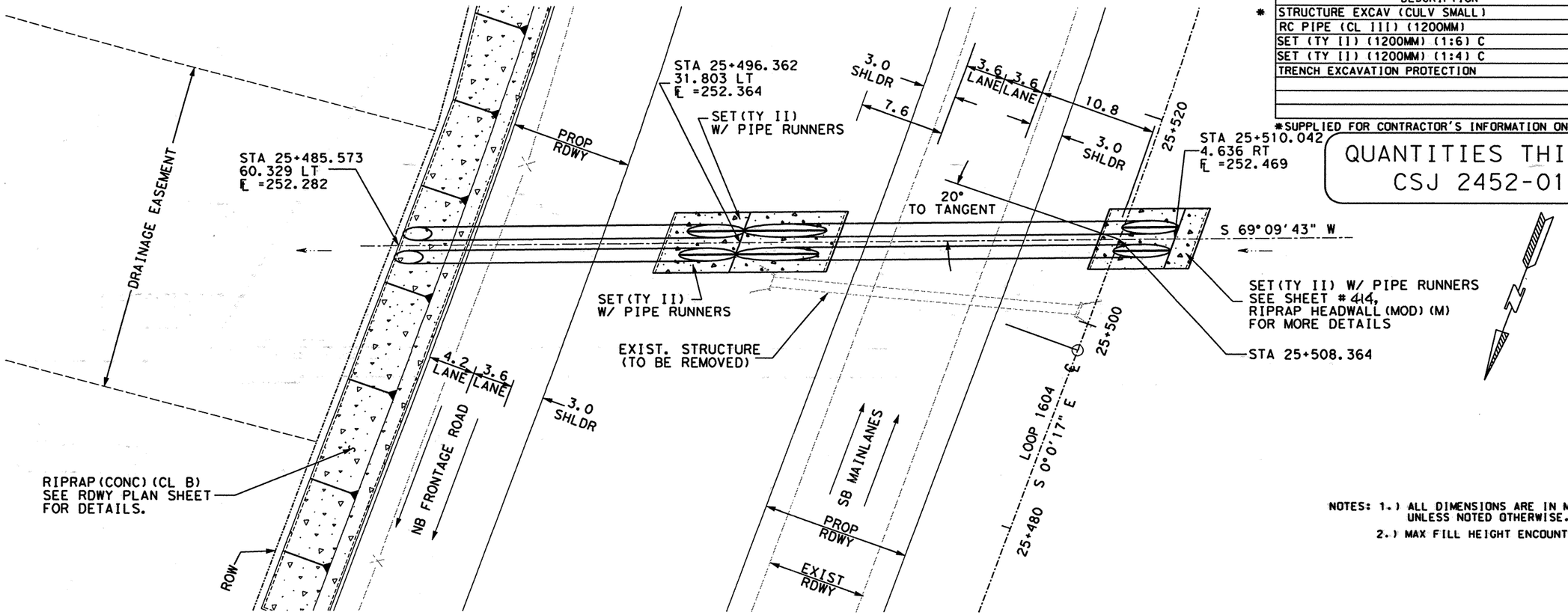


NOTES: 1.) ALL DIMENSIONS ARE IN METERS UNLESS NOTED OTHERWISE.
2.) MAX FILL HEIGHT ENCOUNTERED 1.6 M

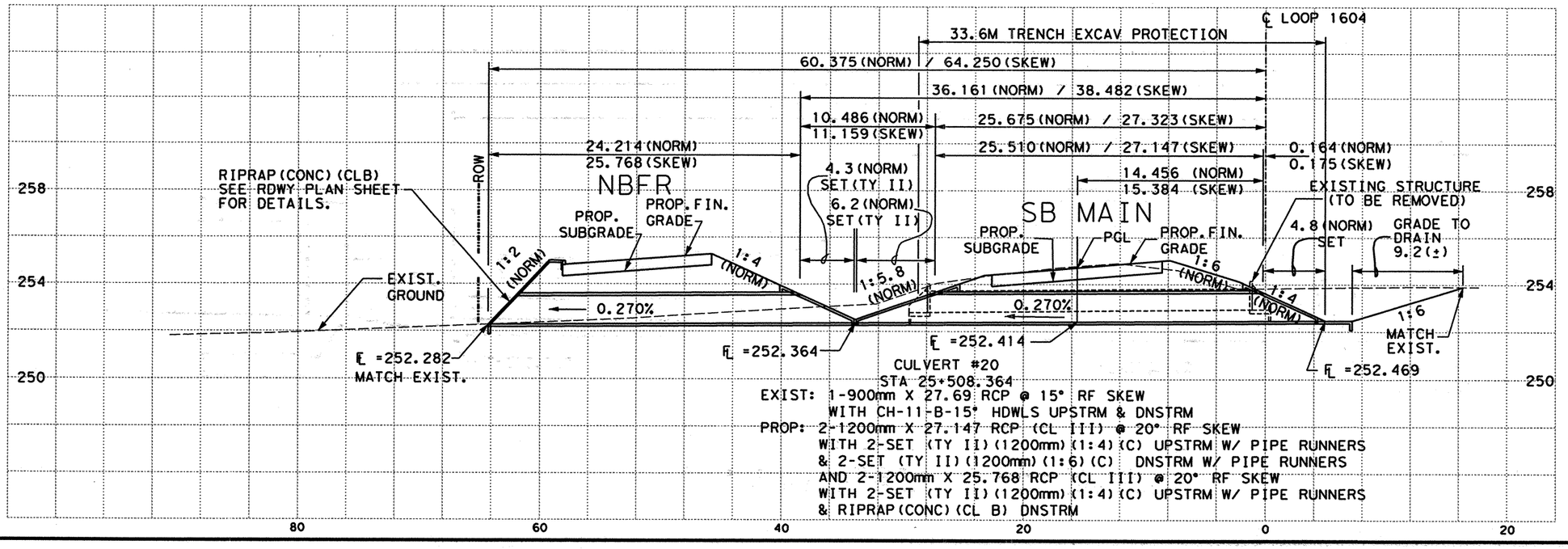


CULVERT #20
STA 25+508.364
EXIST: 1-900mm X 27.69 RCP @ 15° RF SKEW
WITH CH-11-B-15° HDWLS UPSTRM & DNSTRM
PROP: 2-1200mm X 27.147 RCP (CL III) @ 20° RF SKEW
WITH 2-SET (TY II) (1200mm) (1:4) (C) UPSTRM W/ PIPE RUNNERS
& 2-SET (TY II) (1200mm) (1:6) (C) DNSTRM W/ PIPE RUNNERS
AND 2-1200mm X 25.768 RCP (CL III) @ 20° RF SKEW
WITH 2-SET (TY II) (1200mm) (1:4) (C) UPSTRM W/ PIPE RUNNERS
& RIPRAP (CONC) (CL B) DNSTRM

SCALE: 1:400 HORIZ
1:200 VERT


555 EAST RAMSEY SAN ANTONIO TEXAS 78216
PHONE (210)375-9000
FAX (210)375-9010
PAPE-DAWSON ENGINEERS
CIVIL & ENVIRONMENTAL
K. STEPHEN BONNETTE 60928 REGISTERED PROFESSIONAL ENGINEER
STATE OF TEXAS
K. STEPHEN BONNETTE, P.E. 9/20/00


© 2000 Texas Department of Transportation

# LOOP 1604
# CULVERT LAYOUT

CULVERT #20 STA 25+508.364

| DN: | | | | | PROJECT NO. | | |
|---|---|---|---|---|---|---|---|
| CK DN: | | | | | NH 2000 (704), etc. | | |
| DW: | CONTROL | SECTION | JOB | DIST. | COUNTY | HIGHWAY NO. | SHEET NO. |
| CK DW: | 2452 | 01 | 036 etc. | SAT | BEXAR | LOOP 1604 | 386 |

Design Filename: j:\3941\16\civil\design\plansheets\394116c120.dgn

Plotted on: 09/19/00

| ESTIMATED QUANTITIES | | | |
|---|---|---|---|
| DESCRIPTION | UNIT | EST. | FINAL |
| * STRUCT EXCAV (CULV SMALL) | M3 | 302.0 | |
| RCPIPE (CL III) (600MM) | M | 60.813 | |
| RCPIPE (CL IV) (600MM) | M | 165.000 | |
| SET (TY II) (600MM) (1:6) | EA | 6 | |
| TRENCH EXCAVATION PROTECTION | M | 24.5 | |
| | | | |
| | | | |
| | | | |

*SUPPLIED FOR CONTRACTOR'S INFORMATION ONLY

QUANTITIES THIS SHEET
CSJ 2452-01-036

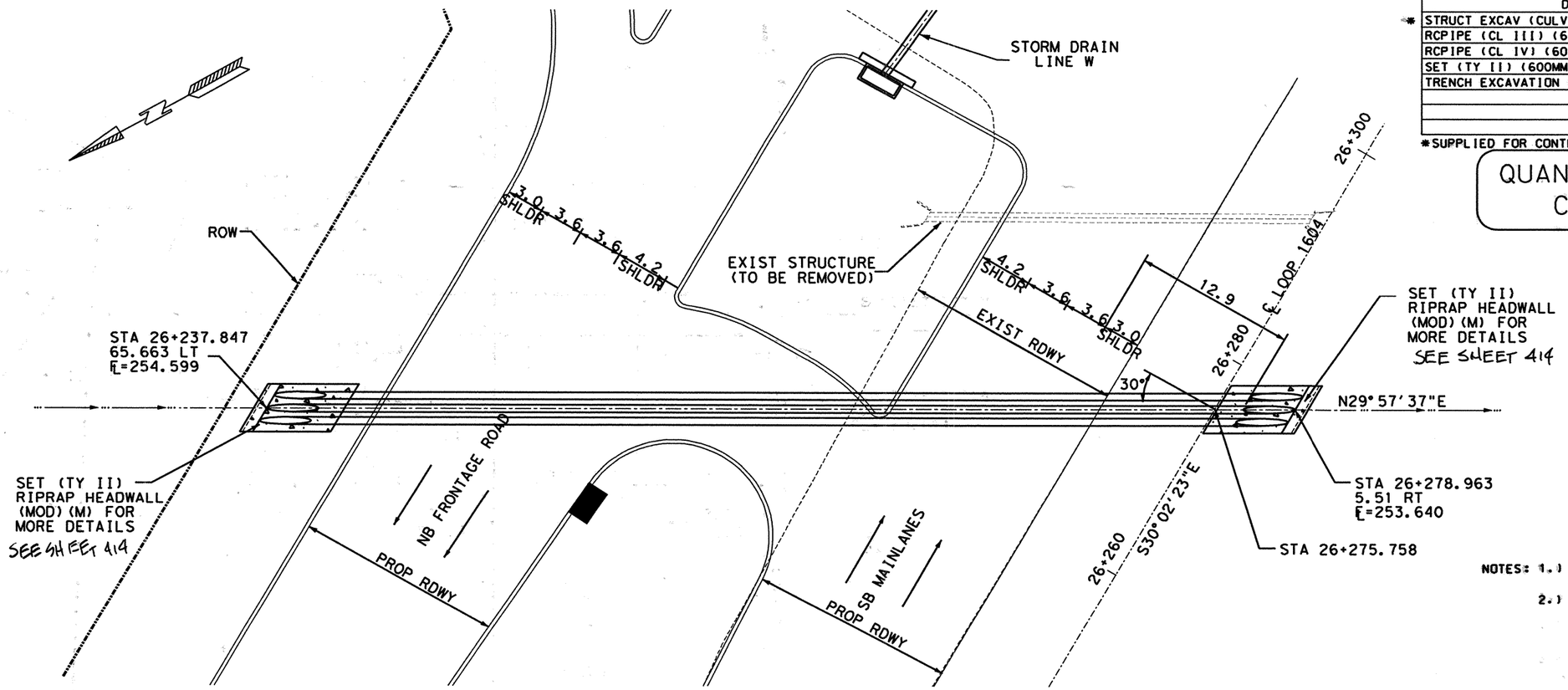


NOTES: 1.) ALL DIMENSIONS ARE IN METERS UNLESS NOTED OTHERWISE.
2.) MAX FILL HEIGHT ENCOUNTERED 1.5 M

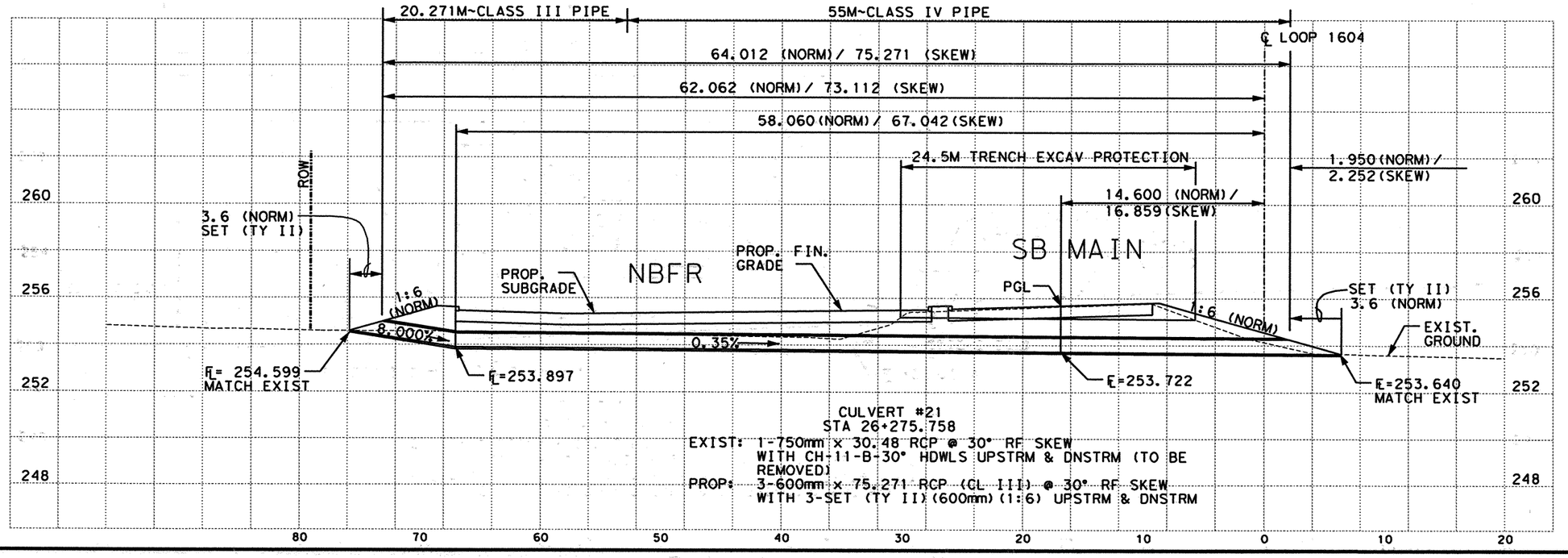


CULVERT #21
STA 26+275.758
EXIST: 1-750mm x 30.48 RCP @ 30° RF SKEW WITH CH-11-B-30° HDWLS UPSTRM & DNSTRM (TO BE REMOVED)
PROP: 3-600mm x 75.271 RCP (CL III) @ 30° RF SKEW WITH 3-SET (TY II) (600mm) (1:6) UPSTRM & DNSTRM

SCALE: 1:400 HORIZ
1:200 VERT

555 EAST RAMSEY SAN ANTONIO TEXAS 78216
PHONE (210)375-9000
FAX (210)375-9010
PAPE-DAWSON ENGINEERS
CIVIL & ENVIRONMENTAL
K. STEPHEN BONNETTE 60928 REGISTERED PROFESSIONAL ENGINEER STATE OF TEXAS
K. STEPHEN BONNETTE, P.E. 9/20/00 DATE

© 2000 Texas Department of Transportation

LOOP 1604
CULVERT LAYOUT
CULVERT # 21 STA 26+275.758

| DN: | | | | | PROJECT NO. | | |
|---|---|---|---|---|---|---|---|
| CK DN: | | | | | NH 2000 (704), etc. | | |
| DW: | CONTROL | SECTION | JOB | DIST. | STATE | COUNTY | HIGHWAY NO. | SHEET NO. |
| CK DW: | 2452 | 01 | 036 | SAT | TX | BEXAR | LOOP 1604 | 387 |

etc.

Design Filename: j:\3941\16\civil\design\plansheets\3941116c121.dgn

Plotted on: 01/26/2004

Design Filename: p:\52\2011\design\civil\plansheets\drainage\cross-drain\3941160121.dgn

| ESTIMATED QUANTITIES | | | |
|---|---|---|---|
| DESCRIPTION | UNIT | EST. | FINAL |
| * STRUCT EXCAV (CULV SMALL) | M3 | 302.0 | |
| RCPIPE (CL III) (600MM) | M | 225.813 | |
| RCPIPE (CL IV) (600MM) | M | 145.000 | |
| SET (TY II) (600MM) (1:6) | EA | 6 | |
| TRENCH EXCAVATION PROTECTION | M | 24.5 | |
| | | | |
| | | | |
| | | | |

* SUPPLIED FOR CONTRACTOR'S INFORMATION ONLY

QUANTITIES THIS SHEET
CSJ 2452-01-036

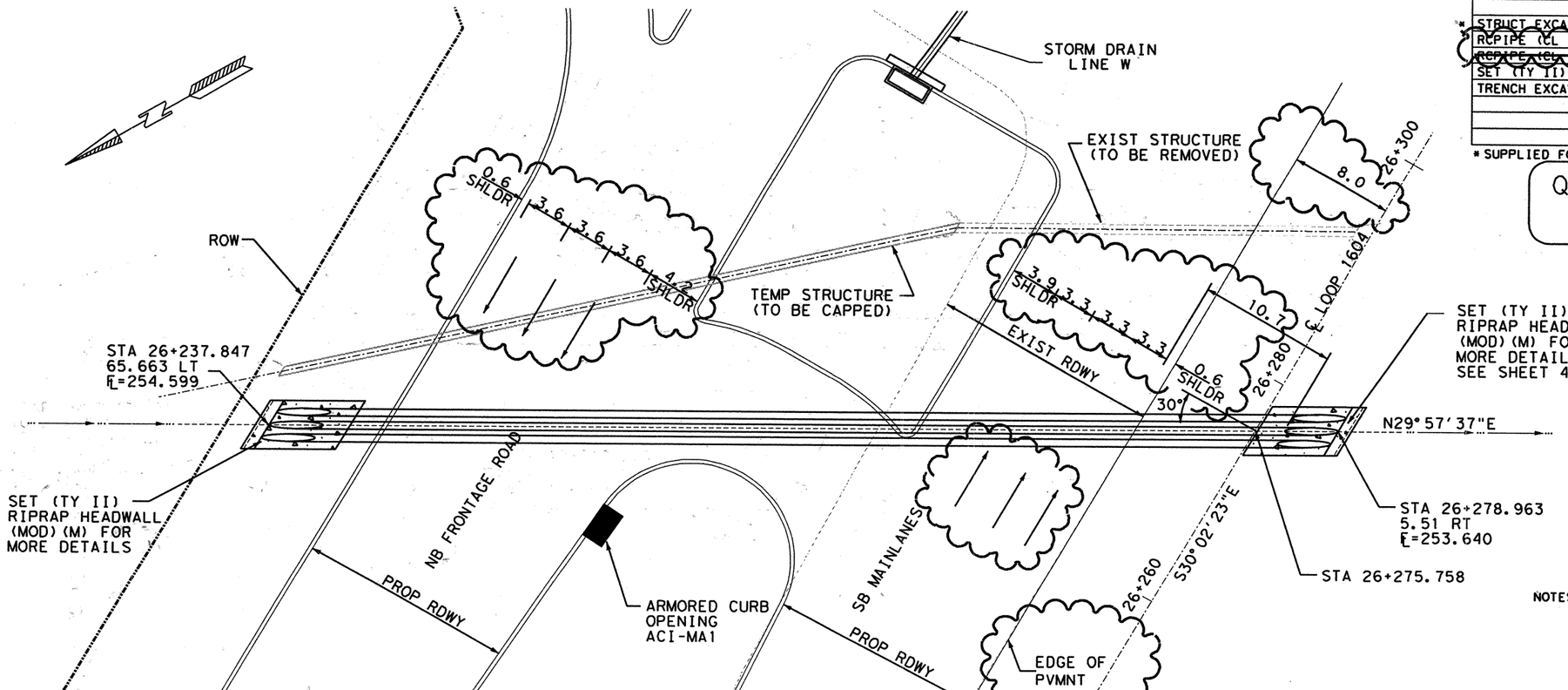


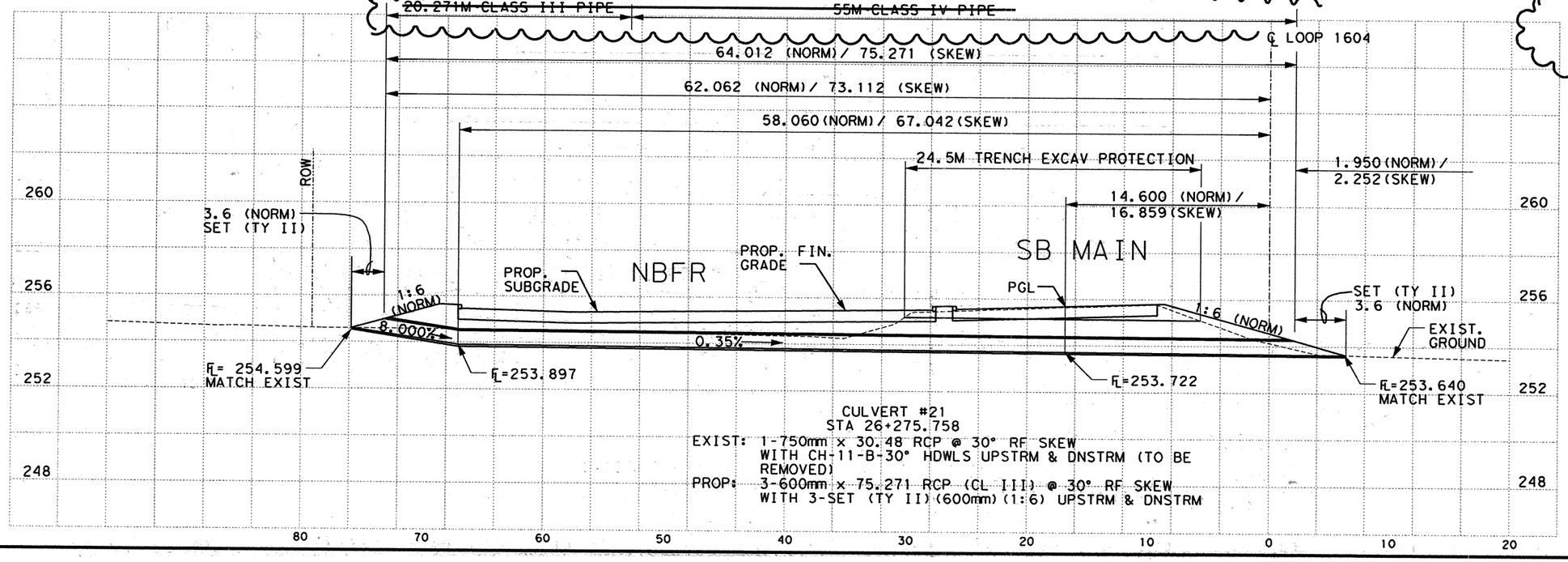


CULVERT #21
STA 26+275.758
EXIST: 1-750mm x 30.48 RCP @ 30° RF SKEW WITH CH-11-B-30° HDWLS UPSTRM & DNSTRM (TO BE REMOVED)
PROP: 3-600mm x 75.271 RCP (CL III) @ 30° RF SKEW WITH 3-SET (TY II) (600mm) (1:6) UPSTRM & DNSTRM

CHANGE ORDER NO. 64

-REVISED RDWY GEOMETRICS AND LANE CONFIGURATIONS
-CHANGED CLASS IV PIPE TO CL III
-REVISED QUANTITIES

CHANGE ORDER NO. 64 | REVISED SHEET

SCALE: 1:400 HORIZ
1:200 VERT

555 EAST RAMSEY SAN ANTONIO TEXAS 78216
PHONE (210)375-9000
FAX (210)375-9010
PAPE-DAWSON ENGINEERS
CIVIL & ENVIRONMENTAL
J. KENT O'BRIEN 64398 REGISTERED PROFESSIONAL ENGINEER
1/27/2004
J. KENT O'BRIEN, P.E.
DATE

© 2000 Texas Department of Transportation

# LOOP 1604
# CULVERT LAYOUT

CULVERT # 21 STA 26+275.758

| DN: | | | | | PROJECT NO. | | |
|---|---|---|---|---|---|---|---|
| CK DN: | | | | | NH 2000 (704), etc. | | |
| DW: | CONTROL | SECTION | JOB | DIST | STATE | COUNTY | HIGHWAY NO. | SHEET NO. |
| CK DW: | 2452 | 01 | 036 | SAT | TX | BEXAR | LOOP 1604 | 387A |

Plotted on: 05/31/2005

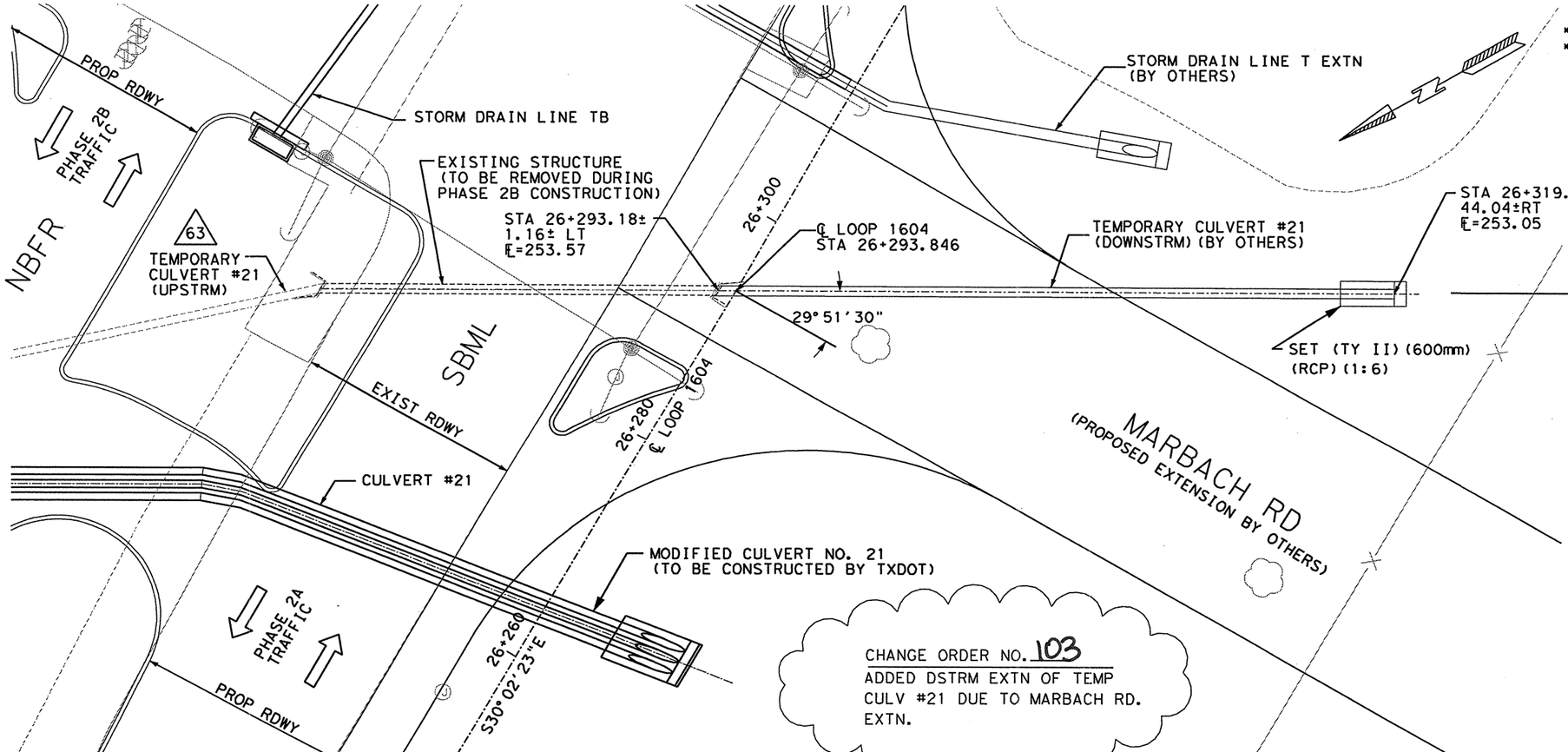


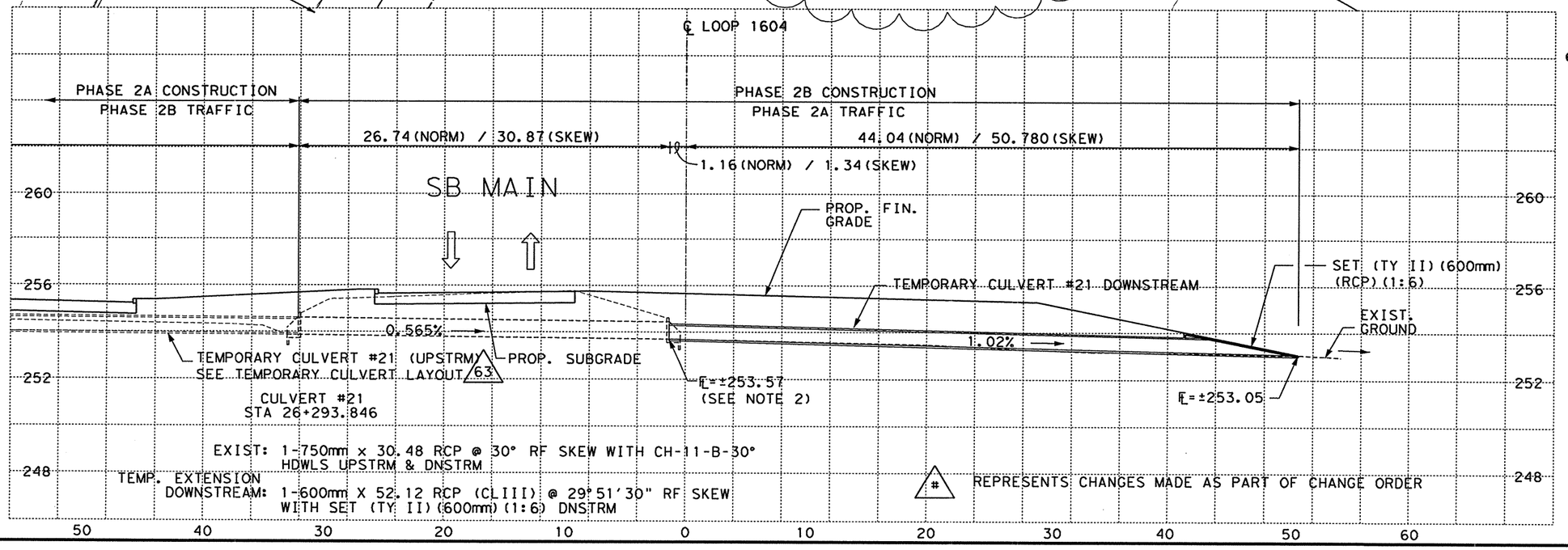


# ESTIMATED QUANTITIES

| | DESCRIPTION | UNIT | EST. | FINAL |
|---|---|---|---|---|
| * | RC PIPE (CL III) (600MM) | M | 52.12 | |
| * | SET (TY II) (600mm) (RCP) (1:6) | EA | 1 | |

* SUPPLIED FOR CONTRACTOR'S INFORMATION ONLY

## QUANTITIES THIS SHEET
## CSJ 2452-01-036

NOTES:
1.) ALL DIMENSIONS ARE IN METERS UNLESS NOTED OTHERWISE.
2.) CONTRACTOR TO REMOVE DOWNSTREAM HEADWALL OF EXISTING STRUCTURE, PLACE TEMPORARY CULVERT END-TO-END W/ EXISTING STRUCTURE, POUR CONCRETE AROUND TEMPORARY-TO-EXISTING STRUCTURE CONNECTION, AND BACKFILL W/ PROPOSED EMBANKMENT.
3.) UPON COMPLETION OF CULVERT #21 THE CONTRACTOR SHALL CAP BOTH ENDS OF THE TEMPORARY DRAINAGE STRUCTURE PLACED IN PHASE 2A AND 2B W/CONCRETE AND ABANDON AND REMOVE EXISTING DRAINAGE SRUCTURE IN PHASE 2B. THIS WORK SHALL NOT BE PAID FOR DIRECTLY BUT SHALL BE CONSIDERED SUBSIDIARY TO ITEM 464 (RC PIPE).
4.) CONTRACTOR TO PROVIDE POSITIVE DRAINAGE TO UPSTREAM END OF TEMPORARY DRAINAGE STRUCTURE AND AWAY FROM DOWNSTREAM END OF TEMPORARY DRAINAGE STRUCTURE.
5.) UPON COMPLETION OF THE ULTIMATE PROPOSED DRAINAGE STRUCTURE, SUFFICIENT LENGTH OF THE TEMPORARY DRAINAGE STRUCTURE SHALL BE REMOVED. LENGTH OF REMOVAL SHALL BE SUFFICIENT ENOUGH TO ALLOW FOR FINAL ROADWAY CONSTRUCTION AND GRADING AS APPROVED BY THE ENGINEER.
6.) FOR PAY ITEMS ASSOCIATED WITH STAGED CONST. OF CULVERT SEE CULVERT LAYOUT AND S.O.W. PLAN SHEETS.

SUPPLEMENTAL SHEET

CHANGE ORDER NO. 103

SCALE: 1:400 HORIZ
1:200 VERT

555 EAST RAWSEY SAN ANTONIO TEXAS 78216 PHONE (210)375-9000 FAX (210)375-9010
PAPE-DAWSON ENGINEERS
CIVIL & ENVIRONMENTAL
STATE OF TEXAS J. KENT O'BRIEN 64398 REGISTERED PROFESSIONAL ENGINEER
J. KENT O'BRIEN, P.E. 5/10/2005 DATE

© 2000 Texas Department of Transportation

## LOOP 1604
## TEMPORARY CULVERT LAYOUT
CULVERT # 21 STA 26+293+846 DOWNSTREAM
SHEET 2 OF 2

| DN: | | | | | PROJECT NO. | | | |
|---|---|---|---|---|---|---|---|---|
| CK DN: | | | | | NH 2000 (704), etc. | | | |
| DW: | CONTROL | SECTION | JOB | DIST. | STATE | COUNTY | HIGHWAY NO. | SHEET NO. |
| CK DW: | 2452 | 01 | 036 | SAT | TX | BEXAR | LOOP 1604 | 38 78 |

Design Filename: p:\57\75\02\design\civil\plansheets\drainage\522011to121b.dgn

Plotted on: 05/31/2005

Design Filename: p:\57\75\02\design\civil\plansheets\drainage\394116c121.dgn

| ESTIMATED QUANTITIES | | | |
|---|---|---|---|
| DESCRIPTION | UNIT | EST. | FINAL |
| *SYRDVT EXCAV (CULV SMALL) | MY | 302.0 | |
| RCPIPE (CL III) (600MM) | M | 226.071 | |
| RCPIPE (CL IV) (600MM) | M | 765.600 | |
| SET (TY II) (600MM) (1:6) | EA | 6 | |
| TRENCH EXCAVATION PROTECTION | MY | 24.5M | |
| CONC COLLAR (CL A) | EA | 6 | |
| | | | |
| | | | |

* SUPPLIED FOR CONTRACTOR'S INFORMATION ONLY

QUANTITIES THIS SHEET
CSJ 2452-01-036

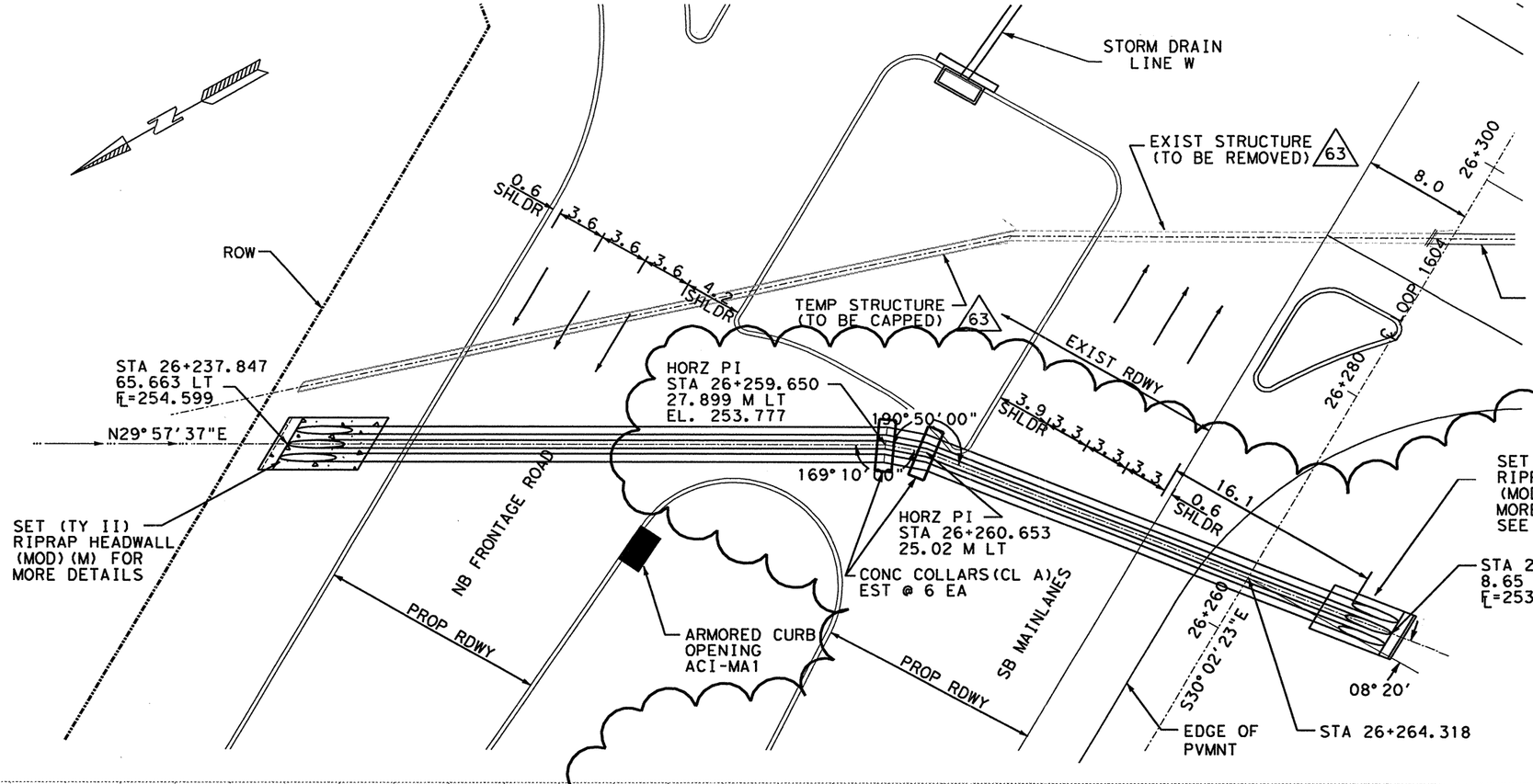


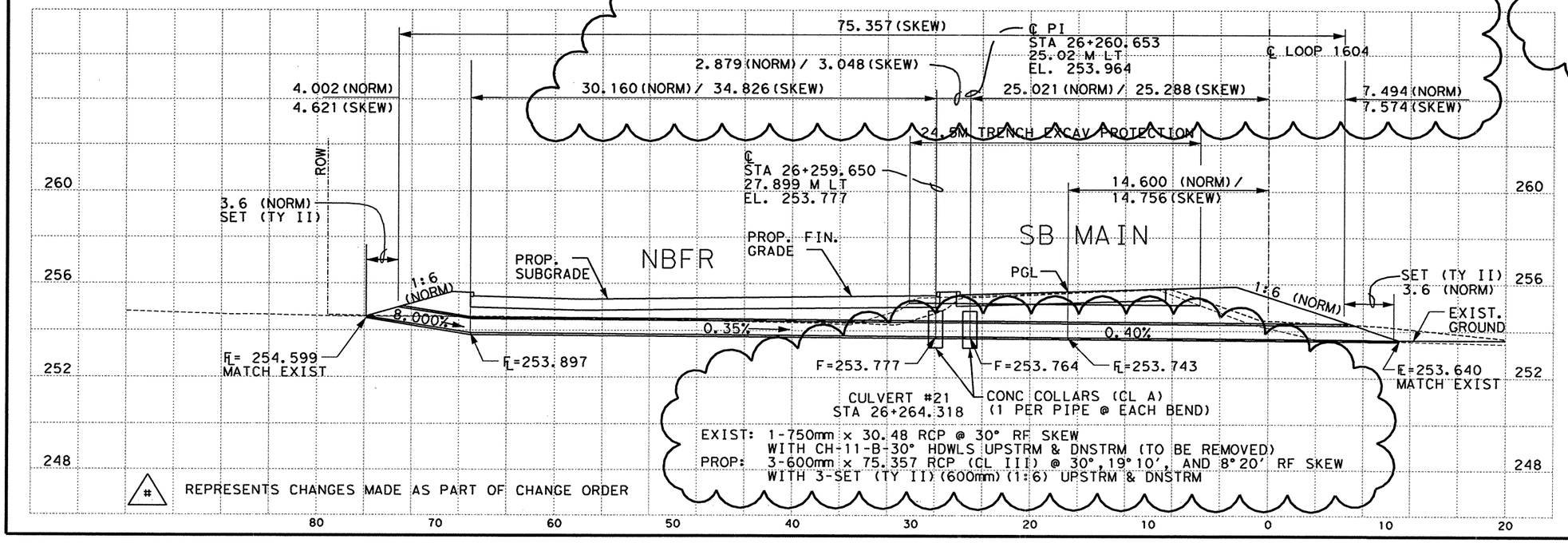


NOTES: 1.) ALL DIMENSIONS ARE IN METERS UNLESS NOTED OTHERWISE.
2.) MAX FILL HEIGHT ENCOUNTERED 1.5 M

CHANGE ORDER NO. 103

-REVISED CULVERT GEOMETRICS DUE TO MARBACH RD EXTN
-REVISED/ADDED QUANTITIES

# REPRESENTS CHANGES MADE AS PART OF CHANGE ORDER

THIS SEAL AND SIGNATURE ATTESTS ONLY TO THOSE ITEMS NOTED AS PART OF THE CHANGE ORDER.

CHANGE ORDER NO. 103 | REVISED SHEET

SCALE: 1:400 HORIZ
1:200 VERT

555 EAST RAMSEY SAN ANTONIO TEXAS 78216 PHONE (210)375-9000 FAX (210)375-9010
PAPE-DAWSON ENGINEERS CIVIL & ENVIRONMENTAL
STATE OF TEXAS J. KENT O'BRIEN 64398 REGISTERED PROFESSIONAL ENGINEER
J. KENT O'BRIEN, P.E. 5/10/2005 DATE

© 2000 Texas Department of Transportation

LOOP 1604
CULVERT LAYOUT

CULVERT # 21 STA 26+275.758

| DN: | | | | | | PROJECT NO. | |
|---|---|---|---|---|---|---|---|
| CK DN: | | | | | | NH 2000 (704), etc. | |
| DW: | CONTROL | SECTION | JOB | DIST. | STATE | COUNTY | HIGHWAY NO. | SHEET NO. |
| CK DW: | 2452 | 01 | 036 | SAT | TX | BEXAR | LOOP 1604 | 38 |

etc.

5-20-05

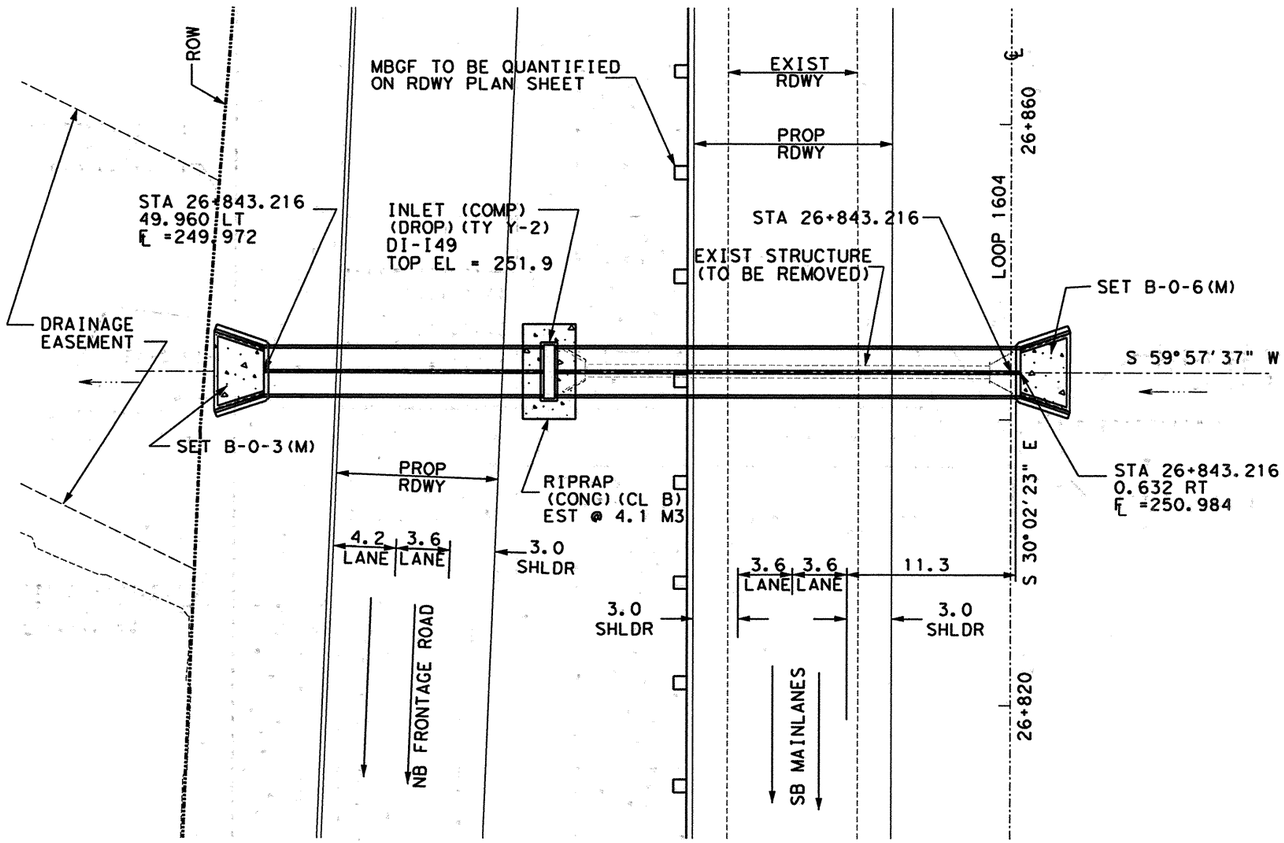


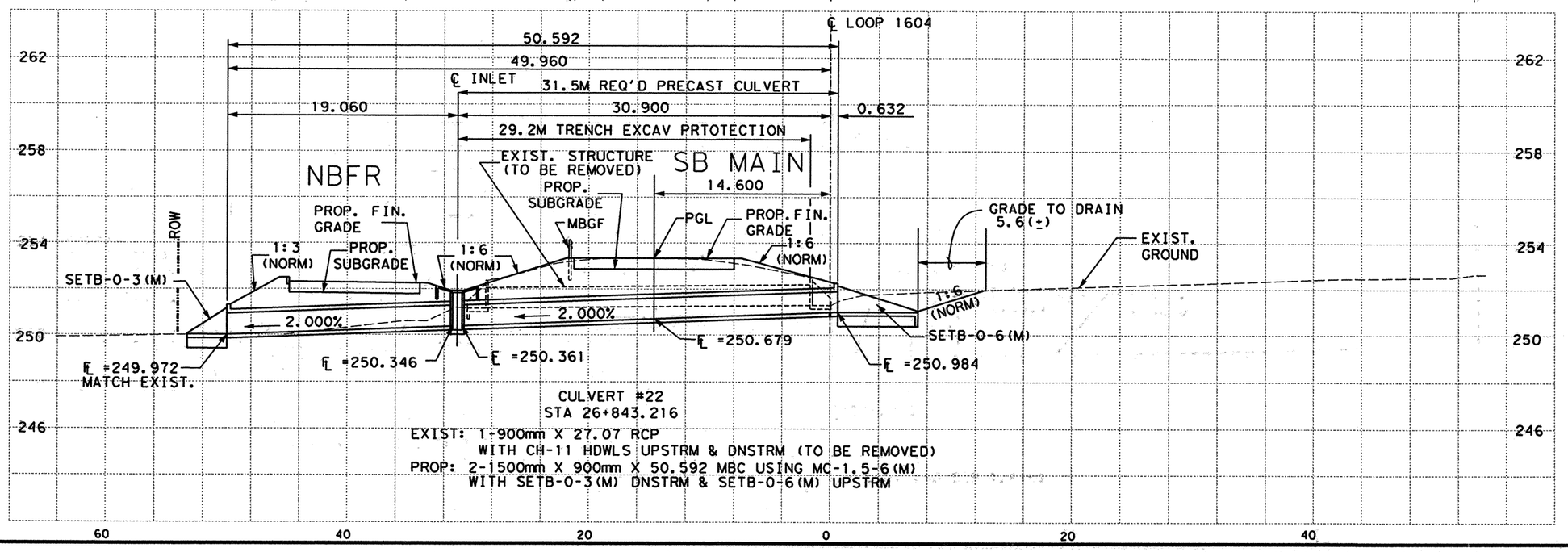


CULVERT #22
STA 26+843.216
EXIST: 1-900mm X 27.07 RCP
WITH CH-11 HDWLS UPSTRM & DNSTRM (TO BE REMOVED)
PROP: 2-1500mm X 900mm X 50.592 MBC USING MC-1.5-6(M)
WITH SETB-0-3(M) DNSTRM & SETB-0-6(M) UPSTRM

| ESTIMATED QUANTITIES | | | |
|---|---|---|---|
| DESCRIPTION | UNIT | EST. | FINAL |
| STRUCT EXCAV (CULV SMALL) | M3 | 356.5 | |
| CONC BOX CULV (1500MM X 900MM) | M | 101.184 | |
| SET (TY I) (1500MM X 900MM) (1:3) | EA | 2 | |
| SET (TY I) (1500MM X 900MM) (1:6) | EA | 2 | |
| TRENCH EXCAVATION PROTECTION | M | 29.2 | |
| INLET (COMP) (DROP) (TY Y-2) | EA | 1 | |
| RIPRAP (CONC)CL B) | M3 | 4.1 | |
| | | | |

*SUPPLIED FOR CONTRACTOR'S INFORMATION ONLY

QUANTITIES THIS SHEET
CSJ 2452-01-036

NOTES:
1.) ALL DIMENSIONS ARE IN METERS UNLESS NOTED OTHERWISE.
2.) MAX FILL HEIGHT ENCOUNTERED 1.6 M
3.) CULVERT DESIGNED TO BE BOTH CAST-IN-PLACE AND PRECAST AS SHOWN.
4.) CONTRACTOR IS TO PRESENT A PLAN TO THE ENGINEER FOR APPROVAL TO TIE-IN THE CAST-IN-PLACE CULV. TO THE PRECAST CULV.
5.) SEE MISCELLANEOUS DETAIL SHEET FOR INLET RIPRAP DETAILS.

SCALE: 1:400 HORIZ
1:200 VERT

555 EAST RAMSEY SAN ANTONIO TEXAS 78216
PHONE (210)375-9000
FAX (210)375-9010
PAPE-DAWSON ENGINEERS
CIVIL & ENVIRONMENTAL
STATE OF TEXAS
K. STEPHEN BONNETTE
60928
REGISTERED PROFESSIONAL ENGINEER
K. STEPHEN BONNETTE, P.E. 9/20/00 DATE

© 2000 Texas Department of Transportation

LOOP 1604
CULVERT LAYOUT
CULVERT #22 STA 26+843.216

| DN: | | | | | | PROJECT NO. | | |
|---|---|---|---|---|---|---|---|---|
| CK DN: | | | | | | NH 2000 (704), etc. | | |
| DW: | CONTROL | SECTION | JOB | DIST | STATE | COUNTY | HIGHWAY NO. | SHEET NO. |
| CK DW: | 2452 | 01 | 036 etc. | SAT | TX | BEXAR | LOOP 1604 | 388 |

Plotted on: 09/19/00
Design Filename: j:\3941\16\civil\design\plonsheets\394116c122.dgn

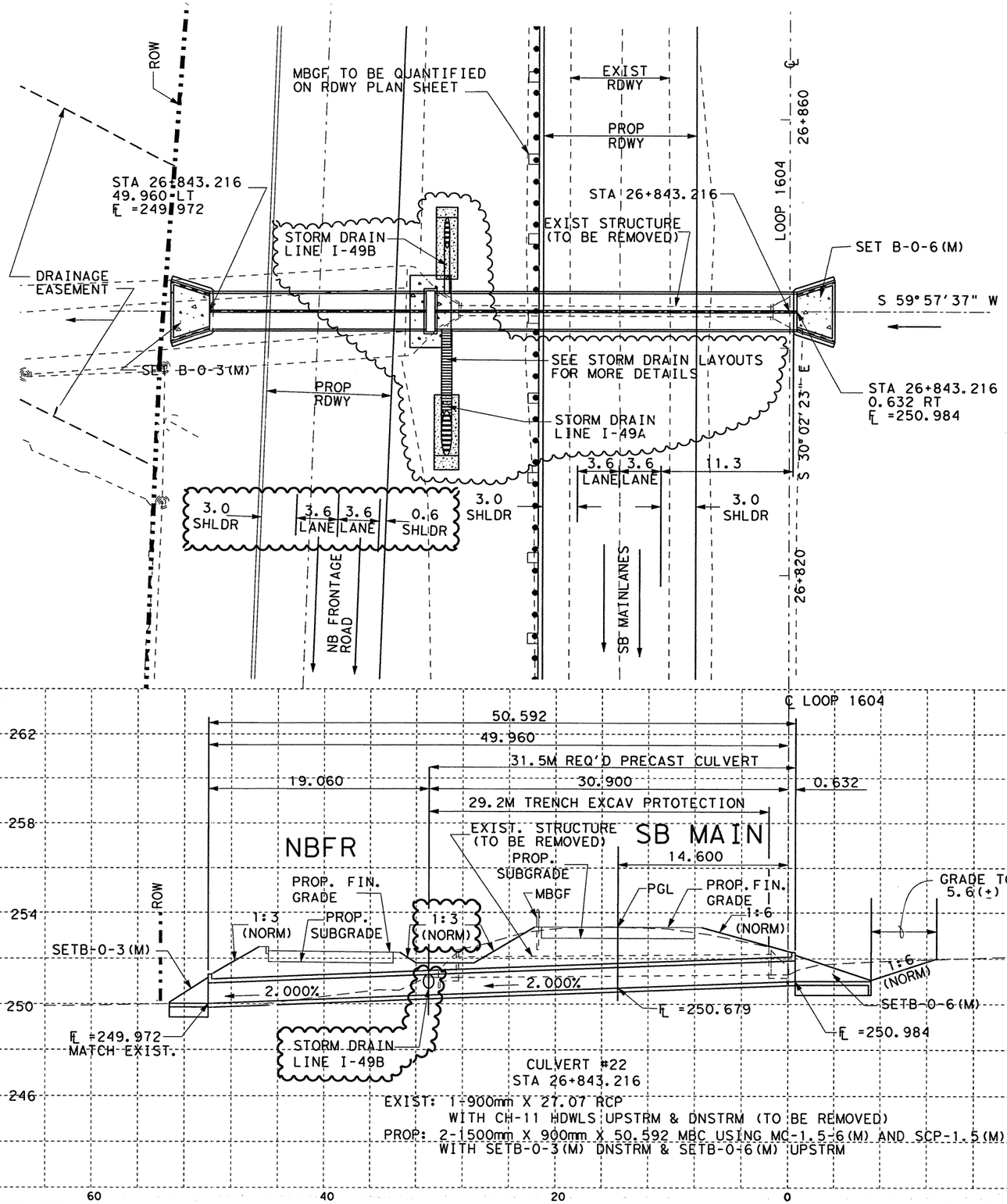


SCALE: 1:400 HORIZ
1:200 VERT

| ESTIMATED QUANTITIES | | | |
|---|---|---|---|
| DESCRIPTION | UNIT | EST. | FINAL |
| * STRUCT EXCAV (CULV SMALL) | M3 | 356.5 | |
| CONC BOX CULV (1500MM X 900MM) | M | 101.184 | |
| SET (TY I) (1500MM X 900MM) (1:3) | EA | 2 | |
| SET (TY I) (1500MM X 900MM) (1:6) | EA | 2 | |
| TRENCH EXCAVATION PROTECTION | M | 29.2 | |
| ~~INLET (COMP) (DROP) (TY Y 2)~~ | ~~EA~~ | ~~1~~ | |
| ~~RIPRAP (CONC) (CL B)~~ | ~~M3~~ | ~~4.1~~ | |

* SUPPLIED FOR CONTRACTOR'S INFORMATION ONLY

QUANTITIES THIS SHEET
CSJ 2452-01-036

NOTES:
1.) ALL DIMENSIONS ARE IN METERS UNLESS NOTED OTHERWISE.
2.) MAX FILL HEIGHT ENCOUNTERED 1.6 M
3.) CULVERT DESIGNED TO BE BOTH CAST-IN-PLACE AND PRECAST AS SHOWN.
4.) ~~CONTRACTOR IS TO PRESENT A PLAN TO THE ENGINEER FOR APPROVAL TO TIE-IN THE CAST-IN-PLACE CULV. TO THE PRECAST CULV.~~
5.) ~~SEE MISCELLANEOUS DETAIL SHEET FOR INLET RIPRAP DETAILS.~~

CHANGE ORDER 64

REVISED SHEET

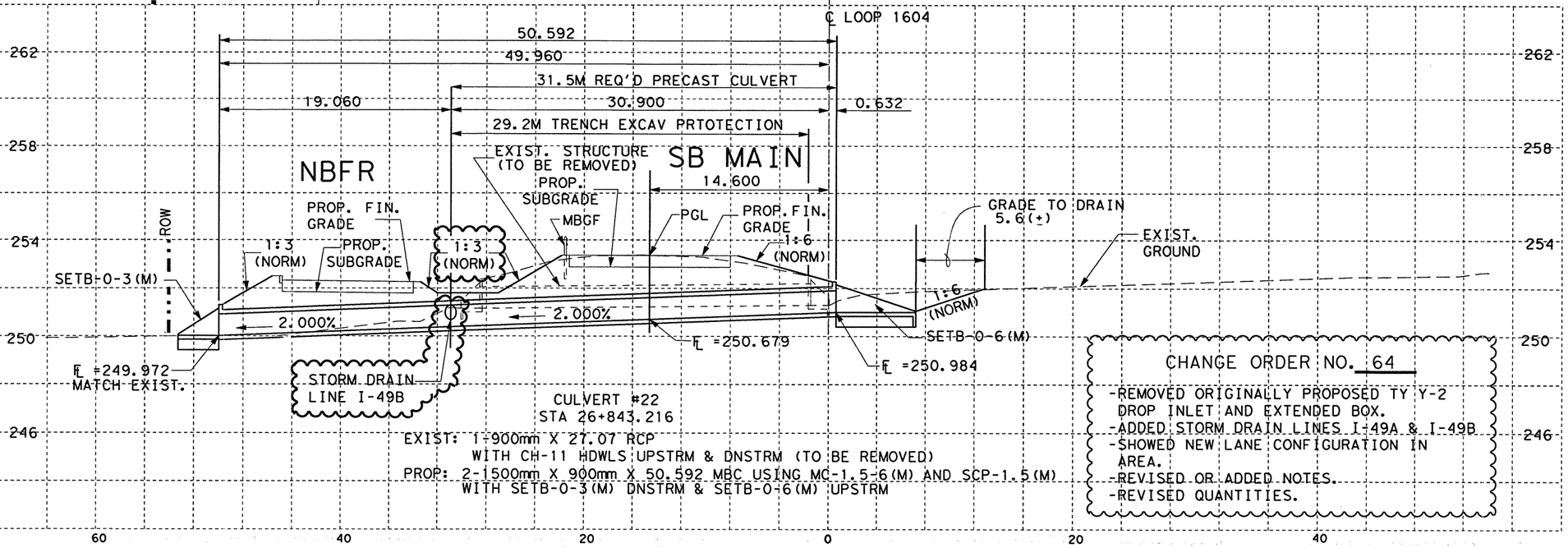


CULVERT #22
STA 26+843.216
EXIST: 1-900mm X 27.07 RCP
WITH CH-11 HDWLS UPSTRM & DNSTRM (TO BE REMOVED)
PROP: 2-1500mm X 900mm X 50.592 MBC USING MC-1.5-6(M) AND SCP-1.5(M)
WITH SETB-0-3(M) DNSTRM & SETB-0-6(M) UPSTRM

CHANGE ORDER NO. 64

-REMOVED ORIGINALLY PROPOSED TY Y-2 DROP INLET AND EXTENDED BOX.
-ADDED STORM DRAIN LINES I-49A & I-49B
-SHOWED NEW LANE CONFIGURATION IN AREA.
-REVISED OR ADDED NOTES.
-REVISED QUANTITIES.

STATE OF TEXAS
JEROME D. PAVLISKA
76075
REGISTERED PROFESSIONAL ENGINEER

Jerome D. Pavliska, P.E. 4-02-04
Jerome D. Pavliska, P.E. Date

© 2004 Texas Department of Transportation

**LOOP 1604**
CULVERT LAYOUT
**CULVERT #22 STA 26+843.216**

| DN: | | | | | PROJECT NO. | | | |
|---|---|---|---|---|---|---|---|---|
| CK DN: | | | | | NH 2000 (704), etc. | | | |
| DW: | CONTROL | SECTION | JOB | DIST | STATE | COUNTY | HIGHWAY NO. | SHEET NO. |
| CK DW: | 2452 | 01 | 036 | SAT | TX | BEXAR | LOOP 1604 | 388A |

3-10-04

LEVELS DI: 1 2 3 4 5 6 7 8 9 10 11 12 13 14 15 16 17 18 19 20 21 22 23 24 25 26 27 28 29 30 31 32 33 34 35 36 37 38 39 40 41 42 43 44 45 46 47 48 49 50 51 52 53 54 55 56 57 58 59 60 61 62 63

ACC: 1606VIX REVISIONS
FILE: 394116CL22.DGN

Plotted on: 09/19/00

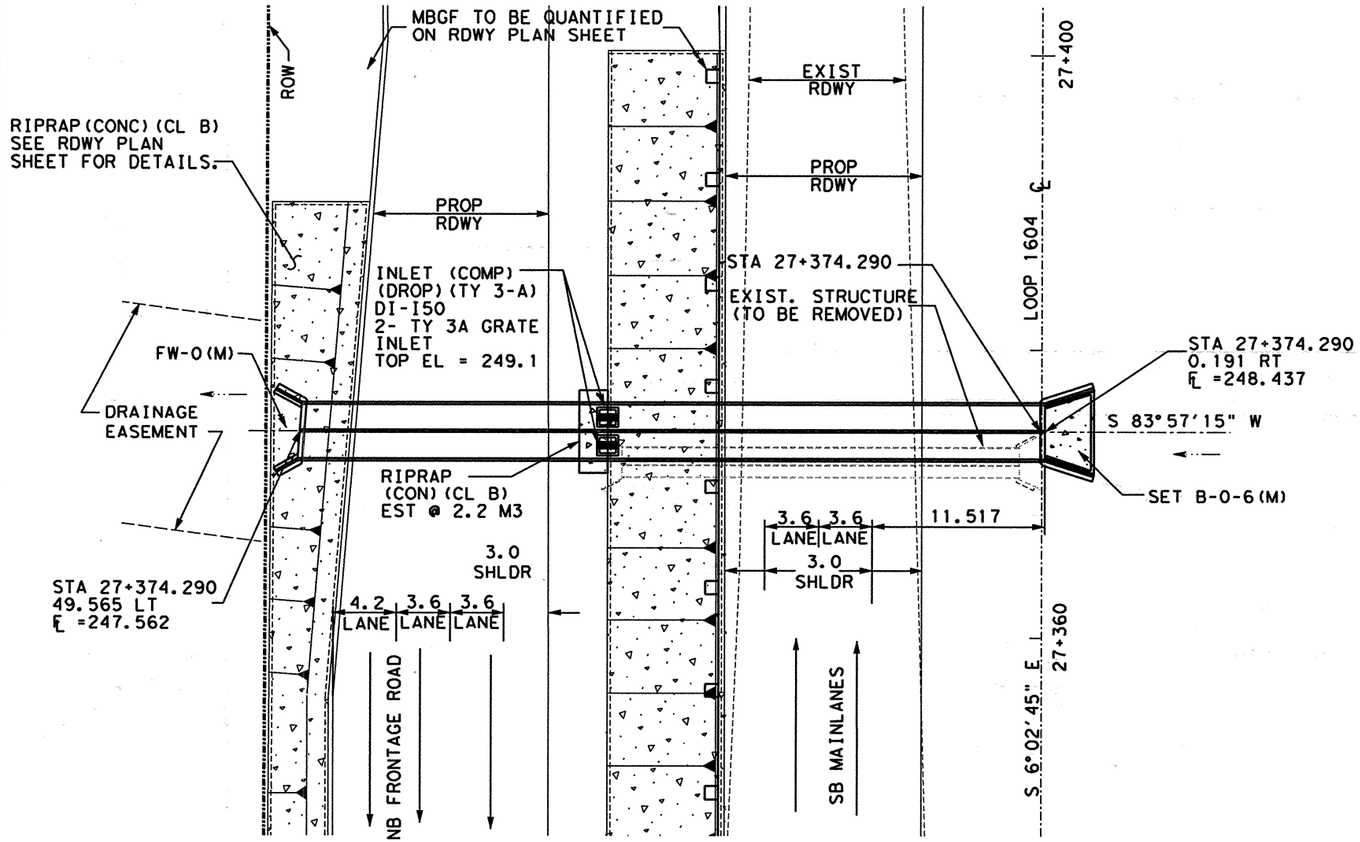


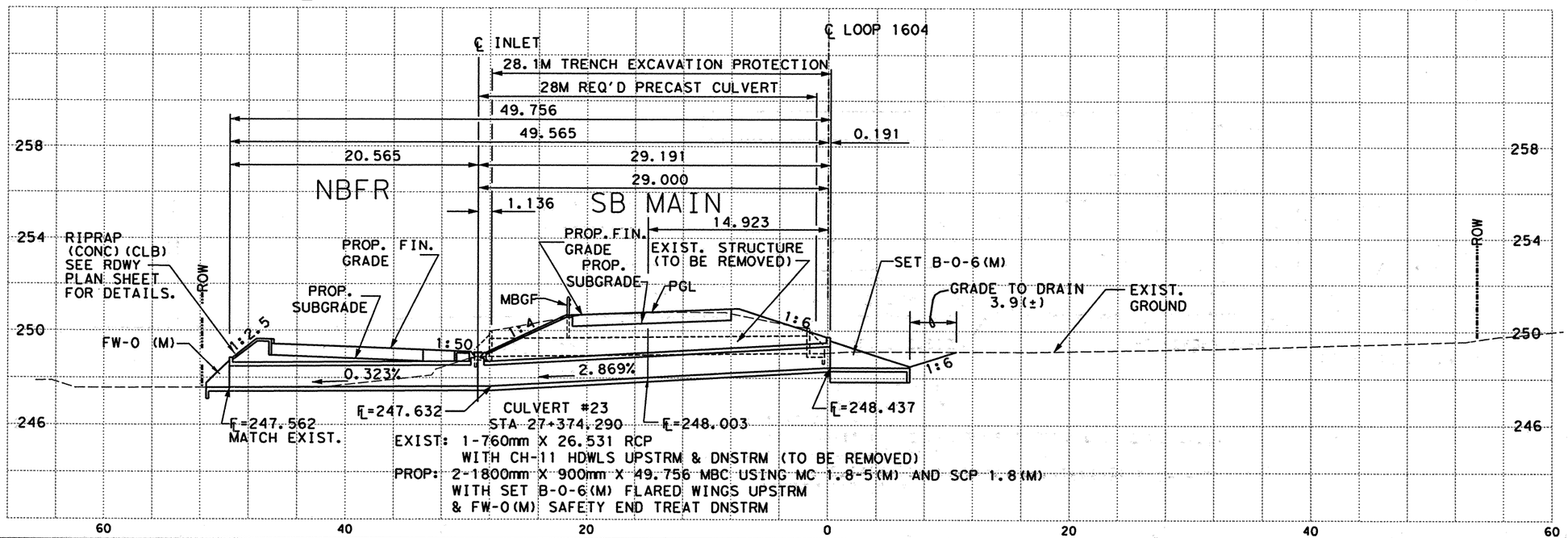


| ESTIMATED QUANTITIES | | | |
|---|---|---|---|
| DESCRIPTION | UNIT | EST. | FINAL |
| STRUCT EXCAV (CULV LARGE) | M3 | 384.6 | |
| CONC BOX CULV (1800MM X 900MM) | M | 99.512 | |
| WINGWALL (FW-0) (H=900MM) | EA | 1 | |
| SET (TY I) (1800MM X 900MM) (1:6) | EA | 2 | |
| TRENCH EXCAVATION PROTECTION | M | 28.1 | |
| INLET (COMP) (DROP) (TY-3A) | EA | 2 | |
| RIPRAP (CONC) (CL B) | M3 | 2.2 | |

*SUPPLIED FOR CONTRACTOR'S INFORMATION ONLY

## QUANTITIES THIS SHEET
## CSJ 2452-01-036

NOTES:
1.) ALL DIMENSIONS ARE IN METERS UNLESS NOTED OTHERWISE.
2.) CONTRACTOR TO ADJUST HEADWALL AND WINGWALL STEEL DIMENSIONS TO MATCH FIELD CONDITIONS. ANY ADJUSTMENTS SHALL BE SUBSIDIARY TO THE PERTINENT BID ITEM.
3.) MAX FILL HEIGHT ENCOUNTERED 1.8 M
4.) CULVERT DESIGNED TO BE BOTH CAST-IN-PLACE AND PRECAST AS SHOWN.
5.) CONTRACTOR IS TO PRESENT A PLAN TO THE ENGINEER FOR APPROVAL TO TIE-IN THE CAST-IN-PLACE CULV. TO THE PRECAST CULV.
6.) SEE MISCELLANEOUS DETAIL SHEET FOR INLET RIPRAP DETAILS.

SCALE: 1:400 HORIZ
1:200 VERT

555 EAST RAMSEY SAN ANTONIO TEXAS 78216
PHONE (210)375-9000
FAX (210)375-9010
PAPE-DAWSON ENGINEERS
CIVIL & ENVIRONMENTAL
STATE OF TEXAS K. STEPHEN BONNETTE 60928 REGISTERED PROFESSIONAL ENGINEER
K. STEPHEN BONNETTE, P.E. 9/20/00 DATE

© 2000 Texas Department of Transportation

# LOOP 1604
# CULVERT LAYOUT

CULVERT #23 STA 27+374.290

| ON: | | | | | | PROJECT NO. | |
|---|---|---|---|---|---|---|---|
| CK ON: | | | | | | NH 2000 (704), etc. | |
| DW: | CONTROL | SECTION | JOB | DIST. | STATE | COUNTY | HIGHWAY NO. | SHEET NO. |
| CK DW: | 2452 | 01 | 036 | SAT | TX | BEXAR | LOOP 1604 | 389 |

etc.

Design Filename: j:\394116\civil\design\plansheets\394116c123.dgn

Plotted on: $DATE$

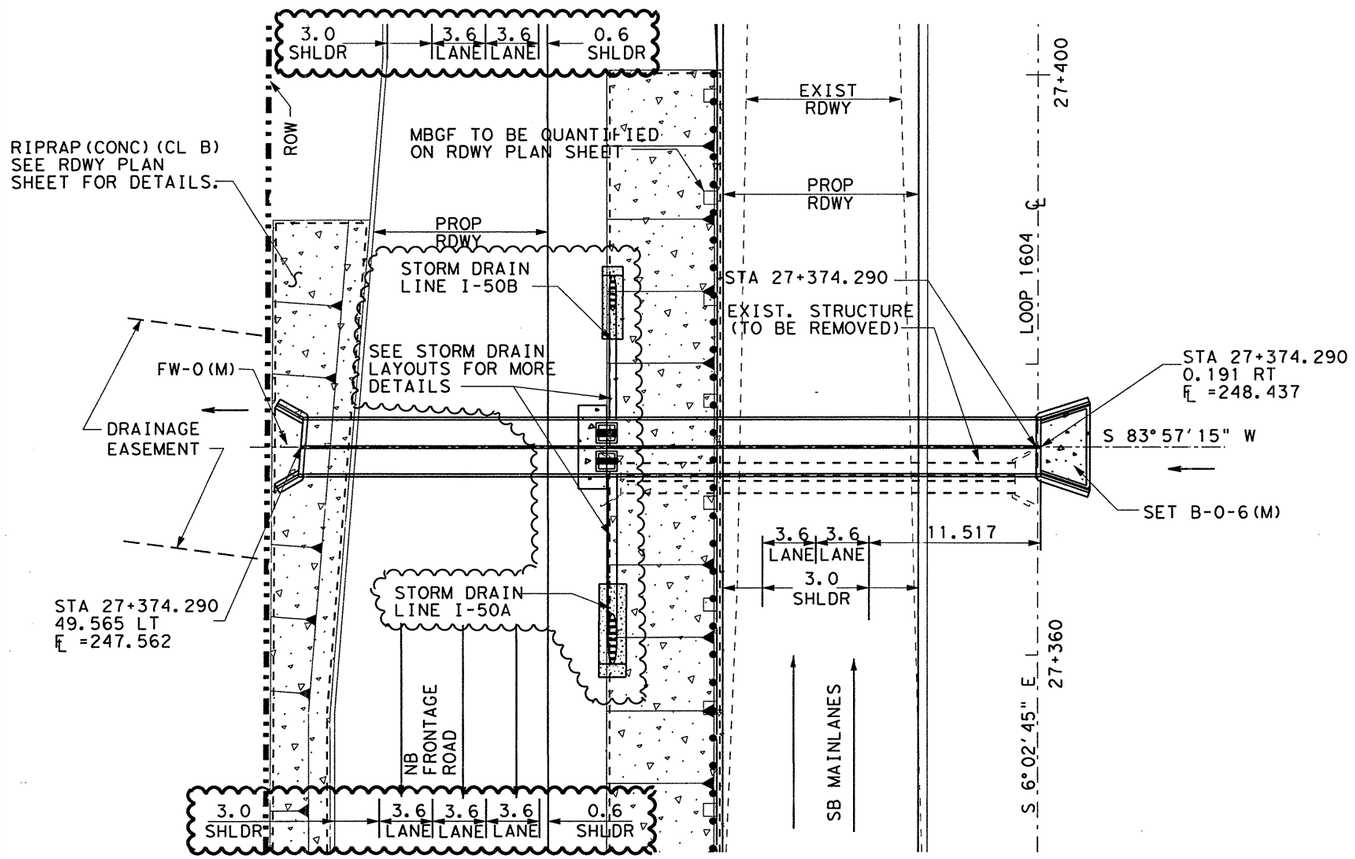


SCALE: 1:400 HORIZ
1:200 VERT

| ESTIMATED QUANTITIES | | | |
|---|---|---|---|
| DESCRIPTION | UNIT | EST. | FINAL |
| STRUCT EXCAV (CULV LARGE) | M3 | 384.6 | |
| CONC BOX CULV (1800MM X 900MM) | M | 99.512 | |
| WINGWALL (FW-0) (H=900MM) | EA | 1 | |
| SET (TY I) (1800MM X 900MM) (1:6) | EA | 2 | |
| TRENCH EXCAVATION PROTECTION | M | 28.1 | |
| ~~INLET (COMP) (DROP) (TY 3A)~~ | ~~EA~~ | ~~2~~ | |
| ~~RIPRAP (CONC) (CL B)~~ | ~~M3~~ | ~~2.2~~ | |

* SUPPLIED FOR CONTRACTOR'S INFORMATION ONLY

QUANTITIES THIS SHEET
CSJ 2452-01-036

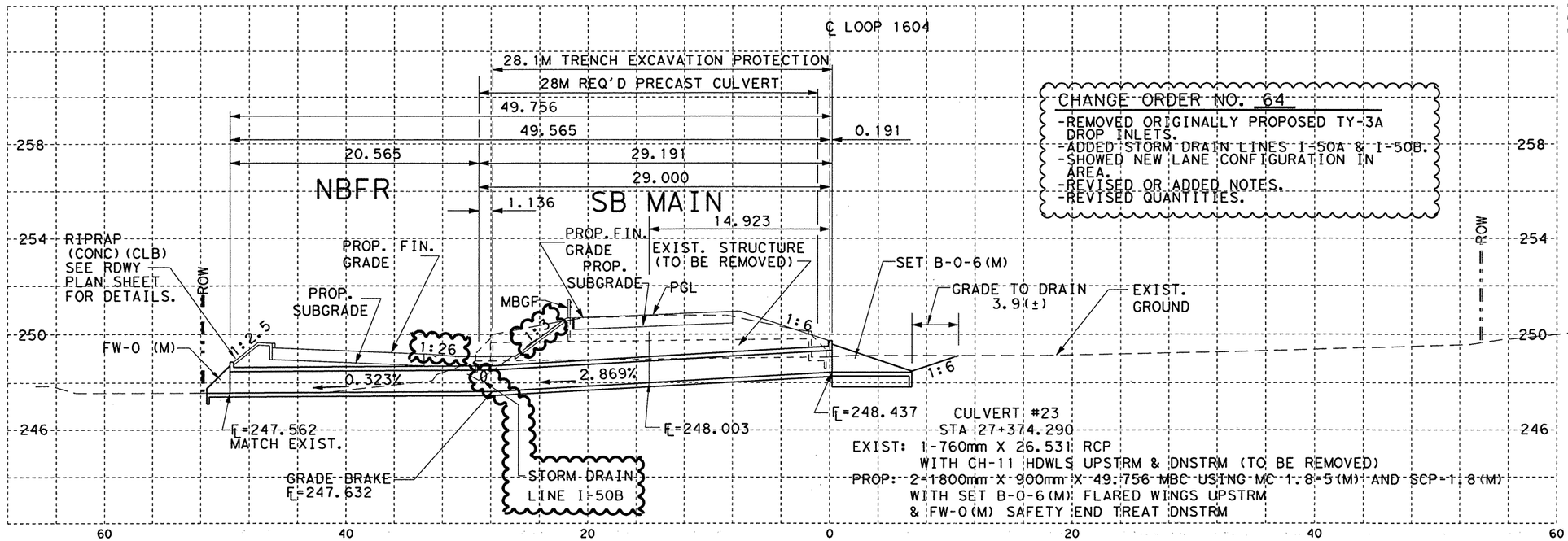


NOTES: 1.) ALL DIMENSIONS ARE IN METERS UNLESS NOTED OTHERWISE.
2.) CONTRACTOR TO ADJUST HEADWALL AND WINGWALL STEEL DIMENSIONS TO MATCH FIELD CONDITIONS. ANY ADJUSTMENTS SHALL BE SUBSIDIARY TO THE PERTINENT BID ITEM.
3.) MAX FILL HEIGHT ENCOUNTERED 1.8 M
4.) CULVERT DESIGNED TO BE BOTH CAST-IN-PLACE AND PRECAST AS SHOWN.
5.) ~~CONTRACTOR IS TO PRESENT A PLAN TO THE ENGINEER FOR APPROVAL TO TIE -IN THE CAST-IN-PLACE CULV. TO THE PRECAST CULV.~~
6.) ~~SEE MISCELLANEOUS DETAIL SHEET FOR INLET RIPRAP DETAILS.~~

CHANGE ORDER NO. 64
-REMOVED ORIGINALLY PROPOSED TY-3A DROP INLETS.
-ADDED STORM DRAIN LINES I-50A & I-50B.
-SHOWED NEW LANE CONFIGURATION IN AREA.
-REVISED OR ADDED NOTES.
-REVISED QUANTITIES.

CHANGE ORDER 64
REVISED SHEET

STATE OF TEXAS
JEROME D. PAVLISKA
76075
REGISTERED PROFESSIONAL ENGINEER

Jerome D. Pavliska, P.E. 4-02-04
Jerome D. Pavliska, P.E. Date

© 2004 Texas Department of Transportation

LOOP 1604
CULVERT LAYOUT
CULVERT #23 STA 27+374.290

| DN: | | | | | PROJECT NO. | |
|---|---|---|---|---|---|---|
| CK DN: | | | | | NH 2000 (704), etc. | |
| DW: | CONTROL | SECTION | JOB | DIST | STATE | COUNTY | HIGHWAY NO. | SHEET NO. |
| CK DW: | 2452 | 01 | 036 etc. | SAT | TX | BEXAR | LOOP 1604 | 389A |

3-10-04

LEVELS 015
1 2 3 4 5 6 7 8 9 10 11 12 13 14 15 16 17 18 19 20 21 22 23 24 25 26 27 28 29 30 31 32 33 34 35 36 37 38 39 40 41 42 43 44 45 46 47 48 49 50 51 52 53 54 55 56 57 58 59 60 61 63

ACC: 1604/TX REVISIONS
FILE: 394116CL23.DGN

Plotted on: 09/19/00

| ESTIMATED QUANTITIES | | | |
|---|---|---|---|
| DESCRIPTION | UNIT | EST. | FINAL |
| STRUCT EXCAV (CULV SMALL) | M3 | 309.0 | |
| RC PIPE (CL III) (1050MM) | M | 123.513 | |
| SET (TY II) (1050MM) (1:6) C | EA | 6 | |
| | | | |
| | | | |
| | | | |
| | | | |
| | | | |

*SUPPLIED FOR CONTRACTOR'S INFORMATION ONLY

QUANTITIES THIS SHEET
CSJ 2452-01-036

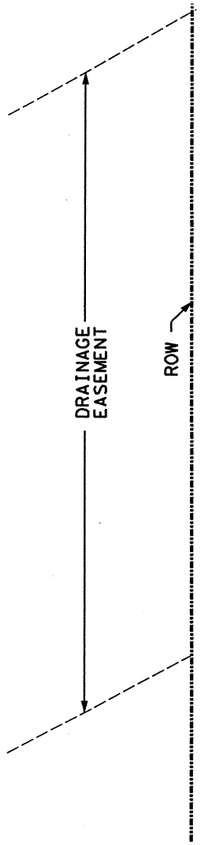


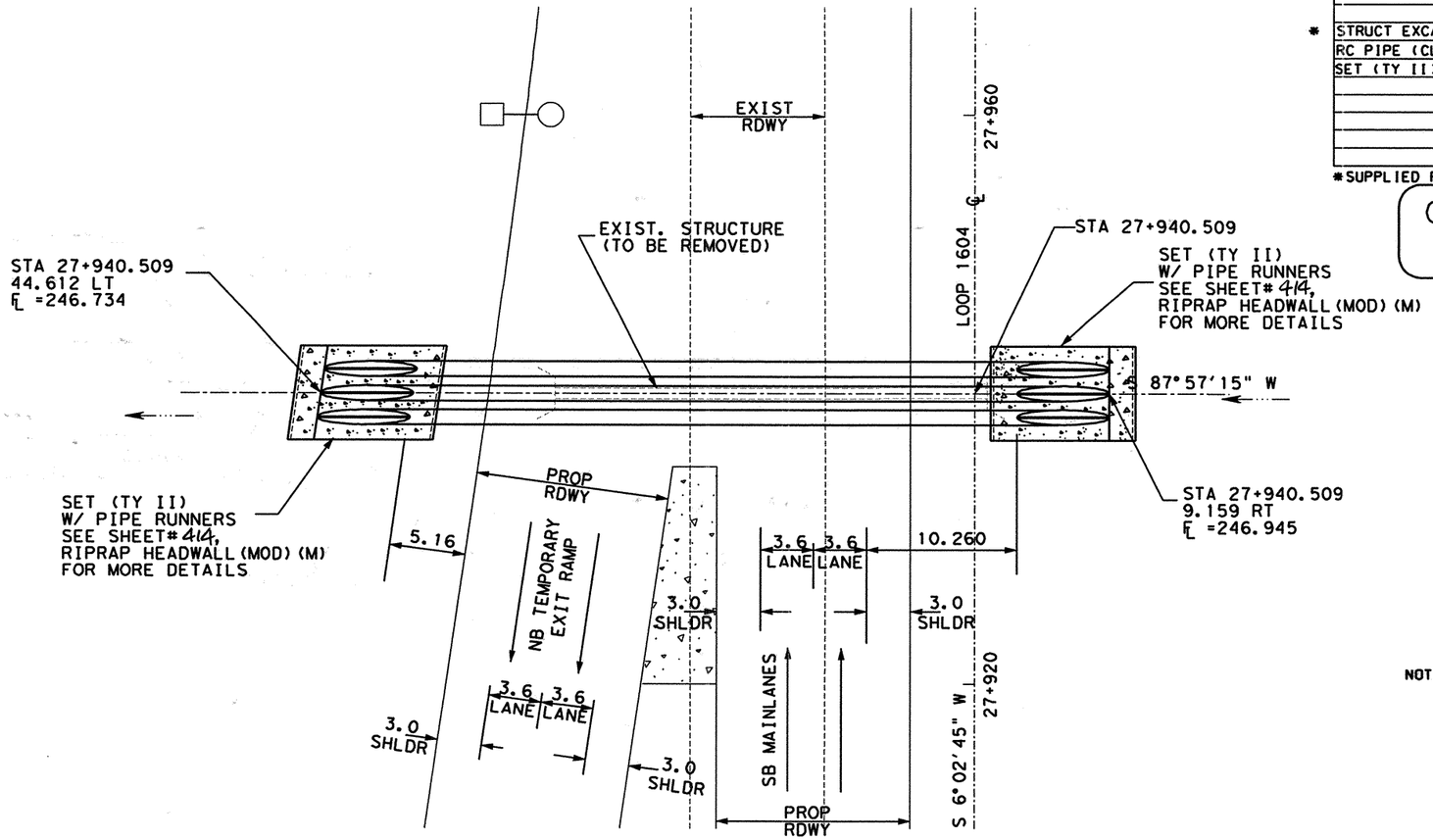


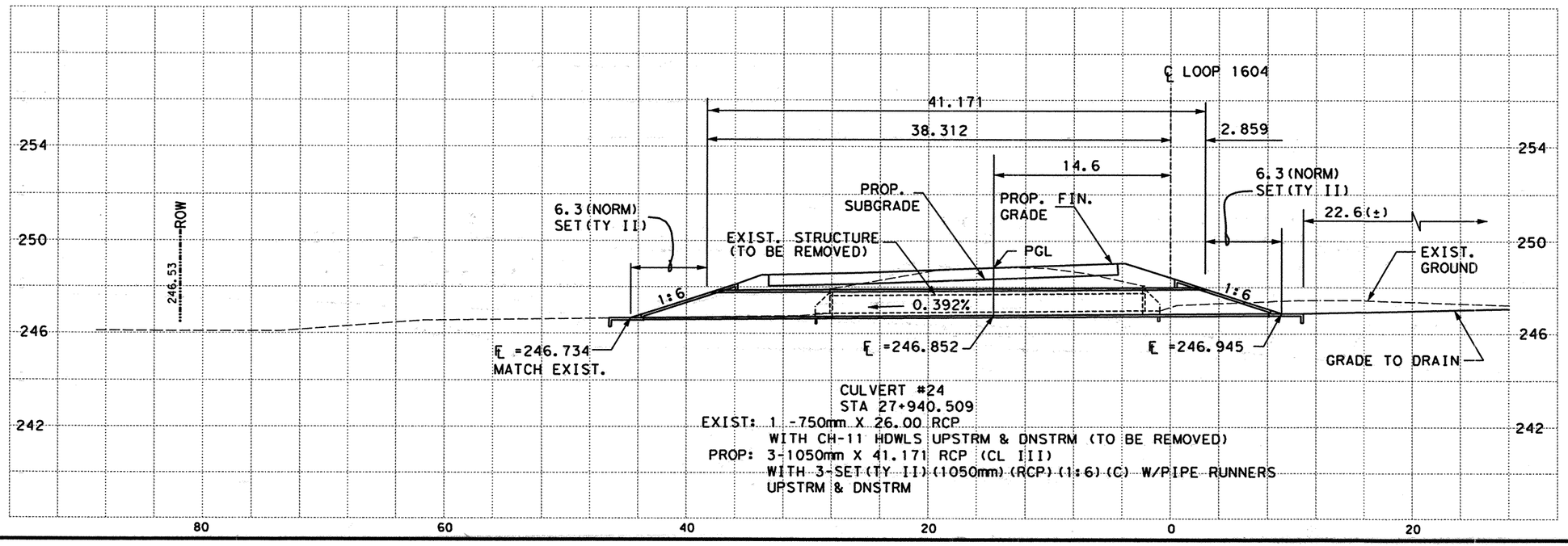


CULVERT #24
STA 27+940.509
EXIST: 1 -750mm X 26.00 RCP
WITH CH-11 HDWLS UPSTRM & DNSTRM (TO BE REMOVED)
PROP: 3-1050mm X 41.171 RCP (CL III)
WITH 3-SET (TY II) (1050mm) (RCP) (1:6) (C) W/PIPE RUNNERS
UPSTRM & DNSTRM

NOTES: 1.) ALL DIMENSIONS ARE IN METERS UNLESS NOTED OTHERWISE.
2.) CONTRACTOR TO ADJUST HEADWALL AND WINGWALL STEEL DIMENSIONS TO MATCH FIELD CONDITIONS. ANY ADJUSTMENTS SHALL BE SUBSIDIARY TO THE PERTINENT BID ITEM.
3.) MAX FILL HEIGHT ENCOUNTERED 1.1 M

SCALE: 1:400 HORIZ
1:200 VERT

555 EAST RAMSEY SAN ANTONIO TEXAS 78216
PHONE (210)375-9000
FAX (210)375-9010
PAPE-DAWSON ENGINEERS
CIVIL & ENVIRONMENTAL
STATE OF TEXAS K. STEPHEN BONNETTE 60928 REGISTERED PROFESSIONAL ENGINEER
K. STEPHEN BONNETTE, P.E. 9/20/00 DATE

© 2000 Texas Department of Transportation

# LOOP 1604
# CULVERT LAYOUT

CULVERT #24 STA 27+940.509

| DN: | | | | | | PROJECT NO. | |
|---|---|---|---|---|---|---|---|
| CK DN: | | | | | | NH 2000 (704), etc. | |
| DW: | CONTROL | SECTION | JOB | DIST. | STATE | COUNTY | HIGHWAY NO. | SHEET NO. |
| CK DW: | 2452 | 01 | 036 etc. | SAT | TX | BEXAR | LOOP 1604 | 390 |

Design Filename: J:\394116\civil\design\plansheets\394116cl24.dgn

Plotted on: 09/19/00

Design Filename: j:\3941\16\civil\design\plansheets\3941160125.dgn

| ESTIMATED QUANTITIES | | | |
|---|---|---|---|
| DESCRIPTION | UNIT | EST. | FINAL |
| * STRUCT EXCAV (CULV SMALL) | M3 | 148.1 | |
| RC PIPE (CL III) (900MM) | M | 48.597 | |
| SET (TY II) (900MM) (1:6) | EA | 2 | |
| TRENCH EXCAVATION PROTECTION | M | 41.5 | |

*SUPPLIED FOR CONTRACTOR'S INFORMATION ONLY

QUANTITIES THIS SHEET
CSJ 2452-01-036

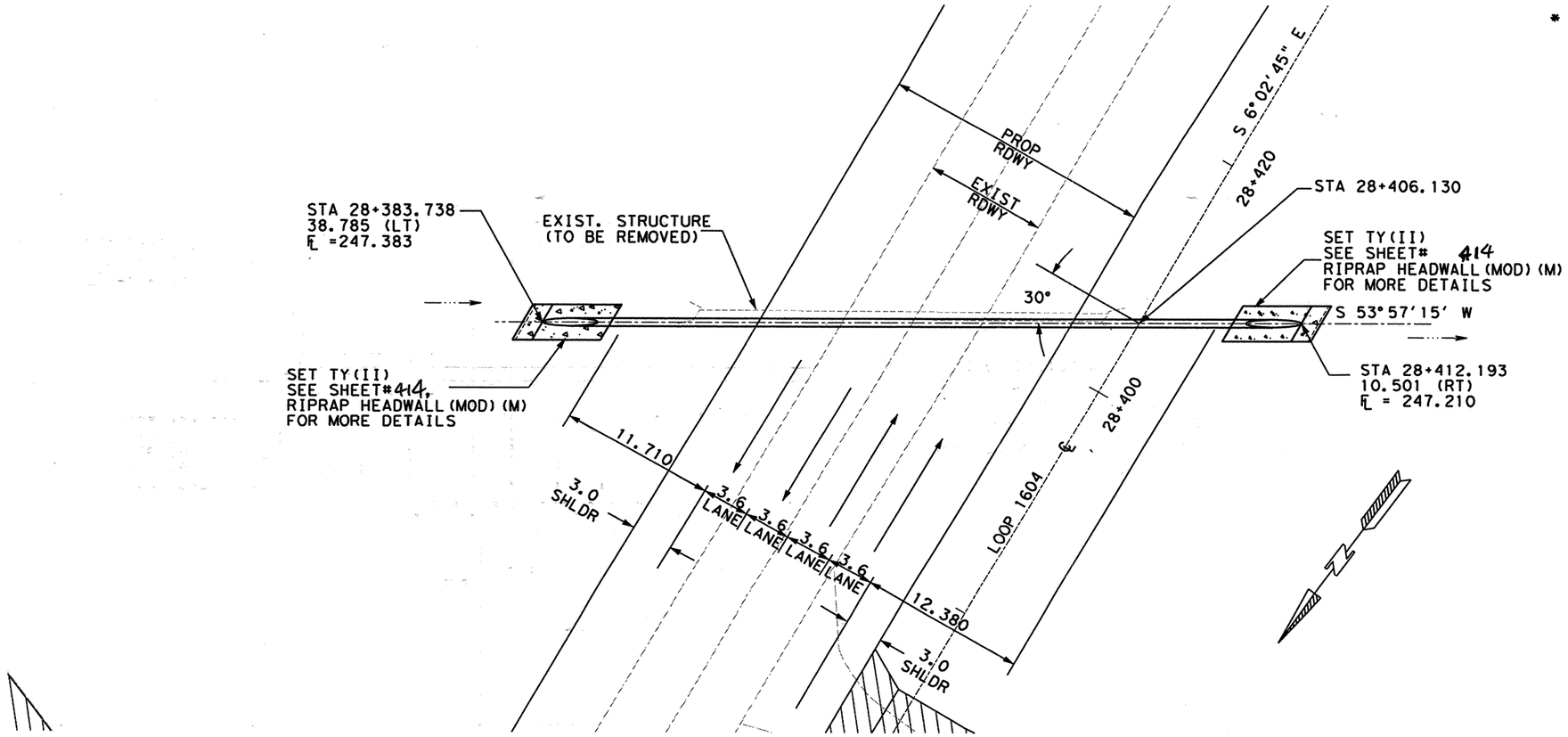


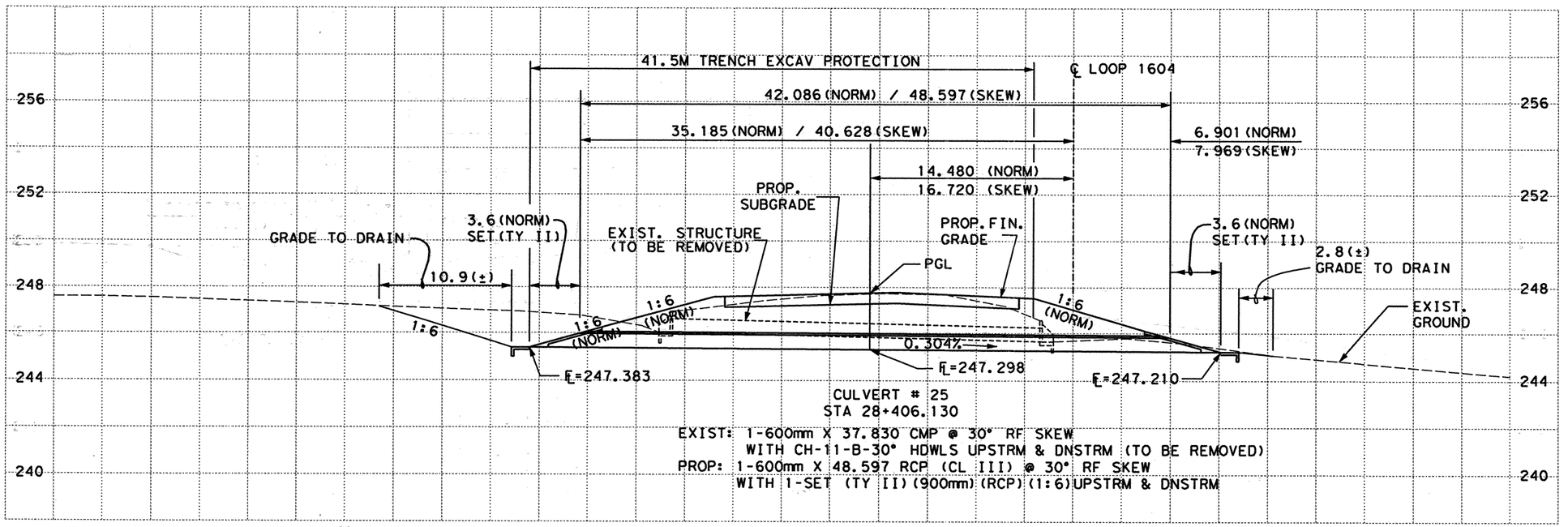


CULVERT # 25
STA 28+406.130
EXIST: 1-600mm X 37.830 CMP @ 30° RF SKEW
WITH CH-11-B-30° HDWLS UPSTRM & DNSTRM (TO BE REMOVED)
PROP: 1-600mm X 48.597 RCP (CL III) @ 30° RF SKEW
WITH 1-SET (TY II) (900mm) (RCP) (1:6) UPSTRM & DNSTRM

NOTES: 1.) ALL DIMENSIONS ARE IN METERS UNLESS NOTED OTHERWISE.
2.) MAX FILL HEIGHT ENCOUNTERED 1.3 M

SCALE: 1:400 HORIZ
1:200 VERT


555 EAST RAMSEY SAN ANTONIO TEXAS 78216
PHONE (210)375-9000
FAX (210)375-9010
PAPE-DAWSON ENGINEERS
CIVIL & ENVIRONMENTAL
STATE OF TEXAS K. STEPHEN BONNETTE 60928 REGISTERED PROFESSIONAL ENGINEER
K. STEPHEN BONNETTE, P.E. 9/20/00 DATE


© 2000 Texas Department of Transportation

LOOP 1604
CULVERT LAYOUT
CULVERT # 25 STA 28+406.130

| DN: | | | | | PROJECT NO. | | |
|---|---|---|---|---|---|---|---|
| CK DN: | | | | | NH 2000 (704), etc. | | |
| DW: | CONTROL | SECTION | JOB | DIST. | STATE | COUNTY | HIGHWAY NO. | SHEET NO. |
| CK DW: | 2452 | 01 | 036 etc. | SAT | TX | BEXAR | LOOP 1604 | 391 |

Plotted on: 01/26/2004

Design Filename: p:\52\2011\design\civil\plansheets\drainage\cross-drain\394116c125.dgn

| ESTIMATED QUANTITIES | | | |
|---|---|---|---|
| DESCRIPTION | UNIT | EST. | FINAL |
| * STRUCT EXCAV (CULV SMALL) | M3 | 148.1 | |
| RC PIPE (CL III) (900MM) | M | 48.597 | |
| SET (TY II) (900MM) (1:6) | EA | 2 | |
| TRENCH EXCAVATION PROTECTION | M | 41.5 | |
| CEMENT STAB BKFL | M2 | 20.9 | |
| CUT & RESTORE PVMNT | M3 | 17.0 | |

QUANTITIES THIS SHEET
CSJ 2452-01-036

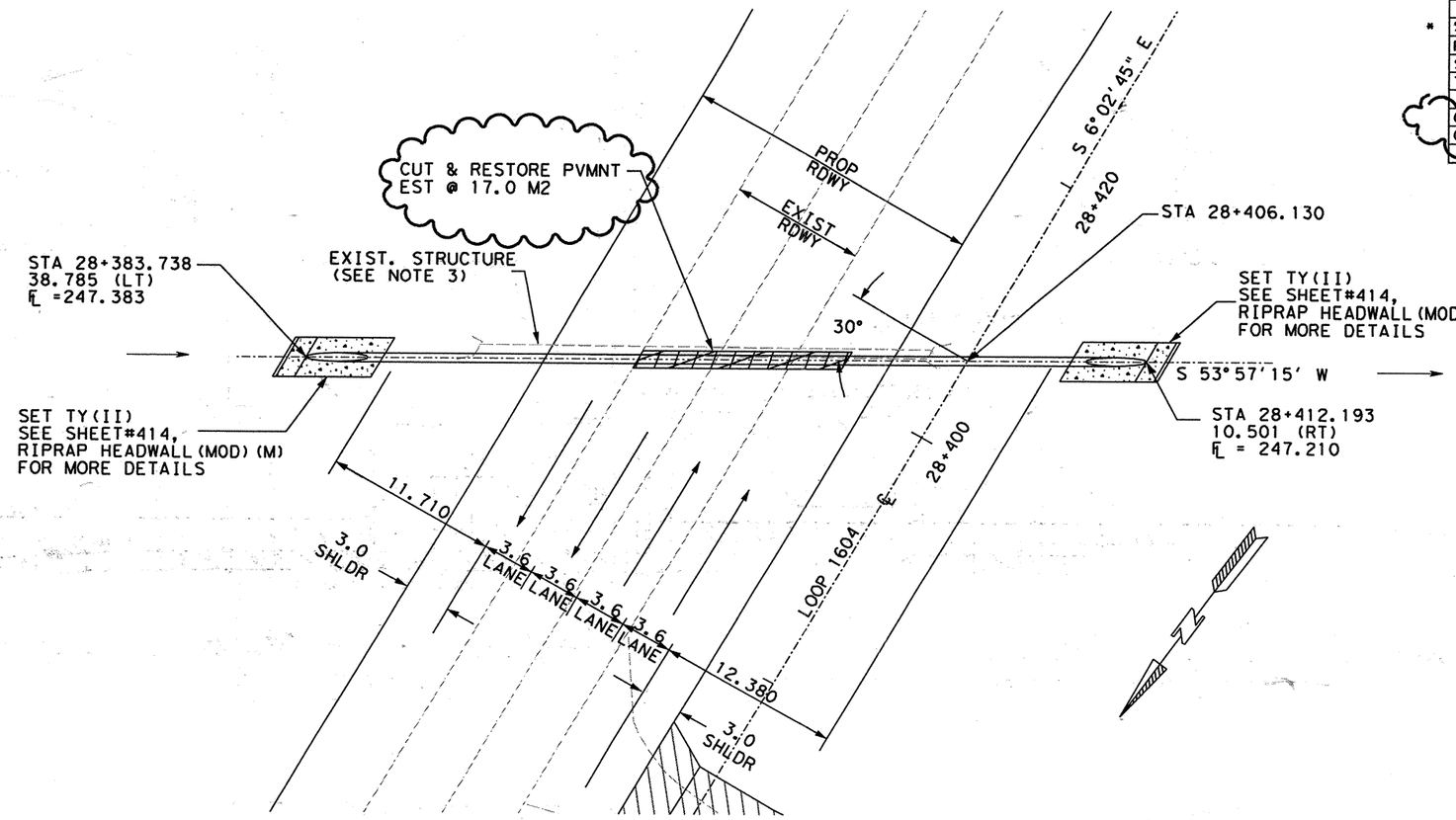


NOTES:
1.) ALL DIMENSIONS ARE IN METERS UNLESS NOTED OTHERWISE.
2.) MAX FILL HEIGHT ENCOUNTERED 1.3M.
3.) CONSTRUCTION ACROSS EXISTING ROADWAY SHALL OCCUR DURING OFF PEAK OR WEEKEND HOURS. CONTRACTOR SHALL PROVIDE FOR STEEL PLATING ACROSS TRENCH WHILE FLOWABLE BACKFILL SETS. PROVIDING THE STEEL PLATING SHALL BE CONSIDERED SUBSIDIARY TO THE PERTINENT BID ITEMS.
4.) FLOWABLE BACKFILL MAY INCLUDE THE USE OF CEMENT STABILIZED BACKFILL AS APPROVED BY THE ENGINEER.

CHANGE ORDER NO. 64

-ADDED CEM. STAB. BKFLL.
-ADDED CUT AND RESTORE PVMNT
-REVISED QUANTITIES

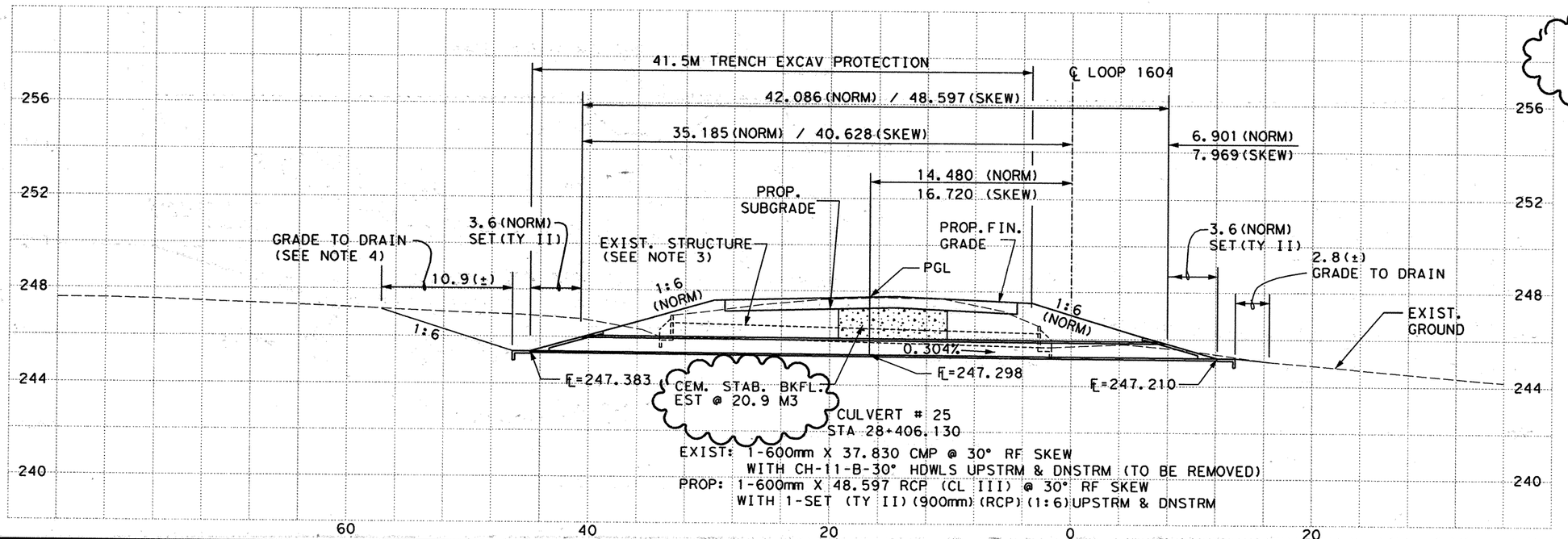


CULVERT # 25
STA 28+406.130
EXIST: 1-600mm X 37.830 CMP @ 30° RF SKEW
WITH CH-11-B-30° HDWLS UPSTRM & DNSTRM (TO BE REMOVED)
PROP: 1-600mm X 48.597 RCP (CL III) @ 30° RF SKEW
WITH 1-SET (TY II) (900mm) (RCP) (1:6) UPSTRM & DNSTRM

CHANGE ORDER NO. 64 | REVISED SHEET

SCALE: 1:400 HORIZ
1:200 VERT

555 EAST RAMSEY SAN ANTONIO TEXAS 78216
PHONE (210)375-9000
FAX (210)375-9010
PAPE-DAWSON ENGINEERS
CIVIL & ENVIRONMENTAL
STATE OF TEXAS
J. KENT O'BRIEN
64398
REGISTERED PROFESSIONAL ENGINEER
J. KENT O'BRIEN, P.E.
1/27/2004
DATE

© 2000 Texas Department of Transportation

LOOP 1604
CULVERT LAYOUT
CULVERT # 25 STA 28+406.130

| DN: | | | | | PROJECT NO. | | | |
|---|---|---|---|---|---|---|---|---|
| CK DN: | | | | | NH 2000 (704), etc. | | | |
| DN: | CONTROL | SECTION | JOB | DIST. | STATE | COUNTY | HIGHWAY NO. | SHEET NO. |
| CK DN: | 2452 | 01 | 036 etc. | SAT | TX | BEXAR | LOOP 1604 | 391A |

Plotted on: 09/19/00

# US 90

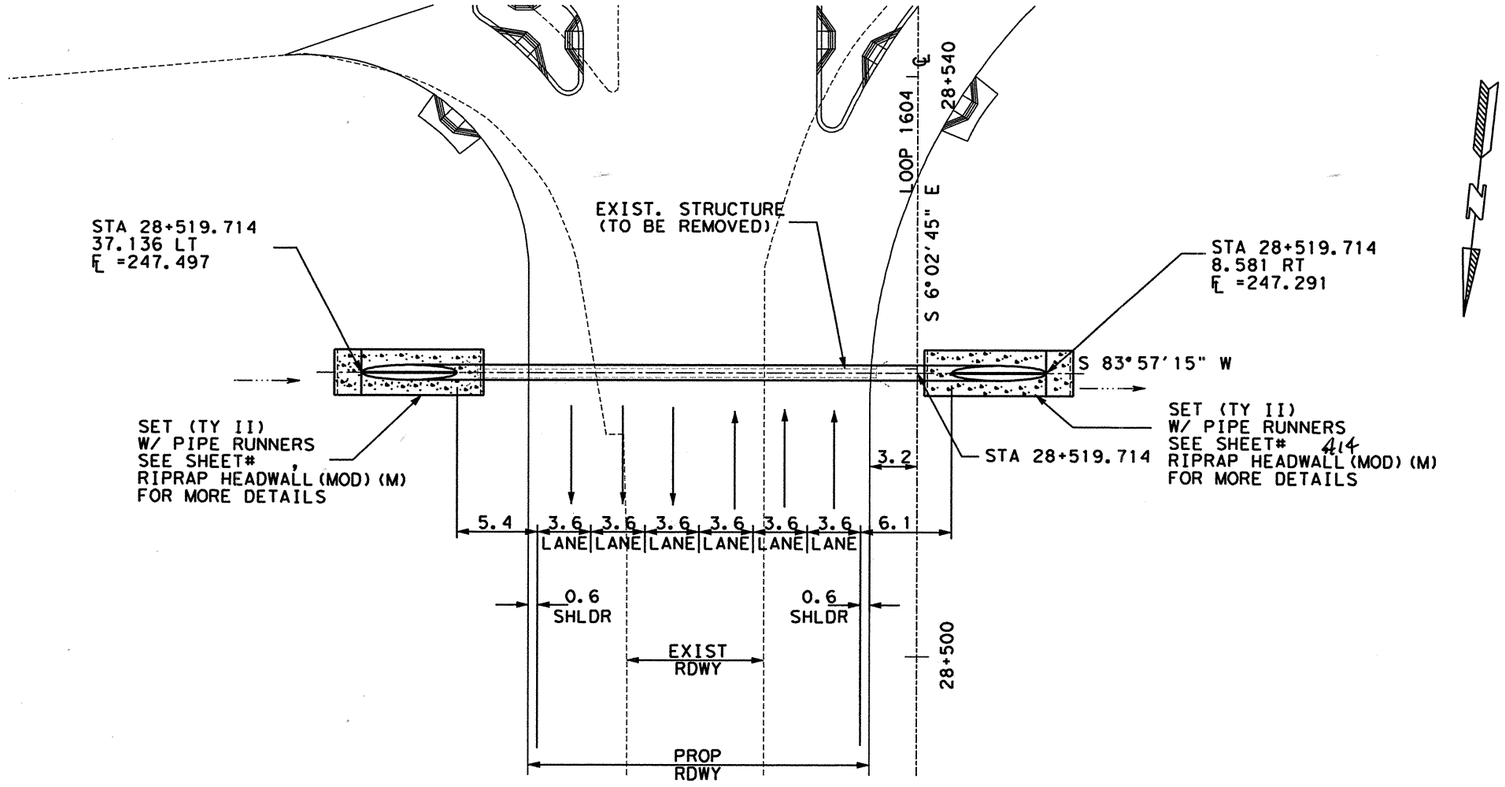


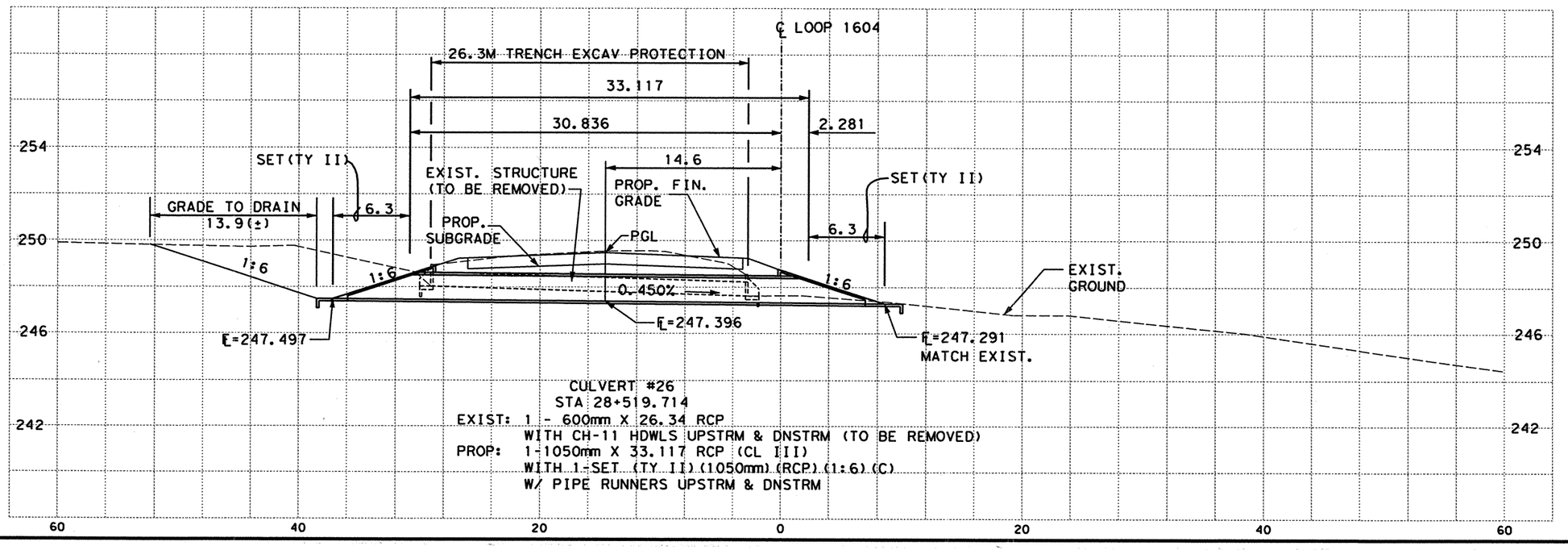


CULVERT #26
STA 28+519.714
EXIST: 1 - 600mm X 26.34 RCP
WITH CH-11 HDWLS UPSTRM & DNSTRM (TO BE REMOVED)
PROP: 1-1050mm X 33.117 RCP (CL III)
WITH 1-SET (TY II) (1050mm) (RCP) (1:6) (C)
W/ PIPE RUNNERS UPSTRM & DNSTRM

ESTIMATED QUANTITIES

| | DESCRIPTION | UNIT | EST. | FINAL |
|---|---|---|---|---|
| * | STRUCT EXCAV (CULV SMALL) | M3 | 186.0 | |
| | RC PIPE (CL III) (1050MM) | M | 33.117 | |
| | SET (TY II) (1050MM) (1:6) C | EA | 2 | |
| | TRENCH EXCAVATION PROTECTION | M | 26.3 | |

*SUPPLIED FOR CONTRACTOR'S INFORMATION ONLY

QUANTITIES THIS SHEET
CSJ 2452-01-036

NOTES: 1.) ALL DIMENSIONS ARE IN METERS UNLESS NOTED OTHERWISE.
2.) MAX FILL HEIGHT ENCOUNTERED 0.7 M

SCALE: 1:400 HORIZ
1:200 VERT

555 EAST RAMSEY SAN ANTONIO TEXAS 78216 PHONE (210)375-9000 FAX (210)375-9010
PAPE-DAWSON ENGINEERS CIVIL & ENVIRONMENTAL
STATE OF TEXAS K. STEPHEN BONNETTE 60928 REGISTERED PROFESSIONAL ENGINEER
K. STEPHEN BONNETTE, P.E. 9/20/00 DATE

© 2000 Texas Department of Transportation

LOOP 1604
CULVERT LAYOUT
CULVERT #26 STA 28+519.714

| DN: | | | | | PROJECT NO. | | |
|---|---|---|---|---|---|---|---|
| CK DN: | | | | | NH 2000 (704), etc. | | |
| DW: | CONTROL | SECTION | JOB | DIST. | STATE | COUNTY | HIGHWAY NO. | SHEET NO. |
| CK DW: | 2452 | 01 | 036 etc. | SAT | TX | BEXAR | LOOP 1604 | 392 |

Design Filename: jr\3941\16\civil\design\plansheets\394116c126.dgn

Plotted on: 01/26/2004

Design Filename: p:\52\2011\design\civil\plansheets\drainage\cross-drain\394116c126.dgn

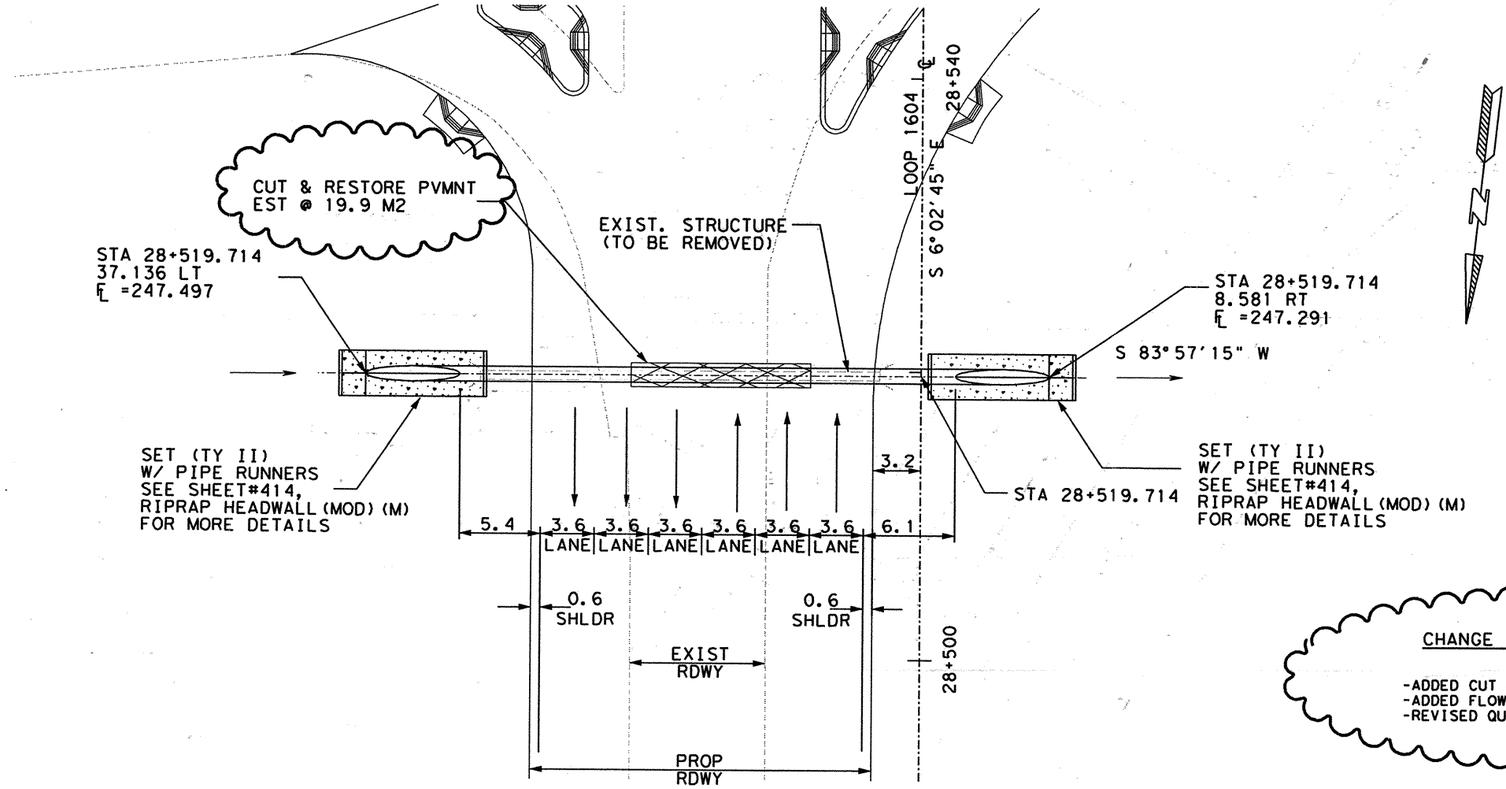


| ESTIMATED QUANTITIES | | | |
|---|---|---|---|
| DESCRIPTION | UNIT | EST. | FINAL |
| STRUCT EXCAV (CULV SMALL) | M3 | 186.0 | |
| RC PIPE (CL III) (1050MM) | M | 33.117 | |
| SET (TY II) (1050MM) (1:6) C | EA | 2 | |
| TRENCH EXCAVATION PROTECTION | M | 26.3 | |
| CEMENT STAB BKFL | M3 | 19.0 | |
| CUT & RESTORE PVMNT | M2 | 19.9 | |

QUANTITIES THIS SHEET
CSJ 2452-01-036

NOTES:
1.) ALL DIMENSIONS ARE IN METERS UNLESS NOTED OTHERWISE.
2.) MAX FILL HEIGHT ENCOUNTERED 1.3M.
3.) CONSTRUCTION ACROSS EXISTING ROADWAY SHALL OCCUR DURING OFF PEAK OR WEEKEND HOURS. CONTRACTOR SHALL PROVIDE FOR STEEL PLATING ACROSS TRENCH WHILE FLOWABLE BACKFILL SETS. PROVIDING THE STEEL PLATING SHALL BE CONSIDERED SUBSIDIARY TO THE PERTINENT BID ITEMS.
4.) FLOWABLE BACKFILL MAY INCLUDE THE USE OF CEMENT STABILIZED BACKFILL AS APPROVED BY THE ENGINEER.

CHANGE ORDER NO. 64

-ADDED CUT AND RESTORE PVMNT
-ADDED FLOWABLE BACKFILL
-REVISED QUANTITIES

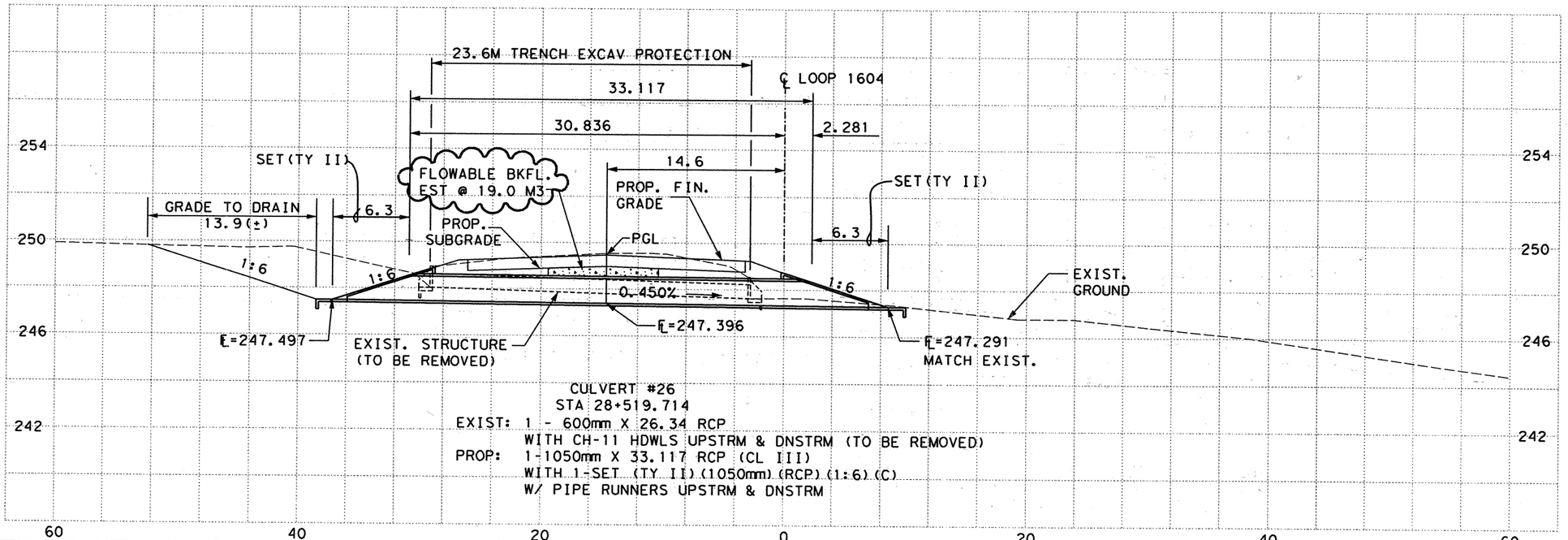


CULVERT #26
STA 28+519.714
EXIST: 1 - 600mm X 26.34 RCP
WITH CH-11 HDWLS UPSTRM & DNSTRM (TO BE REMOVED)
PROP: 1-1050mm X 33.117 RCP (CL III)
WITH 1-SET (TY II) (1050mm) (RCP) (1:6) (C)
W/ PIPE RUNNERS UPSTRM & DNSTRM

CHANGE ORDER NO. 64 | REVISED SHEET

SCALE: 1:400 HORIZ
1:200 VERT

555 EAST RAMSEY SAN ANTONIO TEXAS 78216
PHONE (210)375-9000
FAX (210)375-9010
PAPE-DAWSON ENGINEERS
CIVIL & ENVIRONMENTAL
STATE OF TEXAS
J. KENT O'BRIEN
64398
REGISTERED PROFESSIONAL ENGINEER
J. KENT O'BRIEN, P.E. 1/27/2004
DATE

© 2000 Texas Department of Transportation

# LOOP 1604
# CULVERT LAYOUT

CULVERT #26 STA 28+519.714

| DN: | | | | | PROJECT NO. | | |
|---|---|---|---|---|---|---|---|
| CK DN: | | | | | NH 2000 (704), etc. | | |
| DW: | CONTROL | SECTION | JOB | DIST. | STATE | COUNTY | HIGHWAY NO. | SHEET NO. |
| CK DW: | 2452 | 01 | 036 | SAT | TX | BEXAR | LOOP 1604 | 392A |

Plotted on: 09/21/01

Design Filename: j:\3941\16\change order\design\civil\plansheets\433716CL27.dgn

**CHANGE ORDER #1 REVISIONS**

**ADDED CULVERT # 27 WITH UTILITY INFORMATION**

CONTRACTOR IS ALERTED TO UTILITIES PROPOSED IN AREA.

MATCH TOE OF SLOPE
123.610 LT FM 471 (CULEBRA RD.) ℄
STA 10+367.429
= 86.859 LT LOOP 1604 ℄
STA 15+897.641
℄ = 257.800

200mm RIPRAP (CONC) (CL A)
W/#4 BARS @ 340mm OCEW
& 600mm x 150mm
TOEDOWN ALL AROUND
EST @ 4.48 M3

BEGIN CULVERT #27
120.843 LT FM 471 (CULEBRA RD.) ℄
STA 10+363.880
= 83.569 LT LOOP 1604 ℄
STA 15+900.711
℄ = 257.838

DRAINAGE EASEMENT

ROW

132°22'19"

HORIZ PI - CULVERT #27
120.094 LT FM 471 (CULEBRA RD.) ℄
STA 10+362.920
= 82.678 LT LOOP 1604 ℄
STA 15+901.542
℄ = 257.849

SW-0(M)

FOR INFORMATION SEE STILLING BASIN DETAIL

PROP SDWLK

BEGIN MANDATORY PRE-CAST BOX

4.2 LANE
3.6 LANE
3.6 LANE
3.6 LANE
1.2 SHLDR
PROP ROW

LOOP 1604 NB FRONTAGE ROAD

0+600

CULEBRA CREEK

STORM DRAIN LINE ZR

TYPE RR8 RIPRAP

W925

PP

EXIST. RDWY

10+380

FM 471 ℄ (CULEBRA ROAD)

S 70°37'05" E

CUT & RESTORE PVMT EST @ 94 M2

FUTURE EXTENSION TO BE CONSTRUCTED BY OTHERS

3

4

FM 471 (CULEBRA RD.)
STA 10+353.617 ℄
= 84.034 LT LOOP 1604 ℄
STA 16+021.988

04°25'45"

135°00'00"

105°40'11"

S 66°21'19" E

10+340

S 24°27'21" W

0+600

PROP CURB (TYP)

NORTH TURN AROUND

SOUTH TURN AROUND

END CULVERT #27
42.359 RT
FM 471 (CULEBRA RD.) ℄
STA 10+353.262
= 87.426 LT LOOP 1604 ℄
STA 16+064.213
℄ = 259.250

HORIZ PI - CULVERT #27
39.226 RT
FM 471 (CULEBRA RD.) ℄
STA 10+350.579
= 84.477 LT LOOP 1604 ℄
STA 16+061.329
℄ = 259.215

END MANDATORY PRE-CAST BOX

STORM DRAIN LINE ZT

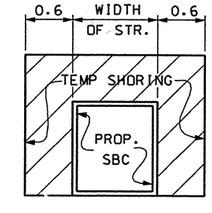


TEMP SHORING DETAIL
N.T.S.

| ESTIMATED QUANTITIES | | | |
|---|---|---|---|
| DESCRIPTION | UNIT | EST. | FINAL |
| * STRUCT EXCAV (CULV SMALL) | M3 | 3663.7 | |
| WINGWALL (SW-0) (H=2100MM) | EA | 1 | |
| CONC BOX CULV (3000MM X 2100MM) | M | 165.139 | |
| TRENCH EXCAVATION PROTECTION | M | 165.139 | |
| FLOWABLE BACKFILL | M3 | 131.25 | |
| CLASS A CONC MISC | M3 | 4.48 | |
| CUT & RESTORE PAVEMENT | M2 | 94 | |
| | | | |

* SUPPLIED FOR CONTRACTOR'S INFORMATION ONLY

QUANTITIES THIS SHEET
CSJ 2452-01-038

■ PHASE 1A- STAGE A CONSTRUCTION LIMITS
▲ PHASE 1A- STAGE B CONSTRUCTION LIMITS
● PHASE 1A- STAGE C CONSTRUCTION LIMITS

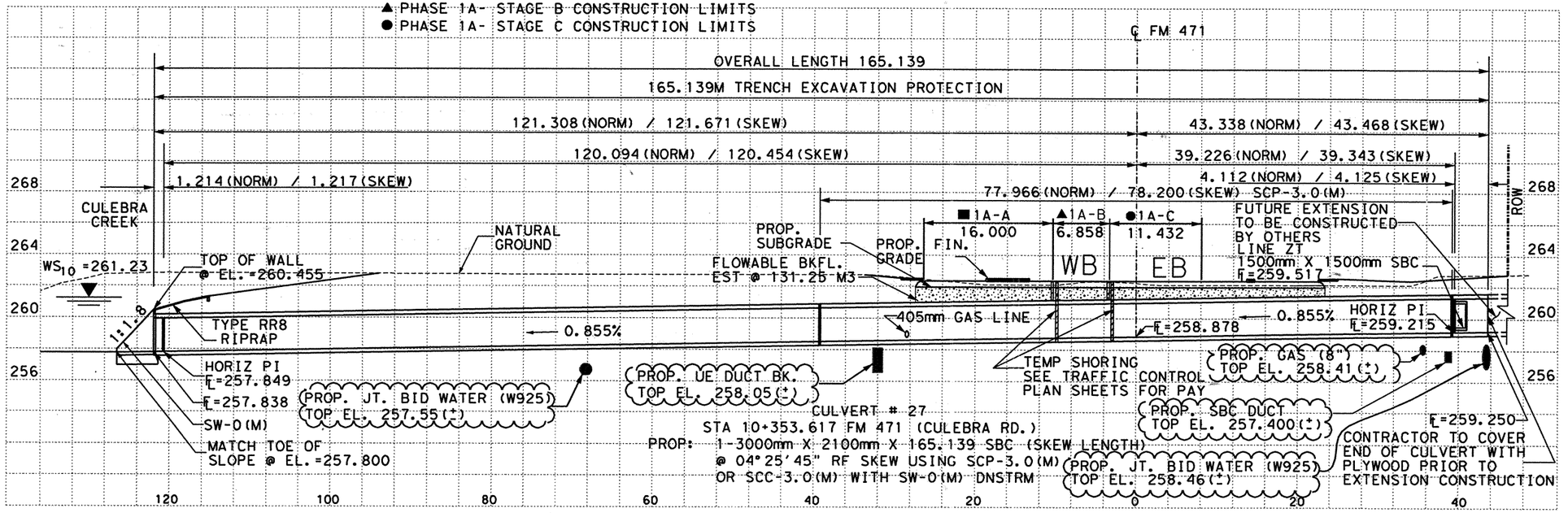


NOTES:

1.) ALL DIMENSIONS ARE IN METERS UNLESS NOTED OTHERWISE.

2.) CONTRACTOR TO ADJUST HEADWALL AND WINGWALL STEEL DIMENSIONS TO MATCH FIELD CONDITIONS. ANY ADJUSTMENTS SHALL BE SUBSIDIARY TO THE PERTINENT BID ITEM.

3.) MAX FILL HEIGHT ENCOUNTERED 2.3 M

4.) CULVERT DESIGNED TO BE CAST-IN-PLACE UNLESS SHOWN OTHERWISE.

5.) FLOWABLE BACKFILL PLACED TO TOP OF SUBGRADE. WITHIN THE LIMITS OF THE ROADWAY.

SCALE: 1:600 HORIZ
1:300 VERT

New Sht

555 EAST RAMSEY SAN ANTONIO TEXAS 78216
PHONE (210)375-9000
FAX (210)375-9010
PAPE-DAWSON ENGINEERS
CIVIL & ENVIRONMENTAL
STATE OF TEXAS K. STEPHEN BONNETTE 60928 REGISTERED PROFESSIONAL ENGINEER
K. STEPHEN BONNETTE, P.E. 9/21/01 DATE

© 2000 Texas Department of Transportation

**LOOP 1604**
**CHANGE ORDER #1-CULVERT LAYOUT**
**CULVERT # 27**
**STA 10+353.617 FM 471 (CULEBRA RD.)**

| DN: | | | | | PROJECT NO. | | |
|---|---|---|---|---|---|---|---|
| CK DN: | | | | | NH 2000 (704), etc. | | |
| DW: | CONTROL | SECTION | JOB | DIST. | STATE | COUNTY | HIGHWAY NO. | SHEET NO. |
| CK DW: | 2452 | 01 | 036 | SAT | TX | BEXAR | LOOP 1604 | 392A |

Plotted on: 07/02/01

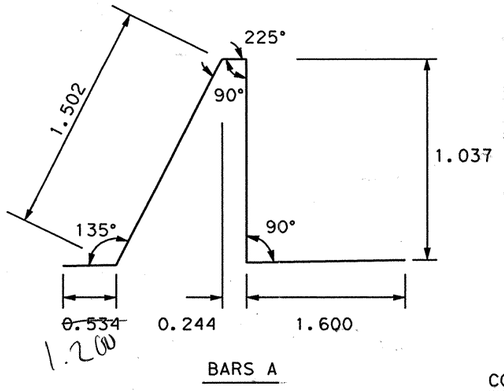


BARS A

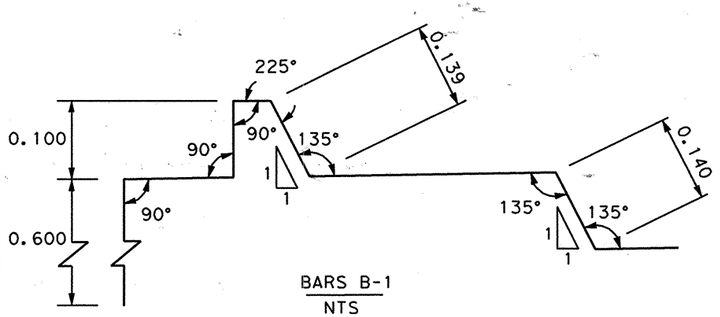


BARS B-1
NTS

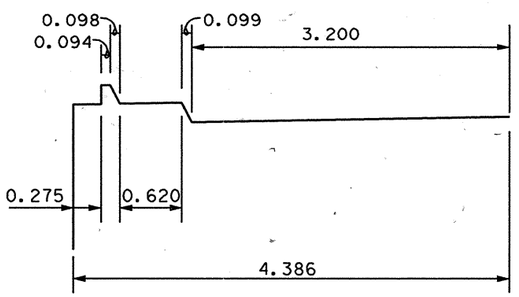


BARS B-2

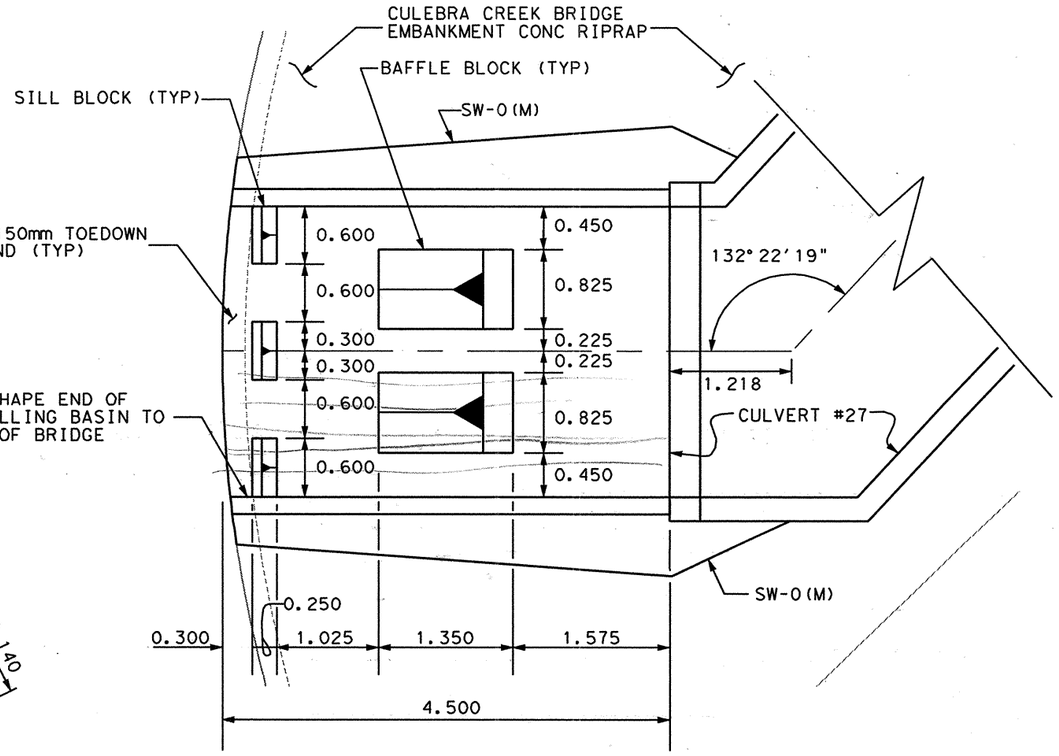


PLAN VIEW

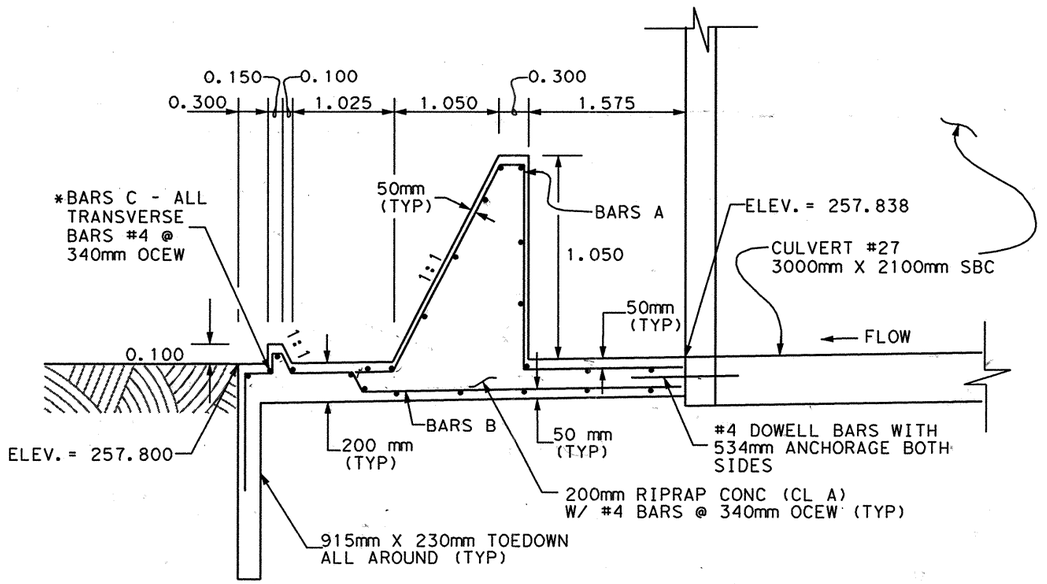


PROFILE VIEW

## QUANTITIES THIS SHEET
## CSJ 2452-01-038

NOTES:
1.) ALL DIMENSIONS ARE IN METERS UNLESS NOTED OTHERWISE.
*2.) STEEL SPACING IS NOT TO SCALE.
3.) BLOCKS & RIPRAP SHALL BE CONSTRUCTED MONOLITHICALLY W/ THAT OF ADJACENT CONCRETE.
4.) MINIMUM ANCHORAGE LENGTH FOR REBAR IS 150mm. MAXIMUM COVER FOR STEEL IS 100mm.

6 B 2ea Baffle
3ea
6 A Lengthed to 1.2m

## CHANGE ORDER #1 REVISIONS
## STILLING BASIN ADDED

SCALE: 1:60 HORIZ
1:30 VERT

New Sht

555 EAST RAMSEY SAN ANTONIO TEXAS 78216
PHONE (210)375-9000
FAX (210)375-9010
PAPE-DAWSON ENGINEERS
CIVIL & ENVIRONMENTAL
K. STEPHEN BONNETTE 60928 REGISTERED PROFESSIONAL ENGINEER
K. STEPHEN BONNETTE, P.E. DATE 7/2/2001

© 2000 Texas Department of Transportation

## LOOP 1604 CHANGE ORDER #1
## STILLING BASIN DETAIL

| DN: | | | | | PROJECT NO. | | |
|---|---|---|---|---|---|---|---|
| CK DN: | | | | | NH 2000 (704), etc. | | |
| DW: | CONTROL | SECTION | JOB | DIST. | STATE | COUNTY | HIGHWAY NO. | SHEET NO. |
| CK DW: | 2452 | Ø1 | Ø36 | SAT | TX | BEXAR | LOOP 1604 | 392B |

Design Filename: j:\3941\16\change order\design\civil\plansheets\433716sb.dgn

Plotted on: 10/17/2002

Design Filename: P:\52\20\11\design\civil\plansheets\Drainage\Cross-Drain\sht392c.dgn

QUANTITIES THIS SHEET
CSJ 2452-01-038

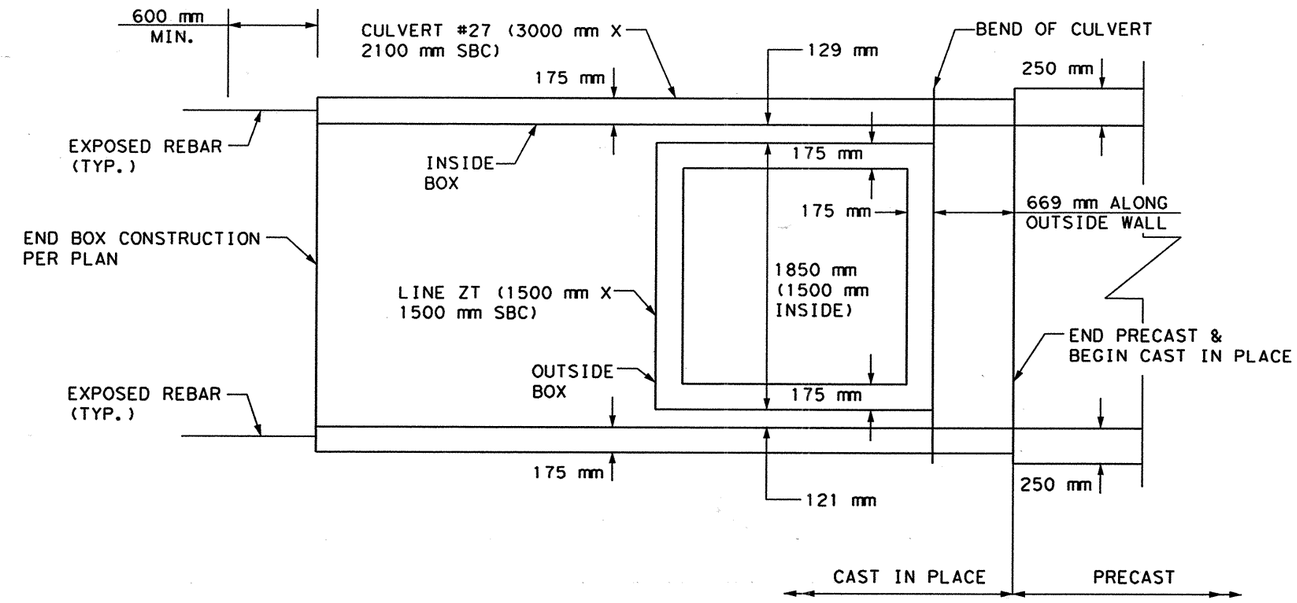


SECTION B-B

NOTES:

1.) BEND STEEL IN FIELD TO FIT AVAILABLE SPACE

2.) MINIMUM LAP LENGTHS:
#4 - 450 mm
#5 - 560 mm
#7 - 900 mm

3.) CONTRACTOR TO LEAVE A MINIMUM OF 600 mm OF EXPOSED REBAR AT THE SOUTH END OF THE BOX.

NEW SHEET
C.O. # 56

SCALE: 1:40

555 EAST RAMSEY SAN ANTONIO TEXAS 78216 PHONE (210)375-9000 FAX (210)375-9010
PAPE-DAWSON ENGINEERS CIVIL & ENVIRONMENTAL
STATE OF TEXAS K. STEPHEN BONNETTE 60928 REGISTERED PROFESSIONAL ENGINEER
K. STEPHEN BONNETTE, P.E. 10/17/02 DATE

© 2000 Texas Department of Transportation

LOOP 1604
CHANGE ORDER #1 - DETAIL
CULVERT #27/ LINE ZT TIE-IN
SHEET 1 OF 1

| DN: | | | | | PROJECT NO. | | |
|---|---|---|---|---|---|---|---|
| CK DN: | | | | | NH 2000 (704), etc. | | |
| DW: | CONTROL | SECTION | JOB | DIST. | COUNTY | HIGHWAY NO. | SHEET NO. |
| CK DW: | 2452 | 01 | 03G etc. | SAT | BEXAR | LOOP 1604 | 392C |
| | | | | TX | | | |

Plotted on: 10/17/2002

Replace Sht. 392A with this Sht.

Design Filename: P:\S2\2011\design\civil\plansheets\Drainage\Cross-Drain\433716CL27.dgn

**CHANGE ORDER #1 REVISIONS**

**ADDED CULVERT # 27 WITH UTILITY INFORMATION**

CONTRACTOR IS ALERTED TO UTILITIES PROPOSED IN AREA.

| ESTIMATED QUANTITIES | | | |
|---|---|---|---|
| DESCRIPTION | UNIT | EST. | FINAL |
| * STRUCT EXCAV (CULV SMALL) | M3 | 3663.7 | |
| WINGWALL (SW-0) (H=2100MM) | EA | 1 | |
| CONC BOX CULV (3000MM X 2100MM) | M | 165.139 | |
| TRENCH EXCAVATION PROTECTION | M | 165.139 | |
| FLOWABLE BACKFILL | M3 | 131.25 | |
| CLASS A CONC MISC | M3 | 4.48 | |
| CUT & RESTORE PAVEMENT | M2 | 94 | |
| | | | |

* SUPPLIED FOR CONTRACTOR'S INFORMATION ONLY

**QUANTITIES THIS SHEET**
**CSJ 2452-01-038**

MATCH TOE OF SLOPE
123.610 LT FM 471 (CULEBRA RD.) ℄
STA 10+367.429
= 86.859 LT LOOP 1604 ℄
STA 15+897.641
℄ = 257.800

200mm RIPRAP (CONC) (CL A)
W/#4 BARS @ 340mm OCEW
& 600mm x 150mm
TOEDOWN ALL AROUND
EST @ 4.48 M3

BEGIN CULVERT #27
120.843 LT FM 471 (CULEBRA RD.) ℄
STA 10+363.880
= 83.569 LT LOOP 1604 ℄
STA 15+900.711
℄ = 257.838

DRAINAGE EASEMENT

ROW

132°22'19"

HORIZ PI - CULVERT #27
120.094 LT FM 471 (CULEBRA RD.) ℄
STA 10+362.920
= 82.678 LT LOOP 1604 ℄
STA 15+901.542
℄ = 257.849

FM 471 (CULEBRA RD.) ℄
STA 10+353.617 ℄
= 84.034 LT LOOP 1604 ℄
STA 16+021.988

SW-0(M)

FOR INFORMATION SEE STILLING BASIN DETAIL

PROP SDWLK

BEGIN MANDATORY PRE-CAST BOX

4.2 LANE
3.6 LANE
3.6 LANE
3.6 LANE
1.2 SHLDR
PROP RDWY

LOOP 1604 NB FRONTAGE ROAD

0+600

PROP CURB (TYP)

CULEBRA CREEK

STORM DRAIN LINE ZR

TYPE RR8 RIPRAP

W925

NORTH TURN AROUND

FM 471 ℄ (CULEBRA ROAD)
S 66°21'19" E

10+340

S 24°27'21" W

END MANDATORY PRE-CAST BOX

SOUTH TURN AROUND

W925

PP

EXIST. RDWY

10+380

S 70°37'05" E

CUT & RESTORE PVMT EST @ 94 M2

04°25'45"

ROW

PP

161°07'26"

FUTURE EXTENSION TO BE CONSTRUCTED BY OTHERS

END CULVERT #27
42.978 RT
FM 471 (CULEBRA RD.) ℄
STA 10+351.545
= 85.771 LT LOOP 1604 ℄
STA 16+064.982
℄ = 259.254

C.O.# 56

79°36'35"

HORIZ PI - CULVERT #27
39.226 RT
FM 471 (CULEBRA RD.) ℄
STA 10+350.579
= 84.477 LT LOOP 1604 ℄
STA 16+061.329
℄ = 259.215

STORM DRAIN LINE ZT

0.6 WIDTH 0.6 OF STR.
TEMP SHORING
PROP. SBC

TEMP SHORING DETAIL
N. T. S.

■ PHASE 1A- STAGE A CONSTRUCTION LIMITS
▲ PHASE 1A- STAGE B CONSTRUCTION LIMITS
● PHASE 1A- STAGE C CONSTRUCTION LIMITS

℄ FM 471

OVERALL LENGTH 165.139
165.139M TRENCH EXCAVATION PROTECTION
121.308(NORM) / 121.671(SKEW)
43.338(NORM) / 43.468(SKEW)
120.094(NORM) / 120.454(SKEW)
39.226(NORM) / 39.343(SKEW)
1.214(NORM) / 1.217(SKEW)
4.112(NORM) / 4.125(SKEW)
77.966(NORM) / 78.200(SKEW) SCP-3.0(M)

■1A-A 16.000
▲1A-B 6.858
●1A-C 11.432
WB
EB

CULEBRA CREEK
$WS_{10}$ =261.23
TOP OF WALL @ EL.=260.455
NATURAL GROUND
PROP. SUBGRADE
PROP. GRADE
FLOWABLE BKFL. EST @ 131.25 M3
FIN.
FUTURE EXTENSION TO BE CONSTRUCTED BY OTHERS LINE ZT 1500mm X 1500mm SBC ℄=259.517
ROW
1:1.8
TYPE RR8 RIPRAP
0.855%
405mm GAS LINE
℄=258.878
0.855%
HORIZ PI ℄=259.215
HORIZ PI ℄=257.849
℄=257.838
SW-0(M)
MATCH TOE OF SLOPE @ EL.=257.800
PROP. JT. BID WATER (W925) TOP EL. 257.55(±)
PROP. UE DUCT BK. TOP EL. 258.05(±)
CULVERT # 27
STA 10+353.617 FM 471 (CULEBRA RD.)
PROP: 1-3000mm X 2100mm X 165.139 SBC (SKEW LENGTH)
@ 04°25'45" RF SKEW USING SCP-3.0(M)
OR SCC-3.0(M) WITH SW-0(M) DNSTRM
TEMP SHORING SEE TRAFFIC CONTROL PLAN SHEETS FOR PAY
PROP. GAS (8") TOP EL. 258.41(±)
PROP. SBC DUCT TOP EL. 257.400(±)
PROP. JT. BID WATER (W925) TOP EL. 258.46(±)
℄=259.250
CONTRACTOR TO COVER END OF CULVERT WITH PLYWOOD PRIOR TO EXTENSION CONSTRUCTION

268
264
260
256

120 100 80 60 40 20 0 20 40

NOTES:

1.) ALL DIMENSIONS ARE IN METERS UNLESS NOTED OTHERWISE.

2.) CONTRACTOR TO ADJUST HEADWALL AND WINGWALL STEEL DIMENSIONS TO MATCH FIELD CONDITIONS. ANY ADJUSTMENTS SHALL BE SUBSIDIARY TO THE PERTINENT BID ITEM.

3.) MAX FILL HEIGHT ENCOUNTERED 2.3 M

4.) CULVERT DESIGNED TO BE CAST-IN-PLACE UNLESS SHOWN OTHERWISE.

5.) FLOWABLE BACKFILL PLACED TO TOP OF SUBGRADE, WITHIN THE LIMITS OF THE ROADWAY.

*6.) SEE CULVERT 27/ LINE ZT TIE-IN SHT. FOR MORE DETAILS

SCALE: 1:600 HORIZ
1:300 VERT

555 EAST RAMSEY SAN ANTONIO TEXAS 78216 PHONE (210)375-9000 FAX (210)375-9010
PAPE-DAWSON ENGINEERS CIVIL & ENVIRONMENTAL
K. STEPHEN BONNETTE 60928 REGISTERED PROFESSIONAL ENGINEER STATE OF TEXAS
K. STEPHEN BONNETTE, P.E. DATE 10/17/02

© 2000 Texas Department of Transportation

**LOOP 1604**
**CHANGE ORDER #1-CULVERT LAYOUT**
**CULVERT # 27**
**STA 10+353.617 FM 471 (CULEBRA RD.)**

| DN= | | | | | PROJECT NO. | | | |
|---|---|---|---|---|---|---|---|---|
| CK DN= | | | | | NH 2000 (704), etc. | | | |
| DW= | CONTROL | SECTION | JOB | DIST. | STATE | COUNTY | HIGHWAY NO. | SHEET NO. |
| CK DW= | 2452 | 01 | 038 etc. | SAT | TX | BEXAR | LOOP 1604 | 392D |

DISCLAIMER:
The use of this standard is governed by the "Texas Engineering Practice Act". No warranty of any kind is made by TxDOT for any purpose whatsoever. TxDOT assumes no responsibility for the conversion of this standard to other formats or for incorrect results or damages resulting from its use.

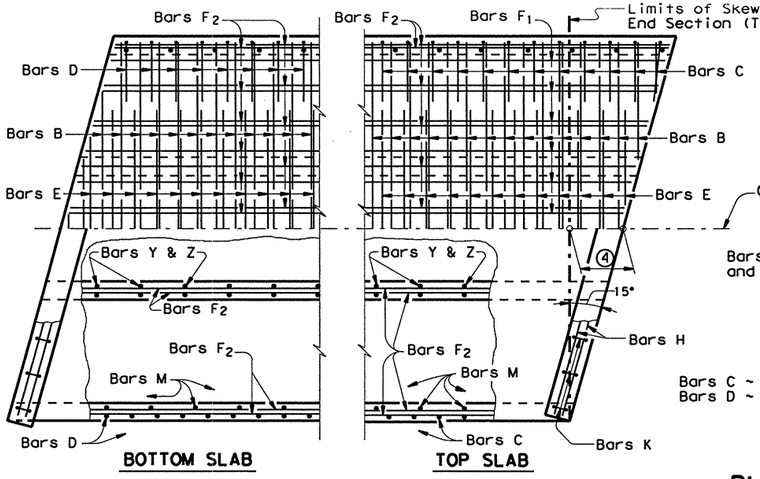


## PLAN OF SKEWED ENDS ~ 15°

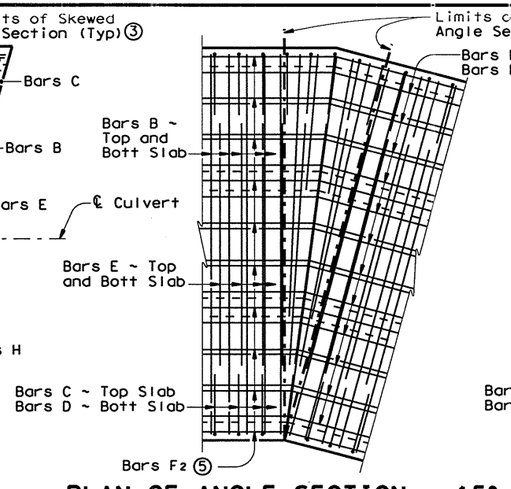


## PLAN OF ANGLE SECTION ~ 15°

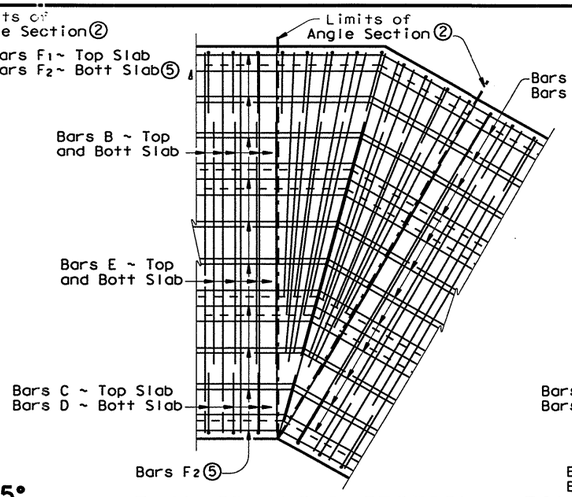


## PLAN OF ANGLE SECTION ~ 30°

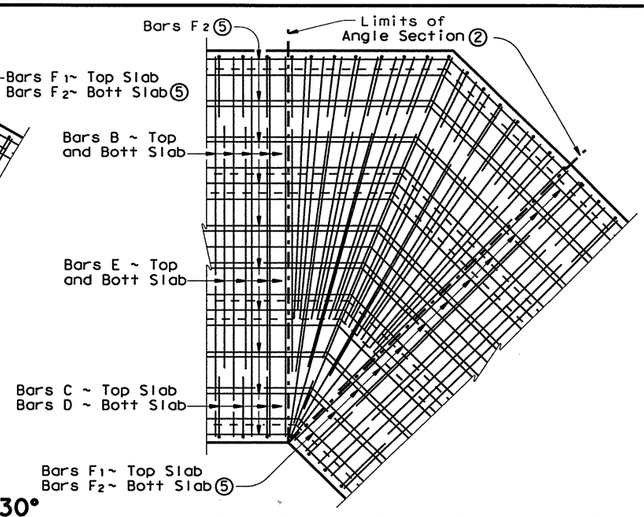


## PLAN OF ANGLE SECTION ~ 45°

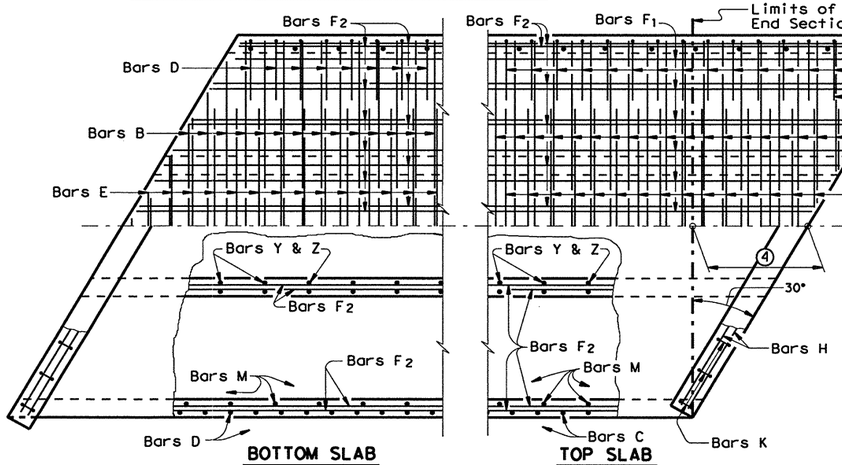


## PLAN OF SKEWED ENDS ~ 30°

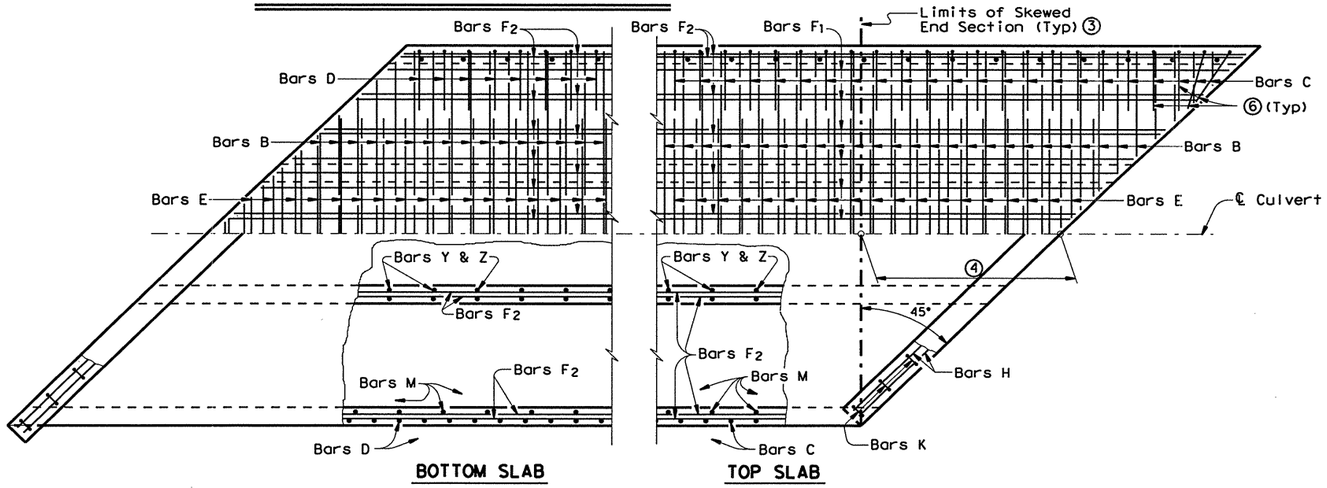


## PLAN OF SKEWED ENDS ~ 45°

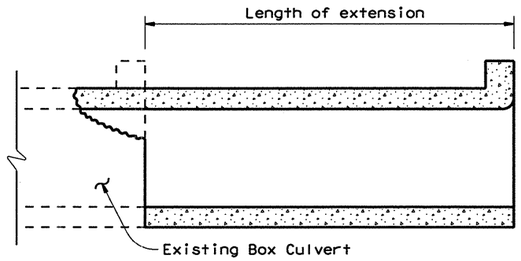


## LENGTHENING DETAIL ①

① For box culverts with less than 0.6 m of fill, the top slab shall be broken back to provide a minimum 560 mm lap of the existing longitudinal bars with the longitudinal bars in the extension. If the depth of fill is 0.6 m or greater, the top slab shall be broken back to provide a 320 mm minimum embedment of existing longitudinal reinforcing into the extension. Alternatively, if the fill height is greater than 0.6 m, the existing curb may be left in place and 600 mm long #6 bars shall be drilled and grouted 300 mm into the existing top slab at 450 mm center to center spacing. Wings and apron shall be broken back as necessary to install the extension. Exposed wingwall and apron reinforcing may be removed or cleaned and included in the extension. When lengthening existing box culverts with dimensions different than current standard dimensions, horizontal and vertical transitions shall be formed as directed by the Engineer. Bottom slabs shall match to maintain an uninterrupted flow line. Existing and new reinforcing shall be field bent into transition maintaining specified cover requirements. For direct traffic culverts, the "H" dimension may be adjusted to provide a smooth riding surface.

② When the spacing between Bars B becomes less than half of the normal spacing, bars shall be cut to avoid fouling

③ The length of Bars B and E will vary in the skewed end sections

④ [One half of overall width] x [Tan of the skew angle]

⑤ Bars $F_1$ and $F_2$ shall be continuous through the angle section. They shall be bent to remain parallel to the walls of the Box Culvert.

⑥ When necessary to avoid fouling in acute corners, the slab extension leg of Bars C and Bars D may be shortened to a minimum of 450 mm for skews of 30° and 45°.

### GENERAL NOTES:

Designed according to current AASHTO Standard Specifications.

All reinforcing steel shall be Grade 420 (fy = 420 MPa).

All concrete shall have a minimum 28 day compressive strength of 25 MPa.

Refer to Multiple Box Culverts standard for details of straight sections of culvert. For skewed sections and angle sections refer to Multiple Box Culverts standard for slab and wall dimensions, bar sizes, maximum bar spacing, and any other details not shown.

Texas Department of Transportation
Design Division (Bridge)

# MULTIPLE BOX CULVERTS MISCELLANEOUS DETAILS

## MC-MD (M)

| FILE: mc-mdstd.dgn | DN: KLR | CK: KRP | DW: MCB | CK: KLR | STD: | B60M |
|---|---|---|---|---|---|---|
| © TxDOT January 1997 | DIST | FED REG | FEDERAL AID PROJECT • | | | SHEET |
| REVISIONS | SAT | 6 | NH 2000(704), ETC. | | | 393 |
| | COUNTY | | CONTROL | SECT | JOB | HIGHWAY |
| | BEXAR | | 2452 | 01 | 036, etc. | LP1604 |

LEVELS U...AVED ACC: (LV=1,3 for Metric)
1 3

DISCLAIMER:
The use of this standard is governed by the "Texas Engineering Practice Act". No warranty of any kind is made by TxDOT for any purpose whatsoever. TxDOT assumes no responsibility for the conversion of this standard to other formats or for incorrect results or damages resulting from its use.

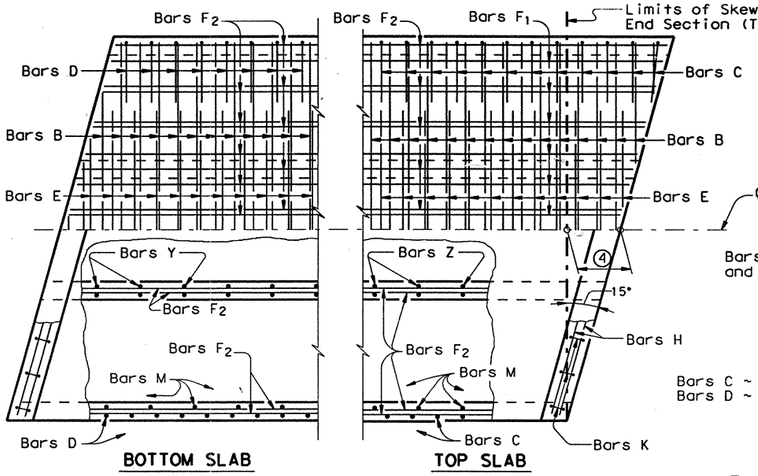


## PLAN OF SKEWED ENDS ~ 15° ⑦

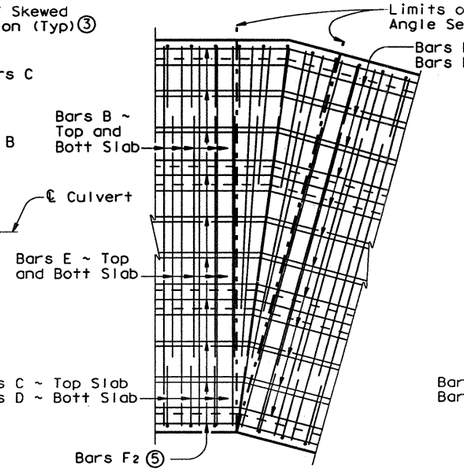


## PLAN OF ANGLE SECTION ~ 15°

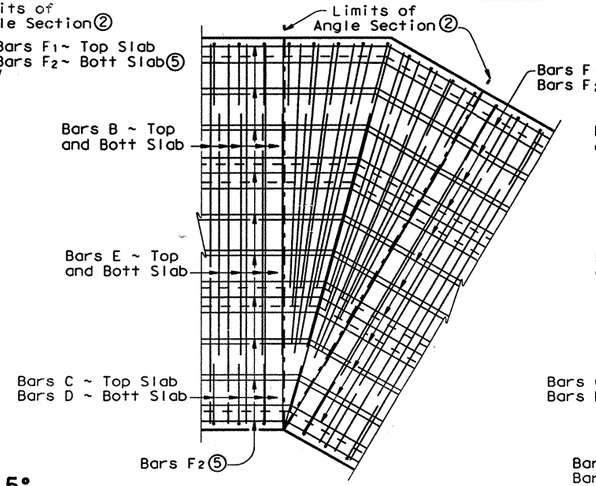


## PLAN OF ANGLE SECTION ~ 30°

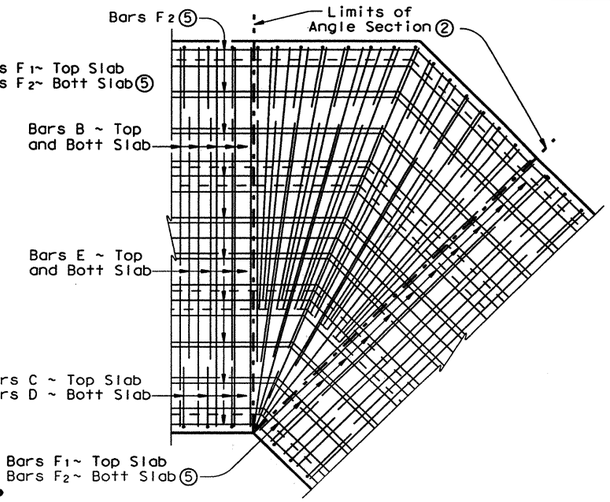


## PLAN OF ANGLE SECTION ~ 45°

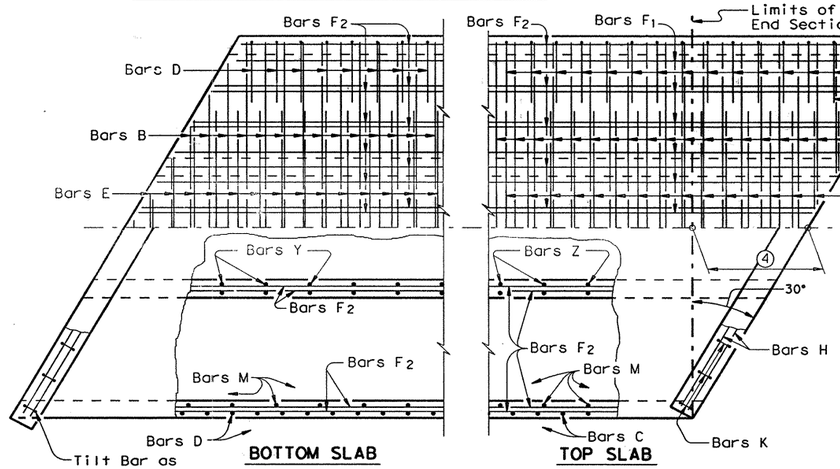


## PLAN OF SKEWED ENDS ~ 30°

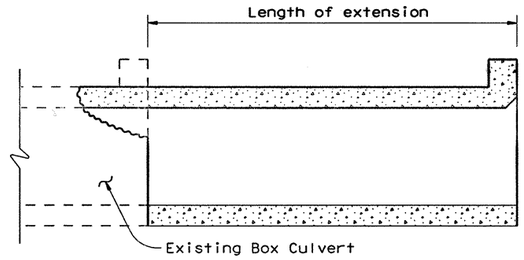


## LENGTHENING DETAIL ①

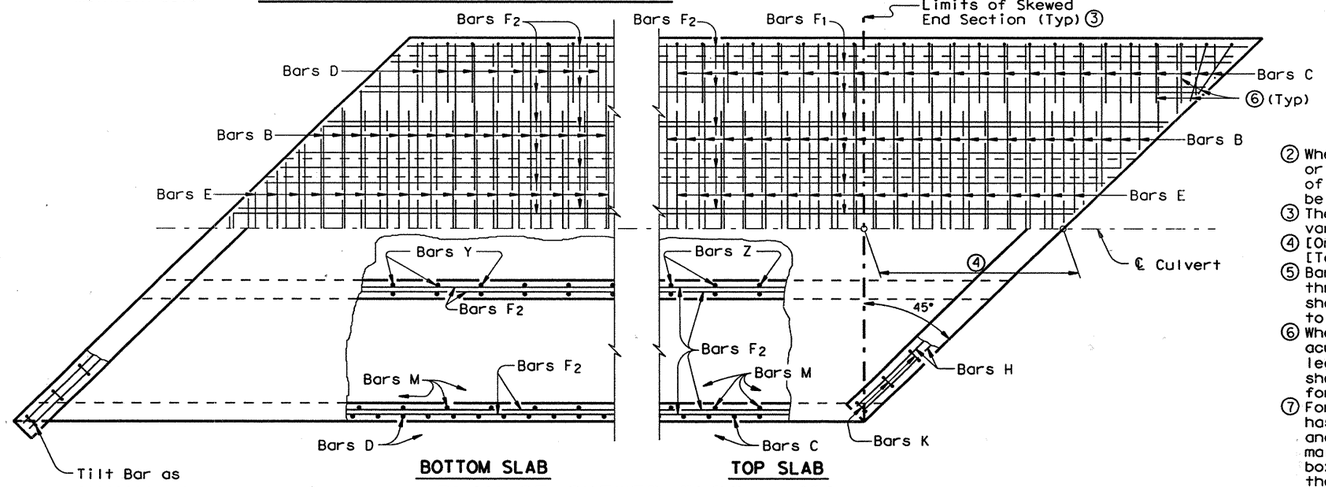


## PLAN OF SKEWED ENDS ~ 45°

① For box culverts with less than 2'-0" of fill, the top slab shall be broken back to provide a minimum 1'-10" lap of the existing longitudinal bars with the longitudinal bars in the extension. If the depth of fill is 2'-0" or greater, the top slab shall be broken back to provide a 1'-0" minimum embedment of existing longitudinal reinforcing into the extension. Alternatively, if the fill height is greater than 2'-0", the existing curb may be left in place and 2'-0" long #6 bars shall be drilled and grouted 1'-0" into the existing top slab at 1'-6" center to center spacing. Wings and apron shall be broken back as necessary to install the extension. Exposed wingwall and apron reinforcing may be removed or cleaned and included in the extension. When lengthening existing box culverts with dimensions different than current standard dimensions, horizontal and vertical transitions shall be formed as directed by the Engineer. Bottom slabs shall match to maintain an uninterrupted flow line. Existing and new reinforcing shall be field bent into transition maintaining specified cover requirements. For direct traffic culverts, the "H" dimension may be adjusted to provide a smooth riding surface.

② When the spacing between Bars B or Bars E becomes less than half of the normal spacing, bars shall be cut to avoid fouling

③ The length of Bars B and E will vary in the skewed end sections

④ [One half of overall width] x [Tan of the skew angle]

⑤ Bars F1 and F2 shall be continuous through the angle section. They shall be bent to remain parallel to the walls of the Box Culvert.

⑥ When necessary to avoid fouling in acute corners, the slab extension leg of Bars C and Bars D may be shortened to a minimum of 1'-6" for skews of 30° and 45°.

⑦ For skews of 15° or less, the contractor has the option of placing Bars B, C, D and E parallel to the skewed end while maintaining spacing along centerline box. Lengths of Bars B and E shown on the standards shall be increased to accommodate the skew.

### GENERAL NOTES:

Designed according to current AASHTO Standard and Interim Specifications.

Designed for HS20 loading.

All reinforcing steel shall be Grade 60.

All concrete shall be Class "C" concrete with a minimum 28 day compressive strength of 3600 psi; except for the top slab of direct traffic culverts, which shall be Class "S" concrete with a minimum 28 day compressive strength of 4000 psi.

Refer to Multiple Box Culverts Cast-in-Place standard for details of straight sections of culvert. For skewed sections and angle sections refer to Multiple Box Culverts Cast- in-Place standard for slab and wall dimensions, bar sizes, maximum bar spacing, and any other details not shown. For Skewed ends with curbs, adjust length of Bars H, number of Bars K, curb concrete volume and reinforcing steel weight by dividing the values shown on the culvert standards by the cosine of the skew angle.

Laps for Bars H, when required, shall be 1'-9" for uncoated bars and 2'-7" for epoxy coated.

HS20 LOADING

Texas Department of Transportation
Bridge Division

# MULTIPLE BOX CULVERTS MISCELLANEOUS DETAILS

Change Order #35
New Sheet

MC-MD

| FILE: mc-mdste.dgn | DN: GAF | CK: MAS | DW: MCB | CK: GAF |
|---|---|---|---|---|
| © TxDOT September 2000 | DISTRICT | FEDERAL AID PROJECT | | SHEET |
| REVISIONS | 15 | NH 2000(704)et 393 | | |
| | COUNTY | CONTROL | SECT | JOB | HIGHWAY |
| | BEXAR | | | | |

ACC:
LEVELS DISPLAYED
1

DISCLAIMER:
The use of this standard is governed by the "Texas Engineering Practice Act". No warranty of any kind is made by TxDOT for any purpose whatsoever. TxDOT assumes no responsibility for the conversion of this standard to other formats or for incorrect results or damages resulting from its use.

# BILLS OF REINFORCING STEEL (For Box Length = 10 meters)

| NUMBER OF SPANS | SECTION DIMENSIONS | | | | Bars B | | | | | Bars C & D | | | | | | | Bars E | | | | | Bars $F_1$ ~#4 | | | | Bars $F_2$ ~#4 450 mm Max | | | Bars M~#4 450 mm Max | | | Bars Y & Z ~#4 300 mm Max | | | | | | Bars H 4~#4 | | Bars K | | QUANTITIES: Per Meter of Barrel | | Curb | | Total | |
|---|---|---|---|---|---|---|---|---|---|---|---|---|---|---|---|---|---|---|---|---|---|---|---|---|---|---|---|---|---|---|---|---|---|---|---|---|---|---|---|---|---|---|---|---|---|
| | S | H | T | U | No. | Size | Spa | Length | Mass | No. | Size | Spa | Bar C Lgth | Bar C Mass | Bar D Lgth | Bar D Mass | No. | Size | Spa | Length | Mass | No. | Spa | Length | Mass | No. | Length | Mass | No. | Lgth | Mass | No. | Bar Y Lgth | Bar Y Mass | Bar Z Lgth | Bar Z Mass | Length | Mass | No. | Mass | Conc ($m^3$) | Reinf (kg) | Conc ($m^3$) | Reinf (kg) | Conc ($m^3$) | Reinf (kg) |
| 2 | 1,500 | 600 | 175 | 175 | 162 | #4 | 125 | 3,430 | 552 | 134 | #4 | 150 | 2,120 | 282 | 2,080 | 277 | 134 | #5 | 150 | 1,760 | 366 | 14 | 200 | 9,900 | 138 | 38 | 9,900 | 374 | 46 | 600 | 27 | 34 | 1,410 | 48 | 1,490 | 50 | 3,450 | 14 | 26 | 33 | 1.55 | 211.4 | 0.6 | 47 | 16.1 | 2,161 |
| 3 | 1,500 | 600 | 175 | 175 | 162 | #4 | 125 | 5,100 | 821 | 134 | #4 | 150 | 2,120 | 282 | 2,080 | 277 | 134 | #5 | 150 | 3,440 | 715 | 21 | 200 | 9,900 | 207 | 54 | 9,900 | 531 | 46 | 600 | 27 | 68 | 1,410 | 95 | 1,490 | 101 | 5,120 | 20 | 36 | 46 | 2.24 | 305.6 | 0.9 | 66 | 23.3 | 3,122 |
| 4 | 1,500 | 600 | 175 | 175 | 162 | #4 | 125 | 6,780 | 1,092 | 134 | #4 | 150 | 2,120 | 282 | 2,080 | 277 | 134 | #5 | 150 | 5,110 | 1,063 | 28 | 200 | 9,900 | 276 | 70 | 9,900 | 689 | 46 | 600 | 27 | 102 | 1,410 | 143 | 1,490 | 151 | 6,800 | 27 | 48 | 62 | 2.93 | 400.0 | 1.2 | 89 | 30.6 | 4,089 |
| 5 | 1,500 | 600 | 175 | 175 | 162 | #4 | 125 | 8,450 | 1,361 | 134 | #4 | 150 | 2,120 | 282 | 2,080 | 277 | 134 | #5 | 150 | 6,790 | 1,412 | 35 | 200 | 9,900 | 344 | 86 | 9,900 | 846 | 46 | 600 | 27 | 136 | 1,410 | 191 | 1,490 | 201 | 8,470 | 34 | 60 | 77 | 3.62 | 494.1 | 1.5 | 111 | 37.8 | 5,052 |
| 6 | 1,500 | 600 | 175 | 175 | 162 | #4 | 125 | 10,130 | 1,631 | 134 | #4 | 150 | 2,120 | 282 | 2,080 | 277 | 134 | #5 | 150 | 8,460 | 1,759 | 42 | 200 | 9,900 | 413 | 102 | 9,900 | 1,004 | 46 | 600 | 27 | 170 | 1,410 | 238 | 1,490 | 252 | 10,150 | 40 | 70 | 90 | 4.31 | 588.3 | 1.8 | 130 | 45.0 | 6,013 |
| 2 | 1,500 | 900 | 175 | 175 | 162 | #4 | 125 | 3,430 | 552 | 116 | #4 | 175 | 2,420 | 279 | 2,080 | 240 | 134 | #5 | 150 | 1,760 | 366 | 14 | 200 | 9,900 | 138 | 44 | 9,900 | 433 | 46 | 900 | 41 | 34 | 1,410 | 48 | 2,090 | 71 | 3,450 | 14 | 26 | 33 | 1.71 | 216.8 | 0.6 | 47 | 17.7 | 2,215 |
| 3 | 1,500 | 900 | 175 | 175 | 162 | #4 | 125 | 5,100 | 821 | 116 | #4 | 175 | 2,420 | 279 | 2,080 | 240 | 134 | #5 | 150 | 3,440 | 715 | 21 | 200 | 9,900 | 207 | 62 | 9,900 | 610 | 46 | 900 | 41 | 68 | 1,410 | 95 | 2,090 | 141 | 5,120 | 20 | 36 | 46 | 2.45 | 314.9 | 0.9 | 66 | 25.4 | 3,215 |
| 4 | 1,500 | 900 | 175 | 175 | 162 | #4 | 125 | 6,780 | 1,092 | 116 | #4 | 175 | 2,420 | 279 | 2,080 | 240 | 134 | #5 | 150 | 5,110 | 1,063 | 28 | 200 | 9,900 | 276 | 80 | 9,900 | 787 | 46 | 900 | 41 | 102 | 1,410 | 143 | 2,090 | 212 | 6,800 | 27 | 48 | 62 | 3.19 | 413.3 | 1.2 | 89 | 33.2 | 4,222 |
| 5 | 1,500 | 900 | 175 | 175 | 162 | #4 | 125 | 8,450 | 1,361 | 116 | #4 | 175 | 2,420 | 279 | 2,080 | 240 | 134 | #5 | 150 | 6,790 | 1,412 | 35 | 200 | 9,900 | 344 | 98 | 9,900 | 964 | 46 | 900 | 41 | 136 | 1,410 | 191 | 2,090 | 283 | 8,470 | 34 | 60 | 77 | 3.94 | 511.5 | 1.5 | 111 | 40.9 | 5,226 |
| 6 | 1,500 | 900 | 175 | 175 | 162 | #4 | 125 | 10,130 | 1,631 | 116 | #4 | 175 | 2,420 | 279 | 2,080 | 240 | 134 | #5 | 150 | 8,460 | 1,759 | 42 | 200 | 9,900 | 413 | 116 | 9,900 | 1,142 | 46 | 900 | 41 | 170 | 1,410 | 238 | 2,090 | 353 | 10,150 | 40 | 70 | 90 | 4.68 | 609.6 | 1.8 | 130 | 48.7 | 6,226 |
| 2 | 1,500 | 1,200 | 175 | 175 | 162 | #4 | 125 | 3,430 | 552 | 116 | #4 | 175 | 2,720 | 314 | 2,080 | 240 | 134 | #5 | 150 | 1,760 | 366 | 14 | 200 | 9,900 | 138 | 44 | 9,900 | 433 | 46 | 1,200 | 55 | 34 | 1,410 | 48 | 2,690 | 91 | 3,450 | 14 | 26 | 33 | 1.86 | 223.7 | 0.6 | 47 | 19.3 | 2,284 |
| 3 | 1,500 | 1,200 | 175 | 175 | 162 | #4 | 125 | 5,100 | 821 | 116 | #4 | 175 | 2,720 | 314 | 2,080 | 240 | 134 | #5 | 150 | 3,440 | 715 | 21 | 200 | 9,900 | 207 | 62 | 9,900 | 610 | 46 | 1,200 | 55 | 68 | 1,410 | 95 | 2,690 | 182 | 5,120 | 20 | 36 | 46 | 2.66 | 323.9 | 0.9 | 66 | 27.5 | 3,305 |
| 4 | 1,500 | 1,200 | 175 | 175 | 162 | #4 | 125 | 6,780 | 1,092 | 116 | #4 | 175 | 2,720 | 314 | 2,080 | 240 | 134 | #5 | 150 | 5,110 | 1,063 | 28 | 200 | 9,900 | 276 | 80 | 9,900 | 787 | 46 | 1,200 | 55 | 102 | 1,410 | 143 | 2,690 | 273 | 6,800 | 27 | 48 | 62 | 3.46 | 424.3 | 1.2 | 89 | 35.8 | 4,332 |
| 5 | 1,500 | 1,200 | 175 | 175 | 162 | #4 | 125 | 8,450 | 1,361 | 116 | #4 | 175 | 2,720 | 314 | 2,080 | 240 | 134 | #5 | 150 | 6,790 | 1,412 | 35 | 200 | 9,900 | 344 | 98 | 9,900 | 964 | 46 | 1,200 | 55 | 136 | 1,410 | 191 | 2,690 | 364 | 8,470 | 34 | 60 | 77 | 4.25 | 524.5 | 1.5 | 111 | 44.1 | 5,356 |
| 6 | 1,500 | 1,200 | 175 | 175 | 162 | #4 | 125 | 10,130 | 1,631 | 116 | #4 | 175 | 2,720 | 314 | 2,080 | 240 | 134 | #5 | 150 | 8,460 | 1,759 | 42 | 200 | 9,900 | 413 | 116 | 9,900 | 1,142 | 46 | 1,200 | 55 | 170 | 1,410 | 238 | 2,690 | 455 | 10,150 | 40 | 70 | 90 | 5.05 | 624.7 | 1.8 | 130 | 52.3 | 6,377 |
| 2 | 1,500 | 1,500 | 175 | 175 | 162 | #4 | 125 | 3,430 | 552 | 116 | #4 | 175 | 3,020 | 348 | 2,080 | 240 | 134 | #5 | 150 | 1,760 | 366 | 14 | 200 | 9,900 | 138 | 50 | 9,900 | 492 | 46 | 1,500 | 69 | 34 | 1,410 | 48 | 3,290 | 111 | 3,450 | 14 | 26 | 33 | 2.02 | 236.4 | 0.6 | 47 | 20.8 | 2,411 |
| 3 | 1,500 | 1,500 | 175 | 175 | 162 | #4 | 125 | 5,100 | 821 | 116 | #4 | 175 | 3,020 | 348 | 2,080 | 240 | 134 | #5 | 150 | 3,440 | 715 | 21 | 200 | 9,900 | 207 | 70 | 9,900 | 689 | 46 | 1,500 | 69 | 68 | 1,410 | 95 | 3,290 | 222 | 5,120 | 20 | 36 | 46 | 2.87 | 340.6 | 0.9 | 66 | 29.6 | 3,472 |
| 4 | 1,500 | 1,500 | 175 | 175 | 162 | #4 | 125 | 6,780 | 1,092 | 116 | #4 | 175 | 3,020 | 348 | 2,080 | 240 | 134 | #5 | 150 | 5,110 | 1,063 | 28 | 200 | 9,900 | 276 | 90 | 9,900 | 886 | 46 | 1,500 | 69 | 102 | 1,410 | 143 | 3,290 | 334 | 6,800 | 27 | 48 | 62 | 3.72 | 445.1 | 1.2 | 89 | 38.4 | 4,540 |
| 5 | 1,500 | 1,500 | 175 | 175 | 162 | #4 | 125 | 8,450 | 1,361 | 116 | #4 | 175 | 3,020 | 348 | 2,080 | 240 | 134 | #5 | 150 | 6,790 | 1,412 | 35 | 200 | 9,900 | 344 | 110 | 9,900 | 1,082 | 46 | 1,500 | 69 | 136 | 1,410 | 191 | 3,290 | 445 | 8,470 | 34 | 60 | 77 | 4.57 | 549.2 | 1.5 | 111 | 47.2 | 5,603 |
| 6 | 1,500 | 1,500 | 175 | 175 | 162 | #4 | 125 | 10,130 | 1,631 | 116 | #4 | 175 | 3,020 | 348 | 2,080 | 240 | 134 | #5 | 150 | 8,460 | 1,759 | 42 | 200 | 9,900 | 413 | 130 | 9,900 | 1,279 | 46 | 1,500 | 69 | 170 | 1,410 | 238 | 3,290 | 556 | 10,150 | 40 | 70 | 90 | 5.42 | 653.3 | 1.8 | 130 | 56.0 | 6,663 |

| H | Bar Dimensions | | |
|---|---|---|---|
| | "X" | "Y" | "Z" |
| 600 | 725 | 725 | 690 |
| 900 | 1,025 | 1,025 | 690 |
| 1,200 | 1,325 | 1,325 | 690 |
| 1,500 | 1,625 | 1,625 | 690 |
| | | | |
| | | | |

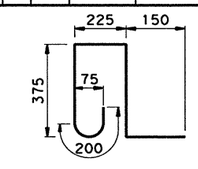


**BARS K ~ #4**
(Spa = 300 mm Max)
(Length = 1,290 mm)

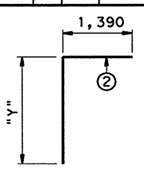


**BARS C**

② Extend into slab.

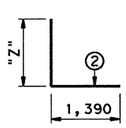


**BARS D**

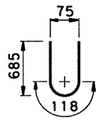


**BARS Y**

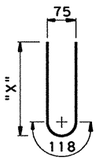


**BARS Z**

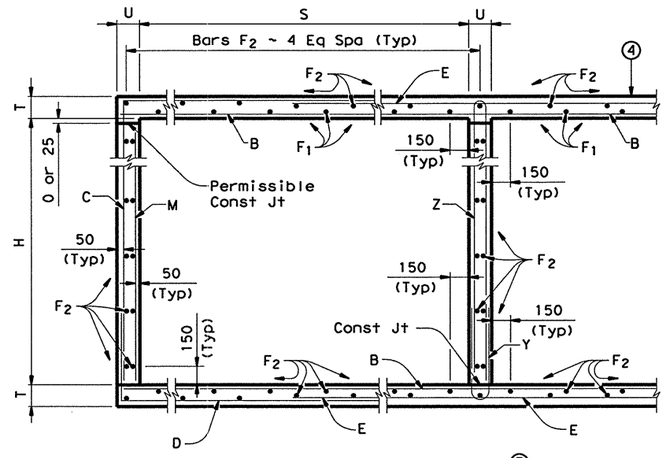


## TYPICAL SECTION ③

③ Reinforcing shown for orientation purposes only. See table for number and spacing of bars.

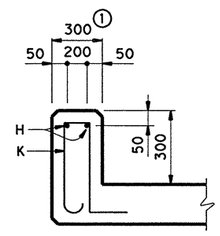


① For T6 Rail ~ see T6-CM(M) for additional details

## SECTION THRU CURB

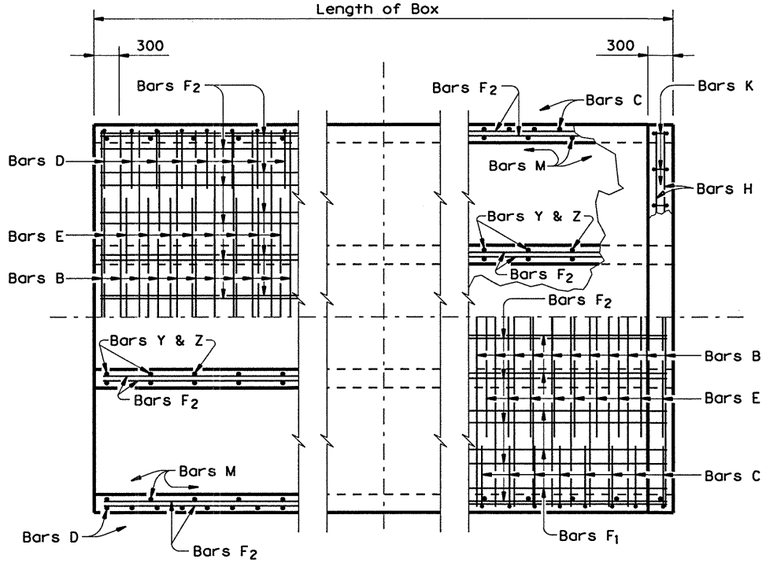


**BOTTOM SLAB** **TOP SLAB**

## PART PLANS ③

④ For Direct Traffic, construct top slab to conform to crown of roadway while maintaining constant thickness of slab.

## GENERAL NOTES:

Designed according to current AASHTO 1992 Standard Specifications.

Designed for MS18 Loading and to the maximum fill height shown.

All reinforcing steel shall be Grade 420 (fy = 420 MPa).

All concrete shall have a minimum 28 day compressive strength of 25 MPa.

The bottom edge of the top slab shall be chamfered 75 mm at the entrance. Reinforcing bars shall be adjusted to provide a minimum of 35 mm clear cover. Headwall heights will be reduced, if necessary, to provide a minimum 75 mm projection above the roadway slope. No increase or decrease will be made in plan quantities of concrete or reinforcing steel for this work.

Construction joints shown at the flow line may be raised a maximum of 150 mm at the Contractor's option. If this option is used, bars M may be cut off or raised, bars C and D may be reversed, and Bars Y & Z may be reversed.

All dimensions are in millimeters and all mass is in kilograms unless otherwise noted.

Texas Department of Transportation
Design Division (Bridge)

# MULTIPLE BOX CULVERTS
## 1,500 mm SPAN
## DIRECT TRAFFIC TO 6 m MAX FILL

# MC-1.5-6(M)

| FILE: mc156std.dgn | DN: KRP | CK: GAF | DW: TxDOT | CK: GAF | STD: B65M |
|---|---|---|---|---|---|
| ©TxDOT January 1997 | DIST | FED REG | FEDERAL AID PROJECT • | | SHEET |
| REVISIONS | SAT | 6 | NH 2000(704), ETC. | | 394 |
| | COUNTY | | CONTROL | SECT | JOB | HIGHWAY |
| | BEXAR | | 2452 | 01 | 036, etc. | LP1604 |

ACC:
(LV=1, 3 for Metric)
LEVELS DISPLAYED
1 3

DISCLAIMER:
The use of this standard is governed by the "Texas Engineering Practice Act". No warranty of any kind is made by TxDOT for any purpose whatsoever. TxDOT assumes no responsibility for the conversion of this standard to other formats or for incorrect results or damages resulting from its use.

ACC: (LV=1,3 for Metric)

LEVELS DISPLAYED 1 3

# BILLS OF REINFORCING STEEL (For Box Length = 10 meters)

| NUMBER OF SPANS | SECTION DIMENSIONS | | | | Bars B | | | | | Bars C & D | | | | | | | Bars E | | | | | Bars $F_1$~#4 | | | | Bars $F_2$~#4 450 mm Max | | | Bars M~#4 450 mm Max | | | Bars Y & Z~#4 300 mm Max | | | | | Bars H 4~#4 | | Bars K | | QUANTITIES Per Meter of Barrel | | Curb | | Total | |
|---|---|---|---|---|---|---|---|---|---|---|---|---|---|---|---|---|---|---|---|---|---|---|---|---|---|---|---|---|---|---|---|---|---|---|---|---|---|---|---|---|---|---|---|---|---|---|
| | S | H | T | U | No. | Size | Spa | Length | Mass | No. | Size | Spa | Bar C Lgth | Bar C Mass | Bar D Lgth | Bar D Mass | No. | Size | Spa | Length | Mass | No. | Spa | Length | Mass | No. | Length | Mass | No. | Lgth | Mass | No. | Bar Y Lgth | Bar Y Mass | Bar Z Lgth | Bar Z Mass | Length | Mass | No. | Mass | Conc ($m^3$) | Reinf (kg) | Conc ($m^3$) | Reinf (kg) | Conc ($m^3$) | Reinf (kg) |
| 2 | 1,800 | 900 | 175 | 175 | 134 | #5 | 150 | 4,030 | 838 | 134 | #4 | 150 | 2,680 | 357 | 2,340 | 312 | 162 | #5 | 125 | 1,840 | 463 | 16 | 225 | 9,900 | 157 | 50 | 9,900 | 492 | 46 | 900 | 41 | 34 | 1,410 | 48 | 2,090 | 71 | 4,050 | 16 | 30 | 38 | 1.92 | 277.9 | 0.7 | 54 | 19.9 | 2,833 |
| 3 | 1,800 | 900 | 175 | 175 | 134 | #5 | 150 | 6,000 | 1,248 | 134 | #4 | 150 | 2,680 | 357 | 2,340 | 312 | 162 | #5 | 125 | 3,820 | 960 | 24 | 225 | 9,900 | 236 | 71 | 9,900 | 699 | 46 | 900 | 41 | 68 | 1,410 | 95 | 2,090 | 141 | 6,020 | 24 | 42 | 54 | 2.77 | 408.9 | 1.1 | 78 | 28.7 | 4,167 |
| 4 | 1,800 | 900 | 175 | 175 | 134 | #5 | 150 | 7,980 | 1,660 | 134 | #4 | 150 | 2,680 | 357 | 2,340 | 312 | 162 | #5 | 125 | 5,790 | 1,456 | 32 | 225 | 9,900 | 315 | 92 | 9,900 | 905 | 46 | 900 | 41 | 102 | 1,410 | 143 | 2,090 | 212 | 8,000 | 32 | 56 | 72 | 3.61 | 540.1 | 1.5 | 104 | 37.6 | 5,505 |
| 5 | 1,800 | 900 | 175 | 175 | 134 | #5 | 150 | 9,950 | 2,069 | 134 | #4 | 150 | 2,680 | 357 | 2,340 | 312 | 162 | #5 | 125 | 7,770 | 1,954 | 40 | 225 | 9,900 | 394 | 113 | 9,900 | 1,112 | 46 | 900 | 41 | 136 | 1,410 | 191 | 2,090 | 283 | 9,970 | 40 | 70 | 90 | 4.46 | 671.3 | 1.8 | 130 | 46.4 | 6,843 |
| 6 | 1,800 | 900 | 175 | 175 | 134 | #5 | 150 | 11,930 | 2,481 | 134 | #4 | 150 | 2,680 | 357 | 2,340 | 312 | 162 | #5 | 125 | 9,740 | 2,449 | 48 | 225 | 9,900 | 472 | 134 | 9,900 | 1,319 | 46 | 900 | 41 | 170 | 1,410 | 238 | 2,090 | 353 | 11,950 | 48 | 82 | 105 | 5.31 | 802.2 | 2.2 | 153 | 55.3 | 8,175 |
| 2 | 1,800 | 1,200 | 175 | 175 | 134 | #5 | 150 | 4,030 | 838 | 134 | #4 | 150 | 2,980 | 397 | 2,340 | 312 | 162 | #5 | 125 | 1,840 | 463 | 16 | 225 | 9,900 | 157 | 50 | 9,900 | 492 | 46 | 1,200 | 55 | 34 | 1,410 | 48 | 2,690 | 91 | 4,050 | 16 | 30 | 38 | 2.07 | 285.3 | 0.7 | 54 | 21.5 | 2,907 |
| 3 | 1,800 | 1,200 | 175 | 175 | 134 | #5 | 150 | 6,000 | 1,248 | 134 | #4 | 150 | 2,980 | 397 | 2,340 | 312 | 162 | #5 | 125 | 3,820 | 960 | 24 | 225 | 9,900 | 236 | 71 | 9,900 | 699 | 46 | 1,200 | 55 | 68 | 1,410 | 95 | 2,690 | 182 | 6,020 | 24 | 42 | 54 | 2.98 | 418.4 | 1.1 | 78 | 30.8 | 4,262 |
| 4 | 1,800 | 1,200 | 175 | 175 | 134 | #5 | 150 | 7,980 | 1,660 | 134 | #4 | 150 | 2,980 | 397 | 2,340 | 312 | 162 | #5 | 125 | 5,790 | 1,456 | 32 | 225 | 9,900 | 315 | 92 | 9,900 | 905 | 46 | 1,200 | 55 | 102 | 1,410 | 143 | 2,690 | 273 | 8,000 | 32 | 56 | 72 | 3.88 | 551.6 | 1.5 | 104 | 40.2 | 5,620 |
| 5 | 1,800 | 1,200 | 175 | 175 | 134 | #5 | 150 | 9,950 | 2,069 | 134 | #4 | 150 | 2,980 | 397 | 2,340 | 312 | 162 | #5 | 125 | 7,770 | 1,954 | 40 | 225 | 9,900 | 394 | 113 | 9,900 | 1,112 | 46 | 1,200 | 55 | 136 | 1,410 | 191 | 2,690 | 364 | 9,970 | 40 | 70 | 90 | 4.78 | 684.8 | 1.8 | 130 | 49.6 | 6,978 |
| 6 | 1,800 | 1,200 | 175 | 175 | 134 | #5 | 150 | 11,930 | 2,481 | 134 | #4 | 150 | 2,980 | 397 | 2,340 | 312 | 162 | #5 | 125 | 9,740 | 2,449 | 48 | 225 | 9,900 | 472 | 134 | 9,900 | 1,319 | 46 | 1,200 | 55 | 170 | 1,410 | 238 | 2,690 | 455 | 11,950 | 48 | 82 | 105 | 5.68 | 817.8 | 2.2 | 153 | 59.0 | 8,331 |
| 2 | 1,800 | 1,500 | 175 | 175 | 134 | #5 | 150 | 4,030 | 838 | 134 | #4 | 150 | 3,280 | 437 | 2,340 | 312 | 162 | #5 | 125 | 1,840 | 463 | 16 | 225 | 9,900 | 157 | 56 | 9,900 | 551 | 46 | 1,500 | 69 | 34 | 1,410 | 48 | 3,290 | 111 | 4,050 | 16 | 30 | 38 | 2.23 | 298.6 | 0.7 | 54 | 23.1 | 3,040 |
| 3 | 1,800 | 1,500 | 175 | 175 | 134 | #5 | 150 | 6,000 | 1,248 | 134 | #4 | 150 | 3,280 | 437 | 2,340 | 312 | 162 | #5 | 125 | 3,820 | 960 | 24 | 225 | 9,900 | 236 | 79 | 9,900 | 777 | 46 | 1,500 | 69 | 68 | 1,410 | 95 | 3,290 | 222 | 6,020 | 24 | 42 | 54 | 3.19 | 435.6 | 1.1 | 78 | 32.9 | 4,434 |
| 4 | 1,800 | 1,500 | 175 | 175 | 134 | #5 | 150 | 7,980 | 1,660 | 134 | #4 | 150 | 3,280 | 437 | 2,340 | 312 | 162 | #5 | 125 | 5,790 | 1,456 | 32 | 225 | 9,900 | 315 | 102 | 9,900 | 1,004 | 46 | 1,500 | 69 | 102 | 1,410 | 143 | 3,290 | 334 | 8,000 | 32 | 56 | 72 | 4.14 | 573.0 | 1.5 | 104 | 42.8 | 5,834 |
| 5 | 1,800 | 1,500 | 175 | 175 | 134 | #5 | 150 | 9,950 | 2,069 | 134 | #4 | 150 | 3,280 | 437 | 2,340 | 312 | 162 | #5 | 125 | 7,770 | 1,954 | 40 | 225 | 9,900 | 394 | 125 | 9,900 | 1,230 | 46 | 1,500 | 69 | 136 | 1,410 | 191 | 3,290 | 445 | 9,970 | 40 | 70 | 90 | 5.09 | 710.1 | 1.8 | 130 | 52.7 | 7,231 |
| 6 | 1,800 | 1,500 | 175 | 175 | 134 | #5 | 150 | 11,930 | 2,481 | 134 | #4 | 150 | 3,280 | 437 | 2,340 | 312 | 162 | #5 | 125 | 9,740 | 2,449 | 48 | 225 | 9,900 | 472 | 148 | 9,900 | 1,456 | 46 | 1,500 | 69 | 170 | 1,410 | 238 | 3,290 | 556 | 11,950 | 48 | 82 | 105 | 6.05 | 847.0 | 2.2 | 153 | 62.6 | 8,623 |
| 2 | 1,800 | 1,800 | 175 | 175 | 134 | #5 | 150 | 4,030 | 838 | 162 | #4 | 125 | 3,580 | 576 | 2,340 | 377 | 162 | #5 | 125 | 1,840 | 463 | 16 | 225 | 9,900 | 157 | 62 | 9,900 | 610 | 46 | 1,800 | 82 | 34 | 1,410 | 48 | 3,890 | 131 | 4,050 | 16 | 30 | 38 | 2.39 | 328.2 | 0.7 | 54 | 24.6 | 3,336 |
| 3 | 1,800 | 1,800 | 175 | 175 | 134 | #5 | 150 | 6,000 | 1,248 | 162 | #4 | 125 | 3,580 | 576 | 2,340 | 377 | 162 | #5 | 125 | 3,820 | 960 | 24 | 225 | 9,900 | 236 | 87 | 9,900 | 856 | 46 | 1,800 | 82 | 68 | 1,410 | 95 | 3,890 | 263 | 6,020 | 24 | 42 | 54 | 3.40 | 469.3 | 1.1 | 78 | 35.0 | 4,771 |
| 4 | 1,800 | 1,800 | 175 | 175 | 134 | #5 | 150 | 7,980 | 1,660 | 162 | #4 | 125 | 3,580 | 576 | 2,340 | 377 | 162 | #5 | 125 | 5,790 | 1,456 | 32 | 225 | 9,900 | 315 | 112 | 9,900 | 1,102 | 46 | 1,800 | 82 | 102 | 1,410 | 143 | 3,890 | 394 | 8,000 | 32 | 56 | 72 | 4.40 | 610.5 | 1.5 | 104 | 45.5 | 6,209 |
| 5 | 1,800 | 1,800 | 175 | 175 | 134 | #5 | 150 | 9,950 | 2,069 | 162 | #4 | 125 | 3,580 | 576 | 2,340 | 377 | 162 | #5 | 125 | 7,770 | 1,954 | 40 | 225 | 9,900 | 394 | 137 | 9,900 | 1,348 | 46 | 1,800 | 82 | 136 | 1,410 | 191 | 3,890 | 526 | 9,970 | 40 | 70 | 90 | 5.41 | 751.7 | 1.8 | 130 | 55.9 | 7,647 |
| 6 | 1,800 | 1,800 | 175 | 175 | 134 | #5 | 150 | 11,930 | 2,481 | 162 | #4 | 125 | 3,580 | 576 | 2,340 | 377 | 162 | #5 | 125 | 9,740 | 2,449 | 48 | 225 | 9,900 | 472 | 162 | 9,900 | 1,594 | 46 | 1,800 | 82 | 170 | 1,410 | 238 | 3,890 | 657 | 11,950 | 48 | 82 | 105 | 6.41 | 892.6 | 2.2 | 153 | 66.3 | 9,079 |

| H | Bar Dimensions "X" | "Y" | "Z" |
|---|---|---|---|
| 900 | 1,025 | 1,025 | 690 |
| 1,200 | 1,325 | 1,325 | 690 |
| 1,500 | 1,625 | 1,625 | 690 |
| 1,800 | 1,925 | 1,925 | 690 |

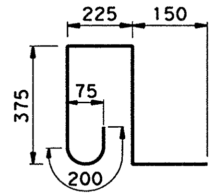


**BARS K ~ #4**
(Spa = 300 mm Max)
(Length = 1,290 mm)

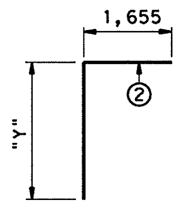


**BARS C**

② Extend into slab.

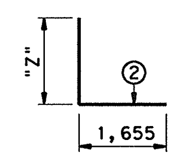


**BARS D**

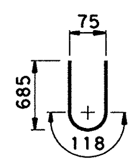


**BARS Y**

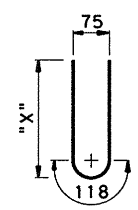


**BARS Z**

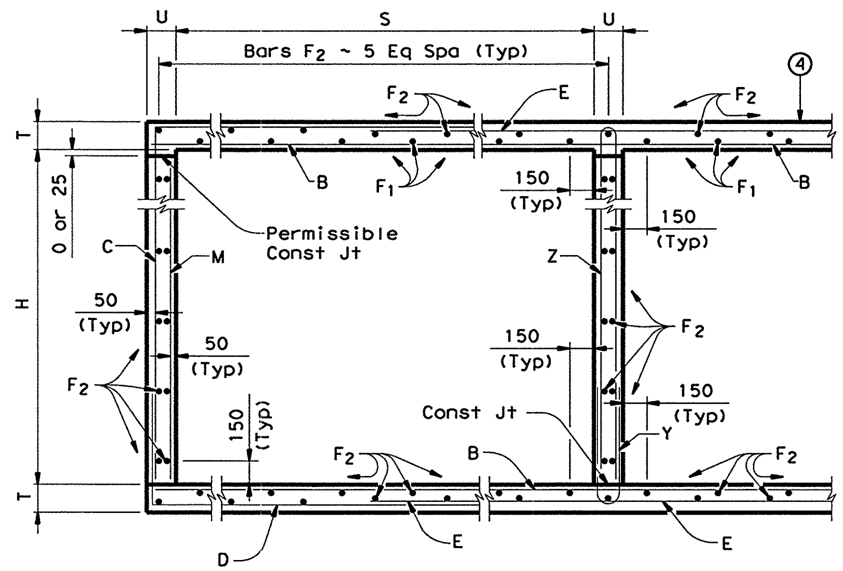


## TYPICAL SECTION③

③ Reinforcing shown for orientation purposes only. See table for number and spacing of bars.

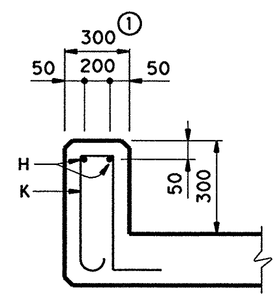


① For T6 Rail ~ see T6-CM(M) for additional details

## SECTION THRU CURB

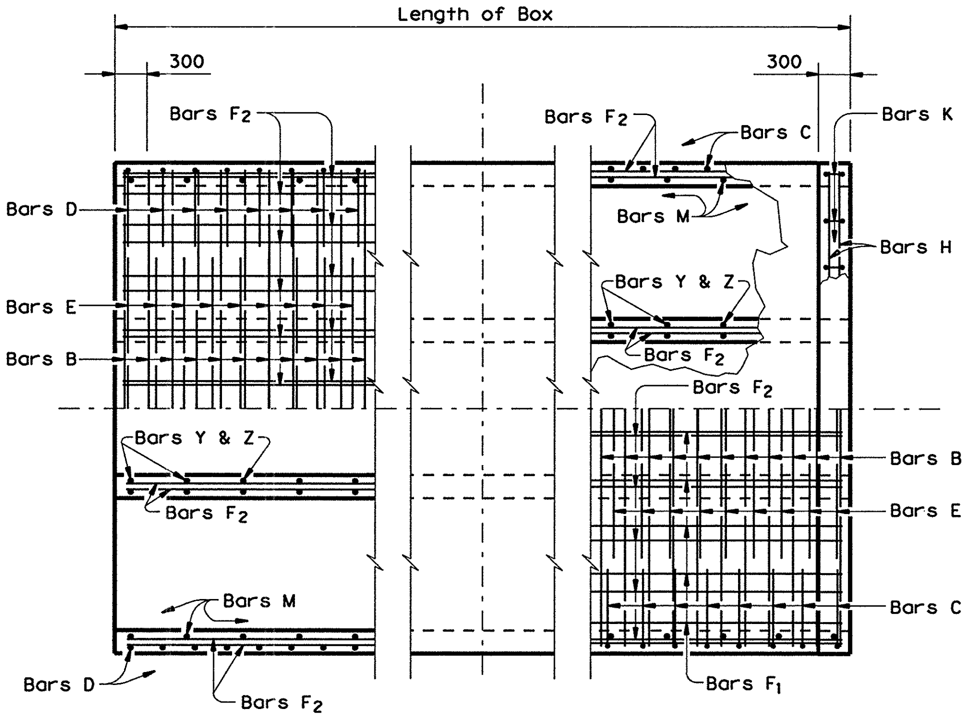


BOTTOM SLAB TOP SLAB

## PART PLANS③

④ For Direct Traffic, construct top slab to conform to crown of roadway while maintaining constant thickness of slab.

## GENERAL NOTES:

Designed according to current AASHTO 1992 Standard Specifications.

Designed for MS18 Loading and to the maximum fill height shown.

All reinforcing steel shall be Grade 420 (fy = 420 MPa).

All concrete shall have a minimum 28 day compressive strength of 25 MPa.

The bottom edge of the top slab shall be chamfered 75 mm at the entrance. Reinforcing bars shall be adjusted to provide a minimum of 35 mm clear cover. Headwall heights will be reduced, if necessary, to provide a minimum 75 mm projection above the roadway slope. No increase or decrease will be made in plan quantities of concrete or reinforcing steel for this work.

Construction joints shown at the flow line may be raised a maximum of 150 mm at the Contractor's option. If this option is used, bars M may be cut off or raised, bars C and D may be reversed, and Bars Y & Z may be reversed.

All dimensions are in millimeters and all mass is in kilograms unless otherwise noted.

*Texas Department of Transportation*
*Design Division (Bridge)*

# MULTIPLE BOX CULVERTS
## 1,800 mm SPAN DIRECT TRAFFIC TO 5 m MAX FILL

## MC-1.8-5(M)

| | | | | | | |
|---|---|---|---|---|---|---|
| FILE: mc185std.dgn | DN: KRP | CK: GAF | DW: TxDOT | CK: GAF | STD: B67M | |
| © TxDOT January 1997 | DIST | FED REG | FEDERAL AID PROJECT • | | | SHEET |
| REVISIONS | SAT | 6 | NH 2000(704), ETC. | | | 395 |
| | COUNTY | | CONTROL | SECT | JOB | HIGHWAY |
| | BEXAR | | 2452 | 01 | 036. etc. | LP1604 |

DISCLAIMER:
The use of this standard is governed by the "Texas Engineering Practice Act". No warranty of any kind is made by TxDOT for any purpose whatsoever. TxDOT assumes no responsibility for the conversion of this standard to other formats or for incorrect results or damages resulting from its use.

# BILLS OF REINFORCING STEEL (For Box Length = 10 meters)

| NUMBER OF SPANS | SECTION DIMENSIONS | | | | Bars B | | | | | Bars C & D | | | | | | | Bars E | | | | | Bars $F_1$~#4 | | | | Bars $F_2$~#4 450 mm Max | | | | Bars M~#4 450 mm Max | | | Bars Y & Z~#4 200 mm Max | | | | | Bars H 4~#4 | | Bars K | | QUANTITIES: Per Meter of Barrel | | Curb | | Total | |
|---|---|---|---|---|---|---|---|---|---|---|---|---|---|---|---|---|---|---|---|---|---|---|---|---|---|---|---|---|---|---|---|---|---|---|---|---|---|---|---|---|---|---|---|---|---|
| | S | H | T | U | No. | Size | Spa | Length | Mass | No. | Size | Spa | Bar C Lgth | Bar C Mass | Bar D Lgth | Bar D Mass | No. | Size | Spa | Length | Mass | No. | Spa | Length | Mass | No. | Length | Mass | No. | Spa | Length | Mass | No. | Lgth | Mass | No. | Bar Y Lgth | Bar Y Mass | Bar Z Lgth | Bar Z Mass | Length | Mass | No. | Mass | Conc ($m^3$) | Reinf (kg) | Conc ($m^3$) | Reinf (kg) | Conc ($m^3$) | Reinf (kg) |
| 2 | 3,000 | 1,500 | 200 | 175 | 134 | #6 | 150 | 6,430 | 1,926 | 162 | #4 | 125 | 4,300 | 692 | 3,360 | 541 | 134 | #6 | 150 | 2,600 | 779 | 30 | 200 | 9,900 | 295 | 72 | 9,900 | 709 | 46 | 1,500 | 69 | 51 | 1,460 | 74 | 3,340 | 169 | 6,450 | 26 | 46 | 59 | 3.40 | 525.4 | 1.2 | 85 | 35.1 | 5,339 |
| 3 | 3,000 | 1,500 | 200 | 175 | 134 | #6 | 150 | 9,600 | 2,875 | 162 | #4 | 125 | 4,300 | 692 | 3,360 | 541 | 134 | #6 | 150 | 5,780 | 1,731 | 45 | 200 | 9,900 | 443 | 103 | 9,900 | 1,014 | 46 | 1,500 | 69 | 102 | 1,460 | 148 | 3,340 | 339 | 9,620 | 38 | 66 | 85 | 4.93 | 785.2 | 1.7 | 123 | 51.0 | 7,975 |
| 4 | 3,000 | 1,500 | 200 | 175 | 134 | #6 | 150 | 12,780 | 3,827 | 162 | #4 | 125 | 4,300 | 692 | 3,360 | 541 | 134 | #6 | 150 | 8,950 | 2,680 | 60 | 200 | 9,900 | 590 | 134 | 9,900 | 1,319 | 46 | 1,500 | 69 | 153 | 1,460 | 222 | 3,340 | 508 | 12,800 | 51 | 88 | 113 | 6.46 | 1,044.8 | 2.3 | 164 | 66.9 | 10,612 |
| 5 | 3,000 | 1,500 | 200 | 175 | 134 | #6 | 150 | 15,950 | 4,777 | 162 | #4 | 125 | 4,300 | 692 | 3,360 | 541 | 134 | #6 | 150 | 12,130 | 3,633 | 75 | 200 | 9,900 | 738 | 165 | 9,900 | 1,624 | 46 | 1,500 | 69 | 204 | 1,460 | 296 | 3,340 | 677 | 15,970 | 63 | 110 | 141 | 8.00 | 1,304.7 | 2.9 | 204 | 82.8 | 13,251 |
| 6 | 3,000 | 1,500 | 200 | 175 | 134 | #6 | 150 | 19,130 | 5,729 | 162 | #4 | 125 | 4,300 | 692 | 3,360 | 541 | 134 | #6 | 150 | 15,300 | 4,582 | 90 | 200 | 9,900 | 886 | 196 | 9,900 | 1,929 | 46 | 1,500 | 69 | 255 | 1,460 | 370 | 3,340 | 847 | 19,150 | 76 | 130 | 167 | 9.53 | 1,564.5 | 3.5 | 243 | 98.7 | 15,888 |
| 2 | 3,000 | 1,800 | 200 | 175 | 134 | #6 | 150 | 6,430 | 1,926 | 162 | #4 | 125 | 4,600 | 741 | 3,360 | 541 | 134 | #6 | 150 | 2,600 | 779 | 30 | 200 | 9,900 | 295 | 78 | 9,900 | 768 | 46 | 1,800 | 82 | 51 | 1,460 | 74 | 3,940 | 200 | 6,450 | 26 | 46 | 59 | 3.56 | 540.6 | 1.2 | 85 | 36.7 | 5,491 |
| 3 | 3,000 | 1,800 | 200 | 175 | 134 | #6 | 150 | 9,600 | 2,875 | 162 | #4 | 125 | 4,600 | 741 | 3,360 | 541 | 134 | #6 | 150 | 5,780 | 1,731 | 45 | 200 | 9,900 | 443 | 111 | 9,900 | 1,092 | 46 | 1,800 | 82 | 102 | 1,460 | 148 | 3,940 | 399 | 9,620 | 38 | 66 | 85 | 5.14 | 805.2 | 1.7 | 123 | 53.1 | 8,175 |
| 4 | 3,000 | 1,800 | 200 | 175 | 134 | #6 | 150 | 12,780 | 3,827 | 162 | #4 | 125 | 4,600 | 741 | 3,360 | 541 | 134 | #6 | 150 | 8,950 | 2,680 | 60 | 200 | 9,900 | 590 | 144 | 9,900 | 1,417 | 46 | 1,800 | 82 | 153 | 1,460 | 222 | 3,940 | 599 | 12,800 | 51 | 88 | 113 | 6.73 | 1,069.9 | 2.3 | 164 | 69.6 | 10,863 |
| 5 | 3,000 | 1,800 | 200 | 175 | 134 | #6 | 150 | 15,950 | 4,777 | 162 | #4 | 125 | 4,600 | 741 | 3,360 | 541 | 134 | #6 | 150 | 12,130 | 3,633 | 75 | 200 | 9,900 | 738 | 177 | 9,900 | 1,742 | 46 | 1,800 | 82 | 204 | 1,460 | 296 | 3,940 | 799 | 15,970 | 63 | 110 | 141 | 8.31 | 1,334.9 | 2.9 | 204 | 86.0 | 13,553 |
| 6 | 3,000 | 1,800 | 200 | 175 | 134 | #6 | 150 | 19,130 | 5,729 | 162 | #4 | 125 | 4,600 | 741 | 3,360 | 541 | 134 | #6 | 150 | 15,300 | 4,582 | 90 | 200 | 9,900 | 886 | 210 | 9,900 | 2,067 | 46 | 1,800 | 82 | 255 | 1,460 | 370 | 3,940 | 999 | 19,150 | 76 | 130 | 167 | 9.90 | 1,599.7 | 3.5 | 243 | 102.4 | 16,240 |
| 2 | 3,000 | 2,100 | 200 | 175 | 134 | #6 | 150 | 6,430 | 1,926 | 162 | #4 | 125 | 4,900 | 789 | 3,360 | 541 | 134 | #6 | 150 | 2,600 | 779 | 30 | 200 | 9,900 | 295 | 78 | 9,900 | 768 | 46 | 2,100 | 96 | 51 | 1,460 | 74 | 4,540 | 230 | 6,450 | 26 | 46 | 59 | 3.71 | 549.8 | 1.2 | 85 | 38.3 | 5,583 |
| 3 | 3,000 | 2,100 | 200 | 175 | 134 | #6 | 150 | 9,600 | 2,875 | 162 | #4 | 125 | 4,900 | 789 | 3,360 | 541 | 134 | #6 | 150 | 5,780 | 1,731 | 45 | 200 | 9,900 | 443 | 111 | 9,900 | 1,092 | 46 | 2,100 | 96 | 102 | 1,460 | 148 | 4,540 | 460 | 9,620 | 38 | 66 | 85 | 5.35 | 817.5 | 1.7 | 123 | 55.2 | 8,298 |
| 4 | 3,000 | 2,100 | 200 | 175 | 134 | #6 | 150 | 12,780 | 3,827 | 162 | #4 | 125 | 4,900 | 789 | 3,360 | 541 | 134 | #6 | 150 | 8,950 | 2,680 | 60 | 200 | 9,900 | 590 | 144 | 9,900 | 1,417 | 46 | 2,100 | 96 | 153 | 1,460 | 222 | 4,540 | 690 | 12,800 | 51 | 88 | 113 | 6.99 | 1,085.2 | 2.3 | 164 | 72.2 | 11,016 |
| 5 | 3,000 | 2,100 | 200 | 175 | 134 | #6 | 150 | 15,950 | 4,777 | 162 | #4 | 125 | 4,900 | 789 | 3,360 | 541 | 134 | #6 | 150 | 12,130 | 3,633 | 75 | 200 | 9,900 | 738 | 177 | 9,900 | 1,742 | 46 | 2,100 | 96 | 204 | 1,460 | 296 | 4,540 | 921 | 15,970 | 63 | 110 | 141 | 8.63 | 1,353.3 | 2.9 | 204 | 89.1 | 13,737 |
| 6 | 3,000 | 2,100 | 200 | 175 | 134 | #6 | 150 | 19,130 | 5,729 | 162 | #4 | 125 | 4,900 | 789 | 3,360 | 541 | 134 | #6 | 150 | 15,300 | 4,582 | 90 | 200 | 9,900 | 886 | 210 | 9,900 | 2,067 | 46 | 2,100 | 96 | 255 | 1,460 | 370 | 4,540 | 1,151 | 19,150 | 76 | 130 | 167 | 10.26 | 1,621.1 | 3.5 | 243 | 106.1 | 16,454 |
| 2 | 3,000 | 2,400 | 200 | 175 | 134 | #6 | 150 | 6,430 | 1,926 | 162 | #4 | 125 | 5,200 | 837 | 3,360 | 541 | 134 | #6 | 150 | 2,600 | 779 | 30 | 200 | 9,900 | 295 | 84 | 9,900 | 827 | 46 | 2,400 | 110 | 51 | 1,460 | 74 | 5,140 | 261 | 6,450 | 26 | 46 | 59 | 3.87 | 565.0 | 1.2 | 85 | 39.9 | 5,735 |
| 3 | 3,000 | 2,400 | 200 | 175 | 134 | #6 | 150 | 9,600 | 2,875 | 162 | #4 | 125 | 5,200 | 837 | 3,360 | 541 | 134 | #6 | 150 | 5,780 | 1,731 | 45 | 200 | 9,900 | 443 | 119 | 9,900 | 1,171 | 46 | 2,400 | 110 | 102 | 1,460 | 148 | 5,140 | 521 | 9,620 | 38 | 66 | 85 | 5.56 | 837.7 | 1.7 | 123 | 57.3 | 8,500 |
| 4 | 3,000 | 2,400 | 200 | 175 | 134 | #6 | 150 | 12,780 | 3,827 | 162 | #4 | 125 | 5,200 | 837 | 3,360 | 541 | 134 | #6 | 150 | 8,950 | 2,680 | 60 | 200 | 9,900 | 590 | 154 | 9,900 | 1,515 | 46 | 2,400 | 110 | 153 | 1,460 | 222 | 5,140 | 782 | 12,800 | 51 | 88 | 113 | 7.25 | 1,110.4 | 2.3 | 164 | 74.8 | 11,268 |
| 5 | 3,000 | 2,400 | 200 | 175 | 134 | #6 | 150 | 15,950 | 4,777 | 162 | #4 | 125 | 5,200 | 837 | 3,360 | 541 | 134 | #6 | 150 | 12,130 | 3,633 | 75 | 200 | 9,900 | 738 | 189 | 9,900 | 1,860 | 46 | 2,400 | 110 | 204 | 1,460 | 296 | 5,140 | 1,042 | 15,970 | 63 | 110 | 141 | 8.94 | 1,383.4 | 2.9 | 204 | 92.3 | 14,038 |
| 6 | 3,000 | 2,400 | 200 | 175 | 134 | #6 | 150 | 19,130 | 5,729 | 162 | #4 | 125 | 5,200 | 837 | 3,360 | 541 | 134 | #6 | 150 | 15,300 | 4,582 | 90 | 200 | 9,900 | 886 | 224 | 9,900 | 2,204 | 46 | 2,400 | 110 | 255 | 1,460 | 370 | 5,140 | 1,303 | 19,150 | 76 | 130 | 167 | 10.63 | 1,656.2 | 3.5 | 243 | 109.8 | 16,805 |
| 2 | 3,000 | 2,700 | 200 | 175 | 134 | #6 | 150 | 6,430 | 1,926 | 162 | #4 | 125 | 5,500 | 886 | 3,360 | 541 | 134 | #6 | 150 | 2,600 | 779 | 30 | 200 | 9,900 | 295 | 90 | 9,900 | 886 | 46 | 2,700 | 123 | 51 | 1,460 | 74 | 5,740 | 291 | 6,450 | 26 | 46 | 59 | 4.03 | 580.1 | 1.2 | 85 | 41.4 | 5,886 |
| 3 | 3,000 | 2,700 | 200 | 175 | 134 | #6 | 150 | 9,600 | 2,875 | 162 | #4 | 125 | 5,500 | 886 | 3,360 | 541 | 134 | #6 | 150 | 5,780 | 1,731 | 45 | 200 | 9,900 | 443 | 127 | 9,900 | 1,250 | 46 | 2,700 | 123 | 102 | 1,460 | 148 | 5,740 | 582 | 9,620 | 38 | 66 | 85 | 5.77 | 857.9 | 1.7 | 123 | 59.4 | 8,702 |
| 4 | 3,000 | 2,700 | 200 | 175 | 134 | #6 | 150 | 12,780 | 3,827 | 162 | #4 | 125 | 5,500 | 886 | 3,360 | 541 | 134 | #6 | 150 | 8,950 | 2,680 | 60 | 200 | 9,900 | 590 | 164 | 9,900 | 1,614 | 46 | 2,700 | 123 | 153 | 1,460 | 222 | 5,740 | 873 | 12,800 | 51 | 88 | 113 | 7.51 | 1,135.6 | 2.3 | 164 | 77.4 | 11,520 |
| 5 | 3,000 | 2,700 | 200 | 175 | 134 | #6 | 150 | 15,950 | 4,777 | 162 | #4 | 125 | 5,500 | 886 | 3,360 | 541 | 134 | #6 | 150 | 12,130 | 3,633 | 75 | 200 | 9,900 | 738 | 201 | 9,900 | 1,978 | 46 | 2,700 | 123 | 204 | 1,460 | 296 | 5,740 | 1,164 | 15,970 | 63 | 110 | 141 | 9.26 | 1,413.6 | 2.9 | 204 | 95.4 | 14,340 |
| 6 | 3,000 | 2,700 | 200 | 175 | 134 | #6 | 150 | 19,130 | 5,729 | 134 | #5 | 150 | 5,500 | 1,144 | 3,500 | 728 | 134 | #6 | 150 | 15,300 | 4,582 | 90 | 200 | 9,900 | 886 | 238 | 9,900 | 2,342 | 46 | 2,700 | 123 | 255 | 1,460 | 370 | 5,740 | 1,455 | 19,150 | 76 | 130 | 167 | 11.00 | 1,735.9 | 3.5 | 243 | 113.4 | 17,602 |
| 2 | 3,000 | 3,000 | 200 | 175 | 134 | #6 | 150 | 6,430 | 1,926 | 134 | #5 | 150 | 5,800 | 1,206 | 3,500 | 728 | 134 | #6 | 150 | 2,600 | 779 | 30 | 200 | 9,900 | 295 | 90 | 9,900 | 886 | 46 | 3,000 | 137 | 51 | 1,460 | 74 | 6,340 | 321 | 6,450 | 26 | 46 | 59 | 4.19 | 635.2 | 1.2 | 85 | 43.0 | 6,437 |
| 3 | 3,000 | 3,000 | 200 | 175 | 134 | #6 | 150 | 9,600 | 2,875 | 134 | #5 | 150 | 5,800 | 1,206 | 3,500 | 728 | 134 | #6 | 150 | 5,780 | 1,731 | 45 | 200 | 9,900 | 443 | 127 | 9,900 | 1,250 | 46 | 3,000 | 137 | 102 | 1,460 | 148 | 6,340 | 643 | 9,620 | 38 | 66 | 85 | 5.98 | 916.1 | 1.7 | 123 | 61.5 | 9,284 |
| 4 | 3,000 | 3,000 | 200 | 175 | 134 | #6 | 150 | 12,780 | 3,827 | 134 | #5 | 150 | 5,800 | 1,206 | 3,500 | 728 | 134 | #6 | 150 | 8,950 | 2,680 | 60 | 200 | 9,900 | 590 | 164 | 9,900 | 1,614 | 46 | 3,000 | 137 | 153 | 1,460 | 222 | 6,340 | 964 | 12,800 | 51 | 88 | 113 | 7.78 | 1,196.8 | 2.3 | 164 | 80.1 | 12,132 |
| 5 | 3,000 | 3,000 | 200 | 175 | 134 | #6 | 150 | 15,950 | 4,777 | 134 | #5 | 150 | 5,800 | 1,206 | 3,500 | 728 | 134 | #6 | 150 | 12,130 | 3,633 | 75 | 200 | 9,900 | 738 | 201 | 9,900 | 1,978 | 46 | 3,000 | 137 | 204 | 1,460 | 296 | 6,340 | 1,286 | 15,970 | 63 | 110 | 141 | 9.57 | 1,477.9 | 2.9 | 204 | 98.6 | 14,983 |
| 6 | 3,000 | 3,000 | 200 | 175 | 134 | #6 | 150 | 19,130 | 5,729 | 134 | #5 | 150 | 5,800 | 1,206 | 3,500 | 728 | 134 | #6 | 150 | 15,300 | 4,582 | 90 | 200 | 9,900 | 886 | 238 | 9,900 | 2,342 | 46 | 3,000 | 137 | 255 | 1,460 | 370 | 6,340 | 1,607 | 19,150 | 76 | 130 | 167 | 11.37 | 1,758.7 | 3.5 | 243 | 117.1 | 17,830 |

| H | Bar Dimensions | | |
|---|---|---|---|
| | "X" | "Y" | "Z" |
| 1,500 | 1,650 | 1,650 | 710 |
| 1,800 | 1,950 | 1,950 | 710 |
| 2,100 | 2,250 | 2,250 | 710 |
| 2,700 | 2,850 | 2,850 | 710 |
| 3,000 | 3,150 | 3,150 | 850 |
| | | | |

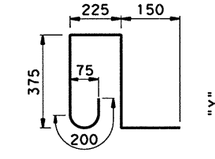


**BARS K ~ #4**
(Spa = 300 mm Max)
(Length = 1,290 mm)

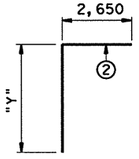


**BARS C**

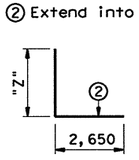


**BARS D**

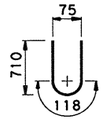


**BARS Y**

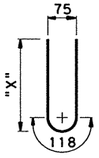


**BARS Z**

② Extend into slab.

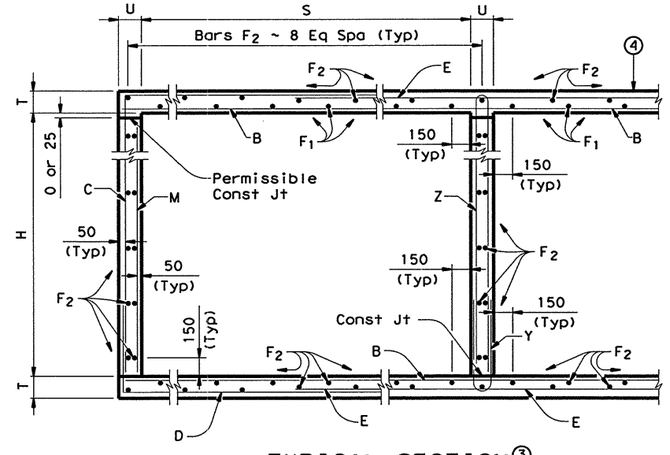


## TYPICAL SECTION ③

③ Reinforcing shown for orientation purposes only. See table for number and spacing of bars.

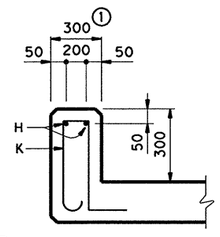


① For T6 Rail ~ see T6-CM(M) for additional details

## SECTION THRU CURB

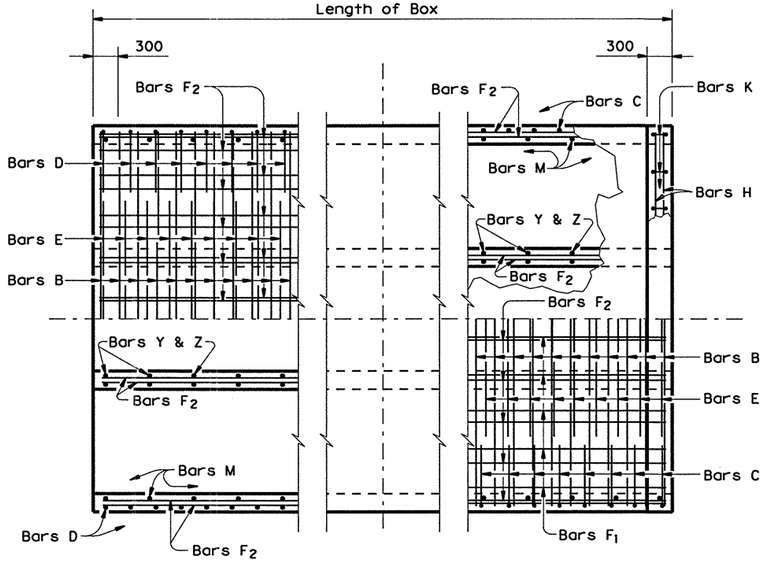


**BOTTOM SLAB** **TOP SLAB**

## PART PLANS ③

④ For Direct Traffic, construct top slab to conform to crown of roadway while maintaining constant thickness of slab.

## GENERAL NOTES:

Designed according to current AASHTO 1992 Standard Specifications.

Designed for MS18 Loading and to the maximum fill height shown.

All reinforcing steel shall be Grade 420 (fy = 420 MPa).

All concrete shall have a minimum 28 day compressive strength of 25 MPa.

The bottom edge of the top slab shall be chamfered 75 mm at the entrance. Reinforcing bars shall be adjusted to provide a minimum of 35 mm clear cover. Headwall heights will be reduced, if necessary, to provide a minimum 75 mm projection above the roadway slope. No increase or decrease will be made in plan quantities of concrete or reinforcing steel for this work.

Construction joints shown at the flow line may be raised a maximum of 150 mm at the Contractor's option. If this option is used, bars M may be cut off or raised, bars C and D may be reversed, and Bars Y & Z may be reversed.

All dimensions are in millimeters and all mass is in kilograms unless otherwise noted.

ACC:
LEVELS DISPLAYED (LV=1,3 for Metric)
1 3

Texas Department of Transportation
Design Division (Bridge)

# MULTIPLE BOX CULVERTS
## 3,000 mm SPAN
## DIRECT TRAFFIC TO 2 m MAX FILL

## MC-3.0-2(M)

| FILE: mc302std.dgn | DN: KRP | CK: GAF | DW: TxDOT | CK: KRP | STD: B83M |
|---|---|---|---|---|---|
| ©TxDOT January 1997 | DIST | FED REG | FEDERAL AID PROJECT • | | SHEET |
| REVISIONS | SAT | 6 | NH 2000(704), ETC. | | 396 |
| | COUNTY | | CONTROL | SECT | JOB | HIGHWAY |
| | BEXAR | | 2452 | 01 | 036, etc. | LP1604 |

## BILLS OF REINFORCING STEEL ~ FOR 44' CLEAR WIDTH ~ BARRELS ONLY

| MARK | B | C | D | E1 | E2 | F1 | F2 | F3 | H | K | Z |
|---|---|---|---|---|---|---|---|---|---|---|---|
| **2 SPANS ~ 6' x 3'** | | | | | | | | | | | |
| NUMBER | 136 | 156 | 156 | 91 | 91 | 17 | 8 | 15 | 4 | 28 | 46 |
| SIZE | #4 | #4 | #4 | #5 | #5 | #4 | #4 | #4 | #4 | #4 | #4 |
| SPACING | 8" | 7" | 7" | 6" | 6" | ~ | 18" | ~ | ~ | 12" | 12" |
| LENGTH | 13'-2" | 5'-10" | 4'-1" | 5'-4" | 5'-4" | 45'-0" | 45'-0" | 45'-0" | 13'-2" | 3'-11" | 7'-6" |
| WEIGHT | 1196 | 608 | 425 | 506 | 506 | 512 | 241 | 452 | 35 | 73 | 230 |
| **3 SPANS ~ 6' x 3'** | | | | | | | | | | | |
| NUMBER | 136 | 156 | 156 | 182 | 182 | 26 | 12 | 22 | 4 | 42 | 92 |
| SIZE | #4 | #4 | #4 | #5 | #5 | #4 | #4 | #4 | #4 | #4 | #4 |
| SPACING | 8" | 7" | 7" | 6" | 6" | ~ | 18" | ~ | ~ | 12" | 12" |
| LENGTH | 19'-8" | 5'-10" | 4'-1" | 5'-4" | 5'-4" | 45'-0" | 45'-0" | 45'-0" | 19'-8" | 3'-11" | 7'-6" |
| WEIGHT | 1787 | 608 | 425 | 1012 | 1012 | 783 | 361 | 662 | 53 | 110 | 461 |
| **4 SPANS ~ 6' x 3'** | | | | | | | | | | | |
| NUMBER | 136 | 156 | 156 | 273 | 273 | 35 | 16 | 29 | 4 | 54 | 138 |
| SIZE | #4 | #4 | #4 | #5 | #5 | #4 | #4 | #4 | #4 | #4 | #4 |
| SPACING | 8" | 7" | 7" | 6" | 6" | ~ | 18" | ~ | ~ | 12" | 12" |
| LENGTH | 26'-2" | 5'-10" | 4'-1" | 5'-4" | 5'-4" | 45'-0" | 45'-0" | 45'-0" | 26'-2" | 3'-11" | 7'-6" |
| WEIGHT | 2377 | 608 | 425 | 1518 | 1518 | 1054 | 482 | 873 | 70 | 141 | 691 |
| **5 SPANS ~ 6' x 3'** | | | | | | | | | | | |
| NUMBER | 136 | 156 | 156 | 364 | 364 | 44 | 20 | 36 | 4 | 68 | 184 |
| SIZE | #4 | #4 | #4 | #5 | #5 | #4 | #4 | #4 | #4 | #4 | #4 |
| SPACING | 8" | 7" | 7" | 6" | 6" | ~ | 18" | ~ | ~ | 12" | 12" |
| LENGTH | 32'-8" | 5'-10" | 4'-1" | 5'-4" | 5'-4" | 45'-0" | 45'-0" | 45'-0" | 32'-8" | 3'-11" | 7'-6" |
| WEIGHT | 2968 | 608 | 425 | 2023 | 2023 | 1324 | 602 | 1084 | 87 | 178 | 922 |
| **6 SPANS ~ 6' x 3'** | | | | | | | | | | | |
| NUMBER | 136 | 156 | 156 | 455 | 455 | 53 | 24 | 43 | 4 | 80 | 230 |
| SIZE | #4 | #4 | #4 | #5 | #5 | #4 | #4 | #4 | #4 | #4 | #4 |
| SPACING | 8" | 7" | 7" | 6" | 6" | ~ | 18" | ~ | ~ | 12" | 12" |
| LENGTH | 39'-2" | 5'-10" | 4'-1" | 5'-4" | 5'-4" | 45'-0" | 45'-0" | 45'-0" | 39'-2" | 3'-11" | 7'-6" |
| WEIGHT | 3559 | 608 | 425 | 2529 | 2529 | 1595 | 722 | 1294 | 105 | 210 | 1152 |

| MARK | B | C | D | E1 | E2 | F1 | F2 | F3 | H | K | Z |
|---|---|---|---|---|---|---|---|---|---|---|---|
| **2 SPANS ~ 6' x 4'** | | | | | | | | | | | |
| NUMBER | 136 | 156 | 156 | 91 | 91 | 17 | 12 | 15 | 4 | 28 | 46 |
| SIZE | #4 | #4 | #4 | #5 | #5 | #4 | #4 | #4 | #4 | #4 | #4 |
| SPACING | 8" | 7" | 7" | 6" | 6" | ~ | 16" | ~ | ~ | 12" | 12" |
| LENGTH | 13'-2" | 6'-10" | 4'-1" | 5'-4" | 5'-4" | 45'-0" | 45'-0" | 45'-0" | 13'-2" | 3'-11" | 9'-6" |
| WEIGHT | 1196 | 712 | 425 | 506 | 506 | 512 | 361 | 452 | 35 | 73 | 292 |
| **3 SPANS ~ 6' x 4'** | | | | | | | | | | | |
| NUMBER | 136 | 156 | 156 | 182 | 182 | 26 | 18 | 22 | 4 | 42 | 92 |
| SIZE | #4 | #4 | #4 | #5 | #5 | #4 | #4 | #4 | #4 | #4 | #4 |
| SPACING | 8" | 7" | 7" | 6" | 6" | ~ | 16" | ~ | ~ | 12" | 12" |
| LENGTH | 19'-8" | 6'-10" | 4'-1" | 5'-4" | 5'-4" | 45'-0" | 45'-0" | 45'-0" | 19'-8" | 3'-11" | 9'-6" |
| WEIGHT | 1787 | 712 | 425 | 1012 | 1012 | 783 | 542 | 662 | 53 | 110 | 584 |
| **4 SPANS ~ 6' x 4'** | | | | | | | | | | | |
| NUMBER | 136 | 156 | 156 | 273 | 273 | 35 | 24 | 29 | 4 | 54 | 138 |
| SIZE | #4 | #4 | #4 | #5 | #5 | #4 | #4 | #4 | #4 | #4 | #4 |
| SPACING | 8" | 7" | 7" | 6" | 6" | ~ | 16" | ~ | ~ | 12" | 12" |
| LENGTH | 26'-2" | 6'-10" | 4'-1" | 5'-4" | 5'-4" | 45'-0" | 45'-0" | 45'-0" | 26'-2" | 3'-11" | 9'-6" |
| WEIGHT | 2377 | 712 | 425 | 1518 | 1518 | 1054 | 722 | 873 | 70 | 141 | 876 |
| **5 SPANS ~ 6' x 4'** | | | | | | | | | | | |
| NUMBER | 136 | 156 | 156 | 364 | 364 | 44 | 30 | 36 | 4 | 68 | 184 |
| SIZE | #4 | #4 | #4 | #5 | #5 | #4 | #4 | #4 | #4 | #4 | #4 |
| SPACING | 8" | 7" | 7" | 6" | 6" | ~ | 16" | ~ | ~ | 12" | 12" |
| LENGTH | 32'-8" | 6'-10" | 4'-1" | 5'-4" | 5'-4" | 45'-0" | 45'-0" | 45'-0" | 32'-8" | 3'-11" | 9'-6" |
| WEIGHT | 2968 | 712 | 425 | 2023 | 2023 | 1324 | 903 | 1084 | 87 | 178 | 1168 |
| **6 SPANS ~ 6' x 4'** | | | | | | | | | | | |
| NUMBER | 136 | 156 | 156 | 455 | 455 | 53 | 36 | 43 | 4 | 80 | 230 |
| SIZE | #4 | #4 | #4 | #5 | #5 | #4 | #4 | #4 | #4 | #4 | #4 |
| SPACING | 8" | 7" | 7" | 6" | 6" | ~ | 16" | ~ | ~ | 12" | 12" |
| LENGTH | 39'-2" | 6'-10" | 4'-1" | 5'-4" | 5'-4" | 45'-0" | 45'-0" | 45'-0" | 39'-2" | 3'-11" | 9'-6" |
| WEIGHT | 3559 | 712 | 425 | 2529 | 2529 | 1595 | 1084 | 1294 | 105 | 210 | 1460 |

| MARK | B | C | D | E1 | E2 | F1 | F2 | F3 | H | K | M | Y | Z |
|---|---|---|---|---|---|---|---|---|---|---|---|---|---|
| **2 SPANS ~ 6' x 5'** | | | | | | | | | | | | | |
| NUMBER | 136 | 156 | 156 | 91 | 91 | 17 | 24 | 15 | 4 | 28 | 62 | 46 | 46 |
| SIZE | #4 | #4 | #4 | #5 | #5 | #4 | #4 | #4 | #4 | #4 | #4 | #4 | #4 |
| SPACING | 8" | 7" | 7" | 6" | 6" | ~ | 15" | ~ | ~ | 12" | 18" | 12" | 12" |
| LENGTH | 13'-5" | 7'-10" | 4'-1" | 5'-4" | 5'-4" | 45'-0" | 45'-0" | 45'-0" | 13'-5" | 3'-11" | 4'-11" | 3'-4" | 10'-10" |
| WEIGHT | 1219 | 816 | 425 | 506 | 506 | 512 | 722 | 452 | 36 | 73 | 204 | 102 | 333 |
| **3 SPANS ~ 6' x 5'** | | | | | | | | | | | | | |
| NUMBER | 136 | 156 | 156 | 182 | 182 | 26 | 32 | 22 | 4 | 42 | 62 | 92 | 92 |
| SIZE | #4 | #4 | #4 | #5 | #5 | #4 | #4 | #4 | #4 | #4 | #4 | #4 | #4 |
| SPACING | 8" | 7" | 7" | 6" | 6" | ~ | 15" | ~ | ~ | 12" | 18" | 12" | 12" |
| LENGTH | 20'-0" | 7'-10" | 4'-1" | 5'-4" | 5'-4" | 45'-0" | 45'-0" | 45'-0" | 20'-0" | 3'-11" | 4'-11" | 3'-4" | 10'-10" |
| WEIGHT | 1817 | 816 | 425 | 1012 | 1012 | 783 | 963 | 662 | 53 | 110 | 204 | 205 | 666 |
| **4 SPANS ~ 6' x 5'** | | | | | | | | | | | | | |
| NUMBER | 136 | 156 | 156 | 273 | 273 | 35 | 40 | 29 | 4 | 54 | 62 | 138 | 138 |
| SIZE | #4 | #4 | #4 | #5 | #5 | #4 | #4 | #4 | #4 | #4 | #4 | #4 | #4 |
| SPACING | 8" | 7" | 7" | 6" | 6" | ~ | 15" | ~ | ~ | 12" | 18" | 12" | 12" |
| LENGTH | 26'-7" | 7'-10" | 4'-1" | 5'-4" | 5'-4" | 45'-0" | 45'-0" | 45'-0" | 26'-7" | 3'-11" | 4'-11" | 3'-4" | 10'-10" |
| WEIGHT | 2415 | 816 | 425 | 1518 | 1518 | 1054 | 1204 | 873 | 71 | 141 | 204 | 307 | 998 |
| **5 SPANS ~ 6' x 5'** | | | | | | | | | | | | | |
| NUMBER | 136 | 156 | 156 | 364 | 364 | 44 | 48 | 36 | 4 | 68 | 62 | 184 | 184 |
| SIZE | #4 | #4 | #4 | #5 | #5 | #4 | #4 | #4 | #4 | #4 | #4 | #4 | #4 |
| SPACING | 8" | 7" | 7" | 6" | 6" | ~ | 15" | ~ | ~ | 12" | 18" | 12" | 12" |
| LENGTH | 33'-2" | 7'-10" | 4'-1" | 5'-4" | 5'-4" | 45'-0" | 45'-0" | 45'-0" | 33'-2" | 3'-11" | 4'-11" | 3'-4" | 10'-10" |
| WEIGHT | 3013 | 816 | 425 | 2023 | 2023 | 1324 | 1445 | 1084 | 89 | 178 | 204 | 409 | 1331 |
| **6 SPANS ~ 6' x 5'** | | | | | | | | | | | | | |
| NUMBER | 136 | 156 | 156 | 455 | 455 | 53 | 56 | 43 | 4 | 82 | 62 | 230 | 230 |
| SIZE | #4 | #4 | #4 | #5 | #5 | #4 | #4 | #4 | #4 | #4 | #4 | #4 | #4 |
| SPACING | 8" | 7" | 7" | 6" | 6" | ~ | 15" | ~ | ~ | 12" | 18" | 12" | 12" |
| LENGTH | 39'-9" | 7'-10" | 4'-1" | 5'-4" | 5'-4" | 45'-0" | 45'-0" | 45'-0" | 39'-9" | 3'-11" | 4'-11" | 3'-4" | 10'-10" |
| WEIGHT | 3611 | 816 | 425 | 2529 | 2529 | 1595 | 1686 | 1294 | 106 | 215 | 205 | 512 | 1664 |

| MARK | B | C | D | E1 | E2 | F1 | F2 | F3 | H | K | M | Y | Z |
|---|---|---|---|---|---|---|---|---|---|---|---|---|---|
| **2 SPANS ~ 6' x 6'** | | | | | | | | | | | | | |
| NUMBER | 136 | 156 | 156 | 91 | 91 | 17 | 24 | 15 | 4 | 28 | 62 | 46 | 46 |
| SIZE | #4 | #4 | #4 | #5 | #5 | #4 | #4 | #4 | #4 | #4 | #4 | #4 | #4 |
| SPACING | 8" | 7" | 7" | 6" | 6" | ~ | 15" | ~ | ~ | 12" | 18" | 12" | 12" |
| LENGTH | 13'-5" | 8'-10" | 4'-1" | 5'-4" | 5'-4" | 45'-0" | 45'-0" | 45'-0" | 13'-5" | 3'-11" | 5'-11" | 3'-4" | 12'-10" |
| WEIGHT | 1219 | 920 | 425 | 506 | 506 | 512 | 722 | 452 | 36 | 73 | 245 | 102 | 394 |
| **3 SPANS ~ 6' x 6'** | | | | | | | | | | | | | |
| NUMBER | 136 | 156 | 156 | 182 | 182 | 26 | 32 | 22 | 4 | 42 | 62 | 92 | 92 |
| SIZE | #4 | #4 | #4 | #5 | #5 | #4 | #4 | #4 | #4 | #4 | #4 | #4 | #4 |
| SPACING | 8" | 7" | 7" | 6" | 6" | ~ | 15" | ~ | ~ | 12" | 18" | 12" | 12" |
| LENGTH | 20'-0" | 8'-10" | 4'-1" | 5'-4" | 5'-4" | 45'-0" | 45'-0" | 45'-0" | 20-0 | 3'-11" | 5'-11" | 3'-4" | 12'-10" |
| WEIGHT | 1817 | 920 | 425 | 1012 | 1012 | 783 | 963 | 662 | 53 | 110 | 245 | 205 | 788 |
| **4 SPANS ~ 6' x 6'** | | | | | | | | | | | | | |
| NUMBER | 136 | 156 | 156 | 273 | 273 | 35 | 40 | 29 | 4 | 54 | 62 | 138 | 138 |
| SIZE | #4 | #4 | #4 | #5 | #5 | #4 | #4 | #4 | #4 | #4 | #4 | #4 | #4 |
| SPACING | 8" | 7" | 7" | 6" | 6" | ~ | 15" | ~ | ~ | 12" | 18" | 12" | 12" |
| LENGTH | 26'-7" | 8'-10" | 4'-1" | 5'-4" | 5'-4" | 45'-0" | 45'-0" | 45'-0" | 26'-7" | 3'-11" | 5'-11" | 3'-4" | 12'-10" |
| WEIGHT | 2415 | 920 | 425 | 1518 | 1518 | 1054 | 1204 | 873 | 71 | 141 | 245 | 307 | 1183 |
| **5 SPANS ~ 6' x 6'** | | | | | | | | | | | | | |
| NUMBER | 136 | 156 | 156 | 364 | 364 | 44 | 48 | 36 | 4 | 68 | 62 | 184 | 184 |
| SIZE | #4 | #4 | #4 | #5 | #5 | #4 | #4 | #4 | #4 | #4 | #4 | #4 | #4 |
| SPACING | 8" | 7" | 7" | 6" | 6" | ~ | 15" | ~ | ~ | 12" | 18" | 12" | 12" |
| LENGTH | 33'-2" | 8'-10" | 4'-1" | 5'-4" | 5'-4" | 45'-0" | 45'-0" | 45'-0" | 33'-2" | 3'-11" | 5'-11" | 3'-4" | 12'-10" |
| WEIGHT | 3013 | 920 | 425 | 2023 | 2023 | 1324 | 1445 | 1084 | 89 | 178 | 245 | 409 | 1577 |
| **6 SPANS ~ 6' x 6'** | | | | | | | | | | | | | |
| NUMBER | 136 | 156 | 156 | 455 | 455 | 53 | 56 | 43 | 4 | 82 | 62 | 230 | 230 |
| SIZE | #4 | #4 | #4 | #5 | #5 | #4 | #4 | #4 | #4 | #4 | #4 | #4 | #4 |
| SPACING | 8" | 7" | 7" | 6" | 6" | ~ | 15" | ~ | ~ | 12" | 18" | 12" | 12" |
| LENGTH | 39'-9" | 8'-10" | 4'-1" | 5'-4" | 5'-4" | 45'-0" | 45'-0" | 45'-0" | 39'-9" | 3'-11" | 5'-11" | 3'-4" | 12'-10" |
| WEIGHT | 3611 | 920 | 425 | 2529 | 2529 | 1595 | 1686 | 1294 | 106 | 215 | 245 | 512 | 1971 |

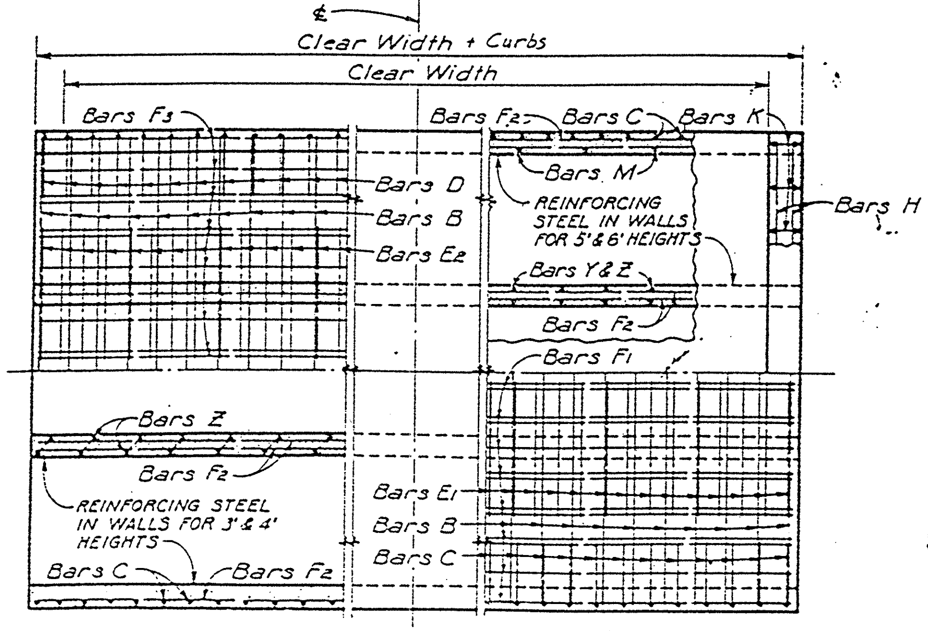


PART PLANS

BOTTOM SLAB　　　TOP SLAB

NOTE: TOP AND BOTTOM SLAB REINFORCING STEEL SIMILAR FOR CULVERT SIZES SHOWN ON THIS SHEET.

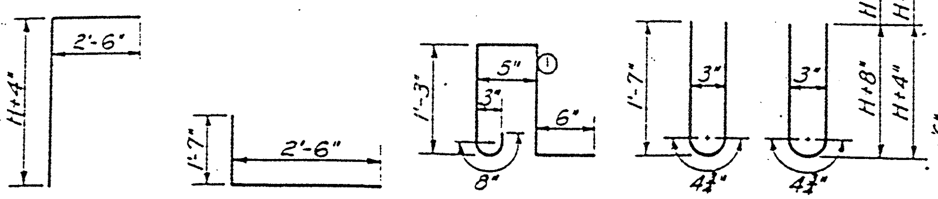


BARS C　BARS D　BARS K　BARS Y　BARS Z

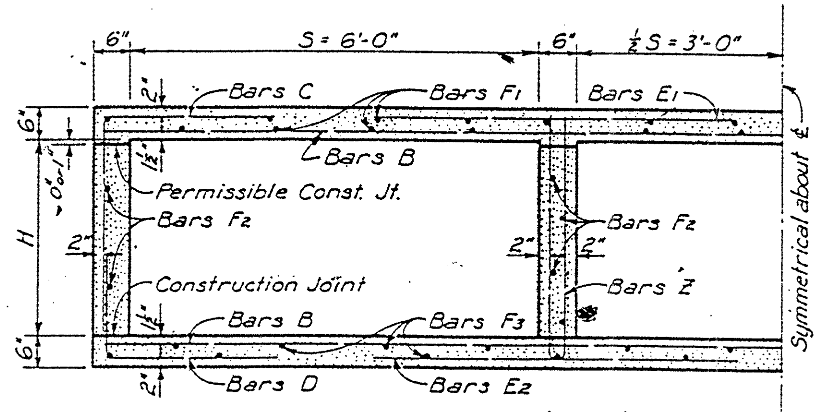


TYPICAL HALF SECTION ~ 3' & 4' HEIGHTS

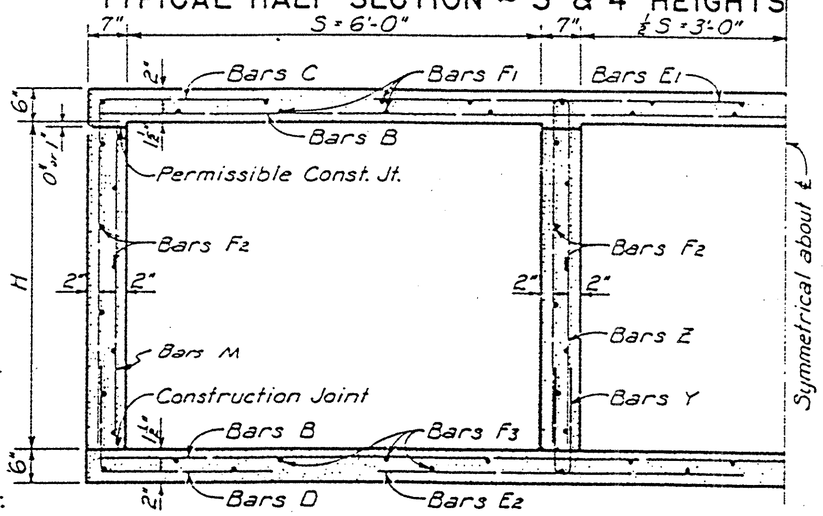


TYPICAL HALF SECTION ~ 5' & 6' HEIGHTS

### BARREL QUANTITIES FOR 44' CLEAR WIDTH

| CULVERT SIZE (S H) | NO. OF SPANS | LENGTH OF STRUCTURE | *BARREL QUANTITIES CONCRETE CU. YDS. | *BARREL QUANTITIES STEEL LBS. | QUANTITIES P.L.F. BARREL CONCRETE CU. YDS. | QUANTITIES P.L.F. BARREL STEEL LBS. |
|---|---|---|---|---|---|---|
| 6' x 3' | 2 | 13'-6" | 30.90 | 4,784 | 0.667 | 103.08 |
| | 3 | 20'-0" | 44.64 | 7,274 | 0.963 | 156.72 |
| | 4 | 26'-6" | 58.38 | 9,757 | 1.259 | 210.37 |
| | 5 | 33'-0" | 72.17 | 12,244 | 1.556 | 264.02 |
| | 6 | 39'-6" | 85.91 | 14,728 | 1.852 | 317.66 |
| 6' x 4' | 2 | 13'-6" | 33.40 | 5,070 | 0.722 | 109.38 |
| | 3 | 20'-0" | 48.00 | 7,682 | 1.037 | 165.69 |
| | 4 | 26'-6" | 62.60 | 10,286 | 1.352 | 222.01 |
| | 5 | 33'-0" | 77.20 | 12,895 | 1.667 | 278.33 |
| | 6 | 39'-6" | 91.76 | 15,502 | 1.981 | 334.65 |
| 6' x 5' | 2 | 13'-9" | 38.44 | 5,906 | 0.833 | 127.68 |
| | 3 | 20'-4" | 54.72 | 8,728 | 1.185 | 188.61 |
| | 4 | 26'-11" | 71.01 | 11,544 | 1.537 | 249.55 |
| | 5 | 33'-6" | 87.29 | 14,364 | 1.889 | 310.49 |
| | 6 | 40'-1" | 103.57 | 17,187 | 2.241 | 371.42 |
| 6' x 6' | 2 | 13'-9" | 41.39 | 6,112 | 0.898 | 132.20 |
| | 3 | 20'-4" | 58.67 | 8,995 | 1.272 | 194.47 |
| | 4 | 26'-11" | 75.90 | 11,874 | 1.645 | 256.74 |
| | 5 | 33'-6" | 93.18 | 14,755 | 2.019 | 319.02 |
| | 6 | 40'-1" | 110.42 | 17,638 | 2.392 | 381.29 |

* These quantities do not include toe walls or wings.

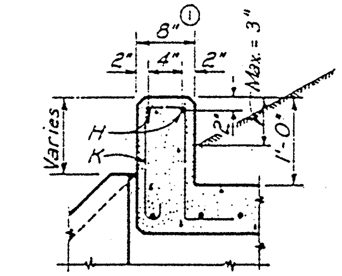


SECTION THRU CURB

GENERAL NOTES:

Designed for HS 20 Loading and maximum fill heights shown.

The bottom edge of the top slab shall be chamfered 3 inches at the entrance. Reinforcing bars shall be adjusted to provide a minimum of 1¼ inches clear cover. Headwall heights will be reduced, if necessary, to provide a maximum of 3 inches projection above the roadway slope. No increase or decrease will be made in plan quantities of concrete or reinforcing steel for this work.

Construction joints shown at the flow line may be raised a maximum of 6 inches at the Contractor's option. Bars M may be cut off or raised, bars C and D may be reversed (D on top) and bars Y and Z may be reversed (Y on top).

All reinforcing steel shall be Grade 60.

① Width must be increased by 4" for use with T6 Rail. (See T6-CM Rail Standard)

Change Order #35
New Sheet

STATE DEPARTMENT OF HIGHWAYS
AND PUBLIC TRANSPORTATION

# MULTIPLE BOX CULVERTS

SIZES 6' x 3', 6' x 4', 6' x 5', & 6' x 6'
4'-1" TO 6'-0" FILL

MC6-2

| | | | | | | | | |
|---|---|---|---|---|---|---|---|---|
| DN.: W.H. | DRAWING | DATE | FED. RD. DIV. NO. | STATE | FEDERAL AID PROJECT NO. | | | SHEET NO. |
| CK. DN.: RMM | Original | JAN. 1958 | 6 | TEXAS | NH 2000 (704), etc. | | | 396A |
| DW.: K.M. | Rev. 8-87 (Grade 60) | | STATE DIST. NO. | COUNTY | CONTROL NO. | SECTION NO. | JOB NO. | HIGHWAY NO. |
| CK. DW.: M.D.A. | Rev. 7-95 (note ①) | | SAT | Bexar | 2452 | 01 | 036 etc. | Lp 1604 |
| TR.: E.J.T. | | | | | | | | |
| CK. TR.: M.D.A. | | | | | | | | |

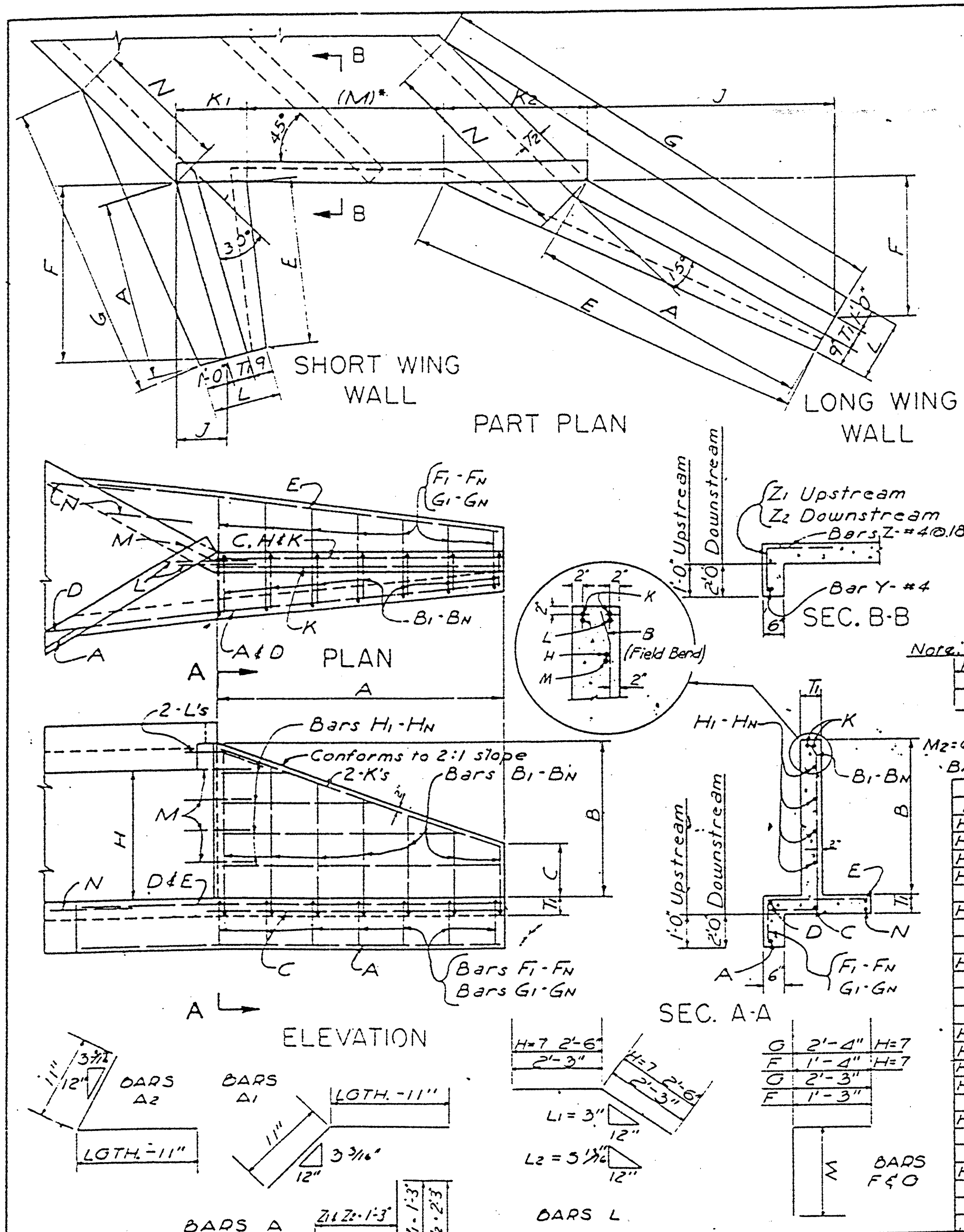


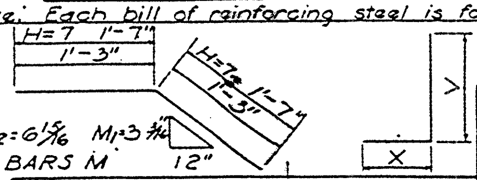


| LONG WINGS H=2 | | | | | | SHORT WINGS H=2 | | | | | |
|---|---|---|---|---|---|---|---|---|---|---|---|
| BAR | NO | SIZE | SPA | LGTH | WT. | BAR | NO | SIZE | SPA | LGTH | WT. |
| A1 | 2 | #4 | - | 10'-11" | 15 | A2 | 2 | #4 | - | 4'-9" | 7 |
| B1-6 | 12 | #4 | 17½ | Av 3'-2½ | 27 | B1-4 | 8 | #4 | 15" | Av 2'-2½ | 12 |
| C | 2 | #4 | - | 9'-1" | 15 | C | 2 | #4 | - | 5'-4" | 7 |
| D | 2 | #4 | - | 11'-0" | 15 | D | 2 | #4 | - | 4'-9" | 7 |
| E | 2 | #4 | - | 12'-7" | 17 | E | 2 | #4 | - | 6'-11" | 10 |
| F | 6 | #4 | 17½ | 3'-3" | 13 | F | 4 | #4 | 15" | 3'-3" | 9 |
| G | 6 | #4 | 17½ | 4'-3" | 18 | G | 4 | #4 | 15" | 4'-3" | 12 |
| H | 2 | #4 | - | 3'-2" | 7 | H | 2 | #4 | - | 2'-10" | 4 |
| K | 4 | #4 | - | 7'-9" | 22 | K | 4 | #4 | - | 4'-3" | 12 |
| L1 | 4 | #5 | - | 4'-6" | 18 | L2 | 4 | #5 | - | 4'-6" | 19 |
| M1 | 2 | #4 | - | 2'-6" | 3 | M2 | 2 | #4 | - | 2'-6" | 3 |
| REINF. STEEL | | | | LB. | 168 | REINF. STEEL | | | | LB. | 102 |
| CONC. | | | | C.Y. | 1.89 | CONC. | | | | C.Y. | 0.84 |

| LONG WINGS H=3 | | | | | | SHORT WINGS H=3 | | | | | |
|---|---|---|---|---|---|---|---|---|---|---|---|
| BAR | NO | SIZE | SPA | LGTH | WT. | BAR | NO | SIZE | SPA | LGTH | WT. |
| A1 | 2 | #4 | - | 14'-11" | 20 | A2 | 2 | #4 | - | 6'-10" | 9 |
| B1-9 | 18 | #4 | 17" | Av 3'-6½ | 46 | B1-5 | 10 | #4 | 17" | Av 3'-8½ | 26 |
| C | 2 | #4 | - | 13'-1" | 18 | C | 2 | #4 | - | 7'-5" | 10 |
| D | 2 | #4 | - | 15'-0" | 21 | D | 2 | #4 | - | 6'-10" | 9 |
| E | 2 | #4 | - | 16'-7" | 23 | E | 2 | #4 | - | 9'-0" | 12 |
| F | 9 | #4 | 17" | 3'-3" | 20 | F | 5 | #4 | 17" | 3'-3" | 11 |
| G | 9 | #4 | 17" | 4'-3" | 26 | G | 5 | #4 | 17" | 4'-3" | 15 |
| H1-2 | 4 | #4 | 17" | Av 8'-4" | 23 | H1-2 | 4 | #4 | 17" | Av 4'-4" | 12 |
| K | 4 | #4 | - | 11'-10" | 32 | K | 4 | #4 | - | 6'-6" | 18 |
| L1 | 4 | #5 | - | 4'-6" | 18 | L2 | 4 | #5 | - | 4'-6" | 19 |
| M1 | 4 | #4 | 17" | 2'-6" | 7 | M2 | 4 | #4 | 17" | 2'-6" | 7 |
| REINF. STEEL | | | | LB. | 234 | REINF. STEEL | | | | LB. | 148 |
| CONC. | | | | C.Y. | 2.97 | CONC. | | | | C.Y. | 1.41 |

| LONG WINGS H=4 | | | | | | SHORT WINGS H=4 | | | | | |
|---|---|---|---|---|---|---|---|---|---|---|---|
| BAR | NO | SIZE | SPA | LGTH | WT. | BAR | NO | SIZE | SPA | LGTH | WT. |
| A1 | 2 | #4 | - | 18'-11" | 26 | A2 | 2 | #4 | - | 8'-11" | 12 |
| B1-12 | 24 | #4 | 16½ | Av 4'-2½ | 68 | B1-7 | 14 | #4 | 15½ | Av 4'-2½ | 40 |
| C | 2 | #4 | - | 17'-1" | 23 | C | 2 | #4 | - | 9'-6" | 13 |
| D | 2 | #4 | - | 19'-0" | 26 | D | 2 | #4 | - | 8'-11" | 12 |
| E | 2 | #5 | - | 20'-7" | 43 | E | 2 | #5 | - | 11'-1" | 23 |
| F | 12 | #4 | 16½ | 3'-3" | 27 | F | 7 | #4 | 15½ | 3'-3" | 16 |
| G | 12 | #4 | 16½ | 4'-3" | 35 | G | 7 | #4 | 15½ | 4'-3" | 20 |
| H1-3 | 6 | #4 | 16 | Av 10'-6 | 43 | H1-3 | 6 | #4 | 16" | Av 5'-4½ | 22 |
| K | 4 | #5 | - | 16'-1" | 67 | K | 4 | #5 | - | 8'-11" | 37 |
| L1 | 4 | #5 | - | 4'-6" | 18 | L2 | 4 | #5 | - | 4'-6" | 19 |
| M1 | 6 | #4 | 16" | 2'-6" | 10 | M2 | 6 | #4 | 16" | 2'-6" | 10 |
| REINF. STEEL | | | | LB. | 386 | REINF. STEEL | | | | LB. | 224 |
| CONC. | | | | C.Y. | 4.19 | CONC. | | | | C.Y. | 2.04 |

| LONG WINGS H=5 | | | | | | SHORT WINGS H=5 | | | | | |
|---|---|---|---|---|---|---|---|---|---|---|---|
| BAR | NO | SIZE | SPA | LGTH | WT. | BAR | NO | SIZE | SPA | LGTH | WT. |
| A1 | 2 | #4 | - | 23'-7" | 32 | A2 | 2 | #4 | - | 10'-11" | 15 |
| B1-10 | 20 | #4 | 17½ | Av 4'-2½ | 56 | B1-6 | 12 | #4 | 18" | Av 4'-3½ | 35 |
| B11-17 | 14 | #4 | 10½ | Av 6'-9" | 63 | B7-9 | 6 | #4 | 9" | Av 7'-0" | 28 |
| C | 2 | #4 | - | 21'-1" | 29 | C | 2 | #4 | - | 11'-7" | 16 |
| D | 2 | #4 | - | 23'-8" | 31 | D | 2 | #4 | - | 10'-11" | 15 |
| E | 2 | #5 | - | 27'-6" | 57 | E | 2 | #5 | - | 14'-6" | 30 |
| F1-10 | 10 | #4 | 17½ | Av 3'-6½ | 24 | F1-6 | 6 | #4 | 18" | Av 3'-7 | 15 |
| F11-17 | 7 | #4 | 10½ | Av 3'-0" | 24 | F7-9 | 3 | #4 | 9" | Av 4'-1" | 8 |
| G1-10 | 10 | #4 | 17½ | Av 4'-6½ | 31 | G1-6 | 6 | #4 | 18" | Av 4'-7 | 19 |
| G11-17 | 7 | #4 | 10½ | Av 6'-0" | 29 | G7-9 | 3 | #4 | 9" | Av 5'-1" | 10 |
| H1-3 | 6 | #4 | 15" | Av 12'-2" | 49 | H1-3 | 6 | #4 | 18 | Av 6'-1½ | 25 |
| K | 4 | #5 | - | 20'-1" | 84 | K | 4 | #5 | - | 11'-2" | 47 |
| L1 | 4 | #6 | - | 4'-6" | 27 | L2 | 4 | #6 | - | 4'-6" | 27 |
| M1 | 6 | #4 | 18" | 2'-6" | 10 | M2 | 6 | #4 | 18" | 2'-6" | 10 |
| N | 2 | #5 | - | 3'-2" | 6 | N | 2 | #5 | - | 3'-2" | 6 |
| REINF. STEEL | | | | LB. | 552 | REINF. STEEL | | | | LB. | 306 |
| CONC. | | | | C.Y. | 6.09 | CONC. | | | | C.Y. | 2.55 |

| LONG WINGS H=6 | | | | | | SHORT WINGS H=6 | | | | | |
|---|---|---|---|---|---|---|---|---|---|---|---|
| BAR | NO | SIZE | SPA | LGTH | WT | BAR | NO | SIZE | SPA | LGTH | WT |
| A1 | 2 | #4 | - | 26'-1" | 35 | A2 | 2 | #4 | - | 11'-10" | 16 |
| B1-9 | 18 | #4 | 17½ | Av 4'-5½ | 54 | B1-7 | 14 | #4 | 13" | Av 4'-10½ | 47 |
| B10-14 | 10 | #4 | 12" | Av 6'-10 | 46 | B8-10 | 6 | #4 | 9" | Av 7'-7½ | 32 |
| B15-22 | 16 | #4 | 7" | Av 8'-1" | 86 | B11-12 | 4 | #4 | 6½ | Av 8'-3½ | 23 |
| C | 2 | #4 | - | 23'-1" | 31 | C | 2 | #4 | - | 12'-7" | 17 |
| D | 2 | #4 | - | 26'-2" | 35 | D | 2 | #4 | - | 11'-11" | 16 |
| E | 2 | #5 | - | 30'-11" | 64 | E | 2 | #5 | - | 16'-2" | 33 |
| F1-9 | 9 | #4 | 17½ | Av 3'-7½ | 22 | F1-7 | 7 | #4 | 13" | Av 3'-9 | 18 |
| F10-14 | 5 | #4 | 12" | Av 4'-2½ | 14 | F8-10 | 3 | #4 | 9" | Av 4'-5 | 9 |
| F15-22 | 8 | #4 | 7" | Av 4'-6" | 25 | F11-12 | 2 | #4 | 6½ | Av 4'-7½ | 6 |
| G1-9 | 9 | #4 | 17½ | Av 4'-7½ | 28 | G1-7 | 7 | #4 | 15" | Av 4'-9 | 23 |
| G10-14 | 5 | #4 | 12" | Av 5'-2½ | 18 | G8-10 | 3 | #4 | 9" | Av 5'-5 | 11 |
| G15-22 | 8 | #4 | 7" | Av 5'-6 | 30 | G11-12 | 2 | #4 | 6½ | Av 5'-7½ | 8 |
| H1-3 | 6 | #4 | 16" | Av 10'-11 | 44 | H1-3 | 6 | #4 | 16" | Av 5'-9 | 24 |
| H4 | 2 | #4 | - | 21'-8" | 29 | H4 | 2 | #4 | - | 11'-1" | 15 |
| K | 4 | #5 | - | 22'-2" | 92 | K | 4 | #5 | - | 12'-3" | 51 |
| L1 | 4 | #6 | - | 4'-6" | 27 | L2 | 4 | #6 | - | 4'-6" | 27 |
| M1 | 8 | #4 | 16 | 2'-6" | 14 | M2 | 8 | #4 | 16" | 2'-6" | 14 |
| N | 2 | #5 | - | 3'-2" | 6 | N | 2 | #5 | - | 3'-2" | 6 |
| REINF. STEEL | | | | LB. | 700 | REINF. STEEL | | | | LB. | 396 |
| CONC. | | | | C.Y. | 7.61 | CONC. | | | | C.Y. | 3.63 |

| LONG WINGS H=7 | | | | | | SHORT WINGS H=7 | | | | | |
|---|---|---|---|---|---|---|---|---|---|---|---|
| BAR | NO | SIZE | SPA | LGTH | WT. | BAR | NO | SIZE | SPA | LGTH | WT. |
| A1 | 2 | #4 | - | 30'-9" | 42 | A2 | 2 | #4 | - | 13'-10" | 19 |
| B1-9 | 18 | #4 | 16" | Av 4'-7½ | 56 | B1-5 | 10 | #4 | 18" | Av 4'-7 | 31 |
| B10-13 | 8 | #4 | 14" | Av 7'-1½ | 39 | B6-9 | 8 | #4 | 11" | Av 7'-5" | 40 |
| B14-19 | 12 | #4 | 8" | Av 8'-3½ | 67 | B10-13 | 8 | #5 | 9½ | Av 8'-3½ | 69 |
| B20-25 | 12 | #5 | 9" | Av 9'-5½ | 118 | C | 2 | #5 | - | 14'-8" | 31 |
| C | 2 | #5 | - | 27'-1" | 56 | D | 2 | #5 | - | 13'-11" | 29 |
| D | 2 | #5 | - | 30'-10" | 64 | E | 2 | #5 | - | 18'-9" | 39 |
| E | 2 | #5 | - | 36'-2" | 75 | F1-5 | 5 | #4 | 18" | Av 3'-11" | 13 |
| F1-9 | 9 | #4 | 16" | Av 3'-10½ | 24 | F6-9 | 4 | #4 | 11" | Av 4'-8" | 13 |
| F10-13 | 4 | #4 | 14" | Av 4'-6½ | 13 | F10-13 | 4 | #5 | 9½ | Av 5'-1½ | 21 |
| F14-19 | 6 | #4 | 8" | Av 4'-10 | 20 | G1-5 | 5 | #4 | 18" | Av 4'-11" | 17 |
| F20-25 | 6 | #5 | 9" | Av 5'-2" | 32 | G6-9 | 4 | #4 | 11" | Av 5'-8 | 16 |
| G1-9 | 9 | #4 | 16" | Av 4'-10½ | 29 | G10-13 | 4 | #5 | 9½ | Av 6'-1½ | 25 |
| G10-13 | 4 | #4 | 14" | Av 5'-6½ | 15 | H1-3 | 6 | #4 | 17" | Av 6'-1" | 32 |
| G14-19 | 6 | #4 | 8" | Av 5'-10 | 24 | H4 | 2 | #4 | 12" | 11'-11" | 16 |
| G20-25 | 6 | #5 | 9" | Av 6'-2" | 39 | H5 | 2 | #4 | 12" | 13'-0" | 18 |
| H1-3 | 6 | #4 | 17" | Av 11'-10 | 47 | K | 4 | #5 | - | 14'-7" | 61 |
| H4 | 2 | #4 | 12" | 23'-2" | 31 | L2 | 4 | #7 | - | 5'-0" | 41 |
| H5 | 2 | #4 | 12" | 25'-6 | 35 | M2 | 10 | #5 | 17&12 | 3'-2" | 33 |
| K | 4 | #5 | - | 26'-3 | 110 | N | 4 | #5 | - | 3'-2" | 13 |
| L1 | 4 | #7 | - | 3'-0" | 41 | | | | | | |
| M1 | 10 | #5 | 12&18 | 3'-2" | 33 | | | | | | |
| N | 4 | #5 | - | 3'-2" | 13 | | | | | | |
| REINF. STEEL | | | | LB. | 1023 | REINF. STEEL | | | | LB. | 577 |
| CONC. | | | | C.Y. | 11.08 | CONC. | | | | C.Y. | 5.42 |

Note: Each bill of reinforcing steel is for two wings.

ESTIMATED QUANTITIES FOR 2 M.B.C. TOEWALLS

| WING WALL | SPAN LGTH | 2 SPANS CONC C.Y. | 2 SPANS REINF. LB. | 3 SPANS CONC C.Y. | 3 SPANS REINF. LB. | 4 SPANS CONC C.Y. | 4 SPANS REINF. LB. | 5 SPANS CONC C.Y. | 5 SPANS REINF. LB. | 6 SPANS CONC C.Y. | 6 SPANS REINF. LB. |
|---|---|---|---|---|---|---|---|---|---|---|---|
| H=2'-0" TO H=4'-0" INCL. | 5'-0" | 0.74 | 52 | 1.18 | 83 | 1.61 | 113 | 2.04 | 143 | 2.47 | 179 |
| | 6'-0" | 0.90 | 64 | 1.41 | 100 | 1.92 | 137 | 2.43 | 174 | 2.95 | 215 |
| | 7'-0" | 1.06 | 76 | 1.65 | 118 | 2.24 | 160 | 2.83 | 204 | 3.42 | 246 |
| | 8'-0" | 1.22 | 88 | 1.88 | 136 | 2.55 | 186 | 3.22 | 234 | 3.89 | 283 |
| H=5'-0" | 5'-0" | 0.70 | 51 | 1.14 | 82 | 1.58 | 112 | 2.02 | 143 | 2.46 | 179 |
| | 6'-0" | 0.86 | 63 | 1.38 | 93 | 1.89 | 136 | 2.41 | 174 | 2.93 | 214 |
| | 7'-0" | 1.02 | 75 | 1.61 | 117 | 2.21 | 159 | 2.80 | 203 | 3.40 | 246 |
| | 8'-0" | 1.17 | 82 | 1.85 | 135 | 2.52 | 185 | 3.20 | 233 | 3.87 | 281 |
| | 9'-0" | 1.33 | 94 | 2.08 | 148 | 2.84 | 204 | 3.59 | 259 | 4.34 | 313 |
| H=6'-0" | 6'-0" | 0.81 | 58 | 1.33 | 94 | 1.85 | 135 | 2.36 | 173 | 2.88 | 209 |
| | 7'-0" | 0.97 | 70 | 1.57 | 112 | 2.16 | 154 | 2.76 | 198 | 3.35 | 242 |
| | 8'-0" | 1.13 | 77 | 1.80 | 130 | 2.48 | 180 | 3.15 | 228 | 3.83 | 277 |
| | 9'-0" | 1.29 | 93 | 2.04 | 147 | 2.79 | 203 | 3.54 | 258 | 4.30 | 312 |
| | 10'-0" | 1.44 | 105 | 2.27 | 167 | 3.11 | 227 | 3.94 | 287 | 4.77 | 349 |
| H=7'-0" | 7'-0" | 0.91 | 64 | 1.31 | 107 | 2.10 | 153 | 2.70 | 197 | 3.29 | 240 |
| | 8'-0" | 1.07 | 76 | 1.74 | 124 | 2.42 | 174 | 3.09 | 223 | 3.77 | 276 |
| | 9'-0" | 1.23 | 88 | 1.98 | 142 | 2.73 | 198 | 3.48 | 252 | 4.24 | 306 |
| | 10'-0" | 1.38 | 100 | 2.22 | 160 | 3.05 | 222 | 3.88 | 281 | 4.71 | 343 |

M: Length of Toewall = $1.4142[n(S+T_2)+T_2]-(K_1+K_2)$
n = Number of Spans
S = Normal Clear Span
Example: 6 Spans of 7'x5'
$M=1.4142[6(7+0.58)+0.58]-(1.63+3.27)=60'\text{-}2\frac{7}{8}"$

| BARS B SHORT WINGS | | | | |
|---|---|---|---|---|
| H | DIMENSION V | | DIMENSION X | |
| H=2 | B1=1'-4" | B4=3'-1" | B1=1'-0" | B4=1'-0" |
| H=3 | B1=1'-4" | B5=4'-1" | B1=1'-0" | B5=1'-0" |
| H=4 | B1=1'-4" | B7=5'-1" | B1=1'-0" | B7=1'-0" |
| H=5 | B1=1'-4" | B6=5'-0" | B1=1'-0" | B6=1'-3" |
| | B7=5'-4" | B9=6'-1" | B7=1'-3" | B9=1'-4" |
| H=6 | B1=1'-10" | B7=5'-6" | B1=1'-0" | B7=1'-5" |
| | B8=5'-10" | B10=6'-6" | B8=1'-5" | B10=1'-6" |
| | B11=6'-8" | B12=7'-1" | B11=1'-7" | B12=1'-7" |
| H=7 | B1=1'-10" | B5=4'-9" | B1=1'-1" | B5=1'-6" |
| | B6=5'-2" | B9=6'-6" | B6=1'-6" | B9=1'-8" |
| | B10=6'-11" | B13=8'-1" | B10=1'-8" | B13=1'-11" |
| **BARS B LONG WINGS** | | | | |
| H=2 | B1=1'-4" | B6=3'-1" | B1=1'-0" | B6=1'-0" |
| H=3 | B1=1'-4" | B9=4'-1" | B1=1'-0" | B9=1'-0" |
| H=4 | B1=1'-4" | B12=5'-1" | B1=1'-0" | B12=1'-0" |
| H=5 | B1=1'-4" | B10=4'-8" | B1=1'-[illegible] | B10=1'-3" |
| | B11=4'-10" | B17=6'-1" | B11=1'-3" | B17=1'-4" |
| H=6 | B1=1'-10" | B9=4'-9" | B1=1'-0" | B9=1'-4" |
| | B10=5'-0" | B14=5'-11" | B10=1'-4" | B14=1'-5" |
| | B15=6'-1" | B22=7'-1" | B15=1'-5" | B22=1'-7" |
| H=7 | B1=1'-10" | B9=4'-10" | B1=1'-1" | B9=1'-6" |
| | B10=5'-1" | B13=6'-0" | B10=1'-6" | B13=1'-8" |
| | B14=6'-2" | B19=7'-0" | B14=1'-8" | B19=1'-9" |
| | B20=7'-2" | B25=8'-1" | B20=1'-9" | B25=1'-11" |

Length of Bars Y shall be 4" more than toewall length. One 30 diam. lap included for all Bars Y over 40'-0" in length. Two 30 diam. laps for all Bars Y over 80'-0" in length.

GENERAL NOTES:

DESIGN: Wingwall designed in accordance with Rankine's theory of retaining wall design.

Chamfer exposed corners 3/4" unless specified otherwise.

All dimensions relating to reinforcing steel are to center of bars.

The toewalls for wingwalls and culverts shall be omitted when structure is founded on solid rock.

Change Order #35 New Sheet

G = Downstream F = Upstream

| BARS H SHORT WINGS | | | BARS H LONG WINGS | | |
|---|---|---|---|---|---|
| H | DIMENSIONS | | H | DIMENSIONS | |
| H=2 | H1 = 2'-10" | | H=2 | H1 = 5'-2" | |
| H=3 | H1 = 3'-0" | H2 = 5'-8" | H=3 | H1 = 5'-6" | H2 = 11'-2" |
| H=4 | H1 = 2'-8" | H3 = 8'-0" | H=4 | H1 = 5'-2" | H3 = 15'-10" |
| H=5 | H1 = 3'-0" | H3 = 9'-2" | H=5 | H1 = 6'-2" | H3 = 18'-2" |
| H=6 | H1 = 3'-0" | H3 = 8'-6" | H=6 | H1 = 5'-8" | H3 = 16'-4" |
| | H4 = 11'-1" | | | H4 = 21'-8" | |
| H=7 | H1 = 3'-2" | H3 = 9'-0" | H=7 | H1 = 6'-2" | H3 = 17'-6" |
| | H4 = 11'-11" | | | H4 = 23'-2" | |
| | H5 = 13'-0" | | | H5 = 25'-6" | |

| BARS F & G SHORT WINGS | | | BARS F & G LONG WINGS | | |
|---|---|---|---|---|---|
| H | DIMENSIONS W | | H | DIMENSIONS W | |
| H=2 | F1G1 = 2'-0" | F4G4 = 2'-0" | H=2 | F1G1 = 2'-0" | F6G6 = 2'-0" |
| H=3 | F1G1 = 2'-0" | F5G5 = 2'-0" | H=3 | F1G1 = 2'-0" | F9G9 = 2'-0" |
| H=4 | F1G1 = 2'-0" | F7G7 = 2'-0" | H=4 | F1G1 = 2'-0" | F12G12 = 2'-0" |
| H=5 | F1G1 = 2'-0" | F6G6 = 2'-8" | H=5 | F1G1 = 2'-0" | F10G10 = 2'-7" |
| | F7G7 = 2'-9" | F9G9 = 2'-11" | | F11G11 = 2'-7" | F17G17 = 2'-11" |
| H=6 | F1G1 = 2'-0" | F7G7 = 3'-0" | H=6 | F1G1 = 2'-0" | F9G9 = 2'-9" |
| | F8G8 = 3'-1" | F10G10 = 3'-3" | | F10G10 = 2'-10" | F14G14 = 3'-1" |
| | F11G11 = 3'-4" | F12G12 = 3'-5" | | F15G15 = 3'-2" | F22G22 = 3'-5" |
| H=7 | F1G1 = 2'-1" | F5G5 = 3'-1" | H=7 | F1G1 = 2'-1" | F9G9 = 3'-0" |
| | F6G6 = 3'-2" | F9G9 = 3'-6" | | F10G10 = 3'-1" | F13G13 = 3'-4" |
| | F10G10 = 3'-7" | F13G13 = 4'-0" | | F14G14 = 3'-5" | F19G19 = 3'-8" |
| | | | | F20G20 = 3'-9" | F25G25 = 4'-0" |

TABLE OF DIMENSIONS

| SIZE | A | B | C | F | G | E | J | K | L | N | T1 |
|---|---|---|---|---|---|---|---|---|---|---|---|
| H=2 SHORT WING | 3'-11 5/8" | 2'-11" | 1'-0" | 3'-10" | 5'-8 3/16 | 3'-7 5/8 | 1'-0 5/16 | 1'-3 1/2" | 2'-3" | 2'-0" | 6" |
| H=2 LONG WING | 7'-8" | 2'-11" | 1'-0" | 3'-10" | 11'-4 3/16 | 9'-10" | 6'-7 11/16 | 2'-6" | 2'-3" | 3'-10 3/16 | 6" |
| H=3 SHORT WING | 6'-0 7/16 | 3'-11" | 1'-0" | 5'-10" | 7'-9 1/4 | 5'-8 7/16 | 1'-6 3/4 | 1'-3 1/2" | 2'-3" | 2'-0" | 6" |
| H=3 LONG WING | 11'-8" | 3'-11" | 1'-0" | 5'-10" | 15'-4 1/4 | 13'-10" | 10'-1 1/4 | 2'-6" | 2'-3" | 3'-10 3/8 | 6" |
| H=4 SHORT WING | 8'-1 3/16" | 4'-11" | 1'-0" | 7'-10" | 9'-10 1/8 | 7'-9 5/16 | 2'-1 3/16 | 1'-3 1/2" | 2'-3" | 2'-0" | 6" |
| H=4 LONG WING | 15'-8" | 4'-11" | 1'-0" | 7'-10" | 19'-4 13/16 | 17'-10" | 13'-6 13/16 | 2'-6" | 2'-3" | 3'-10 3/16 | 6" |
| H=5 SHORT WING | 10'-2 3/16 | 5'-11" | 1'-0" | 9'-10" | 13'-3" | 9'-9 3/16 | 2'-7 7/8 | 1'-7 1/2" | 2'-3" | 3'-6 3/16 | 6" |
| H=5 LONG WING | 19'-8" | 5'-11" | 1'-0" | 9'-10" | 26'-3 1/16 | 22'-5 5/16 | 17'-0 3/8 | 3'-3 1/4 | 2'-3" | 6'-10 1/2 | 6" |
| H=6 SHORT WING | 11'-2 9/16 | 6'-11" | 1'-6" | 10'-10" | 14'-10 1/16 | 10'-8 3/16 | 2'-10 3/16 | 1'-10 7/16 | 2'-3" | 4'-2 1/2" | 6" |
| H=6 LONG WING | 21'-8" | 6'-11" | 1'-6" | 10'-10" | 29'-8 3/16 | 23'-0 1/16 | 18'-9 3/16 | 3'-10 3/16 | 2'-3" | 8'-3 3/16 | 6" |
| H=7 SHORT WING | 13'-3 7/16 | 7'-10" | 1'-5" | 12'-10" | 17'-6 9/16 | 12'-8 7/8 | 3'-5 1/4 | 2'-2 1/2 | 2'-4" | 4'-10 3/16 | 7" |
| H=7 LONG WING | 25'-8" | 7'-10" | 1'-5" | 12'-10" | 34'-11 1/16 | 29'-7 7/8 | 22'-2 1/2 | 4'-7 1/8 | 2'-4" | 9'-6 3/8 | 7" |

TEXAS HIGHWAY DEPARTMENT

# FLARED WINGWALLS - 45° SKEW FOR MULTIPLE CULVERTS

H = 2'-0" TO 7'-0" INCLUSIVE

MCW-FI-45°

| FED. RD. DIV. NO. | STATE | FEDERAL PROJECT NO. | | | SHEET NO. |
|---|---|---|---|---|---|
| 6 | TEXAS | NH 2000 (704), etc. | | | 396B |
| STATE DIST. NO. | COUNTY | CONT. | SECT. | JOB | HIGHWAY NO. |
| SAT | Bexar | 2452 | 01 | 036 | Lp1604 etc. |

Rev. Nov. 1967

## BILL OF REINFORCING STEEL FOR L = 8'

| CULV SIZE S | H | TYPE SECT. | DIMENSIONS T | U | MAX. FILL | TOTAL QUANTITIES FOR L = 8' CONC C.Y. | REINF. LBS. | QUANTITIES P.L.F. OF BARREL CONC C.Y. | REINF. LBS. | BARS A TOP SLAB NO | SIZE | SPA | LG. | WT | BARS B BOTTOM SLAB NO | SIZE | SPA | LG | WT | BARS C NO | SIZE | SPA | LG. | WT. | #4 BARS D @ 18" ± C TO C. NO | LG | WT | #4 BARS F @ 18" MAX. LENGTH = L - 7" F1 | SPA | F2 | SPA | F3 | SPA | TOTAL | WT. | LIFT. WEIGHT L = 8' LBS |
|---|---|---|---|---|---|---|---|---|---|---|---|---|---|---|---|---|---|---|---|---|---|---|---|---|---|---|---|---|---|---|---|---|---|---|---|---|
| 3 | 2 | 1 | 6" | 6" | 22' | 1.778 | 245 | .2222 | 30.63 | 12 | #4 | 8" | 3'-6" | 28 | | | | | | 17 | #4 | 5½" | 13'-6" | 153 | | | | 3 | 14" | 8 | 14" | 2 | 15" | 13 | 64 | 7,370 |
| | 3 | 1 | 6" | 6" | 22' | 2.074 | 279 | .2592 | 34.88 | 12 | #4 | 8" | 3'-6" | 28 | | | | | | 17 | #4 | 5½" | 15'-6" | 176 | | | | 3 | 14" | 8 | 14" | 4 | 14" | 15 | 75 | 8,590 |
| 4 | 2 | 1 | 6" | 6" | 18' | 2.074 | 373 | .2592 | 46.63 | 11 | #5 | 9" | 4'-6" | 52 | | | | | | 15 | #5 | 6½" | 15'-6" | 242 | | | | 4 | 18" | 10 | 18" | 2 | 15" | 16 | 79 | 8,660 |
| | 3 | 1 | 6" | 6" | 18' | 2.370 | 437 | .2963 | 54.63 | 12 | #5 | 8½" | 4'-6" | 56 | | | | | | 16 | #5 | 6" | 17'-6" | 292 | | | | 4 | 18" | 10 | 18" | 4 | 14" | 18 | 89 | 9,900 |
| | 4 | 1 | 6" | 6" | 18' | 2.667 | 470 | .3333 | 58.75 | 12 | #5 | 8½" | 4'-6" | 56 | | | | | | 16 | #5 | 6" | 19'-6" | 325 | | | | 4 | 18" | 10 | 18" | 4 | 18" | 18 | 89 | 11,130 |
| 5 | 2 | 2 | 6" | 6" | 14' | 2.370 | 446 | .2963 | 55.88 | 12 | #5 | 8" | 5'-6" | 69 | 13 | #5 | 7½" | 5'-6" | 75 | 11 | #5 | 9" | 17'-8" | 203 | | | | 8 | 17" | 10 | 17" | 2 | 15" | 20 | 100 | 9,910 |
| | 3 | 2 | 6" | 6" | 14' | 2.667 | 490 | .3333 | 61.25 | 13 | #5 | 7½" | 5'-6" | 75 | 14 | #5 | 7" | 5'-6" | 80 | 11 | #5 | 9½" | 19'-8" | 226 | | | | 8 | 17" | 10 | 17" | 4 | 14" | 22 | 109 | 11,140 |
| | 4 | 2 | 6" | 6" | 14' | 2.963 | 501 | .3704 | 62.63 | 14 | #5 | 7" | 5'-6" | 80 | 15 | #5 | 6½" | 5'-6" | 86 | 10 | #5 | 10" | 21'-8" | 226 | | | | 8 | 17" | 10 | 17" | 4 | 18" | 22 | 109 | 12,350 |
| | 5 | 3 | 6" | 7" | 14' | 3.556 | 623 | .4445 | 77.88 | 12 | #5 | 8" | 5'-8" | 71 | 14 | #5 | 7" | 5'-8" | 83 | 10 | #5 | 10½" | 24'-8" | 257 | 12 | 5'-6" | 44 | 10 | 17" | 12 | 17" | 12 | 18" | 34 | 168 | 14,830 |
| 6 | 3 | 2 | 6" | 6" | 12' | 2.963 | 639 | .3704 | 79.88 | 16 | #5 | 6" | 6'-6" | 108 | 16 | #5 | 6" | 6'-6" | 108 | 13 | #5 | 7½" | 21'-8" | 294 | | | | 10 | 15" | 12 | 15" | 4 | 14" | 26 | 129 | 12,440 |
| | 4 | 2 | 6" | 6" | 12' | 3.259 | 648 | .4074 | 81.00 | 16 | #5 | 6" | 6'-6" | 108 | 17 | #5 | 5½" | 6'-6" | 115 | 12 | #5 | 8" | 23'-8" | 296 | | | | 10 | 15" | 12 | 15" | 4 | 18" | 26 | 129 | 13,650 |
| | 5 | 3 | 6" | 7" | 12' | 3.852 | 752 | .4815 | 94.00 | 15 | #5 | 6½" | 6'-8" | 104 | 16 | #5 | 6" | 6'-8" | 111 | 12 | #5 | 8½" | 26'-0" | 325 | 12 | 5'-6" | 44 | 10 | 16" | 12 | 16" | 12 | 18" | 34 | 168 | 16,120 |
| | 6 | 3 | 6" | 7" | 12' | 4.198 | 821 | .5248 | 102.63 | 11 | #6 | 9½" | 6'-8" | 110 | 12 | #6 | 8" | 6'-8" | 120 | 12 | #5 | 8" | 28'-0" | 350 | 12 | 6'-6" | 52 | 10 | 16" | 12 | 16" | 16 | 16" | 38 | 189 | 17,570 |
| 7 | 3 | 2 | 6½" | 6" | 12' | 3.457 | 875 | .4321 | 109.38 | 14 | #6 | 7" | 7'-6" | 158 | 14 | #6 | 7" | 7'-6" | 158 | 12 | #6 | 8" | 23'-10" | 430 | | | | 10 | 18" | 12 | 18" | 4 | 14" | 26 | 129 | 14,600 |
| | 4 | 2 | 6½" | 6" | 12' | 3.753 | 941 | .4691 | 117.63 | 14 | #6 | 7" | 7'-6" | 158 | 15 | #6 | 6½" | 7'-6" | 169 | 12 | #6 | 8½" | 25'-10" | 466 | | | | 12 | 18" | 14 | 18" | 4 | 18" | 30 | 148 | 15,850 |
| | 5 | 3 | 6½" | 7" | 12' | 4.350 | 1,020 | .5438 | 127.50 | 13 | #6 | 7½" | 7'-8" | 150 | 11 | #7 | 9½" | 7'-8" | 172 | 11 | #6 | 9½" | 28'-2" | 465 | 12 | 5'-6" | 44 | 12 | 17" | 14 | 17" | 12 | 18" | 38 | 189 | 18,320 |
| | 6 | 3 | 6½" | 7" | 12' | 4.695 | 1,087 | .5869 | 135.88 | 10 | #7 | 10" | 7'-8" | 157 | 11 | #7 | 9" | 7'-8" | 172 | 11 | #6 | 9½" | 30'-2" | 498 | 12 | 6'-6" | 52 | 12 | 17" | 14 | 17" | 16 | 16" | 42 | 208 | 19,760 |
| | 7 | 3 | 6½" | 7" | 12' | 5.041 | 1,142 | .6301 | 142.75 | 13 | #6 | 7½" | 7'-8" | 150 | 15 | #6 | 6½" | 7'-8" | 173 | 11 | #6 | 9" | 32'-2" | 531 | 12 | 7'-6" | 60 | 12 | 17" | 14 | 17" | 20 | 15" | 46 | 228 | 21,200 |
| 8 | 4 | 2 | 6½" | 6" | 10' | 4.074 | 1,314 | .5093 | 164.25 | 15 | #7 | 6½" | 8'-6" | 261 | 16 | #7 | 6" | 8'-6" | 278 | 15 | #6 | 6½" | 27'-10" | 627 | | | | 12 | 17" | 14 | 17" | 4 | 18" | 30 | 148 | 17,400 |
| | 5 | 3 | 6½" | 7" | 10' | 4.671 | 1,310 | .5838 | 163.75 | 12 | #7 | 8" | 8'-8" | 213 | 13 | #7 | 7½" | 8'-8" | 230 | 14 | #6 | 7" | 30'-2" | 634 | 12 | 5'-6" | 44 | 12 | 17" | 14 | 17" | 12 | 18" | 38 | 189 | 19,820 |
| | 6 | 3 | 6½" | 7" | 10' | 5.017 | 1,397 | .6271 | 174.63 | 12 | #7 | 8" | 8'-8" | 213 | 14 | #7 | 7" | 8'-8" | 248 | 14 | #6 | 7" | 32'-2" | 676 | 12 | 6'-6" | 52 | 12 | 17" | 14 | 17" | 16 | 16" | 42 | 208 | 21,280 |
| | 7 | 3 | 6½" | 7" | 10' | 5.362 | 1,484 | .6703 | 185.50 | 13 | #7 | 7½" | 8'-8" | 230 | 14 | #7 | 7" | 8'-8" | 248 | 14 | #6 | 7" | 34'-2" | 718 | 12 | 7'-6" | 60 | 12 | 17" | 14 | 17" | 20 | 15" | 46 | 228 | 22,740 |
| | 8 | 3 | 6½" | 8" | 10' | 6.157 | 1,461 | .7696 | 182.63 | 12 | #7 | 8½" | 8'-10" | 217 | 13 | #7 | 7½" | 8'-10" | 235 | 13 | #6 | 7½" | 36'-6" | 713 | 12 | 8'-6" | 68 | 12 | 18" | 14 | 18" | 20 | 18" | 46 | 228 | 25,940 |
| 9 | 5 | 3 | 7" | 7" | 10' | 5.242 | 1,602 | .6553 | 200.25 | 14 | #7 | 7" | 9'-8" | 277 | 15 | #7 | 6½" | 9'-8" | 296 | 16 | #6 | 6" | 32'-4" | 777 | 12 | 5'-6" | 44 | 14 | 17" | 16 | 17" | 12 | 18" | 42 | 208 | 22,340 |
| | 6 | 3 | 7" | 7" | 10' | 5.588 | 1,717 | .6985 | 214.63 | 15 | #7 | 6½" | 9'-8" | 296 | 16 | #7 | 6" | 9'-8" | 316 | 16 | #6 | 6" | 34'-4" | 825 | 12 | 6'-6" | 52 | 14 | 17" | 16 | 17" | 16 | 16" | 46 | 228 | 23,820 |
| | 7 | 3 | 7" | 7" | 10' | 5.934 | 1,793 | .7417 | 221.13 | 15 | #7 | 6½" | 9'-8" | 296 | 16 | #7 | 6" | 9'-8" | 316 | 16 | #6 | 6" | 36'-4" | 873 | 12 | 7'-6" | 60 | 14 | 17" | 16 | 17" | 20 | 15" | 50 | 248 | 25,270 |
| | 8 | 3 | 7" | 8" | 10' | 6.733 | 1,846 | .8416 | 230.75 | 14 | #7 | 7" | 9'-10" | 281 | 15 | #7 | 6½" | 9'-10" | 301 | 12 | #7 | 8" | 38'-8" | 948 | 12 | 8'-6" | 68 | 14 | 17" | 16 | 17" | 20 | 18" | 50 | 248 | 28,540 |
| | 9 | 3 | 7" | 8" | 10' | 7.128 | 1,923 | .8909 | 240.38 | 14 | #7 | 7" | 9'-10" | 281 | 15 | #7 | 6½" | 9'-10" | 301 | 12 | #7 | 8" | 40'-8" | 997 | 12 | 9'-6" | 76 | 14 | 17" | 16 | 17" | 24 | 17" | 54 | 268 | 30,200 |
| 10 | 5 | 3 | 7" | 7" | 10' | 5.588 | 2,067 | .6985 | 258.38 | 17 | #7 | 5½" | 10'-8" | 371 | 17 | #7 | 5½" | 10'-8" | 371 | 15 | #7 | 6½" | 34'-4" | 1053 | 12 | 5'-6" | 44 | 16 | 16" | 18 | 16" | 12 | 18" | 46 | 228 | 24,060 |
| | 6 | 3 | 7" | 7" | 10' | 5.534 | 2,156 | .7417 | 269.50 | 17 | #7 | 5½" | 10'-8" | 371 | 17 | #7 | 5½" | 10'-8" | 371 | 15 | #7 | 6½" | 36'-4" | 1114 | 12 | 6'-6" | 52 | 16 | 16" | 18 | 16" | 16 | 16" | 50 | 248 | 25,520 |
| | 7 | 3 | 7" | 7" | 10' | 6.279 | 2,245 | .7849 | 280.63 | 17 | #7 | 5½" | 10'-8" | 371 | 17 | #7 | 5½" | 10'-8" | 371 | 15 | #7 | 6½" | 38'-4" | 1175 | 12 | 7'-6" | 60 | 16 | 16" | 18 | 16" | 20 | 15" | 54 | 268 | 26,980 |
| | 8 | 3 | 7" | 8" | 10' | 7.078 | 2,313 | .8848 | 289.13 | 16 | #7 | 6" | 10'-10" | 354 | 17 | #7 | 5½" | 10'-10" | 376 | 15 | #7 | 6½" | 40'-8" | 1247 | 12 | 8'-6" | 68 | 16 | 16" | 18 | 16" | 20 | 18" | 54 | 268 | 30,260 |
| | 9 | 3 | 7" | 8" | 10' | 7.473 | 2,401 | .9342 | 300.13 | 16 | #7 | 6" | 10'-10" | 354 | 17 | #7 | 5½" | 10'-10" | 376 | 15 | #7 | 6½" | 42'-8" | 1308 | 12 | 9'-6" | 76 | 16 | 16" | 18 | 16" | 24 | 17" | 58 | 287 | 31,920 |
| | 10 | 3 | 7" | 8" | 10' | 7.866 | 2,582 | .9835 | 322.75 | 16 | #7 | 6" | 10'-10" | 354 | 17 | #7 | 5½" | 10'-10" | 376 | 16 | #7 | 6" | 44'-8" | 1461 | 12 | 10'-6" | 84 | 16 | 16" | 18 | 16" | 28 | 16" | 62 | 307 | 33,650 |

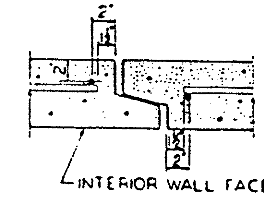


SINGLE MAT PLACEMENT

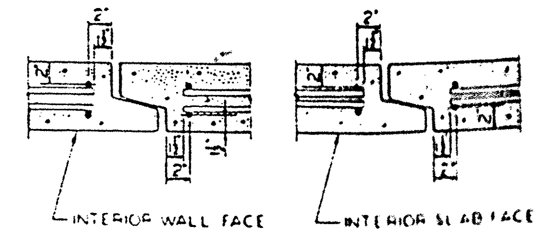


DOUBLE MAT PLACEMENT

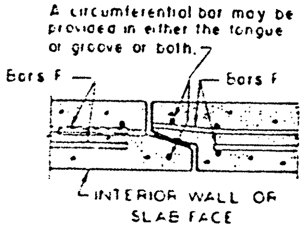


STEEL SUPPORT DETAIL

NOTE: As many Bars F as necessary may be extended to end of box to support steel during manufacture. Bars may be slightly bent to clear slope on groove lip as shown in detail. Alternatively the steel may be supported by bar extensions welded to Bars F.

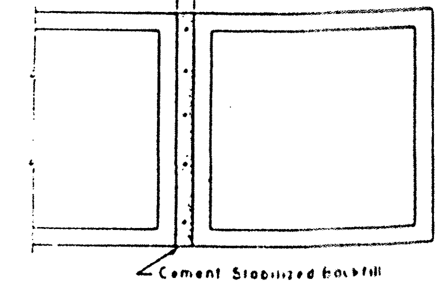


MULTIPLE UNIT PLACEMENT

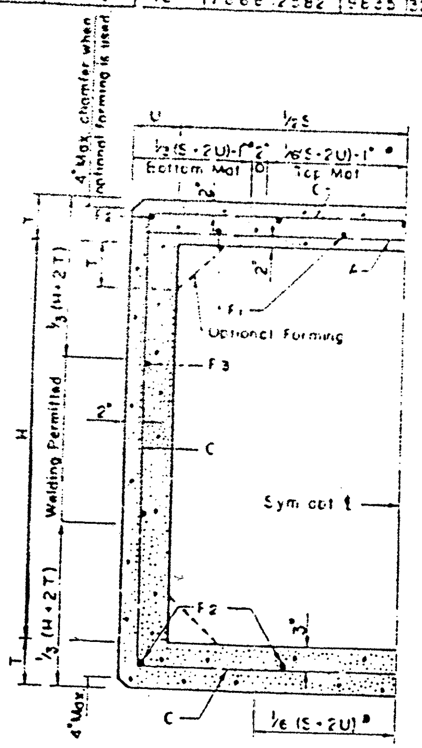


HALF SECTION

TYPE 1

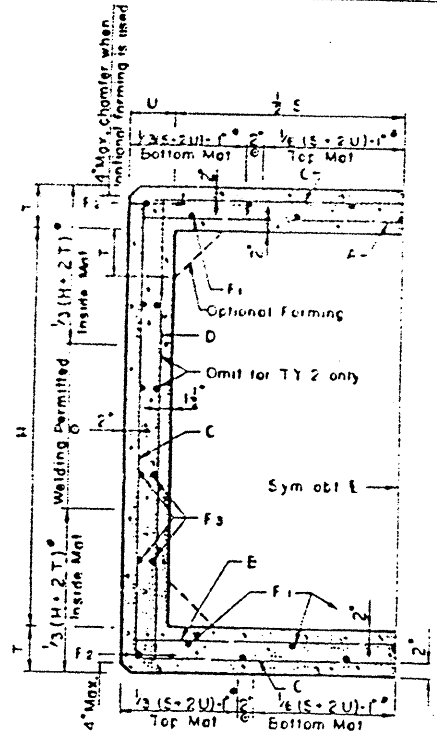


HALF SECTION

TYPES 2 & 3

*Permissible tack welding on mats shown.
©Permissible tack welding both mats.

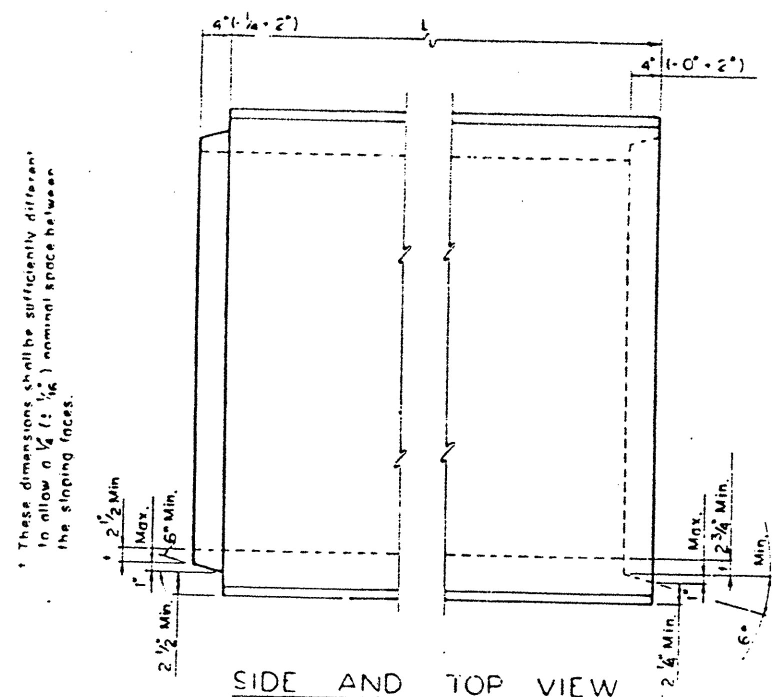


SIDE AND TOP VIEW

NOTE: Tongue and groove dimensional controls shown are intended to allow either a 4" long 1" slope joint, a 6" long 6" slope joint or any joint configuration within these limits. Dimensions shown as minimums shall be maintained around the perimeter of the box.

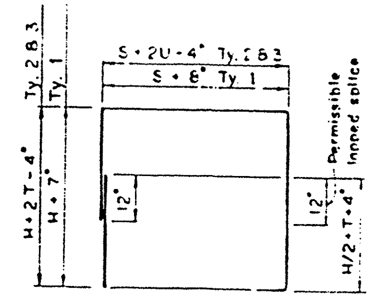


BARS C

GENERAL NOTES

Cement Stabilized Backfill shall be considered subsidiary to the unit price bid for Concrete Box.

All welding to be done by qualified welder.

Cross sectional area of gasket material shall not be less than 3.25 sq. in.

Additional splices in reinforcing steel not shown hereon, must be submitted to the Bridge Division for approval prior to fabrication.

Grade 60 Bars or Wire Fabric may be used in place of Grade 40 Steel by supplying 67% of the area of steel per linear foot shown in the Tables for bars A, B, C and D.

Longitudinal steel shall have at least as much area as bars F and shall be spaced at 18" c.c. maximum.

These designs are adequate for HS 20 live loading and any fill from 2'-0" to the maximum shown in the tables.

In lieu of furnishing the designs shown on this detail the contractor may use designs from either Std. PC-4, PC-7 or ASTM C-789, Table 1. In either △ case, the substituted design must equal or exceed the maximum fill height for the same sized box in the table on this detail. For boxes reinforced with wire fabric the minimum cover shall be three times the wire diameter but not less than one inch. Placing of reinforcement shall otherwise conform to specification "Reinforcing Steel".

TEXAS HIGHWAY DEPARTMENT
BRIDGE DIVISION

# PRECAST CONCRETE BOX CULVERTS

PC-2

| ORIGINAL DRAWING DATE MARCH 1982 | STATE DISTRICT | FEDERAL REGION | FEDERAL AID PROJECT | SHEET |
|---|---|---|---|---|
| REVISIONS: Rev. (General Notes); Rev. (General Notes) | 15 | 6 | | 396C |
| | COUNTY: BEXAR | | 2452 | |

## OF REINFORCING STEEL FOR L=8'

| Culv. Size S | Culv. Size H | Type Sect. | Dimensions T | Dimensions U | Max Fill | Total Quantities for L=8' Conc. C.Y. | Total Quantities for L=8' Reinf. LBS. | Quantities of Barrel Conc. C.Y. | Quantities of Barrel Reinf. LBS. | Bars A Top Slab No | Size | Spa | Lg. | Wt. | Bars B Bottom Slab No | Size | Spa | Lg. | Wt. | Bars C No. | Size | Spa | Lg. | Wt. | #4 Bars D @18"± C. to C. No. | Lg. | Wt. | #4 Bars F @ 18" Max. Length L-7" F1 | Spa | F2 | Spa | F3 | Spa | Total | Wt. | Lift. Weight L=8' LBS. |
|---|---|---|---|---|---|---|---|---|---|---|---|---|---|---|---|---|---|---|---|---|---|---|---|---|---|---|---|---|---|---|---|---|---|---|---|---|
| 3' | 2 | 1 | 4" | 4" | 22' | 1.185 | 243 | .1481 | 30.38 | | | | | | | | | | | 15 | #5 | 6½" | 12'-4" | 193 | | | | | | 8 | 14" | 2 | 15" | 10 | 50 | 4,980 |
| | 3 | 1 | 4" | 4" | 22' | 1.383 | 283 | .1728 | 35.38 | | | | | | | | | | | 15 | #5 | 6½" | 14'-4" | 224 | | | | | | 8 | 14" | 4 | 14" | 12 | 59 | 5,810 |
| 4' | 2 | 1 | 5" | 5" | 20' | 1.790 | 349 | .2235 | 43.63 | | | | | | | | | | | 13 | #6 | 7½" | 14'-10" | 290 | | | | | | 10 | 14" | 2 | 15" | 12 | 59 | 7,500 |
| | 3 | 1 | 5" | 5" | 20' | 2.037 | 423 | .2546 | 52.88 | | | | | | | | | | | 14 | #6 | 7" | 16'-10" | 354 | | | | | | 10 | 14" | 4 | 14" | 14 | 69 | 8,550 |
| | 4 | 1 | 5" | 5" | 20' | 2.284 | 493 | .2955 | 61.63 | | | | | | | | | | | 15 | #6 | 6½" | 18'-10" | 424 | | | | | | 10 | 14" | 4 | 18" | 14 | 69 | 9,600 |
| 5' | 2 | 2 | 6" | 6" | 14' | 2.518 | 446 | .3148 | 55.75 | 12 | #5 | 8" | 5'-6" | 69 | 13 | #5 | 7½" | 5'-6" | 75 | 11 | #5 | 9" | 17'-8" | 203 | | | | 8 | 17" | 10 | 17" | 2 | 15" | 20 | 99 | 10,510 |
| | 3 | 2 | 6" | 6" | 14' | 2.815 | 469 | .3519 | 58.63 | 13 | #5 | 7½" | 5'-6" | 75 | 14 | #5 | 7" | 5'-6" | 80 | 10 | #5 | 10" | 19'-8" | 205 | | | | 8 | 17" | 10 | 17" | 4 | 14" | 22 | 109 | 11,720 |
| | 4 | 2 | 6" | 6" | 14' | 3.111 | 478 | .3889 | 59.75 | 14 | #5 | 7" | 5'-6" | 80 | 15 | #5 | 6½" | 5'-6" | 86 | 9 | #5 | 11" | 21'-8" | 203 | | | | 8 | 17" | 10 | 17" | 4 | 18" | 22 | 109 | 12,930 |
| | 5 | 3 | 6" | 6" | 14' | 3.407 | 575 | .4259 | 71.88 | 13 | #5 | 7½" | 5'-6" | 75 | 15 | #5 | 6½" | 5'-6" | 86 | 9 | #5 | 12" | 23'-8" | 222 | 12 | 5'-6" | 44 | 8 | 17" | 10 | 17" | 12 | 17" | 30 | 148 | 14,200 |
| 6' | 3 | 2 | 7" | 7" | 12' | 3.714 | 572 | .4643 | 71.50 | 13 | #5 | 7½" | 6'-8" | 90 | 14 | #5 | 7" | 6'-8" | 97 | 11 | #5 | 9" | 22'-4" | 256 | | | | 10 | 16" | 12 | 16" | 4 | 15" | 26 | 129 | 15,440 |
| | 4 | 2 | 7" | 7" | 12' | 4.060 | 609 | .5075 | 76.13 | 14 | #5 | 7" | 6'-8" | 97 | 15 | #5 | 6½" | 6'-8" | 104 | 11 | #5 | 9½" | 24'-4" | 279 | | | | 10 | 16" | 12 | 16" | 4 | 18" | 26 | 129 | 16,660 |
| | 5 | 3 | 7" | 7" | 12' | 4.405 | 695 | .5506 | 86.88 | 14 | #5 | 7" | 6'-8" | 97 | 16 | #5 | 6" | 6'-8" | 111 | 10 | #5 | 10" | 26'-4" | 275 | 12 | 5'-6" | 44 | 10 | 16" | 12 | 16" | 12 | 17" | 34 | 168 | 18,320 |
| | 6 | 3 | 7" | 7" | 12' | 4.751 | 744 | .5939 | 93.00 | 14 | #5 | 7" | 6'-8" | 97 | 16 | #5 | 6" | 6'-8" | 111 | 10 | #5 | 10½" | 28'-4" | 296 | 12 | 6'-6" | 52 | 10 | 16" | 12 | 16" | 16 | 16" | 38 | 188 | 19,750 |
| 7' | 3 | 2 | 8" | 8" | 12' | 4.742 | 698 | .5928 | 87.25 | 14 | #5 | 7" | 7'-10" | 114 | 15 | #5 | 6½" | 7'-10" | 123 | 12 | #5 | 8" | 25'-0" | 313 | | | | 12 | 16" | 14 | 16" | 4 | 15" | 30 | 148 | 19,690 |
| | 4 | 2 | 8" | 8" | 12' | 5.138 | 751 | .6423 | 93.88 | 15 | #5 | 6½" | 7'-10" | 123 | 16 | #5 | 6" | 7'-10" | 131 | 12 | #5 | 8" | 27'-0" | 338 | | | | 12 | 16" | 14 | 16" | 6 | 15" | 32 | 159 | 21,330 |
| | 5 | 3 | 8" | 8" | 12' | 5.533 | 835 | .6916 | 104.38 | 16 | #5 | 6" | 7'-10" | 131 | 17 | #5 | 5½" | 7'-10" | 139 | 11 | #5 | 9" | 29'-0" | 333 | 12 | 5'-6" | 44 | 12 | 16" | 14 | 16" | 12 | 18" | 38 | 188 | 22,980 |
| | 6 | 3 | 8" | 8" | 12' | 5.928 | 886 | .7410 | 110.75 | 16 | #5 | 6" | 7'-10" | 131 | 17 | #5 | 5½" | 7'-10" | 139 | 11 | #5 | 9" | 31'-0" | 356 | 12 | 6'-6" | 52 | 12 | 16" | 14 | 16" | 16 | 17" | 42 | 208 | 24,620 |
| | 7 | 3 | 8" | 8" | 12' | 6.323 | 937 | .7904 | 117.13 | 16 | #5 | 6" | 7'-10" | 131 | 17 | #5 | 5½" | 7'-10" | 139 | 11 | #5 | 9" | 33'-0" | 379 | 12 | 7'-6" | 60 | 12 | 16" | 14 | 16" | 20 | 16" | 46 | 228 | 26,260 |
| 8' | 4 | 2 | 8" | 8" | 10' | 5.533 | 913 | .6916 | 114.13 | 12 | #6 | 8½" | 8'-10" | 159 | 13 | #6 | 7½" | 8'-10" | 172 | 14 | #5 | 7" | 29'-0" | 423 | | | | 12 | 18" | 14 | 18" | 6 | 15" | 32 | 159 | 23,040 |
| | 5 | 3 | 8" | 8" | 10' | 5.928 | 997 | .7410 | 124.63 | 12 | #6 | 8" | 8'-10" | 159 | 14 | #6 | 7" | 8'-10" | 186 | 13 | #5 | 7½" | 31'-0" | 420 | 12 | 5'-6" | 44 | 12 | 18" | 14 | 18" | 12 | 18" | 38 | 188 | 24,700 |
| | 6 | 3 | 8" | 8" | 10' | 6.323 | 1052 | .7904 | 131.50 | 12 | #6 | 8" | 8'-10" | 159 | 14 | #6 | 7" | 8'-10" | 186 | 13 | #5 | 7½" | 33'-0" | 447 | 12 | 6'-6" | 52 | 12 | 18" | 14 | 18" | 16 | 17" | 42 | 208 | 26,330 |
| | 7 | 3 | 8" | 8" | 10' | 6.719 | 1071 | .8399 | 133.88 | 12 | #6 | 8" | 8'-10" | 159 | 14 | #6 | 7" | 8'-10" | 186 | 12 | #5 | 8" | 35'-0" | 438 | 12 | 7'-6" | 60 | 12 | 18" | 14 | 18" | 20 | 16" | 46 | 228 | 27,960 |
| | 8 | 3 | 8" | 8" | 10' | 7.114 | 1104 | .8893 | 138.00 | 12 | #6 | 8" | 8'-10" | 159 | 14 | #6 | 7" | 8'-10" | 186 | 12 | #5 | 8" | 37'-0" | 463 | 12 | 8'-6" | 68 | 12 | 18" | 14 | 18" | 20 | 18" | 46 | 228 | 29,570 |
| 9' | 5 | 3 | 9" | 9" | 10' | 7.222 | 1249 | .9028 | 156.13 | 14 | #6 | 7" | 10'-0" | 210 | 15 | #6 | 6½" | 10'-0" | 225 | 16 | #5 | 6" | 33'-8" | 562 | 12 | 5'-6" | 44 | 14 | 18" | 16 | 18" | 12 | 18" | 42 | 208 | 30,110 |
| | 6 | 3 | 9" | 9" | 10' | 7.665 | 1288 | .9581 | 161.00 | 14 | #6 | 7" | 10'-0" | 210 | 16 | #6 | 6" | 10'-0" | 240 | 15 | #5 | 6½" | 35'-8" | 558 | 12 | 6'-6" | 52 | 14 | 18" | 16 | 18" | 16 | 17" | 46 | 228 | 31,930 |
| | 7 | 3 | 9" | 9" | 10' | 8.111 | 1347 | 1.014 | 168.38 | 14 | #6 | 7" | 10'-0" | 210 | 16 | #6 | 6" | 10'-0" | 240 | 15 | #5 | 6½" | 37'-8" | 589 | 12 | 7'-6" | 60 | 14 | 18" | 16 | 18" | 20 | 16" | 50 | 248 | 33,780 |
| | 8 | 3 | 9" | 9" | 10' | 8.555 | 1402 | 1.069 | 175.25 | 15 | #6 | 6½" | 10'-0" | 225 | 16 | #6 | 6" | 10'-0" | 240 | 15 | #5 | 6½" | 39'-8" | 621 | 12 | 8'-6" | 68 | 14 | 18" | 16 | 18" | 20 | 18" | 50 | 248 | 35,620 |
| | 9 | 3 | 9" | 9" | 10' | 8.999 | 1446 | 1.125 | 180.75 | 14 | #6 | 7" | 10'-0" | 210 | 16 | #6 | 6" | 10'-0" | 240 | 15 | #5 | 6½" | 41'-8" | 652 | 12 | 9'-6" | 76 | 14 | 18" | 16 | 18" | 24 | 17" | 54 | 268 | 37,440 |
| 10' | 5 | 3 | 10" | 10" | 10' | 8.640 | 1461 | 1.080 | 182.63 | 11 | #7 | 9" | 11'-2" | 251 | 12 | #7 | 8½" | 11'-2" | 274 | 17 | #5 | 5½" | 36'-4" | 644 | 12 | 5'-6" | 44 | 16 | 17" | 18 | 17" | 16 | 15" | 50 | 248 | 36,000 |
| | 6 | 3 | 10" | 10" | 10' | 9.133 | 1505 | 1.142 | 188.13 | 11 | #7 | 9" | 11'-2" | 251 | 12 | #7 | 8" | 11'-2" | 274 | 17 | #5 | 5½" | 38'-4" | 680 | 12 | 6'-6" | 52 | 16 | 17" | 18 | 17" | 16 | 18" | 50 | 248 | 38,030 |
| | 7 | 3 | 10" | 10" | 10' | 9.627 | 1572 | 1.203 | 196.50 | 12 | #7 | 8½" | 11'-2" | 274 | 13 | #7 | 7½" | 11'-2" | 297 | 16 | #5 | 6" | 40'-4" | 673 | 12 | 7'-6" | 60 | 16 | 17" | 18 | 17" | 20 | 17" | 54 | 268 | 40,070 |
| | 8 | 3 | 10" | 10" | 10' | 10.120 | 1632 | 1.265 | 204.00 | 12 | #7 | 8½" | 11'-2" | 274 | 13 | #7 | 7½" | 11'-2" | 297 | 16 | #5 | 6" | 42'-4" | 706 | 12 | 8'-6" | 68 | 16 | 17" | 18 | 17" | 24 | 16" | 58 | 287 | 42,110 |
| | 9 | 3 | 10" | 10" | 10' | 10.614 | 1674 | 1.327 | 209.25 | 12 | #7 | 8½" | 11'-2" | 274 | 13 | #7 | 7½" | 11'-2" | 297 | 16 | #5 | 6" | 44'-4" | 740 | 12 | 9'-6" | 76 | 16 | 17" | 18 | 17" | 24 | 18" | 58 | 287 | 44,140 |
| | 10 | 3 | 10" | 10" | 10' | 11.108 | 1735 | 1.389 | 216.88 | 12 | #7 | 8½" | 11'-2" | 274 | 13 | #7 | 7½" | 11'-2" | 297 | 16 | #5 | 6" | 46'-4" | 773 | 12 | 10'-6" | 84 | 16 | 17" | 18 | 17" | 28 | 17" | 62 | 307 | 46,180 |

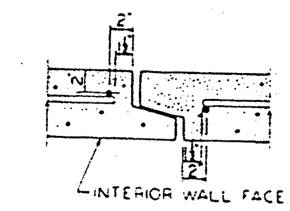


SINGLE MAT PLACEMENT

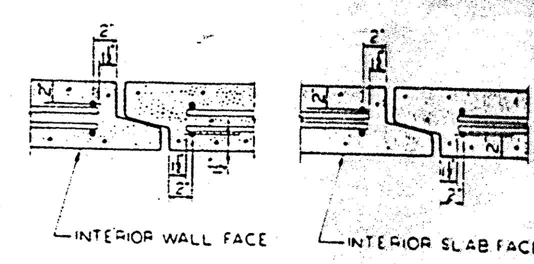


DOUBLE MAT PLACEMENT

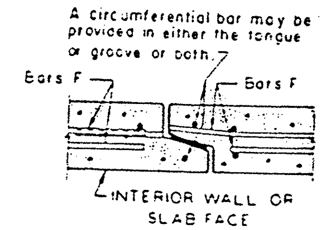


STEEL SUPPORT DETAIL

NOTE: As many Bars F as necessary may be extended to end of box to support steel during manufacture. Bars may be slightly bent to clear slope on groove lip as shown in detail. Alternatively the steel may be supported by bar extensions welded to Bars F.

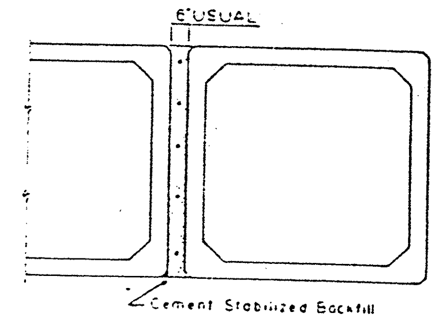


MULTIPLE UNIT PLACEMENT

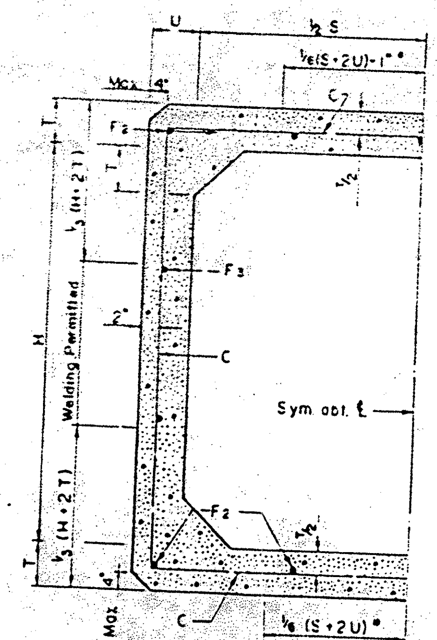


HALF SECTION TYPE 1

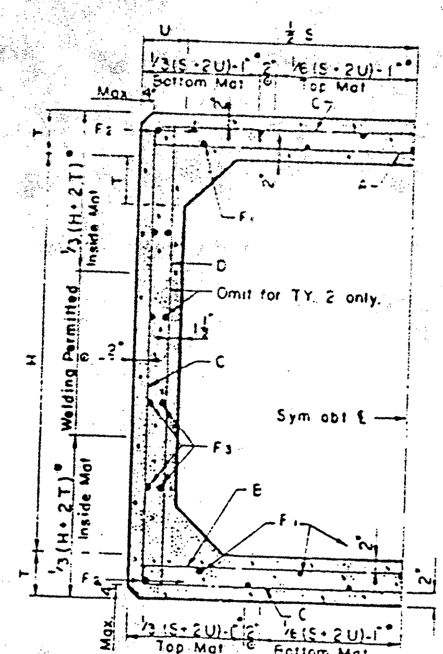


HALF SECTION TYPES 2 & 3

*Permissible tack welding of mats shown.
⊙Permissible tack welding both mats.

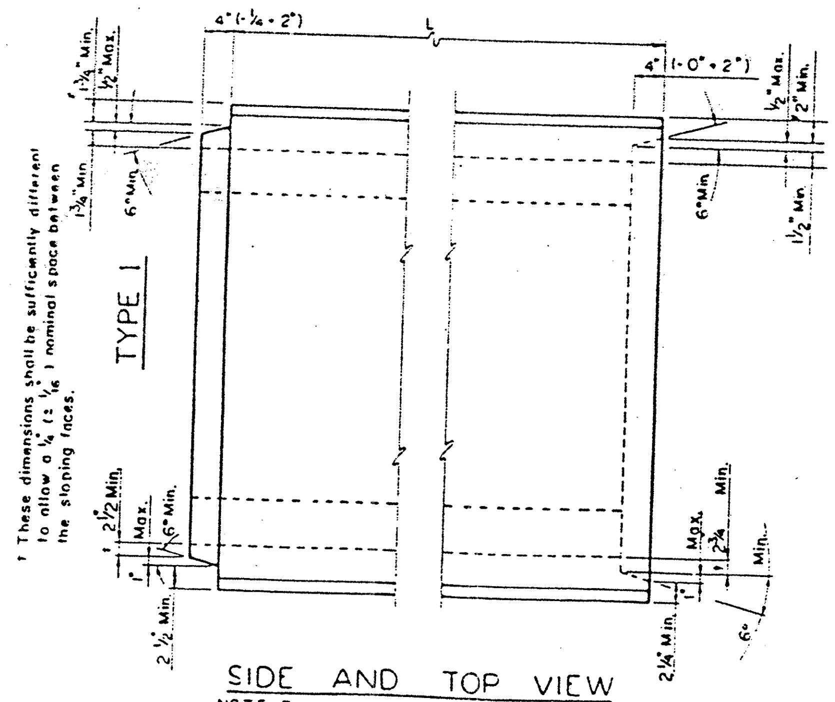


SIDE AND TOP VIEW

NOTE: Tongue and groove dimensional controls shown are intended to allow either a 4" long 1" slope joint, a 6" long 6" slope joint or any joint configuration within these limits. Dimensions shown as minimums shall be maintained around the perimeter of the box.

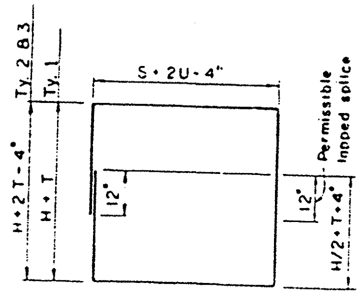


BARS C

GENERAL NOTES:

Cement Stabilized Backfill shall be subsidiary to the unit price bid for Concrete Box.

All welding to be done by qualified welder.

Additional splices in reinforcing steel not shown hereon, must be submitted to the Bridge Division for approval prior to fabrication.

Grade 60 Bars or Wire Fabric may be used in place of Grade 40 Steel by supplying 62% of the area of steel per linear foot shown in the Tables for Bars A, B, C and D.

Longitudinal shall have at least as much area as Bars F and shall be spaced at 18" c.c maximum.

These designs are adequate for HS 20 live loading and any fill from 2'-0" to the maximum shown in the tables.

In lieu of furnishing the designs shown on this detail the contractor may use designs from either Std. PC-2, PC-7 or ASTM C-789, Table I. In either case, △ the substituted design must equal or exceed the maximum fill height for the same sized box in the table on this detail. For boxes reinforced with wire fabric the minimum cover shall be three times the wire diameter but not less than one inch. Placing of reinforcement shall otherwise conform to the specification "Reinforcing Steel"

TEXAS HIGHWAY DEPARTMENT
BRIDGE DIVISION

# PRECAST CONCRETE BOX CULVERTS

PC-4

Original drawing date March 1962
Revisions: △ Rev. 1: 8-81 (Gen. Notes); Rev. 2: 8-81 (Gen. Notes)
Sheet 3 of D

| CULV SIZE | | TYPE SECT | DIMENSIONS | | MAX FILL | TOTAL QUANTITIES FOR L=8' | | QUANTITIES PER L.F. OF BARREL | | BILL OF REINFORCING STEEL FOR L=8' — BARS A TOP SLAB | | | | | BARS B BOTTOM SLAB | | | | | BARS C | | | | | #4 BARS D @18"± C. TO C. | | | #4 BARS F @ 18" MAX. LENGTH L-7" | | | | | | | | LIFT. WEIGHT L=8' |
|---|---|---|---|---|---|---|---|---|---|---|---|---|---|---|---|---|---|---|---|---|---|---|---|---|---|---|---|---|---|---|---|---|---|---|---|---|
| S | H | | T | U | | CONC C.Y. | REINF LBS | CONC C.Y. | REINF LBS | NO | SIZE | SPA | LG. | WT | NO | SIZE | SPA | LG | WT. | NO | SIZE | SPA | LG. | WT. | NO | LG | WT. | F1 | SPA | F2 | SPA | F3 | SPA | TOTAL | WT. | LBS |
| 3' | 2' | 1 | 4" | 4" | 26' | 1.165 | 272 | .1481 | 34.00 | | | | | | | | | | | 12 | #6 | 8" | 12'-4" | 222 | | | | | | 8 | 14" | 2 | 15" | 10 | 50 | 5,000 |
| | 3' | 1 | 4" | 4" | 26' | 1.383 | 339 | .1728 | 42.38 | | | | | | | | | | | 13 | #6 | 7½" | 14'-4" | 280 | | | | | | 8 | 14" | 4 | 14" | 12 | 59 | 5,650 |
| | 2' | 1 | 5" | 5" | 24' | 1.790 | 393 | .2238 | 49.13 | | | | | | | | | | | 15 | #6 | 6½" | 14'-10" | 334 | | | | | | 10 | 14" | 2 | 15" | 12 | 59 | 7,530 |
| | 3' | 1 | 5" | 5" | 24' | 2.037 | 474 | .2546 | 59.25 | | | | | | | | | | | 16 | #6 | 6" | 16'-10" | 405 | | | | | | 10 | 14" | 4 | 14" | 14 | 69 | 8,590 |
| | 4' | 1 | 5" | 5" | 24' | 2.284 | 522 | .2855 | 65.25 | | | | | | | | | | | 16 | #6 | 6" | 18'-10" | 453 | | | | | | 10 | 14" | 4 | 18" | 14 | 69 | 9,620 |
| 5' | 2' | 2 | 6" | 6" | 22' | 2.518 | 615 | .3148 | 76.88 | 10 | #7 | 10½" | 5'-6" | 112 | 10 | #7 | 10" | 5'-6" | 112 | 11 | #6 | 9" | 17'-8" | 292 | | | | 8 | 17" | 10 | 17" | 2 | 15" | 20 | 99 | 10,620 |
| | 3' | 2 | 6" | 6" | 22' | 2.815 | 652 | .3519 | 81.50 | 11 | #7 | 9½" | 5'-6" | 124 | 11 | #7 | 9½" | 5'-6" | 124 | 10 | #6 | 10" | 19'-8" | 295 | | | | 8 | 17" | 10 | 17" | 4 | 14" | 22 | 109 | 11,950 |
| | 4' | 2 | 6" | 6" | 22' | 3.111 | 650 | .3889 | 81.25 | 11 | #7 | 9½" | 5'-6" | 124 | 11 | #7 | 9" | 5'-6" | 124 | 9 | #6 | 11" | 21'-8" | 293 | | | | 8 | 17" | 10 | 17" | 4 | 18" | 22 | 109 | 13,050 |
| | 5' | 3 | 6" | 6" | 22' | 3.407 | 760 | .4259 | 95.00 | 11 | #7 | 9½" | 5'-6" | 124 | 11 | #7 | 9" | 5'-6" | 124 | 9 | #6 | 11" | 23'-8" | 320 | 12 | 5'-6" | 44 | 8 | 17" | 10 | 17" | 12 | 17" | 30 | 148 | 14,320 |
| 6' | 3' | 2 | 7" | 7" | 22' | 3.714 | 893 | .4643 | 111.63 | 12 | #7 | 9½" | 6'-8" | 164 | 12 | #7 | 8" | 6'-8" | 164 | 13 | #6 | 7½" | 22'-4" | 436 | | | | 10 | 16" | 12 | 16" | 4 | 15" | 26 | 129 | 15,660 |
| | 4' | 2 | 7" | 7" | 22' | 4.060 | 909 | .5075 | 113.63 | 12 | #7 | 8" | 6'-8" | 164 | 13 | #7 | 7½" | 6'-8" | 177 | 12 | #6 | 8½" | 24'-4" | 439 | | | | 10 | 16" | 12 | 16" | 4 | 18" | 26 | 129 | 17,070 |
| | 5' | 3 | 7" | 7" | 22' | 4.405 | 988 | .5506 | 123.50 | 12 | #7 | 8" | 6'-8" | 164 | 13 | #7 | 7½" | 6'-8" | 177 | 11 | #6 | 9" | 26'-4" | 435 | 12 | 5'-6" | 44 | 10 | 16" | 12 | 16" | 12 | 17" | 34 | 168 | 18,520 |
| | 6' | 3 | 7" | 7" | 22' | 4.751 | 1049 | .5939 | 131.13 | 12 | #7 | 8" | 6'-8" | 164 | 13 | #7 | 7½" | 6'-8" | 177 | 11 | #6 | 9" | 28'-4" | 468 | 12 | 6'-6" | 52 | 10 | 16" | 12 | 16" | 16 | 16" | 38 | 188 | 19,970 |
| 7' | 3' | 2 | 8" | 8" | 23' | 4.742 | 1127 | .5928 | 140.88 | 13 | #7 | 7½" | 7'-10" | 208 | 13 | #7 | 7½" | 7'-10" | 208 | 15 | #6 | 6½" | 25'-0" | 563 | | | | 12 | 16" | 14 | 16" | 4 | 15" | 30 | 148 | 19,980 |
| | 4' | 2 | 8" | 8" | 23' | 5.138 | 1159 | .6423 | 144.88 | 13 | #7 | 7½" | 7'-10" | 208 | 14 | #7 | 7" | 7'-10" | 224 | 14 | #6 | 7" | 27'-0" | 568 | | | | 12 | 16" | 14 | 16" | 6 | 15" | 32 | 159 | 21,610 |
| | 5' | 3 | 8" | 8" | 23' | 5.533 | 1262 | .6916 | 157.75 | 14 | #7 | 7" | 7'-10" | 224 | 15 | #7 | 6½" | 7'-10" | 240 | 13 | #6 | 7½" | 29'-0" | 566 | 12 | 5'-6" | 44 | 12 | 16" | 14 | 16" | 12 | 18" | 36 | 188 | 23,280 |
| | 6' | 3 | 8" | 8" | 23' | 5.928 | 1283 | .7410 | 160.38 | 14 | #7 | 7" | 7'-10" | 224 | 15 | #7 | 6½" | 7'-10" | 240 | 12 | #6 | 8" | 31'-0" | 559 | 12 | 6'-6" | 52 | 12 | 16" | 14 | 16" | 16 | 17" | 42 | 208 | 24,890 |
| | 7' | 3 | 8" | 8" | 23' | 6.323 | 1347 | .7904 | 168.38 | 14 | #7 | 7" | 7'-10" | 224 | 15 | #7 | 6½" | 7'-10" | 240 | 12 | #6 | 8" | 33'-0" | 595 | 12 | 7'-6" | 60 | 12 | 16" | 14 | 16" | 20 | 16" | 46 | 228 | 26,540 |
| 8' | 4' | 2 | 8" | 8" | 20' | 5.533 | 1415 | .6916 | 176.88 | 15 | #7 | 6½" | 8'-10" | 270 | 16 | #7 | 6" | 8'-10" | 289 | 16 | #6 | 6" | 29'-0" | 697 | | | | 12 | 18" | 14 | 18" | 6 | 15" | 32 | 159 | 23,390 |
| | 5' | 3 | 8" | 8" | 20' | 5.928 | 1489 | .7410 | 186.13 | 15 | #7 | 6½" | 8'-10" | 270 | 16 | #7 | 6" | 8'-10" | 289 | 15 | #6 | 6½" | 31'-0" | 698 | 12 | 5'-6" | 44 | 12 | 18" | 14 | 18" | 12 | 18" | 36 | 188 | 25,040 |
| | 6' | 3 | 8" | 8" | 20' | 6.323 | 1581 | .7904 | 197.63 | 16 | #7 | 6" | 8'-10" | 289 | 16 | #7 | 6" | 8'-10" | 289 | 15 | #6 | 6½" | 33'-0" | 743 | 12 | 6'-6" | 52 | 12 | 18" | 14 | 18" | 16 | 17" | 42 | 208 | 26,700 |
| | 7' | 3 | 8" | 8" | 20' | 6.719 | 1673 | .8399 | 209.13 | 16 | #7 | 6" | 8'-10" | 289 | 17 | #7 | 5½" | 8'-10" | 307 | 15 | #6 | 6½" | 35'-0" | 789 | 12 | 7'-6" | 60 | 12 | 18" | 14 | 18" | 20 | 16" | 46 | 228 | 28,370 |
| | 8' | 3 | 8" | 8" | 20' | 7.114 | 1670 | .8893 | 208.75 | 16 | #7 | 6" | 8'-10" | 289 | 17 | #7 | 5½" | 8'-10" | 307 | 14 | #6 | 7" | 37'-0" | 778 | 12 | 8'-6" | 68 | 12 | 18" | 14 | 18" | 20 | 18" | 46 | 228 | 29,960 |
| 9' | 5' | 3 | 9" | 9" | 20' | 7.222 | 1936 | .9208 | 242.00 | 13 | #8 | 7½" | 10'-0" | 347 | 14 | #8 | 7" | 10'-0" | 374 | 14 | #7 | 7" | 33'-8" | 963 | 12 | 5'-6" | 44 | 14 | 18" | 16 | 18" | 12 | 18" | 42 | 208 | 30,580 |
| | 6' | 3 | 9" | 9" | 20' | 7.665 | 2003 | .9581 | 250.38 | 14 | #8 | 7" | 10'-0" | 374 | 15 | #8 | 6½" | 10'-0" | 401 | 13 | #7 | 7½" | 35'-8" | 948 | 12 | 6'-6" | 52 | 14 | 18" | 16 | 18" | 16 | 17" | 46 | 228 | 32,430 |
| | 7' | 3 | 9" | 9" | 20' | 8.111 | 2007 | 1.014 | 250.88 | 14 | #8 | 7" | 10'-0" | 374 | 15 | #8 | 6½" | 10'-0" | 401 | 12 | #7 | 8" | 37'-8" | 924 | 12 | 7'-6" | 60 | 14 | 18" | 16 | 18" | 20 | 16" | 50 | 248 | 34,230 |
| | 8' | 3 | 9" | 9" | 20' | 8.555 | 2064 | 1.069 | 258.00 | 14 | #8 | 7" | 10'-0" | 374 | 15 | #8 | 6½" | 10'-0" | 401 | 12 | #7 | 8" | 39'-8" | 973 | 12 | 8'-6" | 68 | 14 | 18" | 16 | 18" | 20 | 18" | 50 | 248 | 36,070 |
| | 9' | 3 | 9" | 9" | 20' | 8.999 | 2141 | 1.125 | 267.63 | 14 | #8 | 7" | 10'-0" | 374 | 15 | #8 | 6½" | 10'-0" | 401 | 12 | #7 | 8" | 41'-8" | 1022 | 12 | 9'-6" | 76 | 14 | 18" | 16 | 18" | 24 | 17" | 54 | 268 | 37,920 |
| 10' | 5' | 3 | 10" | 10" | 21' | 8.640 | 2300 | 1.080 | 287.50 | 15 | #8 | 6½" | 11'-2" | 447 | 15 | #8 | 6½" | 11'-2" | 447 | 15 | #7 | 6½" | 36'-4" | 1114 | 12 | 5'-6" | 44 | 16 | 17" | 18 | 17" | 16 | 15" | 50 | 248 | 36,580 |
| | 6' | 3 | 10" | 10" | 21' | 9.133 | 2369 | 1.142 | 296.13 | 15 | #8 | 6½" | 11'-2" | 447 | 15 | #8 | 6½" | 11'-2" | 447 | 15 | #7 | 6½" | 38'-4" | 1175 | 12 | 6'-6" | 52 | 16 | 17" | 18 | 17" | 16 | 18" | 50 | 248 | 38,620 |
| | 7' | 3 | 10" | 10" | 21' | 9.627 | 2376 | 1.203 | 297.00 | 15 | #8 | 6½" | 11'-2" | 447 | 15 | #8 | 6½" | 11'-2" | 447 | 14 | #7 | 7" | 40'-4" | 1154 | 12 | 7'-6" | 60 | 16 | 17" | 18 | 17" | 20 | 17" | 54 | 268 | 40,630 |
| | 8' | 3 | 10" | 10" | 21' | 10.120 | 2460 | 1.265 | 307.50 | 15 | #8 | 6½" | 11'-2" | 447 | 15 | #8 | 6½" | 11'-2" | 447 | 14 | #7 | 7" | 42'-4" | 1211 | 12 | 8'-6" | 68 | 16 | 17" | 18 | 17" | 24 | 16" | 56 | 287 | 42,680 |
| | 9' | 3 | 10" | 10" | 21' | 10.614 | 2526 | 1.327 | 315.75 | 15 | #8 | 6½" | 11'-2" | 447 | 15 | #8 | 6½" | 11'-2" | 447 | 14 | #7 | 7" | 44'-4" | 1269 | 12 | 9'-6" | 76 | 16 | 17" | 18 | 17" | 24 | 18" | 58 | 287 | 44,730 |
| | 10' | 3 | 10" | 10" | 21' | 11.108 | 2611 | 1.389 | 326.38 | 15 | #8 | 6½" | 11'-2" | 447 | 15 | #8 | 6½" | 11'-2" | 447 | 14 | #7 | 7" | 46'-4" | 1326 | 12 | 10'-6" | 84 | 16 | 17" | 18 | 17" | 28 | 17" | 62 | 307 | 46,790 |

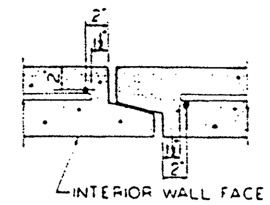


SINGLE MAT PLACEMENT

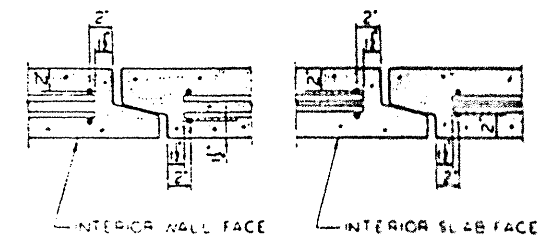


DOUBLE MAT PLACEMENT

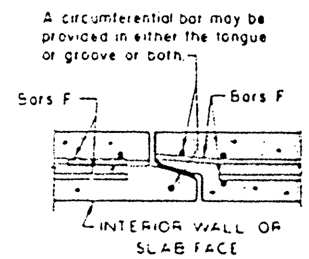


STEEL SUPPORT DETAIL

NOTE: As many Bars F as necessary may be extended to end of box to support steel during manufacture. Bars may be slightly bent to clear slope on groove lip as shown in detail. Alternatively the steel may be supported by bar extensions welded to Bars F

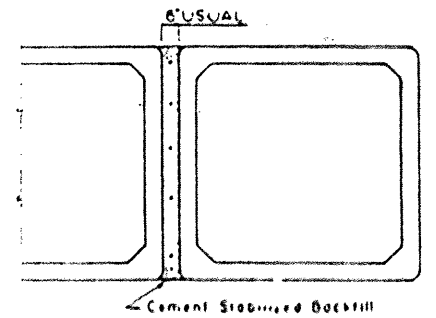


MULTIPLE UNIT PLACEMENT

GENERAL NOTES

Cement Stabilized Backfill shall be considered subsidiary to the unit price bid for Concrete Box

All welding to be done by qualified welder

Additional splices in reinforcing steel not shown hereon, must be submitted to the Bridge Division for approval prior to fabrication.

Grade 60 Bars or Wire Fabric may be used in place of Grade 40 Steel by supplying 82 % of the area of steel per linear foot shown in the Tables for Bars A.

Longitudinal steel shall have at least as much area as Bars F and shall be spaced at 18" c c maximum.

These designs are adequate for HS 20 live loading and any fill from 2'-0" to the maximum shown in the tables.

In lieu of furnishing the designs shown on this detail the contractor may use designs from ASTM C-789, Table I. In either case, the substituted design must equal or exceed the maximum fill height for the same sized box in the table on this detail. For boxes reinforced with wire fabric the minimum cover shall be three times the wire diameter but not less than one inch. Placing of reinforcement shall otherwise conform to specification "Reinforcing Steel".

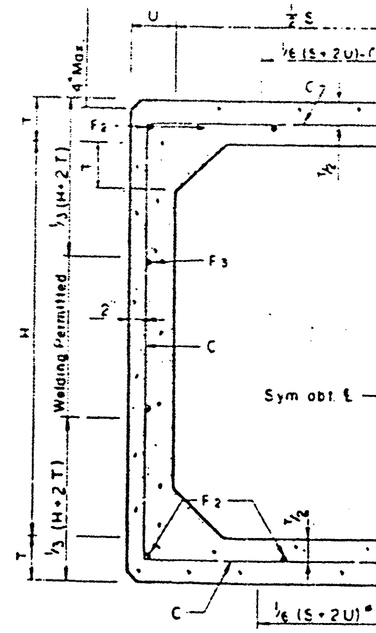


HALF SECTION

TYPE 1

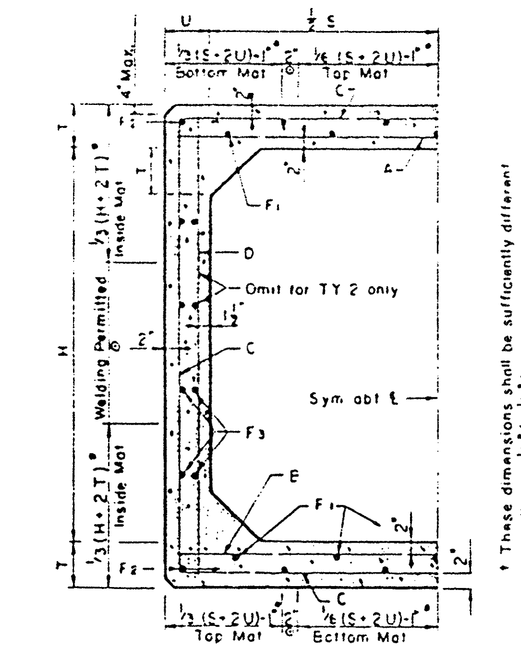


HALF SECTION

TYPES 2 & 3

*Permissible tack welding on mats shown

©Permissible tack welding both mats

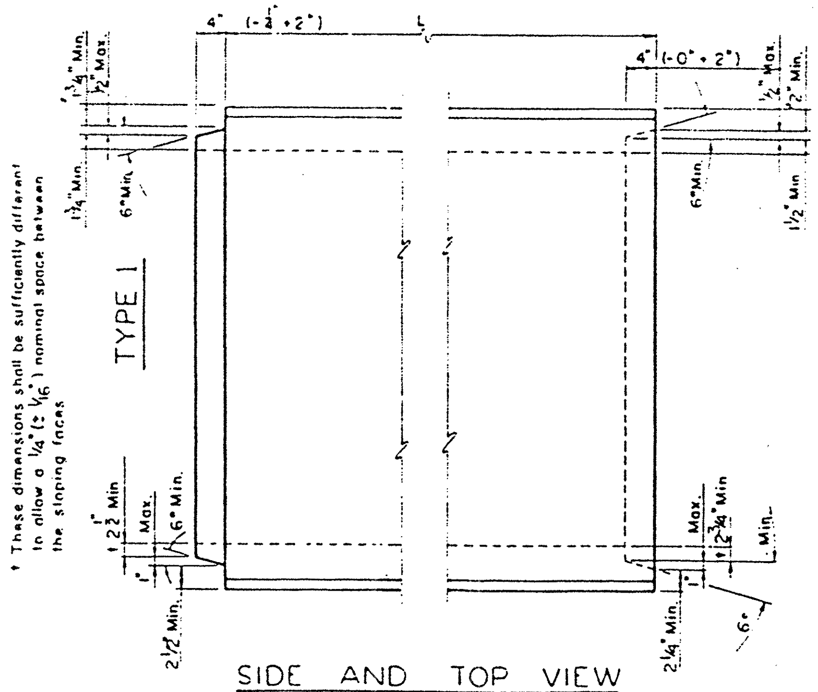


SIDE AND TOP VIEW

NOTE: Tongue and groove dimensional controls shown are intended to allow either a 4" long 1" slope joint, a 6" long 6" slope joint or any joint configuration within these limits. Dimensions shown as minimums shall be maintained around the perimeter of the box.

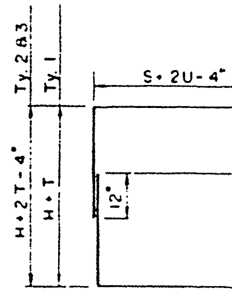


BARS C

TEXAS HIGHWAY DEPARTMENT
BRIDGE DIVISION

# PRECAST CONCRETE BOX CULVERTS

PC-5

[illegible]

317E

| CULVERT SIZE ft. | | DIMENSIONS in. | | | TYPE SECT. | REINFORCING STEEL | | | | | | | | | | | | | | | | EDGE BEAM REINF. | | LIFT● WT. L = 12' | MAX FILL ft. |
|---|---|---|---|---|---|---|---|---|---|---|---|---|---|---|---|---|---|---|---|---|---|---|---|---|---|
| | | | | | | BARS A | | BARS B | | BARS C | | BARS D | | BARS F | | BARS G† | | BARS M | | BARS N | | | | | |
| S | H | $T_t$ | $T_b$ | U | | SIZE | SPA | SIZE | SPA. | SIZE | SPA | SIZE | SPA | SIZE | SPA | SIZE | SPA | SIZE | SPA | SIZE | SPA. | SIZE | NO. | TONS | |
| | 1 | 6 | 6 | 6 | 1 | #5 | 6" | #5 | 12" | #4 | 18" | #4 | 15" | #4 | 18" | #4 | 6" | #4 | 18" | | | #5 | 3 | 2.7 | 15' |
| | 1.5 | " | " | " | 1 | " | " | " | " | " | " | " | " | " | " | " | " | " | 15" | | | " | " | 3.2 | " |
| | 2 | " | " | " | 2 | " | " | " | " | " | 15" | " | " | " | " | " | " | " | 18" | #4 | 18" | " | " | 2.7 | " |
| | 3 | " | " | " | 2 | " | " | " | " | " | " | " | " | " | " | " | " | " | 15" | " | 15" | " | " | 3.2 | " |
| 4 | 1 | 6 | 6 | 6 | 1 | #5 | 5" | #5 | 10" | #4 | 18" | #4 | 15" | #4 | 18" | #4 | 6" | #4 | 18" | | | #5 | 4 | 3.2 | 12' |
| | 2 | " | " | " | 1 | " | " | " | " | " | " | " | 12" | " | " | " | " | " | 15" | | | " | " | 4.1 | " |
| | 3 | " | " | " | 1 | " | " | " | " | " | " | #5 | 9" | " | " | " | " | " | " | | | " | " | 5.0 | " |
| | 4 | " | " | " | 1 | " | " | " | " | " | " | " | 7" | " | " | " | " | " | 12" | | | " | " | 5.9 | " |
| 5 | 1 | 6½ | 6 | 6 | 1 | #5 | 4" | #5 | 8" | #4 | 18" | #4 | 15" | #4 | 18" | #4 | 6" | #4 | 18" | | | #5 | 5 | 3.5 | 10' |
| | 2 | " | " | " | 1 | " | " | " | " | " | " | " | 12" | " | " | " | " | " | 15" | | | " | " | 4.4 | " |
| | 3 | " | " | " | 1 | " | " | " | " | " | " | #5 | 9" | " | " | " | " | " | " | | | " | " | 5.3 | " |
| | 4 | " | " | " | 1 | " | " | " | " | " | " | " | 7" | " | " | " | " | " | 12" | | | " | " | 6.2 | " |
| | 5 | " | " | " | 2 | " | " | " | " | " | 9" | #4 | 9" | " | " | " | " | " | 15" | #4 | 15" | " | " | 5.1 | " |
| 6 | 1 | 7 | 6½ | 6 | 1 | #5 | 4" | #5 | 8" | #4 | 18" | #4 | 15" | #4 | 18" | #4 | 6" | #4 | 18" | | | #5 | 5 | 4.2 | 8' |
| | 2 | " | " | " | 1 | " | " | " | " | " | " | " | 12" | " | " | " | " | " | 15" | | | " | " | 5.1 | " |
| | 3 | " | " | " | 1 | " | " | " | " | " | " | #5 | 9 | " | " | " | " | " | " | | | " | " | 6.0 | " |
| | 4 | " | " | " | 1 | " | " | " | " | " | " | " | 7" | " | " | " | " | " | 12" | | | " | " | 6.9 | " |
| | 5 | " | " | " | 2 | " | " | " | " | " | 9" | #4 | 9" | " | " | " | " | " | 15" | #4 | 15" | " | " | 5.9 | " |
| | 6 | " | " | " | 2 | " | " | " | " | #5 | 10" | #5 | 9" | " | " | " | " | " | " | " | " | " | " | 6.3 | " |
| 7 | 1 | 7½ | 7 | 6 | 1 | #5 | 4" | #5 | 8" | #4 | 18" | #4 | 15" | #4 | 18" | #4 | 6" | #4 | 18" | | | #5 | 5 | 5.0 | 8' |
| | 2 | " | " | " | 1 | " | " | " | " | " | " | " | 12" | " | " | " | " | " | 15" | | | " | " | 5.9 | " |
| | 3 | " | " | " | 1 | " | " | " | " | " | " | #5 | 9" | " | " | " | " | " | " | | | " | " | 6.8 | " |
| | 4 | " | " | " | 1 | " | " | " | " | " | " | " | 7" | " | " | " | " | " | 12" | | | " | " | 7.7 | " |
| | 5 | " | " | " | 2 | " | " | " | " | " | 9" | #4 | 9" | " | " | " | " | " | 15" | #4 | 15" | " | " | 6.7 | " |
| | 6 | " | " | " | 2 | " | " | " | " | #5 | 10" | #5 | 9" | " | " | " | " | " | " | " | " | " | " | 7.1 | " |
| | 7 | " | " | " | 2 | " | " | " | " | " | 8" | " | 6" | " | " | " | " | " | 12" | " | 12" | " | " | 7.6 | " |
| 8 | 1 | 8 | 7½ | 6 | 1 | #6 | 5" | #6 | 8" | #4 | 18" | #4 | 15" | #4 | 18" | #4 | 6" | #4 | 18" | | | #6 | 4 | 5.9 | 8' |
| | 2 | " | " | " | 1 | " | " | " | " | " | " | " | 12" | " | " | " | " | " | 15" | | | " | " | 6.8 | " |
| | 3 | " | " | " | 1 | " | " | " | " | " | " | #5 | 9" | " | " | " | " | " | " | | | " | " | 7.7 | " |
| | 4 | " | " | " | 1 | " | " | " | " | " | " | " | 7" | " | " | " | " | " | 12" | | | " | " | 8.6 | " |
| | 5 | " | " | " | 2 | " | " | " | " | " | 9" | #4 | 9" | " | " | " | " | " | 15" | #4 | 15" | " | " | 7.6 | " |
| | 6 | " | " | " | 2 | " | " | " | " | #5 | 10" | #5 | 9" | " | " | " | " | " | " | " | " | " | " | 8.0 | " |
| | 7 | " | " | " | 2 | " | " | " | " | " | 8" | " | 6" | " | " | " | " | " | 12" | " | 12" | " | " | 8.5 | " |
| | 8 | " | " | " | 2 | " | " | " | " | " | 7" | " | 5" | " | " | " | " | " | " | " | " | " | " | 8.9 | " |
| | 1 | 8 | 7½ | 6 | 1 | #6 | 4" | #6 | 8" | #4 | 18" | #4 | 15" | #4 | 18" | #5 | 6" | #4 | 18" | | | #6 | 4 | 6.4 | 8' |
| | 2 | " | " | " | 1 | " | " | " | " | " | " | " | 12" | " | " | " | " | " | 15" | | | " | " | 7.3 | " |
| | 3 | " | " | " | 1 | " | " | " | " | " | " | #5 | 9" | " | " | " | " | " | " | | | " | " | 8.2 | " |
| | 4 | " | " | " | 1 | " | " | " | " | " | " | " | 7" | " | " | " | " | " | 12" | | | " | " | 9.1 | " |
| | 5 | " | " | " | 2 | " | " | " | " | " | 9" | #4 | 9" | " | " | " | " | " | 15" | #4 | 15" | " | " | 8.2 | " |
| | 6 | " | " | " | 2 | " | " | " | " | #5 | 10" | #5 | 9" | " | " | " | " | " | " | " | " | " | " | 8.6 | " |
| | 7 | " | " | " | 2 | " | " | " | " | " | 8" | " | 6" | " | " | " | " | " | 12" | " | 12" | " | " | 9.0 | " |
| | 8 | " | " | " | 2 | " | " | " | " | " | 7" | " | 5" | " | " | " | " | " | " | " | " | " | " | 9.5 | " |
| 10 | 1 | 8½ | 8 | 6 | 1 | #6 | 4" | #6 | 5" | #4 | 18" | #4 | 15" | #4 | 18" | #5 | 6" | #4 | 18" | | | #6 | 4 | 7.4 | 8' |
| | 2 | " | " | " | 1 | " | " | " | " | " | " | " | 12" | " | " | " | " | " | 15" | | | " | " | 8.3 | " |
| | 3 | " | " | " | 1 | " | " | " | " | " | " | #5 | 9" | " | " | " | " | " | " | | | " | " | 9.2 | " |
| | 4 | " | " | " | 1 | " | " | " | " | " | " | " | 7" | " | " | " | " | " | 12" | | | " | " | 10.1 | " |
| | 5 | " | " | " | 2 | " | " | " | " | " | 9" | #4 | 9" | " | " | " | " | " | 15" | #4 | 15" | " | " | 9.2 | " |
| | 6 | " | " | " | 2 | " | " | " | " | #5 | 10" | #5 | 9" | " | " | " | " | " | " | " | " | " | " | 9.6 | " |
| | 7 | " | " | " | 2 | " | " | " | " | " | 8" | " | 6" | " | " | " | " | " | 12" | " | 12" | " | " | 10.0 | " |
| | 8 | " | " | " | 2 | " | " | " | " | " | 7" | " | 5" | " | " | " | " | " | " | " | " | " | " | 10.5 | " |

● Lift weight is the maximum piece weight of the top and bottom sections.
† If the fill height is greater than 2'-0", the size and spacing of Bars G may be reduced to that of Bars F.

⊕ NOTE:
Clear cover shall be 2" for the top steel in the top slab and shall be 1¼" for all other steel.
Placement tolerance is ± ¼".

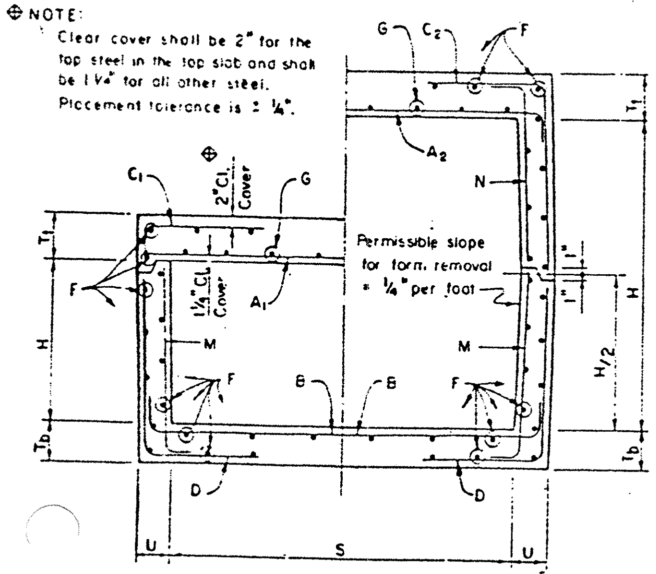


## TYPICAL BOX HALF SECTIONS

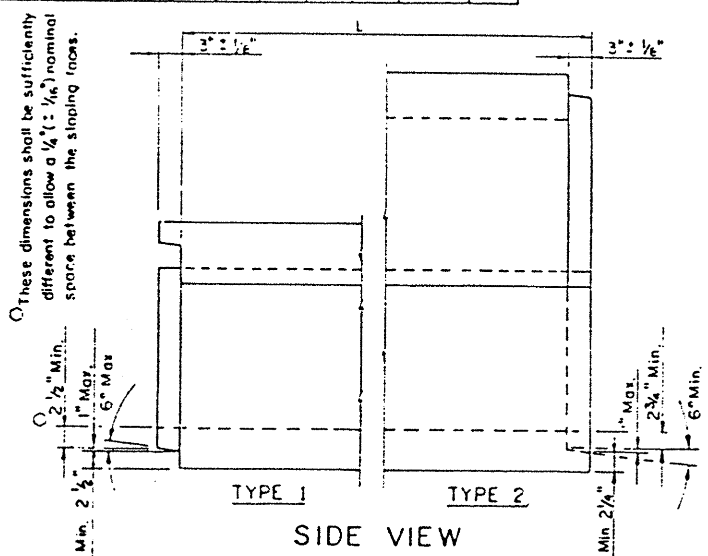


## SIDE VIEW

NOTE: Tongue and groove dimensional controls shown are intended to allow either a 3" long 1" slope joint, a 2" long 6" slope joint or any joint configuration within these limits. Dimensions shown as minimums shall be maintained around the box and along the horizontal joint.

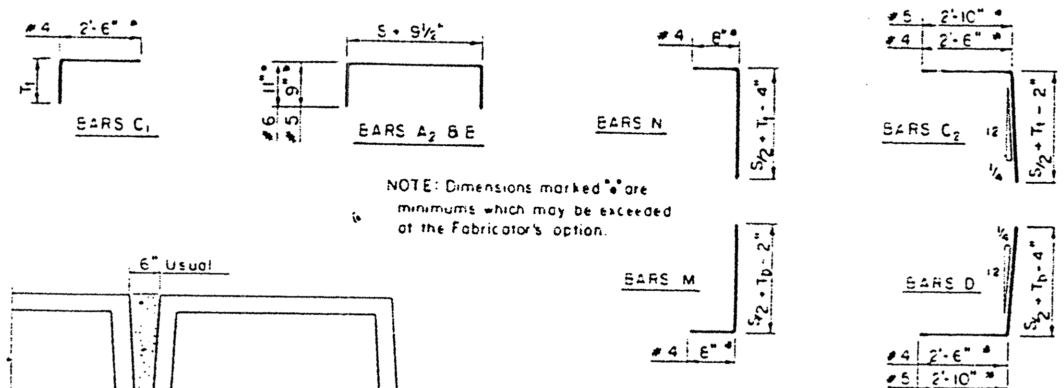


NOTE: Dimensions marked "●" are minimums which may be exceeded at the Fabricator's option.

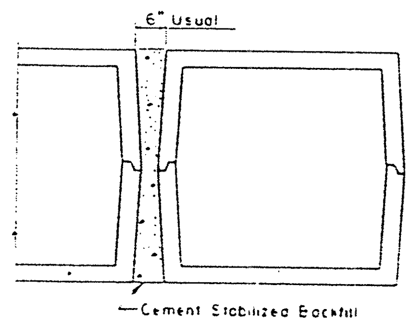


## MULTIPLE UNIT PLACEMENT

NOTE: Edge beam reinforcement may be combined with Bars A in a single layer, or placed in a separate layer as shown below. Bars shall be bundled as necessary to maintain required clear distances between bars.

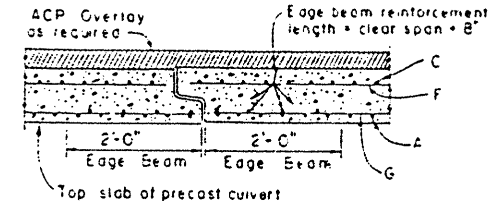


## EDGE BEAM

GENERAL NOTES:

Design conforms to 1977 AASHTO Standard Specifications for Highway Bridges (Interim revisions included thru 1982) for HS 20 direct traffic loading and maximum fill height shown in the table. Precast culverts constructed according to this design shall conform to Item 462 "Concrete Box Culverts".

The Contractor may furnish designs shown on this sheet in lieu of other precast culvert designs of the same nominal size, provided the maximum fill does not exceed that shown in the table.

Reinforcing steel: Grade 60 deformed bars. Concrete, f'c = 4000psi.

Joint Protection: Where fill measured from the top of the precast box culvert to the roadway surface is less than 2'-0", joints shall be protected by strengthening the top slab with an Edge Beam at each free edge.

Edge Beams shall be subsidiary to the unit price bid for Concrete Box.

Tack Welding: No tack welding of reinforcing bars will be permitted except within 6 inches of an end. Bars F are exempt from this restriction, and may be tack welded anywhere along their length.

Multiple Unit Placement: Cement Stabilized Backfill shall be considered subsidiary to the unit price bid for Concrete Box.

Form Removal and Handling Procedures: Precast pieces may be removed from the forms as soon as they have attained sufficient strength to allow handling without cracking. Damaged or cracked pieces shall be subject to rejection.

Marking: In addition to the marking requirements of Item 462, each piece shall bear the following markings:

Top and Bottom pieces without edge beams: TXPC7

Top pieces with edge beams: TXPC7 EB

Joint Seals: Horizontal and transverse joints shall be sealed in accordance with the Specifications.

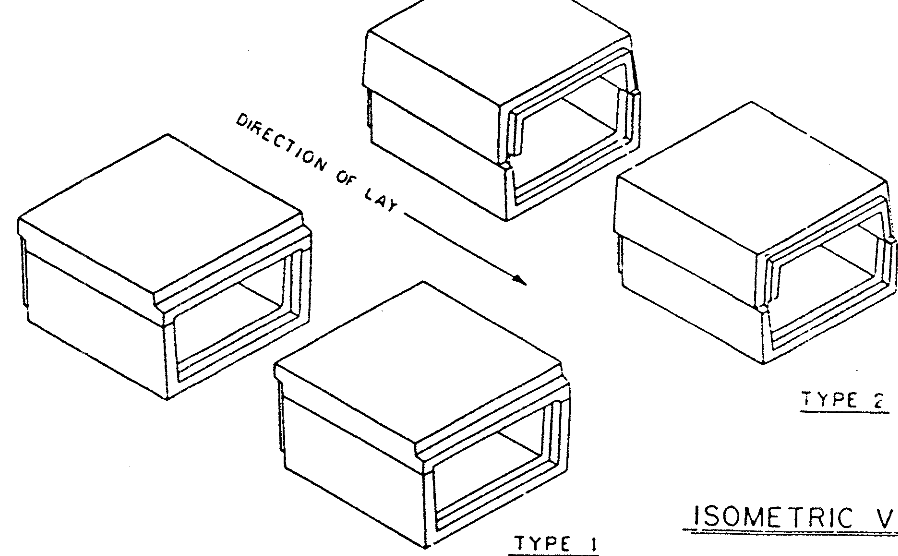


## ISOMETRIC VIEW

STATE DEPARTMENT OF HIGHWAYS AND PUBLIC TRANSPORTATION

# PRECAST CONCRETE BOX CULVERTS

PC-7

ORIGINAL DRAWING DATE MARCH 1983
DN LEH | CK MPM | DW EDS | CK LEH
REVISIONS: Rev. 2-84

DISCLAIMER:
The use of this standard is governed by the "Texas Engineering Practice Act". No warranty of any kind is made by TxDOT for any purpose whatsoever. TxDOT assumes no responsibility for the conversion of this standard to other formats or for incorrect results or damages resulting from its use.

LEVELS DISPLAYED 1 3 | ACC: (LV=1,3 for Metric)

# BOX DATA

| SECTION DIMENSIONS | | | | | Fill Height (m) | M (Min) | REINFORCING (6) | | | | | | | | Lift Mass (5) (kg) | Governing ASTM Standard |
|---|---|---|---|---|---|---|---|---|---|---|---|---|---|---|---|---|
| S | H | $T_T$ | $T_B$ | $T_S$ | | | $A_{S1}$ (mm²/m) | $A_{S2}$ (mm²/m) | $A_{S3}$ (mm²/m) | $A_{S4}$ (mm²/m) | $A_{S7}$ (mm²/m) | $A_{S8}$ (mm²/m) | $A_{S5}$ (mm²/m) | $A_{S6}$ (mm²/m) | | |
| 2,400 | 1,200 | 200 | 200 | 200 | < 0.6 | - | 780 | 1,080 | 570 | 400 | 400 | 400 | 400 | 400 | 9,688 | C 850M |
| 2,400 | 1,200 | 200 | 200 | 200 | 0.6 | 860 | 780 | 850 | 610 | 400 | - | - | - | - | 9,688 | C 789M |
| 2,400 | 1,200 | 200 | 200 | 200 | 0.9 | 790 | 570 | 590 | 510 | 400 | - | - | - | - | 9,688 | C 789M |
| 2,400 | 1,200 | 200 | 200 | 200 | 1.2 | 710 | 530 | 530 | 510 | 400 | - | - | - | - | 9,688 | C 789M |
| 2,400 | 1,200 | 200 | 200 | 200 | 1.5 | 710 | 550 | 530 | 550 | 400 | - | - | - | - | 9,688 | C 789M |
| 2,400 | 1,200 | 200 | 200 | 200 | 1.8 | 710 | 550 | 550 | 550 | 400 | - | - | - | - | 9,688 | C 789M |
| 2,400 | 1,200 | 200 | 200 | 200 | 2.4 | 690 | 590 | 590 | 610 | 400 | - | - | - | - | 9,688 | C 789M |
| 2,400 | 1,200 | 200 | 200 | 200 | 3.0 | 690 | 680 | 680 | 700 | 400 | - | - | - | - | 9,688 | C 789M |
| 2,400 | 1,200 | 200 | 200 | 200 | 3.7 | 690 | 760 | 760 | 780 | 400 | - | - | - | - | 9,688 | C 789M |
| 2,400 | 1,200 | 200 | 200 | 200 | 4.3 | 690 | 850 | 870 | 890 | 400 | - | - | - | - | 9,688 | C 789M |
| 2,400 | 1,500 | 200 | 200 | 200 | < 0.6 | - | 720 | 1,120 | 640 | 400 | 400 | 400 | 440 | 400 | 10,380 | C 850M |
| 2,400 | 1,500 | 200 | 200 | 200 | 0.6 | 890 | 720 | 910 | 680 | 400 | - | - | - | - | 10,380 | C 789M |
| 2,400 | 1,500 | 200 | 200 | 200 | 0.9 | 790 | 530 | 660 | 570 | 400 | - | - | - | - | 10,380 | C 789M |
| 2,400 | 1,500 | 200 | 200 | 200 | 1.2 | 710 | 490 | 570 | 570 | 400 | - | - | - | - | 10,380 | C 789M |
| 2,400 | 1,500 | 200 | 200 | 200 | 1.5 | 710 | 510 | 570 | 610 | 400 | - | - | - | - | 10,380 | C 789M |
| 2,400 | 1,500 | 200 | 200 | 200 | 1.8 | 690 | 510 | 590 | 610 | 400 | - | - | - | - | 10,380 | C 789M |
| 2,400 | 1,500 | 200 | 200 | 200 | 2.4 | 690 | 550 | 640 | 680 | 400 | - | - | - | - | 10,380 | C 789M |
| 2,400 | 1,500 | 200 | 200 | 200 | 3.0 | 690 | 610 | 740 | 760 | 400 | - | - | - | - | 10,380 | C 789M |
| 2,400 | 1,500 | 200 | 200 | 200 | 3.7 | 690 | 680 | 830 | 870 | 400 | - | - | - | - | 10,380 | C 789M |
| 2,400 | 1,800 | 200 | 200 | 200 | < 0.6 | - | 680 | 1,190 | 700 | 400 | 530 | 400 | 440 | 400 | 11,072 | C 850M |
| 2,400 | 1,800 | 200 | 200 | 200 | 0.6 | 910 | 660 | 970 | 740 | 400 | - | - | - | - | 11,072 | C 789M |
| 2,400 | 1,800 | 200 | 200 | 200 | 0.9 | 790 | 490 | 700 | 610 | 400 | - | - | - | - | 11,072 | C 789M |
| 2,400 | 1,800 | 200 | 200 | 200 | 1.2 | 760 | 470 | 610 | 610 | 400 | - | - | - | - | 11,072 | C 789M |
| 2,400 | 1,800 | 200 | 200 | 200 | 1.5 | 740 | 490 | 610 | 660 | 400 | - | - | - | - | 11,072 | C 789M |
| 2,400 | 1,800 | 200 | 200 | 200 | 1.8 | 710 | 470 | 640 | 660 | 400 | - | - | - | - | 11,072 | C 789M |
| 2,400 | 1,800 | 200 | 200 | 200 | 2.4 | 690 | 510 | 680 | 720 | 400 | - | - | - | - | 11,072 | C 789M |
| 2,400 | 1,800 | 200 | 200 | 200 | 3.0 | 690 | 570 | 780 | 830 | 400 | - | - | - | - | 11,072 | C 789M |
| 2,400 | 1,800 | 200 | 200 | 200 | 3.7 | 690 | 640 | 890 | 910 | 400 | - | - | - | - | 11,072 | C 789M |
| 2,400 | 2,100 | 200 | 200 | 200 | < 0.6 | - | 640 | 1,230 | 740 | 400 | 570 | 470 | 470 | 400 | 11,764 | C 850M |
| 2,400 | 2,100 | 200 | 200 | 200 | 0.6 | 1,040 | 590 | 1,040 | 800 | 400 | - | - | - | - | 11,764 | C 789M |
| 2,400 | 2,100 | 200 | 200 | 200 | 0.9 | 890 | 470 | 740 | 680 | 400 | - | - | - | - | 11,764 | C 789M |
| 2,400 | 2,100 | 200 | 200 | 200 | 1.2 | 810 | 420 | 660 | 660 | 400 | - | - | - | - | 11,764 | C 789M |
| 2,400 | 2,100 | 200 | 200 | 200 | 1.5 | 790 | 440 | 660 | 700 | 400 | - | - | - | - | 11,764 | C 789M |
| 2,400 | 2,100 | 200 | 200 | 200 | 1.8 | 760 | 440 | 660 | 720 | 400 | - | - | - | - | 11,764 | C 789M |
| 2,400 | 2,100 | 200 | 200 | 200 | 2.4 | 740 | 470 | 720 | 760 | 400 | - | - | - | - | 11,764 | C 789M |
| 2,400 | 2,100 | 200 | 200 | 200 | 3.0 | 710 | 530 | 800 | 890 | 400 | - | - | - | - | 11,764 | C 789M |
| 2,400 | 2,100 | 200 | 200 | 200 | 3.7 | 710 | 590 | 910 | 970 | 400 | - | - | - | - | 11,764 | C 789M |
| 2,400 | 2,400 | 200 | 200 | 200 | < 0.6 | - | 590 | 1,270 | 800 | 490 | 610 | 550 | 470 | 400 | 12,456 | C 850M |
| 2,400 | 2,400 | 200 | 200 | 200 | 0.6 | 1,550 | 550 | 1,080 | 850 | 400 | - | - | - | - | 12,456 | C 789M |
| 2,400 | 2,400 | 200 | 200 | 200 | 0.9 | 1,040 | 420 | 780 | 720 | 400 | - | - | - | - | 12,456 | C 789M |
| 2,400 | 2,400 | 200 | 200 | 200 | 1.2 | 910 | 400 | 680 | 700 | 400 | - | - | - | - | 12,456 | C 789M |
| 2,400 | 2,400 | 200 | 200 | 200 | 1.5 | 860 | 420 | 680 | 740 | 400 | - | - | - | - | 12,456 | C 789M |
| 2,400 | 2,400 | 200 | 200 | 200 | 1.8 | 810 | 420 | 700 | 760 | 400 | - | - | - | - | 12,456 | C 789M |
| 2,400 | 2,400 | 200 | 200 | 200 | 2.4 | 790 | 440 | 740 | 800 | 400 | - | - | - | - | 12,456 | C 789M |
| 2,400 | 2,400 | 200 | 200 | 200 | 3.0 | 760 | 490 | 850 | 910 | 400 | - | - | - | - | 12,456 | C 789M |
| 2,400 | 2,400 | 200 | 200 | 200 | 3.7 | 740 | 550 | 930 | 1,020 | 400 | - | - | - | - | 12,456 | C 789M |

Note: ASTM C850M design shall be used for direct traffic loading.

(5) For Box Length = 2,400 mm

(6) $A_{S1}$ thru $A_{S4}$, $A_{S7}$ and $A_{S8}$ are minimum required areas of reinforcement per linear meter of box length. $A_{S6}$ and $A_{S5}$ are minimum required areas of reinforcement per linear meter of box width.

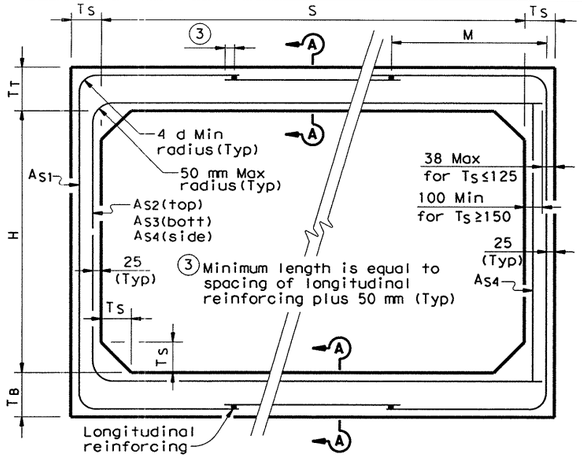


C789M CORNER OPTION "A"

C789M CORNER OPTION "B"

## ASTM C789M STANDARD

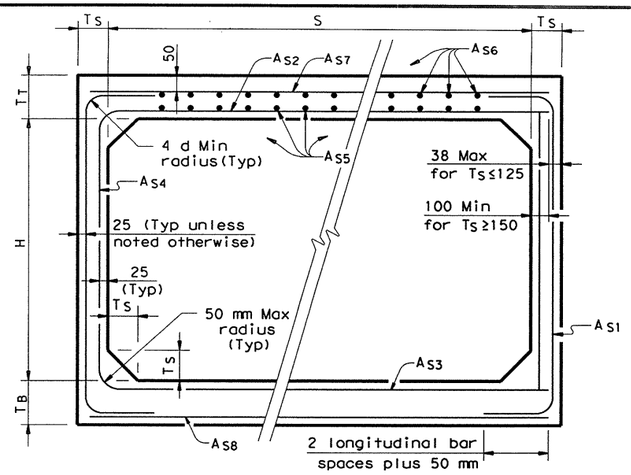


C850M CORNER OPTION "A"

C850M CORNER OPTION "B"

## ASTM C850M STANDARD

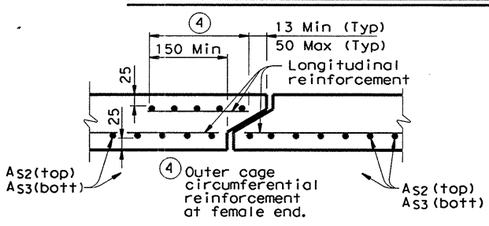


## SECTION A-A

(TOP AND BOTTOM SLAB JOINT REINFORCEMENT)

**GENERAL NOTES:**

Designs shown conform to ASTM C789M or ASTM C850M. Refer to ASTM C789M or ASTM C850M for information or details not shown.

For ASTM C789M designs, all reinforcing steel shall have a minimum specified yield stress of 445 MPa.

For ASTM C850M designs, all reinforcing steel shall have a minimum specified yield stress of 414 MPa.

All box concrete shall have a minimum 28 day compressive strength of 35 MPa.

See SCP-MD(M) standard sheet for miscellaneous details and notes not shown.

Designed for MS18 (HS20) loading and fill heights shown.

In lieu of furnishing the designs shown on this sheet, the contractor may furnish an alternate design that is equal to or exceeds the box design for the design fill height in the table. Shop plans for alternate designs shall be submitted in accordance with Item "Precast Concrete Structures".

All dimensions in millimeters unless otherwise shown.

New Sheet
Change Order #36

Texas Department of Transportation
Design Division (Bridge)

# SINGLE BOX CULVERTS PRECAST
## 2,400 mm SPAN

## SCP-2.4(M)

| FILE: scp24std.dgn | DN: KLR | CK: GAF | DW: TxDOT | CK: GAF | STD: B54M |
|---|---|---|---|---|---|
| ©TxDOT January 1997 | DIST | FED REG | FEDERAL AID PROJECT # | | SHEET |
| REVISIONS 5-97-REMOVE MISC DETAILS | SAT | 6 | NH 2000 (704), ETC | | 29 of 69 |
| | COUNTY | | CONTROL | SECT | JOB | HIGHWAY |
| | BEXAR | | 2452 | 01 | 036,ETC | LP1604 |

DISCLAIMER:
The use of this standard is governed by the "Texas Engineering Practice Act". No warranty of any kind is made by TxDOT for any purpose whatsoever. TxDOT assumes no responsibility for the conversion of this standard to other formats or for incorrect results or damages resulting from its use.

# BILLS OF REINFORCING STEEL (For Box Length = 10 meters)

| NUMBER OF SPANS | SECTION DIMENSIONS | | | | Bars B | | | | | Bars C & D | | | | | | | Bars E | | | | | Bars $F_1$ ~#4 | | | | Bars $F_2$ ~#4 450 mm Max | | | | Bars M~#4 450 mm Max | | | Bars Y & Z ~#4 450 mm Max | | | | | | Bars H 4~#4 | | Bars K | | QUANTITIES: Per Meter of Barrel | | Curb | | Total | |
|---|---|---|---|---|---|---|---|---|---|---|---|---|---|---|---|---|---|---|---|---|---|---|---|---|---|---|---|---|---|---|---|---|---|---|---|---|---|---|---|---|---|---|---|---|---|---|---|
| | S | H | T | U | No. | Size | Spa | Length | Mass | No. | Size | Spa | Bar C Lgth | Bar C Mass | Bar D Lgth | Bar D Mass | No. | Size | Spa | Length | Mass | No. | Spa | Length | Mass | No. | Length | Mass | No. | Lgth | Mass | No. | Bar Y Lgth | Bar Y Mass | Bar Z Lgth | Bar Z Mass | Length | Mass | No. | Mass | Conc ($m^3$) | Reinf (kg) | Conc ($m^3$) | Reinf (kg) | Conc ($m^3$) | Reinf (kg) |
| 2 | 3,000 | 1,500 | 250 | 200 | 162 | #5 | 125 | 6,500 | 1,634 | 134 | #5 | 150 | 3,000 | 624 | 2,200 | 458 | 134 | #7 | 150 | 3,360 | 1,370 | 14 | 450 | 9,900 | 138 | 72 | 9,900 | 709 | 46 | 1,500 | 69 | 23 | 1,580 | 36 | 3,460 | 79 | 6,520 | 26 | 46 | 59 | 4.20 | 511.7 | 1.2 | 85 | 43.2 | 5,202 |
| 3 | 3,000 | 1,500 | 250 | 200 | 162 | #5 | 125 | 9,700 | 2,439 | 134 | #5 | 150 | 3,000 | 624 | 2,200 | 458 | 134 | #7 | 150 | 6,560 | 2,674 | 21 | 450 | 9,900 | 207 | 103 | 9,900 | 1,014 | 46 | 1,500 | 69 | 46 | 1,580 | 72 | 3,460 | 158 | 9,720 | 39 | 68 | 87 | 6.10 | 771.5 | 1.8 | 126 | 62.8 | 7,841 |
| 4 | 3,000 | 1,500 | 250 | 200 | 162 | #5 | 125 | 12,900 | 3,243 | 134 | #5 | 150 | 3,000 | 624 | 2,200 | 458 | 134 | #7 | 150 | 9,760 | 3,978 | 28 | 450 | 9,900 | 276 | 134 | 9,900 | 1,319 | 46 | 1,500 | 69 | 69 | 1,580 | 108 | 3,460 | 237 | 12,920 | 51 | 88 | 113 | 8.00 | 1,031.2 | 2.3 | 164 | 82.3 | 10,476 |
| 5 | 3,000 | 1,500 | 250 | 200 | 162 | #5 | 125 | 16,100 | 4,048 | 134 | #5 | 150 | 3,000 | 624 | 2,200 | 458 | 134 | #7 | 150 | 12,960 | 5,283 | 35 | 450 | 9,900 | 344 | 165 | 9,900 | 1,624 | 46 | 1,500 | 69 | 92 | 1,580 | 144 | 3,460 | 316 | 16,120 | 64 | 110 | 141 | 9.90 | 1,291.0 | 2.9 | 205 | 101.9 | 13,115 |
| 6 | 3,000 | 1,500 | 250 | 200 | 162 | #5 | 125 | 19,300 | 4,852 | 134 | #5 | 150 | 3,000 | 624 | 2,200 | 458 | 134 | #7 | 150 | 16,160 | 6,587 | 42 | 450 | 9,900 | 413 | 196 | 9,900 | 1,929 | 46 | 1,500 | 69 | 115 | 1,580 | 181 | 3,460 | 396 | 19,320 | 77 | 132 | 169 | 11.80 | 1,550.9 | 3.5 | 246 | 121.5 | 15,755 |
| 2 | 3,000 | 1,800 | 250 | 200 | 162 | #5 | 125 | 6,500 | 1,634 | 134 | #5 | 150 | 3,300 | 686 | 2,200 | 458 | 134 | #7 | 150 | 3,360 | 1,370 | 14 | 450 | 9,900 | 138 | 78 | 9,900 | 768 | 46 | 1,800 | 82 | 23 | 1,580 | 36 | 4,060 | 93 | 6,520 | 26 | 46 | 59 | 4.38 | 526.5 | 1.2 | 85 | 45.0 | 5,350 |
| 3 | 3,000 | 1,800 | 250 | 200 | 162 | #5 | 125 | 9,700 | 2,439 | 134 | #5 | 150 | 3,300 | 686 | 2,200 | 458 | 134 | #7 | 150 | 6,560 | 2,674 | 21 | 450 | 9,900 | 207 | 111 | 9,900 | 1,092 | 46 | 1,800 | 82 | 46 | 1,580 | 72 | 4,060 | 186 | 9,720 | 39 | 68 | 87 | 6.34 | 789.6 | 1.8 | 126 | 65.2 | 8,022 |
| 4 | 3,000 | 1,800 | 250 | 200 | 162 | #5 | 125 | 12,900 | 3,243 | 134 | #5 | 150 | 3,300 | 686 | 2,200 | 458 | 134 | #7 | 150 | 9,760 | 3,978 | 28 | 450 | 9,900 | 276 | 144 | 9,900 | 1,417 | 46 | 1,800 | 82 | 69 | 1,580 | 108 | 4,060 | 278 | 12,920 | 51 | 88 | 113 | 8.30 | 1,052.6 | 2.3 | 164 | 85.3 | 10,690 |
| 5 | 3,000 | 1,800 | 250 | 200 | 162 | #5 | 125 | 16,100 | 4,048 | 134 | #5 | 150 | 3,300 | 686 | 2,200 | 458 | 134 | #7 | 150 | 12,960 | 5,283 | 35 | 450 | 9,900 | 344 | 177 | 9,900 | 1,742 | 46 | 1,800 | 82 | 92 | 1,580 | 144 | 4,060 | 371 | 16,120 | 64 | 110 | 141 | 10.26 | 1,315.8 | 2.9 | 205 | 105.5 | 13,363 |
| 6 | 3,000 | 1,800 | 250 | 200 | 162 | #5 | 125 | 19,300 | 4,852 | 134 | #5 | 150 | 3,300 | 686 | 2,200 | 458 | 134 | #7 | 150 | 16,160 | 6,587 | 42 | 450 | 9,900 | 413 | 210 | 9,900 | 2,067 | 46 | 1,800 | 82 | 115 | 1,580 | 181 | 4,060 | 464 | 19,320 | 77 | 132 | 169 | 12.22 | 1,579.0 | 3.5 | 246 | 125.7 | 16,036 |
| 2 | 3,000 | 2,100 | 250 | 200 | 134 | #6 | 150 | 6,500 | 1,947 | 134 | #5 | 150 | 3,600 | 749 | 2,200 | 458 | 134 | #7 | 150 | 3,360 | 1,370 | 14 | 450 | 9,900 | 138 | 78 | 9,900 | 768 | 46 | 2,100 | 96 | 23 | 1,580 | 36 | 4,660 | 107 | 6,520 | 26 | 46 | 59 | 4.56 | 566.9 | 1.2 | 85 | 46.8 | 5,754 |
| 3 | 3,000 | 2,100 | 250 | 200 | 134 | #6 | 150 | 9,700 | 2,905 | 134 | #5 | 150 | 3,600 | 749 | 2,200 | 458 | 134 | #7 | 150 | 6,560 | 2,674 | 21 | 450 | 9,900 | 207 | 111 | 9,900 | 1,092 | 46 | 2,100 | 96 | 46 | 1,580 | 72 | 4,660 | 213 | 9,720 | 39 | 68 | 87 | 6.58 | 846.6 | 1.8 | 126 | 67.6 | 8,592 |
| 4 | 3,000 | 2,100 | 250 | 200 | 134 | #6 | 150 | 12,900 | 3,863 | 134 | #5 | 150 | 3,600 | 749 | 2,200 | 458 | 134 | #7 | 150 | 9,760 | 3,978 | 28 | 450 | 9,900 | 276 | 144 | 9,900 | 1,417 | 46 | 2,100 | 96 | 69 | 1,580 | 108 | 4,660 | 320 | 12,920 | 51 | 88 | 113 | 8.60 | 1,126.5 | 2.3 | 164 | 88.3 | 11,429 |
| 5 | 3,000 | 2,100 | 250 | 200 | 134 | #6 | 150 | 16,100 | 4,822 | 134 | #5 | 150 | 3,600 | 749 | 2,200 | 458 | 134 | #7 | 150 | 12,960 | 5,283 | 35 | 450 | 9,900 | 344 | 177 | 9,900 | 1,742 | 46 | 2,100 | 96 | 92 | 1,580 | 144 | 4,660 | 426 | 16,120 | 64 | 110 | 141 | 10.62 | 1,406.4 | 2.9 | 205 | 109.1 | 14,269 |
| 6 | 3,000 | 2,100 | 250 | 200 | 134 | #6 | 150 | 19,300 | 5,780 | 134 | #5 | 150 | 3,600 | 749 | 2,200 | 458 | 134 | #7 | 150 | 16,160 | 6,587 | 42 | 450 | 9,900 | 413 | 210 | 9,900 | 2,067 | 46 | 2,100 | 96 | 115 | 1,580 | 181 | 4,660 | 533 | 19,320 | 77 | 132 | 169 | 12.64 | 1,686.4 | 3.5 | 246 | 129.9 | 17,110 |
| 2 | 3,000 | 2,400 | 250 | 200 | 134 | #6 | 150 | 6,500 | 1,947 | 134 | #5 | 150 | 3,900 | 811 | 2,200 | 458 | 134 | #7 | 150 | 3,360 | 1,370 | 14 | 450 | 9,900 | 138 | 84 | 9,900 | 827 | 46 | 2,400 | 110 | 23 | 1,580 | 36 | 5,260 | 120 | 6,520 | 26 | 46 | 59 | 4.74 | 581.7 | 1.2 | 85 | 48.6 | 5,902 |
| 3 | 3,000 | 2,400 | 250 | 200 | 134 | #6 | 150 | 9,700 | 2,905 | 134 | #5 | 150 | 3,900 | 811 | 2,200 | 458 | 134 | #7 | 150 | 6,560 | 2,674 | 21 | 450 | 9,900 | 207 | 119 | 9,900 | 1,171 | 46 | 2,400 | 110 | 46 | 1,580 | 72 | 5,260 | 241 | 9,720 | 39 | 68 | 87 | 6.82 | 864.9 | 1.8 | 126 | 70.0 | 8,775 |
| 4 | 3,000 | 2,400 | 250 | 200 | 134 | #6 | 150 | 12,900 | 3,863 | 134 | #5 | 150 | 3,900 | 811 | 2,200 | 458 | 134 | #7 | 150 | 9,760 | 3,978 | 28 | 450 | 9,900 | 276 | 154 | 9,900 | 1,515 | 46 | 2,400 | 110 | 69 | 1,580 | 108 | 5,260 | 361 | 12,920 | 51 | 88 | 113 | 8.90 | 1,148.0 | 2.3 | 164 | 91.3 | 11,644 |
| 5 | 3,000 | 2,400 | 250 | 200 | 134 | #6 | 150 | 16,100 | 4,822 | 134 | #5 | 150 | 3,900 | 811 | 2,200 | 458 | 134 | #7 | 150 | 12,960 | 5,283 | 35 | 450 | 9,900 | 344 | 189 | 9,900 | 1,860 | 46 | 2,400 | 110 | 92 | 1,580 | 144 | 5,260 | 481 | 16,120 | 64 | 110 | 141 | 10.98 | 1,431.3 | 2.9 | 205 | 112.7 | 14,518 |
| 6 | 3,000 | 2,400 | 250 | 200 | 134 | #6 | 150 | 19,300 | 5,780 | 134 | #5 | 150 | 3,900 | 811 | 2,200 | 458 | 134 | #7 | 150 | 16,160 | 6,587 | 42 | 450 | 9,900 | 413 | 224 | 9,900 | 2,204 | 46 | 2,400 | 110 | 115 | 1,580 | 181 | 5,260 | 601 | 19,320 | 77 | 132 | 169 | 13.06 | 1,714.5 | 3.5 | 246 | 134.1 | 17,391 |
| 2 | 3,000 | 2,700 | 250 | 200 | 134 | #6 | 150 | 6,500 | 1,947 | 162 | #5 | 125 | 4,200 | 1,056 | 2,200 | 553 | 134 | #7 | 150 | 3,360 | 1,370 | 14 | 450 | 9,900 | 138 | 90 | 9,900 | 886 | 46 | 2,700 | 123 | 23 | 1,580 | 36 | 5,860 | 134 | 6,520 | 26 | 46 | 59 | 4.92 | 624.3 | 1.2 | 85 | 50.4 | 6,328 |
| 3 | 3,000 | 2,700 | 250 | 200 | 134 | #6 | 150 | 9,700 | 2,905 | 162 | #5 | 125 | 4,200 | 1,056 | 2,200 | 553 | 134 | #7 | 150 | 6,560 | 2,674 | 21 | 450 | 9,900 | 207 | 127 | 9,900 | 1,250 | 46 | 2,700 | 123 | 46 | 1,580 | 72 | 5,860 | 268 | 9,720 | 39 | 68 | 87 | 7.06 | 910.8 | 1.8 | 126 | 72.4 | 9,234 |
| 4 | 3,000 | 2,700 | 250 | 200 | 134 | #6 | 150 | 12,900 | 3,863 | 162 | #5 | 125 | 4,200 | 1,056 | 2,200 | 553 | 134 | #7 | 150 | 9,760 | 3,978 | 28 | 450 | 9,900 | 276 | 164 | 9,900 | 1,614 | 46 | 2,700 | 123 | 69 | 1,580 | 108 | 5,860 | 402 | 12,920 | 51 | 88 | 113 | 9.20 | 1,197.3 | 2.3 | 164 | 94.3 | 12,137 |
| 5 | 3,000 | 2,700 | 250 | 200 | 134 | #6 | 150 | 16,100 | 4,822 | 162 | #5 | 125 | 4,200 | 1,056 | 2,200 | 553 | 134 | #7 | 150 | 12,960 | 5,283 | 35 | 450 | 9,900 | 344 | 201 | 9,900 | 1,978 | 46 | 2,700 | 123 | 92 | 1,580 | 144 | 5,860 | 536 | 16,120 | 64 | 110 | 141 | 11.34 | 1,483.9 | 2.9 | 205 | 116.3 | 15,044 |
| 6 | 3,000 | 2,700 | 250 | 200 | 134 | #6 | 150 | 19,300 | 5,780 | 162 | #5 | 125 | 4,200 | 1,056 | 2,200 | 553 | 134 | #7 | 150 | 16,160 | 6,587 | 42 | 450 | 9,900 | 413 | 238 | 9,900 | 2,342 | 46 | 2,700 | 123 | 115 | 1,580 | 181 | 5,860 | 670 | 19,320 | 77 | 132 | 169 | 13.48 | 1,770.5 | 3.5 | 246 | 138.3 | 17,951 |
| 2 | 3,000 | 3,000 | 250 | 200 | 134 | #6 | 150 | 6,500 | 1,947 | 162 | #5 | 125 | 4,500 | 1,131 | 2,200 | 553 | 134 | #7 | 150 | 3,360 | 1,370 | 14 | 450 | 9,900 | 138 | 90 | 9,900 | 886 | 46 | 3,000 | 137 | 23 | 1,580 | 36 | 6,460 | 148 | 6,520 | 26 | 46 | 59 | 5.10 | 634.6 | 1.2 | 85 | 52.2 | 6,431 |
| 3 | 3,000 | 3,000 | 250 | 200 | 134 | #6 | 150 | 9,700 | 2,905 | 162 | #5 | 125 | 4,500 | 1,131 | 2,200 | 553 | 134 | #7 | 150 | 6,560 | 2,674 | 21 | 450 | 9,900 | 207 | 127 | 9,900 | 1,250 | 46 | 3,000 | 137 | 46 | 1,580 | 72 | 6,460 | 295 | 9,720 | 39 | 68 | 87 | 7.30 | 922.4 | 1.8 | 126 | 74.8 | 9,350 |
| 4 | 3,000 | 3,000 | 250 | 200 | 134 | #6 | 150 | 12,900 | 3,863 | 162 | #5 | 125 | 4,500 | 1,131 | 2,200 | 553 | 134 | #7 | 150 | 9,760 | 3,978 | 28 | 450 | 9,900 | 276 | 164 | 9,900 | 1,614 | 46 | 3,000 | 137 | 69 | 1,580 | 108 | 6,460 | 443 | 12,920 | 51 | 88 | 113 | 9.50 | 1,210.3 | 2.3 | 164 | 97.3 | 12,267 |
| 5 | 3,000 | 3,000 | 250 | 200 | 134 | #6 | 150 | 16,100 | 4,822 | 162 | #5 | 125 | 4,500 | 1,131 | 2,200 | 553 | 134 | #7 | 150 | 12,960 | 5,283 | 35 | 450 | 9,900 | 344 | 201 | 9,900 | 1,978 | 46 | 3,000 | 137 | 92 | 1,580 | 144 | 6,460 | 591 | 16,120 | 64 | 110 | 141 | 11.70 | 1,498.3 | 2.9 | 205 | 119.9 | 15,188 |
| 6 | 3,000 | 3,000 | 250 | 200 | 134 | #6 | 150 | 19,300 | 5,780 | 162 | #5 | 125 | 4,500 | 1,131 | 2,200 | 553 | 134 | #7 | 150 | 16,160 | 6,587 | 42 | 450 | 9,900 | 413 | 238 | 9,900 | 2,342 | 46 | 3,000 | 137 | 115 | 1,580 | 181 | 6,460 | 738 | 19,320 | 77 | 132 | 169 | 13.90 | 1,786.2 | 3.5 | 246 | 142.5 | 18,108 |

| H | Bar Dimensions | | |
|---|---|---|---|
| | "X" | "Y" | "Z" |
| 1,500 | 1,700 | 1,700 | 900 |
| 1,800 | 2,000 | 2,000 | 900 |
| 2,100 | 2,300 | 2,300 | 900 |
| 2,400 | 2,600 | 2,600 | 900 |
| 2,700 | 2,900 | 2,900 | 900 |
| 3,000 | 3,200 | 3,200 | 900 |

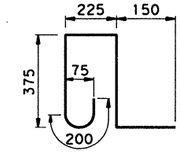


**BARS K ~ #4**
(Spa = 300 mm Max)
(Length = 1,290 mm)

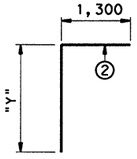


**BARS C**

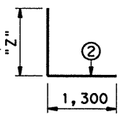


**BARS D**

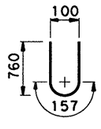


**BARS Y**

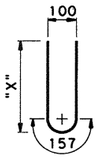


**BARS Z**

② Extend into slab.

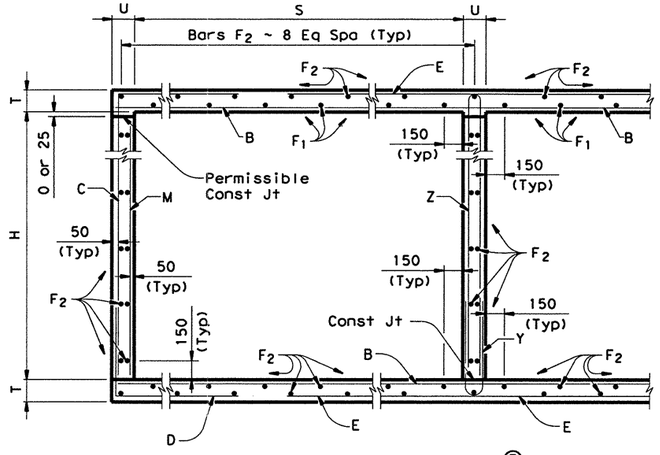


**TYPICAL SECTION** ③

③ Reinforcing shown for orientation purposes only. See table for number and spacing of bars.

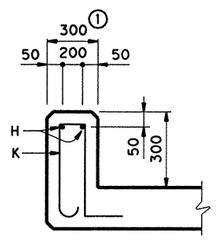


① For T6 Rail ~ see T6-CM(M) for additional details

**SECTION THRU CURB**

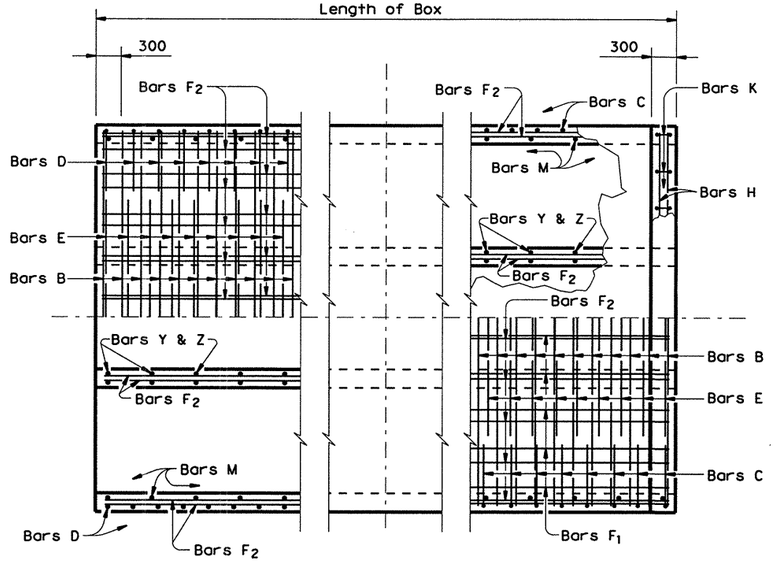


**BOTTOM SLAB** **TOP SLAB**

**PART PLANS** ③

## GENERAL NOTES:

Designed according to current AASHTO 1992 Standard Specifications.

Designed for MS18 Loading and to the maximum fill height shown.

All reinforcing steel shall be Grade 420 (fy = 420 MPa).

All concrete shall have a minimum 28 day compressive strength of 25 MPa.

The bottom edge of the top slab shall be chamfered 75 mm at the entrance. Reinforcing bars shall be adjusted to provide a minimum of 35 mm clear cover. Headwall heights will be reduced, if necessary, to provide a minimum 75 mm projection above the roadway slope. No increase or decrease will be made in plan quantities of concrete or reinforcing steel for this work.

Construction joints shown at the flow line may be raised a maximum of 150 mm at the Contractor's option. If this option is used, bars M may be cut off or raised, bars C and D may be reversed, and Bars Y & Z may be reversed.

All dimensions are in millimeters and all mass is in kilograms unless otherwise noted.

Texas Department of Transportation
Design Division (Bridge)

# MULTIPLE BOX CULVERTS
## 3,000 mm SPAN
## 4 m MAX FILL
(SHALL NOT BE USED FOR DIRECT TRAFFIC)

## MC-3.0-4(M)

| FILE: mc304std.dgn | DN: KRP | CK: GAF | DW: TxDOT | CK: KRP | STD: B85M |
|---|---|---|---|---|---|
| ©TxDOT January 1997 | DIST | FED REG | FEDERAL AID PROJECT • | | SHEET |
| REVISIONS | SAT | 6 | NH 2000 (704), etc. | | 396H |
| | COUNTY | | CONTROL | SECT | JOB | HIGHWAY |
| | BEXAR | | 2452 | 01 | 036 | LP 1604 |

Change Order 74

ACC: (LV=1,3 for Metric)
LEVELS DIS. 1 3 20

DISCLAIMER:
The use of this standard is governed by the "Texas Engineering Practice Act". No warranty of any kind is made by TxDOT for any purpose whatsoever. TxDOT assumes no responsibility for the conversion of this standard to other formats or for incorrect results or damages resulting from its use.

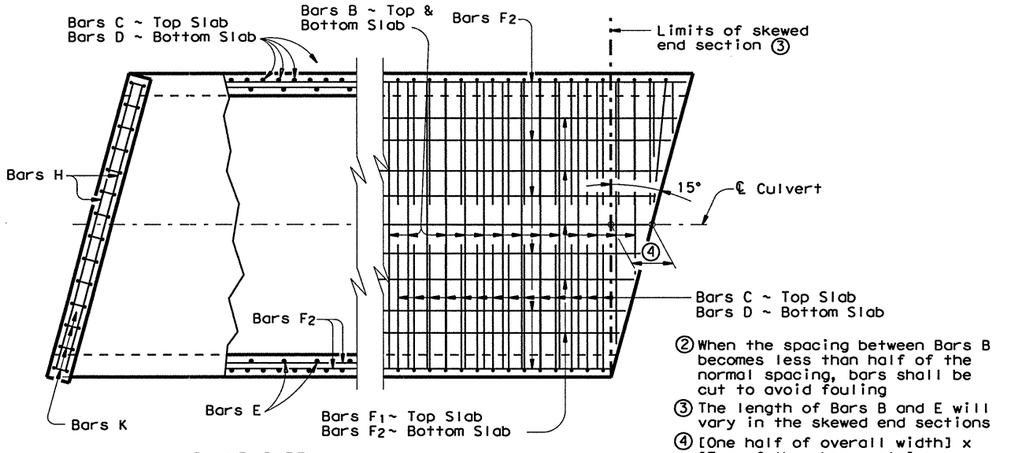


WALLS AND CURB SLAB

## PLAN OF SKEWED ENDS ~ 15°

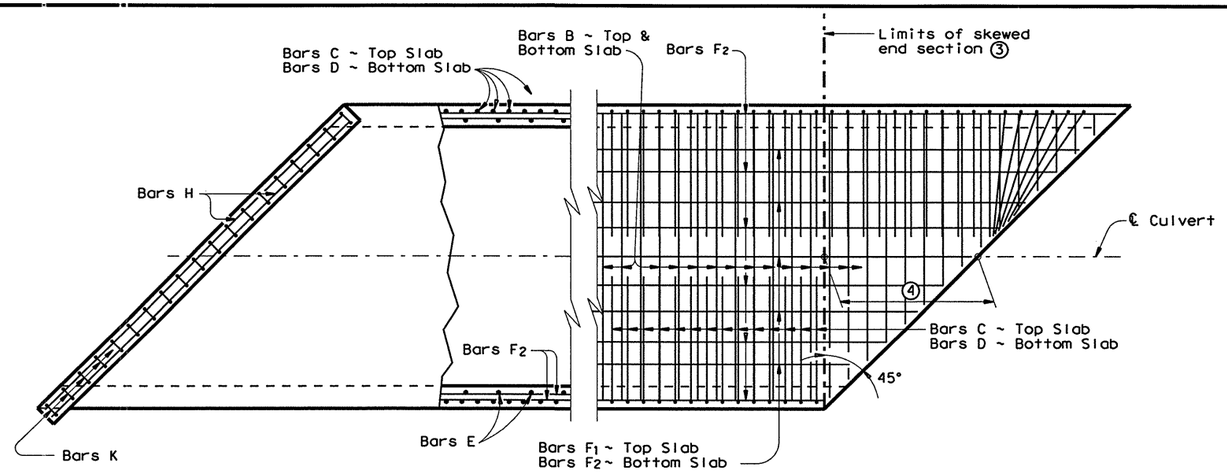


WALLS AND CURB SLAB

## PLAN OF SKEWED ENDS ~ 45°

② When the spacing between Bars B becomes less than half of the normal spacing, bars shall be cut to avoid fouling

③ The length of Bars B and E will vary in the skewed end sections

④ [One half of overall width] x [Tan of the skew angle]

⑤ Bars $F_1$ and $F_2$ shall be continuous through the angle section. They shall be bent to remain parallel to the walls of the Box Culvert.

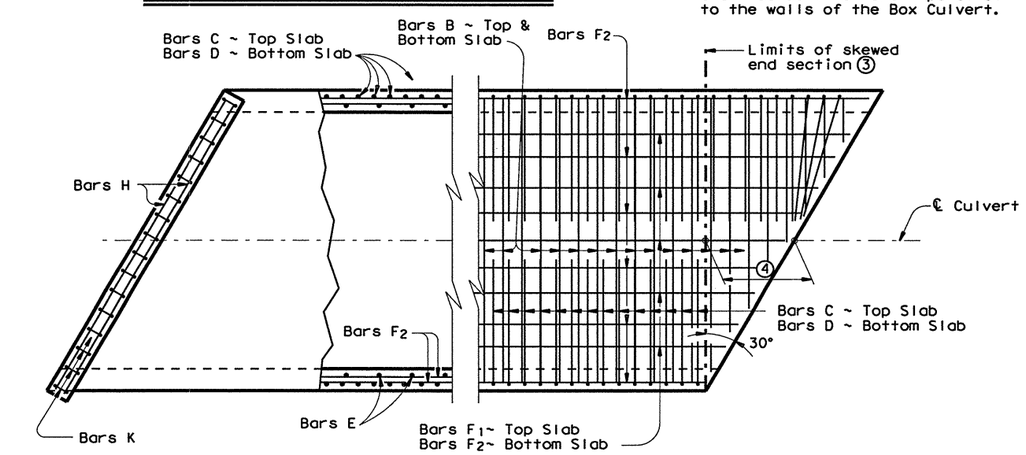


WALLS AND CURB SLAB

## PLAN OF SKEWED ENDS ~ 30°

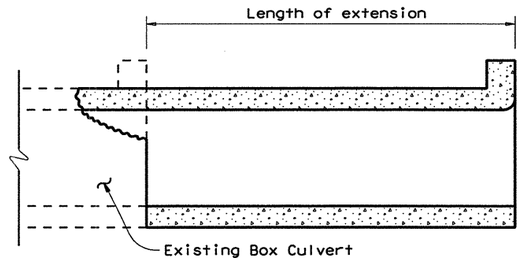


## LENGTHENING DETAIL ①

① For box culverts with less than 0.6 m of fill, the top slab shall be broken back to provide a minimum 560 mm lap of the existing longitudinal bars with the longitudinal bars in the extension. If the depth of fill is 0.6 m or greater, the top slab shall be broken back to provide a 320 mm minimum embedment of existing longitudinal reinforcing into the extension. Alternatively, if the fill height is greater than 0.6 m, the existing curb may be left in place and 600 mm long #6 bars shall be drilled and grouted 300 mm into the existing top slab at 450 mm center to center spacing. Wings and apron shall be broken back as necessary to install the extension. Exposed wingwall and apron reinforcing may be removed or cleaned and included in the extension. When lengthening existing box culverts with dimensions different than current standard dimensions, horizontal and vertical transitions shall be formed as directed by the Engineer. Bottom slabs shall match to maintain an uninterrupted flow line. Existing and new reinforcing shall be field bent into transition maintaining specified cover requirements. For direct traffic culverts, the "H" dimension may be adjusted to provide a smooth riding surface.

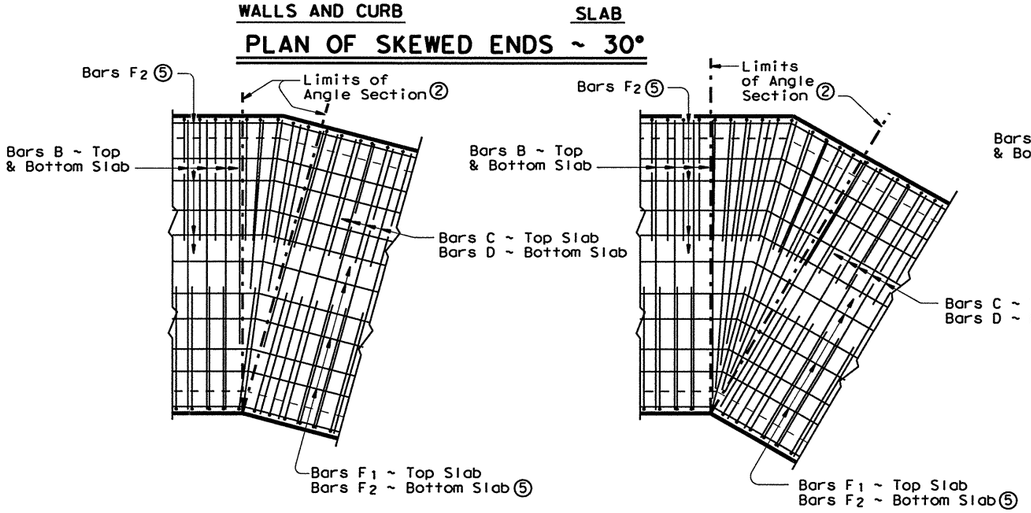


## PLAN OF ANGLE SECTION ~ 15°




## PLAN OF ANGLE SECTION ~ 30°

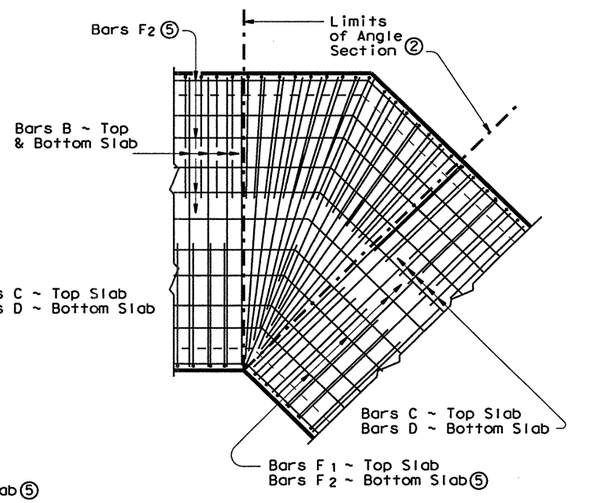


## PLAN OF ANGLE SECTION ~ 45°

### GENERAL NOTES:

Designed according to current AASHTO Standard Specifications.

All reinforcing steel shall be Grade 420 (fy = 420 MPa).

All concrete shall have a minimum 28 day compressive strength of 25 MPa.

Refer to Single Box Culverts Cast-in-Place standard for details of straight sections of culvert. For skewed sections and angle sections refer to Single Box Culverts Cast-in-Place standard for slab and wall dimensions, bar sizes, maximum bar spacing, and any other details not shown.

Texas Department of Transportation
Design Division (Bridge)

# SINGLE BOX CULVERTS CAST-IN-PLACE MISCELLANEOUS DETAILS

## SCC-MD(M)

| FILE: sccmdstd.dgn | DN: KLR | CK: KRP | DW: MCB | CK: KLR | STD: B38M |
|---|---|---|---|---|---|
| ©TxDOT January 1997 | DIST | FED REG | FEDERAL AID PROJECT # | | SHEET |
| REVISIONS | SAT | 6 | NH 2000(704), ETC. | | 397 |
| | COUNTY | | CONTROL | SECT | JOB | HIGHWAY |
| | BEXAR | | 2452 | 01 | 036, ETC. | LP1604 |

LEVELS DISPLAYED: 1 3
ACC: (LV=1,3 for Metric)

DISCLAIMER:
The use of this standard is governed by the "Texas Engineering Practice Act". No warranty of any kind is made by TxDOT for any purpose whatsoever. TxDOT assumes no responsibility for the conversion of this standard to other formats or for incorrect results or damages resulting from its use.

LEVELS DESIGNED | ACC: (LV=1,3 for Metric) | 1 | 3

## BILLS OF REINFORCING STEEL (For Box Length = 10 meters)

| SECTION DIMENSIONS | | | | ② FILL HEIGHT, m | Bars B | | | | | Bars C | | | | | | | Bars D | | | | | | | Bars E~#4 at 450 mm Max | | | Bars $F_1$~#4 | | | | Bars $F_2$~#4 at 450 mm Max | | | Bars H 4~#4 | | Bars K | | QUANTITIES: Per Meter of Barrel | | Curb | | Total | |
|---|---|---|---|---|---|---|---|---|---|---|---|---|---|---|---|---|---|---|---|---|---|---|---|---|---|---|---|---|---|---|---|---|---|---|---|---|---|---|---|---|---|---|
| S | H | T | U | | Number | Size | Spa | Lgth | Mass | Number | Size | Spa | Lgth | Mass | "X" | "Y" | Number | Size | Spa | Lgth | Mass | "Y" | "Z" | No. | Lgth | Mass | No. | Spa | Length | Mass | No. | Length | Mass | Lgth | Mass | No. | Mass | Conc ($m^3$) | Reinf (kg) | Conc ($m^3$) | Reinf (kg) | Conc ($m^3$) | Reinf (kg) |
| 1,800 | 900 | 175 | 175 | 6.0 | 162 | #5 | 125 | 2,050 | 515 | 134 | #5 | 150 | 2,000 | 416 | 1,030 | 970 | 134 | #5 | 150 | 1,800 | 374 | 970 | 830 | 46 | 900 | 41 | 10 | 175 | 9,900 | 98 | 29 | 9,900 | 285 | 2,070 | 8 | 16 | 21 | 1.07 | 172.9 | 0.4 | 29 | 11.1 | 1,758 |
| 1,800 | 900 | 200 | 175 | 8.0 | 134 | #6 | 150 | 2,050 | 614 | 134 | #5 | 150 | 2,020 | 420 | 1,050 | 970 | 134 | #5 | 150 | 1,820 | 379 | 970 | 850 | 46 | 900 | 41 | 5 | 450 | 9,900 | 49 | 29 | 9,900 | 285 | 2,070 | 8 | 16 | 21 | 1.18 | 178.8 | 0.4 | 29 | 12.1 | 1,817 |
| 1,800 | 900 | 225 | 200 | 9.0 | 134 | #6 | 150 | 2,100 | 629 | 134 | #5 | 150 | 2,050 | 426 | 1,080 | 970 | 134 | #5 | 150 | 1,850 | 385 | 970 | 880 | 46 | 900 | 41 | 5 | 450 | 9,900 | 49 | 29 | 9,900 | 285 | 2,120 | 8 | 16 | 21 | 1.35 | 181.5 | 0.4 | 29 | 13.9 | 1,844 |
| 1,800 | 1,200 | 175 | 175 | 6.0 | 162 | #5 | 125 | 2,050 | 515 | 162 | #4 | 125 | 2,200 | 354 | 1,330 | 870 | 162 | #4 | 125 | 1,560 | 251 | 870 | 690 | 46 | 1,200 | 55 | 10 | 175 | 9,900 | 98 | 29 | 9,900 | 285 | 2,070 | 8 | 16 | 21 | 1.17 | 155.8 | 0.4 | 29 | 12.1 | 1,587 |
| 1,800 | 1,200 | 200 | 175 | 8.0 | 162 | #6 | 125 | 2,050 | 742 | 134 | #5 | 150 | 2,320 | 482 | 1,350 | 970 | 134 | #5 | 150 | 1,820 | 379 | 970 | 850 | 46 | 1,200 | 55 | 5 | 450 | 9,900 | 49 | 29 | 9,900 | 285 | 2,070 | 8 | 16 | 21 | 1.28 | 199.2 | 0.4 | 29 | 13.2 | 2,021 |
| 1,800 | 1,200 | 225 | 200 | 9.0 | 134 | #6 | 150 | 2,100 | 629 | 134 | #5 | 150 | 2,350 | 489 | 1,380 | 970 | 134 | #5 | 150 | 1,850 | 385 | 970 | 880 | 46 | 1,200 | 55 | 5 | 450 | 9,900 | 49 | 29 | 9,900 | 285 | 2,120 | 8 | 16 | 21 | 1.47 | 189.2 | 0.4 | 29 | 15.1 | 1,921 |
| 1,800 | 1,500 | 175 | 175 | 6.0 | 162 | #5 | 125 | 2,050 | 515 | 162 | #4 | 125 | 2,500 | 403 | 1,630 | 870 | 162 | #4 | 125 | 1,560 | 251 | 870 | 690 | 46 | 1,500 | 69 | 10 | 175 | 9,900 | 98 | 33 | 9,900 | 325 | 2,070 | 8 | 16 | 21 | 1.28 | 166.1 | 0.4 | 29 | 13.2 | 1,690 |
| 1,800 | 1,500 | 200 | 175 | 8.0 | 162 | #6 | 125 | 2,050 | 742 | 134 | #5 | 150 | 2,620 | 545 | 1,650 | 970 | 134 | #5 | 150 | 1,820 | 379 | 970 | 850 | 46 | 1,500 | 69 | 5 | 450 | 9,900 | 49 | 33 | 9,900 | 325 | 2,070 | 8 | 16 | 21 | 1.39 | 210.9 | 0.4 | 29 | 14.2 | 2,138 |
| 1,800 | 1,500 | 225 | 200 | 9.0 | 162 | #6 | 125 | 2,100 | 760 | 134 | #5 | 150 | 2,650 | 551 | 1,680 | 970 | 134 | #5 | 150 | 1,850 | 385 | 970 | 880 | 46 | 1,500 | 69 | 5 | 450 | 9,900 | 49 | 33 | 9,900 | 325 | 2,120 | 8 | 16 | 21 | 1.59 | 213.9 | 0.4 | 29 | 16.3 | 2,168 |
| 1,800 | 1,800 | 175 | 175 | 6.0 | 162 | #5 | 125 | 2,050 | 515 | 162 | #4 | 125 | 2,800 | 451 | 1,930 | 870 | 162 | #4 | 125 | 1,560 | 251 | 870 | 690 | 46 | 1,800 | 82 | 10 | 175 | 9,900 | 98 | 37 | 9,900 | 364 | 2,070 | 8 | 16 | 21 | 1.38 | 176.1 | 0.4 | 29 | 14.2 | 1,790 |
| 1,800 | 1,800 | 200 | 175 | 8.0 | 162 | #6 | 125 | 2,050 | 742 | 134 | #5 | 150 | 2,920 | 607 | 1,950 | 970 | 134 | #5 | 150 | 1,820 | 379 | 970 | 850 | 46 | 1,800 | 82 | 5 | 450 | 9,900 | 49 | 37 | 9,900 | 364 | 2,070 | 8 | 16 | 21 | 1.49 | 222.3 | 0.4 | 29 | 15.3 | 2,252 |
| 1,800 | 1,800 | 225 | 200 | 9.0 | 162 | #6 | 125 | 2,100 | 760 | 134 | #5 | 150 | 2,950 | 614 | 1,980 | 970 | 134 | #5 | 150 | 1,850 | 385 | 970 | 880 | 46 | 1,800 | 82 | 5 | 450 | 9,900 | 49 | 37 | 9,900 | 364 | 2,120 | 8 | 16 | 21 | 1.71 | 225.4 | 0.4 | 29 | 17.5 | 2,283 |

② Minimum fill height shown shall be used for direct traffic loading.

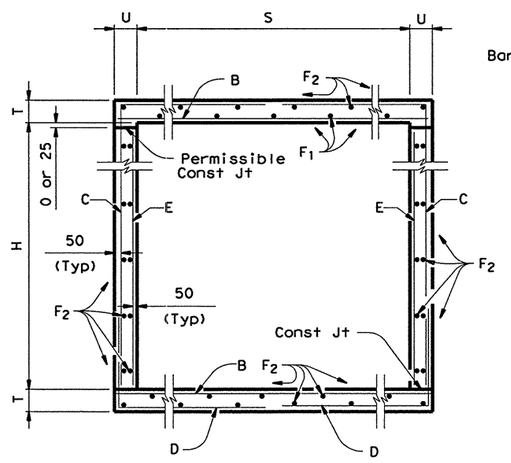


**TYPICAL SECTION**

For Direct Traffic, construct slab to conform to crown of roadway while maintaining constant thickness of slab.

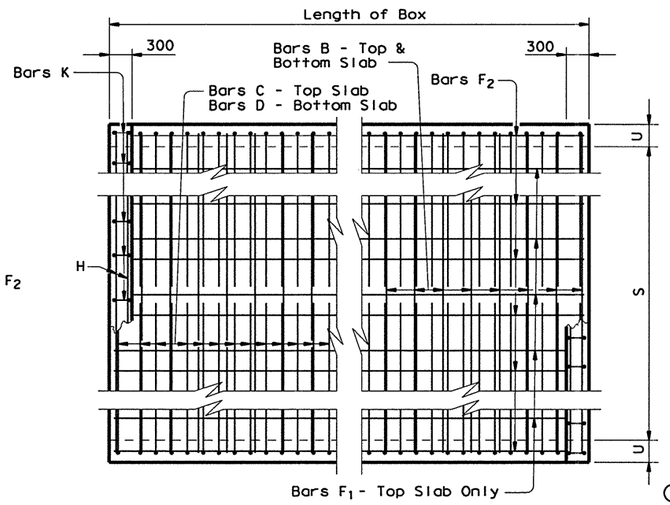


**PLAN OF REINF STEEL**

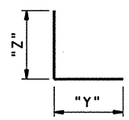


**BARS D**

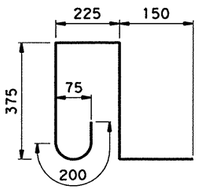


**BARS K** ~ #4
(Spa = 300 mm Max)
(Length = 1290 mm)

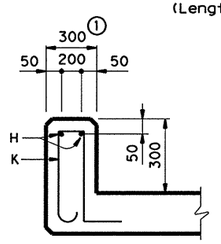


① For T6 Rail ~ see T6-CM(M) for additional details

**SECTION THRU CURB**

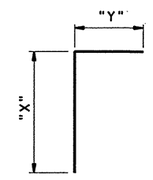


**BARS C**

### GENERAL NOTES:

Designed according to current AASHTO Standard Specifications.
Designed for MS18 Loading and to the maximum fill height shown.
All reinforcing steel shall be Grade 420 (fy = 420 MPa).
All concrete shall have a minimum 28 day compressive strength of 25 MPa.
The bottom edge of the top slab shall be chamfered 75 mm at the entrance. Reinforcing bars shall be adjusted to provide a minimum of 35 mm clear cover. Headwall heights will be reduced, if necessary, to provide a maximum 75 mm projection above the roadway slope. No increase or decrease will be made in plan quantities of concrete or reinforcing steel for this work.
Construction joints shown at the flow line may be raised a maximum of 150 mm at the Contractor's option. If this option is used, bars E may be cut off or raised, and bars C and D may be reversed.
All dimensions are in millimeters and all mass is in kilograms unless otherwise noted.

Texas Department of Transportation
Design Division (Bridge)

# SINGLE BOX CULVERTS CAST-IN-PLACE DIRECT TRAFFIC TO 9 m MAX FILL

## SCC-1.8(M)

| FILE: scc18std.dgn | DN: GAF | CK: TEB | DW: TxDOT | CK: GAF | STD: B42M |
|---|---|---|---|---|---|
| ©TxDOT January 1997 | DIST | FED REG | FEDERAL AID PROJECT • | | SHEET |
| REVISIONS | SAT | 6 | NH 2000(704), ETC. | | 398 |
| | COUNTY | | CONTROL | SECT | JOB | HIGHWAY |
| | BEXAR | | 2452 | 01 | 336, ETC. | LP1604 |

DISCLAIMER:
The use of this standard is governed by the "Texas Engineering Practice Act". No warranty of any kind is made by TxDOT for any purpose whatsoever. TxDOT assumes no responsibility for the conversion of this standard to other formats or for incorrect results or damages resulting from its use.

ACC: (LV=1.3 for Metric)

LEVELS DISPLAYED: 1 3

## BILLS OF REINFORCING STEEL (For Box Length = 10 meters)

| SECTION DIMENSIONS | | | | ② FILL HEIGHT, m | Bars B | | | | | Bars C | | | | | | Bars D | | | | | | | Bars E~#4 at 450 mm Max | | | Bars $F_1$~#4 | | | | Bars $F_2$~#4 at 450 mm Max | | | Bars H 4~#4 | | Bars K | | QUANTITIES: Per Meter of Barrel | | Curb | | Total | |
|---|---|---|---|---|---|---|---|---|---|---|---|---|---|---|---|---|---|---|---|---|---|---|---|---|---|---|---|---|---|---|---|---|---|---|---|---|---|---|---|---|
| S | H | T | U | | Number | Size | Spa | Lgth | Mass | Number | Size | Spa | Lgth | Mass | "X" | "Y" | Number | Size | Spa | Lgth | Mass | "Y" | "Z" | No. | Lgth | Mass | No. | Spa | Length | Mass | No. | Length | Mass | Lgth | Mass | No. | Mass | Conc ($m^3$) | Reinf (kg) | Conc ($m^3$) | Reinf (kg) | Conc ($m^3$) | Reinf (kg) |
| 1,500 | 600 | 175 | 175 | 8.0 | 162 | #5 | 125 | 1,750 | 440 | 134 | #5 | 150 | 1,550 | 322 | 730 | 820 | 134 | #5 | 150 | 1,650 | 343 | 820 | 830 | 46 | 600 | 27 | 8 | 175 | 9,900 | 79 | 22 | 9,900 | 216 | 1,770 | 7 | 14 | 18 | 0.86 | 142.7 | 0.3 | 25 | 8.9 | 1,452 |
| 1,500 | 600 | 200 | 175 | 9.0 | 162 | #5 | 125 | 1,750 | 440 | 162 | #4 | 125 | 1,470 | 237 | 750 | 720 | 162 | #4 | 125 | 1,430 | 230 | 720 | 710 | 46 | 600 | 27 | 4 | 450 | 9,900 | 39 | 22 | 9,900 | 216 | 1,770 | 7 | 14 | 18 | 0.95 | 118.9 | 0.3 | 25 | 9.8 | 1,214 |
| 1,500 | 900 | 175 | 175 | 8.0 | 162 | #5 | 125 | 1,750 | 440 | 162 | #4 | 125 | 1,750 | 282 | 1,030 | 720 | 162 | #4 | 125 | 1,410 | 227 | 720 | 690 | 46 | 900 | 41 | 8 | 175 | 9,900 | 79 | 26 | 9,900 | 256 | 1,770 | 7 | 14 | 18 | 0.96 | 132.5 | 0.3 | 25 | 10.0 | 1,350 |
| 1,500 | 900 | 200 | 175 | 9.0 | 162 | #5 | 125 | 1,750 | 440 | 162 | #4 | 125 | 1,770 | 285 | 1,050 | 720 | 162 | #4 | 125 | 1,430 | 230 | 720 | 710 | 46 | 900 | 41 | 4 | 450 | 9,900 | 39 | 26 | 9,900 | 256 | 1,770 | 7 | 14 | 18 | 1.06 | 129.1 | 0.3 | 25 | 10.9 | 1,316 |
| 1,500 | 1,200 | 175 | 175 | 8.0 | 162 | #5 | 125 | 1,750 | 440 | 162 | #4 | 125 | 2,050 | 330 | 1,330 | 720 | 162 | #4 | 125 | 1,410 | 227 | 720 | 690 | 46 | 1,200 | 55 | 8 | 175 | 9,900 | 79 | 26 | 9,900 | 256 | 1,770 | 7 | 14 | 18 | 1.07 | 138.7 | 0.3 | 25 | 11.0 | 1,412 |
| 1,500 | 1,200 | 200 | 175 | 9.0 | 162 | #5 | 125 | 1,750 | 440 | 162 | #4 | 125 | 2,070 | 333 | 1,350 | 720 | 162 | #4 | 125 | 1,430 | 230 | 720 | 710 | 46 | 1,200 | 55 | 4 | 450 | 9,900 | 39 | 26 | 9,900 | 256 | 1,770 | 7 | 14 | 18 | 1.16 | 135.3 | 0.3 | 25 | 11.9 | 1,378 |
| 1,500 | 1,500 | 175 | 175 | 8.0 | 162 | #5 | 125 | 1,750 | 440 | 162 | #4 | 125 | 2,350 | 378 | 1,630 | 720 | 162 | #4 | 125 | 1,410 | 227 | 720 | 690 | 46 | 1,500 | 69 | 8 | 175 | 9,900 | 79 | 30 | 9,900 | 295 | 1,770 | 7 | 14 | 18 | 1.17 | 148.8 | 0.3 | 25 | 12.1 | 1,513 |
| 1,500 | 1,500 | 200 | 175 | 9.0 | 162 | #5 | 125 | 1,750 | 440 | 162 | #4 | 125 | 2,370 | 382 | 1,650 | 720 | 162 | #4 | 125 | 1,430 | 230 | 720 | 710 | 46 | 1,500 | 69 | 4 | 450 | 9,900 | 39 | 30 | 9,900 | 295 | 1,770 | 7 | 14 | 18 | 1.27 | 145.5 | 0.3 | 25 | 13.0 | 1,480 |

② Minimum fill height shown shall be used for direct traffic loading.

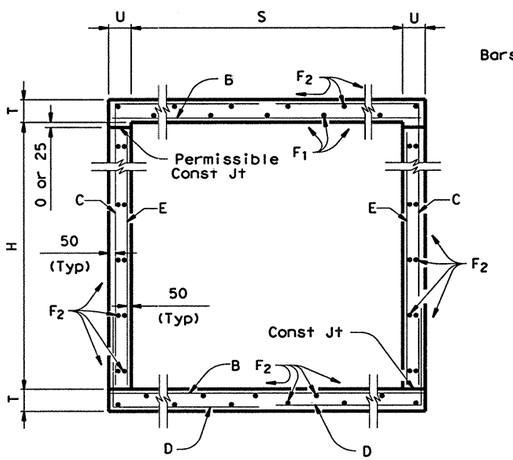


TYPICAL SECTION

For Direct Traffic, construct slab to conform to crown of roadway while maintaining constant thickness of slab.

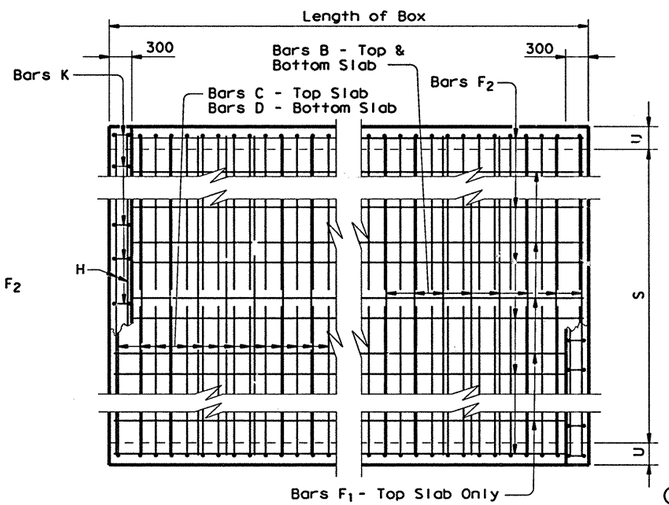


PLAN OF REINF STEEL

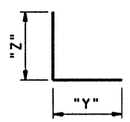


BARS D

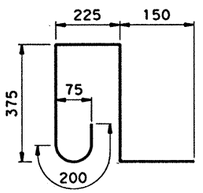


BARS K ~ #4
(Spa = 300 mm Max)
(Length = 1290 mm)

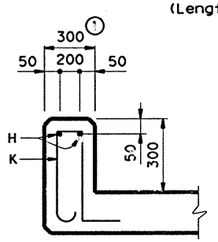


① For T6 Rail ~ see T6-CM(M) for additional details

SECTION THRU CURB

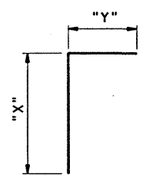


BARS C

**GENERAL NOTES:**

Designed according to current AASHTO Standard Specifications.
Designed for MS18 Loading and to the maximum fill height shown.
All reinforcing steel shall be Grade 420 (fy = 420 MPa).
All concrete shall have a minimum 28 day compressive strength of 25 MPa.
The bottom edge of the top slab shall be chamfered 75 mm at the entrance. Reinforcing bars shall be adjusted to provide a minimum of 35 mm clear cover. Headwall heights will be reduced, if necessary, to provide a maximum 75 mm projection above the roadway slope. No increase or decrease will be made in plan quantities of concrete or reinforcing steel for this work.
Construction joints shown at the flow line may be raised a maximum of 150 mm at the Contractor's option. If this option is used, bars E may be cut off or raised, and bars C and D may be reversed.
All dimensions are in millimeters and all mass is in kilograms unless otherwise noted.

Texas Department of Transportation
Design Division (Bridge)

# SINGLE BOX CULVERTS CAST-IN-PLACE DIRECT TRAFFIC TO 9 m MAX FILL

## SCC-1.5(M)

| FILE: scc15std.dgn | DN: GAF | CK: TEB | DW: TxDOT | CK: GAF | STD: B41M |
|---|---|---|---|---|---|
| ©TxDOT January 1997 | DIST | FED REG | FEDERAL AID PROJECT • | | SHEET |
| REVISIONS | SAT | 6 | NH 2000(704), ETC. | | 37RA |
| | COUNTY | | CONTROL | SECT | JOB | HIGHWAY |
| | BEXAR | | 2452 | 01 | 026, etc. | LP1604 |

04-29-02

# BILLS OF REINFORCING STEEL (For Box Length = 10 meters)

| SECTION DIMENSIONS | | | | ② FILL HEIGHT, m | Bars B | | | | | Bars C | | | | | | | Bars D | | | | | | | Bars E~#4 at 450 mm Max | | | Bars $F_1$~#4 | | | | Bars $F_2$~#4 at 450 mm Max | | | Bars H 4~#4 | | Bars K | | QUANTITIES: Per Meter of Barrel | | Curb | | Total | |
|---|---|---|---|---|---|---|---|---|---|---|---|---|---|---|---|---|---|---|---|---|---|---|---|---|---|---|---|---|---|---|---|---|---|---|---|---|---|---|---|---|---|---|
| S | H | T | U | | Number | Size | Spa | Lgth | Mass | Number | Size | Spa | Lgth | Mass | "X" | "Y" | Number | Size | Spa | Lgth | Mass | "Y" | "Z" | No. | Lgth | Mass | No. | Spa | Length | Mass | No. | Length | Mass | Lgth | Mass | No. | Mass | Conc ($m^3$) | Reinf (kg) | Conc ($m^3$) | Reinf (kg) | Conc ($m^3$) | Reinf (kg) |
| 1,500 | 600 | 175 | 175 | 8.0 | 162 | #5 | 125 | 1,750 | 440 | 134 | #5 | 150 | 1,550 | 322 | 730 | 820 | 134 | #5 | 150 | 1,650 | 343 | 820 | 830 | 46 | 600 | 27 | 8 | 175 | 9,900 | 79 | 22 | 9,900 | 216 | 1,770 | 7 | 14 | 18 | 0.86 | 142.7 | 0.3 | 25 | 8.9 | 1,452 |
| 1,500 | 600 | 200 | 175 | 9.0 | 162 | #5 | 125 | 1,750 | 440 | 162 | #4 | 125 | 1,470 | 237 | 750 | 720 | 162 | #4 | 125 | 1,430 | 230 | 720 | 710 | 46 | 600 | 27 | 4 | 450 | 9,900 | 39 | 22 | 9,900 | 216 | 1,770 | 7 | 14 | 18 | 0.95 | 118.9 | 0.3 | 25 | 9.8 | 1,214 |
| 1,500 | 900 | 175 | 175 | 8.0 | 162 | #5 | 125 | 1,750 | 440 | 162 | #4 | 125 | 1,750 | 282 | 1,030 | 720 | 162 | #4 | 125 | 1,410 | 227 | 720 | 690 | 46 | 900 | 41 | 8 | 175 | 9,900 | 79 | 26 | 9,900 | 256 | 1,770 | 7 | 14 | 18 | 0.96 | 132.5 | 0.3 | 25 | 10.0 | 1,350 |
| 1,500 | 900 | 200 | 175 | 9.0 | 162 | #5 | 125 | 1,750 | 440 | 162 | #4 | 125 | 1,770 | 285 | 1,050 | 720 | 162 | #4 | 125 | 1,430 | 230 | 720 | 710 | 46 | 900 | 41 | 4 | 450 | 9,900 | 39 | 26 | 9,900 | 256 | 1,770 | 7 | 14 | 18 | 1.06 | 129.1 | 0.3 | 25 | 10.9 | 1,316 |
| 1,500 | 1,200 | 175 | 175 | 8.0 | 162 | #5 | 125 | 1,750 | 440 | 162 | #4 | 125 | 2,050 | 330 | 1,330 | 720 | 162 | #4 | 125 | 1,410 | 227 | 720 | 690 | 46 | 1,200 | 55 | 8 | 175 | 9,900 | 79 | 26 | 9,900 | 256 | 1,770 | 7 | 14 | 18 | 1.07 | 138.7 | 0.3 | 25 | 11.0 | 1,412 |
| 1,500 | 1,200 | 200 | 175 | 9.0 | 162 | #5 | 125 | 1,750 | 440 | 162 | #4 | 125 | 2,070 | 333 | 1,350 | 720 | 162 | #4 | 125 | 1,430 | 230 | 720 | 710 | 46 | 1,200 | 55 | 4 | 450 | 9,900 | 39 | 26 | 9,900 | 256 | 1,770 | 7 | 14 | 18 | 1.16 | 135.3 | 0.3 | 25 | 11.9 | 1,378 |
| 1,500 | 1,500 | 175 | 175 | 8.0 | 162 | #5 | 125 | 1,750 | 440 | 162 | #4 | 125 | 2,350 | 378 | 1,630 | 720 | 162 | #4 | 125 | 1,410 | 227 | 720 | 690 | 46 | 1,500 | 69 | 8 | 175 | 9,900 | 79 | 30 | 9,900 | 295 | 1,770 | 7 | 14 | 18 | 1.17 | 148.8 | 0.3 | 25 | 12.1 | 1,513 |
| 1,500 | 1,500 | 200 | 175 | 9.0 | 162 | #5 | 125 | 1,750 | 440 | 162 | #4 | 125 | 2,370 | 382 | 1,650 | 720 | 162 | #4 | 125 | 1,430 | 230 | 720 | 710 | 46 | 1,500 | 69 | 4 | 450 | 9,900 | 39 | 30 | 9,900 | 295 | 1,770 | 7 | 14 | 18 | 1.27 | 145.5 | 0.3 | 25 | 13.0 | 1,480 |

② Minimum fill height shown shall be used for direct traffic loading.

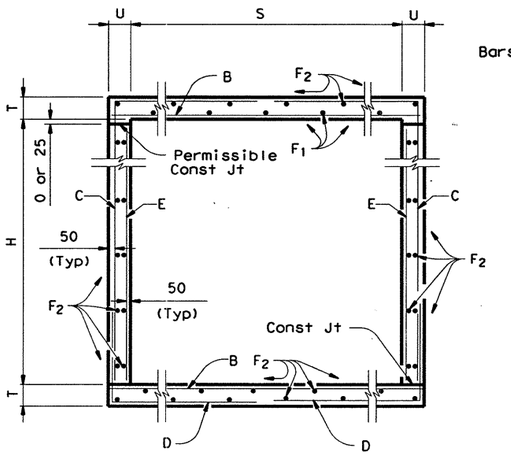


## TYPICAL SECTION

For Direct Traffic, construct slab to conform to crown of roadway while maintaining constant thickness of slab.

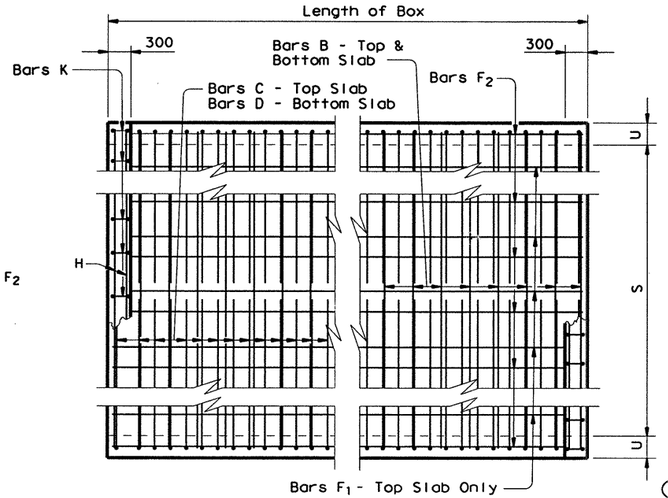


## PLAN OF REINF STEEL

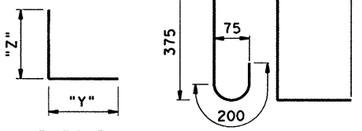


BARS D




BARS K ~ #4
(Spa = 300 mm Max)
(Length = 1290 mm)

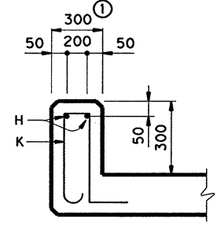


① For T6 Rail ~ see T6-CM(M) for additional details

## SECTION THRU CURB

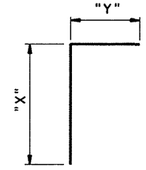


BARS C

## GENERAL NOTES:

Designed according to current AASHTO Standard Specifications.
Designed for MS18 Loading and to the maximum fill height shown.
All reinforcing steel shall be Grade 420 (fy = 420 MPa).
All concrete shall have a minimum 28 day compressive strength of 25 MPa.
The bottom edge of the top slab shall be chamfered 75 mm at the entrance. Reinforcing bars shall be adjusted to provide a minimum of 35 mm clear cover. Headwall heights will be reduced, if necessary, to provide a maximum 75 mm projection above the roadway slope. No increase or decrease will be made in plan quantities of concrete or reinforcing steel for this work.
Construction joints shown at the flow line may be raised a maximum of 150 mm at the Contractor's option. If this option is used, bars E may be cut off or raised, and bars C and D may be reversed.
All dimensions are in millimeters and all mass is in kilograms unless otherwise noted.

**CHANGE ORDER NO. 56**

*Texas Department of Transportation*
*Design Division (Bridge)*

# SINGLE BOX CULVERTS CAST-IN-PLACE DIRECT TRAFFIC TO 9 m MAX FILL

## SCC-1.5(M)

| FILE: scc15std.dgn | DN: GAF | CK: TEB | DW: TxDOT | CK: GAF | STD: B41M |
|---|---|---|---|---|---|
| © TxDOT January 1997 | DIST | FED REG | FEDERAL AID PROJECT | | SHEET |
| REVISIONS | SAT | 6 | NH 2000(704), ETC. | | 398A |
| | COUNTY | | CONTROL | SECT | JOB | HIGHWAY |
| | BEXAR | | 2452 | 01 | 036, | LP 1604 |


DISCLAIMER:
The use of this standard is governed by the "Texas Engineering Practice Act". No warranty of any kind is made by TxDOT for any purpose whatsoever. TxDOT assumes no responsibility for the conversion of this standard to other formats or for incorrect results or damages resulting from its use.


T:/AO/CONSTR/ V/Loop 1604/SCC15STD.dgn
LEVELS Display FIXED ACC: (LV=1,3 for Metric)

DISCLAIMER:
The use of this standard is governed by the "Texas Engineering Practice Act". No warranty of any kind is made by TxDOT for any purpose whatsoever. TxDOT assumes no responsibility for the conversion of this standard to other formats or for incorrect results or damages resulting from its use.

T:/AO/CONSTRL /Loop 1604/SCC30STD.dgn

| LEVELS DISPLAYED | ACC: |
|---|---|
| 1 3 | (LV=1,3 for Metric) |

| SECTION DIMENSIONS | | | | ② FILL HEIGHT, m | BILLS OF REINFORCING STEEL (For Box Length = 10 meters) | | | | | | | | | | | | | | | | | | | | | | | | | | | | QUANTITIES | | | | |
|---|---|---|---|---|---|---|---|---|---|---|---|---|---|---|---|---|---|---|---|---|---|---|---|---|---|---|---|---|---|---|---|---|---|---|---|---|
| | | | | | Bars B | | | | | Bars C | | | | | | | Bars D | | | | | | | Bars E~#4 at 450 mm Max | | | Bars $F_1$~#4 | | | | Bars $F_2$~#4 at 450 mm Max | | | Bars H 4~#4 | | Bars K | | Per Meter of Barrel | | Curb | | Total | |
| S | H | T | U | | Number | Size | Spa | Lgth | Mass | Number | Size | Spa | Lgth | Mass | "X" | "Y" | Number | Size | Spa | Lgth | Mass | "Y" | "Z" | No. | Lgth | Mass | No. | Spa | Length | Mass | No. | Length | Mass | Lgth | Mass | No. | Mass | Conc ($m^3$) | Reinf (kg) | Conc ($m^3$) | Reinf (kg) | Conc ($m^3$) | Reinf (kg) |
| 3,000 | 1,500 | 175 | 175 | 2.0 | 116 | #7 | 175 | 3,250 | 1,147 | 162 | #5 | 125 | 3,200 | 805 | 1,630 | 1,570 | 162 | #5 | 125 | 2,400 | 603 | 1,570 | 830 | 46 | 1,500 | 69 | 17 | 175 | 9,900 | 167 | 41 | 9,900 | 403 | 3,270 | 13 | 24 | 31 | 1.70 | 319.4 | 0.6 | 44 | 17.6 | 3,238 |
| 3,000 | 1,500 | 200 | 175 | 3.0 | 162 | #6 | 125 | 3,250 | 1,177 | 162 | #5 | 125 | 3,220 | 810 | 1,650 | 1,570 | 162 | #5 | 125 | 2,420 | 608 | 1,570 | 850 | 46 | 1,500 | 69 | 7 | 450 | 9,900 | 69 | 41 | 9,900 | 403 | 3,270 | 13 | 24 | 31 | 1.87 | 313.6 | 0.6 | 44 | 19.3 | 3,180 |
| 3,000 | 1,500 | 225 | 200 | 4.0 | 162 | #6 | 125 | 3,300 | 1,195 | 162 | #5 | 125 | 3,250 | 817 | 1,680 | 1,570 | 162 | #5 | 125 | 2,450 | 616 | 1,570 | 880 | 46 | 1,500 | 69 | 7 | 450 | 9,900 | 69 | 41 | 9,900 | 403 | 3,320 | 13 | 24 | 31 | 2.13 | 316.9 | 0.6 | 44 | 21.9 | 3,213 |
| 3,000 | 1,500 | 250 | 200 | 5.0 | 134 | #7 | 150 | 3,300 | 1,345 | 162 | #5 | 125 | 3,270 | 822 | 1,700 | 1,570 | 162 | #5 | 125 | 2,470 | 621 | 1,570 | 900 | 46 | 1,500 | 69 | 7 | 450 | 9,900 | 69 | 41 | 9,900 | 403 | 3,320 | 13 | 24 | 31 | 2.30 | 332.9 | 0.6 | 44 | 23.6 | 3,373 |
| 3,000 | 1,500 | 275 | 225 | 6.0 | 162 | #7 | 125 | 3,350 | 1,651 | 134 | #6 | 150 | 3,300 | 988 | 1,730 | 1,570 | 134 | #6 | 150 | 2,500 | 749 | 1,570 | 930 | 46 | 1,500 | 69 | 7 | 450 | 9,900 | 69 | 41 | 9,900 | 403 | 3,370 | 13 | 26 | 33 | 2.57 | 392.9 | 0.6 | 46 | 26.3 | 3,975 |
| 3,000 | 1,500 | 300 | 250 | 7.0 | 162 | #7 | 125 | 3,400 | 1,676 | 134 | #6 | 150 | 3,320 | 994 | 1,750 | 1,570 | 134 | #6 | 150 | 2,520 | 755 | 1,570 | 950 | 46 | 1,500 | 69 | 7 | 450 | 9,900 | 69 | 41 | 9,900 | 403 | 3,420 | 14 | 26 | 33 | 2.85 | 396.6 | 0.6 | 47 | 29.1 | 4,013 |
| 3,000 | 1,500 | 325 | 275 | 8.0 | 162 | #7 | 125 | 3,450 | 1,700 | 162 | #6 | 125 | 3,350 | 1,213 | 1,780 | 1,570 | 162 | #6 | 125 | 2,550 | 923 | 1,570 | 980 | 46 | 1,500 | 69 | 7 | 450 | 9,900 | 69 | 41 | 9,900 | 403 | 3,470 | 14 | 26 | 33 | 3.13 | 437.7 | 0.6 | 47 | 32.0 | 4,424 |
| 3,000 | 1,500 | 350 | 300 | 9.0 | 162 | #7 | 125 | 3,500 | 1,725 | 162 | #6 | 125 | 3,370 | 1,220 | 1,800 | 1,570 | 162 | #6 | 125 | 2,570 | 931 | 1,570 | 1,000 | 46 | 1,500 | 69 | 7 | 450 | 9,900 | 69 | 41 | 9,900 | 403 | 3,520 | 14 | 26 | 33 | 3.42 | 441.7 | 0.6 | 47 | 34.8 | 4,464 |
| 3,000 | 1,800 | 175 | 175 | 2.0 | 134 | #7 | 150 | 3,250 | 1,325 | 162 | #5 | 125 | 3,500 | 880 | 1,930 | 1,570 | 162 | #5 | 125 | 2,400 | 603 | 1,570 | 830 | 46 | 1,800 | 82 | 19 | 150 | 9,900 | 187 | 45 | 9,900 | 443 | 3,270 | 13 | 24 | 31 | 1.80 | 352.0 | 0.6 | 44 | 18.6 | 3,564 |
| 3,000 | 1,800 | 200 | 175 | 3.0 | 162 | #6 | 125 | 3,250 | 1,177 | 162 | #5 | 125 | 3,520 | 885 | 1,950 | 1,570 | 162 | #5 | 125 | 2,420 | 608 | 1,570 | 850 | 46 | 1,800 | 82 | 7 | 450 | 9,900 | 69 | 45 | 9,900 | 443 | 3,270 | 13 | 24 | 31 | 1.97 | 326.4 | 0.6 | 44 | 20.3 | 3,308 |
| 3,000 | 1,800 | 225 | 200 | 4.0 | 162 | #6 | 125 | 3,300 | 1,195 | 162 | #5 | 125 | 3,550 | 893 | 1,980 | 1,570 | 162 | #5 | 125 | 2,450 | 616 | 1,570 | 880 | 46 | 1,800 | 82 | 7 | 450 | 9,900 | 69 | 45 | 9,900 | 443 | 3,320 | 13 | 24 | 31 | 2.25 | 329.8 | 0.6 | 44 | 23.1 | 3,342 |
| 3,000 | 1,800 | 250 | 200 | 5.0 | 162 | #7 | 125 | 3,300 | 1,626 | 162 | #5 | 125 | 3,570 | 898 | 2,000 | 1,570 | 162 | #5 | 125 | 2,470 | 621 | 1,570 | 900 | 46 | 1,800 | 82 | 7 | 450 | 9,900 | 69 | 45 | 9,900 | 443 | 3,320 | 13 | 24 | 31 | 2.42 | 373.9 | 0.6 | 44 | 24.8 | 3,783 |
| 3,000 | 1,800 | 275 | 225 | 6.0 | 162 | #7 | 125 | 3,350 | 1,651 | 134 | #6 | 150 | 3,600 | 1,078 | 2,030 | 1,570 | 134 | #6 | 150 | 2,500 | 749 | 1,570 | 930 | 46 | 1,800 | 82 | 7 | 450 | 9,900 | 69 | 45 | 9,900 | 443 | 3,370 | 13 | 26 | 33 | 2.71 | 407.2 | 0.6 | 46 | 27.7 | 4,118 |
| 3,000 | 1,800 | 300 | 250 | 7.0 | 162 | #7 | 125 | 3,400 | 1,676 | 134 | #6 | 150 | 3,620 | 1,084 | 2,050 | 1,570 | 134 | #6 | 150 | 2,520 | 755 | 1,570 | 950 | 46 | 1,800 | 82 | 7 | 450 | 9,900 | 69 | 45 | 9,900 | 443 | 3,420 | 14 | 26 | 33 | 3.00 | 410.9 | 0.6 | 47 | 30.6 | 4,156 |
| 3,000 | 1,800 | 325 | 275 | 8.0 | 162 | #7 | 125 | 3,450 | 1,700 | 134 | #6 | 150 | 3,650 | 1,093 | 2,080 | 1,570 | 134 | #6 | 150 | 2,550 | 764 | 1,570 | 980 | 46 | 1,800 | 82 | 7 | 450 | 9,900 | 69 | 45 | 9,900 | 443 | 3,470 | 14 | 26 | 33 | 3.30 | 415.1 | 0.6 | 47 | 33.6 | 4,198 |
| 3,000 | 1,800 | 350 | 300 | 9.0 | 162 | #7 | 125 | 3,500 | 1,725 | 162 | #6 | 125 | 3,670 | 1,329 | 2,100 | 1,570 | 162 | #6 | 125 | 2,570 | 931 | 1,570 | 1,000 | 46 | 1,800 | 82 | 7 | 450 | 9,900 | 69 | 45 | 9,900 | 443 | 3,520 | 14 | 26 | 33 | 3.60 | 457.9 | 0.6 | 47 | 36.6 | 4,626 |
| 3,000 | 2,100 | 175 | 175 | 2.0 | 134 | #7 | 150 | 3,250 | 1,325 | 162 | #5 | 125 | 3,800 | 955 | 2,230 | 1,570 | 162 | #5 | 125 | 2,400 | 603 | 1,570 | 830 | 46 | 2,100 | 96 | 19 | 150 | 9,900 | 187 | 45 | 9,900 | 443 | 3,270 | 13 | 24 | 31 | 1.91 | 360.9 | 0.6 | 44 | 19.7 | 3,653 |
| 3,000 | 2,100 | 200 | 175 | 3.0 | 134 | #7 | 150 | 3,250 | 1,325 | 162 | #5 | 125 | 3,820 | 960 | 2,250 | 1,570 | 162 | #5 | 125 | 2,420 | 608 | 1,570 | 850 | 46 | 2,100 | 96 | 7 | 450 | 9,900 | 69 | 45 | 9,900 | 443 | 3,270 | 13 | 24 | 31 | 2.08 | 350.1 | 0.6 | 44 | 21.4 | 3,545 |
| 3,000 | 2,100 | 225 | 200 | 4.0 | 134 | #7 | 150 | 3,300 | 1,345 | 162 | #5 | 125 | 3,850 | 968 | 2,280 | 1,570 | 162 | #5 | 125 | 2,450 | 616 | 1,570 | 880 | 46 | 2,100 | 96 | 7 | 450 | 9,900 | 69 | 45 | 9,900 | 443 | 3,320 | 13 | 24 | 31 | 2.37 | 353.7 | 0.6 | 44 | 24.3 | 3,581 |
| 3,000 | 2,100 | 250 | 200 | 5.0 | 162 | #7 | 125 | 3,300 | 1,626 | 162 | #5 | 125 | 3,870 | 973 | 2,300 | 1,570 | 162 | #5 | 125 | 2,470 | 621 | 1,570 | 900 | 46 | 2,100 | 96 | 7 | 450 | 9,900 | 69 | 45 | 9,900 | 443 | 3,320 | 13 | 24 | 31 | 2.54 | 382.8 | 0.6 | 44 | 26.0 | 3,872 |
| 3,000 | 2,100 | 275 | 225 | 6.0 | 162 | #7 | 125 | 3,350 | 1,651 | 134 | #6 | 150 | 3,900 | 1,168 | 2,330 | 1,570 | 134 | #6 | 150 | 2,500 | 749 | 1,570 | 930 | 46 | 2,100 | 96 | 7 | 450 | 9,900 | 69 | 45 | 9,900 | 443 | 3,370 | 13 | 26 | 33 | 2.84 | 417.6 | 0.6 | 46 | 29.0 | 4,222 |
| 3,000 | 2,100 | 300 | 250 | 7.0 | 162 | #7 | 125 | 3,400 | 1,676 | 134 | #6 | 150 | 3,920 | 1,174 | 2,350 | 1,570 | 134 | #6 | 150 | 2,520 | 755 | 1,570 | 950 | 46 | 2,100 | 96 | 7 | 450 | 9,900 | 69 | 45 | 9,900 | 443 | 3,420 | 14 | 26 | 33 | 3.15 | 421.3 | 0.6 | 47 | 32.1 | 4,260 |
| 3,000 | 2,100 | 325 | 275 | 8.0 | 162 | #7 | 125 | 3,450 | 1,700 | 134 | #6 | 150 | 3,950 | 1,183 | 2,380 | 1,570 | 134 | #6 | 150 | 2,550 | 764 | 1,570 | 980 | 46 | 2,100 | 96 | 7 | 450 | 9,900 | 69 | 45 | 9,900 | 443 | 3,470 | 14 | 26 | 33 | 3.46 | 425.5 | 0.6 | 47 | 35.3 | 4,302 |
| 3,000 | 2,100 | 350 | 300 | 9.0 | 162 | #7 | 125 | 3,500 | 1,725 | 134 | #6 | 150 | 3,970 | 1,189 | 2,400 | 1,570 | 134 | #6 | 150 | 2,570 | 770 | 1,570 | 1,000 | 46 | 2,100 | 96 | 7 | 450 | 9,900 | 69 | 45 | 9,900 | 443 | 3,520 | 14 | 26 | 33 | 3.78 | 429.2 | 0.6 | 47 | 38.4 | 4,339 |

② Minimum fill height shown shall be used for direct traffic loading.

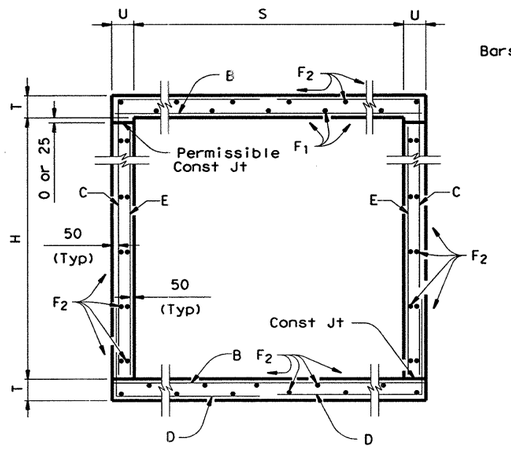


TYPICAL SECTION

For Direct Traffic, construct slab to conform to crown of roadway while maintaining constant thickness of slab.

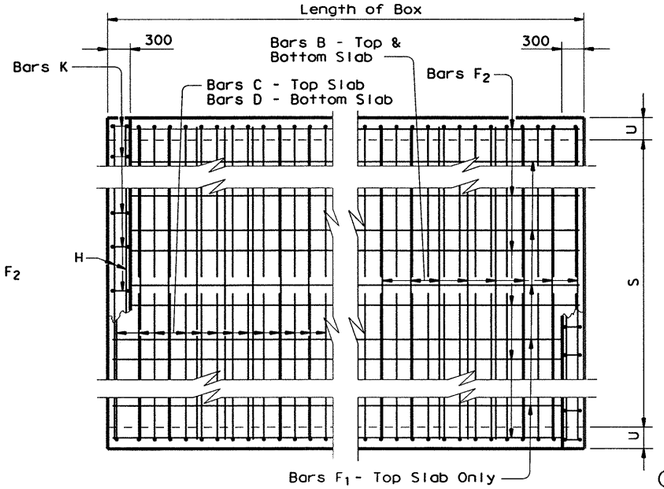


PLAN OF REINF STEEL

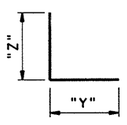


BARS D

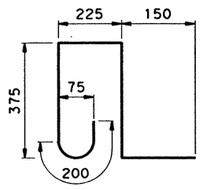


BARS K ~ #4
(Spa = 300 mm Max)
(Length = 1290 mm)

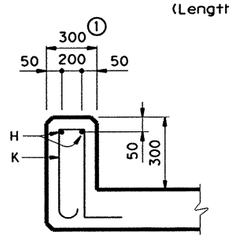


① For T6 Rail ~ see T6-CM(M) for additional details

SECTION THRU CURB

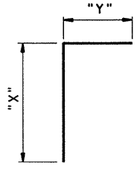


BARS C

**GENERAL NOTES:**

Designed according to current AASHTO Standard Specifications.
Designed for MS18 Loading and to the maximum fill height shown.
All reinforcing steel shall be Grade 420 (fy = 420 MPa).
All concrete shall have a minimum 28 day compressive strength of 25 MPa.
The bottom edge of the top slab shall be chamfered 75 mm at the entrance. Reinforcing bars shall be adjusted to provide a minimum of 35 mm clear cover. Headwall heights will be reduced, if necessary, to provide a maximum 75 mm projection above the roadway slope. No increase or decrease will be made in plan quantities of concrete or reinforcing steel for this work.
Construction joints shown at the flow line may be raised a maximum of 150 mm at the Contractor's option. If this option is used, bars E may be cut off or raised, and bars C and D may be reversed.
All dimensions are in millimeters and all mass is in kilograms unless otherwise noted.

**CHANGE ORDER NO. 56**



*Texas Department of Transportation*
*Design Division (Bridge)*

# SINGLE BOX CULVERTS CAST-IN-PLACE DIRECT TRAFFIC TO 9 m MAX FILL

## SCC-3.0(M)

| FILE: scc30std.dgn | DN: GAF | CK: TEB | DW: TxDOT | CK: GAF | STD: B46M |
|---|---|---|---|---|---|
| ©TxDOT January 1997 | DIST | FED REG | FEDERAL AID PROJECT | | SHEET |
| REVISIONS | SAT | 6 | NH 2000(704), ETC. | | 398B |
| | COUNTY | | CONTROL | SECT | JOB | HIGHWAY |
| | BEXAR | | 2452 | 01 | 036, | LP 1604 |

FIC

DISCLAIMER:
The use of this standard is governed by the "Texas Engineering Practice Act". No warranty of any kind is made by TxDOT for any purpose whatsoever. TxDOT assumes no responsibility for the conversion of this standard to other formats or for incorrect results or damages resulting from its use.

T:/AO/CONSTRU...ON/Loop 1604/SCC30STD.dgn

| LEVELS DISPLAYED | ACC: |
|---|---|
| 1 3 | (LV=1, ? for Metric) |

## BILLS OF REINFORCING STEEL (For Box Length = 10 meters)

| SECTION DIMENSIONS | | | | ② FILL HEIGHT, m | Bars B | | | | | Bars C | | | | | | | Bars D | | | | | | | Bars E~#4 at 450 mm Max | | | Bars $F_1$~#4 | | | | Bars $F_2$~#4 at 450 mm Max | | | Bars H 4~#4 | | Bars K | | QUANTITIES: Per Meter of Barrel | | Curb | | Total | |
|---|---|---|---|---|---|---|---|---|---|---|---|---|---|---|---|---|---|---|---|---|---|---|---|---|---|---|---|---|---|---|---|---|---|---|---|---|---|---|---|---|---|---|
| S | H | T | U | | Number | Size | Spa | Lgth | Mass | Number | Size | Spa | Lgth | Mass | "X" | "Y" | Number | Size | Spa | Lgth | Mass | "Y" | "Z" | No. | Lgth | Mass | No. | Spa | Length | Mass | No. | Length | Mass | Lgth | Mass | No. | Mass | Conc ($m^3$) | Reinf (kg) | Conc ($m^3$) | Reinf (kg) | Conc ($m^3$) | Reinf (kg) |
| 3,000 | 2,400 | 175 | 175 | 2.0 | 134 | #7 | 150 | 3,250 | 1,325 | 162 | #5 | 125 | 4,100 | 1,031 | 2,530 | 1,570 | 162 | #5 | 125 | 2,400 | 603 | 1,570 | 830 | 46 | 2,400 | 110 | 19 | 150 | 9,900 | 187 | 49 | 9,900 | 482 | 3,270 | 13 | 24 | 31 | 2.01 | 373.8 | 0.6 | 44 | 20.7 | 3,782 |
| 3,000 | 2,400 | 200 | 175 | 3.0 | 134 | #7 | 150 | 3,250 | 1,325 | 162 | #5 | 125 | 4,120 | 1,036 | 2,550 | 1,570 | 162 | #5 | 125 | 2,420 | 608 | 1,570 | 850 | 46 | 2,400 | 110 | 7 | 450 | 9,900 | 69 | 49 | 9,900 | 482 | 3,270 | 13 | 24 | 31 | 2.18 | 363.0 | 0.6 | 44 | 22.4 | 3,674 |
| 3,000 | 2,400 | 225 | 200 | 4.0 | 134 | #7 | 150 | 3,300 | 1,345 | 162 | #5 | 125 | 4,150 | 1,043 | 2,580 | 1,570 | 162 | #5 | 125 | 2,450 | 616 | 1,570 | 880 | 46 | 2,400 | 110 | 7 | 450 | 9,900 | 69 | 49 | 9,900 | 482 | 3,320 | 13 | 24 | 31 | 2.49 | 366.5 | 0.6 | 44 | 25.5 | 3,709 |
| 3,000 | 2,400 | 250 | 200 | 5.0 | 162 | #7 | 125 | 3,300 | 1,626 | 162 | #5 | 125 | 4,170 | 1,048 | 2,600 | 1,570 | 162 | #5 | 125 | 2,470 | 621 | 1,570 | 900 | 46 | 2,400 | 110 | 7 | 450 | 9,900 | 69 | 49 | 9,900 | 482 | 3,320 | 13 | 24 | 31 | 2.66 | 395.6 | 0.6 | 44 | 27.2 | 4,000 |
| 3,000 | 2,400 | 275 | 225 | 6.0 | 162 | #7 | 125 | 3,350 | 1,651 | 134 | #6 | 150 | 4,200 | 1,258 | 2,630 | 1,570 | 134 | #6 | 150 | 2,500 | 749 | 1,570 | 930 | 46 | 2,400 | 110 | 7 | 450 | 9,900 | 69 | 49 | 9,900 | 482 | 3,370 | 13 | 26 | 33 | 2.98 | 431.9 | 0.6 | 46 | 30.4 | 4,365 |
| 3,000 | 2,400 | 300 | 250 | 7.0 | 162 | #7 | 125 | 3,400 | 1,676 | 134 | #6 | 150 | 4,220 | 1,264 | 2,650 | 1,570 | 134 | #6 | 150 | 2,520 | 755 | 1,570 | 950 | 46 | 2,400 | 110 | 7 | 450 | 9,900 | 69 | 49 | 9,900 | 482 | 3,420 | 14 | 26 | 33 | 3.30 | 435.6 | 0.6 | 47 | 33.6 | 4,403 |
| 3,000 | 2,400 | 325 | 275 | 8.0 | 162 | #7 | 125 | 3,450 | 1,700 | 134 | #6 | 150 | 4,250 | 1,273 | 2,680 | 1,570 | 134 | #6 | 150 | 2,550 | 764 | 1,570 | 980 | 46 | 2,400 | 110 | 7 | 450 | 9,900 | 69 | 49 | 9,900 | 482 | 3,470 | 14 | 26 | 33 | 3.63 | 439.8 | 0.6 | 47 | 36.9 | 4,445 |
| 3,000 | 2,400 | 350 | 300 | 9.0 | 162 | #7 | 125 | 3,500 | 1,725 | 134 | #6 | 150 | 4,270 | 1,279 | 2,700 | 1,570 | 134 | #6 | 150 | 2,570 | 770 | 1,570 | 1,000 | 46 | 2,400 | 110 | 7 | 450 | 9,900 | 69 | 49 | 9,900 | 482 | 3,520 | 14 | 26 | 33 | 3.96 | 443.5 | 0.6 | 47 | 40.2 | 4,482 |
| 3,000 | 2,700 | 175 | 175 | 2.0 | 134 | #7 | 150 | 3,250 | 1,325 | 162 | #5 | 125 | 4,400 | 1,106 | 2,830 | 1,570 | 162 | #5 | 125 | 2,400 | 603 | 1,570 | 830 | 46 | 2,700 | 123 | 19 | 150 | 9,900 | 187 | 53 | 9,900 | 522 | 3,270 | 13 | 24 | 31 | 2.12 | 386.6 | 0.6 | 44 | 21.8 | 3,910 |
| 3,000 | 2,700 | 200 | 175 | 3.0 | 134 | #7 | 150 | 3,250 | 1,325 | 134 | #6 | 150 | 4,420 | 1,324 | 2,850 | 1,570 | 134 | #6 | 150 | 2,420 | 725 | 1,570 | 850 | 46 | 2,700 | 123 | 7 | 450 | 9,900 | 69 | 53 | 9,900 | 522 | 3,270 | 13 | 24 | 31 | 2.29 | 408.8 | 0.6 | 44 | 23.5 | 4,132 |
| 3,000 | 2,700 | 225 | 200 | 4.0 | 134 | #7 | 150 | 3,300 | 1,345 | 134 | #6 | 150 | 4,450 | 1,333 | 2,880 | 1,570 | 134 | #6 | 150 | 2,450 | 734 | 1,570 | 880 | 46 | 2,700 | 123 | 7 | 450 | 9,900 | 69 | 53 | 9,900 | 522 | 3,320 | 13 | 24 | 31 | 2.61 | 412.6 | 0.6 | 44 | 26.7 | 4,170 |
| 3,000 | 2,700 | 250 | 200 | 5.0 | 162 | #7 | 125 | 3,300 | 1,626 | 134 | #6 | 150 | 4,470 | 1,339 | 2,900 | 1,570 | 134 | #6 | 150 | 2,470 | 740 | 1,570 | 900 | 46 | 2,700 | 123 | 7 | 450 | 9,900 | 69 | 53 | 9,900 | 522 | 3,320 | 13 | 24 | 31 | 2.78 | 441.9 | 0.6 | 44 | 28.4 | 4,463 |
| 3,000 | 2,700 | 275 | 225 | 6.0 | 162 | #7 | 125 | 3,350 | 1,651 | 134 | #6 | 150 | 4,500 | 1,348 | 2,930 | 1,570 | 134 | #6 | 150 | 2,500 | 749 | 1,570 | 930 | 46 | 2,700 | 123 | 7 | 450 | 9,900 | 69 | 53 | 9,900 | 522 | 3,370 | 13 | 26 | 33 | 3.11 | 446.2 | 0.6 | 46 | 31.7 | 4,508 |
| 3,000 | 2,700 | 300 | 250 | 7.0 | 162 | #7 | 125 | 3,400 | 1,676 | 134 | #6 | 150 | 4,520 | 1,354 | 2,950 | 1,570 | 134 | #6 | 150 | 2,520 | 755 | 1,570 | 950 | 46 | 2,700 | 123 | 7 | 450 | 9,900 | 69 | 53 | 9,900 | 522 | 3,420 | 14 | 26 | 33 | 3.45 | 449.9 | 0.6 | 47 | 35.1 | 4,546 |
| 3,000 | 2,700 | 325 | 275 | 8.0 | 162 | #7 | 125 | 3,450 | 1,700 | 134 | #6 | 150 | 4,550 | 1,363 | 2,980 | 1,570 | 134 | #6 | 150 | 2,550 | 764 | 1,570 | 980 | 46 | 2,700 | 123 | 7 | 450 | 9,900 | 69 | 53 | 9,900 | 522 | 3,470 | 14 | 26 | 33 | 3.79 | 454.1 | 0.6 | 47 | 38.6 | 4,588 |
| 3,000 | 2,700 | 350 | 300 | 9.0 | 162 | #7 | 125 | 3,500 | 1,725 | 162 | #6 | 125 | 4,570 | 1,655 | 3,000 | 1,570 | 162 | #6 | 125 | 2,570 | 931 | 1,570 | 1,000 | 46 | 2,700 | 123 | 7 | 450 | 9,900 | 69 | 53 | 9,900 | 522 | 3,520 | 14 | 26 | 33 | 4.14 | 502.5 | 0.6 | 47 | 42.0 | 5,072 |
| 3,000 | 3,000 | 175 | 175 | 2.0 | 134 | #7 | 150 | 3,250 | 1,325 | 134 | #6 | 150 | 4,700 | 1,408 | 3,130 | 1,570 | 134 | #6 | 150 | 2,400 | 719 | 1,570 | 830 | 46 | 3,000 | 137 | 19 | 150 | 9,900 | 187 | 53 | 9,900 | 522 | 3,270 | 13 | 24 | 31 | 2.22 | 429.8 | 0.6 | 44 | 22.8 | 4,342 |
| 3,000 | 3,000 | 200 | 175 | 3.0 | 162 | #7 | 125 | 3,250 | 1,602 | 162 | #6 | 125 | 4,720 | 1,709 | 3,150 | 1,570 | 162 | #6 | 125 | 2,420 | 876 | 1,570 | 850 | 46 | 3,000 | 137 | 7 | 450 | 9,900 | 69 | 53 | 9,900 | 522 | 3,270 | 13 | 24 | 31 | 2.39 | 491.5 | 0.6 | 44 | 24.5 | 4,959 |
| 3,000 | 3,000 | 225 | 200 | 4.0 | 134 | #7 | 150 | 3,300 | 1,345 | 134 | #6 | 150 | 4,750 | 1,423 | 3,180 | 1,570 | 134 | #6 | 150 | 2,450 | 734 | 1,570 | 880 | 46 | 3,000 | 137 | 7 | 450 | 9,900 | 69 | 53 | 9,900 | 522 | 3,320 | 13 | 24 | 31 | 2.73 | 423.0 | 0.6 | 44 | 27.9 | 4,274 |
| 3,000 | 3,000 | 250 | 200 | 5.0 | 162 | #7 | 125 | 3,300 | 1,626 | 134 | #6 | 150 | 4,770 | 1,429 | 3,200 | 1,570 | 134 | #6 | 150 | 2,470 | 740 | 1,570 | 900 | 46 | 3,000 | 137 | 7 | 450 | 9,900 | 69 | 53 | 9,900 | 522 | 3,320 | 13 | 24 | 31 | 2.90 | 452.3 | 0.6 | 44 | 29.6 | 4,567 |
| 3,000 | 3,000 | 275 | 225 | 6.0 | 162 | #7 | 125 | 3,350 | 1,651 | 162 | #6 | 125 | 4,800 | 1,738 | 3,230 | 1,570 | 162 | #6 | 125 | 2,500 | 905 | 1,570 | 930 | 46 | 3,000 | 137 | 7 | 450 | 9,900 | 69 | 53 | 9,900 | 522 | 3,370 | 13 | 26 | 33 | 3.25 | 502.2 | 0.6 | 46 | 33.1 | 5,068 |
| 3,000 | 3,000 | 300 | 250 | 7.0 | 162 | #7 | 125 | 3,400 | 1,676 | 162 | #6 | 125 | 4,820 | 1,745 | 3,250 | 1,570 | 162 | #6 | 125 | 2,520 | 912 | 1,570 | 950 | 46 | 3,000 | 137 | 7 | 450 | 9,900 | 69 | 53 | 9,900 | 522 | 3,420 | 14 | 26 | 33 | 3.60 | 506.1 | 0.6 | 47 | 36.6 | 5,108 |
| 3,000 | 3,000 | 325 | 275 | 8.0 | 162 | #7 | 125 | 3,450 | 1,700 | 162 | #6 | 125 | 4,850 | 1,756 | 3,280 | 1,570 | 162 | #6 | 125 | 2,550 | 923 | 1,570 | 980 | 46 | 3,000 | 137 | 7 | 450 | 9,900 | 69 | 53 | 9,900 | 522 | 3,470 | 14 | 26 | 33 | 3.96 | 510.7 | 0.6 | 47 | 40.2 | 5,154 |
| 3,000 | 3,000 | 350 | 300 | 9.0 | 162 | #7 | 125 | 3,500 | 1,725 | 162 | #6 | 125 | 4,870 | 1,763 | 3,300 | 1,570 | 162 | #6 | 125 | 2,570 | 931 | 1,570 | 1,000 | 46 | 3,000 | 137 | 7 | 450 | 9,900 | 69 | 53 | 9,900 | 522 | 3,520 | 14 | 26 | 33 | 4.32 | 514.7 | 0.6 | 47 | 43.8 | 5,194 |

② Minimum fill height shown shall be used for direct traffic loading.

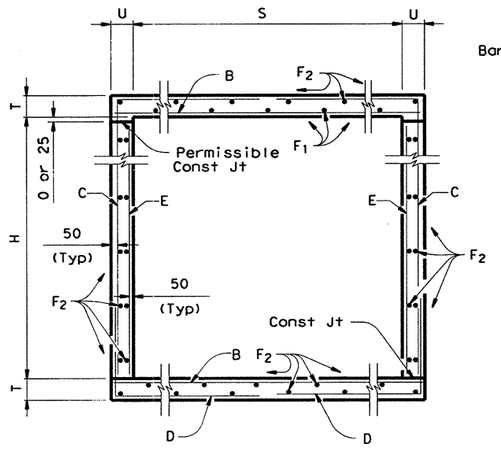


TYPICAL SECTION

For Direct Traffic, construct slab to conform to crown of roadway while maintaining constant thickness of slab.

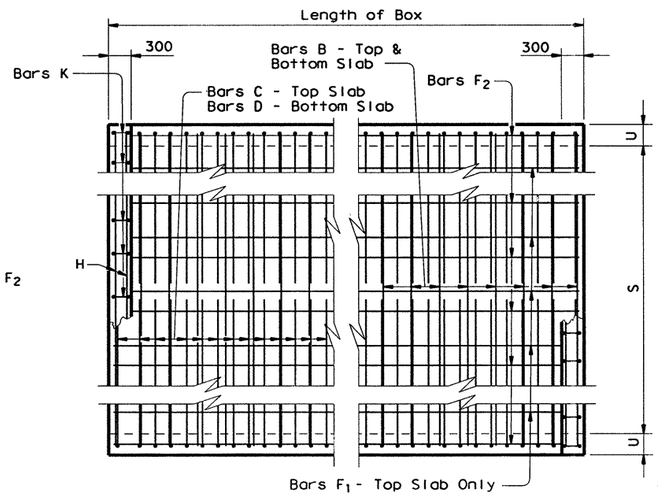


PLAN OF REINF STEEL

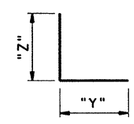


BARS D

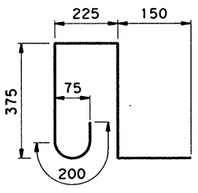


BARS K ~ #4
(Spa = 300 mm Max)
(Length = 1290 mm)

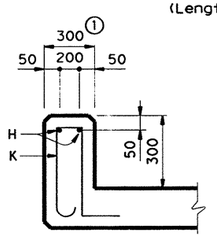


① For T6 Rail ~ see T6-CM(M) for additional details

SECTION THRU CURB

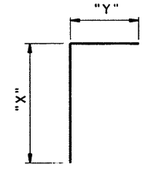


BARS C

**GENERAL NOTES:**

Designed according to current AASHTO Standard Specifications.
Designed for MS18 Loading and to the maximum fill height shown.
All reinforcing steel shall be Grade 420 (fy = 420 MPa).
All concrete shall have a minimum 28 day compressive strength of 25 MPa.
The bottom edge of the top slab shall be chamfered 75 mm at the entrance. Reinforcing bars shall be adjusted to provide a minimum of 35 mm clear cover. Headwall heights will be reduced, if necessary, to provide a maximum 75 mm projection above the roadway slope. No increase or decrease will be made in plan quantities of concrete or reinforcing steel for this work.
Construction joints shown at the flow line may be raised a maximum of 150 mm at the Contractor's option. If this option is used, bars E may be cut off or raised, and bars C and D may be reversed.
All dimensions are in millimeters and all mass is in kilograms unless otherwise noted.

**CHANGE ORDER NO. 56**



*Texas Department of Transportation*
*Design Division (Bridge)*

# SINGLE BOX CULVERTS CAST-IN-PLACE DIRECT TRAFFIC TO 9 m MAX FILL

## SCC-3.0(M)

| FILE: scc30std.dgn | DN: GAF | CK: TEB | DW: TxDOT | CK: GAF | STD: B46M |
|---|---|---|---|---|---|
| ©TxDOT January 1997 | DIST | FED REG | FEDERAL AID PROJECT | | SHEET |
| REVISIONS | SA: | 6 | NH 2000(704), ETC. | | 398C |
| | COUNTY | | CONTROL | SECT | JOB | HIGHWAY |
| | BEXAR | | 2452 | 01 | 036, | LP 1604 |

DISCLAIMER:
The use of this standard is governed by the "Texas Engineering Practice Act". No warranty of any kind is made by TxDOT for any purpose whatsoever. TxDOT assumes no responsibility for the conversion of this standard to other formats or for incorrect results or damages resulting from its use.

LEVELS DISPLAYED: 1 3 | ACC: (LV=1,3 for Metric)

## BOX DATA

| SECTION DIMENSIONS | | | | | Fill Height (m) | M | REINFORCING ⑥ | | | | | | | | ⑤ Lift Mass (kg) | Governing ASTM Standard |
|---|---|---|---|---|---|---|---|---|---|---|---|---|---|---|---|---|
| S | H | $T_T$ | $T_B$ | $T_S$ | | | $A_{S1}$ ($mm^2/m$) | $A_{S2}$ ($mm^2/m$) | $A_{S3}$ ($mm^2/m$) | $A_{S4}$ ($mm^2/m$) | $A_{S7}$ ($mm^2/m$) | $A_{S8}$ ($mm^2/m$) | $A_{S5}$ ($mm^2/m$) | $A_{S6}$ ($mm^2/m$) | | |
| 1,200 | 600 | 190 | 150 | 125 | < 0.6 | - | 440 | 780 | 420 | 280 | 380 | 300 | 380 | 380 | 3,888 | C 850M |
| 1,200 | 600 | 125 | 125 | 125 | 0.6 | 480 | 550 | 470 | 420 | 250 | - | - | - | - | 3,136 | C 789M |
| 1,200 | 600 | 125 | 125 | 125 | 0.9 | 460 | 320 | 280 | 280 | 250 | - | - | - | - | 3,136 | C 789M |
| 1,200 | 600 | 125 | 125 | 125 | 1.2 | 460 | 250 | 250 | 250 | 250 | - | - | - | - | 3,136 | C 789M |
| 1,200 | 600 | 125 | 125 | 125 | 1.5 | 460 | 250 | 250 | 250 | 250 | - | - | - | - | 3,136 | C 789M |
| 1,200 | 600 | 125 | 125 | 125 | 1.8 | 460 | 250 | 250 | 250 | 250 | - | - | - | - | 3,136 | C 789M |
| 1,200 | 600 | 125 | 125 | 125 | 2.4 | 460 | 250 | 250 | 250 | 250 | - | - | - | - | 3,136 | C 789M |
| 1,200 | 600 | 125 | 125 | 125 | 3.0 | 430 | 280 | 280 | 300 | 250 | - | - | - | - | 3,136 | C 789M |
| 1,200 | 600 | 125 | 125 | 125 | 3.7 | 430 | 320 | 320 | 320 | 250 | - | - | - | - | 3,136 | C 789M |
| 1,200 | 600 | 125 | 125 | 125 | 4.3 | 430 | 360 | 360 | 360 | 250 | - | - | - | - | 3,136 | C 789M |
| 1,200 | 600 | 125 | 125 | 125 | 4.9 | 430 | 400 | 400 | 400 | 250 | - | - | - | - | 3,136 | C 789M |
| 1,200 | 600 | 125 | 125 | 125 | 5.5 | 430 | 440 | 440 | 440 | 250 | - | - | - | - | 3,136 | C 789M |
| 1,200 | 900 | 190 | 150 | 125 | < 0.6 | - | 380 | 870 | 490 | 280 | 380 | 300 | 420 | 380 | 4,321 | C 850M |
| 1,200 | 900 | 125 | 125 | 125 | 0.6 | 560 | 440 | 570 | 510 | 250 | - | - | - | - | 3,568 | C 789M |
| 1,200 | 900 | 125 | 125 | 125 | 0.9 | 480 | 280 | 340 | 340 | 250 | - | - | - | - | 3,568 | C 789M |
| 1,200 | 900 | 125 | 125 | 125 | 1.2 | 460 | 250 | 280 | 280 | 250 | - | - | - | - | 3,568 | C 789M |
| 1,200 | 900 | 125 | 125 | 125 | 1.5 | 460 | 250 | 250 | 280 | 250 | - | - | - | - | 3,568 | C 789M |
| 1,200 | 900 | 125 | 125 | 125 | 1.8 | 430 | 250 | 250 | 280 | 250 | - | - | - | - | 3,568 | C 789M |
| 1,200 | 900 | 125 | 125 | 125 | 2.4 | 430 | 250 | 300 | 300 | 250 | - | - | - | - | 3,568 | C 789M |
| 1,200 | 900 | 125 | 125 | 125 | 3.0 | 430 | 250 | 320 | 340 | 250 | - | - | - | - | 3,568 | C 789M |
| 1,200 | 900 | 125 | 125 | 125 | 3.7 | 430 | 250 | 360 | 380 | 250 | - | - | - | - | 3,568 | C 789M |
| 1,200 | 900 | 125 | 125 | 125 | 4.3 | 430 | 280 | 420 | 420 | 250 | - | - | - | - | 3,568 | C 789M |
| 1,200 | 900 | 125 | 125 | 125 | 4.9 | 430 | 320 | 470 | 470 | 250 | - | - | - | - | 3,568 | C 789M |
| 1,200 | 900 | 125 | 125 | 125 | 5.5 | 430 | 340 | 510 | 510 | 250 | - | - | - | - | 3,568 | C 789M |
| 1,200 | 1,200 | 190 | 150 | 125 | < 0.6 | - | 340 | 910 | 510 | 280 | 380 | 300 | 440 | 380 | 4,753 | C 850M |
| 1,200 | 1,200 | 125 | 125 | 125 | 0.6 | 860 | 380 | 640 | 590 | 250 | - | - | - | - | 4,001 | C 789M |
| 1,200 | 1,200 | 125 | 125 | 125 | 0.9 | 610 | 250 | 380 | 380 | 250 | - | - | - | - | 4,001 | C 789M |
| 1,200 | 1,200 | 125 | 125 | 125 | 1.2 | 530 | 250 | 300 | 320 | 250 | - | - | - | - | 4,001 | C 789M |
| 1,200 | 1,200 | 125 | 125 | 125 | 1.5 | 510 | 250 | 280 | 300 | 250 | - | - | - | - | 4,001 | C 789M |
| 1,200 | 1,200 | 125 | 125 | 125 | 1.8 | 480 | 250 | 300 | 300 | 250 | - | - | - | - | 4,001 | C 789M |
| 1,200 | 1,200 | 125 | 125 | 125 | 2.4 | 460 | 250 | 320 | 320 | 250 | - | - | - | - | 4,001 | C 789M |
| 1,200 | 1,200 | 125 | 125 | 125 | 3.0 | 460 | 250 | 340 | 360 | 250 | - | - | - | - | 4,001 | C 789M |
| 1,200 | 1,200 | 125 | 125 | 125 | 3.7 | 460 | 250 | 400 | 400 | 250 | - | - | - | - | 4,001 | C 789M |
| 1,200 | 1,200 | 125 | 125 | 125 | 4.3 | 460 | 250 | 440 | 440 | 250 | - | - | - | - | 4,001 | C 789M |
| 1,200 | 1,200 | 125 | 125 | 125 | 4.9 | 460 | 250 | 490 | 510 | 250 | - | - | - | - | 4,001 | C 789M |
| 1,200 | 1,200 | 125 | 125 | 125 | 5.5 | 430 | 300 | 530 | 550 | 250 | - | - | - | - | 4,001 | C 789M |

Note: ASTM C850M design shall be used for direct traffic loading.

⑤ For Box Length = 2,400 mm

⑥ $A_{S1}$ thru $A_{S4}$, $A_{S7}$ and $A_{S8}$ are minimum required areas of reinforcement per linear meter of box length. $A_{S6}$ and $A_{S5}$ are minimum required areas of reinforcement per linear meter of box width.

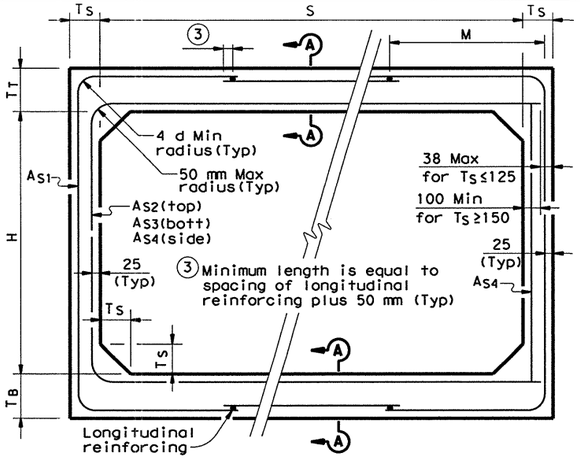


C789M CORNER OPTION "A"

C789M CORNER OPTION "B"

## ASTM C789M STANDARD

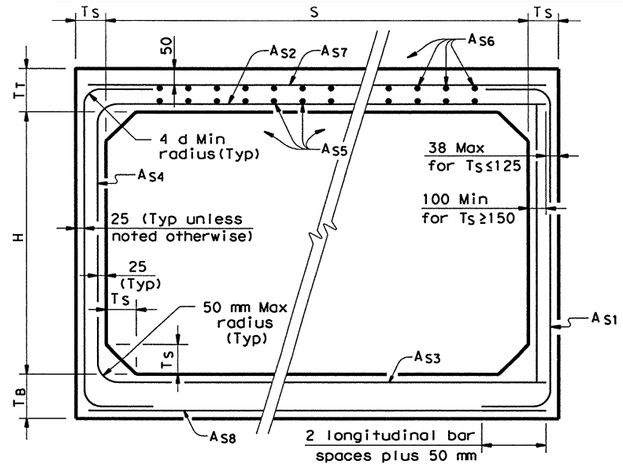


C850M CORNER OPTION "A"

C850M CORNER OPTION "B"

## ASTM C850M STANDARD

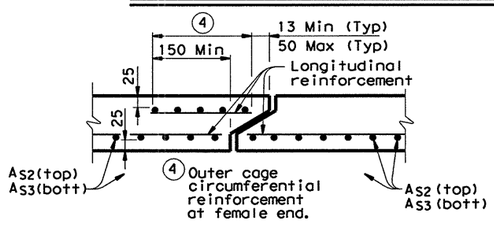


## SECTION A-A

(TOP AND BOTTOM SLAB JOINT REINFORCEMENT)

**GENERAL NOTES:**

Designs shown conform to ASTM C789M or ASTM C850M. Refer to ASTM C789M or ASTM C850M for information or details not shown.

For ASTM C789M designs, all reinforcing steel shall have a minimum specified yield stress of 445 MPa.

For ASTM C850M designs, all reinforcing steel shall have a minimum specified yield stress of 414 MPa.

All box concrete shall have a minimum 28 day compressive strength of 35 MPa.

See SCP-MD(M) standard sheet for miscellaneous details and notes not shown.

Designed for MS18 (HS20) loading and fill heights shown.

In lieu of furnishing the designs shown on this sheet, the contractor may furnish an alternate design that is equal to or exceeds the box design for the design fill height in the table. Shop plans for alternate designs shall be submitted in accordance with Item "Precast Concrete Structures".

All dimensions in millimeters unless otherwise shown.

Texas Department of Transportation
Design Division (Bridge)

# SINGLE BOX CULVERTS PRECAST

## 1,200 mm SPAN

## SCP-1.2(M)

| FILE: scp12std.dgn | DN: KLR | CK: GAF | DW: TxDOT | CK: GAF | STD: B50M |
|---|---|---|---|---|---|
| ©TxDOT January 1997 | DIST | FED REG | FEDERAL AID PROJECT • | | SHEET |
| REVISIONS 5-97-REMOVE MISC DETAILS | SAT | 6 | NH 2000(704), ETC. | | 399 |
| | COUNTY | | CONTROL | SECT | JOB | HIGHWAY |
| | BEXAR | | 2452 | 01 | DIST. ETC. | LP1604 |

DISCLAIMER:
The use of this standard is governed by the "Texas Engineering Practice Act". No warranty of any kind is made by TxDOT for any purpose whatsoever. TxDOT assumes no responsibility for the conversion of this standard to other formats or for incorrect results or damages resulting from its use.

LEVELS DISPLAYED: 1 3 ACC: (LV=1,3 for Metric)

## BOX DATA

| SECTION DIMENSIONS | | | | | Fill Height (m) | M (Min) | REINFORCING ⑥ | | | | | | | | Lift Mass ⑤ (kg) | Governing ASTM Standard |
|---|---|---|---|---|---|---|---|---|---|---|---|---|---|---|---|---|
| S | H | $T_T$ | $T_B$ | $T_S$ | | | $A_{S1}$ (mm²/m) | $A_{S2}$ (mm²/m) | $A_{S3}$ (mm²/m) | $A_{S4}$ (mm²/m) | $A_{S7}$ (mm²/m) | $A_{S8}$ (mm²/m) | $A_{S5}$ (mm²/m) | $A_{S6}$ (mm²/m) | | |
| 1,500 | 900 | 200 | 175 | 150 | < 0.6 | - | 470 | 870 | 470 | 300 | 400 | 360 | 400 | 400 | 5,709 | C 850M |
| 1,500 | 900 | 150 | 150 | 150 | 0.6 | 580 | 760 | 590 | 490 | 300 | - | - | - | - | 4,930 | C 789M |
| 1,500 | 900 | 150 | 150 | 150 | 0.9 | 530 | 360 | 380 | 380 | 300 | - | - | - | - | 4,930 | C 789M |
| 1,500 | 900 | 150 | 150 | 150 | 1.2 | 530 | 300 | 320 | 320 | 300 | - | - | - | - | 4,930 | C 789M |
| 1,500 | 900 | 150 | 150 | 150 | 1.5 | 510 | 300 | 300 | 320 | 300 | - | - | - | - | 4,930 | C 789M |
| 1,500 | 900 | 150 | 150 | 150 | 1.8 | 510 | 300 | 320 | 320 | 300 | - | - | - | - | 4,930 | C 789M |
| 1,500 | 900 | 150 | 150 | 150 | 2.4 | 510 | 300 | 340 | 340 | 300 | - | - | - | - | 4,930 | C 789M |
| 1,500 | 900 | 150 | 150 | 150 | 3.0 | 510 | 320 | 380 | 400 | 300 | - | - | - | - | 4,930 | C 789M |
| 1,500 | 900 | 150 | 150 | 150 | 3.7 | 510 | 360 | 420 | 440 | 300 | - | - | - | - | 4,930 | C 789M |
| 1,500 | 900 | 150 | 150 | 150 | 4.3 | 510 | 400 | 490 | 490 | 300 | - | - | - | - | 4,930 | C 789M |
| 1,500 | 900 | 150 | 150 | 150 | 4.9 | 480 | 440 | 550 | 550 | 300 | - | - | - | - | 4,930 | C 789M |
| 1,500 | 900 | 150 | 150 | 150 | 5.5 | 480 | 490 | 590 | 610 | 300 | - | - | - | - | 4,930 | C 789M |
| 1,500 | 1,200 | 200 | 175 | 150 | < 0.6 | - | 400 | 930 | 510 | 300 | 400 | 360 | 440 | 400 | 6,228 | C 850M |
| 1,500 | 1,200 | 150 | 150 | 150 | 0.6 | 710 | 490 | 680 | 570 | 300 | - | - | - | - | 5,449 | C 789M |
| 1,500 | 1,200 | 150 | 150 | 150 | 0.9 | 580 | 320 | 420 | 440 | 300 | - | - | - | - | 5,449 | C 789M |
| 1,500 | 1,200 | 150 | 150 | 150 | 1.2 | 560 | 300 | 340 | 360 | 300 | - | - | - | - | 5,449 | C 789M |
| 1,500 | 1,200 | 150 | 150 | 150 | 1.5 | 560 | 300 | 340 | 360 | 300 | - | - | - | - | 5,449 | C 789M |
| 1,500 | 1,200 | 150 | 150 | 150 | 1.8 | 560 | 300 | 340 | 360 | 300 | - | - | - | - | 5,449 | C 789M |
| 1,500 | 1,200 | 150 | 150 | 150 | 2.4 | 510 | 300 | 360 | 380 | 300 | - | - | - | - | 5,449 | C 789M |
| 1,500 | 1,200 | 150 | 150 | 150 | 3.0 | 510 | 300 | 420 | 440 | 300 | - | - | - | - | 5,449 | C 789M |
| 1,500 | 1,200 | 150 | 150 | 150 | 3.7 | 510 | 300 | 470 | 490 | 300 | - | - | - | - | 5,449 | C 789M |
| 1,500 | 1,200 | 150 | 150 | 150 | 4.3 | 510 | 340 | 530 | 550 | 300 | - | - | - | - | 5,449 | C 789M |
| 1,500 | 1,200 | 150 | 150 | 150 | 4.9 | 480 | 380 | 590 | 610 | 300 | - | - | - | - | 5,449 | C 789M |
| 1,500 | 1,200 | 150 | 150 | 150 | 5.5 | 480 | 420 | 660 | 660 | 300 | - | - | - | - | 5,449 | C 789M |
| 1,500 | 1,500 | 200 | 175 | 150 | < 0.6 | - | 340 | 970 | 550 | 300 | 400 | 360 | 470 | 400 | 6,747 | C 850M |
| 1,500 | 1,500 | 150 | 150 | 150 | 0.6 | 1,040 | 420 | 740 | 610 | 300 | - | - | - | - | 5,968 | C 789M |
| 1,500 | 1,500 | 150 | 150 | 150 | 0.9 | 740 | 300 | 470 | 490 | 300 | - | - | - | - | 5,968 | C 789M |
| 1,500 | 1,500 | 150 | 150 | 150 | 1.2 | 640 | 300 | 380 | 400 | 300 | - | - | - | - | 5,968 | C 789M |
| 1,500 | 1,500 | 150 | 150 | 150 | 1.5 | 610 | 300 | 360 | 380 | 300 | - | - | - | - | 5,968 | C 789M |
| 1,500 | 1,500 | 150 | 150 | 150 | 1.8 | 560 | 300 | 360 | 380 | 300 | - | - | - | - | 5,968 | C 789M |
| 1,500 | 1,500 | 150 | 150 | 150 | 2.4 | 560 | 300 | 380 | 400 | 300 | - | - | - | - | 5,968 | C 789M |
| 1,500 | 1,500 | 150 | 150 | 150 | 3.0 | 530 | 300 | 440 | 470 | 300 | - | - | - | - | 5,968 | C 789M |
| 1,500 | 1,500 | 150 | 150 | 150 | 3.7 | 530 | 300 | 490 | 510 | 300 | - | - | - | - | 5,968 | C 789M |
| 1,500 | 1,500 | 150 | 150 | 150 | 4.3 | 530 | 300 | 550 | 570 | 300 | - | - | - | - | 5,968 | C 789M |
| 1,500 | 1,500 | 150 | 150 | 150 | 4.9 | 530 | 340 | 610 | 640 | 300 | - | - | - | - | 5,968 | C 789M |
| 1,500 | 1,500 | 150 | 150 | 150 | 5.5 | 510 | 360 | 680 | 700 | 300 | - | - | - | - | 5,968 | C 789M |
| 1,500 | 600 | 200 | 175 | 150 | <0.5 | - | 510 | 690 | 530 | 300 | 400 | 350 | 400 | 400 | 5,184 | C 850M |
| 1,500 | 600 | 150 | 150 | 150 | 5.5 | 580 | 580 | 400 | 400 | 300 | - | - | - | - | 4,406 | C 789M |

⑦

Note: ASTM C850M design shall be used for direct traffic loading.

⑤ For Box Length = 2,400 mm

⑥ $A_{S1}$ thru $A_{S4}$, $A_{S7}$ and $A_{S8}$ are minimum required areas of reinforcement per linear meter of box length. $A_{S6}$ and $A_{S5}$ are minimum required areas of reinforcement per linear meter of box width.

⑦ These designs were created by TxDOT and are not shown in the ASTM Specifications.

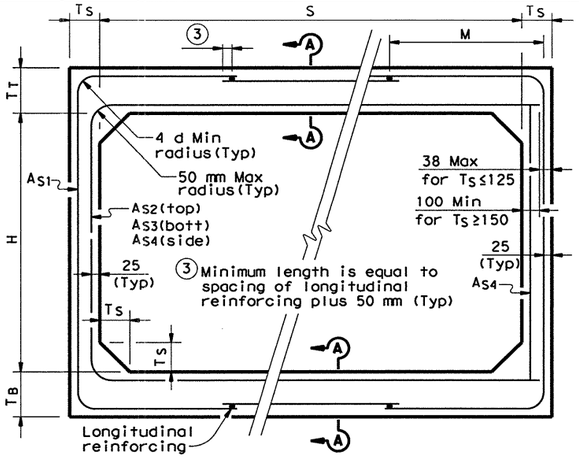


C789M CORNER OPTION "A"

C789M CORNER OPTION "B"

## ASTM C789M STANDARD

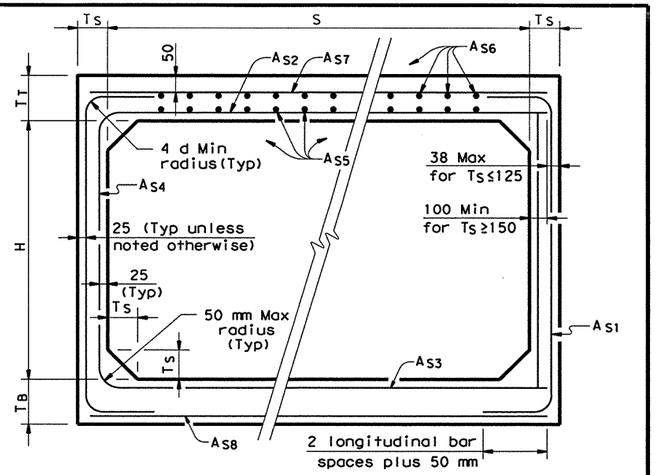


C850M CORNER OPTION "A"

C850M CORNER OPTION "B"

## ASTM C850M STANDARD

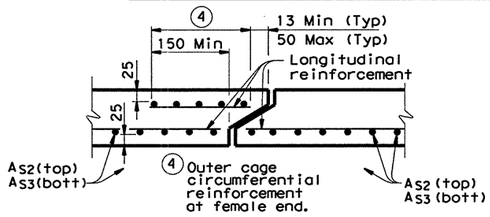


## SECTION A-A

(TOP AND BOTTOM SLAB JOINT REINFORCEMENT)

**GENERAL NOTES:**

Designs shown conform to ASTM C789M or ASTM C850M. Refer to ASTM C789M or ASTM C850M for information or details not shown.

For ASTM C789M designs, all reinforcing steel shall have a minimum specified yield stress of 445 MPa.

For ASTM C850M designs, all reinforcing steel shall have a minimum specified yield stress of 414 MPa.

All box concrete shall have a minimum 28 day compressive strength of 35 MPa.

See SCP-MD(M) standard sheet for miscellaneous details and notes not shown.

Designed for MS18 (HS20) loading and fill heights shown.

In lieu of furnishing the designs shown on this sheet, the contractor may furnish an alternate design that is equal to or exceeds the box design for the design fill height in the table. Shop plans for alternate designs shall be submitted in accordance with Item "Precast Concrete Structures".

All dimensions in millimeters unless otherwise shown.

Texas Department of Transportation
Design Division (Bridge)

# SINGLE BOX CULVERTS PRECAST

## 1,500 mm SPAN

## SCP-1.5(M)

| FILE: scp15std.dgn | DN: KLR | CK: GAF | DW: TxDOT | CK: GAF | STD: B51M |
|---|---|---|---|---|---|
| ©TxDOT January 1997 | DIST | FED REG | FEDERAL AID PROJECT • | | SHEET |
| REVISIONS 5-97-REMOVE MISC DETAILS 9-98-ADD 1500 x 600 | SAT | 6 | NH 2000(704), ETC. | | 400 |
| | COUNTY | | CONTROL | SECT | JOB | HIGHWAY |
| | BEXAR | | 2452 | 01 | 036, etc. | LP1604 |

DISCLAIMER:
The use of this standard is governed by the "Texas Engineering Practice Act". No warranty of any kind is made by TxDOT for any purpose whatsoever. TxDOT assumes no responsibility for the conversion of this standard to other formats or for incorrect results or damages resulting from its use.

LEVELS DISPLAYED 1 3

ACC: (LV=1,3 for Metric)

# BOX DATA

| SECTION DIMENSIONS | | | | | Fill Height (m) | M (Min) | REINFORCING (6) | | | | | | | | Lift Mass (5) (kg) | Governing ASTM Standard |
|---|---|---|---|---|---|---|---|---|---|---|---|---|---|---|---|---|
| S | H | $T_T$ | $T_B$ | $T_S$ | | | $A_{S1}$ (mm²/m) | $A_{S2}$ (mm²/m) | $A_{S3}$ (mm²/m) | $A_{S4}$ (mm²/m) | $A_{S7}$ (mm²/m) | $A_{S8}$ (mm²/m) | $A_{S5}$ (mm²/m) | $A_{S6}$ (mm²/m) | | |
| 1,800 | 900 | 200 | 175 | 175 | < 0.6 | - | 640 | 890 | 440 | 360 | 400 | 360 | 400 | 400 | 6,819 | C 850M |
| 1,800 | 900 | 175 | 175 | 175 | 0.6 | 740 | 640 | 610 | 470 | 360 | - | - | - | - | 6,509 | C 789M |
| 1,800 | 900 | 175 | 175 | 175 | 0.9 | 610 | 440 | 400 | 380 | 360 | - | - | - | - | 6,509 | C 789M |
| 1,800 | 900 | 175 | 175 | 175 | 1.2 | 610 | 380 | 360 | 360 | 360 | - | - | - | - | 6,509 | C 789M |
| 1,800 | 900 | 175 | 175 | 175 | 1.5 | 610 | 360 | 360 | 360 | 360 | - | - | - | - | 6,509 | C 789M |
| 1,800 | 900 | 175 | 175 | 175 | 1.8 | 580 | 360 | 360 | 360 | 360 | - | - | - | - | 6,509 | C 789M |
| 1,800 | 900 | 175 | 175 | 175 | 2.4 | 580 | 360 | 380 | 380 | 360 | - | - | - | - | 6,509 | C 789M |
| 1,800 | 900 | 175 | 175 | 175 | 3.0 | 580 | 420 | 420 | 440 | 360 | - | - | - | - | 6,509 | C 789M |
| 1,800 | 900 | 175 | 175 | 175 | 3.7 | 580 | 490 | 490 | 510 | 360 | - | - | - | - | 6,509 | C 789M |
| 1,800 | 900 | 175 | 175 | 175 | 4.3 | 580 | 550 | 550 | 550 | 360 | - | - | - | - | 6,509 | C 789M |
| 1,800 | 900 | 175 | 175 | 175 | 4.9 | 580 | 590 | 610 | 610 | 360 | - | - | - | - | 6,509 | C 789M |
| 1,800 | 900 | 175 | 175 | 175 | 5.5 | 580 | 660 | 680 | 680 | 360 | - | - | - | - | 6,509 | C 789M |
| 1,800 | 1,200 | 200 | 175 | 175 | < 0.6 | - | 550 | 970 | 510 | 360 | 400 | 360 | 420 | 400 | 7,425 | C 850M |
| 1,800 | 1,200 | 175 | 175 | 175 | 0.6 | 710 | 550 | 700 | 550 | 360 | - | - | - | - | 7,115 | C 789M |
| 1,800 | 1,200 | 175 | 175 | 175 | 0.9 | 640 | 380 | 470 | 440 | 360 | - | - | - | - | 7,115 | C 789M |
| 1,800 | 1,200 | 175 | 175 | 175 | 1.2 | 610 | 360 | 400 | 400 | 360 | - | - | - | - | 7,115 | C 789M |
| 1,800 | 1,200 | 175 | 175 | 175 | 1.5 | 580 | 360 | 380 | 400 | 360 | - | - | - | - | 7,115 | C 789M |
| 1,800 | 1,200 | 175 | 175 | 175 | 1.8 | 580 | 360 | 380 | 400 | 360 | - | - | - | - | 7,115 | C 789M |
| 1,800 | 1,200 | 175 | 175 | 175 | 2.4 | 580 | 360 | 420 | 410 | 360 | - | - | - | - | 7,115 | C 789M |
| 1,800 | 1,200 | 175 | 175 | 175 | 3.0 | 560 | 380 | 490 | 510 | 360 | - | - | - | - | 7,115 | C 789M |
| 1,800 | 1,200 | 175 | 175 | 175 | 3.7 | 560 | 420 | 550 | 550 | 360 | - | - | - | - | 7,115 | C 789M |
| 1,800 | 1,200 | 175 | 175 | 175 | 4.3 | 560 | 470 | 610 | 640 | 360 | - | - | - | - | 7,115 | C 789M |
| 1,800 | 1,200 | 175 | 175 | 175 | 4.9 | 560 | 510 | 680 | 700 | 360 | - | - | - | - | 7,115 | C 789M |
| 1,800 | 1,200 | 175 | 175 | 175 | 5.5 | 560 | 570 | 740 | 760 | 360 | - | - | - | - | 7,115 | C 789M |
| 1,800 | 1,500 | 200 | 175 | 175 | < 0.6 | - | 490 | 1,020 | 550 | 360 | 400 | 360 | 440 | 400 | 8,030 | C 850M |
| 1,800 | 1,500 | 175 | 175 | 175 | 0.6 | 840 | 510 | 760 | 610 | 360 | - | - | - | - | 7,720 | C 789M |
| 1,800 | 1,500 | 175 | 175 | 175 | 0.9 | 690 | 360 | 510 | 490 | 360 | - | - | - | - | 7,720 | C 789M |
| 1,800 | 1,500 | 175 | 175 | 175 | 1.2 | 640 | 360 | 420 | 440 | 360 | - | - | - | - | 7,720 | C 789M |
| 1,800 | 1,500 | 175 | 175 | 175 | 1.5 | 640 | 360 | 420 | 440 | 360 | - | - | - | - | 7,720 | C 789M |
| 1,800 | 1,500 | 175 | 175 | 175 | 1.8 | 640 | 360 | 420 | 440 | 360 | - | - | - | - | 7,720 | C 789M |
| 1,800 | 1,500 | 175 | 175 | 175 | 2.4 | 580 | 360 | 440 | 470 | 360 | - | - | - | - | 7,720 | C 789M |
| 1,800 | 1,500 | 175 | 175 | 175 | 3.0 | 580 | 360 | 440 | 470 | 360 | - | - | - | - | 7,720 | C 789M |
| 1,800 | 1,500 | 175 | 175 | 175 | 3.7 | 580 | 360 | 510 | 530 | 360 | - | - | - | - | 7,720 | C 789M |
| 1,800 | 1,500 | 175 | 175 | 175 | 4.3 | 580 | 360 | 570 | 610 | 360 | - | - | - | - | 7,720 | C 789M |
| 1,800 | 1,500 | 175 | 175 | 175 | 4.9 | 560 | 400 | 660 | 680 | 360 | - | - | - | - | 7,720 | C 789M |
| 1,800 | 1,500 | 175 | 175 | 175 | 5.5 | 560 | 440 | 720 | 740 | 360 | - | - | - | - | 7,720 | C 789M |
| 1,800 | 1,500 | 175 | 175 | 175 | 5.5 | 560 | 490 | 780 | 830 | 360 | - | - | - | - | 7,720 | C 789M |
| 1,800 | 1,800 | 200 | 175 | 175 | < 0.6 | - | 420 | 1,080 | 610 | 360 | 400 | 360 | 470 | 400 | 8,636 | C 850M |
| 1,800 | 1,800 | 175 | 175 | 175 | 0.6 | 1,200 | 470 | 830 | 660 | 360 | - | - | - | - | 8,326 | C 789M |
| 1,800 | 1,800 | 175 | 175 | 175 | 0.9 | 840 | 360 | 550 | 530 | 360 | - | - | - | - | 8,326 | C 789M |
| 1,800 | 1,800 | 175 | 175 | 175 | 1.2 | 740 | 360 | 470 | 490 | 360 | - | - | - | - | 8,326 | C 789M |
| 1,800 | 1,800 | 175 | 175 | 175 | 1.5 | 690 | 360 | 440 | 470 | 360 | - | - | - | - | 8,326 | C 789M |
| 1,800 | 1,800 | 175 | 175 | 175 | 1.8 | 660 | 360 | 440 | 470 | 360 | - | - | - | - | 8,326 | C 789M |
| 1,800 | 1,800 | 175 | 175 | 175 | 2.4 | 640 | 360 | 470 | 510 | 360 | - | - | - | - | 8,326 | C 789M |
| 1,800 | 1,800 | 175 | 175 | 175 | 3.0 | 610 | 360 | 530 | 570 | 360 | - | - | - | - | 8,326 | C 789M |
| 1,800 | 1,800 | 175 | 175 | 175 | 3.7 | 610 | 360 | 590 | 640 | 360 | - | - | - | - | 8,326 | C 789M |
| 1,800 | 1,800 | 175 | 175 | 175 | 4.3 | 610 | 360 | 680 | 700 | 360 | - | - | - | - | 8,326 | C 789M |
| 1,800 | 1,800 | 175 | 175 | 175 | 4.9 | 610 | 400 | 740 | 780 | 360 | - | - | - | - | 8,326 | C 789M |
| 1,800 | 1,800 | 175 | 175 | 175 | 5.5 | 580 | 440 | 800 | 850 | 360 | - | - | - | - | 8,326 | C 789M |

Note: ASTM C850M design shall be used for direct traffic loading.

(5) For Box Length = 2,400 mm

(6) $A_{S1}$ thru $A_{S4}$, $A_{S7}$ and $A_{S8}$ are minimum required areas of reinforcement per linear meter of box length. $A_{S6}$ and $A_{S5}$ are minimum required areas of reinforcement per linear meter of box width.

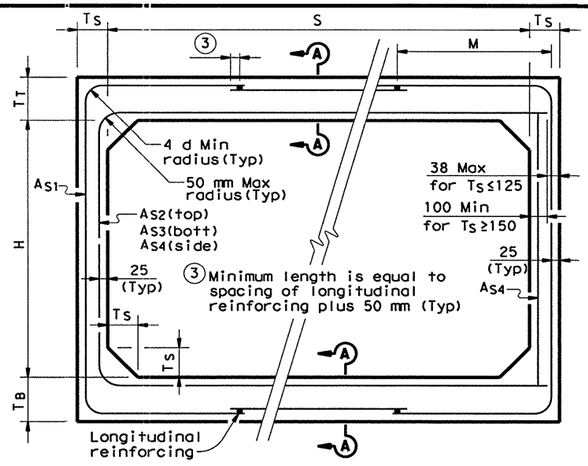


C789M CORNER OPTION "A"

C789M CORNER OPTION "B"

## ASTM C789M STANDARD

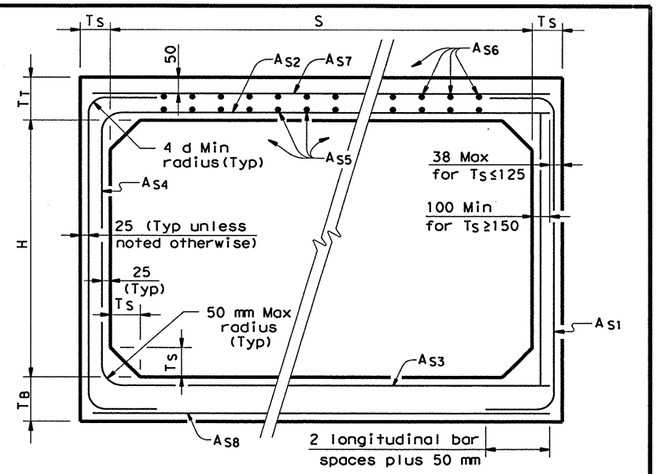


C850M CORNER OPTION "A"

C850M CORNER OPTION "B"

## ASTM C850M STANDARD

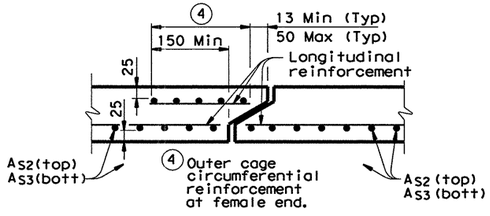


## SECTION A-A

(TOP AND BOTTOM SLAB JOINT REINFORCEMENT)

**GENERAL NOTES:**

Designs shown conform to ASTM C789M or ASTM C850M. Refer to ASTM C789M or ASTM C850M for information or details not shown.

For ASTM C789M designs, all reinforcing steel shall have a minimum specified yield stress of 445 MPa.

For ASTM C850M designs, all reinforcing steel shall have a minimum specified yield stress of 414 MPa.

All box concrete shall have a minimum 28 day compressive strength of 35 MPa.

See SCP-MD(M) standard sheet for miscellaneous details and notes not shown.

Designed for MS18 (HS20) loading and fill heights shown.

In lieu of furnishing the designs shown on this sheet, the contractor may furnish an alternate design that is equal to or exceeds the box design for the design fill height in the table. Shop plans for alternate designs shall be submitted in accordance with Item "Precast Concrete Structures".

All dimensions in millimeters unless otherwise shown.

Texas Department of Transportation
Design Division (Bridge)

# SINGLE BOX CULVERTS PRECAST

## 1,800 mm SPAN

## SCP-1.8(M)

| FILE: scp18std.dgn | DN: KLR | CK: GAF | DW: TxDOT | CK: GAF | STD: B52M |
|---|---|---|---|---|---|
| ©TxDOT January 1997 | DIST | FED REG | FEDERAL AID PROJECT • | | SHEET |
| REVISIONS 5-97-REMOVE MISC DETAILS | SAT | 6 | NH 2000(704), ETC. | | 401 |
| | COUNTY | | CONTROL | SECT | JOB | HIGHWAY |
| | BEXAR | | 2452 | 01 | 036, etc. | LP1604 |

# BOX DATA

| SECTION DIMENSIONS | | | | | Fill Height (m) | M (Min) | REINFORCING (6) | | | | | | | | Lift Mass (5) (kg) | Governing ASTM Standard |
|---|---|---|---|---|---|---|---|---|---|---|---|---|---|---|---|---|
| S | H | $T_T$ | $T_B$ | $T_S$ | | | $A_{S1}$ (mm²/m) | $A_{S2}$ (mm²/m) | $A_{S3}$ (mm²/m) | $A_{S4}$ (mm²/m) | $A_{S7}$ (mm²/m) | $A_{S8}$ (mm²/m) | $A_{S5}$ (mm²/m) | $A_{S6}$ (mm²/m) | | |
| 3,000 | 1,500 | 250 | 250 | 250 | < 0.6 | - | 720 | 1,020 | 610 | 510 | 510 | 510 | 510 | 510 | 15,137 | C 850M |
| 3,000 | 1,500 | 250 | 250 | 250 | 0.6 | 1,040 | 800 | 910 | 660 | 510 | - | - | - | - | 15,137 | C 789M |
| 3,000 | 1,500 | 250 | 250 | 250 | 0.9 | 970 | 640 | 680 | 570 | 510 | - | - | - | - | 15,137 | C 789M |
| 3,000 | 1,500 | 250 | 250 | 250 | 1.2 | 890 | 610 | 640 | 590 | 510 | - | - | - | - | 15,137 | C 789M |
| 3,000 | 1,500 | 250 | 250 | 250 | 1.5 | 860 | 660 | 640 | 640 | 510 | - | - | - | - | 15,137 | C 789M |
| 3,000 | 1,500 | 250 | 250 | 250 | 1.8 | 840 | 700 | 680 | 700 | 510 | - | - | - | - | 15,137 | C 789M |
| 3,000 | 1,500 | 250 | 250 | 250 | 2.4 | 840 | 740 | 740 | 760 | 510 | - | - | - | - | 15,137 | C 789M |
| 3,000 | 1,500 | 250 | 250 | 250 | 3.0 | 840 | 850 | 850 | 870 | 510 | - | - | - | - | 15,137 | C 789M |
| 3,000 | 1,500 | 250 | 250 | 250 | 3.7 | 840 | 950 | 950 | 970 | 510 | - | - | - | - | 15,137 | C 789M |
| 3,000 | 1,500 | 250 | 250 | 250 | 4.3 | 840 | 1,060 | 1,060 | 1,080 | 510 | - | - | - | - | 15,137 | C 789M |
| 3,000 | 1,800 | 250 | 250 | 250 | < 0.6 | - | 680 | 1,060 | 680 | 510 | 510 | 510 | 510 | 510 | 16,002 | C 850M |
| 3,000 | 1,800 | 250 | 250 | 250 | 0.6 | 1,040 | 740 | 970 | 720 | 510 | - | - | - | - | 16,002 | C 789M |
| 3,000 | 1,800 | 250 | 250 | 250 | 0.9 | 940 | 610 | 740 | 640 | 510 | - | - | - | - | 16,002 | C 789M |
| 3,000 | 1,800 | 250 | 250 | 250 | 1.2 | 860 | 570 | 680 | 640 | 510 | - | - | - | - | 16,002 | C 789M |
| 3,000 | 1,800 | 250 | 250 | 250 | 1.5 | 840 | 610 | 700 | 700 | 510 | - | - | - | - | 16,002 | C 789M |
| 3,000 | 1,800 | 250 | 250 | 250 | 1.8 | 840 | 660 | 720 | 760 | 510 | - | - | - | - | 16,002 | C 789M |
| 3,000 | 1,800 | 250 | 250 | 250 | 2.4 | 840 | 700 | 780 | 830 | 510 | - | - | - | - | 16,002 | C 789M |
| 3,000 | 1,800 | 250 | 250 | 250 | 3.0 | 810 | 780 | 890 | 930 | 510 | - | - | - | - | 16,002 | C 789M |
| 3,000 | 1,800 | 250 | 250 | 250 | 3.7 | 810 | 870 | 1,020 | 1,060 | 510 | - | - | - | - | 16,002 | C 789M |
| 3,000 | 1,800 | 250 | 250 | 250 | 4.3 | 810 | 970 | 1,120 | 1,160 | 510 | - | - | - | - | 16,002 | C 789M |
| 3,000 | 2,100 | 250 | 250 | 250 | < 0.6 | - | 660 | 1,100 | 740 | 510 | 510 | 510 | 510 | 510 | 16,867 | C 850M |
| 3,000 | 2,100 | 250 | 250 | 250 | 0.6 | 1,070 | 680 | 1,040 | 760 | 510 | - | - | - | - | 16,867 | C 789M |
| 3,000 | 2,100 | 250 | 250 | 250 | 0.9 | 970 | 570 | 780 | 680 | 510 | - | - | - | - | 16,867 | C 789M |
| 3,000 | 2,100 | 250 | 250 | 250 | 1.2 | 890 | 550 | 720 | 680 | 510 | - | - | - | - | 16,867 | C 789M |
| 3,000 | 2,100 | 250 | 250 | 250 | 1.5 | 860 | 570 | 740 | 740 | 510 | - | - | - | - | 16,867 | C 789M |
| 3,000 | 2,100 | 250 | 250 | 250 | 1.8 | 860 | 610 | 760 | 800 | 510 | - | - | - | - | 16,867 | C 789M |
| 3,000 | 2,100 | 250 | 250 | 250 | 2.4 | 840 | 660 | 830 | 890 | 510 | - | - | - | - | 16,867 | C 789M |
| 3,000 | 2,100 | 250 | 250 | 250 | 3.0 | 840 | 720 | 950 | 990 | 510 | - | - | - | - | 16,867 | C 789M |
| 3,000 | 2,100 | 250 | 250 | 250 | 3.7 | 810 | 800 | 1,060 | 1,100 | 510 | - | - | - | - | 16,867 | C 789M |
| 3,000 | 2,400 | 250 | 250 | 250 | < 0.6 | - | 610 | 1,140 | 800 | 510 | 550 | 510 | 510 | 510 | 17,732 | C 850M |
| 3,000 | 2,400 | 250 | 250 | 250 | 0.6 | 1,140 | 660 | 1,100 | 830 | 510 | - | - | - | - | 17,732 | C 789M |
| 3,000 | 2,400 | 250 | 250 | 250 | 0.9 | 1,020 | 550 | 830 | 720 | 510 | - | - | - | - | 17,732 | C 789M |
| 3,000 | 2,400 | 250 | 250 | 250 | 1.2 | 940 | 530 | 760 | 740 | 510 | - | - | - | - | 17,732 | C 789M |
| 3,000 | 2,400 | 250 | 250 | 250 | 1.5 | 910 | 550 | 780 | 800 | 510 | - | - | - | - | 17,732 | C 789M |
| 3,000 | 2,400 | 250 | 250 | 250 | 1.8 | 890 | 570 | 800 | 870 | 510 | - | - | - | - | 17,732 | C 789M |
| 3,000 | 2,400 | 250 | 250 | 250 | 2.4 | 860 | 610 | 870 | 930 | 510 | - | - | - | - | 17,732 | C 789M |
| 3,000 | 2,400 | 250 | 250 | 250 | 3.0 | 840 | 680 | 990 | 1,060 | 510 | - | - | - | - | 17,732 | C 789M |
| 3,000 | 2,400 | 250 | 250 | 250 | 3.7 | 840 | 760 | 1,100 | 1,160 | 510 | - | - | - | - | 17,732 | C 789M |
| 3,000 | 2,700 | 250 | 250 | 250 | < 0.6 | - | 570 | 1,160 | 850 | 510 | 590 | 550 | 510 | 510 | 18,597 | C 850M |
| 3,000 | 2,700 | 250 | 250 | 250 | 0.6 | 1,330 | 610 | 1,140 | 890 | 510 | - | - | - | - | 18,597 | C 789M |
| 3,000 | 2,700 | 250 | 250 | 250 | 0.9 | 1,120 | 510 | 870 | 780 | 510 | - | - | - | - | 18,597 | C 789M |
| 3,000 | 2,700 | 250 | 250 | 250 | 1.2 | 1,020 | 510 | 780 | 780 | 510 | - | - | - | - | 18,597 | C 789M |
| 3,000 | 2,700 | 250 | 250 | 250 | 1.5 | 970 | 530 | 800 | 850 | 510 | - | - | - | - | 18,597 | C 789M |
| 3,000 | 2,700 | 250 | 250 | 250 | 1.8 | 940 | 550 | 850 | 910 | 510 | - | - | - | - | 18,597 | C 789M |
| 3,000 | 2,700 | 250 | 250 | 250 | 2.4 | 910 | 590 | 910 | 970 | 510 | - | - | - | - | 18,597 | C 789M |
| 3,000 | 2,700 | 250 | 250 | 250 | 3.0 | 890 | 660 | 1,020 | 1,100 | 510 | - | - | - | - | 18,597 | C 789M |
| 3,000 | 2,700 | 250 | 250 | 250 | 3.7 | 860 | 720 | 1,140 | 1,230 | 510 | - | - | - | - | 18,597 | C 789M |
| 3,000 | 3,000 | 250 | 250 | 250 | < 0.6 | - | 570 | 1,210 | 910 | 570 | 680 | 660 | 510 | 510 | 19,462 | C 850M |
| 3,000 | 3,000 | 250 | 250 | 250 | 0.6 | 1,900 | 610 | 1,190 | 930 | 510 | - | - | - | - | 19,462 | C 789M |
| 3,000 | 3,000 | 250 | 250 | 250 | 0.9 | 1,270 | 510 | 910 | 830 | 510 | - | - | - | - | 19,462 | C 789M |
| 3,000 | 3,000 | 250 | 250 | 250 | 1.2 | 1,140 | 510 | 830 | 830 | 510 | - | - | - | - | 19,462 | C 789M |
| 3,000 | 3,000 | 250 | 250 | 250 | 1.5 | 1,070 | 510 | 850 | 890 | 510 | - | - | - | - | 19,462 | C 789M |
| 3,000 | 3,000 | 250 | 250 | 250 | 1.8 | 1,020 | 530 | 870 | 950 | 510 | - | - | - | - | 19,462 | C 789M |
| 3,000 | 3,000 | 250 | 250 | 250 | 2.4 | 970 | 570 | 930 | 1,020 | 510 | - | - | - | - | 19,462 | C 789M |
| 3,000 | 3,000 | 250 | 250 | 250 | 3.0 | 940 | 640 | 1,060 | 1,140 | 510 | - | - | - | - | 19,462 | C 789M |
| 3,000 | 3,000 | 250 | 250 | 250 | 3.7 | 910 | 700 | 1,160 | 1,270 | 510 | - | - | - | - | 19,462 | C 789M |

Note: ASTM C850M design shall be used for direct traffic loading.

(5) For Box Length = 2,400 mm

(6) $A_{S1}$ thru $A_{S4}$, $A_{S7}$ and $A_{S8}$ are minimum required areas of reinforcement per linear meter of box length. $A_{S6}$ and $A_{S5}$ are minimum required areas of reinforcement per linear meter of box width.

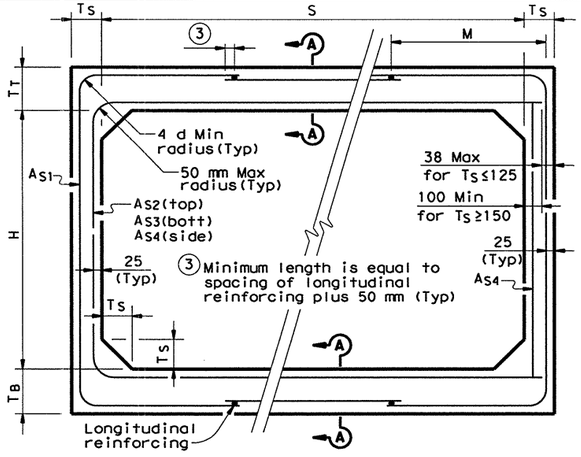


C789M CORNER OPTION "A"

C789M CORNER OPTION "B"

## ASTM C789M STANDARD

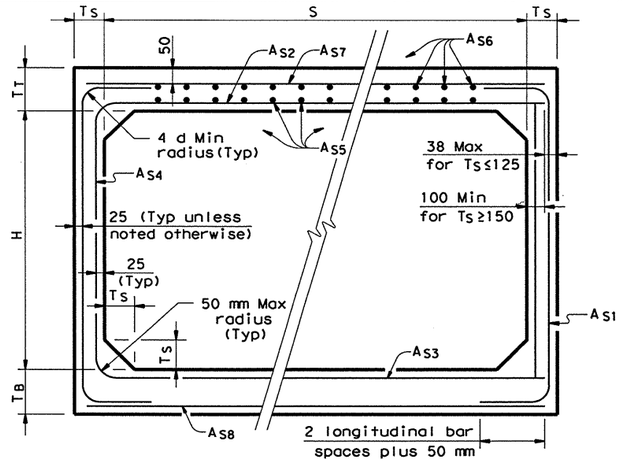


C850M CORNER OPTION "A"

C850M CORNER OPTION "B"

## ASTM C850M STANDARD

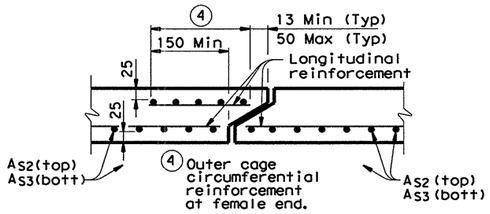


## SECTION A-A

(TOP AND BOTTOM SLAB JOINT REINFORCEMENT)

**GENERAL NOTES:**

Designs shown conform to ASTM C789M or ASTM C850M. Refer to ASTM C789M or ASTM C850M for information or details not shown.

For ASTM C789M designs, all reinforcing steel shall have a minimum specified yield stress of 445 MPa.

For ASTM C850M designs, all reinforcing steel shall have a minimum specified yield stress of 414 MPa.

All box concrete shall have a minimum 28 day compressive strength of 35 MPa.

See SCP-MD(M) standard sheet for miscellaneous details and notes not shown.

Designed for MS18 (HS20) loading and fill heights shown.

In lieu of furnishing the designs shown on this sheet, the contractor may furnish an alternate design that is equal to or exceeds the box design for the design fill height in the table. Shop plans for alternate designs shall be submitted in accordance with Item "Precast Concrete Structures".

All dimensions in millimeters unless otherwise shown.


DISCLAIMER:
The use of this standard is governed by the "Texas Engineering Practice Act". No warranty of any kind is made by TxDOT for any purpose whatsoever. TxDOT assumes no responsibility for the conversion of this standard to other formats or for incorrect results or damages resulting from its use.


LEVELS DISPLAYED 1 3

ACC: (LV=1,3 for Metric)

Texas Department of Transportation
Design Division (Bridge)

# SINGLE BOX CULVERTS PRECAST

## 3,000 mm SPAN

## SCP-3.0(M)

| FILE: scp30std.dgn | DN: KLR | CK: GAF | DW: TxDOT | CK: GAF | STD: B56M |
|---|---|---|---|---|---|
| ©TxDOT January 1997 | DIST | FED REQ | FEDERAL AID PROJECT • | | SHEET |
| REVISIONS 5-97-REMOVE MISC DETAILS | SAT | 6 | NH 2000(704), ETC. | | 402 |
| | COUNTY | | CONTROL | SECT | JOB | HIGHWAY |
| | BEXAR | | 2452 | 01 | 036, etc. | LP1604 |

## BOX DATA

| SECTION DIMENSIONS | | | | | Fill Height (m) | M (Min) | REINFORCING (6) | | | | | | | | Lift Mass (5) (kg) | Governing ASTM Standard |
|---|---|---|---|---|---|---|---|---|---|---|---|---|---|---|---|---|
| S | H | $T_T$ | $T_B$ | $T_S$ | | | $A_{S1}$ (mm²/m) | $A_{S2}$ (mm²/m) | $A_{S3}$ (mm²/m) | $A_{S4}$ (mm²/m) | $A_{S7}$ (mm²/m) | $A_{S8}$ (mm²/m) | $A_{S5}$ (mm²/m) | $A_{S6}$ (mm²/m) | | |
| ~~3,000~~ | ~~1,500~~ | ~~250~~ | ~~250~~ | ~~250~~ | ~~< 0.6~~ | | ~~720~~ | ~~1,020~~ | ~~610~~ | ~~510~~ | ~~510~~ | ~~510~~ | ~~510~~ | ~~510~~ | ~~15,137~~ | ~~C 850M~~ |
| ~~3,000~~ | ~~1,500~~ | ~~250~~ | ~~250~~ | ~~250~~ | ~~0.6~~ | ~~1,040~~ | ~~800~~ | ~~910~~ | ~~660~~ | ~~510~~ | | | | | ~~15,137~~ | ~~C 789M~~ |
| ~~3,000~~ | ~~1,500~~ | ~~250~~ | ~~250~~ | ~~250~~ | ~~0.9~~ | ~~970~~ | ~~640~~ | ~~680~~ | ~~570~~ | ~~510~~ | | | | | ~~15,137~~ | ~~C 789M~~ |
| ~~3,000~~ | ~~1,500~~ | ~~250~~ | ~~250~~ | ~~250~~ | ~~1.2~~ | ~~890~~ | ~~610~~ | ~~640~~ | ~~590~~ | ~~510~~ | | | | | ~~15,137~~ | ~~C 789M~~ |
| ~~3,000~~ | ~~1,500~~ | ~~250~~ | ~~250~~ | ~~250~~ | ~~1.5~~ | ~~860~~ | ~~660~~ | ~~640~~ | ~~640~~ | ~~510~~ | | | | | ~~15,137~~ | ~~C 789M~~ |
| ~~3,000~~ | ~~1,500~~ | ~~250~~ | ~~250~~ | ~~250~~ | ~~1.8~~ | ~~840~~ | ~~700~~ | ~~680~~ | ~~700~~ | ~~510~~ | | | | | ~~15,137~~ | ~~C 789M~~ |
| ~~3,000~~ | ~~1,500~~ | ~~250~~ | ~~250~~ | ~~250~~ | ~~2.4~~ | ~~840~~ | ~~740~~ | ~~740~~ | ~~760~~ | ~~510~~ | | | | | ~~15,137~~ | ~~C 789M~~ |
| ~~3,000~~ | ~~1,500~~ | ~~250~~ | ~~250~~ | ~~250~~ | ~~3.0~~ | ~~840~~ | ~~850~~ | ~~850~~ | ~~870~~ | ~~510~~ | | | | | ~~15,137~~ | ~~C 789M~~ |
| ~~3,000~~ | ~~1,500~~ | ~~250~~ | ~~250~~ | ~~250~~ | ~~3.7~~ | ~~840~~ | ~~950~~ | ~~950~~ | ~~970~~ | ~~510~~ | | | | | ~~15,137~~ | ~~C 789M~~ |
| ~~3,000~~ | ~~1,500~~ | ~~250~~ | ~~250~~ | ~~250~~ | ~~4.3~~ | ~~840~~ | ~~1,060~~ | ~~1,060~~ | ~~1,080~~ | ~~510~~ | | | | | ~~15,137~~ | ~~C 789M~~ |
| ~~3,000~~ | ~~1,800~~ | ~~250~~ | ~~250~~ | ~~250~~ | ~~< 0.6~~ | | ~~600~~ | ~~1,060~~ | ~~680~~ | ~~510~~ | ~~510~~ | ~~510~~ | ~~510~~ | ~~510~~ | ~~16,002~~ | ~~C 850M~~ |
| ~~3,000~~ | ~~1,800~~ | ~~250~~ | ~~250~~ | ~~250~~ | ~~0.6~~ | ~~1,040~~ | ~~740~~ | ~~970~~ | ~~720~~ | ~~510~~ | | | | | ~~16,002~~ | ~~C 789M~~ |
| ~~3,000~~ | ~~1,800~~ | ~~250~~ | ~~250~~ | ~~250~~ | ~~0.9~~ | ~~940~~ | ~~610~~ | ~~740~~ | ~~640~~ | ~~510~~ | | | | | ~~16,002~~ | ~~C 789M~~ |
| ~~3,000~~ | ~~1,800~~ | ~~250~~ | ~~250~~ | ~~250~~ | ~~1.2~~ | ~~860~~ | ~~570~~ | ~~680~~ | ~~640~~ | ~~510~~ | | | | | ~~16,002~~ | ~~C 789M~~ |
| ~~3,000~~ | ~~1,800~~ | ~~250~~ | ~~250~~ | ~~250~~ | ~~1.5~~ | ~~840~~ | ~~610~~ | ~~700~~ | ~~700~~ | ~~510~~ | | | | | ~~16,002~~ | ~~C 789M~~ |
| ~~3,000~~ | ~~1,800~~ | ~~250~~ | ~~250~~ | ~~250~~ | ~~1.8~~ | ~~840~~ | ~~660~~ | ~~720~~ | ~~760~~ | ~~510~~ | | | | | ~~16,002~~ | ~~C 789M~~ |
| ~~3,000~~ | ~~1,800~~ | ~~250~~ | ~~250~~ | ~~250~~ | ~~2.4~~ | ~~840~~ | ~~700~~ | ~~700~~ | ~~830~~ | ~~510~~ | | | | | ~~16,002~~ | ~~C 789M~~ |
| ~~3,000~~ | ~~1,800~~ | ~~250~~ | ~~250~~ | ~~250~~ | ~~3.0~~ | ~~810~~ | ~~780~~ | ~~890~~ | ~~930~~ | ~~510~~ | | | | | ~~16,002~~ | ~~C 789M~~ |
| ~~3,000~~ | ~~1,800~~ | ~~250~~ | ~~250~~ | ~~250~~ | ~~3.7~~ | ~~810~~ | ~~870~~ | ~~1,020~~ | ~~1,060~~ | ~~510~~ | | | | | ~~16,002~~ | ~~C 789M~~ |
| ~~3,000~~ | ~~1,800~~ | ~~250~~ | ~~250~~ | ~~250~~ | ~~4.3~~ | ~~810~~ | ~~970~~ | ~~1,120~~ | ~~1,160~~ | ~~510~~ | | | | | ~~16,002~~ | ~~C 789M~~ |
| ~~3,000~~ | ~~2,100~~ | ~~250~~ | ~~250~~ | ~~250~~ | ~~< 0.6~~ | | ~~660~~ | ~~1,100~~ | ~~740~~ | ~~510~~ | ~~510~~ | ~~510~~ | ~~510~~ | ~~510~~ | ~~16,867~~ | ~~C 850M~~ |
| ~~3,000~~ | ~~2,100~~ | ~~250~~ | ~~250~~ | ~~250~~ | ~~0.6~~ | ~~1,070~~ | ~~680~~ | ~~1,040~~ | ~~760~~ | ~~510~~ | | | | | ~~16,867~~ | ~~C 789M~~ |
| ~~3,000~~ | ~~2,100~~ | ~~250~~ | ~~250~~ | ~~250~~ | ~~0.9~~ | ~~970~~ | ~~570~~ | ~~780~~ | ~~680~~ | ~~510~~ | | | | | ~~16,867~~ | ~~C 789M~~ |
| ~~3,000~~ | ~~2,100~~ | ~~250~~ | ~~250~~ | ~~250~~ | ~~1.2~~ | ~~890~~ | ~~550~~ | ~~720~~ | ~~680~~ | ~~510~~ | | | | | ~~16,867~~ | ~~C 789M~~ |
| ~~3,000~~ | ~~2,100~~ | ~~250~~ | ~~250~~ | ~~250~~ | ~~1.5~~ | ~~860~~ | ~~570~~ | ~~740~~ | ~~740~~ | ~~510~~ | | | | | ~~16,867~~ | ~~C 789M~~ |
| ~~3,000~~ | ~~2,100~~ | ~~250~~ | ~~250~~ | ~~250~~ | ~~1.8~~ | ~~860~~ | ~~610~~ | ~~760~~ | ~~800~~ | ~~510~~ | | | | | ~~16,867~~ | ~~C 789M~~ |
| ~~3,000~~ | ~~2,100~~ | ~~250~~ | ~~250~~ | ~~250~~ | ~~2.4~~ | ~~840~~ | ~~660~~ | ~~830~~ | ~~890~~ | ~~510~~ | | | | | ~~16,867~~ | ~~C 789M~~ |
| ~~3,000~~ | ~~2,100~~ | ~~250~~ | ~~250~~ | ~~250~~ | ~~3.0~~ | ~~840~~ | ~~720~~ | ~~950~~ | ~~990~~ | ~~510~~ | | | | | ~~16,867~~ | ~~C 789M~~ |
| ~~3,000~~ | ~~2,100~~ | ~~250~~ | ~~250~~ | ~~250~~ | ~~3.7~~ | ~~810~~ | ~~800~~ | ~~1,060~~ | ~~1,100~~ | ~~510~~ | | | | | ~~16,867~~ | ~~C 789M~~ |
| ~~3,000~~ | ~~2,400~~ | ~~250~~ | ~~250~~ | ~~250~~ | ~~< 0.6~~ | | ~~610~~ | ~~1,140~~ | ~~800~~ | ~~510~~ | ~~550~~ | ~~510~~ | ~~510~~ | ~~510~~ | ~~17,732~~ | ~~C 850M~~ |
| ~~3,000~~ | ~~2,400~~ | ~~250~~ | ~~250~~ | ~~250~~ | ~~0.6~~ | ~~1,140~~ | ~~660~~ | ~~1,100~~ | ~~830~~ | ~~510~~ | | | | | ~~17,732~~ | ~~C 789M~~ |
| ~~3,000~~ | ~~2,400~~ | ~~250~~ | ~~250~~ | ~~250~~ | ~~0.9~~ | ~~1,020~~ | ~~550~~ | ~~830~~ | ~~720~~ | ~~510~~ | | | | | ~~17,732~~ | ~~C 789M~~ |
| ~~3,000~~ | ~~2,400~~ | ~~250~~ | ~~250~~ | ~~250~~ | ~~1.2~~ | ~~940~~ | ~~530~~ | ~~760~~ | ~~740~~ | ~~510~~ | | | | | ~~17,732~~ | ~~C 789M~~ |
| ~~3,000~~ | ~~2,400~~ | ~~250~~ | ~~250~~ | ~~250~~ | ~~1.5~~ | ~~910~~ | ~~550~~ | ~~780~~ | ~~800~~ | ~~510~~ | | | | | ~~17,732~~ | ~~C 789M~~ |
| ~~3,000~~ | ~~2,400~~ | ~~250~~ | ~~250~~ | ~~250~~ | ~~1.8~~ | ~~890~~ | ~~570~~ | ~~800~~ | ~~870~~ | ~~510~~ | | | | | ~~17,732~~ | ~~C 789M~~ |
| ~~3,000~~ | ~~2,400~~ | ~~250~~ | ~~250~~ | ~~250~~ | ~~2.4~~ | ~~860~~ | ~~610~~ | ~~870~~ | ~~930~~ | ~~510~~ | | | | | ~~17,732~~ | ~~C 789M~~ |
| ~~3,000~~ | ~~2,400~~ | ~~250~~ | ~~250~~ | ~~250~~ | ~~3.0~~ | ~~840~~ | ~~680~~ | ~~990~~ | ~~1,060~~ | ~~510~~ | | | | | ~~17,732~~ | ~~C 789M~~ |
| ~~3,000~~ | ~~2,400~~ | ~~250~~ | ~~250~~ | ~~250~~ | ~~3.7~~ | ~~840~~ | ~~760~~ | ~~1,100~~ | ~~1,160~~ | ~~510~~ | | | | | ~~17,732~~ | ~~C 789M~~ |
| ~~3,000~~ | ~~2,700~~ | ~~250~~ | ~~250~~ | ~~250~~ | ~~< 0.6~~ | | ~~570~~ | ~~1,160~~ | ~~850~~ | ~~510~~ | ~~590~~ | ~~550~~ | ~~510~~ | ~~510~~ | ~~18,597~~ | ~~C 850M~~ |
| ~~3,000~~ | ~~2,700~~ | ~~250~~ | ~~250~~ | ~~250~~ | ~~0.6~~ | ~~1,330~~ | ~~610~~ | ~~1,140~~ | ~~890~~ | ~~510~~ | | | | | ~~18,597~~ | ~~C 789M~~ |
| ~~3,000~~ | ~~2,700~~ | ~~250~~ | ~~250~~ | ~~250~~ | ~~0.9~~ | ~~1,120~~ | ~~510~~ | ~~870~~ | ~~780~~ | ~~510~~ | | | | | ~~18,597~~ | ~~C 789M~~ |
| ~~3,000~~ | ~~2,700~~ | ~~250~~ | ~~250~~ | ~~250~~ | ~~1.2~~ | ~~1,020~~ | ~~510~~ | ~~780~~ | ~~780~~ | ~~510~~ | | | | | ~~18,597~~ | ~~C 789M~~ |
| ~~3,000~~ | ~~2,700~~ | ~~250~~ | ~~250~~ | ~~250~~ | ~~1.5~~ | ~~970~~ | ~~530~~ | ~~800~~ | ~~850~~ | ~~510~~ | | | | | ~~18,597~~ | ~~C 789M~~ |
| ~~3,000~~ | ~~2,700~~ | ~~250~~ | ~~250~~ | ~~250~~ | ~~1.8~~ | ~~940~~ | ~~550~~ | ~~850~~ | ~~910~~ | ~~510~~ | | | | | ~~18,597~~ | ~~C 789M~~ |
| ~~3,000~~ | ~~2,700~~ | ~~250~~ | ~~250~~ | ~~250~~ | ~~2.4~~ | ~~910~~ | ~~590~~ | ~~910~~ | ~~970~~ | ~~510~~ | | | | | ~~18,597~~ | ~~C 789M~~ |
| ~~3,000~~ | ~~2,700~~ | ~~250~~ | ~~250~~ | ~~250~~ | ~~3.0~~ | ~~890~~ | ~~660~~ | ~~1,020~~ | ~~1,100~~ | ~~510~~ | | | | | ~~18,597~~ | ~~C 789M~~ |
| ~~3,000~~ | ~~2,700~~ | ~~250~~ | ~~250~~ | ~~250~~ | ~~3.7~~ | ~~860~~ | ~~720~~ | ~~1,140~~ | ~~1,230~~ | ~~510~~ | | | | | ~~18,597~~ | ~~C 789M~~ |
| ~~3,000~~ | ~~3,000~~ | ~~250~~ | ~~250~~ | ~~250~~ | ~~< 0.6~~ | | ~~570~~ | ~~1,210~~ | ~~910~~ | ~~570~~ | ~~680~~ | ~~660~~ | ~~510~~ | ~~510~~ | ~~19,462~~ | ~~C 850M~~ |
| ~~3,000~~ | ~~3,000~~ | ~~250~~ | ~~250~~ | ~~250~~ | ~~0.6~~ | ~~1,900~~ | ~~610~~ | ~~1,190~~ | ~~930~~ | ~~510~~ | | | | | ~~19,462~~ | ~~C 789M~~ |
| ~~3,000~~ | ~~3,000~~ | ~~250~~ | ~~250~~ | ~~250~~ | ~~0.9~~ | ~~1,270~~ | ~~510~~ | ~~910~~ | ~~830~~ | ~~510~~ | | | | | ~~19,462~~ | ~~C 789M~~ |
| ~~3,000~~ | ~~3,000~~ | ~~250~~ | ~~250~~ | ~~250~~ | ~~1.2~~ | ~~1,140~~ | ~~510~~ | ~~830~~ | ~~830~~ | ~~510~~ | | | | | ~~19,462~~ | ~~C 789M~~ |
| ~~3,000~~ | ~~3,000~~ | ~~250~~ | ~~250~~ | ~~250~~ | ~~1.5~~ | ~~1,070~~ | ~~510~~ | ~~850~~ | ~~890~~ | ~~510~~ | | | | | ~~19,462~~ | ~~C 789M~~ |
| ~~3,000~~ | ~~3,000~~ | ~~250~~ | ~~250~~ | ~~250~~ | ~~1.8~~ | ~~1,020~~ | ~~530~~ | ~~870~~ | ~~950~~ | ~~510~~ | | | | | ~~19,462~~ | ~~C 789M~~ |
| ~~3,000~~ | ~~3,000~~ | ~~250~~ | ~~250~~ | ~~250~~ | ~~2.4~~ | ~~970~~ | ~~570~~ | ~~930~~ | ~~1,020~~ | ~~510~~ | | | | | ~~19,462~~ | ~~C 789M~~ |
| ~~3,000~~ | ~~3,000~~ | ~~250~~ | ~~250~~ | ~~250~~ | ~~3.0~~ | ~~940~~ | ~~640~~ | ~~1,060~~ | ~~1,140~~ | ~~510~~ | | | | | ~~19,462~~ | ~~C 789M~~ |
| ~~3,000~~ | ~~3,000~~ | ~~250~~ | ~~250~~ | ~~250~~ | ~~3.7~~ | ~~910~~ | ~~700~~ | ~~1,160~~ | ~~1,270~~ | ~~510~~ | | | | | ~~19,462~~ | ~~C 789M~~ |
| 3,000 | 3,000 | 250 | 250 | 250 | 7.6 | 930 | 890 | 1,680 | 1,770 | 510 | - | - | - | - | 19,462 | C 789M |

Note: ASTM C850M design shall be used for direct traffic loading.

(5) For Box Length = 2,400 mm

(6) $A_{S1}$ thru $A_{S4}$, $A_{S7}$ and $A_{S8}$ are minimum required areas of reinforcement per linear meter of box length. $A_{S6}$ and $A_{S5}$ are minimum required areas of reinforcement per linear meter of box width.

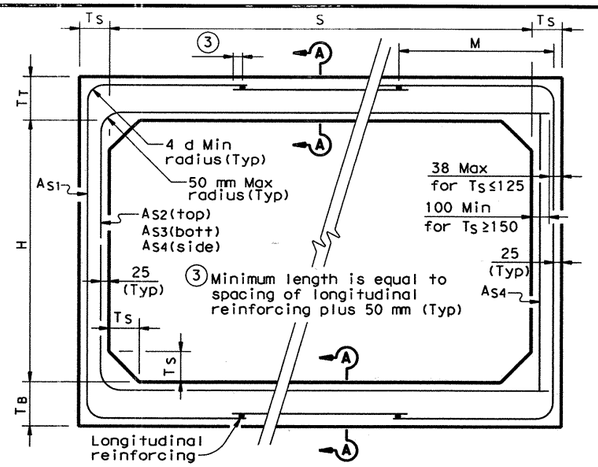


C789M CORNER OPTION "A"

C789M CORNER OPTION "B"

## ASTM C789M STANDARD

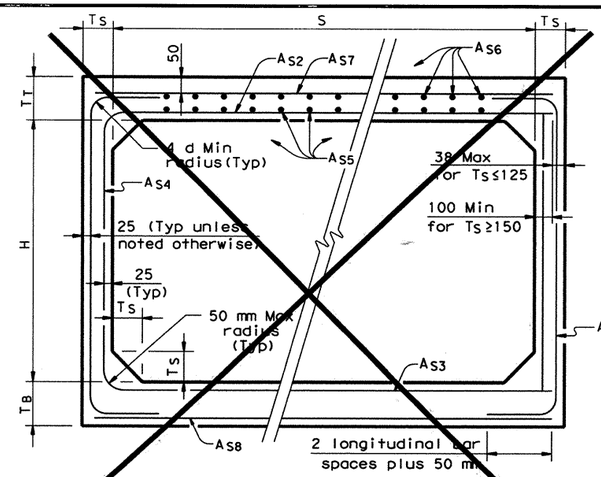


C850M CORNER OPTION "A"

C850M CORNER OPTION "B"

## ASTM C850M STANDARD

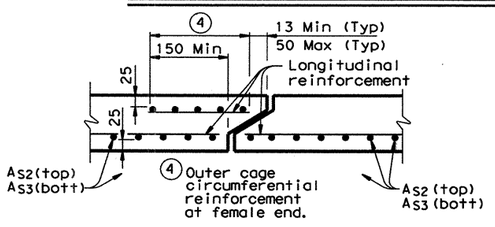


## SECTION A-A

(TOP AND BOTTOM SLAB JOINT REINFORCEMENT)

**GENERAL NOTES:**

Designs shown conform to ASTM C789M or ASTM C850M. Refer to ASTM C789M or ASTM C850M for information or details not shown.

For ASTM C789M designs, all reinforcing steel shall have a minimum specified yield stress of 445 MPa.

For ASTM C850M designs, all reinforcing steel shall have a minimum specified yield stress of 414 MPa.

All box concrete shall have a minimum 28 day compressive strength of 35 MPa.

See SCP-MD(M) standard sheet for miscellaneous details and notes not shown.

Designed for MS18 (HS20) loading and fill heights shown.

In lieu of furnishing the designs shown on this sheet, the contractor may furnish an alternate design that is equal to or exceeds the box design for the design fill height in the table. Shop plans for alternate designs shall be submitted in accordance with Item "Precast Concrete Structures".

All dimensions in millimeters unless otherwise shown.

STATE OF TEXAS
GLENN P. GRISHAM
68713
REGISTERED PROFESSIONAL ENGINEER

Glenn P. Grisham P.E. — 9-22-00

Glenn P. Grisham — Date

DISCLAIMER:
The use of this standard is governed by the "Texas Engineering Practice Act". No warranty of any kind is made by TxDOT for any purpose whatsoever. TxDOT assumes no responsibility for the conversion of this standard to other formats or for incorrect results or damages resulting from its use.

LEVELS DISPLAYED 1 3 ACC: (LV=1,3 for Metric)

Texas Department of Transportation
Design Division (Bridge)

# SINGLE BOX CULVERT PRECAST
## 3,000 mm SPAN

## SCP-3.0(M)(Mod.)

| FILE: scp30std.dgn | DN: | CK: | DW: TxDOT | CK: | STD: B56M |
|---|---|---|---|---|---|
| ©TxDOT Sept:2000 REVISIONS | DIST | FED REG | FEDERAL AID PROJECT • | | SHEET |
| | SAT | 6 | NH 2000(704), etc. | | 402A |
| | COUNTY | | CONTROL | SECT | JOB | HIGHWAY |
| | BEXAR | | 2452 | 01 | 036 | LP1604 |

DISCLAIMER:
The use of this standard is governed by the "Texas Engineering Practice Act". No warranty of any kind is made by TxDOT for any purpose whatsoever. TxDOT assumes no responsibility for the conversion of this standard to other formats or for incorrect results or damages resulting from its use.

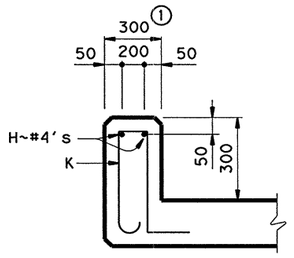


① For T6 Rail ~ see T6-CM(M) for additional details

## SECTION THRU CURB

| QUANTITITES PER METER OF CURB | |
|---|---|
| Reinforcing Steel | 6.26 kg |
| Concrete | 0.090 m3 |

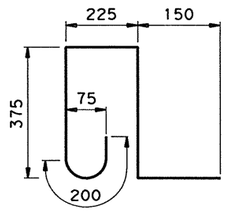


**BARS K ~ #4**
(Spa = 300 mm Max)
(Length = 1290 mm)

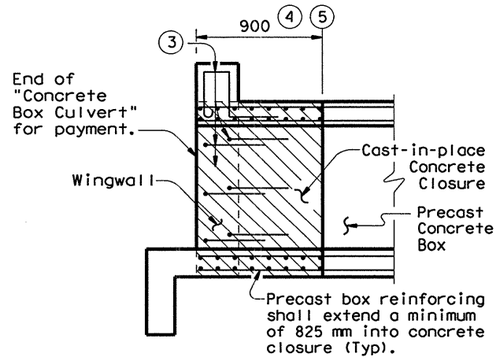


## WINGWALL CONNECTION

(ALSO APPLIES TO SAFETY END TREATMENT)

③ Curb, Wingwall or Safety End Treatment reinforcing shall extend into concrete closure. Any reinforcing that does not fit into the closure shall be bent or trimmed as necessary.

④ Cast-in-place concrete closure shall be 900mm. Boxes shall be cast short or broken back in the field.

⑤ For multiple unit placements the length of the closure for the interior walls may be adjusted as necessary. The length of the top and bottom slab closure shall not be less than 900mm. The exterior walls closure shall not be less than 900 mm unless directed otherwise by the Engineer. See "Wall Closure" detail when interior walls are cast full length.

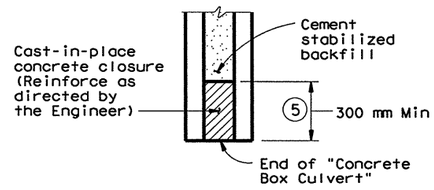


## WALL CLOSURE

(Plan view of interior walls cast full length)

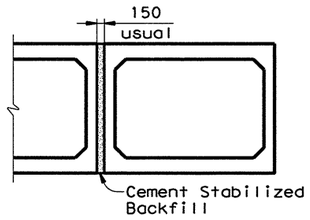


## MULTIPLE UNIT PLACEMENT

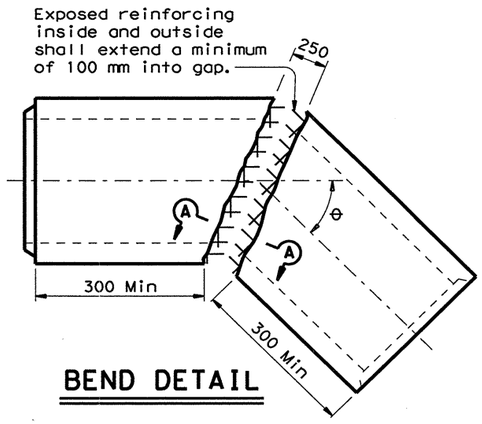


## BEND DETAIL

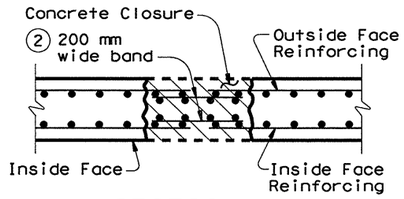


## SECTION A-A

② Bands matching the inside and outside face reinforcing shall be placed in the gaps of the top and bottom slabs. A band matching the outside face reinforcing of the wall shall be placed in the gaps of the walls (placed in the outside face only). The bands shall be tack welded to the exposed reinforcing at each point of contact.

### GENERAL NOTES:

All closure concrete shall meet the specified 28 day compressive strength of the box and shall be placed according to Item "Concrete Structures".

All reinforcing in the closure shall be the same size and spacing as in the precast box section.

All closures shall be flush with the inside and outside faces.

Designed for MS18 (HS20) loading.

All dimensions in millimeters unless otherwise shown.

Texas Department of Transportation
Design Division (Bridge)

# SINGLE BOX CULVERTS
## PRECAST
## MISCELLANEOUS DETAILS

## SCP-MD(M)

| FILE: scp08std.dgn | DN: GAF | CK: TxDOT | DW: JTR | CK: LDS | STD: B48M |
|---|---|---|---|---|---|
| ©TxDOT May 1997 | DIST | FED REG | FEDERAL AID PROJECT • | | SHEET |
| REVISIONS | SAT | 6 | NH 2000(704), ETC. | | 403 |
| | COUNTY | | CONTROL | SECT | JOB | HIGHWAY |
| | BEXAR | | 2452 | 01 | DIST. ETC. | LP1604 |

LEVELS DISPLAYED
1 3
PATH:
(LV=1,3 Metric)

# BILLS OF REINFORCING STEEL (Wings for 2 Structure Ends)

| Box Culvert Height, H | Bars M1 at 300 mm max | | | | | | | | | | Bars M2 at 300 mm max | | | | | | | | Bars N ~ #4 at 300 mm max | | | | | 4-Bars P1 ~ #5 | | 4-Bars P2 ~ #5 | | 4-Bars R ~ #6 | | | | 4-Bars T ~ #4 | | 4-Bars U1 ~ #6 | | 4-Bars U2 ~ #6 | | 8-Bars V ~ #6 | | Bars W ~ #5 | | 12-Bars X ~ #6 | | Bars Y ~ #6 | | | 4-Bars Z ~ #4 | |
|---|---|---|---|---|---|---|---|---|---|---|---|---|---|---|---|---|---|---|---|---|---|---|---|---|---|---|---|---|---|---|---|---|---|---|---|---|---|---|---|---|---|---|---|---|---|---|---|---|
| | No. | Size | Avg Lgth mm | kg | Min "a" | Max "a" | Avg "a" | Min "b" | Max "b" | Avg "b" | No. | Size | Avg Lgth mm | kg | Min "c" | Max "c" | Avg "c" | "d" | No. | Min Lgth mm | Max Lgth mm | Avg Lgth mm | kg | Lgth mm | kg | Lgth mm | kg | Lgth mm | kg | "e" | "f" | Lgth mm | kg | Lgth mm | kg | Lgth mm | kg | Lgth mm | kg | Lgth mm | kg | No. | Lgth mm | kg | Lgth mm | kg | No. | Lgth mm | kg | Lgth mm | kg |
| 600 | 24 | #4 | 840 | 20 | 290 | 290 | 290 | 290 | 810 | 550 | 24 | #4 | 1,260 | 30 | 600 | 600 | 600 | 660 | 8 | 530 | 1,220 | 880 | 7 | 1,890 | 12 | 1,760 | 11 | 2,110 | 19 | 770 | 1,340 | 1,440 | 6 | 1,400 | 13 | 1,350 | 12 | 1,000 | 18 | 8 | 840 | 10 | 1,000 | 27 | 0 | ~ | ~ | 980 | 4 |
| 900 | 32 | #4 | 1,020 | 32 | 290 | 290 | 290 | 290 | 1,160 | 730 | 32 | #4 | 1,260 | 40 | 600 | 600 | 600 | 660 | 16 | 530 | 2,030 | 1,280 | 20 | 2,700 | 17 | 2,560 | 16 | 2,910 | 26 | 770 | 2,140 | 2,250 | 9 | 2,280 | 20 | 2,230 | 20 | 1,000 | 18 | 16 | 840 | 21 | 1,000 | 27 | 0 | ~ | ~ | 980 | 4 |
| 1,200 | 44 | #4 | 1,180 | 52 | 290 | 290 | 290 | 290 | 1,490 | 890 | 44 | #4 | 1,260 | 55 | 600 | 600 | 600 | 660 | 20 | 530 | 2,790 | 1,660 | 33 | 3,460 | 21 | 3,330 | 21 | 3,680 | 33 | 770 | 2,910 | 3,010 | 12 | 3,110 | 28 | 3,060 | 27 | 1,000 | 18 | 20 | 840 | 26 | 1,000 | 27 | 0 | ~ | ~ | 980 | 4 |
| 1,500 | 56 | #4 | 1,420 | 79 | 290 | 380 | 340 | 290 | 1,860 | 1,080 | 56 | #4 | 1,380 | 77 | 600 | 840 | 720 | 660 | 24 | 530 | 3,640 | 2,090 | 50 | 4,370 | 27 | 4,180 | 26 | 4,700 | 42 | 940 | 3,760 | 3,920 | 16 | 4,040 | 36 | 3,990 | 36 | 1,000 | 18 | 24 | 840 | 31 | 1,000 | 27 | 4 | 710 | 6 | 980 | 4 |
| 1,800 | 64 | #5 | 1,610 | 160 | 290 | 460 | 380 | 290 | 2,160 | 1,230 | 64 | #5 | 1,460 | 145 | 600 | 1,000 | 800 | 660 | 28 | 530 | 4,340 | 2,440 | 68 | 5,110 | 32 | 4,870 | 30 | 5,480 | 49 | 1,020 | 4,460 | 4,670 | 19 | 4,790 | 43 | 4,750 | 42 | 1,000 | 18 | 28 | 840 | 37 | 1,000 | 27 | 4 | 860 | 8 | 980 | 4 |
| 2,100 | 72 | #5 | 1,810 | 203 | 310 | 530 | 420 | 310 | 2,470 | 1,390 | 72 | #5 | 1,580 | 177 | 630 | 1,160 | 900 | 680 | 32 | 510 | 5,020 | 2,770 | 88 | 5,840 | 36 | 5,570 | 35 | 6,300 | 56 | 1,140 | 5,160 | 5,400 | 21 | 5,550 | 50 | 5,490 | 49 | 1,000 | 18 | 32 | 840 | 42 | 1,000 | 27 | 4 | 1,010 | 9 | 980 | 4 |
| 2,400 | 84 | #6 | 2,010 | 377 | 310 | 620 | 470 | 310 | 2,770 | 1,540 | 84 | #6 | 1,670 | 314 | 630 | 1,340 | 990 | 680 | 36 | 510 | 5,710 | 3,110 | 111 | 6,600 | 41 | 6,260 | 39 | 7,090 | 63 | 1,240 | 5,850 | 6,150 | 24 | 6,300 | 56 | 6,250 | 56 | 1,000 | 18 | 36 | 840 | 47 | 1,000 | 27 | 8 | 1,130 | 20 | 980 | 4 |
| 2,700 | 92 | #8 | 2,200 | 804 | 310 | 700 | 510 | 310 | 3,070 | 1,690 | 92 | #8 | 1,740 | 636 | 630 | 1,490 | 1,060 | 680 | 40 | 510 | 6,400 | 3,460 | 138 | 7,340 | 46 | 6,950 | 43 | 7,870 | 70 | 1,320 | 6,550 | 6,900 | 27 | 7,060 | 63 | 7,000 | 63 | 1,000 | 18 | 40 | 840 | 52 | 1,000 | 27 | 8 | 1,260 | 23 | 980 | 4 |
| 3,000 | 100 | #8 | 2,440 | 970 | 340 | 790 | 570 | 340 | 3,400 | 1,870 | 100 | #8 | 1,880 | 747 | 660 | 1,670 | 1,170 | 710 | 44 | 500 | 7,080 | 3,790 | 166 | 8,070 | 50 | 7,640 | 47 | 8,690 | 78 | 1,440 | 7,250 | 7,630 | 30 | 7,810 | 70 | 7,740 | 69 | 1,000 | 18 | 44 | 840 | 57 | 1,000 | 27 | 8 | 1,420 | 25 | 980 | 4 |

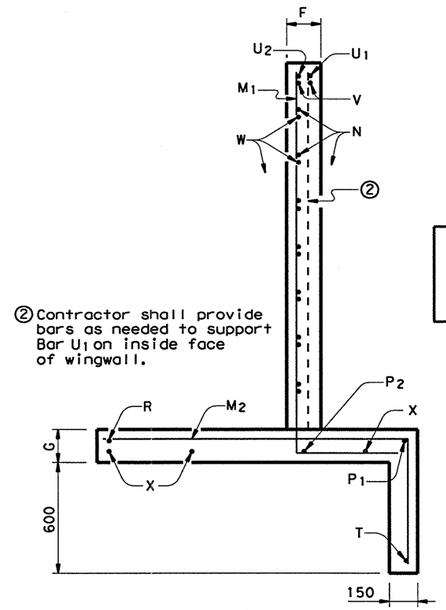


② Contractor shall provide bars as needed to support Bar U1 on inside face of wingwall.

## SECTION A-A

NOTE:
See sheet 2 of 2 for Bar Bend Details and Box Culvert Toe-Wall Quantities.

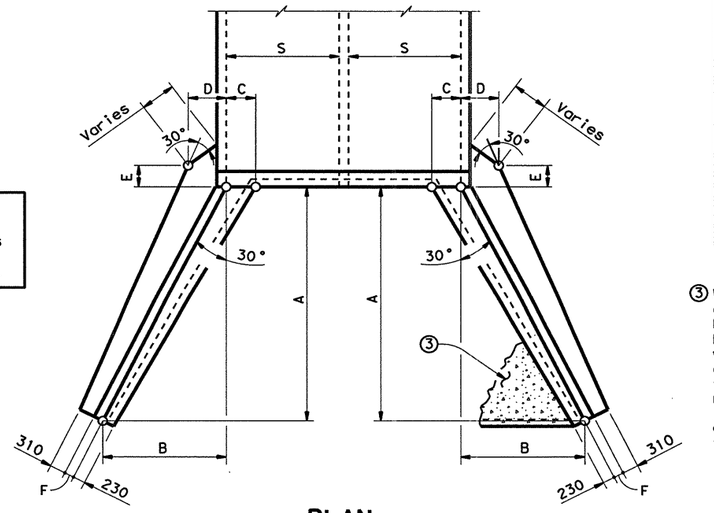


## PLAN
SHOWING DIMENSIONS

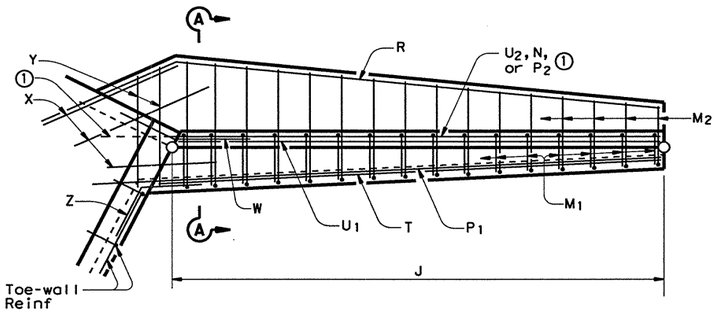


① Extend Bar P2 only into bottom slab of Box Culvert.

## PLAN
SHOWING REINFORCING

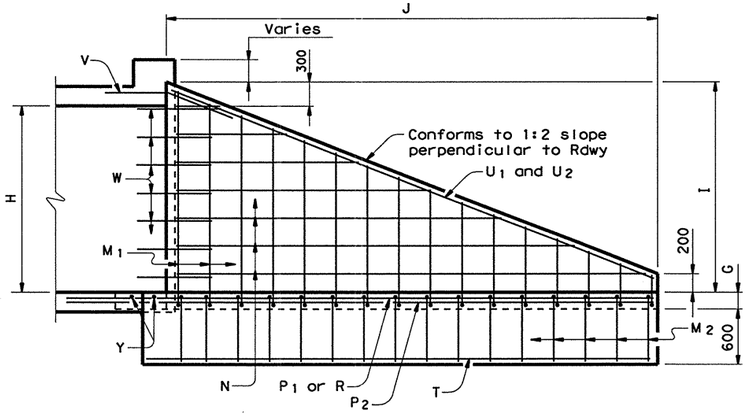


## ELEVATION
SHOWING REINFORCING

## TABLE OF DIMENSIONS

| Box Culvert Height, H | BOTH WALLS | | | | | | | | |
|---|---|---|---|---|---|---|---|---|---|
| | A | B | C | D | E | F | G | I | J |
| 600 | 1,200 | 693 | 266 | 407 | 235 | 160 | 160 | 800 | 1,386 |
| 900 | 1,900 | 1,097 | 266 | 407 | 235 | 160 | 160 | 1,150 | 2,194 |
| 1,200 | 2,560 | 1,478 | 266 | 407 | 235 | 160 | 160 | 1,480 | 2,956 |
| 1,500 | 3,300 | 1,905 | 375 | 546 | 315 | 160 | 160 | 1,850 | 3,811 |
| 1,800 | 3,900 | 2,252 | 472 | 615 | 355 | 160 | 160 | 2,150 | 4,503 |
| 2,100 | 4,500 | 2,598 | 545 | 710 | 410 | 180 | 180 | 2,450 | 5,196 |
| 2,400 | 5,100 | 2,944 | 656 | 788 | 455 | 180 | 180 | 2,750 | 5,889 |
| 2,700 | 5,700 | 3,291 | 754 | 849 | 490 | 180 | 180 | 3,050 | 6,582 |
| 3,000 | 6,300 | 3,637 | 827 | 953 | 550 | 210 | 210 | 3,350 | 7,275 |

## QUANTITIES ④ (Wings for 2 Structure Ends)

| Box Culvert Height, H | Conc ($m^3$) | Reinf (kg) |
|---|---|---|
| 600 | 1.6 | 188 |
| 900 | 2.8 | 270 |
| 1,200 | 4.0 | 357 |
| 1,500 | 6.0 | 474 |
| 1,800 | 7.8 | 680 |
| 2,100 | 10.8 | 815 |
| 2,400 | 13.3 | 1,198 |
| 2,700 | 16.0 | 2,014 |
| 3,000 | 21.7 | 2,358 |

③ When shown elsewhere on the plans, a 130 mm deep concrete riprap shall be constructed. Unless otherwise shown on the plans or directed by the Engineer, the riprap shall have a 150 mm wide by 450 mm deep reinforced concrete toewall along all edges adjacent to natural ground; the toewall shall be reinforced by extending typical riprap reinforcing into the toewall; construction joints or grooved joints, oriented in the direction of flow, shall extend across the full distance of the riprap, at intervals of approximately 6,000 mm.

④ Quantities shown are for wings only. See Item "Headwalls and Wingwalls" for a description of other components that may be included in the pay item Wingwalls.

**GENERAL NOTES:**

Designed according to AASHTO 1992 Standard and current Interim Specifications.

All reinforcing steel shall be Grade 420 (fy = 420 MPa).

All concrete shall have a minimum 28 day compressive strength of 21 MPa.

All Reinforcing bars shall be adjusted to provide a 35 mm clear cover.

The bottom slab of the barrel, wing footing and toewalls shall be placed in one continuous operation.

When structure is founded on solid rock, depth of Toe-walls for culverts and Wingwalls may be reduced or eliminated as directed by the Engineer.

All dimensions are in millimeters and all masses are in kilograms unless otherwise noted.

DISCLAIMER:
The use of this standard is governed by the "Texas Engineering Practice Act". No warranty of any kind is made by TxDOT for any purpose whatsoever. TxDOT assumes no responsibility for the conversion of this standard to other formats or for incorrect results or damages resulting from its use.

LEVELS Di.. ED | ACC: (LV=1,3 for Metric) | 1 | 3

SHEET 1 OF 2

Texas Department of Transportation
Design Division (Bridge)

# FLARED WINGS
## FOR 0° SKEW BOX CULVERTS

**FW-0(M)**

| FILE: fw-00std.dgn | DN: SDA | CK: EJU | DW: MCB | CK: SDA | STD: B102M |
|---|---|---|---|---|---|
| © TxDOT October 1996 | DIST | FED REG | FEDERAL AID PROJECT • | | SHEET |
| REVISIONS 5-97-ADD NOTE ④, GEN NOTES & MISC | SAT | 6 | NH 2000(704), ETC. | | 404 |
| | COUNTY | | CONTROL | SECT | JOB | HIGHWAY |
| | BEXAR | | 2452 | 01 | 036, etc. | LP1604 |

# BOX CULVERT TOE-WALL QUANTITIES (For 2 Structure Ends)

| Box Culvert Height, H | Box Culvert Span, S | Number of Spans | | | | | | | | | | | | | | | | | | | | | | | | | | | | | |
|---|---|---|---|---|---|---|---|---|---|---|---|---|---|---|---|---|---|---|---|---|---|---|---|---|---|---|---|---|---|---|---|
| | | 1 | | | | | | | 2 | | | | | | | | | 3 | | | | | | | 4 | | | | | | | |
| | | 2-Bars K ~ #4 | | Bars L ~ #4 at 450 mm max | | | Reinf | Conc | 2-Bars K ~ #4 | | Bars L ~ #4 at 450 mm max | | | Reinf | Conc | 2-Bars K ~ #4 | | Bars L ~ #4 at 450 mm max | | | Reinf | Conc | 2-Bars K ~ #4 | | Bars L ~ #4 at 450 mm max | | | Reinf | Conc |
| | | Lgth mm | kg | No. | Lgth mm | kg | (Kg) | (m3) | Lgth mm | kg | No. | Lgth mm | kg | (Kg) | (m3) | Lgth mm | kg | No. | Lgth mm | kg | (Kg) | (m3) | Lgth mm | kg | No. | Lgth mm | kg | (Kg) | (m3) | | | | |
| 600 | 900 | 370 | 1 | 6 | 1,200 | 7 | 8 | 0.1 | 1,440 | 3 | 10 | 1,200 | 12 | 15 | 0.3 | 2,520 | 5 | 16 | 1,200 | 19 | 24 | 0.5 | 3,590 | 7 | 22 | 1,200 | 26 | 33 | 0.7 | | | | |
| | 1,200 | 670 | 1 | 6 | 1,200 | 7 | 8 | 0.2 | 2,040 | 4 | 14 | 1,200 | 16 | 20 | 0.4 | 3,420 | 7 | 20 | 1,200 | 23 | 30 | 0.7 | 4,790 | 10 | 26 | 1,200 | 30 | 40 | 1.0 | | | | |
| | 1,500 | 970 | 2 | 8 | 1,200 | 9 | 11 | 0.2 | 2,640 | 5 | 16 | 1,200 | 19 | 24 | 0.5 | 4,320 | 9 | 24 | 1,200 | 28 | 37 | 0.9 | 5,990 | 12 | 32 | 1,200 | 38 | 49 | 1.2 | | | | |
| 900 | 900 | 370 | 1 | 6 | 1,200 | 7 | 8 | 0.1 | 1,440 | 3 | 10 | 1,200 | 12 | 15 | 0.3 | 2,520 | 5 | 16 | 1,200 | 19 | 24 | 0.5 | 3,590 | 7 | 22 | 1,200 | 26 | 33 | 0.7 | | | | |
| | 1,200 | 670 | 1 | 6 | 1,200 | 7 | 8 | 0.2 | 2,040 | 4 | 14 | 1,200 | 16 | 20 | 0.4 | 3,420 | 7 | 20 | 1,200 | 23 | 30 | 0.7 | 4,790 | 10 | 26 | 1,200 | 30 | 40 | 1.0 | | | | |
| | 1,500 | 970 | 2 | 8 | 1,200 | 9 | 11 | 0.2 | 2,640 | 5 | 16 | 1,200 | 19 | 24 | 0.5 | 4,320 | 9 | 24 | 1,200 | 28 | 37 | 0.9 | 5,990 | 12 | 32 | 1,200 | 38 | 49 | 1.2 | | | | |
| | 1,800 | 1,270 | 3 | 10 | 1,200 | 12 | 14 | 0.3 | 3,240 | 6 | 18 | 1,200 | 21 | 28 | 0.6 | 5,220 | 10 | 28 | 1,200 | 33 | 43 | 1.0 | 7,190 | 14 | 38 | 1,200 | 45 | 59 | 1.4 | | | | |
| | 2,100 | 1,570 | 3 | 10 | 1,200 | 12 | 15 | 0.3 | 3,840 | 8 | 22 | 1,200 | 26 | 33 | 0.8 | 6,120 | 12 | 32 | 1,200 | 38 | 50 | 1.2 | 8,390 | 17 | 42 | 1,200 | 49 | 66 | 1.6 | | | | |
| 1200 | 1,200 | 670 | 1 | 6 | 1,200 | 7 | 8 | 0.2 | 2,040 | 4 | 14 | 1,200 | 16 | 20 | 0.4 | 3,420 | 7 | 20 | 1,200 | 23 | 30 | 0.7 | 4,790 | 10 | 26 | 1,200 | 30 | 40 | 1.0 | | | | |
| | 1,500 | 970 | 2 | 8 | 1,200 | 9 | 11 | 0.2 | 2,640 | 5 | 16 | 1,200 | 19 | 24 | 0.5 | 4,320 | 9 | 24 | 1,200 | 28 | 37 | 0.9 | 5,990 | 12 | 32 | 1,200 | 38 | 49 | 1.2 | | | | |
| | 1,800 | 1,270 | 3 | 10 | 1,200 | 12 | 14 | 0.3 | 3,240 | 6 | 18 | 1,200 | 21 | 28 | 0.6 | 5,220 | 10 | 28 | 1,200 | 33 | 43 | 1.0 | 7,190 | 14 | 38 | 1,200 | 45 | 59 | 1.4 | | | | |
| | 2,100 | 1,570 | 3 | 10 | 1,200 | 12 | 15 | 0.3 | 3,840 | 8 | 22 | 1,200 | 26 | 33 | 0.8 | 6,120 | 12 | 32 | 1,200 | 38 | 50 | 1.2 | 8,390 | 17 | 42 | 1,200 | 49 | 66 | 1.6 | | | | |
| | 2,400 | 1,870 | 4 | 12 | 1,200 | 14 | 18 | 0.4 | 4,440 | 9 | 24 | 1,200 | 28 | 37 | 0.9 | 7,020 | 14 | 36 | 1,200 | 42 | 56 | 1.3 | 9,590 | 19 | 48 | 1,200 | 56 | 75 | 1.8 | | | | |
| 1500 | 1,500 | 750 | 1 | 8 | 1,200 | 9 | 11 | 0.2 | 2,430 | 5 | 14 | 1,200 | 16 | 21 | 0.5 | 4,100 | 8 | 22 | 1,200 | 26 | 34 | 0.8 | 5,780 | 11 | 30 | 1,200 | 35 | 47 | 1.1 | | | | |
| | 1,800 | 1,050 | 2 | 8 | 1,200 | 9 | 11 | 0.2 | 3,030 | 6 | 18 | 1,200 | 21 | 27 | 0.6 | 5,000 | 10 | 26 | 1,200 | 30 | 40 | 1.0 | 6,980 | 14 | 36 | 1,200 | 42 | 56 | 1.4 | | | | |
| | 2,100 | 1,350 | 3 | 10 | 1,200 | 12 | 14 | 0.3 | 3,630 | 7 | 20 | 1,200 | 23 | 31 | 0.7 | 5,900 | 12 | 30 | 1,200 | 35 | 47 | 1.1 | 8,180 | 16 | 42 | 1,200 | 49 | 66 | 1.6 | | | | |
| | 2,400 | 1,650 | 3 | 12 | 1,200 | 14 | 17 | 0.3 | 4,230 | 8 | 22 | 1,200 | 26 | 34 | 0.8 | 6,800 | 14 | 34 | 1,200 | 40 | 53 | 1.3 | 9,380 | 19 | 46 | 1,200 | 54 | 73 | 1.8 | | | | |
| | 2,700 | 1,950 | 4 | 12 | 1,200 | 14 | 18 | 0.4 | 4,830 | 10 | 26 | 1,200 | 30 | 40 | 0.9 | 7,700 | 15 | 38 | 1,200 | 45 | 60 | 1.5 | 10,580 | 21 | 52 | 1,200 | 61 | 82 | 2.0 | | | | |
| | 3,000 | 2,250 | 4 | 14 | 1,200 | 16 | 21 | 0.5 | 5,430 | 11 | 28 | 1,200 | 33 | 44 | 1.0 | 8,600 | 17 | 42 | 1,200 | 49 | 66 | 1.6 | 11,780 | 23 | 58 | 1,200 | 68 | 91 | 2.2 | | | | |
| 1800 | 1,800 | 860 | 2 | 8 | 1,200 | 9 | 11 | 0.2 | 2,830 | 6 | 16 | 1,200 | 19 | 24 | 0.6 | 4,810 | 10 | 26 | 1,200 | 30 | 40 | 0.9 | 6,780 | 13 | 36 | 1,200 | 42 | 56 | 1.3 | | | | |
| | 2,100 | 1,160 | 2 | 8 | 1,200 | 9 | 12 | 0.3 | 3,430 | 7 | 20 | 1,200 | 23 | 30 | 0.7 | 5,710 | 11 | 30 | 1,200 | 35 | 47 | 1.1 | 7,980 | 16 | 40 | 1,200 | 47 | 63 | 1.5 | | | | |
| | 2,400 | 1,460 | 3 | 10 | 1,200 | 12 | 15 | 0.3 | 4,030 | 8 | 22 | 1,200 | 26 | 34 | 0.8 | 6,610 | 13 | 34 | 1,200 | 40 | 53 | 1.3 | 9,180 | 18 | 46 | 1,200 | 54 | 72 | 1.8 | | | | |
| | 2,700 | 1,760 | 3 | 12 | 1,200 | 14 | 18 | 0.4 | 4,630 | 9 | 24 | 1,200 | 28 | 37 | 0.9 | 7,510 | 15 | 38 | 1,200 | 45 | 60 | 1.4 | 10,380 | 21 | 52 | 1,200 | 61 | 82 | 2.0 | | | | |
| | 3,000 | 2,060 | 4 | 12 | 1,200 | 14 | 18 | 0.4 | 5,230 | 10 | 28 | 1,200 | 33 | 43 | 1.0 | 8,410 | 17 | 42 | 1,200 | 49 | 66 | 1.6 | 11,580 | 23 | 56 | 1,200 | 66 | 89 | 2.2 | | | | |
| 2100 | 2,100 | 1,010 | 2 | 8 | 1,200 | 9 | 11 | 0.2 | 3,280 | 7 | 18 | 1,200 | 21 | 28 | 0.7 | 5,560 | 11 | 30 | 1,200 | 35 | 46 | 1.1 | 7,830 | 16 | 40 | 1,200 | 47 | 62 | 1.5 | | | | |
| | 2,400 | 1,310 | 3 | 10 | 1,200 | 12 | 14 | 0.3 | 3,880 | 8 | 22 | 1,200 | 26 | 34 | 0.8 | 6,460 | 13 | 34 | 1,200 | 40 | 53 | 1.2 | 9,030 | 18 | 46 | 1,200 | 54 | 72 | 1.7 | | | | |
| | 2,700 | 1,610 | 3 | 10 | 1,200 | 12 | 15 | 0.3 | 4,480 | 9 | 24 | 1,200 | 28 | 37 | 0.9 | 7,360 | 15 | 38 | 1,200 | 45 | 59 | 1.4 | 10,230 | 20 | 50 | 1,200 | 59 | 79 | 1.9 | | | | |
| | 3,000 | 1,910 | 4 | 12 | 1,200 | 14 | 18 | 0.4 | 5,080 | 10 | 26 | 1,200 | 30 | 41 | 1.0 | 8,260 | 16 | 42 | 1,200 | 49 | 66 | 1.6 | 11,430 | 23 | 56 | 1,200 | 66 | 88 | 2.2 | | | | |
| 2400 | 2,400 | 1,090 | 2 | 8 | 1,200 | 9 | 12 | 0.2 | 3,660 | 7 | 20 | 1,200 | 23 | 31 | 0.7 | 6,240 | 12 | 32 | 1,200 | 38 | 50 | 1.2 | 8,810 | 18 | 44 | 1,200 | 52 | 69 | 1.7 | | | | |
| | 2,700 | 1,390 | 3 | 10 | 1,200 | 12 | 14 | 0.3 | 4,260 | 8 | 24 | 1,200 | 28 | 37 | 0.8 | 7,140 | 14 | 36 | 1,200 | 42 | 56 | 1.4 | 10,010 | 20 | 50 | 1,200 | 59 | 79 | 1.9 | | | | |
| | 3,000 | 1,690 | 3 | 12 | 1,200 | 14 | 17 | 0.4 | 4,860 | 10 | 26 | 1,200 | 30 | 40 | 0.9 | 8,040 | 16 | 40 | 1,200 | 47 | 63 | 1.5 | 11,210 | 22 | 54 | 1,200 | 63 | 86 | 2.1 | | | | |
| 2700 | 2,700 | 1,190 | 2 | 10 | 1,200 | 12 | 14 | 0.3 | 4,070 | 8 | 22 | 1,200 | 26 | 34 | 0.8 | 6,940 | 14 | 36 | 1,200 | 42 | 56 | 1.3 | 9,820 | 20 | 48 | 1,200 | 56 | 76 | 1.9 | | | | |
| | 3,000 | 1,490 | 3 | 10 | 1,200 | 12 | 15 | 0.3 | 4,670 | 9 | 24 | 1,200 | 28 | 37 | 0.9 | 7,840 | 16 | 40 | 1,200 | 47 | 63 | 1.5 | 11,020 | 22 | 54 | 1,200 | 63 | 85 | 2.1 | | | | |
| 3000 | 3,000 | 1,350 | 3 | 10 | 1,200 | 12 | 14 | 0.3 | 4,520 | 9 | 24 | 1,200 | 28 | 37 | 0.9 | 7,700 | 15 | 38 | 1,200 | 45 | 60 | 1.5 | 10,870 | 22 | 54 | 1,200 | 63 | 85 | 2.1 | | | | |

| Box Culvert Height, H | Box Culvert Span, S | Number of Spans | | | | | | | | | | | | | | | | | | | | | | | | | | | | | |
|---|---|---|---|---|---|---|---|---|---|---|---|---|---|---|---|---|---|---|---|---|---|---|---|---|---|---|---|---|---|---|---|
| | | 5 | | | | | | | 6 | | | | | | | | | | | | | | | | | | | | | | |
| | | 2-Bars K ~ #4 | | Bars L ~ #4 at 450 mm max | | | Reinf | Conc | 2-Bars K ~ #4 | | Bars L ~ #4 at 450 mm max | | | Reinf | Conc | | | | | | | | | | | | | | | | |
| | | Lgth mm | kg | No. | Lgth mm | kg | (Kg) | (m3) | Lgth mm | kg | No. | Lgth mm | kg | (Kg) | (m3) | | | | | | | | | | | | | | | | |
| 600 | 900 | 4,670 | 9 | 26 | 1,200 | 30 | 40 | 1.0 | 5,740 | 11 | 32 | 1,200 | 38 | 49 | 1.2 | | | | | | | | | | | | | | | | |
| | 1,200 | 6,170 | 12 | 32 | 1,200 | 38 | 50 | 1.2 | 7,540 | 15 | 40 | 1,200 | 47 | 62 | 1.5 | | | | | | | | | | | | | | | | |
| | 1,500 | 7,670 | 15 | 40 | 1,200 | 47 | 62 | 1.5 | 9,340 | 19 | 48 | 1,200 | 56 | 75 | 1.8 | | | | | | | | | | | | | | | | |
| 900 | 900 | 4,670 | 9 | 26 | 1,200 | 30 | 40 | 1.0 | 5,740 | 11 | 32 | 1,200 | 38 | 49 | 1.2 | | | | | | | | | | | | | | | | |
| | 1,200 | 6,170 | 12 | 32 | 1,200 | 38 | 50 | 1.2 | 7,540 | 15 | 40 | 1,200 | 47 | 62 | 1.5 | | | | | | | | | | | | | | | | |
| | 1,500 | 7,670 | 15 | 40 | 1,200 | 47 | 62 | 1.5 | 9,340 | 19 | 48 | 1,200 | 56 | 75 | 1.8 | | | | | | | | | | | | | | | | |
| | 1,800 | 9,170 | 18 | 46 | 1,200 | 54 | 72 | 1.8 | 11,140 | 22 | 56 | 1,200 | 66 | 88 | 2.1 | | | | | | | | | | | | | | | | |
| | 2,100 | 10,670 | 21 | 52 | 1,200 | 61 | 82 | 2.0 | 12,940 | 26 | 64 | 1,200 | 75 | 101 | 2.5 | | | | | | | | | | | | | | | | |
| 1200 | 1,200 | 6,170 | 12 | 32 | 1,200 | 38 | 50 | 1.2 | 7,540 | 15 | 40 | 1,200 | 47 | 62 | 1.5 | | | | | | | | | | | | | | | | |
| | 1,500 | 7,670 | 15 | 40 | 1,200 | 47 | 62 | 1.5 | 9,340 | 19 | 48 | 1,200 | 56 | 75 | 1.8 | | | | | | | | | | | | | | | | |
| | 1,800 | 9,170 | 18 | 46 | 1,200 | 54 | 72 | 1.8 | 11,140 | 22 | 56 | 1,200 | 66 | 88 | 2.1 | | | | | | | | | | | | | | | | |
| | 2,100 | 10,670 | 21 | 52 | 1,200 | 61 | 82 | 2.0 | 12,940 | 26 | 64 | 1,200 | 75 | 101 | 2.5 | | | | | | | | | | | | | | | | |
| | 2,400 | 12,170 | 24 | 60 | 1,200 | 70 | 95 | 2.3 | 14,740 | 29 | 72 | 1,200 | 84 | 114 | 2.8 | | | | | | | | | | | | | | | | |
| 1500 | 1,500 | 7,450 | 15 | 38 | 1,200 | 45 | 59 | 1.5 | 9,130 | 18 | 46 | 1,200 | 54 | 72 | 1.8 | | | | | | | | | | | | | | | | |
| | 1,800 | 8,950 | 18 | 46 | 1,200 | 54 | 72 | 1.7 | 10,930 | 22 | 54 | 1,200 | 63 | 85 | 2.1 | | | | | | | | | | | | | | | | |
| | 2,100 | 10,450 | 21 | 52 | 1,200 | 61 | 82 | 2.0 | 12,730 | 25 | 62 | 1,200 | 73 | 98 | 2.4 | | | | | | | | | | | | | | | | |
| | 2,400 | 11,950 | 24 | 58 | 1,200 | 68 | 92 | 2.3 | 14,530 | 29 | 70 | 1,200 | 82 | 111 | 2.8 | | | | | | | | | | | | | | | | |
| | 2,700 | 13,450 | 27 | 66 | 1,200 | 77 | 104 | 2.5 | 16,330 | 32 | 78 | 1,200 | 91 | 124 | 3.1 | | | | | | | | | | | | | | | | |
| | 3,000 | 14,950 | 30 | 72 | 1,200 | 84 | 114 | 2.8 | 18,130 | 36 | 86 | 1,200 | 101 | 137 | 3.4 | | | | | | | | | | | | | | | | |
| 1800 | 1,800 | 8,760 | 17 | 44 | 1,200 | 52 | 69 | 1.7 | 10,730 | 21 | 54 | 1,200 | 63 | 85 | 2.1 | | | | | | | | | | | | | | | | |
| | 2,100 | 10,260 | 20 | 52 | 1,200 | 61 | 81 | 2.0 | 12,530 | 25 | 62 | 1,200 | 73 | 98 | 2.4 | | | | | | | | | | | | | | | | |
| | 2,400 | 11,760 | 23 | 58 | 1,200 | 68 | 91 | 2.2 | 14,330 | 28 | 70 | 1,200 | 82 | 111 | 2.7 | | | | | | | | | | | | | | | | |
| | 2,700 | 13,260 | 26 | 64 | 1,200 | 75 | 101 | 2.5 | 16,130 | 32 | 78 | 1,200 | 91 | 124 | 3.0 | | | | | | | | | | | | | | | | |
| | 3,000 | 14,760 | 29 | 72 | 1,200 | 84 | 114 | 2.8 | 17,930 | 36 | 86 | 1,200 | 101 | 137 | 3.4 | | | | | | | | | | | | | | | | |
| 2100 | 2,100 | 10,110 | 20 | 50 | 1,200 | 59 | 79 | 1.9 | 12,380 | 25 | 60 | 1,200 | 70 | 95 | 2.4 | | | | | | | | | | | | | | | | |
| | 2,400 | 11,610 | 23 | 58 | 1,200 | 68 | 91 | 2.2 | 14,180 | 28 | 68 | 1,200 | 80 | 108 | 2.7 | | | | | | | | | | | | | | | | |
| | 2,700 | 13,110 | 26 | 64 | 1,200 | 75 | 101 | 2.5 | 15,980 | 32 | 76 | 1,200 | 89 | 121 | 3.0 | | | | | | | | | | | | | | | | |
| | 3,000 | 14,610 | 29 | 70 | 1,200 | 82 | 111 | 2.7 | 17,780 | 35 | 84 | 1,200 | 99 | 134 | 3.3 | | | | | | | | | | | | | | | | |
| 2400 | 2,400 | 11,390 | 23 | 56 | 1,200 | 66 | 88 | 2.2 | 13,960 | 28 | 68 | 1,200 | 80 | 108 | 2.7 | | | | | | | | | | | | | | | | |
| | 2,700 | 12,890 | 26 | 62 | 1,200 | 73 | 98 | 2.4 | 15,760 | 31 | 76 | 1,200 | 89 | 120 | 3.0 | | | | | | | | | | | | | | | | |
| | 3,000 | 14,390 | 29 | 70 | 1,200 | 82 | 111 | 2.7 | 17,560 | 35 | 84 | 1,200 | 99 | 133 | 3.3 | | | | | | | | | | | | | | | | |
| 2700 | 2,700 | 12,690 | 25 | 62 | 1,200 | 73 | 98 | 2.4 | 15,570 | 31 | 76 | 1,200 | 89 | 120 | 2.9 | | | | | | | | | | | | | | | | |
| | 3,000 | 14,190 | 28 | 68 | 1,200 | 80 | 108 | 2.7 | 17,370 | 35 | 84 | 1,200 | 99 | 133 | 3.3 | | | | | | | | | | | | | | | | |
| 3000 | 3,000 | 14,050 | 28 | 68 | 1,200 | 80 | 108 | 2.6 | 17,220 | 34 | 82 | 1,200 | 96 | 130 | 3.2 | | | | | | | | | | | | | | | | |

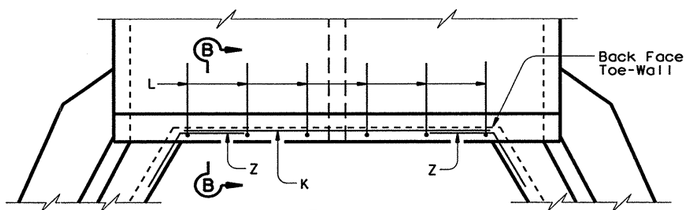


**PLAN**
**SHOWING REINFORCING FOR CULVERT TOE-WALL**

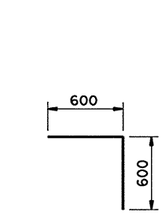


**BARS L**

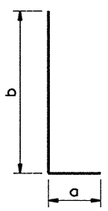


**BARS M1**

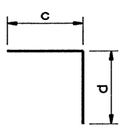


**BARS M2**

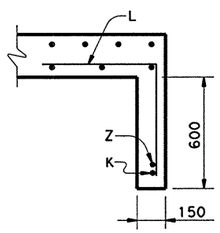


**SECTION B-B**

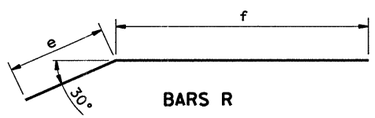


**BARS R**

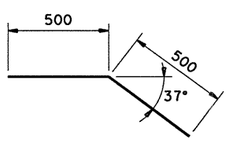


**BARS V**

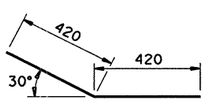


**BARS W**

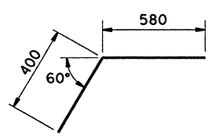


**BARS Z**

DISCLAIMER:
The use of this standard is governed by the "Texas Engineering Practice Act". No warranty of any kind is made by TxDOT for any purpose whatsoever. TxDOT assumes no responsibility for the conversion of this standard to other formats or for incorrect results or damages resulting from its use.

ACC: (LV=1,3 for Metric)
LEVELS Displayed
1 3

SHEET 2 OF 2

Texas Department of Transportation
Design Division (Bridge)

# FLARED WINGS
## FOR 0° SKEW BOX CULVERTS

**FW-0(M)**

| FILE: fw-00std.dgn | DN: SDA | CK: EJU | DW: MCB | CK: SDA | STD: B102M |
|---|---|---|---|---|---|
| ©TxDOT October 1996 | DIST | FED REG | FEDERAL AID PROJECT • | | SHEET |
| REVISIONS | SAT | 6 | NH 2000(704), ETC. | | 405 |
| 5-97-ADD NOTE ④ ,GEN NOTES & MISC | COUNTY | | CONTROL | SECT | JOB | HIGHWAY |
| | BEXAR | | 2452 | 01 | ETC. | LP1604 |

# BILLS OF REINFORCING STEEL (Short and Long Wings for 2 Structure Ends)

| | Box Culvert Height, H | Bars M1 at 300 mm max | | | | | | | | | | Bars M2 at 300 mm max | | | | | | | | | | Bars N ~ #4 at 300 mm max | | | | | 2-Bars P1 ~ #5 | | 2-Bars P2 ~ #5 | | 2-Bars R ~ #6 | | | | 2-Bars T ~ #4 | | 2-Bars U1 ~ #6 | | 2-Bars U2 ~ #6 | | 4-Bars V ~ #6 | | Bars W ~ #5 | | 6-Bars X ~ #6 | | Bars Y ~ #6 | | | 2-Bars Z ~ #4 | |
|---|---|---|---|---|---|---|---|---|---|---|---|---|---|---|---|---|---|---|---|---|---|---|---|---|---|---|---|---|---|---|---|---|---|---|---|---|---|---|---|---|---|---|---|---|---|---|---|---|
| | | No. | Size | Avg Lgth mm | kg | Min "a" | Max "a" | Avg "a" | Min "b" | Max "b" | Avg "b" | No. | Size | Avg Lgth mm | kg | Min "c" | Max "c" | Avg "c" | "d" | No. | Min Lgth mm | Max Lgth mm | Avg Lgth mm | kg | Lgth mm | kg | Lgth mm | kg | Lgth mm | kg | "e" | "f" | Lgth mm | kg | Lgth mm | kg | Lgth mm | kg | Lgth mm | kg | No. | Lgth mm | kg | Lgth mm | kg | No. | Lgth mm | kg | Lgth mm | kg |
| SHORT WALLS | 600 | 10 | #4 | 860 | 9 | 290 | 290 | 290 | 300 | 830 | 570 | 10 | #4 | 1,260 | 13 | 600 | 600 | 600 | 660 | 4 | 500 | 1,120 | 810 | 3 | 1,670 | 5 | 1,610 | 5 | 1,960 | 9 | 770 | 1,190 | 1,230 | 2 | 1,280 | 6 | 1,270 | 6 | 1,000 | 9 | 4 | 840 | 5 | 1,000 | 13 | 0 | ~ | ~ | 980 | 2 |
| | 900 | 16 | #4 | 1,030 | 16 | 290 | 290 | 290 | 300 | 1,180 | 740 | 16 | #4 | 1,260 | 20 | 600 | 600 | 600 | 660 | 8 | 500 | 1,850 | 1,180 | 9 | 2,400 | 7 | 2,340 | 7 | 2,690 | 12 | 770 | 1,920 | 1,950 | 4 | 2,080 | 9 | 2,070 | 9 | 1,000 | 9 | 8 | 840 | 10 | 1,000 | 13 | 0 | ~ | ~ | 980 | 2 |
| | 1,200 | 20 | #4 | 1,200 | 24 | 290 | 290 | 290 | 300 | 1,510 | 910 | 20 | #4 | 1,260 | 25 | 600 | 600 | 600 | 660 | 10 | 500 | 2,530 | 1,520 | 15 | 3,080 | 10 | 3,020 | 9 | 3,370 | 15 | 770 | 2,600 | 2,640 | 5 | 2,840 | 13 | 2,830 | 13 | 1,000 | 9 | 10 | 840 | 13 | 1,000 | 13 | 0 | ~ | ~ | 980 | 2 |
| | 1,500 | 24 | #4 | 1,430 | 34 | 290 | 380 | 340 | 300 | 1,880 | 1,090 | 24 | #4 | 1,380 | 33 | 600 | 840 | 720 | 660 | 12 | 500 | 3,300 | 1,900 | 23 | 3,870 | 12 | 3,790 | 12 | 4,310 | 19 | 940 | 3,370 | 3,430 | 7 | 3,690 | 16 | 3,680 | 16 | 1,000 | 9 | 12 | 840 | 16 | 1,000 | 13 | 2 | 720 | 3 | 980 | 2 |
| | 1,800 | 30 | #5 | 1,620 | 75 | 290 | 460 | 380 | 300 | 2,180 | 1,240 | 30 | #5 | 1,470 | 68 | 610 | 1,000 | 810 | 660 | 14 | 500 | 3,920 | 2,210 | 31 | 4,520 | 14 | 4,410 | 14 | 5,020 | 22 | 1,030 | 3,990 | 4,070 | 8 | 4,380 | 20 | 4,370 | 20 | 1,000 | 9 | 14 | 840 | 18 | 1,000 | 13 | 2 | 870 | 4 | 980 | 2 |
| | 2,100 | 34 | #5 | 1,840 | 97 | 310 | 540 | 430 | 320 | 2,490 | 1,410 | 34 | #5 | 1,580 | 83 | 630 | 1,170 | 900 | 680 | 16 | 500 | 4,540 | 2,520 | 40 | 5,160 | 16 | 5,030 | 16 | 5,770 | 26 | 1,150 | 4,620 | 4,710 | 9 | 5,070 | 23 | 5,060 | 23 | 1,000 | 9 | 16 | 840 | 21 | 1,000 | 13 | 2 | 1,020 | 5 | 980 | 2 |
| | 2,400 | 38 | #6 | 2,030 | 172 | 310 | 630 | 470 | 320 | 2,790 | 1,560 | 38 | #6 | 1,670 | 142 | 630 | 1,350 | 990 | 680 | 18 | 500 | 5,160 | 2,830 | 51 | 5,810 | 18 | 5,650 | 18 | 6,490 | 29 | 1,240 | 5,250 | 5,360 | 11 | 5,760 | 26 | 5,750 | 26 | 1,000 | 9 | 18 | 840 | 23 | 1,000 | 13 | 4 | 1,140 | 10 | 980 | 2 |
| | 2,700 | 42 | #8 | 2,230 | 372 | 320 | 710 | 520 | 320 | 3,090 | 1,710 | 42 | #8 | 1,750 | 292 | 630 | 1,500 | 1,070 | 680 | 20 | 500 | 5,780 | 3,140 | 62 | 6,460 | 20 | 6,270 | 19 | 7,190 | 32 | 1,320 | 5,870 | 6,010 | 12 | 6,450 | 29 | 6,430 | 29 | 1,000 | 9 | 20 | 840 | 26 | 1,000 | 13 | 4 | 1,270 | 11 | 980 | 2 |
| | 3,000 | 46 | #8 | 2,460 | 450 | 350 | 790 | 570 | 350 | 3,420 | 1,890 | 46 | #8 | 1,880 | 344 | 660 | 1,670 | 1,170 | 710 | 22 | 490 | 6,390 | 3,440 | 75 | 7,100 | 22 | 6,890 | 21 | 7,950 | 36 | 1,450 | 6,500 | 6,650 | 13 | 7,140 | 32 | 7,120 | 32 | 1,000 | 9 | 22 | 840 | 29 | 1,000 | 13 | 4 | 1,430 | 13 | 980 | 2 |
| LONG WALLS | 600 | 12 | #4 | 840 | 10 | 290 | 290 | 290 | 290 | 810 | 550 | 12 | #4 | 1,260 | 15 | 600 | 600 | 600 | 660 | 4 | 530 | 1,220 | 880 | 3 | 1,890 | 6 | 1,760 | 5 | 2,230 | 10 | 890 | 1,340 | 1,440 | 3 | 1,400 | 6 | 1,350 | 6 | 1,000 | 9 | 4 | 840 | 5 | 1,000 | 13 | 2 | 460 | 2 | 980 | 2 |
| | 900 | 16 | #4 | 1,020 | 16 | 290 | 290 | 290 | 290 | 1,160 | 730 | 16 | #4 | 1,260 | 20 | 600 | 600 | 600 | 660 | 8 | 530 | 2,030 | 1,280 | 10 | 2,700 | 8 | 2,560 | 8 | 3,030 | 14 | 890 | 2,140 | 2,250 | 4 | 2,280 | 10 | 2,230 | 10 | 1,000 | 9 | 8 | 840 | 10 | 1,000 | 13 | 2 | 460 | 2 | 980 | 2 |
| | 1,200 | 22 | #4 | 1,180 | 26 | 290 | 290 | 290 | 290 | 1,490 | 890 | 22 | #4 | 1,260 | 28 | 600 | 600 | 600 | 660 | 10 | 530 | 2,790 | 1,660 | 17 | 3,460 | 11 | 3,330 | 10 | 3,800 | 17 | 890 | 2,910 | 3,010 | 6 | 3,110 | 14 | 3,060 | 14 | 1,000 | 9 | 10 | 840 | 13 | 1,000 | 13 | 2 | 460 | 2 | 980 | 2 |
| | 1,500 | 28 | #4 | 1,420 | 40 | 290 | 380 | 340 | 290 | 1,860 | 1,080 | 28 | #4 | 1,380 | 38 | 600 | 840 | 720 | 660 | 12 | 530 | 3,640 | 2,090 | 25 | 4,370 | 14 | 4,180 | 13 | 4,900 | 22 | 1,140 | 3,760 | 3,920 | 8 | 4,040 | 18 | 3,990 | 18 | 1,000 | 9 | 12 | 840 | 16 | 1,000 | 13 | 2 | 670 | 3 | 980 | 2 |
| | 1,800 | 32 | #5 | 1,610 | 80 | 290 | 460 | 380 | 290 | 2,160 | 1,230 | 32 | #5 | 1,460 | 73 | 600 | 1,000 | 800 | 660 | 14 | 530 | 4,340 | 2,440 | 34 | 5,110 | 16 | 4,870 | 15 | 5,720 | 26 | 1,260 | 4,460 | 4,670 | 9 | 4,790 | 21 | 4,750 | 21 | 1,000 | 9 | 14 | 840 | 18 | 1,000 | 13 | 4 | 760 | 7 | 980 | 2 |
| | 2,100 | 36 | #5 | 1,810 | 101 | 310 | 530 | 420 | 310 | 2,470 | 1,390 | 36 | #5 | 1,580 | 88 | 630 | 1,160 | 900 | 680 | 16 | 510 | 5,020 | 2,770 | 44 | 5,840 | 18 | 5,570 | 17 | 6,590 | 29 | 1,430 | 5,160 | 5,400 | 11 | 5,550 | 25 | 5,490 | 25 | 1,000 | 9 | 16 | 840 | 21 | 1,000 | 13 | 4 | 890 | 8 | 980 | 2 |
| | 2,400 | 42 | #6 | 2,010 | 189 | 310 | 620 | 470 | 310 | 2,770 | 1,540 | 42 | #6 | 1,670 | 157 | 630 | 1,340 | 990 | 680 | 18 | 510 | 5,710 | 3,110 | 56 | 6,600 | 20 | 6,260 | 19 | 7,420 | 33 | 1,570 | 5,850 | 6,150 | 12 | 6,300 | 28 | 6,250 | 28 | 1,000 | 9 | 18 | 840 | 23 | 1,000 | 13 | 6 | 1,010 | 14 | 980 | 2 |
| | 2,700 | 46 | #8 | 2,200 | 402 | 310 | 700 | 510 | 310 | 3,070 | 1,690 | 46 | #8 | 1,740 | 318 | 630 | 1,490 | 1,060 | 680 | 20 | 510 | 6,400 | 3,460 | 69 | 7,340 | 23 | 6,950 | 22 | 8,230 | 37 | 1,680 | 6,550 | 6,900 | 14 | 7,060 | 32 | 7,000 | 31 | 1,000 | 9 | 20 | 840 | 26 | 1,000 | 13 | 6 | 1,140 | 15 | 980 | 2 |
| | 3,000 | 50 | #8 | 2,440 | 485 | 340 | 790 | 570 | 340 | 3,400 | 1,870 | 50 | #8 | 1,880 | 374 | 660 | 1,670 | 1,170 | 710 | 22 | 500 | 7,080 | 3,790 | 83 | 8,070 | 25 | 7,640 | 24 | 9,120 | 41 | 1,870 | 7,250 | 7,630 | 15 | 7,810 | 35 | 7,740 | 35 | 1,000 | 9 | 22 | 840 | 29 | 1,000 | 13 | 8 | 1,250 | 22 | 980 | 2 |

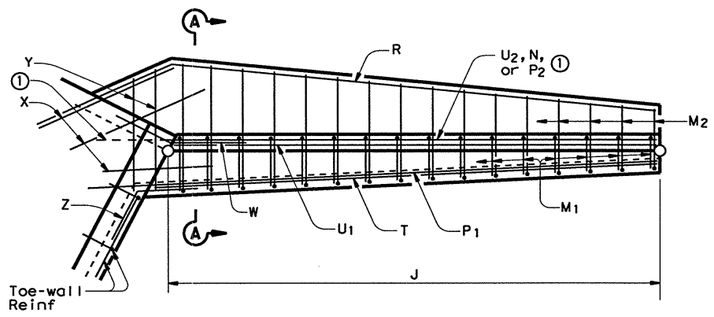


① Extend Bar $P_2$ only into bottom slab of Box Culvert.

## PLAN
### SHOWING REINFORCING

NOTE:
See sheet 2 of 2 for Bar Bend Details and Box Culvert Toe-Wall Quantities.

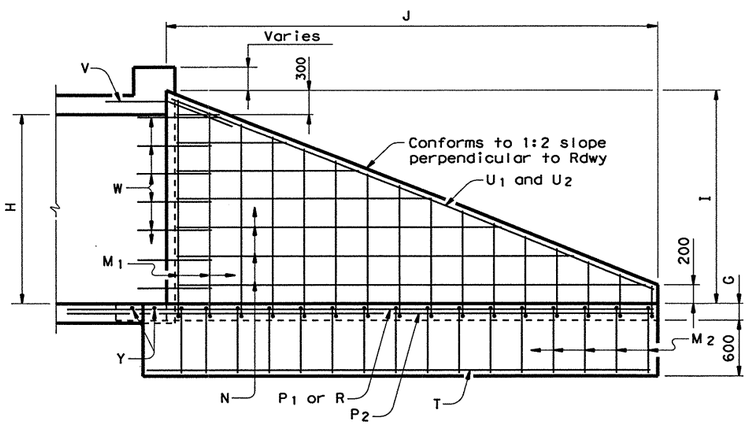


## ELEVATION
### SHOWING REINFORCING

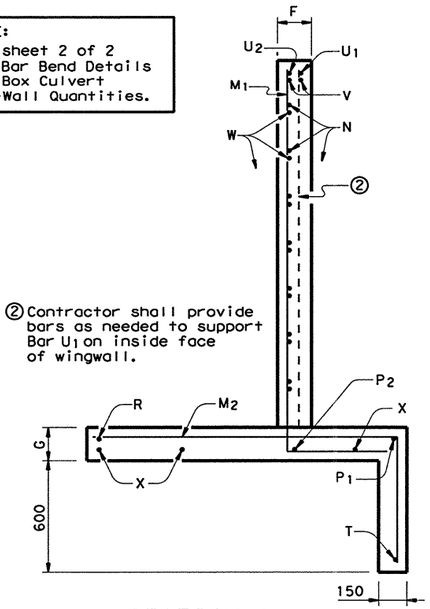


## SECTION A-A

② Contractor shall provide bars as needed to support Bar $U_1$ on inside face of wingwall.

## TABLE OF DIMENSIONS

| Box Culvert Height, H | SHORT WALLS | | | | | | | | | LONG WALLS | | | | | | | | |
|---|---|---|---|---|---|---|---|---|---|---|---|---|---|---|---|---|---|---|
| | A | B | C | D | E | F | G | I | J | A | B | C | D | E | F | G | I | J |
| 600 | 1,200 | 322 | 238 | 454 | 122 | 160 | 160 | 800 | 1,242 | 1,200 | 693 | 266 | 407 | 235 | 160 | 160 | 800 | 1,386 |
| 900 | 1,900 | 509 | 238 | 454 | 122 | 160 | 160 | 1,150 | 1,967 | 1,900 | 1,097 | 266 | 407 | 235 | 160 | 160 | 1,150 | 2,194 |
| 1,200 | 2,560 | 686 | 238 | 454 | 122 | 160 | 160 | 1,480 | 2,650 | 2,560 | 1,478 | 266 | 407 | 235 | 160 | 160 | 1,480 | 2,956 |
| 1,500 | 3,300 | 884 | 334 | 609 | 163 | 160 | 160 | 1,850 | 3,416 | 3,300 | 1,905 | 375 | 546 | 315 | 160 | 160 | 1,850 | 3,811 |
| 1,800 | 3,900 | 1,045 | 419 | 686 | 184 | 160 | 160 | 2,150 | 4,038 | 3,900 | 2,252 | 472 | 615 | 355 | 160 | 160 | 2,150 | 4,503 |
| 2,100 | 4,500 | 1,206 | 483 | 792 | 212 | 180 | 180 | 2,450 | 4,659 | 4,500 | 2,598 | 545 | 710 | 410 | 180 | 180 | 2,450 | 5,196 |
| 2,400 | 5,100 | 1,367 | 579 | 879 | 236 | 180 | 180 | 2,750 | 5,280 | 5,100 | 2,944 | 656 | 788 | 455 | 180 | 180 | 2,750 | 5,889 |
| 2,700 | 5,700 | 1,527 | 664 | 947 | 254 | 180 | 180 | 3,050 | 5,901 | 5,700 | 3,291 | 754 | 849 | 490 | 180 | 180 | 3,050 | 6,582 |
| 3,000 | 6,300 | 1,688 | 728 | 1,063 | 285 | 210 | 210 | 3,350 | 6,522 | 6,300 | 3,637 | 827 | 953 | 550 | 210 | 210 | 3,350 | 7,275 |

## QUANTITIES ④ (Wings for 2 Structure Ends)

| Box Culvert Height, H | Conc ($m^3$) | Reinf (kg) |
|---|---|---|
| 600 | 1.5 | 183 |
| 900 | 2.6 | 267 |
| 1,200 | 3.8 | 347 |
| 1,500 | 5.7 | 454 |
| 1,800 | 7.4 | 663 |
| 2,100 | 10.2 | 794 |
| 2,400 | 12.6 | 1,153 |
| 2,700 | 15.2 | 1,942 |
| 3,000 | 20.7 | 2,281 |

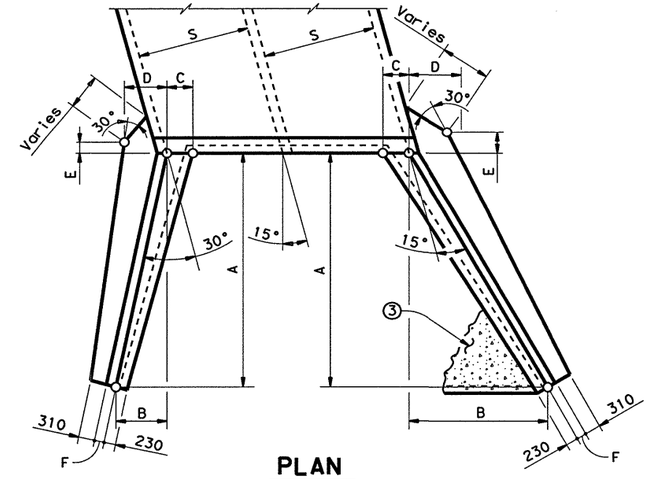


## PLAN
### SHOWING DIMENSIONS

③ When shown elsewhere on the plans, a 130 mm deep concrete riprap shall be constructed. Unless otherwise shown on the plans or directed by the Engineer, the riprap shall have a 150 mm wide by 450 mm deep reinforced concrete toewall along all edges adjacent to natural ground; the toewall shall be reinforced by extending typical riprap reinforcing into the toewall; construction joints or grooved joints, oriented in the direction of flow, shall extend across the full distance of the riprap, at intervals of approximately 6,000 mm.

④ Quantities shown are for wings only. See Item "Headwalls and Wingwalls" for a description of other components that may be included in the pay item Wingwalls.

### GENERAL NOTES:

Designed according to AASHTO 1992 Standard and current Interim Specifications.

All reinforcing steel shall be Grade 420 (fy = 420 MPa).

All concrete shall have a minimum 28 day compressive strength of 21 MPa.

All Reinforcing bars shall be adjusted to provide a 35 mm clear cover.

The bottom slab of the barrel, wing footing and toewalls shall be placed in one continuous operation.

When structure is founded on solid rock, depth of Toe-walls for culverts and Wingwalls may be reduced or eliminated as directed by the Engineer.

All dimensions are in millimeters and all masses are in kilograms unless otherwise noted.



Texas Department of Transportation
Design Division (Bridge)

# FLARED WINGS
## FOR 15° SKEW BOX CULVERTS

# FW-15 (M)

| FILE: fw-15std.dgn | DN: SDA | CK: EJU | DW: MCB | CK: SDA | STD: B103M |
|---|---|---|---|---|---|
| ©TxDOT October 1996 | DIST | FED REG | FEDERAL AID PROJECT • | | SHEET |
| REVISIONS | SAT | 6 | NH 2000 (704), etc. | | 406 |
| 5-97-ADD NOTE ④, GEN NOTES & MISC | COUNTY | | CONTROL | SECT | JOB | HIGHWAY |
| | BEXAR | | 2452 | 01 | 036, etc. | LP1604 |

DISCLAIMER:
The use of this standard is governed by the "Texas Engineering Practice Act". No warranty of any kind is made by TxDOT for any purpose whatsoever. TxDOT assumes no responsibility for the conversion of this standard to other formats or for incorrect results or damages resulting from its use.

ACC: (LV=1,3 for Metric)
LEVELS DISPLAYED 1 3

# BOX CULVERT TOE-WALL QUANTITIES (For 2 Structure Ends)

| Box Culvert Height, H | Box Culvert Span, S | Number of Spans | | | | | | | | | | | | | | | | | | | | | | | | | | | | | | | | | |
|---|---|---|---|---|---|---|---|---|---|---|---|---|---|---|---|---|---|---|---|---|---|---|---|---|---|---|---|---|---|---|---|---|---|---|---|
| | | 1 | | | | | | | 2 | | | | | | | | 3 | | | | | | | 4 | | | | | | | 5 | | | | | | |
| | | 2-Bars K ~ #4 | | Bars L ~ #4 at 450 mm max | | | Reinf | Conc | 2-Bars K ~ #4 | | Bars L ~ #4 at 450 mm max | | | Reinf | Conc | 2-Bars K ~ #4 | | Bars L ~ #4 at 450 mm max | | | Reinf | Conc | 2-Bars K ~ #4 | | Bars L ~ #4 at 450 mm max | | | Reinf | Conc | 2-Bars K ~ #4 | | Bars L ~ #4 at 450 mm max | | | Reinf | Conc |
| | | Lgth mm | kg | No. | Lgth mm | kg | (Kg) | (m3) | Lgth mm | kg | No. | Lgth mm | kg | (Kg) | (m3) | Lgth mm | kg | No. | Lgth mm | kg | (Kg) | (m3) | Lgth mm | kg | No. | Lgth mm | kg | (Kg) | (m3) | Lgth mm | kg | No. | Lgth mm | kg | (Kg) | (m3) |
| 600 | 900 | 430 | 1 | 6 | 1,200 | 7 | 8 | 0.1 | 1,540 | 3 | 12 | 1,200 | 14 | 17 | 0.3 | 2,650 | 5 | 16 | 1,200 | 19 | 24 | 0.6 | 3,770 | 7 | 22 | 1,200 | 26 | 33 | 0.8 | 4,880 | 10 | 28 | 1,200 | 33 | 43 | 1.0 | 5,990 | 12 | 32 | 1,200 | 38 | 49 | 1.2 |
| | 1,200 | 740 | 1 | 8 | 1,200 | 9 | 11 | 0.2 | 2,160 | 4 | 14 | 1,200 | 16 | 21 | 0.5 | 3,590 | 7 | 20 | 1,200 | 23 | 31 | 0.7 | 5,010 | 10 | 28 | 1,200 | 33 | 43 | 1.0 | 6,430 | 13 | 34 | 1,200 | 40 | 53 | 1.3 | 7,860 | 16 | 42 | 1,200 | 49 | 65 | 1.6 |
| | 1,500 | 1,050 | 2 | 8 | 1,200 | 9 | 11 | 0.2 | 2,780 | 6 | 16 | 1,200 | 19 | 24 | 0.6 | 4,520 | 9 | 24 | 1,200 | 28 | 37 | 0.9 | 6,250 | 12 | 34 | 1,200 | 40 | 52 | 1.2 | 7,990 | 16 | 42 | 1,200 | 49 | 65 | 1.6 | 9,720 | 19 | 50 | 1,200 | 59 | 78 | 1.9 |
| 900 | 900 | 430 | 1 | 6 | 1,200 | 7 | 8 | 0.1 | 1,540 | 3 | 12 | 1,200 | 14 | 17 | 0.3 | 2,650 | 5 | 16 | 1,200 | 19 | 24 | 0.6 | 3,770 | 7 | 22 | 1,200 | 26 | 33 | 0.8 | 4,880 | 10 | 28 | 1,200 | 33 | 43 | 1.0 | 5,990 | 12 | 32 | 1,200 | 38 | 49 | 1.2 |
| | 1,200 | 740 | 1 | 8 | 1,200 | 9 | 11 | 0.2 | 2,160 | 4 | 14 | 1,200 | 16 | 21 | 0.5 | 3,590 | 7 | 20 | 1,200 | 23 | 31 | 0.7 | 5,010 | 10 | 28 | 1,200 | 33 | 43 | 1.0 | 6,430 | 13 | 34 | 1,200 | 40 | 53 | 1.3 | 7,860 | 16 | 42 | 1,200 | 49 | 65 | 1.6 |
| | 1,500 | 1,050 | 2 | 8 | 1,200 | 9 | 11 | 0.2 | 2,780 | 6 | 16 | 1,200 | 19 | 24 | 0.6 | 4,520 | 9 | 24 | 1,200 | 28 | 37 | 0.9 | 6,250 | 12 | 34 | 1,200 | 40 | 52 | 1.2 | 7,990 | 16 | 42 | 1,200 | 49 | 65 | 1.6 | 9,720 | 19 | 50 | 1,200 | 59 | 78 | 1.9 |
| | 1,800 | 1,360 | 3 | 10 | 1,200 | 12 | 14 | 0.3 | 3,400 | 7 | 20 | 1,200 | 23 | 30 | 0.7 | 5,450 | 11 | 30 | 1,200 | 35 | 46 | 1.1 | 7,490 | 15 | 38 | 1,200 | 45 | 59 | 1.5 | 9,540 | 19 | 48 | 1,200 | 56 | 75 | 1.8 | 11,580 | 23 | 58 | 1,200 | 68 | 91 | 2.2 |
| | 2,100 | 1,670 | 3 | 12 | 1,200 | 14 | 17 | 0.3 | 4,030 | 8 | 22 | 1,200 | 26 | 34 | 0.8 | 6,380 | 13 | 34 | 1,200 | 40 | 53 | 1.2 | 8,740 | 17 | 44 | 1,200 | 52 | 69 | 1.7 | 11,090 | 22 | 56 | 1,200 | 66 | 88 | 2.1 | 13,450 | 27 | 66 | 1,200 | 77 | 104 | 2.6 |
| 1200 | 1,200 | 740 | 1 | 8 | 1,200 | 9 | 11 | 0.2 | 2,160 | 4 | 14 | 1,200 | 16 | 21 | 0.5 | 3,590 | 7 | 20 | 1,200 | 23 | 31 | 0.7 | 5,010 | 10 | 28 | 1,200 | 33 | 43 | 1.0 | 6,430 | 13 | 34 | 1,200 | 40 | 53 | 1.3 | 7,860 | 16 | 42 | 1,200 | 49 | 65 | 1.6 |
| | 1,500 | 1,050 | 2 | 8 | 1,200 | 9 | 11 | 0.2 | 2,780 | 6 | 16 | 1,200 | 19 | 24 | 0.6 | 4,520 | 9 | 24 | 1,200 | 28 | 37 | 0.9 | 6,250 | 12 | 34 | 1,200 | 40 | 52 | 1.2 | 7,990 | 16 | 42 | 1,200 | 49 | 65 | 1.6 | 9,720 | 19 | 50 | 1,200 | 59 | 78 | 1.9 |
| | 1,800 | 1,360 | 3 | 10 | 1,200 | 12 | 14 | 0.3 | 3,400 | 7 | 20 | 1,200 | 23 | 30 | 0.7 | 5,450 | 11 | 30 | 1,200 | 35 | 46 | 1.1 | 7,490 | 15 | 38 | 1,200 | 45 | 59 | 1.5 | 9,540 | 19 | 48 | 1,200 | 56 | 75 | 1.8 | 11,580 | 23 | 58 | 1,200 | 68 | 91 | 2.2 |
| | 2,100 | 1,670 | 3 | 12 | 1,200 | 14 | 17 | 0.3 | 4,030 | 8 | 22 | 1,200 | 26 | 34 | 0.8 | 6,380 | 13 | 34 | 1,200 | 40 | 53 | 1.2 | 8,740 | 17 | 44 | 1,200 | 52 | 69 | 1.7 | 11,090 | 22 | 56 | 1,200 | 66 | 88 | 2.1 | 13,450 | 27 | 66 | 1,200 | 77 | 104 | 2.6 |
| | 2,400 | 1,980 | 4 | 12 | 1,200 | 14 | 18 | 0.4 | 4,650 | 9 | 26 | 1,200 | 30 | 40 | 0.9 | 7,310 | 15 | 38 | 1,200 | 45 | 59 | 1.4 | 9,980 | 20 | 50 | 1,200 | 59 | 78 | 1.9 | 12,640 | 25 | 62 | 1,200 | 73 | 98 | 2.4 | 15,310 | 30 | 74 | 1,200 | 87 | 117 | 2.9 |
| 1500 | 1,500 | 840 | 2 | 8 | 1,200 | 9 | 11 | 0.2 | 2,580 | 5 | 16 | 1,200 | 19 | 24 | 0.5 | 4,310 | 9 | 24 | 1,200 | 28 | 37 | 0.9 | 6,050 | 12 | 32 | 1,200 | 38 | 50 | 1.2 | 7,780 | 15 | 40 | 1,200 | 47 | 62 | 1.5 | 9,520 | 19 | 48 | 1,200 | 56 | 75 | 1.9 |
| | 1,800 | 1,160 | 2 | 10 | 1,200 | 12 | 14 | 0.3 | 3,200 | 6 | 18 | 1,200 | 21 | 27 | 0.6 | 5,240 | 10 | 28 | 1,200 | 33 | 43 | 1.0 | 7,290 | 14 | 38 | 1,200 | 45 | 59 | 1.4 | 9,330 | 19 | 48 | 1,200 | 56 | 75 | 1.8 | 11,380 | 23 | 56 | 1,200 | 66 | 88 | 2.2 |
| | 2,100 | 1,470 | 3 | 10 | 1,200 | 12 | 15 | 0.3 | 3,820 | 8 | 22 | 1,200 | 26 | 33 | 0.8 | 6,180 | 12 | 32 | 1,200 | 38 | 50 | 1.2 | 8,530 | 17 | 44 | 1,200 | 52 | 69 | 1.6 | 10,890 | 22 | 54 | 1,200 | 63 | 85 | 2.1 | 13,240 | 26 | 66 | 1,200 | 77 | 104 | 2.5 |
| | 2,400 | 1,780 | 4 | 12 | 1,200 | 14 | 18 | 0.4 | 4,440 | 9 | 24 | 1,200 | 28 | 37 | 0.9 | 7,110 | 14 | 36 | 1,200 | 42 | 56 | 1.4 | 9,770 | 19 | 48 | 1,200 | 56 | 76 | 1.9 | 12,440 | 25 | 62 | 1,200 | 73 | 97 | 2.4 | 15,110 | 30 | 74 | 1,200 | 87 | 117 | 2.9 |
| | 2,700 | 2,090 | 4 | 14 | 1,200 | 16 | 21 | 0.4 | 5,060 | 10 | 26 | 1,200 | 30 | 41 | 1.0 | 8,040 | 16 | 40 | 1,200 | 47 | 63 | 1.5 | 11,020 | 22 | 54 | 1,200 | 63 | 85 | 2.1 | 13,990 | 28 | 68 | 1,200 | 80 | 108 | 2.6 | 16,970 | 34 | 82 | 1,200 | 96 | 130 | 3.2 |
| | 3,000 | 2,400 | 5 | 14 | 1,200 | 16 | 21 | 0.5 | 5,680 | 11 | 30 | 1,200 | 35 | 46 | 1.1 | 8,970 | 18 | 44 | 1,200 | 52 | 69 | 1.7 | 12,260 | 24 | 60 | 1,200 | 70 | 95 | 2.3 | 15,550 | 31 | 74 | 1,200 | 87 | 118 | 2.9 | 18,830 | 37 | 90 | 1,200 | 106 | 143 | 3.5 |
| 1800 | 1,800 | 970 | 2 | 8 | 1,200 | 9 | 11 | 0.2 | 3,020 | 6 | 18 | 1,200 | 21 | 27 | 0.6 | 5,060 | 10 | 28 | 1,200 | 33 | 43 | 1.0 | 7,110 | 14 | 36 | 1,200 | 42 | 56 | 1.4 | 9,150 | 18 | 46 | 1,200 | 54 | 72 | 1.8 | 11,200 | 22 | 56 | 1,200 | 66 | 88 | 2.2 |
| | 2,100 | 1,280 | 3 | 10 | 1,200 | 12 | 14 | 0.3 | 3,640 | 7 | 20 | 1,200 | 23 | 31 | 0.7 | 5,990 | 12 | 32 | 1,200 | 38 | 49 | 1.2 | 8,350 | 17 | 42 | 1,200 | 49 | 66 | 1.6 | 10,700 | 21 | 54 | 1,200 | 63 | 85 | 2.0 | 13,060 | 26 | 64 | 1,200 | 75 | 101 | 2.5 |
| | 2,400 | 1,590 | 3 | 10 | 1,200 | 12 | 15 | 0.3 | 4,260 | 8 | 24 | 1,200 | 28 | 37 | 0.8 | 6,930 | 14 | 36 | 1,200 | 42 | 56 | 1.3 | 9,590 | 19 | 48 | 1,200 | 56 | 75 | 1.8 | 12,260 | 24 | 60 | 1,200 | 70 | 95 | 2.3 | 14,920 | 30 | 72 | 1,200 | 84 | 114 | 2.8 |
| | 2,700 | 1,900 | 4 | 12 | 1,200 | 14 | 18 | 0.4 | 4,880 | 10 | 26 | 1,200 | 30 | 40 | 0.9 | 7,860 | 16 | 40 | 1,200 | 47 | 63 | 1.5 | 10,830 | 22 | 54 | 1,200 | 63 | 85 | 2.1 | 13,810 | 27 | 68 | 1,200 | 80 | 107 | 2.6 | 16,790 | 33 | 80 | 1,200 | 94 | 127 | 3.2 |
| | 3,000 | 2,210 | 4 | 14 | 1,200 | 16 | 21 | 0.4 | 5,500 | 11 | 28 | 1,200 | 33 | 44 | 1.1 | 8,790 | 17 | 44 | 1,200 | 52 | 69 | 1.7 | 12,080 | 24 | 58 | 1,200 | 68 | 92 | 2.3 | 15,360 | 31 | 74 | 1,200 | 87 | 117 | 2.9 | 18,650 | 37 | 90 | 1,200 | 106 | 143 | 3.5 |
| 2100 | 2,100 | 1,150 | 2 | 8 | 1,200 | 9 | 12 | 0.3 | 3,500 | 7 | 20 | 1,200 | 23 | 30 | 0.7 | 5,860 | 12 | 30 | 1,200 | 35 | 47 | 1.1 | 8,210 | 16 | 42 | 1,200 | 49 | 66 | 1.6 | 10,570 | 21 | 52 | 1,200 | 61 | 82 | 2.0 | 12,920 | 26 | 64 | 1,200 | 75 | 101 | 2.5 |
| | 2,400 | 1,460 | 3 | 10 | 1,200 | 12 | 15 | 0.3 | 4,120 | 8 | 22 | 1,200 | 26 | 34 | 0.8 | 6,790 | 13 | 34 | 1,200 | 40 | 53 | 1.3 | 9,450 | 19 | 48 | 1,200 | 56 | 75 | 1.8 | 12,120 | 24 | 60 | 1,200 | 70 | 94 | 2.3 | 14,790 | 29 | 72 | 1,200 | 84 | 114 | 2.8 |
| | 2,700 | 1,770 | 4 | 12 | 1,200 | 14 | 18 | 0.4 | 4,740 | 9 | 26 | 1,200 | 30 | 40 | 0.9 | 7,720 | 15 | 40 | 1,200 | 47 | 62 | 1.5 | 10,700 | 21 | 52 | 1,200 | 61 | 82 | 2.0 | 13,670 | 27 | 66 | 1,200 | 77 | 105 | 2.6 | 16,650 | 33 | 80 | 1,200 | 94 | 127 | 3.1 |
| | 3,000 | 2,080 | 4 | 14 | 1,200 | 16 | 21 | 0.4 | 5,370 | 11 | 28 | 1,200 | 33 | 44 | 1.0 | 8,650 | 17 | 44 | 1,200 | 52 | 69 | 1.6 | 11,940 | 24 | 58 | 1,200 | 68 | 92 | 2.3 | 15,230 | 30 | 74 | 1,200 | 87 | 117 | 2.9 | 18,510 | 37 | 88 | 1,200 | 103 | 140 | 3.5 |
| 2400 | 2,400 | 1,250 | 2 | 10 | 1,200 | 12 | 14 | 0.3 | 3,920 | 8 | 22 | 1,200 | 26 | 34 | 0.8 | 6,580 | 13 | 34 | 1,200 | 40 | 53 | 1.3 | 9,250 | 18 | 46 | 1,200 | 54 | 72 | 1.8 | 11,910 | 24 | 58 | 1,200 | 68 | 92 | 2.3 | 14,580 | 29 | 70 | 1,200 | 82 | 111 | 2.8 |
| | 2,700 | 1,560 | 3 | 10 | 1,200 | 12 | 15 | 0.3 | 4,540 | 9 | 24 | 1,200 | 28 | 37 | 0.9 | 7,510 | 15 | 38 | 1,200 | 45 | 60 | 1.4 | 10,490 | 21 | 52 | 1,200 | 61 | 82 | 2.0 | 13,470 | 27 | 66 | 1,200 | 77 | 104 | 2.5 | 16,440 | 33 | 80 | 1,200 | 94 | 127 | 3.1 |
| | 3,000 | 1,870 | 4 | 12 | 1,200 | 14 | 18 | 0.4 | 5,160 | 10 | 28 | 1,200 | 33 | 43 | 1.0 | 8,450 | 17 | 42 | 1,200 | 49 | 66 | 1.6 | 11,730 | 23 | 58 | 1,200 | 68 | 91 | 2.2 | 15,020 | 30 | 72 | 1,200 | 84 | 114 | 2.8 | 18,310 | 36 | 88 | 1,200 | 103 | 140 | 3.4 |
| 2700 | 2,700 | 1,380 | 3 | 10 | 1,200 | 12 | 14 | 0.3 | 4,350 | 9 | 24 | 1,200 | 28 | 37 | 0.8 | 7,330 | 15 | 38 | 1,200 | 45 | 59 | 1.4 | 10,310 | 20 | 52 | 1,200 | 61 | 81 | 2.0 | 13,280 | 26 | 64 | 1,200 | 75 | 101 | 2.5 | 16,260 | 32 | 78 | 1,200 | 91 | 124 | 3.1 |
| | 3,000 | 1,690 | 3 | 12 | 1,200 | 14 | 17 | 0.4 | 4,970 | 10 | 26 | 1,200 | 30 | 40 | 1.0 | 8,260 | 16 | 42 | 1,200 | 49 | 66 | 1.6 | 11,550 | 23 | 56 | 1,200 | 66 | 89 | 2.2 | 14,840 | 30 | 72 | 1,200 | 84 | 114 | 2.8 | 18,120 | 36 | 86 | 1,200 | 101 | 137 | 3.4 |
| 3000 | 3,000 | 1,550 | 3 | 10 | 1,200 | 12 | 15 | 0.3 | 4,840 | 10 | 26 | 1,200 | 30 | 40 | 0.9 | 8,120 | 16 | 40 | 1,200 | 47 | 63 | 1.5 | 11,410 | 23 | 56 | 1,200 | 66 | 88 | 2.2 | 14,700 | 29 | 72 | 1,200 | 84 | 114 | 2.8 | 17,990 | 36 | 86 | 1,200 | 101 | 137 | 3.4 |

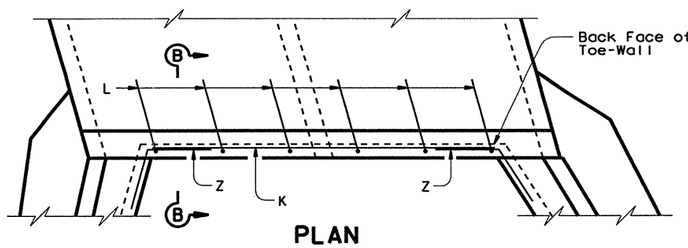


## PLAN
SHOWING REINFORCING FOR CULVERT TOE-WALL

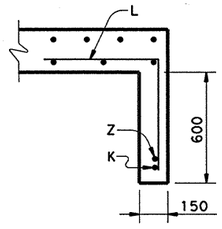


## SECTION B-B

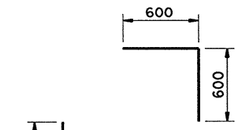


BARS L

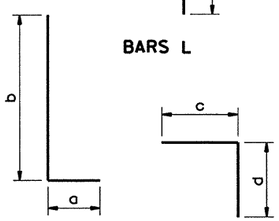


BARS $M_1$ BARS $M_2$

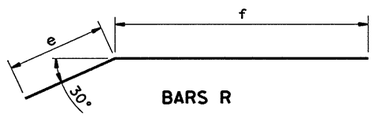


BARS R

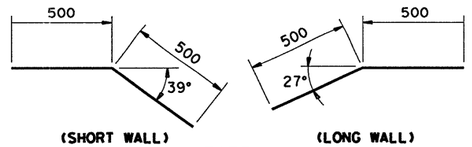


(SHORT WALL) (LONG WALL)

BARS V

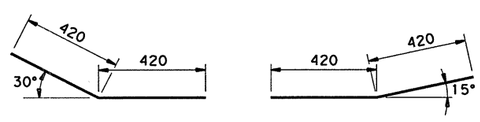


(SHORT WALL) (LONG WALL)

BARS W

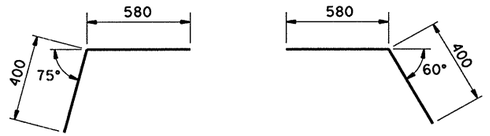


(SHORT WALL) (LONG WALL)

BARS Z

DISCLAIMER:
The use of this standard is governed by the "Texas Engineering Practice Act". No warranty of any kind is made by TxDOT for any purpose whatsoever. TxDOT assumes no responsibility for the conversion of this standard to other formats or for incorrect results or damages resulting from its use.

LEVELS DISPLAYED 1 3 ACC: (LV=1,3 for Metric)

SHEET 2 OF 2

Texas Department of Transportation
Design Division (Bridge)

# FLARED WINGS
## FOR 15° SKEW BOX CULVERTS

# FW-15(M)

| FILE: fw-15std.dgn | DN: SDA | CK: EJU | DW: MCB | CK: SDA | STD: B103M |
|---|---|---|---|---|---|
| © TxDOT October 1996 | DIST | FED REG | FEDERAL AID PROJECT • | | SHEET |
| REVISIONS 5-97-ADD NOTE ④, GEN NOTES & MISC | SAT | 6 | NH 2000 (704), etc. | | 407 |
| | COUNTY | | CONTROL | SECT | JOB | HIGHWAY |
| | BEXAR | | 2452 | 01 | 036, etc. | LP1604 |

# BILLS OF REINFORCING STEEL (Short and Long Wings for 2 Structure Ends)

| Wall | Box Culvert Height, H | Bars M1 at 300 mm max No. | Size | Avg Lgth mm | kg | Min "a" | Max "a" | Avg "a" | Min "b" | Max "b" | Avg "b" | Bars M2 at 300 mm max No. | Size | Avg Lgth mm | kg | Min "c" | Max "c" | Avg "c" | "d" |
|---|---|---|---|---|---|---|---|---|---|---|---|---|---|---|---|---|---|---|---|
| SHORT WALLS | 600 | 10 | #4 | 870 | 9 | 290 | 290 | 290 | 300 | 850 | 580 | 10 | #4 | 1,260 | 13 | 600 | 600 | 600 | 660 |
| SHORT WALLS | 900 | 16 | #4 | 1,040 | 17 | 290 | 290 | 290 | 300 | 1,200 | 750 | 16 | #4 | 1,260 | 20 | 600 | 600 | 600 | 660 |
| SHORT WALLS | 1,200 | 20 | #4 | 1,210 | 24 | 290 | 290 | 290 | 300 | 1,530 | 920 | 20 | #4 | 1,260 | 25 | 600 | 600 | 600 | 660 |
| SHORT WALLS | 1,500 | 24 | #4 | 1,440 | 34 | 290 | 380 | 340 | 300 | 1,900 | 1,100 | 24 | #4 | 1,390 | 33 | 600 | 850 | 730 | 660 |
| SHORT WALLS | 1,800 | 28 | #5 | 1,630 | 71 | 290 | 460 | 380 | 300 | 2,200 | 1,250 | 28 | #5 | 1,470 | 64 | 610 | 1,000 | 810 | 660 |
| SHORT WALLS | 2,100 | 32 | #5 | 1,850 | 92 | 310 | 540 | 430 | 320 | 2,520 | 1,420 | 32 | #5 | 1,580 | 78 | 630 | 1,170 | 900 | 680 |
| SHORT WALLS | 2,400 | 36 | #6 | 2,040 | 164 | 310 | 630 | 470 | 320 | 2,820 | 1,570 | 36 | #6 | 1,670 | 134 | 630 | 1,350 | 990 | 680 |
| SHORT WALLS | 2,700 | 40 | #8 | 2,240 | 356 | 320 | 710 | 520 | 320 | 3,120 | 1,720 | 40 | #8 | 1,750 | 278 | 630 | 1,500 | 1,070 | 680 |
| SHORT WALLS | 3,000 | 44 | #8 | 2,480 | 434 | 350 | 800 | 580 | 350 | 3,450 | 1,900 | 44 | #8 | 1,880 | 329 | 660 | 1,680 | 1,170 | 710 |
| LONG WALLS | 600 | 12 | #4 | 830 | 10 | 290 | 290 | 290 | 290 | 790 | 540 | 12 | #4 | 1,260 | 15 | 600 | 600 | 600 | 660 |
| LONG WALLS | 900 | 20 | #4 | 1,010 | 20 | 290 | 290 | 290 | 290 | 1,140 | 720 | 20 | #4 | 1,260 | 25 | 600 | 600 | 600 | 660 |
| LONG WALLS | 1,200 | 26 | #4 | 1,170 | 30 | 290 | 290 | 290 | 290 | 1,470 | 880 | 26 | #4 | 1,260 | 33 | 600 | 600 | 600 | 660 |
| LONG WALLS | 1,500 | 32 | #4 | 1,410 | 45 | 290 | 380 | 340 | 290 | 1,840 | 1,070 | 32 | #4 | 1,380 | 44 | 600 | 840 | 720 | 660 |
| LONG WALLS | 1,800 | 38 | #5 | 1,590 | 94 | 290 | 450 | 370 | 290 | 2,140 | 1,220 | 38 | #5 | 1,460 | 86 | 600 | 990 | 800 | 660 |
| LONG WALLS | 2,100 | 44 | #5 | 1,810 | 124 | 310 | 530 | 420 | 310 | 2,460 | 1,390 | 44 | #5 | 1,570 | 107 | 620 | 1,160 | 890 | 680 |
| LONG WALLS | 2,400 | 50 | #6 | 2,010 | 225 | 310 | 620 | 470 | 310 | 2,760 | 1,540 | 50 | #6 | 1,670 | 187 | 630 | 1,340 | 990 | 680 |
| LONG WALLS | 2,700 | 56 | #8 | 2,200 | 490 | 310 | 700 | 510 | 310 | 3,060 | 1,690 | 56 | #8 | 1,740 | 387 | 630 | 1,480 | 1,060 | 680 |
| LONG WALLS | 3,000 | 60 | #8 | 2,430 | 579 | 340 | 790 | 570 | 340 | 3,380 | 1,860 | 60 | #8 | 1,870 | 446 | 660 | 1,660 | 1,160 | 710 |

| Wall | Box Culvert Height, H | Bars N ~ #4 at 300 mm max No. | Min Lgth mm | Max Lgth mm | Avg Lgth mm | kg | 2-Bars P1 ~ #5 Lgth mm | kg | 2-Bars P2 ~ #5 Lgth mm | kg | 2-Bars R ~ #6 Lgth mm | kg | "e" | "f" |
|---|---|---|---|---|---|---|---|---|---|---|---|---|---|---|
| SHORT WALLS | 600 | 4 | 530 | 1,130 | 830 | 3 | 1,600 | 5 | 1,570 | 5 | 1,920 | 9 | 770 | 1,150 |
| SHORT WALLS | 900 | 8 | 530 | 1,830 | 1,180 | 9 | 2,300 | 7 | 2,270 | 7 | 2,620 | 12 | 770 | 1,850 |
| SHORT WALLS | 1,200 | 10 | 530 | 2,490 | 1,510 | 15 | 2,960 | 9 | 2,930 | 9 | 3,280 | 15 | 770 | 2,510 |
| SHORT WALLS | 1,500 | 12 | 530 | 3,230 | 1,880 | 22 | 3,710 | 12 | 3,670 | 11 | 4,190 | 19 | 940 | 3,250 |
| SHORT WALLS | 1,800 | 14 | 530 | 3,830 | 2,180 | 30 | 4,310 | 13 | 4,270 | 13 | 4,890 | 22 | 1,030 | 3,860 |
| SHORT WALLS | 2,100 | 16 | 530 | 4,430 | 2,480 | 39 | 4,910 | 15 | 4,870 | 15 | 5,610 | 25 | 1,150 | 4,460 |
| SHORT WALLS | 2,400 | 18 | 530 | 5,030 | 2,780 | 50 | 5,520 | 17 | 5,470 | 17 | 6,320 | 28 | 1,250 | 5,070 |
| SHORT WALLS | 2,700 | 20 | 530 | 5,630 | 3,080 | 61 | 6,120 | 19 | 6,070 | 19 | 6,990 | 31 | 1,320 | 5,670 |
| SHORT WALLS | 3,000 | 22 | 530 | 6,230 | 3,380 | 74 | 6,720 | 21 | 6,670 | 21 | 7,730 | 35 | 1,450 | 6,280 |
| LONG WALLS | 600 | 4 | 610 | 1,460 | 1,040 | 4 | 2,300 | 7 | 2,070 | 6 | 2,540 | 11 | 890 | 1,650 |
| LONG WALLS | 900 | 8 | 610 | 2,450 | 1,530 | 12 | 3,260 | 10 | 3,060 | 9 | 3,530 | 16 | 890 | 2,640 |
| LONG WALLS | 1,200 | 10 | 610 | 3,390 | 2,000 | 20 | 4,190 | 13 | 3,990 | 12 | 4,460 | 20 | 890 | 3,570 |
| LONG WALLS | 1,500 | 12 | 610 | 4,430 | 2,520 | 30 | 5,330 | 17 | 5,040 | 16 | 5,760 | 26 | 1,140 | 4,620 |
| LONG WALLS | 1,800 | 14 | 610 | 5,280 | 2,950 | 41 | 6,270 | 19 | 5,890 | 18 | 6,730 | 30 | 1,260 | 5,470 |
| LONG WALLS | 2,100 | 16 | 590 | 6,110 | 3,350 | 53 | 7,180 | 22 | 6,730 | 21 | 7,740 | 35 | 1,420 | 6,320 |
| LONG WALLS | 2,400 | 18 | 590 | 6,960 | 3,780 | 68 | 8,130 | 25 | 7,580 | 24 | 8,730 | 39 | 1,560 | 7,170 |
| LONG WALLS | 2,700 | 20 | 590 | 7,810 | 4,200 | 83 | 9,060 | 28 | 8,430 | 26 | 9,690 | 43 | 1,660 | 8,030 |
| LONG WALLS | 3,000 | 22 | 560 | 8,620 | 4,590 | 100 | 9,970 | 31 | 9,280 | 29 | 10,730 | 48 | 1,850 | 8,880 |

| Wall | Box Culvert Height, H | 2-Bars T ~ #4 Lgth mm | kg | 2-Bars U1 ~ #6 Lgth mm | kg | 2-Bars U2 ~ #6 Lgth mm | kg | 4-Bars V ~ #6 Lgth mm | kg | Bars W ~ #5 No. | Lgth mm | kg | 6-Bars X ~ #6 Lgth mm | kg | Bars Y ~ #6 No. | Lgth mm | kg | 2-Bars Z ~ #4 Lgth mm | kg |
|---|---|---|---|---|---|---|---|---|---|---|---|---|---|---|---|---|---|---|---|
| SHORT WALLS | 600 | 1,150 | 2 | 1,250 | 6 | 1,270 | 6 | 1,000 | 9 | 4 | 840 | 5 | 1,000 | 13 | 0 | ~ | ~ | 1,010 | 2 |
| SHORT WALLS | 900 | 1,850 | 4 | 2,040 | 9 | 2,050 | 9 | 1,000 | 9 | 8 | 840 | 10 | 1,000 | 13 | 0 | ~ | ~ | 1,010 | 2 |
| SHORT WALLS | 1,200 | 2,510 | 5 | 2,770 | 12 | 2,790 | 12 | 1,000 | 9 | 10 | 840 | 13 | 1,000 | 13 | 0 | ~ | ~ | 1,010 | 2 |
| SHORT WALLS | 1,500 | 3,260 | 6 | 3,600 | 16 | 3,610 | 16 | 1,000 | 9 | 12 | 840 | 16 | 1,000 | 13 | 2 | 720 | 3 | 1,010 | 2 |
| SHORT WALLS | 1,800 | 3,860 | 8 | 4,270 | 19 | 4,290 | 19 | 1,000 | 9 | 14 | 840 | 18 | 1,000 | 13 | 2 | 870 | 4 | 1,010 | 2 |
| SHORT WALLS | 2,100 | 4,460 | 9 | 4,940 | 22 | 4,960 | 22 | 1,000 | 9 | 16 | 840 | 21 | 1,000 | 13 | 2 | 1,020 | 5 | 1,010 | 2 |
| SHORT WALLS | 2,400 | 5,070 | 10 | 5,610 | 25 | 5,630 | 25 | 1,000 | 9 | 18 | 840 | 23 | 1,000 | 13 | 4 | 1,140 | 10 | 1,010 | 2 |
| SHORT WALLS | 2,700 | 5,670 | 11 | 6,280 | 28 | 6,300 | 28 | 1,000 | 9 | 20 | 840 | 26 | 1,000 | 13 | 4 | 1,280 | 11 | 1,010 | 2 |
| SHORT WALLS | 3,000 | 6,270 | 12 | 6,950 | 31 | 6,970 | 31 | 1,000 | 9 | 22 | 840 | 29 | 1,000 | 13 | 4 | 1,430 | 13 | 1,010 | 2 |
| LONG WALLS | 600 | 1,850 | 4 | 1,670 | 7 | 1,580 | 7 | 1,000 | 9 | 4 | 840 | 5 | 1,000 | 13 | 2 | 460 | 2 | 1,010 | 2 |
| LONG WALLS | 900 | 2,810 | 6 | 2,720 | 12 | 2,620 | 12 | 1,000 | 9 | 8 | 840 | 10 | 1,000 | 13 | 2 | 460 | 2 | 1,010 | 2 |
| LONG WALLS | 1,200 | 3,740 | 7 | 3,710 | 17 | 3,610 | 16 | 1,000 | 9 | 10 | 840 | 13 | 1,000 | 13 | 2 | 460 | 2 | 1,010 | 2 |
| LONG WALLS | 1,500 | 4,880 | 10 | 4,820 | 22 | 4,720 | 21 | 1,000 | 9 | 12 | 840 | 16 | 1,000 | 13 | 2 | 670 | 3 | 1,010 | 2 |
| LONG WALLS | 1,800 | 5,820 | 12 | 5,720 | 26 | 5,620 | 25 | 1,000 | 9 | 14 | 840 | 18 | 1,000 | 13 | 4 | 750 | 7 | 1,010 | 2 |
| LONG WALLS | 2,100 | 6,730 | 13 | 6,620 | 30 | 6,510 | 29 | 1,000 | 9 | 16 | 840 | 21 | 1,000 | 13 | 4 | 880 | 8 | 1,010 | 2 |
| LONG WALLS | 2,400 | 7,680 | 15 | 7,520 | 34 | 7,410 | 33 | 1,000 | 9 | 18 | 840 | 23 | 1,000 | 13 | 6 | 1,000 | 13 | 1,010 | 2 |
| LONG WALLS | 2,700 | 8,610 | 17 | 8,420 | 38 | 8,310 | 37 | 1,000 | 9 | 20 | 840 | 26 | 1,000 | 13 | 6 | 1,120 | 15 | 1,010 | 2 |
| LONG WALLS | 3,000 | 9,520 | 19 | 9,320 | 42 | 9,180 | 41 | 1,000 | 9 | 22 | 840 | 29 | 1,000 | 13 | 8 | 1,230 | 22 | 1,010 | 2 |

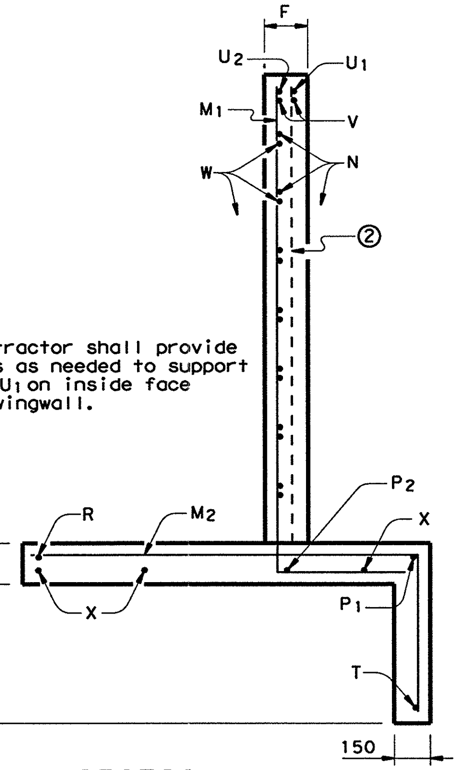


②Contractor shall provide bars as needed to support Bar U1 on inside face of wingwall.

## SECTION A-A

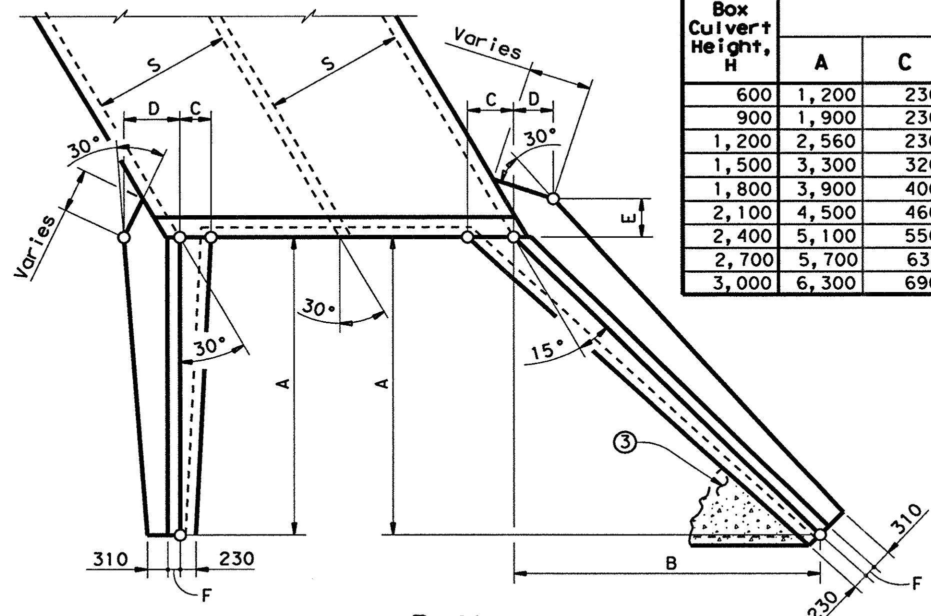


## PLAN

### SHOWING DIMENSIONS

## TABLE OF DIMENSIONS

| Box Culvert Height, H | SHORT WALLS A | C | D | F | G | I | J | LONG WALLS A | B | C | D | E | F | G | I | J |
|---|---|---|---|---|---|---|---|---|---|---|---|---|---|---|---|---|
| 600 | 1,200 | 230 | 470 | 160 | 160 | 800 | 1,200 | 1,200 | 1,200 | 325 | 332 | 332 | 160 | 160 | 800 | 1,697 |
| 900 | 1,900 | 230 | 470 | 160 | 160 | 1,150 | 1,900 | 1,900 | 1,900 | 325 | 332 | 332 | 160 | 160 | 1,150 | 2,687 |
| 1,200 | 2,560 | 230 | 470 | 160 | 160 | 1,480 | 2,560 | 2,560 | 2,560 | 325 | 332 | 332 | 160 | 160 | 1,480 | 3,620 |
| 1,500 | 3,300 | 320 | 630 | 160 | 160 | 1,850 | 3,300 | 3,300 | 3,300 | 461 | 445 | 445 | 160 | 160 | 1,850 | 4,667 |
| 1,800 | 3,900 | 400 | 710 | 160 | 160 | 2,150 | 3,900 | 3,900 | 3,900 | 584 | 502 | 502 | 160 | 160 | 2,150 | 5,515 |
| 2,100 | 4,500 | 460 | 820 | 180 | 180 | 2,450 | 4,500 | 4,500 | 4,500 | 675 | 580 | 580 | 180 | 180 | 2,450 | 6,364 |
| 2,400 | 5,100 | 550 | 910 | 180 | 180 | 2,750 | 5,100 | 5,100 | 5,100 | 814 | 643 | 643 | 180 | 180 | 2,750 | 7,212 |
| 2,700 | 5,700 | 630 | 980 | 180 | 180 | 3,050 | 5,700 | 5,700 | 5,700 | 937 | 693 | 693 | 180 | 180 | 3,050 | 8,061 |
| 3,000 | 6,300 | 690 | 1,100 | 210 | 210 | 3,350 | 6,300 | 6,300 | 6,300 | 1,029 | 778 | 778 | 210 | 210 | 3,350 | 8,910 |

## QUANTITIES ④ (Wings for 2 Structure Ends)

| Box Culvert Height, H | Conc ($m^3$) | Reinf (kg) |
|---|---|---|
| 600 | 1.7 | 190 |
| 900 | 2.9 | 288 |
| 1,200 | 4.2 | 372 |
| 1,500 | 6.3 | 486 |
| 1,800 | 8.1 | 706 |
| 2,100 | 11.3 | 855 |
| 2,400 | 13.9 | 1,239 |
| 2,700 | 16.7 | 2,109 |
| 3,000 | 22.8 | 2,463 |

④ Quantities shown are for wings only. See Item "Headwalls and Wingwalls" for a description of other components that may be included in the pay item Wingwalls.

③ When shown elsewhere on the plans, a 130 mm deep concrete riprap shall be constructed. Unless otherwise shown on the plans or directed by the Engineer, the riprap shall have a 150 mm wide by 450 mm deep reinforced concrete toewall along all edges adjacent to natural ground; the toewall shall be reinforced by extending typical riprap reinforcing into the toewall; construction joints or grooved joints, oriented in the direction of flow, shall extend across the full distance of the riprap, at intervals of approximately 6,000 mm.

**GENERAL NOTES:**

Designed according to AASHTO 1992 Standard and current Interim Specifications.

All reinforcing steel shall be Grade 420 (fy = 420 MPa).

All concrete shall have a minimum 28 day compressive strength of 21 MPa.

All Reinforcing bars shall be adjusted to provide a 35 mm clear cover.

The bottom slab of the barrel, wing footing and toewalls shall be placed in one continuous operation.

When structure is founded on solid rock, depth of Toe-walls for culverts and Wingwalls may be reduced or eliminated as directed by the Engineer.

All dimensions are in millimeters and all masses are in kilograms unless otherwise noted.

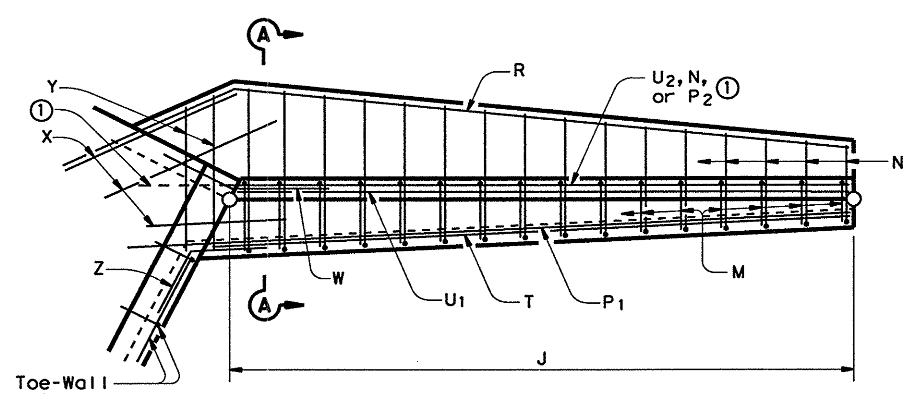


①Extend Bar P2 only into bottom slab of Box Culvert.

## PLAN

### SHOWING REINFORCING

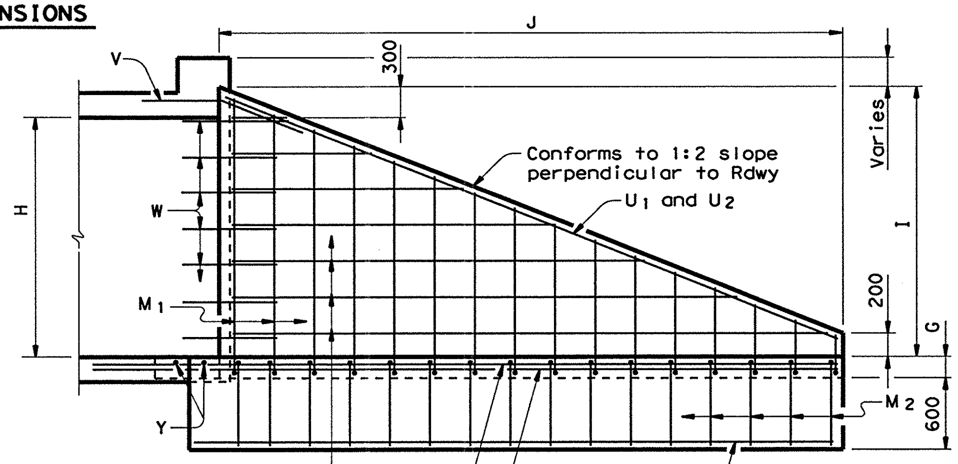


## ELEVATION

### SHOWING REINFORCING

NOTE:
See sheet 2 of 2 for Bar Bend Details and Box Culvert Toe-Wall Quantities.

SHEET 1 OF 2

Texas Department of Transportation
Design Division (Bridge)

# FLARED WINGS
## FOR 30° SKEW BOX CULVERTS

## FW-30(M)

| FILE: fw-30std.dgn | DN: SDA | CK: EJU | DW: MCB | CK: SDA | STD: B104M |
|---|---|---|---|---|---|
| © TxDOT October 1996 | DIST | FED REG | FEDERAL AID PROJECT • | | SHEET |
| REVISIONS | SAT | 6 | NH 2000 )704), etc. | | 408 |
| 5-97~ADD NOTE ④ ,GEN NOTES & MISC | COUNTY | | CONTROL | SECT | JOB / HIGHWAY |
| | BEXAR | | 2452 | 01 | 036, etc. / LP1604 |


DISCLAIMER:
The use of this standard is governed by the "Texas Engineering Practice Act". No warranty of any kind is made by TxDOT for any purpose whatsoever. TxDOT assumes no responsibility for the conversion of this standard to other formats or for incorrect results or damages resulting from its use.


LEVELS DISPLAYED 1 3 ACC: (LV=1,3 for Metric)

DISCLAIMER:
The use of this standard is governed by the "Texas Engineering Practice Act". No warranty of any kind is made by TxDOT for any purpose whatsoever. TxDOT assumes no responsibility for the conversion of this standard to other formats or for incorrect results or damages resulting from its use.

ACC: (LV=1,3 for Metric)

LEVELS DI...ED 1 3

## BOX CULVERT TOE-WALL QUANTITIES (For 2 Structure Ends)

Number of Spans: 1 and 2

| Box Culvert Height, H | Box Culvert Span, S | 1: 2-Bars K ~ #4 Lgth mm | kg | 1: Bars L ~ #4 at 450 mm max No. | Lgth mm | kg | Reinf (Kg) | Conc (m3) | 2: 2-Bars K ~ #4 Lgth mm | kg | 2: Bars L ~ #4 at 450 mm max No. | Lgth mm | kg | Reinf (Kg) | Conc (m3) |
|---|---|---|---|---|---|---|---|---|---|---|---|---|---|---|---|
| 600 | 900 | 480 | 1 | 6 | 1,200 | 7 | 8 | 0.1 | 1,730 | 3 | 12 | 1,200 | 14 | 18 | 0.4 |
| | 1,200 | 830 | 2 | 8 | 1,200 | 9 | 11 | 0.2 | 2,420 | 5 | 16 | 1,200 | 19 | 24 | 0.5 |
| | 1,500 | 1,200 | 2 | 10 | 1,180 | 12 | 14 | 0.3 | 3,110 | 6 | 18 | 1,200 | 21 | 27 | 0.6 |
| 900 | 900 | 480 | 1 | 6 | 1,200 | 7 | 8 | 0.1 | 1,730 | 3 | 12 | 1,200 | 14 | 18 | 0.4 |
| | 1,200 | 830 | 2 | 8 | 1,200 | 9 | 11 | 0.2 | 2,420 | 5 | 16 | 1,200 | 19 | 24 | 0.5 |
| | 1,500 | 1,200 | 2 | 10 | 1,180 | 12 | 14 | 0.3 | 3,110 | 6 | 18 | 1,200 | 21 | 27 | 0.6 |
| | 1,800 | 1,520 | 3 | 10 | 1,200 | 12 | 15 | 0.3 | 3,800 | 8 | 22 | 1,200 | 26 | 33 | 0.8 |
| | 2,100 | 1,870 | 4 | 12 | 1,200 | 14 | 18 | 0.4 | 4,500 | 9 | 24 | 1,200 | 28 | 37 | 0.9 |
| 1200 | 1,200 | 830 | 2 | 8 | 1,200 | 9 | 11 | 0.2 | 2,420 | 5 | 16 | 1,200 | 19 | 24 | 0.5 |
| | 1,500 | 1,180 | 2 | 10 | 1,200 | 12 | 14 | 0.3 | 3,110 | 6 | 18 | 1,200 | 21 | 27 | 0.6 |
| | 1,800 | 1,520 | 3 | 10 | 1,200 | 12 | 15 | 0.3 | 3,800 | 8 | 22 | 1,200 | 26 | 33 | 0.8 |
| | 2,100 | 1,870 | 4 | 12 | 1,200 | 14 | 18 | 0.4 | 4,500 | 9 | 24 | 1,200 | 28 | 37 | 0.9 |
| | 2,400 | 2,220 | 4 | 14 | 1,200 | 16 | 21 | 0.5 | 5,190 | 10 | 28 | 1,200 | 33 | 43 | 1.0 |
| 1500 | 1,500 | 950 | 2 | 8 | 1,200 | 9 | 11 | 0.2 | 2,880 | 6 | 18 | 1,200 | 21 | 27 | 0.6 |
| | 1,800 | 1,300 | 3 | 10 | 1,200 | 12 | 14 | 0.3 | 3,580 | 7 | 20 | 1,200 | 23 | 31 | 0.7 |
| | 2,100 | 1,640 | 3 | 12 | 1,200 | 14 | 17 | 0.3 | 4,270 | 8 | 24 | 1,200 | 28 | 37 | 0.8 |
| | 2,400 | 1,990 | 4 | 12 | 1,200 | 14 | 18 | 0.4 | 4,960 | 10 | 26 | 1,200 | 30 | 40 | 1.0 |
| | 2,700 | 2,340 | 5 | 14 | 1,200 | 16 | 21 | 0.5 | 5,660 | 11 | 30 | 1,200 | 35 | 46 | 1.1 |
| | 3,000 | 2,680 | 5 | 16 | 1,200 | 19 | 24 | 0.5 | 6,350 | 13 | 32 | 1,200 | 38 | 50 | 1.2 |
| 1800 | 1,800 | 1,090 | 2 | 8 | 1,200 | 9 | 12 | 0.2 | 3,380 | 7 | 20 | 1,200 | 23 | 30 | 0.7 |
| | 2,100 | 1,440 | 3 | 10 | 1,200 | 12 | 15 | 0.3 | 4,070 | 8 | 22 | 1,200 | 26 | 34 | 0.8 |
| | 2,400 | 1,790 | 4 | 12 | 1,200 | 14 | 18 | 0.4 | 4,760 | 9 | 26 | 1,200 | 30 | 40 | 0.9 |
| | 2,700 | 2,130 | 4 | 14 | 1,200 | 16 | 21 | 0.4 | 5,450 | 11 | 28 | 1,200 | 33 | 44 | 1.1 |
| | 3,000 | 2,480 | 5 | 14 | 1,200 | 16 | 21 | 0.5 | 6,150 | 12 | 32 | 1,200 | 38 | 50 | 1.2 |
| 2100 | 2,100 | 1,290 | 3 | 10 | 1,200 | 12 | 14 | 0.3 | 3,920 | 8 | 22 | 1,200 | 26 | 34 | 0.8 |
| | 2,400 | 1,640 | 3 | 12 | 1,200 | 14 | 17 | 0.3 | 4,610 | 9 | 24 | 1,200 | 28 | 37 | 0.9 |
| | 2,700 | 1,980 | 4 | 12 | 1,200 | 14 | 18 | 0.4 | 5,300 | 11 | 28 | 1,200 | 33 | 43 | 1.0 |
| | 3,000 | 2,330 | 5 | 14 | 1,200 | 16 | 21 | 0.5 | 6,000 | 12 | 32 | 1,200 | 38 | 49 | 1.2 |
| 2400 | 2,400 | 1,410 | 3 | 10 | 1,200 | 12 | 15 | 0.3 | 4,380 | 9 | 24 | 1,200 | 28 | 37 | 0.9 |
| | 2,700 | 1,750 | 3 | 12 | 1,200 | 14 | 18 | 0.4 | 5,070 | 10 | 26 | 1,200 | 30 | 41 | 1.0 |
| | 3,000 | 2,100 | 4 | 14 | 1,200 | 16 | 21 | 0.4 | 5,770 | 11 | 30 | 1,200 | 35 | 47 | 1.1 |
| 2700 | 2,700 | 1,550 | 3 | 10 | 1,200 | 12 | 15 | 0.3 | 4,870 | 10 | 26 | 1,200 | 30 | 40 | 0.9 |
| | 3,000 | 1,900 | 4 | 12 | 1,200 | 14 | 18 | 0.4 | 5,560 | 11 | 30 | 1,200 | 35 | 46 | 1.1 |
| 3000 | 3,000 | 1,750 | 3 | 12 | 1,200 | 14 | 18 | 0.4 | 5,410 | 11 | 28 | 1,200 | 33 | 44 | 1.0 |

Number of Spans: 3 and 4

| Box Culvert Height, H | Box Culvert Span, S | 3: 2-Bars K ~ #4 Lgth mm | kg | 3: Bars L ~ #4 at 450 mm max No. | Lgth mm | kg | Reinf (kg) | Conc (m3) | 4: 2-Bars K ~ #4 Lgth mm | kg | 4: Bars L ~ #4 at 450 mm max No. | Lgth mm | kg | Reinf (kg) | Conc (m3) |
|---|---|---|---|---|---|---|---|---|---|---|---|---|---|---|---|
| 600 | 900 | 2,970 | 6 | 18 | 1,200 | 21 | 27 | 0.6 | 4,210 | 8 | 24 | 1,200 | 28 | 37 | 0.9 |
| | 1,200 | 4,010 | 8 | 22 | 1,200 | 26 | 34 | 0.8 | 5,590 | 11 | 30 | 1,200 | 35 | 46 | 1.1 |
| | 1,500 | 5,050 | 10 | 28 | 1,200 | 33 | 43 | 1.0 | 6,980 | 14 | 36 | 1,200 | 42 | 56 | 1.4 |
| 900 | 900 | 2,970 | 6 | 18 | 1,200 | 21 | 27 | 0.6 | 4,210 | 8 | 24 | 1,200 | 28 | 37 | 0.9 |
| | 1,200 | 4,010 | 8 | 22 | 1,200 | 26 | 34 | 0.8 | 5,590 | 11 | 30 | 1,200 | 35 | 46 | 1.1 |
| | 1,500 | 5,050 | 10 | 28 | 1,200 | 33 | 43 | 1.0 | 6,980 | 14 | 36 | 1,200 | 42 | 56 | 1.4 |
| | 1,800 | 6,080 | 12 | 32 | 1,200 | 38 | 50 | 1.2 | 8,360 | 17 | 42 | 1,200 | 49 | 66 | 1.6 |
| | 2,100 | 7,120 | 14 | 36 | 1,200 | 42 | 56 | 1.4 | 9,750 | 19 | 48 | 1,200 | 56 | 76 | 1.9 |
| 1200 | 1,200 | 4,010 | 8 | 22 | 1,200 | 26 | 34 | 0.8 | 5,590 | 11 | 30 | 1,200 | 35 | 46 | 1.1 |
| | 1,500 | 5,050 | 10 | 28 | 1,200 | 33 | 43 | 1.0 | 6,980 | 14 | 36 | 1,200 | 42 | 56 | 1.4 |
| | 1,800 | 6,080 | 12 | 32 | 1,200 | 38 | 50 | 1.2 | 8,360 | 17 | 42 | 1,200 | 49 | 66 | 1.6 |
| | 2,100 | 7,120 | 14 | 36 | 1,200 | 42 | 56 | 1.4 | 9,750 | 19 | 48 | 1,200 | 56 | 76 | 1.9 |
| | 2,400 | 8,160 | 16 | 42 | 1,200 | 49 | 65 | 1.6 | 11,140 | 22 | 54 | 1,200 | 63 | 85 | 2.1 |
| 1500 | 1,500 | 4,820 | 10 | 26 | 1,200 | 30 | 40 | 1.0 | 6,750 | 13 | 36 | 1,200 | 42 | 56 | 1.3 |
| | 1,800 | 5,860 | 12 | 30 | 1,200 | 35 | 47 | 1.1 | 8,140 | 16 | 42 | 1,200 | 49 | 65 | 1.6 |
| | 2,100 | 6,900 | 14 | 36 | 1,200 | 42 | 56 | 1.3 | 9,520 | 19 | 48 | 1,200 | 56 | 75 | 1.8 |
| | 2,400 | 7,940 | 16 | 40 | 1,200 | 47 | 63 | 1.5 | 10,910 | 22 | 54 | 1,200 | 63 | 85 | 2.1 |
| | 2,700 | 8,980 | 18 | 44 | 1,200 | 52 | 69 | 1.7 | 12,300 | 24 | 60 | 1,200 | 70 | 95 | 2.3 |
| | 3,000 | 10,020 | 20 | 50 | 1,200 | 59 | 79 | 1.9 | 13,680 | 27 | 66 | 1,200 | 77 | 105 | 2.6 |
| 1800 | 1,800 | 5,660 | 11 | 30 | 1,200 | 35 | 46 | 1.1 | 7,940 | 16 | 40 | 1,200 | 47 | 63 | 1.5 |
| | 2,100 | 6,700 | 13 | 34 | 1,200 | 40 | 53 | 1.3 | 9,320 | 19 | 46 | 1,200 | 54 | 72 | 1.8 |
| | 2,400 | 7,730 | 15 | 40 | 1,200 | 47 | 62 | 1.5 | 10,710 | 21 | 54 | 1,200 | 63 | 85 | 2.0 |
| | 2,700 | 8,770 | 17 | 44 | 1,200 | 52 | 69 | 1.7 | 12,090 | 24 | 60 | 1,200 | 70 | 94 | 2.3 |
| | 3,000 | 9,810 | 20 | 48 | 1,200 | 56 | 76 | 1.9 | 13,480 | 27 | 66 | 1,200 | 77 | 104 | 2.5 |
| 2100 | 2,100 | 6,540 | 13 | 34 | 1,200 | 40 | 53 | 1.3 | 9,170 | 18 | 46 | 1,200 | 54 | 72 | 1.8 |
| | 2,400 | 7,580 | 15 | 38 | 1,200 | 45 | 60 | 1.5 | 10,560 | 21 | 52 | 1,200 | 61 | 82 | 2.0 |
| | 2,700 | 8,620 | 17 | 44 | 1,200 | 52 | 69 | 1.6 | 11,940 | 24 | 58 | 1,200 | 68 | 92 | 2.3 |
| | 3,000 | 9,660 | 19 | 48 | 1,200 | 56 | 76 | 1.8 | 13,330 | 27 | 64 | 1,200 | 75 | 102 | 2.5 |
| 2400 | 2,400 | 7,350 | 15 | 38 | 1,200 | 45 | 59 | 1.4 | 10,330 | 21 | 52 | 1,200 | 61 | 82 | 2.0 |
| | 2,700 | 8,390 | 17 | 42 | 1,200 | 49 | 66 | 1.6 | 11,710 | 23 | 58 | 1,200 | 68 | 91 | 2.2 |
| | 3,000 | 9,430 | 19 | 46 | 1,200 | 54 | 73 | 1.8 | 13,100 | 26 | 64 | 1,200 | 75 | 101 | 2.5 |
| 2700 | 2,700 | 8,190 | 16 | 42 | 1,200 | 49 | 66 | 1.6 | 11,510 | 23 | 56 | 1,200 | 66 | 89 | 2.2 |
| | 3,000 | 9,230 | 18 | 46 | 1,200 | 54 | 72 | 1.8 | 12,900 | 26 | 62 | 1,200 | 73 | 98 | 2.4 |
| 3000 | 3,000 | 9,080 | 18 | 46 | 1,200 | 54 | 72 | 1.7 | 12,740 | 25 | 62 | 1,200 | 73 | 98 | 2.4 |

Number of Spans: 5 and 6

| Box Culvert Height, H | Box Culvert Span, S | 5: 2-Bars K ~ #4 Lgth mm | kg | 5: Bars L ~ #4 at 450 mm max No. | Lgth mm | kg | Reinf (kg) | Conc (m3) | 6: 2-Bars K ~ #4 Lgth mm | kg | 6: Bars L ~ #4 at 450 mm max No. | Lgth mm | kg | Reinf (kg) | Conc (m3) |
|---|---|---|---|---|---|---|---|---|---|---|---|---|---|---|---|
| 600 | 900 | 5,450 | 11 | 30 | 1,200 | 35 | 46 | 1.1 | 6,690 | 13 | 36 | 1,200 | 42 | 56 | 1.4 |
| | 1,200 | 7,180 | 14 | 38 | 1,200 | 45 | 59 | 1.4 | 8,770 | 17 | 46 | 1,200 | 54 | 71 | 1.7 |
| | 1,500 | 8,910 | 18 | 46 | 1,200 | 54 | 72 | 1.7 | 10,850 | 22 | 54 | 1,200 | 63 | 85 | 2.1 |
| 900 | 900 | 5,450 | 11 | 30 | 1,200 | 35 | 46 | 1.1 | 6,690 | 13 | 36 | 1,200 | 42 | 56 | 1.4 |
| | 1,200 | 7,180 | 14 | 38 | 1,200 | 45 | 59 | 1.4 | 8,770 | 17 | 46 | 1,200 | 54 | 71 | 1.7 |
| | 1,500 | 8,910 | 18 | 46 | 1,200 | 54 | 72 | 1.7 | 10,850 | 22 | 54 | 1,200 | 63 | 85 | 2.1 |
| | 1,800 | 10,650 | 21 | 54 | 1,200 | 63 | 85 | 2.1 | 12,930 | 26 | 64 | 1,200 | 75 | 101 | 2.5 |
| | 2,100 | 12,380 | 25 | 62 | 1,200 | 73 | 97 | 2.4 | 15,000 | 30 | 74 | 1,200 | 87 | 117 | 2.9 |
| 1200 | 1,200 | 7,180 | 14 | 38 | 1,200 | 45 | 59 | 1.4 | 8,770 | 17 | 46 | 1,200 | 54 | 71 | 1.7 |
| | 1,500 | 8,910 | 18 | 46 | 1,200 | 54 | 72 | 1.7 | 10,850 | 22 | 54 | 1,200 | 63 | 85 | 2.1 |
| | 1,800 | 10,650 | 21 | 54 | 1,200 | 63 | 85 | 2.1 | 12,930 | 26 | 64 | 1,200 | 75 | 101 | 2.5 |
| | 2,100 | 12,380 | 25 | 62 | 1,200 | 73 | 97 | 2.4 | 15,000 | 30 | 74 | 1,200 | 87 | 117 | 2.9 |
| | 2,400 | 14,110 | 28 | 68 | 1,200 | 80 | 108 | 2.7 | 17,080 | 34 | 82 | 1,200 | 96 | 130 | 3.2 |
| 1500 | 1,500 | 8,690 | 17 | 44 | 1,200 | 52 | 69 | 1.7 | 10,620 | 21 | 54 | 1,200 | 63 | 84 | 2.1 |
| | 1,800 | 10,420 | 21 | 52 | 1,200 | 61 | 82 | 2.0 | 12,700 | 25 | 62 | 1,200 | 73 | 98 | 2.4 |
| | 2,100 | 12,150 | 24 | 60 | 1,200 | 70 | 95 | 2.3 | 14,780 | 29 | 72 | 1,200 | 84 | 114 | 2.8 |
| | 2,400 | 13,880 | 28 | 68 | 1,200 | 80 | 107 | 2.6 | 16,860 | 34 | 82 | 1,200 | 96 | 130 | 3.2 |
| | 2,700 | 15,620 | 31 | 76 | 1,200 | 89 | 120 | 2.9 | 18,940 | 38 | 90 | 1,200 | 106 | 143 | 3.6 |
| | 3,000 | 17,350 | 34 | 84 | 1,200 | 99 | 133 | 3.3 | 21,010 | 42 | 100 | 1,200 | 117 | 159 | 3.9 |
| 1800 | 1,800 | 10,220 | 20 | 52 | 1,200 | 61 | 81 | 2.0 | 12,500 | 25 | 62 | 1,200 | 73 | 98 | 2.4 |
| | 2,100 | 11,950 | 24 | 60 | 1,200 | 70 | 94 | 2.3 | 14,580 | 29 | 72 | 1,200 | 84 | 113 | 2.8 |
| | 2,400 | 13,680 | 27 | 66 | 1,200 | 77 | 105 | 2.6 | 16,650 | 33 | 80 | 1,200 | 94 | 127 | 3.2 |
| | 2,700 | 15,410 | 31 | 74 | 1,200 | 87 | 117 | 2.9 | 18,730 | 37 | 90 | 1,200 | 106 | 143 | 3.5 |
| | 3,000 | 17,150 | 34 | 82 | 1,200 | 96 | 130 | 3.2 | 20,810 | 41 | 98 | 1,200 | 115 | 156 | 3.9 |
| 2100 | 2,100 | 11,800 | 23 | 58 | 1,200 | 68 | 91 | 2.3 | 14,420 | 29 | 70 | 1,200 | 82 | 111 | 2.8 |
| | 2,400 | 13,530 | 27 | 66 | 1,200 | 77 | 104 | 2.6 | 16,500 | 33 | 80 | 1,200 | 94 | 127 | 3.1 |
| | 2,700 | 15,260 | 30 | 74 | 1,200 | 87 | 117 | 2.9 | 18,580 | 37 | 90 | 1,200 | 106 | 142 | 3.5 |
| | 3,000 | 16,990 | 34 | 82 | 1,200 | 96 | 130 | 3.2 | 20,660 | 41 | 98 | 1,200 | 115 | 156 | 3.9 |
| 2400 | 2,400 | 13,300 | 26 | 66 | 1,200 | 77 | 104 | 2.5 | 16,270 | 32 | 78 | 1,200 | 91 | 124 | 3.1 |
| | 2,700 | 15,030 | 30 | 72 | 1,200 | 84 | 114 | 2.8 | 18,350 | 36 | 88 | 1,200 | 103 | 140 | 3.5 |
| | 3,000 | 16,760 | 33 | 80 | 1,200 | 94 | 127 | 3.2 | 20,430 | 41 | 98 | 1,200 | 115 | 156 | 3.8 |
| 2700 | 2,700 | 14,830 | 29 | 72 | 1,200 | 84 | 114 | 2.8 | 18,150 | 36 | 88 | 1,200 | 103 | 139 | 3.4 |
| | 3,000 | 16,560 | 33 | 80 | 1,200 | 94 | 127 | 3.1 | 20,230 | 40 | 96 | 1,200 | 113 | 153 | 3.8 |
| 3000 | 3,000 | 16,410 | 33 | 78 | 1,200 | 91 | 124 | 3.1 | 20,080 | 40 | 96 | 1,200 | 113 | 153 | 3.8 |

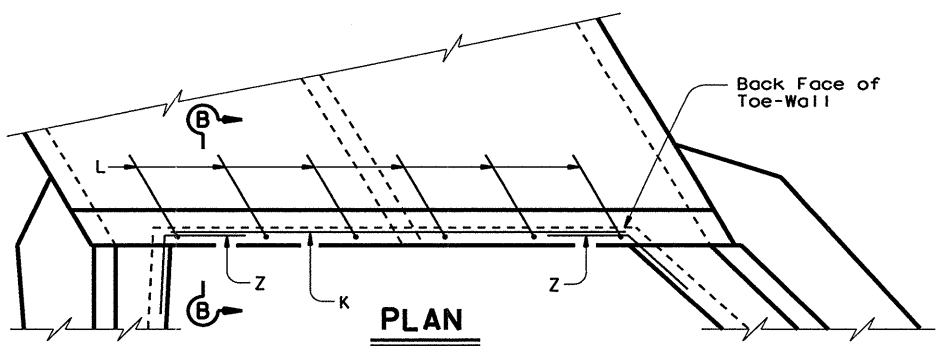


**PLAN**

SHOWING REINFORCING FOR CULVERT TOE-WALL

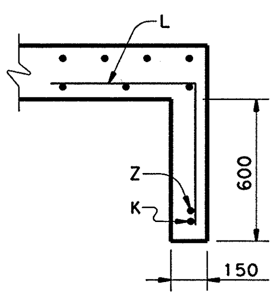


**SECTION B-B**

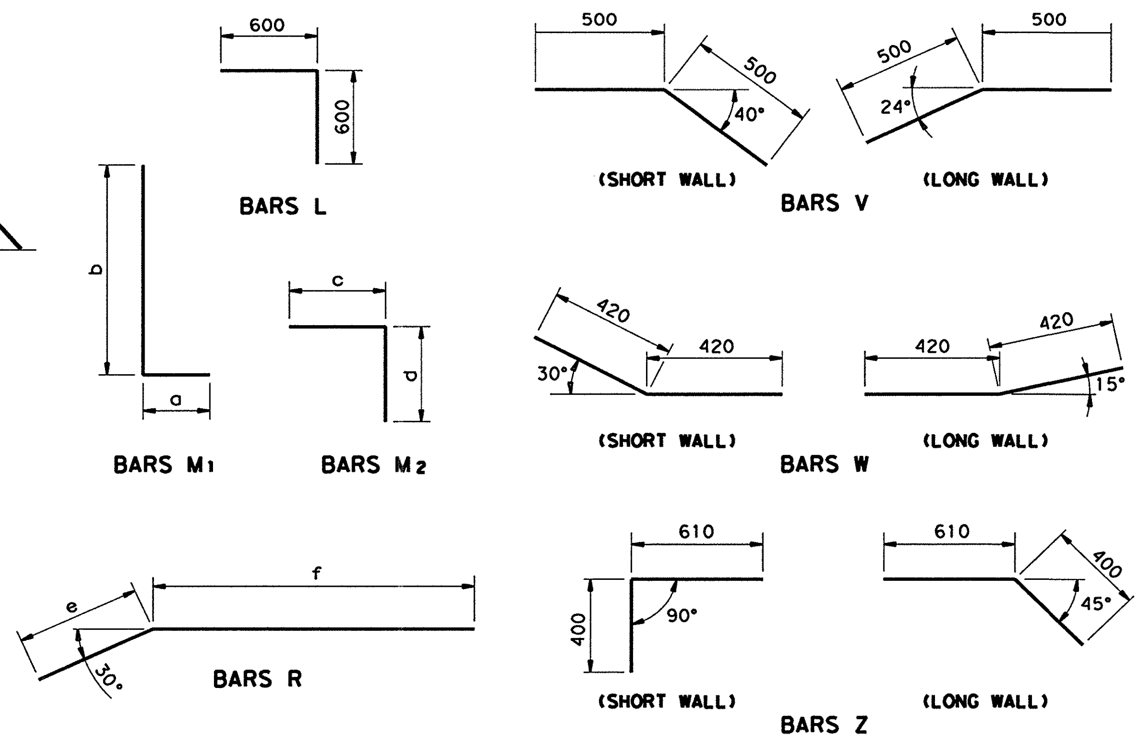


SHEET 2 OF 2

Texas Department of Transportation
Design Division (Bridge)

# FLARED WINGS
## FOR 30° SKEW BOX CULVERTS

## FW-30(M)

| FILE: fw-30std.dgn | DN: SDA | CK: EJU | DW: MCB | CK: SDA | STD: B104M |
|---|---|---|---|---|---|

© TxDOT October 1996

| DIST | FED REG | FEDERAL AID PROJECT | SHEET |
|---|---|---|---|
| SAT | 6 | NH 2000 (704), ETC. | 409 |

REVISIONS
5-97~ADD NOTE (4), GEN NOTES & MISC

| COUNTY | CONTROL | SECT | JOB | HIGHWAY |
|---|---|---|---|---|
| BEXAR | 2452 | 01 | 036, etc. | LP1604 |

# BILLS OF REINFORCING STEEL (Short and Long Wings for 2 Structure Ends)

| | Box Culvert Height, H | Bars M1 at 300 mm max | | | | | | | | | | Bars M2 at 300 mm max | | | | | | | | | | Bars N ~ #4 at 300 mm max | | | | | 2-Bars P1 ~ #5 | | 2-Bars P2 ~ #5 | | 2-Bars R ~ #6 | | | | 2-Bars T ~ #4 | | 2-Bars U1 ~ #6 | | 2-Bars U2 ~ #6 | | 4-Bars V ~ #6 | | Bars W ~ #5 | | 6-Bars X ~ #6 | | Bars Y ~ #6 | | 2-Bars Z ~ #4 | |
|---|---|---|---|---|---|---|---|---|---|---|---|---|---|---|---|---|---|---|---|---|---|---|---|---|---|---|---|---|---|---|---|---|---|---|---|---|---|---|---|---|---|---|---|---|---|---|---|
| | | No. | Size | Avg Lgth mm | kg | Min "a" | Max "a" | Avg "a" | Min "b" | Max "b" | Avg "b" | No. | Size | Avg Lgth mm | kg | Min "c" | Max "c" | Avg "c" | "d" | No. | Min Lgth mm | Max Lgth mm | Avg Lgth mm | kg | Lgth mm | kg | Lgth mm | kg | Lgth mm | kg | "e" | "f" | Lgth mm | kg | Lgth mm | kg | Lgth mm | kg | Lgth mm | kg | No. | Lgth mm | kg | Lgth mm | kg | No. | Lgth mm | kg | Lgth mm | kg |
| SHORT WALLS | 600 | 12 | #4 | 880 | 10 | 290 | 290 | 290 | 300 | 870 | 590 | 12 | #4 | 1,260 | 15 | 600 | 600 | 600 | 660 | 4 | 560 | 1,180 | 870 | 3 | 1,600 | 5 | 1,610 | 5 | 1,960 | 9 | 770 | 1,190 | 1,150 | 2 | 1,300 | 6 | 1,340 | 6 | 1,000 | 9 | 4 | 840 | 5 | 1,000 | 13 | 0 | ~ | ~ | 1,070 | 2 |
| | 900 | 16 | #4 | 1,050 | 17 | 290 | 290 | 290 | 300 | 1,220 | 760 | 16 | #4 | 1,260 | 20 | 600 | 600 | 600 | 660 | 8 | 560 | 1,910 | 1,240 | 10 | 2,330 | 7 | 2,340 | 7 | 2,690 | 12 | 770 | 1,920 | 1,880 | 4 | 2,110 | 9 | 2,150 | 10 | 1,000 | 9 | 8 | 840 | 10 | 1,000 | 13 | 0 | ~ | ~ | 1,070 | 2 |
| | 1,200 | 20 | #4 | 1,220 | 24 | 290 | 290 | 290 | 300 | 1,550 | 930 | 20 | #4 | 1,260 | 25 | 600 | 600 | 600 | 660 | 10 | 560 | 2,590 | 1,580 | 16 | 3,010 | 9 | 3,020 | 9 | 3,370 | 15 | 770 | 2,600 | 2,560 | 5 | 2,870 | 13 | 2,910 | 13 | 1,000 | 9 | 10 | 840 | 13 | 1,000 | 13 | 0 | ~ | ~ | 1,070 | 2 |
| | 1,500 | 26 | #4 | 1,450 | 37 | 290 | 380 | 340 | 300 | 1,920 | 1,110 | 26 | #4 | 1,390 | 36 | 600 | 850 | 730 | 660 | 12 | 560 | 3,360 | 1,960 | 23 | 3,750 | 12 | 3,790 | 12 | 4,310 | 19 | 940 | 3,370 | 3,300 | 7 | 3,720 | 17 | 3,760 | 17 | 1,000 | 9 | 12 | 840 | 16 | 1,000 | 13 | 2 | 720 | 3 | 1,070 | 2 |
| | 1,800 | 30 | #5 | 1,640 | 76 | 290 | 460 | 380 | 300 | 2,220 | 1,260 | 30 | #5 | 1,470 | 68 | 610 | 1,010 | 810 | 660 | 14 | 560 | 3,980 | 2,270 | 32 | 4,360 | 14 | 4,410 | 14 | 5,020 | 22 | 1,030 | 3,990 | 3,910 | 8 | 4,410 | 20 | 4,450 | 20 | 1,000 | 9 | 14 | 840 | 18 | 1,000 | 13 | 2 | 870 | 4 | 1,070 | 2 |
| | 2,100 | 34 | #5 | 1,860 | 98 | 310 | 540 | 430 | 320 | 2,540 | 1,430 | 34 | #5 | 1,590 | 84 | 630 | 1,180 | 910 | 680 | 16 | 570 | 4,600 | 2,590 | 41 | 4,970 | 15 | 5,030 | 16 | 5,770 | 26 | 1,150 | 4,620 | 4,520 | 9 | 5,100 | 23 | 5,140 | 23 | 1,000 | 9 | 16 | 840 | 21 | 1,000 | 13 | 2 | 1,020 | 5 | 1,070 | 2 |
| | 2,400 | 38 | #6 | 2,050 | 174 | 310 | 630 | 470 | 320 | 2,840 | 1,580 | 38 | #6 | 1,680 | 143 | 630 | 1,360 | 1,000 | 680 | 18 | 570 | 5,220 | 2,900 | 52 | 5,570 | 17 | 5,650 | 18 | 6,490 | 29 | 1,240 | 5,250 | 5,120 | 10 | 5,790 | 26 | 5,830 | 26 | 1,000 | 9 | 18 | 840 | 23 | 1,000 | 13 | 4 | 1,140 | 10 | 1,070 | 2 |
| | 2,700 | 42 | #8 | 2,250 | 376 | 320 | 710 | 520 | 320 | 3,140 | 1,730 | 42 | #8 | 1,750 | 292 | 630 | 1,510 | 1,070 | 680 | 20 | 570 | 5,850 | 3,210 | 64 | 6,170 | 19 | 6,270 | 19 | 7,190 | 32 | 1,320 | 5,870 | 5,720 | 11 | 6,480 | 29 | 6,520 | 29 | 1,000 | 9 | 20 | 840 | 26 | 1,000 | 13 | 4 | 1,270 | 11 | 1,070 | 2 |
| | 3,000 | 46 | #8 | 2,500 | 457 | 350 | 800 | 580 | 350 | 3,480 | 1,920 | 46 | #8 | 1,890 | 345 | 660 | 1,690 | 1,180 | 710 | 22 | 570 | 6,480 | 3,530 | 77 | 6,780 | 21 | 6,890 | 21 | 7,950 | 36 | 1,450 | 6,500 | 6,330 | 13 | 7,170 | 32 | 7,220 | 32 | 1,000 | 9 | 22 | 840 | 29 | 1,000 | 13 | 4 | 1,430 | 13 | 1,070 | 2 |
| LONG WALLS | 600 | 16 | #4 | 820 | 13 | 290 | 290 | 290 | 280 | 780 | 530 | 16 | #4 | 1,260 | 20 | 600 | 600 | 600 | 660 | 4 | 850 | 2,050 | 1,450 | 6 | 3,090 | 10 | 2,770 | 9 | 3,240 | 14 | 890 | 2,350 | 2,640 | 5 | 2,310 | 10 | 2,190 | 10 | 1,000 | 9 | 4 | 840 | 5 | 1,000 | 13 | 2 | 460 | 2 | 1,070 | 2 |
| | 900 | 26 | #4 | 1,000 | 26 | 290 | 290 | 290 | 280 | 1,130 | 710 | 26 | #4 | 1,260 | 33 | 600 | 600 | 600 | 660 | 8 | 850 | 3,450 | 2,150 | 17 | 4,490 | 14 | 4,170 | 13 | 4,640 | 21 | 890 | 3,750 | 4,040 | 8 | 3,760 | 17 | 3,630 | 16 | 1,000 | 9 | 8 | 840 | 10 | 1,000 | 13 | 2 | 460 | 2 | 1,070 | 2 |
| | 1,200 | 34 | #4 | 1,160 | 39 | 290 | 290 | 290 | 280 | 1,460 | 870 | 34 | #4 | 1,260 | 43 | 600 | 600 | 600 | 660 | 10 | 850 | 4,770 | 2,810 | 28 | 5,810 | 18 | 5,490 | 17 | 5,960 | 27 | 890 | 5,070 | 5,360 | 11 | 5,120 | 23 | 4,990 | 22 | 1,000 | 9 | 10 | 840 | 13 | 1,000 | 13 | 2 | 460 | 2 | 1,070 | 2 |
| | 1,500 | 44 | #4 | 1,400 | 61 | 290 | 380 | 340 | 280 | 1,830 | 1,060 | 44 | #4 | 1,380 | 60 | 600 | 840 | 720 | 660 | 12 | 850 | 6,250 | 3,550 | 42 | 7,460 | 23 | 6,970 | 22 | 7,680 | 34 | 1,130 | 6,550 | 7,010 | 14 | 6,640 | 30 | 6,510 | 29 | 1,000 | 9 | 12 | 840 | 16 | 1,000 | 13 | 2 | 670 | 3 | 1,070 | 2 |
| | 1,800 | 52 | #5 | 1,580 | 128 | 290 | 450 | 370 | 280 | 2,130 | 1,210 | 52 | #5 | 1,460 | 118 | 600 | 990 | 800 | 660 | 14 | 850 | 7,450 | 4,150 | 58 | 8,810 | 27 | 8,170 | 25 | 9,000 | 40 | 1,250 | 7,750 | 8,360 | 17 | 7,880 | 35 | 7,750 | 35 | 1,000 | 9 | 14 | 840 | 18 | 1,000 | 13 | 4 | 750 | 7 | 1,070 | 2 |
| | 2,100 | 60 | #5 | 1,800 | 168 | 310 | 530 | 420 | 300 | 2,450 | 1,380 | 60 | #5 | 1,570 | 146 | 620 | 1,160 | 890 | 680 | 16 | 810 | 8,610 | 4,710 | 75 | 10,120 | 31 | 9,370 | 29 | 10,370 | 46 | 1,410 | 8,960 | 9,670 | 19 | 9,120 | 41 | 8,950 | 40 | 1,000 | 9 | 16 | 840 | 21 | 1,000 | 13 | 4 | 870 | 8 | 1,070 | 2 |
| | 2,400 | 68 | #6 | 2,000 | 304 | 310 | 620 | 470 | 300 | 2,750 | 1,530 | 68 | #6 | 1,660 | 252 | 620 | 1,330 | 980 | 680 | 18 | 810 | 9,810 | 5,310 | 95 | 11,490 | 36 | 10,570 | 33 | 11,700 | 52 | 1,540 | 10,160 | 11,040 | 22 | 10,350 | 46 | 10,190 | 46 | 1,000 | 9 | 18 | 840 | 23 | 1,000 | 13 | 6 | 980 | 13 | 1,070 | 2 |
| | 2,700 | 76 | #8 | 2,190 | 661 | 310 | 700 | 510 | 300 | 3,050 | 1,680 | 76 | #8 | 1,730 | 523 | 620 | 1,480 | 1,050 | 680 | 20 | 810 | 11,010 | 5,910 | 117 | 12,830 | 40 | 11,770 | 37 | 13,000 | 58 | 1,640 | 11,360 | 12,380 | 25 | 11,590 | 52 | 11,430 | 51 | 1,000 | 9 | 20 | 840 | 26 | 1,000 | 13 | 6 | 1,100 | 15 | 1,070 | 2 |
| | 3,000 | 84 | #8 | 2,420 | 808 | 340 | 790 | 570 | 330 | 3,360 | 1,850 | 84 | #8 | 1,870 | 624 | 650 | 1,660 | 1,160 | 710 | 22 | 760 | 12,160 | 6,460 | 141 | 14,150 | 44 | 12,970 | 40 | 14,380 | 64 | 1,820 | 12,560 | 13,700 | 27 | 12,830 | 57 | 12,610 | 56 | 1,000 | 9 | 22 | 840 | 29 | 1,000 | 13 | 6 | 1,230 | 16 | 1,070 | 2 |

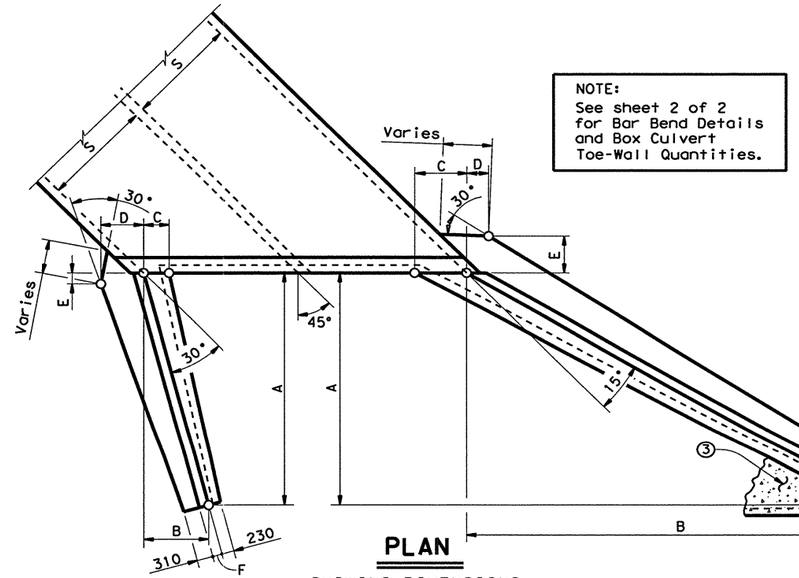


## PLAN
### SHOWING DIMENSIONS

NOTE:
See sheet 2 of 2 for Bar Bend Details and Box Culvert Toe-Wall Quantities.

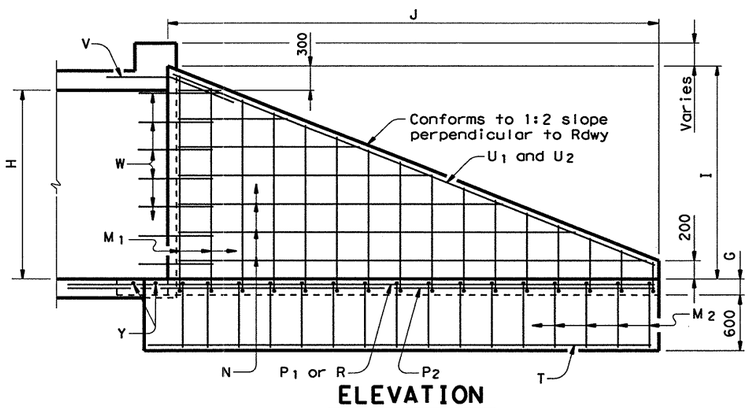


## ELEVATION
### SHOWING REINFORCING

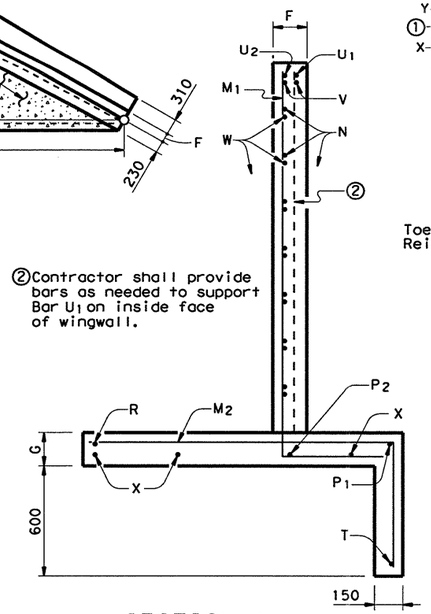


## SECTION A-A

②Contractor shall provide bars as needed to support Bar U1 on inside face of wingwall.

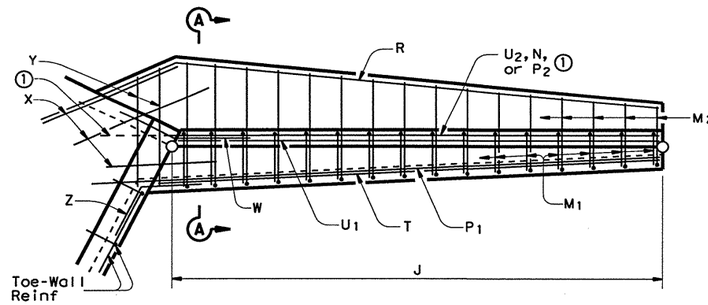


①Extend Bar P2 only into bottom slab of Box Culvert.

## PLAN
### SHOWING REINFORCING

③When shown elsewhere on the plans, a 130 mm deep concrete riprap shall be constructed. Unless otherwise shown on the plans or directed by the Engineer, the riprap shall have a 150 mm wide by 450 mm deep reinforced concrete toewall along all edges adjacent to natural ground; the toewall shall be reinforced by extending typical riprap reinforcing into the toewall; construction joints or grooved joints, oriented in the direction of flow, shall extend across the full distance of the riprap, at intervals of approximately 6,000 mm.

## TABLE OF DIMENSIONS

| Box Culvert Height, H | SHORT WALLS | | | | | | | | | LONG WALLS | | | | | | | | |
|---|---|---|---|---|---|---|---|---|---|---|---|---|---|---|---|---|---|---|
| | A | B | C | D | E | F | G | I | J | A | B | C | D | E | F | G | I | J |
| 600 | 1,200 | 322 | 238 | 454 | 122 | 160 | 160 | 800 | 1,242 | 1,200 | 2,078 | 460 | 235 | 407 | 160 | 160 | 800 | 2,400 |
| 900 | 1,900 | 509 | 238 | 454 | 122 | 160 | 160 | 1,150 | 1,967 | 1,900 | 3,291 | 460 | 235 | 407 | 160 | 160 | 1,150 | 3,800 |
| 1,200 | 2,560 | 686 | 238 | 454 | 122 | 160 | 160 | 1,480 | 2,650 | 2,560 | 4,434 | 460 | 235 | 407 | 160 | 160 | 1,480 | 5,120 |
| 1,500 | 3,300 | 884 | 329 | 609 | 163 | 160 | 160 | 1,850 | 3,416 | 3,300 | 5,716 | 655 | 315 | 546 | 160 | 160 | 1,850 | 6,600 |
| 1,800 | 3,900 | 1,045 | 409 | 686 | 184 | 160 | 160 | 2,150 | 4,038 | 3,900 | 6,755 | 831 | 355 | 615 | 160 | 160 | 2,150 | 7,800 |
| 2,100 | 4,500 | 1,206 | 470 | 792 | 212 | 180 | 180 | 2,450 | 4,659 | 4,500 | 7,794 | 963 | 410 | 710 | 180 | 180 | 2,450 | 9,000 |
| 2,400 | 5,100 | 1,367 | 560 | 879 | 236 | 180 | 180 | 2,750 | 5,280 | 5,100 | 8,833 | 1,163 | 455 | 788 | 180 | 180 | 2,750 | 10,200 |
| 2,700 | 5,700 | 1,527 | 641 | 947 | 254 | 180 | 180 | 3,050 | 5,901 | 5,700 | 9,873 | 1,342 | 490 | 849 | 180 | 180 | 3,050 | 11,400 |
| 3,000 | 6,300 | 1,688 | 701 | 1,063 | 285 | 210 | 210 | 3,350 | 6,522 | 6,300 | 10,912 | 1,473 | 550 | 953 | 210 | 210 | 3,350 | 12,600 |

## QUANTITIES ④ (Wings for 2 Structure Ends)

| Box Culvert Height, H | Conc ($m^3$) | Reinf (kg) |
|---|---|---|
| 600 | 2.1 | 220 |
| 900 | 3.7 | 332 |
| 1,200 | 5.3 | 434 |
| 1,500 | 7.9 | 582 |
| 1,800 | 10.2 | 852 |
| 2,100 | 14.2 | 1,033 |
| 2,400 | 17.5 | 1,500 |
| 2,700 | 21.0 | 2,562 |
| 3,000 | 28.6 | 3,033 |

④Quantities shown are for wings only. See Item "Headwalls and Wingwalls" for a description of other components that may be included in the pay item Wingwalls.

**GENERAL NOTES:**

Designed according to AASHTO 1992 Standard and current Interim Specifications.

All reinforcing steel shall be Grade 420 (fy = 420 MPa).

All concrete shall have a minimum 28 day compressive strength of 21 MPa.

All Reinforcing bars shall be adjusted to provide a 35 mm clear cover.

The bottom slab of the barrel, wing footing and toewalls shall be placed in one continuous operation.

When structure is founded on solid rock, depth of Toe-walls for culverts and Wingwalls may be reduced or eliminated as directed by the Engineer.

All dimensions are in millimeters and all masses are in kilograms unless otherwise noted.

SHEET 1 OF 2

Texas Department of Transportation
Design Division (Bridge)

# FLARED WINGS
## FOR 45° SKEW BOX CULVERTS

# FW-45 (M)

| FILE: fw-45std.dgn | DN: SDA | CK: EJU | DW: MCB | CK: SDA | STD: B105M |
|---|---|---|---|---|---|
| ©TxDOT October 1996 | DIST | FED REG | FEDERAL AID PROJECT • | | SHEET |
| REVISIONS | SAT | 6 | NH 2000 (704), etc. | | 410 |
| 5-97-ADD NOTE ④, GEN NOTES & MISC | COUNTY | | CONTROL | SECT | JOB | HIGHWAY |
| | BEXAR | | 2452 | '01 | 036, etc. | LP1604 |

DISCLAIMER:
The use of this standard is governed by the "Texas Engineering Practice Act". No warranty of any kind is made by TxDOT for any purpose whatsoever. TxDOT assumes no responsibility for the conversion of this standard to other formats or for incorrect results or damages resulting from its use.

ACC: (LV=1,3 for Metric)
LEVELS DISPLAYED 1 3

# BOX CULVERT TOE-WALL QUANTITIES (For 2 Structure Ends)

| Box Culvert Height, H | Box Culvert Span, S | Number of Spans | | | | | | | | | | | | | | | | | | | | | | | | | | | | | | | | | |
|---|---|---|---|---|---|---|---|---|---|---|---|---|---|---|---|---|---|---|---|---|---|---|---|---|---|---|---|---|---|---|---|---|---|---|---|
| | | 1 | | | | | | | 2 | | | | | | | | 3 | | | | | | | 4 | | | | | | | 5 | | | | | | |
| | | 2-Bars K ~ #4 | | Bars L ~ #4 at 450 mm max | | | Reinf | Conc | 2-Bars K ~ #4 | | Bars L ~ #4 at 450 mm max | | | Reinf | Conc | 2-Bars K ~ #4 | | Bars L ~ #4 at 450 mm max | | | Reinf | Conc | 2-Bars K ~ #4 | | Bars L ~ #4 at 450 mm max | | | Reinf | Conc | 2-Bars K ~ #4 | | Bars L ~ #4 at 450 mm max | | | Reinf | Conc |
| | | Lgth mm | kg | No. | Lgth mm | kg | (Kg) | (m3) | Lgth mm | kg | No. | Lgth mm | kg | (Kg) | (m3) | Lgth mm | kg | No. | Lgth mm | kg | (Kg) | (m3) | Lgth mm | kg | No. | Lgth mm | kg | (Kg) | (m3) | Lgth mm | kg | No. | Lgth mm | kg | (Kg) | (m3) |
| 600 | 900 | 570 | 1 | 6 | 1,200 | 7 | 8 | 0.2 | 2,090 | 4 | 14 | 1,200 | 16 | 20 | 0.5 | 3,620 | 7 | 22 | 1,200 | 26 | 33 | 0.8 | 5,140 | 10 | 28 | 1,200 | 33 | 43 | 1.1 | 6,660 | 13 | 36 | 1,200 | 42 | 55 | 1.4 | 8,180 | 16 | 44 | 1,200 | 52 | 68 | 1.7 |
| | 1,200 | 1,000 | 2 | 8 | 1,200 | 9 | 11 | 0.2 | 2,940 | 6 | 18 | 1,200 | 21 | 27 | 0.6 | 4,890 | 10 | 28 | 1,200 | 33 | 43 | 1.0 | 6,830 | 14 | 36 | 1,200 | 42 | 56 | 1.4 | 8,780 | 17 | 46 | 1,200 | 54 | 71 | 1.7 | 10,720 | 21 | 54 | 1,200 | 63 | 84 | 2.1 |
| | 1,500 | 1,420 | 3 | 10 | 1,200 | 12 | 15 | 0.3 | 3,790 | 8 | 22 | 1,200 | 26 | 34 | 0.8 | 6,160 | 12 | 32 | 1,200 | 38 | 50 | 1.2 | 8,530 | 17 | 44 | 1,200 | 52 | 69 | 1.7 | 10,900 | 22 | 54 | 1,200 | 63 | 85 | 2.1 | 13,270 | 26 | 66 | 1,200 | 77 | 103 | 2.6 |
| 900 | 900 | 570 | 1 | 6 | 1,200 | 7 | 8 | 0.2 | 2,090 | 4 | 14 | 1,200 | 16 | 20 | 0.5 | 3,620 | 7 | 22 | 1,200 | 26 | 33 | 0.8 | 5,140 | 10 | 28 | 1,200 | 33 | 43 | 1.1 | 6,660 | 13 | 36 | 1,200 | 42 | 55 | 1.4 | 8,180 | 16 | 44 | 1,200 | 52 | 68 | 1.7 |
| | 1,200 | 1,000 | 2 | 8 | 1,200 | 9 | 11 | 0.2 | 2,940 | 6 | 18 | 1,200 | 21 | 27 | 0.6 | 4,890 | 10 | 28 | 1,200 | 33 | 43 | 1.0 | 6,830 | 14 | 36 | 1,200 | 42 | 56 | 1.4 | 8,780 | 17 | 46 | 1,200 | 54 | 71 | 1.7 | 10,720 | 21 | 54 | 1,200 | 63 | 84 | 2.1 |
| | 1,500 | 1,420 | 3 | 10 | 1,200 | 12 | 15 | 0.3 | 3,790 | 8 | 22 | 1,200 | 26 | 34 | 0.8 | 6,160 | 12 | 32 | 1,200 | 38 | 50 | 1.2 | 8,530 | 17 | 44 | 1,200 | 52 | 69 | 1.7 | 10,900 | 22 | 54 | 1,200 | 63 | 85 | 2.1 | 13,270 | 26 | 66 | 1,200 | 77 | 103 | 2.6 |
| | 1,800 | 1,850 | 4 | 12 | 1,200 | 14 | 18 | 0.4 | 4,640 | 9 | 26 | 1,200 | 30 | 39 | 0.9 | 7,430 | 15 | 38 | 1,200 | 45 | 60 | 1.5 | 10,230 | 20 | 52 | 1,200 | 61 | 81 | 2.0 | 13,020 | 26 | 64 | 1,200 | 75 | 101 | 2.5 | 15,810 | 31 | 78 | 1,200 | 91 | 122 | 3.0 |
| | 2,100 | 2,270 | 5 | 14 | 1,200 | 16 | 21 | 0.5 | 5,490 | 11 | 30 | 1,200 | 35 | 46 | 1.1 | 8,710 | 17 | 44 | 1,200 | 52 | 69 | 1.7 | 11,920 | 24 | 58 | 1,200 | 68 | 92 | 2.3 | 15,140 | 30 | 74 | 1,200 | 87 | 117 | 2.9 | 18,360 | 36 | 88 | 1,200 | 103 | 139 | 3.5 |
| 1200 | 1,200 | 1,000 | 2 | 8 | 1,200 | 9 | 11 | 0.2 | 2,940 | 6 | 18 | 1,200 | 21 | 27 | 0.6 | 4,890 | 10 | 28 | 1,200 | 33 | 43 | 1.0 | 6,830 | 14 | 36 | 1,200 | 42 | 56 | 1.4 | 8,780 | 17 | 46 | 1,200 | 54 | 71 | 1.7 | 10,720 | 21 | 54 | 1,200 | 63 | 84 | 2.1 |
| | 1,500 | 1,420 | 3 | 10 | 1,200 | 12 | 15 | 0.3 | 3,790 | 8 | 22 | 1,200 | 26 | 34 | 0.8 | 6,160 | 12 | 32 | 1,200 | 38 | 50 | 1.2 | 8,530 | 17 | 44 | 1,200 | 52 | 69 | 1.7 | 10,900 | 22 | 54 | 1,200 | 63 | 85 | 2.1 | 13,270 | 26 | 66 | 1,200 | 77 | 103 | 2.6 |
| | 1,800 | 1,850 | 4 | 12 | 1,200 | 14 | 18 | 0.4 | 4,640 | 9 | 26 | 1,200 | 30 | 39 | 0.9 | 7,430 | 15 | 38 | 1,200 | 45 | 60 | 1.5 | 10,230 | 20 | 52 | 1,200 | 61 | 81 | 2.0 | 13,020 | 26 | 64 | 1,200 | 75 | 101 | 2.5 | 15,810 | 31 | 78 | 1,200 | 91 | 122 | 3.0 |
| | 2,100 | 2,270 | 5 | 14 | 1,200 | 16 | 21 | 0.5 | 5,490 | 11 | 30 | 1,200 | 35 | 46 | 1.1 | 8,710 | 17 | 44 | 1,200 | 52 | 69 | 1.7 | 11,920 | 24 | 58 | 1,200 | 68 | 92 | 2.3 | 15,140 | 30 | 74 | 1,200 | 87 | 117 | 2.9 | 18,360 | 36 | 88 | 1,200 | 103 | 139 | 3.5 |
| | 2,400 | 2,700 | 5 | 16 | 1,200 | 19 | 24 | 0.5 | 6,340 | 13 | 32 | 1,200 | 38 | 51 | 1.2 | 9,980 | 20 | 50 | 1,200 | 59 | 79 | 1.9 | 13,620 | 27 | 66 | 1,200 | 77 | 104 | 2.6 | 17,260 | 34 | 84 | 1,200 | 99 | 133 | 3.3 | 20,900 | 42 | 100 | 1,200 | 117 | 159 | 4.0 |
| 1500 | 1,500 | 1,140 | 2 | 10 | 1,200 | 12 | 14 | 0.3 | 3,510 | 7 | 20 | 1,200 | 23 | 30 | 0.7 | 5,870 | 12 | 32 | 1,200 | 38 | 50 | 1.2 | 8,240 | 16 | 42 | 1,200 | 49 | 65 | 1.6 | 10,610 | 21 | 54 | 1,200 | 63 | 84 | 2.1 | 12,980 | 26 | 64 | 1,200 | 75 | 101 | 2.5 |
| | 1,800 | 1,560 | 3 | 10 | 1,200 | 12 | 15 | 0.3 | 4,350 | 9 | 24 | 1,200 | 28 | 37 | 0.9 | 7,150 | 14 | 38 | 1,200 | 45 | 59 | 1.4 | 9,940 | 20 | 50 | 1,200 | 59 | 79 | 1.9 | 12,730 | 25 | 64 | 1,200 | 75 | 100 | 2.5 | 15,530 | 31 | 76 | 1,200 | 89 | 120 | 3.0 |
| | 2,100 | 1,990 | 4 | 12 | 1,200 | 14 | 18 | 0.4 | 5,200 | 10 | 28 | 1,200 | 33 | 43 | 1.0 | 8,420 | 17 | 42 | 1,200 | 49 | 66 | 1.6 | 11,640 | 23 | 58 | 1,200 | 68 | 91 | 2.2 | 14,850 | 30 | 72 | 1,200 | 84 | 114 | 2.8 | 18,070 | 36 | 88 | 1,200 | 103 | 139 | 3.4 |
| | 2,400 | 2,410 | 5 | 14 | 1,200 | 16 | 21 | 0.5 | 6,050 | 12 | 32 | 1,200 | 38 | 50 | 1.2 | 9,690 | 19 | 48 | 1,200 | 56 | 75 | 1.9 | 13,330 | 27 | 66 | 1,200 | 77 | 104 | 2.5 | 16,980 | 34 | 82 | 1,200 | 96 | 130 | 3.2 | 20,620 | 41 | 98 | 1,200 | 115 | 156 | 3.9 |
| | 2,700 | 2,830 | 6 | 16 | 1,200 | 19 | 25 | 0.6 | 6,900 | 14 | 36 | 1,200 | 42 | 56 | 1.3 | 10,970 | 22 | 54 | 1,200 | 63 | 85 | 2.1 | 15,030 | 30 | 72 | 1,200 | 84 | 114 | 2.8 | 19,100 | 38 | 92 | 1,200 | 108 | 146 | 3.6 | 23,160 | 46 | 110 | 1,200 | 129 | 175 | 4.4 |
| | 3,000 | 3,260 | 6 | 18 | 1,200 | 21 | 27 | 0.6 | 7,750 | 15 | 40 | 1,200 | 47 | 62 | 1.5 | 12,240 | 24 | 60 | 1,200 | 70 | 94 | 2.3 | 16,730 | 33 | 80 | 1,200 | 94 | 127 | 3.1 | 21,220 | 42 | 100 | 1,200 | 117 | 159 | 4.0 | 25,710 | 51 | 122 | 1,200 | 143 | 194 | 4.8 |
| 1800 | 1,800 | 1,300 | 3 | 10 | 1,200 | 12 | 15 | 0.3 | 4,100 | 8 | 22 | 1,200 | 26 | 34 | 0.8 | 6,890 | 14 | 36 | 1,200 | 42 | 56 | 1.4 | 9,680 | 19 | 48 | 1,200 | 56 | 75 | 1.9 | 12,480 | 25 | 62 | 1,200 | 73 | 98 | 2.4 | 15,270 | 30 | 76 | 1,200 | 89 | 119 | 2.9 |
| | 2,100 | 1,730 | 3 | 12 | 1,200 | 14 | 17 | 0.4 | 4,950 | 10 | 26 | 1,200 | 30 | 40 | 1.0 | 8,160 | 16 | 42 | 1,200 | 49 | 65 | 1.6 | 11,380 | 23 | 56 | 1,200 | 66 | 89 | 2.2 | 14,600 | 29 | 72 | 1,200 | 84 | 113 | 2.8 | 17,820 | 35 | 86 | 1,200 | 101 | 136 | 3.4 |
| | 2,400 | 2,150 | 4 | 14 | 1,200 | 16 | 20 | 0.4 | 5,790 | 12 | 30 | 1,200 | 35 | 47 | 1.1 | 9,440 | 19 | 48 | 1,200 | 56 | 75 | 1.8 | 13,080 | 26 | 64 | 1,200 | 75 | 101 | 2.5 | 16,720 | 33 | 80 | 1,200 | 94 | 127 | 3.2 | 20,360 | 40 | 98 | 1,200 | 115 | 155 | 3.9 |
| | 2,700 | 2,580 | 5 | 16 | 1,200 | 19 | 24 | 0.5 | 6,640 | 13 | 34 | 1,200 | 40 | 53 | 1.3 | 10,710 | 21 | 52 | 1,200 | 61 | 82 | 2.0 | 14,780 | 29 | 72 | 1,200 | 84 | 113 | 2.8 | 18,840 | 37 | 90 | 1,200 | 106 | 143 | 3.6 | 22,910 | 46 | 108 | 1,200 | 127 | 173 | 4.3 |
| | 3,000 | 3,000 | 6 | 18 | 1,200 | 21 | 27 | 0.6 | 7,490 | 15 | 38 | 1,200 | 45 | 60 | 1.4 | 11,980 | 24 | 58 | 1,200 | 68 | 92 | 2.3 | 16,470 | 33 | 80 | 1,200 | 94 | 127 | 3.1 | 20,960 | 42 | 100 | 1,200 | 117 | 159 | 3.9 | 25,450 | 51 | 120 | 1,200 | 141 | 192 | 4.8 |
| 2100 | 2,100 | 1,540 | 3 | 10 | 1,200 | 12 | 15 | 0.3 | 4,750 | 9 | 26 | 1,200 | 30 | 39 | 0.9 | 7,970 | 16 | 40 | 1,200 | 47 | 63 | 1.5 | 11,190 | 22 | 56 | 1,200 | 66 | 88 | 2.2 | 14,410 | 29 | 70 | 1,200 | 82 | 111 | 2.8 | 17,620 | 35 | 86 | 1,200 | 101 | 136 | 3.4 |
| | 2,400 | 1,960 | 4 | 12 | 1,200 | 14 | 18 | 0.4 | 5,600 | 11 | 30 | 1,200 | 35 | 46 | 1.1 | 9,240 | 18 | 46 | 1,200 | 54 | 72 | 1.8 | 12,890 | 26 | 64 | 1,200 | 75 | 101 | 2.5 | 16,530 | 33 | 80 | 1,200 | 94 | 127 | 3.1 | 20,170 | 40 | 96 | 1,200 | 113 | 153 | 3.8 |
| | 2,700 | 2,390 | 5 | 14 | 1,200 | 16 | 21 | 0.5 | 6,450 | 13 | 34 | 1,200 | 40 | 53 | 1.2 | 10,520 | 21 | 52 | 1,200 | 61 | 82 | 2.0 | 14,580 | 29 | 70 | 1,200 | 82 | 111 | 2.8 | 18,650 | 37 | 90 | 1,200 | 106 | 143 | 3.5 | 22,720 | 45 | 108 | 1,200 | 127 | 172 | 4.3 |
| | 3,000 | 2,810 | 6 | 16 | 1,200 | 19 | 25 | 0.6 | 7,300 | 15 | 38 | 1,200 | 45 | 60 | 1.4 | 11,790 | 23 | 58 | 1,200 | 68 | 91 | 2.2 | 16,280 | 32 | 78 | 1,200 | 91 | 123 | 3.1 | 20,770 | 41 | 98 | 1,200 | 115 | 156 | 3.9 | 25,260 | 50 | 120 | 1,200 | 141 | 191 | 4.7 |
| 2400 | 2,400 | 1,670 | 3 | 12 | 1,200 | 14 | 17 | 0.4 | 5,310 | 11 | 28 | 1,200 | 33 | 44 | 1.0 | 8,950 | 18 | 46 | 1,200 | 54 | 72 | 1.7 | 12,600 | 25 | 62 | 1,200 | 73 | 98 | 2.4 | 16,240 | 32 | 78 | 1,200 | 91 | 123 | 3.1 | 19,880 | 40 | 96 | 1,200 | 113 | 153 | 3.8 |
| | 2,700 | 2,090 | 4 | 14 | 1,200 | 16 | 20 | 0.4 | 6,160 | 12 | 32 | 1,200 | 38 | 50 | 1.2 | 10,230 | 20 | 50 | 1,200 | 59 | 79 | 2.0 | 14,290 | 28 | 70 | 1,200 | 82 | 110 | 2.7 | 18,360 | 36 | 88 | 1,200 | 103 | 139 | 3.5 | 22,420 | 45 | 106 | 1,200 | 124 | 169 | 4.2 |
| | 3,000 | 2,520 | 5 | 16 | 1,200 | 19 | 24 | 0.5 | 7,010 | 14 | 36 | 1,200 | 42 | 56 | 1.3 | 11,500 | 23 | 56 | 1,200 | 66 | 89 | 2.2 | 15,990 | 32 | 76 | 1,200 | 89 | 121 | 3.0 | 20,480 | 41 | 98 | 1,200 | 115 | 156 | 3.9 | 24,970 | 50 | 118 | 1,200 | 138 | 188 | 4.7 |
| 2700 | 2,700 | 1,840 | 4 | 12 | 1,200 | 14 | 18 | 0.4 | 5,900 | 12 | 30 | 1,200 | 35 | 47 | 1.2 | 9,970 | 20 | 50 | 1,200 | 59 | 79 | 1.9 | 14,030 | 28 | 68 | 1,200 | 80 | 108 | 2.7 | 18,100 | 36 | 86 | 1,200 | 101 | 137 | 3.4 | 22,170 | 44 | 106 | 1,200 | 124 | 168 | 4.2 |
| | 3,000 | 2,260 | 4 | 14 | 1,200 | 16 | 20 | 0.5 | 6,750 | 13 | 34 | 1,200 | 40 | 53 | 1.3 | 11,240 | 22 | 56 | 1,200 | 66 | 88 | 2.1 | 15,730 | 31 | 76 | 1,200 | 89 | 120 | 3.0 | 20,220 | 40 | 96 | 1,200 | 113 | 153 | 3.8 | 24,710 | 49 | 116 | 1,200 | 136 | 185 | 4.6 |
| 3000 | 3,000 | 2,070 | 4 | 14 | 1,200 | 16 | 20 | 0.4 | 6,560 | 13 | 34 | 1,200 | 40 | 53 | 1.3 | 11,050 | 22 | 54 | 1,200 | 63 | 85 | 2.1 | 15,540 | 31 | 74 | 1,200 | 87 | 118 | 2.9 | 20,030 | 40 | 96 | 1,200 | 113 | 153 | 3.8 | 24,520 | 49 | 116 | 1,200 | 136 | 185 | 4.6 |

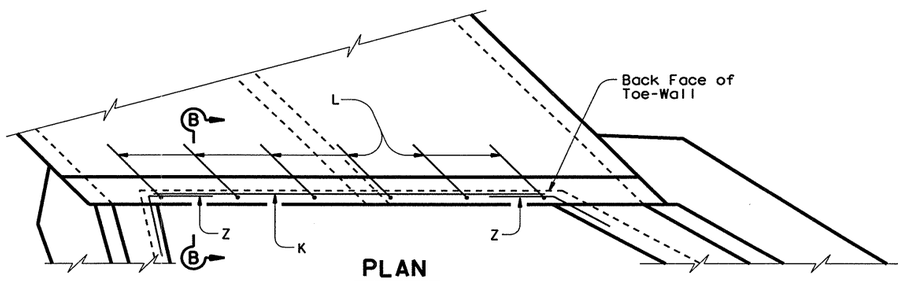


**PLAN**

**SHOWING REINFORCING FOR CULVERT TOE-WALL**

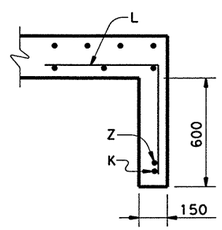


**SECTION B-B**

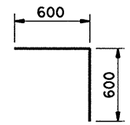


**BARS L**

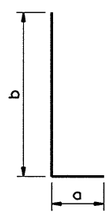


**BARS M1**

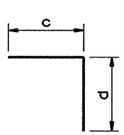


**BARS M2**

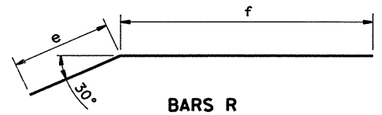


**BARS R**

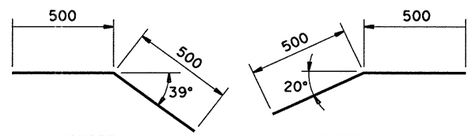


(SHORT WALL) (LONG WALL)

**BARS V**

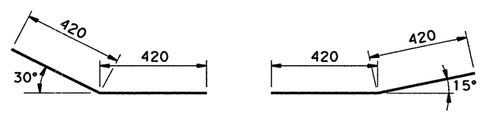


(SHORT WALL) (LONG WALL)

**BARS W**

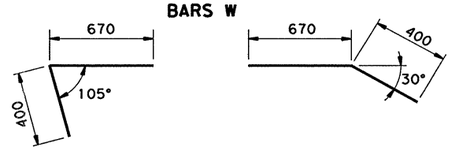


(SHORT WALL) (LONG WALL)

**BARS Z**

DISCLAIMER:
The use of this standard is governed by the "Texas Engineering Practice Act". No warranty of any kind is made by TxDOT for any other formats or for incorrect results or damages resulting from its use.

LEVELS DISPLAYED 1 3 ACC: (LV=1,3 for Metric)

SHEET 2 OF 2

Texas Department of Transportation
Design Division (Bridge)

# FLARED WINGS
## FOR 45° SKEW BOX CULVERTS

# FW-45 (M)

| FILE: fw-45std.dgn | DN: SDA | CK: EJU | DW: MCB | CK: SDA | STD: B105M |
|---|---|---|---|---|---|
| ©TxDOT October 1996 | DIST | FED REG | FEDERAL AID PROJECT • | | SHEET |
| REVISIONS | SAT | 6 | NH 2000 (704), etc. | | 411 |
| 5-97-ADD NOTE ④ ,GEN NOTES & MISC | COUNTY | | CONTROL | SECT | JOB | HIGHWAY |
| | BEXAR | | 2452 | 01 | 036; etc. | LP1604 |

# BILLS OF REINFORCING STEEL (Wings for 2 Structure Ends)

| Box Culvert Height, H | Bars M1 at 300 mm max | | | | | | | | | | Bars M2 at 300 mm max | | | | | | | | Bars N ~ #4 at 300 mm max | | | | | 4-Bars P1 ~ #5 | | 4-Bars P2 ~ #5 | | 4-Bars R ~ #6 | | | | 4-Bars T ~ #4 | | 4-Bars U1 ~ #6 | | 4-Bars U2 ~ #6 | | 8-Bars V ~ #6 | | Bars W ~ #5 | | 12-Bars X ~ #6 | | Bars Y ~ #6 | | 4-Bars Z ~ #4 | |
|---|---|---|---|---|---|---|---|---|---|---|---|---|---|---|---|---|---|---|---|---|---|---|---|---|---|---|---|---|---|---|---|---|---|---|---|---|---|---|---|---|---|---|---|---|
| | No. | Size | Avg Lgth mm | kg | Min "a" | Max "a" | Avg "a" | Min "b" | Max "b" | Avg "b" | No. | Size | Avg Lgth mm | kg | Min "c" | Max "c" | Avg "c" | "d" | No. | Min Lgth mm | Max Lgth mm | Avg Lgth mm | kg | Lgth mm | kg | Lgth mm | kg | Lgth mm | kg | "e" | "f" | Lgth mm | kg | Lgth mm | kg | Lgth mm | kg | Lgth mm | kg | Lgth mm | kg | No. | Lgth mm | kg | Lgth mm | kg | No. | Lgth mm | kg | Lgth mm | kg |
| 600 | 20 | #4 | 870 | 17 | 290 | 290 | 290 | 300 | 850 | 580 | 20 | #4 | 1,260 | 25 | 600 | 600 | 600 | 660 | 8 | 490 | 1,090 | 790 | 6 | 1,570 | 10 | 1,570 | 10 | 2,240 | 20 | 1,090 | 1,150 | 1,130 | 4 | 1,270 | 11 | 1,270 | 11 | 1,000 | 18 | 8 | 840 | 10 | 1,000 | 27 | 4 | 410 | 4 | 920 | 4 |
| 900 | 32 | #4 | 1,040 | 33 | 290 | 290 | 290 | 300 | 1,200 | 750 | 32 | #4 | 1,260 | 40 | 600 | 600 | 600 | 660 | 16 | 490 | 1,790 | 1,140 | 18 | 2,270 | 14 | 2,270 | 14 | 2,940 | 26 | 1,090 | 1,850 | 1,830 | 7 | 2,050 | 18 | 2,050 | 18 | 1,000 | 18 | 16 | 840 | 21 | 1,000 | 27 | 4 | 410 | 4 | 920 | 4 |
| 1,200 | 40 | #4 | 1,210 | 48 | 290 | 290 | 290 | 300 | 1,530 | 920 | 40 | #4 | 1,260 | 50 | 600 | 600 | 600 | 660 | 20 | 490 | 2,450 | 1,470 | 29 | 2,930 | 18 | 2,930 | 18 | 3,600 | 32 | 1,090 | 2,510 | 2,490 | 10 | 2,790 | 25 | 2,790 | 25 | 1,000 | 18 | 20 | 840 | 26 | 1,000 | 27 | 4 | 410 | 4 | 920 | 4 |
| 1,500 | 48 | #4 | 1,440 | 69 | 290 | 380 | 340 | 300 | 1,900 | 1,100 | 48 | #4 | 1,390 | 66 | 600 | 850 | 730 | 660 | 24 | 490 | 3,190 | 1,840 | 44 | 3,670 | 23 | 3,670 | 23 | 4,740 | 42 | 1,490 | 3,250 | 3,230 | 13 | 3,610 | 32 | 3,610 | 32 | 1,000 | 18 | 24 | 840 | 31 | 1,000 | 27 | 8 | 530 | 9 | 920 | 4 |
| 1,800 | 56 | #5 | 1,630 | 142 | 290 | 460 | 380 | 300 | 2,200 | 1,250 | 56 | #5 | 1,470 | 128 | 610 | 1,000 | 810 | 660 | 28 | 490 | 3,790 | 2,140 | 60 | 4,270 | 27 | 4,270 | 27 | 5,560 | 50 | 1,700 | 3,860 | 3,830 | 15 | 4,290 | 38 | 4,290 | 38 | 1,000 | 18 | 28 | 840 | 37 | 1,000 | 27 | 12 | 610 | 16 | 920 | 4 |
| 2,100 | 64 | #5 | 1,850 | 184 | 310 | 540 | 430 | 320 | 2,520 | 1,420 | 64 | #5 | 1,580 | 157 | 630 | 1,170 | 900 | 680 | 32 | 490 | 4,390 | 2,440 | 78 | 4,880 | 30 | 4,870 | 30 | 6,440 | 58 | 1,980 | 4,460 | 4,430 | 18 | 4,960 | 44 | 4,960 | 44 | 1,000 | 18 | 32 | 840 | 42 | 1,000 | 27 | 16 | 680 | 24 | 920 | 4 |
| 2,400 | 72 | #6 | 2,040 | 328 | 310 | 630 | 470 | 320 | 2,820 | 1,570 | 72 | #6 | 1,670 | 269 | 630 | 1,350 | 990 | 680 | 36 | 490 | 4,990 | 2,740 | 98 | 5,480 | 34 | 5,470 | 34 | 7,290 | 65 | 2,220 | 5,070 | 5,040 | 20 | 5,630 | 50 | 5,630 | 50 | 1,000 | 18 | 36 | 840 | 47 | 1,000 | 27 | 20 | 790 | 35 | 920 | 4 |
| 2,700 | 80 | #8 | 2,240 | 712 | 320 | 710 | 520 | 320 | 3,120 | 1,720 | 80 | #8 | 1,750 | 556 | 630 | 1,500 | 1,070 | 680 | 40 | 490 | 5,590 | 3,040 | 121 | 6,080 | 38 | 6,070 | 38 | 8,070 | 72 | 2,400 | 5,670 | 5,640 | 22 | 6,300 | 56 | 6,300 | 56 | 1,000 | 18 | 40 | 840 | 52 | 1,000 | 27 | 20 | 900 | 40 | 920 | 4 |
| 3,000 | 88 | #8 | 2,480 | 867 | 350 | 800 | 580 | 350 | 3,450 | 1,900 | 88 | #8 | 1,880 | 657 | 660 | 1,680 | 1,170 | 710 | 44 | 490 | 6,190 | 3,340 | 146 | 6,690 | 42 | 6,670 | 41 | 8,990 | 80 | 2,710 | 6,280 | 6,240 | 25 | 6,970 | 62 | 6,970 | 62 | 1,000 | 18 | 44 | 840 | 57 | 1,000 | 27 | 24 | 990 | 53 | 920 | 4 |

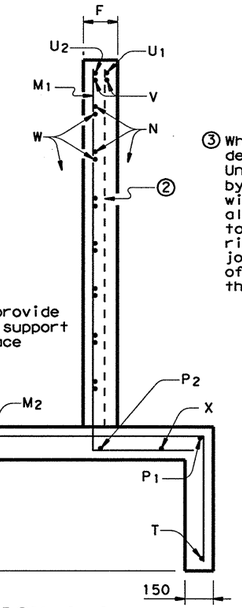


## SECTION A-A

② Contractor shall provide bars as needed to support Bar $U_1$ on inside face of wingwall.

③ When shown elsewhere on the plans, a 130 mm deep concrete riprap shall be constructed. Unless otherwise shown on the plans or directed by the Engineer, the riprap shall have a 150 mm wide by 450 mm deep reinforced concrete toewall along all edges adjacent to natural ground; the toewall shall be reinforced by extending typical riprap reinforcing into the toewall; construction joints or grooved joints, oriented in the direction of flow, shall extend across the full distance of the riprap, at intervals of approximately 6,000 mm.

NOTE:
See sheet 2 of 2 for Bar Bend Details and Box Culvert Toe-Wall Quantities.

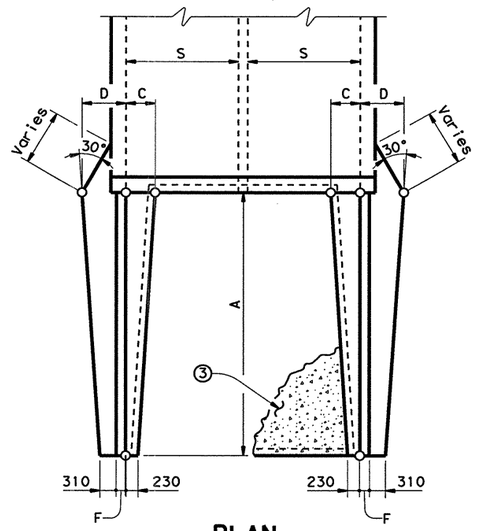


## PLAN
### SHOWING DIMENSIONS

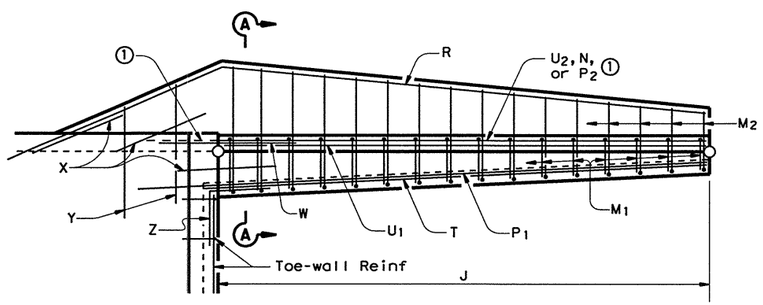


① Extend Bar $P_2$ only into bottom slab of Box Culvert.

## PLAN
### SHOWING REINFORCING

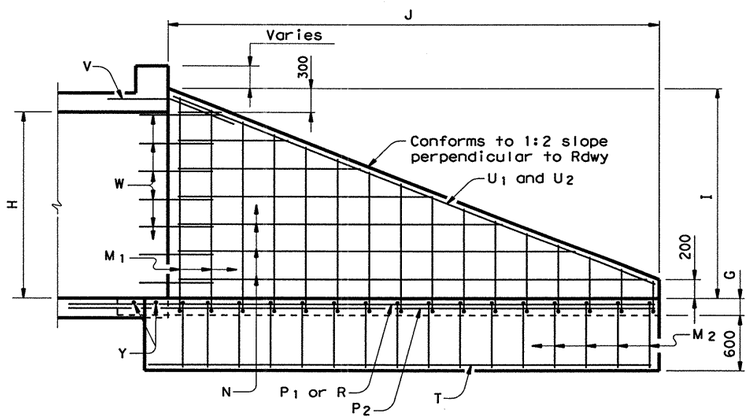


## ELEVATION
### SHOWING REINFORCING

## TABLE OF DIMENSIONS

| Box Culvert Height, H | Both Walls | | | | | | |
|---|---|---|---|---|---|---|---|
| | A | C | D | F | G | I | J |
| 600 | 1,200 | 230 | 470 | 160 | 160 | 800 | 1,200 |
| 900 | 1,900 | 230 | 470 | 160 | 160 | 1,150 | 1,900 |
| 1,200 | 2,560 | 230 | 470 | 160 | 160 | 1,480 | 2,560 |
| 1,500 | 3,300 | 320 | 630 | 160 | 160 | 1,850 | 3,300 |
| 1,800 | 3,900 | 400 | 710 | 160 | 160 | 2,150 | 3,900 |
| 2,100 | 4,500 | 460 | 820 | 180 | 180 | 2,450 | 4,500 |
| 2,400 | 5,100 | 550 | 910 | 180 | 180 | 2,750 | 5,100 |
| 2,700 | 5,700 | 630 | 980 | 180 | 180 | 3,050 | 5,700 |
| 3,000 | 6,300 | 690 | 1,100 | 210 | 210 | 3,350 | 6,300 |

## QUANTITIES ④
(Wings for 2 Structure Ends)

| Box Culvert Height, H | Conc ($m^3$) | Reinf (kg) |
|---|---|---|
| 600 | 1.4 | 178 |
| 900 | 2.4 | 263 |
| 1,200 | 3.5 | 334 |
| 1,500 | 5.2 | 434 |
| 1,800 | 6.8 | 625 |
| 2,100 | 9.5 | 757 |
| 2,400 | 11.7 | 1,080 |
| 2,700 | 14.0 | 1,813 |
| 3,000 | 19.2 | 2,143 |

④ Quantities shown are for wings only. See Item "Headwalls and Wingwalls" for a description of other components that may be included in the pay item Wingwalls.

**GENERAL NOTES:**

Designed according to AASHTO 1992 Standard and current Interim Specifications.

All reinforcing steel shall be Grade 420 (fy = 420 MPa).

All concrete shall have a minimum 28 day compressive strength of 21 MPa.

All Reinforcing bars shall be adjusted to provide a 35 mm clear cover.

The bottom slab of the barrel, wing footing and toewalls shall be placed in one continuous operation.

When structure is founded on solid rock, depth of Toe-walls for culverts and Wingwalls may be reduced or eliminated as directed by the Engineer.

All dimensions are in millimeters and all masses are in kilograms unless otherwise noted.

DISCLAIMER:
The use of this standard is governed by the "Texas Engineering Practice Act". No warranty of any kind is made by TxDOT for any purpose whatsoever. TxDOT assumes no responsibility for the conversion of this standard to other formats or for incorrect results or damages resulting from its use.

ACC: (LV=1,3 for Metric)
LEVELS DISPLAYED 1 3

SHEET 1 OF 2

Texas Department of Transportation
Design Division (Bridge)

# STRAIGHT WINGS
## FOR 0° SKEW BOX CULVERTS

## SW-0(M)

| FILE: sw-00std.dgn | DN: SDA | CK: EJU | DW: MCB | CK: SDA | STD: B180M |
|---|---|---|---|---|---|
| ©TxDOT October 1996 | DIST | FED REG | FEDERAL AID PROJECT • | | SHEET |
| REVISIONS | SAT | 6 | NH 2000(704),etc. | | 412 |
| 5-97-ADD NOTE ④, GEN NOTES & MISC | COUNTY | | CONTROL | SECT | JOB | HIGHWAY |
| | BEXAR | | 2452 | 01 | 036,etc. | LP 1604 |

# BOX CULVERT TOE-WALL QUANTITIES (For 2 Structure Ends)

| Box Culvert Height, H | Box Culvert Span, S | Number of Spans | | | | | | | | | | | | | | | | | | | | | | | | | | | | | | | | | |
|---|---|---|---|---|---|---|---|---|---|---|---|---|---|---|---|---|---|---|---|---|---|---|---|---|---|---|---|---|---|---|---|---|---|---|---|
| | | 1 | | | | | | | 2 | | | | | | | | 3 | | | | | | | 4 | | | | | | | 5 | | | | | | |
| | | 2-Bars K ~ #4 | | Bars L ~ #4 at 450 mm max | | | Reinf | Conc | 2-Bars K ~ #4 | | Bars L ~ #4 at 450 mm max | | | Reinf | Conc | 2-Bars K ~ #4 | | Bars L ~ #4 at 450 mm max | | | Reinf | Conc | 2-Bars K ~ #4 | | Bars L ~ #4 at 450 mm max | | | Reinf | Conc | 2-Bars K ~ #4 | | Bars L ~ #4 at 450 mm max | | | Reinf | Conc |
| | | Lgth mm | kg | No. | Lgth mm | kg | (kg) | (m3) | Lgth mm | kg | No. | Lgth mm | kg | (kg) | (m3) | Lgth mm | kg | No. | Lgth mm | kg | (kg) | (m3) | Lgth mm | kg | No. | Lgth mm | kg | (kg) | (m3) | Lgth mm | Wt | No. | Lgth mm | kg | (kg) | (m3) |
| 600 | 900 | 440 | 1 | 6 | 1,200 | 7 | 8 | 0.1 | 1,520 | 3 | 12 | 1,200 | 14 | 17 | 0.3 | 2,590 | 5 | 16 | 1,200 | 19 | 24 | 0.6 | 3,670 | 7 | 22 | 1,200 | 26 | 33 | 0.8 | 4,740 | 9 | 28 | 1,200 | 33 | 42 | 1.0 |
| | 1,200 | 740 | 1 | 8 | 1,200 | 9 | 11 | 0.2 | 2,120 | 4 | 14 | 1,200 | 16 | 21 | 0.5 | 3,490 | 7 | 20 | 1,200 | 23 | 30 | 0.7 | 4,870 | 10 | 28 | 1,200 | 33 | 43 | 1.0 | 6,240 | 12 | 34 | 1,200 | 40 | 52 | 1.2 |
| | 1,500 | 1,040 | 2 | 8 | 1,200 | 9 | 11 | 0.2 | 2,720 | 5 | 16 | 1,200 | 19 | 24 | 0.6 | 4,390 | 9 | 24 | 1,200 | 28 | 37 | 0.9 | 6,070 | 12 | 32 | 1,200 | 38 | 50 | 1.2 | 7,740 | 15 | 40 | 1,200 | 47 | 62 | 1.5 |
| 900 | 900 | 440 | 1 | 6 | 1,200 | 7 | 8 | 0.1 | 1,520 | 3 | 12 | 1,200 | 14 | 17 | 0.3 | 2,590 | 5 | 16 | 1,200 | 19 | 24 | 0.6 | 3,670 | 7 | 22 | 1,200 | 26 | 33 | 0.8 | 4,740 | 9 | 28 | 1,200 | 33 | 42 | 1.0 |
| | 1,200 | 740 | 1 | 8 | 1,200 | 9 | 11 | 0.2 | 2,120 | 4 | 14 | 1,200 | 16 | 21 | 0.5 | 3,490 | 7 | 20 | 1,200 | 23 | 30 | 0.7 | 4,870 | 10 | 28 | 1,200 | 33 | 43 | 1.0 | 6,240 | 12 | 34 | 1,200 | 40 | 52 | 1.2 |
| | 1,500 | 1,040 | 2 | 8 | 1,200 | 9 | 11 | 0.2 | 2,720 | 5 | 16 | 1,200 | 19 | 24 | 0.6 | 4,390 | 9 | 24 | 1,200 | 28 | 37 | 0.9 | 6,070 | 12 | 32 | 1,200 | 38 | 50 | 1.2 | 7,740 | 15 | 40 | 1,200 | 47 | 62 | 1.5 |
| | 1,800 | 1,340 | 3 | 10 | 1,200 | 12 | 14 | 0.3 | 3,320 | 7 | 20 | 1,200 | 23 | 30 | 0.7 | 5,290 | 11 | 28 | 1,200 | 33 | 43 | 1.0 | 7,270 | 14 | 38 | 1,200 | 45 | 59 | 1.4 | 9,240 | 18 | 48 | 1,200 | 56 | 75 | 1.8 |
| | 2,100 | 1,640 | 3 | 12 | 1,200 | 14 | 17 | 0.3 | 3,920 | 8 | 22 | 1,200 | 26 | 34 | 0.8 | 6,190 | 12 | 32 | 1,200 | 38 | 50 | 1.2 | 8,470 | 17 | 44 | 1,200 | 52 | 68 | 1.6 | 10,740 | 21 | 54 | 1,200 | 63 | 85 | 2.1 |
| 1200 | 1,200 | 740 | 1 | 8 | 1,200 | 9 | 11 | 0.2 | 2,120 | 4 | 14 | 1,200 | 16 | 21 | 0.5 | 3,490 | 7 | 20 | 1,200 | 23 | 30 | 0.7 | 4,870 | 10 | 28 | 1,200 | 33 | 43 | 1.0 | 6,240 | 12 | 34 | 1,200 | 40 | 52 | 1.2 |
| | 1,500 | 1,040 | 2 | 8 | 1,200 | 9 | 11 | 0.2 | 2,720 | 5 | 16 | 1,200 | 19 | 24 | 0.6 | 4,390 | 9 | 24 | 1,200 | 28 | 37 | 0.9 | 6,070 | 12 | 32 | 1,200 | 38 | 50 | 1.2 | 7,740 | 15 | 40 | 1,200 | 47 | 62 | 1.5 |
| | 1,800 | 1,340 | 3 | 10 | 1,200 | 12 | 14 | 0.3 | 3,320 | 7 | 20 | 1,200 | 23 | 30 | 0.7 | 5,290 | 11 | 28 | 1,200 | 33 | 43 | 1.0 | 7,270 | 14 | 38 | 1,200 | 45 | 59 | 1.4 | 9,240 | 18 | 48 | 1,200 | 56 | 75 | 1.8 |
| | 2,100 | 1,640 | 3 | 12 | 1,200 | 14 | 17 | 0.3 | 3,920 | 8 | 22 | 1,200 | 26 | 34 | 0.8 | 6,190 | 12 | 32 | 1,200 | 38 | 50 | 1.2 | 8,470 | 17 | 44 | 1,200 | 52 | 68 | 1.6 | 10,740 | 21 | 54 | 1,200 | 63 | 85 | 2.1 |
| | 2,400 | 1,940 | 4 | 12 | 1,200 | 14 | 18 | 0.4 | 4,520 | 9 | 24 | 1,200 | 28 | 37 | 0.9 | 7,090 | 14 | 36 | 1,200 | 42 | 56 | 1.4 | 9,670 | 19 | 48 | 1,200 | 56 | 76 | 1.8 | 12,240 | 24 | 60 | 1,200 | 70 | 95 | 2.3 |
| 1500 | 1,500 | 860 | 2 | 8 | 1,200 | 9 | 11 | 0.2 | 2,540 | 5 | 16 | 1,200 | 19 | 24 | 0.5 | 4,210 | 8 | 24 | 1,200 | 28 | 37 | 0.8 | 5,890 | 12 | 32 | 1,200 | 38 | 49 | 1.2 | 7,560 | 15 | 40 | 1,200 | 47 | 62 | 1.5 |
| | 1,800 | 1,160 | 2 | 10 | 1,200 | 12 | 14 | 0.3 | 3,140 | 6 | 18 | 1,200 | 21 | 27 | 0.6 | 5,110 | 10 | 28 | 1,200 | 33 | 43 | 1.0 | 7,090 | 14 | 38 | 1,200 | 45 | 59 | 1.4 | 9,060 | 18 | 46 | 1,200 | 54 | 72 | 1.8 |
| | 2,100 | 1,460 | 3 | 10 | 1,200 | 12 | 15 | 0.3 | 3,740 | 7 | 22 | 1,200 | 26 | 33 | 0.7 | 6,010 | 12 | 32 | 1,200 | 38 | 49 | 1.2 | 8,290 | 16 | 42 | 1,200 | 49 | 66 | 1.6 | 10,560 | 21 | 54 | 1,200 | 63 | 84 | 2.0 |
| | 2,400 | 1,760 | 3 | 12 | 1,200 | 14 | 18 | 0.4 | 4,340 | 9 | 24 | 1,200 | 28 | 37 | 0.9 | 6,910 | 14 | 36 | 1,200 | 42 | 56 | 1.3 | 9,490 | 19 | 48 | 1,200 | 56 | 75 | 1.8 | 12,060 | 24 | 60 | 1,200 | 70 | 94 | 2.3 |
| | 2,700 | 2,060 | 4 | 14 | 1,200 | 16 | 21 | 0.4 | 4,940 | 10 | 26 | 1,200 | 30 | 40 | 1.0 | 7,810 | 16 | 40 | 1,200 | 47 | 62 | 1.5 | 10,690 | 21 | 54 | 1,200 | 63 | 85 | 2.0 | 13,560 | 27 | 66 | 1,200 | 77 | 104 | 2.6 |
| | 3,000 | 2,360 | 5 | 14 | 1,200 | 16 | 21 | 0.5 | 5,540 | 11 | 30 | 1,200 | 35 | 46 | 1.1 | 8,710 | 17 | 44 | 1,200 | 52 | 69 | 1.7 | 11,890 | 24 | 58 | 1,200 | 68 | 92 | 2.2 | 15,060 | 30 | 74 | 1,200 | 87 | 117 | 2.8 |
| 1800 | 1,800 | 1,000 | 2 | 8 | 1,200 | 9 | 11 | 0.2 | 2,980 | 6 | 18 | 1,200 | 21 | 27 | 0.6 | 4,950 | 10 | 28 | 1,200 | 33 | 43 | 1.0 | 6,930 | 14 | 36 | 1,200 | 42 | 56 | 1.4 | 8,900 | 18 | 46 | 1,200 | 54 | 72 | 1.7 |
| | 2,100 | 1,300 | 3 | 10 | 1,200 | 12 | 14 | 0.3 | 3,580 | 7 | 20 | 1,200 | 23 | 31 | 0.7 | 5,850 | 12 | 32 | 1,200 | 38 | 49 | 1.1 | 8,130 | 16 | 42 | 1,200 | 49 | 65 | 1.6 | 10,400 | 21 | 52 | 1,200 | 61 | 82 | 2.0 |
| | 2,400 | 1,600 | 3 | 12 | 1,200 | 14 | 17 | 0.3 | 4,180 | 8 | 24 | 1,200 | 28 | 36 | 0.8 | 6,750 | 13 | 36 | 1,200 | 42 | 56 | 1.3 | 9,330 | 19 | 48 | 1,200 | 56 | 75 | 1.8 | 11,900 | 24 | 58 | 1,200 | 68 | 92 | 2.3 |
| | 2,700 | 1,900 | 4 | 12 | 1,200 | 14 | 18 | 0.4 | 4,780 | 10 | 26 | 1,200 | 30 | 40 | 0.9 | 7,650 | 15 | 40 | 1,200 | 47 | 62 | 1.5 | 10,530 | 21 | 52 | 1,200 | 61 | 82 | 2.0 | 13,400 | 27 | 66 | 1,200 | 77 | 104 | 2.5 |
| | 3,000 | 2,200 | 4 | 14 | 1,200 | 16 | 21 | 0.4 | 5,380 | 11 | 28 | 1,200 | 33 | 44 | 1.0 | 8,550 | 17 | 44 | 1,200 | 52 | 69 | 1.6 | 11,730 | 23 | 58 | 1,200 | 68 | 91 | 2.2 | 14,900 | 30 | 72 | 1,200 | 84 | 114 | 2.8 |
| 2100 | 2,100 | 1,180 | 2 | 10 | 1,200 | 12 | 14 | 0.3 | 3,460 | 7 | 20 | 1,200 | 23 | 30 | 0.7 | 5,730 | 11 | 30 | 1,200 | 35 | 47 | 1.1 | 8,010 | 16 | 42 | 1,200 | 49 | 65 | 1.5 | 10,280 | 20 | 52 | 1,200 | 61 | 81 | 2.0 |
| | 2,400 | 1,480 | 3 | 10 | 1,200 | 12 | 15 | 0.3 | 4,060 | 8 | 22 | 1,200 | 26 | 34 | 0.8 | 6,630 | 13 | 34 | 1,200 | 40 | 53 | 1.3 | 9,210 | 18 | 46 | 1,200 | 54 | 72 | 1.8 | 11,780 | 23 | 58 | 1,200 | 68 | 91 | 2.2 |
| | 2,700 | 1,780 | 4 | 12 | 1,200 | 14 | 18 | 0.4 | 4,660 | 9 | 26 | 1,200 | 30 | 40 | 0.9 | 7,530 | 15 | 38 | 1,200 | 45 | 60 | 1.4 | 10,410 | 21 | 52 | 1,200 | 61 | 82 | 2.0 | 13,280 | 26 | 66 | 1,200 | 77 | 104 | 2.5 |
| | 3,000 | 2,080 | 4 | 14 | 1,200 | 16 | 21 | 0.4 | 5,260 | 10 | 28 | 1,200 | 33 | 43 | 1.0 | 8,430 | 17 | 42 | 1,200 | 49 | 66 | 1.6 | 11,610 | 23 | 58 | 1,200 | 68 | 91 | 2.2 | 14,780 | 29 | 72 | 1,200 | 84 | 114 | 2.8 |
| 2400 | 2,400 | 1,300 | 3 | 10 | 1,200 | 12 | 14 | 0.3 | 3,880 | 8 | 22 | 1,200 | 26 | 34 | 0.8 | 6,450 | 13 | 34 | 1,200 | 40 | 53 | 1.2 | 9,030 | 18 | 46 | 1,200 | 54 | 72 | 1.7 | 11,600 | 23 | 58 | 1,200 | 68 | 91 | 2.2 |
| | 2,700 | 1,600 | 3 | 12 | 1,200 | 14 | 17 | 0.3 | 4,480 | 9 | 24 | 1,200 | 28 | 37 | 0.9 | 7,350 | 15 | 38 | 1,200 | 45 | 59 | 1.4 | 10,230 | 20 | 52 | 1,200 | 61 | 81 | 1.9 | 13,100 | 26 | 64 | 1,200 | 75 | 101 | 2.5 |
| | 3,000 | 1,900 | 4 | 12 | 1,200 | 14 | 18 | 0.4 | 5,080 | 10 | 28 | 1,200 | 33 | 43 | 1.0 | 8,250 | 16 | 42 | 1,200 | 49 | 66 | 1.6 | 11,430 | 23 | 56 | 1,200 | 66 | 88 | 2.2 | 14,600 | 29 | 70 | 1,200 | 82 | 111 | 2.8 |
| 2700 | 2,700 | 1,440 | 3 | 10 | 1,200 | 12 | 15 | 0.3 | 4,320 | 9 | 24 | 1,200 | 28 | 37 | 0.8 | 7,190 | 14 | 38 | 1,200 | 45 | 59 | 1.4 | 10,070 | 20 | 50 | 1,200 | 59 | 79 | 1.9 | 12,940 | 26 | 64 | 1,200 | 75 | 101 | 2.5 |
| | 3,000 | 1,740 | 3 | 12 | 1,200 | 14 | 18 | 0.4 | 4,920 | 10 | 26 | 1,200 | 30 | 40 | 1.0 | 8,090 | 16 | 42 | 1,200 | 49 | 65 | 1.5 | 11,270 | 22 | 56 | 1,200 | 66 | 88 | 2.1 | 14,440 | 29 | 70 | 1,200 | 82 | 111 | 2.7 |
| 3000 | 3,000 | 1,620 | 3 | 12 | 1,200 | 14 | 17 | 0.3 | 4,800 | 10 | 26 | 1,200 | 30 | 40 | 0.9 | 7,970 | 16 | 40 | 1,200 | 47 | 63 | 1.5 | 11,150 | 22 | 56 | 1,200 | 66 | 88 | 2.1 | 14,320 | 28 | 70 | 1,200 | 82 | 111 | 2.7 |

| Box Culvert Height, H | Box Culvert Span, S | Number of Spans | | | | | | | | | | | | | | | | | | | | | | | | | | | | | | | | | |
|---|---|---|---|---|---|---|---|---|---|---|---|---|---|---|---|---|---|---|---|---|---|---|---|---|---|---|---|---|---|---|---|---|---|---|---|
| | | 6 | | | | | | | | | | | | | | | | | | | | | | | | | | | | | | | | | |
| | | 2-Bars K ~ #4 | | Bars L ~ #4 at 450 mm max | | | Reinf | Conc | | | | | | | | | | | | | | | | | | | | | | | | | | | |
| | | Lgth mm | kg | No. | Lgth mm | kg | (kg) | (m3) | | | | | | | | | | | | | | | | | | | | | | | | | | | |
| 600 | 900 | 5,820 | 12 | 32 | 1,200 | 38 | 49 | 1.2 | | | | | | | | | | | | | | | | | | | | | | | | | | | |
| | 1,200 | 7,620 | 15 | 40 | 1,200 | 47 | 62 | 1.5 | | | | | | | | | | | | | | | | | | | | | | | | | | | |
| | 1,500 | 9,420 | 19 | 48 | 1,200 | 56 | 75 | 1.8 | | | | | | | | | | | | | | | | | | | | | | | | | | | |
| 900 | 900 | 5,820 | 12 | 32 | 1,200 | 38 | 49 | 1.2 | | | | | | | | | | | | | | | | | | | | | | | | | | | |
| | 1,200 | 7,620 | 15 | 40 | 1,200 | 47 | 62 | 1.5 | | | | | | | | | | | | | | | | | | | | | | | | | | | |
| | 1,500 | 9,420 | 19 | 48 | 1,200 | 56 | 75 | 1.8 | | | | | | | | | | | | | | | | | | | | | | | | | | | |
| | 1,800 | 11,220 | 22 | 56 | 1,200 | 66 | 88 | 2.2 | | | | | | | | | | | | | | | | | | | | | | | | | | | |
| | 2,100 | 13,020 | 26 | 64 | 1,200 | 75 | 101 | 2.5 | | | | | | | | | | | | | | | | | | | | | | | | | | | |
| 1200 | 1,200 | 7,620 | 15 | 40 | 1,200 | 47 | 62 | 1.5 | | | | | | | | | | | | | | | | | | | | | | | | | | | |
| | 1,500 | 9,420 | 19 | 48 | 1,200 | 56 | 75 | 1.8 | | | | | | | | | | | | | | | | | | | | | | | | | | | |
| | 1,800 | 11,220 | 22 | 56 | 1,200 | 66 | 88 | 2.2 | | | | | | | | | | | | | | | | | | | | | | | | | | | |
| | 2,100 | 13,020 | 26 | 64 | 1,200 | 75 | 101 | 2.5 | | | | | | | | | | | | | | | | | | | | | | | | | | | |
| | 2,400 | 14,820 | 29 | 72 | 1,200 | 84 | 114 | 2.8 | | | | | | | | | | | | | | | | | | | | | | | | | | | |
| 1500 | 1,500 | 9,240 | 18 | 48 | 1,200 | 56 | 75 | 1.8 | | | | | | | | | | | | | | | | | | | | | | | | | | | |
| | 1,800 | 11,040 | 22 | 56 | 1,200 | 66 | 88 | 2.1 | | | | | | | | | | | | | | | | | | | | | | | | | | | |
| | 2,100 | 12,840 | 26 | 64 | 1,200 | 75 | 101 | 2.5 | | | | | | | | | | | | | | | | | | | | | | | | | | | |
| | 2,400 | 14,640 | 29 | 72 | 1,200 | 84 | 114 | 2.8 | | | | | | | | | | | | | | | | | | | | | | | | | | | |
| | 2,700 | 16,440 | 33 | 80 | 1,200 | 94 | 127 | 3.1 | | | | | | | | | | | | | | | | | | | | | | | | | | | |
| | 3,000 | 18,240 | 36 | 88 | 1,200 | 103 | 139 | 3.4 | | | | | | | | | | | | | | | | | | | | | | | | | | | |
| 1800 | 1,800 | 10,880 | 22 | 54 | 1,200 | 63 | 85 | 2.1 | | | | | | | | | | | | | | | | | | | | | | | | | | | |
| | 2,100 | 12,680 | 25 | 62 | 1,200 | 73 | 98 | 2.4 | | | | | | | | | | | | | | | | | | | | | | | | | | | |
| | 2,400 | 14,480 | 29 | 70 | 1,200 | 82 | 111 | 2.7 | | | | | | | | | | | | | | | | | | | | | | | | | | | |
| | 2,700 | 16,280 | 32 | 78 | 1,200 | 91 | 124 | 3.1 | | | | | | | | | | | | | | | | | | | | | | | | | | | |
| | 3,000 | 18,080 | 36 | 86 | 1,200 | 101 | 137 | 3.4 | | | | | | | | | | | | | | | | | | | | | | | | | | | |
| 2100 | 2,100 | 12,560 | 25 | 62 | 1,200 | 73 | 98 | 2.4 | | | | | | | | | | | | | | | | | | | | | | | | | | | |
| | 2,400 | 14,360 | 29 | 70 | 1,200 | 82 | 111 | 2.7 | | | | | | | | | | | | | | | | | | | | | | | | | | | |
| | 2,700 | 16,160 | 32 | 78 | 1,200 | 91 | 124 | 3.1 | | | | | | | | | | | | | | | | | | | | | | | | | | | |
| | 3,000 | 17,960 | 36 | 86 | 1,200 | 101 | 137 | 3.4 | | | | | | | | | | | | | | | | | | | | | | | | | | | |
| 2400 | 2,400 | 14,180 | 28 | 70 | 1,200 | 82 | 110 | 2.7 | | | | | | | | | | | | | | | | | | | | | | | | | | | |
| | 2,700 | 15,980 | 32 | 78 | 1,200 | 91 | 123 | 3.0 | | | | | | | | | | | | | | | | | | | | | | | | | | | |
| | 3,000 | 17,780 | 35 | 86 | 1,200 | 101 | 136 | 3.3 | | | | | | | | | | | | | | | | | | | | | | | | | | | |
| 2700 | 2,700 | 15,820 | 31 | 76 | 1,200 | 89 | 121 | 3.0 | | | | | | | | | | | | | | | | | | | | | | | | | | | |
| | 3,000 | 17,620 | 35 | 84 | 1,200 | 99 | 134 | 3.3 | | | | | | | | | | | | | | | | | | | | | | | | | | | |
| 3000 | 3,000 | 17,500 | 35 | 84 | 1,200 | 99 | 133 | 3.3 | | | | | | | | | | | | | | | | | | | | | | | | | | | |

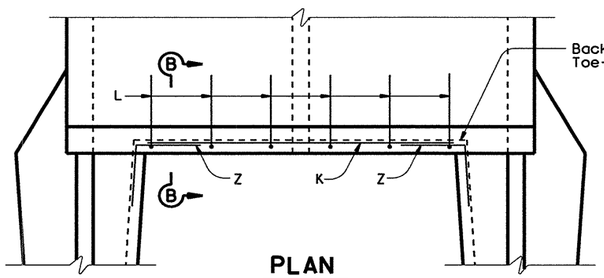


## PLAN
SHOWING REINFORCING FOR CULVERT TOE-WALL

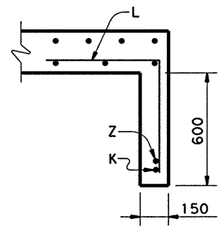


## SECTION B-B

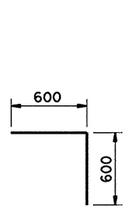


BARS L

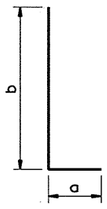


BARS M1

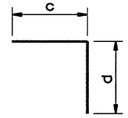


BARS M2

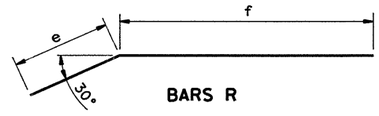


BARS R

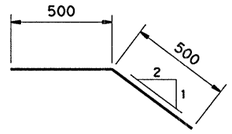


BARS V

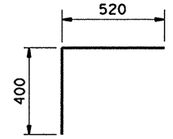


BARS Z

SHEET 2 OF 2

Texas Department of Transportation
Design Division (Bridge)

# STRAIGHT WINGS
## FOR 0° SKEW BOX CULVERTS

## SW-0(M)

| FILE: sw-00std.dgn | DN: SDA | CK: EJU | DW: MCB | CK: SDA | STD: B180M |
|---|---|---|---|---|---|
| © TxDOT October 1996 | DIST | FED REG | FEDERAL AID PROJECT # | | SHEET |
| REVISIONS | SAT | 6 | NH 2000(704),etc. | | 413 |
| 5-97-ADD NOTE ④ ,GEN NOTES & MISC | COUNTY | | CONTROL | SECT | JOB | HIGHWAY |
| | BEXAR | | 2452 | 01 | 036,etc. | LP 1604 |

DISCLAIMER:
The use of this standard is governed by the "Texas Engineering Practice Act". No warranty of any kind is made by TxDOT for any purpose whatsoever. TxDOT assumes no responsibility for the conversion of this standard to other formats or for incorrect results or damages resulting from its use.

LEVELS DISABLED
1 3
ACC:
(LV=1,3 for Metric)

DISCLAIMER:
The use of this standard is governed by the Texas Engineering Practice Act. No warranty of any kind is made by TxDOT for any purpose whatsoever. TxDOT assumes no responsibility for the conversion of this standard to other formats or for incorrect results or damages resulting from its use.

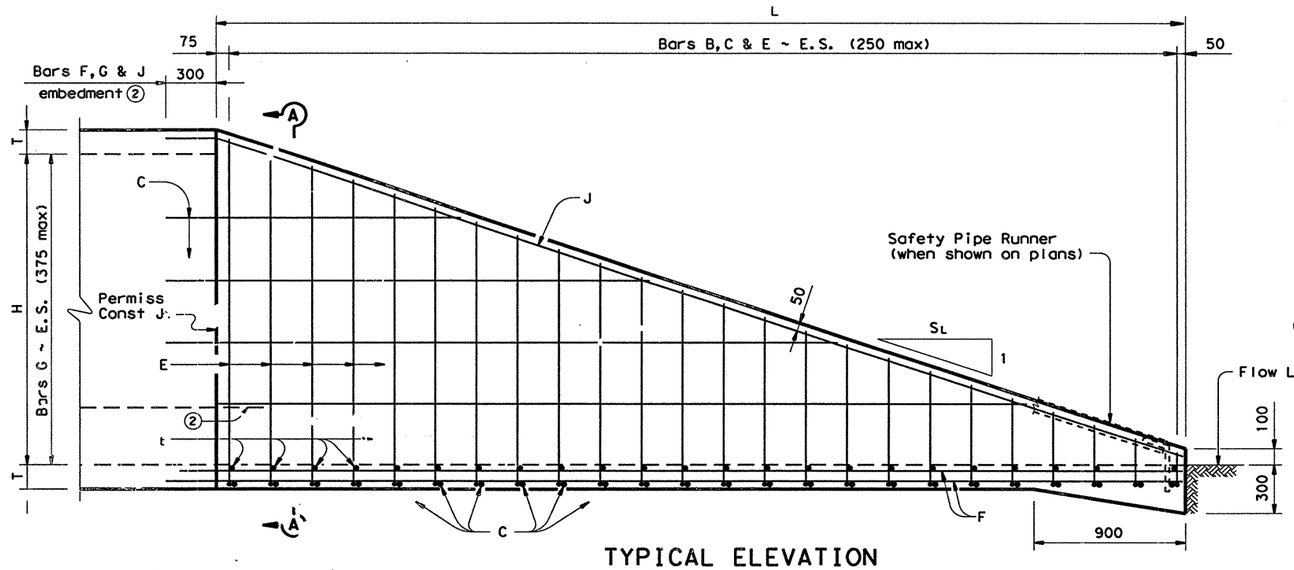


## TYPICAL ELEVATION

(Shown at 1:4 Slope)

② Minimum 300 mm lap with extended culvert reinforcement may also be used.

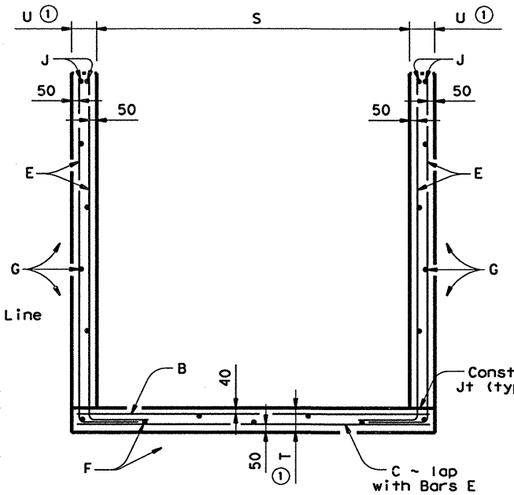


## SECTION A-A

(SINGLE CULVERT)
(S > 1,200)

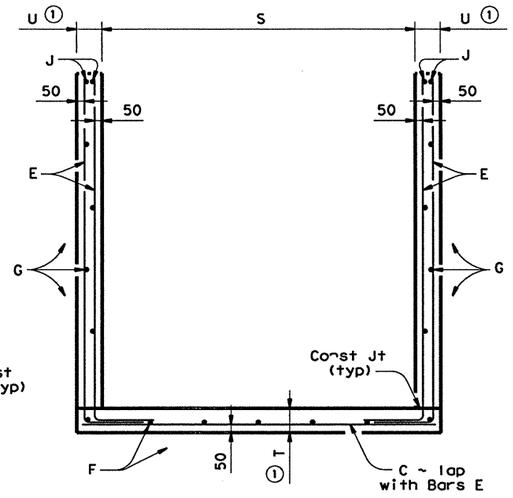


## SECTION A-A

(SINGLE CULVERT)
(S ≤ 1,200)

① 150 min or may be same thickness as adjacent culvert

### QUANTITY CALCULATIONS ③

S = Clear Span of each Barrel
H = Height of Barrels
N = Number of Barrels
SL = Side Slope Ratio
W = N(S)+150(N+1)
L = (H+50)SL

### CONCRETE VOLUME

$[150(W)(L)+67,500(W)+75(H+250)(L)(N+1)]\ \frac{1}{10^9}\ m^3$

### SHEET QUANTITY CALCULATIONS

| Bar | Unit Weight (kg/m) | Average Length (mm) | Number of Bars |
|---|---|---|---|
| B ⑤ | .994 | (W-75) | $\left(\frac{L}{250}+.5\right)^{④}$ |
| C | .994 | (W-75) | $\left(\frac{L}{250}+.5\right)^{④}$ |
| E | .994 | $\left(\frac{H+1,050}{2}\right)$ | $\left(\frac{L}{250}+.5\right)^{④}(N+1)(2)$ |
| F | .994 | (L+260) | $N\left(\frac{S}{300}+1\right)^{④}+1$ |
| G | .994 | $\left(\frac{SL}{2}(H+200)+300\right)$ | $\left(\frac{H}{375}-1\right)^{④}(N+1)$ |
| J | .994 | $\left(\sqrt{SL^2+1}\right)(L)+260)$ | (N+1)(2) |

③ Based on T and U = 150 mm. Interior Wings with multiple precast box culverts are assumed at 150 mm.

④ If not an integer, round up to next highest integer.

⑤ Omit Bars B if S ≤ 1,200 mm.

### EXAMPLE 1

(Single Barrel ~ 1,200 x 900
1:6 slope)

| Bar | No. | Size | Length | Weight |
|---|---|---|---|---|
| Omit Bars B if S ≤ 1,200 mm | | | | |
| C | 24 | #4 | 1,420 | 34 |
| E | 96 | #4 | 970 Avg | 93 |
| F | 6 | #4 | 5,960 | 36 |
| G | 4 | #4 | 3,600 Avg | 14 |
| J | 4 | #4 | 6,040 | 24 |
| Reinforcing Steel | | | (kg) | 201 |
| Concrete | | | ($m^3$) | 2.4 |

### EXAMPLE 2

(Double Barrel ~ 1,500 x 1,200
1:4 slope)

| Bar | No. | Size | Length | Weight |
|---|---|---|---|---|
| B | 21 | #4 | 3,370 | 70 |
| C | 21 | #4 | 3,370 | 70 |
| E | 126 | #4 | 1,120 Avg | 140 |
| F | 13 | #4 | 5,260 | 68 |
| G | 9 | #4 | 3,100 Avg | 28 |
| J | 6 | #4 | 5,410 | 32 |
| Reinforcing Steel | | | (kg) | 408 |
| Concrete | | | ($m^3$) | 4.5 |

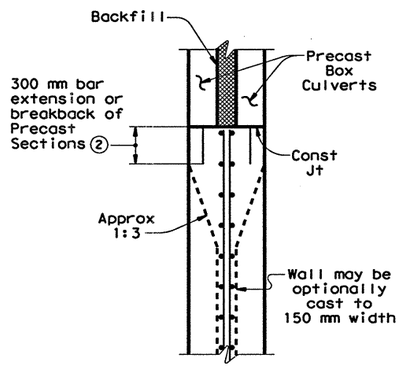


## PLAN

(INTERIOR WING EXTENSIONS FOR MULTIPLE BOX CULVERTS)

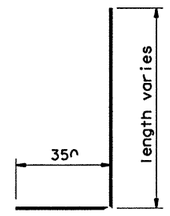


BARS E

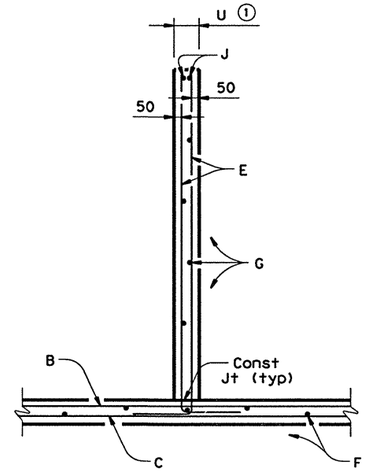


## SECTION A-A

(INTERIOR WING ~ MULTIPLE CULVERTS)

### GENERAL NOTES:

The quantities for concrete and reinforcing steel resulting from the formulas given on this sheet are for Contractor's information only.

Quantities are for one complete end, either single or multiple box, and are included in the price bid for each Safety End Treatment.

Additional Riprap as indicated elsewhere in the plans will also be included in the price bid for Safety End Treatment.

All dimensions are in millimeters unless otherwise noted.

Include this sheet in plans only when single or multiple Box Culverts require treatment.

Texas Department of Transportation
Design Division (Bridge)

# STRAIGHT WING WALLS FOR SINGLE OR MULTIPLE BOX CULVERT SAFETY END TREATMENT (TYPE I)

## SWW(M)

| FILE: sww-mstd.dgn | DN: MAS | CK: TxDOT | DW: MCB | CK: LDS | STD: B17M |
|---|---|---|---|---|---|
| ©TxDOT May 1996 | DIST | FED REG | FEDERAL AID PROJECT • | | SHEET |
| REVISIONS | SAT | 6 | NH 2000(704), ETC. | | 413A |
| | COUNTY | | CONTROL | SECT | JOB | HIGHWAY |
| | BEXAR | | 2452 | 01 | 036, etc. | LP1604 |

04-29-02

LEVELS DISPLAYED 1 3 ACC: (LV=1,3 for Metric)

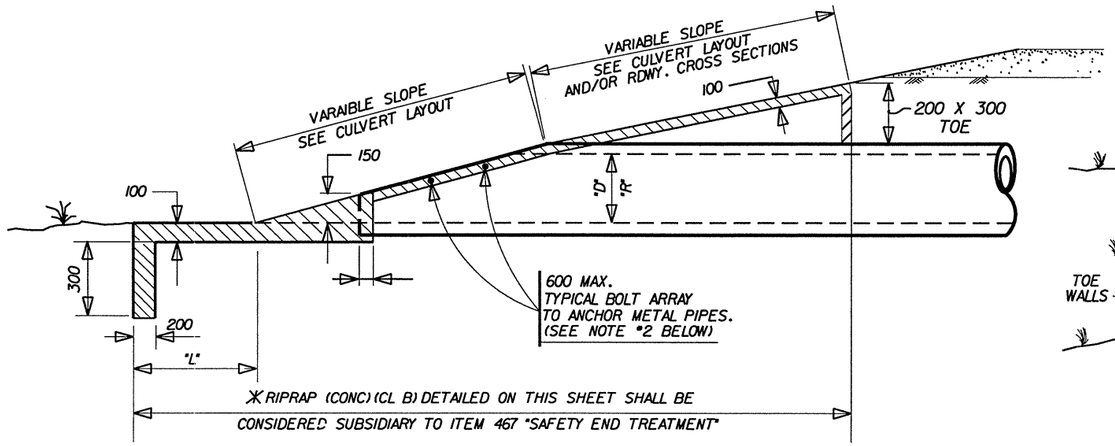


## LONGITUDINAL SECTION FOR CIRCULAR & ARCH PIPES

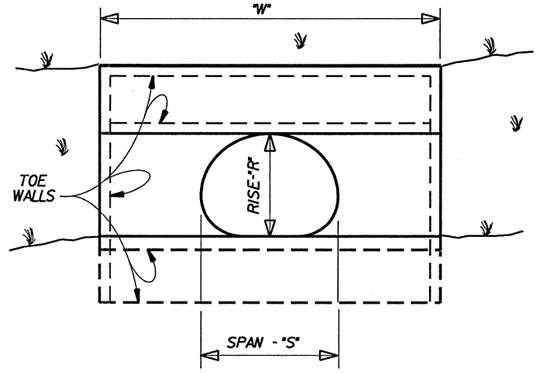


## SINGLE C.M.P. ARCH PIPE CULVERT

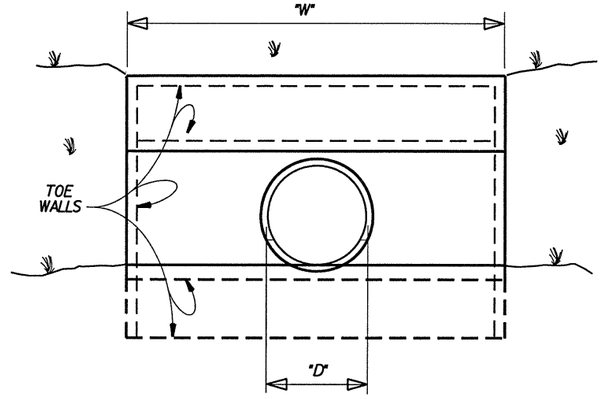


## SINGLE CIRCULAR PIPE CULVERT

(CMP or RCP)

## DIMENSIONS FOR CIRCULAR (CMP and RCP) PIPE CULVERTS

| "D" INSIDE DIA. of PIPE | "L" | "G" | | SINGLE | DOUBLE | TRIPLE | QUADRUPLE |
|---|---|---|---|---|---|---|---|
| | | CGM | RCP | "W" | | | |
| 450 | 600 | 360 | 225 | 1370 | 2185 | 3000 | 3810 |
| 550 | 750 | 380 | 250 | 1600 | 2540 | 3450 | 4065 |
| 600 | 900 | 430 | 275 | 1800 | 2855 | 3910 | 4965 |
| 750 | 1200 | 510 | 325 | 2250 | 3535 | 4820 | 6105 |
| 900 | 1500 | 580 | 375 | 2700 | 4205 | 5710 | 7215 |
| 1050 | 1800 | 660 | 425 | 3150 | 4885 | 6620 | 8355 |
| 1200 | 2100 | 740 | 475 | 3600 | 5565 | 7530 | 9495 |
| 1350 | 2400 | 860 | 575 | 4050 | 6285 | 8520 | 10755 |
| 1500 | 2700 | 970 | 600 | 4500 | 6995 | 9490 | 11985 |

"G" IS MEASURED BETWEEN THE OUTER SURFACES OF THE PIPES.

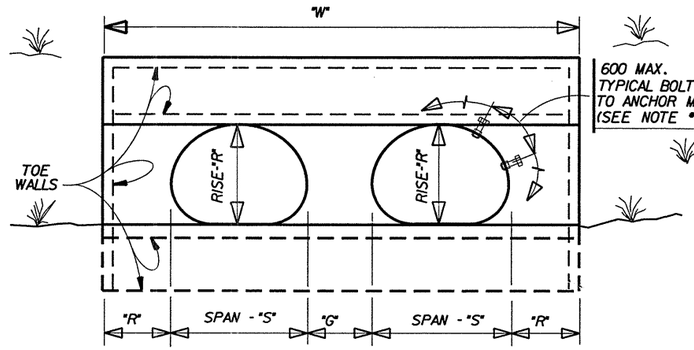


## MULTIPLE C.M.P. ARCH PIPE CULVERT

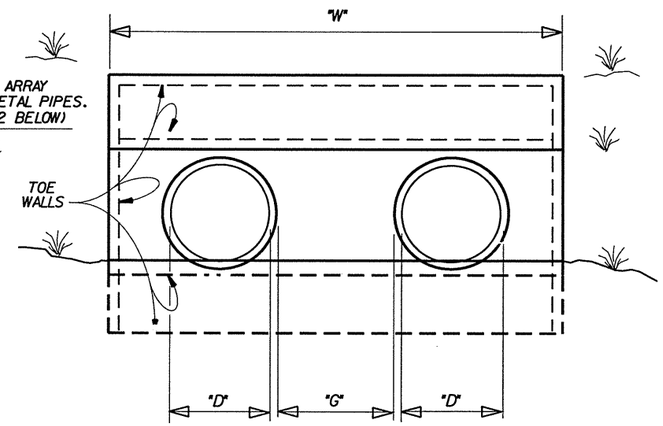


## MULTIPLE CIRCULAR PIPE CULVERT

(CMP or RCP)

## DIMENSIONS FOR C.M.P. ARCH PIPE CULVERTS

| DESIGN SIZE | APPROX. ARCH DIM. SPAN "S" | APPROX. ARCH DIM. RISE "R" | "L" | "G" | SINGLE | DOUBLE | TRIPLE | QUADRUPLE |
|---|---|---|---|---|---|---|---|---|
| | | | | | "W" | | | |
| 2 | 525 | 375 | 600 | 360 | 1300 | 2210 | 3120 | 4030 |
| 3 | 700 | 500 | 900 | 430 | 1725 | 2880 | 4035 | 5190 |
| 4 | 875 | 600 | 1200 | 510 | 2100 | 3510 | 4920 | 6330 |
| 5 | 1050 | 725 | 1500 | 580 | 2525 | 4180 | 5835 | 7490 |
| 6 | 1225 | 825 | 1800 | 660 | 2900 | 4810 | 6720 | 8630 |
| 7 | 1425 | 950 | 2100 | 740 | 3350 | 5540 | 7730 | 9920 |
| 8 | 1600 | 1075 | 2400 | 860 | 3775 | 6260 | 8745 | 11230 |
| 9 | 1775 | 1175 | 2700 | 970 | 4150 | 6920 | 9690 | 12460 |

BASED ON 68 X 13 CORRUGATION
"G" IS MEASURED BETWEEN THE OUTER SURFACES OF THE PIPES.

### NOTES:

1.) FOR RIPRAP QUANTITIES AND SLOPES, SEE CULVERT LAYOUT SHEET. CONCRETE SHALL BE CLASS B UNLESS OTHERWISE SHOWN IN THE PLANS.

2.) ALL METAL PIPES (CIRCULAR AND/OR ARCH) SHALL HAVE 5/8" X 6" GALVANIZED BOLTS WITH 2 HEX NUTS AT 600 mm MAX. CENTERS TO ANCHOR THE PIPE TO THE CONCRETE. THIS WORK WILL BE SUBSIDIARY TO THE RIPRAP HEADWALL.

3.) FOR CONCRETE ARCH PIPES, THE CMP ARCH PIPE CULVERT DIMENSIONS WILL HAVE TO BE ADJUSTED FOR THE PIPE WALL THICKNESS.

4.) FOR PIPES LARGER THAN SHOWN, USE THE CLEAR DISTANCE BETWEEN PIPES SHOWN IN ITEMS 460 AND/OR 464.

5.) IF THE SIDES OF THE HEADWALL IS ADJACENT TO A RIPRAP SLOPE AND IF THE TOP OF THE HEADWALL IS ADJACENT TO THE ROADWAY FOUNDATION OR RIPRAP SLOPE, THE SIDE AND TOP TOE WALLS MAY BE ELIMINATED IF APPROVED BY THE ENGINEER.

6.) ALL DIMENSIONS ARE IN mm UNLESS SHOWN OTHERWISE.

STATE OF TEXAS
JOEL K. DAVENPORT, JR.
79276
REGISTERED
PROFESSIONAL ENGINEER

Joel K Davenport Jr. P.E. 10/19/00
Joel K. Davenport, Jr. P.E. 79276 Date

# SAN ANTONIO DISTRICT STANDARD
## RIPRAP HEADWALL (M)
## (MODIFIED)

REVISED TO MAKE RIPRAP (CONC) (CL B) SUBSIDIARY TO S.E.T.

© 2000
Texas Department of Transportation

| FED.RD. DIV.NO. | PROJECT NO. | | SHEET NO. |
|---|---|---|---|
| 6 | NH 2000(704), etc. | | 414 |
| STATE | STATE DISTRICT | COUNTY | |
| TEXAS | SAT | BEXAR | |
| CONT. | SECT. | JOB | HIGHWAY NO. |
| 2452 | 01 | 036, etc. | LP 1604 |

11/95

I:\ap\design\sht151 rh5kdwl.dgn

DISCLAIMER:
The use of this standard is governed by the "Texas Engineering Practice Act". No warranty of any kind is made by TxDOT for any purpose whatsoever. TxDOT assumes no responsibility for the conversion of this standard to other formats or for incorrect results or damages resulting from its use.

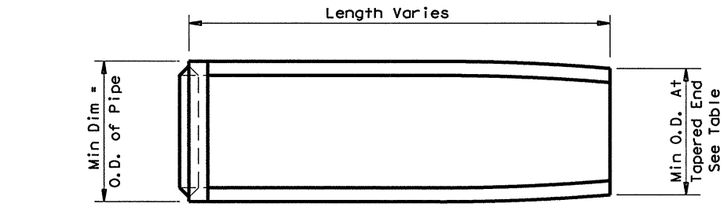


## PLAN VIEW - 300 THRU 600

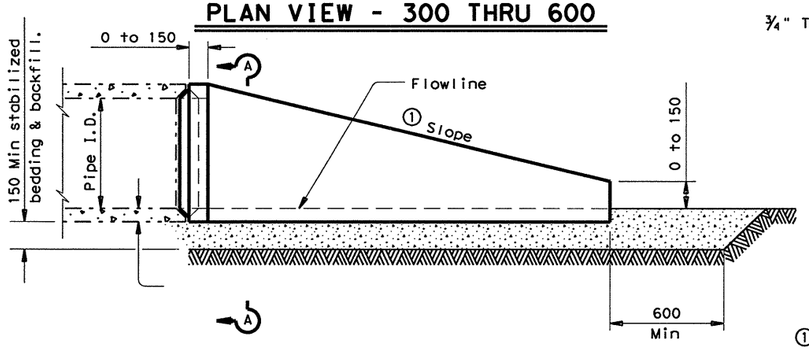


## LONGITUDINAL ELEVATION - 300 THRU 600

①Note: Slope to be according to structure summary or culvert cross-section.

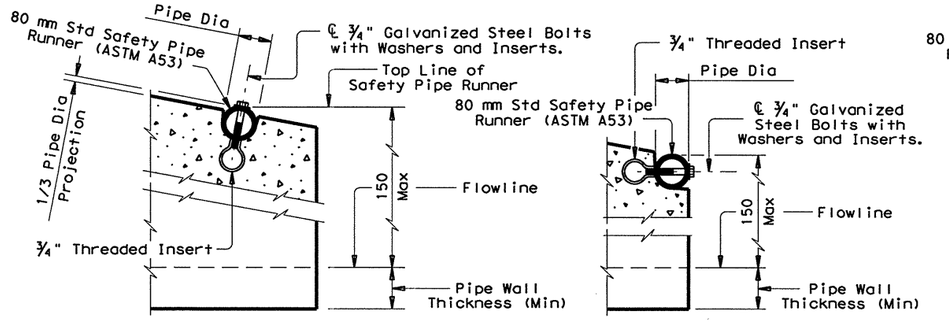


## END DETAILS FOR INSTALLATION OF SAFETY PIPE RUNNERS

(If required)

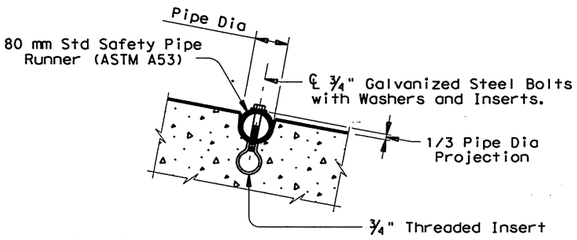


## INSTALLATION DETAIL FOR SAFETY PIPE RUNNERS

(If required)

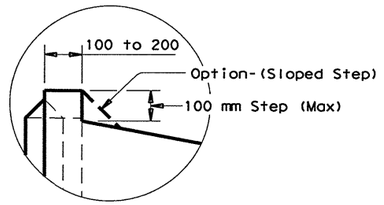


## DETAIL "A"

The top 100 mm of void between precast end treatments shall be filled with Cl "B" concrete riprap and shall be considered subsidiary to Precast Safety End Treatment.

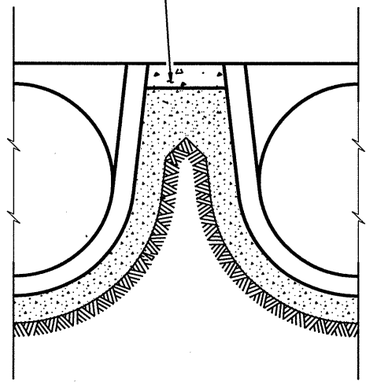

## MULTIPLE PIPE INSTALLATION

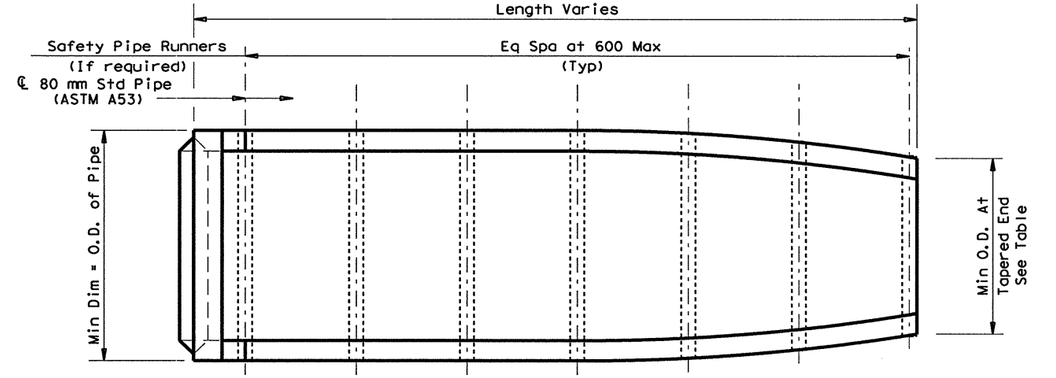


## PLAN VIEW - 750 THRU 1,050

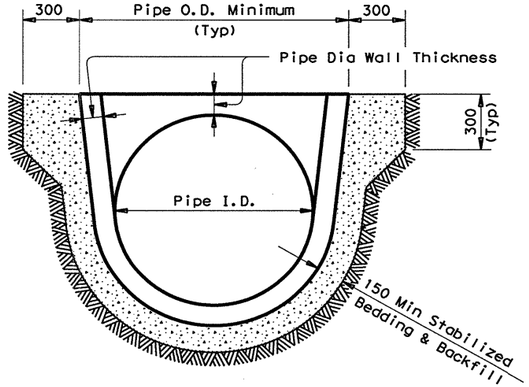


## SECTION A-A

(Showing single pipe installation)

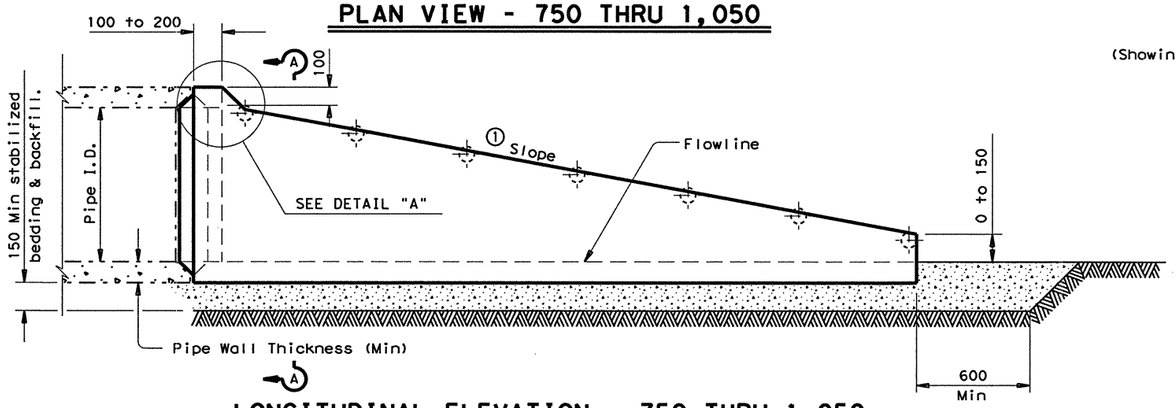


## LONGITUDINAL ELEVATION - 750 THRU 1,050

Sheet 1 of 2

Texas Department of Transportation
Design Division (Bridge)

# PRECAST SAFETY END TREATMENT

## PARALLEL DRAINAGE

## PSET-RP(M)

| FILE: psetstd8.dgn | DN: RLW | CK: KLR | DW: JTR | CK: KLR | STD: B247M |
|---|---|---|---|---|---|
| ©TxDOT August 1995 | DIST | FED REG | FEDERAL AID PROJECT • | | SHEET |
| REVISIONS | SAT | 6 | NH 2000 (704), etc. | | 415 |
| | COUNTY | | CONTROL | SECT | JOB | HIGHWAY |
| | BEXAR | | 2452 | 01 | 036, etc. | LP1604 |

ACC:
(LV=1,3 for Metric)
LEVELS DI... ED
1 3

DISCLAIMER:
The use of this standard is governed by the "Texas Engineering Practice Act". No warranty of any kind is made by TxDOT for any purpose whatsoever. TxDOT assumes no responsibility for the conversion of this standard to other formats or for incorrect results or damages resulting from its use.

| PIPE I.D. | MINIMUM WALL THICKNESS | MINIMUM O.D. | MIN O.D. AT TAPERED END | MIN REINF REQUIREMENTS ($cm^2/m$) | MAXIMUM SLOPE | MINIMUM LENGTH | PIPE RUNNERS REQUIRED | |
|---|---|---|---|---|---|---|---|---|
| | | | | | | | SINGLE PIPE | MULTIPLE PIPE |
| 300 | 50 | 400 | 400 | 1.5 CIRC. | 1:6 | 1,200 | No | Yes, for >2 pipes |
| 375 | 57 | 489 | 475 | 1.5 CIRC. | 1:6 | 1,700 | No | Yes, for >2 pipes |
| 450 | 63 | 576 | 538 | 1.5 CIRC. | 1:6 | 2,175 | No | Yes, for >2 pipes |
| 600 | 75 | 750 | 675 | 1.5 CIRC. | 1:6 | 3,150 | No | Yes, for >2 pipes |
| 750 | 88 | 926 | 775 | 3.8 CIRC. | 1:6 | 3,625 | No | Yes |
| 900 | 100 | 1,100 | 900 | 4.0 ELIP. | 1:6 | 4,600 | Yes | Yes |
| 1,050 | 113 | 1,276 | 1,038 | 4.9 ELIP. | 1:6 | 5,574 | Yes | Yes |

GENERAL NOTES:

Precast safety end treatment for reinforced concrete pipe may be used for TYPE 11 end treatment as specified in Item "Safety End Treatment".

The Safety End Treatment option shown on sheet 1 of 2 should only be utilized as indicated in the table on this sheet.

All precast concrete end sections shall be manufactured in accordance with Item "Reinforced Concrete Pipe Culverts" and in accordance with ASTM Specification C-76, Wall B for circular pipe.

Precast concrete end sections shall be provided with a tongue or groove end for compatability to upstream or downstream end conditions with sufficient annular space to allow for mortar, cold applied asphalt joint compound or pre-formed plastic gasket material.

Methods of lifting shall be provided by the manufacturer for ease of loading, unloading and installation.

All exposed corners shall be tooled to prevent sharp edges which might be subject to chipping or spalling.

Design requirements for the treatment of culvert ends must conform to the "Highway Design Division Operations and Procedures Manual 1-86".

The details for safety pipe runners shown on this sheet conform to the "Highway Design Division Operations and Procedures Manual 1-86", which addresses the basic design requirements concerning culvert ends.

All dimensions are in millimeters unless otherwise noted.



Texas Department of Transportation
Design Division (Bridge)

# PRECAST SAFETY END TREATMENT
## PARALLEL DRAINAGE
## PSET-RP(M)

| FILE: psetstd8.dgn | DN: RLW | CK: KLR | DW: JTR | CK: KLR | STD: B247M |
|---|---|---|---|---|---|
| ©TxDOT August 1995 | DIST | FED REG | FEDERAL AID PROJECT • | | SHEET |
| REVISIONS | SAT | 6 | NH 2000 (704), etc. | | 416 |
| | COUNTY | | CONTROL | SECT | JOB | HIGHWAY |
| | BEXAR | | 2452 | 01 | 036; etc. | LP1604 |

LEVELS DISPLAYED 1 3
ACC: LP 1604
(LV=1,3 for Metric)

DISCLAIMER:
The use of this standard is governed by the "Texas Engineering Practice Act". No warranty of any kind is made by TxDOT for any purpose whatsoever. TxDOT assumes no responsibility for the conversion of this standard to other formats or for incorrect results or damages resulting from its use.

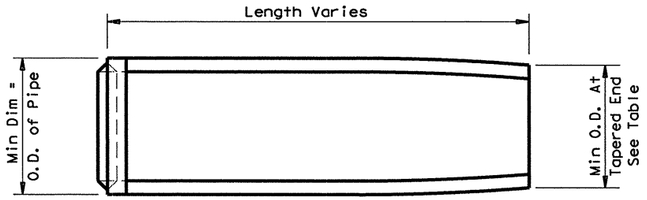


## PLAN VIEW - 300 THRU 600

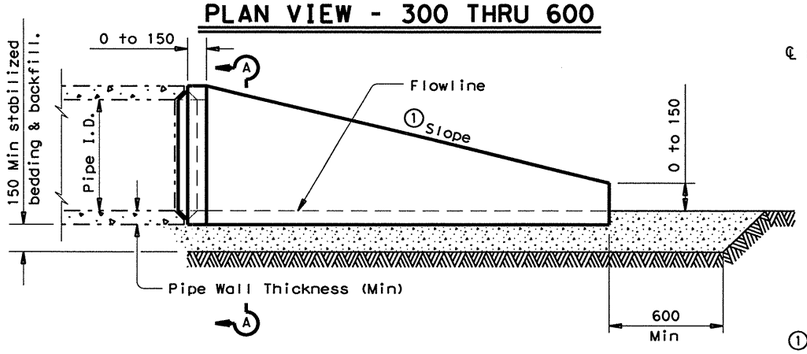


## LONGITUDINAL ELEVATION - 300 THRU 600

① Note: Slope to be according to structure summary or culvert cross-section.

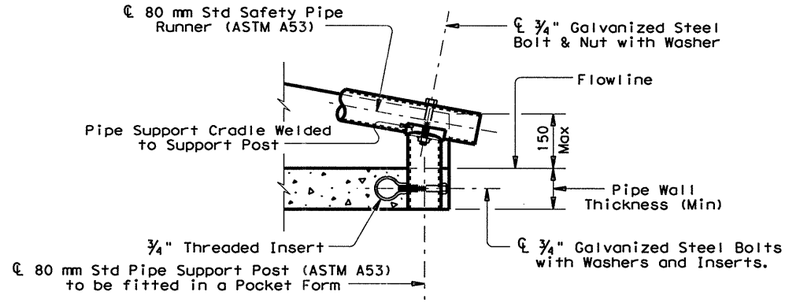


## END DETAIL FOR INSTALLATION OF SAFETY PIPE RUNNERS

(If required)

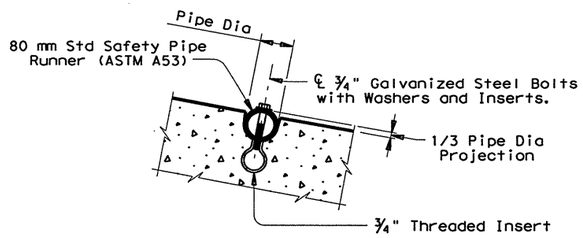


## INSTALLATION DETAIL FOR SAFETY PIPE RUNNERS

(If required)

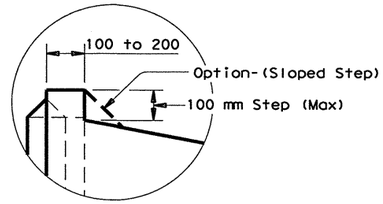


## DETAIL "A"

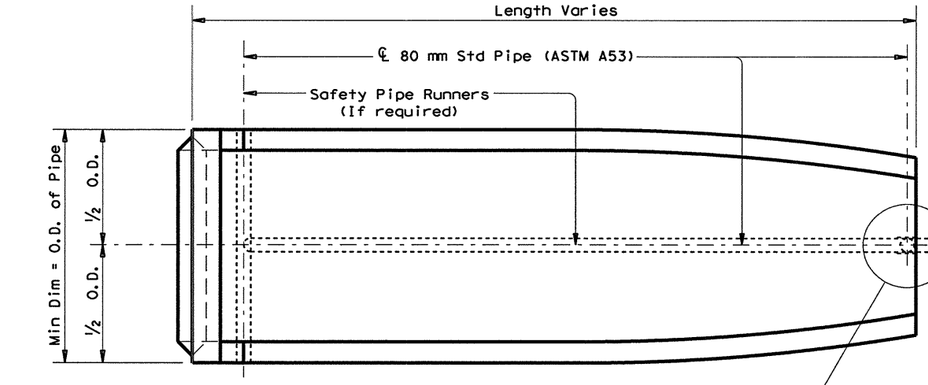


## PLAN VIEW - 750 THRU 1,050

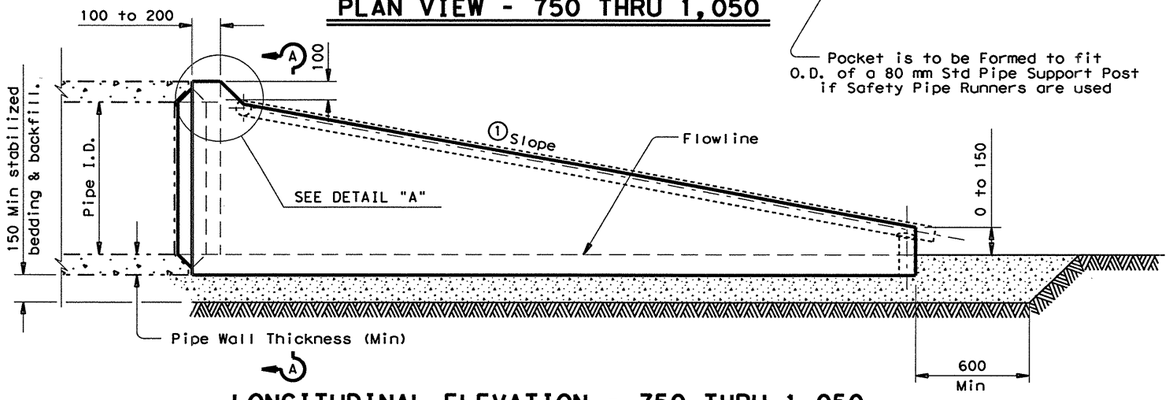


## LONGITUDINAL ELEVATION - 750 THRU 1,050

Pocket is to be Formed to fit O.D. of a 80 mm Std Pipe Support Post if Safety Pipe Runners are used

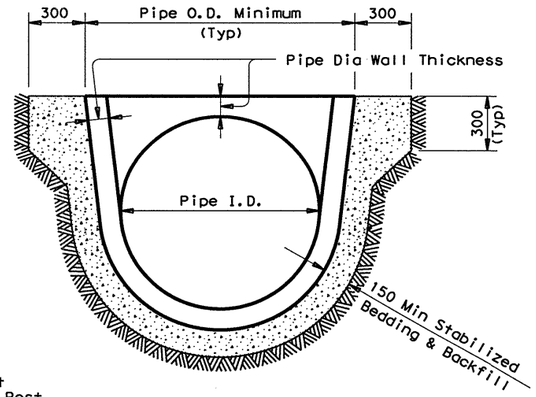


## SECTION A-A

The top 100 mm of void between precast end treatments shall be filled with Cl "B" concrete riprap and shall be considered subsidiary to Precast Safety End Treatment.

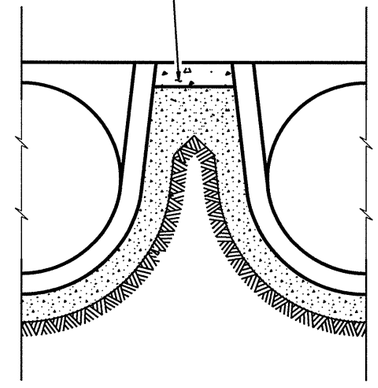

## MULTIPLE PIPE INSTALLATION

ACC:
(LV=1,3 for Metric)
LEVELS DGN'ED
1 3

Sheet 1 of 2

Texas Department of Transportation
Design Division (Bridge)

# PRECAST SAFETY END TREATMENT
## CROSS DRAINAGE
## PSET-RC(M)

| FILE: psetstd7.dgn | DN: RLW | CK: KLR | DW: JTR | CK: KLR | STD: B246M |
|---|---|---|---|---|---|
| ©TxDOT August 1995 | DIST | FED REG | FEDERAL AID PROJECT • | | SHEET |
| REVISIONS | SAT | 6 | NH 2000 (704), etc. | | 417 |
| | COUNTY | | CONTROL | SECT | JOB | HIGHWAY |
| | BEXAR | | 2452 | 01 | 036; etc. | LP1604 |

DISCLAIMER:
The use of this standard is governed by the "Texas Engineering Practice Act". No warranty of any kind is made by TxDOT for any purpose whatsoever. TxDOT assumes no responsibility for the conversion of this standard to other formats or for incorrect results or damages resulting from its use.

| PIPE I.D. | MINIMUM WALL THICKNESS | MINIMUM O.D. | MIN O.D. AT TAPERED END | MIN REINF REQUIREMENTS ($cm^2/m$) | SLOPE | MINIMUM LENGTH | SINGLE PIPE | | MULTIPLE PIPE | |
|---|---|---|---|---|---|---|---|---|---|---|
| | | | | | | | SKEW | PIPE RUNNERS REQUIRED | SKEW | PIPE RUNNERS REQUIRED |
| 300 | 50 | 400 | 400 | 1.5 CIRC. | 1:3 | 600 | <=45 deg | No | <=45 deg | No |
| | | | | | 1:4 | 800 | | | | |
| | | | | | 1:6 | 1,200 | | | | |
| 375 | 57 | 489 | 475 | 1.5 CIRC. | 1:3 | 850 | <=45 deg | No | <=45 deg | No |
| | | | | | 1:4 | 1,125 | | | | |
| | | | | | 1:6 | 1,700 | | | | |
| 450 | 63 | 576 | 538 | 1.5 CIRC. | 1:3 | 1,100 | <=45 deg | No | <=45 deg | No |
| | | | | | 1:4 | 1,450 | | | | |
| | | | | | 1:6 | 2,175 | | | | |
| 600 | 75 | 750 | 675 | 1.5 CIRC. | 1:3 | 1,575 | <=45 deg | No | <=30 deg | No |
| | | | | | 1:4 | 2,100 | | | >30 deg | Yes |
| | | | | | 1:6 | 3,150 | | | | |
| 750 | 88 | 926 | 775 | 3.8 CIRC. | 1:3 | 1,875 | <=15 deg | No | <=15 deg | No |
| | | | | | 1:4 | 2,450 | >15 deg | Yes | >15 deg | Yes |
| | | | | | 1:6 | 3,625 | | | | |
| 900 | 100 | 1,100 | 900 | 4.0 ELIP. | 1:3 | 2,350 | 0 deg | No | =>0 deg | Yes |
| | | | | | 1:4 | 3,100 | >0 deg | Yes | | |
| | | | | | 1:6 | 4,600 | | | | |
| 1,050 | 113 | 1,276 | 1,038 | 4.9 ELIP. | 1:3 | 2,850 | =>0 deg | Yes | =>0 deg | Yes |
| | | | | | 1:4 | 3,750 | | | | |
| | | | | | 1:6 | 5,575 | | | | |

GENERAL NOTES:

Precast safety end treatment for reinforced concrete pipe may be used for TYPE II end treatment as specified in Item "Safety End Treatment".

The Safety End Treatment option shown on sheet 1 of 2 should only be utilized as indicated in the table on this sheet.

All precast concrete end sections shall be manufactured in accordance with Item "Reinforced Concrete Pipe Culverts" and in accordance with ASTM Specification C-76, Wall B for circular pipe.

Precast concrete end sections shall be provided with a tongue or groove end for compatability to upstream or downstream end conditions with sufficient annular space to allow for mortar, cold applied asphalt joint compound or pre-formed plastic gasket material.

Methods of lifting shall be provided by the manufacturer for ease of loading, unloading and installation.

All exposed corners shall be tooled to prevent sharp edges which might be subject to chipping or spalling.

Design requirements for the treatment of culvert ends must conform to the "Highway Design Division Operations and Procedures Manual 1-86".

The details for safety pipe runners shown on this sheet conform to the "Highway Design Division Operations and Procedures Manual 1-86", which addresses the basic design requirements concerning culvert ends.

All dimensions are in millimeters unless otherwise noted.



Texas Department of Transportation
Design Division (Bridge)

# PRECAST SAFETY END TREATMENT
## CROSS DRAINAGE

## PSET-RC(M)

| FILE: psetstd7.dgn | DN: RLW | CK: KLR | DW: JTR | CK: KLR | STD: B246M |
|---|---|---|---|---|---|
| ©TxDOT August 1995 | DIST | FED REG | FEDERAL AID PROJECT • | | SHEET |
| REVISIONS | SAT | 6 | NH 2000 (704), etc. | | 418 |
| | COUNTY | | CONTROL | SECT | JOB | HIGHWAY |
| | BEXAR | | 2452 | 01 | 036; etc. | LP1604 |

LEVELS DISPLAYED 1 3
ACC:
(LV=1,3 for Metric)

DISCLAIMER:
The use of this standard is governed by the "Texas Engineering Practice Act". No warranty of any kind is made by TxDOT for any purpose whatsoever. TxDOT assumes no responsibility for the conversion of this standard to other formats or for incorrect results or damages resulting from its use.

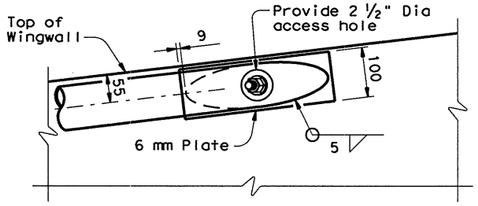


## ELEVATION AT WING

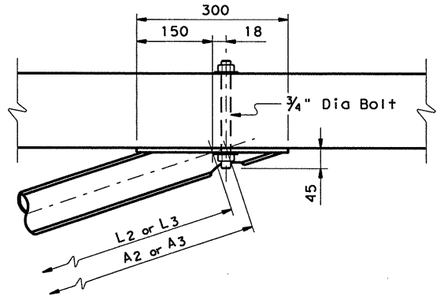


## SECTION AT WING

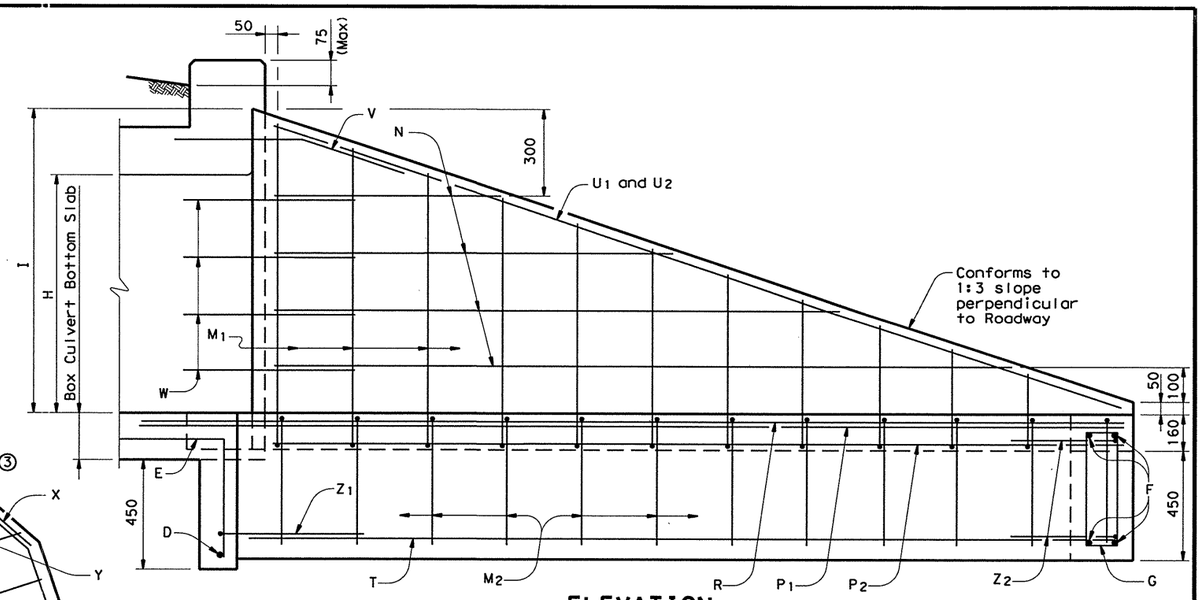


## ELEVATION

(PERPENDICULAR TO WINGWALL)

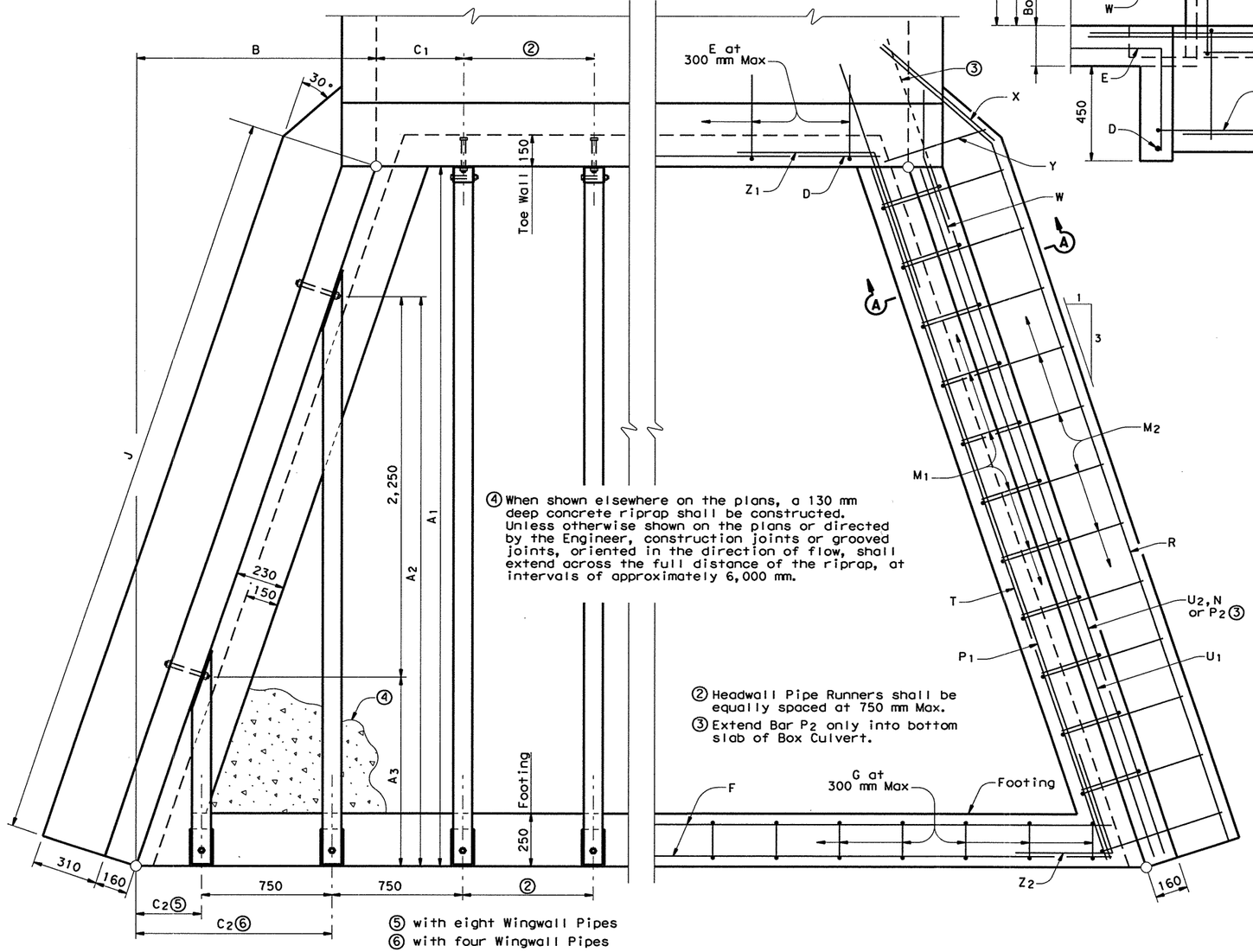


④ When shown elsewhere on the plans, a 130 mm deep concrete riprap shall be constructed. Unless otherwise shown on the plans or directed by the Engineer, construction joints or grooved joints, oriented in the direction of flow, shall extend across the full distance of the riprap, at intervals of approximately 6,000 mm.

② Headwall Pipe Runners shall be equally spaced at 750 mm Max.

③ Extend Bar $P_2$ only into bottom slab of Box Culvert.

⑤ with eight Wingwall Pipes

⑥ with four Wingwall Pipes

## SHOWING DIMENSIONS

## PLAN

## SHOWING REINFORCING

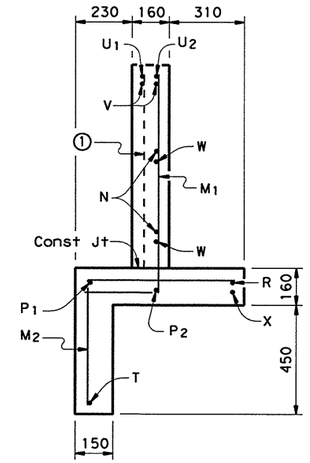


## SECTION A-A

① Contractor shall provide bars as needed to support Bar $U_1$ on inside face of wingwall.

**GENERAL NOTES:**

All reinforcing steel shall be Grade 420 (fy = 420 MPa)

All concrete shall have a minimum 28 day compressive strength of 21 MPa.

All pipe runners shall be 80 mm in diameter and shall conform to ASTM A53. Pipe runners less than or equal to 3,600 mm in length shall be standard weight (Schedule 40). Pipe runners greater than 3,600 mm in length shall be extra strong (Schedule 80).

All bolts, nuts, washers, brackets, angles and pipe runners are considered parts of the Safety End Treatment for payment.

Bolts and nuts shall conform to ASTM A307.

Holes shall be 1/16" oversize unless otherwise noted.

Steel plate shall conform to ASTM A36.

Dimensions relating to reinforcing steel are to centers of bars.

All reinforcing bars shall be adjusted to provide a 35 mm clear cover.

Chamfer exposed corners 20 mm except as otherwise noted.

All exposed steel shall be galvanized unless otherwise shown on plans. Galvanizing damaged during transport and construction shall be repaired in accordance with the specifications.

All dimensions are in millimeters and masses are in kilograms unless otherwise noted.



Texas Department of Transportation
Design Division (Bridge)

# SAFETY END TREATMENT
## FOR 0° SKEW BOX CULVERTS WITH FLARED WINGS ~ TYPE 1 1:3 EMBANKMENT SLOPE

# SETB-0-3(M)

| FILE: stb003st.dgn | DN: SDA | CK: EJU | DW: MCB | CK: EJU | STD: B221M |
|---|---|---|---|---|---|
| ©TxDOT October 1996 | DIST | FED REG | FEDERAL AID PROJECT • | | SHEET |
| REVISIONS 5-97 ~ CORRECT L3 DIMENSIONS ON SHEET 2 | SAT | 6 | NH 2000 (704), etc. | | 419 |
| | COUNTY | | CONTROL | SECT | JOB | HIGHWAY |
| | BEXAR | | 2452 | 01 | 036-04-032 | LP1604 |

LEVELS DISPLAYED 1 3 ACC: (LV=1,3 for Metric)

# BILLS OF REINFORCING STEEL (For 4 Wing Walls)

| Box Culvert Height, H | A1 | B | I | J | Bars M1 ~ #4 at 300 mm max No. | Avg Lgth mm | kg | Min "a" | Max "a" | Avg "a" | Bars M2 ~ #4 at 300 mm max No. | Lgth mm | kg | Bars N ~ #4 at 300 mm max No. | Min Lgth mm | Max Lgth mm | Avg Lgth mm | kg | 4-Bars P1 ~ #5 Lgth mm | kg | 4-Bars P2 ~ #5 Lgth mm | kg | 4-Bars R ~ #6 Lgth mm | kg | "b" | "c" | 4-Bars T ~ #4 Lgth mm | kg | 4-Bars U1 ~ #6 Lgth mm | kg | 4-Bars U2 ~ #6 Lgth mm | kg | 8-Bars V ~ #6 Lgth mm | kg | Bars W ~ #5 No. | Lgth mm | kg | 4-Bars X ~ #6 Lgth mm | kg | 4-Bars Y ~ #6 Lgth mm | kg | 4-Bars Z1 ~ #4 Lgth mm | kg | 8-Bars Z2 ~ #4 Lgth mm | kg |
|---|---|---|---|---|---|---|---|---|---|---|---|---|---|---|---|---|---|---|---|---|---|---|---|---|---|---|---|---|---|---|---|---|---|---|---|---|---|---|---|---|---|---|---|---|
| 600 | 2,250 | 750 | 800 | 2,372 | 32 | 790 | 25 | 150 | 840 | 500 | 36 | 1,110 | 40 | 12 | 770 | 2,190 | 1,480 | 18 | 2,830 | 18 | 2,740 | 17 | 3,190 | 29 | 870 | 2,320 | 2,380 | 9 | 2,390 | 21 | 2,360 | 21 | 1,000 | 18 | 12 | 840 | 16 | 870 | 8 | 470 | 4 | 920 | 4 | 920 | 7 |
| 900 | 3,300 | 1,100 | 1,150 | 3,479 | 48 | 960 | 46 | 150 | 1,190 | 670 | 52 | 1,110 | 57 | 16 | 770 | 3,290 | 2,030 | 32 | 3,940 | 24 | 3,850 | 24 | 4,290 | 38 | 870 | 3,420 | 3,490 | 14 | 3,550 | 32 | 3,520 | 31 | 1,000 | 18 | 16 | 840 | 21 | 870 | 8 | 470 | 4 | 920 | 4 | 920 | 7 |
| 1,200 | 4,290 | 1,430 | 1,480 | 4,522 | 60 | 1,130 | 67 | 160 | 1,520 | 840 | 64 | 1,110 | 71 | 20 | 770 | 4,340 | 2,560 | 51 | 4,980 | 31 | 4,890 | 30 | 5,340 | 48 | 870 | 4,470 | 4,530 | 18 | 4,640 | 41 | 4,620 | 41 | 1,000 | 18 | 20 | 840 | 26 | 870 | 8 | 470 | 4 | 920 | 4 | 920 | 7 |
| 1,500 | 5,400 | 1,800 | 1,850 | 5,692 | 76 | 1,320 | 100 | 160 | 1,890 | 1,030 | 80 | 1,110 | 88 | 24 | 770 | 5,510 | 3,140 | 75 | 6,150 | 38 | 6,060 | 38 | 6,510 | 58 | 870 | 5,640 | 5,700 | 23 | 5,870 | 52 | 5,850 | 52 | 1,000 | 18 | 24 | 840 | 31 | 870 | 8 | 470 | 4 | 920 | 4 | 920 | 7 |

| CULVERT SIZE | | | FOOTING | | | | | PIPE RUNNERS | | | | | | | | | | TOTAL QUANTITIES | | | BOX CULVERT TOE-WALL QUANTITIES | | | | | |
|---|---|---|---|---|---|---|---|---|---|---|---|---|---|---|---|---|---|---|---|---|---|---|---|---|---|---|
| | Box Culvert Height, H | Box Culvert Span, S | 8-Bars F ~ #5 Lgth mm | kg | Bars G ~ #4 No. | Lgth mm | kg | Headwall No. | C1 | L1 | Wingwall No. | C2 | A2 | L2 | A3 | L3 | | Conc ($m^3$) | Reinf (Kg) | Pipe (m) | 2-Bars D ~ #4 Lgth mm | kg | Bars E ~ #4 No. | Lgth mm | kg | Conc ($m^3$) | Reinf (Kg) |
| NUMBER OF SPANS 1 | 600 | 900 | 1,960 | 24 | 16 | 1,500 | 24 | 2 | 450 | 2,345 | 4 | 450 | 1,350 | 1,405 | ~ | ~ | | 2.9 | 302 | 10.31 | 480 | 1 | 4 | 900 | 4 | 0.1 | 5 |
| | | 1,200 | 2,260 | 28 | 18 | 1,500 | 27 | 2 | 600 | 2,345 | 4 | 600 | 1,800 | 1,875 | ~ | ~ | | 3.0 | 309 | 12.19 | 780 | 2 | 6 | 900 | 5 | 0.1 | 7 |
| | | 1,500 | 2,560 | 32 | 20 | 1,500 | 30 | 4 | 375 | 2,345 | 4 | 375 | 1,125 | 1,165 | ~ | ~ | | 3.1 | 316 | 14.04 | 1,080 | 2 | 8 | 900 | 7 | 0.2 | 9 |
| | 900 | 900 | 2,660 | 33 | 20 | 1,500 | 30 | 4 | 75 | 3,450 | 4 | 425 | 1,275 | 1,325 | ~ | ~ | | 4.6 | 424 | 19.10 | 480 | 1 | 4 | 900 | 4 | 0.1 | 5 |
| | | 1,200 | 2,960 | 37 | 22 | 1,500 | 33 | 4 | 225 | 3,450 | 4 | 575 | 1,725 | 1,800 | ~ | ~ | | 4.7 | 431 | 21.00 | 780 | 2 | 6 | 900 | 5 | 0.1 | 7 |
| | | 1,500 | 3,260 | 40 | 24 | 1,500 | 36 | 4 | 375 | 3,450 | 4 | 725 | 2,175 | 2,275 | ~ | ~ | | 4.8 | 437 | 22.90 | 1,080 | 2 | 8 | 900 | 7 | 0.2 | 9 |
| | | 1,800 | 3,560 | 44 | 26 | 1,500 | 39 | 6 | 150 | 3,450 | 4 | 500 | 1,500 | 1,560 | ~ | ~ | | 4.9 | 444 | 26.94 | 1,380 | 3 | 8 | 900 | 7 | 0.2 | 10 |
| | | 2,100 | 3,860 | 48 | 28 | 1,500 | 42 | 6 | 300 | 3,450 | 4 | 650 | 1,950 | 2,035 | ~ | ~ | | 5.0 | 451 | 28.84 | 1,680 | 3 | 10 | 900 | 9 | 0.3 | 12 |
| | 1,200 | 1,200 | 3,620 | 45 | 26 | 1,500 | 39 | 2 | 600 | 4,495 | 8 | 530 | 3,840 | 4,030 | 1,590 | 1,655 | | 6.5 | 549 | 31.73 | 780 | 2 | 6 | 900 | 5 | 0.1 | 7 |
| | | 1,500 | 3,920 | 49 | 28 | 1,500 | 42 | 4 | 375 | 4,495 | 8 | 305 | 3,165 | 3,315 | 915 | 945 | | 6.6 | 556 | 35.02 | 1,080 | 2 | 8 | 900 | 7 | 0.2 | 9 |
| | | 1,800 | 4,220 | 52 | 30 | 1,500 | 45 | 4 | 525 | 4,495 | 8 | 455 | 3,615 | 3,790 | 1,365 | 1,420 | | 6.7 | 563 | 38.82 | 1,380 | 3 | 8 | 900 | 7 | 0.2 | 10 |
| | | 2,100 | 4,520 | 56 | 32 | 1,500 | 48 | 4 | 675 | 4,495 | 8 | 605 | 4,065 | 4,265 | 1,815 | 1,895 | | 6.8 | 569 | 42.62 | 1,680 | 3 | 10 | 900 | 9 | 0.3 | 12 |
| | | 2,400 | 4,820 | 60 | 34 | 1,500 | 51 | 6 | 450 | 4,495 | 8 | 380 | 3,390 | 3,555 | 1,140 | 1,185 | | 6.9 | 576 | 45.93 | 1,980 | 4 | 12 | 900 | 11 | 0.3 | 15 |
| | 1,500 | 1,500 | 4,660 | 58 | 34 | 1,500 | 51 | 4 | 375 | 5,665 | 8 | 675 | 4,275 | 4,485 | 2,025 | 2,115 | | 8.9 | 705 | 49.06 | 1,080 | 2 | 8 | 900 | 7 | 0.2 | 9 |
| | | 1,800 | 4,960 | 62 | 36 | 1,500 | 54 | 6 | 150 | 5,665 | 8 | 450 | 3,600 | 3,775 | 1,350 | 1,405 | | 9.0 | 712 | 54.71 | 1,380 | 3 | 8 | 900 | 7 | 0.2 | 10 |
| | | 2,100 | 5,260 | 65 | 38 | 1,500 | 57 | 6 | 300 | 5,665 | 8 | 600 | 4,050 | 4,250 | 1,800 | 1,880 | | 9.1 | 718 | 58.51 | 1,680 | 3 | 10 | 900 | 9 | 0.3 | 12 |
| | | 2,400 | 5,560 | 69 | 40 | 1,500 | 60 | 6 | 450 | 5,665 | 8 | 750 | 4,500 | 4,725 | 2,250 | 2,355 | | 9.2 | 725 | 62.31 | 1,980 | 4 | 12 | 900 | 11 | 0.3 | 15 |
| | | 2,700 | 5,860 | 73 | 42 | 1,500 | 63 | 8 | 225 | 5,665 | 8 | 525 | 3,825 | 4,010 | 1,575 | 1,640 | | 9.3 | 732 | 67.92 | 2,280 | 5 | 12 | 900 | 11 | 0.3 | 15 |
| | | 3,000 | 6,160 | 76 | 44 | 1,500 | 66 | 8 | 375 | 5,665 | 8 | 675 | 4,275 | 4,485 | 2,025 | 2,115 | | 9.4 | 739 | 71.72 | 2,580 | 5 | 14 | 900 | 13 | 0.4 | 18 |
| NUMBER OF SPANS 2 | 600 | 1,500 | 4,230 | 53 | 30 | 1,500 | 45 | 8 | 463 | 2,345 | 4 | 463 | 1,389 | 1,445 | ~ | ~ | | 3.6 | 351 | 24.54 | 2,760 | 5 | 16 | 900 | 14 | 0.4 | 20 |
| | 900 | 1,500 | 4,930 | 61 | 36 | 1,500 | 54 | 10 | 88 | 3,450 | 4 | 438 | 1,314 | 1,365 | ~ | ~ | | 5.3 | 476 | 39.96 | 2,760 | 5 | 16 | 900 | 14 | 0.4 | 20 |
| | | 1,800 | 5,530 | 69 | 40 | 1,500 | 60 | 10 | 400 | 3,450 | 4 | 750 | 2,250 | 2,350 | ~ | ~ | | 5.5 | 489 | 43.90 | 3,360 | 7 | 18 | 900 | 16 | 0.5 | 23 |
| | | 2,100 | 6,130 | 76 | 44 | 1,500 | 66 | 12 | 325 | 3,450 | 4 | 675 | 2,025 | 2,115 | ~ | ~ | | 5.7 | 503 | 49.86 | 3,960 | 8 | 20 | 900 | 18 | 0.6 | 26 |
| | 1,200 | 1,500 | 5,590 | 69 | 40 | 1,500 | 60 | 8 | 463 | 4,495 | 8 | 393 | 3,429 | 3,595 | 1,179 | 1,225 | | 7.1 | 595 | 55.24 | 2,760 | 5 | 16 | 900 | 14 | 0.4 | 20 |
| | | 1,800 | 6,190 | 77 | 44 | 1,500 | 66 | 10 | 400 | 4,495 | 8 | 330 | 3,240 | 3,395 | 990 | 1,025 | | 7.3 | 608 | 62.63 | 3,360 | 7 | 18 | 900 | 16 | 0.5 | 23 |
| | | 2,100 | 6,790 | 84 | 48 | 1,500 | 72 | 12 | 325 | 4,495 | 8 | 255 | 3,015 | 3,160 | 765 | 785 | | 7.5 | 621 | 69.72 | 3,960 | 8 | 20 | 900 | 18 | 0.6 | 26 |
| | | 2,400 | 7,390 | 92 | 52 | 1,500 | 78 | 12 | 638 | 4,495 | 8 | 568 | 3,954 | 4,150 | 1,704 | 1,775 | | 7.7 | 635 | 77.64 | 4,560 | 9 | 24 | 900 | 21 | 0.6 | 31 |
| | 1,500 | 1,500 | 6,330 | 79 | 44 | 1,500 | 66 | 10 | 88 | 5,665 | 8 | 388 | 3,414 | 3,580 | 1,164 | 1,210 | | 9.5 | 741 | 75.81 | 2,760 | 5 | 16 | 900 | 14 | 0.4 | 20 |
| | | 1,800 | 6,930 | 86 | 48 | 1,500 | 72 | 10 | 400 | 5,665 | 8 | 700 | 4,350 | 4,565 | 2,100 | 2,195 | | 9.6 | 754 | 83.69 | 3,360 | 7 | 18 | 900 | 16 | 0.5 | 23 |
| | | 2,100 | 7,530 | 93 | 52 | 1,500 | 78 | 12 | 325 | 5,665 | 8 | 625 | 4,125 | 4,330 | 1,875 | 1,955 | | 9.8 | 767 | 93.12 | 3,960 | 8 | 20 | 900 | 18 | 0.6 | 26 |
| | | 2,400 | 8,130 | 101 | 56 | 1,500 | 83 | 14 | 263 | 5,665 | 8 | 563 | 3,939 | 4,130 | 1,689 | 1,760 | | 10.0 | 781 | 102.87 | 4,560 | 9 | 24 | 900 | 21 | 0.6 | 31 |
| | | 2,700 | 8,730 | 108 | 60 | 1,500 | 89 | 16 | 200 | 5,665 | 8 | 500 | 3,750 | 3,935 | 1,500 | 1,560 | | 10.2 | 794 | 112.62 | 5,160 | 10 | 26 | 900 | 23 | 0.7 | 34 |
| NUMBER OF SPANS 3 | 600 | 1,500 | 5,910 | 73 | 42 | 1,500 | 63 | 12 | 550 | 2,345 | 4 | 550 | 1,650 | 1,720 | ~ | ~ | | 4.1 | 390 | 35.02 | 4,430 | 9 | 22 | 900 | 20 | 0.6 | 28 |
| | 900 | 1,500 | 6,610 | 82 | 46 | 1,500 | 69 | 14 | 175 | 3,450 | 4 | 525 | 1,575 | 1,640 | ~ | ~ | | 5.8 | 512 | 54.86 | 4,430 | 9 | 22 | 900 | 20 | 0.6 | 28 |
| | | 1,800 | 7,510 | 93 | 52 | 1,500 | 78 | 16 | 275 | 3,450 | 4 | 625 | 1,875 | 1,955 | ~ | ~ | | 6.1 | 532 | 63.02 | 5,330 | 11 | 26 | 900 | 23 | 0.8 | 34 |
| | 1,200 | 1,500 | 7,270 | 90 | 50 | 1,500 | 75 | 12 | 550 | 4,495 | 8 | 480 | 3,690 | 3,870 | 1,440 | 1,500 | | 7.7 | 630 | 75.42 | 4,430 | 9 | 22 | 900 | 20 | 0.6 | 28 |
| | | 1,800 | 8,170 | 101 | 56 | 1,500 | 83 | 14 | 650 | 4,495 | 8 | 580 | 3,990 | 4,185 | 1,740 | 1,815 | | 7.9 | 651 | 86.93 | 5,330 | 11 | 26 | 900 | 23 | 0.8 | 34 |
| | 1,500 | 1,500 | 8,010 | 99 | 56 | 1,500 | 83 | 14 | 175 | 5,665 | 8 | 475 | 3,675 | 3,855 | 1,425 | 1,485 | | 10.0 | 779 | 100.67 | 4,430 | 9 | 22 | 900 | 20 | 0.6 | 28 |
| | | 1,800 | 8,910 | 111 | 62 | 1,500 | 92 | 16 | 275 | 5,665 | 8 | 575 | 3,975 | 4,170 | 1,725 | 1,800 | | 10.3 | 800 | 114.52 | 5,330 | 11 | 26 | 900 | 23 | 0.8 | 34 |

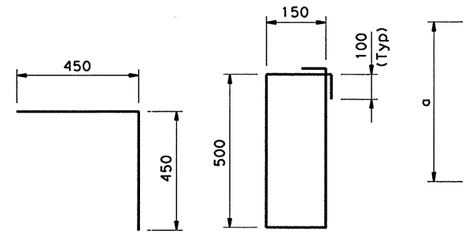


BARS E BARS G

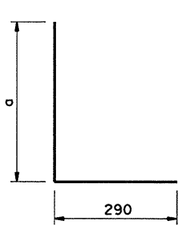


BARS M1

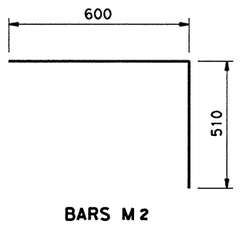


BARS M2

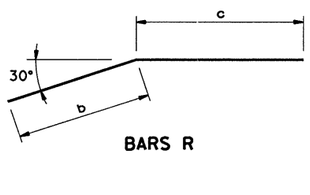


BARS R

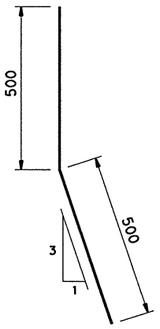


BARS V

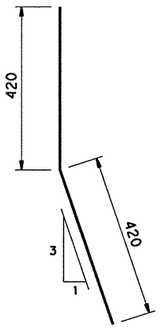


BARS W

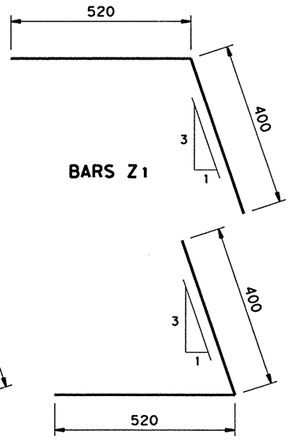


BARS Z1 BARS Z2

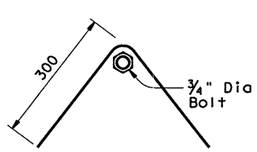


## ANCHOR BARS

Contractor shall provide 2 ~ #3 anchor bars per sidewall bolt

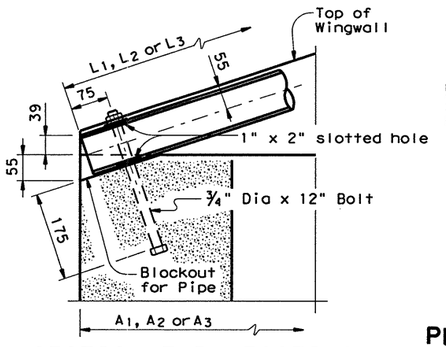


## SECTION THRU FOOTING

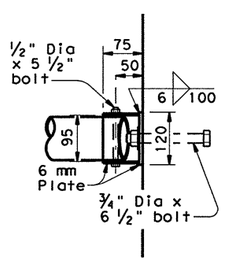


## PLAN AT HEADWALL

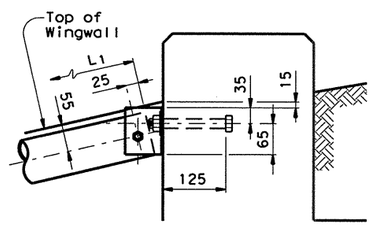


## ELEVATION AT HEADWALL

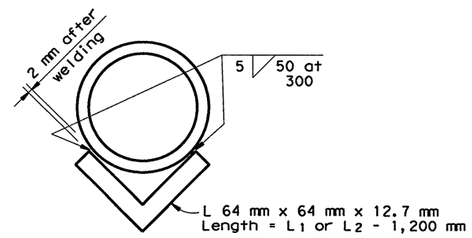


NOTE: Where $L_1$ or $L_2 > 4,500$ mm, the pipe runners shall be strengthened over the midspan as shown.

## PIPE STRENGTHENING DETAIL

DISCLAIMER:
The use of this standard is governed by the "Texas Engineering Practice Act". No warranty of any kind is made by TxDOT for any purpose whatsoever. TxDOT assumes no responsibility for the conversion of this standard to other formats or for incorrect results or damages resulting from its use.

ACC: (LV=1,3 for Metric)

LEVELS DISPLAYED 1 3



Texas Department of Transportation
Design Division (Bridge)

# SAFETY END TREATMENT
## FOR 0° SKEW BOX CULVERTS WITH FLARED WINGS ~ TYPE 1 1:3 EMBANKMENT SLOPE

# SETB-0-3(M)

| FILE: stb003st.dgn | DN: SDA | CK: EJU | DW: MCB | CK: EJU | STD: B221M |
|---|---|---|---|---|---|
| © TxDOT October 1996 | DIST | FED REG | FEDERAL AID PROJECT • | | SHEET |
| REVISIONS 5-97 ~ CORRECT L3 DIMENSIONS ON SHEET 2 | SAT | 6 | NH 2000 (704), etc. | | 420 |
| | COUNTY | | CONTROL | SECT | JOB | HIGHWAY |
| | BEXAR | | 2452 | 01 | 036, etc. | LP1604 |

DISCLAIMER:
The use of this standard is governed by the "Texas Engineering Practice Act". No warranty of any kind is made by TxDOT for any purpose whatsoever. TxDOT assumes no responsibility for the conversion of this standard to other formats or for incorrect results or damages resulting from its use.

LEVELS DISPLAYED | ACC: (LV=1,3 for Metric)

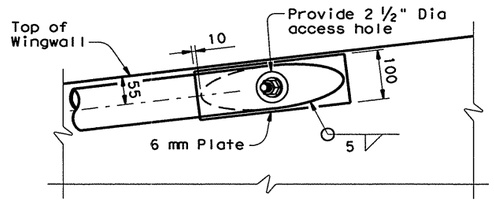


## ELEVATION AT WING

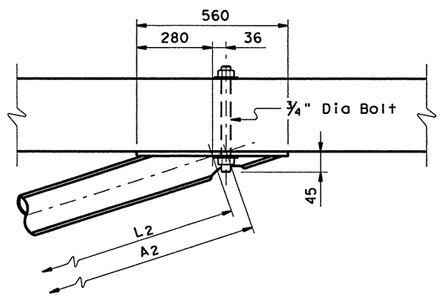


## SECTION AT WING

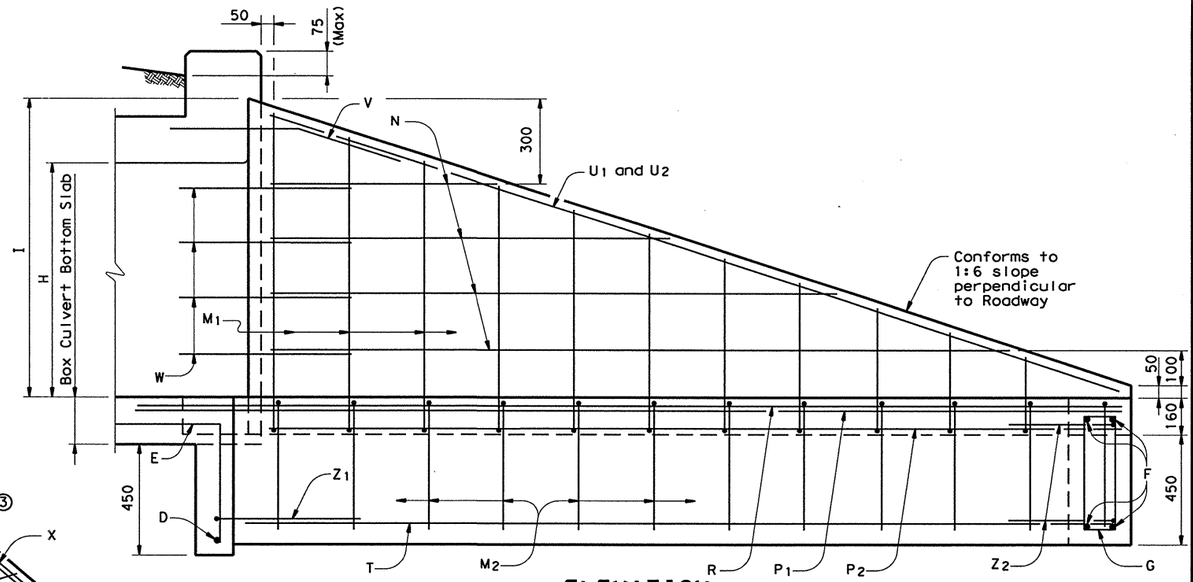


## ELEVATION

(PERPENDICULAR TO WINGWALL)

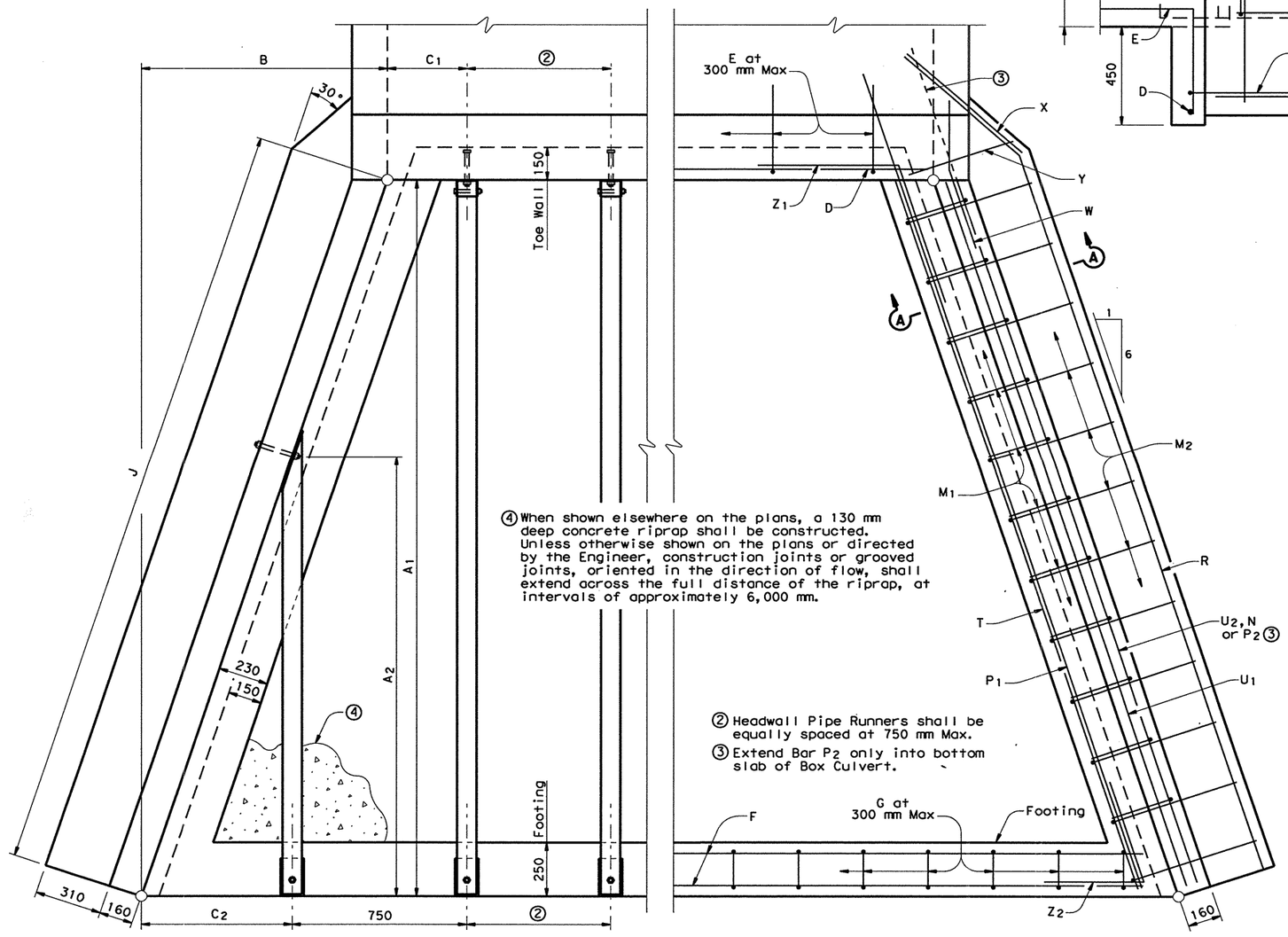


## SHOWING DIMENSIONS

## PLAN

## SHOWING REINFORCING

④ When shown elsewhere on the plans, a 130 mm deep concrete riprap shall be constructed. Unless otherwise shown on the plans or directed by the Engineer, construction joints or grooved joints, oriented in the direction of flow, shall extend across the full distance of the riprap, at intervals of approximately 6,000 mm.

② Headwall Pipe Runners shall be equally spaced at 750 mm Max.

③ Extend Bar $P_2$ only into bottom slab of Box Culvert.

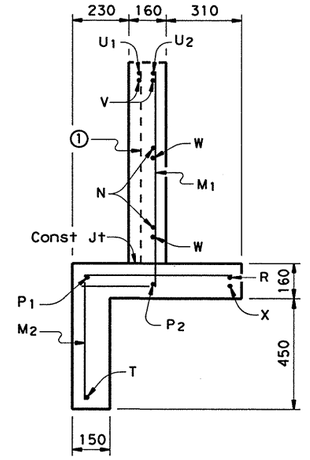


## SECTION A-A

① Contractor shall provide bars as needed to support Bar $U_1$ on inside face of wingwall.

**GENERAL NOTES:**

All reinforcing steel shall be Grade 420 (fy = 420 MPa)

All concrete shall have a minimum 28 day compressive strength of 21 MPa.

All pipe runners shall be 80 mm in diameter and shall conform to ASTM A53. Pipe runners less than or equal to 3,600 mm in length shall be standard weight (Schedule 40). Pipe runners greater than 3,600 mm in length shall be extra strong (Schedule 80).

All bolts, nuts, washers, brackets, angles and pipe runners are considered parts of the Safety End Treatment for payment.

Bolts and nuts shall conform to ASTM A307.

Holes shall be 1/16" oversize unless otherwise noted.

Steel plate shall conform to ASTM A36.

Dimensions relating to reinforcing steel are to centers of bars.

All reinforcing bars shall be adjusted to provide a 35 mm clear cover.

Chamfer exposed corners 20 mm except as otherwise noted.

All exposed steel shall be galvanized unless otherwise shown on plans. Galvanizing damaged during transport and construction shall be repaired in accordance with the specifications.

All dimensions are in millimeters and masses are in kilograms unless otherwise noted.



Texas Department of Transportation
Design Division (Bridge)

# SAFETY END TREATMENT
## FOR 0° SKEW BOX CULVERTS WITH FLARED WINGS ~ TYPE 1 1:6 EMBANKMENT SLOPE

# SETB-0-6(M)

| FILE: stb006st.dgn | DN: SDA | CK: EJU | DW: MCB | CK: EJU | STD: B223M |
|---|---|---|---|---|---|
| © TxDOT October 1996 | DIST | FED REG | FEDERAL AID PROJECT • | | SHEET |
| REVISIONS | SAT | 6 | NH 2000(704), etc. | | 421 |
| | COUNTY | | CONTROL | SECT | JOB | HIGHWAY |
| | BEXAR | | 2452 | 01 | 036, etc. | LP 1604 |

DISCLAIMER:
The use of this standard is governed by the "Texas Engineering Practice Act". No warranty of any kind is made by TxDOT for any purpose whatsoever. TxDOT assumes no responsibility for the conversion of this standard to other formats or for incorrect results or damages resulting from its use.

LEVELS DISPLAYED 1 3 | ACC: (LV=1,3 for Metric)

## TABLE OF DIMENSIONS

## BILLS OF REINFORCING STEEL (For 4 Wing Walls)

| Box Culvert Height, H | $A_1$ | B | I | J | Bars $M_1$ ~ #4 at 300 mm max | | | | | | Bars $M_2$ ~ #4 at 300 mm max | | | Bars N ~ #4 at 300 mm max | | | | | 4-Bars $P_1$ ~ #5 | | 4-Bars $P_2$ ~ #5 | | 4-Bars R ~ #6 | | | | 4-Bars T ~ #4 | | 4-Bars $U_1$ ~ #6 | | 4-Bars $U_2$ ~ #6 | | 8-Bars V ~ #6 | | Bars W ~ #5 | | | 4-Bars X ~ #6 | | 4-Bars Y ~ #6 | | 4-Bars $Z_1$ ~ #4 | | 8-Bars $Z_2$ ~ #4 | |
|---|---|---|---|---|---|---|---|---|---|---|---|---|---|---|---|---|---|---|---|---|---|---|---|---|---|---|---|---|---|---|---|---|---|---|---|---|---|---|---|---|---|---|---|---|
| | | | | | No. | Avg Lgth mm | kg | Min "a" | Max "a" | Avg "a" | No. | Lgth mm | kg | No. | Min Lgth mm | Max Lgth mm | Avg Lgth mm | kg | Lgth mm | kg | Lgth mm | kg | Lgth mm | kg | "b" | "c" | Lgth mm | kg | Lgth mm | kg | Lgth mm | kg | Lgth mm | kg | No. | Lgth mm | kg | Lgth mm | kg | Lgth mm | kg | Lgth mm | kg | Lgth mm | kg |
| 600 | 4,500 | 750 | 800 | 4,562 | 60 | 770 | 46 | 110 | 850 | 480 | 64 | 1,110 | 71 | 12 | 1,560 | 4,300 | 2,930 | 35 | 4,990 | 31 | 4,930 | 31 | 5,470 | 49 | 960 | 4,510 | 4,540 | 18 | 4,530 | 40 | 4,520 | 40 | 1,000 | 18 | 12 | 840 | 16 | 960 | 9 | 450 | 4 | 920 | 4 | 920 | 7 |
| 900 | 6,600 | 1,100 | 1,150 | 6,691 | 88 | 950 | 83 | 110 | 1,200 | 660 | 92 | 1,110 | 102 | 16 | 1,560 | 6,430 | 4,000 | 64 | 7,120 | 44 | 7,060 | 44 | 7,600 | 68 | 960 | 6,640 | 6,670 | 27 | 6,690 | 60 | 6,680 | 60 | 1,000 | 18 | 16 | 840 | 21 | 960 | 9 | 450 | 4 | 920 | 4 | 920 | 7 |

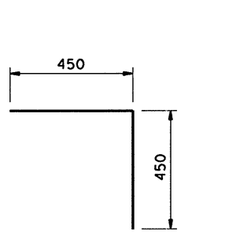


BARS E

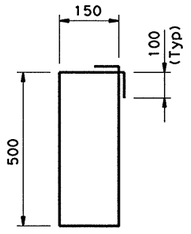


BARS G

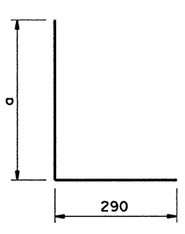


BARS M1

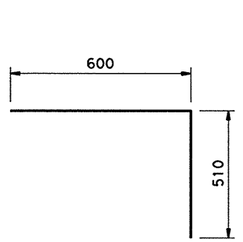


BARS M2

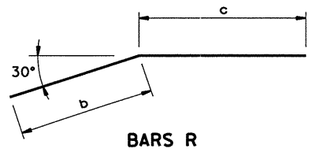


BARS R

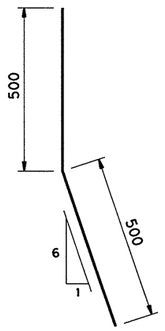


BARS V

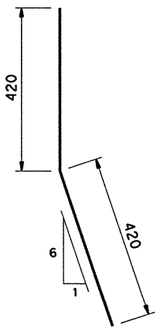


BARS W

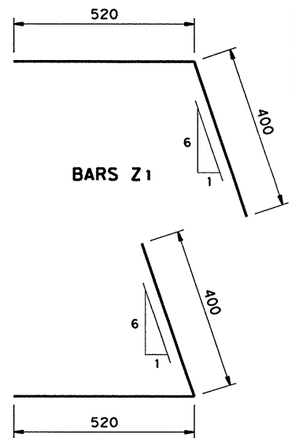


BARS Z1

BARS Z2

| NUMBER OF SPANS | | Box Culvert Height, H | Box Culvert Span, S | 8-Bars F ~ #5 Lgth mm | 8-Bars F ~ #5 kg | Bars G ~ #4 No. | Bars G ~ #4 Lgth mm | Bars G ~ #4 kg | Headwall No. | Headwall $C_1$ | Headwall $L_1$ | Wingwall No. | Wingwall $C_2$ | Wingwall $A_2$ | Wingwall $L_2$ | TOTAL QUANTITIES Conc ($m^3$) | TOTAL QUANTITIES Reinf (Kg) | TOTAL QUANTITIES Pipe (m) | BOX CULVERT TOE-WALL QUANTITIES 2-Bars D ~ #4 Lgth mm | 2-Bars D ~ #4 kg | Bars E ~ #4 No. | Bars E ~ #4 Lgth mm | Bars E ~ #4 kg | Conc ($m^3$) | Reinf (Kg) |
|---|---|---|---|---|---|---|---|---|---|---|---|---|---|---|---|---|---|---|---|---|---|---|---|---|
| 1 | | 600 | 900 | 2,050 | 25 | 16 | 1,500 | 24 | 2 | 450 | 4,535 | 4 | 450 | 2,700 | 2,700 | 5.1 | 467 | 19.87 | 500 | 1 | 4 | 900 | 4 | 0.1 | 5 |
| | | | 1,200 | 2,350 | 29 | 18 | 1,500 | 27 | 2 | 600 | 4,535 | 4 | 600 | 3,600 | 3,615 | 5.2 | 474 | 23.53 | 800 | 2 | 6 | 900 | 5 | 0.1 | 7 |
| | | | 1,500 | 2,650 | 33 | 20 | 1,500 | 30 | 4 | 375 | 4,535 | 4 | 375 | 2,250 | 2,245 | 5.3 | 481 | 27.12 | 1,100 | 2 | 8 | 900 | 7 | 0.2 | 9 |
| | | 900 | 900 | 2,750 | 34 | 20 | 1,500 | 30 | 4 | 75 | 6,665 | 4 | 425 | 2,550 | 2,550 | 8.2 | 677 | 36.86 | 500 | 1 | 4 | 900 | 4 | 0.1 | 5 |
| | | | 1,200 | 3,050 | 38 | 22 | 1,500 | 33 | 4 | 225 | 6,665 | 4 | 575 | 3,450 | 3,460 | 8.3 | 683 | 40.50 | 800 | 2 | 6 | 900 | 5 | 0.1 | 7 |
| | | | 1,500 | 3,350 | 42 | 24 | 1,500 | 36 | 4 | 375 | 6,665 | 4 | 725 | 4,350 | 4,375 | 8.4 | 690 | 44.16 | 1,100 | 2 | 8 | 900 | 7 | 0.2 | 9 |
| | | | 1,800 | 3,650 | 45 | 26 | 1,500 | 39 | 6 | 150 | 6,665 | 4 | 500 | 3,000 | 3,005 | 8.5 | 697 | 52.01 | 1,400 | 3 | 8 | 900 | 7 | 0.2 | 10 |
| | | | 2,100 | 3,950 | 49 | 28 | 1,500 | 42 | 6 | 300 | 6,665 | 4 | 650 | 3,900 | 3,915 | 8.6 | 703 | 55.65 | 1,700 | 3 | 10 | 900 | 9 | 0.3 | 12 |
| 2 | | 600 | 1,500 | 4,320 | 54 | 32 | 1,500 | 48 | 8 | 463 | 4,535 | 4 | 463 | 2,778 | 2,780 | 5.8 | 519 | 47.40 | 2,770 | 6 | 16 | 900 | 14 | 0.4 | 20 |
| | | 900 | 1,500 | 5,020 | 62 | 36 | 1,500 | 54 | 10 | 88 | 6,665 | 4 | 438 | 2,628 | 2,625 | 8.9 | 729 | 77.15 | 2,770 | 6 | 16 | 900 | 14 | 0.4 | 20 |
| | | | 1,800 | 5,620 | 70 | 40 | 1,500 | 60 | 10 | 400 | 6,665 | 4 | 750 | 4,500 | 4,525 | 9.1 | 742 | 84.75 | 3,370 | 7 | 18 | 900 | 16 | 0.5 | 23 |
| | | | 2,100 | 6,220 | 77 | 44 | 1,500 | 66 | 12 | 325 | 6,665 | 4 | 675 | 4,050 | 4,070 | 9.3 | 755 | 96.26 | 3,970 | 8 | 20 | 900 | 18 | 0.6 | 26 |
| 3 | | 600 | 1,500 | 6,000 | 74 | 42 | 1,500 | 63 | 12 | 550 | 4,535 | 4 | 550 | 3,300 | 3,310 | 6.3 | 555 | 67.66 | 4,450 | 9 | 22 | 900 | 20 | 0.6 | 29 |
| | | 900 | 1,500 | 6,700 | 83 | 46 | 1,500 | 69 | 14 | 175 | 6,665 | 4 | 525 | 3,150 | 3,155 | 9.4 | 764 | 105.93 | 4,450 | 9 | 22 | 900 | 20 | 0.6 | 29 |
| | | | 1,800 | 7,600 | 94 | 52 | 1,500 | 78 | 16 | 275 | 6,665 | 4 | 625 | 3,750 | 3,765 | 9.7 | 784 | 121.70 | 5,350 | 11 | 26 | 900 | 23 | 0.8 | 34 |

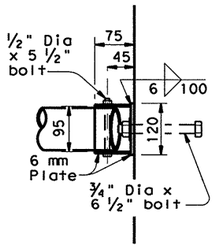


PLAN AT HEADWALL

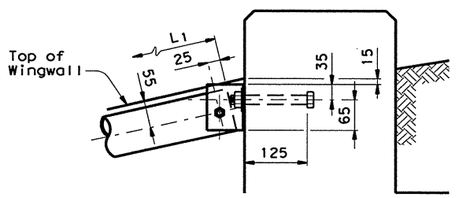


ELEVATION AT HEADWALL

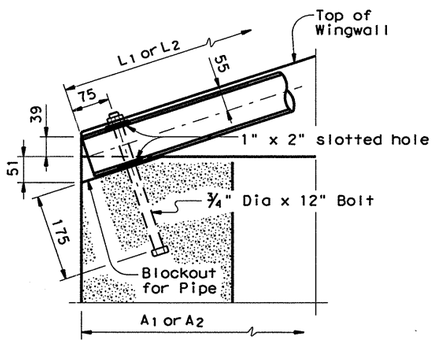


SECTION THRU FOOTING

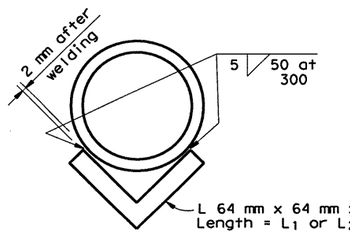


NOTE: Where $L_1$ or $L_2 > 4,500$ mm, the pipe runners shall be strengthened over the midspan as shown.

PIPE STRENGTHENING DETAIL

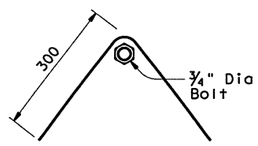


ANCHOR BARS

Contractor shall provide 2 ~ #3 anchor bars per sidewall bolt

SHEET 2 OF 2

Texas Department of Transportation
Design Division (Bridge)

# SAFETY END TREATMENT
## FOR 0° SKEW BOX CULVERTS WITH FLARED WINGS ~ TYPE 1 1:6 EMBANKMENT SLOPE

# SETB-0-6(M)

| FILE: stb006st.dgn | DN: SDA | CK: EJU | DW: MCB | CK: EJU | STD: B223M |
|---|---|---|---|---|---|
| © TxDOT October 1996 | DIST | FED REG | FEDERAL AID PROJECT • | | SHEET |
| REVISIONS | SAT | 6 | NH 2000(704), etc. | | 422 |
| | COUNTY | | CONTROL | SECT | JOB | HIGHWAY |
| | BEXAR | | 2452 | 01 | 036, etc. | LP 1604 |

DISCLAIMER:
The use of this standard is governed by the "Texas Engineering Practice Act". No warranty of any kind is made by TxDOT for any purpose whatsoever. TxDOT assumes no responsibility for the conversion of this standard to other formats or for incorrect results or damages resulting from its use.

LEVELS DISPLAYED 1 3 | ACC: (LV=1,3 for Metric)

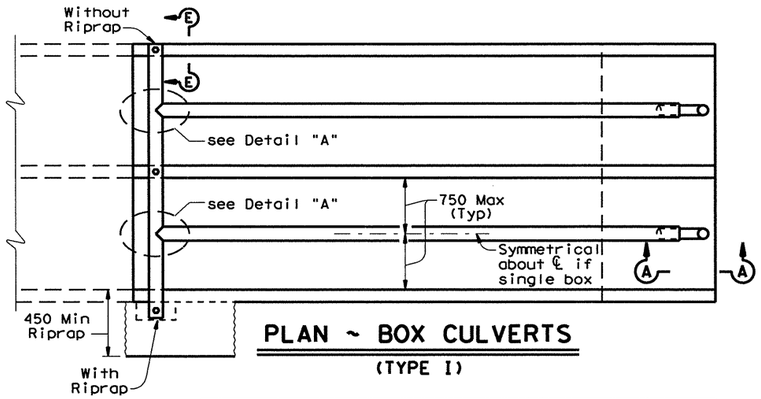


## PLAN ~ BOX CULVERTS
(TYPE I)

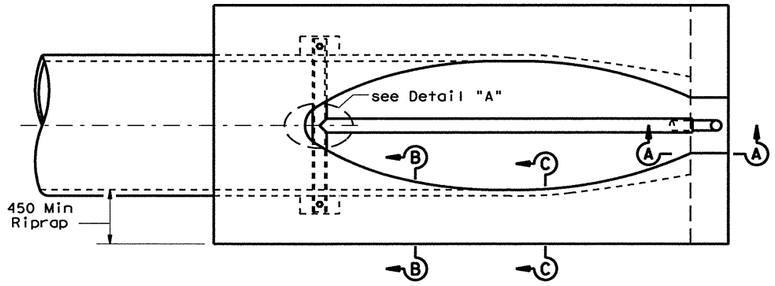


## PLAN ~ CONCRETE PIPE
(TYPE II)




## PLAN ~ CORRUGATED METAL PIPE
(TYPE II)

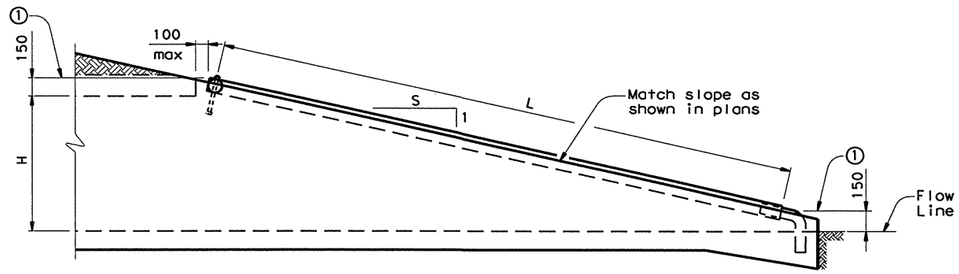


## END TREATMENT ~ MULTIPLE OR SINGLE BOX CULVERTS

① Top of Safety Pipe Runner (Typ)

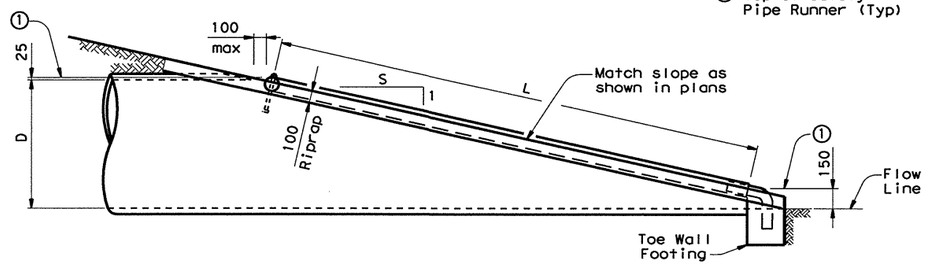


## END TREATMENT ~ CONCRETE PIPE

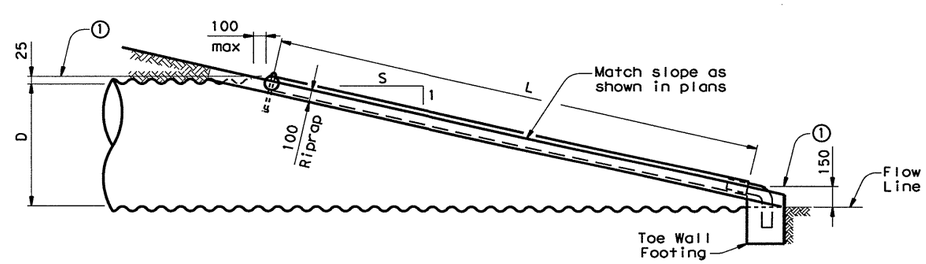


## END TREATMENT ~ CORRUGATED METAL PIPE

Note: See Sheet 2 of 2 for Sections A-A, B-B, C-C, D-D and E-E.

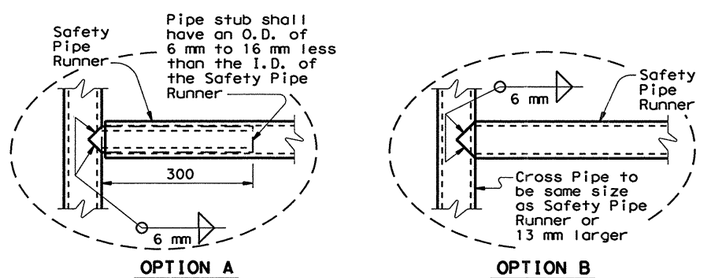


## DETAIL A

SHEET 1 OF 2

Texas Department of Transportation
Design Division (Bridge)

# CROSS DRAINAGE SAFETY PIPE RUNNERS

## CD-SPR(M)

| FILE: csprmstd.dgn | DN: MPM | CK: TER | DW: MCB | CK: TER | STD: BISM |
|---|---|---|---|---|---|
| © TxDOT October 1996 | DIST | FED REG | FEDERAL AID PROJECT • | | SHEET |
| REVISIONS | SAT | 6 | NH 2000 (704), etc. | | 423 |
| | COUNTY | | CONTROL | SECT | JOB | HIGHWAY |
| | BEXAR | | 2452 | 01 | 036, etc. | LP1604 |

DISCLAIMER:
The use of this standard is governed by the "Texas Engineering Practice Act". No warranty of any kind is made by TxDOT for any purpose whatsoever. TxDOT assumes no responsibility for the conversion of this standard to other formats or for incorrect results or damages resulting from its use.

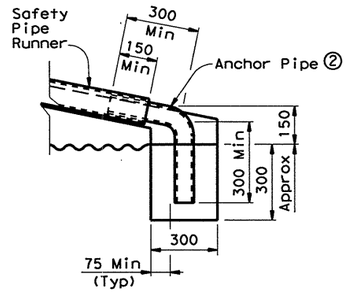


OPTION A

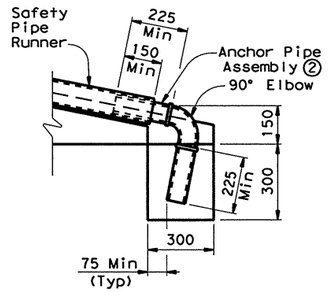


OPTION B

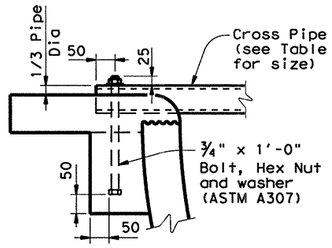


SECTION B-B

Deepen and widen Riprap around end of cross pipe and provide bolted connection to allow cleanout access

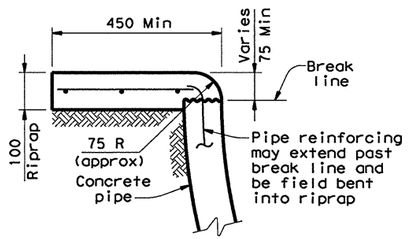


SECTION C-C

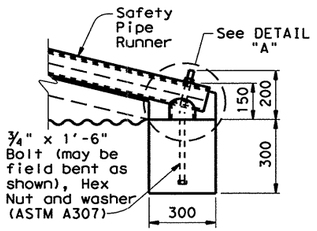


OPTION C

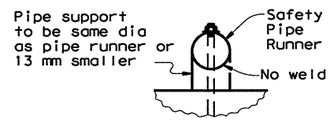


DETAIL "A"

Note:
Any of the above Safety Pipe Runner Lower Anchorage options may be used.

SECTION A-A

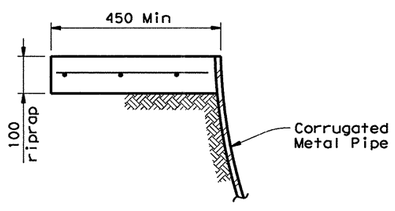


SECTION D-D

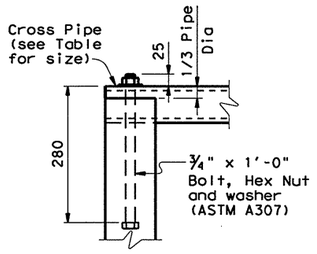


SECTION E-E

| "L" FOR VARIOUS CULVERT SIZES AND SIDE SLOPES ③ | | | | |
|---|---|---|---|---|
| Size | 1:3 Slope | 1:4 Slope | 1:5 Slope | 1:6 Slope |
| H = 600 | 1,900 | 2,475 | 3,050 | 3,650 |
| D = 900 | 2,450 | 3,200 | 3,950 | 4,725 |
| H = 900 | 2,850 | 3,700 | 4,600 | 5,475 |
| D = 1,050 | 2,925 | 3,825 | 4,725 | 5,625 |
| H = 1,050 | 3,325 | 4,325 | 5,350 | 6,375 |
| D = 1,200 | 3,400 | 4,425 | 5,475 | 6,550 |
| H = 1,200 | 3,800 | 4,950 | 6,125 | 7,300 |
| D = 1,350 | 3,875 | 5,050 | 6,250 | 7,450 |
| H = 1,350 | 4,275 | 5,575 | 6,875 | 8,200 |
| D = 1,500 | 4,350 | 5,675 | 7,000 | 8,375 |
| H = 1,500 | 4,750 | 6,175 | 7,650 | 9,125 |

| MAXIMUM PIPE "L" FOR A GIVEN PIPE SIZE AND YIELD | | | |
|---|---|---|---|
| Yield / Nom Dia | 240 MPa ASTM A53 Ty E and S Gr B | 290 MPa ASTM A500 Gr B | 360 MPa API5LX52 |
| 80 mm (OD=88.9 mm) | 3,350 | 4,000 | 4,975 |
| 90 mm (OD=102 mm) | 4,650 | 5,575 | 6,900 |
| 100 mm (OD=114 mm) | 6,250 | 7,500 | 9,275 |
| 125 mm (OD=141 mm) | 10,600 | ~ | ~ |

② Anchor Pipe may be any of the above materials and shall have an O.D. of 6 mm to 16 mm less than the I.D. of the Safety Pipe Runners.
③ For anchor pipe using Option C for lower anchorage, add 375 mm to the value for "L" in the above table.

DESIGN: Safety Pipe Runners are designed for a traversing load of 8,000 N at yield as recommended by Research Report 280-1, Safety Treatment of Roadside Cross-Drainage Structures, Texas Transportation Institute, March 1981.

**GENERAL NOTES:**

These details are to be used as a guide for installation of safety pipe runners for cross-drainage structures where out of control vehicles may traverse the openings approximately perpendicular to the safety pipe runners. Some installations may require the preparation of special details. In general, safety pipe runners are installed on cross-drainage structures at maximum spacings of approximately 750 mm.

Installation of safety pipe runners for single or multiple culverts will be in accordance with the details shown if the use of safety pipe runners are specified elsewhere in the plans.

Payment for riprap (if required) and toe wall footing is included in the price bid for each Safety Pipe End Treatment.

All dimensions are in millimeters unless otherwise noted.

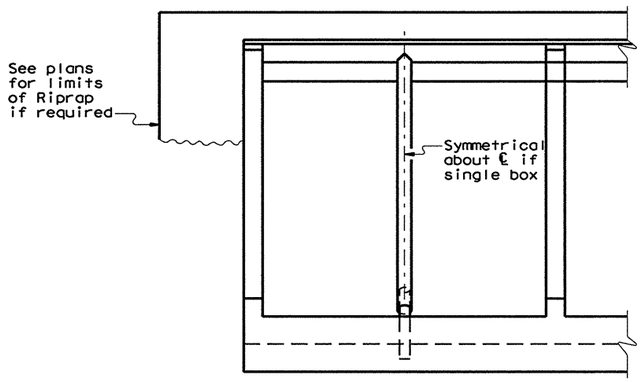


END VIEW ~ MULTIPLE OR SINGLE BOX CULVERTS

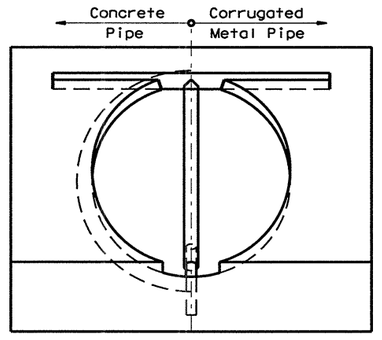


END VIEW ~ CONCRETE OR CORRUGATED METAL PIPE



Texas Department of Transportation
Design Division (Bridge)

# CROSS DRAINAGE SAFETY PIPE RUNNERS

## CD-SPR(M)

| FILE: csprmstd.dgn | DN: MPM | CK: TER | DW: MCB | CK: TER | STD: B15M |
|---|---|---|---|---|---|
| ©TxDOT October 1996 | DIST | FED REG | FEDERAL AID PROJECT • | | SHEET |
| REVISIONS | SAT | 6 | NH 2000 (704), etc. | | 424 |
| | COUNTY | | CONTROL | SECT | JOB | HIGHWAY |
| | BEXAR | | 2452 | 01 | 036, etc. | LP1604 |

LEVELS DISPLAYED 1 3 ACC: (LV=1,3 for Metric)

DISCLAIMER:
The use of this standard is governed by the "Texas Engineering Practice Act". No warranty of any kind is made by TxDOT for any purpose whatsoever. TxDOT assumes no responsibility for the conversion of this standard to other formats or for incorrect results or damages resulting from its use.

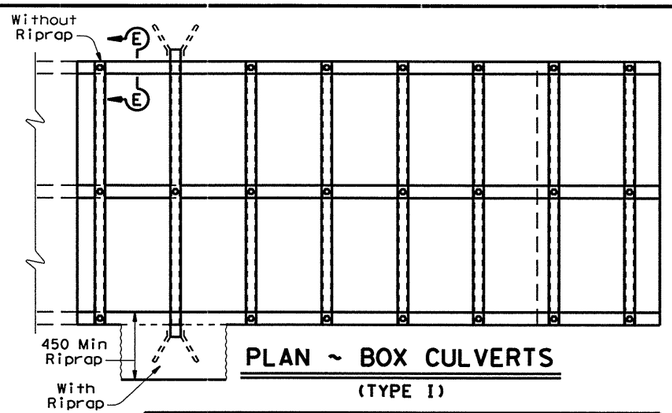


## PLAN ~ BOX CULVERTS
(TYPE I)

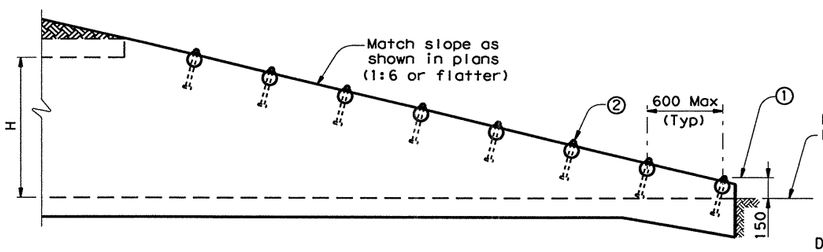


## END TREATMENT ~ MULTIPLE OR SINGLE BOX CULVERTS

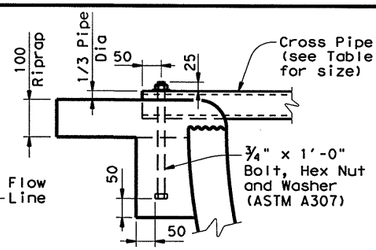


## SECTION B-B

Deepen and widen riprap around end of cross pipe and provide bolted connection to allow cleanout access

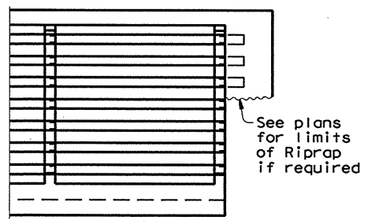


## END VIEW ~ MULTIPLE OR SINGLE BOX CULVERTS

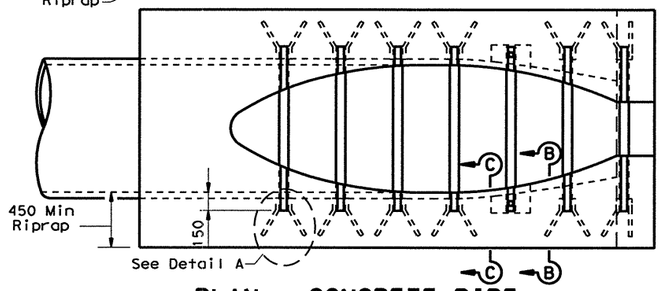


## PLAN ~ CONCRETE PIPE
(TYPE II)

① Top of Safety Pipe Runner (Typ)
② Third Pipe Runner shall always have bolted connection for clean out access

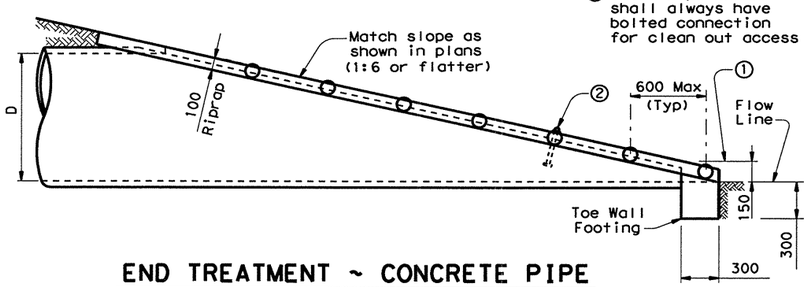


## END TREATMENT ~ CONCRETE PIPE

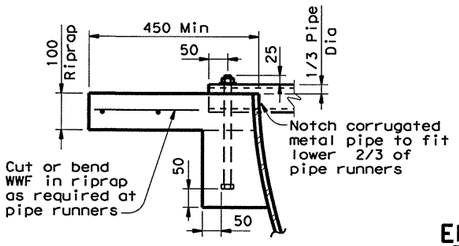


## SECTION D-D

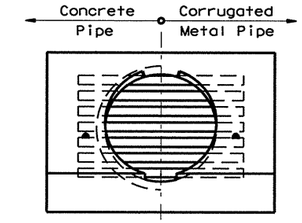


## END VIEW ~ CONCRETE OR CORRUGATED METAL PIPE

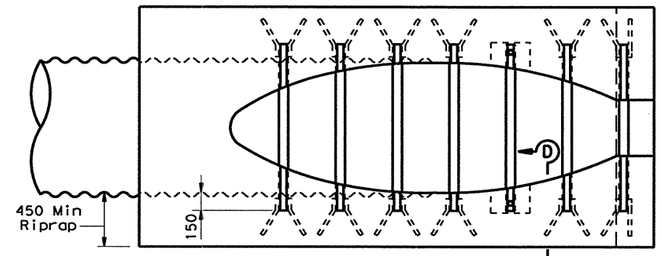


## PLAN ~ CORRUGATED METAL PIPE
(TYPE II)

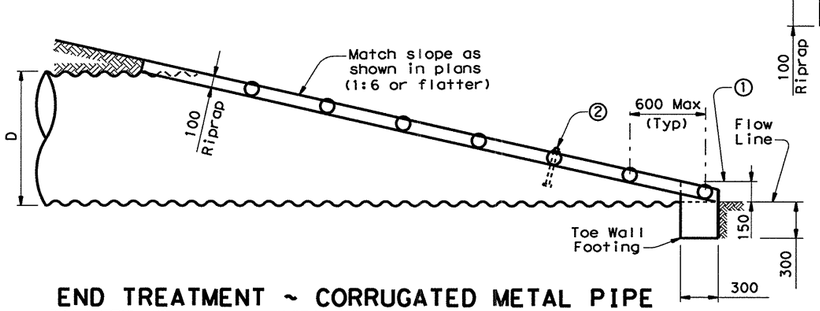


## END TREATMENT ~ CORRUGATED METAL PIPE

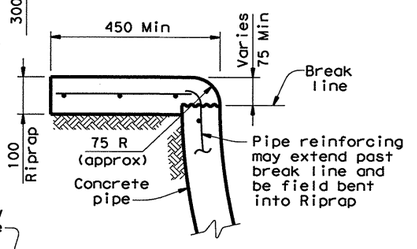


## SECTION C-C

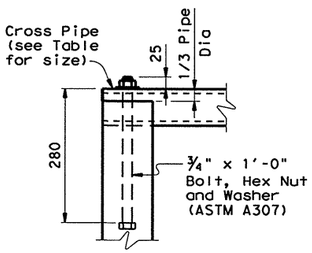


## SECTION E-E

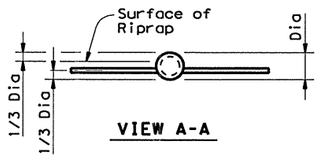


## VIEW A-A

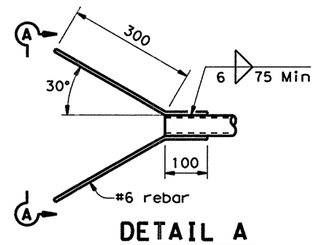


## DETAIL A

### REQUIRED PIPE SIZES FOR GIVEN PIPE YIELD

| Culvert Size ("H" or "D") | Pipe Runner Length | 240 MPa ASTM A53, Ty E and S Gr B | | | 290 MPa ASTM A500, Gr B | | | 360 MPa API 5LX52 | | |
|---|---|---|---|---|---|---|---|---|---|---|
| | | Nom | OD | ID | Nom | OD | ID | Nom | OD | ID |
| 750 | 1,050 | 80 mm XS | 88.9 | 73.7 | 65 mm XXS | 73.0 | 45.0 | 65 mm XXS | 73.0 | 45.0 |
| | | 90 mm STD | 102.0 | 90.1 | 80 mm STD | 88.9 | 77.9 | 80 mm STD | 88.9 | 77.9 |
| 900 | 1,200 | 80 mm XXS | 88.9 | 58.4 | 80 mm XS | 88.9 | 73.7 | 80 mm STD | 88.9 | 77.9 |
| | | 90 mm XS | 102.0 | 85.4 | 90 mm STD | 102.0 | 90.1 | | | |
| 1,050 | 1,350 | 80 mm XXS | 88.9 | 58.4 | 80 mm XXS | 88.9 | 58.4 | 80 mm XS | 88.9 | 73.7 |
| | | 90 mm XS | 102.0 | 85.4 | 90 mm XS | 102.0 | 85.4 | 90 mm STD | 102.0 | 90.1 |
| | | 100 mm STD | 114.0 | 102.0 | 100 mm STD | 114.0 | 102.0 | | | |
| 1,200 | 1,500 | 80 mm XXS | 88.9 | 58.4 | 80 mm XXS | 88.9 | 58.4 | 80 mm XXS | 88.9 | 58.4 |
| | | 100 mm XS | 114.0 | 97.2 | 90 mm XS | 102.0 | 85.4 | 90 mm STD | 102.0 | 90.1 |
| | | | | | 100 mm STD | 114.0 | 102.0 | | | |
| 1,350 | 1,650 | 100 mm XS | 114.0 | 97.2 | 80 mm XXS | 88.9 | 58.4 | 80 mm XXS | 88.9 | 58.4 |
| | | 125 mm STD | 141.0 | 128.0 | 100 mm STD | 114.0 | 102.0 | 90 mm XS | 102.0 | 85.4 |
| | | | | | | | | 100 mm STD | 114.0 | 102.0 |
| 1,500 | 1,800 | 100 mm XS | 114.0 | 97.2 | 100 mm XS | 114.0 | 97.2 | 80 mm XXS | 89.9 | 58.4 |
| | | 125 mm STD | 141.0 | 128.0 | 125 mm STD | 141.0 | 128.0 | 90 mm XS | 102.0 | 85.4 |
| | | | | | | | | 100 mm STD | 114.0 | 102.0 |

DESIGN: Safety Pipe Runners are designed for a traversing load of 44,480 N at yield as recommended by Research Report 280-2F, Safety Treatment of Roadside Parallel-Drainage Structures, Texas Transportation Institute, June 1981.

**GENERAL NOTES:**

These details are to be used as a guide for installation of safety pipe runners for parallel drainage structures where out of control vehicles may impact the openings approximately perpendicular to the safety pipe runners. Some installations may require the preparation of special details. In general, safety pipe runners are installed on parallel drainage structures at maximum spacings of approximately 600 mm.

Installation of safety pipe runners for single or multiple culverts will be in accordance with the details shown if the use of safety pipe runners are specified elsewhere in the plans.

Payment for riprap (if required) and toe wall footing is included in the price bid for each Safety Pipe End Treatment.

All dimensions are in millimeters unless otherwise noted.

ACC: (LV=1,3 for Metric)
LEVELS DISPLAYED 1 3

Texas Department of Transportation
Design Division (Bridge)

# PARALLEL DRAINAGE SAFETY PIPE RUNNERS

## PD-SPR(M)

| FILE: psprmstd.dgn | DN: MPM | CK: TER | DW: MCB | CK: TER | STD: | B16M |
|---|---|---|---|---|---|---|
| ©TxDOT October 1996 | DIST | FED REG | FEDERAL AID PROJECT • | | | SHEET |
| REVISIONS | SAT | 6 | NH 2000 (704), etc. | | | 425 |
| | COUNTY | | CONTROL | SECT | JOB | HIGHWAY |
| | BEXAR | | 2452 | 01 | 036, etc. | LP1604 |

DISCLAIMER:
The use of this standard is governed by the "Texas Engineering Practice Act". No warranty of any kind is made by TxDOT for any purpose whatsoever. TxDOT assumes no responsibility for the conversion of this standard to other formats or for incorrect results or damages resulting from its use.

ACC: (LV=1,2 for English; 1,3 for Metric)

LEVELS DISPLAYED: 1 3

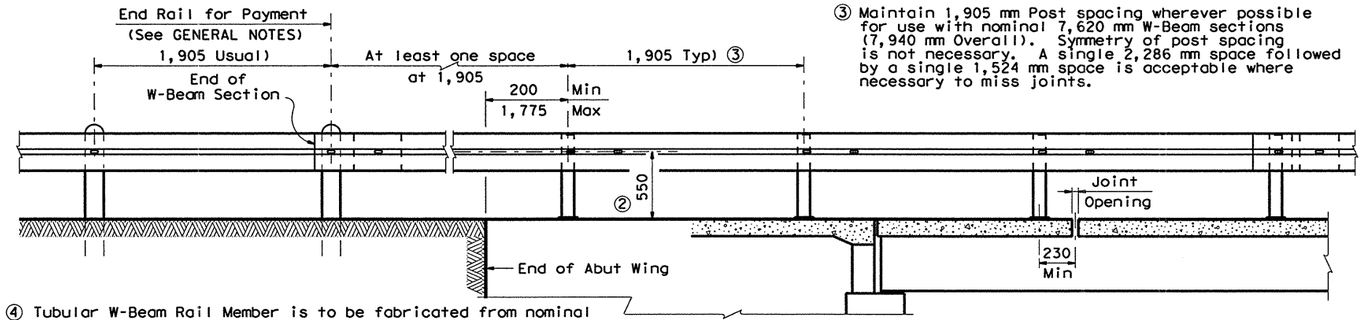


## INSIDE ELEVATION OF RAIL

③ Maintain 1,905 mm Post spacing wherever possible for use with nominal 7,620 mm W-Beam sections (7,940 mm Overall). Symmetry of post spacing is not necessary. A single 2,286 mm space followed by a single 1,524 mm space is acceptable where necessary to miss joints.

④ Tubular W-Beam Rail Member is to be fabricated from nominal 7,620 mm W-Beam sections (7,940 mm Overall). Additional post mounting slots are to be made in each member 380 mm from the standard slots at 1,905 mm centers. Top and bottom seams may be continuously welded with 80% penetration in lieu of intermittant welding shown. Welds shall be chipped and cleaned and the complete 8,320 mm tubular member galvanized after fabrication.

⑤ See Section Thru Splice for Washers

② Increase 50 mm for Structures with Overlay

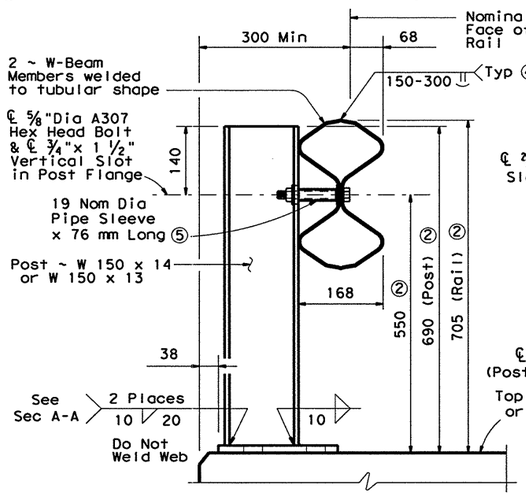


## SECTION THRU RAIL

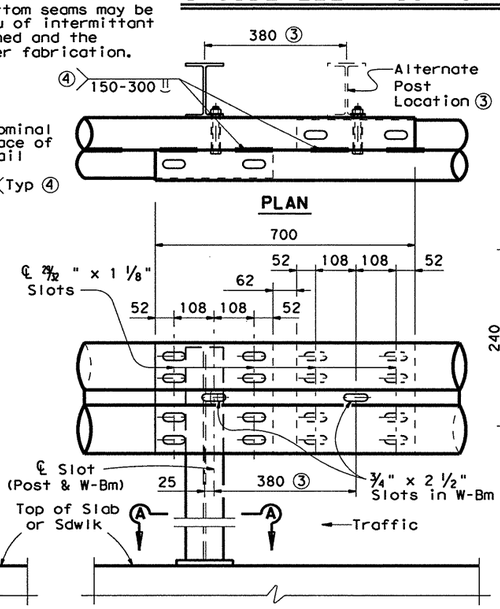


## TUBULAR W-BEAM SPLICE DETAILS

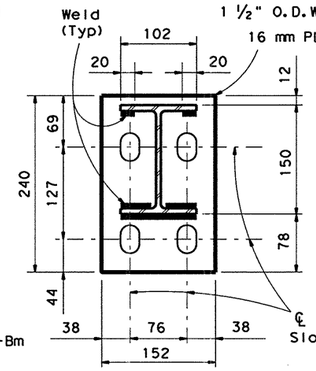


## SECTION A-A

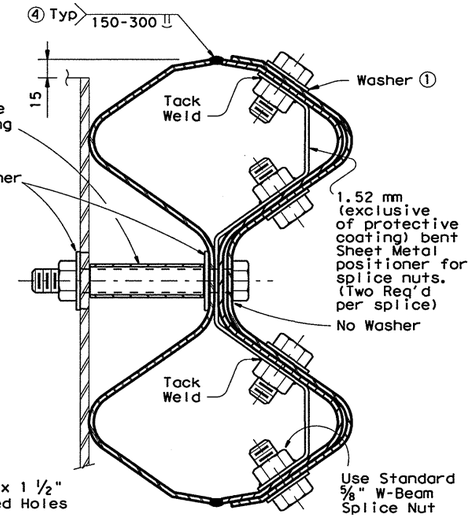


## SECTION THRU SPLICE

① 8~ 5/8" Splice nuts shall be tacked to bent sheet metal postioners as shown. Other suitable positioning methods or devices may be substituted. The complete splice shall have 16 bolts. Each bolt will include a 5 x 45 x 75 mm plate washer or a 1 3/4" O.D. washer.




Member shall be Steel ~ Nom thickness = 2.66 mm exclusive of protective coating. Actual section may vary slightly with the manufacturer.

## W-BEAM SECTION

GENERAL NOTES:

This rail has been successfully evaluated by full scale impact tests conducted in accordance with NCHRP Report 230. Test documentation may be found in Research Report 230-1, "Tubular W-Beam Bridge Rail", of Research study 2-5-78-230 "Bridge Rail to contain Heavy Trucks and Buses", Texas Transportation Institute, October 1978.

Tubular Rail Member shall be extended and connected to at least the first soil embedded post at each end of the structure. More such posts shall be used to utilize 7,620 mm standard sections. Approach guard fence posts shall be spaced at 1,905 mm adjacent to the Tubular Rail since its flexibility is similar to standard metal beam guard fence. Do not install additional posts at 953 mm centers. Payment for this rail shall be in increments of 7,620 mm.

Face of rail and posts shall be vertical transversely unless otherwise approved by the Engineer. Posts shall be perpendicular to adjacent roadway grade. Grout may be used under base plates if necessary.

All posts, w-beam, pipe, sheet metal, bolts, nuts, washers, and bottom plates are considered as parts of the rail for payment.

All steel components except reinforcing shall be galvanized unless otherwise shown in plans. Exposed edges of handrail and handrail posts shall be rounded or chamfered to approximately 2 mm by grinding. Rail shall be extended across all fixed armor joints, slab span joints, or pan form joints with no change in post spacing or continuity. At expansion armor joints of 32 mm or less, the splice bolts nearest the joint and post mounting bolts at intervening post shall be snugly tightened to allow for rail expansion. At expansion armor joints over 32 mm, suitably longer splice holes shall be provided.

Anchor bolts shall be 7/8" Dia ASTM A307 Grade A bolts (or A36 threaded rods with one tack welded hex nut each) with one hex nut and one hardened steel washer at each bolt. Threaded rods may be 0.781" minimum diameter with rolled threads. Nuts shall conform to A563 requirements. The untapped blanks shall be galvanized prior to cutting the threads. Threads for bolts and nuts shall have Class 2A and 2B fit tolerances in accordance with ANSI B1.1.

Shop drawings to be submitted to the Bridge Engineer for approval are required only for the proposed rail splices at armor expansion joints greater than 32 mm and for rails on horizontal curves in which case the Tubular Rail member shall be fabricated to the required radius if the radius is 183 meters or less. For rails not requiring shop drawings, erection drawings showing splice locations shall be submitted to the Area Engineer for approval. Shop or Erection Drawings may be 280 x 432 mm or larger.

All dimensions are in millimeters unless otherwise shown.

Average mass of railing (1,905 mm Post spa and no Overlay) = 34 kg/m.

DESIGN CRITERIA

This rail is intended to be used only for curbless structures.

Fully anchored guard fence must be attached to both ends of rail.

Tests have shown that although this rail deflects horizontally 600 to 900 mm, adequate vehicle containment and re-direction is achieved. The resulting more gradual deceleration thus produces a safer condition than afforded by other bridge railings.

This railing is especially suitable for use on bridge width box culverts. The detail sheet titled "Culvert Mounting For T6(M) Traffic Rail, Type T6-CM(M)" is then required to show headwall and wingwall modifications and additional reinforcing steel to be included as part of the railing for payment.

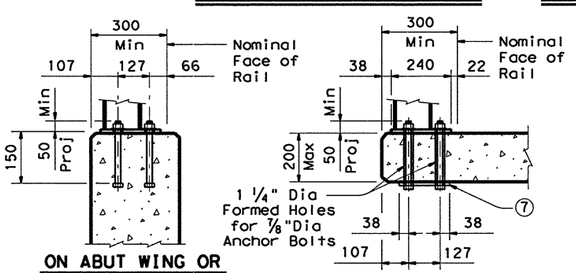


ON ABUT WING OR CIP RETAINING WALL — FOR 200 mm MAX CONC DEPTH

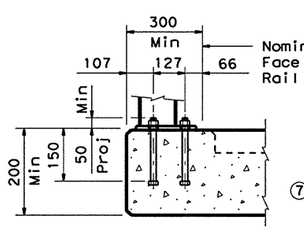


FOR 200 mm MIN CONC DEPTH

⑦PL 6 x 152 x 203 ( 15/16" Dia Holes)

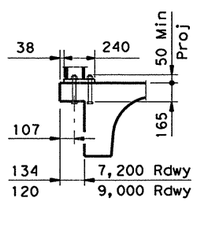


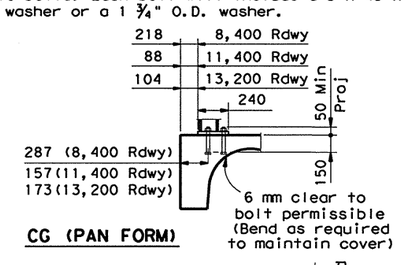


CG (PAN FORM)

⑥ For temporary installations (posted speed 72 km/h or less) only the front two bolts are necessary. Optional 0.875 inch diameter anchorages with resin binder in capsules or other two-component system may be used provided a minimum ultimate tensile strength of 88,964 N per front anchor can be obtained. If posted temporary speed is greater than 72 km/h, the minimum tensile strength must be 123,216 N per front anchor. For permanent installations, the minimum ultimate tensile strength must be 123,216 N per front anchor and 66,723 N per rear anchor. Depth of holes and installation shall be in accordance with manufacturer's recommendations such that the full required minimum tensile strength can be obtained. Drilled holes for resin or other two-component anchorage systems must be power wire brushed. Compressed air, if used to help clean holes, shall have no oil in suspensions. Field tests in accordance with ASTM E488 may be used if permitted and/or required by the Engineer to demonstrate minimum tensile strength.

⑧ For CIP slabs under 150 mm add PL ⑦ (tack weld to bolt heads) and an additional longitudinal #4 bar as shown (included as part of rail for payment).

## POST MOUNTING DETAILS ⑥

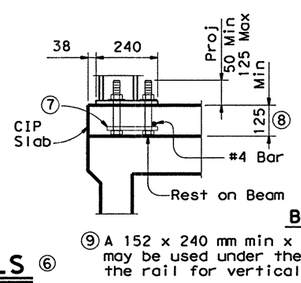


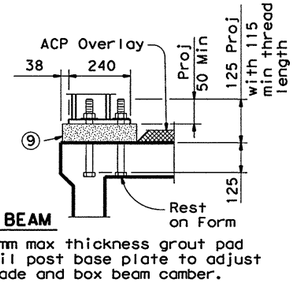


BOX BEAM

⑨ A 152 x 240 mm min x 75 mm max thickness grout pad may be used under the rail post base plate to adjust the rail for vertical grade and box beam camber.

Texas Department of Transportation
Design Division (Bridge)

# TRAFFIC RAIL

# TYPE T6(M)

| FILE: ristd020.dgn | DN: JJP | CK: THD | DW: DRG | CK: LDS | STD: B585M |
|---|---|---|---|---|---|
| ©TxDOT January 1996 | DIST | FED REG | FEDERAL AID PROJECT • | | SHEET |
| REVISIONS | SAT | 6 | NH 2000 (704), etc. | | 426 |
| | COUNTY | | CONTROL | SECT | JOB | HIGHWAY |
| | BEXAR | | 2452 | 01 | 036, etc. | LP1604 |

DISCLAIMER:
The use of this standard is governed by the "Texas Engineering Practice Act". No warranty of any kind is made by TxDOT for any purpose whatsoever. TxDOT assumes no responsibility for the conversion of this standard to other formats or for incorrect results or damages resulting from its use.

ACC: (LV=1,2 for English; 1,3 for Metric)
ED
LEVELS D: 1 3

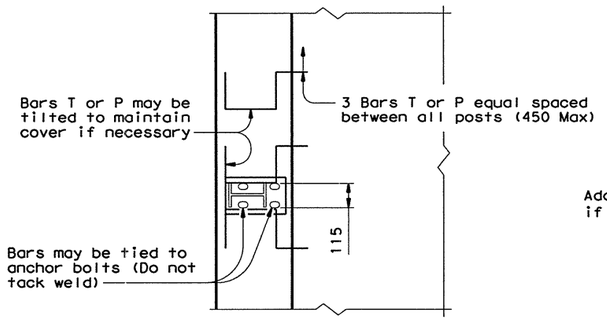


PLAN

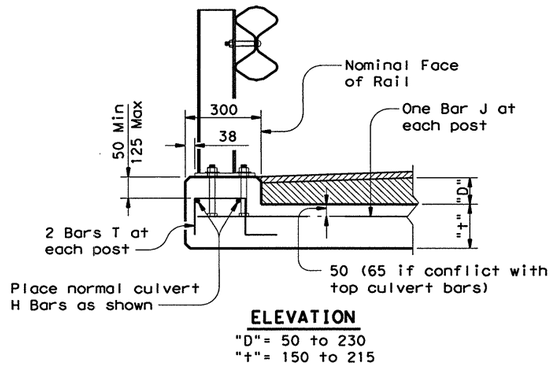


ELEVATION

"D"= 50 to 230
"t"= 150 to 215

## DIRECT TRAFFIC TO 230 FILL

Standard Culvert "K" Bars may be tilted as necessary to maintain cover.

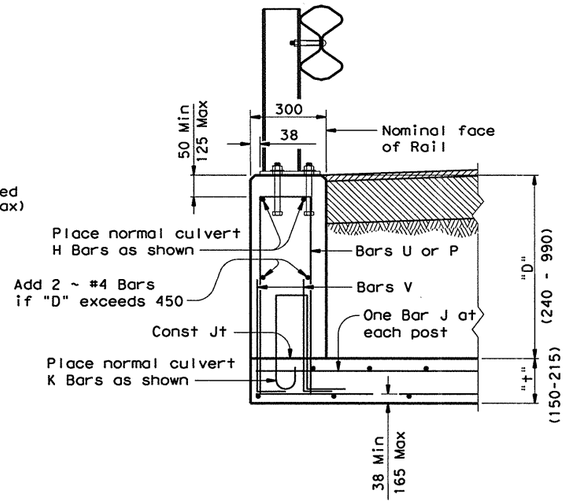


ELEVATION

## CULVERT FILL 231 to 990

Note: Bars U and V are always used together and must lap a minimum of 230 mm

Note: Place bars T, P or U as high as possible within the ranges shown.

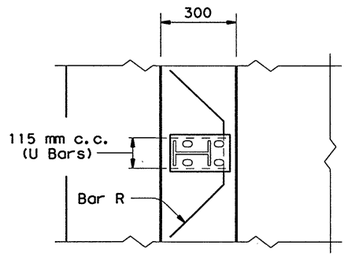


PLAN

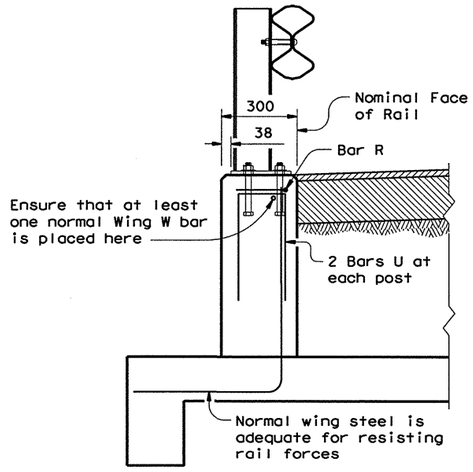


ELEVATION

## CULVERT WINGWALLS

Note: See culvert wingwall standard for bars and details not shown.

Note:
See standard sheet titled: Traffic Rail Type T6(M) for railing, post and anchor bolt details. These culvert mounting details are not suitable for mounting other rail types.
All reinforcing shall be Grade 420.
All dimensions are in millimeters unless otherwise noted.

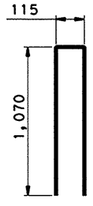


BARS J (#5)

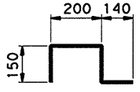


BARS T (#5)
("D" = 50 to 230)
2 at 115 mm c.c. at each post
3 at 450 mm Max between all posts

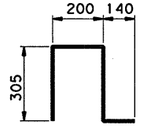


BARS P (#5)
("D" = 231 to 380)
2 at 115 mm c.c. at each post
3 at 450 mm Max between all posts

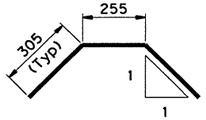


BARS R (#5)

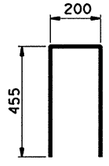


BARS U (#5)
("D" = 381 to 990
& ON WINGWALLS)
2 at 115 mm c.c. at each post
3 at 450 mm Max between all posts

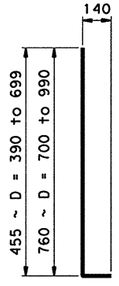


BARS V (#5)
2 pairs at 115 mm c.c. at each post
3 pairs at 450 Max between all posts

Texas Department of Transportation
Design Division (Bridge)

# CULVERT MOUNTING FOR T6(M) TRAFFIC RAIL

## T6-CM(M)

| FILE: rlstd022.dgn | DN: JJP | CK: THD | DW: KDK | CK: LDS | STD: B584M |
|---|---|---|---|---|---|
| © TxDOT January 1996 | DIST | FED REG | FEDERAL AID PROJECT • | | SHEET |
| REVISIONS | SAT | 6 | NH 2000 (704), etc. | | 427 |
| | COUNTY | | CONTROL | SECT | JOB | HIGHWAY |
| | BEXAR | | 2452 | 01 | 036, etc | LP1604 |

DISCLAIMER:
The use of this standard is governed by the "Texas Engineering Practice Act". No warranty of any kind is made by TxDOT for any purpose whatsoever. TxDOT assumes no responsibility for the conversion of this standard to other formats or for incorrect results or damages resulting from its use.

LEVELS DI... ACC:
(LV=1,2 for English; 1,3 for Metric)

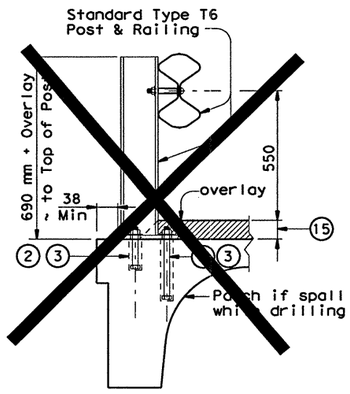


0 & 44 mm Overhang

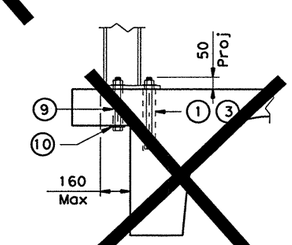


197 mm thru 540 mm Overhangs

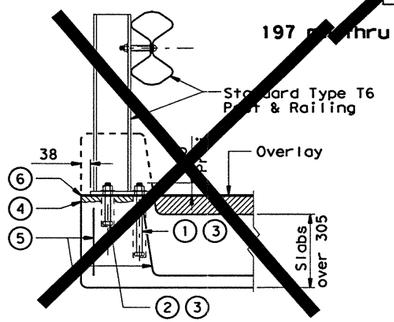


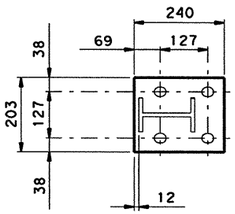


OPTIONAL 20 mm BASE PLATE
(May be used to provide clearance for drilling of holes in existing bridge deck).

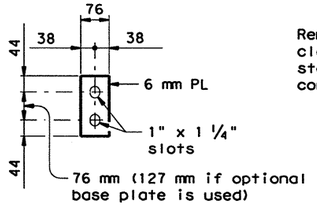


⑩ BOTTOM PLATE

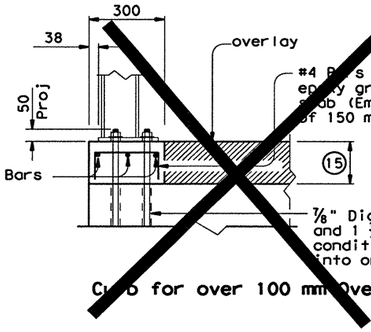


Curb for over 100 mm Overlay

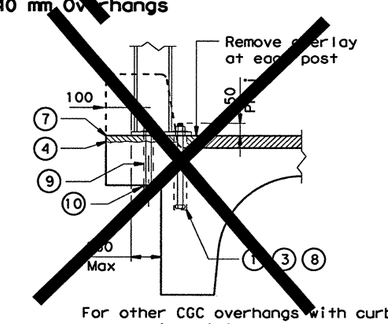


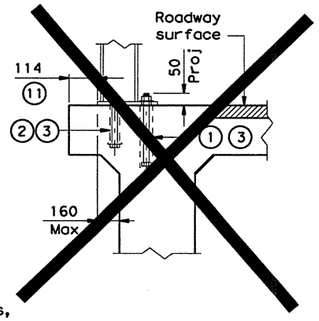


For other CGC overhangs with curbs, use details similar to others shown on this sheet.

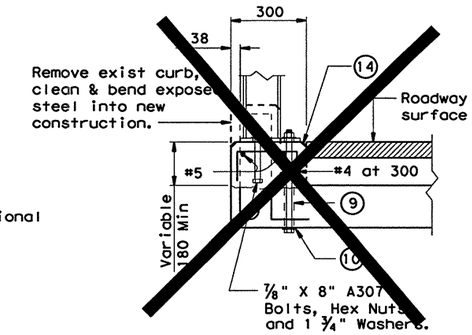


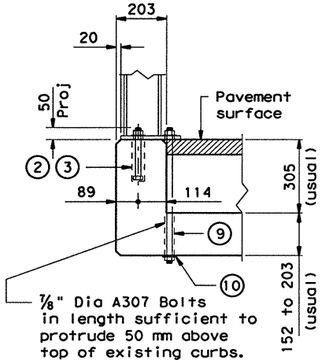


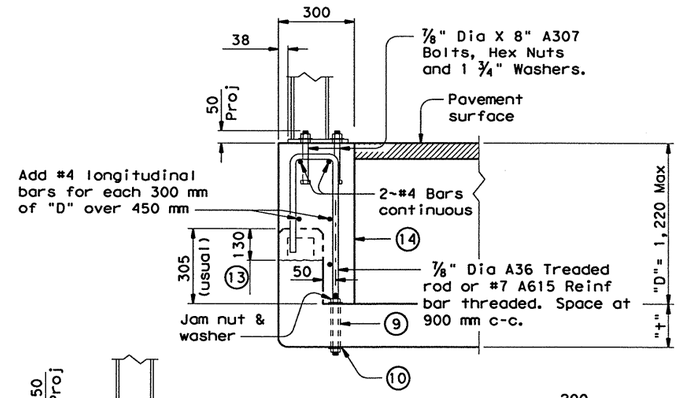


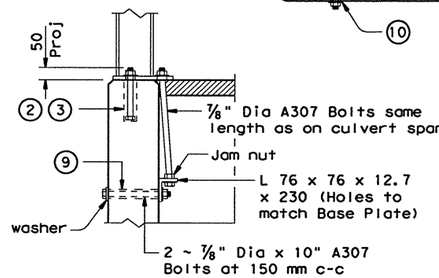


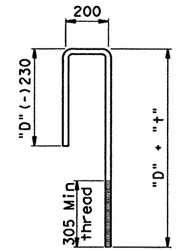


7/8" Dia Threaded Rod
or 25M A615 Rebar

This sheet is intended to be used as a guide for retrofitting existing structures with the Type T6(M) traffic railing. Details with appropriate notes taken from this guide should be prepared for the specific application. Dimensions of existing slab thickness, curb widths, heights etc. should be shown. Particular care should be taken in identifying the bridge end abutment wingwall conditions, and providing for proper railing post anchorage and approach guard fence post positioning. This sheet may not be used without modification. The details shown may need to be amended if the exact condition existing is not covered. In all cases details and notes not required must be crossed out or eliminated, "(MOD)" added, the phrase "(Not to be used as a standard)" removed and the sheet sealed and signed.

GENERAL NOTES:
Designed according to current AASHTO Standard Specifications for Highway Bridges. Successfully evaluated by full-scale crash tests to meet NCHRP Report 230 criteria. These retrofit details are evaluated to have equivalent anchorage strength to the tested Type T6.

Not all possible combinations of existing railing, curbs, parapets, etc have been shown on this sheet. Other combinations and treatments are permissible if they meet the same strength and geometric requirements as indicated. Railing Type T6 must only be used on essentially curbless structures. Curbs and/or overlays up to 100 mm are permissible for special drainage control and other conditions, but should be avoided if possible.

See Traffic Rail Type T6(M) for details not shown hereon.

All reinforcing shall be Grade 420.

All dimensions are in millimeters unless otherwise noted.

Application shall be for BCS No. 3

(2) 7/8" Dia x 6" A307 Bolts grouted head down in 2" Dia hole.

(3) Optional 7/8" Dia anchorages with resin binder in capsules, or other two-component system may be used provided that a minimum ultimate tensile resistance of 123.2 kN per front anchor and 66.7 kN per rear anchor can be obtained. Hole size, hole cleaning and other installation requirements shall conform to manufacturer's recommendations. Field pull-out tests in accordance with ASTM E488 may be used to demonstrate pullout strength if permitted and/or required by the Engineer.

(9) Drill 1" - 1 1/8" Dia holes thru existing slab for 7/8" Dia bolts. Holes must be drilled with rotary or coring type equipment. Percussion or impact drilling shall not be used. Spalls in the bottom of the slab exceeding 13 mm from the edge of the holes shall be patched.

(10) Bottom Plate

(12) Maintain 1,905 mm post spacing wherever possible for use with nominal 7,620 mm standard rail section. Symmetry of post spacing is not necessary. A single 2,286 mm space followed by a single 1,524 mm space is acceptable where necessary to miss joints or culvert walls.

(13) Breakback existing curb, incorporate existing steel into new concrete.

(14) Cast continuous new curb or wall. (Class C or better.)

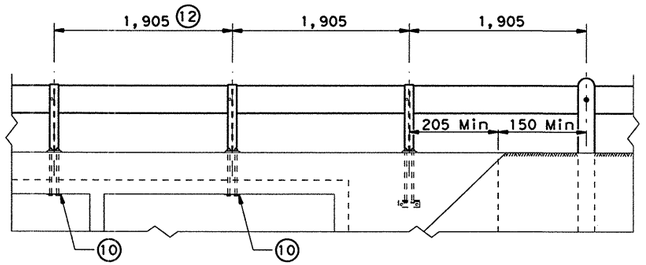


TYPICAL CULVERT OR PARALLEL WING

STATE OF TEXAS
JOEL K. DAVENPORT, JR.
79276
REGISTERED
PROFESSIONAL ENGINEER

Joel K. Davenport, Jr. P.E. 79276 — 11/1/00 Date

Texas Department of Transportation
Design Division (Bridge)

# RETROFIT GUIDE FOR T6 RAIL
(NOT TO BE USED AS A STANDARD)

## T6R(M) (MOD)

| FILE: rlstd021.dgn | DN: JJP | CK: THD | DW: DRG | CK: LDS | STD: B564M |
|---|---|---|---|---|---|
| ©TxDOT January 1996 | DIST | FED REG | FEDERAL AID PROJECT # | | SHEET |
| REVISIONS | SAT | 6 | NH 2000 (704), etc. | | 428 |
| | COUNTY | | CONTROL | SECT | JOB | HIGHWAY |
| | BEXAR | | 2452 | 01 | 036, etc. | LP1604 |

Plotted on: 09/19/00

Design Filename: j:\394\16\civil\design\intdo\394116id01.dgn

## NOTES

1. FOR HYDROLOGIC DATA, SEE RUNOFF COMPUTATION SHEET.
2. ALL DIMENSIONS ARE IN METERS UNLESS NOTED OTHERWISE.
3. FOR SUMMARIZATION OF ARMOR CURB SLOTS, SEE STORM DRAIN AND ARMOR CURB SUMMARY SHEET.
4. ALL ARMOR CURB OPENINGS SHALL HAVE AN ARMOR CURB FLUME CONSTRUCTED FROM BEHIND THE OPENING TO THE TOE OF SLOPE OF THE EMBANKMENT AND SHALL BE CONSIDERED SUBSIDIARY TO THE ARMORED CURB SLOT PAY ITEM.
5. SIDEWALK DRAINS SHALL BE PAID FOR AS AN ARMORED CURB SLOT.

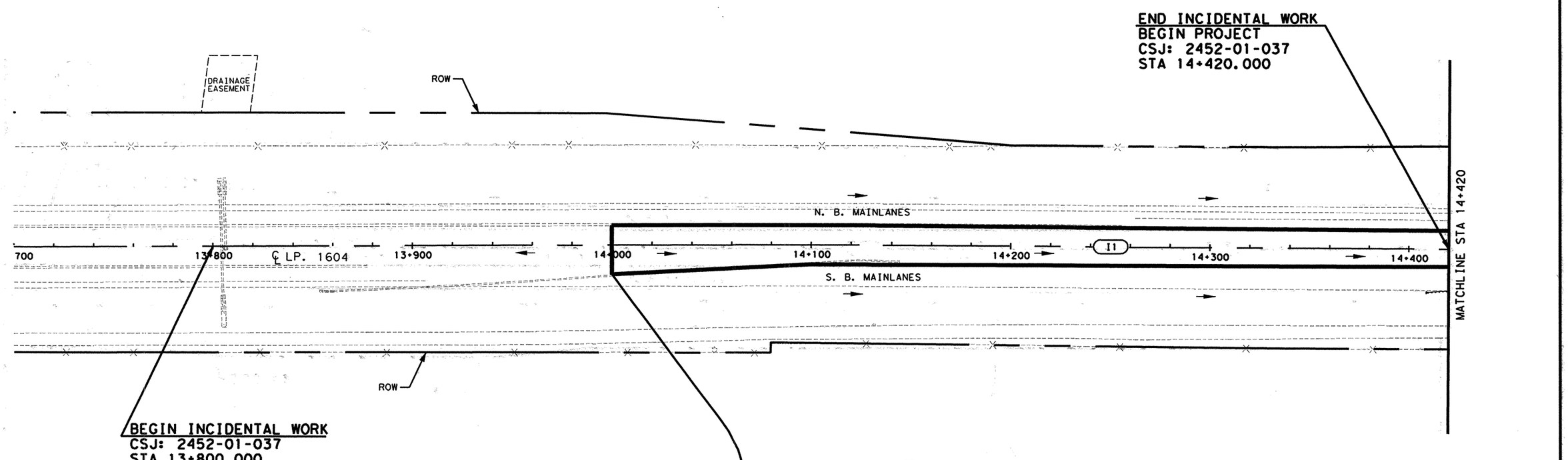


SCALE: 1:2000

## LEGEND

- INTERIOR DRAINAGE AREA
- EXTERIOR DRAINAGE AREA
- (I5) INTERIOR DRAINAGE AREA DESIGNATION
- (2) EXTERIOR DRAINAGE AREA DESIGNATION
- CONCRETE
- FLOW ARROW
- LINE I10 STORM DRAIN DESIGNATION
- DI-XX DROP INLET DESIGNATION
- CI-XX CURB INLET DESIGNATION
- ACI-XX ARMORED CURB OPENING DESIGNATION


555 EAST RAMSEY SAN ANTONIO TEXAS 78216 PHONE (210)375-9000 FAX (210)375-9010

PAPE-DAWSON ENGINEERS CIVIL & ENVIRONMENTAL

STATE OF TEXAS K. STEPHEN BONNETTE 60928 REGISTERED PROFESSIONAL ENGINEER

K. STEPHEN BONNETTE, P.E. 9/20/00 DATE



© 2000 Texas Department of Transportation


# LOOP 1604
# INTERIOR DRAINAGE AREA MAP & STORM DRAIN LAYOUT

SHEET 1 OF 22

| DN: | | | | | PROJECT NO. | | |
|---|---|---|---|---|---|---|---|
| CK DN: | | | | | NH 2000 (704), etc. | | |
| DW: | CONTROL | SECTION | JOB | DIST. | STATE | COUNTY | HIGHWAY NO. | SHEET NO. |
| CK DW: | 2452 | Ø1 | Ø36 etc. | SAT | TX | BEXAR | LOOP 1604 | 429 |

Plotted on: 09/19/00

## NOTES

1. FOR HYDROLOGIC DATA, SEE RUNOFF COMPUTATION SHEET.
2. ALL DIMENSIONS ARE IN METERS UNLESS NOTED OTHERWISE.
3. FOR SUMMARIZATION OF ARMOR CURB SLOTS, SEE STORM DRAIN AND ARMOR CURB SUMMARY SHEET.
4. ALL ARMOR CURB OPENINGS SHALL HAVE AN ARMOR CURB FLUME CONSTRUCTED FROM BEHIND THE OPENING TO THE TOE OF SLOPE OF THE EMBANKMENT AND SHALL BE CONSIDERED SUBSIDIARY TO THE ARMORED CURB SLOT PAY ITEM.
5. SIDEWALK DRAINS SHALL BE PAID FOR AS AN ARMORED CURB SLOT.

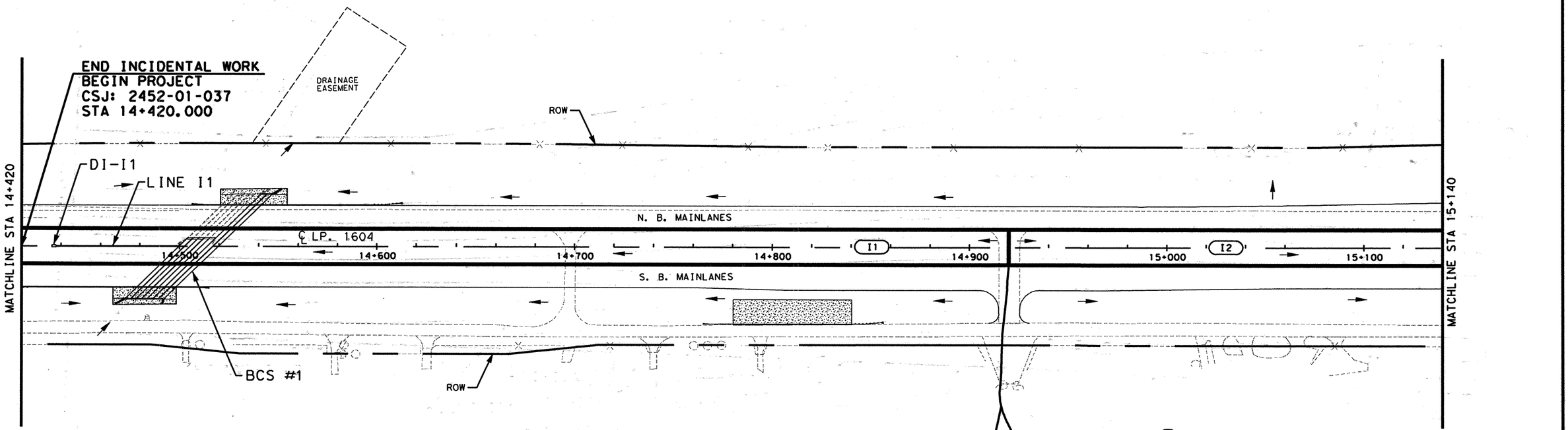


## LEGEND

- INTERIOR DRAINAGE AREA
- EXTERIOR DRAINAGE AREA
- (I5) INTERIOR DRAINAGE AREA DESIGNATION
- (2) EXTERIOR DRAINAGE AREA DESIGNATION
- CONCRETE
- FLOW ARROW
- LINE I10 — STORM DRAIN DESIGNATION
- (3) DI-XX — DROP INLET DESIGNATION
- CI-XX — CURB INLET DESIGNATION
- ACI-XX — ARMORED CURB OPENING DESIGNATION

SCALE: 1:2000

555 EAST RAMSEY SAN ANTONIO TEXAS 78216
PHONE (210)375-9000
FAX (210)375-9010
PAPE-DAWSON ENGINEERS
CIVIL & ENVIRONMENTAL

STATE OF TEXAS — K. STEPHEN BONNETTE — 60928 — REGISTERED PROFESSIONAL ENGINEER

9/20/00
K. STEPHEN BONNETTE, P.E. — DATE

© 2000 Texas Department of Transportation

# LOOP 1604
# INTERIOR DRAINAGE AREA MAP & STORM DRAIN LAYOUT

SHEET 2 OF 22

| DN: | | | | | PROJECT NO. | | |
|---|---|---|---|---|---|---|---|
| CK DN: | | | | | NH 2000 (704), etc. | | |
| DW: | CONTROL | SECTION | JOB | DIST. | STATE | COUNTY | HIGHWAY NO. | SHEET NO. |
| CK DW: | 2452 | 01 | 036 etc. | SAT | TX | BEXAR | LOOP 1604 | 430 |

Design Filename: j:\3941\16\civil\design\intdo\3941161d02.dgn

Plotted on: 09/19/00

## NOTES

1. FOR HYDROLOGIC DATA, SEE RUNOFF COMPUTATION SHEET.
2. ALL DIMENSIONS ARE IN METERS UNLESS NOTED OTHERWISE.
3. FOR SUMMARIZATION OF ARMOR CURB SLOTS, SEE STORM DRAIN AND ARMOR CURB SUMMARY SHEET.
4. ALL ARMOR CURB OPENINGS SHALL HAVE AN ARMOR CURB FLUME CONSTRUCTED FROM BEHIND THE OPENING TO THE TOE OF SLOPE OF THE EMBANKMENT AND SHALL BE CONSIDERED SUBSIDIARY TO THE ARMORED CURB SLOT PAY ITEM.
5. SIDEWALK DRAINS SHALL BE PAID FOR AS AN ARMORED CURB SLOT.

ESTIMATED QUANTITIES

| | DESCRIPTION | UNIT | EST. | FINAL |
|---|---|---|---|---|
| | CSJ: 2452-01-038 | | | |
| * | RIPRAP (CONC) (CL B) | M3 | 1.8 | |
| | CONC CURB (ARMOR CURB SLOT) | M | 6.0 | |

* FOR CONTRACTOR'S INFORMATION ONLY

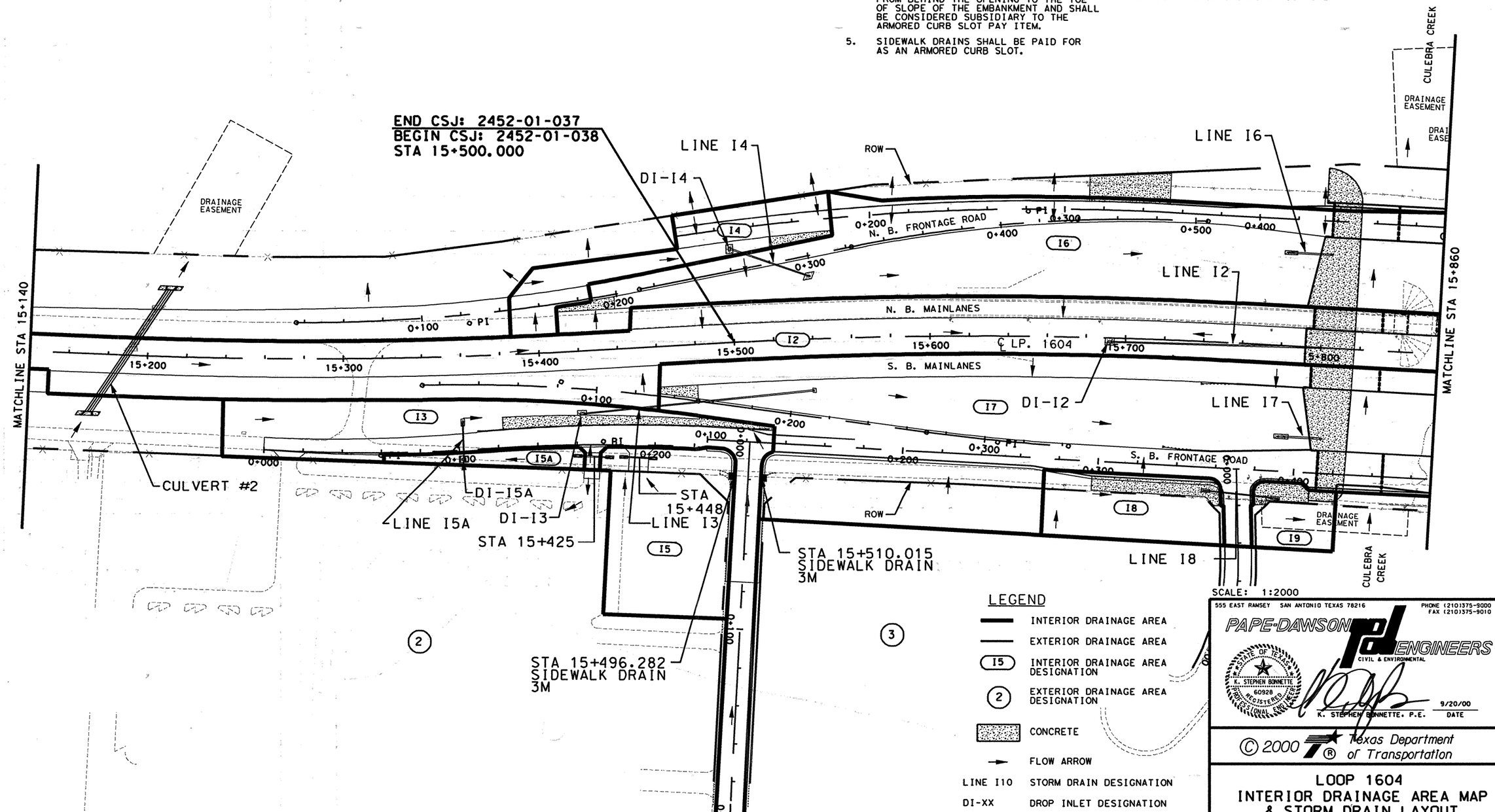


## LEGEND

- INTERIOR DRAINAGE AREA
- EXTERIOR DRAINAGE AREA
- I5 — INTERIOR DRAINAGE AREA DESIGNATION
- (2) — EXTERIOR DRAINAGE AREA DESIGNATION
- CONCRETE
- FLOW ARROW
- LINE I10 — STORM DRAIN DESIGNATION
- DI-XX — DROP INLET DESIGNATION
- CI-XX — CURB INLET DESIGNATION
- ACI-XX — ARMORED CURB OPENING DESIGNATION


555 EAST RAMSEY SAN ANTONIO TEXAS 78216
PHONE (210)375-9000
FAX (210)375-9010
PAPE-DAWSON ENGINEERS
CIVIL & ENVIRONMENTAL
STATE OF TEXAS — K. STEPHEN BONNETTE — 60928 — REGISTERED PROFESSIONAL ENGINEER
K. STEPHEN BONNETTE, P.E. 9/20/00 DATE


© 2000 Texas Department of Transportation

# LOOP 1604
# INTERIOR DRAINAGE AREA MAP & STORM DRAIN LAYOUT

SHEET 3 OF 22

| DN: | | | | | PROJECT NO. | | |
|---|---|---|---|---|---|---|---|
| CK DN: | | | | | NH 2000 (704), etc. | | |
| DW: | CONTROL | SECTION | JOB | DIST. | COUNTY | HIGHWAY NO. | SHEET NO. |
| CK DW: | 2452 | 01 | 036 etc. | SAT | BEXAR | LOOP 1604 | 431 |

STATE: TX

Design Filenames: j:\3941\16\civil\design\intdo\3941161d03.dgn

Plotted on: $DATE$

Design Filename: $FILE$

## NOTES

1. FOR HYDROLOGIC DATA, SEE RUNOFF COMPUTATION SHEET.
2. ALL DIMENSIONS ARE IN METERS UNLESS NOTED OTHERWISE.
3. FOR SUMMARIZATION OF ARMOR CURB SLOTS, SEE STORM DRAIN AND ARMOR CURB SUMMARY SHEET.
4. ALL ARMOR CURB OPENINGS SHALL HAVE AN ARMOR CURB FLUME CONSTRUCTED FROM BEHIND THE OPENING TO THE TOE OF SLOPE OF THE EMBANKMENT AND SHALL BE CONSIDERED SUBSIDIARY TO THE ARMORED CURB SLOT PAY ITEM.
5. SIDEWALK DRAINS SHALL BE PAID FOR AS AN ARMORED CURB SLOT.

**ESTIMATED QUANTITIES**

| DESCRIPTION | UNIT | EST. | FINAL |
|---|---|---|---|
| CSJ: 2452-01-038 | | | |
| NO QUANTITIES ON THIS SHEET | | | |

* FOR CONTRACTOR'S INFORMATION ONLY

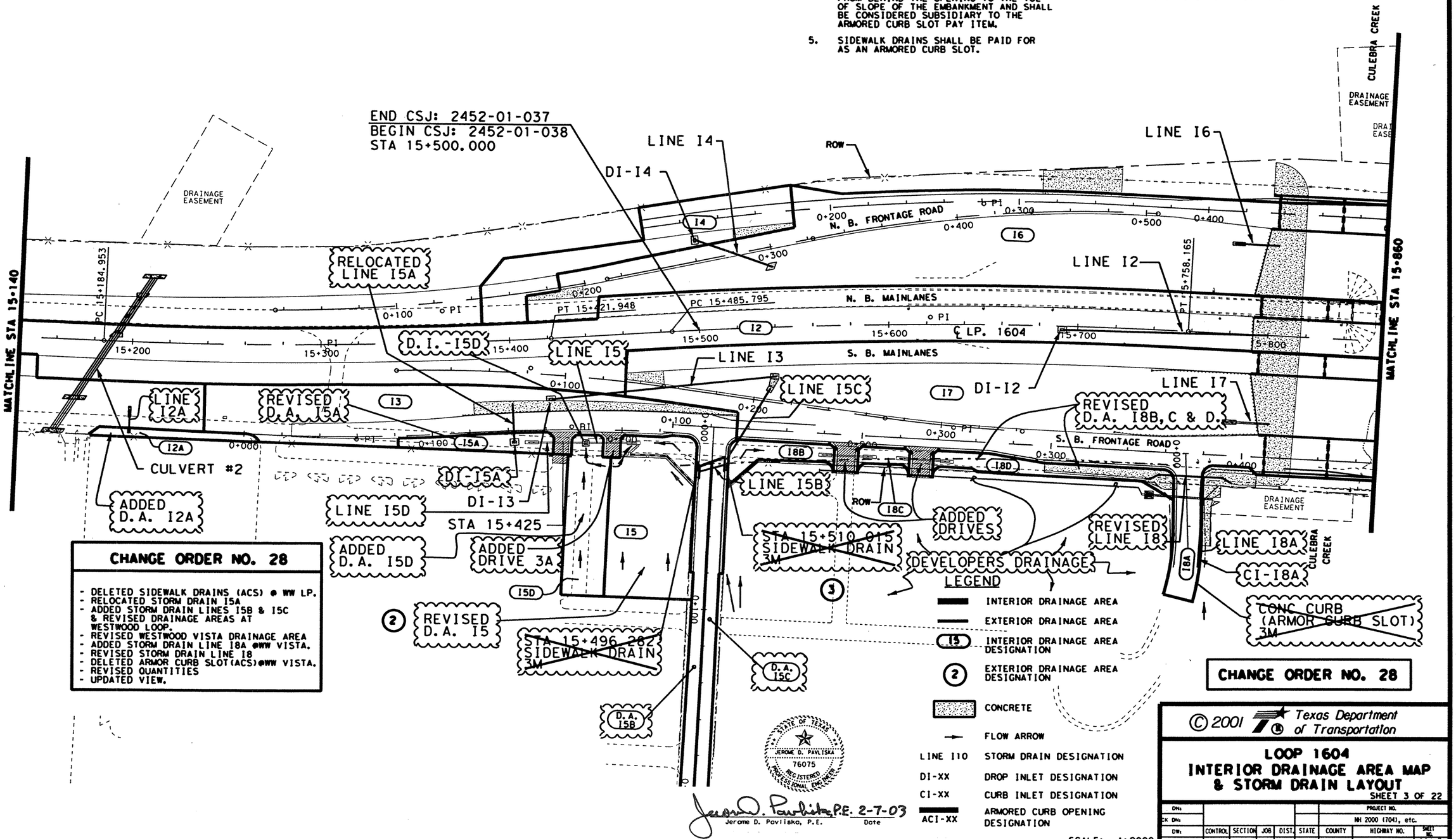


### CHANGE ORDER NO. 28

- DELETED SIDEWALK DRAINS (ACS) @ WW LP.
- RELOCATED STORM DRAIN I5A
- ADDED STORM DRAIN LINES I5B & I5C & REVISED DRAINAGE AREAS AT WESTWOOD LOOP.
- REVISED WESTWOOD VISTA DRAINAGE AREA
- ADDED STORM DRAIN LINE I8A @WW VISTA.
- REVISED STORM DRAIN LINE I8
- DELETED ARMOR CURB SLOT (ACS) @WW VISTA.
- REVISED QUANTITIES
- UPDATED VIEW.

**LEGEND**

- INTERIOR DRAINAGE AREA
- EXTERIOR DRAINAGE AREA
- (15) INTERIOR DRAINAGE AREA DESIGNATION
- (2) EXTERIOR DRAINAGE AREA DESIGNATION
- CONCRETE
- FLOW ARROW
- LINE I10 — STORM DRAIN DESIGNATION
- DI-XX — DROP INLET DESIGNATION
- CI-XX — CURB INLET DESIGNATION
- ACI-XX — ARMORED CURB OPENING DESIGNATION

STATE OF TEXAS — JEROME D. PAVLISKA — 76075 — REGISTERED PROFESSIONAL ENGINEER

Jerome D. Pavliska, P.E. 2-7-03
Jerome D. Pavliska, P.E. — Date

SCALE: 1:2000

© 2001 Texas Department of Transportation

# LOOP 1604
# INTERIOR DRAINAGE AREA MAP & STORM DRAIN LAYOUT

SHEET 3 OF 22

| DN: | | | | | PROJECT NO. | | |
|---|---|---|---|---|---|---|---|
| CK DN: | | | | | NH 2000 (704), etc. | | |
| DW: | CONTROL | SECTION | JOB | DIST. | STATE | COUNTY | HIGHWAY NO. | SHEET NO. |
| CK DW: | 2452 | 01 | 036 etc. | SAT | TX | BEXAR | LOOP 1604 | 431A |

01-23-03

Plotted on: 09/19/00

## NOTES

1. FOR HYDROLOGIC DATA, SEE RUNOFF COMPUTATION SHEET.
2. ALL DIMENSIONS ARE IN METERS UNLESS NOTED OTHERWISE.
3. FOR SUMMARIZATION OF ARMOR CURB SLOTS, SEE STORM DRAIN AND ARMOR CURB SUMMARY SHEET.
4. ALL ARMOR CURB OPENINGS SHALL HAVE AN ARMOR CURB FLUME CONSTRUCTED FROM BEHIND THE OPENING TO THE TOE OF SLOPE OF THE EMBANKMENT AND SHALL BE CONSIDERED SUBSIDIARY TO THE ARMORED CURB SLOT PAY ITEM.
5. SIDEWALK DRAINS SHALL BE PAID FOR AS AN ARMORED CURB SLOT.

ESTIMATED QUANTITIES

| DESCRIPTION | UNIT | EST. | FINAL |
|---|---|---|---|
| CSJ: 2452-01-038 | | | |
| CONC CURB (ARMOR CURB SLOT) | M | 15 | |
| RIPRAP (CONC) (CL B) | M3 | 5.4 | |

* FOR CONTRACTOR'S INFORMATION ONLY

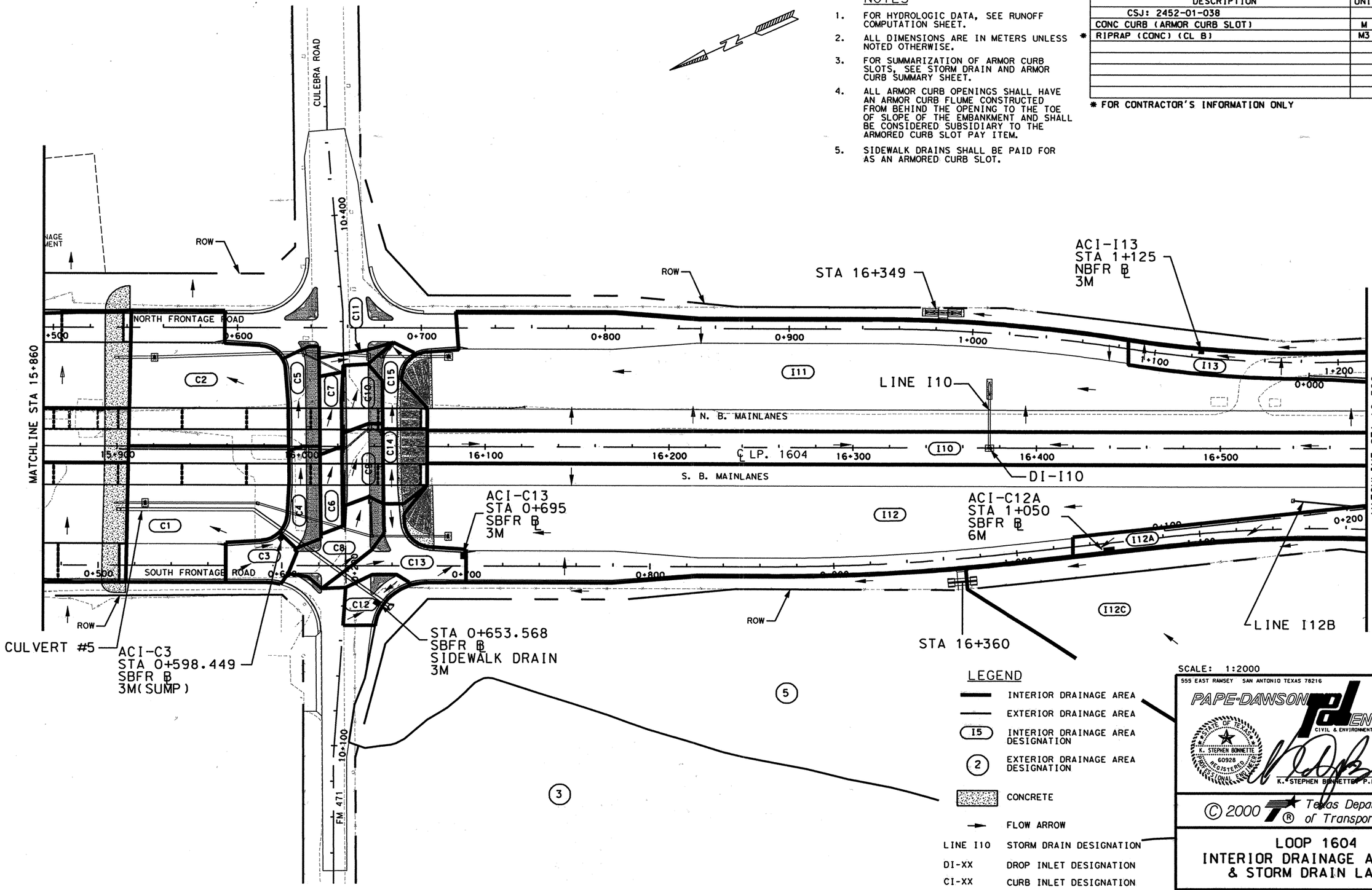


## LEGEND

- INTERIOR DRAINAGE AREA
- EXTERIOR DRAINAGE AREA
- (I5) INTERIOR DRAINAGE AREA DESIGNATION
- (2) EXTERIOR DRAINAGE AREA DESIGNATION
- CONCRETE
- FLOW ARROW
- LINE I10 — STORM DRAIN DESIGNATION
- DI-XX — DROP INLET DESIGNATION
- CI-XX — CURB INLET DESIGNATION
- ACI-XX — ARMORED CURB OPENING DESIGNATION

SCALE: 1:2000


555 EAST RAMSEY SAN ANTONIO TEXAS 78216
PHONE (210)375-9000
FAX (210)375-9010
PAPE-DAWSON ENGINEERS
CIVIL & ENVIRONMENTAL


STATE OF TEXAS — K. STEPHEN BONNETTE — 60928 — REGISTERED PROFESSIONAL ENGINEER

K. STEPHEN BONNETTE P.E. — 9/20/00 DATE

© 2000 Texas Department of Transportation

# LOOP 1604
# INTERIOR DRAINAGE AREA MAP & STORM DRAIN LAYOUT

SHEET 4 OF 22

| DN: | | | | | | PROJECT NO. | |
|---|---|---|---|---|---|---|---|
| CK DN: | | | | | | NH 2000 (704), etc. | |
| DW: | CONTROL | SECTION | JOB | DIST. | STATE | COUNTY | HIGHWAY NO. | SHEET NO. |
| CK DW: | 2452 | Ø1 | Ø36 etc. | SAT | TX | BEXAR | LOOP 1604 | 432 |

Design Filename: j:\3941\16civil\design\intdo\3941161d04.dgn

Plotted on: 07/02/01

Design Filename: j:\3941\16\change order\design\civil\plansheets\4337161d04.dgn

## NOTES

1. FOR HYDROLOGIC DATA, SEE RUNOFF COMPUTATION SHEET.
2. ALL DIMENSIONS ARE IN METERS UNLESS NOTED OTHERWISE.
3. FOR SUMMARIZATION OF ARMOR CURB SLOTS, SEE STORM DRAIN AND ARMOR CURB SUMMARY SHEET.
4. ALL ARMOR CURB OPENINGS SHALL HAVE AN ARMOR CURB FLUME CONSTRUCTED FROM BEHIND THE OPENING TO THE TOE OF SLOPE OF THE EMBANKMENT AND SHALL BE CONSIDERED SUBSIDIARY TO THE ARMORED CURB SLOT PAY ITEM.
5. SIDEWALK DRAINS SHALL BE PAID FOR AS AN ARMORED CURB SLOT.

ESTIMATED QUANTITIES

| DESCRIPTION | UNIT | EST. | FINAL |
|---|---|---|---|
| CSJ: 2452-01-038 | | | |
| CONC CURB (ARMOR CURB SLOT) | M | 15 | |
| * RIPRAP (CONC) (CL B) | M3 | 5.4 | |

* FOR CONTRACTOR'S INFORMATION ONLY

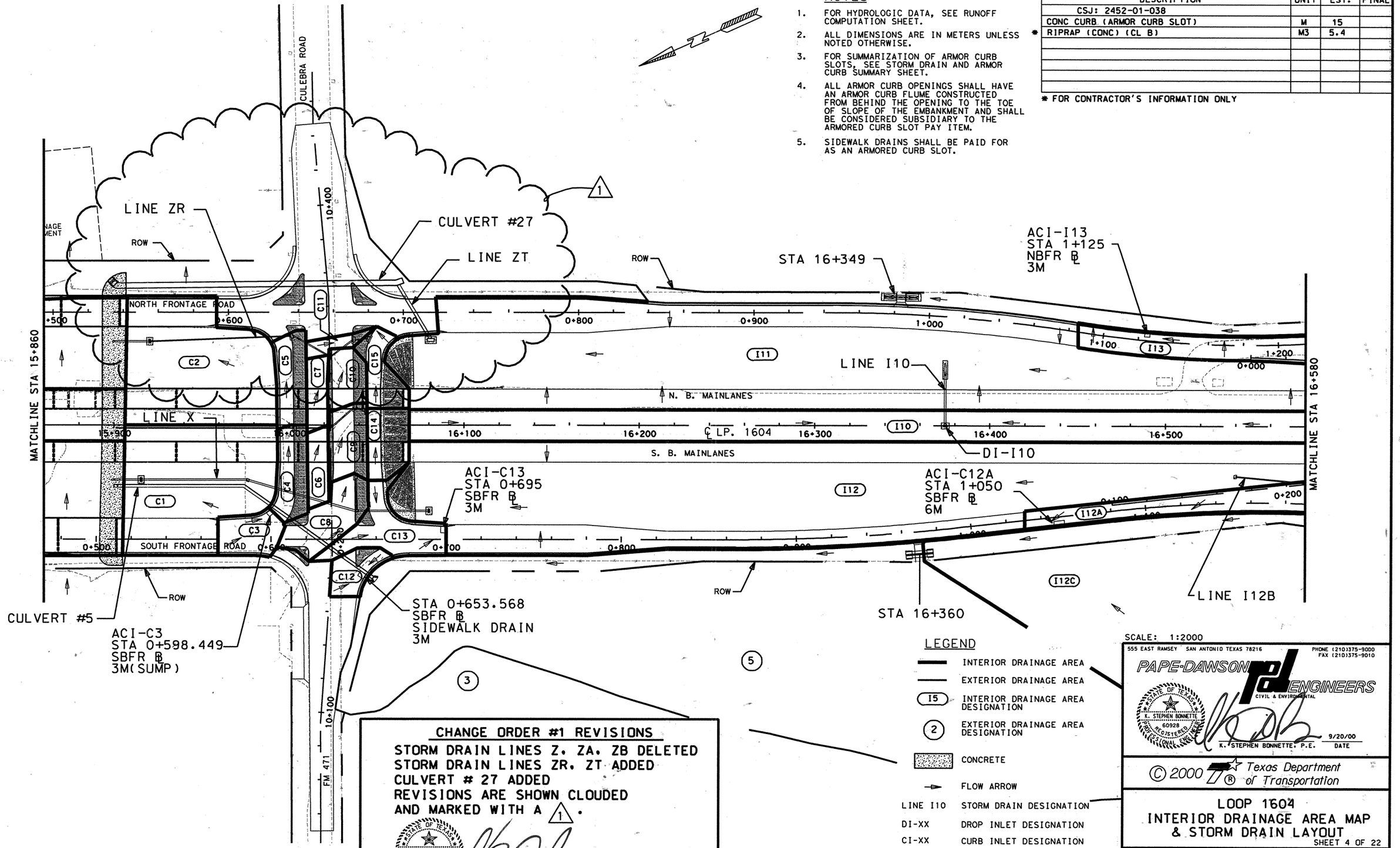


### CHANGE ORDER #1 REVISIONS

STORM DRAIN LINES Z, ZA, ZB DELETED
STORM DRAIN LINES ZR, ZT ADDED
CULVERT # 27 ADDED
REVISIONS ARE SHOWN CLOUDED AND MARKED WITH A 1.

K. STEPHEN BONNETTE 60928 REGISTERED PROFESSIONAL ENGINEER STATE OF TEXAS

K. STEPHEN BONNETTE, P.E. 7/2/2001 DATE

## LEGEND

- INTERIOR DRAINAGE AREA
- EXTERIOR DRAINAGE AREA
- I5 — INTERIOR DRAINAGE AREA DESIGNATION
- 2 — EXTERIOR DRAINAGE AREA DESIGNATION
- CONCRETE
- FLOW ARROW
- LINE I10 — STORM DRAIN DESIGNATION
- DI-XX — DROP INLET DESIGNATION
- CI-XX — CURB INLET DESIGNATION
- ACI-XX — ARMORED CURB OPENING DESIGNATION

SCALE: 1:2000


555 EAST RAMSEY SAN ANTONIO TEXAS 78216 PHONE (210)375-9000 FAX (210)375-9010

PAPE-DAWSON ENGINEERS CIVIL & ENVIRONMENTAL

K. STEPHEN BONNETTE 60928 REGISTERED PROFESSIONAL ENGINEER STATE OF TEXAS

K. STEPHEN BONNETTE, P.E. 9/20/00 DATE



© 2000 Texas Department of Transportation


# LOOP 1604
# INTERIOR DRAINAGE AREA MAP & STORM DRAIN LAYOUT

SHEET 4 OF 22

| DN: | | | | | | PROJECT NO. | |
|---|---|---|---|---|---|---|---|
| CK DN: | | | | | | NH 2000 (704), etc. | |
| DW: | CONTROL | SECTION | JOB | DIST. | STATE | COUNTY | HIGHWAY NO. | SHEET NO. |
| CK DW: | 2452 | 01 | 036 | SAT | TX | BEXAR | LOOP 1604 | 432A |

etc.

Plotted on: 05/14/02

## NOTES

1. FOR HYDROLOGIC DATA, SEE RUNOFF COMPUTATION SHEET.
2. ALL DIMENSIONS ARE IN METERS UNLESS NOTED OTHERWISE.
3. FOR SUMMARIZATION OF ARMOR CURB SLOTS, SEE STORM DRAIN AND ARMOR CURB SUMMARY SHEET.
4. ALL ARMOR CURB OPENINGS SHALL HAVE AN ARMOR CURB FLUME CONSTRUCTED FROM BEHIND THE OPENING TO THE TOE OF SLOPE OF THE EMBANKMENT AND SHALL BE CONSIDERED SUBSIDIARY TO THE ARMORED CURB SLOT PAY ITEM.
5. SIDEWALK DRAINS SHALL BE PAID FOR AS AN ARMORED CURB SLOT.

SCALE: 1:2000

### ESTIMATED QUANTITIES

| DESCRIPTION | UNIT | EST. | FINAL |
|---|---|---|---|
| CSJ: 2452-01-038 | | | |
| CONC CURB (ARMOR CURB SLOT) | M | 15 | |
| * RIPRAP (CONC) (CL B) | M3 | 5.4 | |

* FOR CONTRACTOR'S INFORMATION ONLY

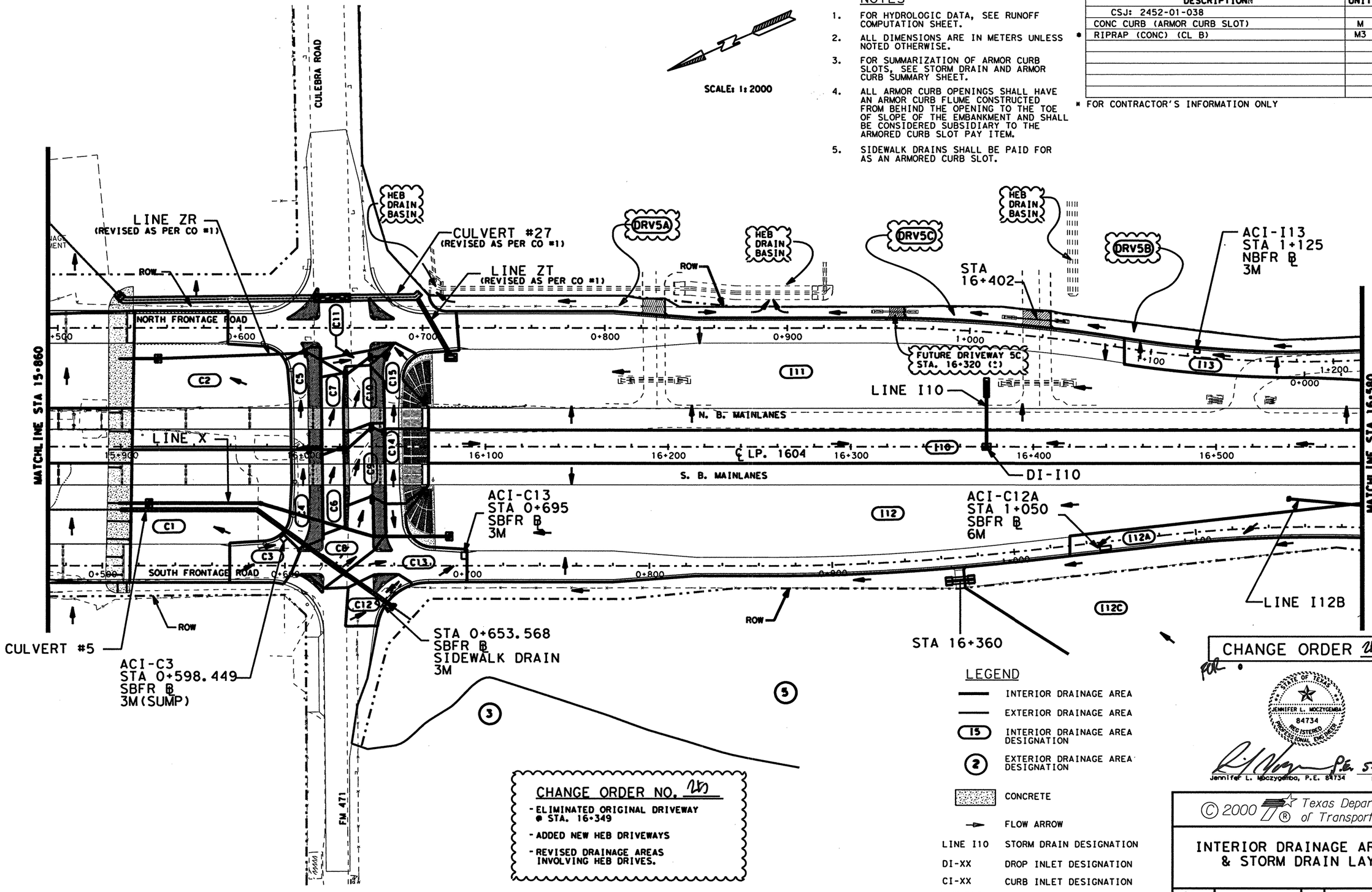


### CHANGE ORDER NO. 25

- ELIMINATED ORIGINAL DRIVEWAY @ STA. 16+349
- ADDED NEW HEB DRIVEWAYS
- REVISED DRAINAGE AREAS INVOLVING HEB DRIVES.

### LEGEND

- INTERIOR DRAINAGE AREA
- EXTERIOR DRAINAGE AREA
- (15) INTERIOR DRAINAGE AREA DESIGNATION
- (2) EXTERIOR DRAINAGE AREA DESIGNATION
- CONCRETE
- FLOW ARROW
- LINE I10 — STORM DRAIN DESIGNATION
- DI-XX — DROP INLET DESIGNATION
- CI-XX — CURB INLET DESIGNATION
- ACI-XX — ARMORED CURB OPENING DESIGNATION

CHANGE ORDER 25

STATE OF TEXAS
JENNIFER L. MOCZYGEMBA
84734
REGISTERED PROFESSIONAL ENGINEER

Jennifer L. Moczygemba, P.E. 84734 — Date 5-29-02

© 2000 Texas Department of Transportation

# INTERIOR DRAINAGE AREA MAP & STORM DRAIN LAYOUT



| DIST | COUNTY | CONTROL | SECTION | JOB | HIGHWAY NO. | SHEET |
|---|---|---|---|---|---|---|
| 15 | BEXAR | 2452 | 01 | 036 | LOOP 1604 | 432A |

PROJECT NO. NH 2000 (704), etc.

05-14-02

Design Filename: T:\AO\Design\lp1604fm471-90\chng*order*files\pd*sheets\4337161D04*C025.dgn

Plotted on: 09/25/00
Design File\on: X:\3941\...\design\intdo\3941161d04-detail.dgn

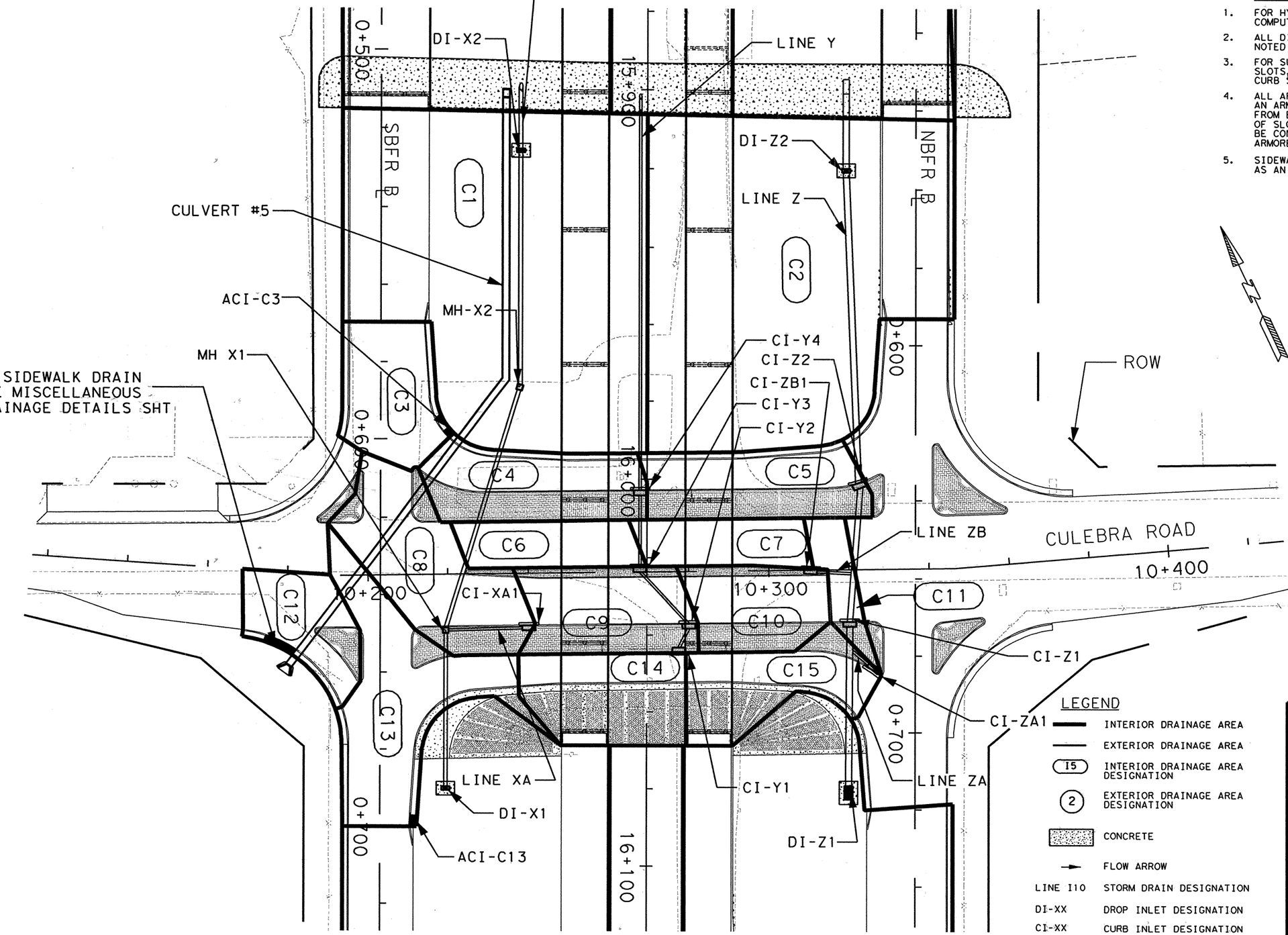


NOTES

1. FOR HYDROLOGIC DATA, SEE RUNOFF COMPUTATION SHEET.
2. ALL DIMENSIONS ARE IN METERS UNLESS NOTED OTHERWISE.
3. FOR SUMMARIZATION OF ARMOR CURB SLOTS, SEE STORM DRAIN AND ARMOR CURB SUMMARY SHEET.
4. ALL ARMOR CURB OPENINGS SHALL HAVE AN ARMOR CURB FLUME CONSTRUCTED FROM BEHIND THE OPENING TO THE TOE OF SLOPE OF THE EMBANKMENT AND SHALL BE CONSIDERED SUBSIDIARY TO THE ARMORED CURB SLOT PAY ITEM.
5. SIDEWALK DRAINS SHALL BE PAID FOR AS AN ARMORED CURB SLOT.

LEGEND

- INTERIOR DRAINAGE AREA
- EXTERIOR DRAINAGE AREA
- (I5) INTERIOR DRAINAGE AREA DESIGNATION
- (2) EXTERIOR DRAINAGE AREA DESIGNATION
- CONCRETE
- FLOW ARROW
- LINE I10 — STORM DRAIN DESIGNATION
- DI-XX — DROP INLET DESIGNATION
- CI-XX — CURB INLET DESIGNATION
- ACI-XX — ARMORED CURB OPENING DESIGNATION

SCALE: 1:2000

555 EAST RAMSEY SAN ANTONIO TEXAS 78216
PHONE (210)375-9000
FAX (210)375-9010
PAPE-DAWSON ENGINEERS
CIVIL & ENVIRONMENTAL
STATE OF TEXAS — K. STEPHEN BONNETTE — 60928 — REGISTERED PROFESSIONAL ENGINEER
K. STEPHEN BONNETTE, P.E. 9/20/00 DATE

© 2000 Texas Department of Transportation

# LOOP 1604
## INTERIOR DRAINAGE AREA MAP & STORM DRAIN LAYOUT

SHEET 5 OF 22

| DN: | | | | | PROJECT NO. | | |
|---|---|---|---|---|---|---|---|
| CK DN: | | | | | NH 2000 (704), etc. | | |
| DW: | CONTROL | SECTION | JOB | DIST. | COUNTY | HIGHWAY NO. | SHEET NO. |
| CK DW: | 2452 | 01 | 036 etc. | SAT | BEXAR | LOOP 1604 | 433 |
| | | | | TX | | | |

Plotted on: 07/02/01

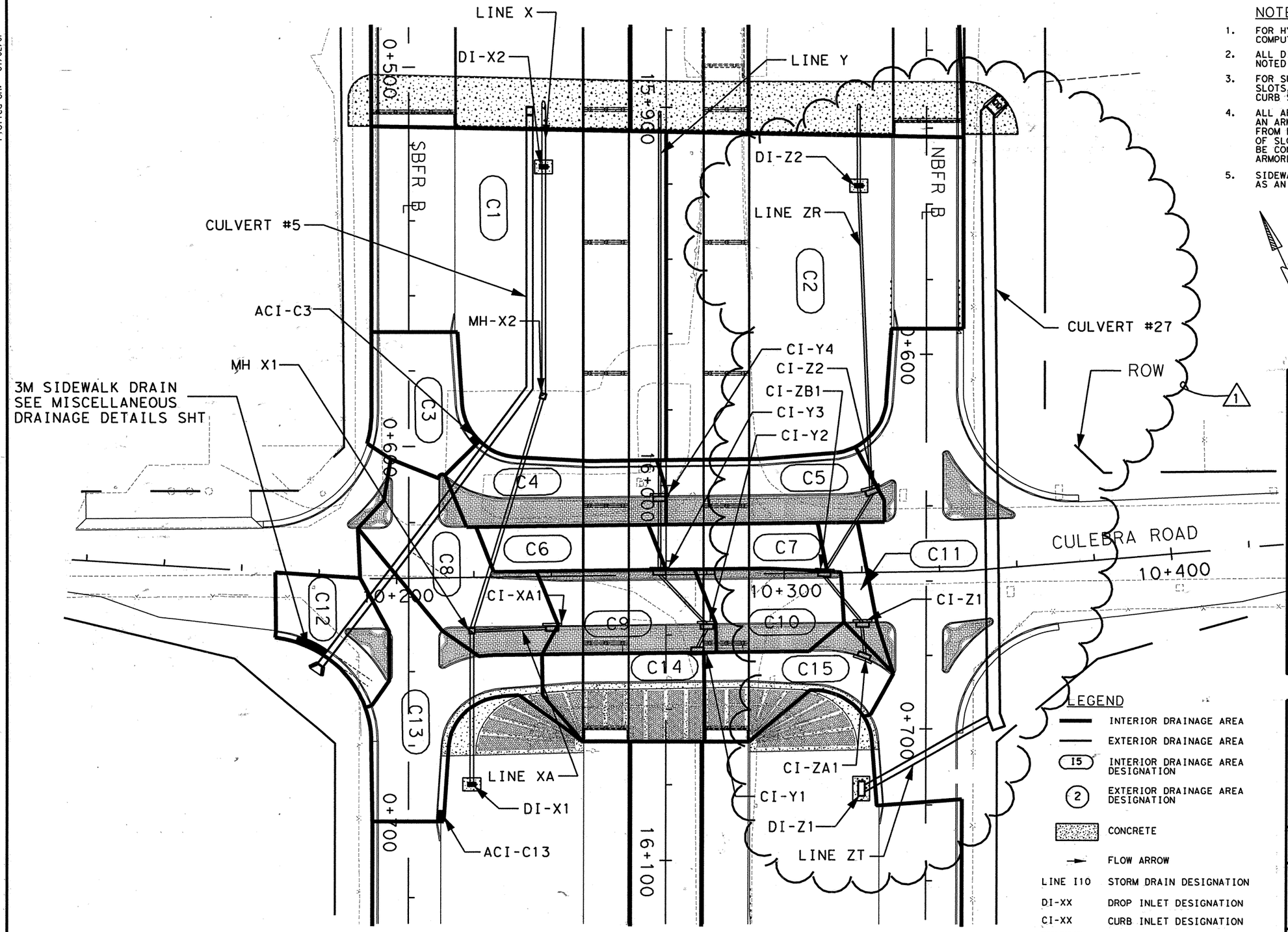


## NOTES

1. FOR HYDROLOGIC DATA, SEE RUNOFF COMPUTATION SHEET.
2. ALL DIMENSIONS ARE IN METERS UNLESS NOTED OTHERWISE.
3. FOR SUMMARIZATION OF ARMOR CURB SLOTS, SEE STORM DRAIN AND ARMOR CURB SUMMARY SHEET.
4. ALL ARMOR CURB OPENINGS SHALL HAVE AN ARMOR CURB FLUME CONSTRUCTED FROM BEHIND THE OPENING TO THE TOE OF SLOPE OF THE EMBANKMENT AND SHALL BE CONSIDERED SUBSIDIARY TO THE ARMORED CURB SLOT PAY ITEM.
5. SIDEWALK DRAINS SHALL BE PAID FOR AS AN ARMORED CURB SLOT.

## LEGEND

- INTERIOR DRAINAGE AREA
- EXTERIOR DRAINAGE AREA
- (15) INTERIOR DRAINAGE AREA DESIGNATION
- (2) EXTERIOR DRAINAGE AREA DESIGNATION
- CONCRETE
- FLOW ARROW
- LINE I10 — STORM DRAIN DESIGNATION
- DI-XX — DROP INLET DESIGNATION
- CI-XX — CURB INLET DESIGNATION
- ACI-XX — ARMORED CURB OPENING DESIGNATION

## CHANGE ORDER # 1 REVISIONS

STORM DRAIN LINES Z, ZA AND ZB DELETED
STORM DRAIN LINES ZR AND ZT ADDED
CULVERT # 27 ADDED
REVISIONS ARE SHOWN CLOUDED AND MARKED WITH A (1).

STATE OF TEXAS — K. STEPHEN BONNETTE — 60928 — REGISTERED PROFESSIONAL ENGINEER
K. STEPHEN BONNETTE, P.E. — DATE 7/2/01

SCALE: 1:1000

555 EAST RAMSEY SAN ANTONIO TEXAS 78216
PHONE (210)375-9000
FAX (210)375-9010
PAPE-DAWSON ENGINEERS
CIVIL & ENVIRONMENTAL

STATE OF TEXAS — K. STEPHEN BONNETTE — 60928 — REGISTERED PROFESSIONAL ENGINEER
K. STEPHEN BONNETTE, P.E. — DATE 9/20/00

© 2000 Texas Department of Transportation

# LOOP 1604
## INTERIOR DRAINAGE AREA MAP & STORM DRAIN LAYOUT

SHEET 5 OF 22

| DN: | | | | | PROJECT NO. | |
|---|---|---|---|---|---|---|
| CK DN: | | | | | NH 2000 (704), etc. | |
| DW: | CONTROL | SECTION | JOB | DIST. | COUNTY | HIGHWAY NO. | SHEET NO. |
| CK DW: | 2452 | 01 | 036 | SAT | BEXAR | LOOP 1604 | 433A |

Design Filename: j:\3941\16\change order\design\civil\plansheets\433716id04-detail.dgn

Plotted on: [illegible]/25/00

## NOTES

1. FOR HYDROLOGIC DATA, SEE RUNOFF COMPUTATION SHEET.
2. ALL DIMENSIONS ARE IN METERS UNLESS NOTED OTHERWISE.
3. FOR SUMMARIZATION OF ARMOR CURB SLOTS, SEE STORM DRAIN AND ARMOR CURB SUMMARY SHEET.
4. ALL ARMOR CURB OPENINGS SHALL HAVE AN ARMOR CURB FLUME CONSTRUCTED FROM BEHIND THE OPENING TO THE TOE OF SLOPE OF THE EMBANKMENT AND SHALL BE CONSIDERED SUBSIDIARY TO THE ARMORED CURB SLOT PAY ITEM.
5. SIDEWALK DRAINS SHALL BE PAID FOR AS AN ARMORED CURB SLOT.

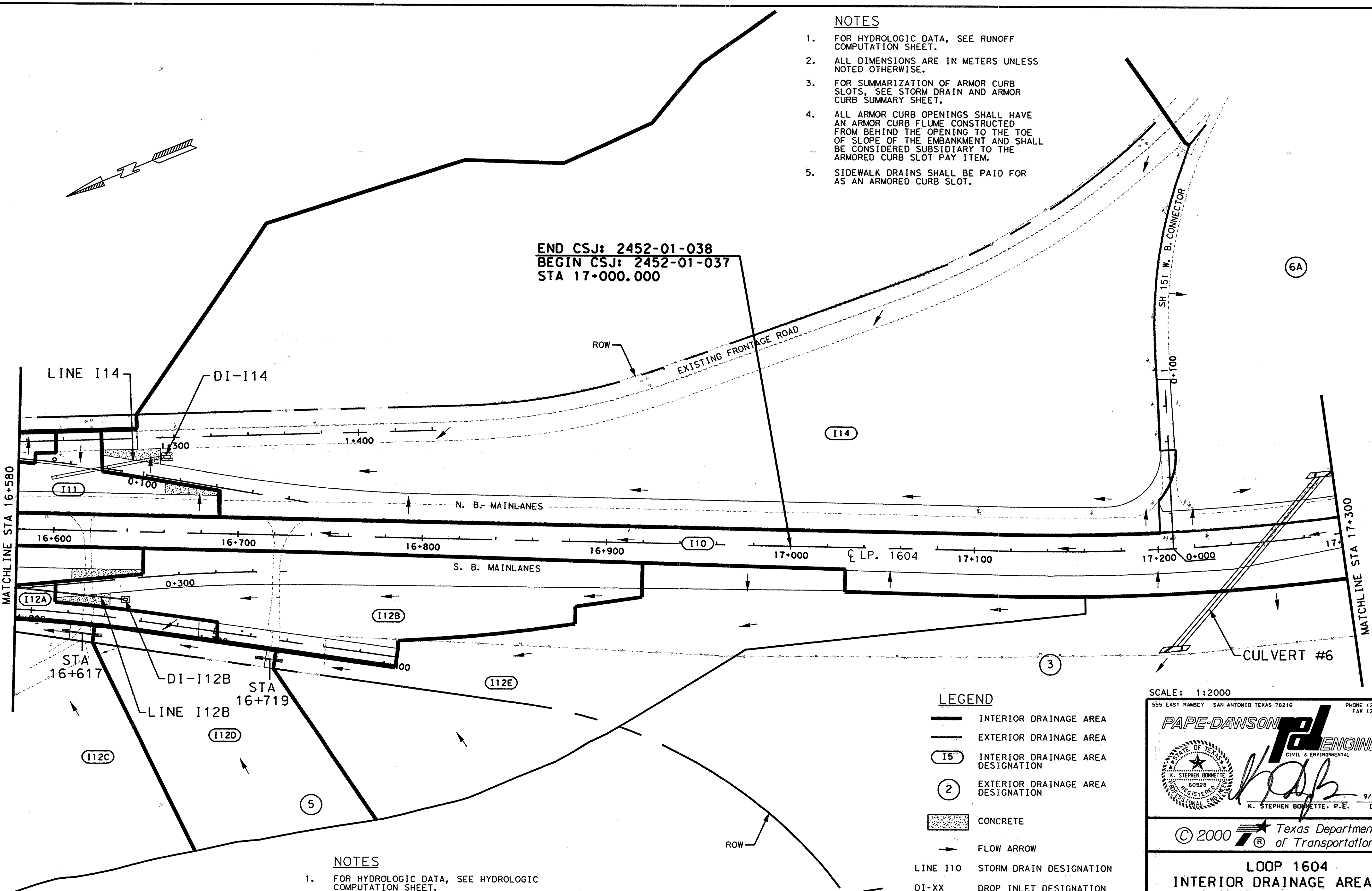


SCALE: 1:2000

## NOTES

1. FOR HYDROLOGIC DATA, SEE HYDROLOGIC COMPUTATION SHEET.
2. ALL DIMENSIONS ARE IN METERS UNLESS NOTED OTHERWISE.
3. FOR SUMMARIZATION OF ARMOR CURB SLOTS, SEE STORM DRAIN AND ARMOR CURB SUMMARY SHEET.

## LEGEND

| | |
|---|---|
| (thick line) | INTERIOR DRAINAGE AREA |
| (thin line) | EXTERIOR DRAINAGE AREA |
| I5 | INTERIOR DRAINAGE AREA DESIGNATION |
| 2 | EXTERIOR DRAINAGE AREA DESIGNATION |
| (stippled box) | CONCRETE |
| → | FLOW ARROW |
| LINE I10 | STORM DRAIN DESIGNATION |
| DI-XX | DROP INLET DESIGNATION |
| CI-XX | CURB INLET DESIGNATION |
| ACI-XX | ARMORED CURB OPENING DESIGNATION |


555 EAST RAMSEY SAN ANTONIO TEXAS 78216
PHONE (210)375-9000
FAX (210)375-9010

PAPE-DAWSON ENGINEERS
CIVIL & ENVIRONMENTAL

STATE OF TEXAS
K. STEPHEN BONNETTE
60928
REGISTERED PROFESSIONAL ENGINEER

K. STEPHEN BONNETTE, P.E. 9/20/00
DATE


© 2000 Texas Department of Transportation

# LOOP 1604
# INTERIOR DRAINAGE AREA MAP & STORM DRAIN LAYOUT

SHEET 6 OF 22

| | | | | | | | | |
|---|---|---|---|---|---|---|---|---|
| DN: | | | | | PROJECT NO. | | | |
| CK DN: | | | | | NH 2000 (704), etc. | | | |
| DW: | CONTROL | SECTION | JOB | DIST. | STATE | COUNTY | HIGHWAY NO. | SHEET NO. |
| CK DW: | 2452 | 01 | 036 | SAT | TX | BEXAR | LOOP 1604 | 434 |

Design Filename: [illegible]:\3941\16[illegible]design\intda\394116id05.dgn

Plotted on: 07/02/01

Design Filename: j:\3941\16\change order\design\civil\plansheets\4337161d05.dgn

## NOTES

1. FOR HYDROLOGIC DATA, SEE RUNOFF COMPUTATION SHEET.
2. ALL DIMENSIONS ARE IN METERS UNLESS NOTED OTHERWISE.
3. FOR SUMMARIZATION OF ARMOR CURB SLOTS, SEE STORM DRAIN AND ARMOR CURB SUMMARY SHEET.
4. ALL ARMOR CURB OPENINGS SHALL HAVE AN ARMOR CURB FLUME CONSTRUCTED FROM BEHIND THE OPENING TO THE TOE OF SLOPE OF THE EMBANKMENT AND SHALL BE CONSIDERED SUBSIDIARY TO THE ARMORED CURB SLOT PAY ITEM.
5. SIDEWALK DRAINS SHALL BE PAID FOR AS AN ARMORED CURB SLOT.

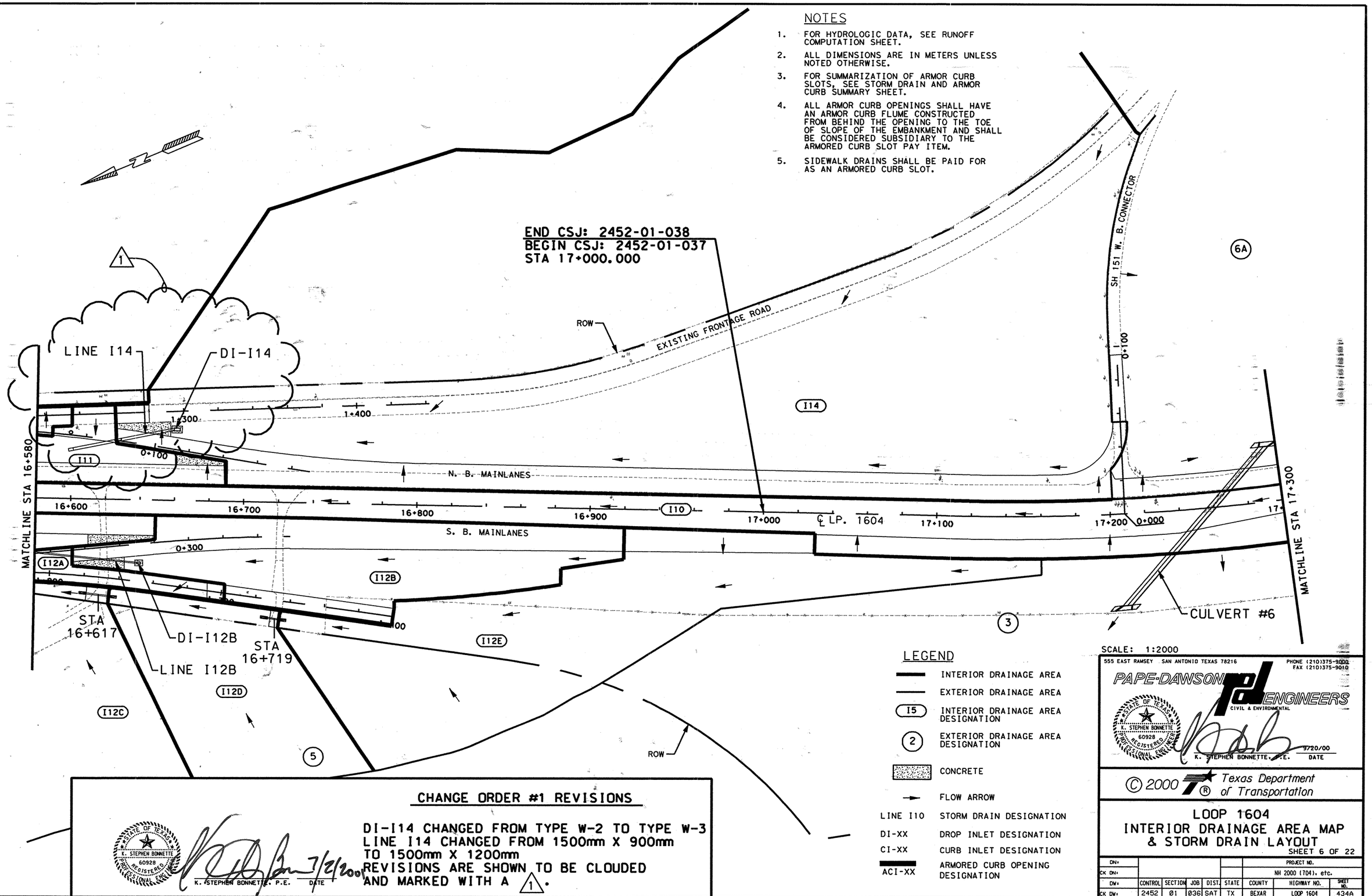


## LEGEND

- INTERIOR DRAINAGE AREA
- EXTERIOR DRAINAGE AREA
- (I5) INTERIOR DRAINAGE AREA DESIGNATION
- (2) EXTERIOR DRAINAGE AREA DESIGNATION
- CONCRETE
- FLOW ARROW
- LINE I10 — STORM DRAIN DESIGNATION
- DI-XX — DROP INLET DESIGNATION
- CI-XX — CURB INLET DESIGNATION
- ACI-XX — ARMORED CURB OPENING DESIGNATION

SCALE: 1:2000

## CHANGE ORDER #1 REVISIONS

DI-I14 CHANGED FROM TYPE W-2 TO TYPE W-3
LINE I14 CHANGED FROM 1500mm X 900mm
TO 1500mm X 1200mm
REVISIONS ARE SHOWN TO BE CLOUDED
AND MARKED WITH A (1).

STATE OF TEXAS — K. STEPHEN BONNETTE — 60928 — REGISTERED PROFESSIONAL ENGINEER

K. STEPHEN BONNETTE, P.E. — DATE 7/2/2001

555 EAST RAMSEY SAN ANTONIO TEXAS 78216
PHONE (210)375-9000
FAX (210)375-9010
PAPE-DAWSON ENGINEERS
CIVIL & ENVIRONMENTAL

STATE OF TEXAS — K. STEPHEN BONNETTE — 60928 — REGISTERED PROFESSIONAL ENGINEER

K. STEPHEN BONNETTE, P.E. — 9720/00 DATE

© 2000 Texas Department of Transportation

# LOOP 1604
# INTERIOR DRAINAGE AREA MAP & STORM DRAIN LAYOUT

SHEET 6 OF 22

| DN: | | | | | | PROJECT NO. | |
|---|---|---|---|---|---|---|---|
| CK DN: | | | | | | NH 2000 (704), etc. | |
| DW: | CONTROL | SECTION | JOB | DIST. | STATE | COUNTY | HIGHWAY NO. | SHEET NO. |
| CK DW: | 2452 | Ø1 | Ø36 etc. | SAT | TX | BEXAR | LOOP 1604 | 434A |

Plotted on: 05/14/02

Design Filename: T:\AO\Design\lp1604fm471-90\chgorder*files\pd*sheets\433716ID05*C025.dgn

## NOTES

1. FOR HYDROLOGIC DATA, SEE RUNOFF COMPUTATION SHEET.
2. ALL DIMENSIONS ARE IN METERS UNLESS NOTED OTHERWISE.
3. FOR SUMMARIZATION OF ARMOR CURB SLOTS, SEE STORM DRAIN AND ARMOR CURB SUMMARY SHEET.
4. ALL ARMOR CURB OPENINGS SHALL HAVE AN ARMOR CURB FLUME CONSTRUCTED FROM BEHIND THE OPENING TO THE TOE OF SLOPE OF THE EMBANKMENT AND SHALL BE CONSIDERED SUBSIDIARY TO THE ARMORED CURB SLOT PAY ITEM.
5. SIDEWALK DRAINS SHALL BE PAID FOR AS AN ARMORED CURB SLOT.

SCALE: 1: 2000

END CSJ: 2452-01-038
BEGIN CSJ: 2452-01-037
STA 17+000.000

DRV5B
LINE I14 (REVISED AS PER CO #1)
DI-I14
ROW
EXISTING FRONTAGE ROAD
SH 151 N. B. CONNECTOR
6A
114
1+300
1+400
111
N. B. MAINLANES
MATCHLINE STA 16+580
16+600
16+700
16+800
16+900
110
17+000
℄ LP. 1604
17+100
17+200
MATCHLINE STA 17+300
S. B. MAINLANES
DRIVEWAY 8A ALLOWED FOR PER CO # 25.
112A
112B
112BA
STA 16+617
DI-I12B
STA 16+719
LINE I12B
112E
3
CULVERT #6
112D
112C
5
ROW

CHANGE ORDER NO. 27
- REVISED DRAINAGE AREAS INVOLVING HEB DRIVES.

FOR CHANGE ORDER 27

## LEGEND

- INTERIOR DRAINAGE AREA
- EXTERIOR DRAINAGE AREA
- (15) INTERIOR DRAINAGE AREA DESIGNATION
- (2) EXTERIOR DRAINAGE AREA DESIGNATION
- CONCRETE
- FLOW ARROW
- LINE I10 — STORM DRAIN DESIGNATION
- DI-XX — DROP INLET DESIGNATION
- CI-XX — CURB INLET DESIGNATION
- ACI-XX — ARMORED CURB OPENING DESIGNATION

STATE OF TEXAS
JENNIFER L. MOCZYGEMBA
84734
REGISTERED PROFESSIONAL ENGINEER

Jennifer L. Moczygemba, P.E. 84734 — Date 5-29-02

© 2000 Texas Department of Transportation

# LOOP 1604
## INTERIOR DRAINAGE AREA MAP & STORM DRAIN LAYOUT

SHEET 6 OF 22

| DIST | | | | | PROJECT NO. | |
|---|---|---|---|---|---|---|
| CK DIST | | | | | NH 2000 (704), etc. | |
| DIST | CONTROL | SECTION | JOB | DIST | STATE | COUNTY | HIGHWAY NO. | SHEET NO. |
| CK DIST | 2452 | 01 | 036 | SAT | TX | BEXAR | LOOP 1604 | 434A |

05-14-02

Plotted on: 09/19/00

Design Filename: j:\3941\16\civil\design\intda\394116d06.dgn

## NOTES

1. FOR HYDROLOGIC DATA, SEE RUNOFF COMPUTATION SHEET.
2. ALL DIMENSIONS ARE IN METERS UNLESS NOTED OTHERWISE.
3. FOR SUMMARIZATION OF ARMOR CURB SLOTS, SEE STORM DRAIN AND ARMOR CURB SUMMARY SHEET.
4. ALL ARMOR CURB OPENINGS SHALL HAVE AN ARMOR CURB FLUME CONSTRUCTED FROM BEHIND THE OPENING TO THE TOE OF SLOPE OF THE EMBANKMENT AND SHALL BE CONSIDERED SUBSIDIARY TO THE ARMORED CURB SLOT PAY ITEM.
5. SIDEWALK DRAINS SHALL BE PAID FOR AS AN ARMORED CURB SLOT.

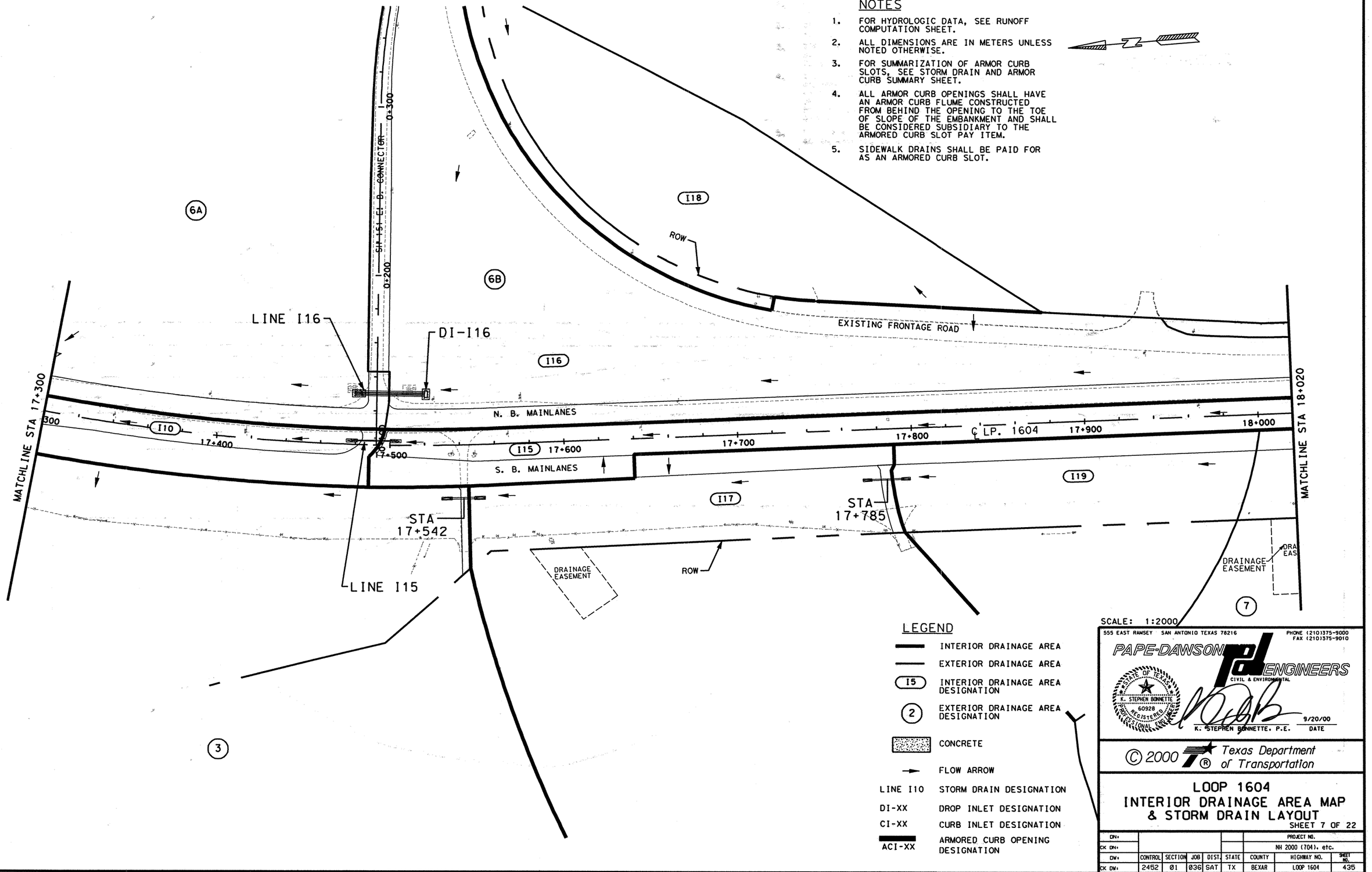


SCALE: 1:2000

## LEGEND

| | |
|---|---|
| | INTERIOR DRAINAGE AREA |
| | EXTERIOR DRAINAGE AREA |
| I5 | INTERIOR DRAINAGE AREA DESIGNATION |
| 2 | EXTERIOR DRAINAGE AREA DESIGNATION |
| | CONCRETE |
| | FLOW ARROW |
| LINE I10 | STORM DRAIN DESIGNATION |
| DI-XX | DROP INLET DESIGNATION |
| CI-XX | CURB INLET DESIGNATION |
| ACI-XX | ARMORED CURB OPENING DESIGNATION |


555 EAST RAMSEY SAN ANTONIO TEXAS 78216
PHONE (210)375-9000
FAX (210)375-9010
PAPE-DAWSON ENGINEERS
CIVIL & ENVIRONMENTAL
STATE OF TEXAS K. STEPHEN BONNETTE 60928 REGISTERED PROFESSIONAL ENGINEER
9/20/00
K. STEPHEN BONNETTE, P.E. DATE



© 2000 Texas Department of Transportation


# LOOP 1604
# INTERIOR DRAINAGE AREA MAP & STORM DRAIN LAYOUT

SHEET 7 OF 22

| DN: | | | | | PROJECT NO. | | |
|---|---|---|---|---|---|---|---|
| CK DN: | | | | | NH 2000 (704), etc. | | |
| DW: | CONTROL | SECTION | JOB | DIST. | COUNTY | HIGHWAY NO. | SHEET NO. |
| CK DW: | 2452 | 01 | 036 etc. | SAT | BEXAR | LOOP 1604 | 435 |

Plotted on: 09/19/00

## NOTES

1. FOR HYDROLOGIC DATA, SEE RUNOFF COMPUTATION SHEET.
2. ALL DIMENSIONS ARE IN METERS UNLESS NOTED OTHERWISE.
3. FOR SUMMARIZATION OF ARMOR CURB SLOTS, SEE STORM DRAIN AND ARMOR CURB SUMMARY SHEET.
4. ALL ARMOR CURB OPENINGS SHALL HAVE AN ARMOR CURB FLUME CONSTRUCTED FROM BEHIND THE OPENING TO THE TOE OF SLOPE OF THE EMBANKMENT AND SHALL BE CONSIDERED SUBSIDIARY TO THE ARMORED CURB SLOT PAY ITEM.
5. SIDEWALK DRAINS SHALL BE PAID FOR AS AN ARMORED CURB SLOT.

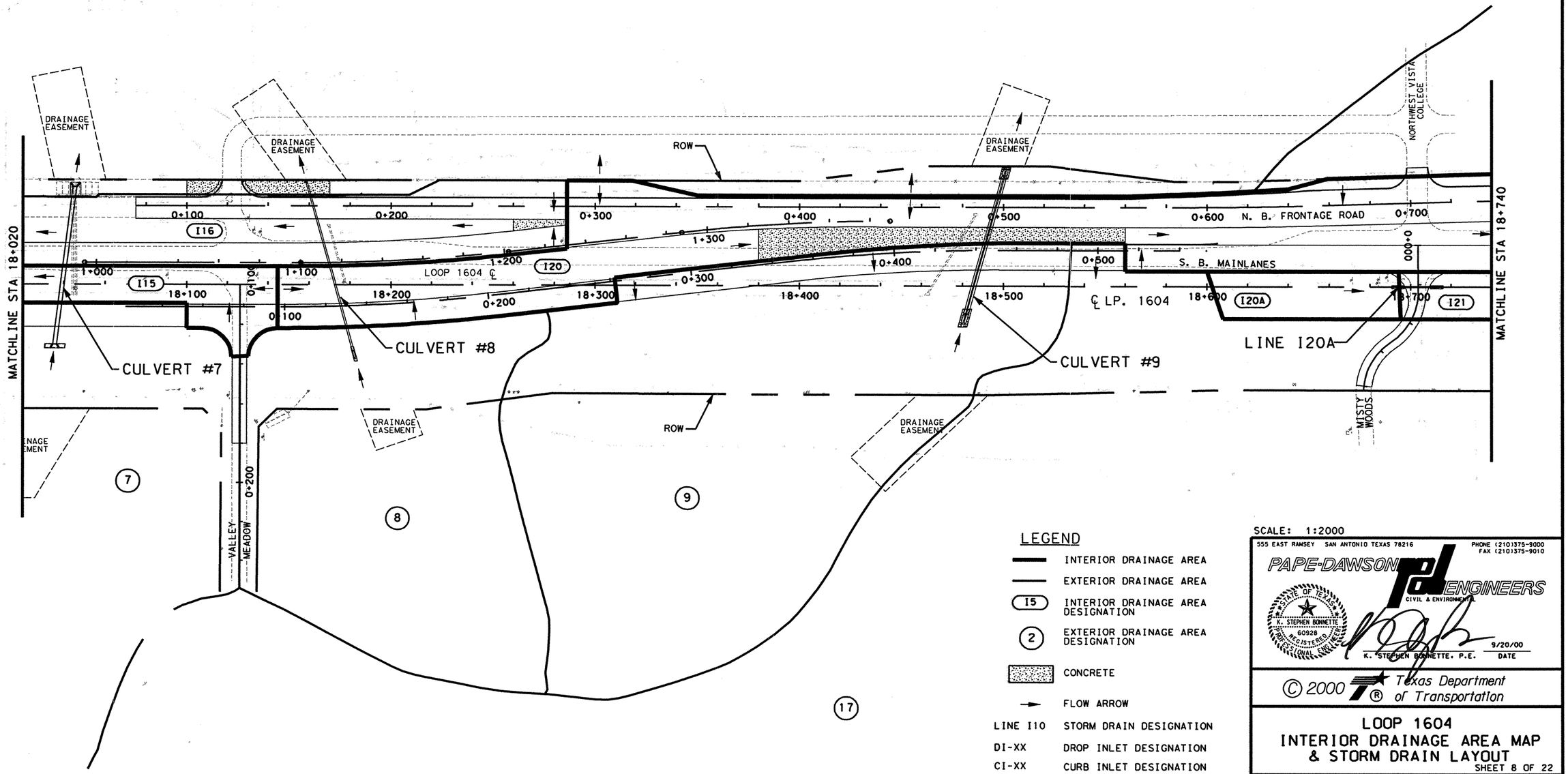


## LEGEND

- INTERIOR DRAINAGE AREA
- EXTERIOR DRAINAGE AREA
- (I5) INTERIOR DRAINAGE AREA DESIGNATION
- (2) EXTERIOR DRAINAGE AREA DESIGNATION
- CONCRETE
- FLOW ARROW
- LINE I10 STORM DRAIN DESIGNATION
- DI-XX DROP INLET DESIGNATION
- CI-XX CURB INLET DESIGNATION
- ACI-XX ARMORED CURB OPENING DESIGNATION

SCALE: 1:2000

555 EAST RAMSEY SAN ANTONIO TEXAS 78216
PHONE (210)375-9000
FAX (210)375-9010
PAPE-DAWSON ENGINEERS
CIVIL & ENVIRONMENTAL
STATE OF TEXAS K. STEPHEN BONNETTE 60928 REGISTERED PROFESSIONAL ENGINEER
K. STEPHEN BONNETTE, P.E. 9/20/00 DATE

© 2000 Texas Department of Transportation

# LOOP 1604
# INTERIOR DRAINAGE AREA MAP & STORM DRAIN LAYOUT

SHEET 8 OF 22

| DN: | | | | | PROJECT NO. | | |
|---|---|---|---|---|---|---|---|
| CK DN: | | | | | NH 2000 (704), etc. | | |
| DW: | CONTROL | SECTION | JOB | DIST. | STATE | COUNTY | HIGHWAY NO. | SHEET NO. |
| CK DW: | 2452 | 01 | 036 etc. | SAT | TX | BEXAR | LOOP 1604 | 436 |

Design Filename: j:\3941\16\civil\design\int-da\394116id07.dgn

## NOTES

1. FOR HYDROLOGIC DATA, SEE RUNOFF COMPUTATION SHEET.
2. ALL DIMENSIONS ARE IN METERS UNLESS NOTED OTHERWISE.
3. FOR SUMMARIZATION OF ARMOR CURB SLOTS, SEE STORM DRAIN AND ARMOR CURB SUMMARY SHEET.
4. ALL ARMOR CURB OPENINGS SHALL HAVE AN ARMOR CURB FLUME CONSTRUCTED FROM BEHIND THE OPENING TO THE TOE OF SLOPE OF THE EMBANKMENT AND SHALL BE CONSIDERED SUBSIDIARY TO THE ARMORED CURB SLOT PAY ITEM.
5. SIDEWALK DRAINS SHALL BE PAID FOR AS AN ARMORED CURB SLOT.

SCALE: 1:2000

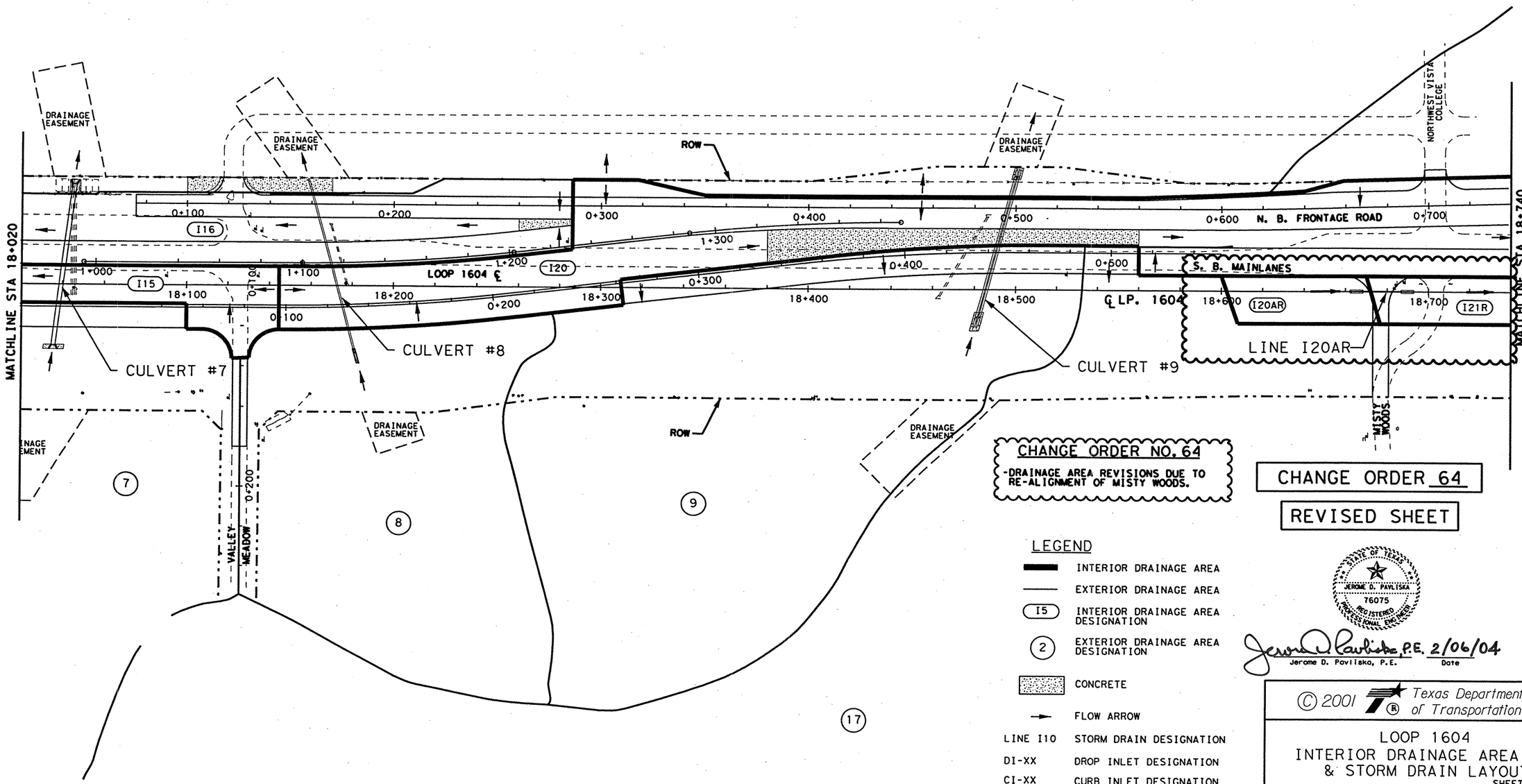


CHANGE ORDER NO. 64

-DRAINAGE AREA REVISIONS DUE TO RE-ALIGNMENT OF MISTY WOODS.

CHANGE ORDER 64

REVISED SHEET

## LEGEND

- INTERIOR DRAINAGE AREA
- EXTERIOR DRAINAGE AREA
- I5 — INTERIOR DRAINAGE AREA DESIGNATION
- (2) — EXTERIOR DRAINAGE AREA DESIGNATION
- CONCRETE
- FLOW ARROW
- LINE I10 — STORM DRAIN DESIGNATION
- DI-XX — DROP INLET DESIGNATION
- CI-XX — CURB INLET DESIGNATION
- ACI-XX — ARMORED CURB OPENING DESIGNATION

STATE OF TEXAS
JEROME D. PAVLISKA
76075
REGISTERED PROFESSIONAL ENGINEER

Jerome D. Pavliska P.E. 2/06/04
Jerome D. Pavliska, P.E. — Date

© 2001 Texas Department of Transportation

LOOP 1604
INTERIOR DRAINAGE AREA MAP
& STORM DRAIN LAYOUT
SHEET 8 OF 22

| DN: | | | | | PROJECT NO. | | | |
|---|---|---|---|---|---|---|---|---|
| CK DN: | | | | | NH 2000 (704), etc. | | | |
| DW: | CONTROL | SECTION | JOB | DIST. | STATE | COUNTY | HIGHWAY NO. | SHEET NO. |
| CK DW: | 2452 | 01 | 036 etc. | SAT | TX | BEXAR | LOOP 1604 | 436A |

02-05-04

t:\oo\design\dgn\04-471-90\CHG#ORDER#FILES\PDA\SHEETS\391161D07.dgn

Plotted on: 09/19/00

## NOTES

1. FOR HYDROLOGIC DATA, SEE RUNOFF COMPUTATION SHEET.
2. ALL DIMENSIONS ARE IN METERS UNLESS NOTED OTHERWISE.
3. FOR SUMMARIZATION OF ARMOR CURB SLOTS, SEE STORM DRAIN AND ARMOR CURB SUMMARY SHEET.
4. ALL ARMOR CURB OPENINGS SHALL HAVE AN ARMOR CURB FLUME CONSTRUCTED FROM BEHIND THE OPENING TO THE TOE OF SLOPE OF THE EMBANKMENT AND SHALL BE CONSIDERED SUBSIDIARY TO THE ARMORED CURB SLOT PAY ITEM.
5. SIDEWALK DRAINS SHALL BE PAID FOR AS AN ARMORED CURB SLOT.

ESTIMATED QUANTITIES

| | DESCRIPTION | UNIT | EST. | FINAL |
|---|---|---|---|---|
| | CSJ: 2452-01-037 | UNIT | EST. | |
| | CONC CURB (ARMOR CURB SLOT) | M | 6.0 | |
| * | RIPRAP (CONC) (CL B) | M3 | 1.8 | |

* FOR CONTRACTOR'S INFORMATION ONLY

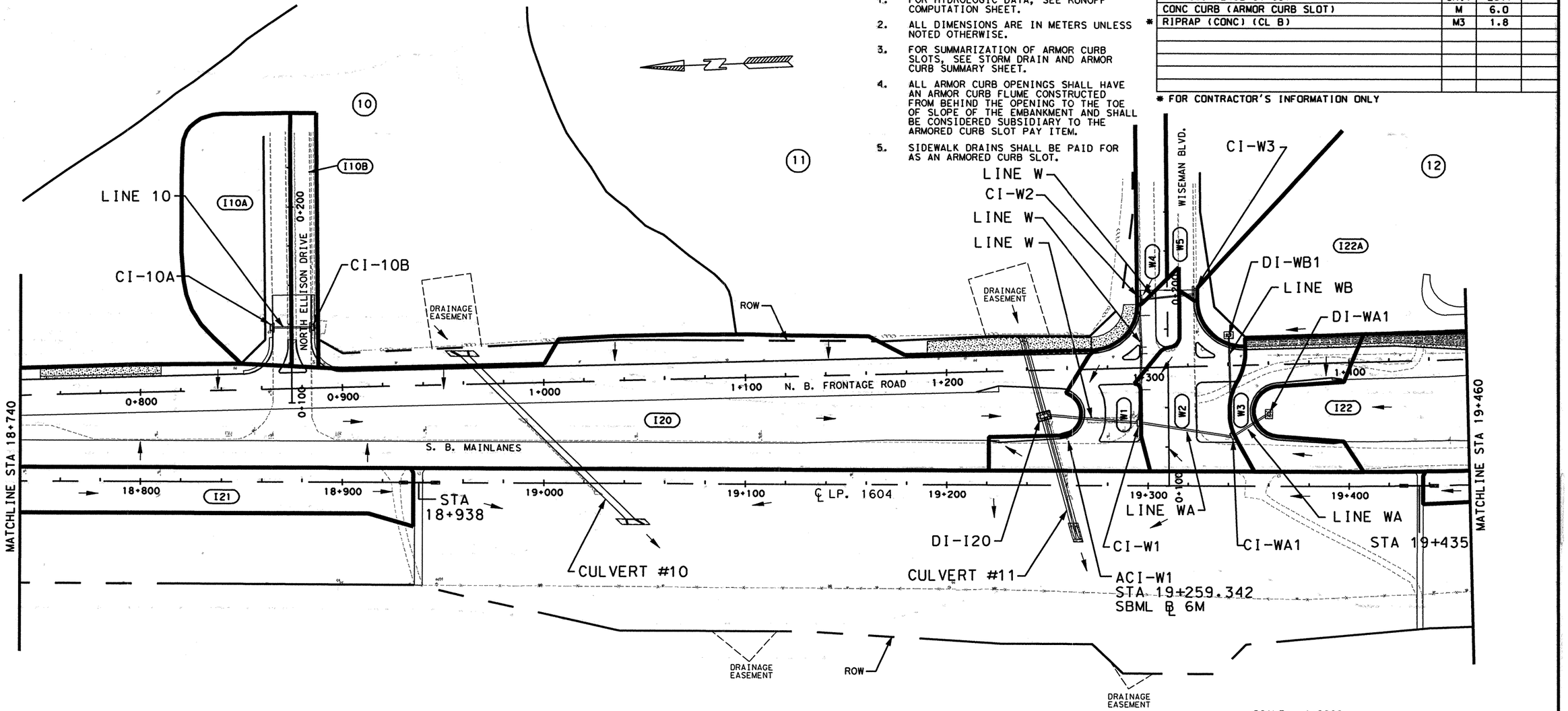


## LEGEND

- INTERIOR DRAINAGE AREA
- EXTERIOR DRAINAGE AREA
- I5 — INTERIOR DRAINAGE AREA DESIGNATION
- 2 — EXTERIOR DRAINAGE AREA DESIGNATION
- CONCRETE
- FLOW ARROW
- LINE I10 — STORM DRAIN DESIGNATION
- DI-XX — DROP INLET DESIGNATION
- CI-XX — CURB INLET DESIGNATION
- ACI-XX — ARMORED CURB OPENING DESIGNATION

SCALE: 1:2000


555 EAST RAMSEY SAN ANTONIO TEXAS 78216
PHONE (210)375-9000
FAX (210)375-9010
PAPE-DAWSON ENGINEERS
CIVIL & ENVIRONMENTAL
STATE OF TEXAS — K. STEPHEN BONNETTE — 60928 — REGISTERED PROFESSIONAL ENGINEER
9/20/00
K. STEPHEN BONNETTE, P.E. — DATE



© 2000 Texas Department of Transportation


# LOOP 1604
# INTERIOR DRAINAGE AREA MAP & STORM DRAIN LAYOUT

SHEET 9 OF 22

| DN: | | | | | | PROJECT NO. | |
|---|---|---|---|---|---|---|---|
| CK DN: | | | | | | NH 2000 (704), etc. | |
| DW: | CONTROL | SECTION | JOB | DIST. | STATE | COUNTY | HIGHWAY NO. | SHEET NO. |
| CK DW: | 2452 | 01 | 036 etc. | SAT | TX | BEXAR | LOOP 1604 | 437 |

Design Filename: j:\3941\16\civil\design\int-da\3941161d08.dgn

## NOTES

1. FOR HYDROLOGIC DATA, SEE RUNOFF COMPUTATION SHEET.
2. ALL DIMENSIONS ARE IN METERS UNLESS NOTED OTHERWISE.
3. FOR SUMMARIZATION OF ARMOR CURB SLOTS, SEE STORM DRAIN AND ARMOR CURB SUMMARY SHEET.
4. ALL ARMOR CURB OPENINGS SHALL HAVE AN ARMOR CURB FLUME CONSTRUCTED FROM BEHIND THE OPENING TO THE TOE OF SLOPE OF THE EMBANKMENT AND SHALL BE CONSIDERED SUBSIDIARY TO THE ARMORED CURB SLOT PAY ITEM.
5. SIDEWALK DRAINS SHALL BE PAID FOR AS AN ARMORED CURB SLOT.

### ESTIMATED QUANTITIES

| DESCRIPTION | UNIT | EST. | FINAL |
|---|---|---|---|
| CSJ: 2452-01-037 | UNIT | EST. | |
| CONC CURB (ARMOR CURB SLOT) | M | 6.0 | |
| * RIPRAP (CONC) (CL B) | M3 | 1.8 | |

* SUPPLIED FOR CONTRACTOR'S INFORMATION ONLY

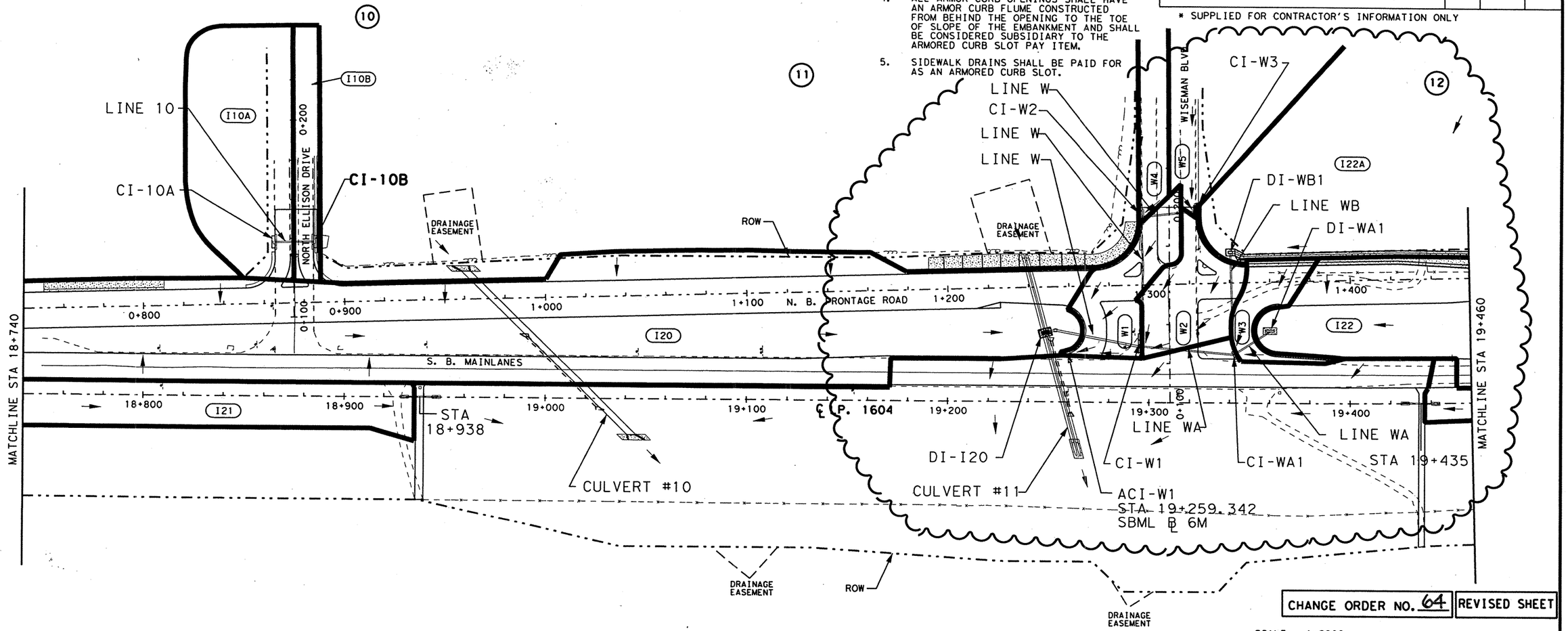


**CHANGE ORDER NO. 64**

-REVISED RDWY GEOMETRICS AND LANE CONFIGURATIONS
-REVISED STORM DRAIN @ WISEMAN BLVD. DUE TO ADA REVISIONS.
-REVISED D.A.'S I20, I22, I22C, W1, W2 AND W3.

**CHANGE ORDER NO. 64** | **REVISED SHEET**

SCALE: 1:2000

### LEGEND

- INTERIOR DRAINAGE AREA
- EXTERIOR DRAINAGE AREA
- (I5) INTERIOR DRAINAGE AREA DESIGNATION
- (2) EXTERIOR DRAINAGE AREA DESIGNATION
- CONCRETE
- FLOW ARROW
- LINE I10 STORM DRAIN DESIGNATION
- DI-XX DROP INLET DESIGNATION
- CI-XX CURB INLET DESIGNATION
- ACI-XX ARMORED CURB OPENING DESIGNATION

STATE OF TEXAS
JEROME D. PAVLISKA
76075
REGISTERED PROFESSIONAL ENGINEER

Jerome D. Pavliska, P.E. 05-03-04
Jerome D. Pavliska, P.E. Date

© 2000 Texas Department of Transportation

LOOP 1604
INTERIOR DRAINAGE AREA MAP
& STORM DRAIN LAYOUT
SHEET 9 OF 22

| DN: | | | | | PROJECT NO. | |
|---|---|---|---|---|---|---|
| CK DN: | | | | | NH 2000 (704), etc. | |
| DW: | CONTROL | SECTION | JOB | DIST | COUNTY | HIGHWAY NO. | SHEET NO. |
| CK DW: | 2452 | 01 | 036 etc. | SAT | BEXAR | LOOP 1604 | 437A |

05-01-04

T:\AO\Design\lp1604fm471-90\PD#Phase2#change#order#mylars\submitol\plonsheets\Drainage\DAmaps\sht#437.dgn

Plotted on: 09/19/00

## NOTES

1. FOR HYDROLOGIC DATA, SEE RUNOFF COMPUTATION SHEET.
2. ALL DIMENSIONS ARE IN METERS UNLESS NOTED OTHERWISE.
3. FOR SUMMARIZATION OF ARMOR CURB SLOTS, SEE STORM DRAIN AND ARMOR CURB SUMMARY SHEET.
4. ALL ARMOR CURB OPENINGS SHALL HAVE AN ARMOR CURB FLUME CONSTRUCTED FROM BEHIND THE OPENING TO THE TOE OF SLOPE OF THE EMBANKMENT AND SHALL BE CONSIDERED SUBSIDIARY TO THE ARMORED CURB SLOT PAY ITEM.
5. SIDEWALK DRAINS SHALL BE PAID FOR AS AN ARMORED CURB SLOT.

ESTIMATED QUANTITIES

| DESCRIPTION | UNIT | EST. | FINAL |
|---|---|---|---|
| CSJ: 2452-01-037 | | | |
| CONC CURB (ARMOR CURB SLOT) | M | 3 | |

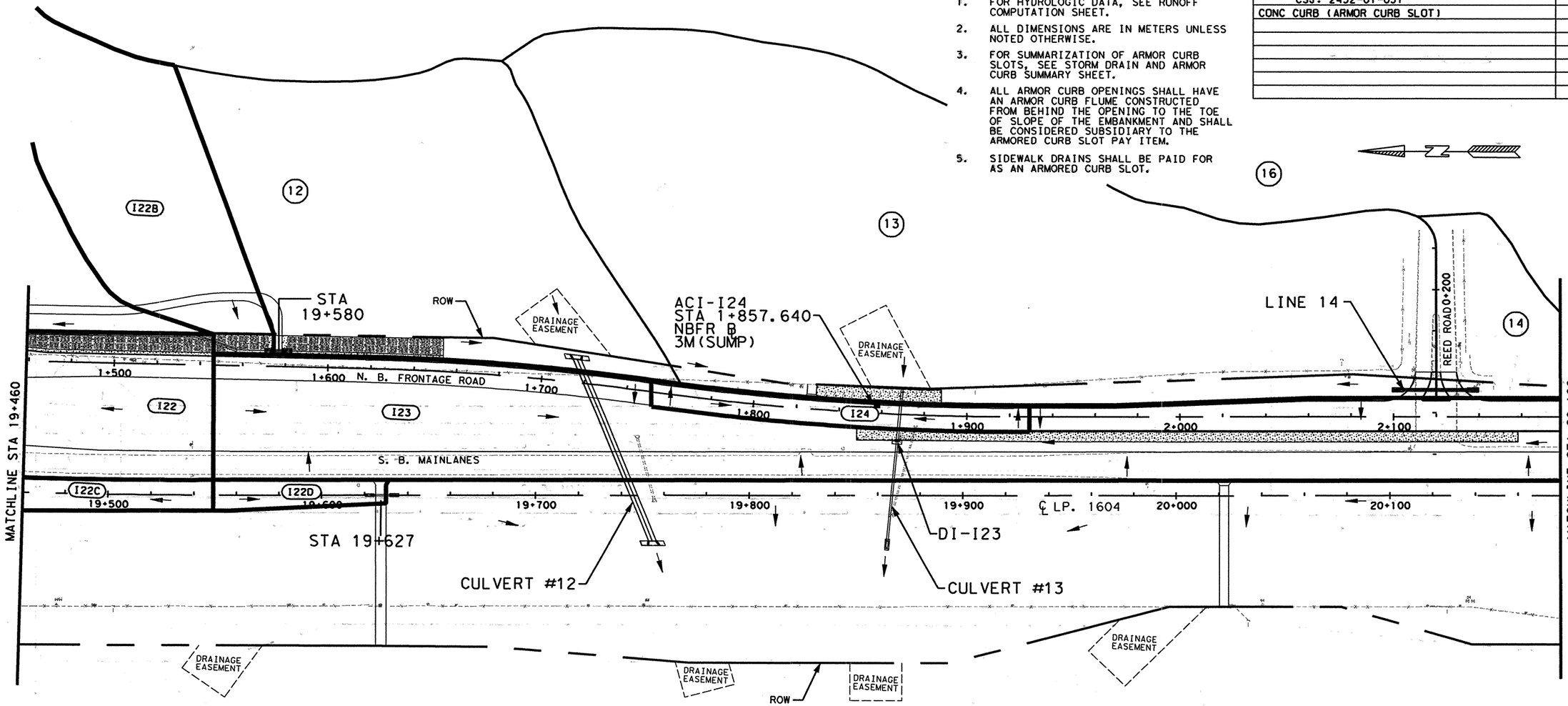


## LEGEND

- INTERIOR DRAINAGE AREA
- EXTERIOR DRAINAGE AREA
- (I5) INTERIOR DRAINAGE AREA DESIGNATION
- (2) EXTERIOR DRAINAGE AREA DESIGNATION
- CONCRETE
- FLOW ARROW
- LINE I10 STORM DRAIN DESIGNATION
- DI-XX DROP INLET DESIGNATION
- CI-XX CURB INLET DESIGNATION
- ACI-XX ARMORED CURB OPENING DESIGNATION

SCALE: 1:2000


555 EAST RAMSEY SAN ANTONIO TEXAS 78216 PHONE (210)375-9000 FAX (210)375-9010

PAPE-DAWSON ENGINEERS CIVIL & ENVIRONMENTAL

STATE OF TEXAS K. STEPHEN BONNETTE 60928 REGISTERED PROFESSIONAL ENGINEER

K. STEPHEN BONNETTE, P.E. 9/20/00 DATE



© 2000 Texas Department of Transportation


# LOOP 1604
# INTERIOR DRAINAGE AREA MAP & STORM DRAIN LAYOUT

SHEET 10 OF 22

| DN: | | | | | PROJECT NO. | |
|---|---|---|---|---|---|---|
| CK DN: | | | | | NH 2000 (704), etc. | |
| DW: | CONTROL | SECTION | JOB | DIST. | COUNTY | HIGHWAY NO. | SHEET NO. |
| CK DW: | 2452 | 01 | 036 etc. | SAT | BEXAR | LOOP 1604 | 438 |

Design File: J:\3941\16\civil\design\intdq\3941161d09.dgn

## NOTES

1. FOR HYDROLOGIC DATA, SEE RUNOFF COMPUTATION SHEET.
2. ALL DIMENSIONS ARE IN METERS UNLESS NOTED OTHERWISE.
3. FOR SUMMARIZATION OF ARMOR CURB SLOTS, SEE STORM DRAIN AND ARMOR CURB SUMMARY SHEET.
4. ALL ARMOR CURB OPENINGS SHALL HAVE AN ARMOR CURB FLUME CONSTRUCTED FROM BEHIND THE OPENING TO THE TOE OF SLOPE OF THE EMBANKMENT AND SHALL BE CONSIDERED SUBSIDIARY TO THE ARMORED CURB SLOT PAY ITEM.
5. SIDEWALK DRAINS SHALL BE PAID FOR AS AN ARMORED CURB SLOT.

ESTIMATED QUANTITIES

| DESCRIPTION | UNIT | EST. | FINAL |
|---|---|---|---|
| CSJ: 2452-01-037 | | | |
| CONC CURB (ARMOR CURB SLOT) | M | 3 | |
| | | | |
| | | | |
| | | | |
| | | | |
| | | | |
| | | | |

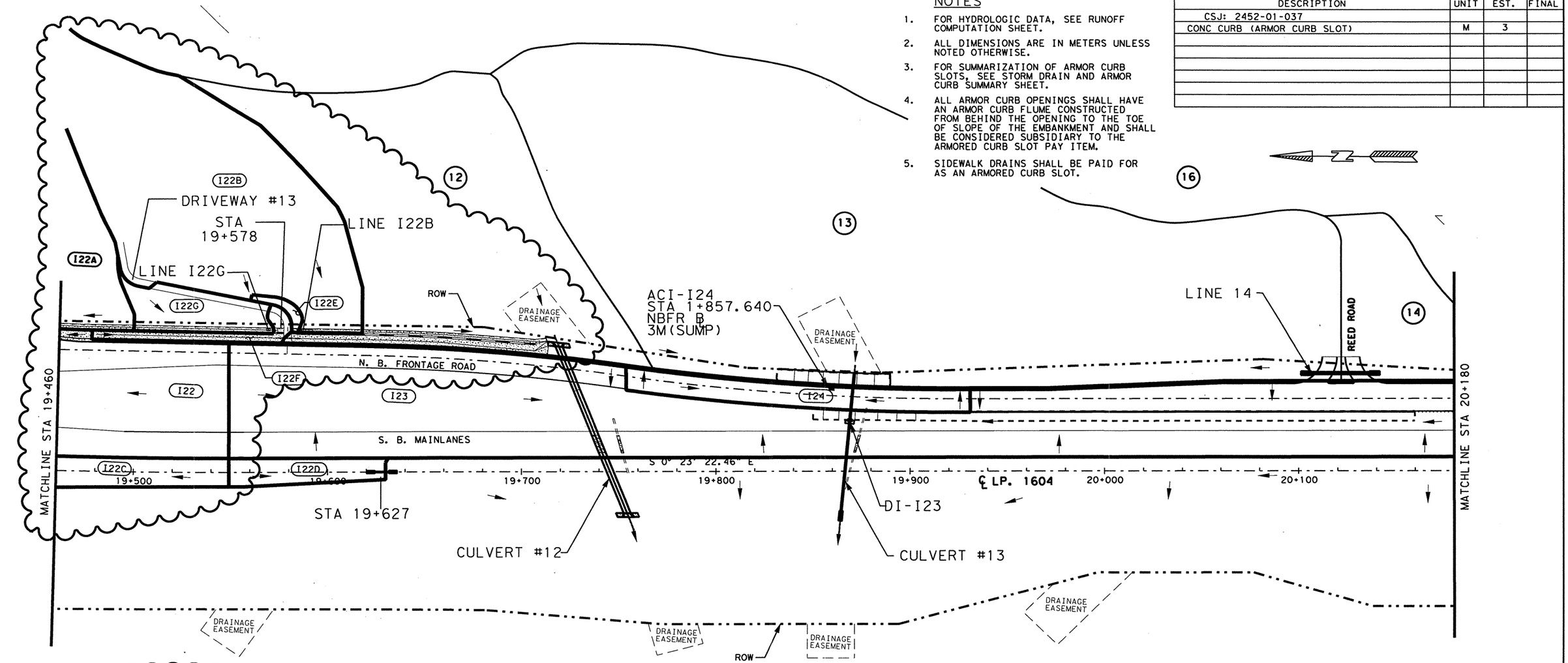


**CHANGE ORDER NO. 64**

-REVISED RDWY GEOMETRICS AND LANE CONFIGURATIONS
-REVISED D.A.'S I22, I22A, I22B, I22C AND ADDED I22F AND I22G @ DRIVEWAY #13 VICINITY.

## LEGEND

- INTERIOR DRAINAGE AREA
- EXTERIOR DRAINAGE AREA
- (I5) INTERIOR DRAINAGE AREA DESIGNATION
- (2) EXTERIOR DRAINAGE AREA DESIGNATION
- CONCRETE
- FLOW ARROW
- LINE I10 STORM DRAIN DESIGNATION
- DI-XX DROP INLET DESIGNATION
- CI-XX CURB INLET DESIGNATION
- ACI-XX ARMORED CURB OPENING DESIGNATION

CHANGE ORDER NO. 64 | REVISED SHEET

SCALE: 1:2000

STATE OF TEXAS
JEROME D. PAVLISKA
76075
REGISTERED PROFESSIONAL ENGINEER

Jerome D. Pavliska, P.E. 4-28-04
Jerome D. Pavliska, P.E. Date

© 2000 Texas Department of Transportation

# LOOP 1604
# INTERIOR DRAINAGE AREA MAP & STORM DRAIN LAYOUT

SHEET 10 OF 22

| DN: | | | | | PROJECT NO. | | |
|---|---|---|---|---|---|---|---|
| CK DN: | | | | | NH 2000 (704), etc. | | |
| DW: | CONTROL | SECTION | JOB | DIST. | STATE | COUNTY | HIGHWAY NO. | SHEET NO. |
| CK DW: | 2452 | 01 | 036 | SAT | TX | BEXAR | LOOP 1604 | 438A |

Design Filename: ...\AO\Design\lp1604fm471-90\PD\Phase2*change*order*mylars\submittal\plansheets\Dr...nage\DAmaps\sht*438.dgn

Plotted on: 09/19/00

## NOTES

1. FOR HYDROLOGIC DATA, SEE RUNOFF COMPUTATION SHEET.
2. ALL DIMENSIONS ARE IN METERS UNLESS NOTED OTHERWISE.
3. FOR SUMMARIZATION OF ARMOR CURB SLOTS, SEE STORM DRAIN AND ARMOR CURB SUMMARY SHEET.
4. ALL ARMOR CURB OPENINGS SHALL HAVE AN ARMOR CURB FLUME CONSTRUCTED FROM BEHIND THE OPENING TO THE TOE OF SLOPE OF THE EMBANKMENT AND SHALL BE CONSIDERED SUBSIDIARY TO THE ARMORED CURB SLOT PAY ITEM.
5. SIDEWALK DRAINS SHALL BE PAID FOR AS AN ARMORED CURB SLOT.

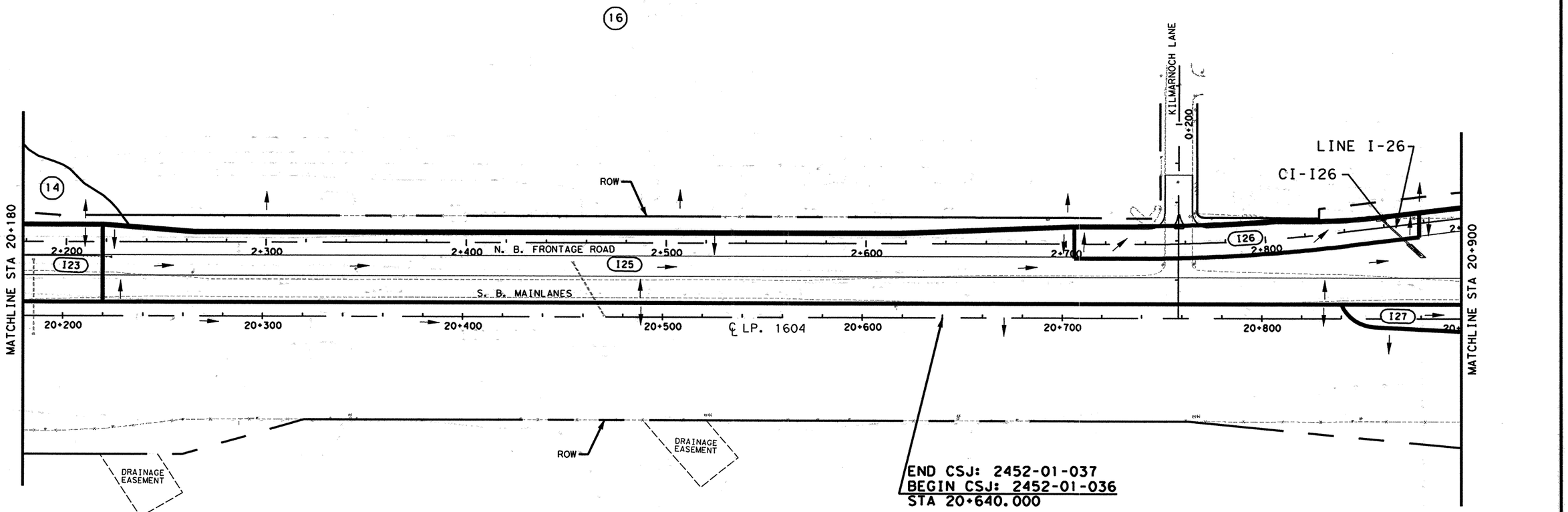


## LEGEND

| | |
|---|---|
| ▬▬ | INTERIOR DRAINAGE AREA |
| ——— | EXTERIOR DRAINAGE AREA |
| (I5) | INTERIOR DRAINAGE AREA DESIGNATION |
| (2) | EXTERIOR DRAINAGE AREA DESIGNATION |
| ▨ | CONCRETE |
| → | FLOW ARROW |
| LINE I10 | STORM DRAIN DESIGNATION |
| DI-XX | DROP INLET DESIGNATION |
| CI-XX | CURB INLET DESIGNATION |
| ACI-XX | ARMORED CURB OPENING DESIGNATION |

SCALE: 1:2000


555 EAST RAMSEY SAN ANTONIO TEXAS 78216
PHONE (210)375-9000
FAX (210)375-9010
PAPE-DAWSON ENGINEERS
CIVIL & ENVIRONMENTAL
STATE OF TEXAS K. STEPHEN BONNETTE 60928 REGISTERED PROFESSIONAL ENGINEER
K. STEPHEN BONNETTE, P.E. 9/20/00
DATE



© 2000 Texas Department of Transportation


# LOOP 1604
# INTERIOR DRAINAGE AREA MAP & STORM DRAIN LAYOUT

SHEET 11 OF 22

| DN: | | | | | PROJECT NO. | | |
|---|---|---|---|---|---|---|---|
| CK DN: | | | | | NH 2000 (704), etc. | | |
| DW: | CONTROL | SECTION | JOB | DIST. | COUNTY | HIGHWAY NO. | SHEET NO. |
| CK DW: | 2452 | Ø1 | Ø36 etc. | SAT | BEXAR | LOOP 1604 | 439 |

Design Filename: j:\3941\16\civil\design\intdo\3941161d10.dgn

Plotted on: 09/18/00

## NOTES

1. FOR HYDROLOGIC DATA, SEE RUNOFF COMPUTATION SHEET.
2. ALL DIMENSIONS ARE IN METERS UNLESS NOTED OTHERWISE.
3. FOR SUMMARIZATION OF ARMOR CURB SLOTS, SEE STORM DRAIN AND ARMOR CURB SUMMARY SHEET.
4. ALL ARMOR CURB OPENINGS SHALL HAVE AN ARMOR CURB FLUME CONSTRUCTED FROM BEHIND THE OPENING TO THE TOE OF SLOPE OF THE EMBANKMENT AND SHALL BE CONSIDERED SUBSIDIARY TO THE ARMORED CURB SLOT PAY ITEM.
5. SIDEWALK DRAINS SHALL BE PAID FOR AS AN ARMORED CURB SLOT.

ESTIMATED QUANTITIES

| | DESCRIPTION | UNIT | EST. | FINAL |
|---|---|---|---|---|
| | CSJ: 2452-01-036 | | | |
| | CONC CURB (ARMOR CURB SLOT) | M | 3 | |
| * | RIPRAP (CONC) (CL B) | M3 | 0.9 | |

* FOR CONTRACTOR'S INFORMATION ONLY

(16)

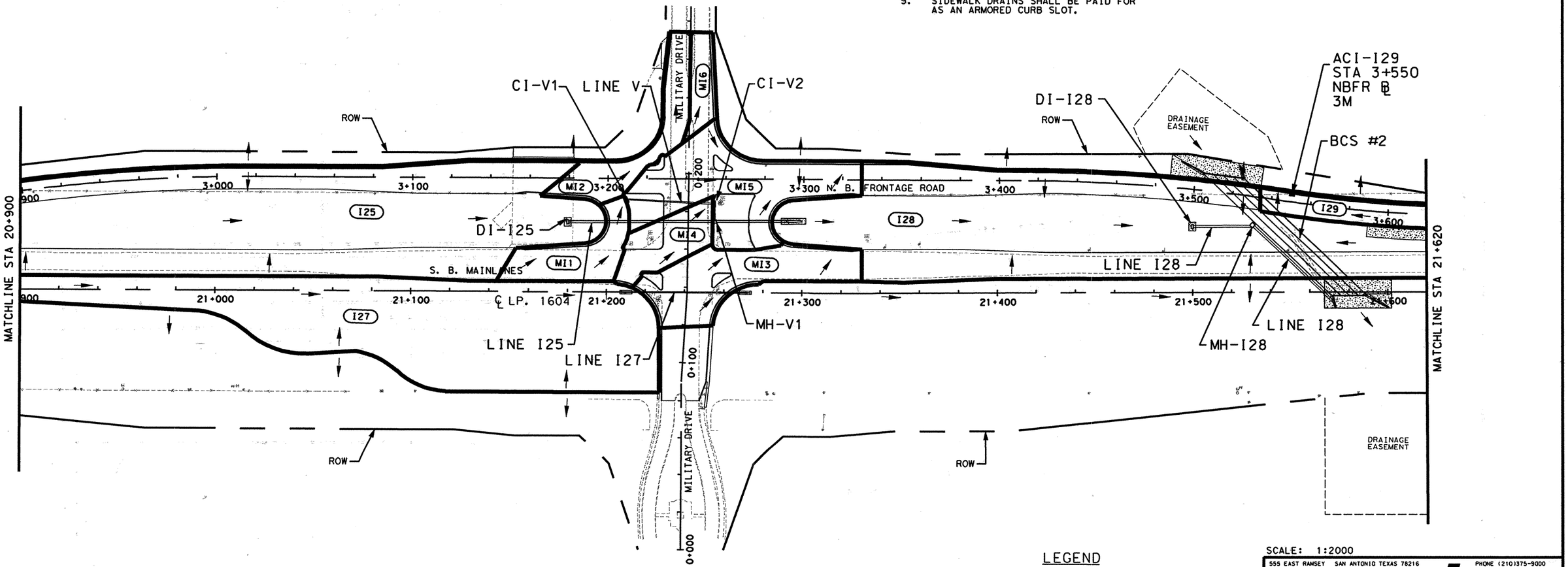


(17)

## LEGEND

- INTERIOR DRAINAGE AREA
- EXTERIOR DRAINAGE AREA
- (15) INTERIOR DRAINAGE AREA DESIGNATION
- (2) EXTERIOR DRAINAGE AREA DESIGNATION
- CONCRETE
- FLOW ARROW
- LINE I10 STORM DRAIN DESIGNATION
- DI-XX DROP INLET DESIGNATION
- CI-XX CURB INLET DESIGNATION
- ACI-XX ARMORED CURB OPENING DESIGNATION

SCALE: 1:2000


555 EAST RAMSEY SAN ANTONIO TEXAS 78216
PHONE (210)375-9000
FAX (210)375-9010
PAPE-DAWSON ENGINEERS
CIVIL & ENVIRONMENTAL
STATE OF TEXAS K. STEPHEN BONNETTE 60928 REGISTERED PROFESSIONAL ENGINEER
K. STEPHEN BONNETTE, P.E. 9/20/00 DATE



© 2000 Texas Department of Transportation


# LOOP 1604
# INTERIOR DRAINAGE AREA MAP & STORM DRAIN LAYOUT

SHEET 12 OF 22

| DN: | | | | | PROJECT NO. | | |
|---|---|---|---|---|---|---|---|
| CK DN: | | | | | NH 2000 (704), etc. | | |
| DW: | CONTROL | SECTION | JOB | DIST. | COUNTY | HIGHWAY NO. | SHEET NO. |
| CK DW: | 2452 | 01 | 036 etc. | SAT | BEXAR | LOOP 1604 | 440 |

Design Filenames: j:\39411\16\civil\design\intdo\3941116idli.dgn

Plotted on: $DATE$

Design Filename: $FILE$

## NOTES

1. FOR HYDROLOGIC DATA, SEE RUNOFF COMPUTATION SHEET.
2. ALL DIMENSIONS ARE IN METERS UNLESS NOTED OTHERWISE.
3. FOR SUMMARIZATION OF ARMOR CURB SLOTS, SEE STORM DRAIN AND ARMOR CURB SUMMARY SHEET.
4. ALL ARMOR CURB OPENINGS SHALL HAVE AN ARMOR CURB FLUME CONSTRUCTED FROM BEHIND THE OPENING TO THE TOE OF SLOPE OF THE EMBANKMENT AND SHALL BE CONSIDERED SUBSIDIARY TO THE ARMORED CURB SLOT PAY ITEM.
5. SIDEWALK DRAINS SHALL BE PAID FOR AS AN ARMORED CURB SLOT.

### ESTIMATED QUANTITIES

| | DESCRIPTION | UNIT | EST. | FINAL |
|---|---|---|---|---|
| | CSJ: 2452-01-036 | | | |
| | ARMOR CURB SLOT | M | 6 | |
| * | RIPRAP (CONC)(CL B) | M3 | 1.8 | |

* FOR CONTRACTOR'S INFORMATION ONLY

SCALE: 1:2000

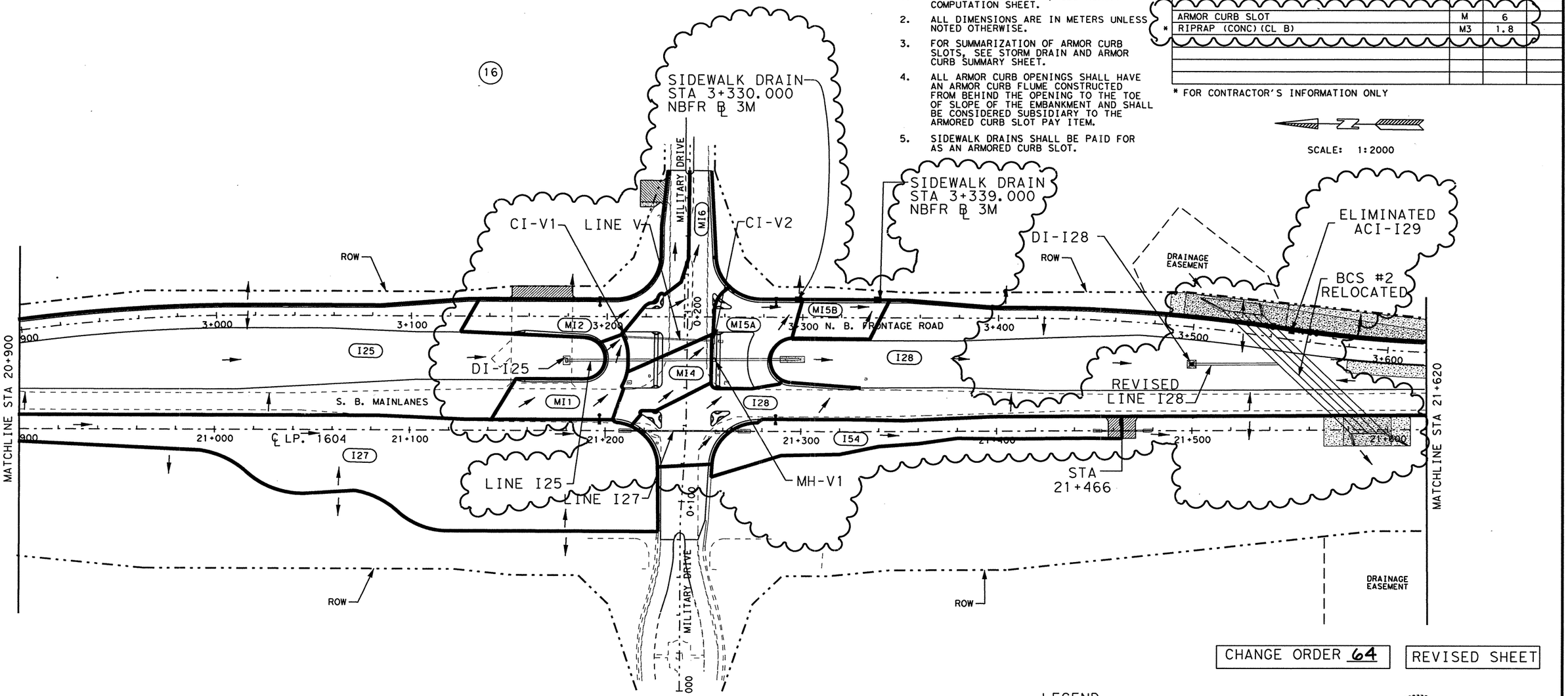


**CHANGE ORDER NO. 64**

-REVISED D.A. I25, MI1, MI2, MI3, MI5, & I28
-ELIMINATED D.A. MI3 & INCLUDED IT WITH D.A. I28
-ADDED D.A. I54
-ELIMINATED D.A. I29 INCLUDED IT WITH D.A. I28
-ELIMINATED ARMOR CURB SLOT ACI-I29
-ADDED SIDEWALK DRAINS FOR D.A.'S MI5A & MI5B
-REVISED LINE I28
-RELOCATED BCS #2
-REVISED QUANTITIES

(17)

CHANGE ORDER 64 | REVISED SHEET

### LEGEND

| | |
|---|---|
| ——— | INTERIOR DRAINAGE AREA |
| ——— | EXTERIOR DRAINAGE AREA |
| (I5) | INTERIOR DRAINAGE AREA DESIGNATION |
| (2) | EXTERIOR DRAINAGE AREA DESIGNATION |
| | CONCRETE |
| → | FLOW ARROW |
| LINE I10 | STORM DRAIN DESIGNATION |
| DI-XX | DROP INLET DESIGNATION |
| CI-XX | CURB INLET DESIGNATION |
| ACI-XX | ARMORED CURB OPENING DESIGNATION |

STATE OF TEXAS
JEROME D. PAVLISKA
76075
REGISTERED PROFESSIONAL ENGINEER

Jerome D. Pavliska, P.E. 6-18-04
Jerome D. Pavliska, P.E. — Date

© 2004 Texas Department of Transportation ®

# LOOP 1604
## INTERIOR DRAINAGE AREA MAP & STORM DRAIN LAYOUT

SHEET 12 OF 22

| DN: | | | | | PROJECT NO. | | |
|---|---|---|---|---|---|---|---|
| CK DN: | | | | | NH 2000 (704), etc. | | |
| DW: | CONTROL | SECTION | JOB | DIST | STATE | COUNTY | HIGHWAY NO. | SHEET NO. |
| CK DW: | 2452 | 01 | 036 | SAT | TX | BEXAR | LOOP 1604 | 440A |

Plotted on: 09/19/00

## NOTES

1. FOR HYDROLOGIC DATA, SEE RUNOFF COMPUTATION SHEET.
2. ALL DIMENSIONS ARE IN METERS UNLESS NOTED OTHERWISE.
3. FOR SUMMARIZATION OF ARMOR CURB SLOTS, SEE STORM DRAIN AND ARMOR CURB SUMMARY SHEET.
4. ALL ARMOR CURB OPENINGS SHALL HAVE AN ARMOR CURB FLUME CONSTRUCTED FROM BEHIND THE OPENING TO THE TOE OF SLOPE OF THE EMBANKMENT AND SHALL BE CONSIDERED SUBSIDIARY TO THE ARMORED CURB SLOT PAY ITEM.
5. SIDEWALK DRAINS SHALL BE PAID FOR AS AN ARMORED CURB SLOT.

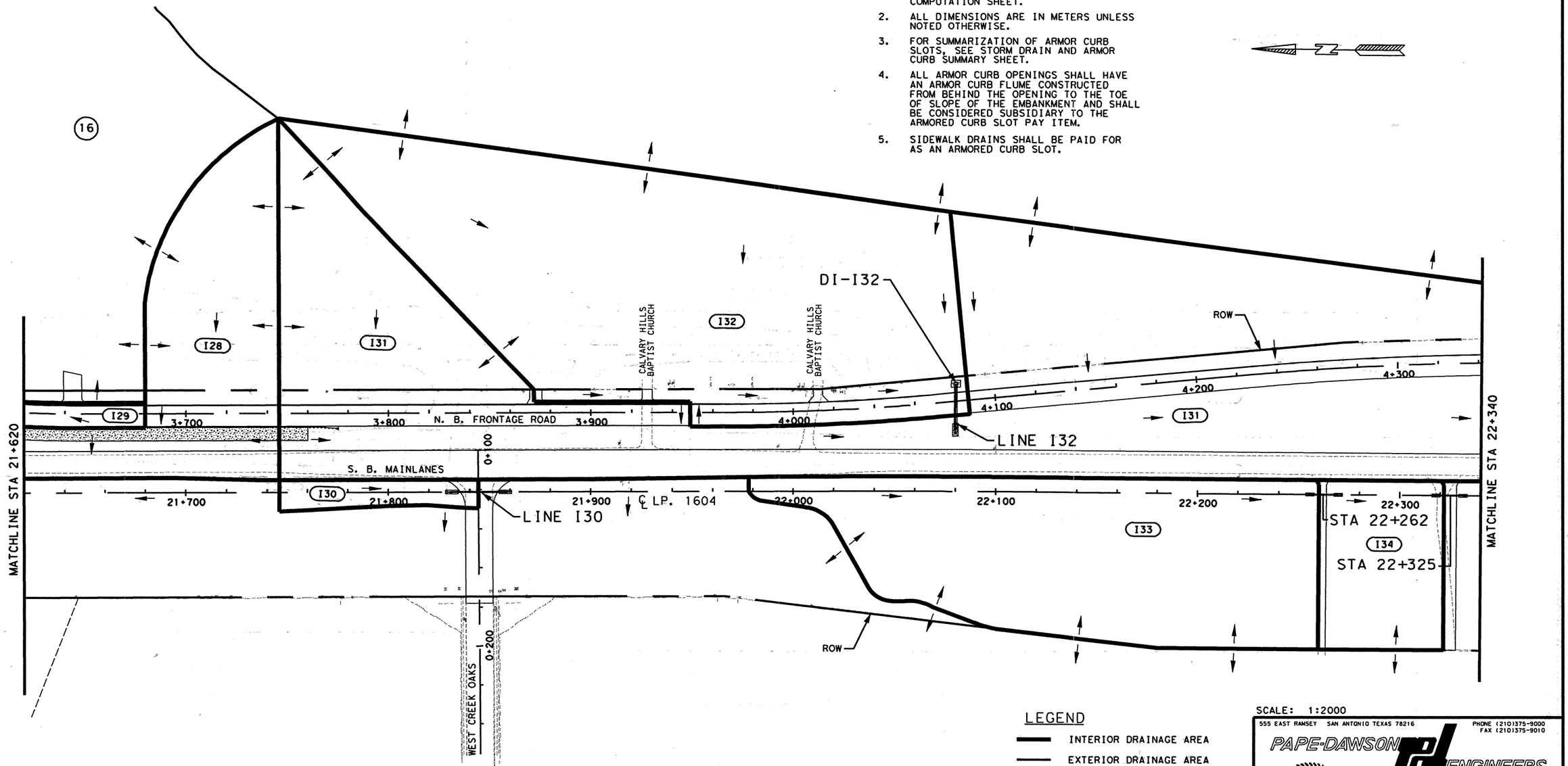


## LEGEND

| | |
|---|---|
| ▬▬ | INTERIOR DRAINAGE AREA |
| ─── | EXTERIOR DRAINAGE AREA |
| (I5) | INTERIOR DRAINAGE AREA DESIGNATION |
| (2) | EXTERIOR DRAINAGE AREA DESIGNATION |
| ▨ | CONCRETE |
| → | FLOW ARROW |
| LINE I10 | STORM DRAIN DESIGNATION |
| DI-XX | DROP INLET DESIGNATION |
| CI-XX | CURB INLET DESIGNATION |
| ACI-XX | ARMORED CURB OPENING DESIGNATION |

SCALE: 1:2000

555 EAST RAMSEY SAN ANTONIO TEXAS 78216 PHONE (210)375-9000 FAX (210)375-9010
PAPE-DAWSON ENGINEERS CIVIL & ENVIRONMENTAL
STATE OF TEXAS K. STEPHEN BONNETTE 60928 REGISTERED PROFESSIONAL ENGINEER
K. STEPHEN BONNETTE, P.E. 9/20/00 DATE

© 2000 Texas Department of Transportation

# LOOP 1604
# INTERIOR DRAINAGE AREA MAP & STORM DRAIN LAYOUT

SHEET 13 OF 22

| DN: | | | | | PROJECT NO. | | |
|---|---|---|---|---|---|---|---|
| CK DN: | | | | | NH 2000 (704), etc. | | |
| DW: | CONTROL | SECTION | JOB | DIST. | COUNTY | HIGHWAY NO. | SHEET NO. |
| CK DW: | 2452 | 01 | 036 etc. | SAT | BEXAR | LOOP 1604 | 441 |

Design Filename: j:\3941\16\civil\design\intdet\394116id12.dgn

Plotted on: 6/1/2004

Design Filename: ...AO\Design\lp1604fm471-90\PD\Phase2*changeorder*mylars\TxDOT*revisions\sht*.dgn

## NOTES

1. FOR HYDROLOGIC DATA, SEE RUNOFF COMPUTATION SHEET.
2. ALL DIMENSIONS ARE IN METERS UNLESS NOTED OTHERWISE.
3. FOR SUMMARIZATION OF ARMOR CURB SLOTS, SEE STORM DRAIN AND ARMOR CURB SUMMARY SHEET.
4. ALL ARMOR CURB OPENINGS SHALL HAVE AN ARMOR CURB FLUME CONSTRUCTED FROM BEHIND THE OPENING TO THE TOE OF SLOPE OF THE EMBANKMENT AND SHALL BE CONSIDERED SUBSIDIARY TO THE ARMORED CURB SLOT PAY ITEM.
5. SIDEWALK DRAINS SHALL BE PAID FOR AS AN ARMORED CURB SLOT.

SCALE: 1:2000

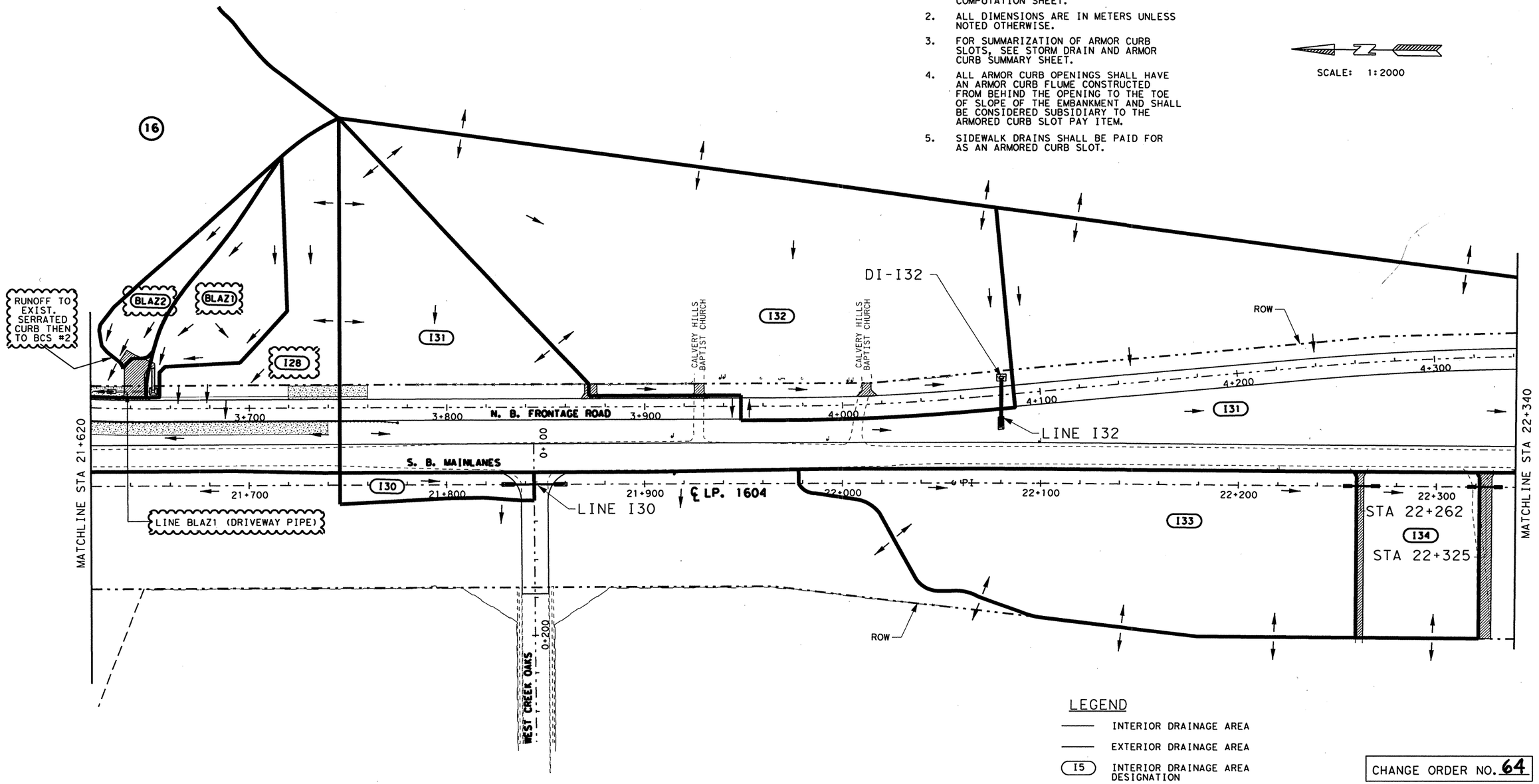


## LEGEND

| | |
|---|---|
| ——— | INTERIOR DRAINAGE AREA |
| ——— | EXTERIOR DRAINAGE AREA |
| (I5) | INTERIOR DRAINAGE AREA DESIGNATION |
| (2) | EXTERIOR DRAINAGE AREA DESIGNATION |
| ▨ | CONCRETE |
| → | FLOW ARROW |
| LINE I10 | STORM DRAIN DESIGNATION |
| DI-XX | DROP INLET DESIGNATION |
| CI-XX | CURB INLET DESIGNATION |
| ACI-XX | ARMORED CURB OPENING DESIGNATION |

CHANGE ORDER NO. 64

REVISED SHEET

**CHANGE ORDER NO. 64**

- ADDED D.A. FOR BLAZING STAR RV RESORT
- REVISED D.A. I28 TO INCLUDE ORIGINAL D.A. I29
- ADDED LINE BLAZ1 (DRIVEWAY PIPE)

STATE OF TEXAS
JEROME D. PAVLISKA
76075
REGISTERED PROFESSIONAL ENGINEER

Jerome D. Pavliska, P.E. 6-01-04
Jerome D. Pavliska, P.E. Date

© 2004 Texas Department of Transportation

# LOOP 1604
# INTERIOR DRAINAGE AREA MAP & STORM DRAIN LAYOUT

SHEET 13 OF 22

| DN: | | | | | PROJECT NO. | | |
|---|---|---|---|---|---|---|---|
| CK DN: | | | | | NH 2000 (704), etc. | | |
| DW: | CONTROL | SECTION | JOB | DIST. | STATE | COUNTY | HIGHWAY NO. | SHEET NO. |
| CK DW: | 2452 | 01 | 036 | SAT | TX | BEXAR | LOOP 1604 | 441A |

Plotted on: 09/19/00

## NOTES

1. FOR HYDROLOGIC DATA, SEE RUNOFF COMPUTATION SHEET.
2. ALL DIMENSIONS ARE IN METERS UNLESS NOTED OTHERWISE.
3. FOR SUMMARIZATION OF ARMOR CURB SLOTS, SEE STORM DRAIN AND ARMOR CURB SUMMARY SHEET.
4. ALL ARMOR CURB OPENINGS SHALL HAVE AN ARMOR CURB FLUME CONSTRUCTED FROM BEHIND THE OPENING TO THE TOE OF SLOPE OF THE EMBANKMENT AND SHALL BE CONSIDERED SUBSIDIARY TO THE ARMORED CURB SLOT PAY ITEM.
5. SIDEWALK DRAINS SHALL BE PAID FOR AS AN ARMORED CURB SLOT.

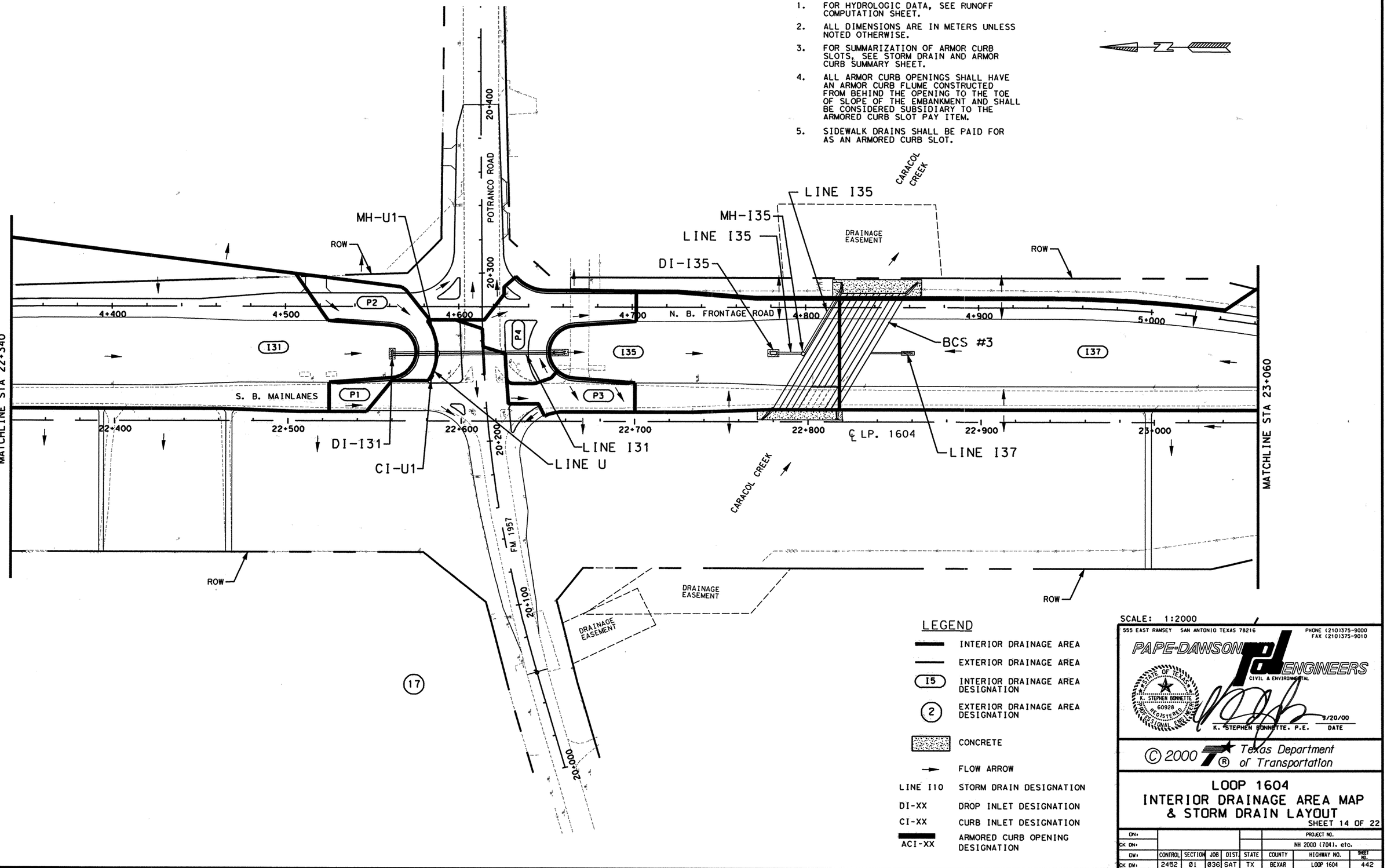


## LEGEND

- INTERIOR DRAINAGE AREA
- EXTERIOR DRAINAGE AREA
- (I5) INTERIOR DRAINAGE AREA DESIGNATION
- (2) EXTERIOR DRAINAGE AREA DESIGNATION
- CONCRETE
- FLOW ARROW
- LINE I10 — STORM DRAIN DESIGNATION
- DI-XX — DROP INLET DESIGNATION
- CI-XX — CURB INLET DESIGNATION
- ACI-XX — ARMORED CURB OPENING DESIGNATION

SCALE: 1:2000

555 EAST RAMSEY SAN ANTONIO TEXAS 78216
PHONE (210)375-9000
FAX (210)375-9010
PAPE-DAWSON ENGINEERS
CIVIL & ENVIRONMENTAL
STATE OF TEXAS K. STEPHEN BONNETTE 60928 REGISTERED PROFESSIONAL ENGINEER
K. STEPHEN BONNETTE, P.E. 9/20/00 DATE

© 2000 Texas Department of Transportation

# LOOP 1604
# INTERIOR DRAINAGE AREA MAP & STORM DRAIN LAYOUT

SHEET 14 OF 22

| DN: | | | | | PROJECT NO. | | |
|---|---|---|---|---|---|---|---|
| CK DN: | | | | | NH 2000 (704), etc. | | |
| DW: | CONTROL | SECTION | JOB | DIST. | COUNTY | HIGHWAY NO. | SHEET NO. |
| CK DW: | 2452 | 01 | 036 etc. | SAT | BEXAR | LOOP 1604 | 442 |

Design Filename: j:\3941\16\civil\design\intdo\3941161d13.dgn

## NOTES

1. FOR HYDROLOGIC DATA, SEE RUNOFF COMPUTATION SHEET.
2. ALL DIMENSIONS ARE IN METERS UNLESS NOTED OTHERWISE.
3. FOR SUMMARIZATION OF ARMOR CURB SLOTS, SEE STORM DRAIN AND ARMOR CURB SUMMARY SHEET.
4. ALL ARMOR CURB OPENINGS SHALL HAVE AN ARMOR CURB FLUME CONSTRUCTED FROM BEHIND THE OPENING TO THE TOE OF SLOPE OF THE EMBANKMENT AND SHALL BE CONSIDERED SUBSIDIARY TO THE ARMORED CURB SLOT PAY ITEM.
5. SIDEWALK DRAINS SHALL BE PAID FOR AS AN ARMORED CURB SLOT.

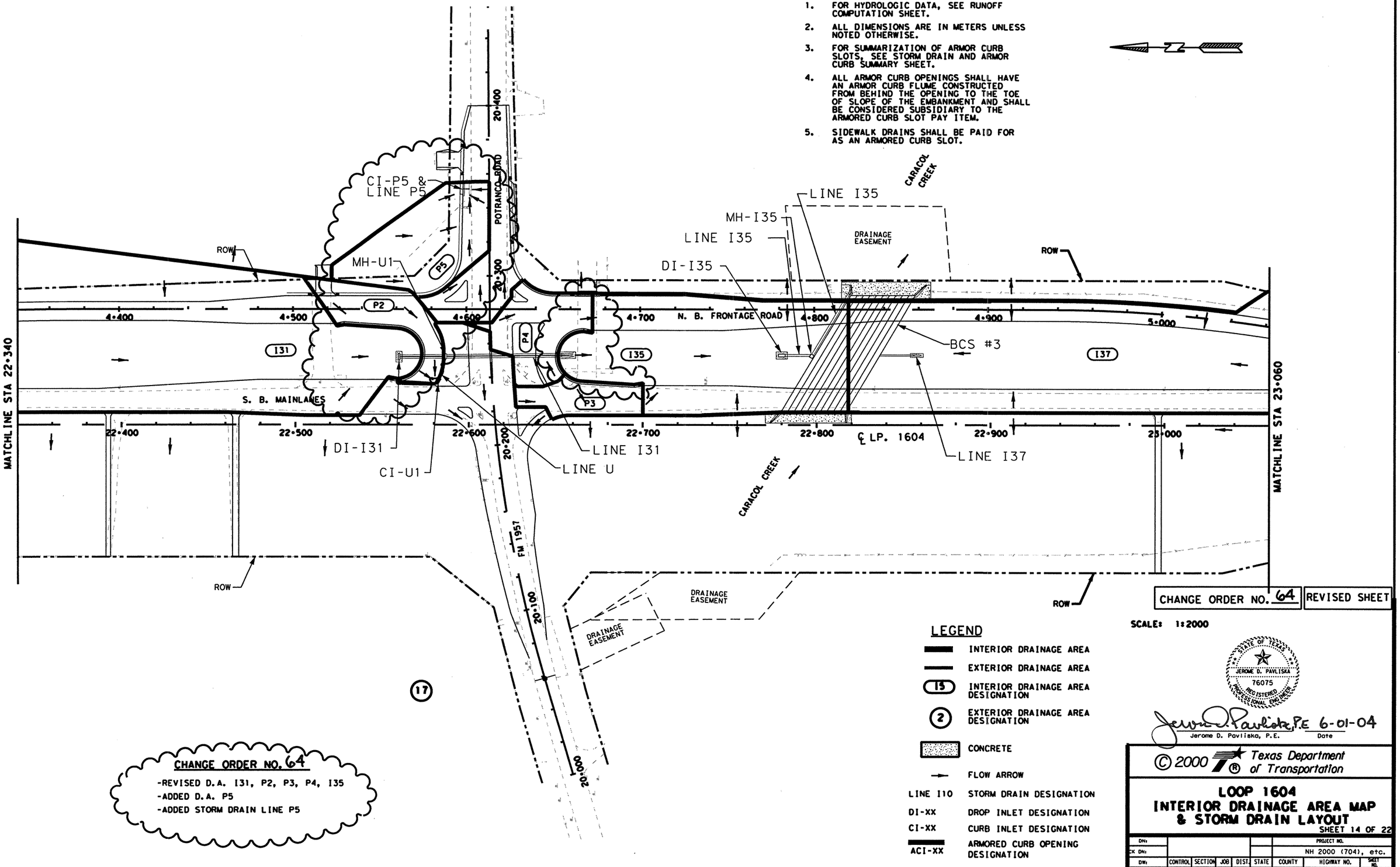


**CHANGE ORDER NO. 64**

-REVISED D.A. I31, P2, P3, P4, I35
-ADDED D.A. P5
-ADDED STORM DRAIN LINE P5

## LEGEND

- INTERIOR DRAINAGE AREA
- EXTERIOR DRAINAGE AREA
- (15) INTERIOR DRAINAGE AREA DESIGNATION
- (2) EXTERIOR DRAINAGE AREA DESIGNATION
- CONCRETE
- FLOW ARROW
- LINE I10 — STORM DRAIN DESIGNATION
- DI-XX — DROP INLET DESIGNATION
- CI-XX — CURB INLET DESIGNATION
- ACI-XX — ARMORED CURB OPENING DESIGNATION

CHANGE ORDER NO. 64 | REVISED SHEET

SCALE: 1:2000

STATE OF TEXAS
JEROME D. PAVLISKA
76075
REGISTERED PROFESSIONAL ENGINEER

Jerome D. Pavliska, P.E. 6-01-04
Jerome D. Pavliska, P.E. — Date

© 2000 Texas Department of Transportation

# LOOP 1604
# INTERIOR DRAINAGE AREA MAP & STORM DRAIN LAYOUT

SHEET 14 OF 22

| DN: | | | | | PROJECT NO. | |
|---|---|---|---|---|---|---|
| CK DN: | | | | | NH 2000 (704), etc. | |
| DW: | CONTROL | SECTION | JOB | DIST. | COUNTY | HIGHWAY NO. | SHEET NO. |
| CK DW: | 2452 | 01 | 036 | SAT | BEXAR | LOOP 1604 | 442A |

Design Filename \AO\Design\lp1604fm471-90\3941161D13*pd.dgn

Plotted on: 09/19/00

## NOTES

1. FOR HYDROLOGIC DATA, SEE RUNOFF COMPUTATION SHEET.
2. ALL DIMENSIONS ARE IN METERS UNLESS NOTED OTHERWISE.
3. FOR SUMMARIZATION OF ARMOR CURB SLOTS, SEE STORM DRAIN AND ARMOR CURB SUMMARY SHEET.
4. ALL ARMOR CURB OPENINGS SHALL HAVE AN ARMOR CURB FLUME CONSTRUCTED FROM BEHIND THE OPENING TO THE TOE OF SLOPE OF THE EMBANKMENT AND SHALL BE CONSIDERED SUBSIDIARY TO THE ARMORED CURB SLOT PAY ITEM.
5. SIDEWALK DRAINS SHALL BE PAID FOR AS AN ARMORED CURB SLOT.

### ESTIMATED QUANTITIES

| | DESCRIPTION | UNIT | EST. | FINAL |
|---|---|---|---|---|
| | CSJ: 2452-01-036 | | | |
| | CONC CURB (ARMOR CURB SLOT) | M | 3 | |
| * | RIPRAP (CONC) (CL B) | M3 | 0.9 | |

* FOR CONTRACTOR'S INFORMATION ONLY

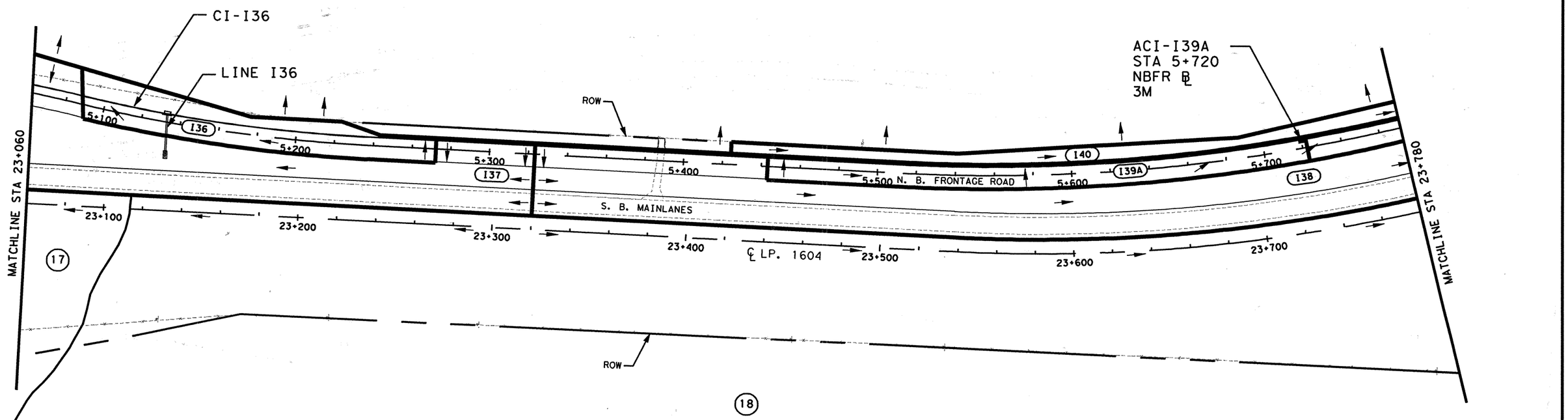


### LEGEND

- INTERIOR DRAINAGE AREA
- EXTERIOR DRAINAGE AREA
- (I5) INTERIOR DRAINAGE AREA DESIGNATION
- (2) EXTERIOR DRAINAGE AREA DESIGNATION
- CONCRETE
- FLOW ARROW
- LINE I10 — STORM DRAIN DESIGNATION
- DI-XX — DROP INLET DESIGNATION
- CI-XX — CURB INLET DESIGNATION
- ACI-XX — ARMORED CURB OPENING DESIGNATION

SCALE: 1:2000

555 EAST RAMSEY SAN ANTONIO TEXAS 78216
PHONE (210)375-9000
FAX (210)375-9010
PAPE-DAWSON ENGINEERS
CIVIL & ENVIRONMENTAL

STATE OF TEXAS — K. STEPHEN BONNETTE — 60928 — REGISTERED PROFESSIONAL ENGINEER

K. STEPHEN BONNETTE, P.E. — 9/20/00 DATE

© 2000 Texas Department of Transportation

# LOOP 1604
# INTERIOR DRAINAGE AREA MAP & STORM DRAIN LAYOUT

SHEET 15 OF 22

| | | | | | | | | |
|---|---|---|---|---|---|---|---|---|
| DN: | | | | | | PROJECT NO. | | |
| CK DN: | | | | | | NH 2000 (704), etc. | | |
| DW: | CONTROL | SECTION | JOB | DIST. | STATE | COUNTY | HIGHWAY NO. | SHEET NO. |
| CK DW: | 2452 | 01 | 036 | SAT | TX | BEXAR | LOOP 1604 | 443 |

Design Filename: s:\pw\16\civil\design\intdq\3941161d14.dgn

Plotted on: 09/19/00

## NOTES

1. FOR HYDROLOGIC DATA, SEE RUNOFF COMPUTATION SHEET.
2. ALL DIMENSIONS ARE IN METERS UNLESS NOTED OTHERWISE.
3. FOR SUMMARIZATION OF ARMOR CURB SLOTS, SEE STORM DRAIN AND ARMOR CURB SUMMARY SHEET.
4. ALL ARMOR CURB OPENINGS SHALL HAVE AN ARMOR CURB FLUME CONSTRUCTED FROM BEHIND THE OPENING TO THE TOE OF SLOPE OF THE EMBANKMENT AND SHALL BE CONSIDERED SUBSIDIARY TO THE ARMORED CURB SLOT PAY ITEM.
5. SIDEWALK DRAINS SHALL BE PAID FOR AS AN ARMORED CURB SLOT.

### ESTIMATED QUANTITIES

| DESCRIPTION | UNIT | EST. | FINAL |
|---|---|---|---|
| CSJ: 2452-01-036 | | | |
| CONC CURB (ARMOR CURB SLOT) | M | 3 | |
| * RIPRAP (CONC) (CL B) | M3 | 0.9 | |

* FOR CONTRACTOR'S INFORMATION ONLY

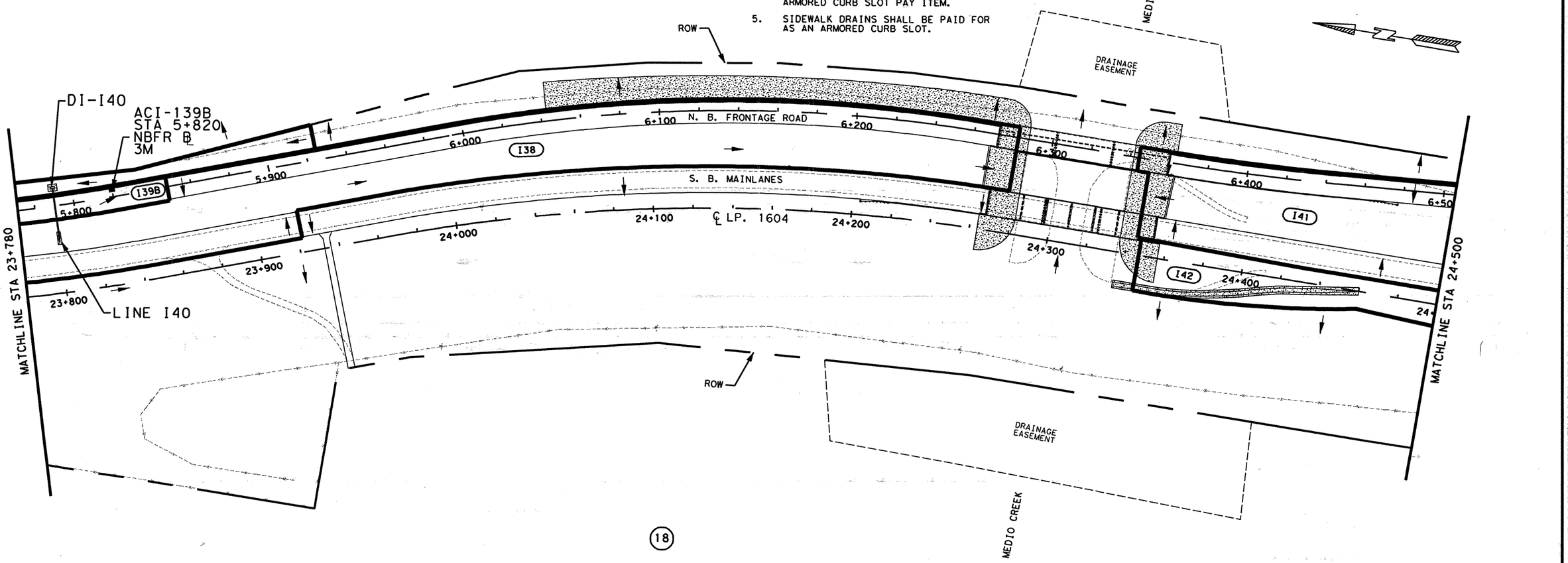


### LEGEND

| | |
|---|---|
| ——— | INTERIOR DRAINAGE AREA |
| ——— | EXTERIOR DRAINAGE AREA |
| (I5) | INTERIOR DRAINAGE AREA DESIGNATION |
| (2) | EXTERIOR DRAINAGE AREA DESIGNATION |
| ▨ | CONCRETE |
| → | FLOW ARROW |
| LINE I10 | STORM DRAIN DESIGNATION |
| DI-XX | DROP INLET DESIGNATION |
| CI-XX | CURB INLET DESIGNATION |
| ACI-XX | ARMORED CURB OPENING DESIGNATION |

SCALE: 1:2000

555 EAST RAMSEY SAN ANTONIO TEXAS 78216
PHONE (210)375-9000
FAX (210)375-9010
PAPE-DAWSON ENGINEERS
CIVIL & ENVIRONMENTAL

STATE OF TEXAS — K. STEPHEN BONNETTE — 60928 — REGISTERED PROFESSIONAL ENGINEER

9/20/00
K. STEPHEN BONNETTE, P.E. — DATE

© 2000 Texas Department of Transportation

# LOOP 1604
# INTERIOR DRAINAGE AREA MAP & STORM DRAIN LAYOUT

SHEET 16 OF 22

| DN: | | | | | PROJECT NO. | | | |
|---|---|---|---|---|---|---|---|---|
| CK DN: | | | | | NH 2000 (704), etc. | | | |
| DW: | CONTROL | SECTION | JOB | DIST. | STATE | COUNTY | HIGHWAY NO. | SHEET NO. |
| CK DW: | 2452 | 01 | 036 | SAT | TX | BEXAR | LOOP 1604 | 444 |

Design Filename: j:\civil\16\civil\design\intda\3941161d15.dgn

Plotted on: 09/19/00

## NOTES

1. FOR HYDROLOGIC DATA, SEE RUNOFF COMPUTATION SHEET.
2. ALL DIMENSIONS ARE IN METERS UNLESS NOTED OTHERWISE.
3. FOR SUMMARIZATION OF ARMOR CURB SLOTS, SEE STORM DRAIN AND ARMOR CURB SUMMARY SHEET.
4. ALL ARMOR CURB OPENINGS SHALL HAVE AN ARMOR CURB FLUME CONSTRUCTED FROM BEHIND THE OPENING TO THE TOE OF SLOPE OF THE EMBANKMENT AND SHALL BE CONSIDERED SUBSIDIARY TO THE ARMORED CURB SLOT PAY ITEM.
5. SIDEWALK DRAINS SHALL BE PAID FOR AS AN ARMORED CURB SLOT.

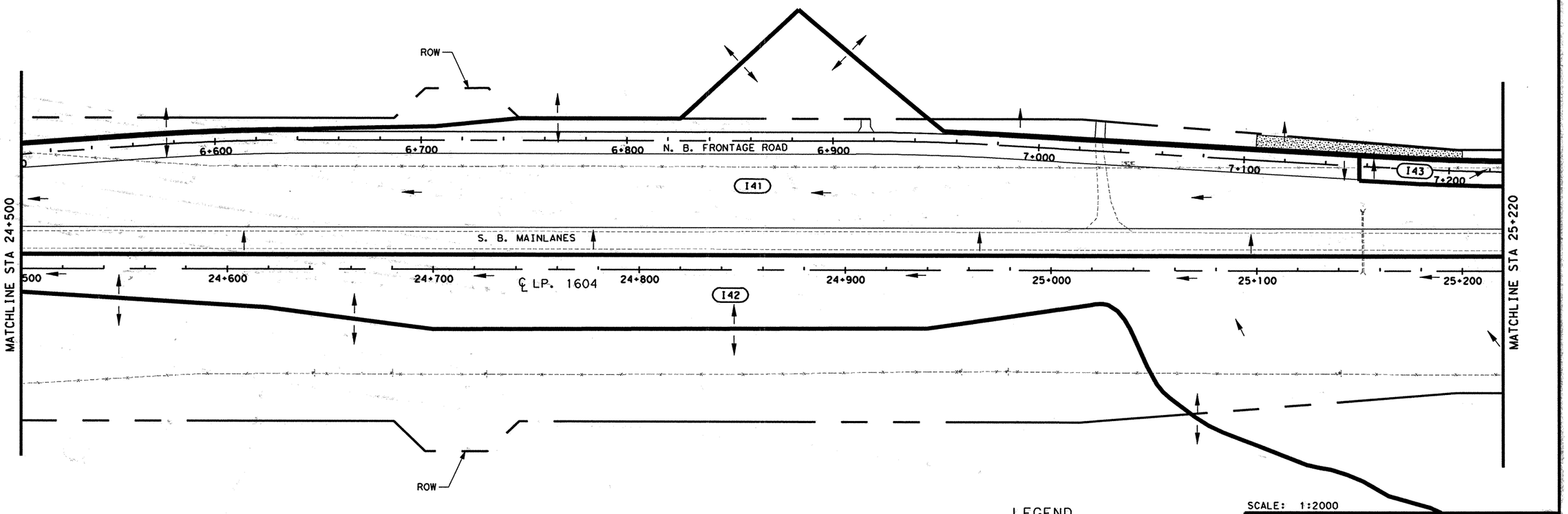


(18)

## LEGEND

- INTERIOR DRAINAGE AREA
- EXTERIOR DRAINAGE AREA
- (I5) INTERIOR DRAINAGE AREA DESIGNATION
- (2) EXTERIOR DRAINAGE AREA DESIGNATION
- CONCRETE
- FLOW ARROW
- LINE I10 STORM DRAIN DESIGNATION
- DI-XX DROP INLET DESIGNATION
- CI-XX CURB INLET DESIGNATION
- ACI-XX ARMORED CURB OPENING DESIGNATION

SCALE: 1:2000

555 EAST RAMSEY SAN ANTONIO TEXAS 78216
PHONE (210)375-9000
FAX (210)375-9010
PAPE-DAWSON ENGINEERS
CIVIL & ENVIRONMENTAL

STATE OF TEXAS — K. STEPHEN BONNETTE — 60928 — REGISTERED PROFESSIONAL ENGINEER

K. STEPHEN BONNETTE, P.E. 9/20/00 DATE

© 2000 Texas Department of Transportation

# LOOP 1604
# INTERIOR DRAINAGE AREA MAP & STORM DRAIN LAYOUT

SHEET 17 OF 22

| DN: | | | | | PROJECT NO. | | |
|---|---|---|---|---|---|---|---|
| CK DN: | | | | | NH 2000 (704), etc. | | |
| DW: | CONTROL | SECTION | JOB | DIST. | COUNTY | HIGHWAY NO. | SHEET NO. |
| CK DW: | 2452 | 01 | 036 etc. | SAT | BEXAR | LOOP 1604 | 445 |

Design Filename: j:\3941\16\civil\design\intdq\3941161d16.dgn

Plotted on: 01/26/2004

Design Filename: p:\52120\11\design\civil\plansheets\drainage\damaps\3941161d16.dgn

## NOTES

1. FOR HYDROLOGIC DATA, SEE RUNOFF COMPUTATION SHEET.
2. ALL DIMENSIONS ARE IN METERS UNLESS NOTED OTHERWISE.
3. FOR SUMMARIZATION OF ARMOR CURB SLOTS, SEE STORM DRAIN AND ARMOR CURB SUMMARY SHEET.
4. ALL ARMOR CURB OPENINGS SHALL HAVE AN ARMOR CURB FLUME CONSTRUCTED FROM BEHIND THE OPENING TO THE TOE OF SLOPE OF THE EMBANKMENT AND SHALL BE CONSIDERED SUBSIDIARY TO THE ARMORED CURB SLOT PAY ITEM.
5. SIDEWALK DRAINS SHALL BE PAID FOR AS AN ARMORED CURB SLOT.

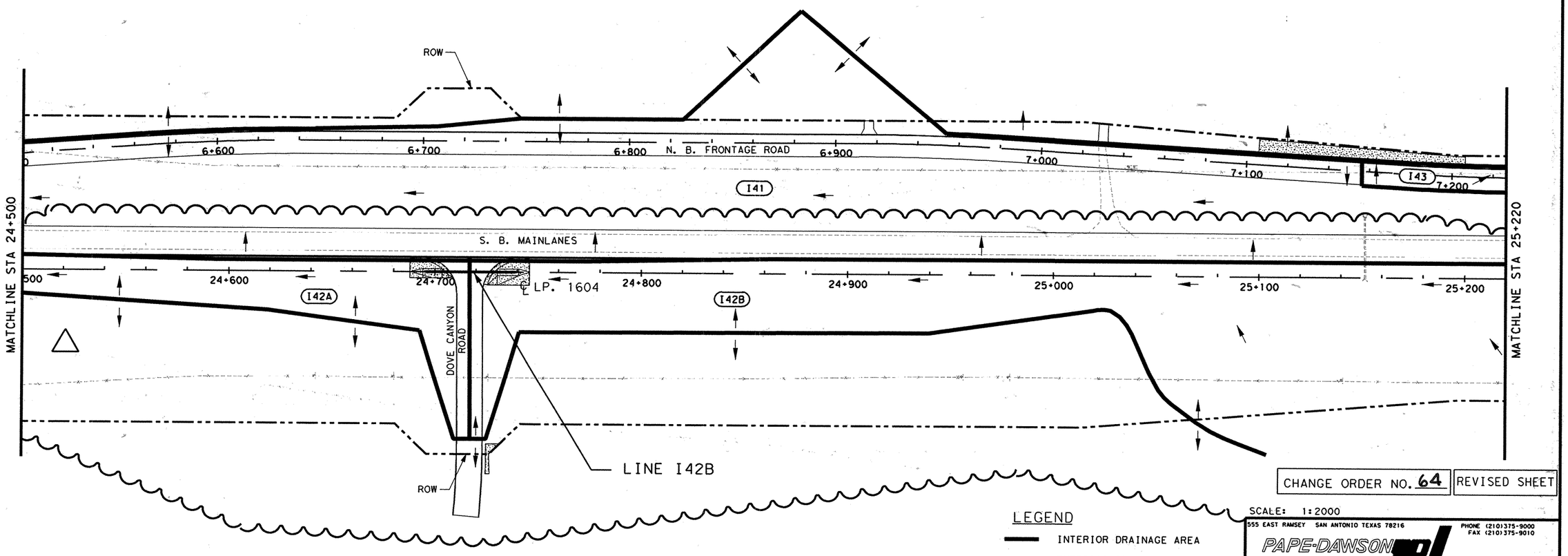


CHANGE ORDER NO. 64 | REVISED SHEET

SCALE: 1:2000

CHANGE ORDER NO. 64

-DIVIDED D.A. I42 INTO I42A & I42B

(18)

## LEGEND

- INTERIOR DRAINAGE AREA
- EXTERIOR DRAINAGE AREA
- (I5) INTERIOR DRAINAGE AREA DESIGNATION
- (2) EXTERIOR DRAINAGE AREA DESIGNATION
- CONCRETE
- FLOW ARROW
- LINE I10 STORM DRAIN DESIGNATION
- DI-XX DROP INLET DESIGNATION
- CI-XX CURB INLET DESIGNATION
- ACI-XX ARMORED CURB OPENING DESIGNATION

555 EAST RAMSEY SAN ANTONIO TEXAS 78216
PHONE (210)375-9000
FAX (210)375-9010
PAPE-DAWSON ENGINEERS
CIVIL & ENVIRONMENTAL
STATE OF TEXAS
J. KENT O'BRIEN
64398
REGISTERED PROFESSIONAL ENGINEER
J. KENT O'BRIEN, P.E.
1/27/2004
DATE

© 2000 Texas Department of Transportation

# LOOP 1604
# INTERIOR DRAINAGE AREA MAP & STORM DRAIN LAYOUT

SHEET 17 OF 22

| DN: | | | | | PROJECT NO. | | |
|---|---|---|---|---|---|---|---|
| CK DN: | | | | | NH 2000 (704), etc. | | |
| DW: | CONTROL | SECTION | JOB | DIST. | COUNTY | HIGHWAY NO. | SHEET NO. |
| CK DW: | 2452 | 01 | 036 | SAT | BEXAR | LOOP 1604 | 445A |

Plotted on: 09/19/00

## NOTES

1. FOR HYDROLOGIC DATA, SEE RUNOFF COMPUTATION SHEET.
2. ALL DIMENSIONS ARE IN METERS UNLESS NOTED OTHERWISE.
3. FOR SUMMARIZATION OF ARMOR CURB SLOTS, SEE STORM DRAIN AND ARMOR CURB SUMMARY SHEET.
4. ALL ARMOR CURB OPENINGS SHALL HAVE AN ARMOR CURB FLUME CONSTRUCTED FROM BEHIND THE OPENING TO THE TOE OF SLOPE OF THE EMBANKMENT AND SHALL BE CONSIDERED SUBSIDIARY TO THE ARMORED CURB SLOT PAY ITEM.
5. SIDEWALK DRAINS SHALL BE PAID FOR AS AN ARMORED CURB SLOT.

ESTIMATED QUANTITIES

| DESCRIPTION | UNIT | EST. | FINAL |
|---|---|---|---|
| CSJ: 2452-01-036 | | | |
| CONC CURB (ARMOR CURB SLOT) | M | 6 | |
| | | | |
| | | | |
| | | | |
| | | | |
| | | | |
| | | | |

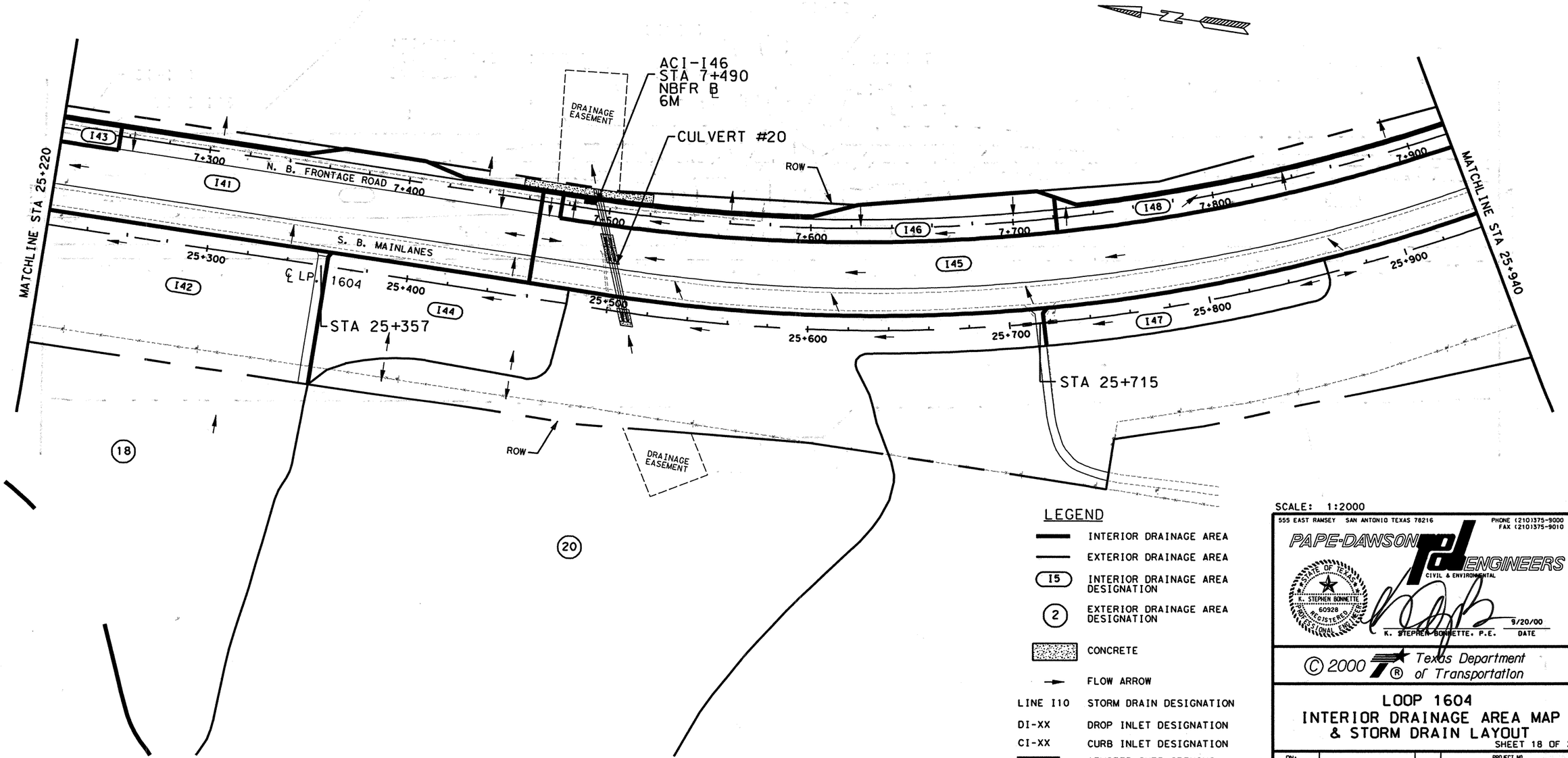


SCALE: 1:2000

LEGEND

- INTERIOR DRAINAGE AREA
- EXTERIOR DRAINAGE AREA
- (I5) INTERIOR DRAINAGE AREA DESIGNATION
- (2) EXTERIOR DRAINAGE AREA DESIGNATION
- CONCRETE
- FLOW ARROW
- LINE I10 — STORM DRAIN DESIGNATION
- DI-XX — DROP INLET DESIGNATION
- CI-XX — CURB INLET DESIGNATION
- ACI-XX — ARMORED CURB OPENING DESIGNATION


555 EAST RAMSEY SAN ANTONIO TEXAS 78216
PHONE (210)375-9000
FAX (210)375-9010
PAPE-DAWSON ENGINEERS
CIVIL & ENVIRONMENTAL
STATE OF TEXAS K. STEPHEN BONNETTE 60928 REGISTERED PROFESSIONAL ENGINEER
K. STEPHEN BONNETTE, P.E. 9/20/00 DATE


© 2000 Texas Department of Transportation

# LOOP 1604
## INTERIOR DRAINAGE AREA MAP & STORM DRAIN LAYOUT

SHEET 18 OF 22

| | | | | | | | | |
|---|---|---|---|---|---|---|---|---|
| DN: | | | | | | PROJECT NO. | | |
| CK DN: | | | | | | NH 2000 (704), etc. | | |
| DW: | CONTROL | SECTION | JOB | DIST. | STATE | COUNTY | HIGHWAY NO. | SHEET NO. |
| CK DW: | 2452 | 01 | 036 etc. | SAT | TX | BEXAR | LOOP 1604 | 446 |

Design Filename: j:\3941\16\civil\design\intdo\3941161d17.dgn

Plotted on: 08/20/2004

Design Filename: j:\3941\16\change order 040817\sheets\394116D17b.dgn

## NOTES

1. FOR HYDROLOGIC DATA, SEE RUNOFF COMPUTATION SHEET.
2. ALL DIMENSIONS ARE IN METERS UNLESS NOTED OTHERWISE.
3. FOR SUMMARIZATION OF ARMOR CURB SLOTS, SEE STORM DRAIN AND ARMOR CURB SUMMARY SHEET.
4. ALL ARMOR CURB OPENINGS SHALL HAVE AN ARMOR CURB FLUME CONSTRUCTED FROM BEHIND THE OPENING TO THE TOE OF SLOPE OF THE EMBANKMENT AND SHALL BE CONSIDERED SUBSIDIARY TO THE ARMORED CURB SLOT PAY ITEM.
5. SIDEWALK DRAINS SHALL BE PAID FOR AS AN ARMORED CURB SLOT.

## ESTIMATED QUANTITIES

| DESCRIPTION | UNIT | EST. | FINAL |
|---|---|---|---|
| CSJ: 2452-01-036 | | | |
| CONC CURB (ARMOR CURB SLOT) | M | 6 | |
| | | | |
| | | | |
| | | | |
| | | | |
| | | | |
| | | | |

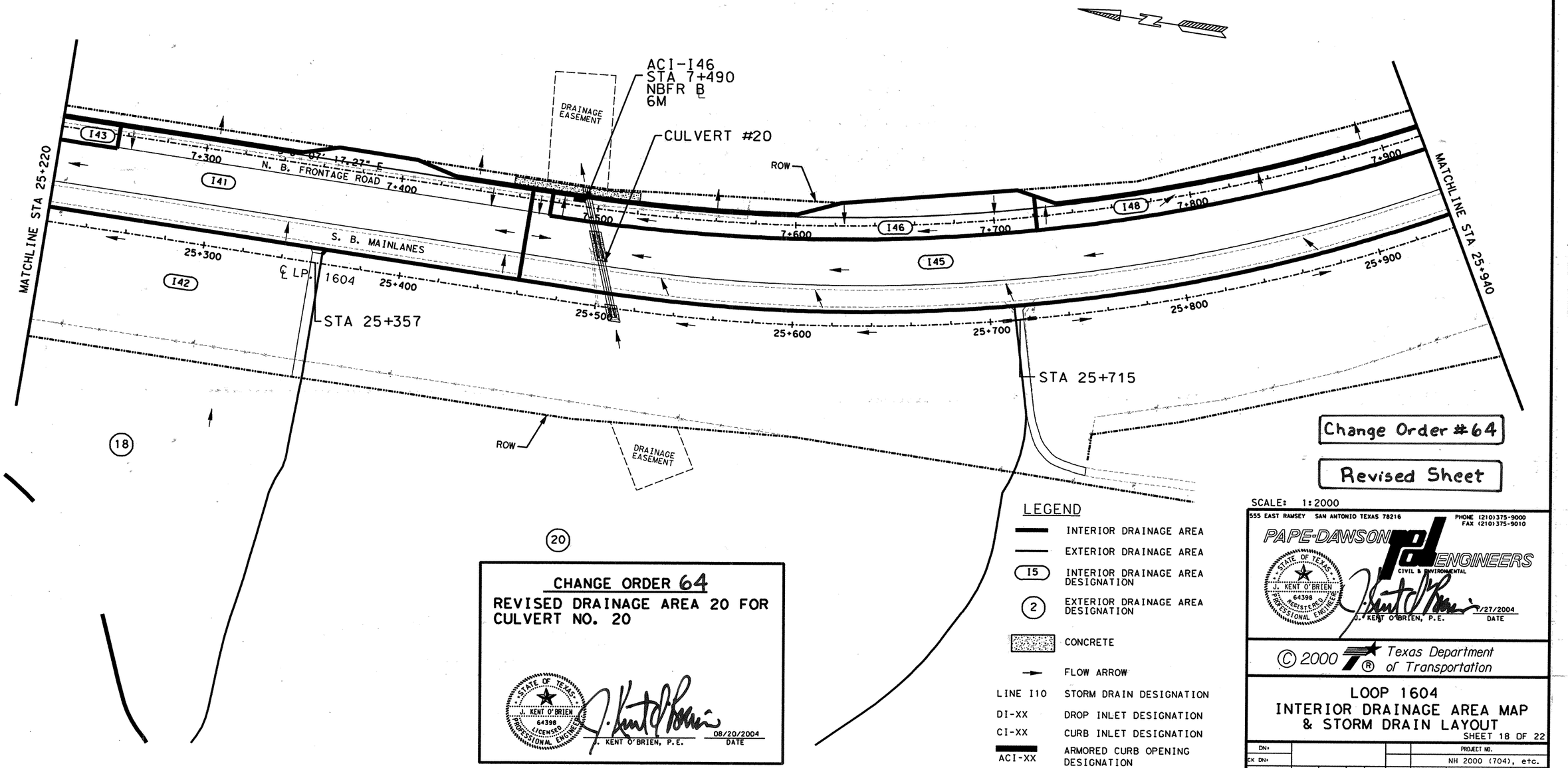


## CHANGE ORDER 64

REVISED DRAINAGE AREA 20 FOR CULVERT NO. 20

J. KENT O'BRIEN 64398 LICENSED PROFESSIONAL ENGINEER

J. KENT O'BRIEN, P.E. — 08/20/2004 DATE

## LEGEND

- INTERIOR DRAINAGE AREA
- EXTERIOR DRAINAGE AREA
- (I5) INTERIOR DRAINAGE AREA DESIGNATION
- (2) EXTERIOR DRAINAGE AREA DESIGNATION
- CONCRETE
- FLOW ARROW
- LINE I10 — STORM DRAIN DESIGNATION
- DI-XX — DROP INLET DESIGNATION
- CI-XX — CURB INLET DESIGNATION
- ACI-XX — ARMORED CURB OPENING DESIGNATION

Change Order #64

Revised Sheet

SCALE: 1:2000

555 EAST RAMSEY SAN ANTONIO TEXAS 78216
PHONE (210)375-9000
FAX (210)375-9010
PAPE-DAWSON ENGINEERS
CIVIL & ENVIRONMENTAL
J. KENT O'BRIEN 64398 REGISTERED PROFESSIONAL ENGINEER
J. KENT O'BRIEN, P.E. 8/27/2004 DATE

© 2000 Texas Department of Transportation

# LOOP 1604
# INTERIOR DRAINAGE AREA MAP & STORM DRAIN LAYOUT

SHEET 18 OF 22

| DN: | | | | | PROJECT NO. | | |
|---|---|---|---|---|---|---|---|
| CK DN: | | | | | NH 2000 (704), etc. | | |
| DW: | CONTROL | SECTION | JOB | DIST. | STATE | COUNTY | HIGHWAY NO. | SHEET NO. |
| CK DW: | 2452 | 01 | 036 etc. | SAT | TX | BEXAR | LOOP 1604 | 446A |

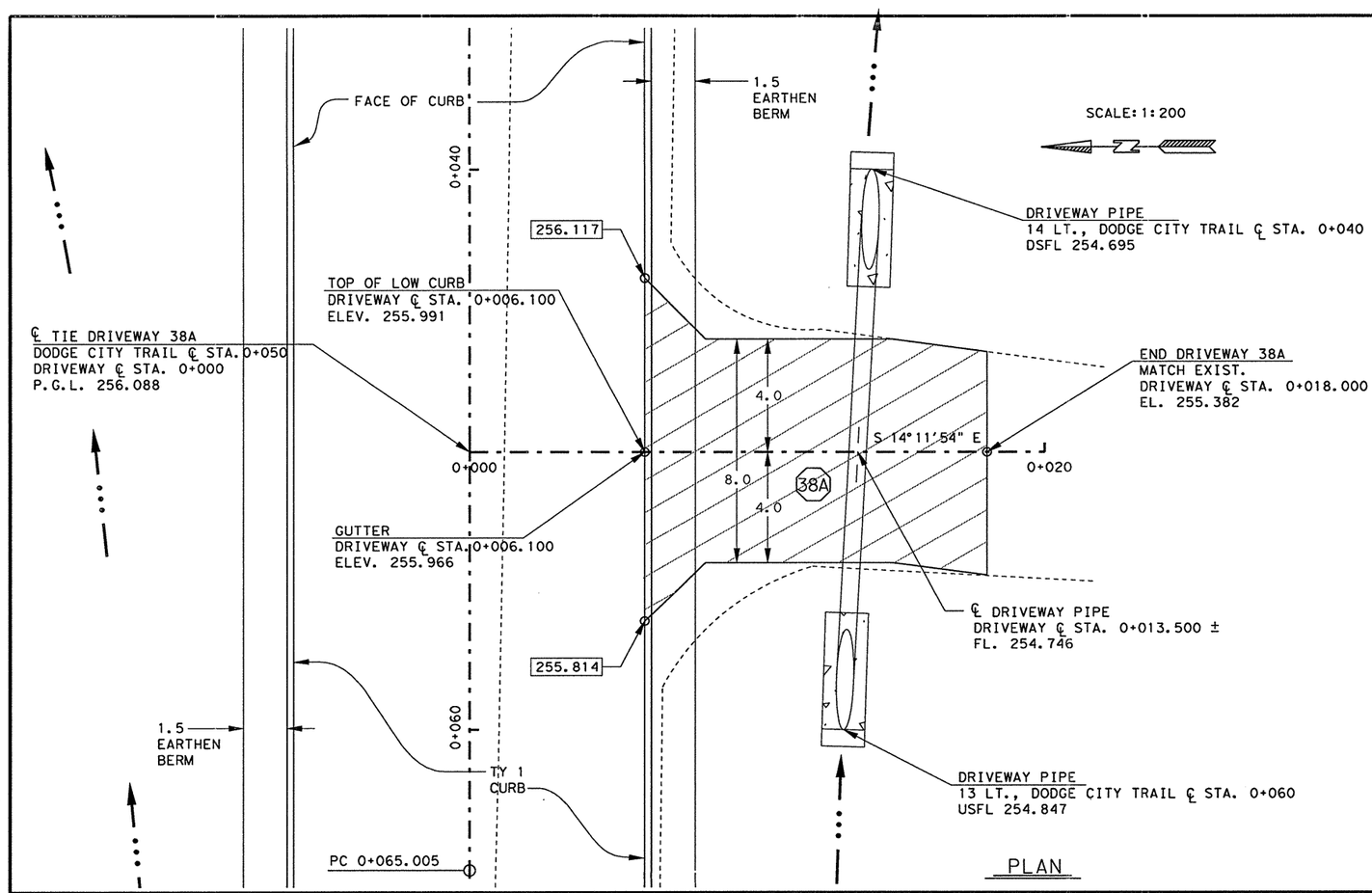


PLAN

| ESTIMATED QUANTITIES | | | |
|---|---|---|---|
| | ITEM | UNIT | QTY. |
| * | STRUCTURAL EXCAV. | M3 | 15.6 |
| * | R.C. PIPE(CL II)450mm | M | 20 |
| * | S.E.T. (TY II) (450mm) (RCP) (1:6) | EA | 2 |
| * | DRYWAYS (ASPH CONC PAV) | M2 | 103 |
| * | CEMENT STAB BACKFILL | M3 | 12 |
| | | | |
| | | | |

* QUANTITIES SUPPLIED FOR CONTRACTORS INFORMATION ONLY SEE APPROPRIATE PLAN SHEET(S) OR SUMMARY FOR PAYMENT.

CHANGE ORDER NO. 129
-NEW DRIVEWAY DETAILS
-NEW QUANTITIES

NOTE(S):

- ALL DIMENSIONS ARE IN METERS UNLESS OTHERWISE NOTED
- DRIVEWAY #, FOR MORE DETAILS SEE SHEET(S) 336 H.
- (#) SEE DODGE CITY TRAIL X-SECTION FOR GRADING INFO.
- XXX.XXX FINISH GRADE ELEVATION




PROFILE

CHANGE ORDER 129

NEW SHEET

STATE OF TEXAS
FITZGERALDO G. SANCHEZ
76084
LICENCED PROFESSIONAL ENGINEER

Fitzgeraldo G. Sanchez 05-23-06
Fitzgeraldo G. Sanchez, P.E. — Date

©2005
Texas Department of Transportation

# DRIVEWAY #38A

SHEET 1 OF1

| FED. RD. DIV. NO. | FEDERAL AID PROJECT NO. | | SHEET NO. |
|---|---|---|---|
| 6 | NH 2000(704), etc | | 446R |
| STATE | DIST. | COUNTY | |
| TEXAS | SAT | BEXAR | |
| CONT. | SECT. | JOB | HIGHWAY NO. |
| 2452 | 01 | 036, etc | LP 1604 |

01-30-06

LEVELS DISPLAYED
1 2 3 4 5 6 7 8 9 10 11 12 21 31 41 51 61 lp1604fm471-90
1 7 8 9 20 21 22 23 24 25 26 27 28 29 30 31 32
33 34 35 36 37 38 39 40 41 42 43 44 45 46 47 48 Realxest.dgn
49 50 51 52 53 54 55 56 57 58 59 60 61 62 63

| ESTIMATED QUANTITIES | | |
|---|---|---|
| ITEM | UNIT | QTY. |
| * DRVWAYS (ASPH- CONC PAV) | M2 | 296 |

* QUANTITIES SUPPLIED FOR CONTRACTORS INFORMATION ONLY SEE APPROPRIATE PLAN SHEET(S) OR SUMMARY FOR PAYMENT.

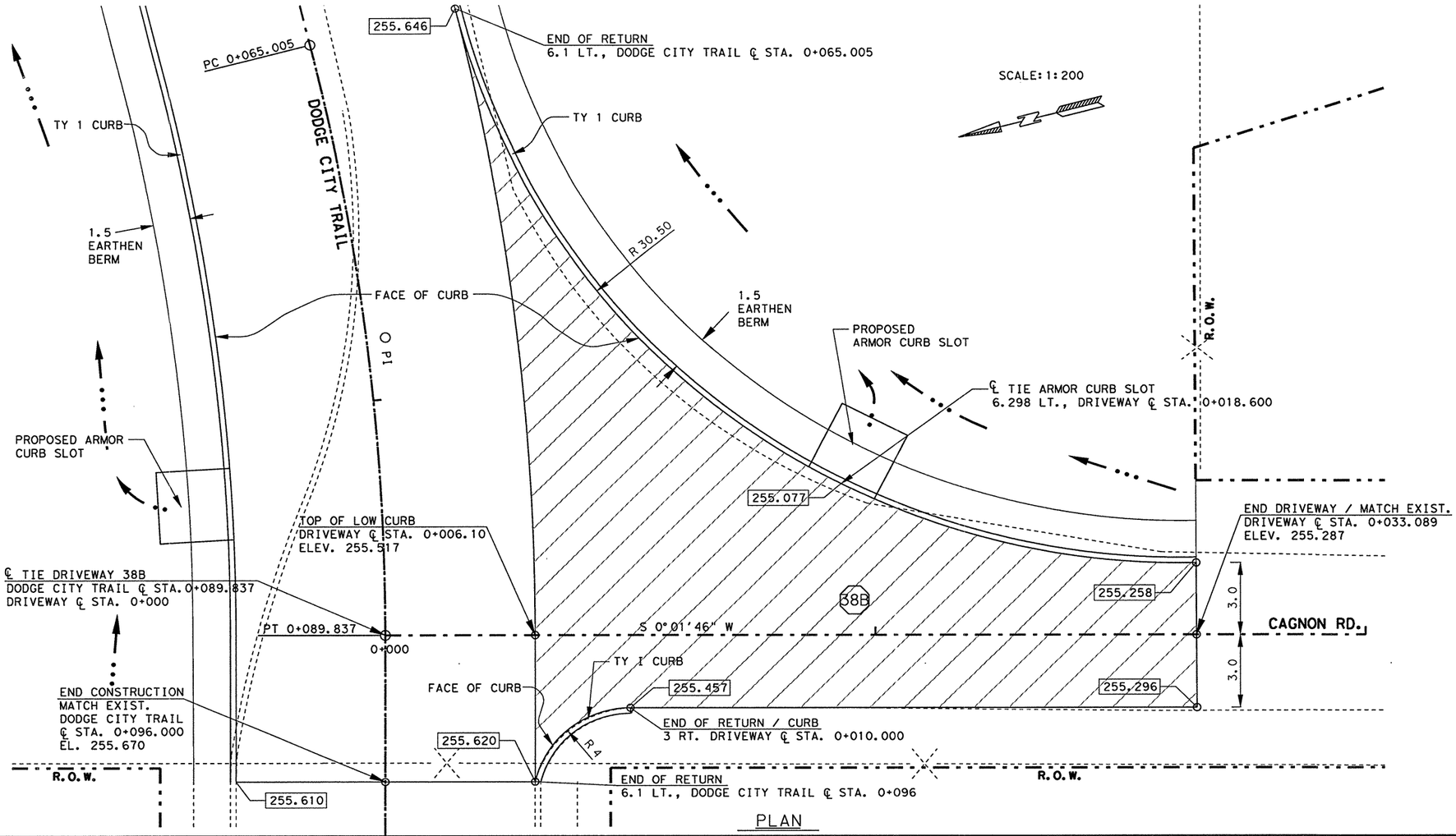


PLAN

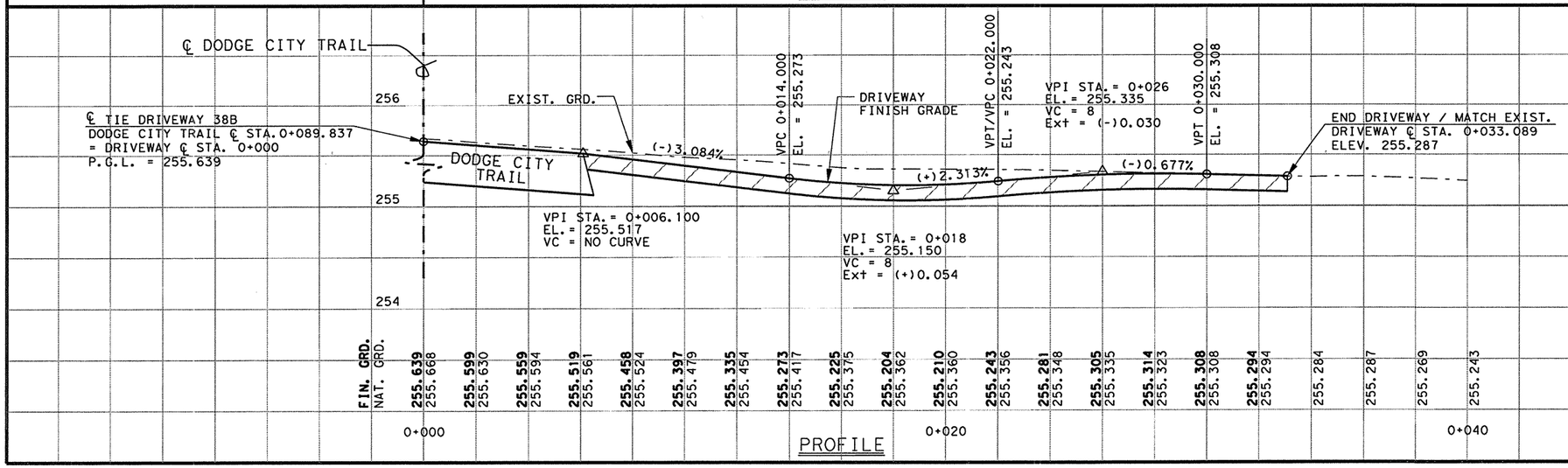


PROFILE

CHANGE ORDER NO. 129
-NEW DRIVEWAY DETAILS
-NEW QUANTITIES

NOTE(S):

- ALL DIMENSIONS ARE IN METERS UNLESS OTHERWISE NOTED
- FOR ARMOR CURB SLOT SEE DETAILS ELSEWHERE IN PLANS.
- SEE X-SECTIONS FOR FURTHER DATA.
- (#) DRIVEWAY #, FOR MORE DETAILS SEE SHEET(S) 336 H.
- XXX.XXX FINISH GRADE ELEVATION

CHANGE ORDER 129

NEW SHEET

STATE OF TEXAS
FITZGERALDO G. SANCHEZ
76084
LICENCED
PROFESSIONAL ENGINEER

Fitzgeraldo G. Sanchez 05-23-06
Fitzgeraldo G. Sanchez, P.E. Date

©2005

Texas Department of Transportation

# DRIVEWAY #38B

SHEET 1 OF1

| FED.RD. DIV.NO. | FEDERAL AID PROJECT NO. | | SHEET NO. |
|---|---|---|---|
| 6 | NH 2000(704), etc | | 4465 |
| STATE | DIST. | COUNTY | |
| TEXAS | SAT | BEXAR | |
| CONT. | SECT. | JOB | HIGHWAY NO. |
| 2452 | 01 | 036, etc | LP 1604 |

01-30-06

LEVELS DISPLAYED
1 2 3 4 5 6 7 8 9 10 11 12 13 14 15 16
17 18 19 20 21 22 32 42 52 62 72 82 92 93 103 132
33 43 53 63 73 83 94 104 124 134 144 154 164 174 184
99 109 125 135 145 155 165 175 186 196 206 216 263

lp1604fm471-90
cagnon.dgn

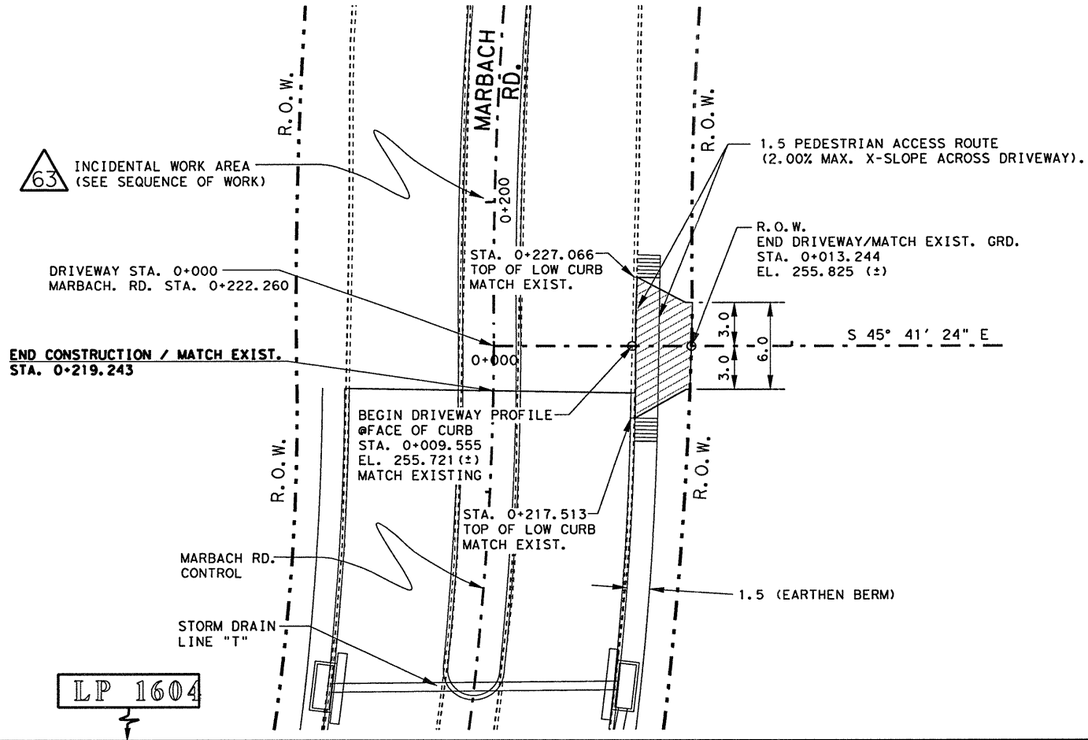


SCALE: 1:400 H
1:100 V

NOTE(S):

ALL DIMENSIONS ARE IN METERS UNLESS OTHERWISE NOTED.

FOR PAY ITEMS SEE APPROPRIATE PLAN SHEET(S).

FOR MORE DRIVEWAY DETAILS SEE SHEET(S) 27A, 28A & 336A.

LP 1604

# CHANGES MADE AS PART OF CHANGE ORDER.

CHANGE ORDER NO. 129
-NEW DRIVEWAY DETAILS

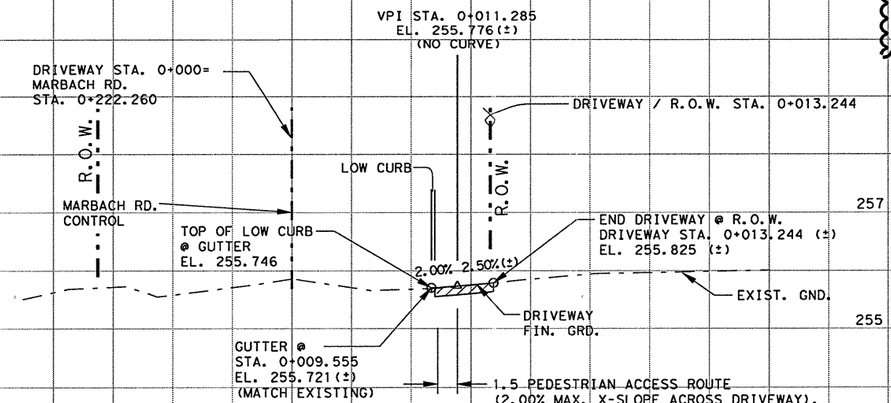


CHANGE ORDER 129

NEW SHEET

STATE OF TEXAS
FITZGERALDO G. SANCHEZ
76084
LICENSED
PROFESSIONAL ENGINEER

Fitzgeraldo G. Sanchez, P.E. 05-23-06 Date

©2005

Texas Department of Transportation

# DRIVEWAY #43
(FIREWORKS STAND @ MARBACH)
SHEET 1 OF 1

| FED.RD. DIV.NO. | FEDERAL AID PROJECT NO. | | SHEET NO. |
|---|---|---|---|
| 6 | NH 2000(704), etc | | 446 T |
| STATE | DIST. | COUNTY | |
| TEXAS | SAT | BEXAR | |
| CONT. | SECT. | JOB | HIGHWAY NO. |
| 2452 | 01 | 036,etc | LP 1604 |

06-15-05

LEVELS DISPLAYED
1 2 3 4 5 6 7 8 9 10 11 12 13 14 15 16
17 18 19 20 21 22 23 24 25 26 27 28 29 30 31 32
33 34 35 36 37 38 39 40 41 42 43 44 45 46 47 48
49 50 51 52 53 54 55 56 57 58 59 60 61 62 63

lp1604fm471-90
drive*43.dgn

Plotted on: 4/3/2006

Design Filename: ...\ao\design\lp1604fm471-90\3941161d17.dgn

## NOTES

1. FOR HYDROLOGIC DATA, SEE RUNOFF COMPUTATION SHEET.
2. ALL DIMENSIONS ARE IN METERS UNLESS NOTED OTHERWISE.
3. FOR SUMMARIZATION OF ARMOR CURB SLOTS, SEE STORM DRAIN AND ARMOR CURB SUMMARY SHEET.
4. ALL ARMOR CURB OPENINGS SHALL HAVE AN ARMOR CURB FLUME CONSTRUCTED FROM BEHIND THE OPENING TO THE TOE OF SLOPE OF THE EMBANKMENT AND SHALL BE CONSIDERED SUBSIDIARY TO THE ARMORED CURB SLOT PAY ITEM.
5. SIDEWALK DRAINS SHALL BE PAID FOR AS AN ARMORED CURB SLOT.

### ESTIMATED QUANTITIES

| DESCRIPTION | UNIT | EST. | FINAL |
|---|---|---|---|
| CSJ: 2452-01-036 | | | |
| CONC CURB (ARMOR CURB SLOT) | M | 18 | |

SCALE: 1:2000

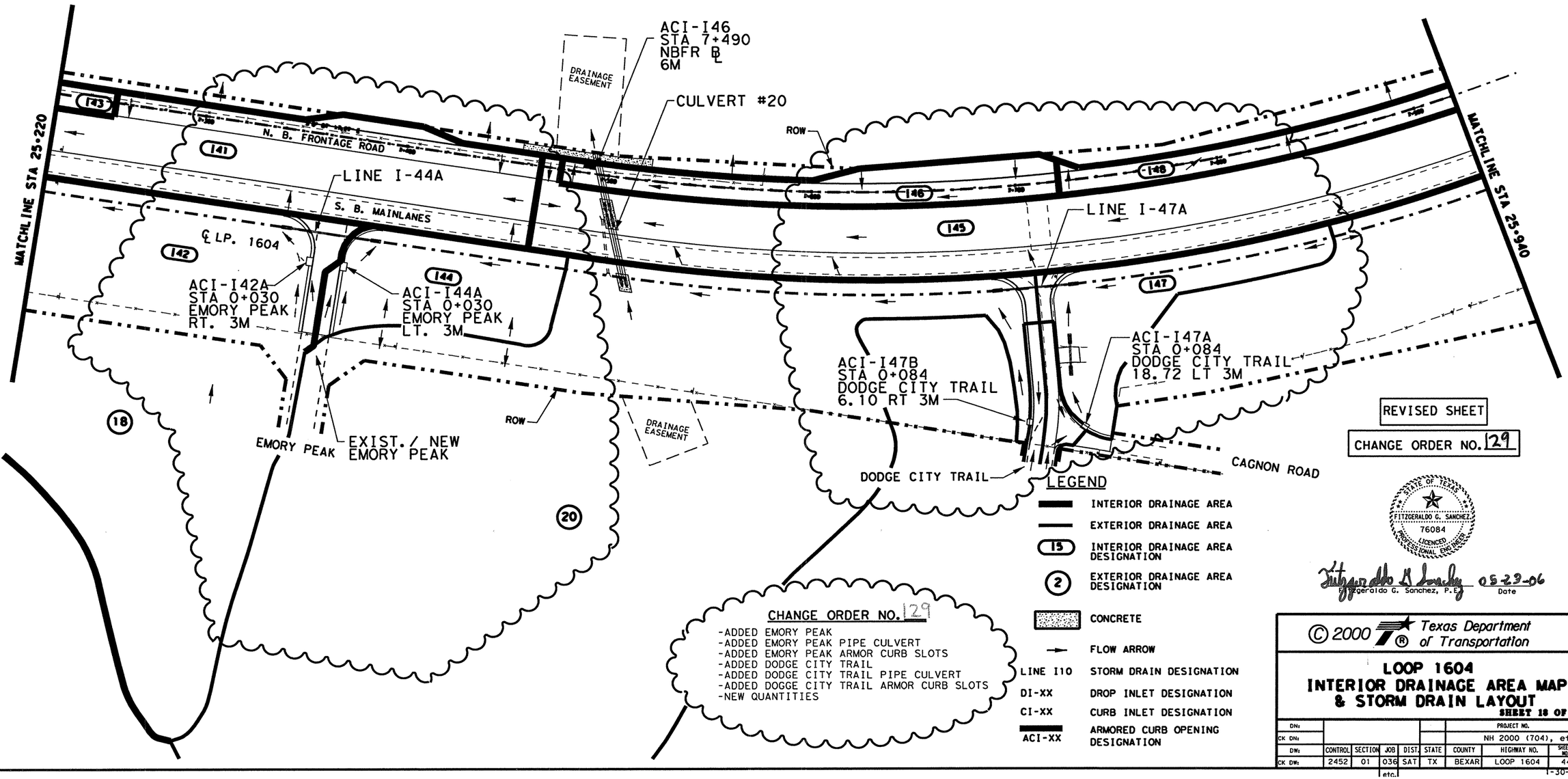


CHANGE ORDER NO. 129

- -ADDED EMORY PEAK
- -ADDED EMORY PEAK PIPE CULVERT
- -ADDED EMORY PEAK ARMOR CURB SLOTS
- -ADDED DODGE CITY TRAIL
- -ADDED DODGE CITY TRAIL PIPE CULVERT
- -ADDED DOGGE CITY TRAIL ARMOR CURB SLOTS
- -NEW QUANTITIES

### LEGEND

- INTERIOR DRAINAGE AREA
- EXTERIOR DRAINAGE AREA
- (15) INTERIOR DRAINAGE AREA DESIGNATION
- (2) EXTERIOR DRAINAGE AREA DESIGNATION
- CONCRETE
- FLOW ARROW
- LINE I10 STORM DRAIN DESIGNATION
- DI-XX DROP INLET DESIGNATION
- CI-XX CURB INLET DESIGNATION
- ACI-XX ARMORED CURB OPENING DESIGNATION

REVISED SHEET

CHANGE ORDER NO. 129

STATE OF TEXAS
FITZGERALDO G. SANCHEZ
76084
LICENCED PROFESSIONAL ENGINEER

Fitzgerald G Sanchez 05-29-06
Fitzgeraldo G. Sanchez, P.E. Date

© 2000 Texas Department of Transportation

# LOOP 1604
## INTERIOR DRAINAGE AREA MAP & STORM DRAIN LAYOUT

SHEET 18 OF 22

| DN: | | | | | PROJECT NO. | | |
|---|---|---|---|---|---|---|---|
| CK DN: | | | | | NH 2000 (704), etc. | | |
| DW: | CONTROL | SECTION | JOB | DIST. | STATE | COUNTY | HIGHWAY NO. | SHEET NO. |
| CK DW: | 2452 | 01 | 036 etc. | SAT | TX | BEXAR | LOOP 1604 | 446 |

1-30-06

Plotted on: 09/19/00

| ESTIMATED QUANTITIES | | | |
|---|---|---|---|
| DESCRIPTION | UNIT | EST. | FINAL |
| CSJ: 2452-01-036 | | | |
| CONC CURB (ARMOR CURB SLOT) | M | 3.0 | |
| * RIPRAP (CONC)(CL B) | M3 | 0.9 | |

* FOR CONTRACTOR'S INFORMATION ONLY

## NOTES

1. FOR HYDROLOGIC DATA, SEE RUNOFF COMPUTATION SHEET.
2. ALL DIMENSIONS ARE IN METERS UNLESS NOTED OTHERWISE.
3. FOR SUMMARIZATION OF ARMOR CURB SLOTS, SEE STORM DRAIN AND ARMOR CURB SUMMARY SHEET.
4. ALL ARMOR CURB OPENINGS SHALL HAVE AN ARMOR CURB FLUME CONSTRUCTED FROM BEHIND THE OPENING TO THE TOE OF SLOPE OF THE EMBANKMENT AND SHALL BE CONSIDERED SUBSIDIARY TO THE ARMORED CURB SLOT PAY ITEM.
5. SIDEWALK DRAINS SHALL BE PAID FOR AS AN ARMORED CURB SLOT.

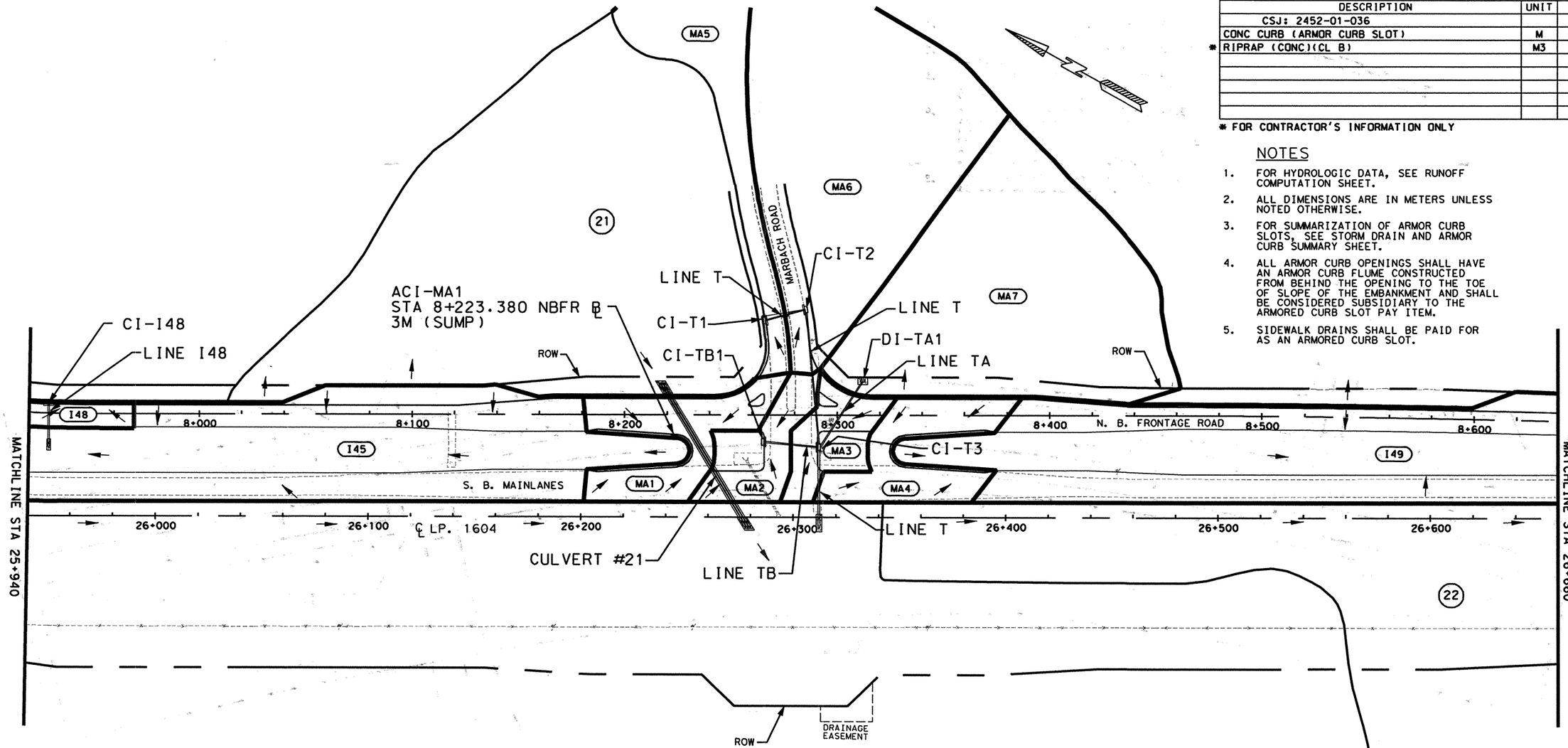


## LEGEND

| | |
|---|---|
| ▬▬ | INTERIOR DRAINAGE AREA |
| ——— | EXTERIOR DRAINAGE AREA |
| I5 | INTERIOR DRAINAGE AREA DESIGNATION |
| 2 | EXTERIOR DRAINAGE AREA DESIGNATION |
| ▨ | CONCRETE |
| → | FLOW ARROW |
| LINE I10 | STORM DRAIN DESIGNATION |
| DI-XX | DROP INLET DESIGNATION |
| CI-XX | CURB INLET DESIGNATION |
| ACI-XX | ARMORED CURB OPENING DESIGNATION |

SCALE: 1:2000

555 EAST RAMSEY SAN ANTONIO TEXAS 78216
PHONE (210)375-9000
FAX (210)375-9010
PAPE-DAWSON ENGINEERS
CIVIL & ENVIRONMENTAL
STATE OF TEXAS K. STEPHEN BONNETTE 60928 REGISTERED PROFESSIONAL ENGINEER
K. STEPHEN BONNETTE, P.E. 9/20/00 DATE

© 2000 Texas Department of Transportation

# LOOP 1604
# INTERIOR DRAINAGE AREA MAP & STORM DRAIN LAYOUT

SHEET 19 OF 22

| DN: | | | | | | PROJECT NO. | |
|---|---|---|---|---|---|---|---|
| CK DN: | | | | | | NH 2000 (704), etc. | |
| DW: | CONTROL | SECTION | JOB | DIST. | STATE | COUNTY | HIGHWAY NO. | SHEET NO. |
| CK DW: | 2452 | 01 | 036 etc. | SAT | TX | BEXAR | LOOP 1604 | 447 |

Design Filename: J:\3941\16\civil\design\inrda\3941161d18.dgn

Plotted on: 01/26/2004

Design Filename: p:\52\2011\design\civil\plansheets\drainage\damaps\3941161d18.dgn

| ESTIMATED QUANTITIES | | | |
|---|---|---|---|
| DESCRIPTION | UNIT | EST. | FINAL |
| CSJ: 2452-01-036 | | | |
| CONC CURB (ARMOR CURB SLOT) | M | 3.0 | |
| * RIPRAP (CONC)(CL B) | M3 | 0.9 | |

* FOR CONTRACTOR'S INFORMATION ONLY

## NOTES

1. FOR HYDROLOGIC DATA, SEE RUNOFF COMPUTATION SHEET.
2. ALL DIMENSIONS ARE IN METERS UNLESS NOTED OTHERWISE.
3. FOR SUMMARIZATION OF ARMOR CURB SLOTS, SEE STORM DRAIN AND ARMOR CURB SUMMARY SHEET.
4. ALL ARMOR CURB OPENINGS SHALL HAVE AN ARMOR CURB FLUME CONSTRUCTED FROM BEHIND THE OPENING TO THE TOE OF SLOPE OF THE EMBANKMENT AND SHALL BE CONSIDERED SUBSIDIARY TO THE ARMORED CURB SLOT PAY ITEM.
5. SIDEWALK DRAINS SHALL BE PAID FOR AS AN ARMORED CURB SLOT.

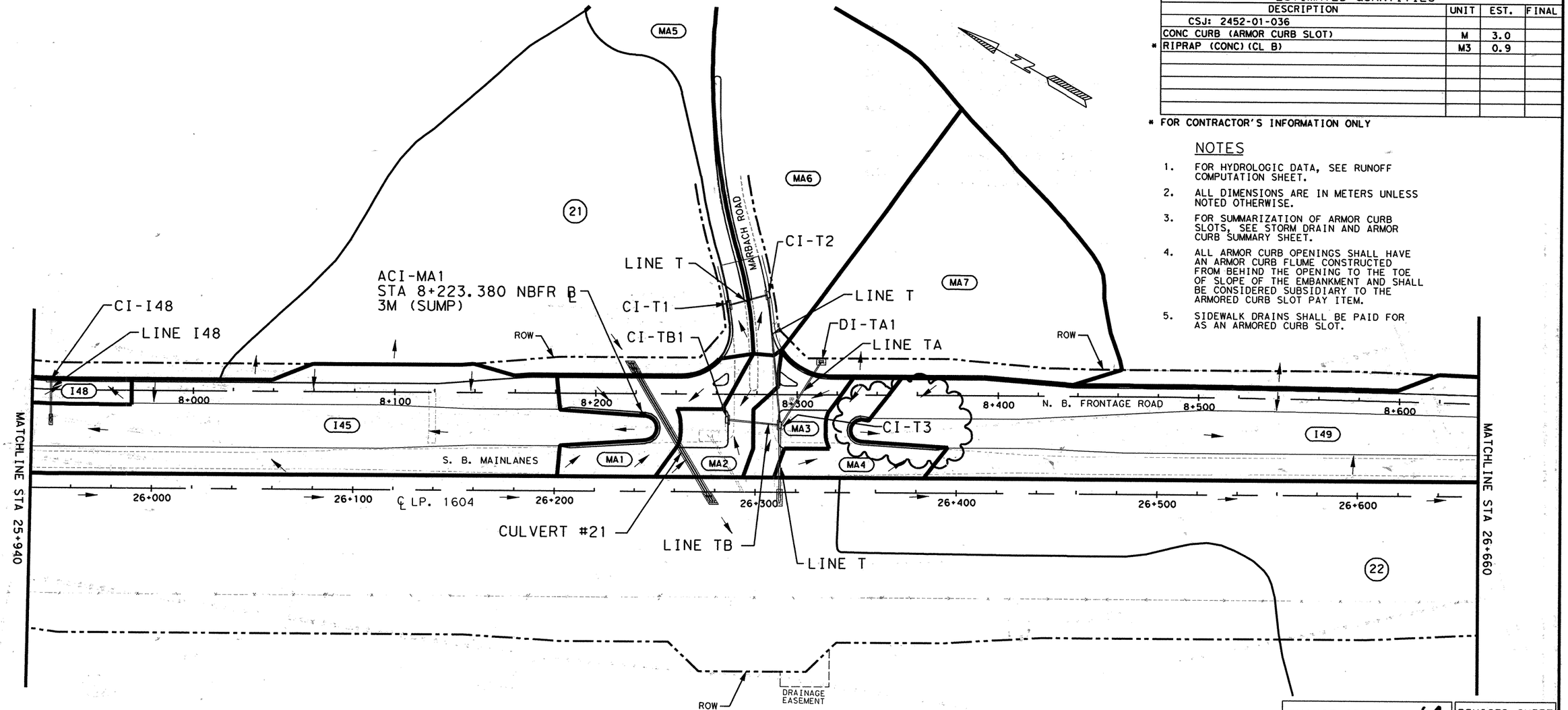


CHANGE ORDER NO. 64 | REVISED SHEET

CHANGE ORDER NO. 64
-REVISED D.A. MA4, I49

## LEGEND

- INTERIOR DRAINAGE AREA
- EXTERIOR DRAINAGE AREA
- (I5) INTERIOR DRAINAGE AREA DESIGNATION
- (2) EXTERIOR DRAINAGE AREA DESIGNATION
- CONCRETE
- FLOW ARROW
- LINE I10 STORM DRAIN DESIGNATION
- DI-XX DROP INLET DESIGNATION
- CI-XX CURB INLET DESIGNATION
- ACI-XX ARMORED CURB OPENING DESIGNATION

SCALE: 1:2000

555 EAST RAMSEY SAN ANTONIO TEXAS 78216 PHONE (210)375-9000 FAX (210)375-9010
PAPE-DAWSON ENGINEERS CIVIL & ENVIRONMENTAL
STATE OF TEXAS J. KENT O'BRIEN 64398 REGISTERED PROFESSIONAL ENGINEER
1/27/2004
J. KENT O'BRIEN, P.E. DATE

© 2000 Texas Department of Transportation

# LOOP 1604
# INTERIOR DRAINAGE AREA MAP & STORM DRAIN LAYOUT

SHEET 19 OF 22

| DN: | | | | | PROJECT NO. | | |
|---|---|---|---|---|---|---|---|
| CK DN: | | | | | NH 2000 (704), etc. | | |
| DW: | CONTROL | SECTION | JOB | DIST. | COUNTY | HIGHWAY NO. | SHEET NO. |
| CK DW: | 2452 | 01 | 036 | SAT | BEXAR | LOOP 1604 | 447A |
| | | | | TX | | | |

Plotted on: 05/31/2005

Design Filename: p:\57\75\02\design\civil\plansheets\drainage\3941161d18.dgn

| ESTIMATED QUANTITIES | | | |
|---|---|---|---|
| DESCRIPTION | UNIT | EST. | FINAL |
| CSJ: 2452-01-036 | | | |
| CONC CURB (ARMOR CURB SLOT) | M | 3.0 | |
| * RIPRAP (CONC) (CL B) | M3 | 0.9 | |

* FOR CONTRACTOR'S INFORMATION ONLY

## NOTES

1. FOR HYDROLOGIC DATA, SEE RUNOFF COMPUTATION SHEET.
2. ALL DIMENSIONS ARE IN METERS UNLESS NOTED OTHERWISE.
3. FOR SUMMARIZATION OF ARMOR CURB SLOTS, SEE STORM DRAIN AND ARMOR CURB SUMMARY SHEET.
4. ALL ARMOR CURB OPENINGS SHALL HAVE AN ARMOR CURB FLUME CONSTRUCTED FROM BEHIND THE OPENING TO THE TOE OF SLOPE OF THE EMBANKMENT AND SHALL BE CONSIDERED SUBSIDIARY TO THE ARMORED CURB SLOT PAY ITEM.
5. SIDEWALK DRAINS SHALL BE PAID FOR AS AN ARMORED CURB SLOT.

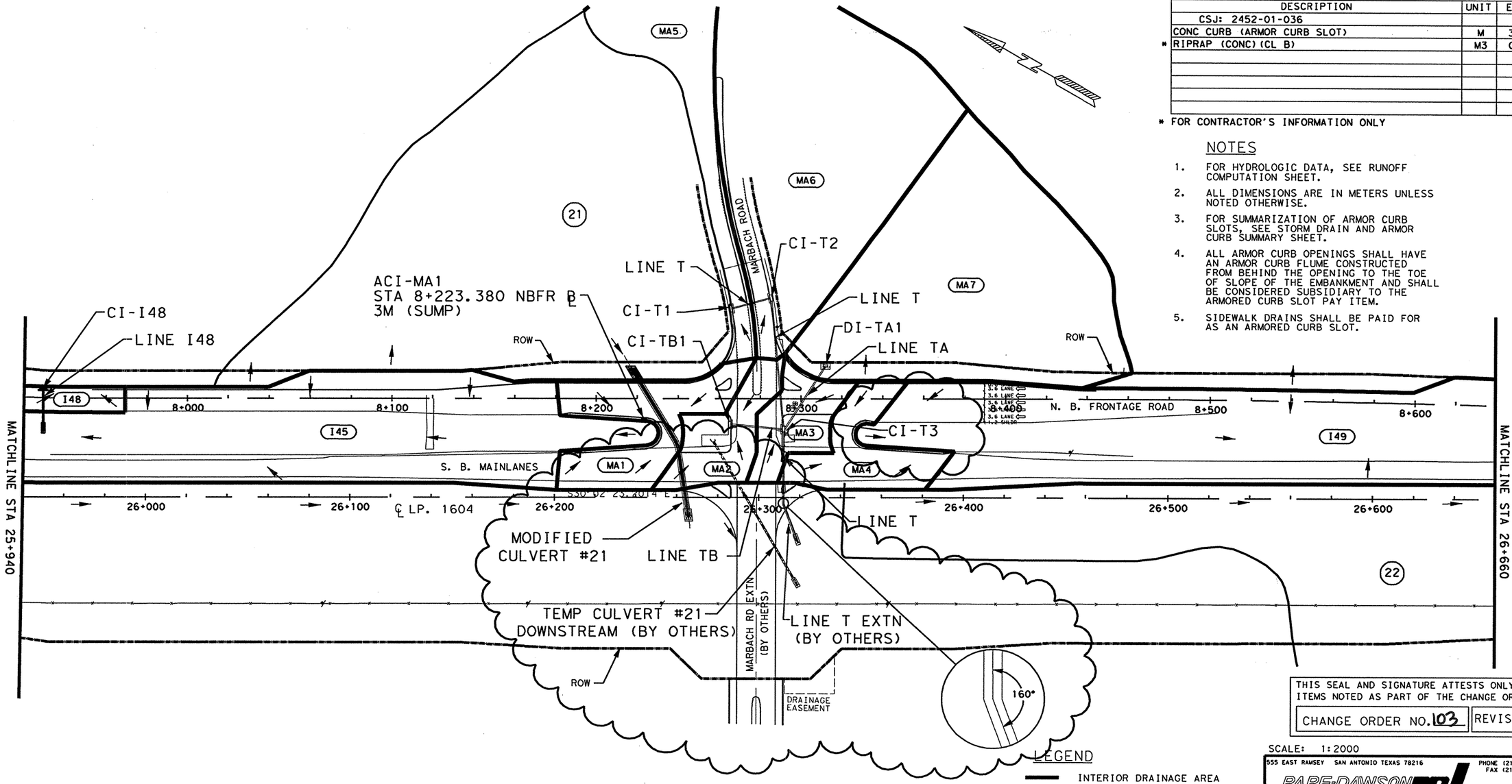


**CHANGE ORDER NO. 103**

-REVISED TO SHOW MODIFIED CULVERT #21 AND TEMP CULVERT #21 DOWNSTREAM
-REVISED TO SHOW LINE T EXTN AND FUTURE MARBACH RD EXTN BY OTHERS

## LEGEND

- INTERIOR DRAINAGE AREA
- EXTERIOR DRAINAGE AREA
- (I5) INTERIOR DRAINAGE AREA DESIGNATION
- (2) EXTERIOR DRAINAGE AREA DESIGNATION
- CONCRETE
- FLOW ARROW
- LINE I10 STORM DRAIN DESIGNATION
- DI-XX DROP INLET DESIGNATION
- CI-XX CURB INLET DESIGNATION
- ACI-XX ARMORED CURB OPENING DESIGNATION

THIS SEAL AND SIGNATURE ATTESTS ONLY TO THOSE ITEMS NOTED AS PART OF THE CHANGE ORDER.

CHANGE ORDER NO. 103 | REVISED SHEET

SCALE: 1:2000

555 EAST RAMSEY SAN ANTONIO TEXAS 78216 PHONE (210)375-9000 FAX (210)375-9010
PAPE-DAWSON ENGINEERS CIVIL & ENVIRONMENTAL
STATE OF TEXAS J. KENT O'BRIEN 64398 REGISTERED PROFESSIONAL ENGINEER
J. KENT O'BRIEN, P.E. 5/10/2005 DATE

© 2000 Texas Department of Transportation

# LOOP 1604
# INTERIOR DRAINAGE AREA MAP & STORM DRAIN LAYOUT

SHEET 19 OF 22

| DN: | | | | | PROJECT NO. | | |
|---|---|---|---|---|---|---|---|
| CK DN: | | | | | NH 2000 (704), etc. | | |
| DW: | CONTROL | SECTION | JOB | DIST. | COUNTY | HIGHWAY NO. | SHEET NO. |
| CK DW: | 2452 | 01 | 036 etc. | SAT | BEXAR | LOOP 1604 | 4415 |

5-20-05

Plotted on: 09/19/00

## NOTES

1. FOR HYDROLOGIC DATA, SEE RUNOFF COMPUTATION SHEET.
2. ALL DIMENSIONS ARE IN METERS UNLESS NOTED OTHERWISE.
3. FOR SUMMARIZATION OF ARMOR CURB SLOTS, SEE STORM DRAIN AND ARMOR CURB SUMMARY SHEET.
4. ALL ARMOR CURB OPENINGS SHALL HAVE AN ARMOR CURB FLUME CONSTRUCTED FROM BEHIND THE OPENING TO THE TOE OF SLOPE OF THE EMBANKMENT AND SHALL BE CONSIDERED SUBSIDIARY TO THE ARMORED CURB SLOT PAY ITEM.
5. SIDEWALK DRAINS SHALL BE PAID FOR AS AN ARMORED CURB SLOT.

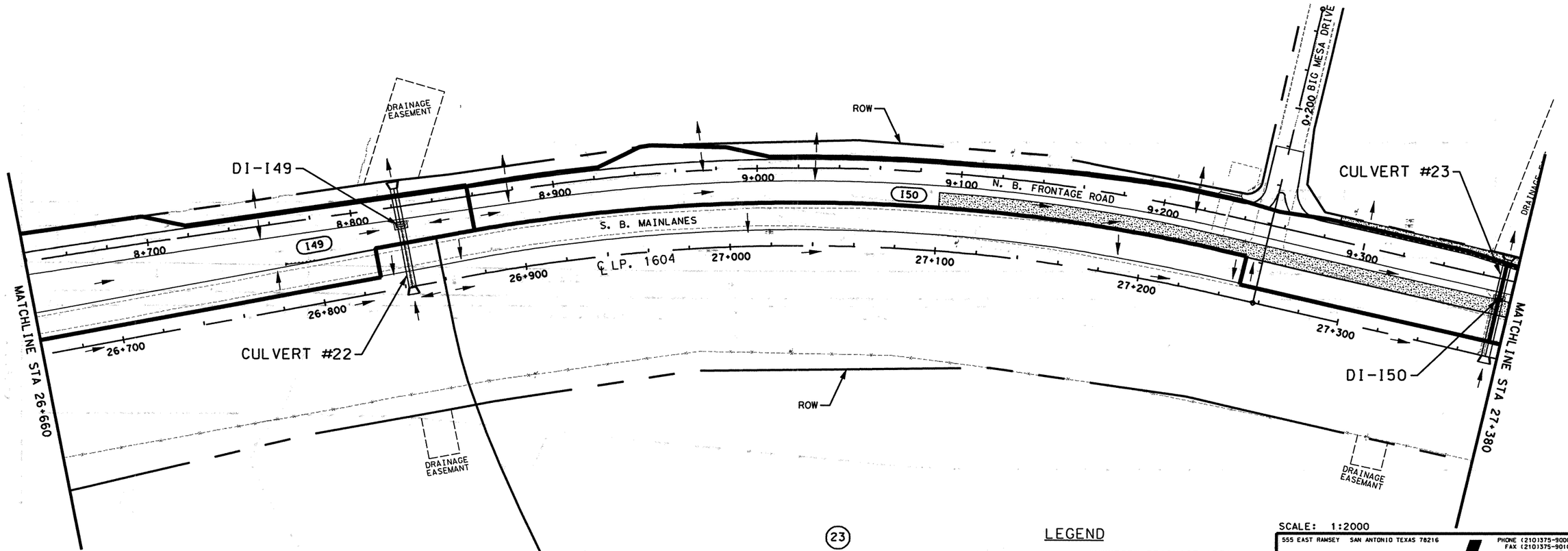


## LEGEND

- INTERIOR DRAINAGE AREA
- EXTERIOR DRAINAGE AREA
- (I5) INTERIOR DRAINAGE AREA DESIGNATION
- (2) EXTERIOR DRAINAGE AREA DESIGNATION
- CONCRETE
- FLOW ARROW
- LINE I10 STORM DRAIN DESIGNATION
- DI-XX DROP INLET DESIGNATION
- CI-XX CURB INLET DESIGNATION
- ACI-XX ARMORED CURB OPENING DESIGNATION

SCALE: 1:2000


555 EAST RAMSEY SAN ANTONIO TEXAS 78216 PHONE (210)375-9000 FAX (210)375-9010

PAPE-DAWSON ENGINEERS CIVIL & ENVIRONMENTAL

STATE OF TEXAS K. STEPHEN BONNETTE 60928 REGISTERED PROFESSIONAL ENGINEER

K. STEPHEN BONNETTE, P.E. 9/20/00 DATE



© 2000 Texas Department of Transportation


# LOOP 1604
# INTERIOR DRAINAGE AREA MAP & STORM DRAIN LAYOUT

SHEET 20 OF 22

| | | | | | | | | |
|---|---|---|---|---|---|---|---|---|
| DN: | | | | | | PROJECT NO. | | |
| CK DN: | | | | | | NH 2000 (704), etc. | | |
| DW: | CONTROL | SECTION | JOB | DIST. | STATE | COUNTY | HIGHWAY NO. | SHEET NO. |
| CK DW: | 2452 | 01 | 036 etc. | SAT | TX | BEXAR | LOOP 1604 | 448 |

Design Filename: j:\3941\16\civil\design\intdq\394116id19.dgn

## NOTES

1. FOR HYDROLOGIC DATA, SEE RUNOFF COMPUTATION SHEET.
2. ALL DIMENSIONS ARE IN METERS UNLESS NOTED OTHERWISE.
3. FOR SUMMARIZATION OF ARMOR CURB SLOTS, SEE STORM DRAIN AND ARMOR CURB SUMMARY SHEET.
4. ALL ARMOR CURB OPENINGS SHALL HAVE AN ARMOR CURB FLUME CONSTRUCTED FROM BEHIND THE OPENING TO THE TOE OF SLOPE OF THE EMBANKMENT AND SHALL BE CONSIDERED SUBSIDIARY TO THE ARMORED CURB SLOT PAY ITEM.
5. SIDEWALK DRAINS SHALL BE PAID FOR AS AN ARMORED CURB SLOT.

| ESTIMATED QUANTITIES DESCRIPTION | UNIT | EST. | FINAL |
|---|---|---|---|

SCALE: 1:2000

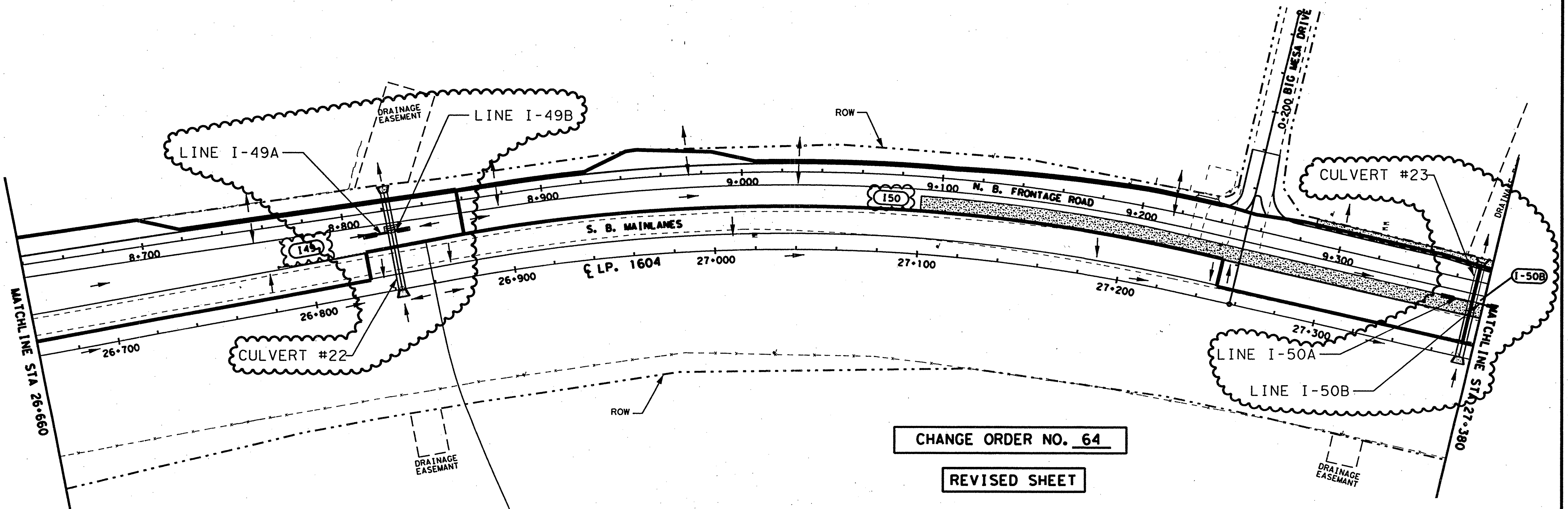


**CHANGE ORDER NO. 64**

**REVISED SHEET**

**CHANGE ORDER NO. 64**

-REVISED CULVERTS NO. 22 & NO. 23
-REVISED D.A. MAP
-ADDED STORM DRAIN I-49A, I-49B, I-50A AND I-50B

## LEGEND

| | |
|---|---|
| ——— | INTERIOR DRAINAGE AREA |
| ——— | EXTERIOR DRAINAGE AREA |
| (I5) | INTERIOR DRAINAGE AREA DESIGNATION |
| (2) | EXTERIOR DRAINAGE AREA DESIGNATION |
| (shaded) | CONCRETE |
| → | FLOW ARROW |
| LINE I10 | STORM DRAIN DESIGNATION |
| DI-XX | DROP INLET DESIGNATION |
| CI-XX | CURB INLET DESIGNATION |
| ACI-XX | ARMORED CURB OPENING DESIGNATION |

STATE OF TEXAS
JEROME D. PAVLISKA
76075
REGISTERED PROFESSIONAL ENGINEER

Jerome D. Pavliska, P.E. 6-01-04
Jerome D. Pavliska, P.E. Date

© 2004 Texas Department of Transportation

# LOOP 1604
# INTERIOR DRAINAGE AREA MAP & STORM DRAIN LAYOUT

SHEET 20 OF 22

| DN: | | | PROJECT NO. | | |
|---|---|---|---|---|---|
| CK DN: | | | NH 2000 (704), etc. | | |
| CONTROL | SECTION | JOB | DIST. | STATE | COUNTY | 
| 2452 | 01 | 036 | SAT | TX | BEXAR |

| HIGHWAY NO. | SHEET NO. |
|---|---|
| LOOP 1604 | 448A |

LEVELS DISPLAYED 1 3 4 5 6 7 9 13 15 17 18 19 20 24 28 29 30 32 33 34 35 36 37 38 39 40 41 42 43 44 45 46 47 48 49 50 51 52 53 54 55 56 57 58 59 60 61 63
ACC: TX REVISIONS
FILE: 3941161D19.DGN
dgn\lp1604fm471-90\PD*Phase2*change*order*mylars\TxDOT*revisions\3941161D19.dgn

Plotted on: 09/19/00

## NOTES

1. FOR HYDROLOGIC DATA, SEE RUNOFF COMPUTATION SHEET.
2. ALL DIMENSIONS ARE IN METERS UNLESS NOTED OTHERWISE.
3. FOR SUMMARIZATION OF ARMOR CURB SLOTS, SEE STORM DRAIN AND ARMOR CURB SUMMARY SHEET.
4. ALL ARMOR CURB OPENINGS SHALL HAVE AN ARMOR CURB FLUME CONSTRUCTED FROM BEHIND THE OPENING TO THE TOE OF SLOPE OF THE EMBANKMENT AND SHALL BE CONSIDERED SUBSIDIARY TO THE ARMORED CURB SLOT PAY ITEM.
5. SIDEWALK DRAINS SHALL BE PAID FOR AS AN ARMORED CURB SLOT.

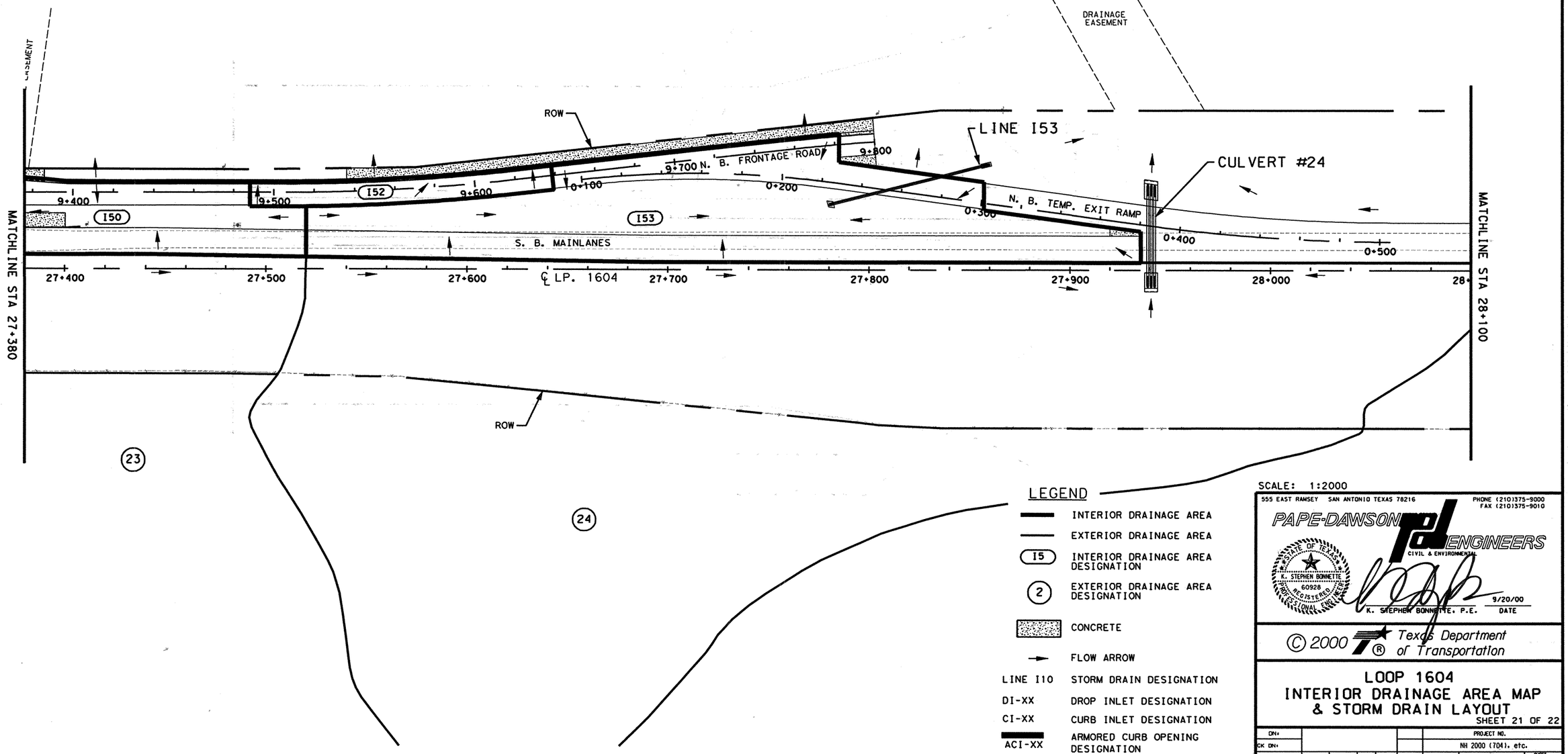


SCALE: 1:2000

## LEGEND

- INTERIOR DRAINAGE AREA
- EXTERIOR DRAINAGE AREA
- (15) INTERIOR DRAINAGE AREA DESIGNATION
- (2) EXTERIOR DRAINAGE AREA DESIGNATION
- CONCRETE
- FLOW ARROW
- LINE I10 STORM DRAIN DESIGNATION
- DI-XX DROP INLET DESIGNATION
- CI-XX CURB INLET DESIGNATION
- ACI-XX ARMORED CURB OPENING DESIGNATION


555 EAST RAMSEY SAN ANTONIO TEXAS 78216
PHONE (210)375-9000
FAX (210)375-9010
PAPE-DAWSON ENGINEERS
CIVIL & ENVIRONMENTAL
STATE OF TEXAS
K. STEPHEN BONNETTE
60928
REGISTERED PROFESSIONAL ENGINEER
K. STEPHEN BONNETTE, P.E.
9/20/00
DATE



© 2000 Texas Department of Transportation


# LOOP 1604
# INTERIOR DRAINAGE AREA MAP & STORM DRAIN LAYOUT

SHEET 21 OF 22

| DN: | | | | | PROJECT NO. | | |
|---|---|---|---|---|---|---|---|
| CK DN: | | | | | NH 2000 (704), etc. | | |
| DW: | CONTROL | SECTION | JOB | DIST. | STATE | COUNTY | HIGHWAY NO. | SHEET NO. |
| CK DW: | 2452 | 01 | 036 etc. | SAT | TX | BEXAR | LOOP 1604 | 449 |

Design Filename: j:\3941\16\civil\design\intdo\3941161d20.dgn

ESTIMATED QUANTITIES
DESCRIPTION UNIT EST. FINAL

## NOTES

1. FOR HYDROLOGIC DATA, SEE RUNOFF COMPUTATION SHEET.
2. ALL DIMENSIONS ARE IN METERS UNLESS NOTED OTHERWISE.
3. FOR SUMMARIZATION OF ARMOR CURB SLOTS, SEE STORM DRAIN AND ARMOR CURB SUMMARY SHEET.
4. ALL ARMOR CURB OPENINGS SHALL HAVE AN ARMOR CURB FLUME CONSTRUCTED FROM BEHIND THE OPENING TO THE TOE OF SLOPE OF THE EMBANKMENT AND SHALL BE CONSIDERED SUBSIDIARY TO THE ARMORED CURB SLOT PAY ITEM.
5. SIDEWALK DRAINS SHALL BE PAID FOR AS AN ARMORED CURB SLOT.

SCALE: 1:2000

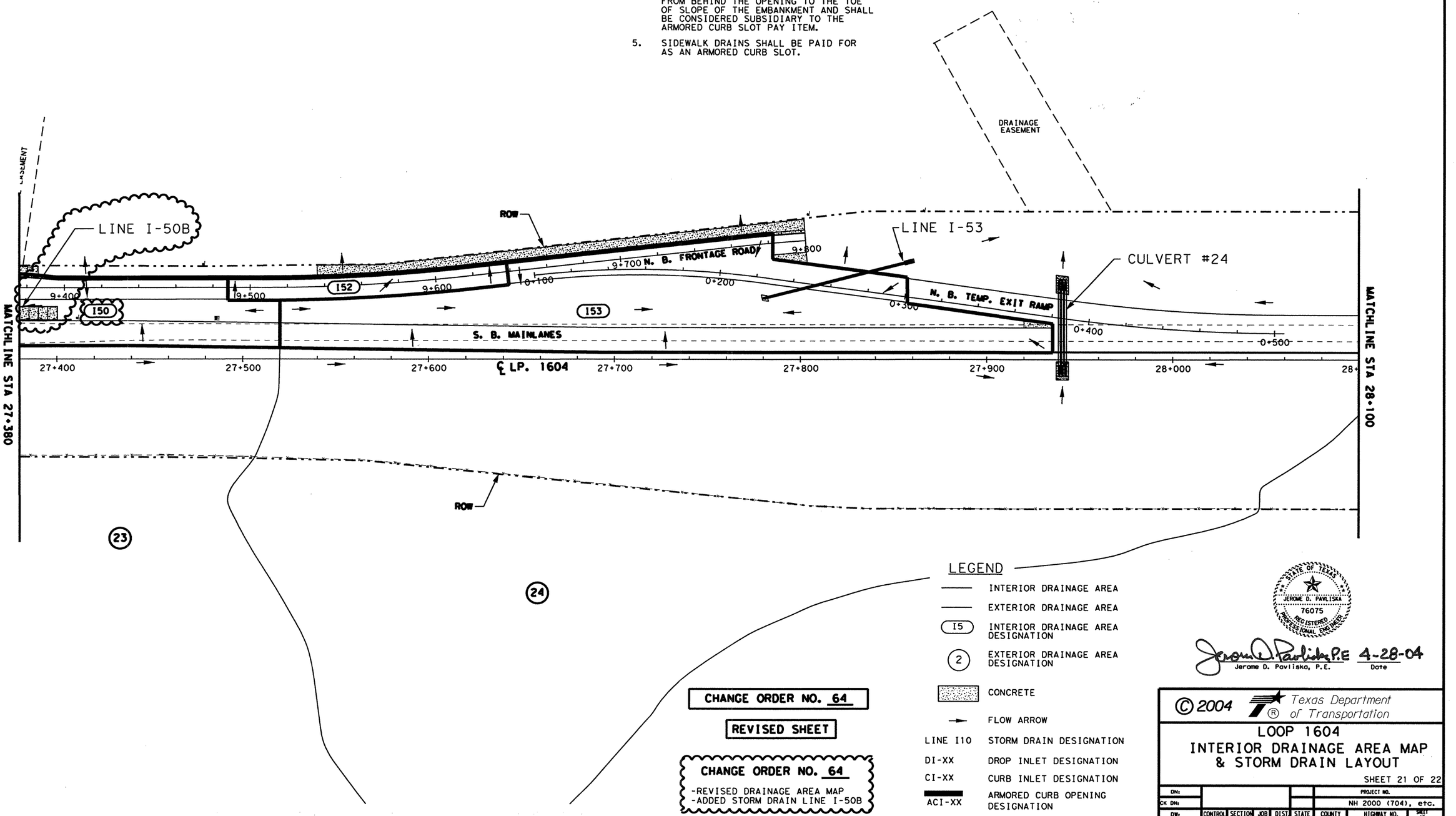


## LEGEND

- INTERIOR DRAINAGE AREA
- EXTERIOR DRAINAGE AREA
- (I5) INTERIOR DRAINAGE AREA DESIGNATION
- (2) EXTERIOR DRAINAGE AREA DESIGNATION
- CONCRETE
- FLOW ARROW
- LINE I10 STORM DRAIN DESIGNATION
- DI-XX DROP INLET DESIGNATION
- CI-XX CURB INLET DESIGNATION
- ACI-XX ARMORED CURB OPENING DESIGNATION

**CHANGE ORDER NO. 64**

**REVISED SHEET**

**CHANGE ORDER NO. 64**
-REVISED DRAINAGE AREA MAP
-ADDED STORM DRAIN LINE I-50B

STATE OF TEXAS
JEROME D. PAVLISKA
76075
REGISTERED PROFESSIONAL ENGINEER

Jerome D. Pavliska, P.E. 4-28-04
Jerome D. Pavliska, P.E. Date

© 2004 Texas Department of Transportation ®

# LOOP 1604
# INTERIOR DRAINAGE AREA MAP & STORM DRAIN LAYOUT

SHEET 21 OF 22

| DN: | | | | | PROJECT NO. | |
|---|---|---|---|---|---|---|
| CK DN: | | | | | NH 2000 (704), etc. | |
| DW: | CONTROL | SECTION | JOB | DIST | COUNTY | HIGHWAY NO. | SHEET NO. |
| CK DW: | 2452 | 01 | 036 | SAT | BEXAR | LOOP 1604 | 449A |

LEVELS DISPLAYED
1 2 3 4 5 6 7 8 9 10 30 41 51 61 ACC: 1604\ TX Revisions
11 12 20 21 22 23 830 32
33 35 36 37 38 39 4142 4546 47 FILE: 3941601D20.DGN
49 50 51 52 56 57 58 59 60 61 63
c:\projects\3941601\Phase2*change*order*mylars\TxDOT*revisions\3941601D20.dgn

## NOTES

1. FOR HYDROLOGIC DATA, SEE RUNOFF COMPUTATION SHEET.
2. ALL DIMENSIONS ARE IN METERS UNLESS NOTED OTHERWISE.
3. FOR SUMMARIZATION OF ARMOR CURB SLOTS, SEE STORM DRAIN AND ARMOR CURB SUMMARY SHEET.
4. ALL ARMOR CURB OPENINGS SHALL HAVE AN ARMOR CURB FLUME CONSTRUCTED FROM BEHIND THE OPENING TO THE TOE OF SLOPE OF THE EMBANKMENT AND SHALL BE CONSIDERED SUBSIDIARY TO THE ARMORED CURB SLOT PAY ITEM.
5. SIDEWALK DRAINS SHALL BE PAID FOR AS AN ARMORED CURB SLOT.

SCALE: 1:2000

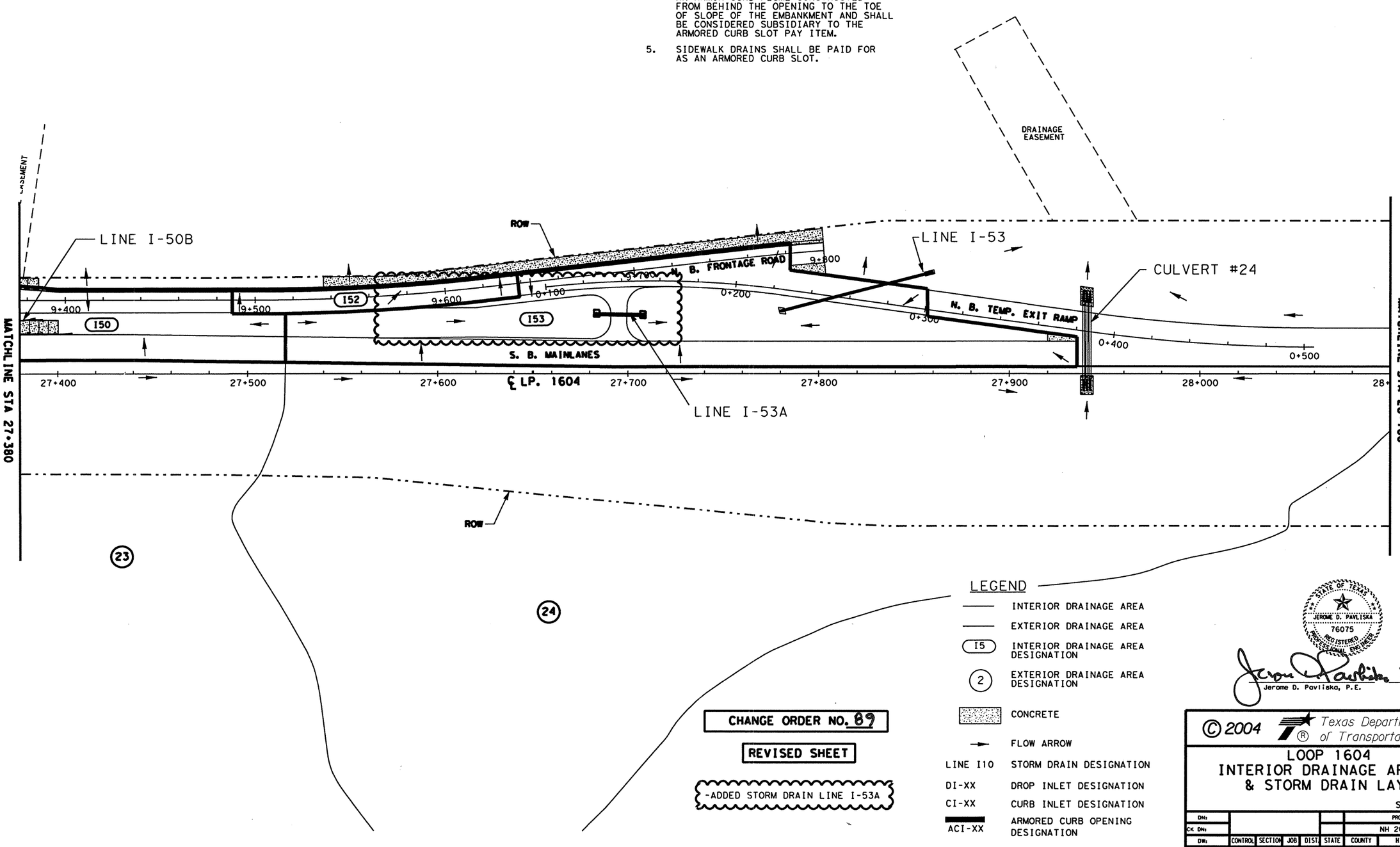


## LEGEND

- INTERIOR DRAINAGE AREA
- EXTERIOR DRAINAGE AREA
- (I5) INTERIOR DRAINAGE AREA DESIGNATION
- (2) EXTERIOR DRAINAGE AREA DESIGNATION
- CONCRETE
- FLOW ARROW
- LINE I10 STORM DRAIN DESIGNATION
- DI-XX DROP INLET DESIGNATION
- CI-XX CURB INLET DESIGNATION
- ACI-XX ARMORED CURB OPENING DESIGNATION

**CHANGE ORDER NO. 89**

**REVISED SHEET**

-ADDED STORM DRAIN LINE I-53A

STATE OF TEXAS
JEROME D. PAVLISKA
76075
REGISTERED PROFESSIONAL ENGINEER

Jerome D. Pavliska 3/15/05
Jerome D. Pavliska, P.E. Date

© 2004
Texas Department of Transportation

# LOOP 1604
# INTERIOR DRAINAGE AREA MAP & STORM DRAIN LAYOUT

SHEET 21 OF 22

| DN: | | | | | PROJECT NO. | |
|---|---|---|---|---|---|---|
| CK DN: | | | | | NH 2000 (704), etc. | |
| DW: | CONTROL | SECTION | JOB | DIST | COUNTY | HIGHWAY NO. | SHEET NO. |
| CK DW: | 2452 | 01 | 036 | SAT | BEXAR | LOOP 1604 | 449A |

Plotted on: 3/15/2005

File: 8:\gMesaTAR\revision1020.dgn
ACC: 1604\ TX Revisions
LEVELS DISPLAYED

Plotted on: 09/18/00

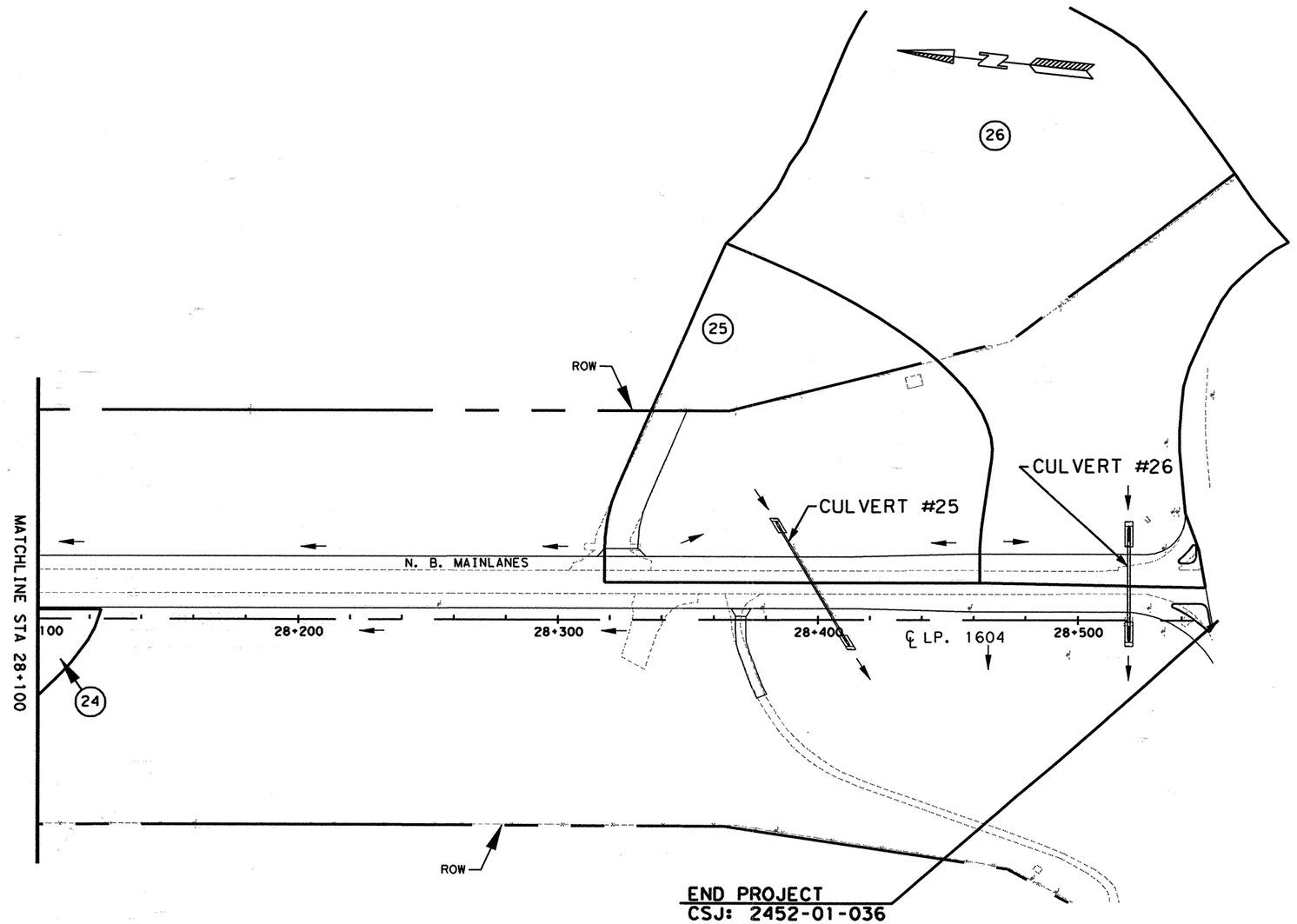


## NOTES

1. FOR HYDROLOGIC DATA, SEE RUNOFF COMPUTATION SHEET.
2. ALL DIMENSIONS ARE IN METERS UNLESS NOTED OTHERWISE.
3. FOR SUMMARIZATION OF ARMOR CURB SLOTS, SEE STORM DRAIN AND ARMOR CURB SUMMARY SHEET.
4. ALL ARMOR CURB OPENINGS SHALL HAVE AN ARMOR CURB FLUME CONSTRUCTED FROM BEHIND THE OPENING TO THE TOE OF SLOPE OF THE EMBANKMENT AND SHALL BE CONSIDERED SUBSIDIARY TO THE ARMORED CURB SLOT PAY ITEM.
5. SIDEWALK DRAINS SHALL BE PAID FOR AS AN ARMORED CURB SLOT.

## LEGEND

| | |
|---|---|
| ▬▬ | INTERIOR DRAINAGE AREA |
| ——— | EXTERIOR DRAINAGE AREA |
| (I5) | INTERIOR DRAINAGE AREA DESIGNATION |
| (2) | EXTERIOR DRAINAGE AREA DESIGNATION |
| ▒▒ | CONCRETE |
| → | FLOW ARROW |
| LINE I10 | STORM DRAIN DESIGNATION |
| DI-XX | DROP INLET DESIGNATION |
| CI-XX | CURB INLET DESIGNATION |
| ACI-XX | ARMORED CURB OPENING DESIGNATION |

SCALE: 1:2000

555 EAST RAMSEY SAN ANTONIO TEXAS 78216 PHONE (210)375-9000 FAX (210)375-9010
PAPE-DAWSON ENGINEERS
CIVIL & ENVIRONMENTAL

STATE OF TEXAS K. STEPHEN BONNETTE 60928 REGISTERED PROFESSIONAL ENGINEER

K. STEPHEN BONNETTE, P.E. 9/20/00 DATE

© 2000 Texas Department of Transportation

# LOOP 1604
# INTERIOR DRAINAGE AREA MAP & STORM DRAIN LAYOUT

SHEET 22 OF 22

| DN: | | | | | | PROJECT NO. | |
|---|---|---|---|---|---|---|---|
| CK DN: | | | | | | NH 2000 (704), etc. | |
| DW: | CONTROL | SECTION | JOB | DIST. | STATE | COUNTY | HIGHWAY NO. | SHEET NO. |
| CK DW: | 2452 | Ø1 | Ø36 etc. | SAT | TX | BEXAR | LOOP 1604 | 450 |

Design Filename: j:\3941\16\civil\design\intdo\394116id21.dgn

Plotted on: 9/25/00

Design File\an N394\Civil\Design\InfDA\RUNOFF.dgn

# RUNOFF COMPUTATION SHEET

| DRAINAGE AREA | AREA (HA) | REACH (M) | VEL. (M/S) | TC (min) | RUNOFF C(10) | INTENSITY (10) mm/hr | Q10 CMS |
|---|---|---|---|---|---|---|---|
| I1 | 1.762 | 495 | 0.6 | 14.00 | 0.51 | 176.24 | 0.437 |
| I2 | 2.530 | 780 | 0.8 | 17.00 | 0.51 | 160.00 | 0.570 |
| I3 | 1.010 | 315 | 0.4 | 12.00 | 0.51 | 189.37 | 0.269 |
| I4 | 0.365 | 130 | 0.2 | 11.00 | 0.51 | 196.82 | 0.101 |
| I5 | 0.577 | 140 | 0.2 | 11.00 | 0.51 | 196.82 | 0.160 |
| I5A | 0.080 | 65 | 0.3 | 10.00 | 0.51 | 204.97 | 0.023 |
| I5+I5A | 0.657 | 220 | 0.3 | 12.00 | 0.51 | 189.37 | 0.175 |
| I5+I5A+I3 | 1.667 | 300 | 0.4 | 12.00 | 0.51 | 189.37 | 0.445 |
| I6 | 1.721 | 395 | 0.5 | 13.00 | 0.51 | 182.54 | 0.442 |
| I4+I6 | 2.086 | 420 | 0.5 | 13.00 | 0.51 | 182.54 | 0.536 |
| I7 | 2.489 | 330 | 0.4 | 13.00 | 0.51 | 182.54 | 0.640 |
| I5+I5A+I3+I7 | 4.156 | 660 | 0.7 | 16.00 | 0.51 | 165.03 | 0.966 |
| I8 | 0.327 | 110 | 0.2 | 11.00 | 0.51 | 196.82 | 0.091 |
| I9 | 0.143 | 60 | 0.3 | 10.00 | 0.51 | 204.97 | 0.041 |
| I8+I9 | 0.470 | 165 | 0.3 | 11.00 | 0.51 | 196.82 | 0.130 |
| | | | | | | | |
| C1 | 0.582 | 70 | 1.0 | 10.00 | 0.95 | 204.97 | 0.315 |
| C2 | 0.581 | 80 | 1.0 | 10.00 | 0.95 | 204.97 | 0.314 |
| C3 | 0.098 | 55 | 1.0 | 10.00 | 0.95 | 204.97 | 0.053 |
| C4 | 0.095 | 60 | 1.0 | 10.00 | 0.95 | 204.97 | 0.051 |
| C5 | 0.090 | 50 | 1.0 | 10.00 | 0.95 | 204.97 | 0.049 |
| C6 | 0.056 | 60 | 1.0 | 10.00 | 0.95 | 204.97 | 0.030 |
| C7 | 0.051 | 50 | 1.0 | 10.00 | 0.95 | 204.97 | 0.028 |
| C8 | 0.126 | 75 | 1.0 | 10.00 | 0.95 | 204.97 | 0.068 |
| C9 | 0.088 | 55 | 1.0 | 10.00 | 0.95 | 204.97 | 0.048 |
| C10 | 0.083 | 50 | 1.0 | 10.00 | 0.95 | 204.97 | 0.045 |
| C11 | 0.020 | 28 | 1.0 | 10.00 | 0.95 | 204.97 | 0.011 |
| C12 | 0.070 | 20 | 1.0 | 10.00 | 0.95 | 204.97 | 0.038 |
| C13 | 0.148 | 70 | 1.0 | 10.00 | 0.95 | 204.97 | 0.080 |
| C14 | 0.087 | 55 | 1.0 | 10.00 | 0.95 | 204.97 | 0.047 |
| C15 | 0.088 | 65 | 1.0 | 10.00 | 0.95 | 204.97 | 0.048 |
| | | | | | | | |
| I10 | 3.405 | 1145 | 1.0 | 20.00 | 0.51 | 146.82 | 0.704 |
| I10A | 0.638 | 140 | 0.2 | 12.00 | 0.80 | 189.37 | 0.268 |
| I10B | 0.195 | 105 | 0.2 | 11.00 | 0.95 | 196.82 | 0.101 |
| 14 | 0.980 | 100 | 0.2 | 11.00 | 0.57 | 196.82 | 0.305 |
| I11 | 3.120 | 625 | 0.7 | 15.00 | 0.51 | 170.42 | 0.749 |
| I12 | 2.806 | 585 | 0.7 | 15.00 | 0.51 | 170.42 | 0.673 |
| I12A | 0.351 | 280 | 0.4 | 12.00 | 0.95 | 189.37 | 0.175 |
| I12B | 1.289 | 320 | 0.4 | 12.00 | 0.51 | 189.37 | 0.344 |
| I12+I12B | 4.095 | 860 | 0.8 | 17.00 | 0.51 | 160.00 | 0.923 |
| I12C | 3.052 | 390 | 0.5 | 13.00 | 0.51 | 182.54 | 0.785 |
| I12D | 1.104 | 200 | 0.3 | 11.00 | 0.51 | 196.82 | 0.306 |
| I12E | 2.314 | 450 | 0.5 | 14.00 | 0.51 | 176.24 | 0.574 |
| I12E+I12D | 3.418 | 550 | 0.6 | 15.00 | 0.51 | 170.42 | 0.820 |
| I12A+I12E+I12D+I12C | 6.821 | 795 | 0.8 | 17.00 | 0.51 | 160.00 | 1.537 |
| I13 | 0.224 | 160 | 0.2 | 11.00 | 0.95 | 196.82 | 0.116 |
| I14 | 13.343 | 630 | 0.7 | 15.00 | 0.51 | 170.42 | 3.203 |
| I15 | 1.511 | 665 | 0.7 | 16.00 | 0.51 | 165.03 | 0.351 |
| I10+I15 | 4.916 | 1805 | 1.2 | 26.00 | 0.51 | 126.63 | 0.877 |
| I10+I11+I14+I15 | 21.379 | 2140 | 1.8 | 29.00 | 0.51 | 118.71 | 3.574 |
| I16 | 6.189 | 800 | 0.8 | 17.00 | 0.51 | 160.00 | 1.395 |
| I17 | 8.360 | 550 | 0.6 | 15.00 | 0.51 | 170.42 | 2.007 |
| I18 | 2.497 | 350 | 0.4 | 13.00 | 0.51 | 182.54 | 0.642 |
| I16+I18 | 8.686 | 800 | 0.8 | 17.00 | 0.51 | 160.00 | 1.957 |
| I19 | 3.250 | 350 | 0.4 | 13.00 | 0.51 | 182.54 | 0.836 |
| I17+I19 | 11.610 | 550 | 0.6 | 15.00 | 0.51 | 170.42 | 2.787 |
| I20 | 5.131 | 1130 | 0.9 | 20.00 | 0.51 | 146.82 | 1.061 |
| I20A | 0.212 | 100 | 1.0 | 10.00 | 0.51 | 204.97 | 0.061 |
| I21 | 0.570 | 260 | 0.4 | 12.00 | 0.51 | 189.37 | 0.152 |
| I20A+I21 | 0.782 | 340 | 0.4 | 13.00 | 0.51 | 182.54 | 0.201 |
| | | | | | | | |
| W1 | 0.359 | 160 | 1.0 | 10.00 | 0.95 | 204.97 | 0.194 |
| W2 | 0.332 | 75 | 1.0 | 10.00 | 0.95 | 204.97 | 0.180 |
| W3 | 0.262 | 90 | 1.0 | 10.00 | 0.95 | 204.97 | 0.142 |
| W4 | 0.346 | 230 | 1.0 | 10.00 | 0.95 | 204.97 | 0.187 |
| W5 | 1.844 | 230 | 0.3 | 12.00 | 0.51 | 189.37 | 0.492 |
| | | | | | | | |
| I22 | 1.158 | 200 | 0.3 | 11.00 | 0.51 | 196.82 | 0.321 |

| DRAINAGE AREA | AREA (HA) | REACH (M) | VEL. (M/S) | TC (min) | RUNOFF C(10) | INTENSITY (10) mm/hr | Q10 CMS |
|---|---|---|---|---|---|---|---|
| I22A | 1.447 | 250 | 0.3 | 12.00 | 0.51 | 189.37 | 0.386 |
| I22B | 1.130 | 245 | 0.3 | 12.00 | 0.51 | 189.37 | 0.301 |
| I22C | 0.176 | 110 | 0.2 | 11.00 | 0.51 | 196.82 | 0.049 |
| I22D | 0.109 | 75 | 0.3 | 10.00 | 0.51 | 204.97 | 0.031 |
| I23 | 2.777 | 350 | 0.4 | 13.00 | 0.51 | 182.54 | 0.714 |
| I24 | 0.229 | 110 | 0.2 | 11.00 | 0.95 | 196.82 | 0.119 |
| I25 | 3.966 | 970 | 0.9 | 18.00 | 0.51 | 155.31 | 0.867 |
| I26 | 0.268 | 155 | 0.3 | 10.00 | 0.95 | 204.97 | 0.145 |
| I27 | 1.346 | 360 | 0.5 | 13.00 | 0.51 | 182.54 | 0.346 |
| | | | | | | | |
| MI1 | 0.142 | 90 | 1.0 | 10.00 | 0.95 | 204.97 | 0.077 |
| MI2 | 0.170 | 130 | 1.0 | 10.00 | 0.95 | 204.97 | 0.092 |
| MI3 | 0.268 | 110 | 1.0 | 10.00 | 0.95 | 204.97 | 0.145 |
| MI4 | 0.123 | 65 | 1.0 | 10.00 | 0.95 | 204.97 | 0.067 |
| MI5 | 0.398 | 120 | 1.0 | 10.00 | 0.95 | 204.97 | 0.215 |
| MI6 | 0.065 | 50 | 1.0 | 10.00 | 0.95 | 204.97 | 0.035 |
| | | | | | | | |
| I28 | 2.698 | 380 | 0.5 | 13.00 | 0.51 | 182.54 | 0.694 |
| I28+I25 | 6.664 | 1290 | 1.0 | 21.00 | 0.51 | 142.95 | 1.342 |
| I29 | 0.188 | 140 | 0.2 | 11.00 | 0.95 | 196.82 | 0.098 |
| I30 | 0.138 | 85 | 1.0 | 10.00 | 0.51 | 204.97 | 0.040 |
| I31 | 6.941 | 950 | 0.9 | 18.00 | 0.51 | 155.31 | 1.518 |
| I32 | 3.257 | 385 | 0.5 | 13.00 | 0.51 | 182.54 | 0.837 |
| I31+I32 | 10.198 | 950 | 0.9 | 18.00 | 0.51 | 155.31 | 2.231 |
| I33 | 1.902 | 280 | 0.4 | 12.00 | 0.51 | 189.37 | 0.507 |
| I34 | 0.536 | 130 | 0.2 | 11.00 | 0.51 | 196.82 | 0.149 |
| I33+I34 | 2.438 | 340 | 0.4 | 13.00 | 0.51 | 182.54 | 0.627 |
| | | | | | | | |
| P1 | 0.054 | 30 | 1.0 | 10.00 | 0.95 | 204.97 | 0.029 |
| P2 | 0.195 | 110 | 1.0 | 10.00 | 0.95 | 204.97 | 0.105 |
| P3 | 0.130 | 70 | 1.0 | 10.00 | 0.95 | 204.97 | 0.070 |
| P4 | 0.289 | 80 | 1.0 | 10.00 | 0.95 | 204.97 | 0.156 |
| | | | | | | | |
| I35 | 0.962 | 180 | 0.3 | 11.00 | 0.51 | 196.82 | 0.267 |
| I31+I32+I35 | 11.160 | 1170 | 1.0 | 20.00 | 0.51 | 146.82 | 2.307 |
| I37 | 2.484 | 495 | 0.6 | 14.00 | 0.51 | 176.24 | 0.617 |
| I36 | 0.348 | 185 | 0.3 | 11.00 | 0.95 | 196.82 | 0.181 |
| I38 | 3.130 | 960 | 0.9 | 18.00 | 0.51 | 155.31 | 0.685 |
| I39A | 0.333 | 250 | 1.0 | 10.00 | 0.95 | 204.97 | 0.180 |
| I39B | 0.189 | 150 | 1.0 | 10.00 | 0.95 | 204.97 | 0.102 |
| I40 | 0.372 | 360 | 0.5 | 13.00 | 0.51 | 182.54 | 0.096 |
| I38+I40 | 3.502 | 960 | 0.9 | 18.00 | 0.51 | 155.31 | 0.766 |
| | | | | | | | |
| I41 | 6.606 | 1156 | 1.0 | 20.00 | 0.51 | 146.82 | 1.366 |
| I42 | 6.759 | 1100 | 0.9 | 20.00 | 0.51 | 146.82 | 1.398 |
| I43 | 0.128 | 90 | 1.0 | 10.00 | 0.95 | 204.97 | 0.069 |
| I44 | 0.594 | 140 | 0.2 | 11.00 | 0.51 | 196.82 | 0.165 |
| I44+I42 | 7.353 | 1115 | 0.9 | 20.00 | 0.51 | 146.82 | 1.520 |
| I45 | 3.449 | 780 | 0.8 | 17.00 | 0.51 | 160.00 | 0.777 |
| I46 | 0.403 | 255 | 0.4 | 12.00 | 0.95 | 189.37 | 0.201 |
| I47 | 0.276 | 140 | 0.2 | 11.00 | 0.51 | 196.82 | 0.077 |
| I48 | 0.335 | 230 | 0.3 | 12.00 | 0.95 | 189.37 | 0.167 |
| | | | | | | | |
| MA1 | 0.294 | 110 | 1.0 | 10.00 | 0.95 | 204.97 | 0.159 |
| MA2 | 0.184 | 50 | 1.0 | 10.00 | 0.95 | 204.97 | 0.100 |
| MA3 | 0.168 | 40 | 1.0 | 10.00 | 0.95 | 204.97 | 0.091 |
| MA4 | 0.265 | 110 | 1.0 | 10.00 | 0.95 | 204.97 | 0.143 |
| MA5 | 0.453 | 200 | 1.0 | 11.00 | 0.80 | 196.82 | 0.198 |
| MA6 | 1.424 | 200 | 1.0 | 11.00 | 0.51 | 196.82 | 0.395 |
| MA7 | 1.376 | 170 | 1.0 | 11.00 | 0.51 | 196.82 | 0.381 |
| | | | | | | | |
| I49 | 2.503 | 520 | 0.6 | 14.00 | 0.51 | 176.24 | 0.621 |
| I50 | 2.008 | 520 | 0.6 | 14.00 | 0.51 | 176.24 | 0.498 |
| I52 | 0.194 | 150 | 0.2 | 11.00 | 0.95 | 196.82 | 0.101 |
| I53 | 1.710 | 245 | 0.3 | 12.00 | 0.51 | 189.37 | 0.456 |

555 EAST RAMSEY SAN ANTONIO TEXAS 78216
PHONE (210)375-9000
FAX (210)375-9010
PAPE-DAWSON ENGINEERS
CIVIL & ENVIRONMENTAL
STATE OF TEXAS K. STEPHEN BONNETTE 60928 REGISTERED PROFESSIONAL ENGINEER
K. STEPHEN BONNETTE, P.E.
9/20/00
DATE

© 2000 Texas Department of Transportation

## LOOP 1604
## RUNOFF
## COMPUTATION SHEET

| DN: | | | | | PROJECT NO. | | |
|---|---|---|---|---|---|---|---|
| CK DN: | | | | | NH 2000 (704), etc. | | |
| DW: | CONTROL | SECTION | JOB | DIST. | STATE | COUNTY | HIGHWAY NO. | SHEET NO. |
| CK DW: | 2452 | 01 | 036 | SAT | TX | BEXAR | LOOP 1604 | 451 |

# RUNOFF COMPUTATION SHEET

| DRAINAGE AREA | AREA (HA) | REACH (M) | VEL. (M/S) | TC (min) | RUNOFF C(10) | INTENSITY (I10) mm/hr | Q10 CMS |
|---|---|---|---|---|---|---|---|
| I1 | 1.762 | 495 | 0.6 | 14.00 | 0.51 | 176.24 | 0.437 |
| I2 | 2.530 | 780 | 0.8 | 17.00 | 0.51 | 160.00 | 0.570 |
| I3 | 1.010 | 315 | 0.4 | 12.00 | 0.51 | 189.37 | 0.269 |
| I4 | 0.365 | 130 | 0.2 | 11.00 | 0.51 | 196.82 | 0.101 |
| I5 | 0.577 | 140 | 0.2 | 11.00 | 0.51 | 196.82 | 0.160 |
| I5A | 0.080 | 65 | 0.3 | 10.00 | 0.51 | 204.97 | 0.023 |
| I5+I5A | 0.657 | 220 | 0.3 | 12.00 | 0.51 | 189.37 | 0.175 |
| I5+I5A+I3 | 1.667 | 300 | 0.4 | 12.00 | 0.51 | 189.37 | 0.445 |
| I6 | 1.721 | 395 | 0.5 | 13.00 | 0.51 | 182.54 | 0.442 |
| I4+I6 | 2.086 | 420 | 0.5 | 13.00 | 0.51 | 182.54 | 0.536 |
| I7 | 2.489 | 330 | 0.4 | 13.00 | 0.51 | 182.54 | 0.640 |
| I5+I5A+I3+I7 | 4.156 | 660 | 0.7 | 16.00 | 0.51 | 165.03 | 0.966 |
| I8 | 0.327 | 110 | 0.2 | 11.00 | 0.51 | 196.82 | 0.091 |
| I9 | 0.143 | 60 | 0.3 | 10.00 | 0.51 | 204.97 | 0.041 |
| I8+I9 | 0.470 | 165 | 0.3 | 11.00 | 0.51 | 196.82 | 0.130 |
| | | | | | | | |
| C1 | 0.582 | 70 | 1.0 | 10.00 | 0.95 | 204.97 | 0.315 |
| C2 | 0.581 | 80 | 1.0 | 10.00 | 0.95 | 204.97 | 0.314 |
| C3 | 0.098 | 55 | 1.0 | 10.00 | 0.95 | 204.97 | 0.053 |
| C4 | 0.095 | 60 | 1.0 | 10.00 | 0.95 | 204.97 | 0.051 |
| C5 | 0.090 | 50 | 1.0 | 10.00 | 0.95 | 204.97 | 0.049 |
| C6 | 0.056 | 60 | 1.0 | 10.00 | 0.95 | 204.97 | 0.030 |
| C7 | 0.051 | 50 | 1.0 | 10.00 | 0.95 | 204.97 | 0.028 |
| C8 | 0.126 | 75 | 1.0 | 10.00 | 0.95 | 204.97 | 0.068 |
| C9 | 0.088 | 55 | 1.0 | 10.00 | 0.95 | 204.97 | 0.048 |
| C10 | 0.083 | 50 | 1.0 | 10.00 | 0.95 | 204.97 | 0.045 |
| C11 | 0.020 | 28 | 1.0 | 10.00 | 0.95 | 204.97 | 0.011 |
| C12 | 0.070 | 20 | 1.0 | 10.00 | 0.95 | 204.97 | 0.038 |
| C13 | 0.148 | 70 | 1.0 | 10.00 | 0.95 | 204.97 | 0.080 |
| C14 | 0.087 | 55 | 1.0 | 10.00 | 0.95 | 204.97 | 0.047 |
| C15 | 0.088 | 65 | 1.0 | 10.00 | 0.95 | 204.97 | 0.048 |
| | | | | | | | |
| I10 | 3.405 | 1145 | 1.0 | 20.00 | 0.51 | 146.82 | 0.704 |
| I10A | 0.638 | 140 | 0.2 | 12.00 | 0.80 | 189.37 | 0.268 |
| I10B | 0.195 | 105 | 0.2 | 11.00 | 0.95 | 196.82 | 0.101 |
| 14 | 0.980 | 100 | 0.2 | 11.00 | 0.57 | 196.82 | 0.305 |
| I11 | 3.120 | 625 | 0.7 | 15.00 | 0.51 | 170.42 | 0.749 |
| I12 | 2.806 | 585 | 0.7 | 15.00 | 0.51 | 170.42 | 0.673 |
| I12A | 0.351 | 280 | 0.4 | 12.00 | 0.95 | 189.37 | 0.175 |
| I12B | 1.289 | 320 | 0.4 | 12.00 | 0.51 | 189.37 | 0.344 |
| I12+I12B | 4.095 | 860 | 0.8 | 17.00 | 0.51 | 160.00 | 0.923 |
| I12C | 3.052 | 390 | 0.5 | 13.00 | 0.51 | 182.54 | 0.785 |
| I12D | 1.104 | 200 | 0.3 | 11.00 | 0.51 | 196.82 | 0.306 |
| I12E | 2.314 | 450 | 0.5 | 14.00 | 0.51 | 176.24 | 0.574 |
| I12E+I12D | 3.418 | 550 | 0.6 | 15.00 | 0.51 | 170.42 | 0.820 |
| I12A+I12E+I12D+I12C | 6.821 | 795 | 0.8 | 17.00 | 0.51 | 160.00 | 1.537 |
| I13 | 0.224 | 160 | 0.2 | 11.00 | 0.95 | 196.82 | 0.116 |
| I14 | 13.343 | 630 | 0.7 | 15.00 | 0.73 | 170.42 | 4.611 |
| I15 | 1.511 | 665 | 0.7 | 16.00 | 0.51 | 165.03 | 0.351 |
| I10+I15 | 4.916 | 1805 | 1.2 | 26.00 | 0.51 | 126.63 | 0.877 |
| I10+I11+I14+I15 | 21.379 | 2140 | 1.8 | 29.00 | 0.65 | 118.71 | 4.582 |
| I16 | 6.189 | 800 | 0.8 | 17.00 | 0.51 | 160.00 | 1.395 |
| I17 | 8.360 | 550 | 0.6 | 15.00 | 0.51 | 170.42 | 2.007 |
| I18 | 2.497 | 350 | 0.4 | 13.00 | 0.51 | 182.54 | 0.642 |
| I16+I18 | 8.686 | 800 | 0.8 | 17.00 | 0.51 | 160.00 | 1.957 |
| I19 | 3.250 | 350 | 0.4 | 13.00 | 0.51 | 182.54 | 0.836 |
| I17+I19 | 11.610 | 550 | 0.6 | 15.00 | 0.51 | 170.42 | 2.787 |
| I20 | 5.131 | 1130 | 0.9 | 20.00 | 0.51 | 146.82 | 1.061 |
| I20A | 0.212 | 100 | 1.0 | 10.00 | 0.51 | 204.97 | 0.061 |
| I21 | 0.570 | 260 | 0.4 | 12.00 | 0.51 | 189.37 | 0.152 |
| I20A+I21 | 0.782 | 340 | 0.4 | 13.00 | 0.51 | 182.54 | 0.201 |
| | | | | | | | |
| W1 | 0.359 | 160 | 1.0 | 10.00 | 0.95 | 204.97 | 0.194 |
| W2 | 0.332 | 75 | 1.0 | 10.00 | 0.95 | 204.97 | 0.180 |
| W3 | 0.262 | 90 | 1.0 | 10.00 | 0.95 | 204.97 | 0.142 |
| W4 | 0.346 | 230 | 1.0 | 10.00 | 0.95 | 204.97 | 0.187 |
| W5 | 1.844 | 230 | 0.3 | 12.00 | 0.51 | 189.37 | 0.492 |
| | | | | | | | |
| I22 | 1.158 | 200 | 0.3 | 11.00 | 0.51 | 196.82 | 0.321 |

| DRAINAGE AREA | AREA (HA) | REACH (M) | VEL. (M/S) | TC (min) | RUNOFF C(10) | INTENSITY (I10) mm/hr | Q10 CMS |
|---|---|---|---|---|---|---|---|
| I22A | 1.447 | 250 | 0.3 | 12.00 | 0.51 | 189.37 | 0.386 |
| I22B | 1.130 | 245 | 0.3 | 12.00 | 0.51 | 189.37 | 0.301 |
| I22C | 0.176 | 110 | 0.2 | 11.00 | 0.51 | 196.82 | 0.049 |
| I22D | 0.109 | 75 | 0.3 | 10.00 | 0.51 | 204.97 | 0.031 |
| I23 | 2.777 | 350 | 0.4 | 13.00 | 0.51 | 182.54 | 0.714 |
| I24 | 0.229 | 110 | 0.2 | 11.00 | 0.95 | 196.82 | 0.119 |
| I25 | 3.966 | 970 | 0.9 | 18.00 | 0.51 | 155.31 | 0.867 |
| I26 | 0.268 | 155 | 0.3 | 10.00 | 0.95 | 204.97 | 0.145 |
| I27 | 1.346 | 360 | 0.5 | 13.00 | 0.51 | 182.54 | 0.346 |
| | | | | | | | |
| MI1 | 0.142 | 90 | 1.0 | 10.00 | 0.95 | 204.97 | 0.077 |
| MI2 | 0.170 | 130 | 1.0 | 10.00 | 0.95 | 204.97 | 0.092 |
| MI3 | 0.268 | 110 | 1.0 | 10.00 | 0.95 | 204.97 | 0.145 |
| MI4 | 0.123 | 65 | 1.0 | 10.00 | 0.95 | 204.97 | 0.067 |
| MI5 | 0.398 | 120 | 1.0 | 10.00 | 0.95 | 204.97 | 0.215 |
| MI6 | 0.065 | 50 | 1.0 | 10.00 | 0.95 | 204.97 | 0.035 |
| | | | | | | | |
| I28 | 2.698 | 380 | 0.5 | 13.00 | 0.51 | 182.54 | 0.694 |
| I28+I25 | 6.664 | 1290 | 1.0 | 21.00 | 0.51 | 142.95 | 1.342 |
| I29 | 0.188 | 140 | 0.2 | 11.00 | 0.95 | 196.82 | 0.098 |
| I30 | 0.138 | 85 | 1.0 | 10.00 | 0.51 | 204.97 | 0.040 |
| I31 | 6.941 | 950 | 0.9 | 18.00 | 0.51 | 155.31 | 1.518 |
| I32 | 3.257 | 385 | 0.5 | 13.00 | 0.51 | 182.54 | 0.837 |
| I31+I32 | 10.198 | 950 | 0.9 | 18.00 | 0.51 | 155.31 | 2.231 |
| I33 | 1.902 | 280 | 0.4 | 12.00 | 0.51 | 189.37 | 0.507 |
| I34 | 0.536 | 130 | 0.2 | 11.00 | 0.51 | 196.82 | 0.149 |
| I33+I34 | 2.438 | 340 | 0.4 | 13.00 | 0.51 | 182.54 | 0.627 |
| | | | | | | | |
| P1 | 0.054 | 30 | 1.0 | 10.00 | 0.95 | 204.97 | 0.029 |
| P2 | 0.195 | 110 | 1.0 | 10.00 | 0.95 | 204.97 | 0.105 |
| P3 | 0.130 | 70 | 1.0 | 10.00 | 0.95 | 204.97 | 0.070 |
| P4 | 0.289 | 80 | 1.0 | 10.00 | 0.95 | 204.97 | 0.156 |
| | | | | | | | |
| I35 | 0.962 | 180 | 0.3 | 11.00 | 0.51 | 196.82 | 0.267 |
| I31+I32+I35 | 11.160 | 1170 | 1.0 | 20.00 | 0.51 | 146.82 | 2.307 |
| I37 | 2.484 | 495 | 0.6 | 14.00 | 0.51 | 176.24 | 0.617 |
| I36 | 0.348 | 185 | 0.3 | 11.00 | 0.95 | 196.82 | 0.181 |
| I38 | 3.130 | 960 | 0.9 | 18.00 | 0.51 | 155.31 | 0.685 |
| I39A | 0.333 | 250 | 1.0 | 10.00 | 0.95 | 204.97 | 0.180 |
| I39B | 0.189 | 150 | 1.0 | 10.00 | 0.95 | 204.97 | 0.102 |
| I40 | 0.372 | 360 | 0.5 | 13.00 | 0.51 | 182.54 | 0.096 |
| I38+I40 | 3.502 | 960 | 0.9 | 18.00 | 0.51 | 155.31 | 0.766 |
| | | | | | | | |
| I41 | 6.606 | 1156 | 1.0 | 20.00 | 0.51 | 146.82 | 1.366 |
| I42 | 6.759 | 1100 | 0.9 | 20.00 | 0.51 | 146.82 | 1.398 |
| I43 | 0.128 | 90 | 1.0 | 10.00 | 0.95 | 204.97 | 0.069 |
| I44 | 0.594 | 140 | 0.2 | 11.00 | 0.51 | 196.82 | 0.165 |
| I44+I42 | 7.353 | 1115 | 0.9 | 20.00 | 0.51 | 146.82 | 1.520 |
| I45 | 3.449 | 780 | 0.8 | 17.00 | 0.51 | 160.00 | 0.777 |
| I46 | 0.403 | 255 | 0.4 | 12.00 | 0.95 | 189.37 | 0.201 |
| I47 | 0.276 | 140 | 0.2 | 11.00 | 0.51 | 196.82 | 0.077 |
| I48 | 0.335 | 230 | 0.3 | 12.00 | 0.95 | 189.37 | 0.167 |
| | | | | | | | |
| MA1 | 0.294 | 110 | 1.0 | 10.00 | 0.95 | 204.97 | 0.159 |
| MA2 | 0.184 | 50 | 1.0 | 10.00 | 0.95 | 204.97 | 0.100 |
| MA3 | 0.168 | 40 | 1.0 | 10.00 | 0.95 | 204.97 | 0.091 |
| MA4 | 0.265 | 110 | 1.0 | 10.00 | 0.95 | 204.97 | 0.143 |
| MA5 | 0.453 | 200 | 1.0 | 11.00 | 0.80 | 196.82 | 0.198 |
| MA6 | 1.424 | 200 | 1.0 | 11.00 | 0.51 | 196.82 | 0.395 |
| MA7 | 1.376 | 170 | 1.0 | 11.00 | 0.51 | 196.82 | 0.381 |
| | | | | | | | |
| I49 | 2.503 | 520 | 0.6 | 14.00 | 0.51 | 176.24 | 0.621 |
| I50 | 2.008 | 520 | 0.6 | 14.00 | 0.51 | 176.24 | 0.498 |
| I52 | 0.194 | 150 | 0.2 | 11.00 | 0.95 | 196.82 | 0.101 |
| I53 | 1.710 | 245 | 0.3 | 12.00 | 0.51 | 189.37 | 0.456 |

1

**CHANGE ORDER #1 REVISIONS**

RUNOFF COEFFICIENT CHANGED FROM 0.51 TO 0.73 FOR D.A. I14

RUNOFF COEFFICIENT CHANGED FROM 0.51 TO 0.65 FOR COMPOSITE AREA I10+I11+I14 +I15

REVISIONS ARE SHOWN CLOUDED AND MARKED WITH A 1.

STATE OF TEXAS · K. STEPHEN BONNETTE · 60928 · REGISTERED PROFESSIONAL ENGINEER

K. STEPHEN BONNETTE, P.E. 7/4/2001 DATE

555 EAST RAMSEY SAN ANTONIO TEXAS 78216
PHONE (210)375-9000
FAX (210)375-9010
PAPE-DAWSON ENGINEERS
CIVIL & ENVIRONMENTAL

STATE OF TEXAS · K. STEPHEN BONNETTE · 60928 · REGISTERED PROFESSIONAL ENGINEER

K. STEPHEN BONNETTE, P.E. 9/20/00 DATE

© 2000 Texas Department of Transportation

LOOP 1604
RUNOFF
COMPUTATION SHEET

| DN: | | | | | PROJECT NO. | | |
|---|---|---|---|---|---|---|---|
| CK DN: | | | | | NH 2000 (704), etc. | | |
| DW: | CONTROL | SECTION | JOB | DIST. | STATE | COUNTY | HIGHWAY NO. | SHEET NO. |
| CK DW: | 2452 | 01 | 036 etc. | SAT | TX | BEXAR | LOOP 1604 | 451A |

Plotted on: 07/02/01

Design Filename: j:\3941\16\change order\design\civil\plansheets\433716runoff.dgn

Plotted on: 05/14/02

# RUNOFF COMPUTATION SHEET

| DRAINAGE AREA | AREA (HA) | REACH (M) | VEL. (M/S) | TC (min) | RUNOFF C(10) | INTENSITY (I10) mm/hr | Q10 CMS |
|---|---|---|---|---|---|---|---|
| I1 | 1.762 | 495 | 0.6 | 14.00 | 0.51 | 176.24 | 0.437 |
| I2 | 2.530 | 780 | 0.8 | 17.00 | 0.51 | 160.00 | 0.570 |
| I3 | 1.010 | 315 | 0.4 | 12.00 | 0.51 | 189.37 | 0.269 |
| I4 | 0.365 | 130 | 0.2 | 11.00 | 0.51 | 196.82 | 0.101 |
| I5 | 0.577 | 140 | 0.2 | 11.00 | 0.51 | 196.82 | 0.160 |
| I5A | 0.080 | 65 | 0.3 | 10.00 | 0.51 | 204.97 | 0.023 |
| I5+I5A | 0.657 | 220 | 0.3 | 12.00 | 0.51 | 189.37 | 0.175 |
| I5+I5A+I3 | 1.667 | 300 | 0.4 | 12.00 | 0.51 | 189.37 | 0.445 |
| I6 | 1.721 | 395 | 0.5 | 13.00 | 0.51 | 182.54 | 0.442 |
| I4+I6 | 2.086 | 420 | 0.5 | 13.00 | 0.51 | 182.54 | 0.536 |
| I7 | 2.489 | 330 | 0.4 | 13.00 | 0.51 | 182.54 | 0.640 |
| I5+I5A+I3+I7 | 4.156 | 660 | 0.7 | 16.00 | 0.51 | 165.03 | 0.966 |
| I8 | 0.327 | 110 | 1.0 | 10.00 | 0.90 | 204.97 | 0.168 |
| I9 | 0.143 | 60 | 0.3 | 10.00 | 0.51 | 204.97 | 0.041 |
| I8+I9 | 0.470 | 165 | 0.3 | 11.00 | 0.51 | 196.82 | 0.130 |
| | | | | | | | |
| C1 | 0.582 | 70 | 1.0 | 10.00 | 0.95 | 204.97 | 0.315 |
| C2 | 0.581 | 80 | 1.0 | 10.00 | 0.95 | 204.97 | 0.314 |
| C3 | 0.098 | 55 | 1.0 | 10.00 | 0.95 | 204.97 | 0.053 |
| C4 | 0.095 | 60 | 1.0 | 10.00 | 0.95 | 204.97 | 0.051 |
| C5 | 0.090 | 50 | 1.0 | 10.00 | 0.95 | 204.97 | 0.049 |
| C6 | 0.056 | 60 | 1.0 | 10.00 | 0.95 | 204.97 | 0.030 |
| C7 | 0.051 | 50 | 1.0 | 10.00 | 0.95 | 204.97 | 0.028 |
| C8 | 0.126 | 75 | 1.0 | 10.00 | 0.95 | 204.97 | 0.068 |
| C9 | 0.088 | 55 | 1.0 | 10.00 | 0.95 | 204.97 | 0.048 |
| C10 | 0.083 | 50 | 1.0 | 10.00 | 0.95 | 204.97 | 0.045 |
| C11 | 0.020 | 28 | 1.0 | 10.00 | 0.95 | 204.97 | 0.011 |
| C12 | 0.070 | 20 | 1.0 | 10.00 | 0.95 | 204.97 | 0.038 |
| C13 | 0.148 | 70 | 1.0 | 10.00 | 0.95 | 204.97 | 0.080 |
| C14 | 0.087 | 55 | 1.0 | 10.00 | 0.95 | 204.97 | 0.047 |
| C15 | 0.088 | 65 | 1.0 | 10.00 | 0.95 | 204.97 | 0.048 |
| | | | | | | | |
| I10 | 3.405 | 1145 | 1.0 | 20.00 | 0.51 | 146.82 | 0.704 |
| I10A | 0.638 | 140 | 0.2 | 12.00 | 0.80 | 189.37 | 0.268 |
| I10B | 0.195 | 105 | 0.2 | 11.00 | 0.95 | 196.82 | 0.101 |
| I4 | 0.980 | 100 | 0.2 | 11.00 | 0.57 | 196.82 | 0.305 |
| I11 | 3.120 | 625 | 0.7 | 15.00 | 0.51 | 170.42 | 0.749 |
| I12 | 2.806 | 585 | 0.7 | 15.00 | 0.51 | 170.42 | 0.673 |
| I12A | 0.351 | 280 | 0.4 | 12.00 | 0.95 | 189.37 | 0.175 |
| I12B | 1.289 | 320 | 0.4 | 12.00 | 0.51 | 189.37 | 0.344 |
| I12+I12B | 4.095 | 860 | 0.8 | 17.00 | 0.51 | 160.00 | 0.923 |
| I12C | 3.052 | 390 | 0.5 | 13.00 | 0.51 | 182.54 | 0.785 |
| I12D | 1.104 | 200 | 0.3 | 11.00 | 0.51 | 196.82 | 0.306 |
| I12E | 2.314 | 450 | 0.5 | 14.00 | 0.51 | 176.24 | 0.574 |
| I12E+I12D | 3.418 | 550 | 0.6 | 15.00 | 0.51 | 170.42 | 0.820 |
| I12A+I12E+I12D+I12C | 6.821 | 795 | 0.8 | 17.00 | 0.51 | 160.00 | 1.537 |
| I13 | 0.221 | 160 | 0.3 | 11.00 | 0.95 | 204.97 | 0.167 |
| I14 | 13.343 | 630 | 0.7 | 15.00 | 0.73 | 170.42 | 4.611 |
| I15 | 1.511 | 665 | 0.7 | 16.00 | 0.51 | 165.03 | 0.351 |
| I10+I15 | 4.916 | 1805 | 1.2 | 26.00 | 0.51 | 126.63 | 0.877 |
| I10+I11+I14+I15 | 21.379 | 2140 | 1.8 | 29.00 | 0.65 | 118.71 | 4.582 |
| I16 | 6.189 | 800 | 0.8 | 17.00 | 0.51 | 160.00 | 1.395 |
| I17 | 8.360 | 550 | 0.6 | 15.00 | 0.51 | 170.42 | 2.007 |
| I18 | 2.497 | 350 | 0.4 | 13.00 | 0.51 | 182.54 | 0.642 |
| I16+I18 | 8.686 | 800 | 0.8 | 17.00 | 0.51 | 160.00 | 1.957 |
| I19 | 3.250 | 350 | 0.4 | 13.00 | 0.51 | 182.54 | 0.836 |
| I17+I19 | 11.610 | 550 | 0.6 | 15.00 | 0.51 | 170.42 | 2.787 |
| I20 | 5.131 | 1130 | 0.9 | 20.00 | 0.51 | 146.82 | 1.061 |
| I20A | 0.212 | 100 | 1.0 | 10.00 | 0.51 | 204.97 | 0.061 |
| I21 | 0.570 | 260 | 0.4 | 12.00 | 0.51 | 189.37 | 0.152 |
| I20A+I21 | 0.782 | 340 | 0.4 | 13.00 | 0.51 | 182.54 | 0.201 |
| | | | | | | | |
| W1 | 0.359 | 160 | 1.0 | 10.00 | 0.95 | 204.97 | 0.194 |
| W2 | 0.332 | 75 | 1.0 | 10.00 | 0.95 | 204.97 | 0.180 |
| W3 | 0.262 | 90 | 1.0 | 10.00 | 0.95 | 204.97 | 0.142 |
| W4 | 0.346 | 230 | 1.0 | 10.00 | 0.95 | 204.97 | 0.187 |
| W5 | 1.844 | 230 | 0.3 | 12.00 | 0.51 | 189.37 | 0.492 |
| | | | | | | | |
| I22 | 1.158 | 200 | 0.3 | 11.00 | 0.51 | 196.82 | 0.321 |

REVISED AS PART OF C.O. # 25

| DRAINAGE AREA | AREA (HA) | REACH (M) | VEL. (M/S) | TC (min) | RUNOFF C(10) | INTENSITY (I10) mm/hr | Q10 CMS |
|---|---|---|---|---|---|---|---|
| I22A | 1.447 | 250 | 0.3 | 12.00 | 0.51 | 189.37 | 0.386 |
| I22B | 1.130 | 245 | 0.3 | 12.00 | 0.51 | 189.37 | 0.301 |
| I22C | 0.176 | 110 | 0.2 | 11.00 | 0.51 | 196.82 | 0.049 |
| I22D | 0.109 | 75 | 0.3 | 10.00 | 0.51 | 204.97 | 0.031 |
| I23 | 2.777 | 350 | 0.4 | 13.00 | 0.51 | 182.54 | 0.714 |
| I24 | 0.229 | 110 | 0.2 | 11.00 | 0.95 | 196.82 | 0.119 |
| I25 | 3.966 | 970 | 0.9 | 18.00 | 0.51 | 155.31 | 0.867 |
| I26 | 0.268 | 155 | 0.3 | 10.00 | 0.95 | 204.97 | 0.145 |
| I27 | 1.346 | 360 | 0.5 | 13.00 | 0.51 | 182.54 | 0.346 |
| | | | | | | | |
| MI1 | 0.142 | 90 | 1.0 | 10.00 | 0.95 | 204.97 | 0.077 |
| MI2 | 0.170 | 130 | 1.0 | 10.00 | 0.95 | 204.97 | 0.092 |
| MI3 | 0.268 | 110 | 1.0 | 10.00 | 0.95 | 204.97 | 0.145 |
| MI4 | 0.123 | 65 | 1.0 | 10.00 | 0.95 | 204.97 | 0.067 |
| MI5 | 0.398 | 120 | 1.0 | 10.00 | 0.95 | 204.97 | 0.215 |
| MI6 | 0.065 | 50 | 1.0 | 10.00 | 0.95 | 204.97 | 0.035 |
| | | | | | | | |
| I28 | 2.698 | 380 | 0.5 | 13.00 | 0.51 | 182.54 | 0.694 |
| I28+I25 | 6.664 | 1290 | 1.0 | 21.00 | 0.51 | 142.95 | 1.342 |
| I29 | 0.188 | 140 | 0.2 | 11.00 | 0.95 | 196.82 | 0.098 |
| I30 | 0.138 | 85 | 1.0 | 10.00 | 0.51 | 204.97 | 0.040 |
| I31 | 6.941 | 950 | 0.9 | 18.00 | 0.51 | 155.31 | 1.518 |
| I32 | 3.257 | 385 | 0.5 | 13.00 | 0.51 | 182.54 | 0.837 |
| I31+I32 | 10.198 | 950 | 0.9 | 18.00 | 0.51 | 155.31 | 2.231 |
| I33 | 1.902 | 280 | 0.4 | 12.00 | 0.51 | 189.37 | 0.507 |
| I34 | 0.536 | 130 | 0.2 | 11.00 | 0.51 | 196.82 | 0.149 |
| I33+I34 | 2.438 | 340 | 0.4 | 13.00 | 0.51 | 182.54 | 0.627 |
| | | | | | | | |
| P1 | 0.054 | 30 | 1.0 | 10.00 | 0.95 | 204.97 | 0.029 |
| P2 | 0.195 | 110 | 1.0 | 10.00 | 0.95 | 204.97 | 0.105 |
| P3 | 0.130 | 70 | 1.0 | 10.00 | 0.95 | 204.97 | 0.070 |
| P4 | 0.289 | 80 | 1.0 | 10.00 | 0.95 | 204.97 | 0.156 |
| | | | | | | | |
| I35 | 0.962 | 180 | 0.3 | 11.00 | 0.51 | 196.82 | 0.267 |
| I31+I32+I35 | 11.160 | 1170 | 1.0 | 20.00 | 0.51 | 146.82 | 2.307 |
| I37 | 2.484 | 495 | 0.6 | 14.00 | 0.51 | 176.24 | 0.617 |
| I36 | 0.348 | 185 | 0.3 | 11.00 | 0.95 | 196.82 | 0.181 |
| I38 | 3.130 | 960 | 0.9 | 18.00 | 0.51 | 155.31 | 0.685 |
| I39A | 0.333 | 250 | 1.0 | 10.00 | 0.95 | 204.97 | 0.180 |
| I39B | 0.189 | 150 | 1.0 | 10.00 | 0.95 | 204.97 | 0.102 |
| I40 | 0.372 | 360 | 0.5 | 13.00 | 0.51 | 182.54 | 0.096 |
| I38+I40 | 3.502 | 960 | 0.9 | 18.00 | 0.51 | 155.31 | 0.766 |
| | | | | | | | |
| I41 | 6.606 | 1156 | 1.0 | 20.00 | 0.51 | 146.82 | 1.366 |
| I42 | 6.759 | 1100 | 0.9 | 20.00 | 0.51 | 146.82 | 1.398 |
| I43 | 0.128 | 90 | 1.0 | 10.00 | 0.95 | 204.97 | 0.069 |
| I44 | 0.594 | 140 | 0.2 | 11.00 | 0.51 | 196.82 | 0.165 |
| I44+I42 | 7.353 | 1115 | 0.9 | 20.00 | 0.51 | 146.82 | 1.520 |
| I45 | 3.449 | 780 | 0.8 | 17.00 | 0.51 | 160.00 | 0.777 |
| I46 | 0.403 | 255 | 0.4 | 12.00 | 0.95 | 189.37 | 0.201 |
| I47 | 0.276 | 140 | 0.2 | 11.00 | 0.51 | 196.82 | 0.077 |
| I48 | 0.335 | 230 | 0.3 | 12.00 | 0.95 | 189.37 | 0.167 |
| | | | | | | | |
| MA1 | 0.294 | 110 | 1.0 | 10.00 | 0.95 | 204.97 | 0.159 |
| MA2 | 0.184 | 50 | 1.0 | 10.00 | 0.95 | 204.97 | 0.100 |
| MA3 | 0.168 | 40 | 1.0 | 10.00 | 0.95 | 204.97 | 0.091 |
| MA4 | 0.265 | 110 | 1.0 | 10.00 | 0.95 | 204.97 | 0.143 |
| MA5 | 0.453 | 200 | 1.0 | 11.00 | 0.80 | 196.82 | 0.198 |
| MA6 | 1.424 | 200 | 1.0 | 11.00 | 0.51 | 196.82 | 0.395 |
| MA7 | 1.376 | 170 | 1.0 | 11.00 | 0.51 | 196.82 | 0.381 |
| | | | | | | | |
| I49 | 2.503 | 520 | 0.6 | 14.00 | 0.51 | 176.24 | 0.621 |
| I50 | 2.008 | 520 | 0.6 | 14.00 | 0.51 | 176.24 | 0.498 |
| I52 | 0.194 | 150 | 0.2 | 11.00 | 0.95 | 196.82 | 0.101 |
| I53 | 1.710 | 245 | 0.3 | 12.00 | 0.51 | 189.37 | 0.456 |

| DRAINAGE AREA | AREA (HA) | REACH (M) | VEL. (M/S) | TC (min) | RUNOFF | INTENSITY (I10) mm/hr | Q10 CMS |
|---|---|---|---|---|---|---|---|
| C.O. 11 | | WESTWOOD LOOP | | | | | |
| I5B | 0.165 | 180 | 1.0 | 10.00 | 0.95 | 204.97 | 0.089 |
| I5C | 0.165 | 180 | 1.0 | 10.00 | 0.95 | 204.97 | 0.089 |
| | | | | | | | |
| C.O. 11 | | WESTWOOD VISTA | | | | | |
| I8A | 0.114 | 60 | 1.0 | 10.00 | 0.95 | 204.97 | 0.062 |

| DRAINAGE AREA | AREA (HA) | REACH (M) | VEL. (M/S) | TC (min) | RUNOFF | INTENSITY (I10) mm/hr | Q10 CMS |
|---|---|---|---|---|---|---|---|
| C.O. # 13 | | DRIVEWAY 8A | | | | | |
| I12BA | 0.500 | 65 | 1.0 | 10.00 | 0.51 | 204.97 | 0.145 |

| DRAINAGE AREA | AREA (HA) | REACH (M) | VEL. (M/S) | TC (min) | RUNOFF | INTENSITY (I10) mm/hr | Q10 CMS |
|---|---|---|---|---|---|---|---|
| C.O.# 15 | | HEB DRIVEWAYS 5A, 5B AND 5C | | | | | |
| DRV5B | 0.175 | 200 | 1.0 | 10.00 | 0.40 | 204.97 | 0.040 |
| DRV5C | 0.049 | 70 | 1.0 | 10.00 | 0.40 | 204.97 | 0.011 |
| I13 + DRV5B | 0.399 | 200 | 1.0 | 10.00 | 0.71 | 204.97 | 0.161 |
| I13 + DRV5B + DRV5C | 0.448 | 238 | 1.0 | 10.00 | 0.68 | 204.97 | 0.173 |
| I13 | 0.224 | 120 | 1.0 | 10.00 | 0.95 | 204.97 | 0.121 |
| DRV5A | 0.101 | 111 | 1.0 | 10.00 | 0.40 | 204.97 | 0.230 |

CHANGE ORDER NO. 15

CHANGE ORDER NO 11

- REVISED RUNOFF COMPUTATIONS

STATE OF TEXAS
JENNIFER L. MOCZYGEMBA
84734
REGISTERED
PROFESSIONAL ENGINEER

Jennifer L. Moczygemba, P.E. 84734 — P.E. 5-29-02 Date

For CO # 25

© 2001 Texas Department of Transportation

**LOOP 1604**
**RUNOFF**
**COMPUTATION SHEET**

| DN: | | | | | PROJECT NO. | | |
|---|---|---|---|---|---|---|---|
| CK DN: | | | | | NH 2000 (704), etc. | | |
| DW: | CONTROL | SECTION | JOB | DIST. | STATE | COUNTY | HIGHWAY NO. | SHEET NO. |
| CK DW: | 2452 | 01 | 036 | SAT | TX | BEXAR | LOOP 1604 | 451B |

etc.] 05-14-02

Design Filename: T:\AO\Design\lp1604fm471-90\chgorder*files\pd*Jul31\sht*451A*C025.dgn

Plotted on: %DATE%

Design Filename: $FILE$

# RUNOFF COMPUTATION SHEET

| DRAINAGE AREA | AREA (HA) | REACH (M) | VEL. (M/S) | TC (min) | RUNOFF C(10) | INTENSITY (110) mm/hr | Q10 CMS |
|---|---|---|---|---|---|---|---|
| I1 | 1.762 | 495 | 0.6 | 14.00 | 0.51 | 176.24 | 0.437 |
| I2 | 2.530 | 780 | 0.8 | 17.00 | 0.51 | 160.00 | 0.570 |
| I3 | 1.010 | 315 | 0.4 | 12.00 | 0.51 | 189.37 | 0.269 |
| I4 | 0.365 | 130 | 0.2 | 11.00 | 0.51 | 196.82 | 0.101 |
| I5 | 0.577 | 140 | 0.2 | 11.00 | 0.51 | 196.82 | 0.160 |
| I5A | 0.080 | 65 | 0.3 | 10.00 | 0.51 | 204.97 | 0.023 |
| I5+I5A | 0.657 | 220 | 0.3 | 12.00 | 0.51 | 189.37 | 0.175 |
| I5+I5A+I3 | 1.667 | 300 | 0.4 | 12.00 | 0.51 | 189.37 | 0.445 |
| I6 | 1.721 | 395 | 0.5 | 13.00 | 0.51 | 182.54 | 0.442 |
| I4+I6 | 2.086 | 420 | 0.5 | 13.00 | 0.51 | 182.54 | 0.536 |
| I7 | 2.489 | 330 | 0.4 | 13.00 | 0.51 | 182.54 | 0.640 |
| I5+I5A+I3+I7 | 4.156 | 660 | 0.7 | 16.00 | 0.51 | 165.03 | 0.966 |
| I8 | 0.321 | 110 | 1.0 | 10.00 | 0.90 | 204.97 | 0.168 |
| I9 | 0.145 | 60 | 0.3 | 10.00 | 0.51 | 204.97 | 0.041 |
| I8+I9 | 0.470 | 165 | 0.3 | 11.00 | 0.51 | 196.82 | 0.130 |
| C1 | 0.582 | 70 | 1.0 | 10.00 | 0.95 | 204.97 | 0.315 |
| C2 | 0.581 | 80 | 1.0 | 10.00 | 0.95 | 204.97 | 0.314 |
| C3 | 0.098 | 55 | 1.0 | 10.00 | 0.95 | 204.97 | 0.053 |
| C4 | 0.095 | 60 | 1.0 | 10.00 | 0.95 | 204.97 | 0.051 |
| C5 | 0.090 | 50 | 1.0 | 10.00 | 0.95 | 204.97 | 0.049 |
| C6 | 0.056 | 60 | 1.0 | 10.00 | 0.95 | 204.97 | 0.030 |
| C7 | 0.051 | 50 | 1.0 | 10.00 | 0.95 | 204.97 | 0.028 |
| C8 | 0.126 | 75 | 1.0 | 10.00 | 0.95 | 204.97 | 0.068 |
| C9 | 0.088 | 55 | 1.0 | 10.00 | 0.95 | 204.97 | 0.048 |
| C10 | 0.083 | 50 | 1.0 | 10.00 | 0.95 | 204.97 | 0.045 |
| C11 | 0.020 | 28 | 1.0 | 10.00 | 0.95 | 204.97 | 0.011 |
| C12 | 0.070 | 20 | 1.0 | 10.00 | 0.95 | 204.97 | 0.038 |
| C13 | 0.148 | 70 | 1.0 | 10.00 | 0.95 | 204.97 | 0.080 |
| C14 | 0.087 | 55 | 1.0 | 10.00 | 0.95 | 204.97 | 0.047 |
| C15 | 0.088 | 65 | 1.0 | 10.00 | 0.95 | 204.97 | 0.048 |
| I10 | 3.405 | 1145 | 1.0 | 20.00 | 0.51 | 146.82 | 0.704 |
| I10A | 0.638 | 140 | 0.2 | 12.00 | 0.80 | 189.37 | 0.268 |
| I10B | 0.195 | 105 | 0.2 | 11.00 | 0.95 | 196.82 | 0.101 |
| I4 | 0.980 | 100 | 0.2 | 11.00 | 0.57 | 196.82 | 0.305 |
| I11 | 3.120 | 625 | 0.7 | 15.00 | 0.51 | 170.42 | 0.749 |
| I12 | 2.806 | 585 | 0.7 | 15.00 | 0.51 | 170.42 | 0.673 |
| I12A | 0.351 | 280 | 0.4 | 12.00 | 0.95 | 189.37 | 0.175 |
| I12B | 1.289 | 320 | 0.4 | 12.00 | 0.51 | 189.37 | 0.344 |
| I12+I12B | 4.095 | 860 | 0.8 | 17.00 | 0.51 | 160.00 | 0.923 |
| I12C | 3.052 | 390 | 0.5 | 13.00 | 0.51 | 182.54 | 0.785 |
| I12D | 1.104 | 200 | 0.3 | 11.00 | 0.51 | 196.82 | 0.306 |
| I12E | 2.314 | 450 | 0.5 | 14.00 | 0.51 | 176.24 | 0.574 |
| I12E+I12D | 3.418 | 550 | 0.6 | 15.00 | 0.51 | 170.42 | 0.820 |
| I12A+I12E+I12D+I12C | 6.821 | 795 | 0.8 | 17.00 | 0.51 | 160.00 | 1.537 |
| I13 | 0.224 | 166 | 0.2 | 11.00 | 0.95 | 196.82 | 0.116 |
| I14 | 13.343 | 630 | 0.7 | 15.00 | 0.73 | 170.42 | 4.611 |
| I15 | 1.511 | 665 | 0.7 | 16.00 | 0.51 | 165.03 | 0.351 |
| I10+I15 | 4.916 | 1805 | 1.2 | 26.00 | 0.51 | 126.63 | 0.877 |
| I10+I11+I14+I15 | 21.379 | 2140 | 1.8 | 29.00 | 0.65 | 118.71 | 4.582 |
| I16 | 6.189 | 800 | 0.8 | 17.00 | 0.51 | 160.00 | 1.395 |
| I17 | 8.360 | 550 | 0.6 | 15.00 | 0.51 | 170.42 | 2.007 |
| I18 | 2.497 | 350 | 0.4 | 13.00 | 0.51 | 182.54 | 0.642 |
| I16+I18 | 8.686 | 800 | 0.8 | 17.00 | 0.51 | 160.00 | 1.957 |
| I19 | 3.250 | 350 | 0.4 | 13.00 | 0.51 | 182.54 | 0.836 |
| I17+I19 | 11.610 | 550 | 0.6 | 15.00 | 0.51 | 170.42 | 2.787 |
| I20 | 5.131 | 1130 | 0.9 | 20.00 | 0.51 | 146.82 | 1.061 |
| I20A | 0.212 | 100 | 1.0 | 10.00 | 0.51 | 204.97 | 0.061 |
| I21 | 0.570 | 260 | 0.4 | 12.00 | 0.51 | 189.37 | 0.152 |
| I20A+I21 | 0.782 | 340 | 0.4 | 13.00 | 0.51 | 182.54 | 0.201 |
| W1 | 0.359 | 160 | 1.0 | 10.00 | 0.95 | 204.97 | 0.194 |
| W2 | 0.332 | 75 | 1.0 | 10.00 | 0.95 | 204.97 | 0.180 |
| W3 | 0.262 | 90 | 1.0 | 10.00 | 0.95 | 204.97 | 0.142 |
| W4 | 0.346 | 230 | 1.0 | 10.00 | 0.95 | 204.97 | 0.187 |
| W5 | 1.844 | 230 | 0.3 | 12.00 | 0.51 | 189.37 | 0.492 |
| I22 | 1.158 | 200 | 0.3 | 11.00 | 0.51 | 196.82 | 0.321 |
| I22A | 1.447 | 250 | 0.3 | 12.00 | 0.51 | 189.37 | 0.386 |
| I22B | 1.130 | 245 | 0.3 | 12.00 | 0.51 | 189.37 | 0.301 |
| I22C | 0.176 | 110 | 0.2 | 11.00 | 0.51 | 196.82 | 0.049 |
| I22D | 0.109 | 75 | 0.3 | 10.00 | 0.51 | 204.97 | 0.031 |
| I23 | 2.777 | 350 | 0.4 | 13.00 | 0.51 | 182.54 | 0.714 |
| I24 | 0.229 | 110 | 0.2 | 11.00 | 0.95 | 196.82 | 0.119 |
| I25 | 3.966 | 970 | 0.9 | 18.00 | 0.51 | 155.31 | 0.867 |
| I26 | 0.268 | 155 | 0.3 | 10.00 | 0.95 | 204.97 | 0.145 |
| I27 | 1.346 | 360 | 0.5 | 13.00 | 0.51 | 182.54 | 0.346 |
| MI1 | 0.142 | 90 | 1.0 | 10.00 | 0.95 | 204.97 | 0.077 |
| MI2 | 0.170 | 130 | 1.0 | 10.00 | 0.95 | 204.97 | 0.092 |
| MI3 | 0.268 | 110 | 1.0 | 10.00 | 0.95 | 204.97 | 0.145 |
| MI4 | 0.123 | 65 | 1.0 | 10.00 | 0.95 | 204.97 | 0.067 |
| MI5 | 0.398 | 120 | 1.0 | 10.00 | 0.95 | 204.97 | 0.215 |
| MI6 | 0.065 | 50 | 1.0 | 10.00 | 0.95 | 204.97 | 0.035 |
| I28 | 2.698 | 380 | 0.5 | 13.00 | 0.51 | 182.54 | 0.694 |
| I28+I25 | 6.664 | 1290 | 1.0 | 21.00 | 0.51 | 142.95 | 1.342 |
| I29 | 0.188 | 140 | 0.2 | 11.00 | 0.95 | 196.82 | 0.098 |
| I30 | 0.138 | 85 | 1.0 | 10.00 | 0.51 | 204.97 | 0.040 |
| I31 | 6.941 | 950 | 0.9 | 18.00 | 0.51 | 155.31 | 1.518 |
| I32 | 3.257 | 385 | 0.5 | 13.00 | 0.51 | 182.54 | 0.837 |
| I31+I32 | 10.198 | 950 | 0.9 | 18.00 | 0.51 | 155.31 | 2.231 |
| I33 | 1.902 | 280 | 0.4 | 12.00 | 0.51 | 189.37 | 0.507 |
| I34 | 0.536 | 130 | 0.2 | 11.00 | 0.51 | 196.82 | 0.149 |
| I33+I34 | 2.438 | 340 | 0.4 | 13.00 | 0.51 | 182.54 | 0.627 |
| P1 | 0.054 | 30 | 1.0 | 10.00 | 0.95 | 204.97 | 0.029 |
| P2 | 0.195 | 110 | 1.0 | 10.00 | 0.95 | 204.97 | 0.105 |
| P3 | 0.130 | 70 | 1.0 | 10.00 | 0.95 | 204.97 | 0.070 |
| P4 | 0.289 | 80 | 1.0 | 10.00 | 0.95 | 204.97 | 0.156 |
| I35 | 0.962 | 180 | 0.3 | 11.00 | 0.51 | 196.82 | 0.267 |
| I31+I32+I35 | 11.160 | 1170 | 1.0 | 20.00 | 0.51 | 146.82 | 2.307 |
| I37 | 2.484 | 495 | 0.6 | 14.00 | 0.51 | 176.24 | 0.617 |
| I36 | 0.348 | 185 | 0.3 | 11.00 | 0.95 | 196.82 | 0.181 |
| I38 | 3.130 | 960 | 0.9 | 18.00 | 0.51 | 155.31 | 0.685 |
| I39A | 0.333 | 250 | 1.0 | 10.00 | 0.95 | 204.97 | 0.180 |
| I39B | 0.189 | 150 | 1.0 | 10.00 | 0.95 | 204.97 | 0.102 |
| I40 | 0.372 | 360 | 0.5 | 13.00 | 0.51 | 182.54 | 0.096 |
| I38+I40 | 3.502 | 960 | 0.9 | 18.00 | 0.51 | 155.31 | 0.766 |
| I41 | 6.606 | 1156 | 1.0 | 20.00 | 0.51 | 146.82 | 1.366 |
| I42 | 6.759 | 1100 | 0.9 | 20.00 | 0.51 | 146.82 | 1.398 |
| I43 | 0.128 | 90 | 1.0 | 10.00 | 0.95 | 204.97 | 0.069 |
| I44 | 0.594 | 140 | 0.2 | 11.00 | 0.51 | 196.82 | 0.165 |
| I44+I42 | 7.353 | 1115 | 0.9 | 20.00 | 0.51 | 146.82 | 1.520 |
| I45 | 3.449 | 780 | 0.8 | 17.00 | 0.51 | 160.00 | 0.777 |
| I46 | 0.403 | 255 | 0.4 | 12.00 | 0.95 | 189.37 | 0.201 |
| I47 | 0.276 | 140 | 0.2 | 11.00 | 0.51 | 196.82 | 0.077 |
| I48 | 0.335 | 230 | 0.3 | 12.00 | 0.95 | 189.37 | 0.167 |
| MA1 | 0.294 | 110 | 1.0 | 10.00 | 0.95 | 204.97 | 0.159 |
| MA2 | 0.184 | 50 | 1.0 | 10.00 | 0.95 | 204.97 | 0.100 |
| MA3 | 0.168 | 40 | 1.0 | 10.00 | 0.95 | 204.97 | 0.091 |
| MA4 | 0.265 | 110 | 1.0 | 10.00 | 0.95 | 204.97 | 0.143 |
| MA5 | 0.453 | 200 | 1.0 | 11.00 | 0.80 | 196.82 | 0.198 |
| MA6 | 1.424 | 200 | 1.0 | 11.00 | 0.51 | 196.82 | 0.395 |
| MA7 | 1.376 | 170 | 1.0 | 11.00 | 0.51 | 196.82 | 0.381 |
| I49 | 2.503 | 520 | 0.6 | 14.00 | 0.51 | 176.24 | 0.621 |
| I50 | 2.008 | 520 | 0.6 | 14.00 | 0.51 | 176.24 | 0.498 |
| I52 | 0.194 | 150 | 0.2 | 11.00 | 0.95 | 196.82 | 0.101 |
| I53 | 1.710 | 245 | 0.3 | 12.00 | 0.51 | 189.37 | 0.456 |

| DRAINAGE AREA | AREA (HA) | REACH (M) | VEL. (M/S) | TC (min) | RUNOFF | INTENSITY (110) mm/hr | Q10 CMS |
|---|---|---|---|---|---|---|---|
| C.O. 11 | | WESTWOOD LOOP | | | | | |
| 15B | 0.165 | 180 | 1.0 | 10.00 | 0.95 | 204.97 | 0.089 |
| 15C | 0.165 | 180 | 1.0 | 10.00 | 0.95 | 204.97 | 0.089 |
| C.O. 11 | | WESTWOOD VISTA | | | | | |
| 18A | 0.114 | 60 | 1.0 | 10.00 | 0.95 | 204.97 | 0.062 |

| DRAINAGE AREA | AREA (HA) | REACH (M) | VEL. (M/S) | TC (min) | RUNOFF | INTENSITY (110) mm/hr | Q10 CMS |
|---|---|---|---|---|---|---|---|
| C.O. # 25 | | DRIVEWAY 8A | | | | | |
| 12BA | 0.500 | 65 | 1.0 | 10.00 | 0.51 | 204.97 | 0.145 |

| DRAINAGE AREA | AREA (HA) | REACH (M) | VEL. (M/S) | TC (min) | RUNOFF | INTENSITY (110) mm/hr | Q10 CMS |
|---|---|---|---|---|---|---|---|
| C.O. # 25 | | HEB DRIVEWAYS 5A, 5B AND 5C | | | | | |
| DRV5B | 0.175 | 200 | 1.0 | 10.00 | 0.40 | 204.97 | 0.040 |
| DRV5C | 0.049 | 70 | 1.0 | 10.00 | 0.40 | 204.97 | 0.011 |
| I13 + DRV5B | 0.399 | 200 | 1.0 | 10.00 | 0.71 | 204.97 | 0.161 |
| I13 + DRV5B + DRV5C | 0.448 | 238 | 1.0 | 10.00 | 0.68 | 204.97 | 0.173 |
| I13 | 0.224 | 120 | 1.0 | 10.00 | 0.95 | 204.97 | 0.121 |
| DRV5A | 0.101 | 111 | 1.0 | 10.00 | 0.40 | 204.97 | 0.230 |

| DRAINAGE AREA | AREA (HA) | REACH (M) | VEL. (M/S) | TC (min) | RUNOFF | INTENSITY (110) mm/hr | Q10 (CMS) |
|---|---|---|---|---|---|---|---|
| C.O. # 28 | | | | | | | |
| I2A | 0.045 | 70 | 0.4 | 10.0 | 0.95 | 204.97 | 0.024 |
| I5A | 0.080 | 65 | 0.4 | 10.0 | 0.51 | 204.97 | 0.232 |
| I5D | 0.225 | 100 | 1.5 | 10.0 | 0.95 | 204.97 | 0.122 |
| I5 (REVISED) | 0.405 | 125 | 1.5 | 10.0 | 0.95 | 204.97 | 0.219 |
| I8B | 0.068 | 55 | 0.4 | 10.0 | 0.60 | 204.97 | 0.023 |
| I8C | 0.025 | 20 | 0.4 | 10.0 | 0.60 | 204.97 | 0.009 |
| I8D | 0.109 | 210 | 1.5 | 10.0 | 0.75 | 204.97 | 0.047 |

# REFERS TO CHANGES MADE AS PART OF CHANGE ORDER.

CHANGE ORDER NO. 28

STATE OF TEXAS — JEROME D. PAVLISKA — 76075 — REGISTERED PROFESSIONAL ENGINEER

Jerome D. Pavliska P.E. 2-7-07

Jerome D. Pavliska, P.E. — Date

© 2001 Texas Department of Transportation

LOOP 1604
RUNOFF
COMPUTATION SHEET

| DN: | | | | | PROJECT NO. | | |
|---|---|---|---|---|---|---|---|
| CK DN: | | | | | NH 2000 (704), etc. | | |
| DW: | CONTROL | SECTION | JOB | DIST. | COUNTY | HIGHWAY NO. | SHEET NO. |
| CK DW: | 2452 | 01 | 036 | SAT | BEXAR | LOOP 1604 | 451C |

etc.] 01-23-03

# DRAIN PIPE CALCULATIONS

| LINE I.D. | APPERTENANCE (FROM) I.D. | APPERTENANCE (TO) I.D. | DRAINAGE AREA NO. | TOTAL D.A. (HA) | TOTAL (CA) | LENGTH (M) | TIME OF CONCENTRATION - MINUTES: ALONG DRAIN LINE | TIME OF CONCENTRATION - MINUTES: INLET TIME | TIME OF CONCENTRATION - MINUTES: USED IN DESIGN | $I_{10}$ (mm./HR.) | $Q_{10}$ (M 3/S) | DESIGN: DIA (mm) | DESIGN: SLOPE (%) | DESIGN: Du (M) | DESIGN: Vu (M/S) | REMARKS |
|---|---|---|---|---|---|---|---|---|---|---|---|---|---|---|---|---|
| | | | CHANGE ORDER NO .28 | | | | | | | | | | | | | |
| I2A | S.E.T. | OUTLET | I2A | 0.045 | 0.043 | 12 | ✳ 70 / 0.4 / 60 = 2.91 | 2.91 | 10.0 | 204.97 | 0.024 | 450 | 4.05 | 0.069 | 1.83 | RCP, CAP. 0.651 CMS |
| I5 | S.E.T. | D.I. I5A | I5 | 0.405 | 0.385 | 27 | ✳ 125 / 1.5 / 60 = 1.39 | 1.39 | 10.0 | 204.97 | 0.219 | 600 | 1.35 | 0.230 | 2.37 | RCP, CAP. 0.821 CMS |
| I5D | D.I. I5D | OUTLET | I5 & I5D | 0.630 | 0.599 | 30 | ✳ 100 / 1.5 / 60 = 1.11 | 1.11 | 10.0 | 204.97 | 0.341 | 600 | 1.35 | 0.274 | 2.68 | RCP, CAP. 0.821 CMS |
| I5A | S.E.T. | OUTLET | I5, I5D & I5D | 0.710 | 0.641 | 21 | ✳✳✳1.39+(27/2.37/60) +(30/2.68/60)= | 1.76 | 10.0 | 204.97 | 0.365 | 600 | 0.50 | 0.378 | 1.86 | RCP, CAP. 0.509 CMS |
| | | | WESTWOOD LOOP | | | | | | | | | | | | | |
| I5B | C1-5B | C1-5C | I5B | 0.165 | 0.157 | 15 | ✳ 180 / 1.0 / 60 = 3.00 | 3.00 | 10.0 | 204.97 | 0.089 | 600 | 1.60 | 0.067 | 1.82 | RCP, CAP. 0.934 CMS |
| I5C | C1-5C | GRD BRK | I5B & I5C | 0.330 | 0.314 | 16 | 15 / 1.82 / 60 = 0.14 | 3.14 | 10.0 | 204.97 | 0.178 | 600 | 6.65 | 0.067 | 3.81 | RCP, CAP. 0.594 CMS |
| | GRD BRK | OUTLET | I5B & I5C | 0.330 | 0.314 | 32 | 16 / 3.81 / 30 = 0.07 | 3.21 | 10.0 | 204.97 | 0.178 | 600 | 0.765 | 0.220 | 1.82 | RCP, CAP. 0.637 CMS |
| | | | WESTWOOD VISTA | | | | | | | | | | | | | |
| I8 | S.E.T. | JUNCT | I8 | 0.327 | 0.294 | 31 | ✳ 110 / 1.0 / 60 = 1.83 | 1.83 | 10.0 | 204.97 | 0.167 | 600 | 3.66 | 0.152 | 2.80 | RCP, CAP. 1.330 CMS |
| I8A | C1-I8A | JUNCT | I8A | 0.114 | 0.114 | 57 | ✳ 60 / 1.0 / 60 = 1.00 | 1.00 | 10.0 | 204.97 | 0.062 | 450 | 1.20 | 0.133 | 1.52 | RCP, CAP. 0.354 CMS |
| I8 | JUNCT | OUTLET | I8 & I8A | 0.397 | 0.441 | 9 | ✳✳ 1.83+(31 / 2.8 / 60) = 2.01 | 2.01 | 10.0 | 204.97 | 0.226 | 600 | 3.66 | 0.171 | 3.35 | RCP, CAP. 1.330 CMS |
| | | | | | | | | | | | | | | | | CONCRETE RIPRAP @ OUTLET. |

S.E.T. = SAFETY END TREATMENT
CI = CURB INLET
GRD BRK = GRADE BREAK
JUNCT = JUNCTION

✳ DENOTES OVERLAND FLOW
✳✳ DENOTES OVERLAND + PIPE.
✳✳✳ DENOTES OVERLAND + PIPE + OVERLAND + PIPE FLOW.

# CURB INLETS / ARMOR CURB SLOT (ACS)

| INLET: D.A. NO. | INLET: STATION | D.A. HA. | Qa M 3/S | CARRY-OVER M 3/S | TOTAL Qa M 3/S | z | z/n (n=0.015) | s M/M | y M | PONDED WIDTH (y x z) M | o M | $q_L$ M 3/S | Lr =Qa/$q_L$ M | L M | L/Lr M | a/y | Q/Qa | Q =Qa x Qa M 3/S | CARRY-OVER M 3/S | REMARKS |
|---|---|---|---|---|---|---|---|---|---|---|---|---|---|---|---|---|---|---|---|---|
| | WESTWOOD LOOP | | | | | | | | | | | | | | | | | | | |
| I-5B | 7.640 RT., STA. 0+025.000 | 0.165 | 0.089 | - | 0.089 | 105 | 7000 | 0.0500 | 0.0367 | 3.853 | 0.063 | 0.02228 | 3.995 | 6.100 | - | - | - | - | - | TY IV CURB INLET ON GRADE, 100% INTERCEPT |
| I-5C | 7.640 LT., STA. 0+020.287 | 0.165 | 0.089 | - | 0.089 | 50 | 3333 | 0.0350 | 0.052 | 2.600 | 0.063 | 0.02600 | 3.423 | 6.100 | - | - | - | - | - | TY IV CURB INLET ON GRADE, 100% INTERCEPT |
| | WESTWOOD VISTA | | | | | | | | | | | | | | | | | | | |
| I-8A | 7.043 LT., STA. 0+069.200 | 0.114 | 0.062 | - | 0.062 | 38.5 | 2567 | ≠0.00424 | 0.075 | 2.888 | 0.063 | 0.0836 | 0.742 | 3.000 | - | - | - | - | - | TY II CURB INLET IN SAG,. 2:1 + SAFETY FACTOR, 100% INTERCEPT |

≠ ½ OF THE FLATTER APPROACH GUTTER SLOPE WAS USED.

# DROP INLETS

| ID | Type | D.A. ha | Discharge m3 / s | Head Available mm | Head Required mm | Top Elevation | Inlet " H " m | Remorks |
|---|---|---|---|---|---|---|---|---|
| CHANGE ORDER #3 | | BLAZING STAR RV RESORT (DRIVEWAY 19) | | | | | | |
| I5A | 1-TY Y-1 | 0.080 | 0.232 | 300 | 30 | 272.250 | 1.00 | |
| I5D | 1-TY 3 | 0.225 | 0.122 | 300 | 100 | 263.700 | 1.100 | TO HELP DRAIN SAG @ FRONT OF WAL-MART AREA |

CHANGE ORDER # 28

CHANGE ORDER RELATED CHANGES OR ADDENDUMS TO DRAINAGE CALCULATIONS.

STATE OF TEXAS — JEROME D. PAVLISKA — 76075 — REGISTERED PROFESSIONAL ENGINEER

Jerome D. Pavliska P.E. 2-7-03
Jerome D. Pavliska, P.E. Date

CHANGE ORDER 28

NEW SHEET

© 2001 Texas Department of Transportation

## STORM DRAIN HYDRAULIC DATA SHEET

| FED. RD. DIV. NO. | FEDERAL AID PROJECT NO. | | SHEET NO. |
|---|---|---|---|
| 6 | NH 2000 (704), etc. | | 451D |
| STATE | DIST. | COUNTY | |
| TEXAS | SAT | BEXAR | |
| CONT. | SECT. | JOB | HIGHWAY NO. |
| 2452 | 01 | 036, etc. | LP 1604 |

01-23-03

LEVELS DISPLAYED $DATE$ $FILE$

# STORM DRAIN COMPUTATION SHEET

| LINE NO. | FROM | TO | DA NO. | TOTAL DA ha | TOTAL CA | LENGTH M | TIME OF CONCENTRATION (MINUTES) ALONG SEWER LINE | INLET TIME | USED IN DESIGN | I mm/HR | Q CMS | DESIGN STR.SIZE mm | SLOPE M/M | CAP. CMS | VEL. M/SEC | FREQ. YR | REMARKS |
|---|---|---|---|---|---|---|---|---|---|---|---|---|---|---|---|---|---|
| 11 | DI-11 | CULVERT #1 | 11 | 1.762 | 0.893 | 62.800 | 0.58 | 14 | 14 | 176.24 | 0.437 | 600 | 0.0060 | 0.496 | 1.93 | 10 | |
| 12 | DI-12 | OUTFALL | 12 | 2.530 | 1.283 | 108.100 | 1.00 | 17 | 17 | 160.00 | 0.570 | 600 | 0.0100 | 0.641 | 2.49 | 10 | |
| 13 | DI-13 | OUTFALL | 15•15A•13 | 1.667 | 0.845 | 107.900 | 1.00 | 12 | 12 | 189.37 | 0.445 | 600 | 0.0050 | 0.453 | 1.80 | 10 | |
| 14 | DI-14 | OUTFALL | 14 | 0.365 | 0.185 | 36.700 | 0.34 | 11 | 11 | 196.82 | 0.101 | 600 | 0.0045 | 0.430 | 1.18 | 10 | |
| 15A | DI-15A | OUTFALL | 15•15A | 0.657 | 0.333 | 18.000 | 0.17 | 12 | 12 | 189.37 | 0.175 | 600 | 0.0050 | 0.453 | 1.43 | 10 | |
| 16 | - | OUTFALL | 14•16 | 2.086 | 1.058 | 20.100 | 0.19 | 13 | 13 | 182.54 | 0.536 | 600 | 0.0100 | 0.641 | 1.91 | 10 | |
| 17 | - | OUTFALL | 15•15A•13•17 | 4.156 | 2.107 | 19.500 | 0.18 | 16 | 16 | 165.03 | 0.966 | 750 | 0.0100 | 1.161 | 2.20 | 10 | |
| 14 | - | OUTFALL | 14 | 0.980 | 0.559 | 33.891 | 0.34 | 11 | 11 | 196.82 | 0.306 | 2-450 | 0.0035 | 0.381 | 1.65 | 10 | |
| 18 | - | OUTFALL | 18 | 0.327 | 0.167 | 35.105 | 0.12 | 11 | 11 | 196.82 | 0.091 | 600 | 0.0366 | 1.330 | 4.98 | 10 | |
| 110 | DI-110 | OUTFALL | 115•110 | 4.916 | 2.492 | 28.000 | 0.26 | 26 | 26 | 126.63 | 0.877 | 900 | 0.0040 | 1.294 | 2.11 | 10 | |
| 10 | CI-10A | CI-10B | 110A | 0.638 | 0.510 | 78.915 | 0.75 | 10 | 10 | 204.97 | 0.290 | 600 | 0.0050 | 0.490 | 1.75 | 10 | |
| 112B | DI-112B | OUTFALL | 112B | 1.289 | 0.654 | 91.400 | 0.85 | 12 | 12 | 189.37 | 0.344 | 600 | 0.0050 | 0.453 | 1.70 | 10 | |
| 114 | DI-114 | OUTFALL | 114 | 13.343 | 6.805 | 48.400 | 0.45 | 15 | 15 | 170.42 | 3.221 | 1.5 x 0.9 | 0.0045 | 3.370 | 2.43 | 10 | SBC |
| 115 | - | OUTFALL | 115 | 1.511 | 0.766 | 22.700 | 0.21 | 16 | 16 | 165.03 | 0.351 | 600 | 0.0049 | 0.448 | 1.25 | 10 | |
| 116 | DI-116 | OUTFALL | 118•116 | 8.686 | 4.404 | 36.000 | 0.33 | 17 | 17 | 160.00 | 1.957 | 3 - 750 | 0.0045 | 2.337 | 1.99 | 10 | |
| 125 | DI-125 | MH-125 | 125 | 3.966 | 2.011 | 73.900 | 0.68 | 18 | 18 | 155.31 | 0.867 | 1050 | 0.0035 | 1.685 | 1.93 | 10 | |
| | MH-125 | OUTFALL | 125•MII•MI4 | 4.231 | 2.263 | 35.500 | 19.01 | 10 | 19 | 150.93 | 0.949 | 1050 | 0.0035 | 1.685 | 2.09 | 10 | |
| 126 | CI-126 | OUTFALL | 126 | 0.268 | 0.255 | 21.400 | 0.20 | 10 | 10 | 204.97 | 0.145 | 600 | 0.0050 | 0.453 | 1.34 | 10 | |
| 120A | - | OUTFALL | 120A | 0.212 | 0.108 | 22.669 | 0.33 | 10 | 10 | 204.97 | 0.061 | 600 | 0.0050 | 0.491 | 1.14 | 10 | |
| 127 | - | OUTFALL | 127 | 1.346 | 0.686 | 62.155 | 0.32 | 13 | 13 | 182.54 | 0.348 | 600 | 0.0144 | 0.833 | 3.27 | 10 | |
| 130 | - | OUTFALL | 130 | 0.138 | 0.070 | 25.581 | 0.46 | 10 | 10 | 204.97 | 0.040 | 600 | 0.0042 | 0.449 | 0.93 | 10 | |
| 128 | DI-128 | MH-128 | 128•125 | 6.664 | 3.379 | 30.800 | 2.85 | 21 | 21 | 142.95 | 1.342 | 1050 | 0.0030 | 1.560 | 2.00 | 10 | |
| | MH-128 | OUTFALL | 128•125 | 6.664 | 3.379 | 56.200 | 21.47 | | 21 | 142.95 | 1.342 | 1050 | 0.0030 | 1.560 | 2.00 | 10 | |
| 131 | DI-131 | MH-UI | 132•131 | 10.198 | 5.170 | 96.100 | 0.89 | 18 | 18 | 155.31 | 2.231 | 2 - 900 | 0.0040 | 2.389 | 2.11 | 10 | |
| | MH-UI | OUTFALL | 132•131•P2 | 10.393 | 5.355 | 18.400 | 18.14 | | 18 | 155.31 | 2.310 | 2 - 900 | 0.0040 | 2.389 | 2.24 | 10 | |
| 132 | DI-132 | OUTFALL | 132 | 3.257 | 1.651 | 21.600 | 0.20 | 13 | 13 | 182.54 | 0.837 | 2 - 600 | 0.0050 | 0.453 | 1.78 | 10 | |
| 135 | DI-135 | MH-135 | 132•131•135 | 11.160 | 5.658 | 14.500 | 0.13 | 20 | 20 | 146.82 | 2.307 | 1200 | 0.0040 | 2.572 | 2.54 | 10 | |
| | MH-135 | OUTFALL | 132•131•135 | 11.160 | 5.658 | 43.900 | 20.29 | | 20 | 146.82 | 2.307 | 1200 | 0.0040 | 2.572 | 2.54 | 10 | |
| 136 | CI-136 | OUTFALL | 136 | 0.348 | 0.331 | 20.500 | 0.19 | 11 | 11 | 196.82 | 0.181 | 600 | 0.0050 | 0.453 | 1.43 | 10 | |
| 137 | - | CULVERT #17 | 137 | 2.484 | 1.259 | 19.600 | 0.18 | 14 | 14 | 176.24 | 0.617 | 750 | 0.0050 | 0.821 | 1.97 | 10 | |
| 140 | DI-140 | OUTFALL | 140 | 0.372 | 0.189 | 24.300 | 0.23 | 13 | 13 | 182.54 | 0.096 | 600 | 0.0045 | 0.430 | 1.18 | 10 | |
| 148 | CI-148 | OUTFALL | 148 | 0.335 | 0.318 | 18.500 | 0.17 | 12 | 12 | 189.37 | 0.167 | 600 | 0.0050 | 0.453 | 1.39 | 10 | |
| 153 | - | OUTFALL | 153 | 1.710 | 0.867 | 74.100 | 0.69 | 12 | 12 | 189.37 | 0.456 | 2 - 450 | 0.0021 | 0.269 | 1.45 | 10 | |
| T | CI-T1 | CI-T2 | MA5 | 0.453 | 0.362 | 18.000 | 0.17 | 10 | 10 | 204.97 | 0.206 | 600 | 0.0030 | 0.380 | 1.33 | 10 | |
| | CI-T2 | CI-T3 | MA5•MA6 | 1.877 | 1.088 | 60.000 | 10.58 | 11 | 11 | 196.82 | 0.595 | 750 | 0.0030 | 0.690 | 1.71 | 10 | |
| | CI-T3 | OUTFALL | MA5•MA6•MA7•MA2•MA3 | 3.603 | 2.126 | 35.000 | 10.90 | 11 | 11 | 196.82 | 1.162 | 900 | 0.0040 | 1.290 | 1.83 | 10 | |
| TA | DI-TAI | CI-T3 | MA7 | 1.376 | 0.702 | 32.000 | 0.30 | 11 | 11 | 196.82 | 0.384 | 600 | 0.0035 | 0.410 | 1.62 | 10 | |
| TB | CI-TBI | CI-T3 | MA2 | 0.184 | 0.175 | 25.000 | 0.23 | 10 | 10 | 204.97 | 0.100 | 600 | 0.0030 | 0.380 | 3.07 | 10 | |
| U | CI-UI | MH-UI | P2 | 0.195 | 0.185 | 14.000 | 0.13 | 10 | 10 | 204.97 | 0.105 | 600 | 0.0050 | 0.490 | 1.31 | 10 | |
| V | CI-VI | CI-V2 | MII | 0.142 | 0.135 | 43.600 | 0.40 | 10 | 10 | 204.97 | 0.077 | 600 | 0.0210 | 1.001 | 1.96 | 10 | |
| | CI-V2 | MH-VI | MII•MI4 | 0.265 | 0.252 | 7.000 | 0.06 | 10 | 10 | 204.97 | 0.143 | 600 | 0.0050 | 0.490 | 1.41 | 10 | |
| W | CI-W3 | CI-W2 | W5 | 1.844 | 0.940 | 25.000 | 0.13 | 12 | 12 | 189.37 | 0.492 | 600 | 0.0316 | 1.230 | 3.89 | 10 | |
| | CI-W2 | CI-WI | W5•W4 | 2.190 | 1.269 | 62.000 | 12.27 | 10 | 12 | 189.37 | 0.668 | 600 | 0.0436 | 1.448 | 4.83 | 10 | |
| | CI-WI | DI-WI | W5•W4•W3•W2•I22•I22A | 5.748 | 3.500 | 45.000 | 12.12 | 10 | 12 | 189.37 | 1.841 | 900 | 0.0436 | 2.627 | 6.21 | 10 | |
| WA | DI-WAI | CI-WAI | I22 | 1.158 | 0.591 | 20.000 | 0.19 | 10 | 10 | 204.97 | 0.336 | 600 | 0.0200 | 0.980 | 2.95 | 10 | |
| | CI-WAI | CI-WI | I22•W3 | 1.420 | 0.840 | 48.000 | 10.35 | 10 | 10 | 204.97 | 0.478 | 600 | 0.0338 | 1.277 | 3.94 | 10 | |
| WB | DI-WBI | CI-WAI | I22A | 1.447 | 0.738 | 50.000 | 0.46 | 10 | 10 | 204.97 | 0.420 | 600 | 0.0283 | 1.167 | 3.56 | 10 | |
| X | DI-XI | MH-XI | II2•II2B•CI3 | 4.244 | 2.228 | 40.121 | 17.35 | 17.0 | 17.0 | 160.00 | 0.990 | 900 | 0.0030 | 1.120 | 1.94 | 10 | |
| | MH-XI | MH-X2 | II2•II2B•C8•CI3 | 4.370 | 2.350 | 63.910 | 17.53 | | 17.0 | 160.00 | 1.044 | 900 | 0.0030 | 1.120 | 1.94 | 10 | |
| | MH-X2 | DI-X2 | II2•II2B•C8•CI3 | 4.370 | 2.350 | 61.998 | 18.07 | | 18.0 | 155.31 | 1.014 | 900 | 0.0030 | 1.120 | 1.94 | 10 | |
| | DI-X2 | OUTFALL | II2•II2B•C8•CI3•CI•C3 | 5.050 | 2.996 | 16.464 | 18.17 | 10.0 | 18.0 | 155.31 | 1.293 | 900 | 0.0030 | 1.690 | 2.70 | 10 | |
| XA | CI-XAI | MH-XI | C8 | 0.126 | 0.120 | 18.567 | 0.16 | 10 | 10 | 204.97 | 0.068 | 600 | 0.0030 | 0.380 | 0.98 | 10 | |
| Y | CI-YI | CI-Y2 | CI4 | 0.087 | 0.083 | 5.591 | 0.10 | 10.0 | 10.0 | 204.97 | 0.047 | 600 | 0.0030 | 0.380 | 0.89 | 10 | |
| | CI-Y2 | CI-Y3 | CI4•C9 | 0.175 | 0.166 | 18.230 | 10.29 | 10.0 | 10.0 | 204.97 | 0.095 | 600 | 0.0030 | 0.380 | 1.06 | 10 | |
| | CI-Y3 | CI-Y4 | CI4•C9•C6 | 0.231 | 0.219 | 18.467 | 10.56 | 10.0 | 10.0 | 204.97 | 0.125 | 600 | 0.0030 | 0.380 | 1.13 | 10 | |
| | CI-Y4 | OUTFALL | CI4•C9•C6•C4 | 0.326 | 0.310 | 101.756 | 11.89 | 10.0 | 10.0 | 204.97 | 0.177 | 600 | 0.0030 | 0.380 | 1.27 | 10 | |
| Z | DI-ZI | JCT | III•II0•II4•II5 | 21.379 | 10.904 | 34.579 | 0.28 | 29 | 29.0 | 118.71 | 3.596 | 1.5 x 1.2 | 0.0030 | 2.410 | 2.07 | 10 | SBC |
| | JCT | CI-ZI | III•II0•II4•II5•CI5 | 21.472 | 10.988 | 5.470 | 29.04 | 10 | 29.0 | 118.71 | 3.623 | 1.5 x 1.2 | 0.0030 | 2.410 | 2.42 | | |
| | CI-ZI | CI-Z2 | III•II0•II4•II5•CI5•CI0•CII | 21.570 | 11.086 | 34.586 | 29.27 | 10 | 29.0 | 118.71 | 3.656 | 1.5 x 1.2 | 0.0030 | 3.300 | 2.43 | | |
| | CI-Z2 | DI-Z2 | III•II0•II4•II5•CI5•CI0•CII•C7•C5 | 21.621 | 11.134 | 80.260 | 29.83 | 10 | 30.0 | 116.31 | 3.656 | 1.5 x 1.2 | 0.0030 | 3.300 | 2.43 | | |
| | DI-Z2 | OUTFALL | III•II0•II4•II5•CI5•CI0•CII•C7•C5•C2 | 22.202 | 11.686 | 18.000 | 29.95 | 10 | 30.0 | 116.31 | 3.776 | 1.5 x 1.2 | 0.0030 | 3.300 | 2.47 | | |
| ZA | CI-ZAI | JB-ZI | CI5 | 0.088 | 0.084 | 5.590 | 0.049 | 10 | 10 | 204.97 | 0.048 | 600 | 0.0030 | 0.380 | 0.90 | 10 | |
| ZB | CI-ZBI | CI-Z2 | C7 | 0.051 | 0.048 | 23.440 | 0.206 | 10 | 10 | 204.97 | 0.028 | 600 | 0.0030 | 0.380 | 0.73 | 10 | |

555 EAST RAMSEY SAN ANTONIO TEXAS 78216
PHONE (210)375-9000
FAX (210)375-9010
PAPE-DAWSON ENGINEERS
CIVIL & ENVIRONMENTAL

STATE OF TEXAS
K. STEPHEN BONNETTE
60928
REGISTERED PROFESSIONAL ENGINEER

K. STEPHEN BONNETTE, P.E. 9/20/00
DATE

© 2000 Texas Department of Transportation

## LOOP 1604
## STORM DRAIN
## COMPUTATION SHEET

| DN: | | | | | PROJECT NO. | | |
|---|---|---|---|---|---|---|---|
| CK DN: | | | | | NH 2000 (704), etc. | | |
| DW: | CONTROL | SECTION | JOB | DIST. | COUNTY | HIGHWAY NO. | SHEET NO. |
| CK DW: | 2452 | 01 | 036 | SAT | BEXAR | LOOP 1604 | 452 |

Plotted on: 09/25/00

Design Filename: J:\3941\016\civil\Design\Int\DA\STRM-DRN1.dgn

# STORM DRAIN COMPUTATION SHEET

| LINE NO. | FROM | TO | DA NO. | TOTAL DA ha | TOTAL CA | LENGTH M | TIME OF CONCENTRATION (MINUTES) ALONG SEWER LINE | INLET TIME | USED IN DESIGN | I mm/HR | Q CMS | DESIGN STR. SIZE mm | SLOPE M/M | CAP. CMS | VEL. M/SEC | FREQ. YR | REMARKS |
|---|---|---|---|---|---|---|---|---|---|---|---|---|---|---|---|---|---|
| I1 | DI-I1 | CULVERT #1 | I1 | 1.762 | 0.893 | 62.800 | 0.58 | 14 | 14 | 176.24 | 0.437 | 600 | 0.0060 | 0.496 | 1.93 | 10 | |
| I2 | DI-I2 | OUTFALL | I2 | 2.530 | 1.283 | 108.100 | 1.00 | 17 | 17 | 160.00 | 0.570 | 600 | 0.0100 | 0.641 | 2.49 | 10 | |
| I3 | DI-I3 | OUTFALL | I5+I5A+I3 | 1.667 | 0.845 | 107.900 | 1.00 | 12 | 12 | 189.37 | 0.445 | 600 | 0.0050 | 0.453 | 1.80 | 10 | |
| I4 | DI-I4 | OUTFALL | I4 | 0.365 | 0.185 | 36.700 | 0.34 | 11 | 11 | 196.82 | 0.101 | 600 | 0.0045 | 0.430 | 1.18 | 10 | |
| I5A | DI-I5A | OUTFALL | I5+I5A | 0.657 | 0.333 | 18.000 | 0.17 | 12 | 12 | 189.37 | 0.175 | 600 | 0.0050 | 0.453 | 1.43 | 10 | |
| I6 | - | OUTFALL | I4+I6 | 2.086 | 1.058 | 20.100 | 0.19 | 13 | 13 | 182.54 | 0.536 | 600 | 0.0100 | 0.641 | 1.91 | 10 | |
| I7 | - | OUTFALL | I5+I5A+I3+I7 | 4.156 | 2.107 | 19.500 | 0.18 | 16 | 16 | 165.03 | 0.966 | 750 | 0.0100 | 1.161 | 2.20 | 10 | |
| I4 | - | OUTFALL | I4 | 0.980 | 0.559 | 33.891 | 0.34 | 11 | 11 | 196.82 | 0.306 | 2-450 | 0.0035 | 0.381 | 1.65 | 10 | |
| I8 | - | OUTFALL | I8 | 0.327 | 0.167 | 35.105 | 0.12 | 11 | 11 | 196.82 | 0.091 | 600 | 0.0366 | 1.330 | 4.98 | 10 | |
| I10 | DI-I10 | OUTFALL | I15+I10 | 4.916 | 2.492 | 28.000 | 0.26 | 26 | 26 | 126.63 | 0.877 | 900 | 0.0040 | 1.294 | 2.11 | 10 | |
| 10 | CI-10A | CI-10B | I10A | 0.638 | 0.510 | 78.915 | 0.75 | 10 | 10 | 204.97 | 0.290 | 600 | 0.0050 | 0.490 | 1.75 | 10 | |
| I12B | DI-I12B | OUTFALL | I12B | 1.289 | 0.654 | 91.400 | 0.85 | 12 | 12 | 189.37 | 0.344 | 600 | 0.0050 | 0.453 | 1.70 | 10 | |
| I14 | DI-I14 | OUTFALL | I14 | 13.343 | 9.740 | 48.400 | 0.45 | 15 | 15 | 170.42 | 4.678 | 1.5 x 1.2 | 0.0045 | 4.606 | 2.53 | 10 | SBC |
| I15 | - | OUTFALL | I15 | 1.511 | 0.766 | 22.700 | 0.21 | 16 | 16 | 165.03 | 0.351 | 600 | 0.0049 | 0.448 | 1.25 | 10 | |
| I16 | DI-I16 | OUTFALL | I18+I16 | 8.686 | 4.404 | 36.000 | 0.33 | 17 | 17 | 160.00 | 1.957 | 3 - 750 | 0.0045 | 2.337 | 1.99 | 10 | |
| I25 | DI-I25 | MH-I25 | I25 | 3.966 | 2.011 | 73.900 | 0.68 | 18 | 18 | 155.31 | 0.867 | 1050 | 0.0035 | 1.685 | 1.93 | 10 | |
| | MH-I25 | OUTFALL | I25+MI1+MI4 | 4.231 | 2.263 | 35.500 | 19.01 | 10 | 19 | 150.93 | 0.949 | 1050 | 0.0035 | 1.685 | 2.09 | 10 | |
| I26 | CI-I26 | OUTFALL | I26 | 0.268 | 0.255 | 21.400 | 0.20 | 10 | 10 | 204.97 | 0.145 | 600 | 0.0050 | 0.453 | 1.34 | 10 | |
| I20A | - | OUTFALL | I20A | 0.212 | 0.108 | 22.669 | 0.33 | 10 | 10 | 204.97 | 0.061 | 600 | 0.0050 | 0.491 | 1.14 | 10 | |
| I27 | - | OUTFALL | I27 | 1.346 | 0.686 | 62.155 | 0.32 | 13 | 13 | 182.54 | 0.348 | 600 | 0.0144 | 0.833 | 3.27 | 10 | |
| I30 | - | OUTFALL | I30 | 0.138 | 0.070 | 25.581 | 0.46 | 10 | 10 | 204.97 | 0.040 | 600 | 0.0042 | 0.449 | 0.93 | 10 | |
| I28 | DI-I28 | MH-I28 | I28+I25 | 6.664 | 3.379 | 30.800 | 2.85 | 21 | 21 | 142.95 | 1.342 | 1050 | 0.0030 | 1.560 | 2.00 | 10 | |
| | MH-I28 | OUTFALL | I28+I25 | 6.664 | 3.379 | 56.200 | 21.47 | | 21 | 142.95 | 1.342 | 1050 | 0.0030 | 1.560 | 2.00 | 10 | |
| I31 | DI-I31 | MH-U1 | I32+I31 | 10.198 | 5.170 | 96.100 | 0.89 | 18 | 18 | 155.31 | 2.231 | 2 - 900 | 0.0040 | 2.389 | 2.11 | 10 | |
| | MH-U1 | OUTFALL | I32+I31+P2 | 10.393 | 5.355 | 18.400 | 18.14 | | 18 | 155.31 | 2.310 | 2 - 900 | 0.0040 | 2.389 | 2.24 | 10 | |
| I32 | DI-I32 | OUTFALL | I32 | 3.257 | 1.651 | 21.600 | 0.20 | 13 | 13 | 182.54 | 0.837 | 2 - 600 | 0.0050 | 0.453 | 1.78 | 10 | |
| I35 | DI-I35 | MH-I35 | I32+I31+I35 | 11.160 | 5.658 | 14.500 | 0.13 | 20 | 20 | 146.82 | 2.307 | 1200 | 0.0040 | 2.572 | 2.54 | 10 | |
| | MH-I35 | OUTFALL | I32+I31+I35 | 11.160 | 5.658 | 43.900 | 20.29 | | 20 | 146.82 | 2.307 | 1200 | 0.0040 | 2.572 | 2.54 | 10 | |
| I36 | CI-I36 | OUTFALL | I36 | 0.348 | 0.331 | 20.500 | 0.19 | 11 | 11 | 196.82 | 0.181 | 600 | 0.0050 | 0.453 | 1.43 | 10 | |
| I37 | - | CULVERT #17 | I37 | 2.484 | 1.259 | 19.600 | 0.18 | 14 | 14 | 176.24 | 0.617 | 750 | 0.0050 | 0.821 | 1.97 | 10 | |
| I40 | DI-I40 | OUTFALL | I40 | 0.372 | 0.189 | 24.300 | 0.23 | 13 | 13 | 182.54 | 0.096 | 600 | 0.0045 | 0.430 | 1.18 | 10 | |
| I48 | CI-I48 | OUTFALL | I48 | 0.335 | 0.318 | 18.500 | 0.17 | 12 | 12 | 189.37 | 0.167 | 600 | 0.0050 | 0.453 | 1.39 | 10 | |
| I53 | - | OUTFALL | I53 | 1.710 | 0.867 | 74.100 | 0.69 | 12 | 12 | 189.37 | 0.456 | 2 - 450 | 0.0021 | 0.269 | 1.45 | 10 | |
| T | CI-T1 | CI-T2 | MA5 | 0.453 | 0.362 | 18.000 | 0.17 | 10 | 10 | 204.97 | 0.206 | 600 | 0.0030 | 0.380 | 1.33 | 10 | |
| | CI-T2 | CI-T3 | MA5+MA6 | 1.877 | 1.088 | 60.000 | 10.58 | 11 | 11 | 196.82 | 0.595 | 750 | 0.0030 | 0.690 | 1.71 | 10 | |
| | CI-T3 | OUTFALL | MA5+MA6+MA7+MA2+MA3 | 3.603 | 2.126 | 35.000 | 10.90 | 11 | 11 | 196.82 | 1.162 | 900 | 0.0040 | 1.290 | 1.83 | 10 | |
| TA | DI-TA1 | CI-T3 | MA7 | 1.376 | 0.702 | 32.000 | 0.30 | 11 | 11 | 196.82 | 0.384 | 600 | 0.0035 | 0.410 | 1.62 | 10 | |
| TB | CI-TB1 | CI-T3 | MA2 | 0.184 | 0.175 | 25.000 | 0.23 | 10 | 10 | 204.97 | 0.100 | 600 | 0.0030 | 0.380 | 3.07 | 10 | |
| U | CI-U1 | MH-U1 | P2 | 0.195 | 0.185 | 14.000 | 0.13 | 10 | 10 | 204.97 | 0.105 | 600 | 0.0050 | 0.490 | 1.31 | 10 | |
| V | CI-V1 | CI-V2 | MI1 | 0.142 | 0.135 | 43.600 | 0.40 | 10 | 10 | 204.97 | 0.077 | 600 | 0.0210 | 1.001 | 1.96 | 10 | |
| | CI-V2 | MH-V1 | MI1+MI4 | 0.265 | 0.252 | 7.000 | 0.06 | 10 | 10 | 204.97 | 0.143 | 600 | 0.0050 | 0.490 | 1.41 | 10 | |
| W | CI-W3 | CI-W2 | W5 | 1.844 | 0.940 | 25.000 | 0.13 | 12 | 12 | 189.37 | 0.492 | 600 | 0.0316 | 1.230 | 3.89 | 10 | |
| | CI-W2 | CI-W1 | W5+W4 | 2.190 | 1.269 | 62.000 | 12.27 | 10 | 12 | 189.37 | 0.668 | 600 | 0.0436 | 1.448 | 4.83 | 10 | |
| | CI-W1 | DI-W1 | W5+W4+W3+W2+I22+I22A | 5.748 | 3.500 | 45.000 | 12.12 | 10 | 12 | 189.37 | 1.841 | 900 | 0.0436 | 2.627 | 6.21 | 10 | |
| WA | DI-WA1 | CI-WA1 | I22 | 1.158 | 0.591 | 20.000 | 0.19 | 10 | 10 | 204.97 | 0.336 | 600 | 0.0200 | 0.980 | 2.95 | 10 | |
| | CI-WA1 | CI-W1 | I22+W3 | 1.420 | 0.840 | 48.000 | 10.35 | 10 | 10 | 204.97 | 0.478 | 600 | 0.0338 | 1.277 | 3.94 | 10 | |
| WB | DI-WB1 | CI-WA1 | I22A | 1.447 | 0.738 | 50.000 | 0.46 | 10 | 10 | 204.97 | 0.420 | 600 | 0.0283 | 1.167 | 3.56 | 10 | |
| X | DI-X1 | MH-X1 | I12+I12B+C13 | 4.244 | 2.228 | 40.121 | 17.35 | 17.0 | 17.0 | 160.00 | 0.990 | 900 | 0.0030 | 1.120 | 1.94 | 10 | |
| | MH-X1 | MH-X2 | I12+I12B+C8+C13 | 4.370 | 2.350 | 63.910 | 17.53 | | 17.0 | 160.00 | 1.044 | 900 | 0.0030 | 1.120 | 1.94 | 10 | |
| | MH-X2 | DI-X2 | I12+I12B+C8+C13 | 4.370 | 2.350 | 61.998 | 18.07 | | 18.0 | 155.31 | 1.014 | 900 | 0.0030 | 1.120 | 1.94 | 10 | |
| | DI-X2 | OUTFALL | I12+I,I2B+C8+C13+C1+C3 | 5.050 | 2.996 | 16.464 | 18.17 | 10.0 | 18.0 | 155.31 | 1.293 | 900 | 0.0030 | 1.690 | 2.70 | 10 | |
| XA | CI-XA1 | MH-X1 | C8 | 0.126 | 0.120 | 18.567 | 0.16 | 10 | 10 | 204.97 | 0.068 | 600 | 0.0030 | 0.380 | 0.98 | 10 | |
| Y | CI-Y1 | CI-Y2 | C14 | 0.087 | 0.083 | 5.591 | 0.10 | 10.0 | 10.0 | 204.97 | 0.047 | 600 | 0.0030 | 0.380 | 0.89 | 10 | |
| | CI-Y2 | CI-Y3 | C14+C9 | 0.175 | 0.166 | 18.230 | 10.29 | 10.0 | 10.0 | 204.97 | 0.095 | 600 | 0.0030 | 0.380 | 1.06 | 10 | |
| | CI-Y3 | CI-Y4 | C14+C9+C6 | 0.231 | 0.219 | 18.467 | 10.56 | 10.0 | 10.0 | 204.97 | 0.125 | 600 | 0.0030 | 0.380 | 1.13 | 10 | |
| | CI-Y4 | OUTFALL | C14+C9+C6+C4 | 0.326 | 0.310 | 101.756 | 11.89 | 10.0 | 10.0 | 204.97 | 0.177 | 600 | 0.0030 | 0.380 | 1.27 | 10 | |
| ZT | DI-Z1 | JCT | I11+I10+I14+I15 | 21.379 | 13.896 | 37.077 | 0.31 | 29 | 29.0 | 118.71 | 4.582 | 1.5 X 1.5 | 0.0030 | 5.086 | 1.97 | 10 | SBC |
| ZR | CI-ZA1 | CI-Z1 | C15 | 0.088 | 0.084 | 7.186 | 0.25 | 10 | 10.0 | 204.97 | 0.048 | 600 | 0.0030 | 0.347 | 0.48 | 10 | |
| | CI-Z1 | CI-ZB1 | C15+C10+C11 | 0.191 | 0.181 | 15.954 | 10.69 | 10 | 10.0 | 204.97 | 0.103 | 600 | 0.0030 | 0.347 | 0.61 | 10 | |
| | CI-ZB1 | CI-Z2 | C15+C10+C11+C7 | 0.242 | 0.230 | 24.196 | 11.33 | 10 | 11.0 | 196.82 | 0.126 | 600 | 0.0030 | 0.347 | 0.63 | 10 | |
| | CI-Z2 | DI-Z2 | C15+C10+C11+C7+C5 | 0.332 | 0.315 | 80.269 | 13.33 | 10 | 13.0 | 182.54 | 0.160 | 600 | 0.0030 | 0.347 | 0.67 | 10 | |
| | DI-Z2 | OUTFALL | C15+C10+C11+C7+C5+C2 | 0.913 | 0.867 | 20.912 | 13.66 | 10 | 13.0 | 182.54 | 0.463 | 750 | 0.0030 | 0.629 | 0.93 | 10 | |

1

## CHANGE ORDER #1 REVISIONS

LINE I-14 RESIZED
LINES Z, ZA, ZB DELETED
LINES ZR, ZT ADDED
REVISIONS ARE SHOWN CLOUDED AND MARKED WITH A 1.

STATE OF TEXAS · K. STEPHEN BONNETTE · 60928 · REGISTERED PROFESSIONAL ENGINEER

K. STEPHEN BONNETTE, P.E. 7/27/2001 DATE

555 EAST RAMSEY SAN ANTONIO TEXAS 78216
PHONE (210)375-9000
FAX (210)375-9010
PAPE-DAWSON ENGINEERS
CIVIL & ENVIRONMENTAL

STATE OF TEXAS · K. STEPHEN BONNETTE · 60928 · REGISTERED PROFESSIONAL ENGINEER

K. STEPHEN BONNETTE, P.E. 9/20/00 DATE

© 2000 Texas Department of Transportation

## LOOP 1604
## STORM DRAIN
## COMPUTATION SHEET

| DN: | | | | | PROJECT NO. | |
|---|---|---|---|---|---|---|
| CK DN: | | | | | NH 2000 (704), etc. | |
| DW: | CONTROL | SECTION | JOB | DIST. | COUNTY | HIGHWAY NO. | SHEET NO. |
| CK DW: | 2452 | 01 | 036 | SAT | BEXAR | LOOP 1604 | 452A |

etc

Plotted on: 07/02/01
Design Filename: j:\3941\16\change order\design\civil\plansheets\433716strm-drn1.dgn

Plotted on: 09/19/00

# CURB INLET COMPUTATIONS

| NO. | CONTROL | STATION | D.A NO | $Q_A$ CMS | CARRY OVER CMS | TOTAL $Q_A$ CMS | z | z / n | S M / M | y m | PONDED WIDTH yxz m | A m | $Q_L$ CMS | $L_R$ m | $L_A$ m | $L_A / L_R$ | A / Y | $Q_I / Q_A$ | Q=QoXQI / QA | CARRY OVER CMS | REMARKS |
|---|---|---|---|---|---|---|---|---|---|---|---|---|---|---|---|---|---|---|---|---|---|
| CI-Z1 | MAINLANE | 16+037 | C10+C11 | 0.058 | | 0.058 | 100.00 | 5556 | 0.0166 | 0.042 | 4.214 | 0.063 | 0.024 | 2.424 | 3.000 | 1.238 | 1.505 | 1.136 | 0.066 | 0.000 | |
| CI-Z2 | MAINLANE | 16+002 | C5 | 0.049 | | 0.049 | 77.00 | 4278 | 0.0150 | 0.044 | 3.424 | 0.063 | 0.024 | 2.005 | 3.000 | 1.496 | 1.426 | 1.000 | 0.049 | 0.000 | |
| CI-ZA1 | MAINLANE | 16+048 | C15 | 0.048 | | 0.048 | 208.00 | 11556 | 0.0150 | 0.030 | 6.323 | 0.063 | 0.021 | 2.242 | 3.000 | 1.338 | 2.086 | 1.000 | 0.048 | 0.000 | |
| CI-ZB1 | MAINLANE | 16+023 | C7 | 0.028 | | 0.028 | 100.00 | 5556 | 0.0150 | 0.033 | 3.268 | 0.063 | 0.022 | 3.000 | 3.000 | 1.000 | 1.940 | 1.000 | 0.028 | 0.000 | |
| CI-Y1 | MAINLANE | 16+044 | C14 | 0.047 | | 0.047 | 185.00 | 10278 | 0.0151 | 0.031 | 5.823 | 0.063 | 0.022 | 2.172 | 3.000 | 1.381 | 2.014 | 1.000 | 0.047 | 0.000 | |
| CI-Y2 | MAINLANE | 16+038 | C9 | 0.048 | | 0.048 | 100.00 | 5556 | 0.0085 | 0.044 | 4.450 | 0.063 | 0.024 | 3.000 | 3.000 | 1.000 | 1.425 | 1.000 | 0.048 | 0.000 | |
| CI-Y3 | MAINLANE | 16+023 | C6 | 0.030 | | 0.030 | 100.00 | 5556 | 0.0065 | 0.039 | 3.923 | 0.063 | 0.023 | 1.288 | 3.000 | 2.330 | 1.616 | 1.000 | 0.030 | 0.000 | |
| CI-Y4 | MAINLANE | 16+004 | C4 | 0.051 | | 0.051 | 100.00 | 5556 | 0.0100 | 0.044 | 4.416 | 0.063 | 0.024 | 2.093 | 3.000 | 1.434 | 1.436 | 1.000 | 0.051 | 0.000 | |
| CI-XA1 | MAINLANE | 16+038 | C8 | 0.068 | | 0.068 | 100.00 | 5556 | 0.0025 | 0.064 | 6.379 | 0.063 | 0.029 | 3.000 | 3.000 | 1.000 | 0.994 | 1.000 | 0.068 | 0.000 | |
| ACI-C3 | SBER | 0+598 | C3 | 0.053 | | 0.053 | 250.00 | 13889 | ---- | 0.041 | ---- | 0.063 | ---- | 0.331 | 3.000 | 9.073 | 1.546 | 1.000 | 0.053 | 0.000 | SUMP ** |
| ACI-C12 | SBER | 0+654 | C12 | 0.038 | | 0.038 | 50.00 | 2778 | ---- | 0.037 | ---- | 0.063 | ---- | 0.242 | 3.000 | 12.410 | 1.713 | 1.000 | 0.038 | 0.000 | SUMP ** |
| ACI-C13 | SBER | 0+695 | C13 | 0.080 | | 0.080 | 54.80 | 3044 | ---- | 0.085 | ---- | 0.063 | ---- | 0.419 | 3.000 | 7.167 | 0.746 | 1.000 | 0.080 | 0.000 | SUMP ** |
| | | | | | | | | | | | | | | | | | | | | | |
| CI-W3 | MAINLANE | 19+323 | W5 | 0.490 | | 0.490 | 78.37 | 3918 | 0.0456 | 0.088 | 6.933 | 0.063 | 0.035 | 14.048 | 6.000 | 0.427 | 0.717 | 0.576 | 0.282 | 0.208 | C.O. TO CI-W1 |
| CI-W2 | MAINLANE | 19+296 | W4 | 0.170 | | 0.170 | 50.00 | 2500 | 0.0450 | 0.071 | 3.529 | 0.063 | 0.030 | 5.580 | 3.000 | 0.538 | 0.898 | 0.668 | 0.114 | 0.056 | C.O. TO ACI-W1 |
| CI-W1 | MAINLANE | 19+296 | W2 | 0.190 | 0.282 | 0.472 | 38.90 | 2161 | ---- | 0.108 | ---- | 0.063 | ---- | 2.298 | 3.000 | 1.305 | 0.587 | 1.000 | 0.472 | 0.000 | SUMP ** |
| CI-WA1 | MAINLANE | 19+341 | W3 | 0.140 | | 0.140 | 28.60 | 1589 | ---- | 0.386 | ---- | 0.063 | ---- | 0.421 | 3.000 | 7.127 | 0.164 | 1.000 | 0.140 | 0.000 | SUMP ** |
| ACI-W1 | NTARWISE | 0+130.5 | W1 | 0.194 | 0.114 | 0.308 | 42.60 | 2367 | ---- | 0.371 | ---- | 0.063 | ---- | 0.942 | 3.000 | 3.185 | 0.171 | 1.000 | 0.308 | 0.000 | SUMP ** |
| | | | | | | | | | | | | | | | | | | | | | |
| CI-U1 | MAINLANE | 22+642 | P2 | 0.105 | | 0.105 | 30.70 | 1706 | 0.0080 | 0.094 | 2.886 | 0.063 | 0.036 | 2.894 | 3.000 | 1.037 | 0.675 | 1.000 | 0.105 | 0.000 | |
| | | | | | | | | | | | | | | | | | | | | | |
| CI-V1 | MAINLANE | 21+210 | M11 | 0.077 | | 0.077 | 16.67 | 926 | 0.0170 | 0.091 | 1.523 | 0.063 | 0.036 | 2.162 | 3.000 | 1.387 | 0.694 | 1.000 | 0.077 | 0.000 | |
| CI-V2 | MAINLANE | 21+254 | M14 | 0.067 | | 0.067 | 33.33 | 1852 | 0.0377 | 0.058 | 1.919 | 0.063 | 0.027 | 2.445 | 3.000 | 1.227 | 1.101 | 1.000 | 0.067 | 0.000 | |
| | | | | | | | | | | | | | | | | | | | | | |
| CI-T1 | MAINLANE | 26+287 | MA5 | 0.198 | | 0.198 | 38.20 | 2122 | ---- | 0.150 | ---- | 0.063 | ---- | 0.860 | 3.000 | 3.488 | 0.423 | 1.000 | 0.198 | 0.000 | SUMP ** |
| CI-T2 | MAINLANE | 26+305 | MA6 | 0.395 | | 0.395 | 63.00 | 3500 | ---- | 0.148 | ---- | 0.063 | ---- | 1.730 | 3.000 | 1.734 | 0.428 | 1.000 | 0.395 | 0.000 | SUMP ** |
| CI-T3 | MAINLANE | 26+311 | MA3 | 0.091 | | 0.091 | 50.00 | 2778 | ---- | 0.022 | ---- | 0.063 | ---- | 0.630 | 3.000 | 4.762 | 2.882 | 1.000 | 0.091 | 0.000 | SUMP ** |
| CI-TB1 | MAINLANE | 26+287 | MA2 | 0.100 | | 0.100 | 50.00 | 2778 | ---- | 0.057 | ---- | 0.063 | ---- | 0.580 | 3.000 | 5.172 | 1.112 | 1.000 | 0.100 | 0.000 | SUMP ** |
| | | | | | | | | | | | | | | | | | | | | | |
| CI-110A | MAINLANE | 18+865.271 | 110A | 0.291 | | 0.291 | 50.00 | 2778 | ---- | 0.152 | ----- | 0.063 | ----- | 1.264 | 3.000 | 2.374 | 0.417 | 1.000 | 0.291 | 0.000 | SUMP ** |
| CI-110B | MAINLANE | 18+884.113 | 110B | 0.105 | | 0.105 | 51.00 | 2833 | ---- | 0.152 | ----- | 0.063 | ----- | 0.456 | 3.000 | 6.578 | 0.417 | 1.000 | 0.105 | 0.000 | SUMP ** |
| ACI-12A | SBER | 1+050 | 112A | 0.175 | | 0.175 | 23.00 | 1278 | 0.0167 | 0.111 | 2.543 | 0.063 | 0.041 | 4.307 | 6.000 | 1.393 | 0.570 | 1.000 | 0.175 | 0.000 | |
| ACI-113 | NBER | 1+125 | 113 | 0.116 | | 0.116 | 20.00 | 1111 | 0.0179 | 0.099 | 1.970 | 0.063 | 0.037 | 3.097 | 3.000 | 0.969 | 0.639 | 0.987 | 0.114 | 0.002 | C.O. TO MEDIAN |
| ACI-124 | NBER | 1+857.64 | 124 | 0.119 | | 0.119 | 27.00 | 1500 | ---- | 0.115 | ---- | 0.063 | ---- | 0.569 | 3.000 | 5.277 | 0.548 | 1.000 | 0.119 | 0.000 | SUMP ** |
| CI-126 | MAINLANE | 20+860 | 126 | 0.145 | | 0.145 | 21.30 | 1183 | 0.0168 | 0.106 | 2.255 | 0.063 | 0.039 | 3.682 | 3.000 | 0.815 | 0.595 | 0.910 | 0.132 | 0.013 | C.O. TO MEDIAN |
| ACI-129 | NBER | 3+587 | 129 | 0.098 | | 0.098 | 18.50 | 1028 | 0.0223 | 0.091 | 1.690 | 0.063 | 0.036 | 2.752 | 3.000 | 1.090 | 0.690 | 1.000 | 0.098 | 0.000 | |
| CI-136 | MAINLANE | 23+130 | 136 | 0.181 | | 0.181 | 20.40 | 1133 | 0.0070 | 0.138 | 2.811 | 0.063 | 0.048 | 3.760 | 6.000 | 1.596 | 0.457 | 1.000 | 0.181 | 0.000 | |
| ACI-139A | NBER | 5+720 | 139A | 0.180 | | 0.180 | 23.60 | 1311 | 0.0035 | 0.148 | 3.499 | 0.063 | 0.051 | 3.520 | 3.000 | 0.852 | 0.425 | 0.943 | 0.170 | 0.010 | C.O. TO ACI-139B |
| ACI-139B | NBER | 5+808 | 139B | 0.102 | 0.010 | 0.112 | 24.60 | 1367 | 0.0035 | 0.122 | 3.007 | 0.063 | 0.044 | 2.561 | 3.000 | 1.171 | 0.515 | 1.000 | 0.112 | 0.000 | |
| ACI-146 | NBER | 7+490 | 146 | 0.201 | | 0.201 | 22.20 | 1233 | 0.0050 | 0.148 | 3.283 | 0.063 | 0.051 | 3.939 | 6.000 | 1.523 | 0.426 | 1.000 | 0.201 | 0.000 | |
| CI-148 | MAINLANE | 25+950 | 148 | 0.167 | | 0.167 | 22.20 | 1233 | 0.0035 | 0.148 | 3.275 | 0.063 | 0.051 | 3.279 | 3.000 | 0.915 | 0.427 | 0.970 | 0.162 | 0.005 | C.O. TO MEDIAN |
| ACI-MA1 | NBER | 8+223.380 | MA1 | 0.159 | | 0.159 | 37.90 | 2106 | ---- | 0.080 | ---- | 0.063 | ---- | 1.730 | 3.000 | 1.734 | 0.788 | 1.000 | 0.159 | 0.000 | SUMP ** |
| ACI-W1 | MAINLANE | 19+259.342 | W1 | 0.194 | | 0.194 | 44.05 | 2447 | 0.0107 | 0.098 | 4.313 | 0.063 | 0.037 | 5.201 | 6.000 | 1.154 | 0.643 | 1.000 | 0.194 | 0.000 | |

# DROP INLET COMPUTATIONS

| NO | CONTROL | STATION | D.A NO | $Q_A$ CMS | H MM | REQ'D AREA $M^2$ | INLET AREA $M^2$ | INLET TYPE | REMARKS |
|---|---|---|---|---|---|---|---|---|---|
| DI-Z1 | SBER | 0+685 | 112 | 0.930 | 700.000 | 0.717 | 1.018 | Y-1 | |
| DI-Z2 | MAINLANE | 15+920 | C2 | 0.310 | 150.000 | 0.516 | 1.018 | Y-1 | |
| DI-X1 | NBER | 0+710 | 111 | 2.380 | 940.000 | 1.583 | 1.776 | W-1 | |
| DI-X2 | MAINLANE | 15+915 | C1+C3 | 0.367 | 150.000 | 0.611 | 1.018 | Y-1 | |
| DI-TA1 | NBER | 8+305 | MA7 | 0.381 | 300.000 | 0.449 | 1.018 | Y-1 | |
| DI-11 | MAINLANE | 14+436 | 11 | 0.440 | 766 | 0.324 | 1.018 | Y-1 | |
| DI-12 | MAINLANE | 15+691 | 12 | 0.570 | 585 | 0.481 | 1.018 | Y-1 | |
| DI-13 | MAINLANE | 15+420 | 15+15A+13 | 0.440 | 864 | 0.305 | 1.018 | Y-1 | |
| DI-14 | MAINLANE | 15+500 | 14 | 0.100 | 300 | 0.118 | 1.018 | Y-1 | |
| DI-15A | MAINLANE | 15+360 | 15+15A | 0.180 | 118 | 0.338 | 1.018 | Y-1 | |
| DI-110 | MAINLANE | 16+374 | 110+115 | 0.85 | 818.00 | 0.606 | 1.018 | Y-1 | |
| DI-112B | MAINLANE | 16+640 | 112B | 0.340 | 434 | 0.333 | 1.018 | Y-1 | |
| DI-114 | MAINLANE | 16+660 | 114 | 1.470 | 310 | 1.703 | 1.776 | W-1 | |
| DI-116 | MAINLANE | 17+500 | 116+118 | 2.280 | 287 | 2.745 | 3.552 | W-2 | |
| DI-120 | MAINLANE | 19+284 | 120 | 1.090 | 1614 | 0.553 | 2.036 | Y-2 | Y-2 TO FIT CULVERT #11 |
| DI-122 | MAINLANE | 19+360 | 122 | 0.320 | 1234 | 0.186 | 1.018 | Y-1 | |
| DI-122A | MAINLANE | 19+340 | 122A | 0.390 | 582 | 0.330 | 1.018 | Y-1 | |
| DI-123 | MAINLANE | 19+867 | 123 | 0.710 | 980 | 0.463 | 1.018 | Y-1 | |
| DI-125 | MAINLANE | 21+180 | 125 | 0.920 | 926 | 0.617 | 1.018 | Y-1 | |
| DI-128 | MAINLANE | 21+500 | 125+128 | 1.440 | 1694 | 0.714 | 1.018 | Y-1 | |
| DI-131 | MAINLANE | 22+560 | 131+132 | 2.300 | 1196 | 1.357 | 2.036 | Y-2 | |
| DI-132 | MAINLANE | 22+080 | 132 | 0.840 | 609 | 0.694 | 1.018 | Y-1 | |
| DI-135 | MAINLANE | 22+780 | 131+132+135 | 2.430 | 727 | 1.838 | 3.552 | W-2 | |
| DI-140 | MAINLANE | 23+800 | 140 | 0.100 | 325 | 0.113 | 1.018 | Y-1 | |
| DI-149 | MAINLANE | 26+843 | 149 | 0.620 | 512 | 0.559 | 2.036 | Y-2 | Y-2 TO FIT CULVERT #22 |
| DI-150 | MAINLANE | 27+374 | 150 | 0.498 | 150 | 0.829 | 1.018 | TY-3A | 2 INLETS TO FIT CULVERT #23 |

** $Q=1.704Lh^{3/2}$; h=A+y

*** $Q=CA\sqrt{2gh}$; h=A+y
g=9.81 m/s
C=0.7

LEGEND

CI CURB INLET
ACI ARMOR CURB INLET
DI DROP INLET

555 EAST RAMSEY SAN ANTONIO TEXAS 78216 PHONE (210)375-9000 FAX (210)375-9010
PAPE-DAWSON ENGINEERS CIVIL & ENVIRONMENTAL
STATE OF TEXAS K. STEPHEN BONNETTE 60928 REGISTERED PROFESSIONAL ENGINEER
K. STEPHEN BONNETTE, P.E. 9/20/00 DATE

© 2000 Texas Department of Transportation

## LOOP 1604
## INLET COMPUTATION SHEET

| DN: | | | | | PROJECT NO. | |
|---|---|---|---|---|---|---|
| CK DN: | | | | | NH 2000 (704), etc. | |
| DW: | CONTROL | SECTION | JOB | DIST. | COUNTY | HIGHWAY NO. | SHEET NO. |
| CK DW: | 2452 | 01 | 036 etc. | SAT | BEXAR | LOOP 1604 | 453 |

Design Filename: j:\2341\16\civil\Design\IntDA\COMP-SHT.DGN

Plotted on: 07/02/01

Design Filename: j:\3941\16\change order\design\civil\plansheets\433716comp-sht.dgn

# CURB INLET COMPUTATIONS

| NO. | CONTROL | STATION | D.A NO | $Q_A$ CMS | CARRY OVER CMS | TOTAL $Q_A$ CMS | z | z / n | S M / M | y m | PONDED WIDTH yxz m | A m | $Q_L$ CMS | $L_R$ m | $L_A$ m | $L_A/L_T$ | A / Y | $Q_1/Q_L$ | Q=QaXQ1 / QA | CARRY OVER CMS | REMARKS |
|---|---|---|---|---|---|---|---|---|---|---|---|---|---|---|---|---|---|---|---|---|---|
| CI-Z1 | MAINLANE | 16+037 | C10+C11 | 0.058 | | 0.058 | 100.00 | 5556 | 0.0166 | 0.042 | 4.214 | 0.063 | 0.024 | 2.424 | 3.000 | 1.238 | 1.505 | 1.136 | 0.066 | 0.000 | |
| CI-Z2 | MAINLANE | 16+002 | C5 | 0.049 | | 0.049 | 77.00 | 4278 | 0.0150 | 0.044 | 3.424 | 0.063 | 0.024 | 2.005 | 3.000 | 1.496 | 1.426 | 1.000 | 0.049 | 0.000 | |
| CI-ZA1 | MAINLANE | 16+048 | C15 | 0.048 | | 0.048 | 208.00 | 11556 | 0.0150 | 0.030 | 6.323 | 0.063 | 0.021 | 2.242 | 3.000 | 1.338 | 2.086 | 1.000 | 0.048 | 0.000 | |
| CI-ZB1 | MAINLANE | 16+023 | C7 | 0.028 | | 0.028 | 100.00 | 5556 | 0.0150 | 0.033 | 3.268 | 0.063 | 0.022 | 3.000 | 3.000 | 1.000 | 1.940 | 1.000 | 0.028 | 0.000 | |
| CI-Y1 | MAINLANE | 16+044 | C14 | 0.047 | | 0.047 | 185.00 | 10278 | 0.0151 | 0.031 | 5.823 | 0.063 | 0.022 | 2.172 | 3.000 | 1.381 | 2.014 | 1.000 | 0.047 | 0.000 | |
| CI-Y2 | MAINLANE | 16+038 | C9 | 0.048 | | 0.048 | 100.00 | 5556 | 0.0085 | 0.044 | 4.450 | 0.063 | 0.024 | 3.000 | 3.000 | 1.000 | 1.425 | 1.000 | 0.048 | 0.000 | |
| CI-Y3 | MAINLANE | 16+023 | C6 | 0.030 | | 0.030 | 100.00 | 5556 | 0.0065 | 0.039 | 3.923 | 0.063 | 0.023 | 1.288 | 3.000 | 2.330 | 1.616 | 1.000 | 0.030 | 0.000 | |
| CI-Y4 | MAINLANE | 16+004 | C4 | 0.051 | | 0.051 | 100.00 | 5556 | 0.0100 | 0.044 | 4.416 | 0.063 | 0.024 | 2.093 | 3.000 | 1.434 | 1.436 | 1.000 | 0.051 | 0.000 | |
| CI-XA1 | MAINLANE | 16+038 | C8 | 0.068 | | 0.068 | 100.00 | 5556 | 0.0025 | 0.064 | 6.379 | 0.063 | 0.029 | 3.000 | 3.000 | 1.000 | 0.994 | 1.000 | 0.068 | 0.000 | |
| ACI-C3 | SBFR | 0+598 | C3 | 0.053 | | 0.053 | 250.00 | 13889 | ---- | 0.041 | ---- | 0.063 | ---- | 0.331 | 3.000 | 9.073 | 1.546 | 1.000 | 0.053 | 0.000 | SUMP * * |
| ACI-C12 | SBFR | 0+654 | C12 | 0.038 | | 0.038 | 50.00 | 2778 | ---- | 0.037 | ---- | 0.063 | ---- | 0.242 | 3.000 | 12.410 | 1.713 | 1.000 | 0.038 | 0.000 | SUMP * * |
| ACI-C13 | SBFR | 0+695 | C13 | 0.080 | | 0.080 | 54.80 | 3044 | ---- | 0.085 | ---- | 0.063 | ---- | 0.419 | 3.000 | 7.167 | 0.746 | 1.000 | 0.080 | 0.000 | SUMP * * |
| | | | | | | | | | | | | | | | | | | | | | |
| CI-W3 | MAINLANE | 19+323 | W5 | 0.490 | | 0.490 | 78.37 | 3918 | 0.0456 | 0.088 | 6.933 | 0.063 | 0.035 | 14.048 | 6.000 | 0.427 | 0.717 | 0.576 | 0.282 | 0.208 | C.O. TO CI-W1 |
| CI-W2 | MAINLANE | 19+296 | W4 | 0.170 | | 0.170 | 50.00 | 2500 | 0.0450 | 0.071 | 3.529 | 0.063 | 0.030 | 5.580 | 3.000 | 0.538 | 0.898 | 0.668 | 0.114 | 0.056 | C.O. TO ACI-W1 |
| CI-W1 | MAINLANE | 19+296 | W2 | 0.190 | 0.282 | 0.472 | 38.90 | 2161 | ---- | 0.108 | ---- | 0.063 | ---- | 2.298 | 3.000 | 1.305 | 0.587 | 1.000 | 0.472 | 0.000 | SUMP * * |
| CI-WA1 | MAINLANE | 19+341 | W3 | 0.140 | | 0.140 | 28.60 | 1589 | ---- | 0.386 | ---- | 0.063 | ---- | 0.421 | 3.000 | 7.127 | 0.164 | 1.000 | 0.140 | 0.000 | SUMP * * |
| ACI-W1 | NTARWISE | 0+130.5 | W1 | 0.194 | 0.114 | 0.308 | 42.60 | 2367 | ---- | 0.371 | ---- | 0.063 | ---- | 0.942 | 3.000 | 3.185 | 0.171 | 1.000 | 0.308 | 0.000 | SUMP * * |
| | | | | | | | | | | | | | | | | | | | | | |
| CI-U1 | MAINLANE | 22+642 | P2 | 0.105 | | 0.105 | 30.70 | 1706 | 0.0080 | 0.094 | 2.886 | 0.063 | 0.036 | 2.894 | 3.000 | 1.037 | 0.675 | 1.000 | 0.105 | 0.000 | |
| | | | | | | | | | | | | | | | | | | | | | |
| CI-V1 | MAINLANE | 21+210 | MI1 | 0.077 | | 0.077 | 16.67 | 926 | 0.0170 | 0.091 | 1.523 | 0.063 | 0.036 | 2.162 | 3.000 | 1.387 | 0.694 | 1.000 | 0.077 | 0.000 | |
| CI-V2 | MAINLANE | 21+254 | MI4 | 0.067 | | 0.067 | 33.33 | 1852 | 0.0377 | 0.058 | 1.919 | 0.063 | 0.027 | 2.445 | 3.000 | 1.227 | 1.101 | 1.000 | 0.067 | 0.000 | |
| | | | | | | | | | | | | | | | | | | | | | |
| CI-T1 | MAINLANE | 26+287 | MA5 | 0.198 | | 0.198 | 38.20 | 2122 | ---- | 0.150 | ---- | 0.063 | ---- | 0.860 | 3.000 | 3.488 | 0.423 | 1.000 | 0.198 | 0.000 | SUMP * * |
| CI-T2 | MAINLANE | 26+305 | MA6 | 0.395 | | 0.395 | 63.00 | 3500 | ---- | 0.148 | ---- | 0.063 | ---- | 1.730 | 3.000 | 1.734 | 0.428 | 1.000 | 0.395 | 0.000 | SUMP * * |
| CI-T3 | MAINLANE | 26+311 | MA3 | 0.091 | | 0.091 | 50.00 | 2778 | ---- | 0.022 | ---- | 0.063 | ---- | 0.630 | 3.000 | 4.762 | 2.882 | 1.000 | 0.091 | 0.000 | SUMP * * |
| CI-TB1 | MAINLANE | 26+287 | MA2 | 0.100 | | 0.100 | 50.00 | 2778 | ---- | 0.057 | ---- | 0.063 | ---- | 0.580 | 3.000 | 5.172 | 1.112 | 1.000 | 0.100 | 0.000 | SUMP * * |
| | | | | | | | | | | | | | | | | | | | | | |
| CI-I10A | MAINLANE | 18+865.271 | I10A | 0.291 | | 0.291 | 50.00 | 2778 | ---- | 0.152 | ----- | 0.063 | ----- | 1.264 | 3.000 | 2.374 | 0.417 | 1.000 | 0.291 | 0.000 | SUMP * * |
| CI-I10B | MAINLANE | 18+884.113 | I10B | 0.105 | | 0.105 | 51.00 | 2833 | ---- | 0.152 | ----- | 0.063 | ----- | 0.456 | 3.000 | 6.578 | 0.417 | 1.000 | 0.105 | 0.000 | SUMP * * |
| ACI-I2A | SBFR | 1+050 | I12A | 0.175 | | 0.175 | 23.00 | 1278 | 0.0167 | 0.111 | 2.543 | 0.063 | 0.041 | 4.307 | 6.000 | 1.393 | 0.570 | 1.000 | 0.175 | 0.000 | |
| ACI-I13 | NBFR | 1+125 | I13 | 0.116 | | 0.116 | 20.00 | 1111 | 0.0179 | 0.099 | 1.970 | 0.063 | 0.037 | 3.097 | 3.000 | 0.969 | 0.639 | 0.987 | 0.114 | 0.002 | C.O. TO MEDIAN |
| ACI-I24 | NBFR | 1+857.64 | I24 | 0.119 | | 0.119 | 27.00 | 1500 | ---- | 0.115 | ---- | 0.063 | ---- | 0.569 | 3.000 | 5.277 | 0.548 | 1.000 | 0.119 | 0.000 | SUMP * * |
| CI-I26 | MAINLANE | 20+860 | I26 | 0.145 | | 0.145 | 21.30 | 1183 | 0.0168 | 0.106 | 2.255 | 0.063 | 0.039 | 3.682 | 3.000 | 0.815 | 0.595 | 0.910 | 0.132 | 0.013 | C.O. TO MEDIAN |
| ACI-I29 | NBFR | 3+587 | I29 | 0.098 | | 0.098 | 18.50 | 1028 | 0.0223 | 0.091 | 1.690 | 0.063 | 0.036 | 2.752 | 3.000 | 1.090 | 0.690 | 1.000 | 0.098 | 0.000 | |
| CI-I36 | MAINLANE | 23+130 | I36 | 0.181 | | 0.181 | 20.40 | 1133 | 0.0070 | 0.138 | 2.811 | 0.063 | 0.048 | 3.760 | 6.000 | 1.596 | 0.457 | 1.000 | 0.181 | 0.000 | |
| ACI-I39A | NBFR | 5+720 | I39A | 0.180 | | 0.180 | 23.60 | 1311 | 0.0035 | 0.148 | 3.499 | 0.063 | 0.051 | 3.520 | 3.000 | 0.852 | 0.425 | 0.943 | 0.170 | 0.010 | C.O. TO ACI-I39B |
| ACI-I39B | NBFR | 5+808 | I39B | 0.102 | 0.010 | 0.112 | 24.60 | 1367 | 0.0035 | 0.122 | 3.007 | 0.063 | 0.044 | 2.561 | 3.000 | 1.171 | 0.515 | 1.000 | 0.112 | 0.000 | |
| ACI-I46 | NBFR | 7+490 | I46 | 0.201 | | 0.201 | 22.20 | 1233 | 0.0050 | 0.148 | 3.283 | 0.063 | 0.051 | 3.939 | 6.000 | 1.523 | 0.426 | 1.000 | 0.201 | 0.000 | |
| CI-I48 | MAINLANE | 25+950 | I48 | 0.167 | | 0.167 | 22.20 | 1233 | 0.0035 | 0.148 | 3.275 | 0.063 | 0.051 | 3.279 | 3.000 | 0.915 | 0.427 | 0.970 | 0.162 | 0.005 | C.O. TO MEDIAN |
| ACI-MA1 | NBFR | 8+223.380 | MA1 | 0.159 | | 0.159 | 37.90 | 2106 | ---- | 0.080 | ---- | 0.063 | ---- | 1.730 | 3.000 | 1.734 | 0.788 | 1.000 | 0.159 | 0.000 | SUMP * * |
| ACI-W1 | MAINLANE | 19+259.342 | W1 | 0.194 | | 0.194 | 44.05 | 2447 | 0.0107 | 0.098 | 4.313 | 0.063 | 0.037 | 5.201 | 6.000 | 1.154 | 0.643 | 1.000 | 0.194 | 0.000 | |

# DROP INLET COMPUTATIONS ***

| NO. | CONTROL | STATION | D.A NO | $Q_A$ CMS | H MM | REQ 'D AREA $M^2$ | INLET AREA $M^2$ | INLET TYPE | REMARKS |
|---|---|---|---|---|---|---|---|---|---|
| DI-Z1 | NBFR | 0+710 | I10+I11+I14+I15 | 4.582 | 940.000 | 3.040 | 3.552 | W-2 | |
| DI-Z2 | MAINLANE | 15+920 | C2 | 0.310 | 165.000 | 0.492 | 1.018 | Y-1 | |
| DI-X1 | SBFR | 0+685 | I12+I12B | 0.930 | 700.000 | 0.717 | 1.018 | Y-1 | |
| DI-X2 | MAINLANE | 15+915 | C1+C3 | 0.367 | 150.000 | 0.611 | 1.018 | Y-1 | |
| DI-TA1 | NBFR | 8+305 | MA7 | 0.381 | 300.000 | 0.449 | 1.018 | Y-1 | |
| DI-I1 | MAINLANE | 14+436 | I1 | 0.440 | 766 | 0.324 | 1.018 | Y-1 | |
| DI-I2 | MAINLANE | 15+691 | I2 | 0.570 | 585 | 0.481 | 1.018 | Y-1 | |
| DI-I3 | MAINLANE | 15+420 | I5+I5A+I3 | 0.440 | 864 | 0.305 | 1.018 | Y-1 | |
| DI-I4 | MAINLANE | 15+500 | I4 | 0.100 | 300 | 0.118 | 1.018 | Y-1 | |
| DI-I5A | MAINLANE | 15+360 | I5+I5A | 0.180 | 118 | 0.338 | 1.018 | Y-1 | |
| DI-I10 | MAINLANE | 16+374 | I10+I15 | 0.85 | 818.00 | 0.606 | 1.018 | Y-1 | |
| DI-I12B | MAINLANE | 16+640 | I12B | 0.340 | 434 | 0.333 | 1.018 | Y-1 | |
| DI-I14 | MAINLANE | 16+660 | I14 | 4.611 | 366 | 5.290 | 5.328 | W-3 | 1 |
| DI-I16 | MAINLANE | 17+500 | I16+I18 | 2.280 | 287 | 2.745 | 3.552 | W-2 | |
| DI-I20 | MAINLANE | 19+284 | I20 | 1.090 | 1614 | 0.553 | 2.036 | Y-2 | Y-2 TO FIT CULVERT #11 |
| DI-I22 | MAINLANE | 19+360 | I22 | 0.320 | 1234 | 0.186 | 1.018 | Y-1 | |
| DI-I22A | MAINLANE | 19+340 | I22A | 0.390 | 582 | 0.330 | 1.018 | Y-1 | |
| DI-I23 | MAINLANE | 19+867 | I23 | 0.710 | 980 | 0.463 | 1.018 | Y-1 | |
| DI-I25 | MAINLANE | 21+180 | I25 | 0.920 | 926 | 0.617 | 1.018 | Y-1 | |
| DI-I28 | MAINLANE | 21+500 | I25+I28 | 1.440 | 1694 | 0.714 | 1.018 | Y-1 | |
| DI-I31 | MAINLANE | 22+560 | I31+I32 | 2.300 | 1196 | 1.357 | 2.036 | Y-2 | |
| DI-I32 | MAINLANE | 22+080 | I32 | 0.840 | 609 | 0.694 | 1.018 | Y-1 | |
| DI-I35 | MAINLANE | 22+780 | I31+I32+I35 | 2.430 | 727 | 1.838 | 3.552 | W-2 | |
| DI-I40 | MAINLANE | 23+800 | I40 | 0.100 | 325 | 0.113 | 1.018 | Y-1 | |
| DI-I49 | MAINLANE | 26+843 | I49 | 0.620 | 512 | 0.559 | 2.036 | Y-2 | Y-2 TO FIT CULVERT #22 |
| DI-I50 | MAINLANE | 27+374 | I50 | 0.498 | 150 | 0.829 | 1.018 | TY-3A | 2 INLETS TO FIT CULVERT #23 |

REQ'D AREA AT 50% CLOGGED

** $Q=1.704Lh^{3/2}$; h=A+y

*** $Q=CA\sqrt{2gh}$; h=A+y
g=9.81 m/s
C=0.7

LEGEND

CI CURB INLET
ACI ARMOR CURB INLET
DI DROP INLET

**CHANGE ORDER # 1 REVISIONS**

DI-Z1 HYDRAULIC PROPERTIES REVISED DUE TO DA-I14 REVISION
DI-Z2 CHANGED FROM INLET TYPE 3-A TO Y-1
DI-I14 CHANGED FROM INLET TYPE W-2 TO W-3
REVISIONS ARE SHOWN CLOUDED AND MARKED WITH A 1.

STATE OF TEXAS K. STEPHEN BONNETTE 60928 REGISTERED PROFESSIONAL ENGINEER

K. STEPHEN BONNETTE, P.E. 7/2/2001 DATE

555 EAST RAMSEY SAN ANTONIO TEXAS 78216 PHONE (210)375-9000 FAX (210)375-9010
PAPE-DAWSON ENGINEERS CIVIL & ENVIRONMENTAL

STATE OF TEXAS K. STEPHEN BONNETTE 60928 REGISTERED PROFESSIONAL ENGINEER

K. STEPHEN BONNETTE, P.E. 7/20/00 DATE

© 2000 Texas Department of Transportation

LOOP 1604
INLET COMPUTATION SHEET

| DN: | | | | | PROJECT NO. | | |
|---|---|---|---|---|---|---|---|
| CK DN: | | | | | NH 2000 (704), etc. | | |
| DW: | CONTROL | SECTION | JOB | DIST. | COUNTY | HIGHWAY NO. | SHEET NO. |
| CK DW: | 2452 | Ø1 | Ø36 | SAT | BEXAR | LOOP 1604 | 453A |

Plotted on: ../31/2006

Design Filename: ...\ao\design\lp1604fm471-90\pd*phase2*change*order*mylars\submital\plansheets\...\...age\datasheets\433716comp-sht.dgn

# CURB INLET COMPUTATIONS

| NO. | CONTROL | STATION | D.A NO | $Q_A$ CMS | CARRY OVER CMS | TOTAL $Q_A$ CMS | z | z / n | S M / M | y m | PONDED WIDTH yxz m | A m | $Q_L$ CMS | $L_R$ m | $L_A$ m | $L_A$/ $L_R$ | A / Y | $Q_1$/ Q | Q=QaXQ1 / QA | CARRY OVER CMS | REMARKS |
|---|---|---|---|---|---|---|---|---|---|---|---|---|---|---|---|---|---|---|---|---|---|
| CI-Z1 | MAINLANE | 16+037 | C10+C11 | 0.058 | | 0.058 | 100.00 | 5556 | 0.0166 | 0.042 | 4.214 | 0.063 | 0.024 | 2.424 | 3.000 | 1.238 | 1.505 | 1.136 | 0.066 | 0.000 | |
| CI-Z2 | MAINLANE | 16+002 | C5 | 0.049 | | 0.049 | 77.00 | 4278 | 0.0150 | 0.044 | 3.424 | 0.063 | 0.024 | 2.005 | 3.000 | 1.496 | 1.426 | 1.000 | 0.049 | 0.000 | |
| CI-ZA1 | MAINLANE | 16+048 | C15 | 0.048 | | 0.048 | 208.00 | 11556 | 0.0150 | 0.030 | 6.323 | 0.063 | 0.021 | 2.242 | 3.000 | 1.338 | 2.086 | 1.000 | 0.048 | 0.000 | |
| CI-ZB1 | MAINLANE | 16+023 | C7 | 0.028 | | 0.028 | 100.00 | 5556 | 0.0150 | 0.033 | 3.268 | 0.063 | 0.022 | 3.000 | 3.000 | 1.000 | 1.940 | 1.000 | 0.028 | 0.000 | |
| CI-Y1 | MAINLANE | 16+044 | C14 | 0.047 | | 0.047 | 185.00 | 10278 | 0.0151 | 0.031 | 5.823 | 0.063 | 0.022 | 2.172 | 3.000 | 1.381 | 2.014 | 1.000 | 0.047 | 0.000 | |
| CI-Y2 | MAINLANE | 16+038 | C9 | 0.048 | | 0.048 | 100.00 | 5556 | 0.0085 | 0.044 | 4.450 | 0.063 | 0.024 | 3.000 | 3.000 | 1.000 | 1.425 | 1.000 | 0.048 | 0.000 | |
| CI-Y3 | MAINLANE | 16+023 | C6 | 0.030 | | 0.030 | 100.00 | 5556 | 0.0065 | 0.039 | 3.923 | 0.063 | 0.023 | 1.288 | 3.000 | 2.330 | 1.616 | 1.000 | 0.030 | 0.000 | |
| CI-Y4 | MAINLANE | 16+004 | C4 | 0.051 | | 0.051 | 100.00 | 5556 | 0.0100 | 0.044 | 4.416 | 0.063 | 0.024 | 2.093 | 3.000 | 1.434 | 1.436 | 1.000 | 0.051 | 0.000 | |
| CI-XA1 | MAINLANE | 16+038 | C8 | 0.068 | | 0.068 | 100.00 | 5556 | 0.0025 | 0.064 | 6.379 | 0.063 | 0.029 | 3.000 | 3.000 | 1.000 | 0.994 | 1.000 | 0.068 | 0.000 | |
| ACI-C3 | SBFR | 0+598 | C3 | 0.053 | | 0.053 | 250.00 | 13889 | ---- | 0.041 | ---- | 0.063 | ---- | 0.331 | 3.000 | 9.073 | 1.546 | 1.000 | 0.053 | 0.000 | SUMP * * |
| ACI-C12 | SBFR | 0+654 | C12 | 0.038 | | 0.038 | 50.00 | 2778 | ---- | 0.037 | ---- | 0.063 | ---- | 0.242 | 3.000 | 12.410 | 1.713 | 1.000 | 0.038 | 0.000 | SUMP * * |
| ACI-C13 | SBFR | 0+695 | C13 | 0.080 | | 0.080 | 54.80 | 3044 | ---- | 0.085 | ---- | 0.063 | ---- | 0.419 | 3.000 | 7.167 | 0.746 | 1.000 | 0.080 | 0.000 | SUMP * * |
| | | | | | | | | | | | | | | | | | | | | | |
| ~~CI-W3~~ | ~~MAINLANE~~ | ~~19+323~~ | ~~W5~~ | ~~0.490~~ | | ~~0.490~~ | ~~78.37~~ | ~~3918~~ | ~~0.0456~~ | ~~0.088~~ | ~~6.933~~ | ~~0.063~~ | ~~0.035~~ | ~~14.048~~ | ~~6.000~~ | ~~0.427~~ | ~~0.717~~ | ~~0.576~~ | ~~0.282~~ | ~~0.208~~ | ~~C.O. TO CI-W1~~ |
| ~~CI-W2~~ | ~~MAINLANE~~ | ~~19+296~~ | ~~W4~~ | ~~0.187~~ | | ~~0.187~~ | ~~50.00~~ | ~~2500~~ | ~~0.0450~~ | ~~0.073~~ | ~~3.657~~ | ~~0.063~~ | ~~0.031~~ | ~~6.016~~ | ~~3.000~~ | ~~0.499~~ | ~~0.867~~ | ~~0.633~~ | ~~0.118~~ | ~~0.069~~ | ~~C.O. TO ACI-W1~~ |
| ~~CI-W1~~ | ~~MAINLANE~~ | ~~19+296~~ | ~~W2~~ | ~~0.180~~ | ~~0.208~~ | ~~0.388~~ | ~~38.90~~ | ~~1945~~ | ~~----~~ | ~~0.108~~ | ~~----~~ | ~~0.063~~ | ~~----~~ | ~~1.889~~ | ~~3.000~~ | ~~1.588~~ | ~~0.587~~ | ~~1.000~~ | ~~0.388~~ | ~~0.000~~ | ~~SUMP * *~~ |
| ~~CI-WA1~~ | ~~MAINLANE~~ | ~~19+341~~ | ~~W3~~ | ~~0.109~~ | | ~~0.109~~ | ~~83.33~~ | ~~4167~~ | ~~----~~ | ~~0.386~~ | ~~----~~ | ~~0.063~~ | ~~----~~ | ~~0.328~~ | ~~3.000~~ | ~~9.153~~ | ~~0.164~~ | ~~1.000~~ | ~~0.109~~ | ~~0.000~~ | ~~SUMP * *~~ |
| ~~ACI-W1~~ | ~~NTARWISE~~ | ~~0+130.5~~ | ~~W1~~ | ~~0.154~~ | ~~0.069~~ | ~~0.223~~ | ~~42.60~~ | ~~2367~~ | ~~----~~ | ~~0.371~~ | ~~----~~ | ~~0.063~~ | ~~----~~ | ~~0.681~~ | ~~3.000~~ | ~~4.407~~ | ~~0.171~~ | ~~0.740~~ | ~~0.223~~ | ~~0.04~~ | ~~C.O. TO DI-I20~~ |
| | | | | | | | | | | | | | | | | | | | | | |
| CI-U1 | MAINLANE | 22+642 | P2 | 0.107 | | 0.107 | 30.70 | 1706 | 0.0080 | 0.095 | 2.906 | 0.063 | 0.043 | 4.608 | 3.000 | 1.022 | 0.670 | 1.000 | 0.107 | 0.000 | |
| | | | | | | | | | | | | | | | | | | | | | |
| ~~CI-V1~~ | ~~MAINLANE~~ | ~~21+210~~ | ~~MI1~~ | ~~0.084~~ | | ~~0.084~~ | ~~16.67~~ | ~~926~~ | ~~0.0170~~ | ~~0.094~~ | ~~1.573~~ | ~~0.063~~ | ~~0.043~~ | ~~3.635~~ | ~~3.000~~ | ~~1.299~~ | ~~0.672~~ | ~~1.000~~ | ~~0.084~~ | ~~0.000~~ | |
| ~~CI-V2~~ | ~~MAINLANE~~ | ~~21+254~~ | ~~MI4~~ | ~~0.067~~ | | ~~0.067~~ | ~~33.33~~ | ~~1852~~ | ~~0.0377~~ | ~~0.058~~ | ~~1.919~~ | ~~0.063~~ | ~~0.027~~ | ~~2.445~~ | ~~3.000~~ | ~~1.227~~ | ~~1.101~~ | ~~1.000~~ | ~~0.067~~ | ~~0.000~~ | |
| | | | | | | | | | | | | | | | | | | | | | |
| CI-T1 | MAINLANE | 26+287 | MA5 | 0.198 | | 0.198 | 38.20 | 2122 | ---- | 0.150 | ---- | 0.063 | ---- | 0.860 | 3.000 | 3.488 | 0.423 | 1.000 | 0.198 | 0.000 | SUMP * * |
| CI-T2 | MAINLANE | 26+305 | MA6 | 0.395 | | 0.395 | 63.00 | 3500 | ---- | 0.148 | ---- | 0.063 | ---- | 1.730 | 3.000 | 1.734 | 0.428 | 1.000 | 0.395 | 0.000 | SUMP * * |
| CI-T3 | MAINLANE | 26+311 | MA3 | 0.091 | | 0.091 | 50.00 | 2778 | ---- | 0.022 | ---- | 0.063 | ---- | 0.630 | 3.000 | 4.762 | 2.882 | 1.000 | 0.091 | 0.000 | SUMP * * |
| CI-TB1 | MAINLANE | 26+287 | MA2 | 0.100 | | 0.100 | 50.00 | 2778 | ---- | 0.057 | ---- | 0.063 | ---- | 0.580 | 3.000 | 5.172 | 1.112 | 1.000 | 0.100 | 0.000 | SUMP * * |
| | | | | | | | | | | | | | | | | | | | | | |
| CI-I10A | MAINLANE | 18+865.271 | I10A | 0.291 | | 0.291 | 50.00 | 2778 | ---- | 0.152 | ----- | 0.063 | ---- | 1.264 | 3.000 | 2.374 | 0.417 | 1.000 | 0.291 | 0.000 | SUMP * * |
| CI-I10B | MAINLANE | 18+884.113 | I10B | 0.105 | | 0.105 | 51.00 | 2833 | ---- | 0.152 | ----- | 0.063 | ---- | 0.456 | 3.000 | 6.578 | 0.417 | 1.000 | 0.105 | 0.000 | SUMP * * |
| ACI-12A | SBFR | 1+050 | I12A | 0.175 | | 0.175 | 23.00 | 1278 | 0.0167 | 0.111 | 2.543 | 0.063 | 0.041 | 4.307 | 6.000 | 1.393 | 0.570 | 1.000 | 0.175 | 0.000 | |
| ACI-I13 | NBFR | 1+125 | I13 | 0.116 | | 0.116 | 20.00 | 1111 | 0.0179 | 0.099 | 1.970 | 0.063 | 0.037 | 3.097 | 3.000 | 0.969 | 0.639 | 0.987 | 0.114 | 0.002 | C.O. TO MEDIAN |
| ACI-I24 | NBFR | 1+857.64 | I24 | 0.119 | | 0.119 | 27.00 | 1500 | ---- | 0.115 | ---- | 0.063 | ---- | 0.569 | 3.000 | 5.277 | 0.548 | 1.000 | 0.119 | 0.000 | SUMP * * |
| CI-I26 | MAINLANE | 20+860 | I26 | 0.145 | | 0.145 | 21.30 | 1183 | 0.0168 | 0.106 | 2.255 | 0.063 | 0.039 | 3.682 | 3.000 | 0.815 | 0.595 | 0.910 | 0.132 | 0.013 | C.O. TO MEDIAN |
| ~~ACI-I29~~ | ~~NBFR~~ | ~~3+587~~ | ~~I29~~ | ~~0.098~~ | | ~~0.098~~ | ~~18.50~~ | ~~1028~~ | ~~0.0223~~ | ~~0.091~~ | ~~1.690~~ | ~~0.063~~ | ~~0.036~~ | ~~2.752~~ | ~~3.000~~ | ~~1.090~~ | ~~0.690~~ | ~~1.000~~ | ~~0.098~~ | ~~0.000~~ | |
| CI-I36 | MAINLANE | 23+130 | I36 | 0.181 | | 0.181 | 20.40 | 1133 | 0.0070 | 0.138 | 2.811 | 0.063 | 0.048 | 3.760 | 6.000 | 1.596 | 0.457 | 1.000 | 0.181 | 0.000 | |
| ACI-I39A | NBFR | 5+720 | I39A | 0.180 | | 0.180 | 23.60 | 1311 | 0.0035 | 0.148 | 3.499 | 0.063 | 0.051 | 3.520 | 3.000 | 0.852 | 0.425 | 0.943 | 0.170 | 0.010 | C.O. TO ACI-I39B |
| ACI-I39B | NBFR | 5+808 | I39B | 0.102 | 0.010 | 0.112 | 24.60 | 1367 | 0.0035 | 0.122 | 3.007 | 0.063 | 0.044 | 2.561 | 3.000 | 1.171 | 0.515 | 1.000 | 0.112 | 0.000 | |
| ACI-I46 | NBFR | 7+490 | I46 | 0.201 | | 0.201 | 22.20 | 1233 | 0.0050 | 0.148 | 3.283 | 0.063 | 0.051 | 3.939 | 6.000 | 1.523 | 0.426 | 1.000 | 0.201 | 0.000 | |
| CI-I48 | MAINLANE | 25+950 | I48 | 0.167 | | 0.167 | 22.20 | 1233 | 0.0035 | 0.148 | 3.275 | 0.063 | 0.051 | 3.279 | 3.000 | 0.915 | 0.427 | 0.970 | 0.162 | 0.005 | C.O. TO MEDIAN |
| ACI-MA1 | NBFR | 8+223.380 | MA1 | 0.159 | | 0.159 | 37.90 | 2106 | ---- | 0.080 | ---- | 0.063 | ---- | 1.730 | 3.000 | 1.734 | 0.788 | 1.000 | 0.159 | 0.000 | SUMP * * |
| ~~ACI-W1~~ | ~~MAINLANE~~ | ~~19+259.342~~ | ~~W1~~ | ~~0.124~~ | | ~~0.124~~ | ~~44.05~~ | ~~2447~~ | ~~0.0107~~ | ~~0.090~~ | ~~4.313~~ | ~~0.063~~ | ~~0.037~~ | ~~5.201~~ | ~~6.000~~ | ~~1.154~~ | ~~0.647~~ | ~~1.000~~ | ~~0.124~~ | ~~0.000~~ | |
| ACI-I42A | EMORY PEAK | 0+030 RT. | I44 | 0.051 | | 0.051 | 50.00 | 3333 | 0.0209 (≠) | 0.048 | 2.400 | 0.063 | 0.022 | 1.962 | 3.000 | 1.529 | | | | | ASSUMED Q'S ON GRADE 100% INTERCEPT. |
| ACI-I44A | EMORY PEAK | 0+030 LT. | I42 | 0.051 | | 0.051 | 50.00 | 3333 | 0.0209 (≠) | 0.048 | 2.400 | 0.063 | 0.022 | 1.962 | 3.000 | 1.529 | | | | | |
| ACI-I47A | DODGE CITY TRAIL | 0+084 LT. | I47 | 0.049 | | 0.049 | 50.00 | 3333 | 0.0025 (≠≠) | 0.067 | 3.350 | 0.063 | 0.083 | 0.590 | 3.000 | 5.085 | | | | | SAG, 100% INTERCEPT. 2:1 SAFETY (±) |
| ACI-I47B | DODGE CITY TRAIL | 0+084 RT. | 20 | 0.045 | | 0.045 | 50.00 | 3333 | 0.0025 (≠≠) | 0.067 | 3.350 | 0.063 | 0.083 | 0.542 | 3.000 | 5.535 | | | | | |

**CHANGE ORDER NO. 129**

-NEW INLET COMPUTATION DATA FOR ARMOR CURB SLOTS PLACED AT EMORY PEAK AND DODGE CITY TRAIL.

# DROP INLET COMPUTATIONS ***

| NO. | CONTROL | STATION | D.A NO | $Q_A$ CMS | H MM | REQ 'D AREA $M^2$ | INLET AREA $M^2$ | INLET TYPE | REMARKS |
|---|---|---|---|---|---|---|---|---|---|
| DI-Z1 | NBFR | 0+710 | I10+I11+I14+I15 | 4.582 | 940.000 | 3.040 | 3.552 | W-2 | |
| DI-Z2 | MAINLANE | 15+920 | C2 | 0.310 | 165.000 | 0.492 | 1.018 | Y-1 | |
| DI-X1 | SBFR | 0+685 | I12+I12B | 0.930 | 700.000 | 0.717 | 1.018 | Y-1 | |
| DI-X2 | MAINLANE | 15+915 | C1+C3 | 0.367 | 150.000 | 0.611 | 1.018 | Y-1 | |
| DI-TA1 | NBFR | 8+305 | MA7 | 0.381 | 300.000 | 0.449 | 1.018 | Y-1 | |
| DI-I1 | MAINLANE | 14+436 | I1 | 0.440 | 766 | 0.324 | 1.018 | Y-1 | |
| DI-I2 | MAINLANE | 15+691 | I2 | 0.570 | 585 | 0.481 | 1.018 | Y-1 | |
| DI-I3 | MAINLANE | 15+420 | I5+I5A+I3 | 0.440 | 864 | 0.305 | 1.018 | Y-1 | |
| DI-I4 | MAINLANE | 15+500 | I4 | 0.100 | 300 | 0.118 | 1.018 | Y-1 | |
| DI-I5A | MAINLANE | 15+360 | I5+I5A | 0.180 | 118 | 0.338 | 1.018 | Y-1 | |
| DI-I10 | MAINLANE | 16+374 | I10+I15 | 0.85 | 818.00 | 0.606 | 1.018 | Y-1 | |
| DI-I12B | MAINLANE | 16+640 | I12B | 0.340 | 434 | 0.333 | 1.018 | Y-1 | |
| DI-I14 | MAINLANE | 16+660 | I14 | 4.611 | 366 | 5.290 | 5.328 | W-3 | |
| DI-I16 | MAINLANE | 17+500 | I16+I18 | 2.280 | 287 | 2.745 | 3.552 | W-2 | |
| ~~DI-I20~~ | ~~MAINLANE~~ | ~~19+284~~ | ~~I20~~ | ~~1.076~~ | ~~1614~~ | ~~0.644~~ | ~~2.036~~ | ~~Y-2~~ | ~~Y-2 TO FIT CULVERT #11~~ |
| DI-I22 | MAINLANE | 19+360 | I22 | 0.310 | 1234 | 0.181 | 1.018 | Y-1 | |
| DI-I22A | MAINLANE | 19+340 | I22A | 0.390 | 582 | 0.330 | 1.018 | Y-1 | |
| DI-I23 | MAINLANE | 19+867 | I23 | 0.710 | 980 | 0.463 | 1.018 | Y-1 | |
| ~~DI-I25~~ | ~~MAINLANE~~ | ~~21+180~~ | ~~I25~~ | ~~0.920~~ | ~~926~~ | ~~0.617~~ | ~~1.018~~ | ~~Y-1~~ | |
| ~~DI-I28~~ | ~~MAINLANE~~ | ~~21+500~~ | ~~I25+I28~~ | ~~1.440~~ | ~~1694~~ | ~~0.714~~ | ~~1.018~~ | ~~Y-1~~ | |
| DI-I31 | MAINLANE | 22+560 | I31+I32 | 2.300 | 1196 | 1.357 | 2.036 | Y-2 | |
| DI-I32 | MAINLANE | 22+080 | I32 | 0.840 | 609 | 0.694 | 1.018 | Y-1 | |
| DI-I35 | MAINLANE | 22+780 | I31+I32+I35 | 2.430 | 727 | 1.838 | 3.552 | W-2 | |
| DI-I40 | MAINLANE | 23+800 | I40 | 0.100 | 325 | 0.113 | 1.018 | Y-1 | |
| ~~DI-I49~~ | ~~MAINLANE~~ | ~~26+843~~ | ~~I49~~ | ~~0.620~~ | ~~512~~ | ~~0.559~~ | ~~2.036~~ | ~~Y-2~~ | ~~Y-2 TO FIT CULVERT #22~~ |
| ~~DI-I50~~ | ~~MAINLANE~~ | ~~27+374~~ | ~~I50~~ | ~~0.490~~ | ~~150~~ | ~~0.829~~ | ~~1.018~~ | ~~TY 3A~~ | ~~2 INLETS TO FIT CULVERT #23~~ |

REQ'D AREA AT 50% CLOGGED

(#) REFERS TO CHANGES MADE AS PART OF CHANGE ORDER.

** $Q=1.704Lh^{3/2}$ ; $h=A+y$

*** $Q=CA\sqrt{2gh}$; $h=A+y$

$g=9.81$ m/s

$C=0.7$

## LEGEND

CI CURB INLET

ACI ARMOR CURB INLET

DI DROP INLET

(≠) ASSUMED AVERAGE

(≠≠) 1/2 OF FLATTEST GRADIENT USED

**REVISED SHEET**

**CHANGE ORDER NO. 129**

STATE OF TEXAS — FITZGERALDO G. SANCHEZ — 76084 — LICENCED PROFESSIONAL ENGINEER

Fitzgeraldo G. Sanchez, P.E. 05-23-06
Date

© 2000 Texas Department of Transportation

LOOP 1604
INLET COMPUTATION SHEET

| DN: | | | PROJECT NO. | | |
|---|---|---|---|---|---|
| CK DN: | | | NH 2000 (704), etc. | | |

| DW: | CONTROL | SECTION | JOB | DIST. | STATE | COUNTY | HIGHWAY NO. | SHEET NO. |
|---|---|---|---|---|---|---|---|---|
| CK DW: | 2452 | 01 | 036 etc. | SAT | TX | BEXAR | LOOP 1604 | 453A |

01-30-06

PLOTTED ON: 09/19/00

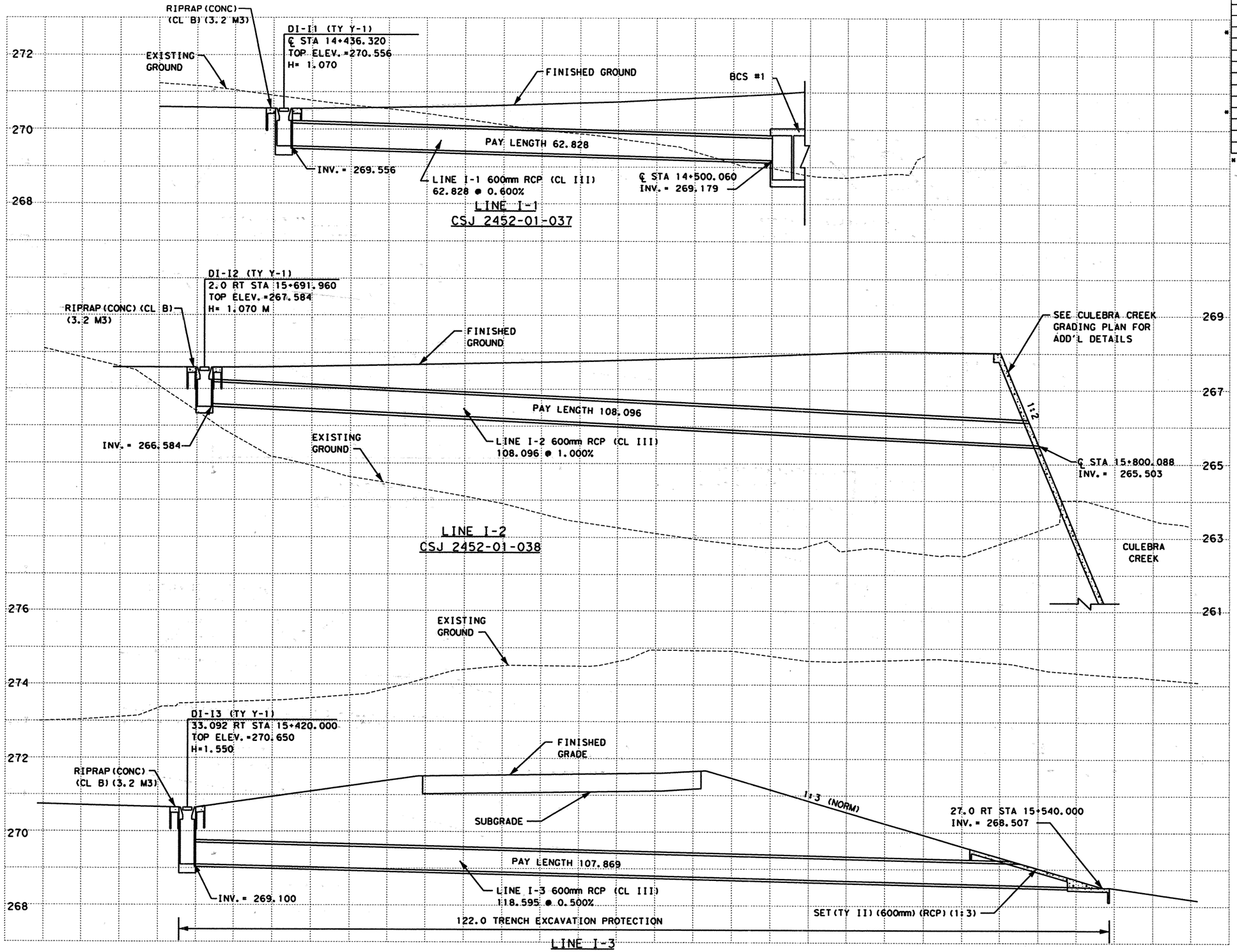


| ESTIMATED QUANTITIES | | | |
|---|---|---|---|
| DESCRIPTION | UNIT | EST. | FINAL |
| CSJ 2452-01-037 | | | |
| * STRUCT EXCAV | M3 | 421.5 | |
| RC PIPE (CL III) (600MM) | M | 170.697 | |
| INLET (DROP) (TY Y-1) | EA | 2 | |
| RIPRAP (CONC) (CL B) | M3 | 6.4 | |
| TRENCH EXCAV PROTECT | M | 122 | |
| SET (TY II) (600MM) (RCP) (1:3) | EA | 1 | |
| CSJ 2452-01-038 | | | |
| * STRUCT EXCAV | M3 | 120.1 | |
| RC PIPE (CL III) (600MM) | M | 108.096 | |
| INLET (COMPL) (DROP) (TY Y-1) | EA | 1 | |
| RIPRAP (CONC) (CL B) | M3 | 3.2 | |

* SUPPLIED FOR CONTRACTOR'S INFORMATION ONLY

NOTES:

1. ALL PIPES ARE NORMAL TO AND STRAIGHT FROM STRUCTURE TO STRUCTURE UNLESS OTHERWISE SHOWN ON INTERIOR DRAINAGE LAYOUTS
2. CONTRACTORS SHALL SHAPE INVERTS OF ALL PROPOSED CURB INLETS, DROP INLETS AND MANHOLES TO PRODUCE POSITIVE FLOW THROUGH STRUCTURE FROM ALL INLETS TO THE OUTLET OF EACH STRUCTURE.
3. CONTRACTOR SHALL INSTALL ALL STORM DRAIN PIPES INTO MANHOLES, BOXES AND EXISTING STRUCTURES FLUSH WITH INSIDE FACE AND GROUT INTO PLACE, INSURING WATERTIGHT SEAL ALL AROUND.
4. ALL STATION AND OFFSET INFORMATION IS REFERENCED TO THE ℄ LOOP 1604 UNLESS OTHERWISE NOTED.
5. CONTRACTOR SHALL CONSTRUCT MANHOLES TO MINIMIZE CONFLICT WITH UTILITIES.
6. SET (TY II) CONSTRUCTION SHALL UTILIZE RIPRAP HEADWALL (MOD) STANDARD SHEET.

SCALE: H: 1:500
V: 1:100

555 EAST RAMSEY SAN ANTONIO TEXAS 78216 PHONE (210)375-9000 FAX (210)375-9010
PAPE-DAWSON ENGINEERS
CIVIL & ENVIRONMENTAL
STATE OF TEXAS K. STEPHEN BONNETTE 60928 REGISTERED PROFESSIONAL ENGINEER
K. STEPHEN BONNETTE, P.E. 09/20/00 DATE

© 2000 Texas Department of Transportation

# LOOP 1604
# STORM DRAIN PROFILES
# LINE I-1 THRU LINE I-3

| DN: | | | | | PROJECT NO. | | |
|---|---|---|---|---|---|---|---|
| CK DN: | | | | | NH 2000 (704), etc. | | |
| DW: | CONTROL | SECTION | JOB | DIST. | STATE | COUNTY | HIGHWAY NO. | SHEET NO. |
| CK DW: | 2452 | 01 | 036 etc. | SAT | TX | BEXAR | LOOP 1604 | 454 |

DESIGN FILENAME: k:\394\16\civil\design\intdgn\394l6strml.dgn

QUANTITIES THIS SHEET
CSJ 7452-01-037

SCALE: 1:50 H
1:50 V

NOTE(S):

1. ALL DIMENSIONS ARE IN METERS UNLESS OTHERWISE NOTED.
2. SET (TYII) CONSTRUCTION SHALL UTILIZE RIPRAP HEADWALL (MOD.) STANDARD SHEET.
3. STATIONS REFERENCED REPRESENT THOSE ALONG THE ℄ LOOP 1604.

ESTIMATED QUANTITIES

| * | DESCRIPTION | UNIT | QUANTITY |
|---|---|---|---|
| | STRUCT EXCAV ((CULV. SMALL) | M3 | 7.0 |
| | RIPRAP CONC (CL B) | M3 | 0.2 |
| | RC PIPE (CL III)(450mm) | M | 8.9 |
| | SET (TY II)(450mm)(1:3) | EA | 1 |
| | SET (TY II)(450mm)(1:4) | EA | 1 |
| | CEMENT STAB BACKFILL | M3 | 2.5 |
| | CUT & RESTORING PAV | M2 | 6.6 |

* FOR CONTRACTORS INFORMATION ONLY

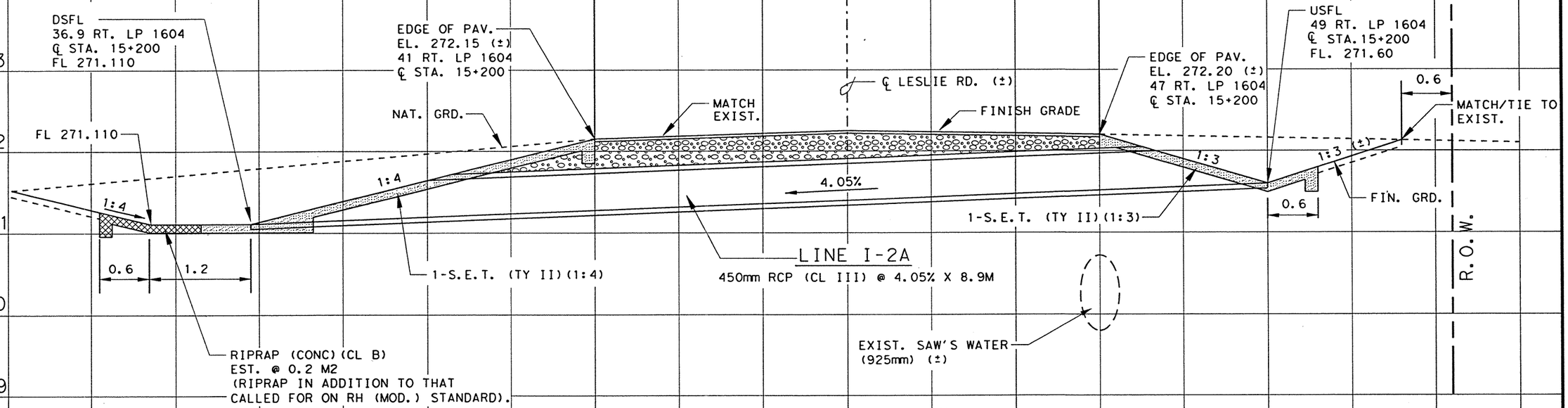


RIPRAP (CONC)(CL B)
EST. @ 0.2 M2
(RIPRAP IN ADDITION TO THAT CALLED FOR ON RH (MOD.) STANDARD).

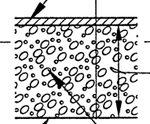


CUT & RESTORING PAV & BACKFILL DETAIL
(LINE I-2A ONLY)

CHANGE ORDER NO. 28

-NEW DRAINAGE STRUCTURE
-NEW QUANTITIES

STATE OF TEXAS
JEROME D. PAVLISKA
76075
REGISTERED PROFESSIONAL ENGINEER

Jerome D. Pavliska P.E. 2-7-03
Jerome D. Pavliska, P.E. Date

CHANGE ORDER 28

NEW SHEET

Texas Department of Transportation

LOOP 1604
STORM DRAIN PROFILE
LINE I-2A

| FED. RD. DIV. NO. | FEDERAL AID PROJECT NO. | | SHEET NO. |
|---|---|---|---|
| 6 | NH 2000 (704), ETC. | | 454A |
| STATE | DISTRICT | | COUNTY |
| TEXAS | SAN ANTONIO | | BEXAR |
| CONT. | SECT. | JOB | HIGHWAY NO. |
| 2452 | 0112 | 036, ETC | LP 1604 |

01-23-03

ACC: t:\ao\design\1604-471-90
FILE: strdrain12A.DGN

LEVELS DISPLAYED
1 2 7 12 32 33 34 35 36 37 38 39 40 41 42 43 44 45 46 47 48 49 50 51 52 53 54 55 56 57 58 59 60

## ESTIMATED QUANTITIES

| DESCRIPTION | UNIT | CSJ : 2452-01-037 | CSJ : 2452-01-038 |
|---|---|---|---|
| STRUCT EXCAV | M3 | 33 | 480 |
| CL A CONC (COLLAR) | EA | | 1 |
| RIPRAP (CONC) (CL B) | M3 | | 2.3 |
| RC PIPE (CL III) (600 MM) | M | 13.8 | 45.6 |
| INLET (COMPL) (CURB) (TY IV) | EA | 1 | 1 |
| SET (TY II) (600 MM) (RCP) (1:3) | EA | | 1 |
| TRENCH EXCAVATION PROTECTION | M | | 42 |
| LOAD & WASTE STR EXCAV | M3 | 33 | 480 |

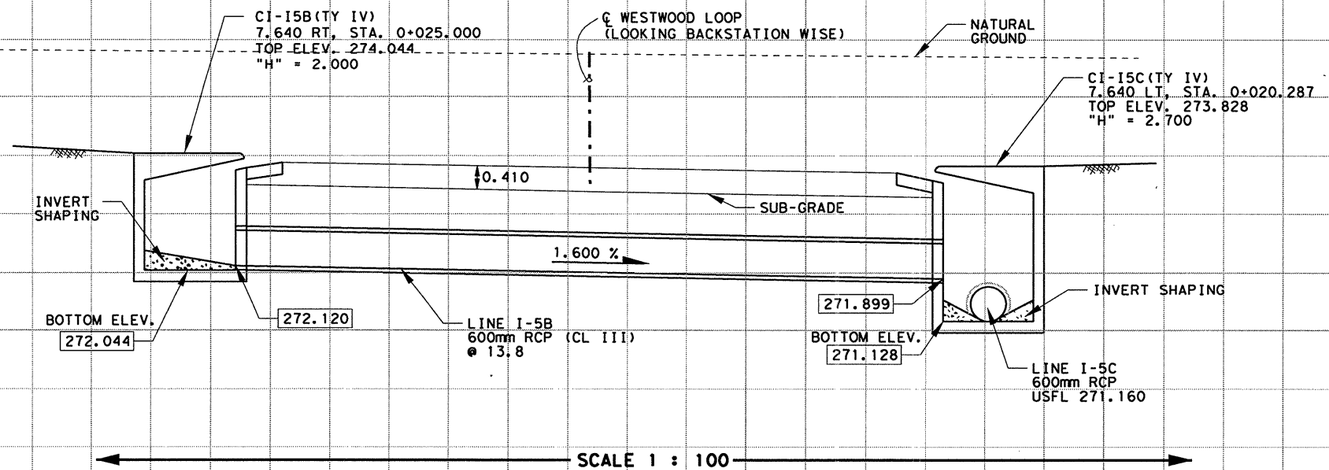


**LINE I-5B**

CSJ : 2452-01-037

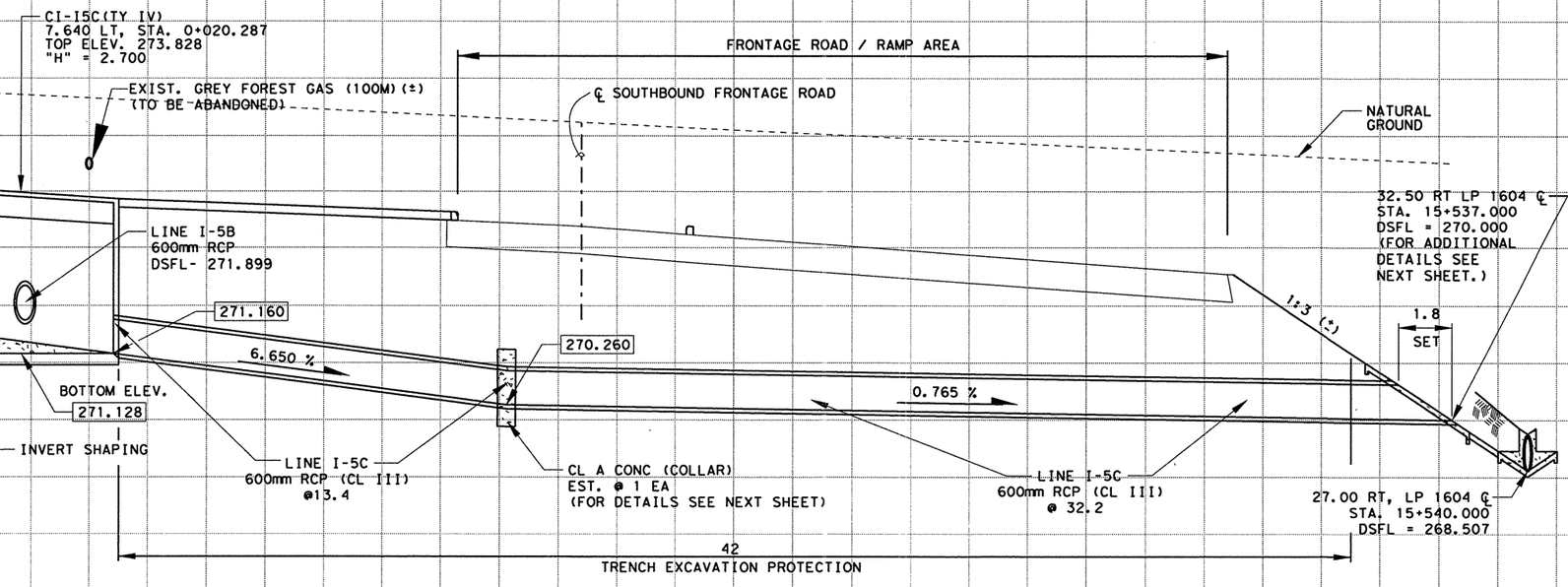


**LINE I-5C**

CSJ : 2452-01-038

NOTE(S):

1. ALL DIMENSIONS ARE IN METERS UNLESS OTHERWISE NOTED.

CHANGE ORDER NO. 28

NEW STORM SEWER NEEDED @ WESTWOOD LP.

**CHANGE ORDER 28**

**NEW SHEET**

STATE OF TEXAS
JEROME D. PAVLISKA
76075
REGISTERED
PROFESSIONAL ENGINEER

Jerome D. Pavliska, P.E. 8-18-03
Jerome D. Pavliska, P.E. — Date

Texas Department of Transportation

# STORM DRAIN I-5B & I-5C

SHEET 1 OF 2

| FED. RD. DIV. NO. | FEDERAL AID PROJECT NO. | | SHEET NO. |
|---|---|---|---|
| 6 | NH 2000(704), etc. | | 454 |
| STATE | DIST. | COUNTY | |
| TEXAS | SAT | BEXAR | |
| CONT. | SECT. | JOB | HIGHWAY NO. |
| 2452 | 01 | 036, etc. | LP 1604 |

LEVELS DISPLAYED
1 2 3 4 5 6 7 8 9 10 11 12 13 14 15 16 17 18 19 20 21 22 23 24 25 26 27 28 29 30 31 32 33 34 35 36 37 38 39 40 41 42 43 44 45 46 47 48 49 50 51 52 53 54 55 56 57 58 59 60 61 62 63

ACC: t:\ao\design\lp1604fm471-90\

FILE: strdrain5b*5c

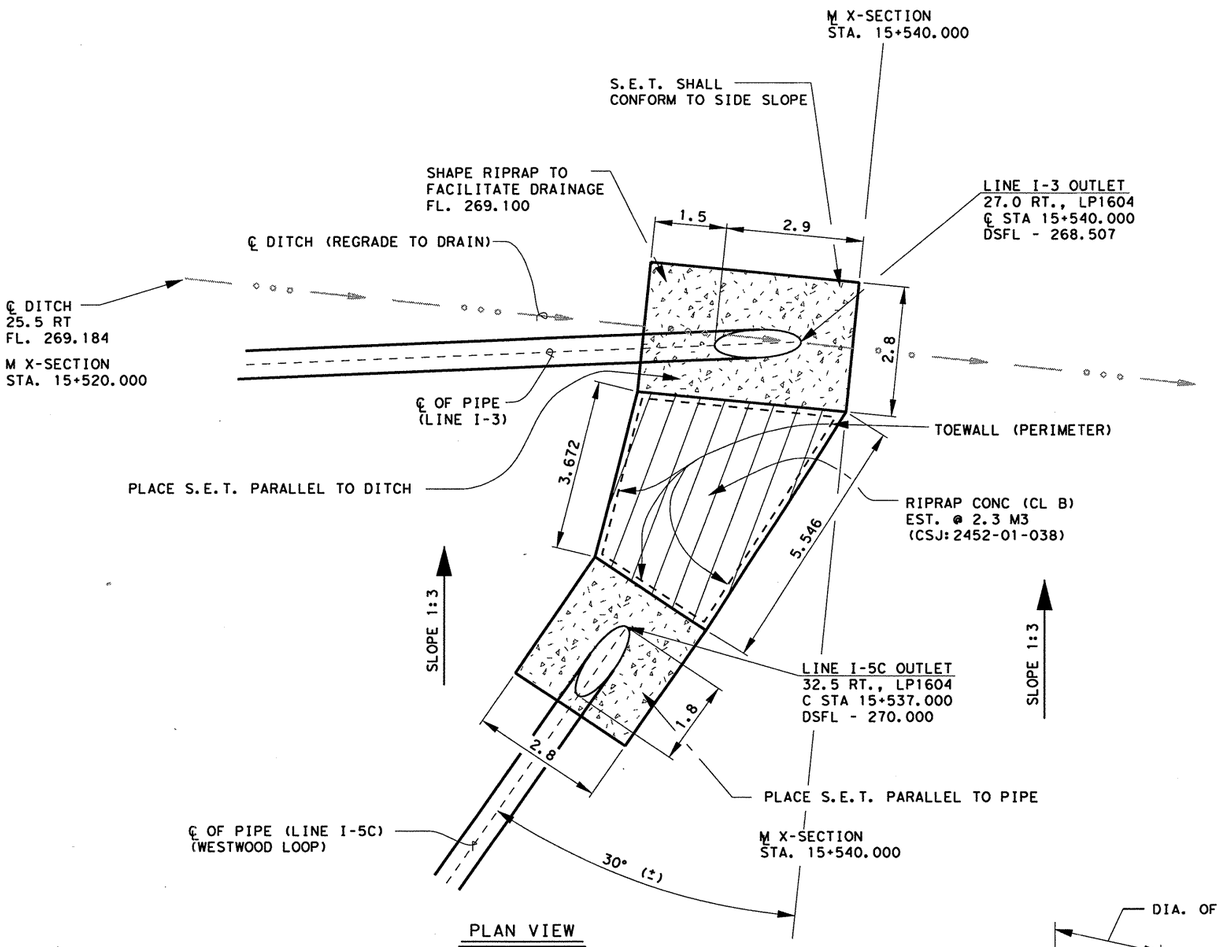


PLAN VIEW

OUTFALL RIPRAP DETAILS
FOR LINE I-3 & I-5C

NOTE(S)

RIPRAP TO BE PAID FOR, NOT CONSIDERED SUBSIDIARY TO S.E.T. (FOR PAYMENT SEE PRIOR SHEET.)

REFER TO SHEET 414 FOR MORE SPECIFICS ABOUT RIPRAP HEADWALL

FOR MORE INFO SEE PROJECT X-SECTION

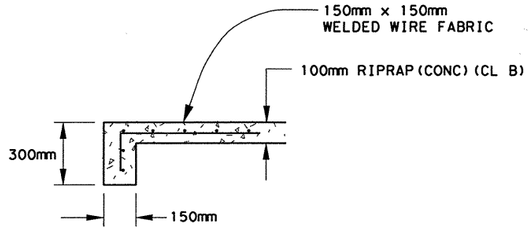


TOE WALL DETAIL

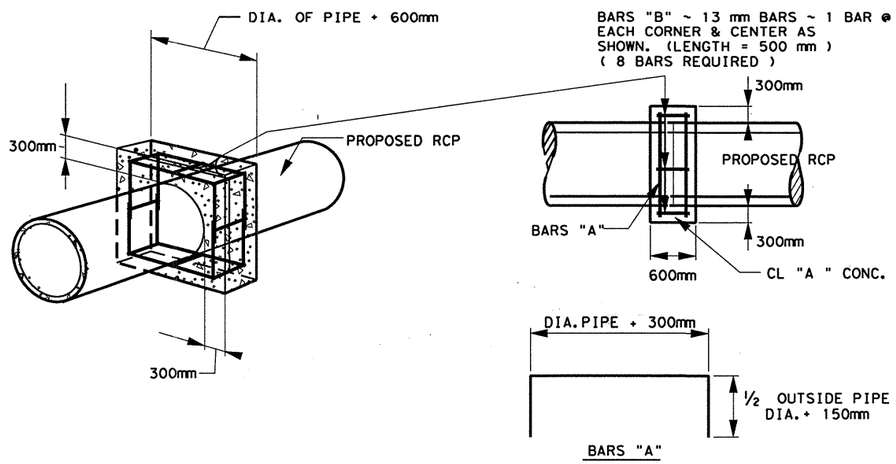


CONCRETE COLLAR DETAIL

NOTE:
ALL WORK & MATERIALS NECESSARY TO MAKE THE ENCASEMENT SHOWN SHALL BE PAID AS BID ITEM 0420-5005 "CL A CONC (COLLAR)".

NOTE(S):

1. DIMENSIONS ARE SHOWN IN METERS UNLESS OTHERWISE NOTED.

CHANGE ORDER NO. 28

NEW SHEET ADDED, SHOWING MISC. DETAILS ASSOCIATED WITH STORM DRAINAGE NEEDED AT WESTWOOD LP.

CHANGE ORDER 28

NEW SHEET

STATE OF TEXAS
JEROME D. PAVLISKA
76075
REGISTERED PROFESSIONAL ENGINEER

Jerome D. Pavliska, P.E. 8-18-03
Jerome D. Pavliska, P.E. Date

© 2001 Texas Department of Transportation

STORM DRAIN I-5B & I-5C

SHEET 2 OF 2

| FED.RD. DIV.NO. | FEDERAL AID PROJECT NO. | | SHEET NO. |
|---|---|---|---|
| 6 | NH 2000(704), etc. | | 454 C |
| STATE | DIST. | COUNTY | |
| TEXAS | SAT | BEXAR | |
| CONT. | SECT. | JOB | HIGHWAY NO. |
| 2452 | 01 | 036, etc. | LP 1604 |

LEVELS DISPLAYED
1 2 3 4 5 6 7 8 9 10 11 12 13 14 15 16
17 18 19 20 21 22 23 24 25 26 27 28 29 30 31 32
33 34 35 36 37 38 39 40 41 42 43 44 45 46 47 48
49 50 51 52 53 54 55 56 57 58 59 60 61 62 63

ACC: t:\oo\design\lp1604fm471-90\
FILE: misc*details*storm.dgn

| ESTIMATED QUANTITIES | | |
|---|---|---|
| ITEM | UNIT | QTY |
| * STRUCT EXCAVATION | M3 | 75 |
| RC PIPE (CL III) (450 MM) | M | 54.9 |
| INLET (COMPL) (CURB) (TY II) | EA | 1 |
| LOAD & WAST STR EXCAV | M3 | 75 |

* SUPPLIED FOR CONTRACTOR'S INFORMATION ONLY.

## WESTWOOD VISTA

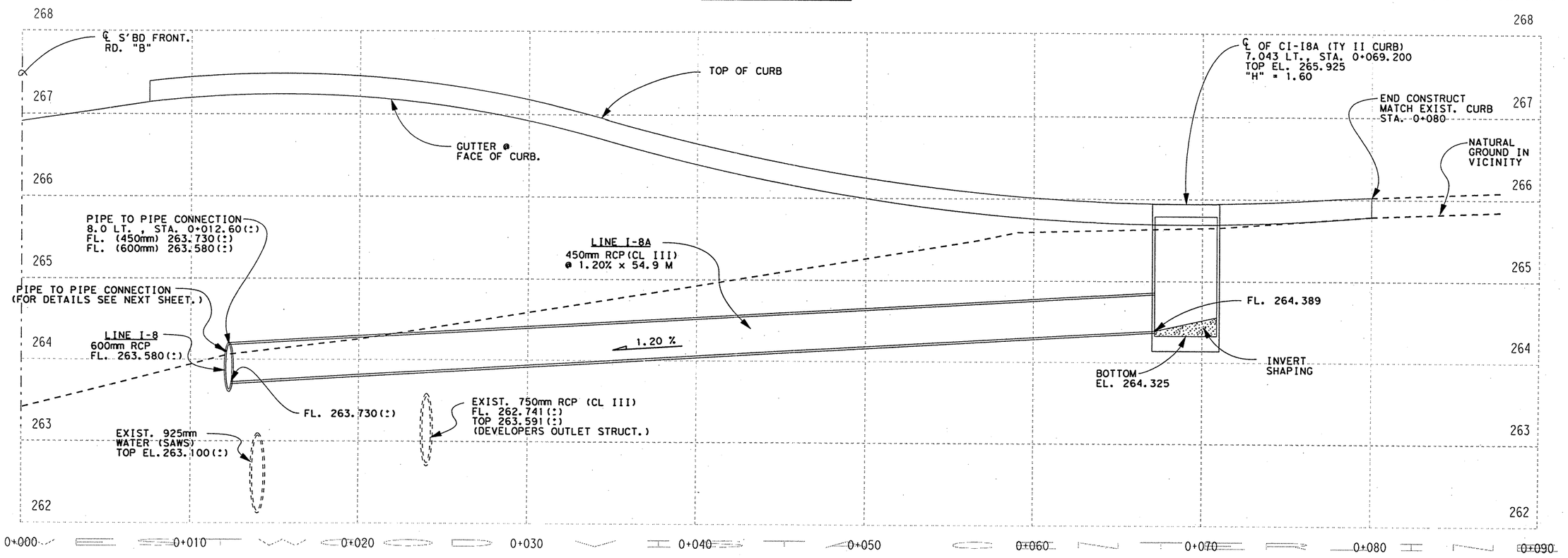


VERTICAL SCALE 1:50
HORIZONTAL SCALE 1:250

## WESTWOOD VISTA

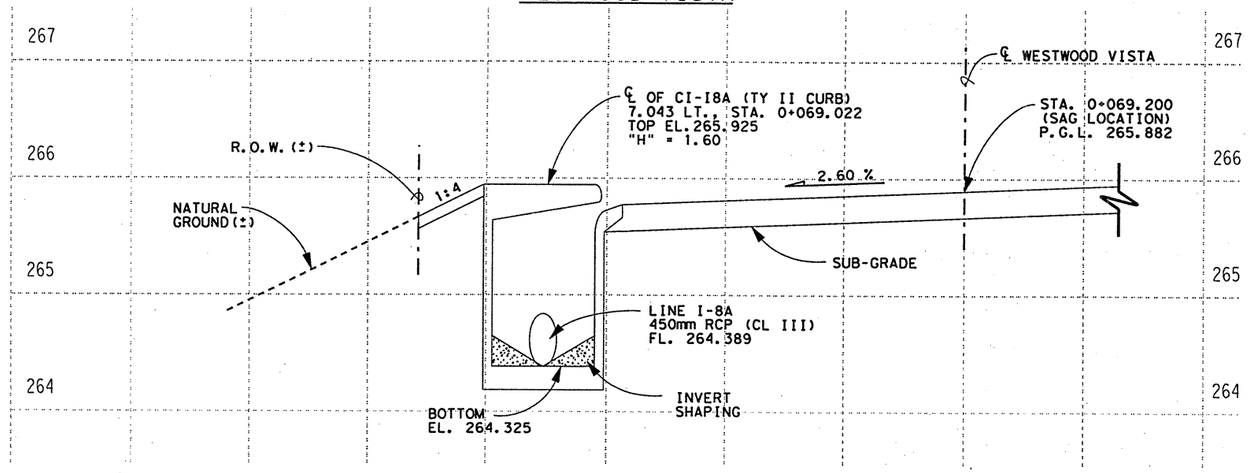


VERTICAL SCALE 1:50
HORIZONTAL SCALE 1:100

**CHANGE ORDER 28**

**NEW SHEET**

CHANGE ORDER NO. 28
-NEW STORM SEWER NEEDED AT WESTWOOD VISTA.

NOTE(S):

1. DIMENSIONS ARE SHOWN IN METERS UNLESS OTHERWISE NOTED.

STATE OF TEXAS
JEROME D. PAVLISKA
76075
REGISTERED PROFESSIONAL ENGINEER

Jerome D. Pavliska P.E. 8-18-03
Jerome D. Pavliska, P.E. — Date

© 2001 Texas Department of Transportation

# STORM DRAIN I-8A

SHEET 1 OF 2

| FED. RD. DIV. NO. | FEDERAL AID PROJECT NO. | | SHEET NO. |
|---|---|---|---|
| 6 | NH 2000 (704), etc | | 454 D |
| STATE | DIST. | COUNTY | |
| TEXAS | SAT | BEXAR | |
| CONT. | SECT. | JOB | HIGHWAY NO. |
| 2452 | 01 | 036 etc | I.P. 1604 |

LEVELS DISPLAYED
ACC: t:\oo\design\lp1604fm471-90\
FILE: chmisc#det#str#i8a.dgn

≠ JOINT SEALER AND CONSTRUCTION METHODS SHALL CONFORM TO THE ITEM "REINFORCED CONCRETE PIPE CULVERTS" THE CONTRACTOR SHALL HAVE OPTION OF USING JOINT MATERIAL COVERED THEREIN.

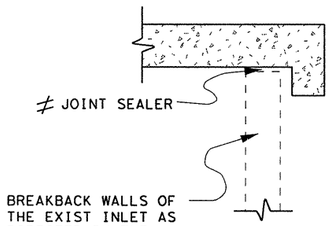


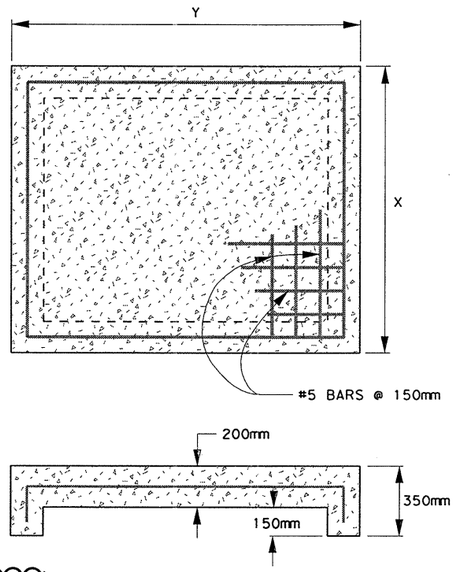


## CAP DETAILS FOR DROP INLETS

-(X & Y DIMENSIONS TO BE DETERMINED @ EACH INDIVIDUAL INLET.)

-ALL WORK AND MATERIALS NECCESSARY TO ALLOW FOR THE CAPPING THE INLETS SHOWN SHALL BE PAID FOR UNDER THE ITEM 479 "ADJUSTING MANHOLES AND INLETS".

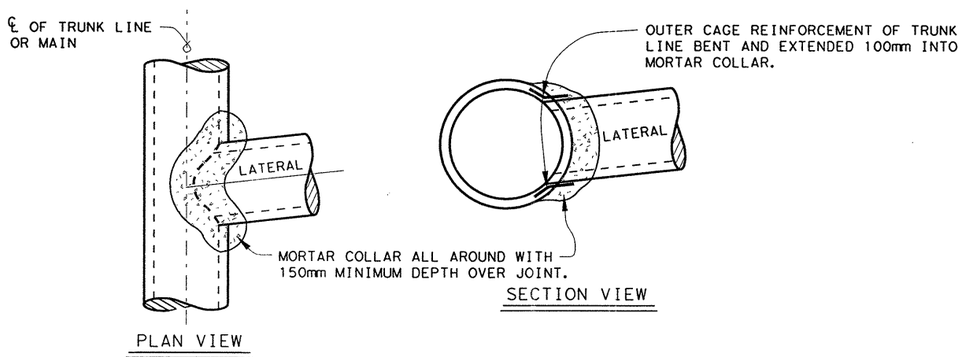


## PIPE SEWER CONNECTION DETAIL

NOTE: ALL WORK AND MATERIALS NECESSARY TO MAKE THE CONNECTION SHOWN SHALL BE SUBSIDIARY TO THE VARIOUS RC PIPE INVOLVED.

## CHANGE ORDER NO. 28

NEW SHEET ADDED, SHOWING MISC. DETAILS ASSOCIATED WITH STORM DRAINAGE NEEDED AT WESTWOOD VISTA.

NOTE(S):

1. DIMENSIONS ARE SHOWN IN METERS UNLESS OTHERWISE NOTED.

CHANGE ORDER 28

NEW SHEET

STATE OF TEXAS
JEROME D. PAVLISKA
76075
REGISTERED
PROFESSIONAL ENGINEER

Jerome D. Pavliska P.E. 2-7-03
Jerome D. Pavliska, P.E. Date

© 2001
Texas Department of Transportation

STORM DRAIN I-8A

SHEET 2 OF 2

| FED. RD. DIV. NO. | FEDERAL AID PROJECT NO. | | SHEET NO. |
|---|---|---|---|
| 6 | NH 2000 (704), etc | | 454 E |
| STATE | DIST. | COUNTY | |
| TEXAS | SAT | BEXAR | |
| CONT. | SECT. | JOB | HIGHWAY NO. |
| 2452 | 01 | 036, etc. | LP 1604 |

01-23-03

LEVELS DISPLAYED
1 2 3 4 5 6 7 8 9 10 11 12 13 14 15 16
17 18 19 20 21 22 23 24 25 26 27 28 29 30 31 32
33 34 35 36 37 38 39 40 41 42 43 44 45 46 47 48
49 50 51 52 53 54 55 56 57 58 59 60 61 62 63

ACC: t:\no\design\lp1604fm471-90\
FILE: chvmisc*det*str*i8a*2.dgn

| CAPPING EXIST. INLET P5 | | | | |
|---|---|---|---|---|
| **ESTIMATED QUANTITIES** | | | | |
| REINF. STEEL | LENGTH | NO. | BAR SIZE | WEIGHT (KG) |
| BARS "X" (┌─┐) | 1.98 | 45 | 5 | 138.5 |
| BARS "Y" (┌──┐) | 7.02 | 12 | 5 | 130.8 |
| | | | | |
| TOTAL REINFORCING STEEL | | | | 269.3 |
| TOTAL CL "A" CONCRETE (CAP) | | | M3 | 2.7 |

NOTE(S):

1. DIMENSIONS ARE SHOWN IN METERS UNLESS OTHERWISE NOTED.
2. QUANTITIES SHOWN ARE FOR CONTRACTORS INFORMATION ONLY.
3. FOR PAYMENT SEE STORM DRAIN LAYOUT.

≠ JOINT SEALER AND CONSTRUCTION METHODS SHALL CONFORM TO THE ITEM "REINFORCED CONCRETE PIPE CULVERTS" THE CONTRACTOR SHALL HAVE OPTION OF USING JOINT MATERIAL COVERED THEREIN.

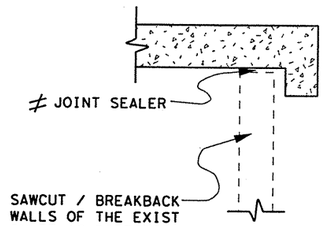


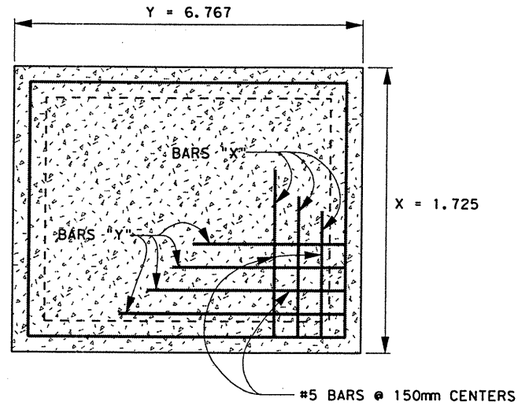


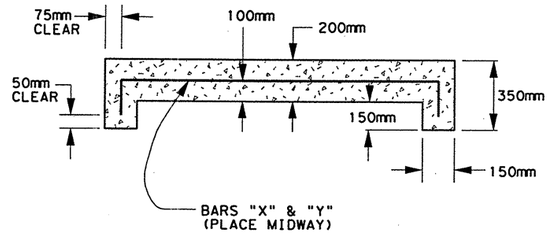


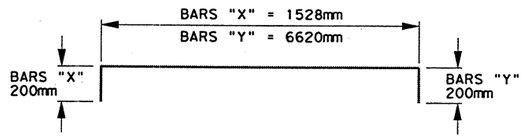


CAPPING DETAILS FOR INLET

-ALL WORK AND MATERIALS NECCESSARY TO ALLOW FOR THE CAPPING OF THIS INLET SHOWN SHALL BE PAID FOR UNDER THE ITEM 479 "ADJUSTING MANHOLES AND INLETS".

-X & Y DIMENSIONS SHALL BE VERIFIED @ EACH INLET.

CHANGE ORDER NO. 64

CAPPING DETAILS FOR EXIST. CURB INLET P5 @ POTRANCO RD.

CHANGE ORDER 64

NEW SHEET

STATE OF TEXAS
JEROME D. PAVLISKA
76075
REGISTERED PROFESSIONAL ENGINEER

Jerome D. Pavliska, P.E. 4-28-04
Jerome D. Pavliska, P.E. — Date

©2004 Texas Department of Transportation

# EXIST. CI-P5 CAPPING DETAILS

SHEET 2 OF 2

| FED.RD. DIV.NO. | FEDERAL AID PROJECT NO. | | SHEET NO. |
|---|---|---|---|
| 6 | NH 2000 (704), etc | | 454G |
| STATE | DIST. | COUNTY | |
| TEXAS | SAT | BEXAR | |
| CONT. | SECT. | JOB | HIGHWAY NO. |
| 2452 | 01 | 036,etc. | LP 1604 |

05-01-04

LEVELS DISPLAYED
1 2 3 4 5 6 7 8 9 10 11 12 13 14 15 16
17 18 19 20 21 22 23 24 25 26 27 28 29 30 31 32
33 34 35 36 37 38 39 40 41 42 43 44 45 46 47 48
49 50 51 52 53 54 55 56 57 58 59 60 61 62 63
ACC: t:\ao\design\lp1604fm471-90\
FILE: ch*misc*det*ci*p5*2.dgn

NOTE(S):
1. DIMENSIONS ARE SHOWN IN METERS UNLESS OTHERWISE NOTED.

| ESTIMATED QUANTITIES | | |
|---|---|---|
| ITEM | UNIT | QTY. |
| * STRUCT EXCAVATION | M3 | 4 |
| RC PIPE (CL III) (450 MM) | M | 3.9 |
| CEMENT STAB BKFL | M3 | 3.0 |
| INLET (COMP) (CURB) (TY IV) | EA | 1 |
| ADJ. INLET (CAP) | EA | 1 |
| CONC (COLLAR) (CL A) | EA | 1 |

* SUPPLIED FOR CONTRACTOR'S INFORMATION ONLY.

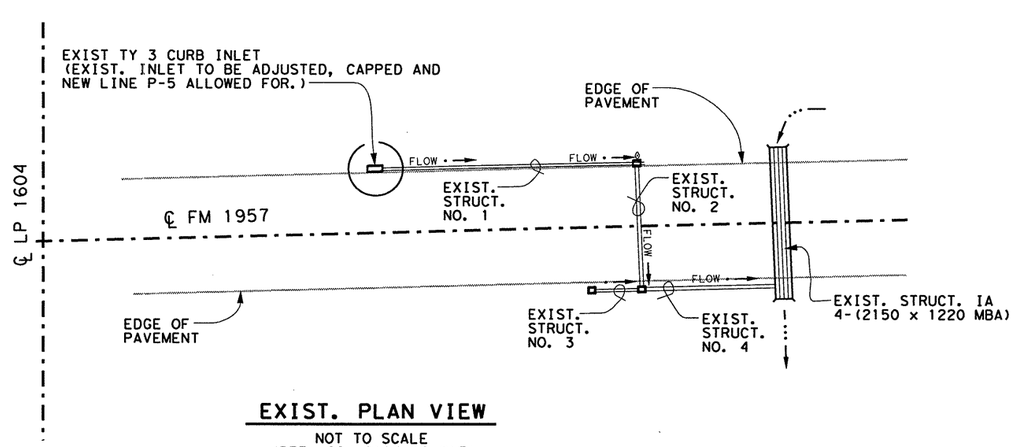


EXIST. PLAN VIEW

NOT TO SCALE
(REF. CSJ: 2104-02-017)

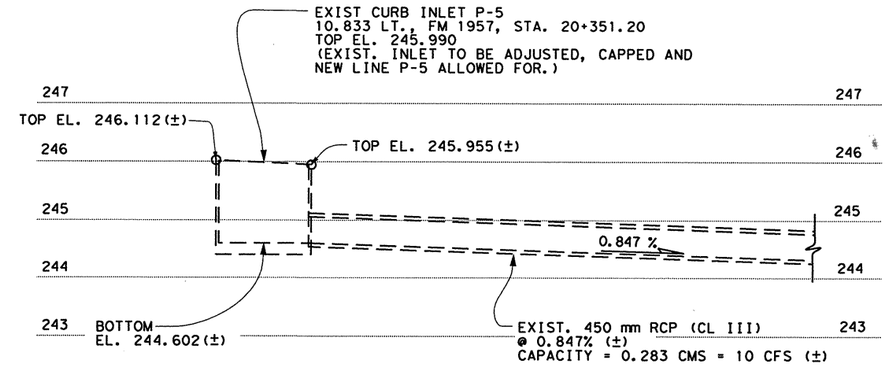


PROFILE

(EXIST. STRUCTURE NO. 1 IN EXIST. PLAN VIEW)

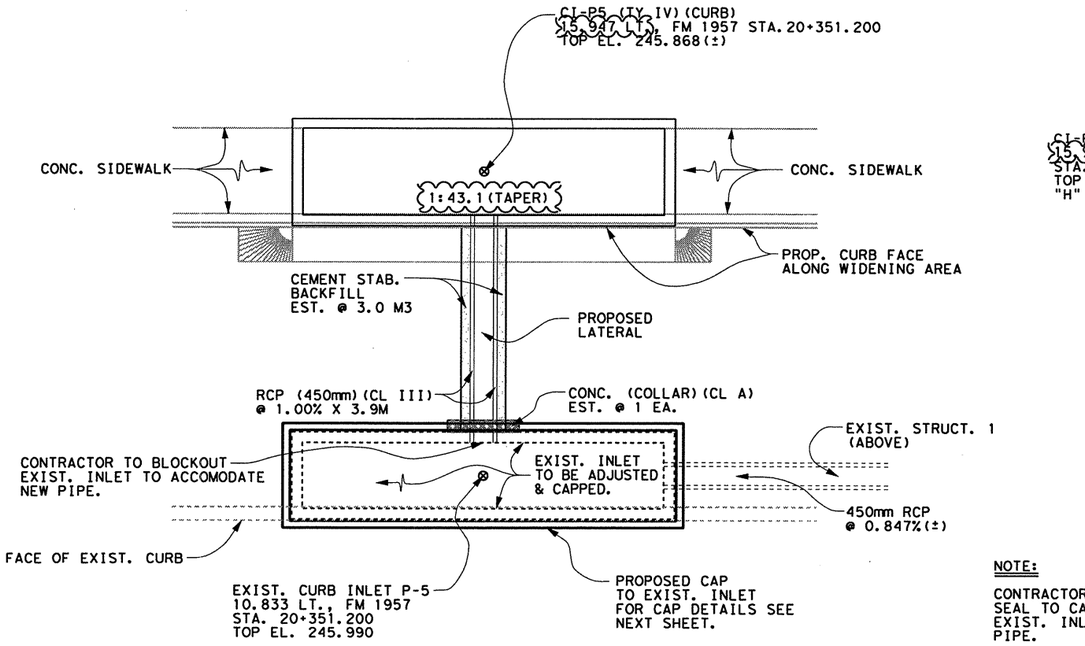


PLAN

LINE P5

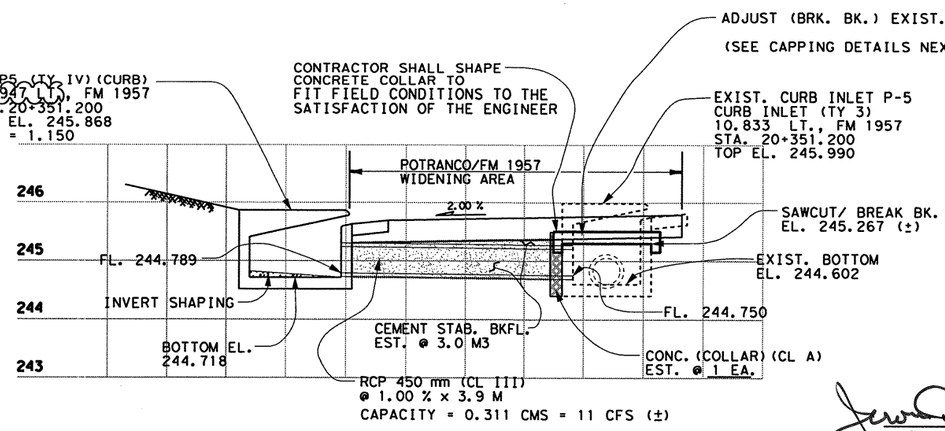


PROFILE

LINE P5

NOTE:

CONTRACTOR SHALL INSURE A WATER TIGHT SEAL TO CAP & AREA BROKE OUT OF THE EXIST. INLET TO ALLOW FOR NEW LATERAL PIPE.

10-14-04 CORRECTED OFFSET TO INLET P5 TO MATCH X-SECTIONS.

CHANGE ORDER 64

NEW SHEET

STATE OF TEXAS
JEROME D. PAVLISKA
76075
REGISTERED
PROFESSIONAL ENGINEER

Jerome D. Pavliska, P.E. 10-19-04
Jerome D. Pavliska, P.E. Date

© 2004 Texas Department of Transportation

# EXIST. CI-P5 CAPPING DETAILS

SHEET 1 OF 2

| FED. RD. DIV. NO. | FEDERAL AID PROJECT NO. | SHEET NO. |
|---|---|---|
| 6 | NH 2000 (704), etc | 454 H |
| STATE | DIST. | COUNTY |
| TEXAS | SAT | BEXAR |
| CONT. | SECT. | JOB | HIGHWAY NO. |
| 2452 | 01 | 036 etc | LP 1604 |

LEVELS DISPLAYED
1 2 3 4 5 6 7 8 9 10 11 12 13 14 15 16
17 18 19 20 21 22 23 24 25 26 27 28 29 30 31 32
33 34 35 36 37 38 39 40 41 42 43 44 45 46 47 48
49 50 51 52 53 54 55 56 57 58 59 60 61 62 63

ACC: *:\oo\design\lp1604fm471-90\
FILE: ch*misc*det*ci*p5*1.dgn

PLOTTED ON: 09/19/00

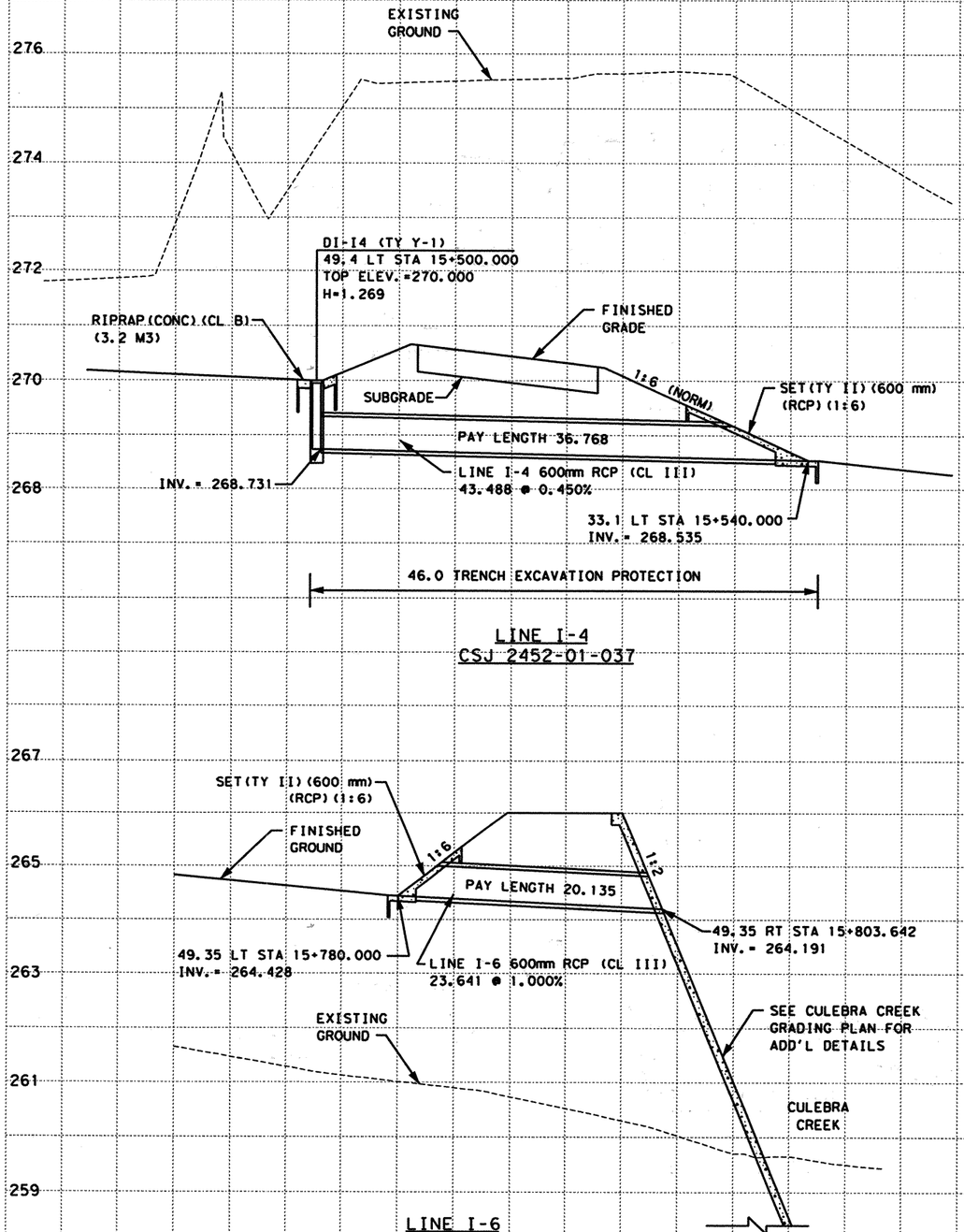


LINE I-4
CSJ 2452-01-037

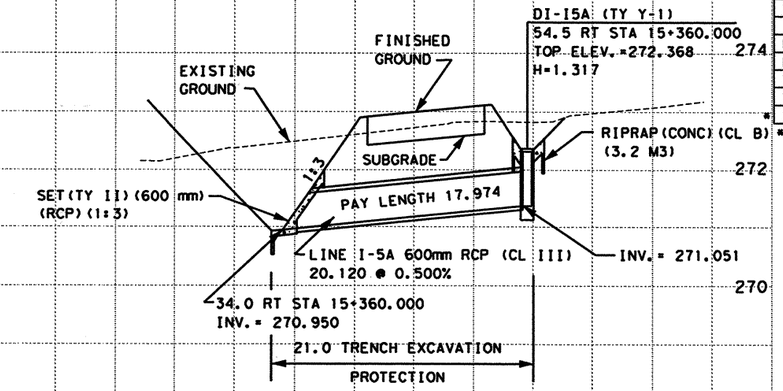


LINE I-5A
CSJ 2452-01-037




LINE I-6
CSJ 2452-01-038

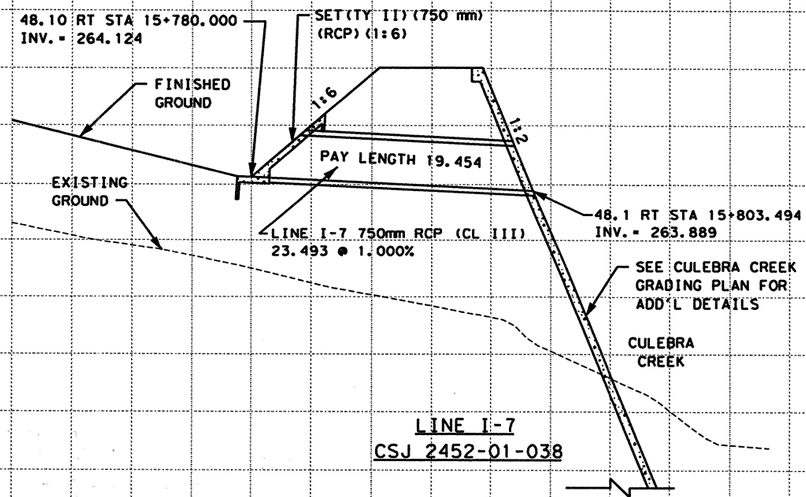


LINE I-7
CSJ 2452-01-038

| ESTIMATED QUANTITIES | | | |
|---|---|---|---|
| DESCRIPTION | UNIT | EST. | FINAL |
| CSJ 2452-01-037 | | | |
| * STRUCT EXCAV | M3 | 110.7 | |
| RC PIPE (CL III) (600MM) | M | 54.742 | |
| INLET (DROP) (TY Y-1) | EA | 2 | |
| RIPRAP (CONC) (CL B) | M3 | 6.4 | |
| TRENCH EXCAV PROTECT | M | 67.0 | |
| SET (TY II) (600MM) (RCP) (1:3) | EA | 1 | |
| SET (TY II) (600MM) (RCP) (1:6) | EA | 1 | |
| CSJ 2452-01-038 | | | |
| RC PIPE (CL III) (600MM) | M | 20.135 | |
| RC PIPE (CL III) (750MM) | M | 19.454 | |
| SET (TY II) (600MM) (RCP) (1:6) | EA | 1 | |
| SET (TY II) (750MM) (RCP) (1:6) | EA | 1 | |
| * STRUCT EXCAV | M3 | 60.1 | |

* SUPPLIED FOR CONTRACTOR'S INFORMATION ONLY

NOTES:

1. ALL PIPES ARE NORMAL TO AND STRAIGHT FROM STRUCTURE TO STRUCTURE UNLESS OTHERWISE SHOWN ON INTERIOR DRAINAGE LAYOUTS
2. CONTRACTORS SHALL SHAPE INVERTS OF ALL PROPOSED CURB INLETS, DROP INLETS AND MANHOLES TO PRODUCE POSITIVE FLOW THROUGH STRUCTURE FROM ALL INLETS TO THE OUTLET OF EACH STRUCTURE.
3. CONTRACTOR SHALL INSTALL ALL STORM DRAIN PIPES INTO MANHOLES, BOXES AND EXISTING STRUCTURES FLUSH WITH INSIDE FACE AND GROUT INTO PLACE, INSURING WATERTIGHT SEAL ALL AROUND.
4. ALL STATION AND OFFSET INFORMATION IS REFERENCED TO THE ℄ LOOP 1604 UNLESS OTHERWISE NOTED.
5. CONTRACTOR SHALL CONSTRUCT MANHOLES TO MINIMIZE CONFLICT WITH UTILITIES.
6. SET (TY II) CONSTRUCTION SHALL UTILIZE RIPRAP HEADWALL (MOD) STANDARD SHEET.

SCALE: H: 1:500
V: 1:100

555 EAST RAMSEY SAN ANTONIO TEXAS 78216
PHONE (210)375-9000
FAX (210)375-9010
PAPE-DAWSON ENGINEERS
CIVIL & ENVIRONMENTAL

STATE OF TEXAS
K. STEPHEN BONNETTE
60928
REGISTERED PROFESSIONAL ENGINEER

K. STEPHEN BONNETTE, P.E. 09/20/00
DATE

© 2000 Texas Department of Transportation

# LOOP 1604
# STORM DRAIN PROFILES
# LINE I-4 THRU LINE I-7

| DN: | | | | | PROJECT NO. | | |
|---|---|---|---|---|---|---|---|
| CK DN: | | | | | NH 2000 (704), etc. | | |
| DW: | CONTROL | SECTION | JOB | DIST. | STATE | COUNTY | HIGHWAY NO. | SHEET NO. |
| CK DW: | 2452 | 01 | 036 etc. | SAT | TX | BEXAR | LOOP 1604 | 455 |

DESIGN FILENAME: 3941N16\civil\design\lntdg\3941l6strml.dgn

| ESTIMATED QUANTITIES | | | |
|---|---|---|---|
| DESCRIPTION | UNIT | EST. | FINAL |
| CSJ:2452-01-038 | | | |
| * STRUCT EXCAV | M3 | 100.8 | |
| RC PIPE (CL III) (600mm) | M | 20.7 | |
| INLET(COMP) (DROP)(TY Y-1) | EA | 1 | |
| RIPRAP (CONC) (CL B) | M3 | 3.2 | |
| TRENCH EXCAV PROTECTION | M | 16.0 | |

* SUPPLIED FOR CONTRACTOR'S INFORMATION ONLY

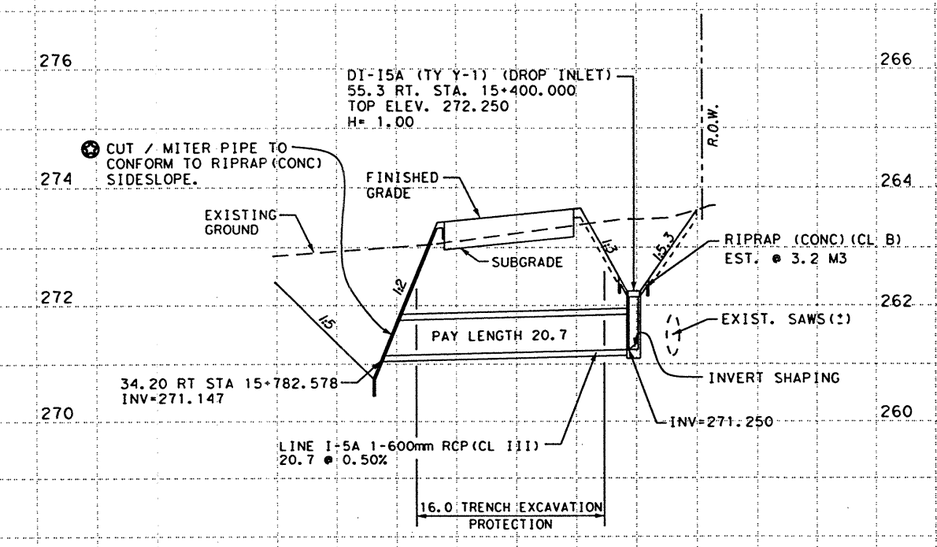


**LINE I-5A**

CSJ:2452-01-038

LABOR & MATERIALS NEEDED TO PERFORM OR ALLOW FOR THIS WORK SHALL BE CONSIDERED SUBSIDIARY TO THE VARIOUS PERTINENT BID ITEMS.

**CHANGE ORDER NO. 28**

- RELOCATED THIS LINE TO AVOID SAWS CONFLICT.
- NEW QUANTITIES.

NOTES:

1. ALL DIMENSIONS ARE IN METERS UNLESS OTHERWISE NOTED.
2. CONTRACTORS SHALL SHAPE INVERTS OF ALL PROPOSED CURB INLETS, DROP INLETS AND MANHOLES TO PRODUCE POSITIVE FLOW THROUGH STRUCTURE FROM ALL INLETS TO THE OUTLET OF EACH STRUCTURE.
3. CONTRACTOR SHALL INSTALL ALL STORM DRAIN PIPES INTO MANHOLES, BOXES AND EXISTING STRUCTURES FLUSH WITH INSIDE FACE AND GROUT INTO PLACE, INSURING WATERTIGHT SEAL ALL AROUND.
4. ALL STATION AND OFFSET INFORMATION IS REFERENCED TO THE ℄ LOOP 1604 UNLESS OTHERWISE NOTED.

CHANGE ORDER 28

NEW SHEET

SCALE: H: 1:500
V: 1:100

STATE OF TEXAS
JEROME D. PAVLISKA
76075
REGISTERED PROFESSIONAL ENGINEER

Jerome D. Pavliska, P.E. 2-7-03
Jerome D. Pavliska, P.E. Date

© 2001 Texas Department of Transportation

LOOP 1604
STORM DRAIN PROFILES
LINE I-5A

| DN: | | | | | | PROJECT NO. | |
|---|---|---|---|---|---|---|---|
| CK DN: | | | | | | NH 2000 (704), etc. | |
| DR: | CONTROL | SECTION | JOB | DIST. | STATE | COUNTY | HIGHWAY NO. | SHEET NO. |
| CK DR: | 2452 | 01 | 036 etc. | SAT | TX | BEXAR | LOOP 1604 | 4558 |

01-23-03

PLOTTED ON: 2/7/03
DESIGN FILENAME: $FILE$ tx sht 455.dgn

PLOTTED ON: $DATE$

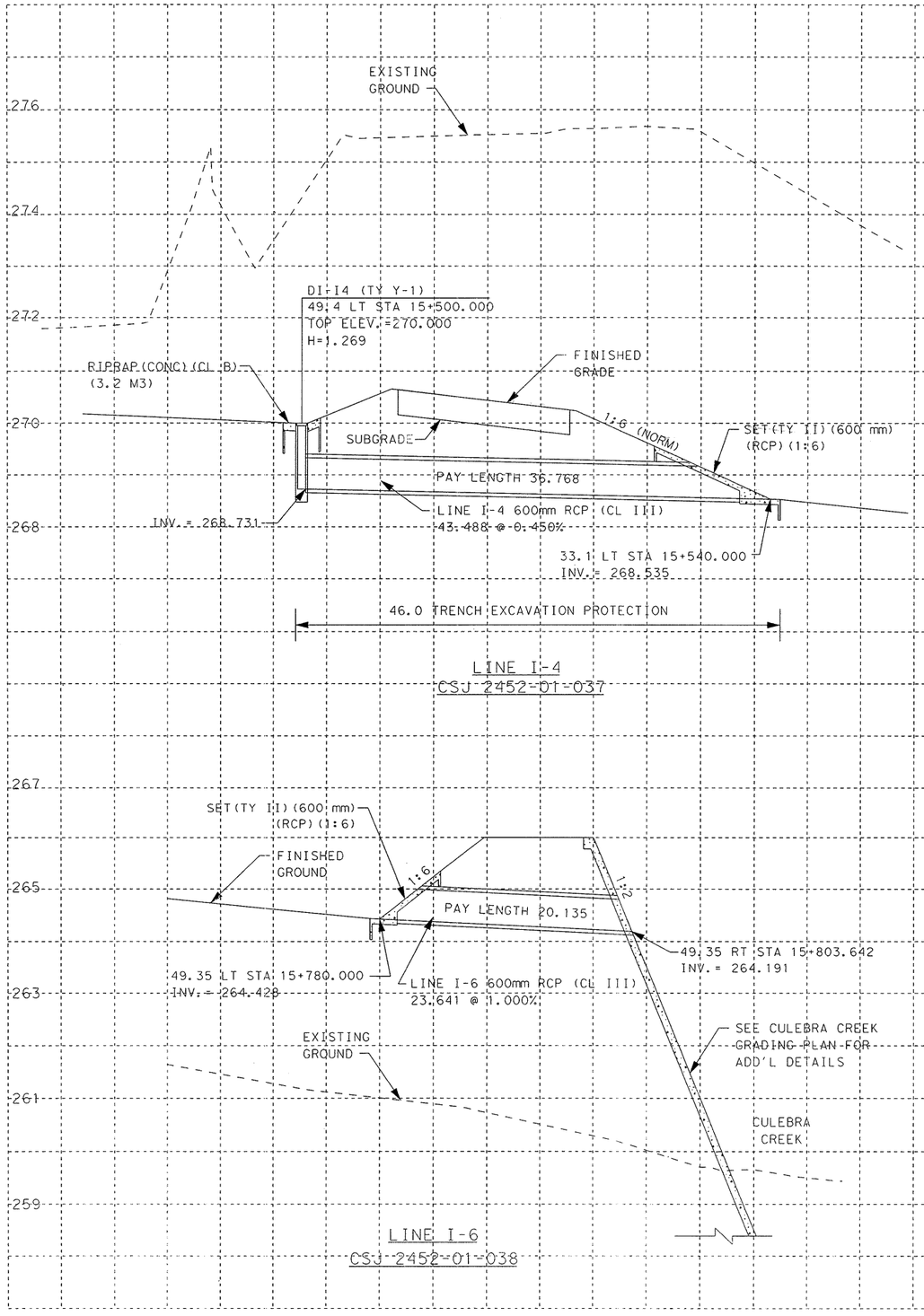


LINE I-4
CSJ 2452-01-037




LINE I-6
CSJ 2452-01-038

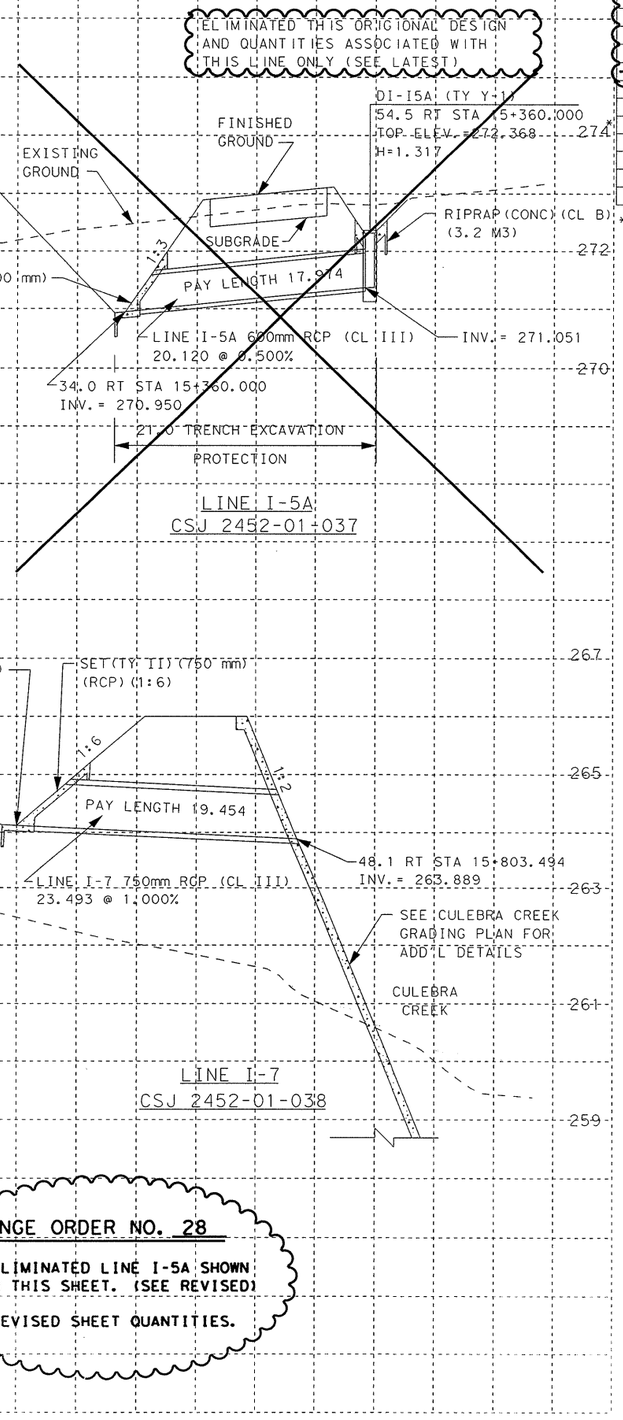


LINE I-5A
CSJ 2452-01-037




LINE I-7
CSJ 2452-01-038

CHANGE ORDER NO. 28

-ELIMINATED LINE I-5A SHOWN ON THIS SHEET. (SEE REVISED)

-REVISED SHEET QUANTITIES.

ESTIMATED QUANTITIES

| DESCRIPTION | UNIT | EST. | FINAL |
|---|---|---|---|
| CSJ 2452-01-037 | | | |
| * STRUCT EXCAV | M3 | 110.7 | |
| RC PIPE (CL III) (600MM) | M3 | 36.768 | |
| INLET (DROP) (TY Y-1) | EA | 1 | |
| RIPRAP (CONC) (CL B) | M3 | 3.2 | |
| TRENCH EXCAV PROTECT | M | 46 | |
| ~~SET (TY II) (600MM) (RCP) (1:3)~~ | ~~EA~~ | ~~1~~ | |
| SET (TY II) (600MM) (RCP) (1:6) | EA | 1 | |
| CSJ 2452-01-038 | | | |
| RC PIPE (CL III) (600MM) | M | 20.135 | |
| RC PIPE (CL III) (750MM) | M | 19.454 | |
| SET (TY II) (600MM) (RCP) (1:6) | EA | 1 | |
| SET (TY II) (750MM) (RCP) (1:6) | EA | 1 | |
| STRUCT EXCAV | M3 | 60.1 | |

* SUPPLIED FOR CONTRACTOR'S INFORMATION ONLY

NOTES:

1. ALL PIPES ARE NORMAL TO AND STRAIGHT FROM STRUCTURE TO STRUCTURE UNLESS OTHERWISE SHOWN ON INTERIOR DRAINAGE LAYOUTS
2. CONTRACTORS SHALL SHAPE INVERTS OF ALL PROPOSED CURB INLETS, DROP INLETS AND MANHOLES TO PRODUCE POSITIVE FLOW THROUGH STRUCTURE FROM ALL INLETS TO THE OUTLET OF EACH STRUCTURE.
3. CONTRACTOR SHALL INSTALL ALL STORM DRAIN PIPES INTO MANHOLES, BOXES AND EXISTING STRUCTURES FLUSH WITH INSIDE FACE AND GROUT INTO PLACE, INSURING WATERTIGHT SEAL ALL AROUND.
4. ALL STATION AND OFFSET INFORMATION IS REFERENCED TO THE ℄ LOOP 1604 UNLESS OTHERWISE NOTED.
5. CONTRACTOR SHALL CONSTRUCT MANHOLES TO MINIMIZE CONFLICT WITH UTILITIES.
6. SET (TY II) CONSTRUCTION SHALL UTILIZE RIPRAP HEADWALL (MOD) STANDARD SHEET.

CHANGE ORDER 28

REVISED SHEET

SCALE: H: 1:500
V: 1:100

STATE OF TEXAS
JEROME D. PAVLISKA
76075
REGISTERED PROFESSIONAL ENGINEER

Jerome D. Pavliska, P.E. 2-7-03
Jerome D. Pavliska, P.E. Date

© 2000 Texas Department of Transportation

LOOP 1604
STORM DRAIN PROFILES
LINE I-4 THRU LINE I-7

| DN: | | | | | PROJECT NO. | | |
|---|---|---|---|---|---|---|---|
| CK DN: | | | | | NH 2000 (704), etc. | | |
| DW: | CONTROL | SECTION | JOB | DIST. | STATE | COUNTY | HIGHWAY NO. | SHEET NO. |
| CK DW: | 2452 | 01 | 036 etc | SAT | TX | BEXAR | LOOP 1604 | 455 C |

01-23-03

DESIGN FILENAME: $FILE$

| ESTIMATED QUANTITIES | | | |
|---|---|---|---|
| ITEM # | DESCRIPTION | UNIT | QTY. |
| * | STRUCT EXCAV | M3 | 9 |
| 150-5003 | BLADING | H | 2 |
| 156-5003 | BLDZR WORK (ORD COMP) (TY A) | H | 2 |
| 432-5001 | RIPRAP (CONC) (CL B) | M3 | 2.2 |
| 464-5007 | RC PIPE (CL III) (750MM) | M | 3 |
| 465-5050 | INLET (COMPL) (DROP) (TY-W1) | EA | 1 |
| 479-5005 | ADJUST INLET (CAP) | EA | 1 |
| | LOAD AND WASTE STR EXCAV | M3 | 9 |

* SUPPLIED FOR CONTRACTORS INFORMATION ONLY

LINE I-8 (RELOCATED) 11
EXIST. SAWS (925MM) PIPE
EXIST. G.F.U.
R.O.W.
NEW POWER POLE
EXIST. G.F.U. (TO BE ABANDONED)
STORM DRAIN LINE I-8 (REVISED) (FOR LATEST SEE THIS CHANGE ORDER.)
RIPRAP (CONC) (CL B) EST. @ 2.2 M3
EXIST. DROP INLET (TO BE CAPPED)
0+020
STORM DRAIN LINE I-8A
INCIDENTAL GRADING DETAILS SEE SHEET 342B (BLADING 2 HRS.) (BLDZR WK (ORD COMP) (TY A) 2 HRS.)
℄ OF EXIST. DRAIN STRUCTURE STA. 0+024.221 (WW VISTA)
℄ OF DROP INLET (TY W-1) 20.763 RT. , STA. 0+023.095 (WESTWOOD VISTA) TOP ELEV. 265.200 BOTTOM ELEV. 263.400 INLET "H" = 1.800
WESTWOOD VISTA
N 67° 50' 23" W
R.O.W.
R.O.W.
LINE I-8 (RELOCATED) 11
JOINT BID SAWS (925mm) 15
EXIST. G.F.U. (TO BE ABANDONED)
NEW POWER POLE
R.O.W.
CULEBRA CREEK
SCALE 1:200 H
1:200 V
GENERAL DRAINAGE AND UTILITY EASEMENT.
0.3 M CLR.
CITY OF SAN ANTONIO CONSERVATION EASEMENT.

CHANGE ORDER NO. 28
-UPDATED VIEW
-NEW QUANTITIES
-ADDED UTILITY INFO.

DEVELOPERS INFORMATION
IN ORDER TO ACCOMMODATE 45 CFS(±)
INLET HEAD REQUIRED = 0.24m (0.8')
INLET HEAD AVAILABLE = 0.80m (2.6')

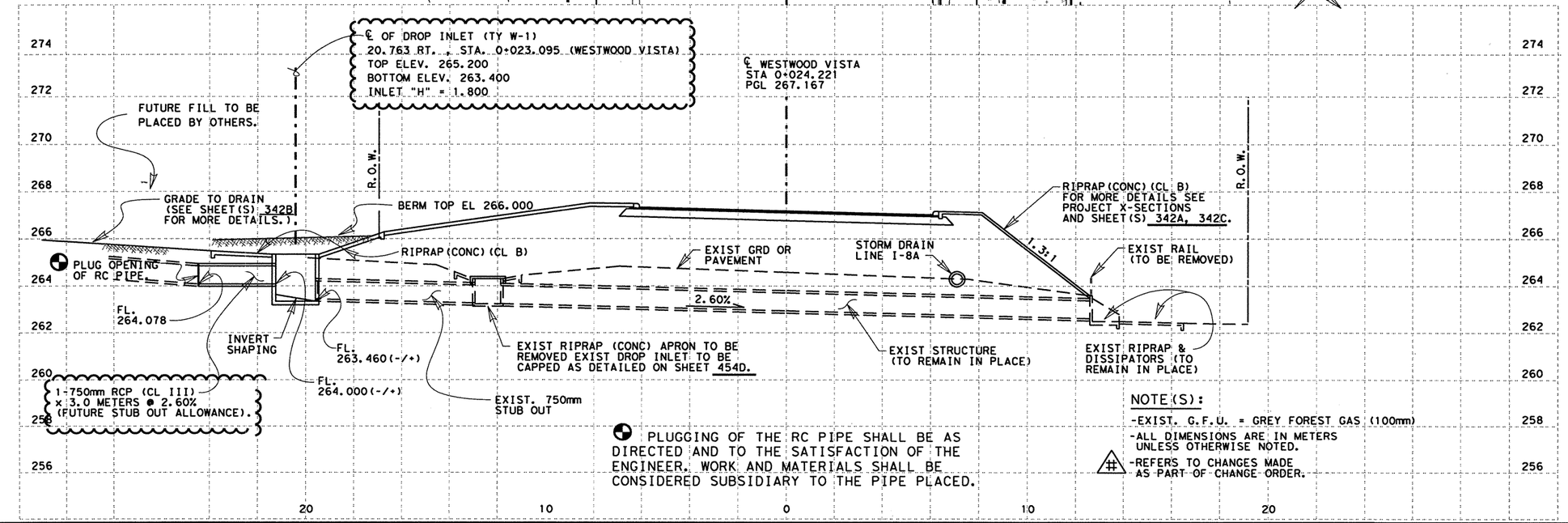


PLUGGING OF THE RC PIPE SHALL BE AS DIRECTED AND TO THE SATISFACTION OF THE ENGINEER. WORK AND MATERIALS SHALL BE CONSIDERED SUBSIDIARY TO THE PIPE PLACED.

NOTE(S):
-EXIST. G.F.U. = GREY FOREST GAS (100mm)
-ALL DIMENSIONS ARE IN METERS UNLESS OTHERWISE NOTED.
# -REFERS TO CHANGES MADE AS PART OF CHANGE ORDER.

CHANGE ORDER 28

NEW SHEET

STATE OF TEXAS
JEROME D. PAVLISKA
76075
REGISTERED PROFESSIONAL ENGINEER

Jerome D. Pavliska, P.E. 8-18-03
Jerome D. Pavliska, P.E. Date

©2002 Texas Department of Transportation

WESTWOOD VISTA
EXISTING CULVERT LAYOUT

| DN: | | | | | PROJECT NO. | |
|---|---|---|---|---|---|---|
| CK DN: | | | | | NH 2000 (704), etc. | |
| DW: | CONTROL | SECTION | JOB | DIST. | COUNTY | HIGHWAY NO. | SHEET NO. |
| CK DW: | 2452 | 01 | 036 etc.) | SAT | BEXAR | LOOP 1604 | 456 B |

01-23-03

lp1604fm471-90 \ culvxwwv2.dgn

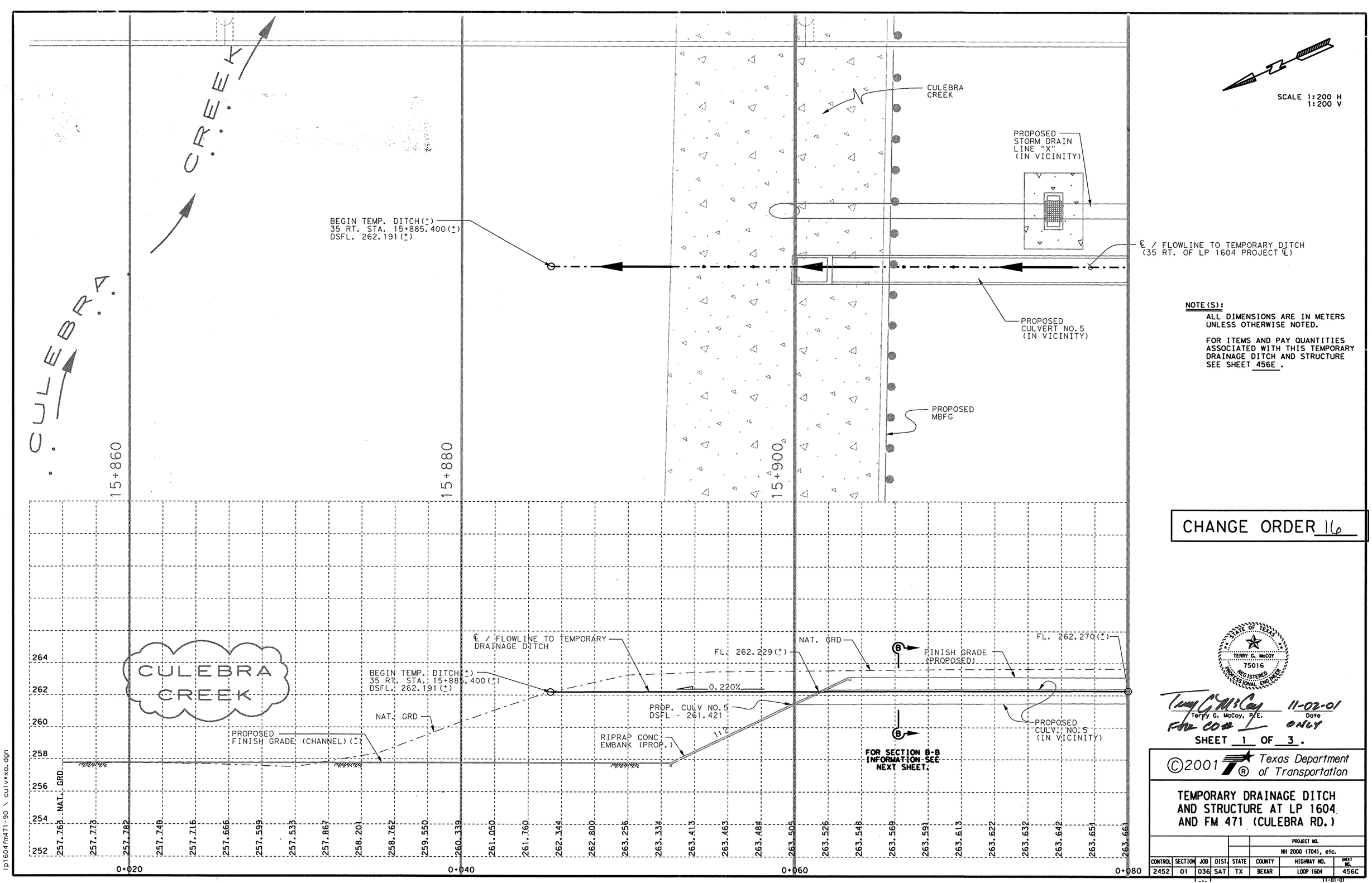


SCALE 1:200 H
1:200 V

**NOTE(S):**

ALL DIMENSIONS ARE IN METERS UNLESS OTHERWISE NOTED.

FOR ITEMS AND PAY QUANTITIES ASSOCIATED WITH THIS TEMPORARY DRAINAGE DITCH AND STRUCTURE SEE SHEET 456E .

CHANGE ORDER 16

STATE OF TEXAS
TERRY G. McCOY
75016
REGISTERED PROFESSIONAL ENGINEER

Terry G. McCoy 11-02-01
Terry G. McCoy, P.E. Date
FOR CO# 1 ONLY

SHEET 1 OF 3.

©2001 Texas Department of Transportation

# TEMPORARY DRAINAGE DITCH AND STRUCTURE AT LP 1604 AND FM 471 (CULEBRA RD.)

| | | | | | | PROJECT NO. | |
|---|---|---|---|---|---|---|---|
| | | | | | | NH 2000 (704), etc. | |
| CONTROL | SECTION | JOB | DIST. | STATE | COUNTY | HIGHWAY NO. | SHEET NO. |
| 2452 | 01 | 036 | SAT | TX | BEXAR | LOOP 1604 | 456C |

11-01-01

lp1604fm471-90 \ culv*xa.dgn

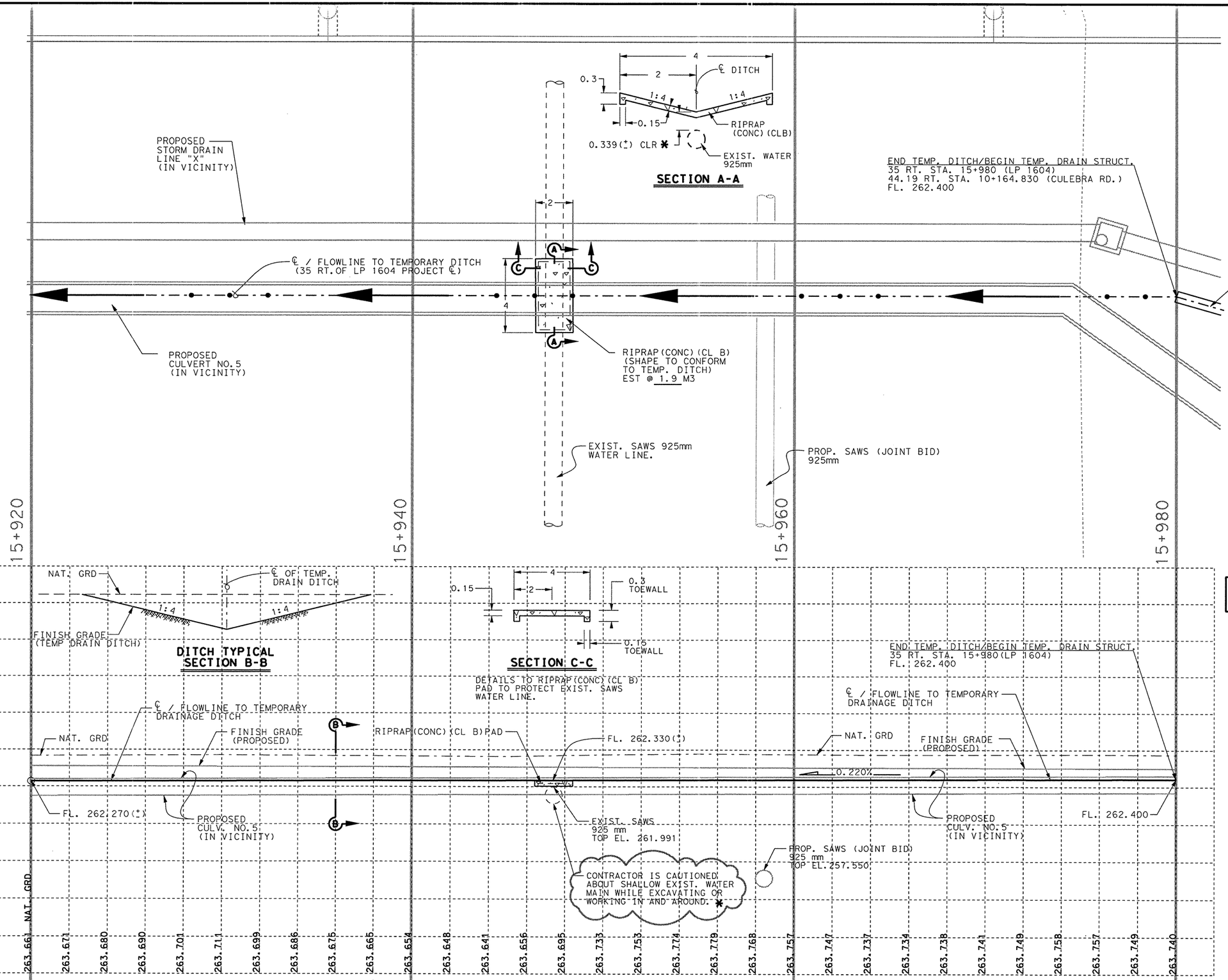


NOTE (S):

ALL DIMENSIONS ARE IN METERS UNLESS OTHERWISE NOTED.

FOR ITEMS AND PAY QUANTITIES ASSOCIATED WITH THIS TEMPORARY DRAINAGE DITCH AND STRUCTURE SEE SHEET 456E .

CHANGE ORDER 16

STATE OF TEXAS
TERRY G. McCOY
75016
REGISTERED
PROFESSIONAL ENGINEER

Terry G. McCoy, P.E. — 11-02-01 Date

FOR CO# — ONLY

SHEET 2 OF 3 .

©2001 Texas Department of Transportation

# TEMPORARY DRAINAGE DITCH AND STRUCTURE AT LP 1604 AND FM 471 (CULEBRA RD.)

| CONTROL | SECTION | JOB | DIST. | STATE | COUNTY | PROJECT NO. NH 2000 (704), etc. HIGHWAY NO. | SHEET NO. |
|---|---|---|---|---|---|---|---|
| 2452 | 01 | 036 | SAT | TX | BEXAR | LOOP 1604 | 456D |

11-01-01

lp1604fm471-90 \ culv*x01.dgn

## ESTIMATED QUANTITIES

| ITEM # | DESCRIPTION | UNIT | QTY. |
|---|---|---|---|
| | STRUCT EXCAV CULV (SMALL) | M3 | 98.6 |
| 110-5002 | EXCAV (CHAN) | M3 | 747 |
| 400-5007 | CEM STABIL BKFL | M3 | 40.2 |
| 400-5008 | CUT AND RESTOR PAV | M2 | 33.6 |
| 432-5001 | RIPRAP (CONC) (CL B) | M3 | 1.7 |
| 464-5005 | RC PIPE (CL III)(600mm) | M | 62.6 |
| | | | |

✳ SUPPLIED FOR CONTRACTORS INFORMATION ONLY

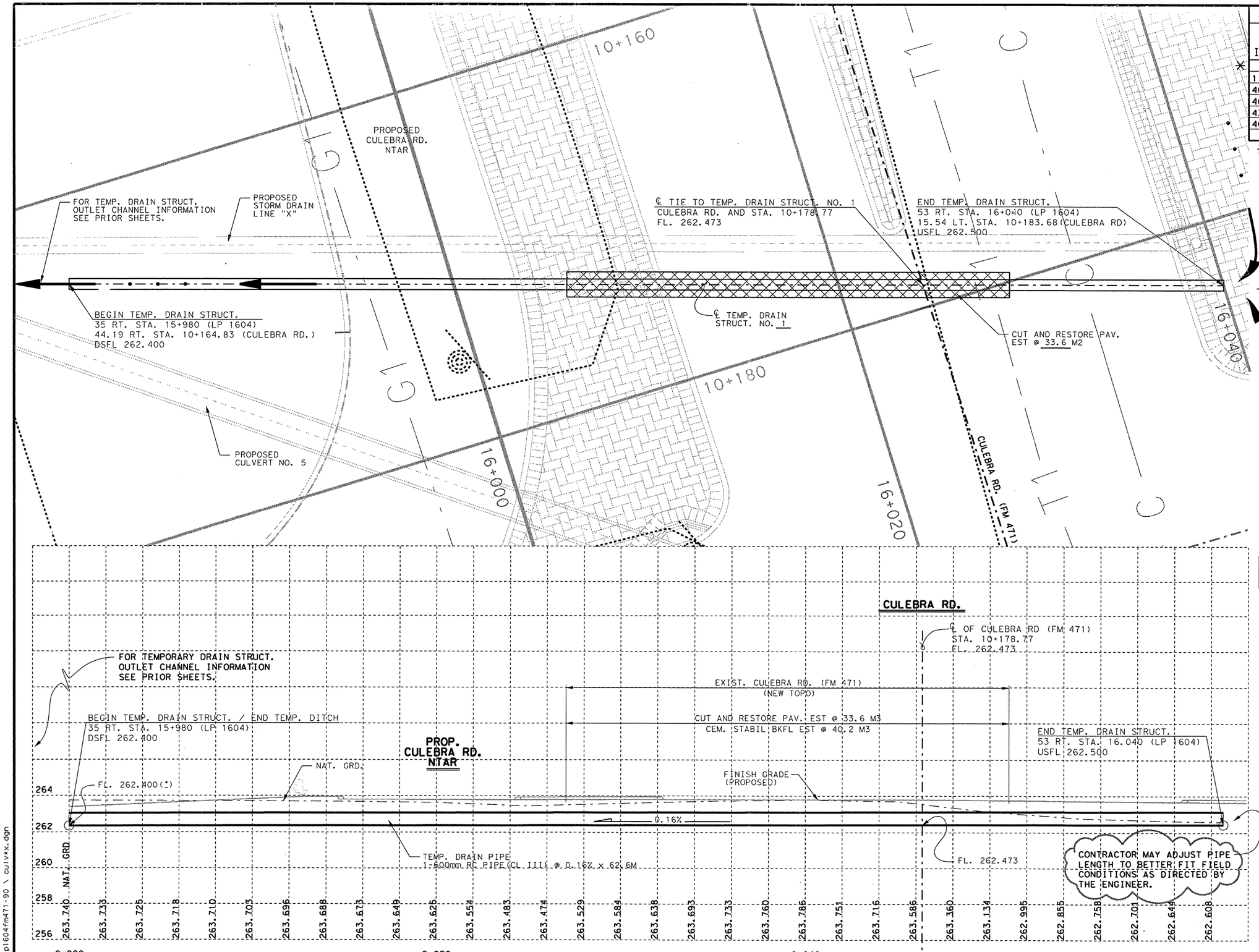


SCALE 1:200 H
1:200 V

NOTE(S):
ALL DIMENSIONS ARE IN METERS UNLESS OTHERWISE NOTED.




CHANGE ORDER 16

STATE OF TEXAS
TERRY G. McCOY
75016
REGISTERED PROFESSIONAL ENGINEER

Terry G. McCoy, P.E. — Date 11-02-01

SHEET 3 OF 3.

©2001 Texas Department of Transportation®

# TEMPORARY DRAINAGE DITCH AND STRUCTURE AT LP 1604 AND FM 471 (CULEBRA RD.)

| CONTROL | SECTION | JOB | DIST. | STATE | COUNTY | PROJECT NO. / HIGHWAY NO. | SHEET NO. |
|---|---|---|---|---|---|---|---|
| | | | | | | NH 2000 (704), etc. | |
| 2452 | 01 | 036 | SAT | TX | BEXAR | LOOP 1604 | 456E |

11-01-01

lp1604fm471-90 \ culvex.dgn

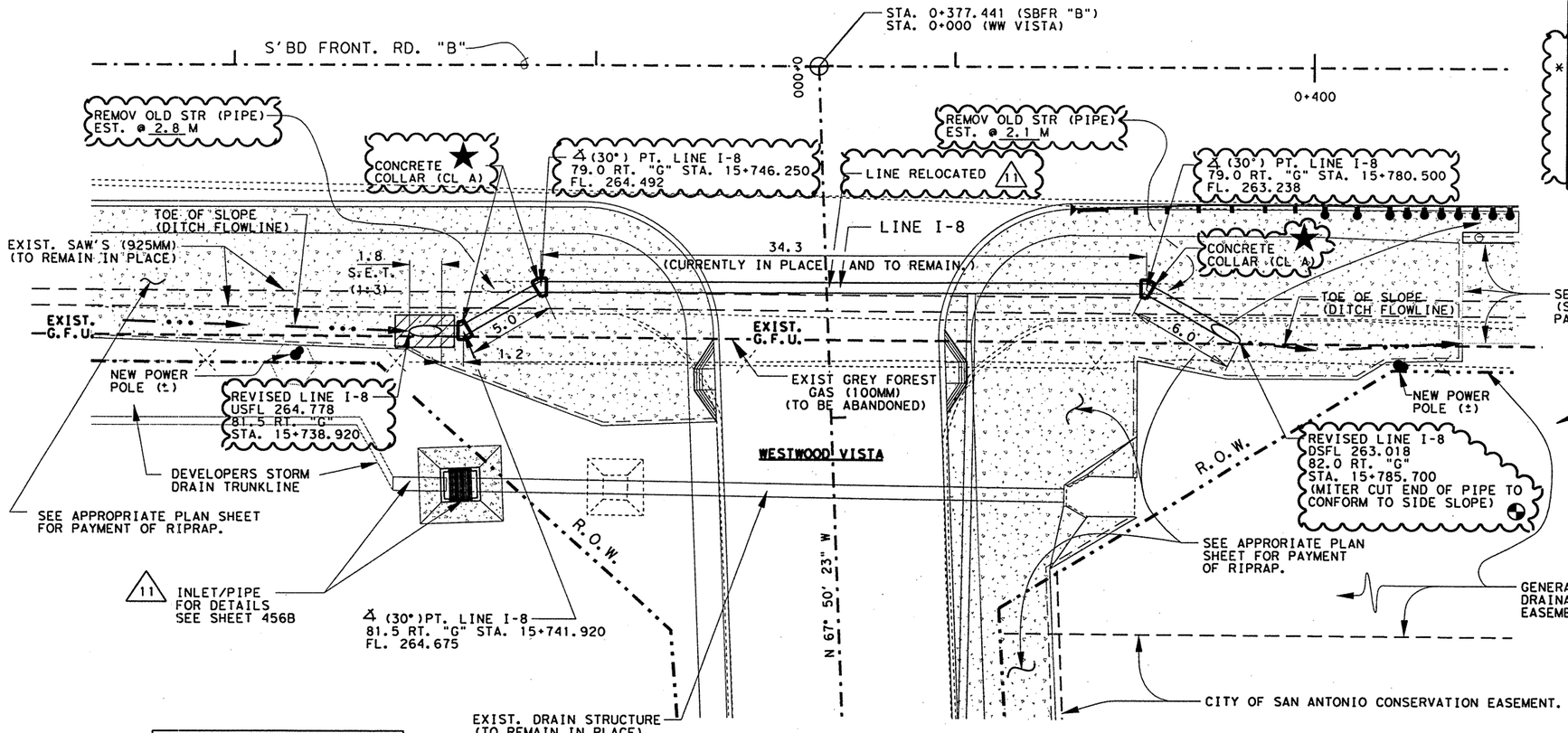


RDWY "G" = ℄ LOOP 1604

**PLAN**

NOTE: EXIST. G.F.U. = GREY FOREST GAS (100mm)

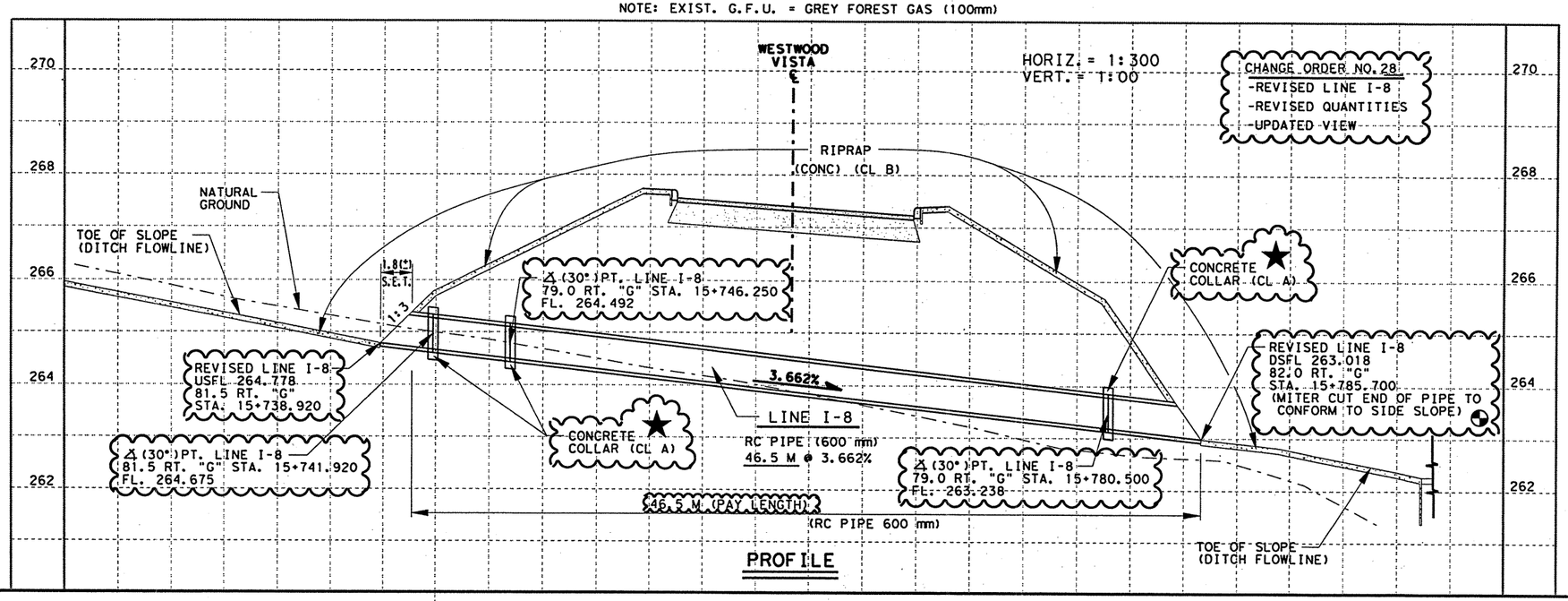


**PROFILE**

## ESTIMATED QUANTITIES

| | ITEM # | ITEM | UNIT | QTY. |
|---|---|---|---|---|
| * | 0156-5003 | BLDZR WORK (ORD COMP) (TY A) | H | 25 |
| * | 0400-5001 | STRUCT EXCAV | M3 | 72 |
| | 0420-5005 | CL A CONC (COLLAR) | EA | 3 |
| | 0464-5005 | RC PIPE (CL III) (600 MM) | M3 | 12.2 |
| | 0467-5070 | SET (TY II) ( 600 MM) (RCP) (1:3) | EA | 1 |
| | 0496-5004 | REMOV OLD STR (PIPE) | M | 4.9 |
| | | LOAD & WASTE STR EXCAV | M3 | 72 |

* SUPPLIED FOR CONTRACTORS INFORMATION ONLY.

SCALE: 1:300

**NOTE(S):**

- ALL DIMENSIONS ARE IN METERS UNLESS SHOWN OTHERWISE.
- FOR GRADING DETAILS SEE SHEET(S) 342B, 342C, & 356B, AND REVISED X-SECTIONS FOR AREAS.

11 REFERS TO CHANGES MADE AS PART OF CHANGE ORDER.

★ FOR CONCRETE COLLAR DETAILS SEE SHEET(S) 454B .

RIPRAP (CONC) (CL B) ASSOCIATED WITH S.E.T. .

WORK AND MATERIALS NEEDED SHALL BE CONSIDERED SUBSIDIARY TO THE PIPE PLACED.

**CHANGE ORDER 28**

**NEW SHEET**

STATE OF TEXAS — JEROME D. PAVLISKA — 76075 — REGISTERED PROFESSIONAL ENGINEER

Jerome D. Pavliska, P.E. 8-18-03
Jerome D. Pavliska, P.E. — Date

©2002 Texas Department of Transportation

# LINE I-8
# PLAN & PROFILE SHEET

| FED. RD. DIV. NO. | FEDERAL AID PROJECT NO. | | SHEET NO. |
|---|---|---|---|
| 6 | NH 2000(704), etc. | | 456 F |
| STATE | DIST. | COUNTY | |
| TEXAS | SAT | BEXAR | |
| CONT. | SECT. | JOB | HIGHWAY NO. |
| 2452 | 01 | 036, etc. | LP 1604 |

01-23-03

LEVELS DISPLAYED 1 2 3 4 5 6 7 8 9 10 11 12 13 14 15 16 17 18 19 20 21 22 23 24 25 26 27 28 29 30 31 32 33 34 35 36 37 38 39 40 41 42 43 44 45 46 47 48 49 50 51 52 53 54 55 56 57 58 59 60 61 62 63 64 65 66 67 68

ACC: t:\oo\design\lpl604fm471-90\

FILE: line8p&p

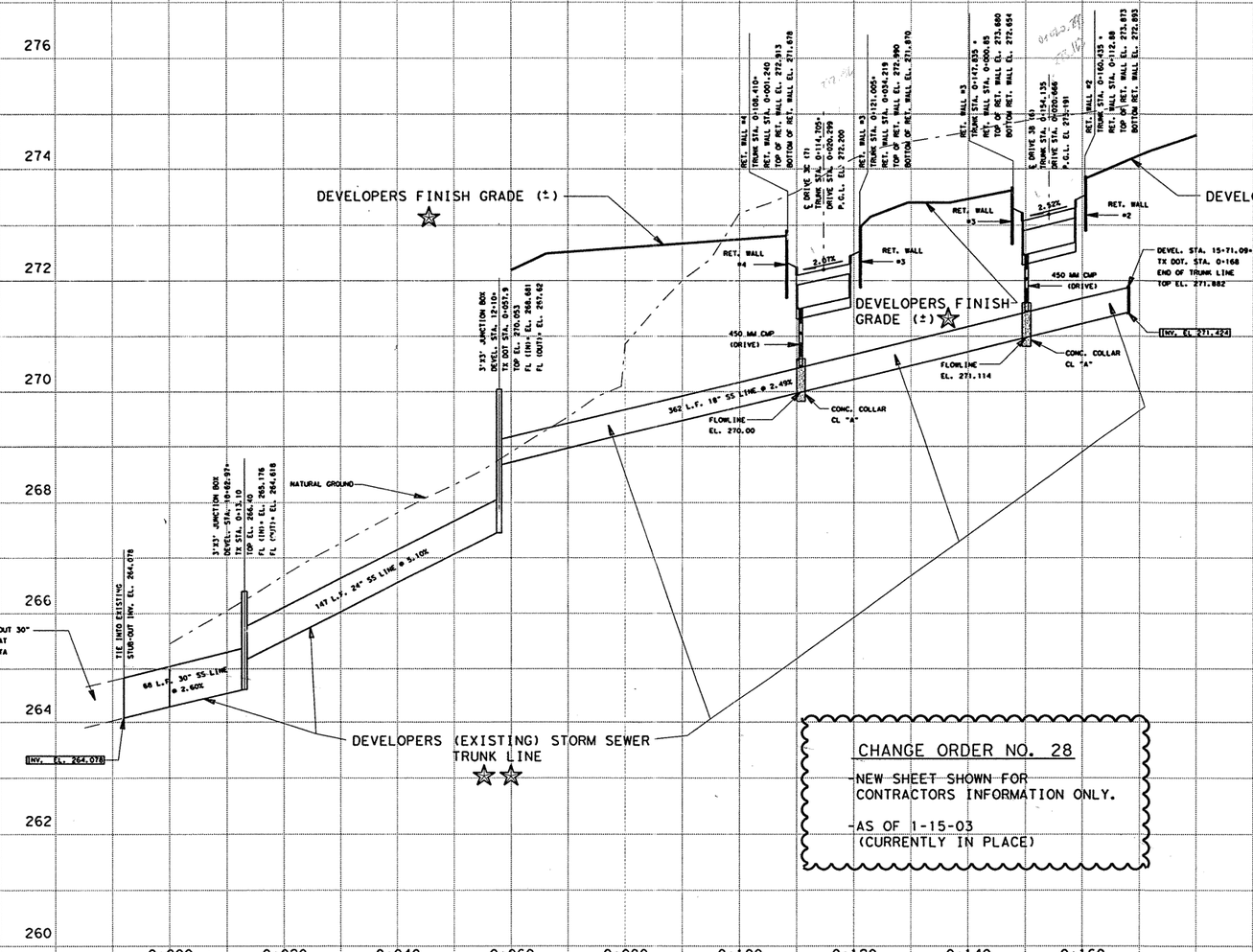


NOTE:

-ALL DIMENSIONS ARE IN METERS UNLESS OTHERWISE NOTED.

-INFORMATION SHOWN ON THIS SHEET IS FOR CONTRACTORS INFORMATION ONLY.

CHANGE ORDER NO. 28

-NEW SHEET SHOWN FOR CONTRACTORS INFORMATION ONLY.

-AS OF 1-15-03 (CURRENTLY IN PLACE)

CHANGE ORDER 28

NEW SHEET

☆ FINAL GRADE BASED UPON PRELIMINARY DATA SUPPLIED TO TxDOT ON 03-08-02 BY BURY & PARTNERS.

☆☆ STORM DRAIN DATA SUPPLIED TO TxDOT ON 04-10-02 BY BURY & PARTNERS.

STATE OF TEXAS
JEROME D. PAVLISKA
76075
REGISTERED PROFESSIONAL ENGINEER

Jerome D. Pavliska, P.E. 08-11-03
Jerome D. Pavliska, P.E. Date

©2002
Texas Department of Transportation

# DEVELOPERS DRIVEWAYS & STORM DRAIN PROFILE

SHEET 1 OF 1

| FED.RD. DIV.NO. | FEDERAL AID PROJECT NO. | | SHEET NO. |
|---|---|---|---|
| 6 | NH 2000(704),etc. | | 456G |
| STATE | DIST. | COUNTY | |
| TEXAS | SAT | BEXAR | |
| CONT. | SECT. | JOB | HIGHWAY NO. |
| 2452 | 01 | 036,etc. | LP 1604 |

03-25-03

LEVELS DISPLAYED
1 2 3 4 5 6 7 8 9 10 11 12 13 14 15 16
17 18 19 20 21 22 23 24 25 26 27 28 29 30 31 32
33 34 35 36 37 38 39 40 41 42 43 44 45 46 47 48
49 50 51 52 53 54 55 56 57 58 59 60 61 62 63

ACC: lp1604fm471-90\
FILE: prof01.dgn

PLOTTED ON: 10/24/00

(C As-Built)

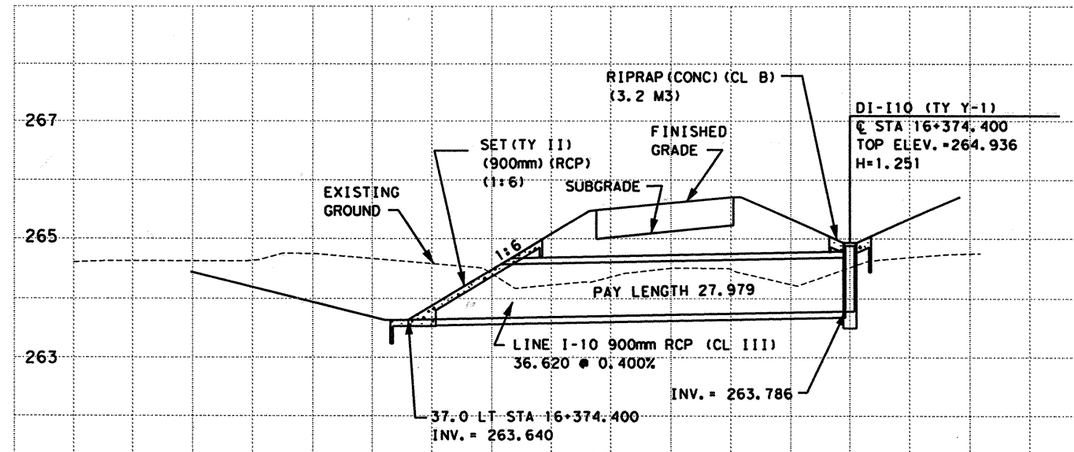


LINE I-10
CSJ 2452-01-038

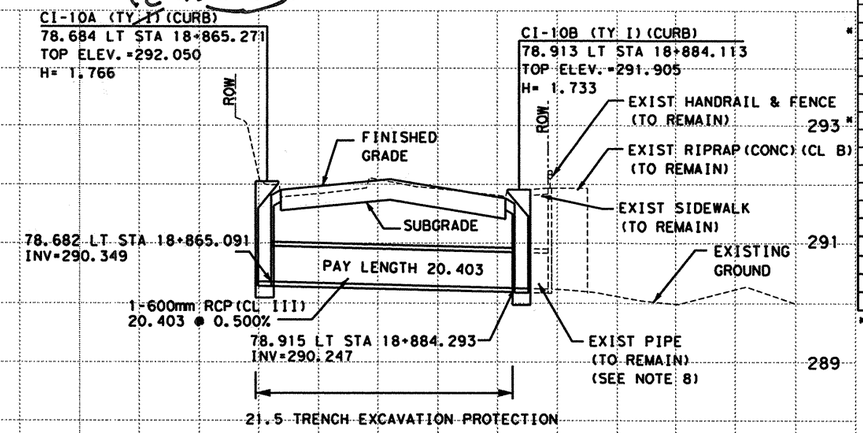


LINE 10
CSJ 2452-01-037

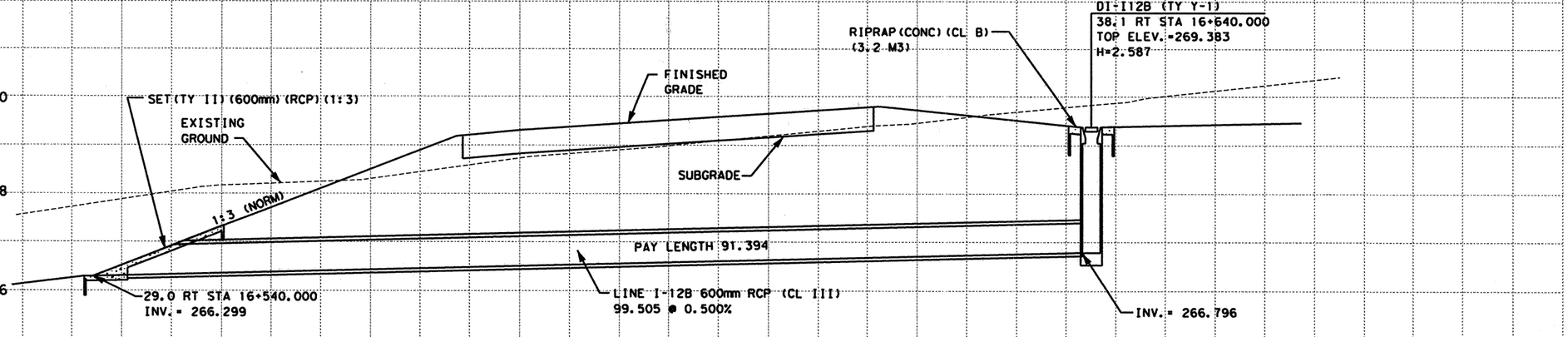


LINE I-12B
CSJ 2452-01-038

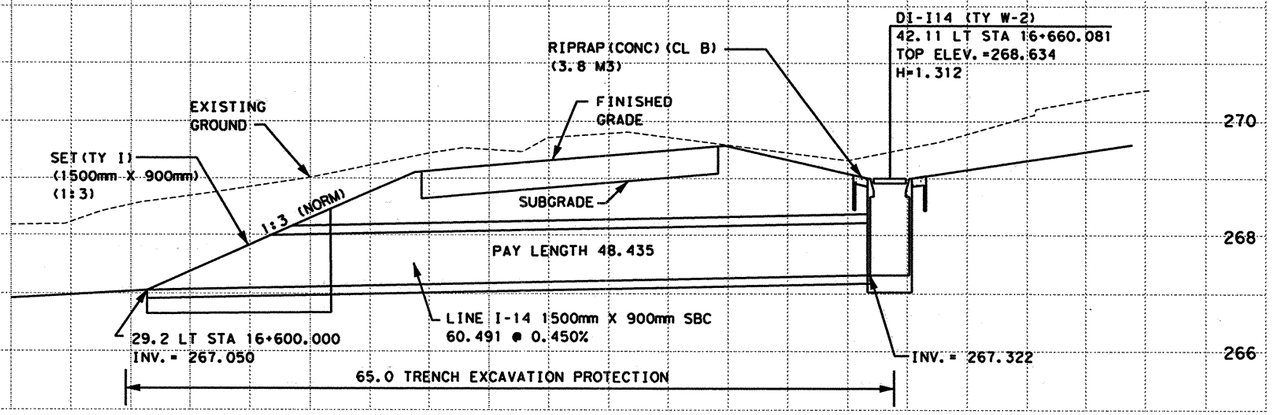


LINE I-14 CSJ 2452-01-038

ESTIMATED QUANTITIES

| DESCRIPTION | UNIT | EST. | FINAL |
|---|---|---|---|
| CSJ 2452-01-037 | | | |
| STRUCT EXCAV | M3 | 33.1 | |
| RC PIPE (CL III) (600MM) | M3 | 20.403 | |
| TRENCH EXCAV PROTECTION | M | 21.5 | |
| INLET (COMPL) (CURB) (TY I) | ~~EA~~ M | ~~2~~ 1 | |
| CSJ 2452-01-038 Ty C | ~~EA~~ | ~~1~~ | |
| STRUCT EXCAV | M3 | 685.8 | |
| RC PIPE (CL III) (600MM) | M | 91.394 | |
| RC PIPE (CL III) (900MM) | M | 27.979 | |
| CONC BOX CULV (1500MM X 900MM) | M | 48.435 | |
| INLET (COMPL) (DROP) (TY Y-1) | EA | 2 | |
| INLET (COMPL) (DROP) (TY W-2) | EA | 1 | |
| RIPRAP (CONC) (CL B) | M3 | 10.2 | |
| TRENCH EXCAV PROTECTION | M | 168.0 | |
| SET (TY II) (600MM) (RCP) (1:3) | EA | 1 | |
| SET (TY II) (900MM) (RCP) (1:6) | EA | 1 | |
| SET (TY I) (1500MM X 900MM) (1:3) | EA | 1 | |

* SUPPLIED FOR CONTRACTOR'S INFORMATION ONLY

NOTES:

1. ALL PIPES ARE NORMAL TO AND STRAIGHT FROM STRUCTURE TO STRUCTURE UNLESS OTHERWISE SHOWN ON INTERIOR DRAINAGE LAYOUTS
2. CONTRACTORS SHALL SHAPE INVERTS OF ALL PROPOSED CURB INLETS, DROP INLETS AND MANHOLES TO PRODUCE POSITIVE FLOW THROUGH STRUCTURE FROM ALL INLETS TO THE OUTLET OF EACH STRUCTURE.
3. CONTRACTOR SHALL INSTALL ALL STORM DRAIN PIPES INTO MANHOLES, BOXES AND EXISTING STRUCTURES FLUSH WITH INSIDE FACE AND GROUT INTO PLACE, INSURING WATERTIGHT SEAL ALL AROUND.
4. ALL STATION AND OFFSET INFORMATION IS REFERENCED TO THE ℄ LOOP 1604 UNLESS OTHERWISE NOTED.
5. CONTRACTOR SHALL CONSTRUCT MANHOLES TO MINIMIZE CONFLICT WITH UTILITIES.
6. SET (TY II) CONSTRUCTION SHALL UTILIZE RIPRAP HEADWALL (MOD) STANDARD SHEET.
7. FOR LINE 10, CONTRACTOR SHALL CONSTRUCT CURB INLET CI-10B AROUND EXISTING RCP TO REMAIN.
8. FOR LINE 10, CONTRACTOR SHALL REPAIR AT CONTRACTOR'S EXPENSE ANY DAMAGE TO THE EXISTING HEADWALL, RCP, SIDEWALK, FENCE, AND/OR HANDRAILING THAT IS INCURRED DURING CONSTRUCTION ACTIVITIES.
9. THE 1500MM X 900MM SBC SHALL BE CONSTRUCTED USING THE SCC-1.5(M) STANDARD. THE SET (TY I) SHALL BE CONSTRUCTED USING THE SETB-0-3(M) STANDARD.

SCALE: H: 1:500
V: 1:100

555 EAST RAMSEY SAN ANTONIO TEXAS 78216 PHONE (210)375-9000 FAX (210)375-9010
PAPE-DAWSON ENGINEERS
CIVIL & ENVIRONMENTAL

STATE OF TEXAS
K. STEPHEN BONNETTE
60928
REGISTERED PROFESSIONAL ENGINEER

09/20/00
K. STEPHEN BONNETTE, P.E. DATE

© 2000 Texas Department of Transportation

# LOOP 1604
# STORM DRAIN PROFILES
# LINE I-10 THRU LINE I-14 & LINE 10

| | | | | | | | | |
|---|---|---|---|---|---|---|---|---|
| DN: | | | | | PROJECT NO. | | | |
| CK DN: | | | | | NH 2000 (704), etc. | | | |
| DW: | CONTROL | SECTION | JOB | DIST. | STATE | COUNTY | HIGHWAY NO. | SHEET NO. |
| CK DW: | 2452 | 01 | 036 | SAT | TX | BEXAR | LOOP 1604 | 457 |

etc.

DESIGN FILENAME: k:\394IN16\civil\Design\Int\DA\394II6STRM2.dgn

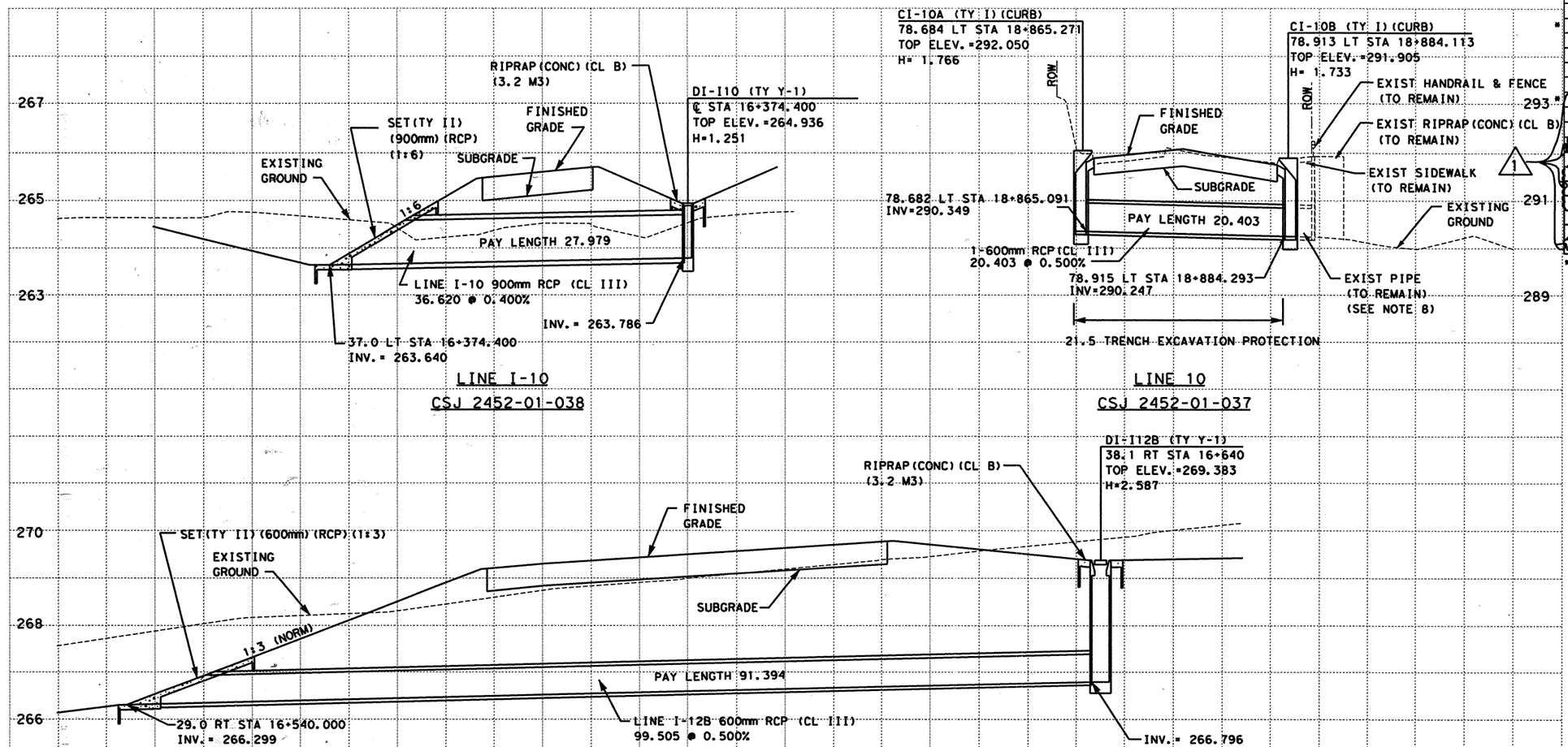


| ESTIMATED QUANTITIES | | | | |
|---|---|---|---|---|
| DESCRIPTION | UNIT | EST. | FINAL |
| CSJ 2452-01-037 | | | |
| * STRUCT EXCAV | M3 | 33.1 | |
| RC PIPE (CL III) (600MM) | M3 | 20.403 | |
| TRENCH EXCAV PROTECTION | M | 21.5 | |
| INLET (COMPL) (CURB) (TY I) | M | 2 | |
| CSJ 2452-01-038 | | | |
| * STRUCT EXCAV | M3 | 863.0 | |
| RC PIPE (CL III) (600MM) | M | 91.394 | |
| RC PIPE (CL III) (900MM) | M | 27.979 | |
| CONC BOX CULV (1500MM X 1200MM) | M | 48.435 | |
| INLET (COMPL) (DROP) (TY Y-1) | EA | 2 | |
| INLET (COMPL) (DROP) (TY W-3) | EA | 1 | |
| RIPRAP (CONC) (CL B) | M3 | 12.3 | |
| TRENCH EXCAV PROTECTION | M | 167.0 | |
| SET (TY II) (600MM) (RCP) (1:3) | EA | 1 | |
| SET (TY II) (900MM) (RCP) (1:6) | EA | 1 | |
| SET (TY I) (1500MM X 1200MM) (1:3) | EA | 1 | |

* SUPPLIED FOR CONTRACTOR'S INFORMATION ONLY

NOTES:

1. ALL PIPES ARE NORMAL TO AND STRAIGHT FROM STRUCTURE TO STRUCTURE UNLESS OTHERWISE SHOWN ON INTERIOR DRAINAGE LAYOUTS
2. CONTRACTORS SHALL SHAPE INVERTS OF ALL PROPOSED CURB INLETS, DROP INLETS AND MANHOLES TO PRODUCE POSITIVE FLOW THROUGH STRUCTURE FROM ALL INLETS TO THE OUTLET OF EACH STRUCTURE.
3. CONTRACTOR SHALL INSTALL ALL STORM DRAIN PIPES INTO MANHOLES, BOXES AND EXISTING STRUCTURES FLUSH WITH INSIDE FACE AND GROUT INTO PLACE, INSURING WATERTIGHT SEAL ALL AROUND.
4. ALL STATION AND OFFSET INFORMATION IS REFERENCED TO THE ℄ LOOP 1604 UNLESS OTHERWISE NOTED.
5. CONTRACTOR SHALL CONSTRUCT MANHOLES TO MINIMIZE CONFLICT WITH UTILITIES.
6. SET (TY II) CONSTRUCTION SHALL UTILIZE RIPRAP HEADWALL (MOD) STANDARD SHEET.
7. FOR LINE 10, CONTRACTOR SHALL CONSTRUCT CURB INLET CI-10B AROUND EXISTING RCP TO REMAIN.
8. FOR LINE 10, CONTRACTOR SHALL REPAIR AT CONTRACTOR'S EXPENSE ANY DAMAGE TO THE EXISTING HEADWALL, RCP, SIDEWALK, FENCE, AND/OR HANDRAILING THAT IS INCURRED DURING CONSTRUCTION ACTIVITIES.
9. THE 1500MM X 1200MM SBC SHALL BE CONSTRUCTED USING THE SCC-1.5(M) STANDARD. THE SET (TY I) SHALL BE CONSTRUCTED USING THE SETB-0-3(M) STANDARD.

SCALE: H: 1:500
V: 1:100

## CHANGE ORDER #1 REVISIONS

LINE I-14 CHANGED FROM 1500mm X 900mm SBC TO 1500mm X 1200mm SBC
DI-I14 CHANGE FROM TYPE W-2 TO TYPE W-3
REVISIONS ARE SHOWN CLOUDED AND MARKED WITH A 1.

K. STEPHEN BONNETTE 60928 REGISTERED PROFESSIONAL ENGINEER
K. STEPHEN BONNETTE. P.E. DATE 7/2/2001

555 EAST RAMSEY SAN ANTONIO TEXAS 78216
PHONE (210)375-9000
FAX (210)375-9010
PAPE-DAWSON ENGINEERS
CIVIL & ENVIRONMENTAL
K. STEPHEN BONNETTE 60928 REGISTERED PROFESSIONAL ENGINEER
K. STEPHEN BONNETTE. P.E. 9/20/00 DATE

© 2000 Texas Department of Transportation

# LOOP 1604
# STORM DRAIN PROFILES
# LINE I-10 THRU LINE I-14 & LINE 10

| DN: | | | | | | PROJECT NO. | |
|---|---|---|---|---|---|---|---|
| CK DN: | | | | | | NH 2000 (704), etc. | |
| DW: | CONTROL | SECTION | JOB | DIST. | STATE | COUNTY | HIGHWAY NO. | SHEET NO. |
| CK DW: | 2452 | 01 | 036 etc. | SAT | TX | BEXAR | LOOP 1604 | 457A |

PLOTTED ON: 07/02/01
DESIGN FILENAME: 1394IV16\change order\design\civil\plansheets\433716strm2.dgn

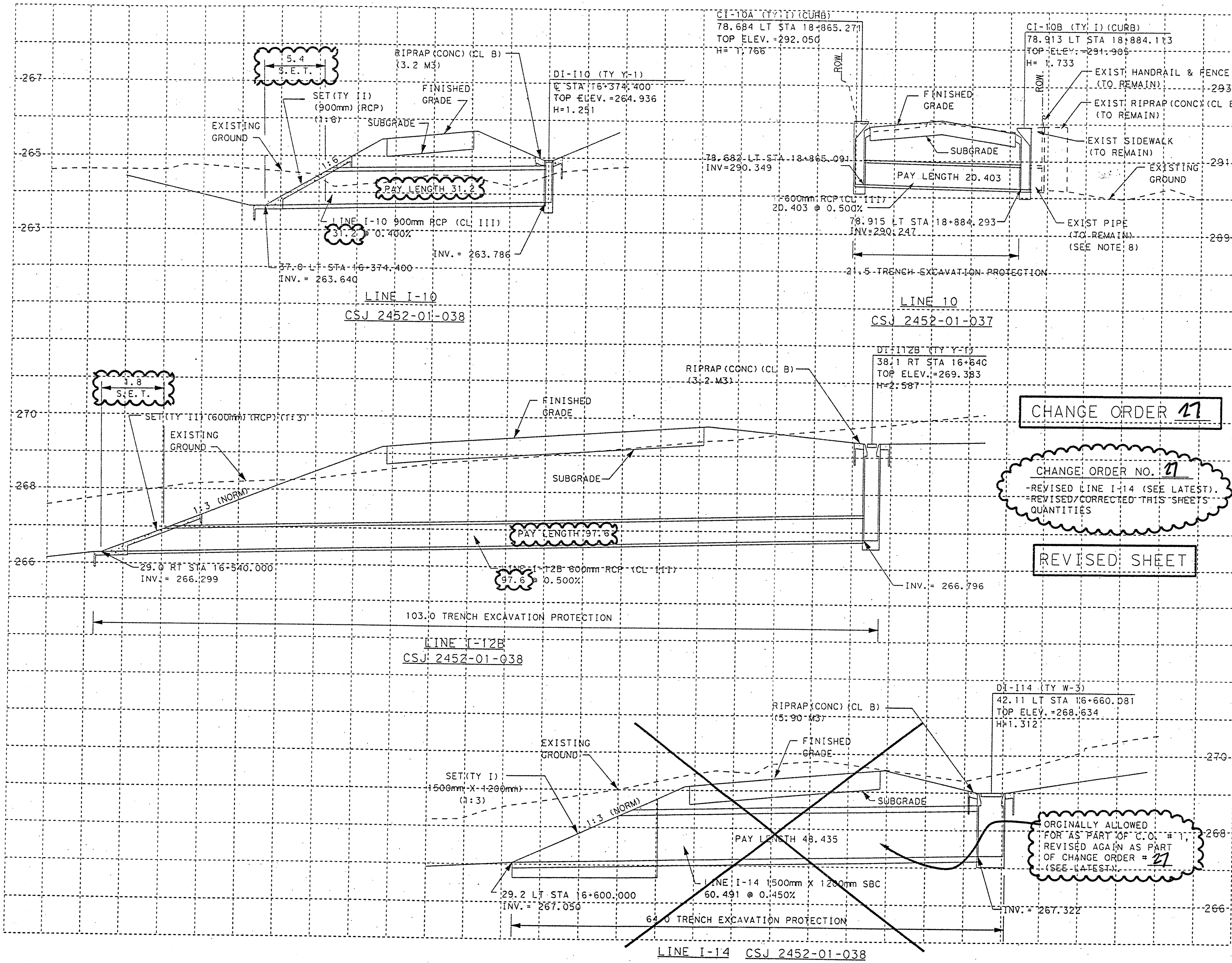


ESTIMATED QUANTITIES

| DESCRIPTION | UNIT | EST. | FINAL |
|---|---|---|---|
| CSJ 2452-01-037 | | | |
| STRUCT EXCAV * | M3 | 33.1 | |
| RC PIPE (CL III) (600MM) | M3 | 20.403 | |
| TRENCH EXCAV PROTECTION | M | 21.5 | |
| INLET (COMPL) (CURB) (TY I) | M | 2 | |
| CSJ 2452-01-038 | | | |
| ⚠1 STRUCT EXCAV * | M3 | 863.0 | |
| RC PIPE (CL III) (600MM) | M | 97.6 | |
| RC PIPE (CL III) (900MM) | M | 31.2 | |
| ⚠1 ~~CONC BOX CULV (1500MM X 1200MM)~~ | ~~M~~ | ~~48.435~~ | |
| INLET (COMPL) (DROP) (TY Y-1) | EA | 2 | |
| ⚠1 ~~INLET (COMPL) (DROP) (TY W-3)~~ | ~~EA~~ | ~~1~~ | |
| ⚠1 RIPRAP (CONC) (CL B) | M3 | 6.4 | |
| ⚠1 TRENCH EXCAV PROTECTION | M | 103.0 | |
| SET (TY II) (600MM) (RCP) (1:3) | EA | 1 | |
| SET (TY II) (900MM) (RCP) (1:6) | EA | 1 | |
| ⚠1 ~~SET (TY I) (1500MM X 1200MM) (1:3)~~ | ~~EA~~ | ~~1~~ | |

* SUPPLIED FOR CONTRACTOR'S INFORMATION ONLY

⚠1 QUANTITIES REVISED AS PART OF C.O. # 1 AND REVISED AGAIN AS PART OF C.O. # 27.

NOTES:

1. ALL PIPES ARE NORMAL TO AND STRAIGHT FROM STRUCTURE TO STRUCTURE UNLESS OTHERWISE SHOWN ON INTERIOR DRAINAGE LAYOUTS
2. CONTRACTORS SHALL SHAPE INVERTS OF ALL PROPOSED CURB INLETS, DROP INLETS AND MANHOLES TO PRODUCE POSITIVE FLOW THROUGH STRUCTURE FROM ALL INLETS TO THE OUTLET OF EACH STRUCTURE.
3. CONTRACTOR SHALL INSTALL ALL STORM DRAIN PIPES INTO MANHOLES, BOXES AND EXISTING STRUCTURES FLUSH WITH INSIDE FACE AND GROUT INTO PLACE, INSURING WATERTIGHT SEAL ALL AROUND.
4. ALL STATION AND OFFSET INFORMATION IS REFERENCED TO THE ℄ LOOP 1604 UNLESS OTHERWISE NOTED.
5. CONTRACTOR SHALL CONSTRUCT MANHOLES TO MINIMIZE CONFLICT WITH UTILITIES.
6. SET (TY II) CONSTRUCTION SHALL UTILIZE RIPRAP HEADWALL (MOD) STANDARD SHEET.
7. FOR LINE 10, CONTRACTOR SHALL CONSTRUCT CURB INLET CI-10B AROUND EXISTING RCP TO REMAIN.
8. FOR LINE 10, CONTRACTOR SHALL REPAIR AT CONTRACTOR'S EXPENSE ANY DAMAGE TO THE EXISTING HEADWALL, RCP, SIDEWALK, FENCE, AND/OR HANDRAILING THAT IS INCURRED DURING CONSTRUCTION ACTIVITIES.

SCALE: H: 1:500 V: 1:100

FOR MOD'S ASSOC. W/ CO# 27 ONLY

STATE OF TEXAS TERRY G. McCOY 75016 REGISTERED PROFESSIONAL ENGINEER

Terry G. McCoy, P.E. 4-29-02 Date

© 2000 Texas Department of Transportation

**LOOP 1604**
**STORM DRAIN PROFILES**
**LINE I-10 THRU LINE I-14 & LINE 10**

| DN: | | | | | | | PROJECT NO. | SHEET NO. |
|---|---|---|---|---|---|---|---|---|
| CK DN: | | | | | | | NH 2000 (704), etc. | |
| DW: | CONTROL | SECTION | JOB | DIST. | STATE | COUNTY | HIGHWAY NO. | |
| CK DW: | 2452 | 01 | 036 | SAT | TX | BEXAR | LOOP 1604 | 403B |

Plotted on: 04/23/02

Design Filename: T:\A0\Design\lp1604\d71-90\chg-order-files\433716STRM2.dgn

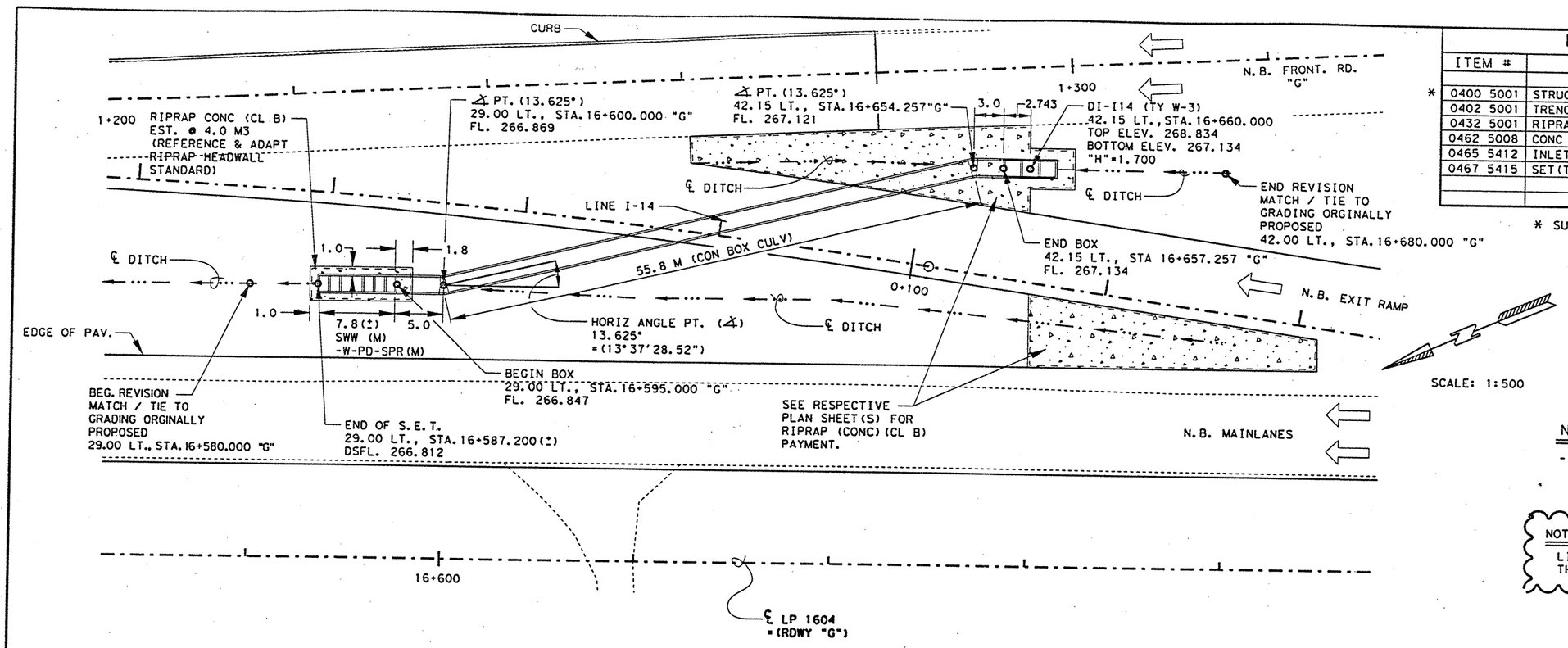


PLAN

SCALE: 1:500

| ESTIMATED QUANTITIES | | | |
|---|---|---|---|
| ITEM # | ITEM | UNIT | QTY. |
| | | | |
| * 0400 5001 | STRUCT EXCAV | M3 | 272 |
| 0402 5001 | TRENCH EXCAV PROTECTION | M | 70.3 |
| 0432 5001 | RIPRAP (CONC) (CL B) | M3 | 4 |
| 0462 5008 | CONC BOX CULV (1500MM X 1200 MM) | M | 63.8 |
| 0465 5412 | INLET (COMPL) (DROP) (W-3) | EA | 1 |
| 0467 5415 | SET (TY I) (1500MM X 1200MM) (1:6) (P) | EA | 1 |
| | | | |
| | | | |

* SUPPLIED FOR CONTRACTORS INFORMATION ONLY.

NOTE(S):

- ALL DIMENSIONS ARE IN METERS UNLESS SHOWN OTHERWISE.

NOTE:
LINE I-14 WAS REVISED AS PART OF C.O. # 1. THIS SHEET & DETAILS SHOWN SUPERSEDES IT.

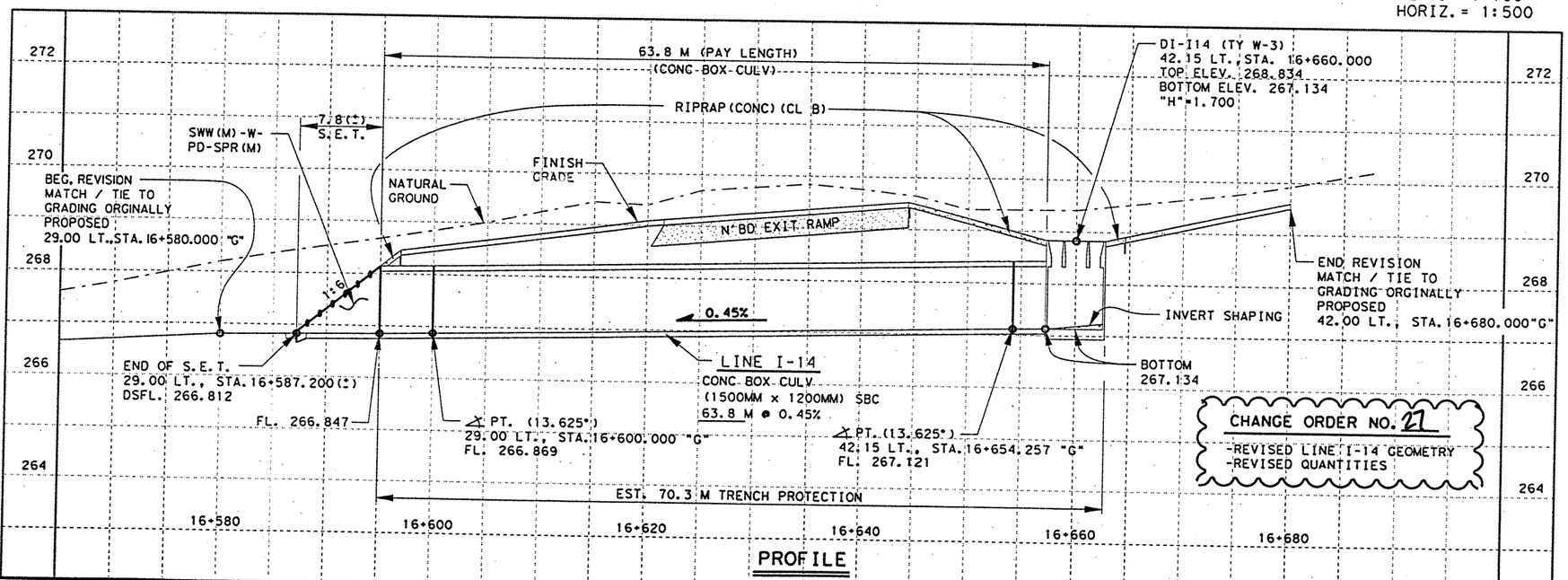


PROFILE

CHANGE ORDER NO. 27
-REVISED LINE I-14 GEOMETRY
-REVISED QUANTITIES

NEW SHEET

CHANGE ORDER 27

STATE OF TEXAS
TERRY G. McCOY
75016
REGISTERED PROFESSIONAL ENGINEER

Terry G. McCoy 4-29-02
Terry G. McCoy, P.E. Date
FOR HOD'S ASSOC W/ CO#27 ONLY

©2002 Texas Department of Transportation

# LINE I-14
# PLAN & PROFILE SHEET

| FED. RD. DIV. NO. | FEDERAL AID PROJECT NO. | | SHEET NO. |
|---|---|---|---|
| 6 | NH 2000(704), etc. | | 4116 |
| STATE | DIST. | COUNTY | |
| TEXAS | SAT | BEXAR | |
| CONT. | SECT. | JOB | HIGHWAY NO. |
| 2452 | 01 | 036, etc. | LP 1604 |

LEVELS DISPLAYED
1 2 3 4 5 6 7 8 9 10 11 12 13 14 15 16
17 18 19 20 21 22 23 24 25 26 27 28 29 30 31 32
33 34 35 36 37 38 39 40 41 42 43 44 45 46 47 48
49 50 51 52 53 54 55 56 57 58 59 60 61 62 63

ACC: I:\oo\design\lpl604fm471-90\
FILE: line14p&P

PLOTTED ON: 09/19/00

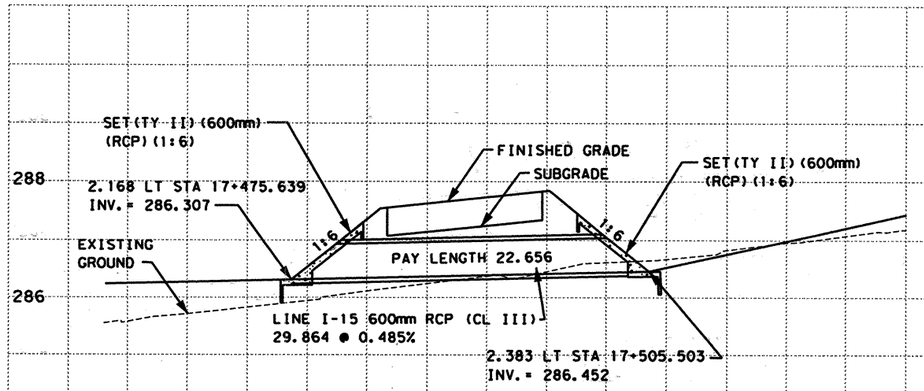


LINE I-15
CSJ 2452-01-037

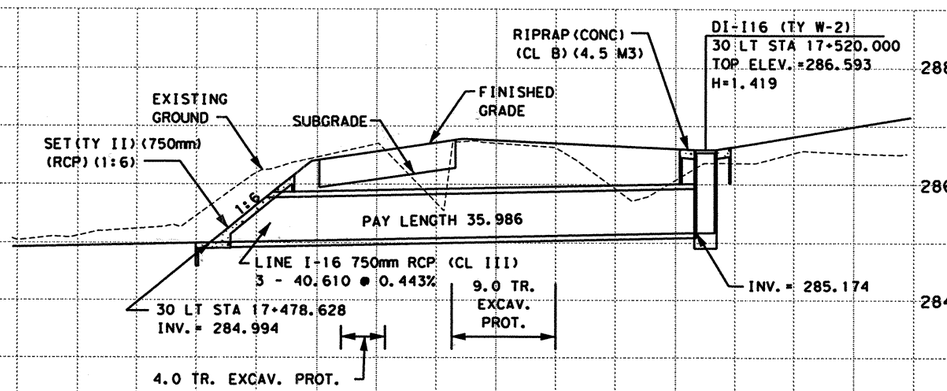


LINE I-16
CSJ 2452-01-037

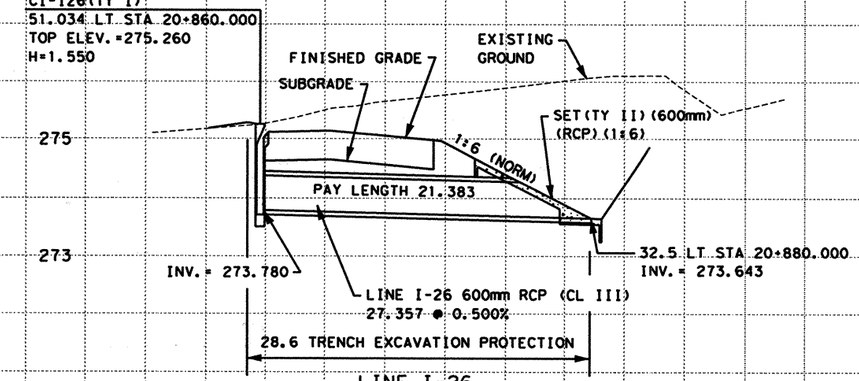


LINE I-26
CSJ 2452-01-036

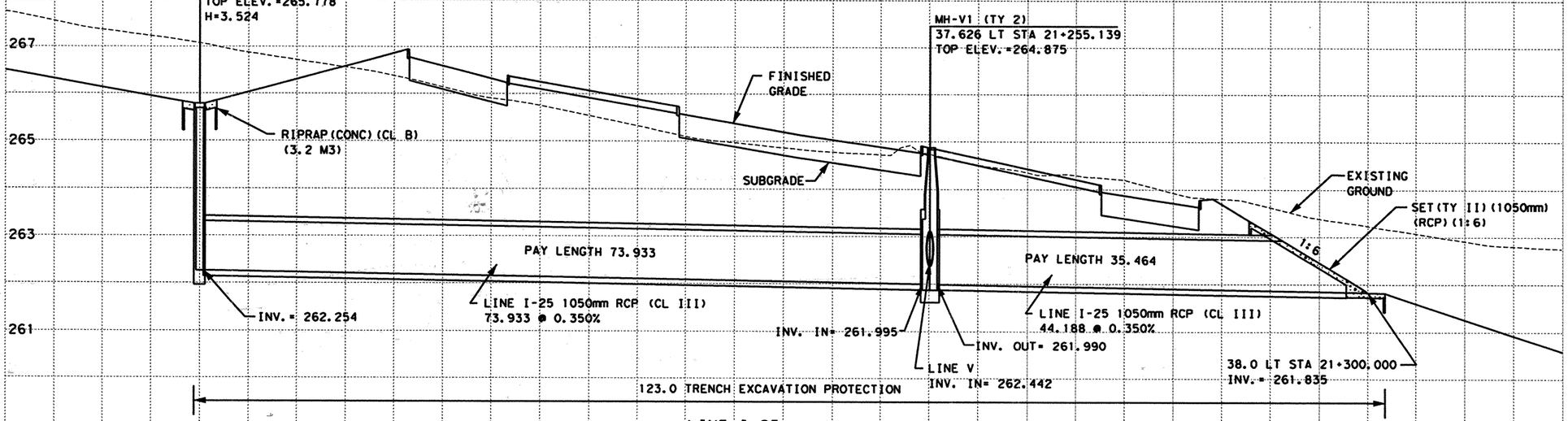


LINE I-25
CSJ 2452-01-036

| ESTIMATED QUANTITIES | | | |
|---|---|---|---|
| DESCRIPTION | UNIT | EST. | FINAL |
| CSJ 2452-01-037 | | | |
| STRUCT EXCAV | M3 | 298.4 | |
| RC PIPE (CL III) (600MM) | M | 22.656 | |
| RC PIPE (CL III) (750MM) | M | 107.958 | |
| INLET (COMPL) (DROP) (TY W-2) | EA | 1 | |
| RIPRAP (CONC) (CL B) | M3 | 4.5 | |
| TRENCH EXCAV PROTECTION | M | 13.0 | |
| SET (TY II) (600MM) (RCP) (1:6) | EA | 2 | |
| SET (TY II) (750MM) (RCP) (1:6) | EA | 3 | |
| CSJ 2452-01-036 | | | |
| STRUCT EXCAV | M3 | 812.3 | |
| RC PIPE (CL III) (600MM) | M | 21.383 | |
| RC PIPE (CL III) (1050MM) | M | 109.397 | |
| INLET (COMPL) (CURB) (TY I) | EA | 1 | |
| INLET (COMPL) (DROP) (TY Y-1) | EA | 1 | |
| MANHOLE (COMPL) (TY 2) | EA | 1 | |
| SET (TY II) (600MM) (RCP) (1:6) | EA | 1 | |
| SET (TY II) (1050MM) (RCP) (1:6) | EA | 1 | |
| RIPRAP (CONC) (CL B) | M3 | 3.2 | |
| TRENCH EXCAV PROTECTION | M | 151.6 | |

* SUPPLIED FOR CONTRACTOR'S INFORMATION ONLY

NOTES:

1. ALL PIPES ARE NORMAL TO AND STRAIGHT FROM STRUCTURE TO STRUCTURE UNLESS OTHERWISE SHOWN ON INTERIOR DRAINAGE LAYOUTS
2. CONTRACTORS SHALL SHAPE INVERTS OF ALL PROPOSED CURB INLETS, DROP INLETS AND MANHOLES TO PRODUCE POSITIVE FLOW THROUGH STRUCTURE FROM ALL INLETS TO THE OUTLET OF EACH STRUCTURE.
3. CONTRACTOR SHALL INSTALL ALL STORM DRAIN PIPES INTO MANHOLES, BOXES AND EXISTING STRUCTURES FLUSH WITH INSIDE FACE AND GROUT INTO PLACE, INSURING WATERTIGHT SEAL ALL AROUND.
4. ALL STATION AND OFFSET INFORMATION IS REFERENCED TO THE ℄ LOOP 1604 UNLESS OTHERWISE NOTED.
5. CONTRACTOR SHALL CONSTRUCT MANHOLES TO MINIMIZE CONFLICT WITH UTILITIES.
6. SET (TY II) CONSTRUCTION SHALL UTILIZE RIPRAP HEADWALL (MOD) STANDARD SHEET.

SCALE: H: 1:500
V: 1:100

555 EAST RAMSEY SAN ANTONIO TEXAS 78216 PHONE (210)375-9000 FAX (210)375-9010
PAPE-DAWSON ENGINEERS CIVIL & ENVIRONMENTAL
K. STEPHEN BONNETTE 60928 REGISTERED PROFESSIONAL ENGINEER
K. STEPHEN BONNETTE, P.E. 09/20/00 DATE

© 2000 Texas Department of Transportation

# LOOP 1604
# STORM DRAIN PROFILES
# LINES I-15, I-16, I-25 & I-26

| DN: | | | | | PROJECT NO. | | |
|---|---|---|---|---|---|---|---|
| CK DN: | | | | | NH 2000 (704), etc. | | |
| DW: | CONTROL | SECTION | JOB | DIST. | STATE | COUNTY | HIGHWAY NO. | SHEET NO. |
| CK DW: | 2452 | 01 | 036 etc. | SAT | TX | BEXAR | LOOP 1604 | 458 |

DESIGN FILENAME: 3941N16\civil\design\int-dgn\3941i6strm2.dgn

PLOTTED ON: 09/19/00

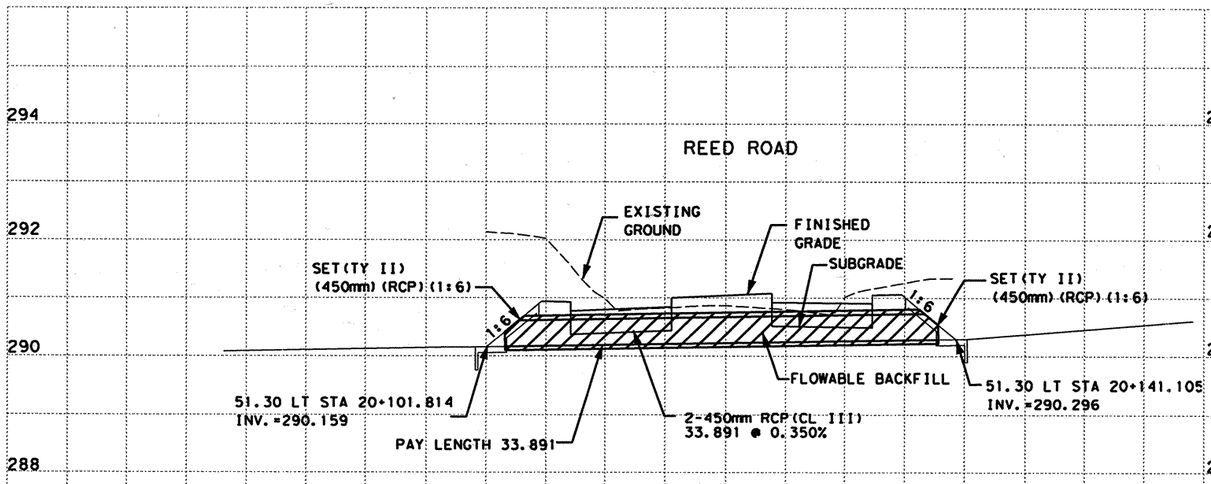


LINE 14
CSJ 2452-01-038

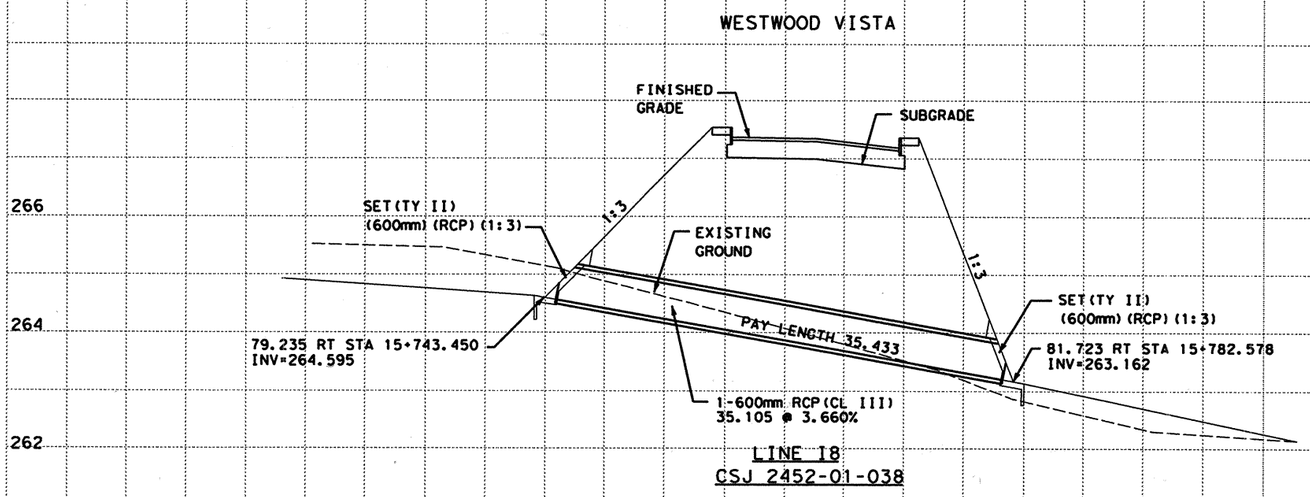


LINE 18
CSJ 2452-01-038

| ESTIMATED QUANTITIES | | | |
|---|---|---|---|
| DESCRIPTION | UNIT | EST. | FINAL |
| CSJ 2452-01-038 | | | |
| * STRUCT EXCAV | M3 | 100 | |
| RC PIPE (CL III) (450MM) | M | 67.782 | |
| RC PIPE (CL III) (600MM) | M | 35.105 | |
| SET (TY II) (600MM) (RCP) (1:3) | EA | 2 | |
| FLOWABLE BACKFILL | M3 | 99.3 | |

* SUPPLIED FOR CONTRACTOR'S INFORMATION ONLY

NOTES:

1. ALL PIPES ARE NORMAL TO AND STRAIGHT FROM STRUCTURE TO STRUCTURE UNLESS OTHERWISE SHOWN ON INTERIOR DRAINAGE LAYOUTS
2. CONTRACTORS SHALL SHAPE INVERTS OF ALL PROPOSED CURB INLETS, DROP INLETS AND MANHOLES TO PRODUCE POSITIVE FLOW THROUGH STRUCTURE FROM ALL INLETS TO THE OUTLET OF EACH STRUCTURE.
3. CONTRACTOR SHALL INSTALL ALL STORM DRAIN PIPES INTO MANHOLES, BOXES AND EXISTING STRUCTURES FLUSH WITH INSIDE FACE AND GROUT INTO PLACE, INSURING WATERTIGHT SEAL ALL AROUND.
4. ALL STATION AND OFFSET INFORMATION IS REFERENCED TO THE ℄ LOOP 1604 UNLESS OTHERWISE NOTED.
5. CONTRACTOR SHALL CONSTRUCT MANHOLES TO MINIMIZE CONFLICT WITH UTILITIES.
6. SET(TY II) CONSTRUCTION SHALL UTILIZE RIPRAP HEADWALL (MOD) STANDARD SHEET.

SCALE: H: 1:500
V: 1:100

555 EAST RAMSEY SAN ANTONIO TEXAS 78216
PHONE (210)375-9000
FAX (210)375-9010
PAPE-DAWSON ENGINEERS
CIVIL & ENVIRONMENTAL
STATE OF TEXAS K. STEPHEN BONNETTE 60928 REGISTERED PROFESSIONAL ENGINEER
09/20/00
K. STEPHEN BONNETTE, P.E. DATE

© 2000 Texas Department of Transportation

# LOOP 1604
# STORM DRAIN PROFILES
# LINE 14 & LINE 18

| DN: | | | | | PROJECT NO. | | | |
|---|---|---|---|---|---|---|---|---|
| CK DN: | | | | | NH 2000 (704), etc. | | | |
| DW: | CONTROL | SECTION | JOB | DIST. | STATE | COUNTY | HIGHWAY NO. | SHEET NO. |
| CK DW: | 2452 | 01 | 036 etc. | SAT | TX | BEXAR | LOOP 1604 | 456 |

DESIGN FILENAME: k:\394\16\civil\design\intda\394116strm5.dgn

PLOTTED ON: $DATE$

DESIGN FILENAME: $FILE$

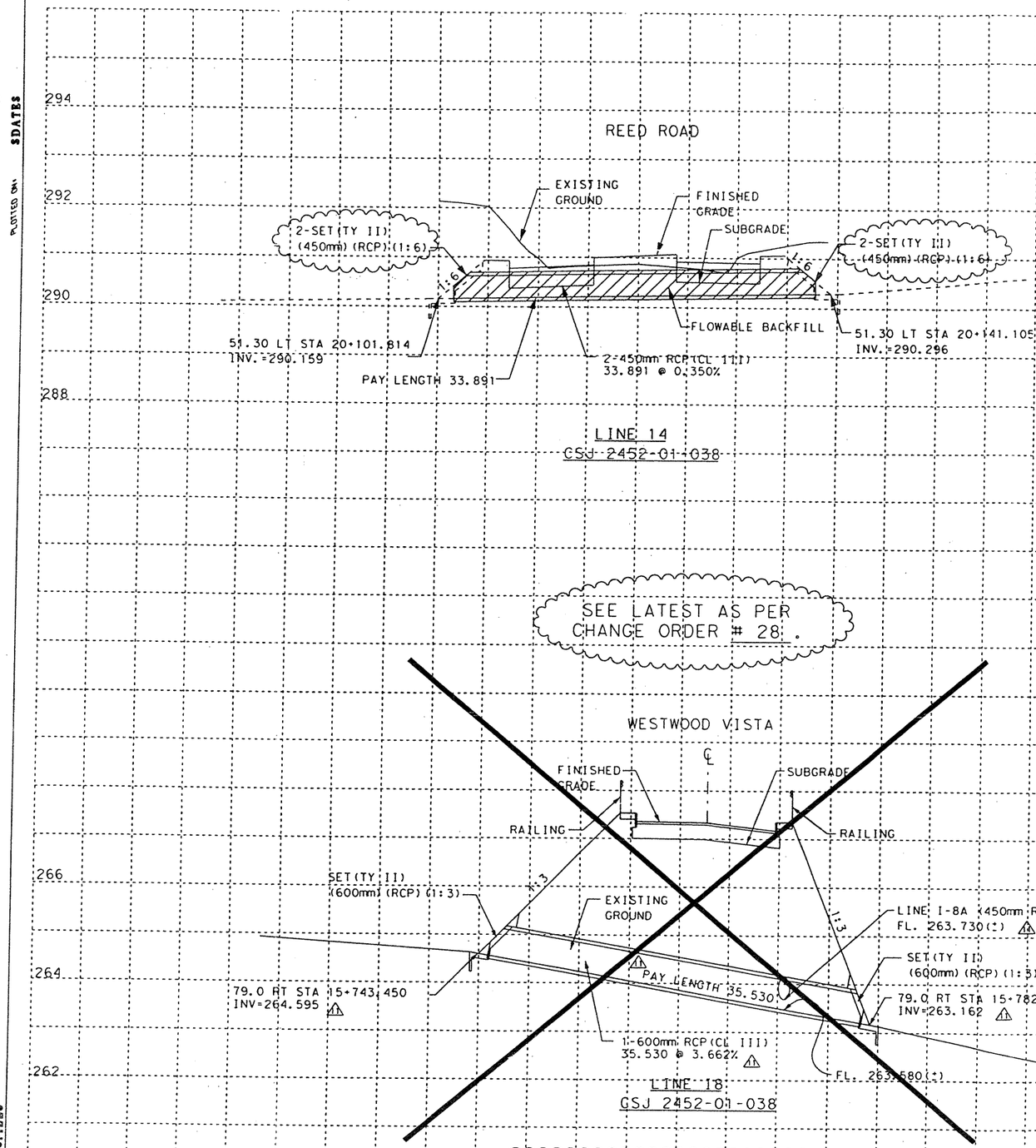


| ESTIMATED QUANTITIES | | | |
|---|---|---|---|
| DESCRIPTION | UNIT | EST. | FINAL |
| CSJ 2452-01-038 | | | |
| STRUCT EXCAV | M3 | 100 | |
| RC PIPE (CL III) (450MM) | M | 67.782 | |
| ~~RC PIPE (CL III) (600MM)~~ | ~~M~~ | ~~35.530~~ | |
| SET (TY II) (450MM) (RCP) (1:6) | EA | 4 | |
| ~~SET (TY II) (600MM) (RCP) (1:3)~~ | ~~EA~~ | ~~2~~ | |
| FLOWABLE BACKFILL | M3 | 99.3 | |

1 *

* SUPPLIED FOR CONTRACTOR'S INFORMATION ONLY

# REFERS TO CHANGES MADE AS PART OF CHANGE ORDER.

NOTES:

1. ALL PIPES ARE NORMAL TO AND STRAIGHT FROM STRUCTURE TO STRUCTURE UNLESS OTHERWISE SHOWN ON INTERIOR DRAINAGE LAYOUTS
2. CONTRACTORS SHALL SHAPE INVERTS OF ALL PROPOSED CURB INLETS, DROP INLETS AND MANHOLES TO PRODUCE POSITIVE FLOW THROUGH STRUCTURE FROM ALL INLETS TO THE OUTLET OF EACH STRUCTURE.
3. CONTRACTOR SHALL INSTALL ALL STORM DRAIN PIPES INTO MANHOLES, BOXES AND EXISTING STRUCTURES FLUSH WITH INSIDE FACE AND GROUT INTO PLACE, INSURING WATERTIGHT SEAL ALL AROUND.
4. ALL STATION AND OFFSET INFORMATION IS REFERENCED TO THE ℄ LOOP 1604 UNLESS OTHERWISE NOTED.
5. CONTRACTOR SHALL CONSTRUCT MANHOLES TO MINIMIZE CONFLICT WITH UTILITIES.
6. SET(TY II) CONSTRUCTION SHALL UTILIZE RIPRAP HEADWALL (MOD) STANDARD SHEET.

CHANGE ORDER #28

REVISED SHEET

SCALE: H: 1:500
V: 1:100

CHANGE ORDER #28
-ELIMINATED LINE 18 DETAILS AND QUANTITIES SHOWN ON THIS SHEET (SEE LATEST)
-CORRECTED QUANTITIES ASSOCIATED WITH LINE 14

STATE OF TEXAS
JEROME D. PAVLISKA
76075
REGISTERED PROFESSIONAL ENGINEER

Jerome D. Pavliska P.E. 2-7-03
Jerome D. Pavliska, P.E. Date

© 2001 Texas Department of Transportation

LOOP 1604
STORM DRAIN PROFILES
LINE 14 & LINE 18

| DN: | | | | | PROJECT NO. | | | |
|---|---|---|---|---|---|---|---|---|
| CK DN: | | | | | NH 2000 (704), etc. | | | |
| DW: | CONTROL | SECTION | JOB | DIST. | STATE | COUNTY | HIGHWAY NO. | SHEET NO. |
| CK DW: | 2452 | 01 | 038 | 5AT | TX | BEXAR | LOOP 1604 | |

PLOTTED ON: $DATE$

DESIGN FILENAME: $FILE$

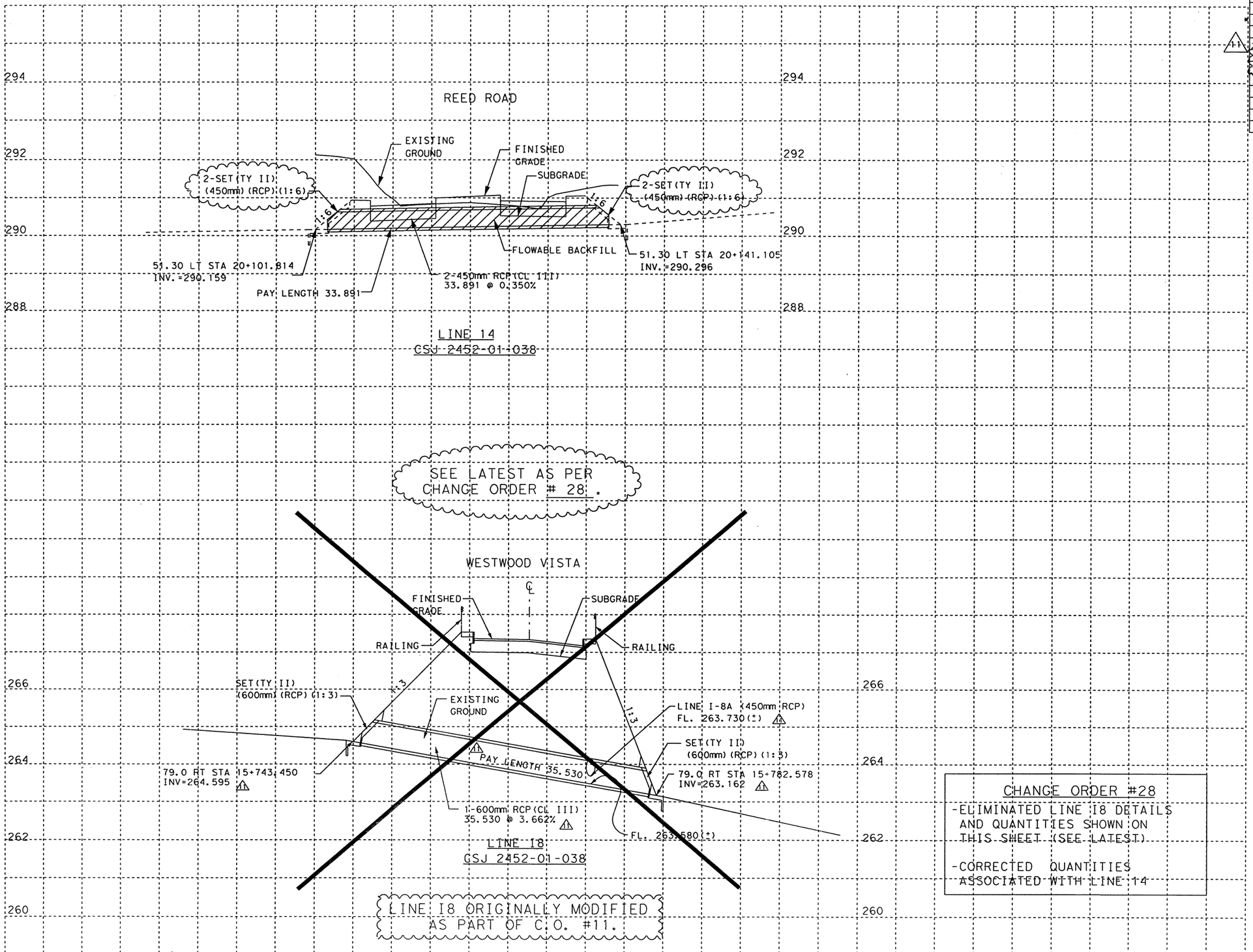


| ESTIMATED QUANTITIES | | | |
|---|---|---|---|
| DESCRIPTION | UNIT | EST. | FINAL |
| CSJ 2452-01-038 | | | |
| * STRUCT EXCAV | M3 | 100 | |
| RC PIPE (CL III) (450MM) | M | 67.782 | |
| RC PIPE (CL III) (600MM) | M | 35.530 | |
| SET (TY II) (450MM) (RCP) (1:6) | EA | 4 | |
| SET (TY II) (600MM) (RCP) (1:3) | EA | 2 | |
| FLOWABLE BACKFILL | M3 | 99.3 | |

1 1

* SUPPLIED FOR CONTRACTOR'S INFORMATION ONLY

1 REFERS TO CHANGES MADE AS PART OF CHANGE ORDER.

NOTES:

1. ALL PIPES ARE NORMAL TO AND STRAIGHT FROM STRUCTURE TO STRUCTURE UNLESS OTHERWISE SHOWN ON INTERIOR DRAINAGE LAYOUTS
2. CONTRACTORS SHALL SHAPE INVERTS OF ALL PROPOSED CURB INLETS, DROP INLETS AND MANHOLES TO PRODUCE POSITIVE FLOW THROUGH STRUCTURE FROM ALL INLETS TO THE OUTLET OF EACH STRUCTURE.
3. CONTRACTOR SHALL INSTALL ALL STORM DRAIN PIPES INTO MANHOLES, BOXES AND EXISTING STRUCTURES FLUSH WITH INSIDE FACE AND GROUT INTO PLACE, INSURING WATERTIGHT SEAL ALL AROUND.
4. ALL STATION AND OFFSET INFORMATION IS REFERENCED TO THE ℄ LOOP 1604 UNLESS OTHERWISE NOTED.
5. CONTRACTOR SHALL CONSTRUCT MANHOLES TO MINIMIZE CONFLICT WITH UTILITIES.
6. SET (TY II) CONSTRUCTION SHALL UTILIZE RIPRAP HEADWALL (MOD) STANDARD SHEET.

CHANGE ORDER #28

REVISED SHEET

SCALE: H: 1:500
V: 1:100

STATE OF TEXAS
JEROME D. PAVLISKA
76075
REGISTERED PROFESSIONAL ENGINEER

Jerome D. Pavliska, P.E. 2-7-03
Jerome D. Pavliska, P.E. Date

CHANGE ORDER #28

-ELIMINATED LINE I8 DETAILS AND QUANTITIES SHOWN ON THIS SHEET (SEE LATEST).

-CORRECTED QUANTITIES ASSOCIATED WITH LINE 14

© 2001 Texas Department of Transportation

LOOP 1604
STORM DRAIN PROFILES
LINE 14 & LINE I8

| DN: | | | | | PROJECT NO. | | |
|---|---|---|---|---|---|---|---|
| CK DN: | | | | | NH 2000 (704), etc. | | |
| DW: | CONTROL | SECTION | JOB | DIST. | COUNTY | HIGHWAY NO. | SHEET NO. |
| CK DW: | 2452 | 01 | 036 | SAT | BEXAR | LOOP 1604 | 456A |

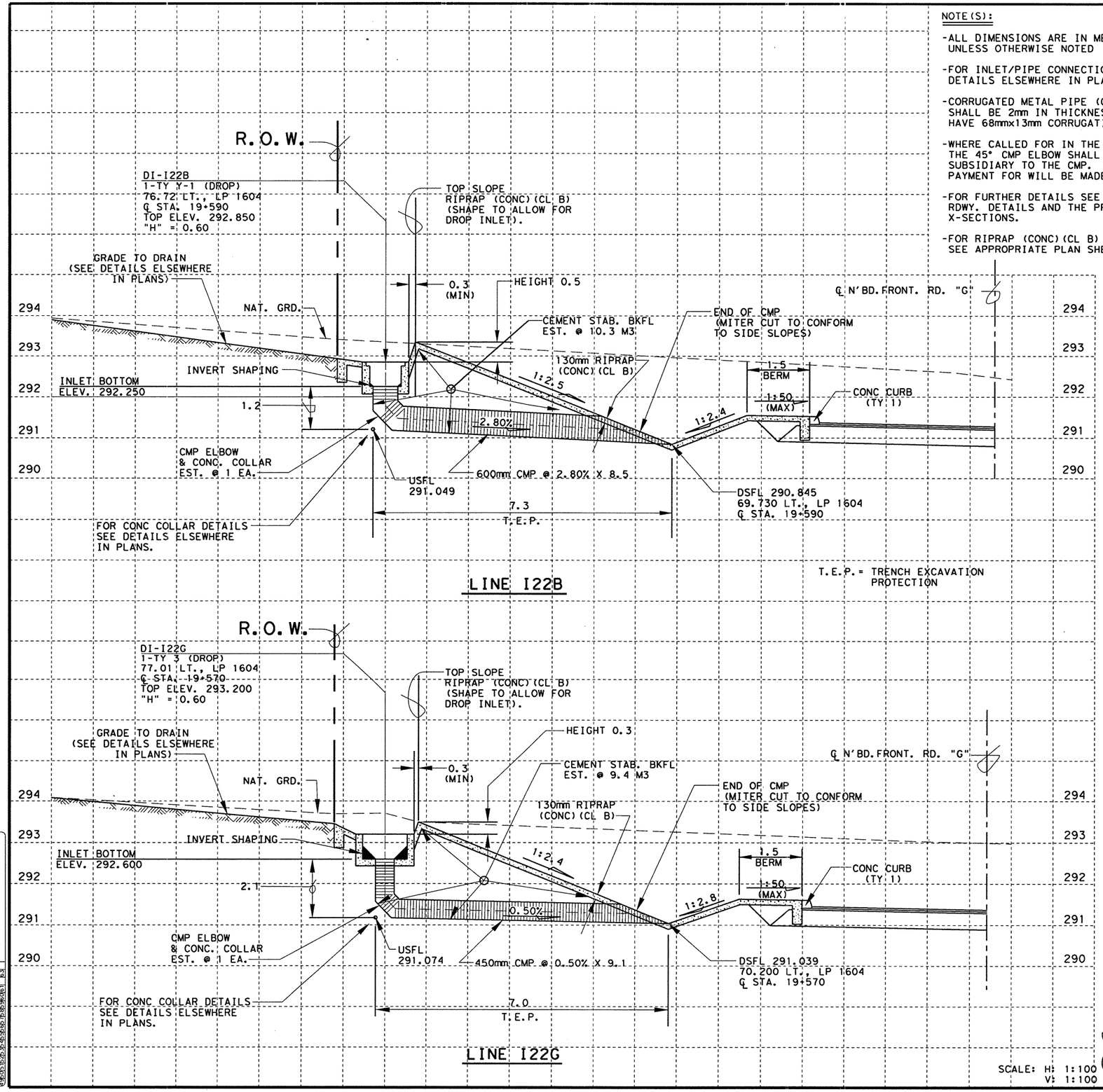


LINE I22B

T.E.P. = TRENCH EXCAVATION PROTECTION




LINE I22G

SCALE: H: 1:100
V: 1:100

NOTE(S):

-ALL DIMENSIONS ARE IN METERS UNLESS OTHERWISE NOTED

-FOR INLET/PIPE CONNECTIONS SEE DETAILS ELSEWHERE IN PLANS.

-CORRUGATED METAL PIPE (CMP) SHALL BE 2mm IN THICKNESS AND HAVE 68mmx13mm CORRUGATIONS.

-WHERE CALLED FOR IN THE PLANS THE 45° CMP ELBOW SHALL BE CONSIDERED SUBSIDIARY TO THE CMP. NO DIRECT PAYMENT FOR WILL BE MADE.

-FOR FURTHER DETAILS SEE MISC. RDWY. DETAILS AND THE PROJECTS X-SECTIONS.

-FOR RIPRAP (CONC)(CL B) PAYMENT SEE APPROPRIATE PLAN SHEET(S).

**ESTIMATED QUANTITIES**

| DESCRIPTION | UNIT | EST. | FINAL |
|---|---|---|---|
| STRUCT. EXCAVATION | M3 | 18.5 | |
| CMP (GAL STL 450MM) | M | 9.1 | |
| CMP (GAL STL 600MM) | M | 8.5 | |
| CEM STABIL BKFL | M3 | 19.7 | |
| TRENCH EXCAV PROTECTION | M | 14.3 | |
| INLET (COMPL)(DROP)(TY 3) | EA | 1 | |
| INLET (COMPL)(DROP)(TY Y-1) | EA | 1 | |
| CONC. (COLLAR)(CL A) | EA | 2 | |

* FOR CONTRACTORS INFORMATION ONLY.

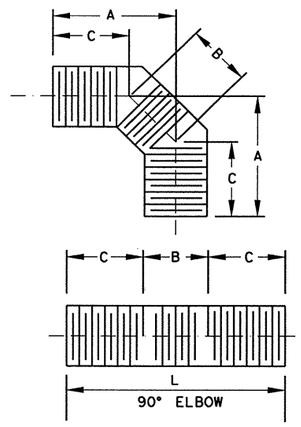


| 90° ELBOW | | | | |
|---|---|---|---|---|
| DIAMETER | A | B | C | L |
| MM | M | M | M | M |
| 450 | 0.69 | 0.36 | 0.43 | 1.22 |
| 600 | 0.70 | 0.41 | 0.41 | 1.22 |
| | | | | |

**CMP ELBOW DETAIL**

NOTES: -ELBOW DETAILS PROVIDED FOR CONTRACTORS INFO ONLY. CONSIDERED SUBSIDIARY TO ITEM 460 "CORRUGATED METAL PIPE".

-ALL DIMENSION NOMINAL

-L = LENGTH OF CMP REQUIRED TO FABRICATE FITTING IN METRIC.

-THICKNESS AND CORRUGATION SHALL BE AS MENTIONED ELSEWHERE IN PLANS.

CHANGE ORDER NO. 64
-NEW STORM DRAIN'S I22B & I22G
-NEW QUANTITIES AND DETAILS

CHANGE ORDER 64

NEW SHEET

STATE OF TEXAS
JEROME D. PAVLISKA
76075
REGISTERED
PROFESSIONAL ENGINEER

Jerome D. Pavliska, P.E. 4-28-04
Jerome D. Pavliska, P.E. Date

©2000
Texas Department of Transportation

LP 1604
STORM DRAIN PROFILES
LINES I22B AND I22G
SHEET 1 OF 1

| FED. RD. DIV. NO. | FEDERAL AID PROJECT NO. | | SHEET NO. |
|---|---|---|---|
| 6 | NH 2000 (704), etc | | 459C |
| STATE | DIST. | COUNTY | |
| TEXAS | SAT | BEXAR | |
| CONT. | SECT. | JOB | HIGHWAY NO. |
| 2452 | 01 | 036, etc | LP 1604 |

05-01-04

LEVELS SUPPLIED
1 2 3 4 5 6 7 8 9 10 11 12 13 14 15 16
17 18 19 20 21 22 23 24 25 26 27 28 29 30 31 32
33 34 35 36 37 38 39 40 41 42 43 44 45 46 47 48
49 50 51 52 53 54 55 56 57 58 59 60 61 62 63

ACC: t:\oo\design\lp1604
FILE: STRDRAIN22A*OGN

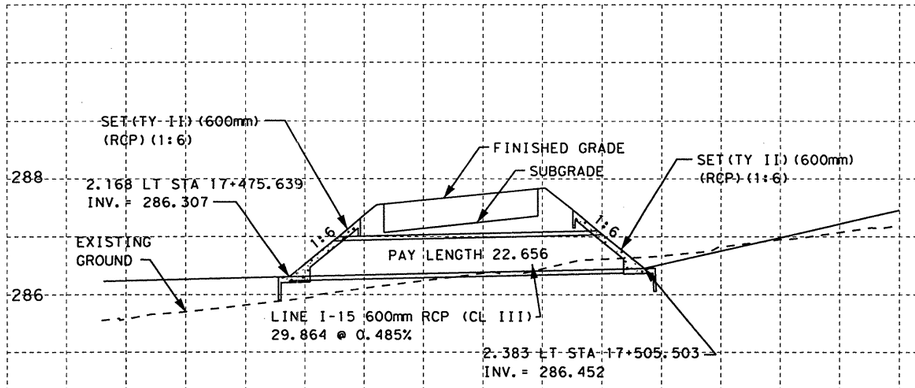


LINE I-15
CSJ 2452-01-037

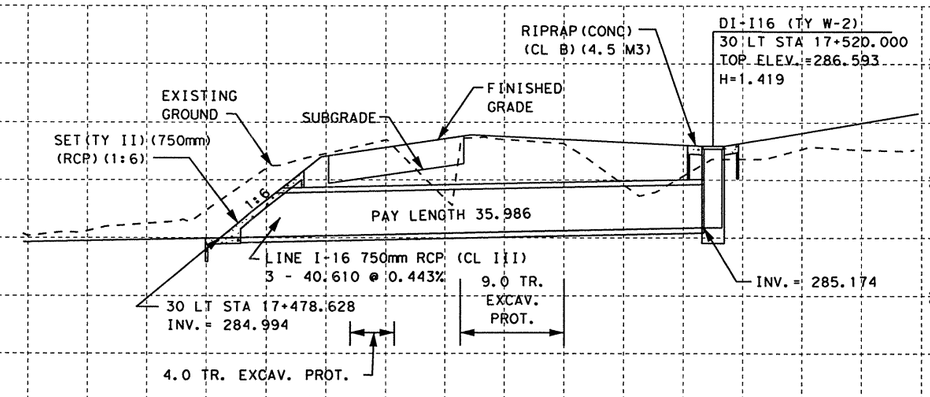


LINE I-16
CSJ 2452-01-037

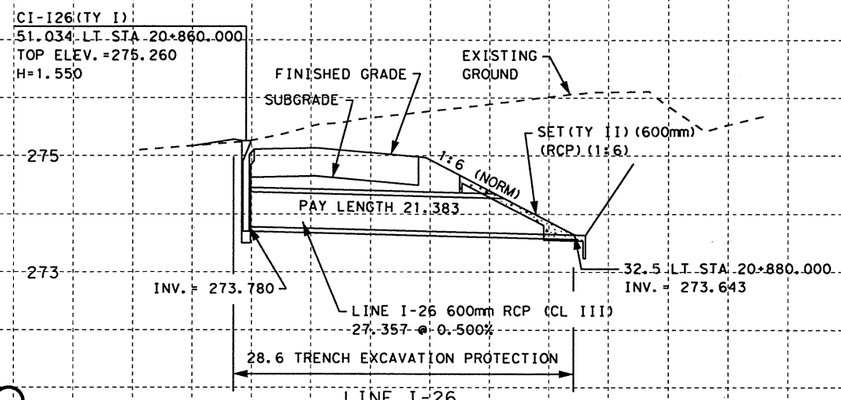


LINE I-26
CSJ 2452-01-036

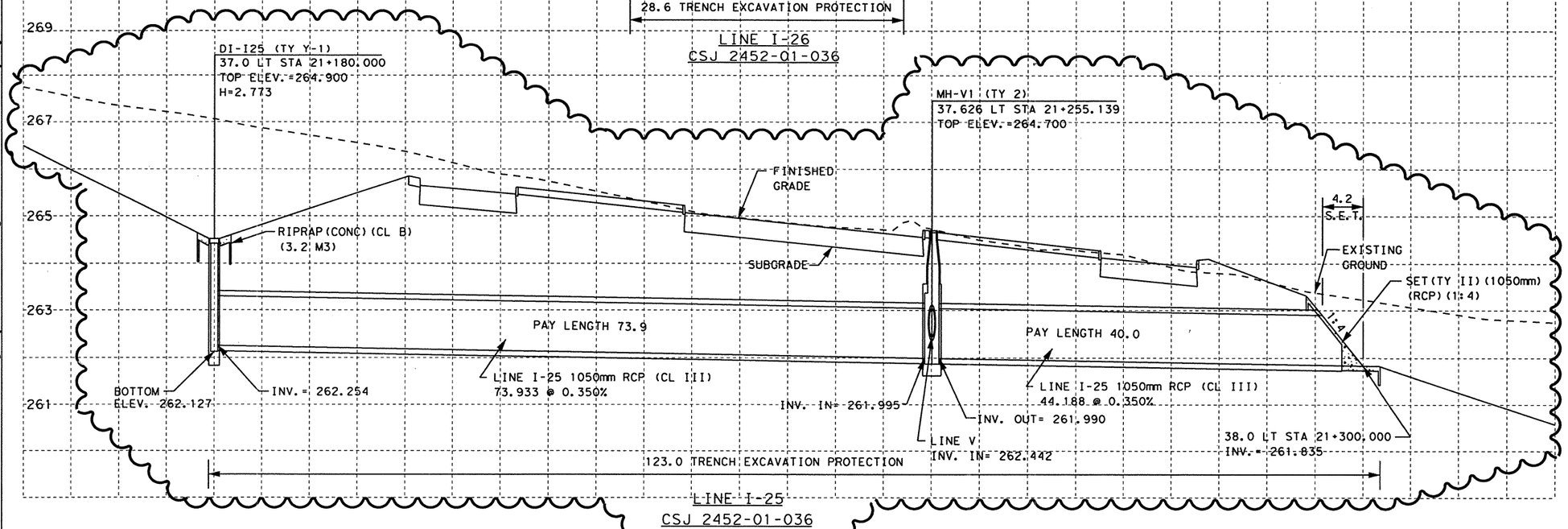


LINE I-25
CSJ 2452-01-036

ESTIMATED QUANTITIES

| DESCRIPTION | UNIT | EST. | FINAL |
|---|---|---|---|
| CSJ 2452-01-037 | | | |
| STRUCT EXCAV | M3 | 6.2 | |
| RC PIPE (CL III) (600MM) | M | 22.656 | |
| RC PIPE (CL III) (750MM) | M | 107.958 | |
| INLET (COMPL) (DROP) (TY W-2) | EA | 1 | |
| RIPRAP (CONC) (CL B) | M3 | 4.5 | |
| TRENCH EXCAV PROTECTION | M | 13.0 | |
| SET (TY II) (600MM) (RCP) (1:6) | EA | 2 | |
| SET (TY II) (750MM) (RCP) (1:6) | EA | 3 | |
| CSJ 2452-01-036 | | | |
| * STRUCT EXCAV | M3 | 812.3 | |
| RC PIPE (CL III) (600MM) | M | 21.383 | |
| RC PIPE (CL III) (1050MM) | M | 113.9 | |
| INLET (COMPL) (CURB) (TY I) | EA | 1 | |
| INLET (COMPL) (DROP) (TY Y-1) | EA | 1 | |
| MANHOLE (COMPL) (TY 2) | EA | 1 | |
| SET (TY II) (600MM) (RCP) (1:6) | EA | | |
| SET (TY II) (1050MM) (RCP) (1:4) | EA | 1 | |
| RIPRAP (CONC) (CL B) | M3 | 3.2 | |
| TRENCH EXCAV PROTECTION | M | 151.6 | |

* SUPPLIED FOR CONTRACTOR'S INFORMATION ONLY

ALL INLETS TO THE OUTLET OF EACH STRUCTURE.

3. CONTRACTOR SHALL INSTALL ALL STORM DRAIN PIPES INTO MANHOLES, BOXES AND EXISTING STRUCTURES FLUSH WITH INSIDE FACE AND GROUT INTO PLACE, INSURING WATERTIGHT SEAL ALL AROUND.

4. ALL STATION AND OFFSET INFORMATION IS REFERENCED TO THE ℄ LOOP 1604 UNLESS OTHERWISE NOTED.

5. CONTRACTOR SHALL CONSTRUCT MANHOLES TO MINIMIZE CONFLICT WITH UTILITIES.

6. SET (TY II) CONSTRUCTION SHALL UTILIZE RIPRAP HEADWALL (MOD) STANDARD SHEET.

**CHANGE ORDER NO.**

-REVISED LINE I-25 DUE TO ADA REVISIONS @ MILITARY DR.

-REVISED DI-I25 & MH-V1 DATA & ELEV'S

-REVISED QUANTITIES

**CHANGE ORDER 64**

**REVISED SHEET**

SCALE: H: 1:500
V: 1:100

STATE OF TEXAS
JEROME D. PAVLISKA
76075
REGISTERED PROFESSIONAL ENGINEER

Jerome D. Pavliska, P.E. 4-28-04
Jerome D. Pavliska, P.E. — Date

© 2000 Texas Department of Transportation

LOOP 1604
STORM DRAIN PROFILES
LINES I-15, I-16, I-25 & I-26

| DN: | | | | | PROJECT NO. | | |
|---|---|---|---|---|---|---|---|
| CK DN: | | | | | NH 2000 (704), etc. | | |
| DW: | CONTROL | SECTION | JOB | DIST. | STATE | COUNTY | HIGHWAY NO. | SHEET NO. |
| CK DW: | 2452 | 01 | 036 etc. | SAT | TX | BEXAR | LOOP 1604 | 458A |

PLOTTED ON:

DESIGN FILENAME: T:\AOD\Design\lp1604fm471-90\chg-order-files\394116strm2-pd.dgn

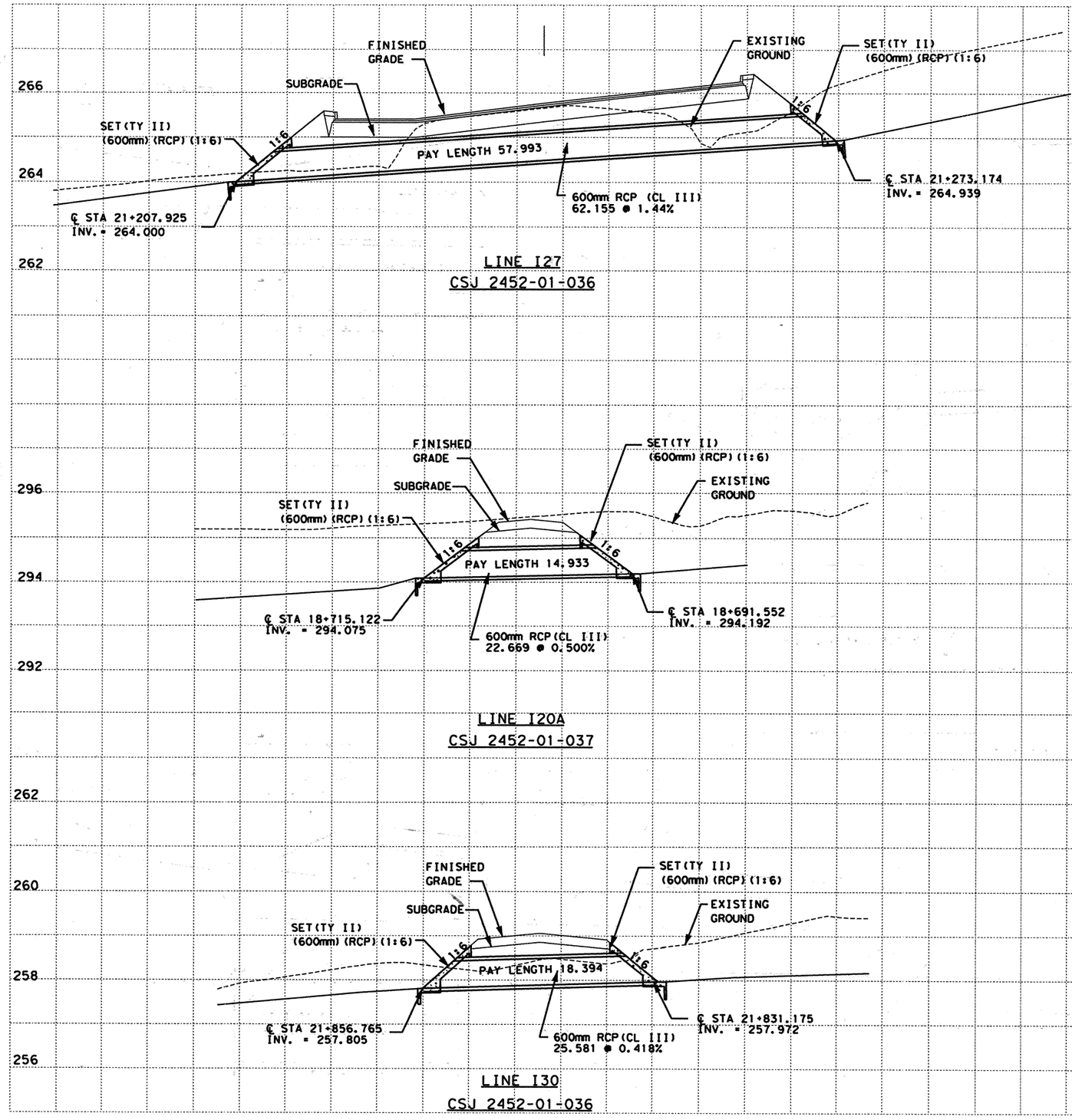


ESTIMATED QUANTITIES

| DESCRIPTION | UNIT | EST. | FINAL |
|---|---|---|---|
| CSJ 2452-01-037 | | | |
| * STRUCT EXCAV | M3 | 101.8 | |
| RC PIPE (CL III) (600MM) | M | 14.933 | |
| SET (TY II) (600MM) (RCP) (1:6) | EA | 2 | |
| CSJ 2452-01-036 | | | |
| * STRUCT EXCAV | M3 | 48.3 | |
| RC PIPE (CL III) (600MM) | M | 76.387 | |
| SET (TY II) (600MM) (RCP) (1:6) | EA | 4 | |

* SUPPLIED FOR CONTRACTOR'S INFORMATION ONLY

**NOTES:**

1. ALL PIPES ARE NORMAL TO AND STRAIGHT FROM STRUCTURE TO STRUCTURE UNLESS OTHERWISE SHOWN ON INTERIOR DRAINAGE LAYOUTS
2. CONTRACTORS SHALL SHAPE INVERTS OF ALL PROPOSED CURB INLETS, DROP INLETS AND MANHOLES TO PRODUCE POSITIVE FLOW THROUGH STRUCTURE FROM ALL INLETS TO THE OUTLET OF EACH STRUCTURE.
3. CONTRACTOR SHALL INSTALL ALL STORM DRAIN PIPES INTO MANHOLES, BOXES AND EXISTING STRUCTURES FLUSH WITH INSIDE FACE AND GROUT INTO PLACE, INSURING WATERTIGHT SEAL ALL AROUND.
4. ALL STATION AND OFFSET INFORMATION IS REFERENCED TO THE ℄ LOOP 1604 UNLESS OTHERWISE NOTED.
5. CONTRACTOR SHALL CONSTRUCT MANHOLES TO MINIMIZE CONFLICT WITH UTILITIES.
6. SET (TY II) CONSTRUCTION SHALL UTILIZE RIPRAP HEADWALL (MOD) STANDARD SHEET.

SCALE: H: 1:500
V: 1:100

555 EAST RAMSEY SAN ANTONIO TEXAS 78216
PHONE (210)375-9000
FAX (210)375-9010
PAPE-DAWSON ENGINEERS
CIVIL & ENVIRONMENTAL
STATE OF TEXAS K. STEPHEN BONNETTE 60928 REGISTERED PROFESSIONAL ENGINEER
K. STEPHEN BONNETTE, P.E. 09/20/00
DATE

© 2000 Texas Department of Transportation

# LOOP 1604
# STORM DRAIN PROFILES
# I20A, I27, I30

| DN: | | | | | | PROJECT NO. | |
|---|---|---|---|---|---|---|---|
| CK DN: | | | | | | NH 2000 (704), etc. | |
| DW: | CONTROL | SECTION | JOB | DIST. | STATE | COUNTY | HIGHWAY NO. | SHEET NO. |
| CK DW: | 2452 | 01 | 036 etc. | SAT | TX | BEXAR | LOOP 1604 | 459 |

PLOTTED ON: 09/19/00

DESIGN FILENAME: 3941\16\civil\design\intda\3941l6strm4.dgn

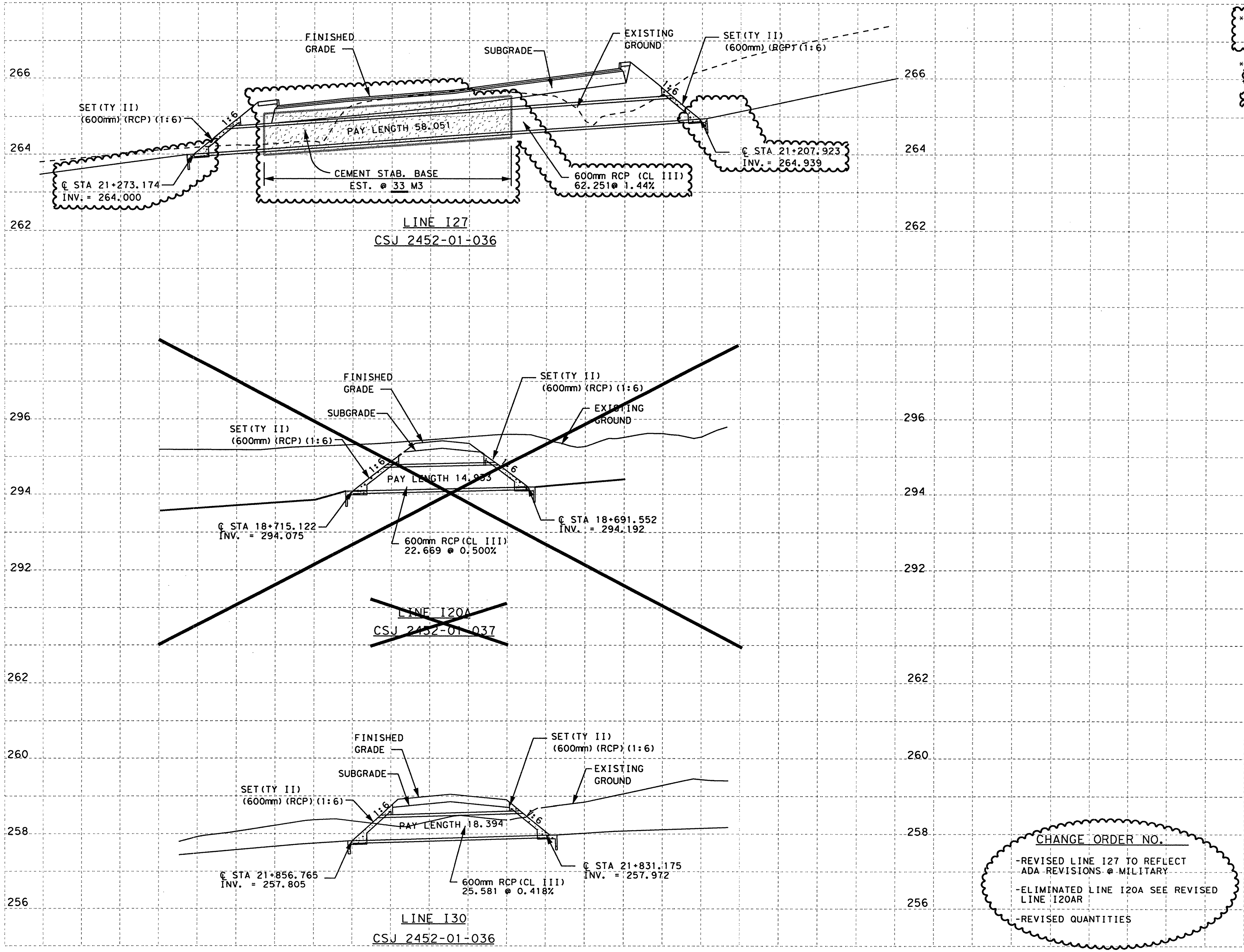


CHANGE ORDER NO.

-REVISED LINE I27 TO REFLECT ADA REVISIONS @ MILITARY

-ELIMINATED LINE I20A SEE REVISED LINE I20AR

-REVISED QUANTITIES

| ESTIMATED QUANTITIES | | | |
|---|---|---|---|
| DESCRIPTION | UNIT | EST. | FINAL |
| ~~CSJ 2452-01-037~~ | | | |
| * STRUCT EXCAV | M3 | 88.0 | |
| ~~RC PIPE (CL III)(600MM)~~ | ~~M~~ | ~~14.933~~ | |
| ~~SET(TY II)(600MM)(RCP)(1:6)~~ | ~~EA~~ | ~~2~~ | |
| CSJ 2452-01-036 | | | |
| * STRUCT EXCAV | M3 | 48.3 | |
| RC PIPE (CL III)(600MM) | M | 76.445 | |
| SET(TY II)(600MM)(RCP)(1:6) | EA | 4 | |
| CEMENT STAB BACKFILL | M3 | 33 | |

* SUPPLIED FOR CONTRACTOR'S INFORMATION ONLY

NOTES:

1. ALL PIPES ARE NORMAL TO AND STRAIGHT FROM STRUCTURE TO STRUCTURE UNLESS OTHERWISE SHOWN ON INTERIOR DRAINAGE LAYOUTS
2. CONTRACTORS SHALL SHAPE INVERTS OF ALL PROPOSED ...NLETS, DROP INLETS AND MANHOLES TO ...E POSITIVE FLOW THROUGH STRUCTURE FROM ALL INLETS TO THE OUTLET OF EACH STRUCTURE.
3. CONTRACTOR SHALL INSTALL ALL STORM DRAIN PIPES INTO MANHOLES, BOXES AND EXISTING STRUCTURES FLUSH WITH INSIDE FACE AND GROUT INTO PLACE, INSURING WATERTIGHT SEAL ALL AROUND.
4. ALL STATION AND OFFSET INFORMATION IS REFERENCED TO THE ℄ LOOP 1604 UNLESS OTHERWISE NOTED.
5. CONTRACTOR SHALL CONSTRUCT MANHOLES TO MINIMIZE CONFLICT WITH UTILITIES.
6. SET(TY II) CONSTRUCTION SHALL UTILIZE RIPRAP HEADWALL (MOD) STANDARD SHEET.

CHANGE ORDER NO.___

REVISED SHEET

SCALE: H: 1:500
V: 1:100

STATE OF TEXAS — JEROME D. PAVLISKA — 76075 — REGISTERED PROFESSIONAL ENGINEER

Jerome D. Pavliska, P.E. 4-28-04
Jerome D. Pavliska, P.E. — Date

© 2000 Texas Department of Transportation

LOOP 1604
STORM DRAIN PROFILES
I20A, I27, I30

| DN: | | | | | | PROJECT NO. | |
|---|---|---|---|---|---|---|---|
| CK DN: | | | | | | NH 2000 (704), etc. | |
| DW: | CONTROL | SECTION | JOB | DIST. | STATE | COUNTY | HIGHWAY NO. | SHEET NO. |
| CK DW: | 2452 | 01 | 036 etc. | SAT | TX | BEXAR | LOOP 1604 | 459A |

PLOTTED ON: 4/29/2004

## ESTIMATED QUANTITIES

| | ITEM # | ITEM | UNIT | QTY. |
|---|---|---|---|---|
| * | 0400 5001 | STRUCT EXCAV | M3 | 32 |
| | 0464 5005 | RC PIPE (CL III) (600 MM) | M | 19.8 |
| | 0467 5078 | SET (TY II) ( 600 MM) (RCP) (1:6) | EA | 2 |

* FOR CONTRACTORS INFORMATION ONLY

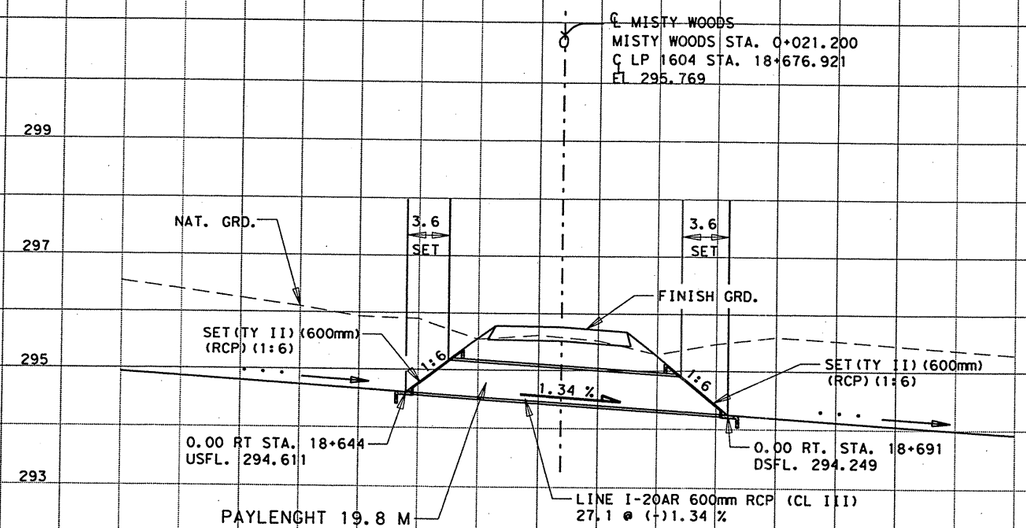


NOTE(S):

- ALL DIMENSIONS ARE IN METERS UNLESS OTHERWISE NOTED.
- INFORMATION SHOWN ON THIS SHEET IS FOR CONTRACTORS INFORMATION ONLY.
- ~~SET (TY II) CONSTRUCTION SHALL UTILIZE~~ RIPRAP HEADWALL (MOD.) STANDARD SHEET.

CHANGE ORDER NO. 64

- REVISED STORM DRAIN NEEDED @ MISTY WOODS DUE TO RE-ALIGNMENT.

CHANGE ORDER 64

NEW SHEET

STATE OF TEXAS
JEROME D. PAVLISKA
76075
REGISTERED PROFESSIONAL ENGINEER

Jerome D. Pavliska P.E. 2/06/04
Jerome D. Pavliska, P.E. Date

©2003

Texas Department of Transportation

# LOOP 1604
# STORM DRAIN PROFILE
# "I-20AR"

| FED.RD. DIV.NO. | FEDERAL AID PROJECT NO. | | SHEET NO. |
|---|---|---|---|
| 6 | NH 2000(704), etc. | | 459B |
| STATE | DIST. | COUNTY | |
| TEXAS | SAT | BEXAR | |
| CONT. | SECT. | JOB | HIGHWAY NO. |
| 2452 | 01 | 036, etc. | LP 1604 |

02-05-04

LEVELS DISPLAYED
1 2 3 4 5 6 7 8 9 10 11 12 21 31 41 51 61
7 10 11 26 27 28 29 30 31 32
33 34 35 36 37 38 39 40 41 42 43 44 45 46 47 48
49 50 51 52 53 54 55 56 57 58 59 60 61 62 63

ACC: lp1604fm471-90\
FILE: prof01.dgn

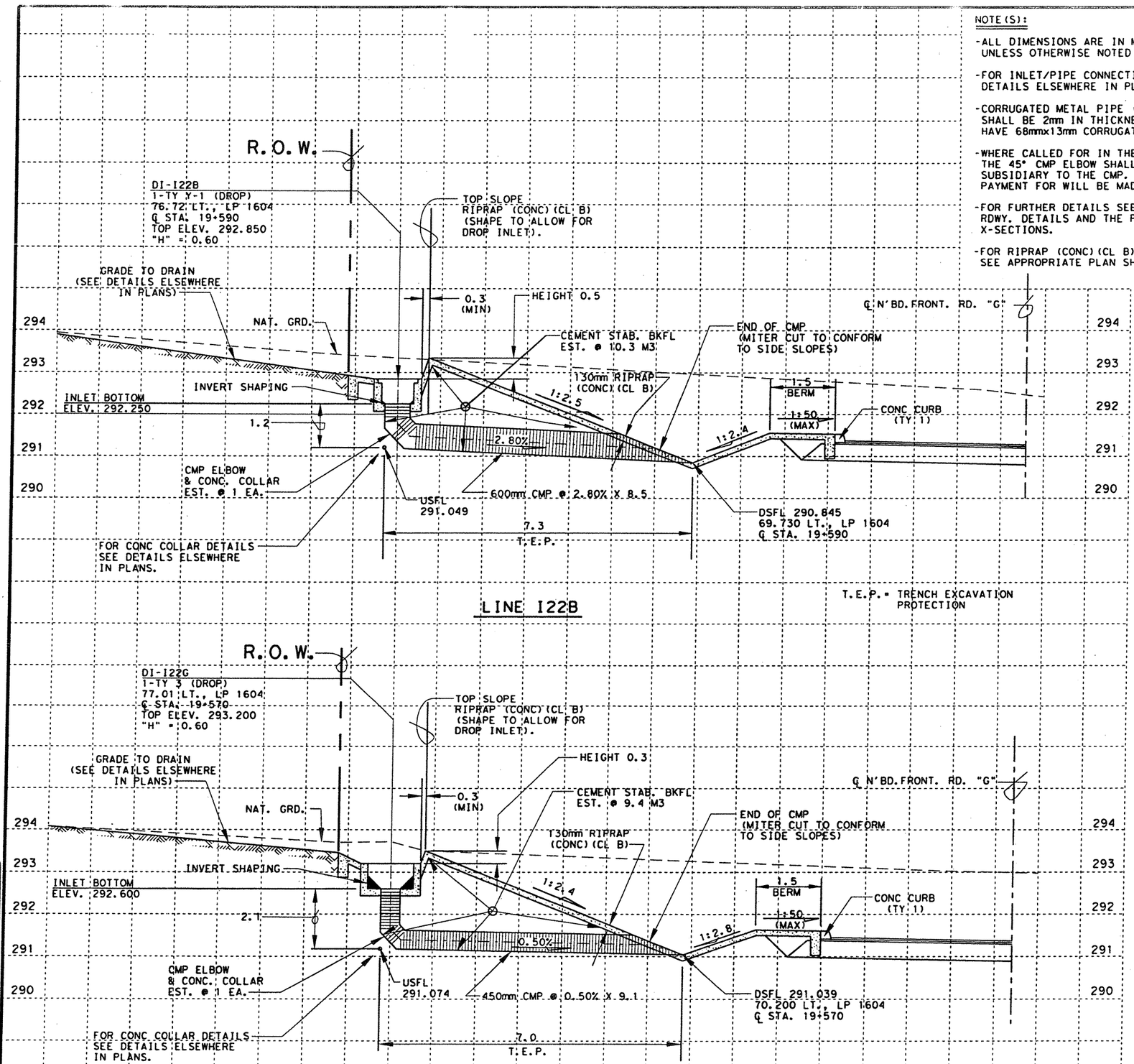


NOTE(S):

- ALL DIMENSIONS ARE IN METERS UNLESS OTHERWISE NOTED
- FOR INLET/PIPE CONNECTIONS SEE DETAILS ELSEWHERE IN PLANS.
- CORRUGATED METAL PIPE (CMP) SHALL BE 2mm IN THICKNESS AND HAVE 68mmx13mm CORRUGATIONS.
- WHERE CALLED FOR IN THE PLANS THE 45° CMP ELBOW SHALL BE CONSIDERED SUBSIDIARY TO THE CMP. NO DIRECT PAYMENT FOR WILL BE MADE.
- FOR FURTHER DETAILS SEE MISC. RDWY. DETAILS AND THE PROJECTS X-SECTIONS.
- FOR RIPRAP (CONC) (CL B) PAYMENT SEE APPROPRIATE PLAN SHEET(S).

## ESTIMATED QUANTITIES

| | DESCRIPTION | UNIT | EST. | FINAL |
|---|---|---|---|---|
| * | STRUCT. EXCAVATION | M3 | 18.5 | |
| | CMP (GAL STL 450MM) | M | 9.1 | |
| | CMP (GAL STL 600MM) | M | 8.5 | |
| | CEM STABIL BKFL | M3 | 19.7 | |
| | TRENCH EXCAV PROTECTION | M | 14.3 | |
| | INLET (COMPL) (DROP) (TY 3) | EA | 1 | |
| | INLET (COMPL) (DROP) (TY Y-1) | EA | 1 | |
| | CONC. (COLLAR) (CL A) | EA | 2 | |

* FOR CONTRACTORS INFORMATION ONLY.

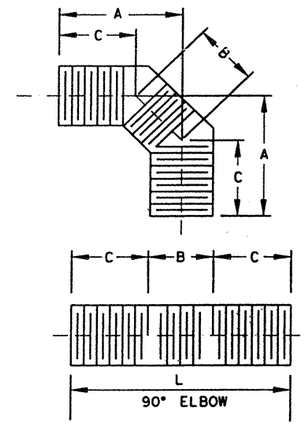


| 90° ELBOW | | | | |
|---|---|---|---|---|
| DIAMETER | A | B | C | L |
| MM | M | M | M | M |
| 450 | 0.69 | 0.36 | 0.43 | 1.22 |
| 600 | 0.70 | 0.41 | 0.41 | 1.22 |

## CMP ELBOW DETAIL

NOTES:
- ELBOW DETAILS PROVIDED FOR CONTRACTORS INFO ONLY. CONSIDERED SUBSIDIARY TO ITEM 460 "CORRUGATED METAL PIPE".
- ALL DIMENSION NOMINAL
- L = LENGTH OF CMP REQUIRED TO FABRICATE FITTING IN METRIC.
- THICKNESS AND CORRUGATION SHALL BE AS MENTIONED ELSEWHERE IN PLANS.

CHANGE ORDER NO. 64
- NEW STORM DRAIN'S I22B & I22G
- NEW QUANTITIES AND DETAILS

CHANGE ORDER 64

NEW SHEET

STATE OF TEXAS
JEROME D. PAVLISKA
76075
REGISTERED PROFESSIONAL ENGINEER

Jerome D. Pavliska, P.E. 4-28-04
Jerome D. Pavliska, P.E. — Date

SCALE: H: 1:100
V: 1:100

©2000
Texas Department of Transportation

# LP 1604
# STORM DRAIN PROFILES LINES I22B AND I22G

SHEET 1 OF 1

| FED. RD. DIV. NO. | FEDERAL AID PROJECT NO. | | SHEET NO. |
|---|---|---|---|
| 6 | NH 2000 (704), etc | | 459C |
| STATE | DIST. | COUNTY | |
| TEXAS | SAT | BEXAR | |
| CONT. | SECT. | JOB | HIGHWAY NO. |
| 2452 | 01 | 036, etc | LP 1604 |

LEVELS DISPLAYED
ACC: I:\dgn\design\lp1604
FILE: STRDRAIN22A.DGN

PLOTTED ON: 09/19/00

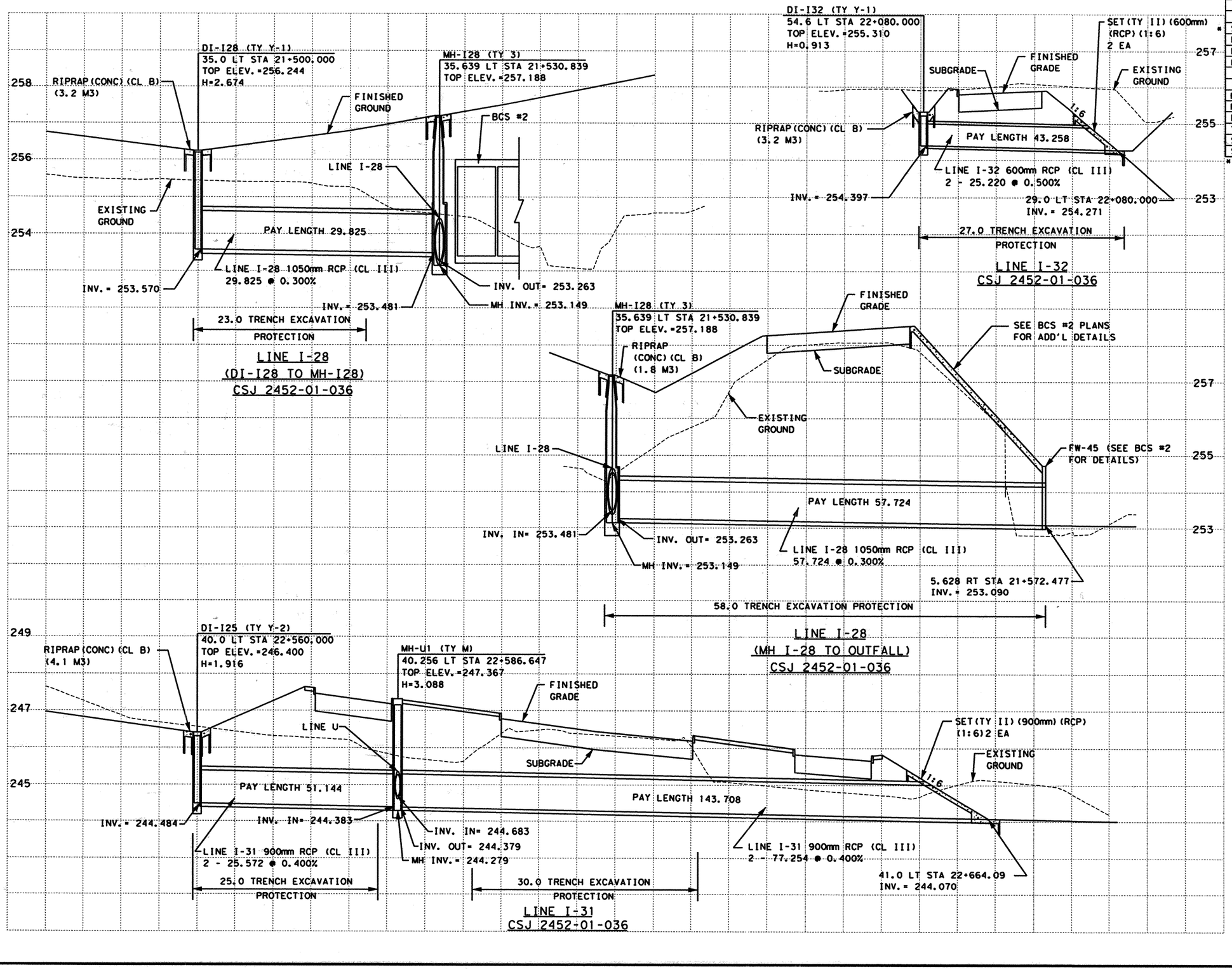


ESTIMATED QUANTITIES

| DESCRIPTION | UNIT | EST. | FINAL |
|---|---|---|---|
| CSJ 2452-01-036 | | | |
| STRUCT EXCAV | M3 | 1103.6 | |
| RC PIPE (CL III) (600MM) | M | 43.258 | |
| RC PIPE (CL III) (900MM) | M | 194.852 | |
| RC PIPE (CL III) (1050MM) | M | 87.549 | |
| INLET (COMPL) (DROP) (TY Y-1) | EA | 2 | |
| INLET (COMPL) (DROP) (TY Y-2) | EA | 1 | |
| MANHOLE (COMPL) (TY 3) | EA | 1 | |
| MANHOLE (COMPL) (TY M) | EA | 1 | |
| RIPRAP (CONC) (CL B) | M3 | 12.3 | |
| TRENCH EXCAV PROTECTION | M | 163.0 | |
| SET (TY II) (600MM) (RCP) (1:6) | EA | 2 | |
| SET (TY II) (900MM) (RCP) (1:6) | EA | 2 | |

* SUPPLIED FOR CONTRACTOR'S INFORMATION ONLY

NOTES:

1. ALL PIPES ARE NORMAL TO AND STRAIGHT FROM STRUCTURE TO STRUCTURE UNLESS OTHERWISE SHOWN ON INTERIOR DRAINAGE LAYOUTS
2. CONTRACTORS SHALL SHAPE INVERTS OF ALL PROPOSED CURB INLETS, DROP INLETS AND MANHOLES TO PRODUCE POSITIVE FLOW THROUGH STRUCTURE FROM ALL INLETS TO THE OUTLET OF EACH STRUCTURE.
3. CONTRACTOR SHALL INSTALL ALL STORM DRAIN PIPES INTO MANHOLES, BOXES AND EXISTING STRUCTURES FLUSH WITH INSIDE FACE AND GROUT INTO PLACE, INSURING WATERTIGHT SEAL ALL AROUND.
4. ALL STATION AND OFFSET INFORMATION IS REFERENCED TO THE ℄ LOOP 1604 UNLESS OTHERWISE NOTED.
5. CONTRACTOR SHALL CONSTRUCT MANHOLES TO MINIMIZE CONFLICT WITH UTILITIES.
6. SET (TY II) CONSTRUCTION SHALL UTILIZE RIPRAP HEADWALL (MOD) STANDARD SHEET.

SCALE: H: 1:500
V: 1:100

555 EAST RAMSEY SAN ANTONIO TEXAS 78216 PHONE (210)375-9000 FAX (210)375-9010
PAPE-DAWSON ENGINEERS
CIVIL & ENVIRONMENTAL
K. STEPHEN BONNETTE 60928 REGISTERED PROFESSIONAL ENGINEER STATE OF TEXAS
K. STEPHEN BONNETTE, P.E. 09/20/00 DATE

© 2000 Texas Department of Transportation

# LOOP 1604
# STORM DRAIN PROFILES
# LINES I-28, I-31 & I-32

| DN: | | | | | PROJECT NO. | | |
|---|---|---|---|---|---|---|---|
| CK DN: | | | | | NH 2000 (704), etc. | | |
| DW: | CONTROL | SECTION | JOB | DIST. | STATE | COUNTY | HIGHWAY NO. | SHEET NO. |
| CK DW: | 2452 | 01 | 036 etc. | SAT | TX | BEXAR | LOOP 1604 | 460 |

DESIGN FILENAME: N:\394\N16\civil\design\int\dgn\394ll6strm2.dgn

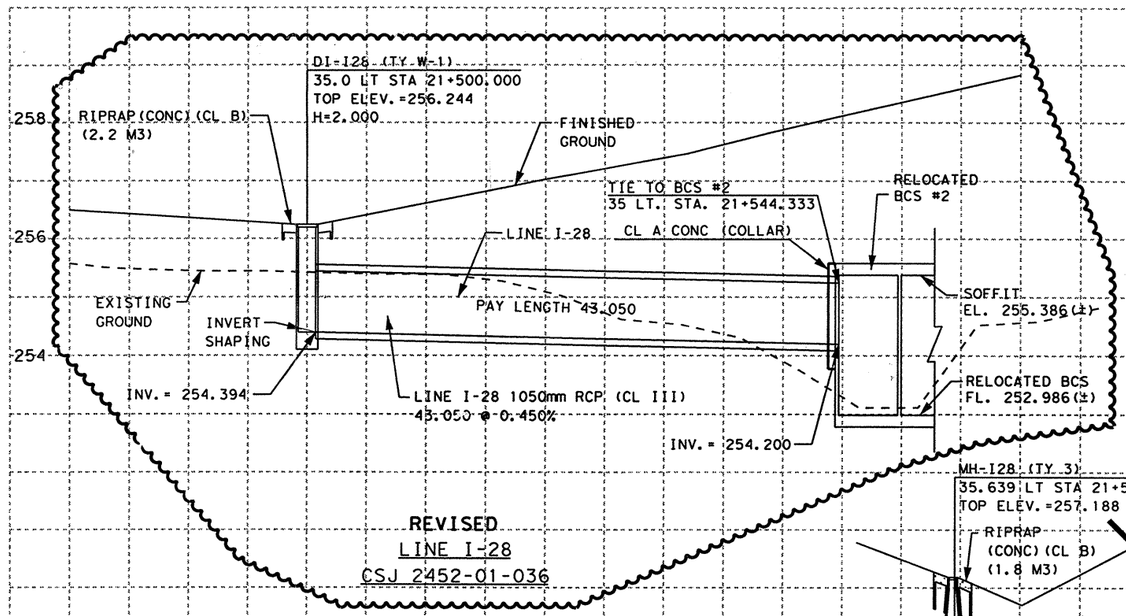


REVISED
LINE I-28
CSJ 2452-01-036

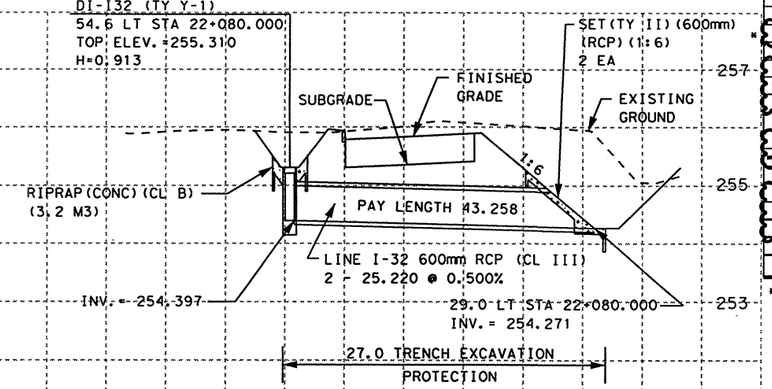


LINE I-32
CSJ 2452-01-036

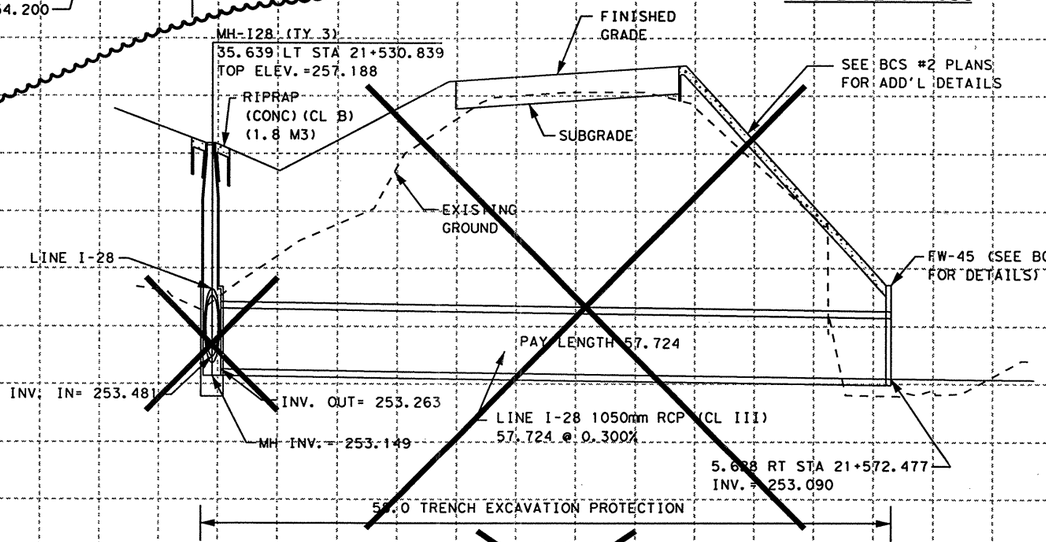


LINE I-28
(MH I-28 TO OUTFALL)
CSJ 2452-01-036

PORTION OF ORIGINAL LINE I-28 ELIMINATED.

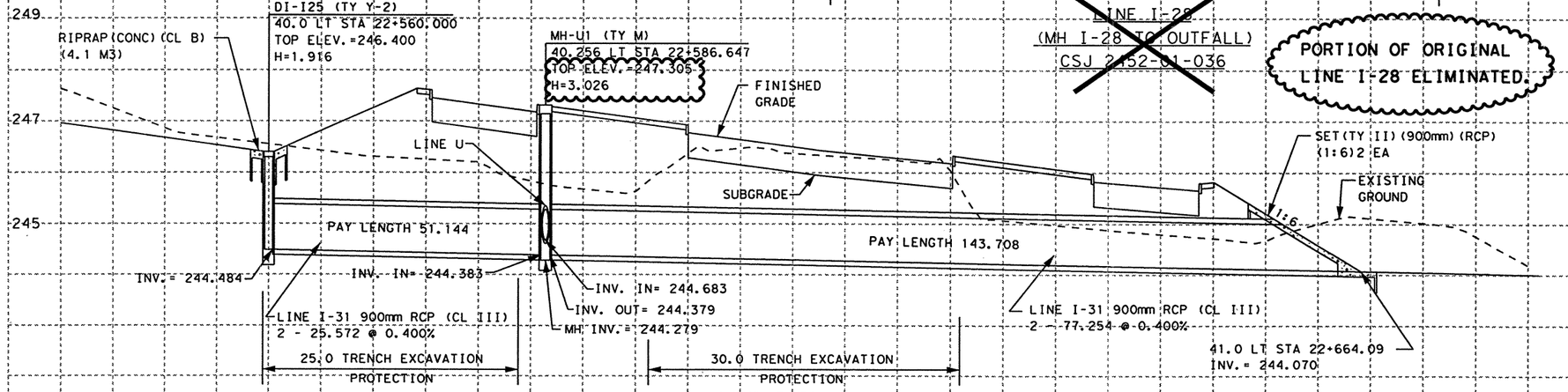


LINE I-31
CSJ 2452-01-036

ESTIMATED QUANTITIES

| DESCRIPTION | UNIT | EST. | FINAL |
|---|---|---|---|
| CSJ 2452-01-036 | | | |
| * STRUCT EXCAV | M3 | 537 | |
| RC PIPE (CL III) (600MM) | M | 43.258 | |
| RC PIPE (CL III) (900MM) | M | 194.852 | |
| RC PIPE (CL III) (1050MM) | M | 43.050 | |
| INLET (COMPL) (DROP) (TY Y-1) | EA | 1 | |
| INLET (COMPL) (DROP) (TY Y-2) | EA | 1 | |
| INLET (COMPL) (DROP) (TY W-1) | EA | 1 | |
| MANHOLE (COMPL) (TY 3) | EA | 1 | |
| MANHOLE (COMPL) (TY M) | EA | 1 | |
| CL A CONC (COLLAR) | EA | 1 | |
| RIPRAP (CONC) (CL B) | M3 | 9.5 | |
| TRENCH EXCAV PROTECTION | M | 82 | |
| SET (TY II) (600MM) (RCP) (1:6) | EA | 2 | |
| SET (TY II) (900MM) (RCP) (1:6) | EA | 2 | |

* SUPPLIED FOR CONTRACTOR'S INFORMATION ONLY

**CHANGE ORDER NO. 64**
-REVISED MANHOLE DATA
-REVISED LINE I-28
-REVISED QUANTITIES

NOTES:

1. ALL PIPES ARE NORMAL TO AND STRAIGHT FROM STRUCTURE TO STRUCTURE UNLESS OTHERWISE SHOWN ON INTERIOR DRAINAGE LAYOUTS
2. CONTRACTORS SHALL SHAPE INVERTS OF ALL PROPOSED CURB INLETS, DROP INLETS AND MANHOLES TO PRODUCE POSITIVE FLOW THROUGH STRUCTURE FROM ALL INLETS TO THE OUTLET OF EACH STRUCTURE.
3. CONTRACTOR SHALL INSTALL ALL STORM DRAIN PIPES INTO MANHOLES, BOXES AND EXISTING STRUCTURES FLUSH WITH INSIDE FACE AND GROUT INTO PLACE, INSURING WATERTIGHT SEAL ALL AROUND.
4. ALL STATION AND OFFSET INFORMATION IS REFERENCED TO THE ℄ LOOP 1604 UNLESS OTHERWISE NOTED.
5. CONTRACTOR SHALL CONSTRUCT MANHOLES TO MINIMIZE CONFLICT WITH UTILITIES.
6. SET (TY II) CONSTRUCTION SHALL UTILIZE RIPRAP HEADWALL (MOD) STANDARD SHEET.

**CHANGE ORDER 64**

**REVISED SHEET**

SCALE: H: 1:500
V: 1:100

STATE OF TEXAS
JEROME D. PAVLISKA
76075
REGISTERED PROFESSIONAL ENGINEER

Jerome D. Pavliska, P.E. 4-13-04
Jerome D. Pavliska, P.E. — Date

© 2000 Texas Department of Transportation

LOOP 1604
STORM DRAIN PROFILES
LINES I-28, I-31 & I-32

| DN: | | | | | PROJECT NO. | | |
|---|---|---|---|---|---|---|---|
| CK DN: | | | | | NH 2000 (704), etc. | | |
| DW: | CONTROL | SECTION | JOB | DIST. | STATE | COUNTY | HIGHWAY NO. | SHEET NO. |
| CK DW: | 2452 | 01 | 036 | SAT | TX | BEXAR | LOOP 1604 | 460A |

PLOTTED ON: $DATE$
DESIGN FILENAME: T:\AD\Design\p1604fm471-90\chgorderfiles\394116strm2.dgn

PLOTTED ON: 3/9/2006

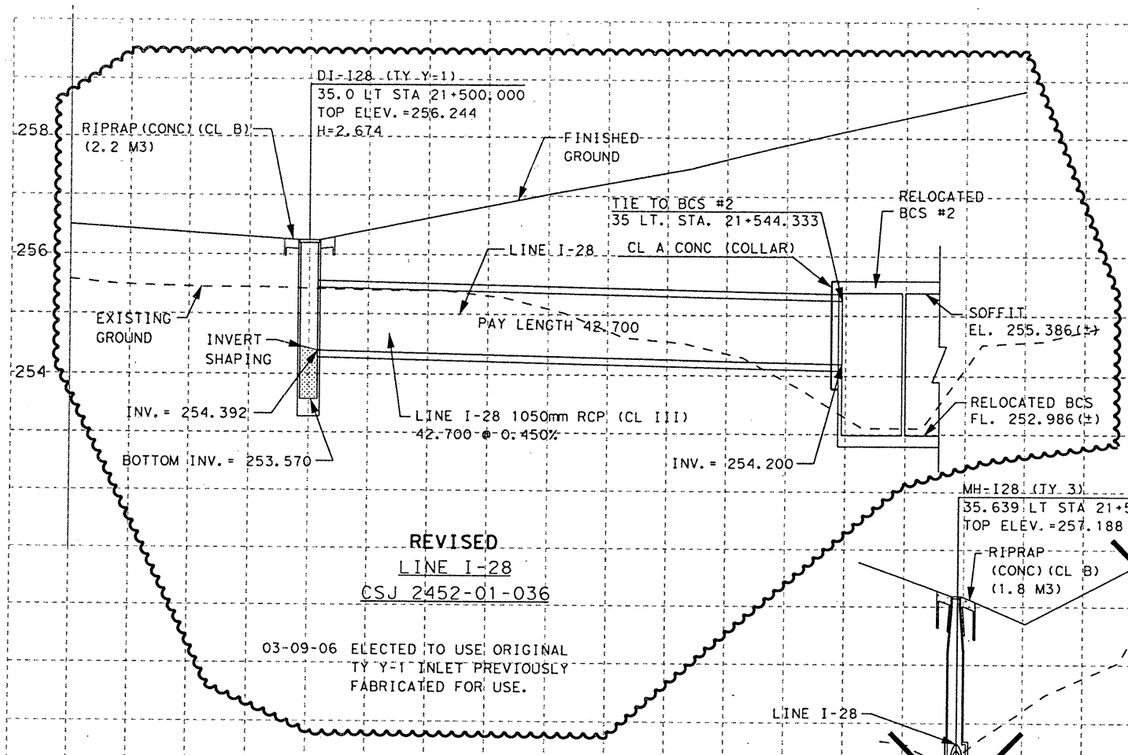


REVISED
LINE I-28
CSJ 2452-01-036

03-09-06 ELECTED TO USE ORIGINAL TY Y-1 INLET PREVIOUSLY FABRICATED FOR USE.

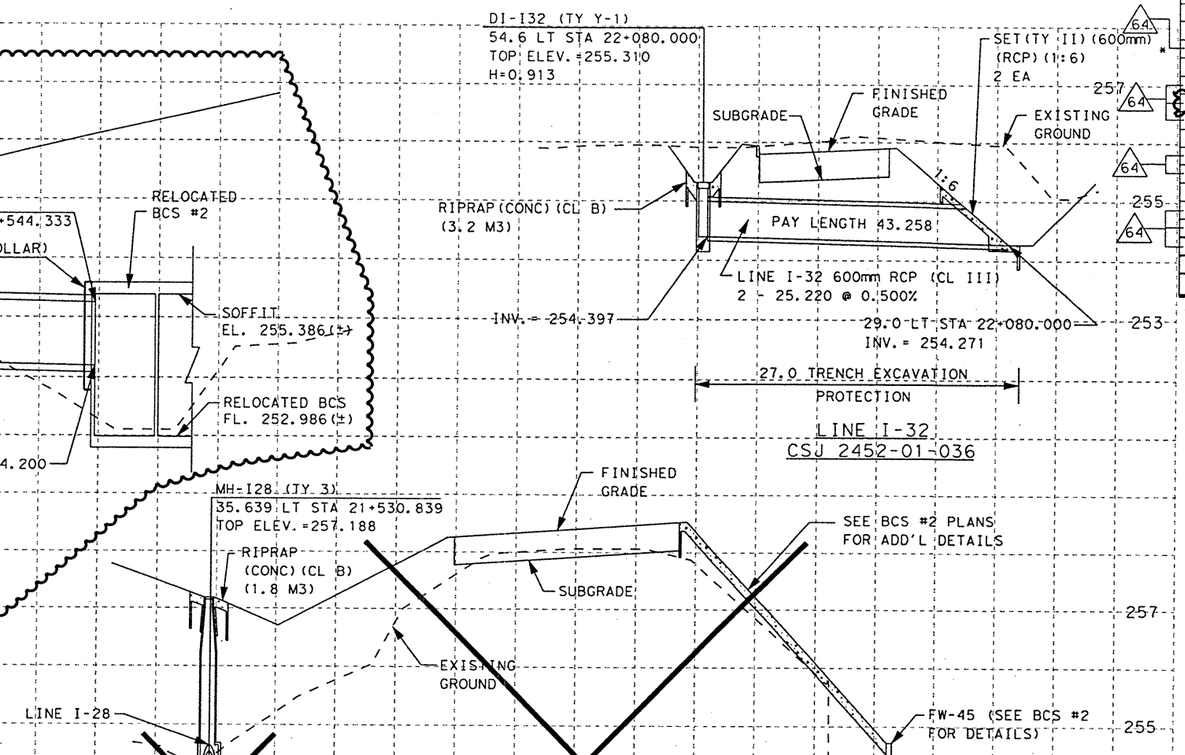


LINE I-32
CSJ 2452-01-036

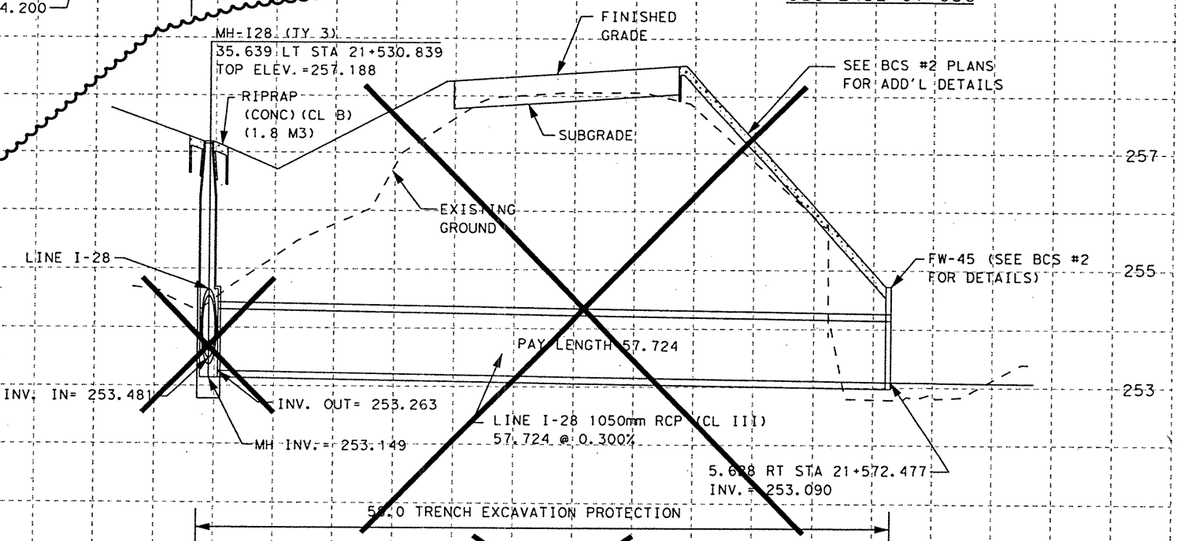


LINE I-28
(MH I-28 TO OUTFALL)
CSJ 2452-01-036

64

PORTION OF ORIGINAL 64 LINE I-28 ELIMINATED.

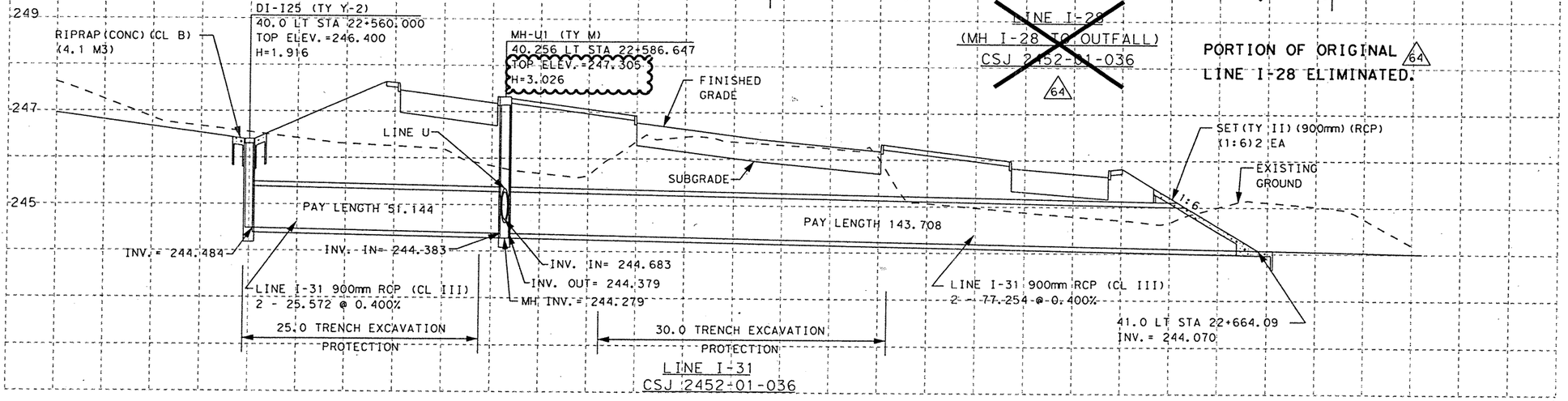


LINE I-31
CSJ 2452-01-036

# ESTIMATED QUANTITIES

| DESCRIPTION | UNIT | EST. | FINAL |
|---|---|---|---|
| CSJ 2452-01-036 | | | |
| STRUCT EXCAV | M3 | 537 | |
| RC PIPE (CL III) (600MM) | M | 43.258 | |
| RC PIPE (CL III) (900MM) | M | 194.852 | |
| RC PIPE (CL III) (1050MM) | M | 42.7 | |
| INLET (COMPL) (DROP) (TY Y-1) | EA | 1 | |
| INLET (COMPL) (DROP) (TY Y-2) | EA | 1 | |
| INLET (COMPL) (DROP) (TY W-1) | EA | 1 | |
| ~~MANHOLE (COMPL) (TY S)~~ | ~~EA~~ | ~~1~~ | |
| MANHOLE (COMPL) (TY M) | EA | 1 | |
| CL A CONC (COLLAR) | EA | 1 | |
| RIPRAP (CONC) (CL B) | M3 | 9.5 | |
| TRENCH EXCAV PROTECTION | M | 82 | |
| SET (TY II) (600MM) (RCP) (1:6) | EA | 2 | |
| SET (TY II) (900MM) (RCP) (1:6) | EA | 2 | |

* SUPPLIED FOR CONTRACTOR'S INFORMATION ONLY

CHANGE ORDER NO.

-REVISED LINE I-28
-REVISED QUANTITIES

**NOTES:**

1. ALL PIPES ARE NORMAL TO AND STRAIGHT FROM STRUCTURE TO STRUCTURE UNLESS OTHERWISE SHOWN ON INTERIOR DRAINAGE LAYOUTS
2. CONTRACTORS SHALL SHAPE INVERTS OF ALL PROPOSED CURB INLETS, DROP INLETS AND MANHOLES TO PRODUCE POSITIVE FLOW THROUGH STRUCTURE FROM ALL INLETS TO THE OUTLET OF EACH STRUCTURE.
3. CONTRACTOR SHALL INSTALL ALL STORM DRAIN PIPES INTO MANHOLES, BOXES AND EXISTING STRUCTURES FLUSH WITH INSIDE FACE AND GROUT INTO PLACE, INSURING WATERTIGHT SEAL ALL AROUND.
4. ALL STATION AND OFFSET INFORMATION IS REFERENCED TO THE ℄ LOOP 1604 UNLESS OTHERWISE NOTED.
5. CONTRACTOR SHALL CONSTRUCT MANHOLES TO MINIMIZE CONFLICT WITH UTILITIES.
6. SET (TY II) CONSTRUCTION SHALL UTILIZE RIPRAP HEADWALL (MOD) STANDARD SHEET.

CHANGE ORDER 126

REVISED SHEET

SCALE: H: 1:500
V: 1:100

STATE OF TEXAS
FITZGERALDO G. SANCHEZ
76084
LICENCED PROFESSIONAL ENGINEER

Fitzgeraldo G. Sanchez 03-28-06
Fitzgeraldo G. Sanchez, P.E. Date

© 2000 Texas Department of Transportation

LOOP 1604
STORM DRAIN PROFILES
LINES I-28, I-31 & I-32

| DN: | | | | | | PROJECT NO. | | |
|---|---|---|---|---|---|---|---|---|
| CK DN: | | | | | | NH 2000 (704), etc. | | |
| DW: | CONTROL | SECTION | JOB | DIST. | STATE | COUNTY | HIGHWAY NO. | SHEET NO. |
| CK DW: | 2452 | 01 | 036 | SAT | TX | BEXAR | LOOP 1604 | 46 |

# REFERS TO CHANGES MADE AS PART OF C.O.

DESIGN FILENAME: Design\lp1604fm471-90\chg_order_files\394116STRM2.dgn

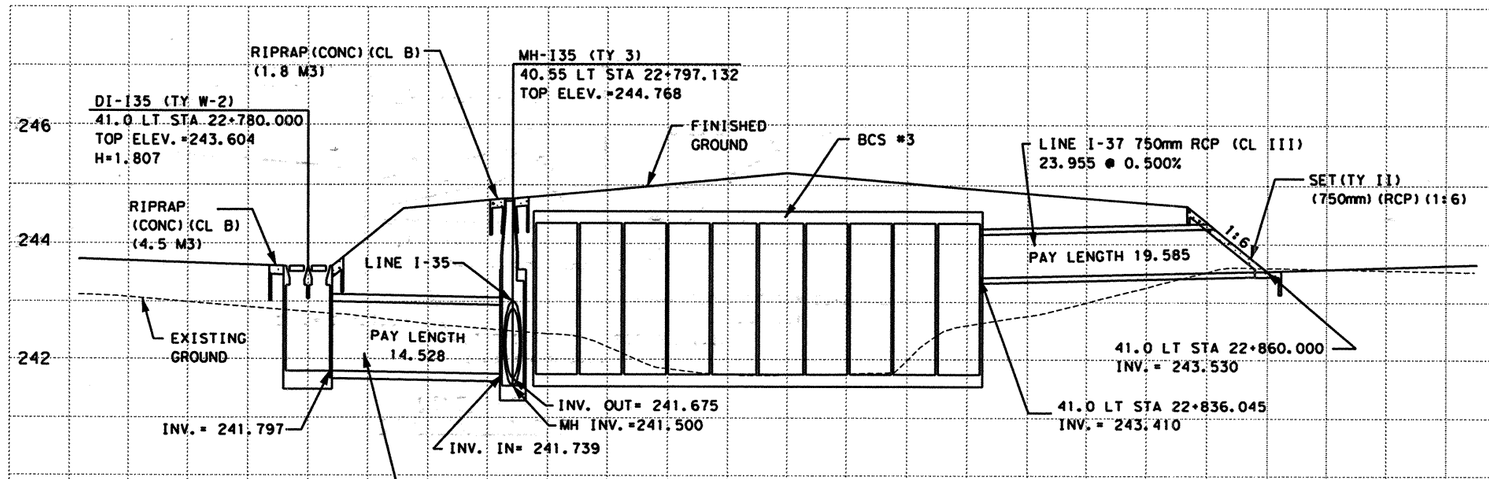


LINES I-35 (DI-I35 TO MH-I35) & I-37
CSJ 2452-01-036

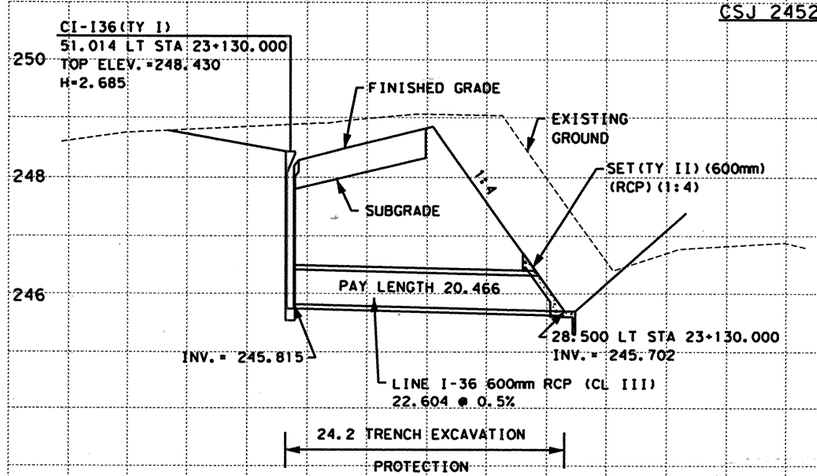


LINE I-36
CSJ 2452-01-036

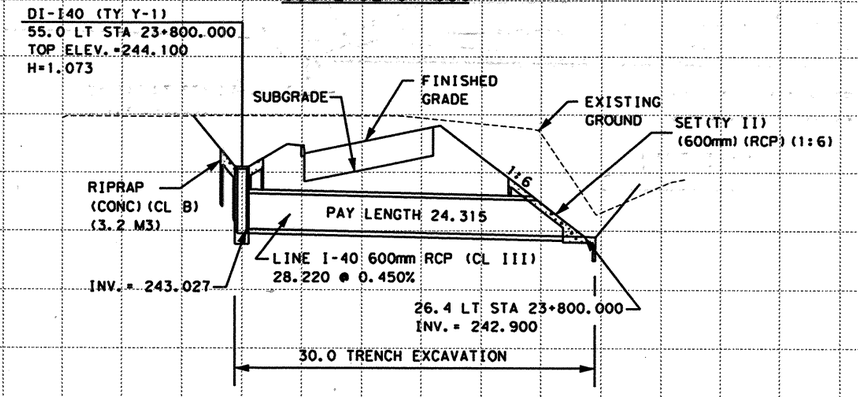


LINE I-40
CSJ 2452-01-036

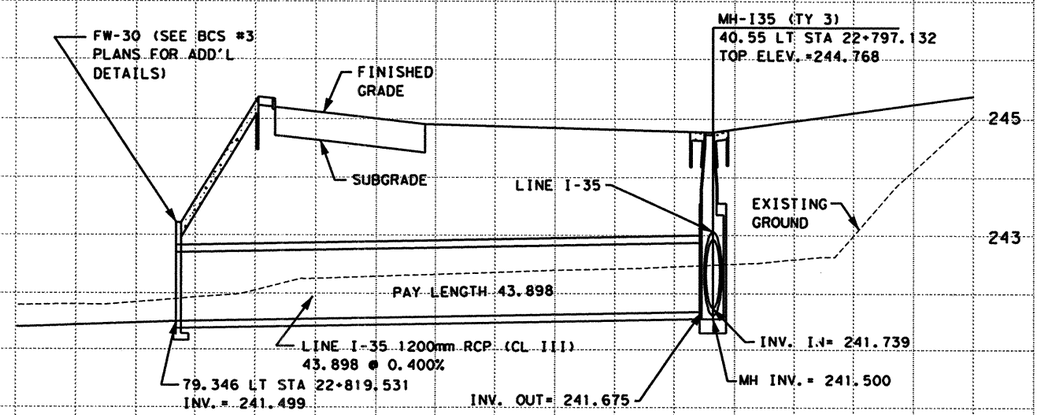


LINE I-35 (MH-I35 TO OUTFALL)
CSJ 2452-01-036

| ESTIMATED QUANTITIES | | | | |
|---|---|---|---|---|
| DESCRIPTION | | UNIT | EST. | FINAL |
| CSJ 2452-01-036 | | | | |
| * | STRUCT EXCAV | M3 | 345.7 | |
| | RC PIPE (CL III) (600MM) | M | 44.781 | |
| | RC PIPE (CL III) (750MM) | M | 19.585 | |
| | RC PIPE (CL III) (1200MM) | M | 58.426 | |
| | INLET (COMPL) (DROP) (TY Y-1) | EA | 1 | |
| | INLET (COMPL) (DROP) (TY W-2) | EA | 1 | |
| | MANHOLE (COMPL) (TY 3) | EA | 1 | |
| | RIPRAP (CONC) (CL B) | M3 | 9.5 | |
| | TRENCH EXCAV PROTECT | M | 54.2 | |
| | SET (TY II) (600MM) (RCP) (1:6) | EA | 1 | |
| | SET (TY II) (750MM) (RCP) (1:6) | EA | 1 | |
| | SET (TY II) (600MM) (RCP) (1:4) | EA | 1 | |
| | INLET (COMP) (CURB) (TY I) | EA | 1 | |

* SUPPLIED FOR CONTRACTOR'S INFORMATION ONLY

NOTES:

1. ALL PIPES ARE NORMAL TO AND STRAIGHT FROM STRUCTURE TO STRUCTURE UNLESS OTHERWISE SHOWN ON INTERIOR DRAINAGE LAYOUTS
2. CONTRACTORS SHALL SHAPE INVERTS OF ALL PROPOSED CURB INLETS, DROP INLETS AND MANHOLES TO PRODUCE POSITIVE FLOW THROUGH STRUCTURE FROM ALL INLETS TO THE OUTLET OF EACH STRUCTURE.
3. CONTRACTOR SHALL INSTALL ALL STORM DRAIN PIPES INTO MANHOLES, BOXES AND EXISTING STRUCTURES FLUSH WITH INSIDE FACE AND GROUT INTO PLACE, INSURING WATERTIGHT SEAL ALL AROUND.
4. ALL STATION AND OFFSET INFORMATION IS REFERENCED TO THE ℄ LOOP 1604 UNLESS OTHERWISE NOTED.
5. CONTRACTOR SHALL CONSTRUCT MANHOLES TO MINIMIZE CONFLICT WITH UTILITIES.
6. SET (TY II) CONSTRUCTION SHALL UTILIZE RIPRAP HEADWALL (MOD) STANDARD SHEET.

SCALE: H: 1:500
V: 1:100

555 EAST RAMSEY SAN ANTONIO TEXAS 78216
PHONE (210)375-9000
FAX (210)375-9010
PAPE-DAWSON ENGINEERS
CIVIL & ENVIRONMENTAL
STATE OF TEXAS
K. STEPHEN BONNETTE
60928
REGISTERED
PROFESSIONAL ENGINEER
K. STEPHEN BONNETTE, P.E. 09/20/00
DATE

© 2000 Texas Department of Transportation

# LOOP 1604
# STORM DRAIN PROFILES
# LINE I-35, I-36, I-37 & I-40

| DN: | | | | | | PROJECT NO. | |
|---|---|---|---|---|---|---|---|
| CK DN: | | | | | | NH 2000 (704), etc. | |
| DW: | CONTROL | SECTION | JOB | DIST. | STATE | COUNTY | HIGHWAY NO. | SHEET NO. |
| CK DW: | 2452 | 01 | 036 etc. | SAT | TX | BEXAR | LOOP 1604 | 461 |

PLOTTED ON: 09/19/00

DESIGN FILENAME: k:\394IN16\civil\design\int-da\394II6strm3.dgn

Plotted on: 01/27/2004

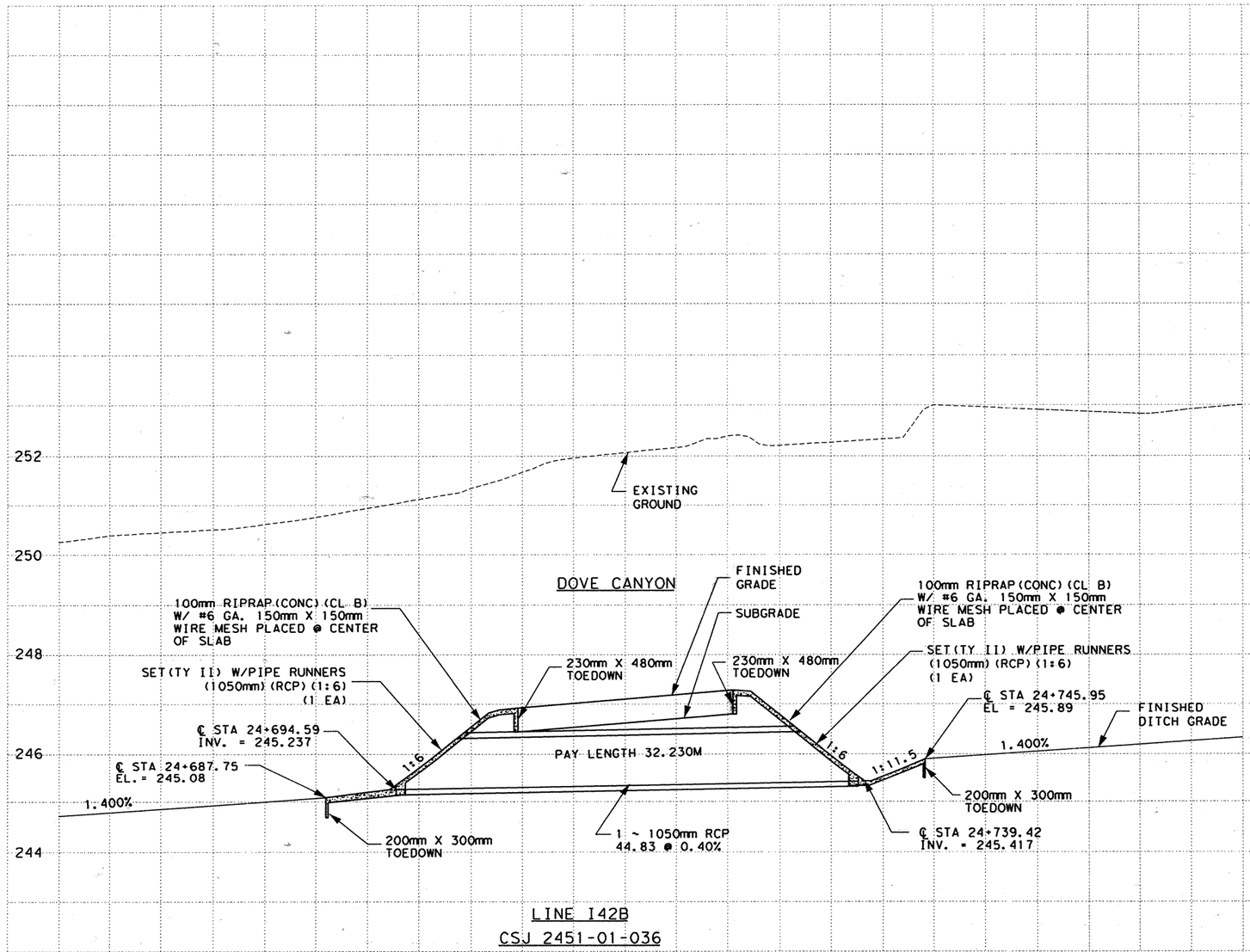


LINE I42B

CSJ 2451-01-036

| ESTIMATED QUANTITIES | | | |
|---|---|---|---|
| DESCRIPTION | UNIT | EST. | FINAL |
| CSJ 2452-01-036 | | | |
| * STRUCT EXCAV | M3 | 100 | |
| RC PIPE (CL III) (1050MM) | M | 32.230 | |
| SET (TY II) (1050MM) (RCP) (1:6) (P) | EA | 2 | |

* SUPPLIED FOR CONTRACTOR'S INFORMATION ONLY

CHANGE ORDER NO. 64

-PIPE CULVERT FOR DOVE CANYON

NOTES:

1. ALL STATION AND OFFSET INFORMATION IS REFERENCED TO THE ℄ LOOP 1604 UNLESS OTHERWISE NOTED.

CHANGE ORDER NO. 64 | NEW SHEET

SCALE: H: 1:500
V: 1:100

555 EAST RAMSEY SAN ANTONIO TEXAS 78216
PHONE (210) 375-9000
FAX (210) 375-9010
PAPE-DAWSON ENGINEERS
CIVIL & ENVIRONMENTAL

STATE OF TEXAS
J. KENT O'BRIEN
64398
REGISTERED PROFESSIONAL ENGINEER

J. KENT O'BRIEN, P.E. 1/27/2004
DATE

© 2000 Texas Department of Transportation

# LOOP 1604
# STORM DRAIN PROFILES
# I42B

| DN: | | | | | PROJECT NO. | |
|---|---|---|---|---|---|---|
| CK DN: | | | | | NH 2000 (704), etc. | |
| DW: | CONTROL | SECTION | JOB | DIST. | STATE | COUNTY | HIGHWAY NO. | SHEET NO. |
| CK DW: | 2452 | 01 | 036 etc. | SAT | TX | BEXAR | LOOP 1604 | 461A |

Design Filename: p:\52\2011\design\civil\plansheets\drainage\stormdrain\522011strmdv.dgn

PLOTTED ON: 09/19/00

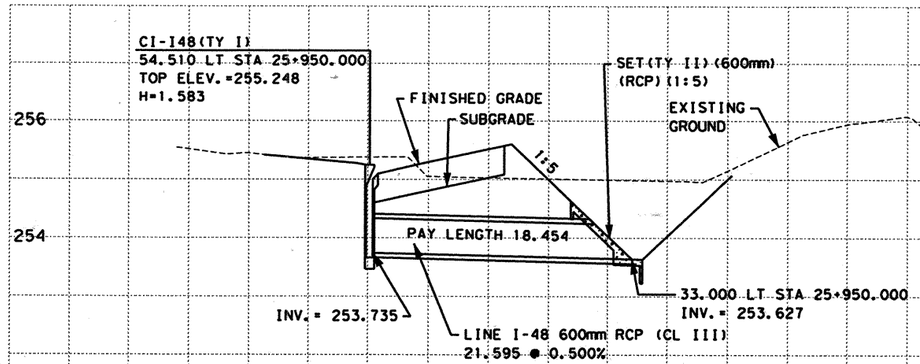


LINE I-48
CSJ 2452-01-036

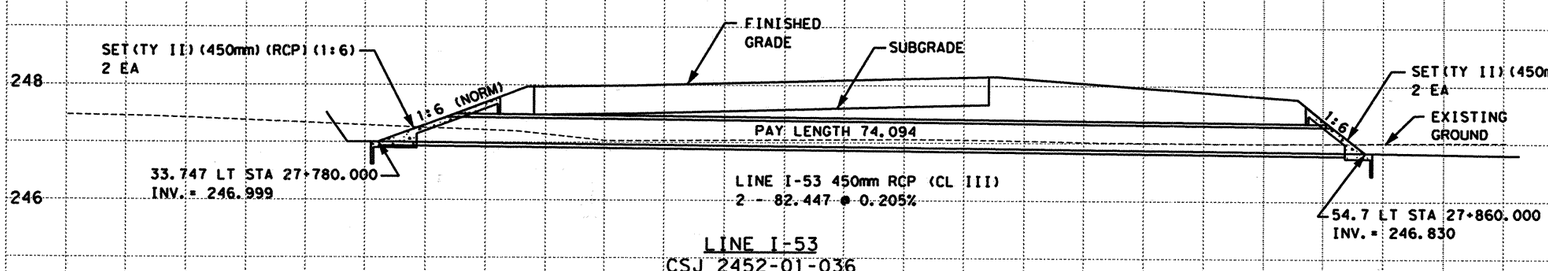


LINE I-53
CSJ 2452-01-036

ESTIMATED QUANTITIES

| DESCRIPTION | UNIT | EST. | FINAL |
|---|---|---|---|
| CSJ 2452-01-036 | | | |
| * STRUCT EXCAV | M3 | 68.4 | |
| RC PIPE (CL III)(450MM) | M | 148.188 | |
| SET (TY II)(450MM)(RCP)(1:6) | EA | 4 | |
| RC PIPE (CL III)(600MM) | M | 18.454 | |
| SET (TY II)(600MM)(RCP)(1:5) | EA | 1 | |
| INLET(COMPL)CURB)(TY I) | EA | 1 | |

* SUPPLIED FOR CONTRACTOR'S INFORMATION ONLY

**NOTES:**

1. ALL PIPES ARE NORMAL TO AND STRAIGHT FROM STRUCTURE TO STRUCTURE UNLESS OTHERWISE SHOWN ON INTERIOR DRAINAGE LAYOUTS
2. CONTRACTORS SHALL SHAPE INVERTS OF ALL PROPOSED CURB INLETS, DROP INLETS AND MANHOLES TO PRODUCE POSITIVE FLOW THROUGH STRUCTURE FROM ALL INLETS TO THE OUTLET OF EACH STRUCTURE.
3. CONTRACTOR SHALL INSTALL ALL STORM DRAIN PIPES INTO MANHOLES, BOXES AND EXISTING STRUCTURES FLUSH WITH INSIDE FACE AND GROUT INTO PLACE, INSURING WATERTIGHT SEAL ALL AROUND.
4. ALL STATION AND OFFSET INFORMATION IS REFERENCED TO THE ℄ LOOP 1604 UNLESS OTHERWISE NOTED.
5. CONTRACTOR SHALL CONSTRUCT MANHOLES TO MINIMIZE CONFLICT WITH UTILITIES.
6. SET(TY II)CONSTRUCTION SHALL UTILIZE RIPRAP HEADWALL(MOD) STANDARD SHEET.

SCALE: H: 1:500
V: 1:100

555 EAST RAMSEY SAN ANTONIO TEXAS 78216
PHONE (210)375-9000
FAX (210)375-9010
PAPE-DAWSON ENGINEERS
CIVIL & ENVIRONMENTAL
STATE OF TEXAS
K. STEPHEN BONNETTE
60928
REGISTERED
PROFESSIONAL ENGINEER
K. STEPHEN BONNETTE, P.E.
09/20/00
DATE

© 2000 Texas Department of Transportation

# LOOP 1604
# STORM DRAIN PROFILES
# LINES I-48 & I-53

| DN: | | | | | PROJECT NO. | | |
|---|---|---|---|---|---|---|---|
| CK DN: | | | | | NH 2000 (704), etc. | | |
| DW: | CONTROL | SECTION | JOB | DIST. | STATE | COUNTY | HIGHWAY NO. | SHEET NO. |
| CK DW: | 2452 | 01 | 036 etc. | SAT | TX | BEXAR | LOOP 1604 | 462 |

DESIGN FILENAME: k:\394lN16\civil\design\lnrdgn\394ll6strm3.dgn

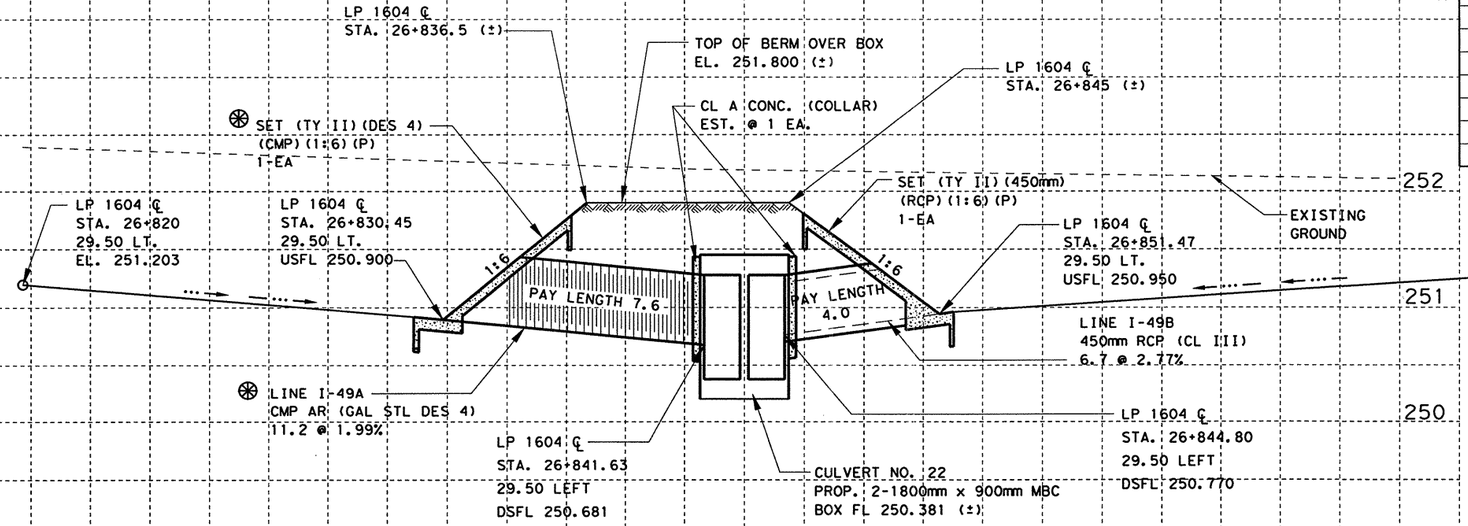


✻ CORRUGATED METAL PIPE (CMP) SHALL BE 2mm IN THICKNESS AND HAVE 68mm X 13mm CORRUGATION

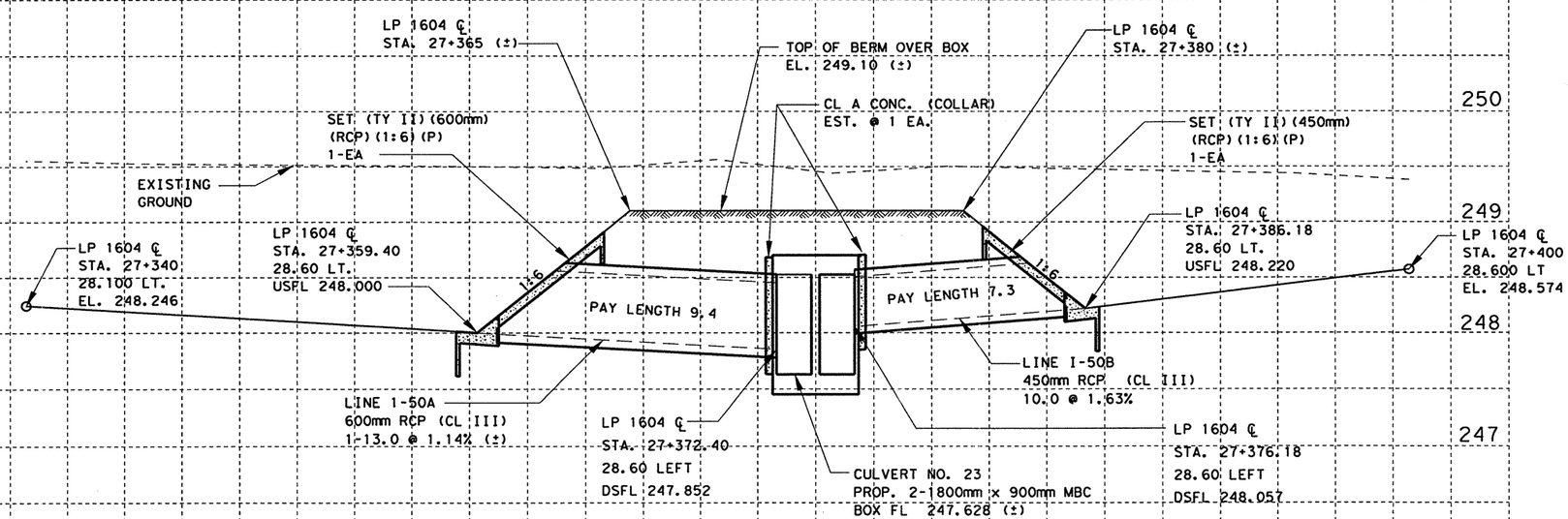


## ESTIMATED QUANTITIES

| DESCRIPTION | UNIT | EST. | FINAL |
|---|---|---|---|
| ✻ STRUCT EXCAVATION | M3 | 49 | |
| CMP AR (GAL STL DES 4) | M | 7.6 | |
| SET (TY II) (DES 4) (CMP) (1:6) (P) | EA | 1 | |
| RC PIPE (CL III) (450mm) | M | 11.3 | |
| RC PIPE (CL III) (600mm) | M | 9.4 | |
| SET (TY II) (450mm) (RCP) (1:6) (P) | EA | 2 | |
| SET (TY II) (600mm) (RCP) (1:6) (P) | EA | 1 | |
| CL A CONC (COLLAR) | EA | 4 | |

✻ FOR CONTRACTORS INFORMATION ONLY.

NOTE(S):

1. DIMENSIONS ARE SHOWN IN METERS UNLESS OTHERWISE NOTED.
2. SET (TY II) CONSTRUCTION SHALL UTILIZE RIPRAP HEADWALL (MOD) STANDARD.
3. SEE PROJECT X-SECTIONS FOR MORE INFORMATION
4. SEE CULVERT LAYOUTS FOR MORE DETAILS.

**CHANGE ORDER NO. 64**

-NEW STORM DRAIN ASSOCIATED WITH CULVERTS NO. 22 & 23.
-NEW QUANTITIES.

**CHANGE ORDER NO. 64**

**NEW SHEET**

STATE OF TEXAS
JEROME D. PAVLISKA
76075
REGISTERED
PROFESSIONAL ENGINEER

Jerome D. Pavliska, P.E. 4-2-04
Jerome D. Pavliska, P.E. Date

SCALE: H: 1:250
V: 1:50

©2004

Texas Department of Transportation

# LOOP 1604
# STORM DRAIN PROFILES
## LINES I-49A, I-49B I-50A & I-50B

| FED. RD. DIV. NO. | FEDERAL AID PROJECT NO. | SHEET NO. |
|---|---|---|
| 6 | NH 2000 (704) , etc. | 462A |
| STATE | DIST. | COUNTY |
| TEXAS | SAT | BEXAR |
| CONT. | SECT. | JOB / HIGHWAY NO. |
| 2452 | 01 | 036, etc. / LP 1604 |

LEVELS DISPLAYED
1 2 3 4 5 6 7 8 9 10 11 12 13 14 15 16
17 18 19 20 21 22 23 24 25 26 27 28 29 30 31 32
33 34 35 36 37 38 39 40 41 42 43 44 45 46 47 48
49 50 51 52 53 54 55 56 57 58 59 60 61 63

ACC: ao\des\ea 4fm471-90
FILE: strdrain22*dgn

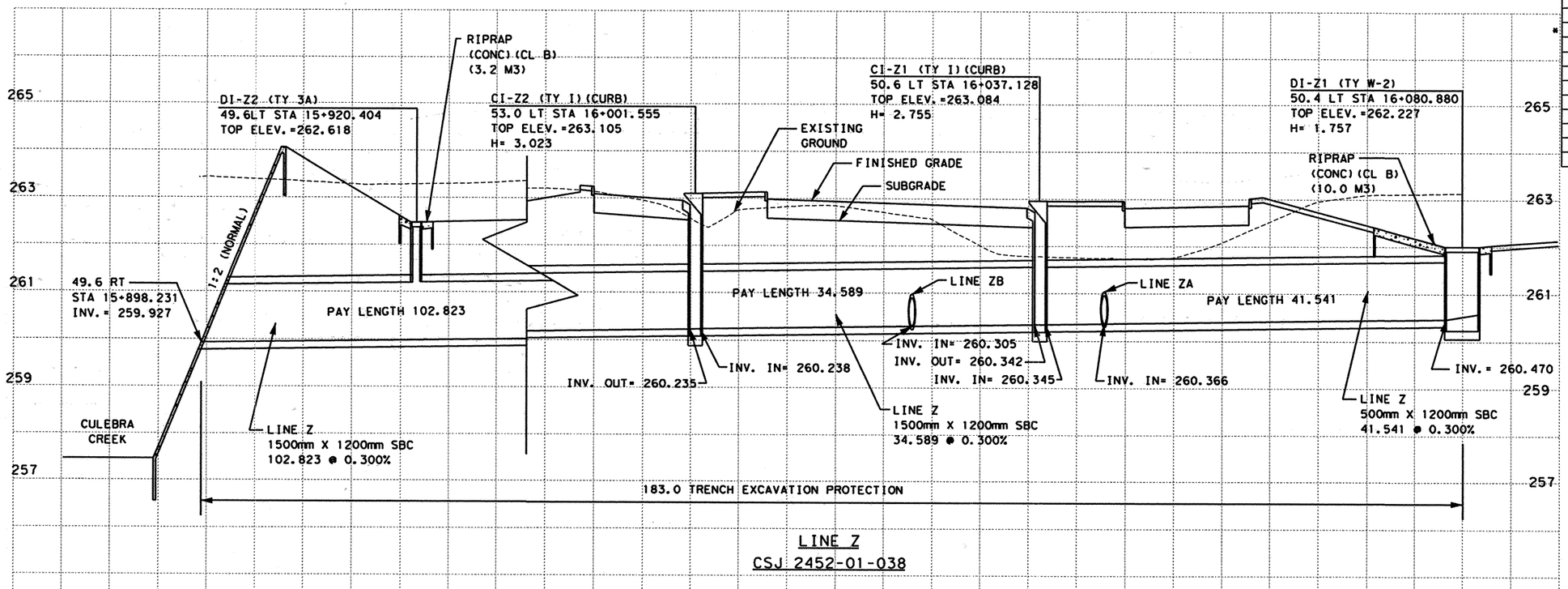


LINE Z
CSJ 2452-01-038

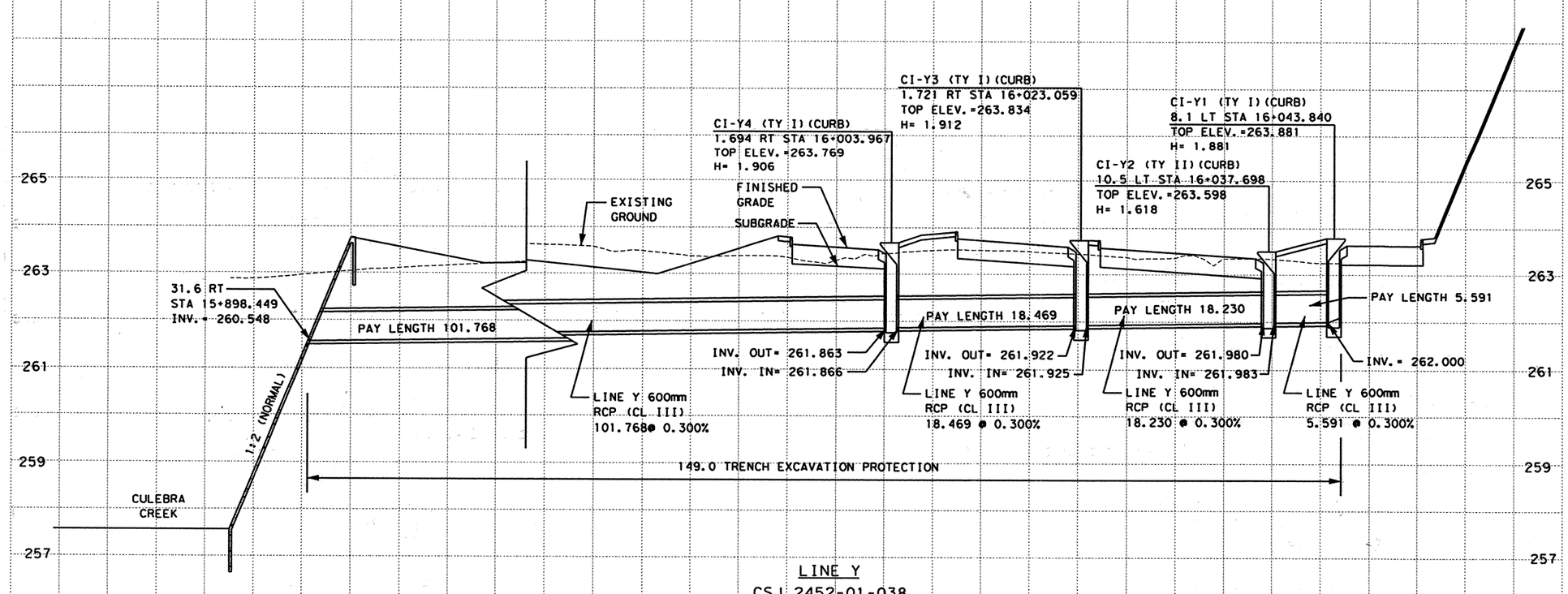


LINE Y
CSJ 2452-01-038

ESTIMATED QUANTITIES

| DESCRIPTION | UNIT | EST. | FINAL |
|---|---|---|---|
| CSJ 2452-01-038 | | | |
| STRUCT EXCAV | M3 | 1875.2 | |
| RC PIPE (CL III) (600MM) | M | 144.058 | |
| INLET (COMPL) (DROP) (TY 3A) | EA | 1 | |
| INLET (COMPL) (CURB) (TY II) | EA | 1 | |
| RIPRAP (CONC) (CL B) | M3 | 13.2 | |
| TRENCH EXCAV PROTECTION | M | 332.0 | |
| CONC BOX CULV (1500MM X 1200MM) | M | 178.953 | |
| INLET (COMPL) (CURB) (TY I) | EA | 5 | |
| INLET (COMPL) (DROP) (TY W-2) | EA | 1 | |

NOTES:

1. ALL PIPES ARE NORMAL TO AND STRAIGHT FROM STRUCTURE TO STRUCTURE UNLESS OTHERWISE SHOWN ON INTERIOR DRAINAGE LAYOUTS
2. CONTRACTORS SHALL SHAPE INVERTS OF ALL PROPOSED CURB INLETS, DROP INLETS AND MANHOLES TO PRODUCE POSITIVE FLOW THROUGH STRUCTURE FROM ALL INLETS TO THE OUTLET OF EACH STRUCTURE.
3. CONTRACTOR SHALL INSTALL ALL STORM DRAIN PIPES INTO MANHOLES, BOXES AND EXISTING STRUCTURES FLUSH WITH INSIDE FACE AND GROUT INTO PLACE, INSURING WATERTIGHT SEAL ALL AROUND.
4. ALL STATION AND OFFSET INFORMATION IS REFERENCED TO THE ℄ LOOP 1604 UNLESS OTHERWISE NOTED.
5. CONTRACTOR SHALL CONSTRUCT MANHOLES TO MINIMIZE CONFLICT WITH UTILITIES.
6. SET (TY II) CONSTRUCTION SHALL UTILIZE RIPRAP HEADWALL (MOD) STANDARD SHEET.
7. THE 1500MM X 1200MM SBC SHALL BE CONSTRUCTED USING THE SCP-1.5(M) STANDARD.

SCALE: H: 1:500
V: 1:100

555 EAST RAMSEY SAN ANTONIO TEXAS 78216
PHONE (210)375-9000
FAX (210)375-9010
PAPE-DAWSON ENGINEERS
CIVIL & ENVIRONMENTAL
K. STEPHEN BONNETTE 60928 REGISTERED PROFESSIONAL ENGINEER STATE OF TEXAS
K. STEPHEN BONNETTE, P.E. 09/20/00 DATE

© 2000 Texas Department of Transportation

# LOOP 1604
# STORM DRAIN PROFILES
# LINES Y & Z

| DN: | | | | | | PROJECT NO. | |
|---|---|---|---|---|---|---|---|
| CK DN: | | | | | | NH 2000 (704), etc. | |
| DW: | CONTROL | SECTION | JOB | DIST. | STATE | COUNTY | HIGHWAY NO. | SHEET NO. |
| CK DW: | 2452 | 01 | 036 etc. | SAT | TX | BEXAR | LOOP 1604 | 463 |

PLOTTED ON: 09/25/00
DESIGN FILENAME: ...\civil\design\intdat\394116int_strmpr.dgn

PLOTTED ON: 07/02/01

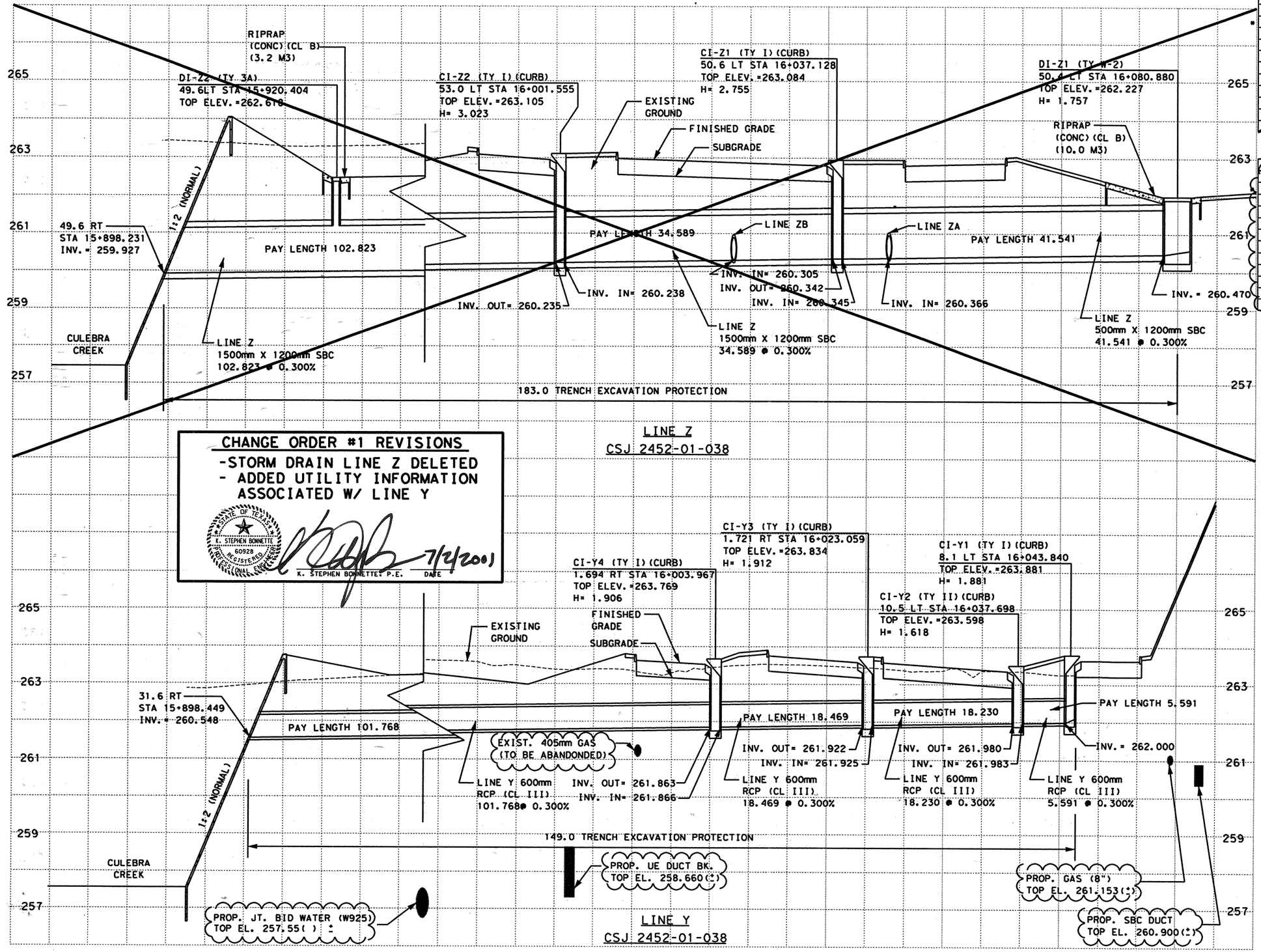


LINE Z
CSJ 2452-01-038

**CHANGE ORDER #1 REVISIONS**
- STORM DRAIN LINE Z DELETED
- ADDED UTILITY INFORMATION ASSOCIATED W/ LINE Y

K. STEPHEN BONNETTE 60928 REGISTERED PROFESSIONAL ENGINEER — STATE OF TEXAS

K. STEPHEN BONNETTE, P.E. — DATE 7/4/2001




LINE Y
CSJ 2452-01-038

**ESTIMATED QUANTITIES**

| DESCRIPTION | UNIT | EST. | FINAL |
|---|---|---|---|
| CSJ 2452-01-038 | | | |
| * STRUCT EXCAV | M3 | 1875.2 | |
| RC PIPE (CL III) (600MM) | M | 144.058 | |
| INLET (COMPL) (DROP) (TY 3A) | EA | 1 | |
| INLET (COMPL) (CURB) (TY II) | EA | 1 | |
| RIPRAP (CONC) (CL B) | M3 | 13.2 | |
| TRENCH EXCAV PROTECTION | M | 332.0 | |
| CONC BOX CULV (1500MM X 1200MM) | M | 178.953 | |
| INLET (COMPL) (CURB) (TY I) | EA | 5 | |
| INLET (COMPL) (DROP) (TY W-2) | EA | 1 | |

* SUPPLIED FOR CONTRACTOR'S INFORMATION ONLY

**ESTIMATED QUANTITIES**

| DESCRIPTION | UNIT | EST. | FINAL |
|---|---|---|---|
| CSJ 2452-01-038 | | | |
| STRUCT EXCAV | M3 | 253.1 | |
| RC PIPE (CL III) (600MM) | M | 144.058 | |
| INLET (COMPL) (DROP) (TY 3A) | EA | 0 | |
| INLET (COMPL) (CURB) (TY II) | EA | 1 | |
| RIPRAP (CONC) (CL B) | M3 | 0 | |
| TRENCH EXCAV PROTECTION | M | 149.0 | |
| CONC BOX CULV (1500MM X 1200MM) | M | 0 | |
| INLET (COMPL) (CURB) (TY I) | EA | 3 | |
| INLET (COMPL) (DROP) (TY W-2) | EA | 0 | |

SUPPLIED FOR CONTRACTOR'S INFORMATION ONLY

1

**NOTES:**

1. ALL PIPES ARE NORMAL TO AND STRAIGHT FROM STRUCTURE TO STRUCTURE UNLESS OTHERWISE SHOWN ON INTERIOR DRAINAGE LAYOUTS
2. CONTRACTORS SHALL SHAPE INVERTS OF ALL PROPOSED CURB INLETS, DROP INLETS AND MANHOLES TO PRODUCE POSITIVE FLOW THROUGH STRUCTURE FROM ALL INLETS TO THE OUTLET OF EACH STRUCTURE.
3. CONTRACTOR SHALL INSTALL ALL STORM DRAIN PIPES INTO MANHOLES, BOXES AND EXISTING STRUCTURES FLUSH WITH INSIDE FACE AND GROUT INTO PLACE, INSURING WATERTIGHT SEAL ALL AROUND.
4. ALL STATION AND OFFSET INFORMATION IS REFERENCED TO THE C LOOP 1604 UNLESS OTHERWISE NOTED.
5. CONTRACTOR SHALL CONSTRUCT MANHOLES TO MINIMIZE CONFLICT WITH UTILITIES.
6. SET (TY II) CONSTRUCTION SHALL UTILIZE RIPRAP HEADWALL (MOD) STANDARD SHEET.
7. THE 1500MM X 1200MM SBC SHALL BE CONSTRUCTED USING THE SCP-1.5(M) STANDARD.

SCALE: H: 1:500
V: 1:100

555 EAST RAMSEY SAN ANTONIO TEXAS 78216
PHONE (210)375-9000
FAX (210)375-9010
PAPE-DAWSON ENGINEERS
CIVIL & ENVIRONMENTAL
K. STEPHEN BONNETTE 60928 REGISTERED PROFESSIONAL ENGINEER — STATE OF TEXAS
K. STEPHEN BONNETTE, P.E. — 9/20/00 DATE

© 2000 Texas Department of Transportation

# LOOP 1604
# STORM DRAIN PROFILES
# LINE Y

| DN: | | | | | | PROJECT NO. | | |
|---|---|---|---|---|---|---|---|---|
| CK DN: | | | | | | NH 2000 (704), etc. | | |
| DW: | CONTROL | SECTION | JOB | DIST. | STATE | COUNTY | HIGHWAY NO. | SHEET NO. |
| CK DW: | 2452 | 01 | 036 | SAT | TX | BEXAR | LOOP 1604 | 463A |

DESIGN FILENAME: k:\394\N16\change_order\design\civil\plansheets\V4337I6INT_STRMPR.dgn

PLOTTED ON: 07/02/01

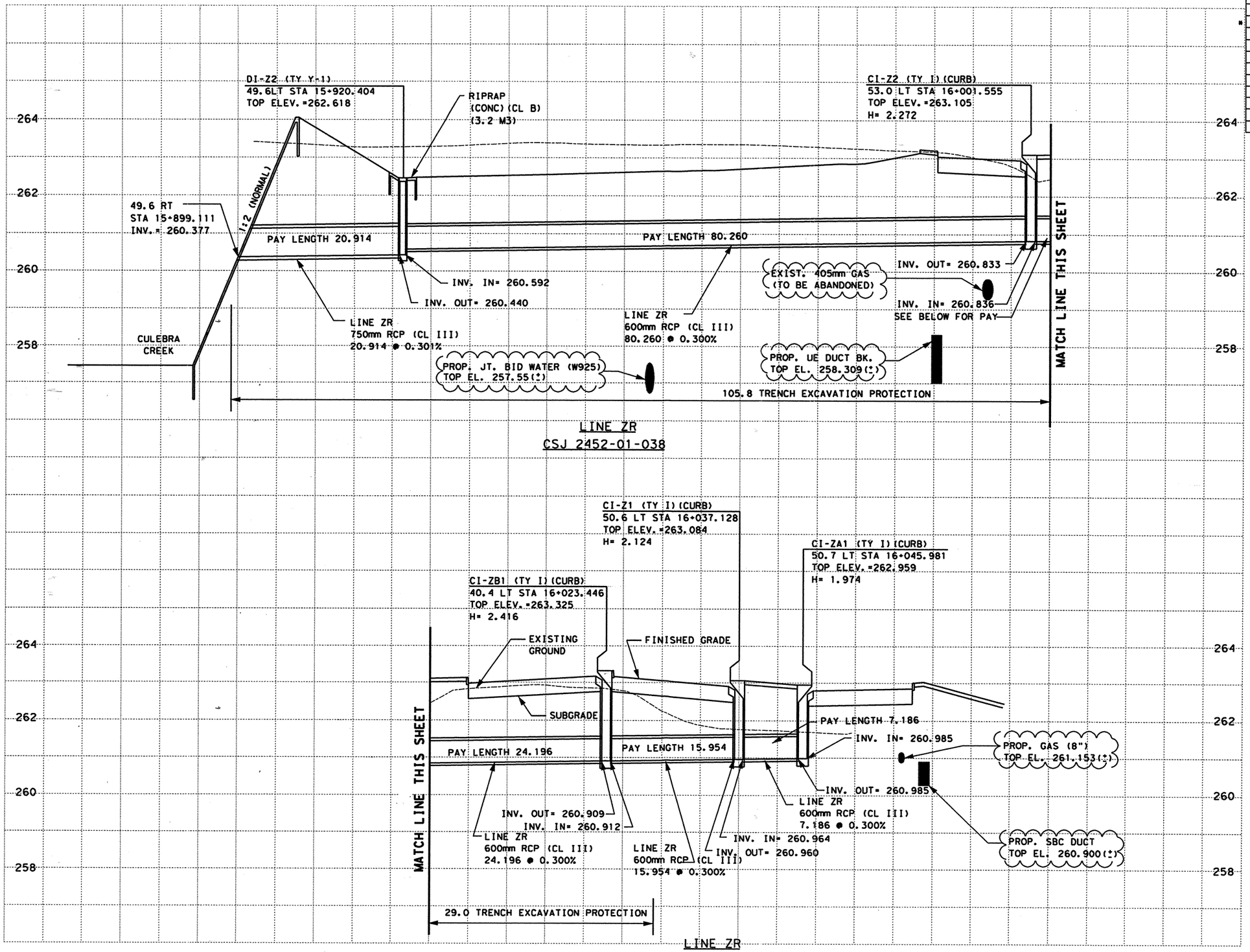





| ESTIMATED QUANTITIES | | | |
|---|---|---|---|
| DESCRIPTION | UNIT | EST. | FINAL |
| CSJ 2452-01-038 | | | |
| * STRUCT EXCAV | M3 | 382.7 | |
| RC PIPE (CL III) (600MM) | M | 127.596 | |
| RC PIPE (CL III) (750MM) | M | 20.914 | |
| RIPRAP (CONC) (CL B) | M3 | 3.2 | |
| TRENCH EXCAV PROTECTION | M | 134.8 | |
| INLET (COMPL) (CURB) (TY I) | EA | 4 | |
| INLET (COMPL) (DROP) (TY Y-1) | EA | 1 | |

* SUPPLIED FOR CONTRACTOR'S INFORMATION ONLY

**NOTES:**

1. ALL PIPES ARE NORMAL TO AND STRAIGHT FROM STRUCTURE TO STRUCTURE UNLESS OTHERWISE SHOWN ON INTERIOR DRAINAGE LAYOUTS
2. CONTRACTORS SHALL SHAPE INVERTS OF ALL PROPOSED CURB INLETS, DROP INLETS AND MANHOLES TO PRODUCE POSITIVE FLOW THROUGH STRUCTURE FROM ALL INLETS TO THE OUTLET OF EACH STRUCTURE.
3. CONTRACTOR SHALL INSTALL ALL STORM DRAIN PIPES INTO MANHOLES, BOXES AND EXISTING STRUCTURES FLUSH WITH INSIDE FACE AND GROUT INTO PLACE, INSURING WATERTIGHT SEAL ALL AROUND.
4. ALL STATION AND OFFSET INFORMATION IS REFERENCED TO THE ℄ LOOP 1604 UNLESS OTHERWISE NOTED.
5. CONTRACTOR SHALL CONSTRUCT MANHOLES TO MINIMIZE CONFLICT WITH UTILITIES.

**CHANGE ORDER #1 REVISIONS**

**STORM DRAIN LINE ZR ADDED WITH UTILITY INFORMATION**

SCALE: H: 1:500
V: 1:100

New Sht

555 EAST RAMSEY SAN ANTONIO TEXAS 78216
PHONE (210)375-9000
FAX (210)375-9010
PAPE-DAWSON ENGINEERS
CIVIL & ENVIRONMENTAL
STATE OF TEXAS
K. STEPHEN BONNETTE
60928
REGISTERED PROFESSIONAL ENGINEER
K. STEPHEN BONNETTE, P.E. 9/20/00 DATE

© 2000 Texas Department of Transportation

# LOOP 1604 CHANGE ORDER #1
# STORM DRAIN PROFILES
# LINE ZR

| DN: | | | | | | PROJECT NO. | |
|---|---|---|---|---|---|---|---|
| CK DN: | | | | | | NH 2000 (704), etc. | |
| DW: | CONTROL | SECTION | JOB | DIST. | STATE | COUNTY | HIGHWAY NO. | SHEET NO. |
| CK DW: | 2452 | 01 | 036 etc. | SAT | TX | BEXAR | LOOP 1604 | 463B |

DESIGN FILENAME: h:\394ll16\change order\design\civil\plansheets\433716int_strmpr.dgn

PLOTTED ON: 09/21/01

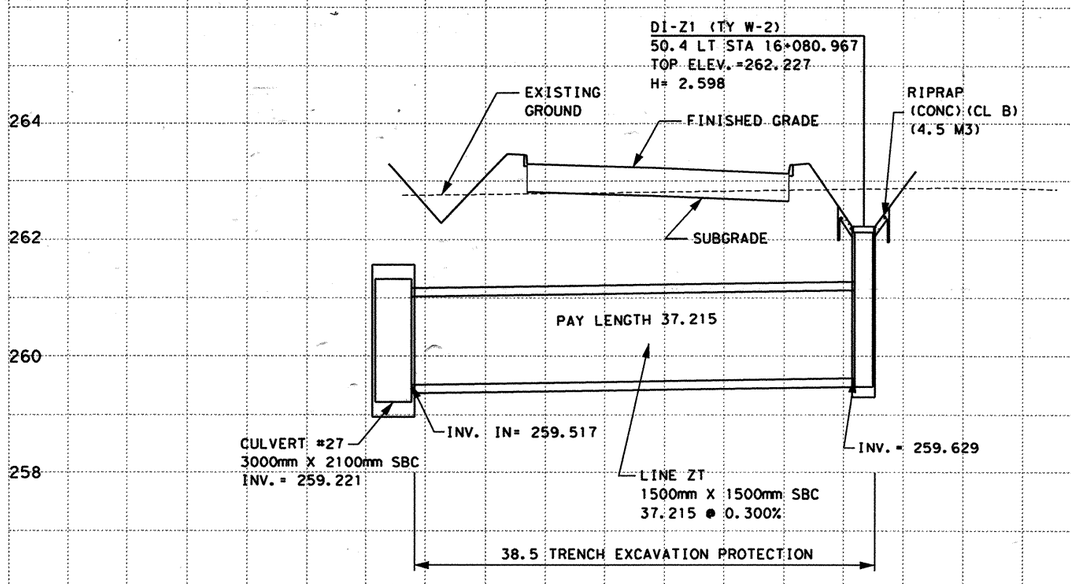


LINE ZT
CSJ 2452-01-038

| ESTIMATED QUANTITIES | | | |
|---|---|---|---|
| DESCRIPTION | UNIT | EST. | FINAL |
| CSJ 2452-01-038 | | | |
| * STRUCT EXCAV | M3 | 340.4 | |
| RIPRAP (CONC)(CL B) | M3 | 4.5 | |
| TRENCH EXCAV PROTECTION | M | 38.5 | |
| CONC BOX CULV (1500MM X 1500MM) | M | 37.215 | |
| INLET(COMPL)(DROP)(TY W-2) | EA | 1 | |

* SUPPLIED FOR CONTRACTOR'S INFORMATION ONLY

NOTES:

1. ALL PIPES ARE NORMAL TO AND STRAIGHT FROM STRUCTURE TO STRUCTURE UNLESS OTHERWISE SHOWN ON INTERIOR DRAINAGE LAYOUTS
2. CONTRACTORS SHALL SHAPE INVERTS OF ALL PROPOSED CURB INLETS, DROP INLETS AND MANHOLES TO PRODUCE POSITIVE FLOW THROUGH STRUCTURE FROM ALL INLETS TO THE OUTLET OF EACH STRUCTURE.
3. CONTRACTOR SHALL INSTALL ALL STORM DRAIN PIPES INTO MANHOLES, BOXES AND EXISTING STRUCTURES FLUSH WITH INSIDE FACE AND GROUT INTO PLACE, INSURING WATERTIGHT SEAL ALL AROUND.
4. ALL STATION AND OFFSET INFORMATION IS REFERENCED TO THE ℄ LOOP 1604 UNLESS OTHERWISE NOTED.
5. CULVERT DESIGNED MAY BE CAST-IN-PLACE OR PRE-CAST, AS DIRECTED BY THE ENGINEER.

CHANGE ORDER #1 REVISIONS
STORM DRAIN LINE ZT ADDED

SCALE: H: 1:500
V: 1:100

New Sht

555 EAST RAMSEY SAN ANTONIO TEXAS 78216 PHONE (210)375-9000 FAX (210)375-9010
PAPE-DAWSON ENGINEERS
CIVIL & ENVIRONMENTAL
STATE OF TEXAS K. STEPHEN BONNETTE 60928 REGISTERED PROFESSIONAL ENGINEER
K. STEPHEN BONNETTE, P.E. 9/24/01 DATE

© 2000 Texas Department of Transportation

LOOP 1604 CHANGE ORDER #1
STORM DRAIN PROFILES
LINE ZT

| DN: | | | | | PROJECT NO. | | |
|---|---|---|---|---|---|---|---|
| CK DN: | | | | | NH 2000 (704), etc. | | |
| DW: | CONTROL | SECTION | JOB | DIST. | STATE | COUNTY | HIGHWAY NO. | SHEET NO. |
| CK DW: | 2452 | 01 | 036 | SAT | TX | BEXAR | LOOP 1604 etc. | 463C |

DESIGN FILENAME: L:\394\N16\change_order\design\civil\plansheets\433716INT_STRMPR.dgn

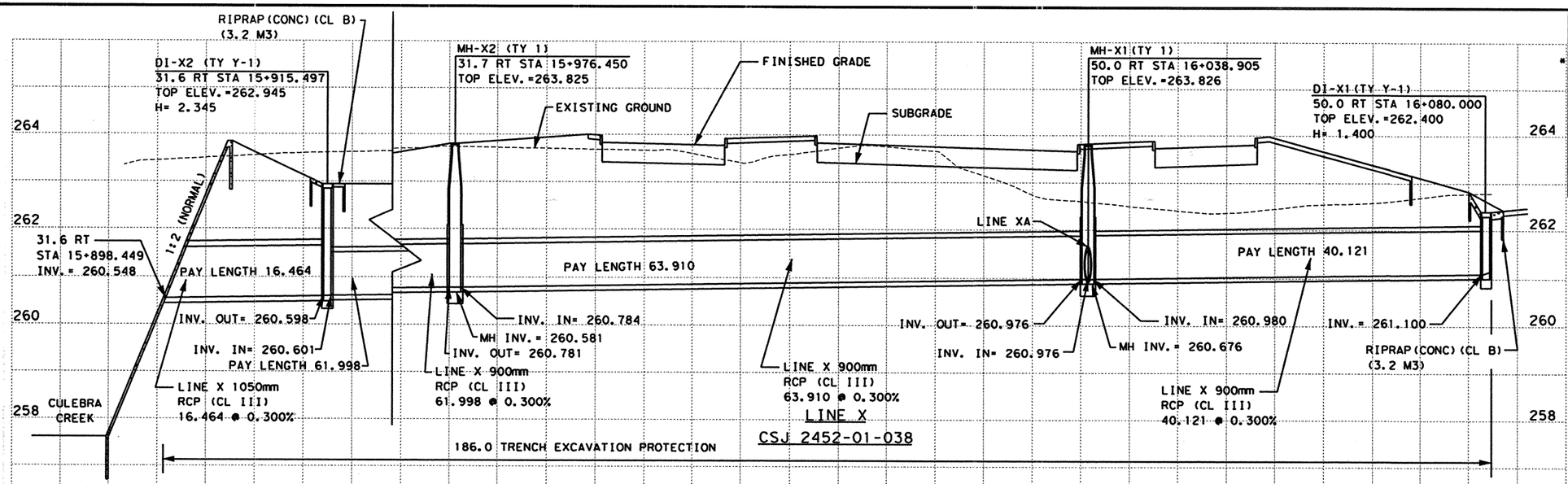


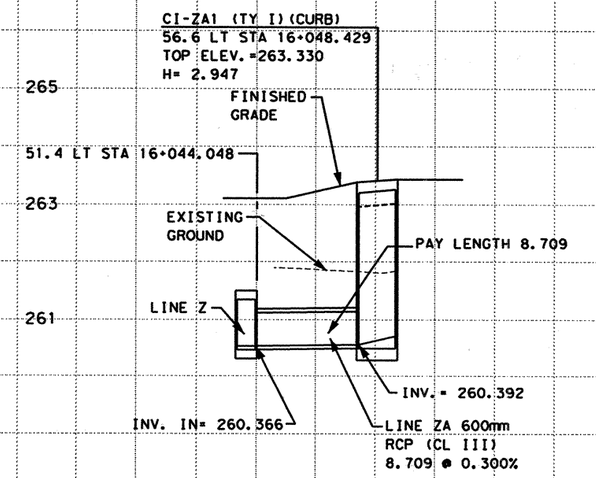


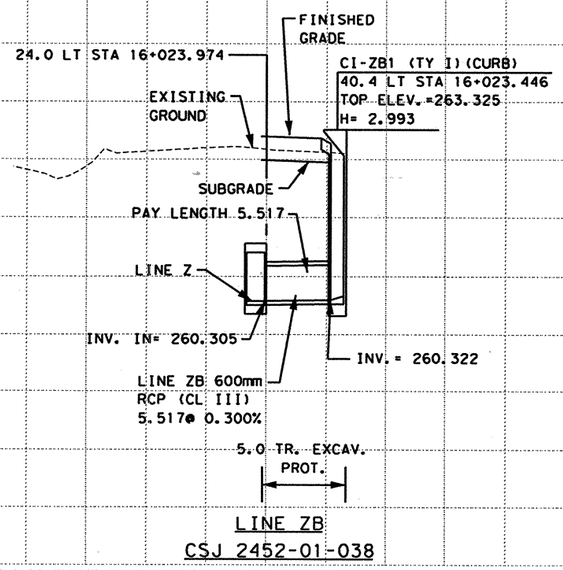


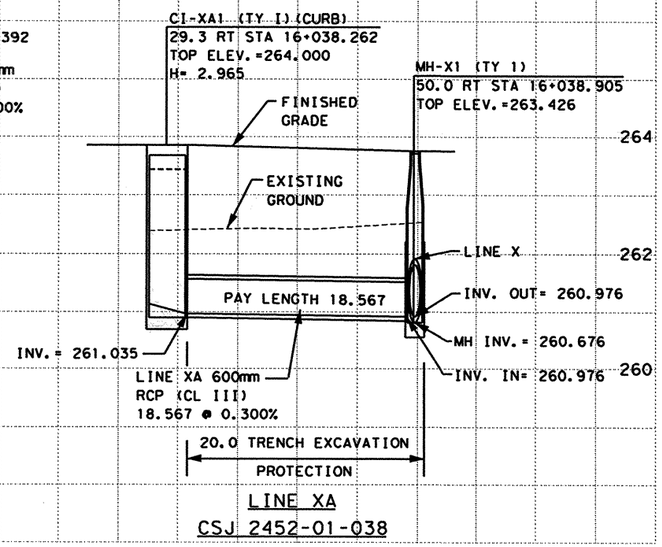


| ESTIMATED QUANTITIES | | | |
|---|---|---|---|
| DESCRIPTION | UNIT | EST. | FINAL |
| CSJ 2452-01-038 | | | |
| STRUCT EXCAV | M3 | 1010.8 | |
| RC PIPE (CL III) (600MM) | M | 29.793 | |
| RC PIPE (CL III) (900MM) | M | 166.029 | |
| RC PIPE (CL III) (1050MM) | M | 16.464 | |
| INLET (COMPL) (DROP) (TY Y-1) | EA | 2 | |
| INLET (COMPL) (CURB) (TY I) | EA | 3 | |
| RIPRAP (CONC) (CL B) | M3 | 6.4 | |
| TRENCH EXCAV PROTECTION | M | 211.0 | |
| MANHOLE (COMPL) (TY 1) | EA | 2 | |

* SUPPLIED FOR CONTRACTOR'S INFORMATION ONLY

NOTES:

1. ALL PIPES ARE NORMAL TO AND STRAIGHT FROM STRUCTURE TO STRUCTURE UNLESS OTHERWISE SHOWN ON INTERIOR DRAINAGE LAYOUTS
2. CONTRACTORS SHALL SHAPE INVERTS OF ALL PROPOSED CURB INLETS, DROP INLETS AND MANHOLES TO PRODUCE POSITIVE FLOW THROUGH STRUCTURE FROM ALL INLETS TO THE OUTLET OF EACH STRUCTURE.
3. CONTRACTOR SHALL INSTALL ALL STORM DRAIN PIPES INTO MANHOLES, BOXES AND EXISTING STRUCTURES FLUSH WITH INSIDE FACE AND GROUT INTO PLACE, INSURING WATERTIGHT SEAL ALL AROUND.
4. ALL STATION AND OFFSET INFORMATION IS REFERENCED TO THE ℄ LOOP 1604 UNLESS OTHERWISE NOTED.
5. CONTRACTOR SHALL CONSTRUCT MANHOLES TO MINIMIZE CONFLICT WITH UTILITIES.
6. SET (TY II) CONSTRUCTION SHALL UTILIZE RIPRAP HEADWALL (MOD) STANDARD SHEET.

SCALE: H: 1:500
V: 1:100

555 EAST RAMSEY SAN ANTONIO TEXAS 78216
PHONE (210)375-9000
FAX (210)375-9010
PAPE-DAWSON ENGINEERS
CIVIL & ENVIRONMENTAL
K. STEPHEN BONNETTE 60926 REGISTERED PROFESSIONAL ENGINEER STATE OF TEXAS
K. STEPHEN BONNETTE, P.E. 09/20/00 DATE

© 2000 Texas Department of Transportation

# LOOP 1604
# STORM DRAIN PROFILES
# LINES X, XA, ZA, ZB

| DN: | | | | | | PROJECT NO. | | |
|---|---|---|---|---|---|---|---|---|
| CK DN: | | | | | | NH 2000 (704), etc. | | |
| DW: | CONTROL | SECTION | JOB | DIST. | STATE | COUNTY | HIGHWAY NO. | SHEET NO. |
| CK DW: | 2452 | 01 | 036 | SAT | TX | BEXAR | LOOP 1604 | 464 |

PLOTTED ON: 09/25/00
DESIGN FILENAME: ...4\N16\civil\design\int\dgn\394116int_strmpr.dgn

PLOTTED ON: 07/02/01

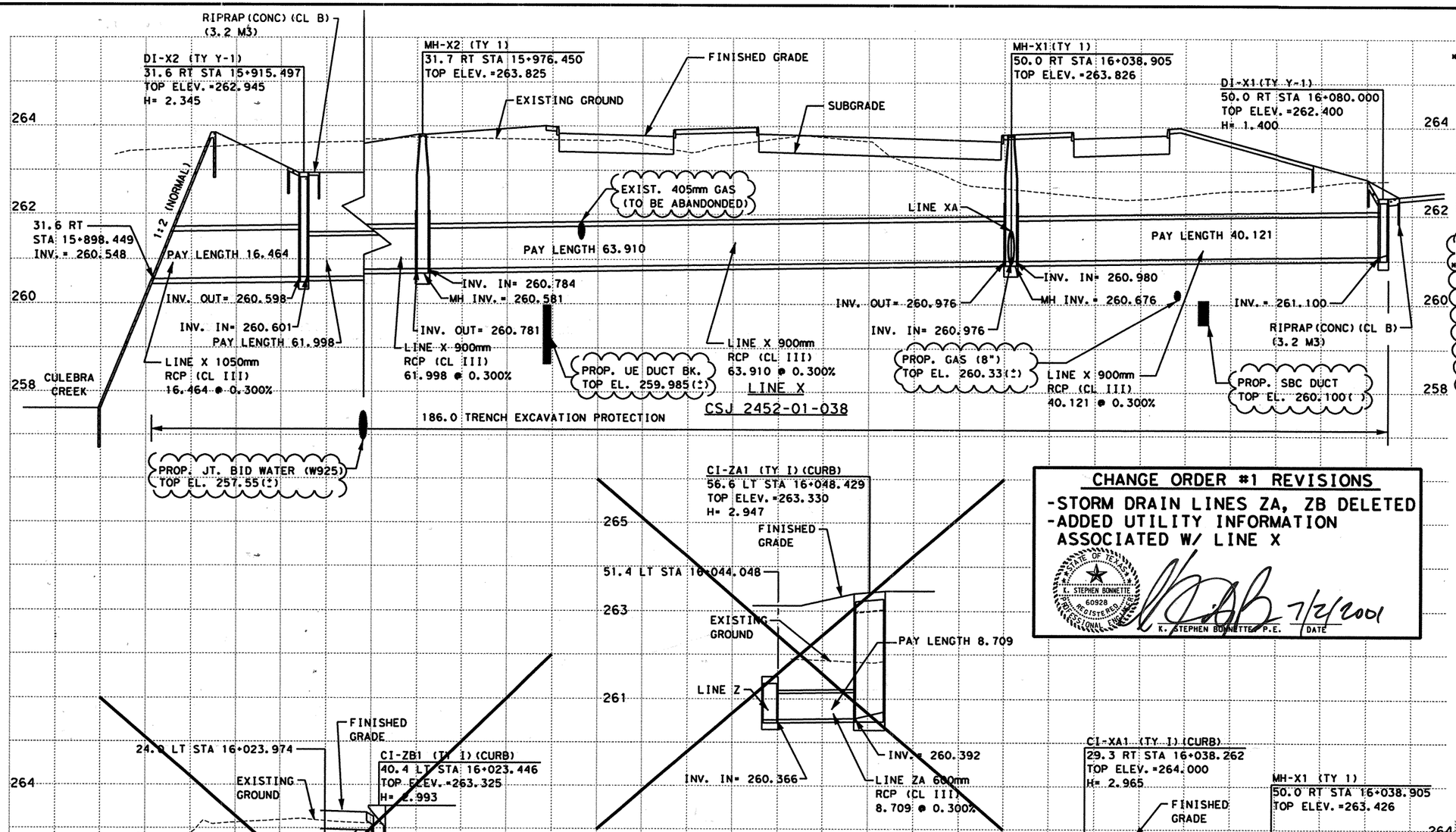





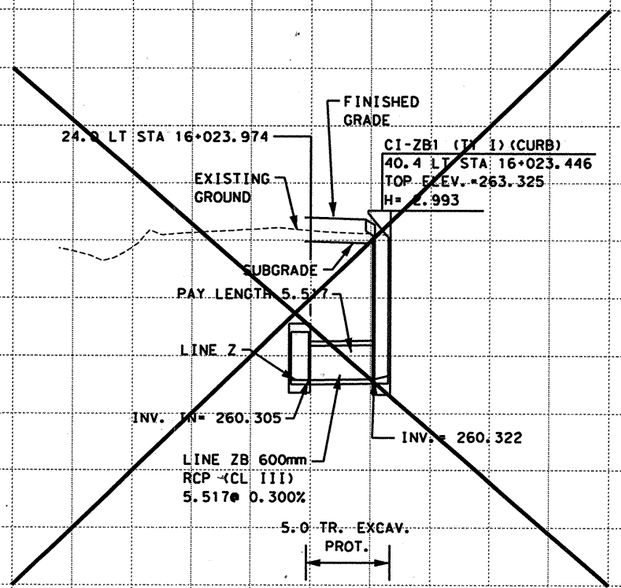


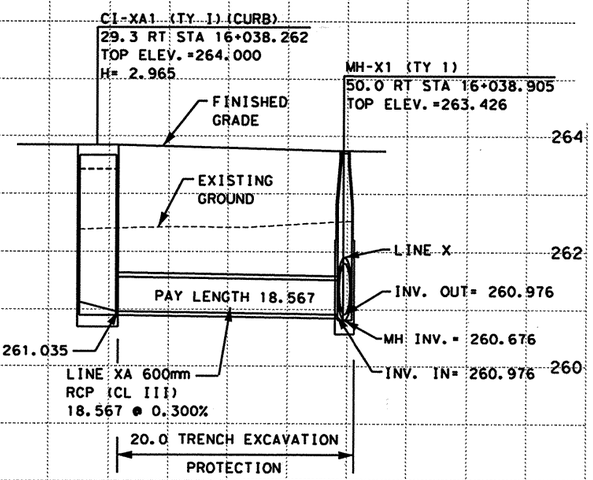


## CHANGE ORDER #1 REVISIONS

- -STORM DRAIN LINES ZA, ZB DELETED
- -ADDED UTILITY INFORMATION ASSOCIATED W/ LINE X

STATE OF TEXAS · K. STEPHEN BONNETTE · 60928 · REGISTERED PROFESSIONAL ENGINEER

K. STEPHEN BONNETTE, P.E. 7/2/2001 DATE

| ESTIMATED QUANTITIES | | | |
|---|---|---|---|
| DESCRIPTION | UNIT | EST. | FINAL |
| CSJ 2452-01-038 | | | |
| * STRUCT EXCAV | M3 | 1010.8 | |
| RC PIPE (CL III) (600MM) | M | 29.793 | |
| RC PIPE (CL III) (900MM) | M | 166.029 | |
| RC PIPE (CL III) (1050MM) | M | 16.464 | |
| INLET (COMPL) (DROP) (TY Y-1) | EA | 2 | |
| INLET (COMPL) (CURB) (TY I) | EA | 3 | |
| RIPRAP (CONC) (CL B) | M3 | 6.4 | |
| TRENCH EXCAV PROTECTION | M | 311.0 | |
| MANHOLE (COMPL) (TY 1) | EA | 2 | |

* SUPPLIED FOR CONTRACTOR'S INFORMATION ONLY

| ESTIMATED QUANTITIES | | | |
|---|---|---|---|
| DESCRIPTION | UNIT | EST. | FINAL |
| CSJ 2452-01-038 | | | |
| * STRUCT EXCAV | M3 | 529.4 | |
| RC PIPE (CL III) (600MM) | M | 18.567 | |
| RC PIPE (CL III) (900MM) | M | 166.029 | |
| RC PIPE (CL III) (1050MM) | M | 16.464 | |
| INLET (COMPL) (DROP) (TY Y-1) | EA | 2 | |
| INLET (COMPL) (CURB) (TY I) | EA | 1 | |
| RIPRAP (CONC) (CL B) | M3 | 6.4 | |
| TRENCH EXCAV PROTECTION | M | 206.0 | |
| MANHOLE (COMPL) (TY 1) | EA | 2 | |

* SUPPLIED FOR CONTRACTOR'S INFORMATION ONLY

1

**NOTES:**

1. ALL PIPES ARE NORMAL TO AND STRAIGHT FROM STRUCTURE TO STRUCTURE UNLESS OTHERWISE SHOWN ON INTERIOR DRAINAGE LAYOUTS
2. CONTRACTORS SHALL SHAPE INVERTS OF ALL PROPOSED CURB INLETS, DROP INLETS AND MANHOLES TO PRODUCE POSITIVE FLOW THROUGH STRUCTURE FROM ALL INLETS TO THE OUTLET OF EACH STRUCTURE.
3. CONTRACTOR SHALL INSTALL ALL STORM DRAIN PIPES INTO MANHOLES, BOXES AND EXISTING STRUCTURES FLUSH WITH INSIDE FACE AND GROUT INTO PLACE, INSURING WATERTIGHT SEAL ALL AROUND.
4. ALL STATION AND OFFSET INFORMATION IS REFERENCED TO THE C LOOP 1604 UNLESS OTHERWISE NOTED.
5. CONTRACTOR SHALL CONSTRUCT MANHOLES TO MINIMIZE CONFLICT WITH UTILITIES.
6. SET (TY II) CONSTRUCTION SHALL UTILIZE RIPRAP HEADWALL (MOD) STANDARD SHEET.

SCALE: H: 1:500
V: 1:100

555 EAST RAMSEY SAN ANTONIO TEXAS 78216
PHONE (210)375-9000
FAX (210)375-9010
PAPE-DAWSON ENGINEERS
CIVIL & ENVIRONMENTAL
STATE OF TEXAS · K. STEPHEN BONNETTE · 60928 · REGISTERED PROFESSIONAL ENGINEER
K. STEPHEN BONNETTE, P.E. 9/20/00 DATE

© 2000 Texas Department of Transportation

# LOOP 1604
# STORM DRAIN PROFILES
# LINES X, XA

| DN: | | | | | | PROJECT NO. | |
|---|---|---|---|---|---|---|---|
| CK DN: | | | | | | NH 2000 (704), etc. | |
| DW: | CONTROL | SECTION | JOB | DIST. | STATE | COUNTY | HIGHWAY NO. | SHEET NO. |
| CK DW: | 2452 | 01 | 036 | SAT | TX | BEXAR | LOOP 1604 | 464A |

DESIGN FILENAME: \394\16\change_order\design\civil\plansheets\433716int_strmpr.dgn

PLOTTED ON: 09/19/00

| ESTIMATED QUANTITIES | | | |
|---|---|---|---|
| DESCRIPTION | UNIT | EST. | FINAL |
| CSJ 2452-01-037 | | | |
| * STRUCT EXCAV | M3 | 390.9 | |
| RC PIPE (CLIII) (600MM) | M | 86.602 | |
| RC PIPE (CLIII) (900MM) | M | 44.720 | |
| INLET (COMPL) (CURB) (TY II) | EA | 2 | |
| INLET (COMPL) (CURB) (TY IV) | EA | 1 | |
| TRENCH EXCAV PROTECTION | M | 100.0 | |

* SUPPLIED FOR CONTRACTOR'S INFORMATION ONLY

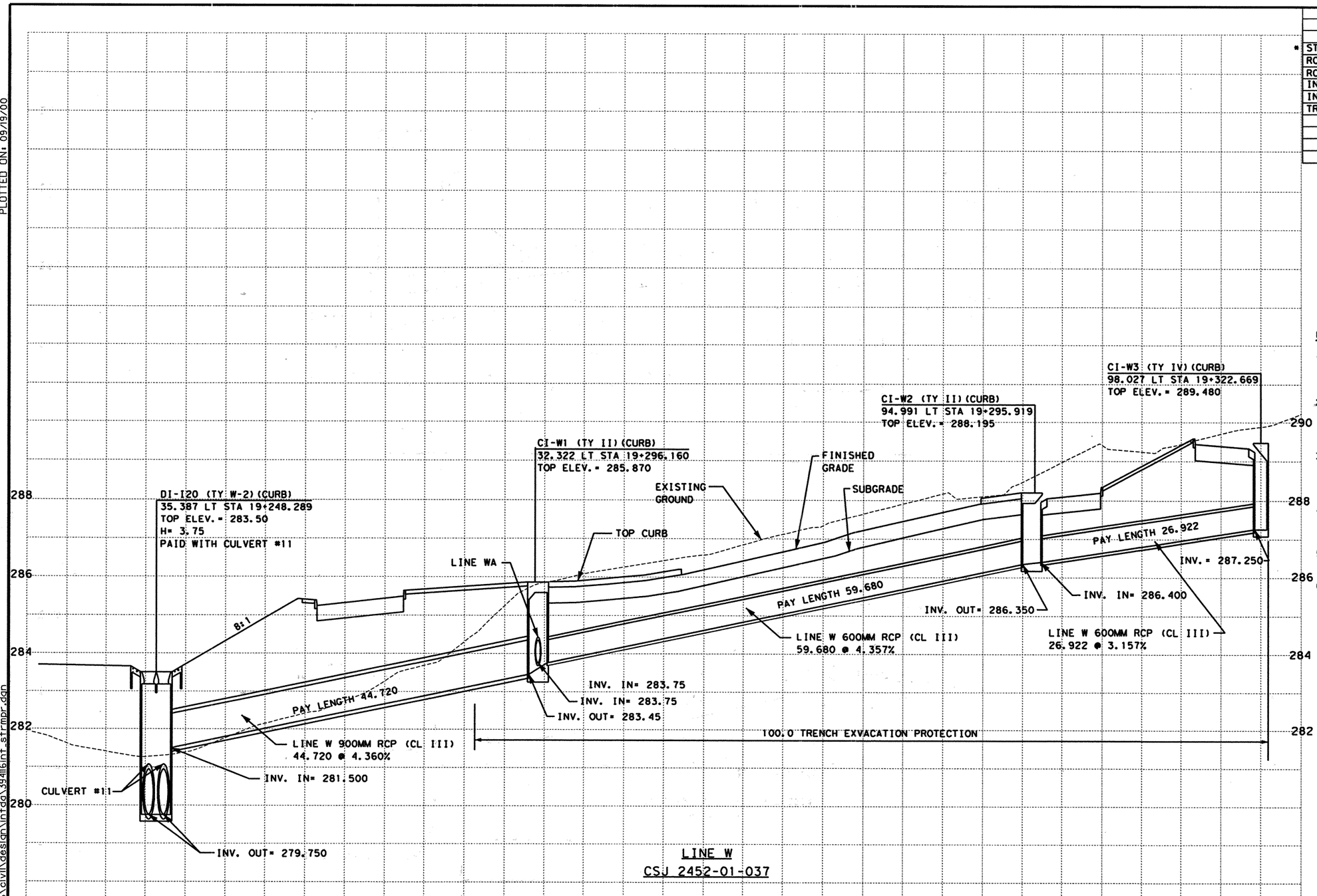


LINE W
CSJ 2452-01-037

NOTES:

1. ALL PIPES ARE NORMAL TO AND STRAIGHT FROM STRUCTURE TO STRUCTURE UNLESS OTHERWISE SHOWN ON INTERIOR DRAINAGE LAYOUTS
2. CONTRACTORS SHALL SHAPE INVERTS OF ALL PROPOSED CURB INLETS, DROP INLETS AND MANHOLES TO PRODUCE POSITIVE FLOW THROUGH STRUCTURE FROM ALL INLETS TO THE OUTLET OF EACH STRUCTURE.
3. CONTRACTOR SHALL INSTALL ALL STORM DRAIN PIPES INTO MANHOLES, BOXES AND EXISTING STRUCTURES FLUSH WITH INSIDE FACE AND GROUT INTO PLACE, INSURING WATERTIGHT SEAL ALL AROUND.
4. ALL STATION AND OFFSET INFORMATION IS REFERENCED TO THE ℄ LOOP 1604 UNLESS OTHERWISE NOTED.
5. CONTRACTOR SHALL CONSTRUCT MANHOLES TO MINIMIZE CONFLICT WITH UTILITIES.
6. SET (TY II) CONSTRUCTION SHALL UTILIZE RIPRAP HEADWALL (MOD) STANDARD SHEET.

SCALE: H: 1:500
V: 1:100


555 EAST RAMSEY SAN ANTONIO TEXAS 78216 PHONE (210)375-9000 FAX (210)375-9010
PAPE-DAWSON ENGINEERS CIVIL & ENVIRONMENTAL
STATE OF TEXAS K. STEPHEN BONNETTE 60928 REGISTERED PROFESSIONAL ENGINEER
09/20/00
K. STEPHEN BONNETTE, P.E. DATE



© 2000 Texas Department of Transportation


# LOOP 1604
# STORM DRAIN PROFILES
# LINE W

| DN: | | | | | PROJECT NO. | | | |
|---|---|---|---|---|---|---|---|---|
| CK DN: | | | | | NH 2000 (704), etc. | | | |
| DW: | CONTROL | SECTION | JOB | DIST. | STATE | COUNTY | HIGHWAY NO. | SHEET NO. |
| CK DW: | 2452 | 01 | 036 etc. | SAT | TX | BEXAR | LOOP 1604 | 465 |

DESIGN FILENAME: \394\16\civil\design\intdo\394il6int_strmpr.dgn

PLOTTED ON: 09/19/00

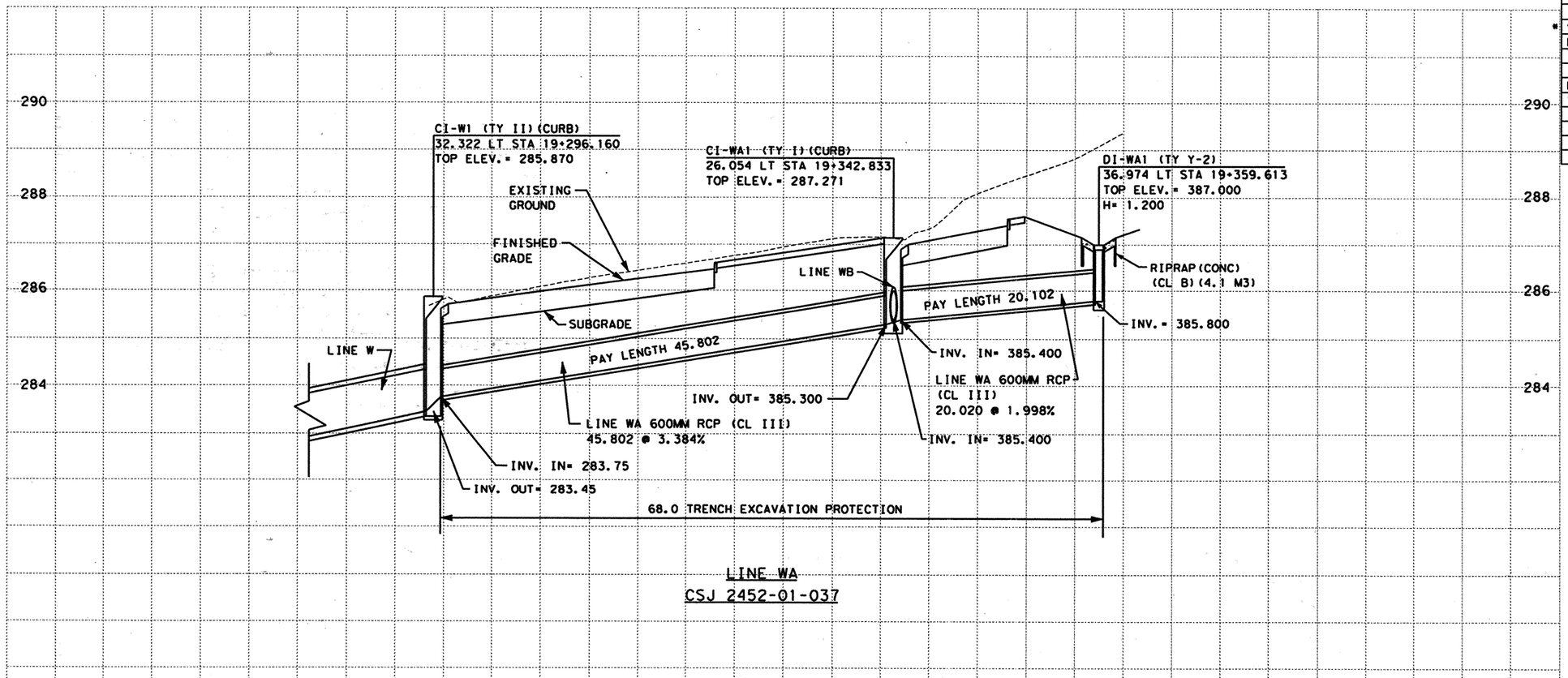


LINE WA
CSJ 2452-01-037

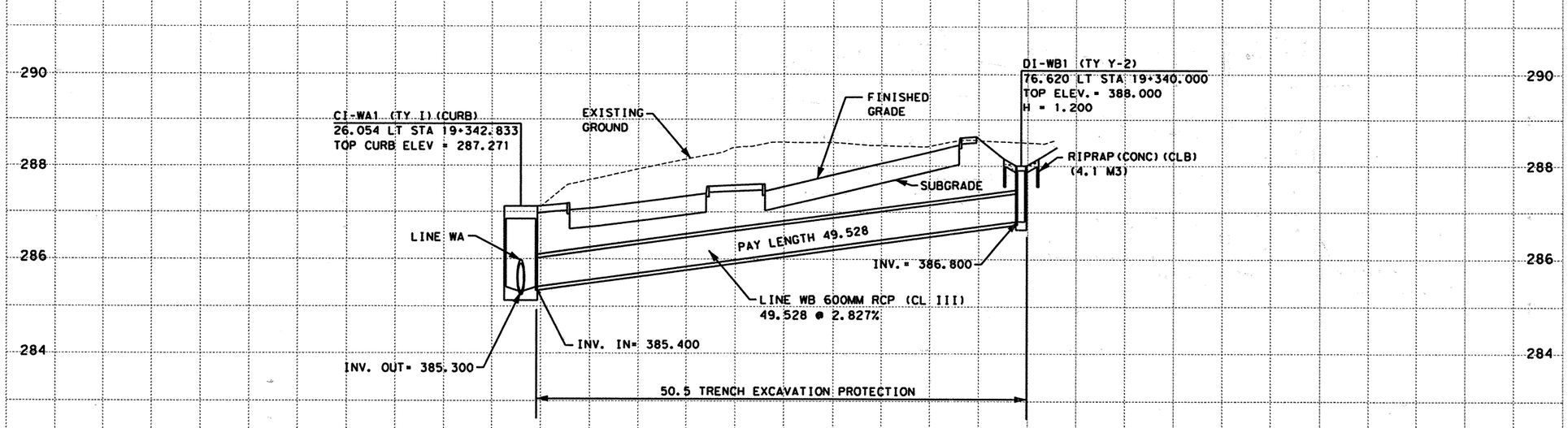


LINE WB
CSJ 2452-01-037

| ESTIMATED QUANTITIES | | | |
|---|---|---|---|
| DESCRIPTION | UNIT | EST. | FINAL |
| CSJ 2452-01-037 | | | |
| * STRUCT EXCAV | M3 | 427.2 | |
| RC PIPE (CLIII) (600MM) | M | 115.350 | |
| INLET (COMPL) (DROP) (TY Y-2) | EA | 2 | |
| INLET (COMPL) (CURB) (TY II) | EA | 1 | |
| RIPRAP (CONC) (CL B) | M3 | 8.2 | |
| TRENCH EXCAV PROTECTION | M | 118.5 | |
| INLET (COMPL) (CURB) (TY I) | EA | 1 | |

* SUPPLIED FOR CONTRACTOR'S INFORMATION ONLY

NOTES:

1. ALL PIPES ARE NORMAL TO AND STRAIGHT FROM STRUCTURE TO STRUCTURE UNLESS OTHERWISE SHOWN ON INTERIOR DRAINAGE LAYOUTS
2. CONTRACTORS SHALL SHAPE INVERTS OF ALL PROPOSED CURB INLETS, DROP INLETS AND MANHOLES TO PRODUCE POSITIVE FLOW THROUGH STRUCTURE FROM ALL INLETS TO THE OUTLET OF EACH STRUCTURE.
3. CONTRACTOR SHALL INSTALL ALL STORM DRAIN PIPES INTO MANHOLES, BOXES AND EXISTING STRUCTURES FLUSH WITH INSIDE FACE AND GROUT INTO PLACE, INSURING WATERTIGHT SEAL ALL AROUND.
4. ALL STATION AND OFFSET INFORMATION IS REFERENCED TO THE ℄ LOOP 1604 UNLESS OTHERWISE NOTED.
5. CONTRACTOR SHALL CONSTRUCT MANHOLES TO MINIMIZE CONFLICT WITH UTILITIES.
6. SET (TY II) CONSTRUCTION SHALL UTILIZE RIPRAP HEADWALL (MOD) STANDARD SHEET.

SCALE: H: 1:500
V: 1:100

555 EAST RAMSEY SAN ANTONIO TEXAS 78216 PHONE (210)375-9000 FAX (210)375-9010
PAPE-DAWSON ENGINEERS CIVIL & ENVIRONMENTAL
K. STEPHEN BONNETTE 60928 REGISTERED PROFESSIONAL ENGINEER
K. STEPHEN BONNETTE, P.E. 09/20/00 DATE

© 2000 Texas Department of Transportation

# LOOP 1604
# STORM DRAIN PROFILES
# LINE WA & LINE WB

| DN: | | | | | PROJECT NO. | | | |
|---|---|---|---|---|---|---|---|---|
| CK DN: | | | | | NH 2000 (704), etc. | | | |
| DW: | CONTROL | SECTION | JOB | DIST. | STATE | COUNTY | HIGHWAY NO. | SHEET NO. |
| CK DW: | 2452 | 01 | 036 etc. | SAT | TX | BEXAR | LOOP 1604 | 466 |

DESIGN FILENAME: \3941\16\civil\design\intdd\3941lint_strmpr.dgn

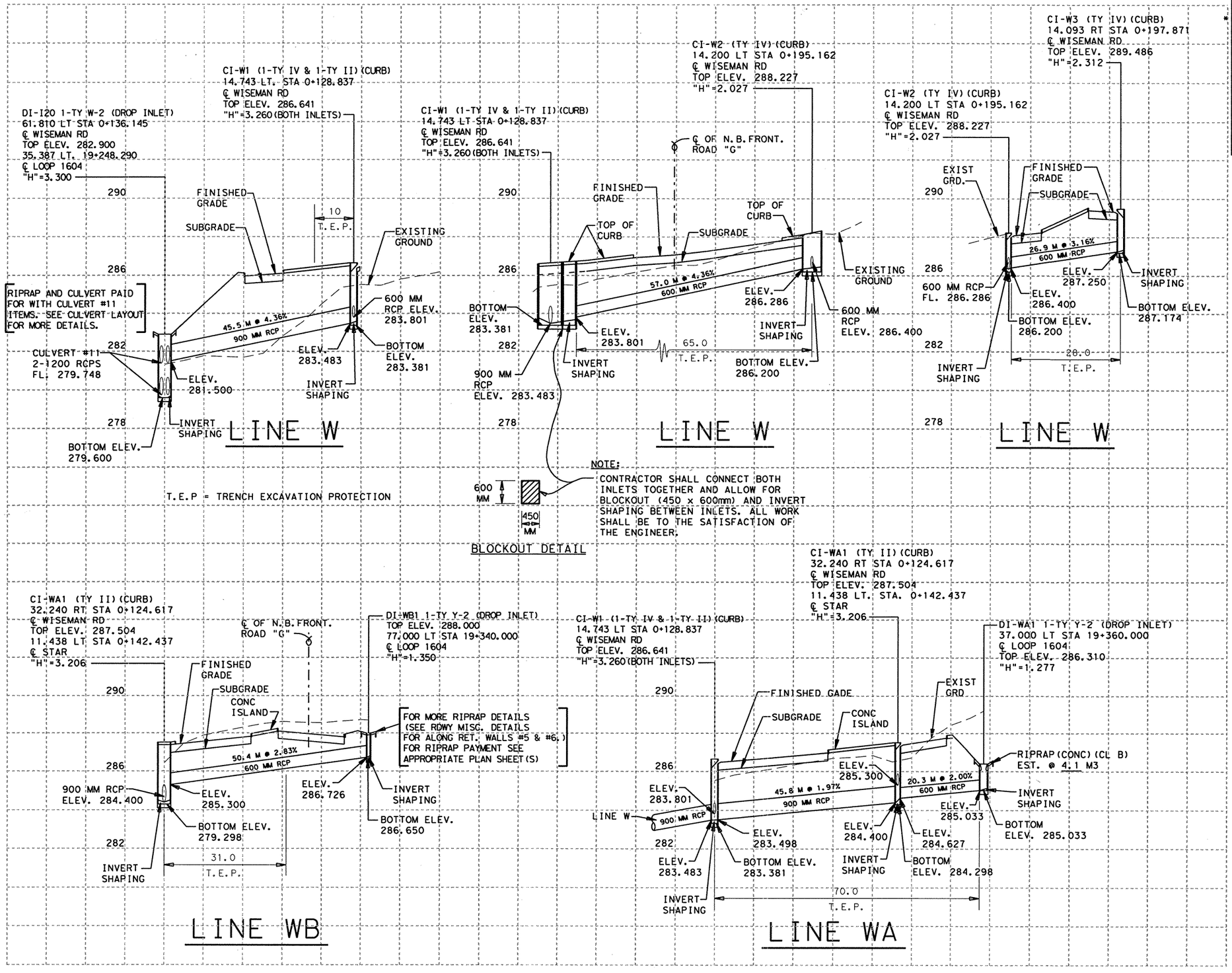


| ESTIMATED QUANTITIES | | | |
|---|---|---|---|
| DESCRIPTION | UNIT | EST. | FINAL |
| CSJ 2452-01-036 | | | |
| STRUCT EXCAV | M3 | 764 | |
| RC PIPE (CL III) (600MM) | M | 154.6 | |
| RC PIPE (CL III) (900MM) | M | 91.3 | |
| INLET (COMPL) (CURB) (TY II) | EA | 2 | |
| INLET (COMPL) (CURB) (TY IV) | EA | 3 | |
| TRENCH EXCAV PROTECTION | M | 204 | |
| RIPRAP (CONC) (CL B) | M3 | 4.1 | |
| INLET (COMPL) (DROP) (TY Y-2) | EA | 2 | |

* SUPPLIED FOR CONTRACTOR'S INFORMATION ONLY

**CHANGE ORDER NO. 64**

-REVISED STORM DRAIN @ WISEMAN BLVD. DUE TO ADA REVISION.

-REVISED QUANTITIES

-THIS SHEET REPLACES ORGINAL SHEET(S) 465 AND 466.

NOTES:

1. CONTRACTORS SHALL SHAPE INVERTS OF ALL PROPOSED CURB INLETS, DROP INLETS AND MANHOLES TO PRODUCE POSITIVE FLOW THROUGH STRUCTURE FROM ALL INLETS TO THE OUTLET OF EACH STRUCTURE.
2. CONTRACTOR SHALL INSTALL ALL STORM DRAIN PIPES INTO MANHOLES, BOXES AND EXISTING STRUCTURES FLUSH WITH INSIDE FACE AND GROUT INTO PLACE, INSURING WATERTIGHT SEAL ALL AROUND.
3. ALL STATION AND OFFSET INFORMATION IS REFERENCED TO THE ℄ LOOP 1604 UNLESS OTHERWISE NOTED.
4. RIPRAP AND CULVERT PAID FOR WITH CULVERT #11 ITEMS. SEE CUVERT LAYOUT FOR MORE DETAILS.

CHANGE ORDER 64

NEW SHEET

STATE OF TEXAS — JEROME D. PAVLISKA — 76075 — REGISTERED PROFESSIONAL ENGINEER

Jerome D. Pavliska, P.E. 3/09/04

Jerome D. Pavliska, P.E. — Date

SCALE: HORIZ- 1:100
VERT - 1:200

©2003

Texas Department of Transportation

LP 1604
STORM DRAIN PROFILE
LINES W, WA, WB (REVISED)

| FED. RD. DIV. NO. | FEDERAL AID PROJECT NO. | SHEET NO. |
|---|---|---|
| 6 | NH 2000(704), etc. | 466A |
| STATE | DIST. | COUNTY |
| TEXAS | SAT | BEXAR |
| CONT. | SECT. | JOB / HIGHWAY NO. |
| 2452 | 01 | 036, etc. / LP 1604 |

LEVELS DISPLAYED
1 2 3 4 5 6 7 8 9 10 11 12 13 14 15 16
17 18 19 20 21 22 23 24 25 26 27 28 29 30 31 32
33 34 35 36 37 38 39 40 41 42 44 45 46 47 48
49 50 51 52 53 54 55 56 57 58 59 60 61 62 63

ACC: lp1604fm471-90\
FILE: profilewis.dgn

PLOTTED ON: 09/19/00

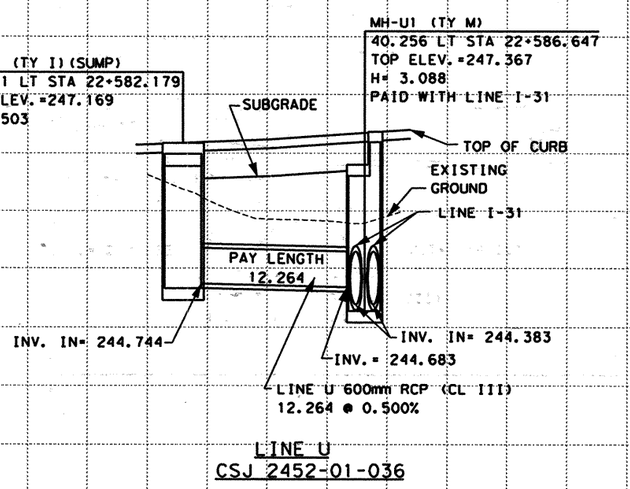


LINE U
CSJ 2452-01-036

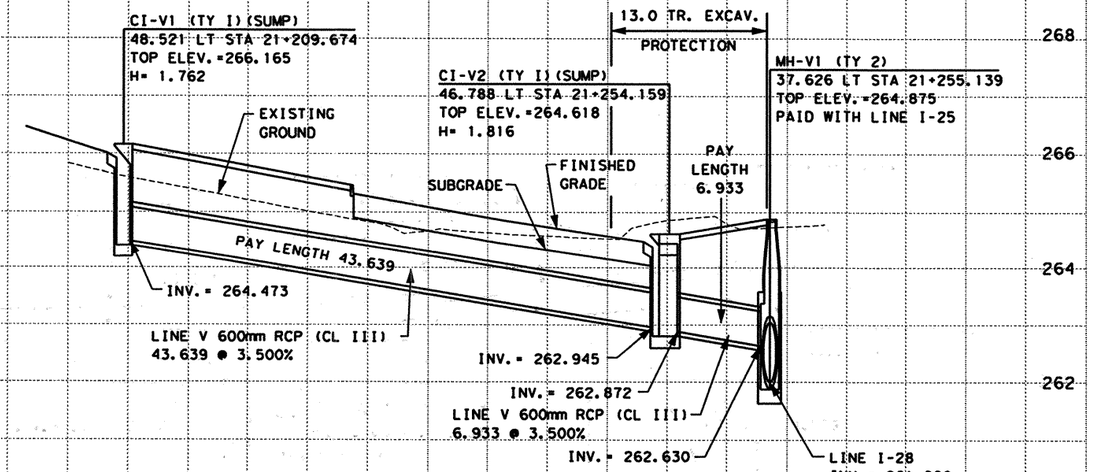


LINE V
CSJ 2452-01-036

| ESTIMATED QUANTITIES | | | |
|---|---|---|---|
| DESCRIPTION | UNIT | EST. | FINAL |
| CSJ 2452-01-036 | | | |
| * STRUCT EXCAV | M3 | 126.2 | |
| RC PIPE (CL III)(600MM) | M | 62.836 | |
| INLET(COMPL)(CURB)(TY I) | EA | 3 | |
| TRENCH EXCAV PROTECT | M | 13.0 | |

* SUPPLIED FOR CONTRACTOR'S INFORMATION ONLY

NOTES:

1. ALL PIPES ARE NORMAL TO AND STRAIGHT FROM STRUCTURE TO STRUCTURE UNLESS OTHERWISE SHOWN ON INTERIOR DRAINAGE LAYOUTS
2. CONTRACTORS SHALL SHAPE INVERTS OF ALL PROPOSED CURB INLETS, DROP INLETS AND MANHOLES TO PRODUCE POSITIVE FLOW THROUGH STRUCTURE FROM ALL INLETS TO THE OUTLET OF EACH STRUCTURE.
3. CONTRACTOR SHALL INSTALL ALL STORM DRAIN PIPES INTO MANHOLES, BOXES AND EXISTING STRUCTURES FLUSH WITH INSIDE FACE AND GROUT INTO PLACE, INSURING WATERTIGHT SEAL ALL AROUND.
4. ALL STATION AND OFFSET INFORMATION IS REFERENCED TO THE ℄ LOOP 1604 UNLESS OTHERWISE NOTED.
5. CONTRACTOR SHALL CONSTRUCT MANHOLES TO MINIMIZE CONFLICT WITH UTILITIES.

SCALE: H: 1:500
V: 1:100

555 EAST RAMSEY SAN ANTONIO TEXAS 78216
PHONE (210)375-9000
FAX (210)375-9010
PAPE-DAWSON ENGINEERS
CIVIL & ENVIRONMENTAL

STATE OF TEXAS
K. STEPHEN BONNETTE
60928
REGISTERED PROFESSIONAL ENGINEER

K. STEPHEN BONNETTE, P.E. 09/20/00
DATE

© 2000 Texas Department of Transportation

# LOOP 1604
# STORM DRAIN PROFILES
# LINES U & V

| DN: | | | | | | PROJECT NO. | |
|---|---|---|---|---|---|---|---|
| CK DN: | | | | | | NH 2000 (704), etc. | |
| DW: | CONTROL | SECTION | JOB | DIST. | STATE | COUNTY | HIGHWAY NO. | SHEET NO. |
| CK DW: | 2452 | 01 | 036 etc. | SAT | TX | BEXAR | LOOP 1604 | 467 |

DESIGN FILENAME: 3941N6\civil\design\intda\3941l6strm6.dgn

PLOTTED ON: 8/25/2004

DESIGN FILENAME: T:\AO\Design\lp1604fm471-90\chg_order_files\394116STRM6.dgn

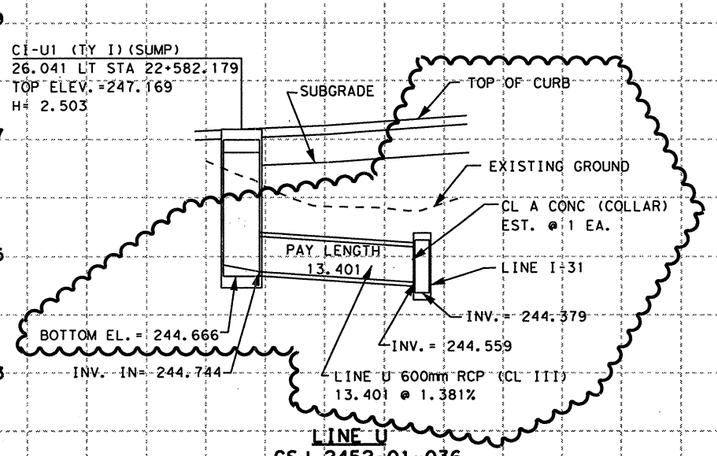


LINE U
CSJ 2452-01-036

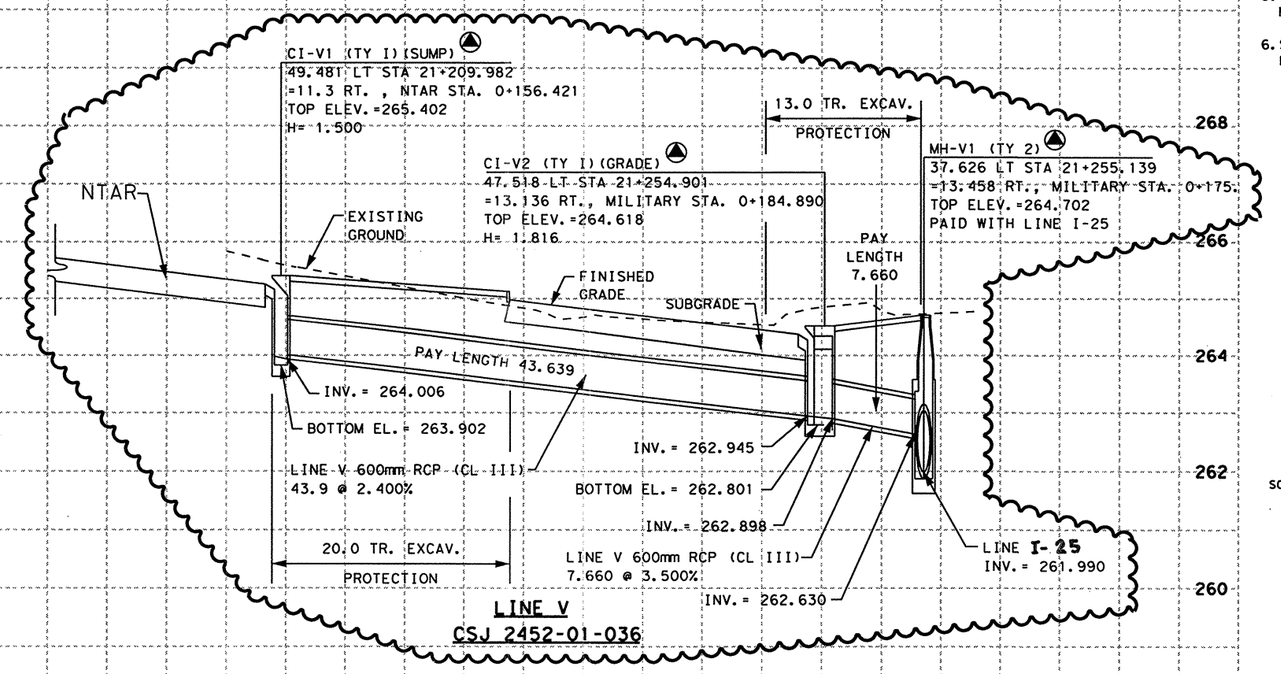


LINE V
CSJ 2452-01-036

| ESTIMATED QUANTITIES | | | |
|---|---|---|---|
| DESCRIPTION | UNIT | EST. | FINAL |
| CSJ 2452-01-036 | | | |
| * STRUCT EXCAV | M3 | 11.0 | |
| RC PIPE (CL III)(600MM) | M | 64.961 | |
| INLET (COMPL)(CURB)(TY 1) | EA | 2 | |
| TRENCH EXCAV PROTECT | M | 33.0 | |
| CL A CONC (COLLAR) | EA | 1 | |

* SUPPLIED FOR CONTRACTOR'S INFORMATION ONLY

NOTES:

1. ALL PIPES ARE NORMAL TO AND STRAIGHT FROM STRUCTURE TO STRUCTURE UNLESS OTHERWISE SHOWN ON INTERIOR DRAINAGE LAYOUTS
2. CONTRACTORS SHALL SHAPE INVERTS OF ALL PROPOSED INLETS, DROP INLETS AND MANHOLES TO BE POSITIVE FLOW THROUGH STRUCTURE FROM ALL INLETS TO THE OUTLET OF EACH STRUCTURE.
3. CONTRACTOR SHALL INSTALL ALL STORM DRAIN PIPES INTO MANHOLES, BOXES AND EXISTING STRUCTURES FLUSH WITH INSIDE FACE AND GROUT INTO PLACE, INSURING WATERTIGHT SEAL ALL AROUND.
4. ALL STATION AND OFFSET INFORMATION IS REFERENCED TO THE ℄ LOOP 1604 UNLESS OTHERWISE NOTED.
5. CONTRACTOR SHALL CONSTRUCT MANHOLES TO MINIMIZE CONFLICT WITH UTILITIES.
6. SET (TY II) CONSTRUCTION SHALL UTILIZE RIPRAP HEADWALL (MOD) STANDARD SHEET.

▲ NEW STATION AND OFFSET REFERENCED ARE THOSE TO THE CENTER OF APPERTENANCE FLAGGED.

**CHANGE ORDER NO. 64**

-REVISED LINE V DUE TO ADA REVISIONS @ MILITARY DRIVE.

-REVISED LINE U ELEVATIONS AND LENGTH

-REVISED QUANTITIES

**CHANGE ORDER 64**

**REVISED SHEET**

SCALE: H: 1:500
V: 1:100

STATE OF TEXAS
JEROME D. PAVLISKA
76075
REGISTERED PROFESSIONAL ENGINEER

Jerome D. Pavliska, P.E. 8-23-04
Jerome D. Pavliska, P.E. — Date

© 2000 Texas Department of Transportation

LOOP 1604
STORM DRAIN PROFILES
LINES U & V

| DN: | | | | | PROJECT NO. | | | |
|---|---|---|---|---|---|---|---|---|
| CK DN: | | | | | NH 2000 (704), etc. | | | |
| DW: | CONTROL | SECTION | JOB | DIST. | STATE | COUNTY | HIGHWAY NO. | SHEET NO. |
| CK DW: | 2452 | 01 | 036 etc | SAT | TX | BEXAR | LOOP 1604 | 467A |

05-01-04

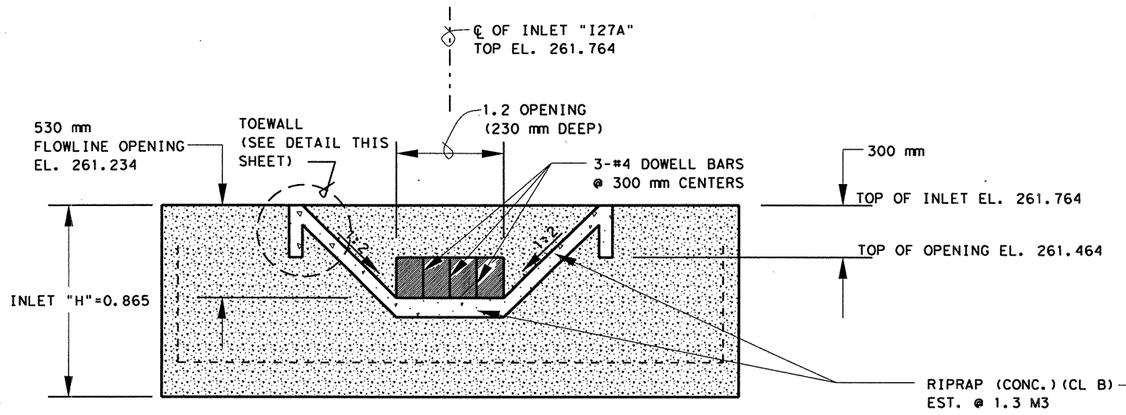


## INLET "I27A" BACKSIDE DETAILS

N. T. S.

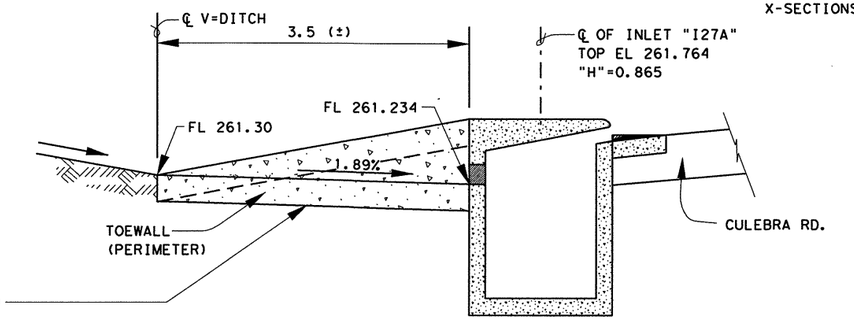


## SECTION "A-A"

N. T. S.

NOTE(S):

- THE INLET OPENING SHALL BE PLACED ON EITHER SIDE OF THE TIE BEAM OF THE TYPE IV INLET.
- ALL DIMENSIONS ARE IN METERS UNLESS OTHERWISE NOTED.
- FOR MORE DETAILS SEE PROJECT X-SECTIONS & PLAN SHEETS.

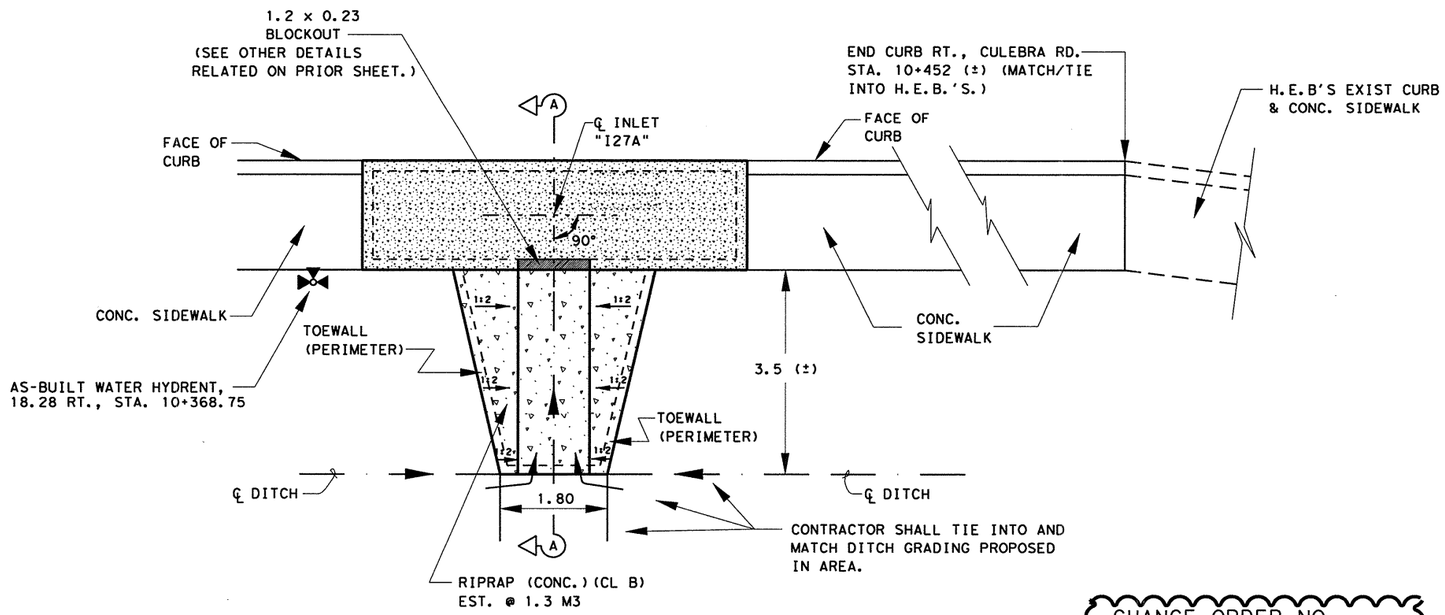


## PLAN VIEW

N. T. S.

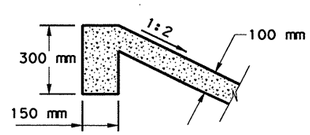


## TOEWALL DETAIL

N. T. S.

CHANGE ORDER NO.

NEW STORM DRAIN & DETAILS
NEEDED @ CULEBRA RD.

CHANGE ORDER 58

NEW SHEET

STATE OF TEXAS
JEROME D. PAVLISKA
76075
REGISTERED
PROFESSIONAL ENGINEER

Jerome D. Pavliska, P.E. 3-20-03
Jerome D. Pavliska, P.E. Date

Texas Department of Transportation

# STORM DRAIN "I27A"

2 OF 2

| FED. RD. DIV. NO. | FEDERAL AID PROJECT NO. | | SHEET NO. |
|---|---|---|---|
| 6 | NH 2000 (704), etc | | 408B |
| STATE | DIST. | COUNTY | |
| TEXAS | SAT | BEXAR | |
| CONT. | SECT. | JOB | HIGHWAY NO. |
| 2452 | 01 | 036, etc. | LP 1604 |

3-19-03

LEVELS DISPLAYED
1 2 3 4 5 6 7 8 9 10 11 12 21 31 41 51 61 32
17 18 19 20 21 22 23 24 25 26 27 28 29 30
33 34 35 36 37 38 39 40 41 42 43 44 45 46 47 48
49 50 51 52 53 54 55 56 57 58 59 60 61 63

ACC t:\go\design\p1604fm471-90\
FILE: ch misc det-str i27a1.DGN

PLOTTED ON: 06/07/2005

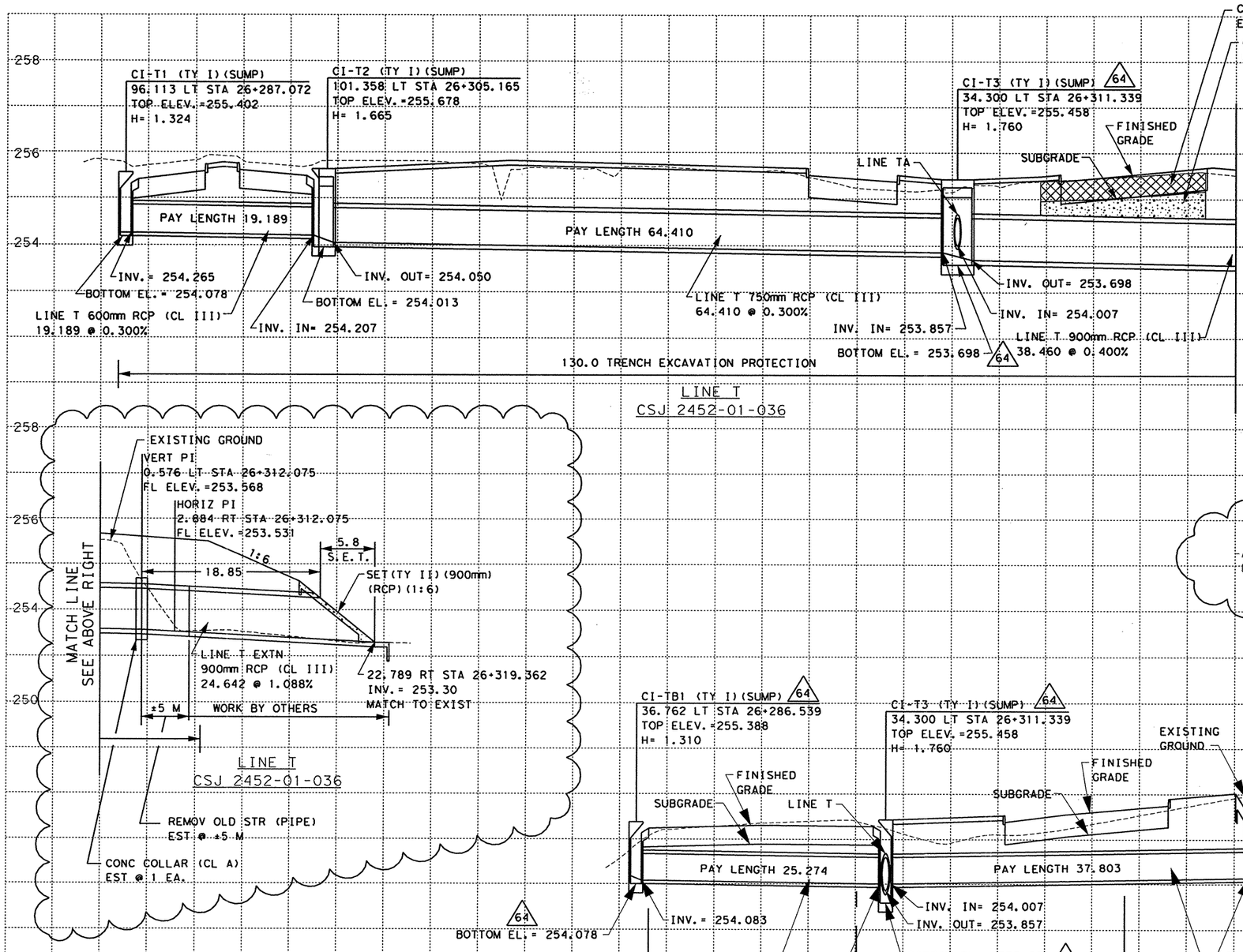


CHANGE ORDER NO. 103
ADDED WORK BY OTHERS (LINE T)
DUE TO MARBACH ROAD EXTN.

ESTIMATED QUANTITIES

| | DESCRIPTION | UNIT | EST. | FINAL |
|---|---|---|---|---|
| | CSJ 2452-01-037 | | | |
| * | STRUCT EXCAV | M3 | 537.6 | |
| | RC PIPE (CL III) (600MM) | M | 82.266 | |
| | INLET (DROP) (TY Y-1) | EA | 1 | |
| | RIPRAP (CONC) (CL B) | M3 | 3.2 | |
| | TRENCH EXCAV PROTECT | M | 166.0 | |
| | SET (TY II) (900MM) (RCP) (1:6) | EA | 1 | |
| | PC PIPE (CL III) (750MM) | M | 64.410 | |
| | RC PIPE (CL III) (900MM) | M | 32.926 | |
| | INLET (COMPL) (CURB) (TY I) | EA | 4 | |
| 64 | CEMENT STAB BKFL | M3 | 10.9 | |
| 64 | CUT & RESTORE PVMNT | M2 | 26.2 | |
| | CONC COLLAR (CL A) | EA | 1 | |
| | REM OLD STR (PIPE) | M | 5.0 | |

* SUPPLIED FOR CONTRACTOR'S INFORMATION ONLY

NOTES:

1. ALL PIPES ARE NORMAL TO AND STRAIGHT FROM STRUCTURE TO STRUCTURE UNLESS OTHERWISE SHOWN ON INTERIOR DRAINAGE LAYOUTS
2. CONTRACTORS SHALL SHAPE INVERTS OF ALL PROPOSED CURB INLETS, DROP INLETS AND MANHOLES TO PRODUCE POSITIVE FLOW THROUGH STRUCTURE FROM ALL INLETS TO THE OUTLET OF EACH STRUCTURE.
3. CONTRACTOR SHALL INSTALL ALL STORM DRAIN PIPES INTO MANHOLES, BOXES AND EXISTING STRUCTURES FLUSH WITH INSIDE FACE AND GROUT INTO PLACE, INSURING WATERTIGHT SEAL ALL AROUND.
4. ALL STATION AND OFFSET INFORMATION IS REFERENCED TO THE C LOOP 1604 UNLESS OTHERWISE NOTED.
5. CONTRACTOR SHALL CONSTRUCT MANHOLES TO MINIMIZE CONFLICT WITH UTILITIES.
6. SET (TY II) CONSTRUCTION SHALL UTILIZE RIPRAP HEADWALL (MOD) STANDARD SHEET.
7. CONTRACTOR SHALL UTILIZE STEEL PLATING OVER TRENCH IN AREAS OF FLOWABLE BACKFILL UNTIL SUCH TIME AS THE BACKFILL IS READY FOR PAVING AND TRAFFIC
8. FLOWABLE BACKFILL MAY INCLUDE THE USE OF CEMENT STABILIZED BACKFILL AS APPROVED BY THE ENGINEER.

THIS SEAL AND SIGNATURE ATTESTS ONLY TO THOSE ITEMS NOTED AS PART OF THE CHANGE ORDER.

CHANGE ORDER NO. 103 | REVISED SHEET

555 EAST RAMSEY SAN ANTONIO TEXAS 78216 PHONE (210) 375-9000 FAX (210) 375-9010
PAPE-DAWSON ENGINEERS CIVIL ENVIRONMENTAL
STATE OF TEXAS J. KENT O'BRIEN 64398 REGISTERED PROFESSIONAL ENGINEER
J. KENT O'BRIEN, P.E. 5/10/2005 DATE

© 2000 Texas Department of Transportation

# LOOP 1604
# STORM DRAIN PROFILES
## LINES T, TA & TB

| | | | | | | | | |
|---|---|---|---|---|---|---|---|---|
| DN: | | | | | | | PROJECT NO. | |
| CK DN: | | | | | | | NH 2000 (704), etc. | |
| DW: | CONTROL | SECTION | JOB | DIST | STATE | COUNTY | HIGHWAY NO. | SHEET NO. |
| CK DW: | 2452 | 01 | 036 etc. | SAT | TX | BEXAR | LOOP 1604 | 403B |

5-20-05

* REPRESENTS CHANGES MADE AS PART OF CHANGE ORDER

DESIGN FILENAME=..\57\75\02\DESIGN\CIVIL\PLANSHEETS\DRAINAGE\394116STRM6.DGN

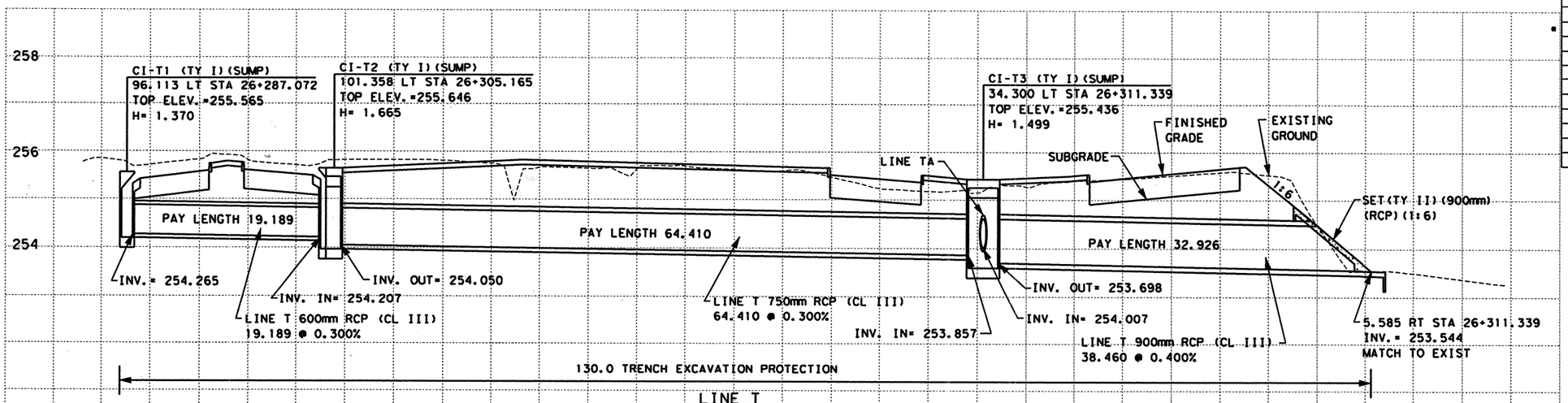


LINE T
CSJ 2452-01-037

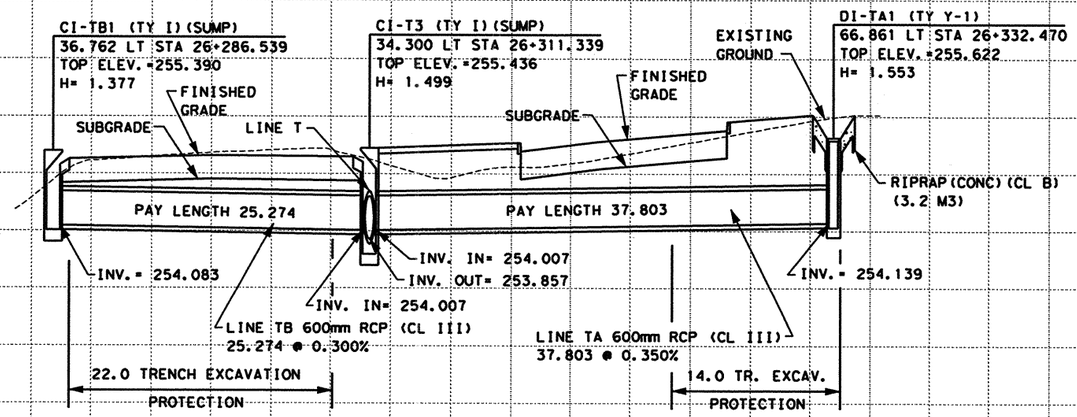


LINE TA & LINE TB
CSJ 2452-01-037

| ESTIMATED QUANTITIES | | | |
|---|---|---|---|
| DESCRIPTION | UNIT | EST. | FINAL |
| CSJ 2452-01-037 | | | |
| * STRUCT EXCAV | M3 | 537.6 | |
| RC PIPE (CL III) (600MM) | M | 82.266 | |
| INLET (DROP) (TY Y-1) | EA | 1 | |
| RIPRAP (CONC) (CL B) | M3 | 3.2 | |
| TRENCH EXCAV PROTECT | M | 166.0 | |
| SET (TY II) (900MM) (RCP) (1:6) | EA | 1 | |
| PC PIPE (CL III) (750MM) | M | 64.410 | |
| RC PIPE (CL III) (900MM) | M | 32.926 | |
| INLET (COMPL) (CURB) (TY I) | EA | 4 | |
| | | | |

* SUPPLIED FOR CONTRACTOR'S INFORMATION ONLY

NOTES:

1. ALL PIPES ARE NORMAL TO AND STRAIGHT FROM STRUCTURE TO STRUCTURE UNLESS OTHERWISE SHOWN ON INTERIOR DRAINAGE LAYOUTS
2. CONTRACTORS SHALL SHAPE INVERTS OF ALL PROPOSED CURB INLETS, DROP INLETS AND MANHOLES TO PRODUCE POSITIVE FLOW THROUGH STRUCTURE FROM ALL INLETS TO THE OUTLET OF EACH STRUCTURE.
3. CONTRACTOR SHALL INSTALL ALL STORM DRAIN PIPES INTO MANHOLES, BOXES AND EXISTING STRUCTURES FLUSH WITH INSIDE FACE AND GROUT INTO PLACE, INSURING WATERTIGHT SEAL ALL AROUND.
4. ALL STATION AND OFFSET INFORMATION IS REFERENCED TO THE ℄ LOOP 1604 UNLESS OTHERWISE NOTED.
5. CONTRACTOR SHALL CONSTRUCT MANHOLES TO MINIMIZE CONFLICT WITH UTILITIES.
6. SET (TY II) CONSTRUCTION SHALL UTILIZE RIPRAP HEADWALL (MOD) STANDARD SHEET.

SCALE: H: 1:500
V: 1:100

555 EAST RAMSEY SAN ANTONIO TEXAS 78216 PHONE (210)375-9000 FAX (210)375-9010
PAPE-DAWSON ENGINEERS
CIVIL & ENVIRONMENTAL
STATE OF TEXAS K. STEPHEN BONNETTE 60928 REGISTERED PROFESSIONAL ENGINEER
09/20/00
K. STEPHEN BONNETTE, P.E. DATE

© 2000 Texas Department of Transportation

# LOOP 1604
# STORM DRAIN PROFILES
# LINES T, TA & TB

| DN: | | | | | PROJECT NO. | | |
|---|---|---|---|---|---|---|---|
| CK DN: | | | | | NH 2000 (704), etc. | | |
| DW: | CONTROL | SECTION | JOB | DIST. | STATE | COUNTY | HIGHWAY NO. | SHEET NO. |
| CK DW: | 2452 | 01 | 036 etc. | SAT | TX | BEXAR | LOOP 1604 | 468 |

PLOTTED ON: 09/19/00
DESIGN FILENAME: k:\394fl\16\civil\design\lntdgn\394fl6strm6.dgn

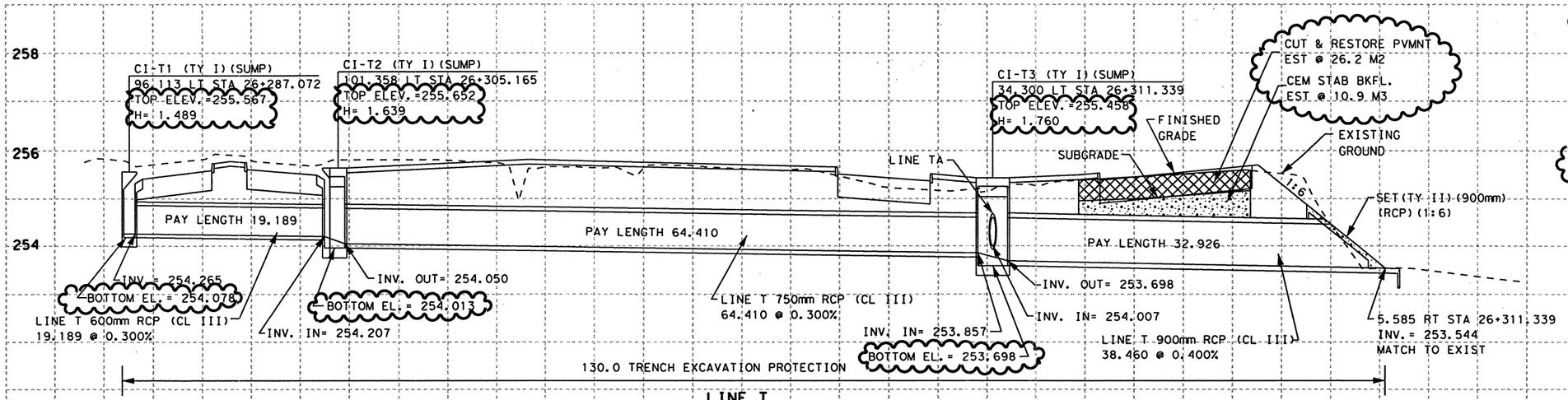


LINE T
CSJ 2452-01-037

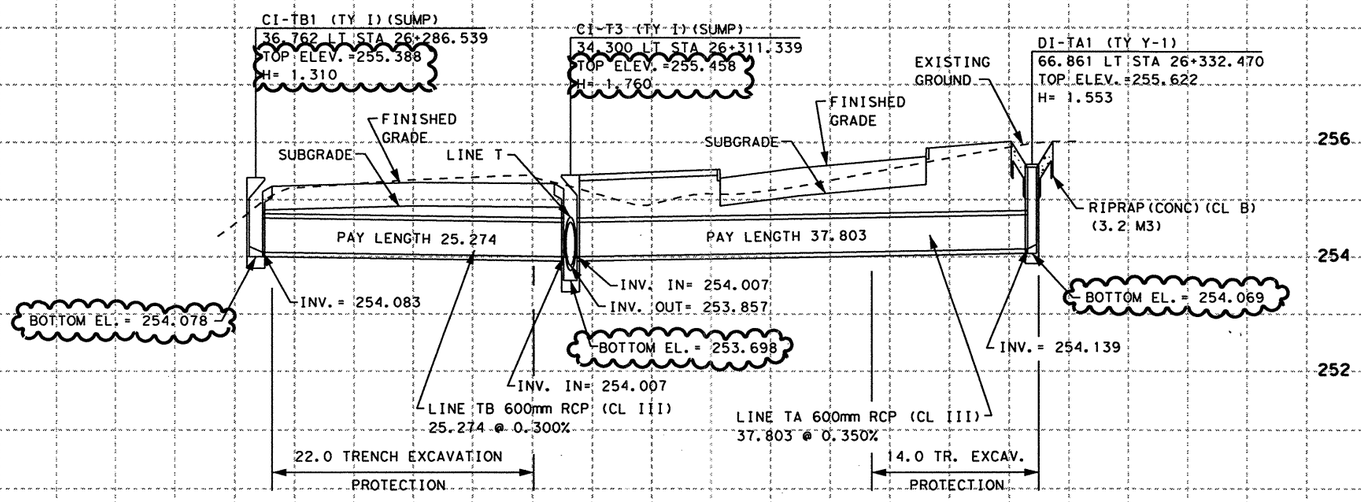


LINE TA & LINE TB
CSJ 2452-01-037

CHANGE ORDER NO. 64
-ADDED FLOWABLE BACKFILL
-ADDED CUT & RESTORE PVMNT
-REVISED/ADDED INLET ELEVATIONS

SCALE: H: 1:500
V: 1:100

ESTIMATED QUANTITIES

| DESCRIPTION | UNIT | EST. | FINAL |
|---|---|---|---|
| CSJ 2452-01-037 | | | |
| STRUCT EXCAV | M3 | 537.6 | |
| RC PIPE (CL III) (600MM) | M | 82.266 | |
| INLET (DROP) (TY Y-1) | EA | 1 | |
| RIPRAP (CONC) (CL B) | M3 | 3.2 | |
| TRENCH EXCAV PROTECT | M | 166.0 | |
| SET (TY II) (900MM) (RCP) (1:6) | EA | 1 | |
| PC PIPE (CL III) (750MM) | M | 64.410 | |
| RC PIPE (CL III) (900MM) | M | 32.926 | |
| INLET (COMPL) (CURB) (TY I) | EA | 4 | |
| CEMENT STAB BKFL | M3 | 10.9 | |
| CUT & RESTORE PVMNT | M2 | 26.2 | |

* SUPPLIED FOR CONTRACTOR'S INFORMATION ONLY

NOTES:

1. ALL PIPES ARE NORMAL TO AND STRAIGHT FROM STRUCTURE TO STRUCTURE UNLESS OTHERWISE SHOWN ON INTERIOR DRAINAGE LAYOUTS
2. CONTRACTORS SHALL SHAPE INVERTS OF ALL PROPOSED CURB INLETS, DROP INLETS AND MANHOLES TO PRODUCE POSITIVE FLOW THROUGH STRUCTURE FROM ALL INLETS TO THE OUTLET OF EACH STRUCTURE.
3. CONTRACTOR SHALL INSTALL ALL STORM DRAIN PIPES INTO MANHOLES, BOXES AND EXISTING STRUCTURES FLUSH WITH INSIDE FACE AND GROUT INTO PLACE, INSURING WATERTIGHT SEAL ALL AROUND.
4. ALL STATION AND OFFSET INFORMATION IS REFERENCED TO THE ℄ LOOP 1604 UNLESS OTHERWISE NOTED.
5. CONTRACTOR SHALL CONSTRUCT MANHOLES TO MINIMIZE CONFLICT WITH UTILITIES.
6. SET (TY II) CONSTRUCTION SHALL UTILIZE RIPRAP HEADWALL (MOD) STANDARD SHEET.
7. CONTRACTOR SHALL UTILIZE STEEL PLATING OVER TRENCH IN AREAS OF FLOWABLE BACKFILL UNTIL SUCH TIME AS THE BACKFILL IS READY FOR PAVING AND TRAFFIC
8. FLOWABLE BACKFILL MAY INCLUDE THE USE OF CEMENT STABILIZED BACKFILL AS APPROVED BY THE ENGINEER.

CHANGE ORDER 64

REVISED SHEET

STATE OF TEXAS
JEROME D. PAVLISKA
76075
REGISTERED PROFESSIONAL ENGINEER

Jerome D. Pavliska, P.E. 4-28-04
Jerome D. Pavliska, P.E. Date

© 2000 Texas Department of Transportation

LOOP 1604
STORM DRAIN PROFILES
LINES T, TA & TB

| DN: | | | | | | PROJECT NO. | | | |
|---|---|---|---|---|---|---|---|---|---|
| CK DN: | | | | | | NH 2000 (704), etc. | | | |
| DW: | CONTROL | SECTION | JOB | DIST. | STATE | COUNTY | HIGHWAY NO. | | SHEET NO. |
| CK: | | | | | | | | | |

PLOTTED ON:

T:\AUD\Design\lp1604\fm471-90\chg-order-files\394116STRM6.dgn

NOTE(S):

ALL DIMENSIONS ARE IN METERS UNLESS OTHERWISE NOTED.

| ESTIMATED QUANTITIES | | |
|---|---|---|
| ITEM | UNIT | QTY. |
| * STRUCT EXCAVATION | M3 | 25 |
| CEM STABIL BKFL | M3 | 20.5 |
| RIPRAP (CONC.)(CL B) | M3 | 1.3 |
| RC PIPE (CL III)(450 mm) | M | 16.4 |
| INLET (COMPL)(CURB)(TY IV) | EA | 1 |

* FOR CONTRACTOR'S INFORMATION ONLY.

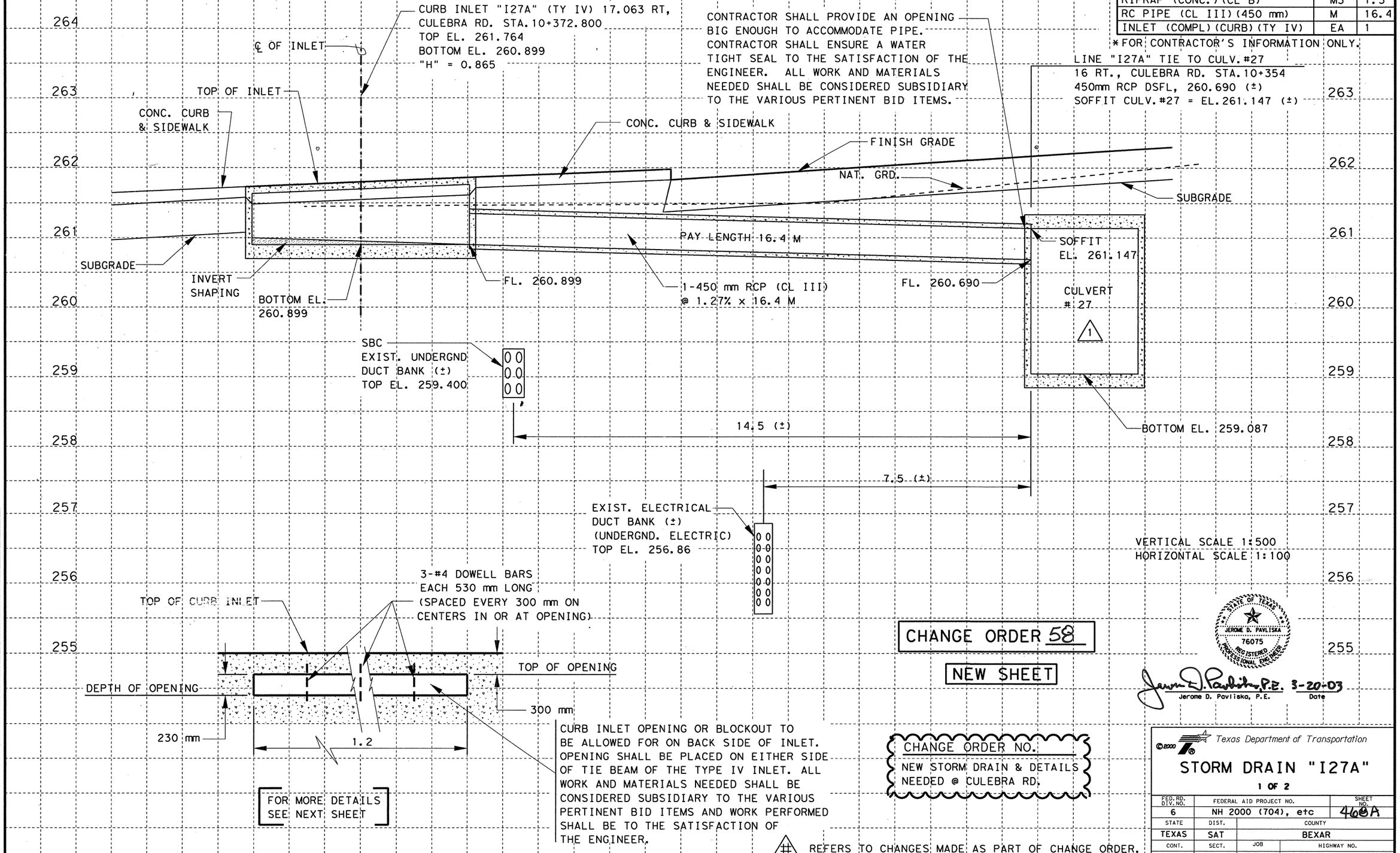


VERTICAL SCALE 1:500
HORIZONTAL SCALE 1:100




FOR MORE DETAILS SEE NEXT SHEET

CURB INLET OPENING OR BLOCKOUT TO BE ALLOWED FOR ON BACK SIDE OF INLET. OPENING SHALL BE PLACED ON EITHER SIDE OF TIE BEAM OF THE TYPE IV INLET. ALL WORK AND MATERIALS NEEDED SHALL BE CONSIDERED SUBSIDIARY TO THE VARIOUS PERTINENT BID ITEMS AND WORK PERFORMED SHALL BE TO THE SATISFACTION OF THE ENGINEER.

CHANGE ORDER 58

NEW SHEET

CHANGE ORDER NO.

NEW STORM DRAIN & DETAILS NEEDED @ CULEBRA RD.

(#) REFERS TO CHANGES MADE AS PART OF CHANGE ORDER.

STATE OF TEXAS
JEROME D. PAVLISKA
76075
REGISTERED PROFESSIONAL ENGINEER

Jerome D. Pavliska, P.E. 3-20-03
Jerome D. Pavliska, P.E. Date

©2000
Texas Department of Transportation

# STORM DRAIN "I27A"

1 OF 2

| FED. RD. DIV. NO. | FEDERAL AID PROJECT NO. | | SHEET NO. |
|---|---|---|---|
| 6 | NH 2000 (704), etc | | 46GA |
| STATE | DIST. | COUNTY | |
| TEXAS | SAT | BEXAR | |
| CONT. | SECT. | JOB | HIGHWAY NO. |
| 2452 | 01 | 036, etc. | LP 1604 |

3-19-03

LEVELS DISPLAYED
1 2 3 4 5 6 7 8 9 10 11 12 13 14 15 16 17 18 19 20 21 22 23 24 25 26 27 28 29 30 31 32 33 34 35 36 37 38 39 40 41 42 43 44 45 46 47 48 49 50 51 52 53 54 55 56 57 58 59 60 61 63

ACC: t:\ao\design\lp1604
FILE: ch misc det str 127a.

Plotted on: 09/19/00

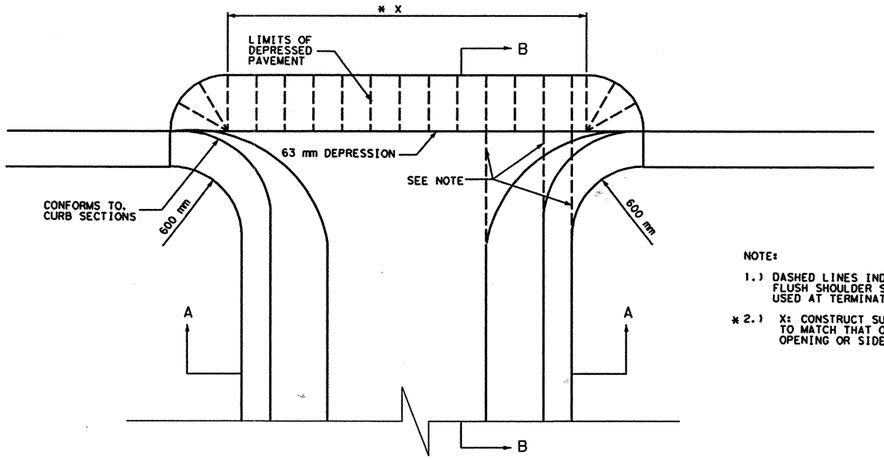


NOTE:

1.) DASHED LINES INDICATE LAYOUT OF FLUSH SHOULDER SIDE OF DRAIN WHEN USED AT TERMINATION OF CURB.

*2.) X: CONSTRUCT SUFFICIENT WIDTH TO MATCH THAT OF ARMORED CURB OPENING OR SIDEWALK DRAIN.

## SIDEWALK DRAIN
(SUBSIDIARY TO ITEM 531)

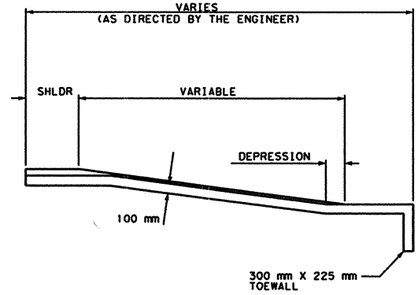


SECT B-B
NTS

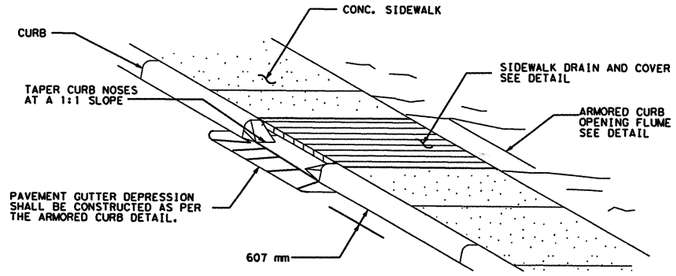


## SIDEWALK DRAIN
TYPICAL CURB TREATMENT
(SUBSIDIARY TO ITEM 531)
NTS

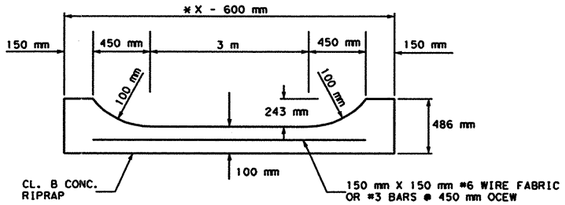


SECT A-A
NTS

## ARMORED CURB OPENING FLUME
NTS

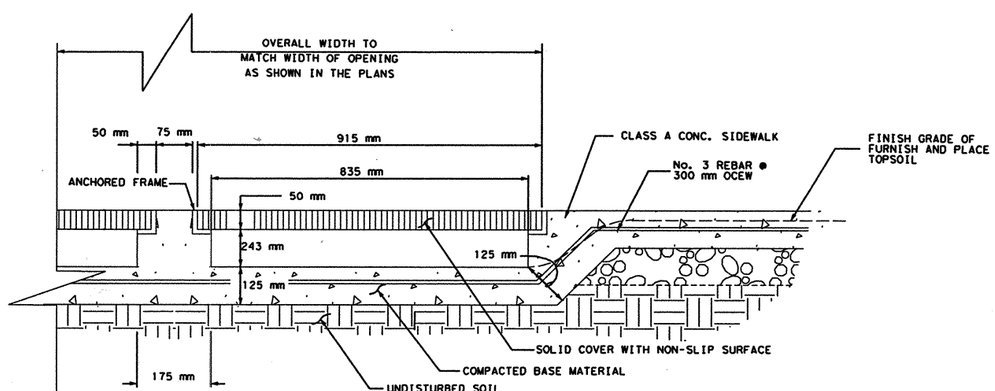


## SIDEWALK DRAIN TYPICAL HALF SECTION
(SUBSIDIARY TO ITEM 531)
NTS

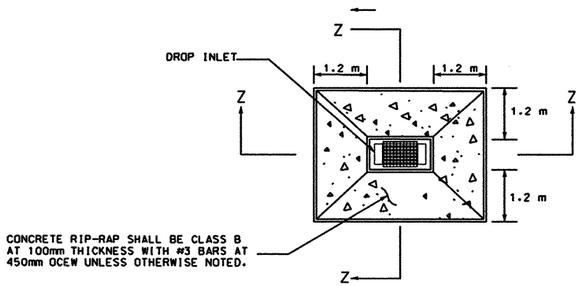


TYPICAL PLAN VIEW
NTS

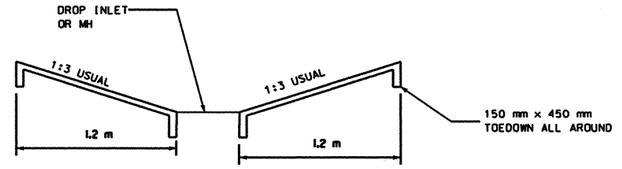


SECT Z-Z
TYPICAL SECTION
NTS

## DROP INLET & MANHOLE RIPRAP APRON DETAIL
NTS

NOT TO SCALE

555 EAST RAMSEY SAN ANTONIO TEXAS 78216
PHONE (210)375-9000
FAX (210)375-9010
PAPE-DAWSON ENGINEERS
CIVIL & ENVIRONMENTAL
STATE OF TEXAS K. STEPHEN BONNETTE 60928 REGISTERED PROFESSIONAL ENGINEER
9/20/00
K. STEPHEN BONNETTE, P.E. DATE

© 2000 Texas Department of Transportation

# LOOP 1604 MISCELLANEOUS DRAINAGE DETAILS

| DN: | | | | | PROJECT NO. | | |
|---|---|---|---|---|---|---|---|
| CK DN: | | | | | NH 2000 (704), etc. | | |
| DN: | CONTROL | SECTION | JOB | DIST. | STATE | COUNTY | HIGHWAY NO. | SHEET NO. |
| CK DW: | 2452 | 01 | 036 etc. | SAT | TX | BEXAR | LOOP 1604 | 470 |

Design Filename: j:\39411\16\Civil\Design\IntDA\SDWLK\DRAIN.DGN

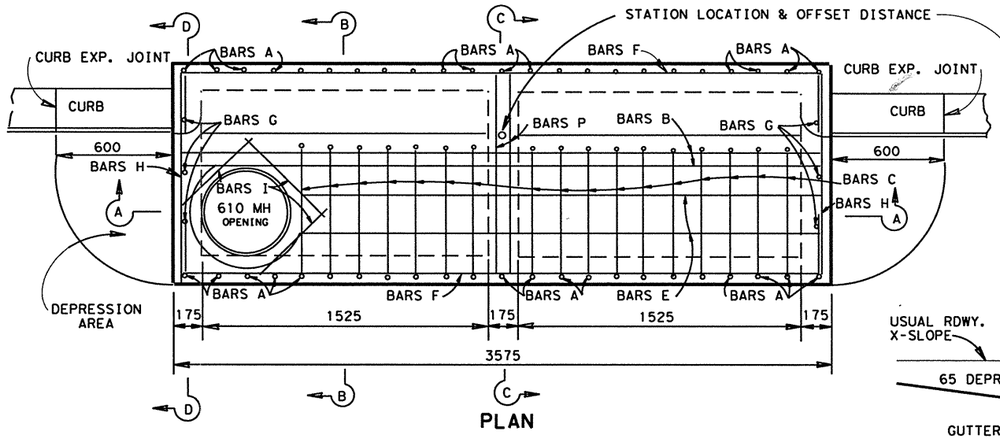


PLAN

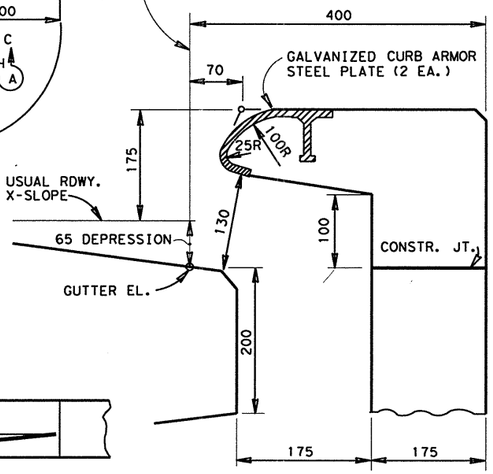


THROAT DETAIL

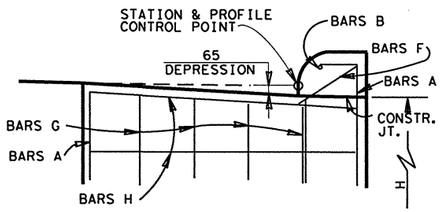


SECTION D-D

| REINFORCING STEEL | | | | | |
|---|---|---|---|---|---|
| ESTIMATED QUANTITIES - FOR "H" = 1475 | | | | | |
| BAR | NO. | SIZE | SPAC | LENGTH | MASS |
| A | 24 | #4 | 150 | 5010 | 120 |
| B | 4 | #5 | 75 | 3475 | 22 |
| C | 17 | #5 | 150 | 1740 | 46 |
| E | 2 | #4 | 200 | 2825 | 6 |
| F | 17 | #4 | 280 | 4295 | 73 |
| G | 6 | #4 | 280 | 1475 | 9 |
| H | 10 | #4 | 280 | 1325 | 13 |
| I | 3 | #4 | - | 710 | 2 |
| P | 6 | #5 | - | 1325 | 12 |
| | | | | | |
| | | | | | |
| TOTAL - REINF. STEEL - kg | | | | | 303 * |
| TOTAL - CLASS "C" CONC. - $m^3$ | | | | | 4.1 * |

* FOR CONTRACTOR'S INFORMATION ONLY.
NO DEDUCTION MADE FOR PIPES.
QUANTITIES SHOWN ARE FOR "H" = 1475
"H" WILL VARY

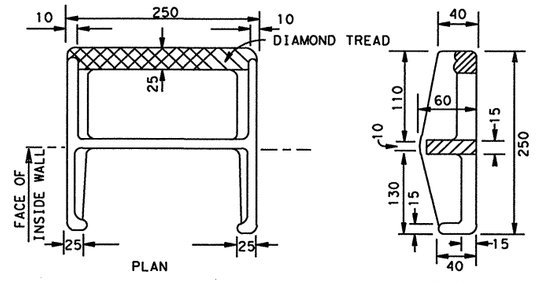


## DETAIL OF CAST IRON STEP FOR INLET

PLACE @ 380 SPACING WHEN "H" EXCEEDS 1200

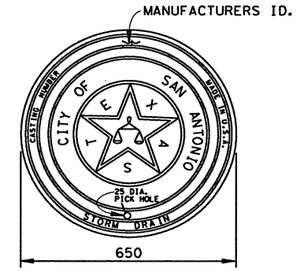


MINIMUM OF SIX
RIBS SPACED
EVENLY AROUND OUTSIDE
DIAMETER OF RING.

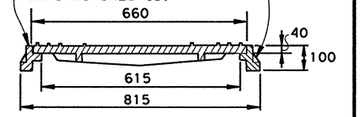


## MANHOLE
## RING & COVER DETAIL

NOTE: FOR COVERS NOT ON SAN ANTONIO CITY STREETS, DELETE "CITY OF SAN ANTONIO & SCALES OF JUSTICE". MANHOLE RING AND COVER SHALL BE DESIGNED FOR HEAVY DUTY ROADWAY SERVICE AND SHALL INCLUDE A LOCKING DEVICE FOR THE COVER. THE LOAD BEARING SURFACE SHALL BE MACHINE GROUND.

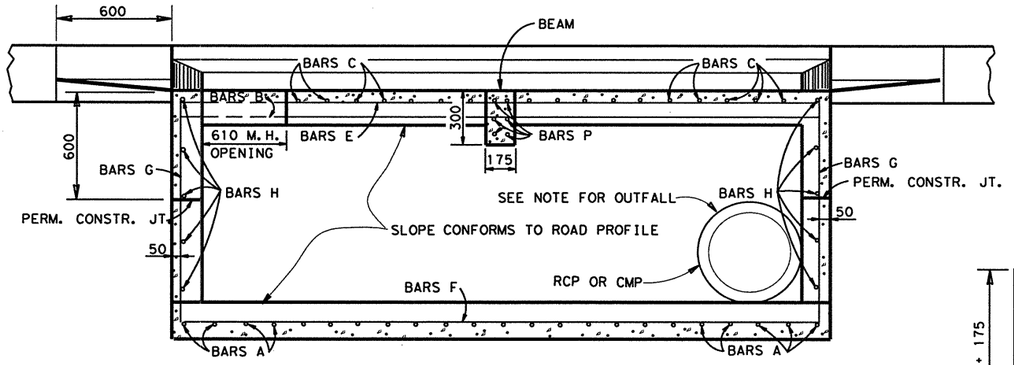


SECTION A-A

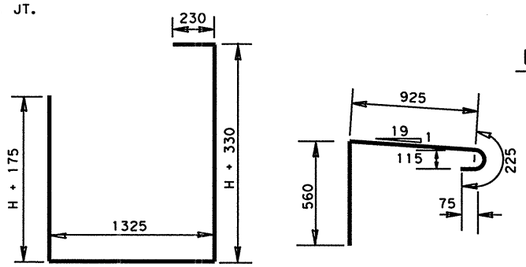


BAR A




BAR C

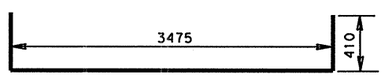


BAR F

BAR DETAILS

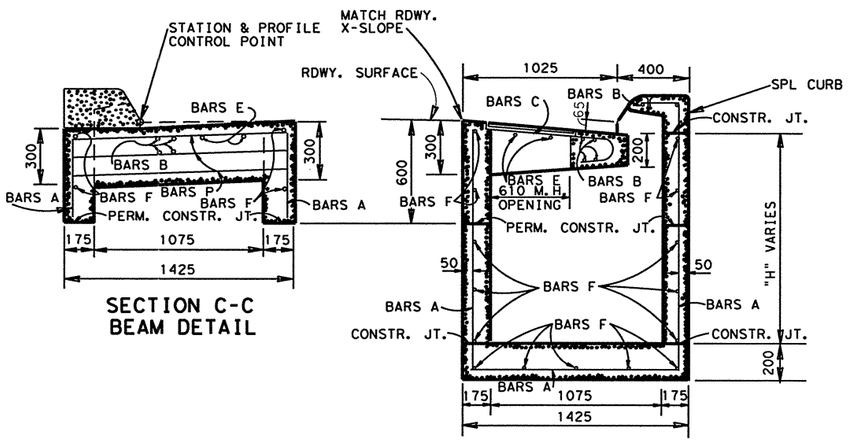


SECTION C-C
BEAM DETAIL

SECTION B-B

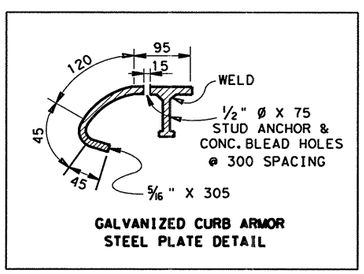


GALVANIZED CURB ARMOR
STEEL PLATE DETAIL

## GENERAL NOTES :

CURB MUST BE CAST-IN-PLACE FROM BEGIN GUTTER TRANSITION TO END GUTTER TRANSITION INCLUDING OVER INLET.

OUTFALL PIPES WHICH LAY TRANSVERSE TO ROADWAY, AT INLETS ON GRADE, WILL BE PLACED AT LOW END OF INLET. OTHER PIPES MAY BE PLACED ON ANY SIDE OF INLET.

PAYMENT FOR CONC., REINF. STEEL, M H RING & COVER, CURB ARMOR AND STEPS SHALL BE INCLUDED IN UNIT COST OF ITEM 465 "MANHOLE & INLETS".

EXCEPT FOR THE CURB ARMOR AND STUD ANCHOR THICKNESS, ALL DIMENSIONS SHOWN ARE IN mm.

ALL EXPOSED CORNERS SHALL HAVE A 20 CHAMFER.

© 1998 Texas Department of Transportation

# CURB INLET TYPE C(M)

## SAN ANTONIO DISTRICT STANDARD

12/95

| FED. RD. DIV. NO. | PROJECT NO. | | SHEET NO. |
|---|---|---|---|
| 6 | NH 2000 (704), etc. | | 471 |
| STATE | STATE DISTRICT | COUNTY | |
| TEXAS | SAT | BEXAR | |
| CONT. | SECT. | JOB | HIGHWAY NO. |
| 2452 | 01 | 036, etc. | LP 1604 |

STRUCTURE DESIGN
/BRIDGE/STDS/CURBINC.DGN

# REINFORCING STEEL

| LOWER UNIT 3050 X 1125 (TY. I) | | | | |
|---|---|---|---|---|
| BAR | NO. | SIZE | SPAC. | LENGTH |
| A | 12 | #4 | 300 | VARIES |
| B | 11 | #4 | 300 | 1405 |
| $B_1$ | VARIES | #4 | 300 | 1405 |
| $E_1$ | 20 | #4 | 450± | VARIES |
| $E_2$ | 6 | #4 | 450± | VARIES |
| $F_1$ | VARIES | #4 | 300± | 3330 |
| $F_2$ | 9 | #4 | — | 3330 |

| LOWER UNIT 3050 X 1525 (TY. II) | | | | |
|---|---|---|---|---|
| BAR | NO. | SIZE | SPAC. | LENGTH |
| A | 12 | #4 | 300 | VARIES |
| B | 11 | #4 | 300 | 1805 |
| $B_1$ | VARIES | #4 | 300 | 1805 |
| $E_1$ | 22 | #4 | 450± | VARIES |
| $E_2$ | 8 | #4 | 450± | VARIES |
| $F_1$ | VARIES | #4 | 300± | 3330 |
| $F_2$ | 11 | #4 | — | 3330 |

| LOWER UNIT 6100 X 1125 (TY. III) | | | | |
|---|---|---|---|---|
| BAR | NO. | SIZE | SPAC. | LENGTH |
| A | 22 | #4 | 300 | VARIES |
| B | 21 | #4 | 300 | 1405 |
| $B_1$ | VARIES | #4 | 300 | 1405 |
| $E_1$ | 34 | #4 | 450± | VARIES |
| $E_2$ | 6 | #4 | 450± | VARIES |
| $F_1$ | VARIES | #4 | 300± | 4015 |
| $F_2$ | 9 | #4 | — | 4015 |
| G | 4 | #4 | — | 1405 |
| H | 10 | #4 | 150 | 800 |

| LOWER UNIT 6100 X 1525 (TY. IV) | | | | |
|---|---|---|---|---|
| BAR | NO. | SIZE | SPAC. | LENGTH |
| A | 22 | #4 | 300 | VARIES |
| B | 21 | #4 | 300 | 1805 |
| $B_1$ | VARIES | #4 | 300 | 1805 |
| $E_1$ | 36 | #4 | 450± | VARIES |
| $E_2$ | 8 | #4 | 450± | VARIES |
| $F_1$ | VARIES | #4 | 300± | 4015 |
| $F_2$ | 11 | #4 | — | 4015 |
| G | 4 | #4 | — | 1805 |
| H | 13 | #4 | 150 | 800 |

TY V = TY I & TY III BOLTED TOGETHER

TYPE VII = 2 -TY III BOLTED TOGETHER

TY VI = TY II & TY IV BOLTED TOGETHER

TYPE VIII = 2 -TY IV BOLTED TOGETHER

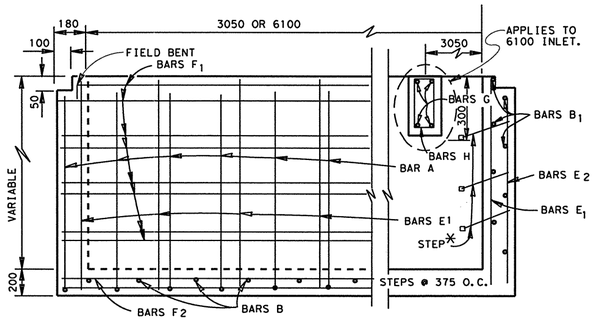


SECTION B-B

✳LOCATION OF STEPS WILL BE DETERMINED BY THE LOCATION OF RING & COVER.

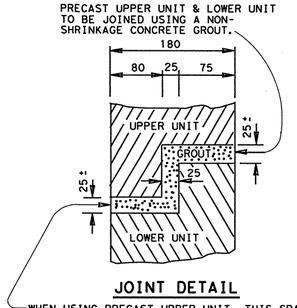


JOINT DETAIL

WHEN USING PRECAST UPPER UNIT, THIS SPACE IS FOR MAKING MINOR HORIZONTAL AND VERTICAL ADJUSTMENTS TO ACCOMODATE A FIT BETWEEN THE UPPER AND LOWER UNIT THAT ALLOWS FOR A MATCH LINE AND GRADE BETWEEN THE ROADWAY CURB AND THE UPPER UNIT OF THE INLET.

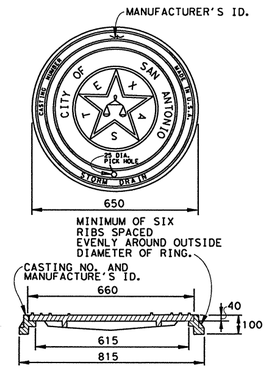


RING & COVER DETAIL

NOTE: FOR COVERS NOT ON SAN ANTONIO CITY STREETS, DELETE "CITY OF SAN ANTONIO & SCALES OF JUSTICE". MANHOLE RING AND COVER SHALL BE DESIGNED FOR HEAVY DUTY ROADWAY SERVICE AND SHALL INCLUDE A LOCKING DEVICE FOR THE COVER. THE LOAD BEARING SURFACE SHALL BE MACHINE GROUND.

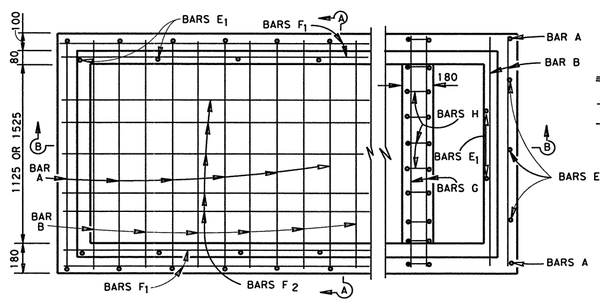


PLAN

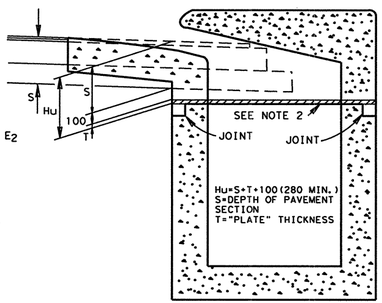


PHASE CONSTRUCTION

NOTES FOR PHASE CONSTRUCTION: (WHEN DIRECTED BY THE ENGINEER)

1. THE CURB INLET SHALL BE CONSTRUCTED TO A DEPTH "Hu" BELOW THE INLET GUTTER LINE ELEVATION.
2. CAP THE INLET WITH A STEEL PLATE APPROVED BY THE ENGINEER AND CONSTRUCT THE ROADWAY OVER THE PLATE.
3. AFTER THE RDWY. IS COMPLETED AND AFTER THE CURB IS PLACED (UP TO THE CONCRETE DEPRESSION) BUT PRIOR TO THE FINAL ACP, SAW CUT THE PAVEMENT, REMOVE THE PLATE AND COMPLETE THE UPPER PORTION OF THE CURB INLET.

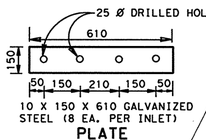


10 X 150 X 610 GALVANIZED STEEL (8 EA. PER INLET)

PLATE

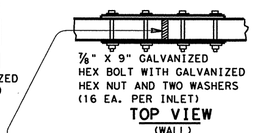


TOP VIEW (WALL)

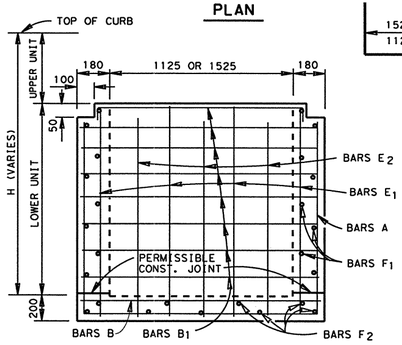


SECTION A-A

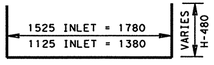


BARS A

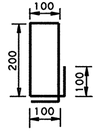


BAR H

## GENERAL NOTES:

ALL CONCRETE SHALL BE CLASS "A".
ALL DIMENSIONS FOR REINFORCING STEEL ARE TO CENTER OF BARS.
ALL REINFORCING STEEL SHALL HAVE A MINIMUM COVER OF 50.
QUANTITIES SHOWN ARE FOR CONTRACTORS INFORMATION ONLY.
BOLTS, NUTS, WASHERS AND PLATES SHALL BE GALVANIZED.
BOLTS, NUTS, WASHERS, PLATES AND GASKETS ARS SUBSIDIARY TO INLETS.
THE CONTRACTOR SHALL PROVIDE AN ADEQUATE MEANS TO LIFT AND PLACE THE INLETS, WHEN USING PRECAST UNITS.
ALL BARS AT PIPE BLOCKOUT LOCATIONS SHALL BE CUT OR BEND.
ALL LOWER UNITS SHALL RECEIVE INVERT MORTAR SHAPING.
PIPE BLOCKOUTS IN INLET WALLS SHALL NOT EXCEED 75 BEYOND THE OUTER SHELL OF THE PIPE, TAKING INTO ACCOUNT THE SKEW OF THE PIPE AS NECESSARY.
COMMERCIAL STEPS (APPROVED BY THE ENGINEER) SHALL BE PROVIDED AND INSTALLED IN INLETS WHERE "H" EXCEEDS 1200.
CONSTRUCTION JOINT MAY BE RAISED A MAXIMUM OF 150.

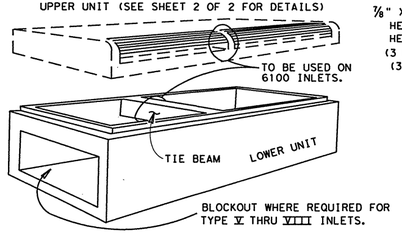


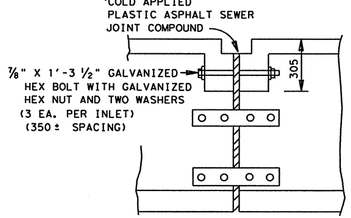


SIDE VIEW

TO BE USED ON TYPE V THRU VIII INLETS.

INLET BOLTING DETAILS

# SAN ANTONIO DISTRICT STANDARD

# CURB INLET

# TYPE I THRU VIII (M)

# LOWER UNIT

© 1998 Texas Department of Transportation

SHEET 1 OF 2

| FED. RD. DIV. NO. | PROJECT NO. | | SHEET NO. |
|---|---|---|---|
| 6 | NH 2000 (704), etc. | | 472 |
| STATE | STATE DISTRICT | COUNTY | |
| TEXAS | SAT | BEXAR | |
| CONT. | SECT. | JOB | HIGHWAY NO. |
| 2452 | 01 | 036, etc. | LP 1604 |

12/95

STRUCTURE DESIGN
/BRIDGE/STDS/CURBINLOW.DGN

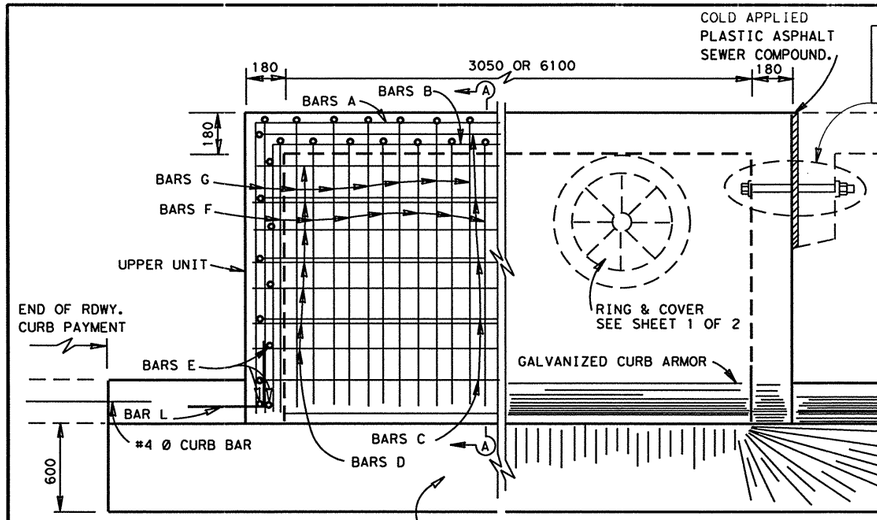


PLAN

INLETS V THRU VIII ONLY. 3 EA.- TIE BOLTS ARE TO BE USED ON UPPER UNITS. BOLT: ⅞" X 16" WITH 1 HEX. NUT AND 2 WASHERS SPACED AT 350. ±

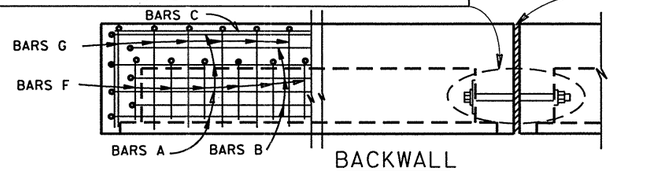


BACKWALL

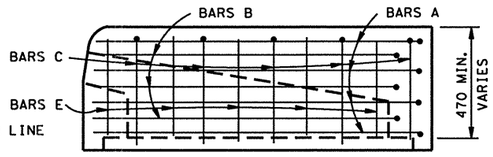


END WALL

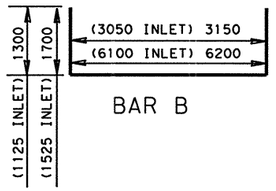


BAR B

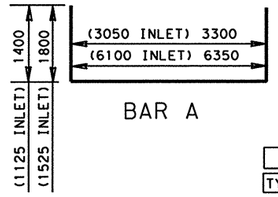


BAR A

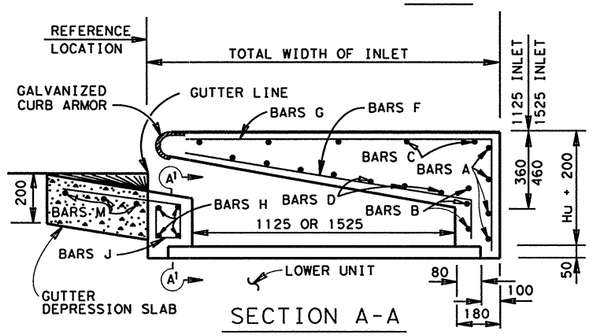


SECTION A-A

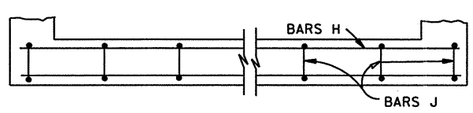


SECTION A¹ -A¹

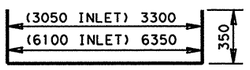


BAR C

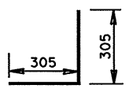


BAR L

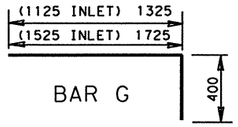


BAR G

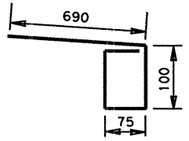


BAR J

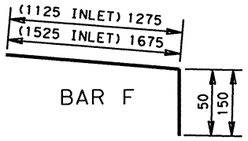


BAR F

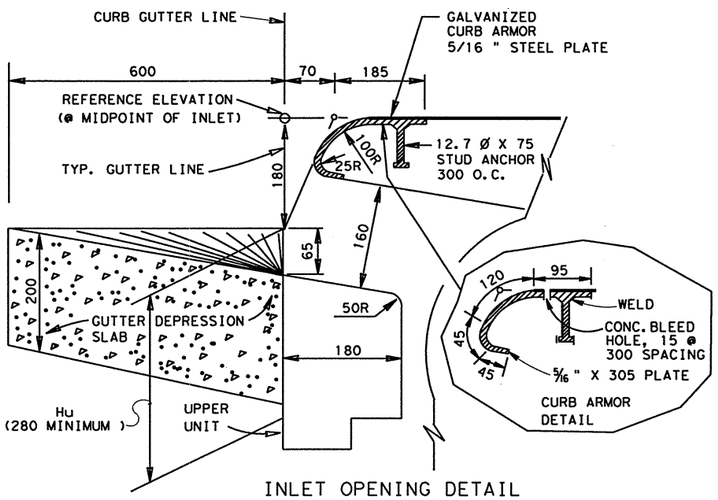


INLET OPENING DETAIL

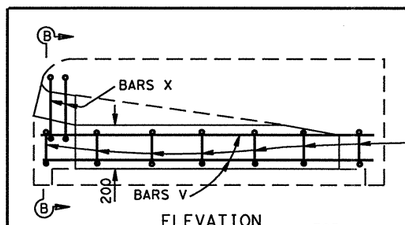


ELEVATION

NOTE: TIE BEAM SHALL BE USED ON 6100 INLETS. LOCATED IN THE CENTER.

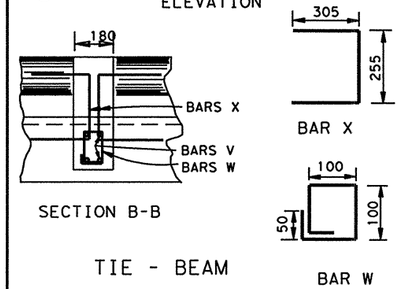


SECTION B-B




TIE - BEAM

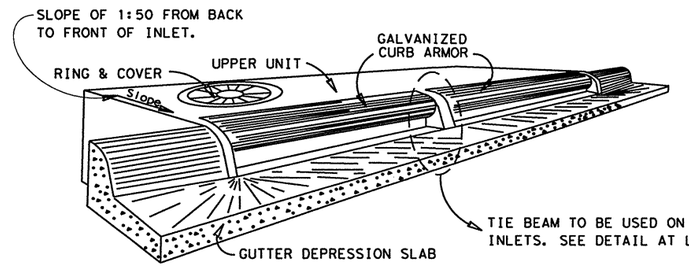


## REINFORCING STEEL (FOR Hu = 280)

UPPER UNIT 3050 X 1125 (TY. I )

| BAR | NO. | SIZE | SPAC. | LENGTH | MASS |
|---|---|---|---|---|---|
| A | 4 | #4 | — | 6100 | 24 |
| B | 3 | #4 | — | 5750 | 17 |
| C | 5 | #4 | 300 | 4000 | 20 |
| D | 9 | #4 | 150 | 3310 | 30 |
| E | 12 | #4 | 300 | 350 | 4 |
| F | 21 | #6 | 150 | 1425 | 67 |
| G | 22 | #6 | 150 | 1725 | 85 |
| H | 4 | #4 | — | 3310 | 13 |
| J | 12 | #4 | 300 | 1190 | 14 |
| L | 4 | #4 | — | 610 | 2 |
| M | 3 | #4 | — | 4450 | 13 |
| TOTAL | | | | kg | 289 |

UPPER UNIT 3050 X 1525 (TY. II )

| BAR | NO. | SIZE | SPAC. | LENGTH | MASS |
|---|---|---|---|---|---|
| A | 4 | #4 | — | 6900 | 27 |
| B | 3 | #4 | — | 6550 | 20 |
| C | 7 | #4 | 300 | 4000 | 28 |
| D | 11 | #4 | 150 | 3310 | 36 |
| E | 16 | #4 | 300 | 350 | 6 |
| F | 21 | #6 | 150 | 1725 | 81 |
| G | 22 | #6 | 150 | 2125 | 104 |
| H | 4 | #4 | — | 3310 | 13 |
| J | 12 | #4 | 300 | 1190 | 14 |
| L | 4 | #4 | — | 610 | 2 |
| M | 3 | #4 | — | 4450 | 13 |
| TOTAL | | | | kg | 344 |

UPPER UNIT 6100 X 1125 (TY. III )

| BAR | NO. | SIZE | SPAC. | LENGTH | MASS |
|---|---|---|---|---|---|
| A | 4 | #4 | — | 9150 | 36 |
| B | 3 | #4 | — | 8800 | 26 |
| C | 5 | #4 | 300 | 7050 | 35 |
| D | 9 | #4 | 150 | 6360 | 57 |
| E | 12 | #4 | 300 | 350 | 4 |
| F | 41 | #6 | 150 | 1425 | 131 |
| G | 42 | #6 | 150 | 1725 | 162 |
| H | 4 | #4 | — | 6360 | 25 |
| J | 22 | #4 | 300 | 1190 | 26 |
| L | 4 | #4 | — | 610 | 2 |
| M | 3 | #4 | — | 7500 | 22 |
| V | 4 | #4 | — | 1385 | 6 |
| W | 7 | #4 | 200 | 500 | 3 |
| X | 4 | #4 | — | 865 | 3 |
| TOTAL | | | | kg | 538 |

UPPER UNIT 6100 X 1525 (TY. IV )

| BAR | NO. | SIZE | SPAC. | LENGTH | MASS |
|---|---|---|---|---|---|
| A | 4 | #4 | — | 9950 | 40 |
| B | 3 | #4 | — | 9600 | 29 |
| C | 7 | #4 | 300 | 7050 | 49 |
| D | 11 | #4 | 150 | 6360 | 70 |
| E | 16 | #4 | 300 | 350 | 6 |
| F | 41 | #6 | 150 | 1725 | 158 |
| G | 42 | #6 | 150 | 2125 | 199 |
| H | 4 | #4 | — | 6360 | 25 |
| J | 22 | #4 | 300 | 1190 | 26 |
| L | 4 | #4 | — | 610 | 2 |
| M | 3 | #4 | — | 7500 | 22 |
| V | 4 | #4 | — | 1785 | 7 |
| W | 10 | #4 | 200 | 500 | 5 |
| X | 4 | #4 | — | 865 | 3 |
| TOTAL | | | | kg | 641 |

TY V = TY I & TY III BOLTED TOGETHER

TY VII = TY III & TY III BOLTED TOGETHER

TY VI = TY II & TY IV BOLTED TOGETHER

TY VIII = TY IV & TY IV BOLTED TOGETHER

## CONCRETE QUANTITIES

| GUTTER DEPRESSION SLAB | m3 |
|---|---|
| 6100 INLET | 0.9 |
| 3050 INLET | 0.5 |

## CONCRETE QUANTITIES

| UPPER UNIT (ONLY) | m3 |
|---|---|
| 6100 X 1525 | 2.9 |
| 6100 X 1125 | 2.3 |
| 3050 X 1525 | 1.6 |
| 3050 X 1125 | 1.2 |

## GENERAL NOTES:

ALL BARS INTERCEPTING MANHOLE RING & COVER SHALL BE CUT OR BENT.
ALL CONCRETE SHALL BE CLASS "A".
ALL DIMENSIONS RELATING TO REINFORCING STEEL ARE TO CENTER OF BARS.
ALL EXPOSED CORNERS SHALL BE CHAMFERED 20.
RING & COVER LOCATION WILL BE AS DIRECTED/APPROVED BY THE ENGINEER.
BOLTS, NUTS & WASHERS SHALL BE GALVANIZED.
QUANTITIES SHOWN ARE FOR CONTRACTORS INFORMATION ONLY.
GUTTER DEPRESSION SLAB SHALL RECEIVE A WOOD FLOAT FINISH.
SEE SHEET 1 OF 2 FOR FIT BETWEEN UPPER AND LOWER UNITS.
FACE OF INLET TO CONFORM TO FACE OF CURB LINE.
PAYMENT FOR CONC., STEEL, RING & COVER, STEPS, ETC. SHALL BE INCLUDED IN UNIT COST OF ITEM 465 "MANHOLES & INLETS.
ALL DIMENSIONS ARE IN mm UNLESS OTHERWISE SHOWN.

# SAN ANTONIO DISTRICT STANDARD
# CURB INLET
## TYPE I THRU VIII (M)
## UPPER UNIT

© 1998 Texas Department of Transportation

SHEET 2 OF 2

| FED.RD. DIV.NO. | PROJECT NO. | | SHEET NO. |
|---|---|---|---|
| 6 | NH 2000 (704), etc. | | 473 |
| STATE | STATE DISTRICT | COUNTY | |
| TEXAS | SAT | BEXAR | |
| CONT. | SECT. | JOB | HIGHWAY NO. |
| 2452 | 01 | ETC. | LP 1604 |

12/95

STRUCTURE DESIGN
/BRISGE/STDS/CURBINUP.DGN

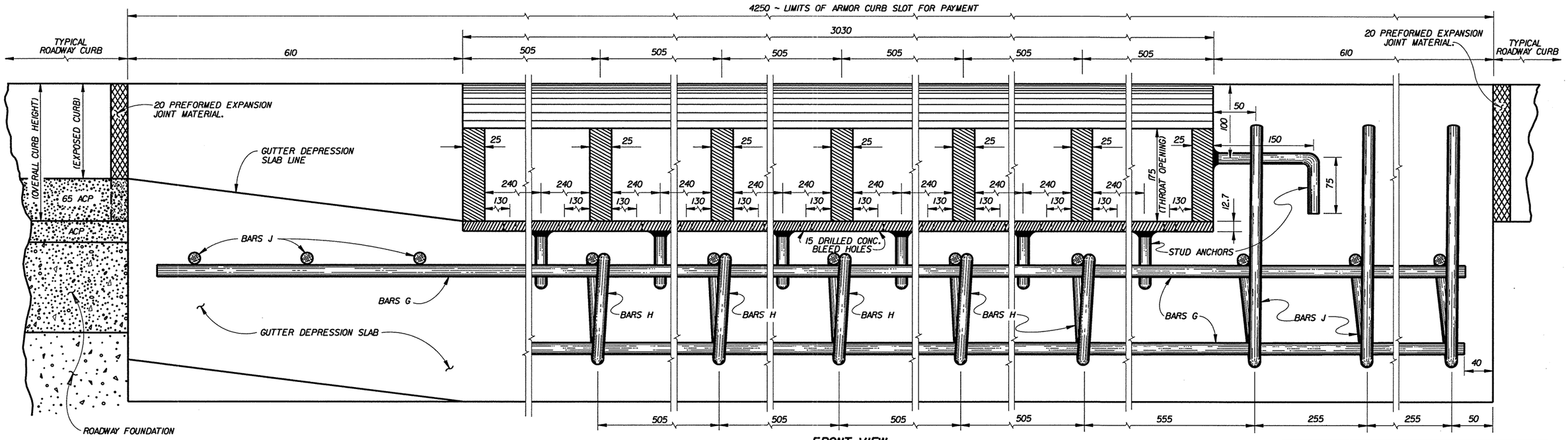


FRONT VIEW

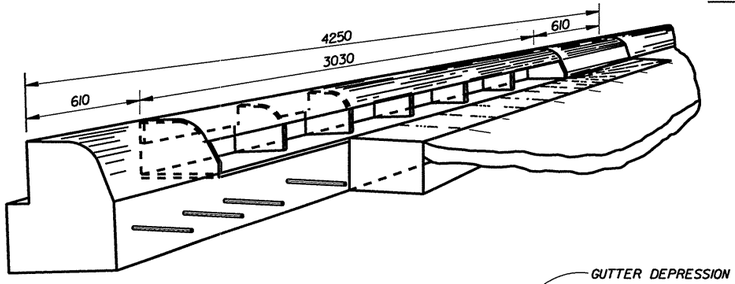


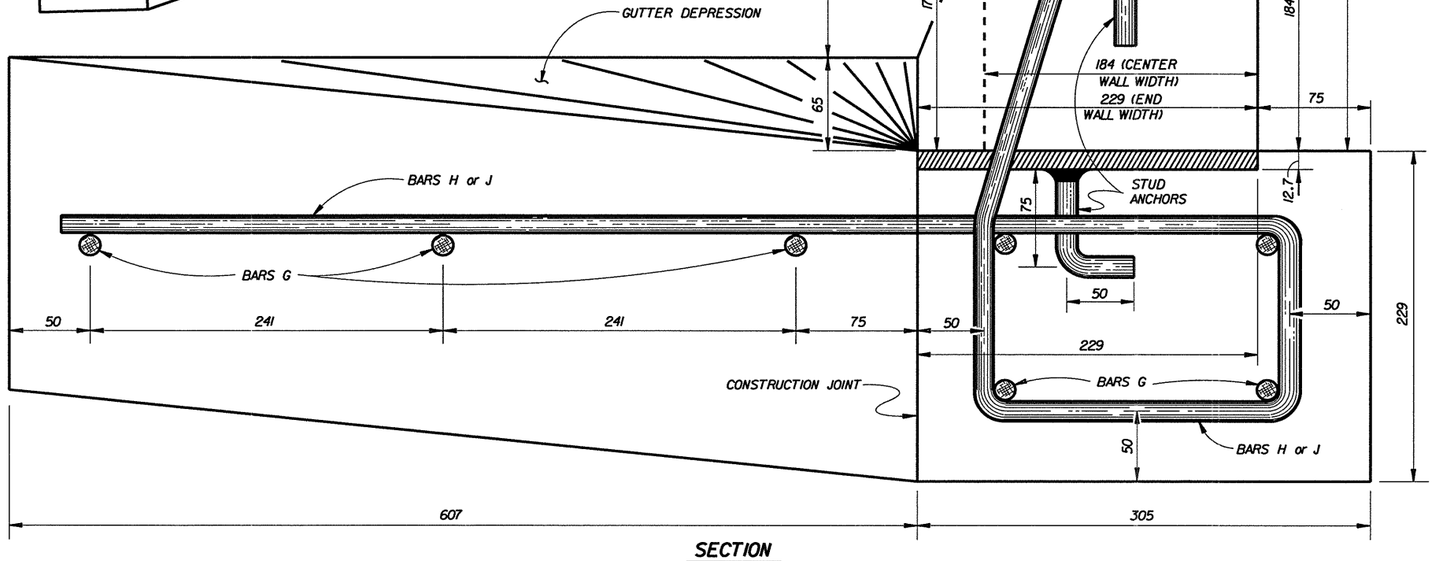


SECTION

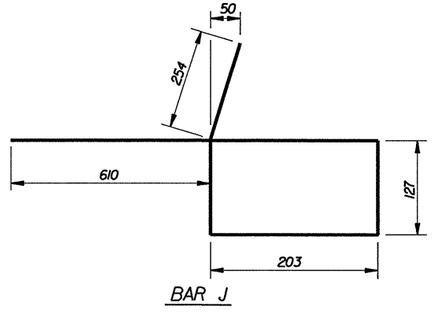


BAR J

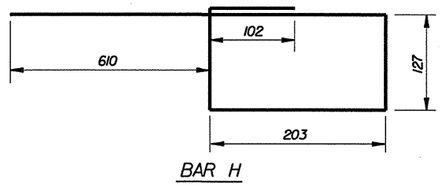


BAR H

## ESTIMATED QUANTITIES
### FOR REINFORCING STEEL

| BAR | NO. | SIZE | SPAC. | LENGTH | WEIGHT |
|---|---|---|---|---|---|
| G | 7 | #4 | SHOWN | 4170 | 29 |
| H | 5 | #4 | 508 | 1372 | 7 |
| J | 6 | #4 | 203 | 1524 | 9 |
| TOTAL WEIGHT * | | | | kg | 45 |
| CONCRETE FOR FOUNDATION * | | | | m3 | 0.36 |
| CONCRETE FOR GUTTER DEPRESSION * | | | | m3 | 0.60 |

| STRUCTURAL STEEL FOR ARMOR CURB SLOT | | |
|---|---|---|
| STUD ANCHORS ( 12.7 DIA.) | kg | 2 |
| STEEL PLATE | kg | 205 |
| TOTAL WEIGHT * | kg | 207 |

* FOR CONTRACTORS INFO ONLY.

GENERAL NOTES:

ALL CONCRETE SHALL BE CL."A".

ALL DIMENSIONS RELATING TO REINFORCING STEEL ARE TO CENTER OF BARS.

ALL SIDES OF ARMOR CURB SLOT AND STUD ANCHORS SHALL BE 6 mm FILLET WELDS.

ALL EXPOSED STRUCTURAL STEEL (ARMOR) SHALL BE GALVANIZED.

ALL EXPOSED EDGES ON ARMOR CURB SHALL RECEIVE A 3 mm BEVEL.

THE SHAPE OF THE TYPICAL ROADWAY CURB SHALL TRANSITION TO THE ARMOR CURB AS APPROVED BY THE ENGINEER.

# ARMOR CURB SLOT(M)
## WITH CONCRETE FOUNDATION
## SAN ANTONIO DISTRICT STANDARD

© 1998 Texas Department of Transportation

| FED. RD. DIV. NO. | PROJECT NO. | | SHEET NO. |
|---|---|---|---|
| 6 | NH 2000 (704), etc. | | 474 |
| STATE | STATE DISTRICT | COUNTY | |
| TEXAS | SAT | BEXAR | |
| CONT. | SECT. | JOB | HIGHWAY NO. |
| 2452 | 01 | 035, etc. | LP 1604 |

06/96

STRUCTURE DESIGN
/BRIDGE/STDS/ARMORCURB.DGN

## NOTES :

1. ALL CONCRETE SHALL BE CLASS "A". COARSE AGGREGATE GRADE "4" MAY BE USED.
2. DIMENSIONS RELATING TO REINFORCING STEEL ARE TO CENTER OF BARS.
3. PAYMENT FOR CONC., STEEL & GRATE SHALL BE INCLUDED IN THE UNIT COST OF ITEM 465 "MANHOLES & INLETS".
4. THE STATION LOCATION AND OFFSET DISTANCE SHOWN IN THE PLANS IS TO THE CENTER OF THE INLET.
5. RIPRAP BASIN AROUND THE INLET WHEN SHOWN IN THE PLANS IS PAID FOR UNDER ITEM 432.
6. THE WORK FOR THE BLOCKOUT IN THE BOX CULVERT DECK FOR A PROPOSED CULVERT OR THE BREAKOUT OF THE DECK ON AN EXIST. BOX IS SUBSIDIARY TO THE INLET.
7. ALL EXPOSED CORNERS SHALL HAVE A 20 CHAMFER.
8. ALL DIMENSIONS ARE IN mm UNLESS SHOWN OTHERWISE

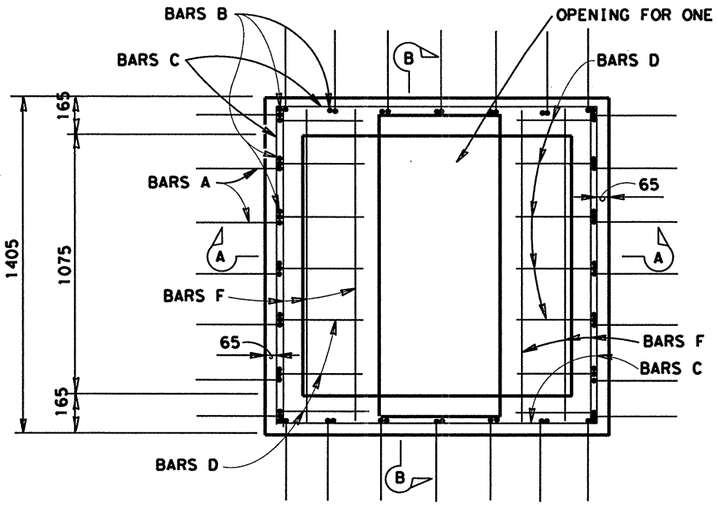


PLAN VIEW

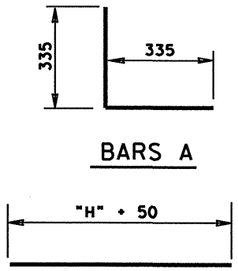


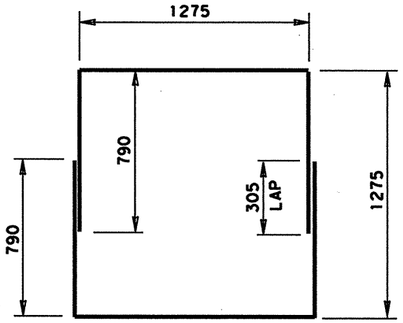


2 BARS @ EACH SPACING

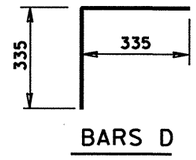


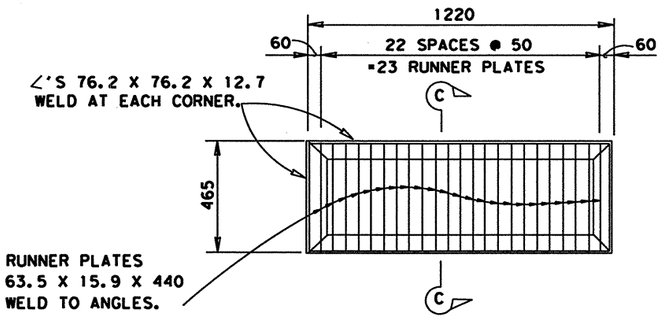


GRATE - TYPE 2

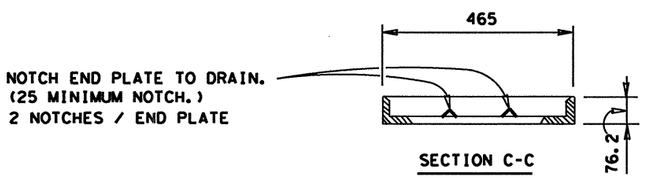


SECTION C-C

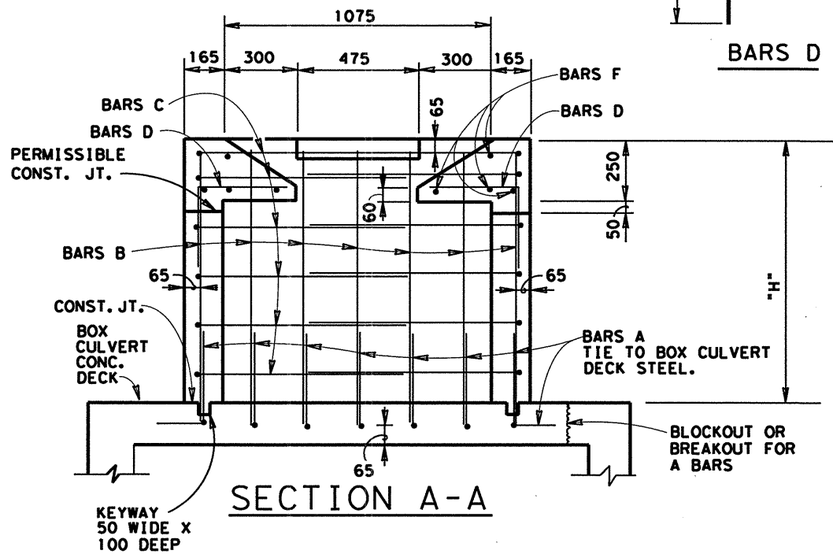


SECTION A-A

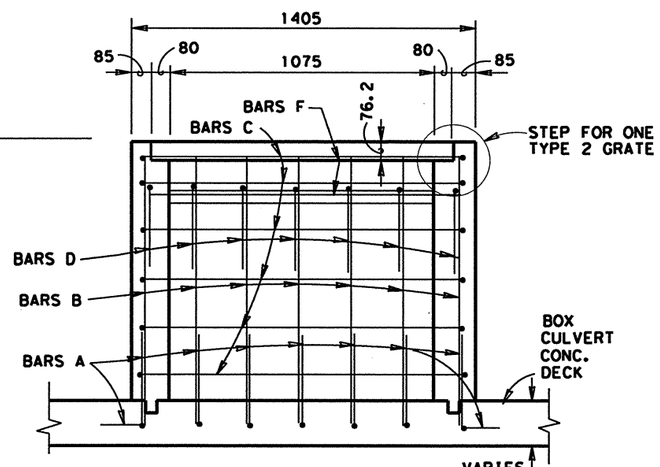


SECTION B-B

QUANTITIES VARY WITH "H"

| ESTIMATED QUANTITIES FOR "H" = 1000 | | | | | |
|---|---|---|---|---|---|
| REINFORCING STEEL | | | | | |
| BAR | NO. | SIZE | SPACING | LENGTH | MASS |
| A | 28 | #4 | 200 ± | 670 | 19 |
| B | 24 | #4 | 200 ± | 1050 | 25 |
| C | 10 | #4 | 200 ± | 2855 | 28 |
| D | 14 | #4 | 200 ± | 670 | 9 |
| F | 8 | #5 | AS SHOWN | 1275 | 16 |
| TOTAL REINFORCING STEEL (kg) | | | | | 97 * |
| CL A CONCRETE ($M^3$) = 0.9 * | | | | | |
| GRATE TYPE 2 (EA.) = 1 * | | | | | |

* FOR CONTRACTOR'S INFORMATION ONLY

SPACING AND LENGTH IS TO THE NEAREST mm.
MASS IS TO THE NEAREST kg.

# DROP INLET TYPE 3A(M)
## GRATE TYPE 2(M)
## SAN ANTONIO DISTRICT STANDARD

©1998 Texas Department of Transportation

| FED. RD. DIV. NO. | PROJECT NO. | | SHEET NO. |
|---|---|---|---|
| 6 | NH 2000 (704), etc. | | 475 |
| STATE | STATE DISTRICT | COUNTY | |
| TEXAS | SAT | BEXAR | |
| CONT. | SECT. | JOB | HIGHWAY NO. |
| 2452 | 01 | 036, etc. | LP 1604 |

12/95

STRUCTURE DESIGN
/BRIDGE/STDS/DROPIN3A.DGN

## NOTES :

1. ALL CONCRETE SHALL BE CLASS "A". COARSE AGGREGATE GRADE "4" MAY BE USED.
2. DIMENSIONS RELATING TO REINFORCING STEEL ARE TO CENTER OF BARS.
3. REINFORCING STEEL SHALL BE FIELD BENT OR CUT TO ALLOW FOR INSTALLATION OF PIPE(S).
4. PIPES MAY BE PLACED ON ANY SIDE(S) AS INDICATED IN THE PLANS.
5. PAYMENT FOR GRATE, CONC. & STEEL SHALL BE INCLUDED IN THE UNIT COST OF ITEM 465 "MANHOLES & INLETS".
6. THE STATION LOCATION AND OFFSET DISTANCE SHOWN IN THE PLANS IS TO THE CENTER OF THE INLET.
7. RIPRAP BASIN AROUND THE INLET WHEN SHOWN IN THE PLANS IS PAID FOR UNDER ITEM 432.
8. ALL EXPOSED CORNERS SHALL HAVE A 20 CHAMFER.
9. ALL DIMENSIONS ARE IN mm UNLESS SHOWN OTHERWISE.

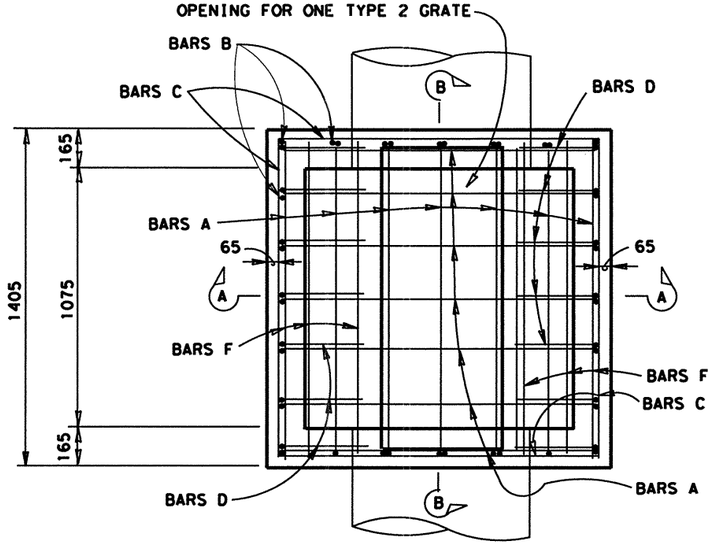


PLAN VIEW

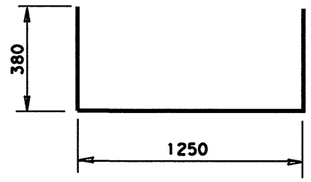


BARS A

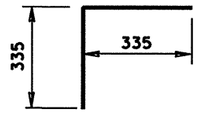


BARS D

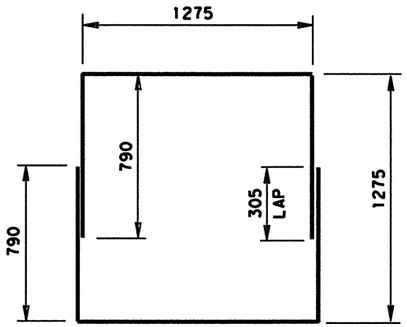


BARS C

2 BARS @ EACH SPACING

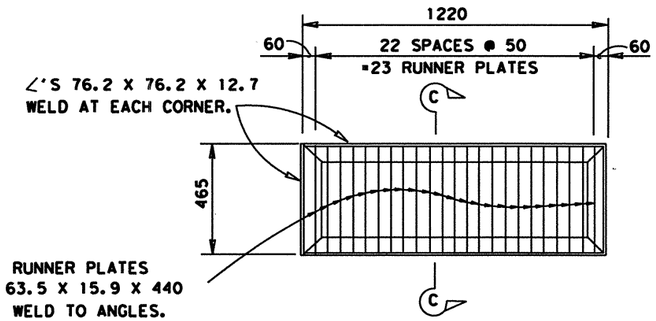


GRATE - TYPE 2

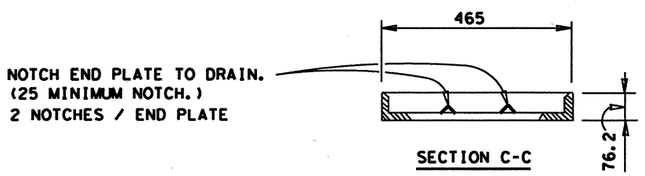


SECTION C-C

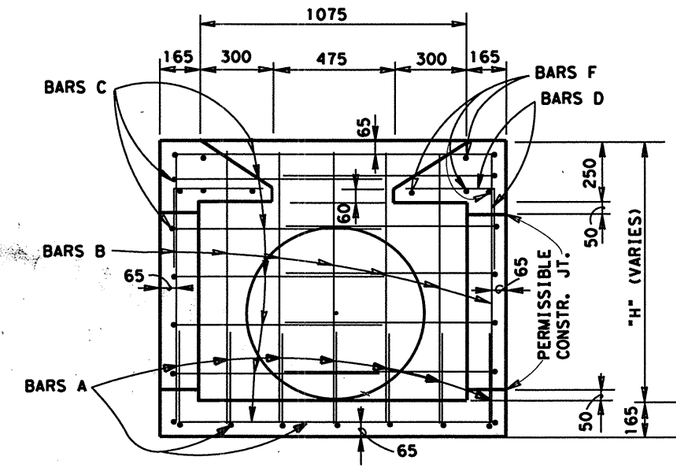


SECTION A-A

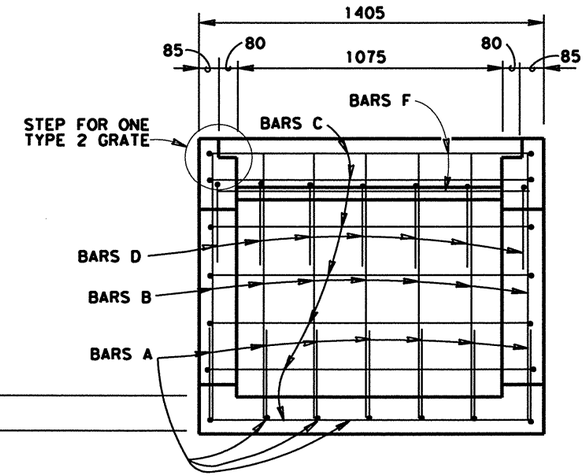


SECTION B-B

| ESTIMATED QUANTITIES FOR "H"= 1000 | | | | | |
|---|---|---|---|---|---|
| REINFORCING STEEL | | | | | |
| BAR | NO. | SIZE | SPACING | LENGTH | MASS |
| A | 14 | #4 | 200 ± | 2010 | 28 |
| B | 24 | #4 | 200 ± | 1050 | 25 |
| C | 12 | #4 | 200 ± | 2855 | 34 |
| D | 14 | #4 | 200 ± | 670 | 9 |
| F | 8 | #5 | AS SHOWN | 1275 | 16 |
| TOTAL REINFORCING STEEL (kg) = 112 * | | | | | |
| CL A CONCRETE ($M^3$) = 1.3 * | | | | | |
| GRATE TYPE 2 (EA.) = 1 * | | | | | |

QUANTITIES VARY WITH "H"

* FOR CONTRACTOR'S INFORMATION ONLY.

SPACING AND LENGTH IS TO NEAREST mm.
MASS IS TO THE NEAREST kg.

CHANGE ORDER 28

NEW SHEET

# DROP INLET TYPE 3(M)

## GRATE TYPE 2(M)

## SAN ANTONIO DISTRICT STANDARD

© 1998 Texas Department of Transportation

| FED.RD. DIV.NO. | PROJECT NO. | | SHEET NO. |
|---|---|---|---|
| 6 | NH 2000 (704), ETC. | | 475A |
| STATE | STATE DISTRICT | COUNTY | |
| TEXAS | SAT | BEXAR | |
| CONT. | SECT. | JOB | HIGHWAY NO. |
| 2452 | 01 | 036 | LP 1604 |

12/95

2-11-03

STRUCTURE DESIGN
/BRIDGE/STDS/DROPIN3.DGN

NOTES :

1. ALL CONCRETE SHALL BE CLASS "A". COURSE AGGREGATE GRADE "4" MAY BE USED.
2. DIMENSIONS RELATING TO REINFORCING STEEL ARE TO CENTER OF BARS.
3. REINFORCING STEEL SHALL BE FIELD BENT OR CUT TO ALLOW FOR INSTALLATION OF PIPE(S).
4. PIPES MAY BE PLACED ON ANY SIDE(S) AS INDICATED IN THE PLANS.
5. PAYMENT FOR GRATES, CONC. & STEEL SHALL BE INCLUDED IN THE UNIT COST OF ITEM 465 "MANHOLES & INLETS".
6. THE STATION LOCATION AND OFFSET DISTANCE SHOWN IN THE PLANS IS TO THE CENTER OF THE INLET.
7. RIPRAP BASIN AROUND THE INLET WHEN SHOWN IN THE PLANS IS PAID FOR UNDER ITEM 432.
8. ALL EXPOSED CORNERS SHALL HAVE A 20 CHAMFER.
9. ALL DIMENSIONS ARE IN mm UNLESS SHOWN OTHERWISE.

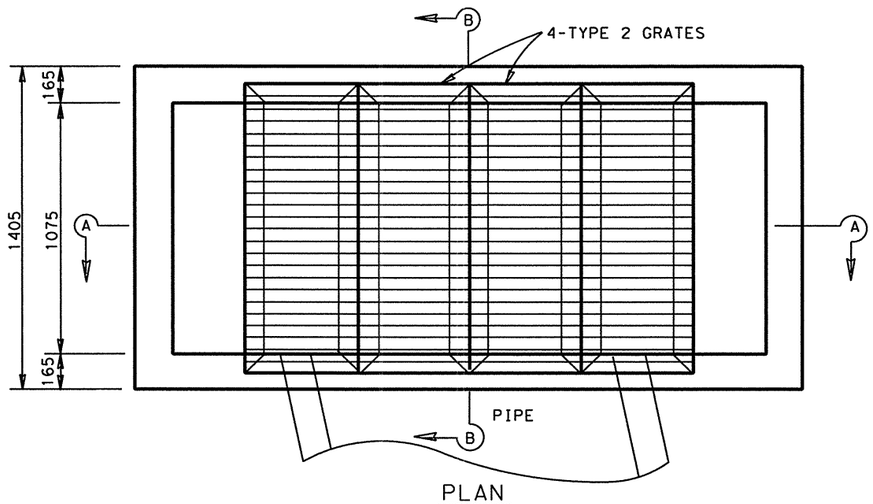


PLAN

| REINFORCING STEEL | | | | |
|---|---|---|---|---|
| BAR | NO. | SIZE | SPACING | LENGTH |
| R | 13 | # 4 | 230 ± | 2525 |
| S | 5 | # 4 | 230 ± | 3890 |
| T | 36 | # 4 | 230 ± | VARIES |
| U | VARIES | # 4 | 230 ± | 2525 |
| V | VARIES | # 4 | 230 ± | 2100 |
| | | | | |
| | | | | |

TOTAL CONCRETE AND STEEL WILL VARY WITH "H"

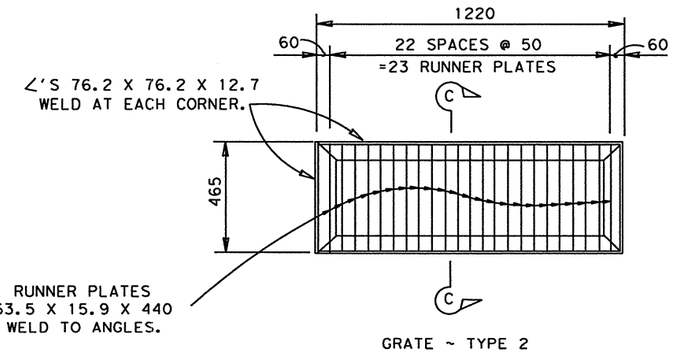


GRATE ~ TYPE 2

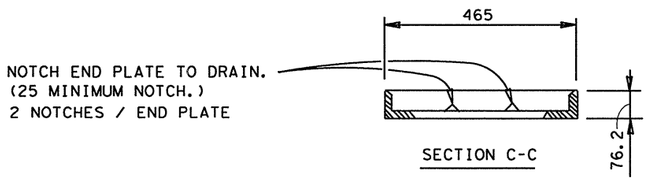


SECTION C-C




SECTION A-A




SECTION B-B

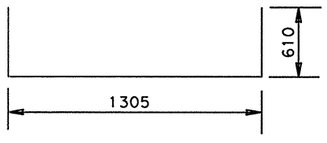


BARS U

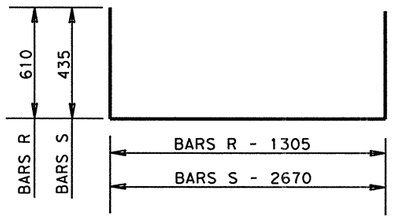


BARS R & S

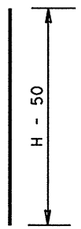


BARS T

# DROP INLET TYPE 6(M) & GRATE TYPE 2(M)

SAN ANTONIO DISTRICT STANDARD

© 1998 Texas Department of Transportation

| FED. RD. DIV. NO. | PROJECT NO. | | SHEET NO. |
|---|---|---|---|
| 6 | NH 2000 (704), etc. | | 476 |
| STATE | STATE DISTRICT | COUNTY | |
| TEXAS | SAT | BEXAR | |
| CONT. | SECT. | JOB | HIGHWAY NO. |
| 2452 | 01 | 036, etc. | LP 1604 |

11/95

STRUCTURE DESIGN
/BRIDGE/STDS/DROPINT6.DGN

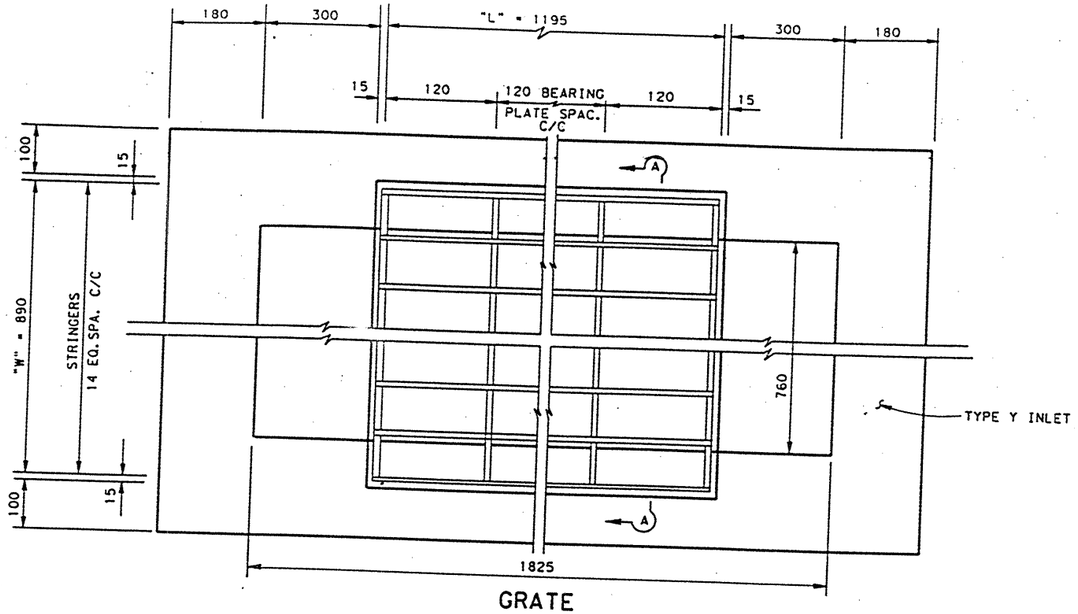


GRATE
PLAN VIEW

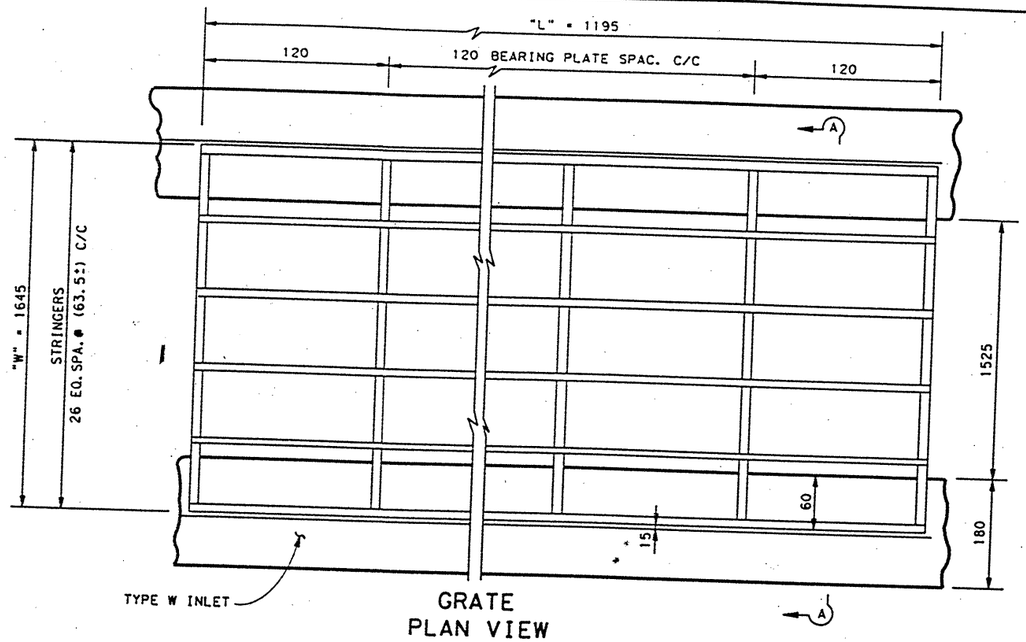


GRATE
PLAN VIEW

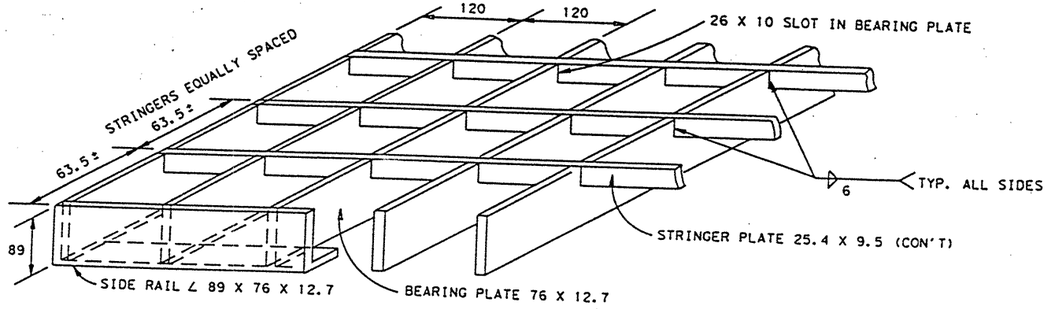


GRATE CORE

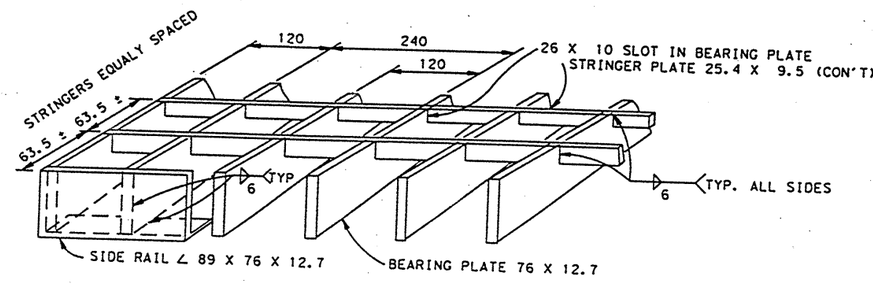


GRATE CORE

| STRUCTURAL STEEL FOR ONE TYPE 3 GRATE | | | | | | | | | | | |
|---|---|---|---|---|---|---|---|---|---|---|---|
| GRATE DIM. OUT TO OUT | | SIDE-RAIL 89 X 76 X 12.7 | | | BEARING PLATE ℄ 76 X 12.7 | | | STRINGER PLATE ℄ 25.4 X 9.5 | | | TOTAL MASS |
| L | W | NO. | LGTH. | MASS | NO. | LGTH. | MASS | NO. | LGTH. | MASS | kg |
| 1195 | 890 | 2 | 1195 | 37 | 11 | 860 | 72 | 13 | 1195 | 30 | 130 * |

* FOR CONTRACTOR'S INFORMATION ONLY
LENGTHS ARE TO THE NEAREST mm AND MASS IS TO THE NEAREST kg.

GRATE TYPE 3

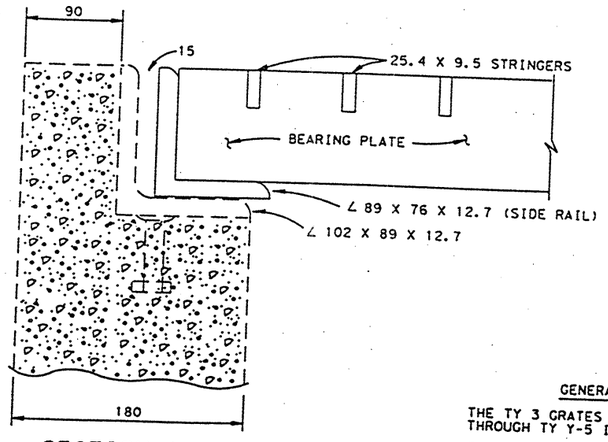


SECTION A-A

| STRUCTURAL STEEL FOR ONE TYPE 4 GRATE | | | | | | | | | | | |
|---|---|---|---|---|---|---|---|---|---|---|---|
| GRATE DIM. OUT TO OUT | | SIDE-RAIL 89 X 76 X 12.7 | | | BEARING PLATE ℄ 76 X 12.7 | | | STRINGER PLATE ℄ 25.4 X 9.5 | | | TOTAL MASS |
| L | W | NO. | LGTH. | MASS | NO. | LGTH. | MASS | NO. | LGTH. | MASS | kg |
| 1195 | 1645 | 2 | 1195 | 37 | 11 | 1620 | 136 | 27 | 1195 | 62 | 235 * |

* FOR CONTRACTOR'S INFORMATION ONLY
LENGTHS ARE TO THE NEAREST mm AND MASS IS TO THE NEAREST kg.

GRATE TYPE 4

# TYPE 3 & TYPE 4 GRATE (M)
# SAN ANTONIO DISTRICT STANDARD

GENERAL NOTES :

THE TY 3 GRATES ARE REQUIRED ON TY Y-1 THROUGH TY Y-5 INLETS.

THE TY 4 GRATES ARE REQUIRED ON TY W-1 THROUGH TY W-5 INLETS.

THE GRATE(S) ARE SUBSIDARY TO THE INLET.

ALL DIMENSIONS ARE mm UNLESS SHOWN OTHERWISE

© 1998 Texas Department of Transportation

| FED. RD. DIV. NO. | PROJECT NO. | | SHEET NO. |
|---|---|---|---|
| 6 | NH 2000 (704), ETC | | 476A |
| STATE | STATE DISTRICT | COUNTY | |
| TEXAS | SAT | BEXAR | |
| CONT. | SECT. | JOB | HIGHWAY NO. |

STRUCTURE DESIGN
/BRIDGE/STDS/DGRATE3T4.DGN

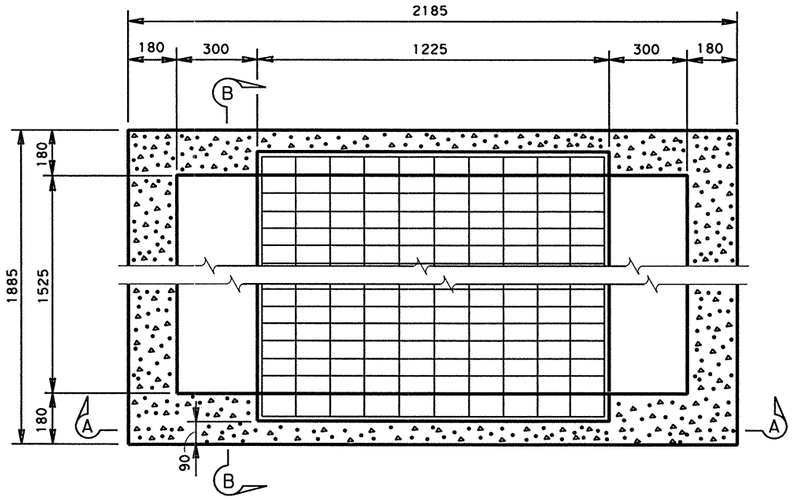


PLAN VIEW W/GRATE

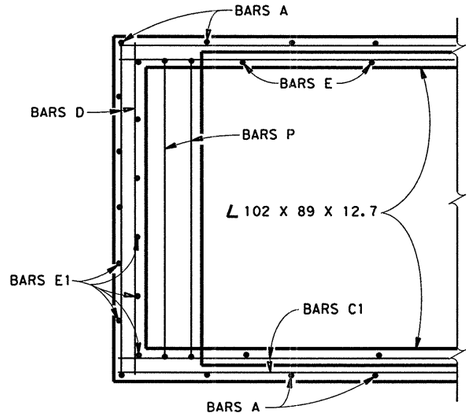


NOTE: SHOWING WALL REINF. STEEL ONLY, FLOOR REINF. STEEL NOT SHOWN FOR CLARITY. SEE SECTION A-A & B-B FOR FLOOR REINF. STEEL.

PARTIAL PLAN VIEW

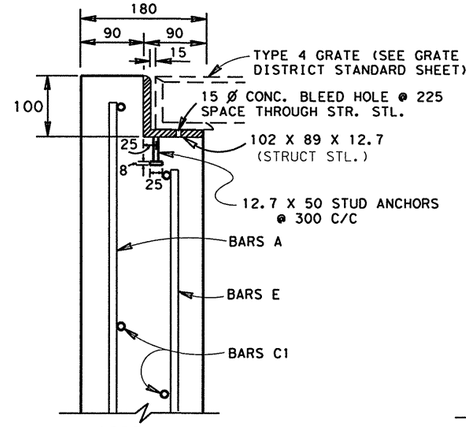


SIDE WALL DETAIL @ GRATE

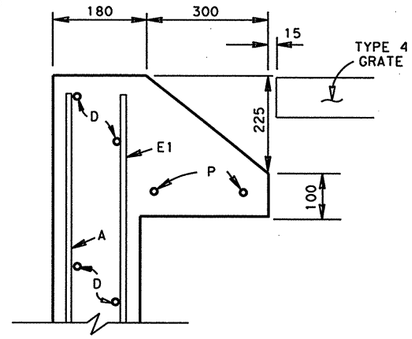


END WALL DETAIL




SECTION A-A
(SIDE ELEVATION)




SECTION B-B




BARS P

BARS A

GENERAL NOTES :

1. ALL CONCRETE SHALL BE CLASS "A". COARSE AGGREGATE GRADE "4" MAY BE USED.
2. DIMENSIONS RELATING TO REINFORCING STEEL ARE TO CENTER OF BARS.
3. REINFORCING STEEL SHALL BE FIELD BENT OR CUT TO ALLOW FOR INSTALLATION OF PIPE(S).
4. PIPES MAY BE PLACED ON ANY SIDE AS INDICATED IN THE PLANS.
5. PAYMENT FOR GRATE, CONC., REIN. & STRUCTURAL STEEL SHALL BE INCLUDED IN THE UNIT COST OF ITEM 465 "MANHOLES & INLETS".
6. THE STATION LOCATION AND OFFSET DISTANCE SHOWN IN THE PLANS IS TO THE CENTER OF THE INLET.
7. RIPRAP BASIN AROUND THE INLET WHEN SHOWN IN THE PLANS IS PAID FOR UNDER ITEM 432.
8. ALL EXPOSED CORNERS SHALL HAVE A 20 CHAMFER.
9. ALL DIMENSIONS ARE IN mm UNLESS SHOWN OTHERWISE.

# DROP INLET TYPE W-1 (M)
# SAN ANTONIO DISTRICT STANDARD

| ESTIMATED QUANTITIES ( BASED ON "H"= 2000) | | | |
|---|---|---|---|
| REINF. STL. kg | CL. A CONC. m3 | STRUCT. STL. kg | GRATES TYPE 4 |
| ✳ 247 | ✳ 3.58 | ✳ 44 | ✳ 1 |

✳FOR CONTRACTOR'S INFORMATION ONLY

REINFORCING STEEL ( BASED ON "H"= 2000)

| BARS A | | | | | BARS B | | | | | BARS C | | | | | BARS C1 | | | | | BARS D | | | | | BARS E | | | | | BARS E1 | | | | | BARS P | | | | |
|---|---|---|---|---|---|---|---|---|---|---|---|---|---|---|---|---|---|---|---|---|---|---|---|---|---|---|---|---|---|---|---|---|---|---|---|---|---|
| NO. | SIZE | SPAC. | LEN. | MASS | NO. | SIZE | SPAC. | LEN. | MASS | NO. | SIZE | SPAC. | LEN. | MASS | NO. | SIZE | SPAC. | LEN. | MASS | NO. | SIZE | SPAC. | LEN. | MASS | NO. | SIZE | SPAC. | LEN. | MASS | NO. | SIZE | SPAC. | LEN. | MASS | NO. | SIZE | SPAC. | LEN. | MASS |
| 8 | #4 | 300 | 5935 | 47 | 7 | #4 | 300 | 1785 | 12 | 13 | #4 | 300 | 2085 | 27 | 24 | #4 | 300 | 2085 | 50 | 24 | #4 | 300 | 1785 | 43 | 6 | #4 | 460 | 1955 | 12 | 22 | #4 | 300 | 2060 | 45 | 4 | #4 | SHOWN | 2640 | 11 |

NOTE : QUANTITIES WILL VARY WITH "H".

©1998 Texas Department of Transportation

| FED.RD. DIV.NO. | PROJECT NO. | | | SHEET NO. |
|---|---|---|---|---|
| 6 | NH 2000 (704), etc. | | | 477 |
| STATE | STATE DISTRICT | COUNTY | | |
| TEXAS | SAT | BEXAR | | |
| CONT. | SECT. | JOB | HIGHWAY NO. | |
| 2452 | 01 | 036, etc. | LP 1604 | |

12/95

STRUCTURE DESIGN
/BRIDGE/STDS/DROPINW1.DGN

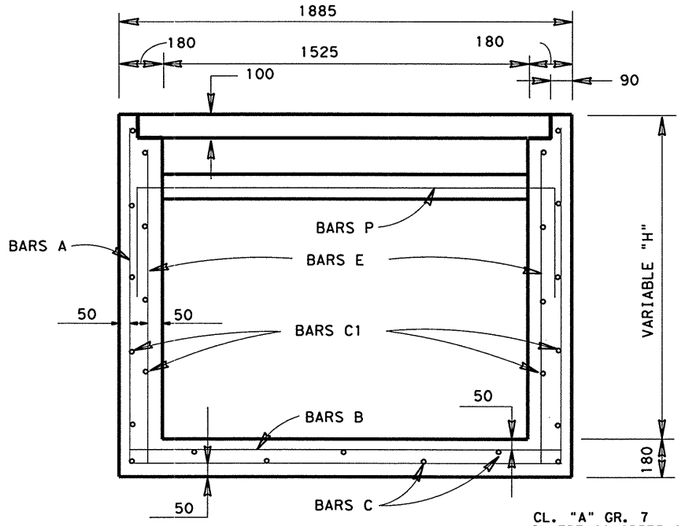


## SECTION B-B

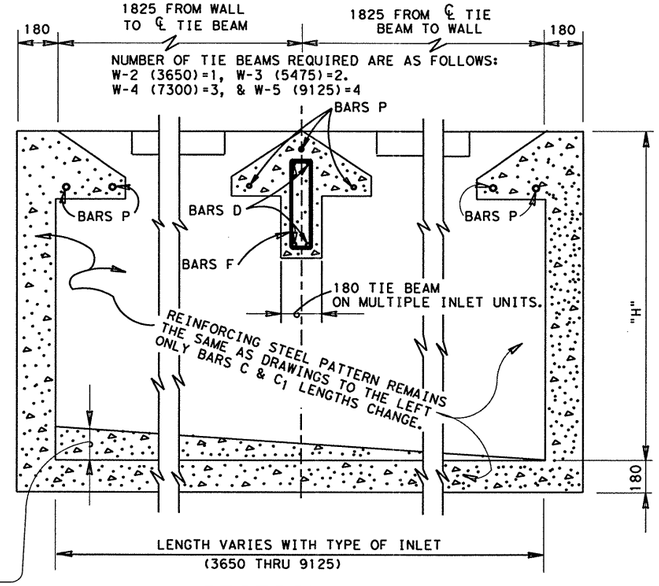


## SECTION A-A
(SIDE ELEVATION)

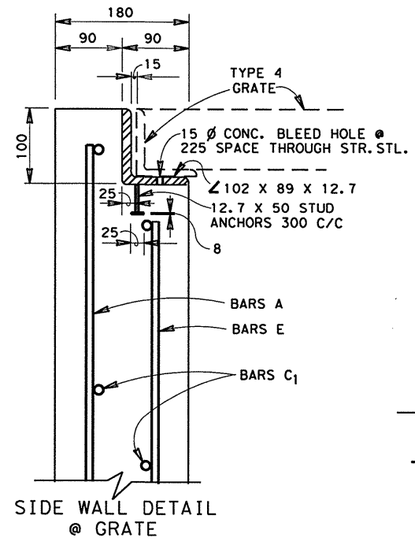


SIDE WALL DETAIL
@ GRATE

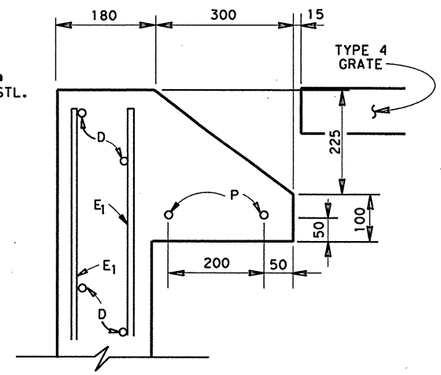


## END WALL DETAIL

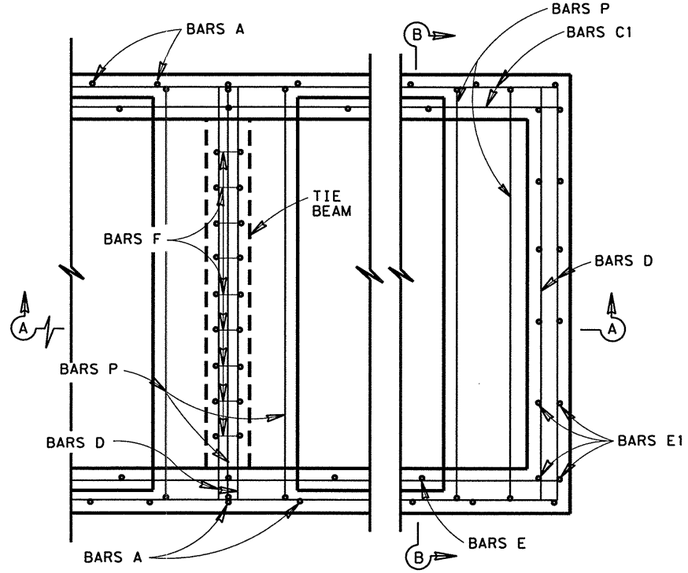


## PARTIAL PLAN VIEW

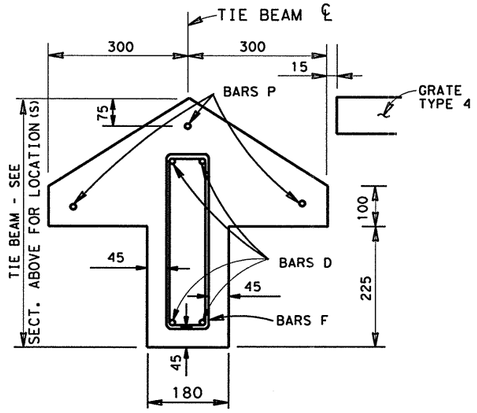


## TIE BEAM DETAIL

| ESTIMATED QUANTITIES ✳ (BASED ON "H"= 2000) | | | | |
|---|---|---|---|---|
| ITEM DESCRIPTION | INLET TYPES | | | |
| | W-2 | W-3 | W-4 | W-5 |
| CL. "A" CONC. $m^3$ | 5.49 | 7.56 | 9.64 | 11.72 |
| REIN. STL. kg | 380 | 521 | 663 | 805 |
| STRUCT. STL. kg | 88 | 131 | 175 | 218 |
| GRATES (TYPE 4) | 2 | 3 | 4 | 5 |

✳ FOR CONTRACTOR'S INFORMATION ONLY

GENERAL NOTES :

1. ALL CONCRETE SHALL BE CLASS "A". COARSE AGGREGATE GRADE "4" MAY BE USED.
2. DIMENSIONS RELATING TO REINFORCING STEEL ARE TO CENTER OF BARS.
3. REINFORCING STEEL SHALL BE FIELD BENT OR CUT TO ALLOW FOR INSTALLATION OF PIPE(S).
4. PIPES MAY BE PLACED ON ANY SIDE AS INDICATED IN THE PLANS.
5. THE STATION LOCATION AND OFFSET DISTANCE SHOWN IN THE PLANS IS TO THE CENTER OF THE INLET.
6. RIPRAP BASIN AROUND THE INLET WHEN SHOWN IN THE PLANS IS PAID FOR UNDER ITEM 432.
7. PAYMENT FOR GRATES, CONC., REIN. & STRUCTURAL STEEL SHALL BE INCLUDED IN THE UNIT COST OF ITEM 465 "MANHOLES & INLETS".
8. ALL EXPOSED CORNERS SHALL HAVE A 20 CHAMFER.
9. ALL DIMENSIONS ARE IN mm UNLESS SHOWN OTHERWISE

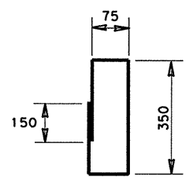


BARS F

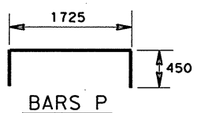


BARS P

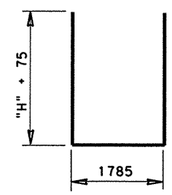


BARS A

# DROP INLET
# TYPE W-2 THRU W-5(M)
# SAN ANTONIO DISTRICT STANDARD

QUANTITIES WILL VARY WITH A DIFFERENT "H". REINFORCING STEEL ( BASED ON "H" = 2000)
SPACING & LENGTHS ARE TO THE NEAREST mm, MASS IS TO THE NEAREST kg

| INLET TYPE | BARS A | | | | | BARS B | | | | | BARS C | | | | | BARS C1 | | | | | BARS D | | | | | BARS E | | | | | BARS E1 | | | | | BARS P | | | | | BARS F | | | | |
|---|---|---|---|---|---|---|---|---|---|---|---|---|---|---|---|---|---|---|---|---|---|---|---|---|---|---|---|---|---|---|---|---|---|---|---|---|---|---|---|---|---|---|---|---|
| | NO. | SIZE | SPAC. | LEN. | MASS | NO. | SIZE | SPAC. | LEN. | MASS | NO. | SIZE | SPAC. | LEN. | MASS | NO. | SIZE | SPAC. | LEN. | MASS | NO. | SIZE | SPAC. | LEN. | MASS | NO. | SIZE | SPAC. | LEN. | MASS | NO. | SIZE | SPAC. | LEN. | MASS | NO. | SIZE | SPAC. | LEN. | MASS | NO. | SIZE | SPAC. | LEN. | MASS |
| W-2 | 14 | #4 | 300 | 5935 | 83 | 13 | #4 | 300 | 1785 | 23 | 7 | #4 | 290 | 3910 | 27 | 24 | #4 | 315 | 3910 | 93 | 28 | #4 | 330 | 1785 | 50 | 14 | #4 | 460 | 1955 | 27 | 24 | #4 | 315 | 2060 | 49 | 7 | #4 | SHOWN | 2625 | 18 | 9 | #4 | 6" | 1000 | 9 |
| W-3 | 20 | #4 | 300 | 5935 | 118 | 19 | #4 | 300 | 1785 | 34 | 7 | #4 | 290 | 5740 | 40 | 24 | #4 | 315 | 5740 | 137 | 32 | #4 | 330 | 1785 | 57 | 22 | #4 | 460 | 1955 | 43 | 24 | #4 | 315 | 2060 | 49 | 10 | #4 | SHOWN | 2625 | 26 | 18 | #4 | 6" | 1000 | 18 |
| W-4 | 26 | #4 | 300 | 5935 | 153 | 25 | #4 | 300 | 1785 | 44 | 7 | #4 | 290 | 7570 | 53 | 24 | #4 | 315 | 7570 | 181 | 36 | #4 | 330 | 1785 | 64 | 30 | #4 | 460 | 1955 | 58 | 24 | #4 | 315 | 2060 | 49 | 13 | #4 | SHOWN | 2625 | 34 | 27 | #4 | 6" | 1000 | 27 |
| W-5 | 32 | #4 | 300 | 5935 | 189 | 31 | #4 | 300 | 1785 | 55 | 7 | #4 | 290 | 9400 | 65 | 24 | #4 | 315 | 9400 | 224 | 40 | #4 | 330 | 1785 | 71 | 38 | #4 | 460 | 1955 | 74 | 24 | #4 | 315 | 2060 | 49 | 16 | #4 | SHOWN | 2625 | 42 | 36 | #4 | 6" | 1000 | 36 |

11/95

© 1998 Texas Department of Transportation

| FED. RD. DIV. NO. | PROJECT NO. | | | SHEET NO. |
|---|---|---|---|---|
| 6 | NH 2000 (704), etc. | | | 478 |
| STATE | STATE DIST. NO. | COUNTY | | |
| TEXAS | 15 | BEXAR | | |
| CONT. | SECT. | JOB | HIGHWAY NO. | |
| 2452 | 01 | 036, etc. | LP 1604 | |

STRUCTURE DESIGN
/BRIDGE/STDS/DROP1NW25.DGN

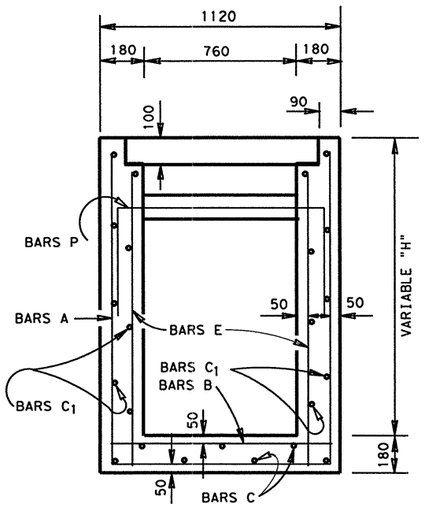


SECTION B-B

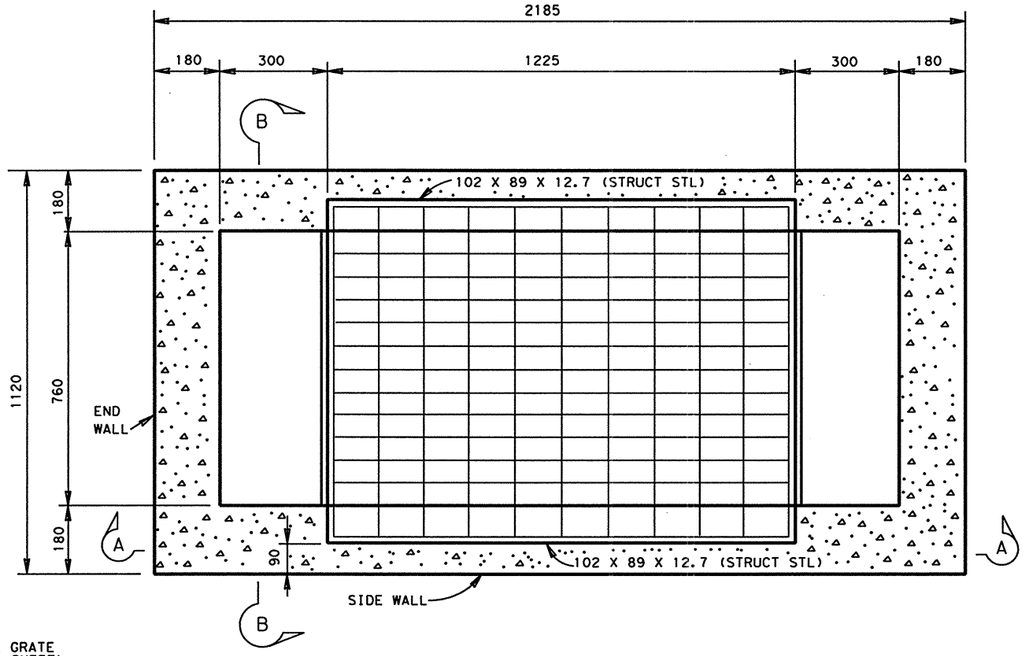


PLAN VIEW W/GRATE

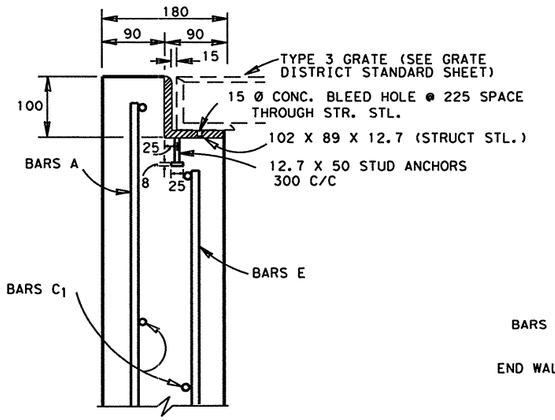


SIDE WALL
DETAIL
@ GRATE

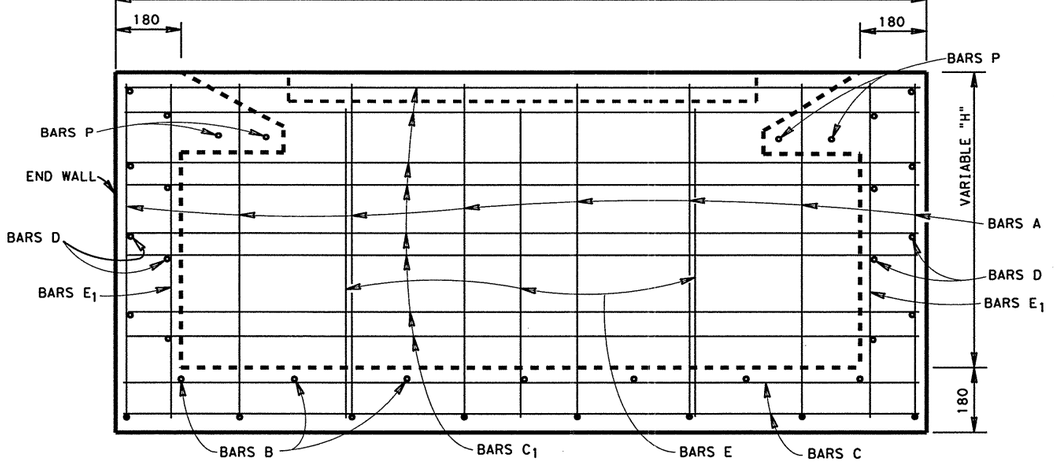


SIDE WALL
SECTION A-A

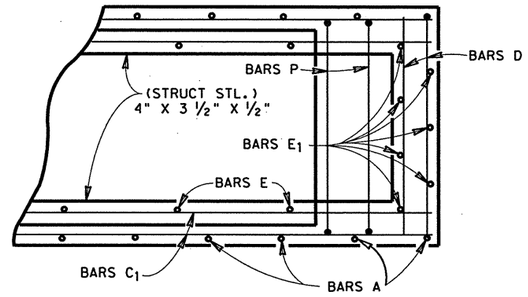


PARTIAL PLAN

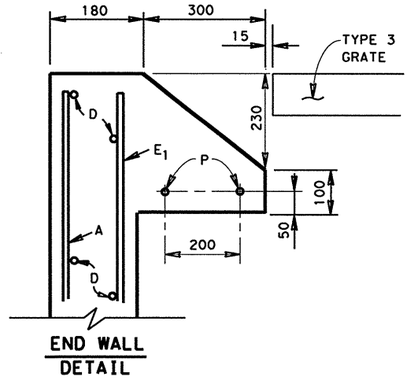


END WALL
DETAIL

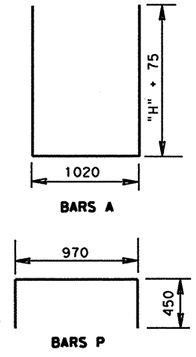


NOTES :

1. ALL CONCRETE SHALL BE CLASS "A". COARSE AGGREGATE GRADE "4" MAY BE USED.
2. DIMENSIONS RELATING TO REINFORCING STEEL ARE TO CENTER OF BARS.
3. REINFORCING STEEL SHALL BE FIELD BENT OR CUT TO ALLOW FOR INSTALLATION OF PIPE(S).
4. PIPES MAY BE PLACED ON ANY SIDE AS INDICATED IN THE PLANS.
5. THE STATION LOCATION AND OFFSET DISTANCE SHOWN IN THE PLANS IS TO THE CENTER OF THE INLET.
6. RIPRAP BASIN AROUND THE INLET WHEN SHOWN IN THE PLANS IS PAID FOR UNDER ITEM 432.
7. ALL EXPOSED CORNERS SHALL HAVE A 20 CHAMFER.
8. ALL DIMENSIONS ARE IN mm UNLESS SHOWN OTHERWISE.

# DROP INLET TYPE Y-1(M)

## SAN ANTONIO DISTRICT STANDARD®

QUANTITIES WILL VARY WITH "H"

REINFORCING STEEL AND ESTIMATED QUANTITIES (BASED ON H = 900)

| BARS A (FLOOR & WALLS) | | | | | BARS B (FLOOR) | | | | | BARS C (FLOOR) | | | | | BARS $C_1$ (SIDE WALLS) | | | | | BARS D (END WALLS) | | | | | BARS E (WALLS) | | | | | BARS $E_1$ WALLS | | | | | BARS P | | | | | TOTALS | | | GRATE |
|---|---|---|---|---|---|---|---|---|---|---|---|---|---|---|---|---|---|---|---|---|---|---|---|---|---|---|---|---|---|---|---|---|---|---|---|---|---|---|---|---|---|---|
| NO. | SIZE | SPA. | LENGTH | kg | NO. | SIZE | SPA. | LENGTH | kg | NO. | SIZE | SPA. | LENGTH | kg | NO. | SIZE | SPA. | LENGTH | kg | NO. | SIZE | SPA. | LENGTH | kg | NO. | SIZE | SPA. | LENGTH | kg | NO. | SIZE | SPA. | LENGTH | kg | NO. | SIZE | SPA. | LENGTH | kg | REINF. STL. kg | CL. "A" CONC. m3 | STRUCT. STL. kg | TYPE 3 EA. |
| 8 | #4 | 300 | 2970 | 24 | 7 | #4 | 300 | 1040 | 7 | 7 | #4 | 300 | 2085 | 15 | 16 | #4 | 330 | 2085 | 33 | 16 | #4 | 330 | 1040 | 17 | 6 | #4 | 460 | 880 | 5 | 14 | #4 | 300 | 980 | 12 | 4 | #4 | SHOWN | 1870 | 7 | 120 * | 1.47 * | 44 * | 1 * |

* FOR CONTRACTOR'S INFORMATION ONLY

© 1998 Texas Department of Transportation

| FED. RD. DIV. NO. | PROJECT NO. | | SHEET NO. |
|---|---|---|---|
| 6 | NH 2000 (704), etc. | | 479 |
| STATE | STATE DISTRICT | COUNTY | |
| TEXAS | SAT | BEXAR | |
| CONT. | SECT. | JOB | HIGHWAY NO. |
| 2452 | 01 | 036, etc. | LP 1604 |

12/95

STRUCTURE DESIGN
/BRIDGE/STDS/DROPINY1.DGN

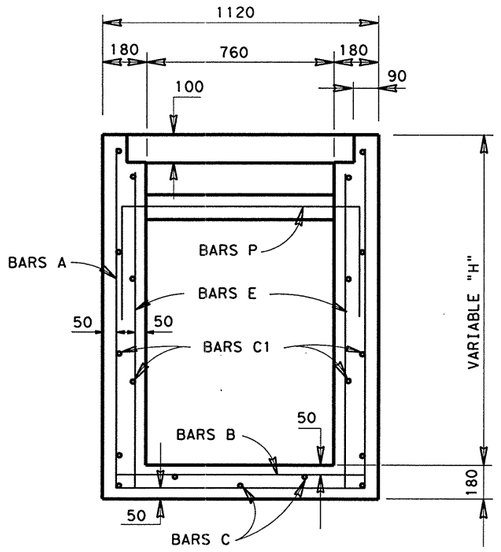


## SECTION B-B

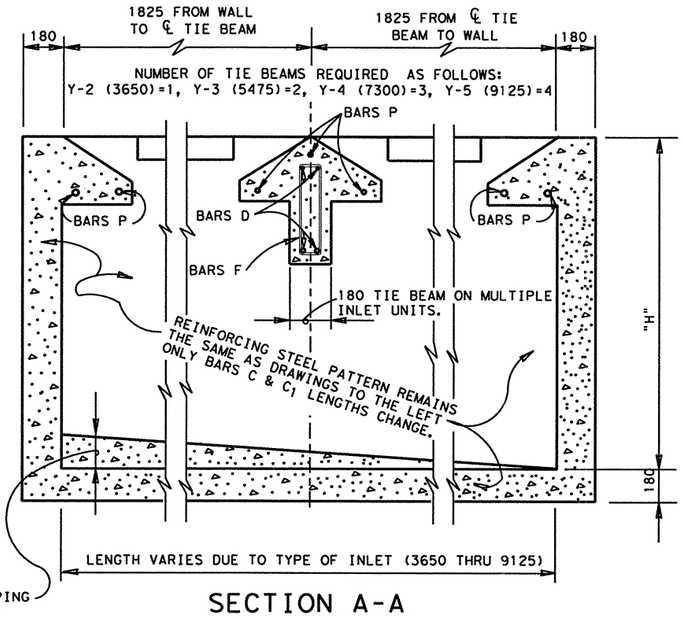


## SECTION A-A
(SIDE ELEVATION)

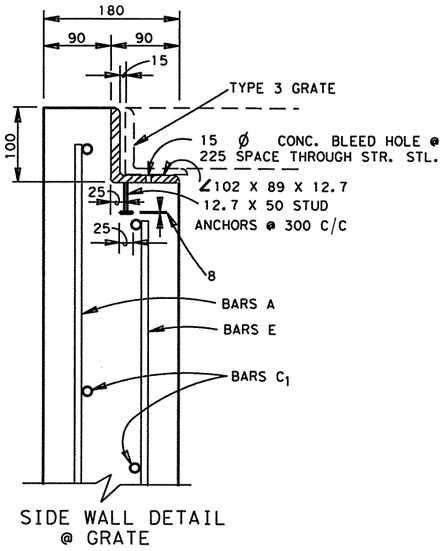


SIDE WALL DETAIL
@ GRATE

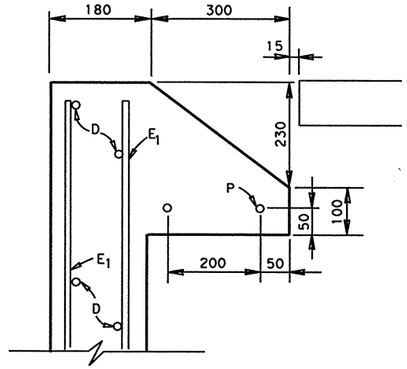


## END WALL DETAIL

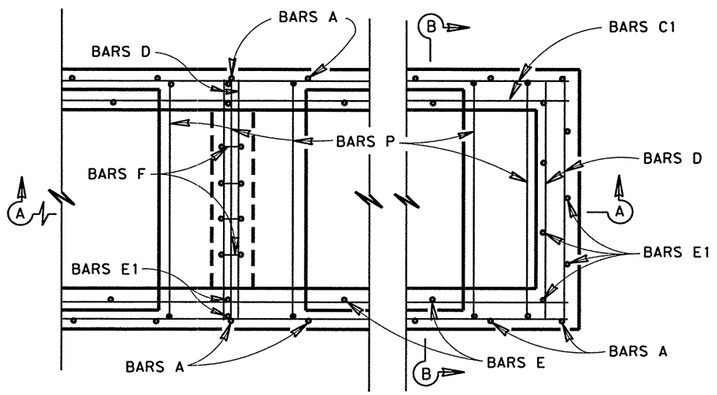


## PARTIAL PLAN VIEW




## TIE BEAM DETAIL




| ESTIMATED QUANTITIES ✳ (BASED ON "H" 3'-0") | | | | |
|---|---|---|---|---|
| DESCRIPTION | INLET TYPES | | | |
| | Y-2 | Y-3 | Y-4 | Y-5 |
| CL."A" CONC. m3 | 2.5 | 3.6 | 4.7 | 5.7 |
| REIN. STL. kg | 194 | 277 | 357 | 439 |
| STRUCT. STL. kg | 88 | 132 | 176 | 220 |
| GRATES (TYPE 3) | 2 | 3 | 4 | 5 |

✳ FOR CONTRACTOR'S INFORMATION ONLY

QUANTITIES WILL VARY WITH "H".
REINFORCING STEEL ( BASED ON "H" = 900)

GENERAL NOTES :

1. ALL CONCRETE SHALL BE CLASS "A". COARSE AGGREGATE GRADE "4" MAY BE USED.
2. DIMENSIONS RELATING TO REINFORCING STEEL ARE TO CENTER OF BARS.
3. REINFORCING STEEL SHALL BE FIELD BENT OR CUT TO ALLOW FOR INSTALLATION OF PIPE(S).
4. PIPES MAY BE PLACED ON ANY SIDE AS INDICATED IN THE PLANS.
5. PAYMENT FOR GRATES, CONC., REIN. & STRUCTURAL STEEL SHALL BE INCLUDED IN THE UNIT COST OF ITEM 465 "MANHOLES & INLETS".
6. THE STATION LOCATION AND OFFSET DISTANCE SHOWN IN THE PLANS IS TO THE CENTER OF THE INLET.
7. RIPRAP BASIN AROUND THE INLET WHEN SHOWN IN THE PLANS IS PAID FOR UNDER ITEM 432.
8. ALL EXPOSED CORNERS SHALL HAVE A 20 CHAMFER.
9. ALL DIMENSIONS ARE IN mm UNLESS SHOWN OTHERWISE.

# DROP INLET
# TYPE Y-2 THRU Y-5(M)

## SAN ANTONIO
## DISTRICT STANDARD

| INLET TYPE | BARS A | | | | | BARS B | | | | | BARS C | | | | | BARS $C_1$ | | | | | BARS D | | | | | BARS E | | | | | BARS $E_1$ | | | | | BARS P | | | | | BARS F | | | | |
|---|---|---|---|---|---|---|---|---|---|---|---|---|---|---|---|---|---|---|---|---|---|---|---|---|---|---|---|---|---|---|---|---|---|---|---|---|---|---|---|---|---|---|---|---|
| | NO. | SIZE | SPAC. | LEN. | MASS | NO. | SIZE | SPAC. | LEN. | MASS | NO. | SIZE | SPAC. | LEN. | MASS | NO. | SIZE | SPAC. | LEN. | MASS | NO. | SIZE | SPAC. | LEN. | MASS | NO. | SIZE | SPAC. | LEN. | MASS | NO. | SIZE | SPAC. | LEN. | MASS | NO. | SIZE | SPAC. | LEN. | MASS | NO. | SIZE | SPAC. | LEN. | MASS |
| Y-2 | 14 | #4 | 305 | 3000 | 42 | 13 | #4 | 305 | 1015 | 13 | 5 | #4 | 254 | 3910 | 19 | 14 | #4 | 318 | 3910 | 54 | 20 | #4 | 330 | 1015 | 20 | 12 | #4 | 460 | 900 | 11 | 18 | #4 | 280 | 990 | 18 | 7 | #4 | SHOWN | 1880 | 13 | 4 | #4 | 153 | 1016 | 4 |
| Y-3 | 20 | #4 | 305 | 3000 | 60 | 19 | #4 | 305 | 1015 | 19 | 5 | #4 | 254 | 5740 | 29 | 14 | #4 | 318 | 5740 | 80 | 24 | #4 | 330 | 1015 | 24 | 18 | #4 | 460 | 900 | 16 | 22 | #4 | 280 | 990 | 22 | 10 | #4 | SHOWN | 1880 | 19 | 8 | #4 | 153 | 1016 | 8 |
| Y-4 | 26 | #4 | 305 | 3000 | 78 | 25 | #4 | 305 | 1015 | 25 | 5 | #4 | 254 | 7570 | 38 | 14 | #4 | 318 | 7570 | 105 | 28 | #4 | 330 | 1015 | 28 | 24 | #4 | 460 | 900 | 21 | 26 | #4 | 280 | 990 | 26 | 13 | #4 | SHOWN | 1880 | 24 | 12 | #4 | 153 | 1016 | 12 |
| Y-5 | 32 | #4 | 305 | 3000 | 95 | 31 | #4 | 305 | 1015 | 31 | 5 | #4 | 254 | 9400 | 47 | 14 | #4 | 318 | 9400 | 131 | 32 | #4 | 330 | 1015 | 32 | 30 | #4 | 460 | 900 | 27 | 30 | #4 | 280 | 990 | 30 | 16 | #4 | SHOWN | 1880 | 30 | 16 | #4 | 153 | 1016 | 16 |

12/95

©1998 Texas Department of Transportation

| FED. RD. DIV. NO. | PROJECT NO. | | SHEET NO. |
|---|---|---|---|
| 6 | NH 2000 (704), etc. | | 480 |
| STATE | STATE DISTRICT | COUNTY | |
| TEXAS | SAT | BEXAR | |
| CONT. | SECT. | JOB | HIGHWAY NO. |
| 2452 | 01 | 036, etc. | LP 1604 |

STRUCTURE DESIGN
/BRIDGE/STDS/DROPINY25.DGN

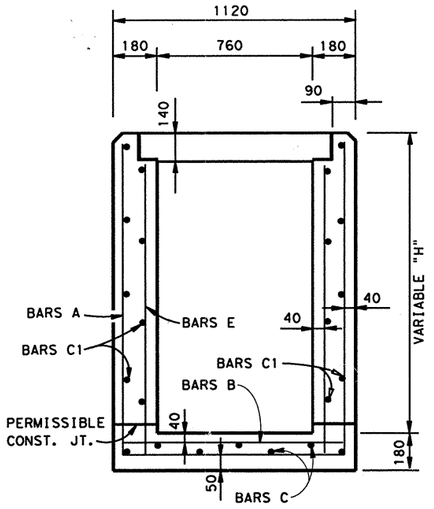


SECTION B-B

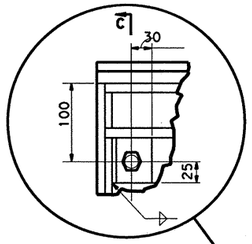


DETAIL #1
FOR 4-CORNERS

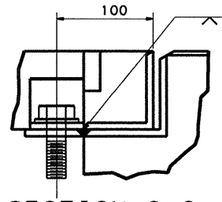


SECTION C-C

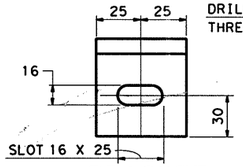


BRACKET

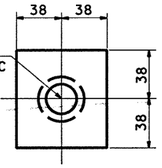


ASS'Y. PLATE

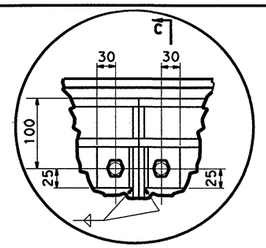


DETAIL #2

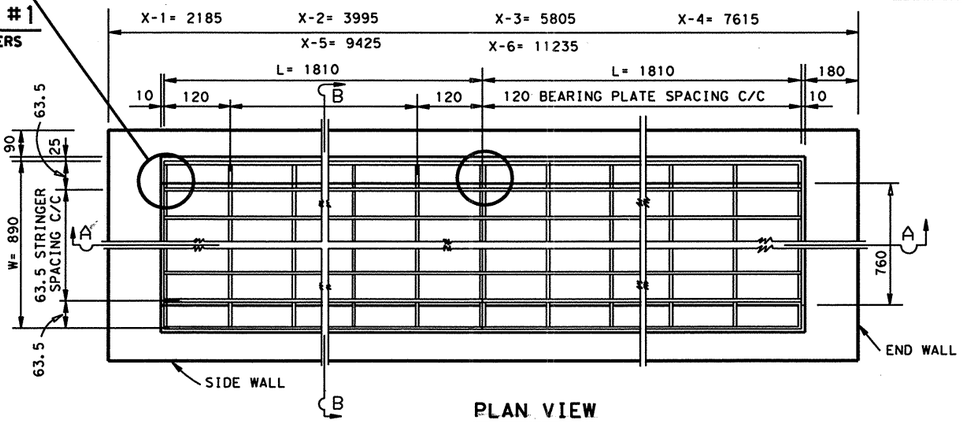


PLAN VIEW

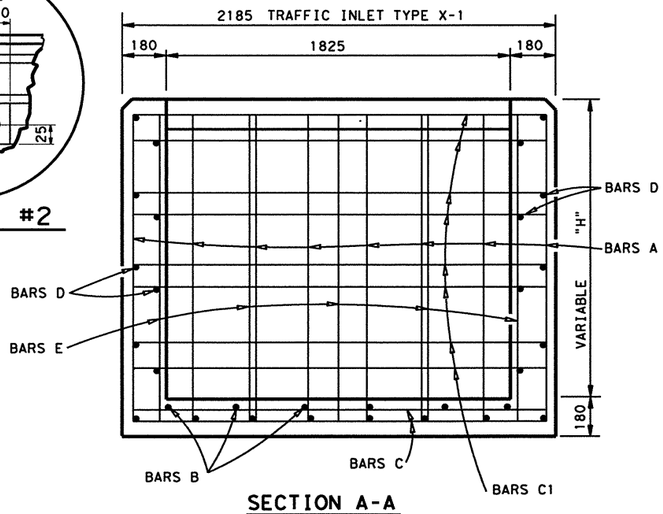


SECTION A-A

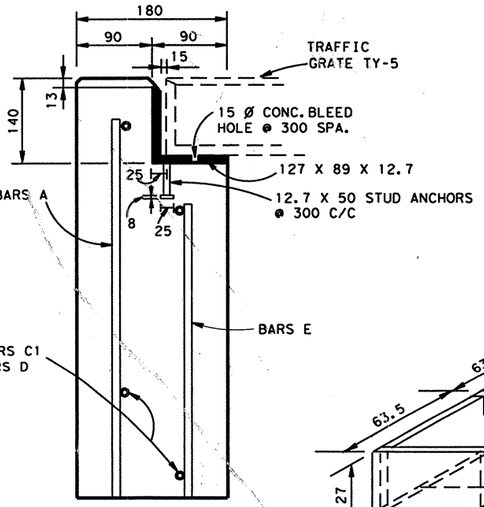


SIDE WALL

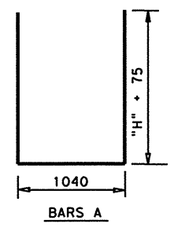


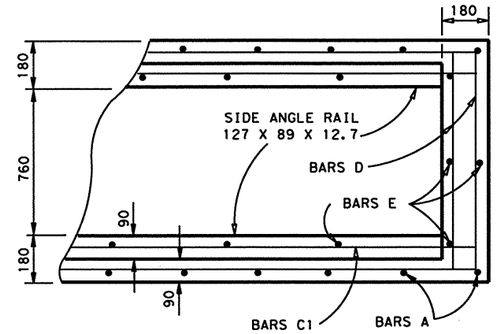


PLAN

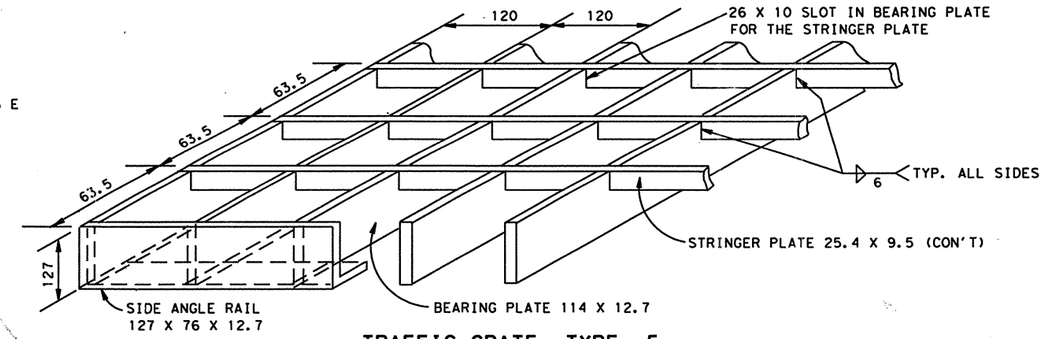


TRAFFIC GRATE TYPE 5

GENERAL NOTES :

ALL CONCRETE SHALL BE CLASS "C". COARSE AGGREGATE GRADE "4" MAY BE USED.
DIMENSIONS RELATING TO REINFORCING STEEL ARE TO CENTER OF BARS.
ALL EXPOSED CORNERS SHALL BE CHAMFERED 20.
QUANTITIES VARY WITH "H".
REINFORCING STEEL SHALL BE FIELD BENT OR CUT TO ALLOW FOR INSTALLATION OF PIPE(S).
PAYMENT FOR CONC., STEEL & GRATE SHALL BE INCLUDED IN UNIT COST OF ITEM 465 "MANHOLES & INLETS".
ALL DIMENSIONS ARE IN mm UNLESS SHOWN OTHERWISE.

| STRUCTURAL STEEL FOR ONE TRAFFIC GRATE TY 5 | | | | | | | | | | | | | | | | | | | | | | |
|---|---|---|---|---|---|---|---|---|---|---|---|---|---|---|---|---|---|---|---|---|---|---|
| GRATE DIM. OUT TO OUT | | SIDE-RAIL 127x76x12.7 | | | BEARING PLATE ℞ 114x12.7 | | | STRINGER PLATE ℞ 25.4x9.5 | | | BRACKET 76x76x12.7 | | | ASSEMBLY PLATE ℞ 76x12.7 | | | ASSEMBLY BOLT HEX BOLT ½"x 2" | | | ASSEMBLY WASHER CIRCULAR WASHER 9/16"Ø | | | TOTAL MASS |
| L | W | NO. | LGTH. | MASS | NO. | LGTH. | MASS | NO. | LGTH. | MASS | NO. | LGTH. | MASS | NO. | LGTH. | MASS | NO. | LGTH. | MASS | NO. | LGTH. | MASS | kg |
| 1810 | 890 | 2 | 1810 | 69 | 16 | 865 | 159 | 13 | 1810 | 45 | 4 | 50 | 3 | 4 | 76 | 3 | 4 | 2" | — | 4 | 1⅜"Ø OUTS | — | 279 * |

*QUANTITIES ARE FOR CONTRACTOR'S INFORMATION ONLY

| REINFORCING STEEL AND ESTIMATED QUANTITIES (BASED ON "H"= 900) | | | | | | | | | | | | | | | | | | | | | | | | | | | | | | | TOTAL * | | | TRAFFIC GRATE TY 5 EA.* |
|---|---|---|---|---|---|---|---|---|---|---|---|---|---|---|---|---|---|---|---|---|---|---|---|---|---|---|---|---|---|---|---|---|---|---|
| INLET TYPE | BARS A (FLOOR & WALLS) | | | | | BARS B (FLOOR) | | | | | BARS C (FLOOR) | | | | | BARS C1 (SIDE WALLS) | | | | | BARS D (END WALLS) | | | | | BARS E (WALLS) | | | | | REINF STL kg | CL C CONC m3 | STRUCT STL kg | |
| | NO. | SIZE | SPA. | LENGTH | MASS | NO. | SIZE | SPA. | LENGTH | MASS | NO. | SIZE | SPA. | LENGTH | MASS | NO. | SIZE | SPA. | LENGTH | MASS | NO. | SIZE | SPA. | LENGTH | MASS | NO. | SIZE | SPA. | LENGTH | MASS | | | | |
| X-1 | 8 | # 4 | 305 | 3000 | 24 | 7 | # 4 | 305 | 1040 | 7 | 7 | # 4 | 305 | 2085 | 15 | 16 | # 4 | 330 | 2085 | 33 | 16 | # 4 | 330 | 1040 | 17 | 10 | # 4 | 460 | 850 | 8 | 104 | 1.4 | 75 | 1 |
| X-2 | 14 | # 4 | 305 | 3000 | 42 | 13 | # 4 | 305 | 1040 | 13 | 7 | # 4 | 305 | 3895 | 27 | 16 | # 4 | 330 | 3895 | 62 | 16 | # 4 | 330 | 1040 | 17 | 18 | # 4 | 460 | 850 | 15 | 176 | 2.1 | 149 | 2 |
| X-3 | 20 | # 4 | 305 | 3000 | 60 | 19 | # 4 | 305 | 1040 | 20 | 7 | # 4 | 305 | 5700 | 40 | 16 | # 4 | 330 | 5700 | 91 | 16 | # 4 | 330 | 1040 | 17 | 26 | # 4 | 460 | 850 | 22 | 250 | 2.8 | 223 | 3 |
| X-4 | 26 | # 4 | 305 | 3000 | 78 | 25 | # 4 | 305 | 1040 | 26 | 7 | # 4 | 305 | 7510 | 52 | 16 | # 4 | 330 | 7510 | 119 | 16 | # 4 | 330 | 1040 | 17 | 34 | # 4 | 460 | 850 | 29 | 321 | 3.5 | 297 | 4 |
| X-5 | 32 | # 4 | 305 | 3000 | 95 | 31 | # 4 | 305 | 1040 | 32 | 7 | # 4 | 305 | 9320 | 65 | 16 | # 4 | 330 | 9320 | 148 | 16 | # 4 | 330 | 1040 | 17 | 42 | # 4 | 460 | 850 | 35 | 392 | 4.3 | 371 | 5 |
| X-6 | 38 | # 4 | 305 | 3000 | 113 | 37 | # 4 | 305 | 1040 | 38 | 7 | # 4 | 305 | 11130 | 77 | 16 | # 4 | 330 | 11130 | 177 | 16 | # 4 | 330 | 1040 | 17 | 50 | # 4 | 460 | 850 | 42 | 464 | 5.0 | 445 | 6 |

SAN ANTONIO
DISTRICT STANDARD

# TRAFFIC INLET
# TYPE X-1 THRU X-6(M)
# TRAFFIC GRATE TYPE 5(M)

© 1998 Texas Department of Transportation

| FED. RD. DIV. NO. | PROJECT NO. | | SHEET NO. |
|---|---|---|---|
| 6 | NH 2000(704), etc. | | 480A |
| STATE | STATE DISTRICT | COUNTY | |
| TEXAS | SAT | BEXAR | |
| CONT. | SECT. | JOB | HIGHWAY NO. |
| 2452 | 01 | 036, etc. | LP 1604 |

12/95

t:/Ao/Construction/Loop1604/C028*WWLoop&HarwellDrvwys/trafficX-5inlet.dgn

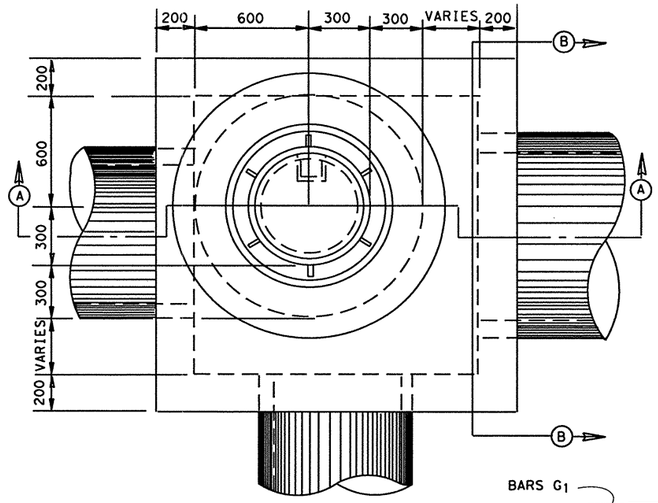


PLAN

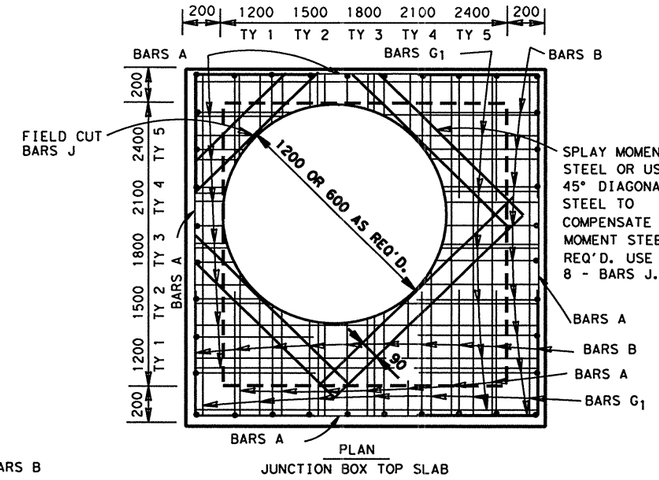


PLAN
JUNCTION BOX TOP SLAB

1200 X 1200 X 1200 (TY 1)

| BAR | NO. | SIZE | SPAC. | LEN. | MASS |
|---|---|---|---|---|---|
| A | 16 | 4 | 225 | 1500 | 24 |
| B | 32 | 5 | 200 | 1950 | 97 |
| C | 32 | 5 | 200 | 1300 | 65 |
| D | 16 | 4 | 225 | 1500 | 24 |
| E | 20 | 3 | 300 | 1200 | 13 |
| G | 20 | 4 | 300 | 1500 | 30 |
| $G_1$ | 24 | 4 | 300 | 1500 | 36 |
| H | 20 | 3 | 300 | 1500 | 17 |
| J | 8 | 6 | 90 | 1150 | 21 |
| REINF. STEEL | | | | kg | 327 * |
| ≠ CL. A CONC. | | | | m3 | 2.56 * |

1800 X 1800 X 1800 (TY 3)

| BAR | NO. | SIZE | SPAC. | LEN. | MASS |
|---|---|---|---|---|---|
| A | 20 | 4 | 225 | 2100 | 42 |
| B | 44 | 5 | 200 | 2550 | 174 |
| C | 44 | 5 | 200 | 1300 | 89 |
| D | 20 | 4 | 225 | 2100 | 42 |
| E | 28 | 3 | 300 | 1800 | 28 |
| G | 28 | 4 | 300 | 2100 | 58 |
| $G_1$ | 32 | 4 | 300 | 2100 | 67 |
| H | 28 | 3 | 300 | 2100 | 33 |
| J | 8 | 6 | 90 | 1150 | 21 |
| REINF. STEEL | | | | kg | 554 * |
| ≠ CL. A CONC. | | | | m3 | 5.25 * |

1500 X 1500 X 1500 (TY 2)

| BAR | NO. | SIZE | SPAC. | LEN. | MASS |
|---|---|---|---|---|---|
| A | 18 | 4 | 225 | 1800 | 32 |
| B | 40 | 5 | 200 | 2250 | 140 |
| C | 40 | 5 | 200 | 1300 | 81 |
| D | 18 | 4 | 225 | 1800 | 32 |
| E | 24 | 3 | 300 | 1500 | 20 |
| G | 24 | 4 | 300 | 1800 | 43 |
| $G_1$ | 28 | 4 | 300 | 1800 | 50 |
| H | 24 | 3 | 300 | 1800 | 24 |
| J | 8 | 6 | 90 | 1150 | 21 |
| REINF. STEEL | | | | kg | 443 * |
| ≠ CL. A CONC. | | | | m3 | 3.79 * |

2100 X 2100 X 2100 (TY 4)

| BAR | NO. | SIZE | SPAC. | LEN. | MASS |
|---|---|---|---|---|---|
| A | 24 | 4 | 225 | 2400 | 57 |
| B | 52 | 5 | 200 | 2850 | 280 |
| C | 52 | 5 | 200 | 1600 | 129 |
| D | 24 | 4 | 225 | 2400 | 57 |
| E | 32 | 4 | 300 | 2100 | 67 |
| G | 32 | 4 | 300 | 2400 | 76 |
| $G_1$ | 36 | 4 | 300 | 2400 | 86 |
| H | 32 | 3 | 300 | 2400 | 43 |
| J | 8 | 6 | 90 | 1150 | 21 |
| REINF. STEEL | | | | kg | 816 * |
| ≠ CL. A CONC. | | | | m3 | 6.95 * |

2400 X 2400 X 2400 (TY 5)

| BAR | NO. | SIZE | SPAC. | LEN. | MASS |
|---|---|---|---|---|---|
| A | 26 | 5 | 225 | 2700 | 109 |
| B | 56 | 5 | 200 | 3150 | 274 |
| C | 56 | 5 | 200 | 1600 | 139 |
| D | 26 | 5 | 225 | 2700 | 109 |
| E | 36 | 4 | 300 | 2400 | 86 |
| G | 36 | 4 | 300 | 2700 | 97 |
| $G_1$ | 40 | 4 | 300 | 2700 | 107 |
| H | 36 | 4 | 300 | 2700 | 97 |
| J | 8 | 6 | 90 | 1150 | 21 |
| REINF. STEEL | | | | kg | 1039 * |
| ≠ CL. A CONC. | | | | m3 | 8.88 * |

* QUANTITIES ARE FOR CONTRACTOR'S INFORMATION ONLY.
≠ CONCRETE QUANTITIES ALLOW FOR MANHOLE ACCESS BUT HAVE NOT BEEN DECREASED FOR DRAINAGE PIPES BECAUSE THE NUMBER AND SIZE VARY.

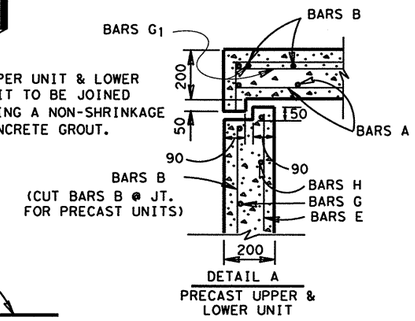


DETAIL A
PRECAST UPPER & LOWER UNIT

UPPER UNIT & LOWER UNIT TO BE JOINED USING A NON-SHRINKAGE CONCRETE GROUT.

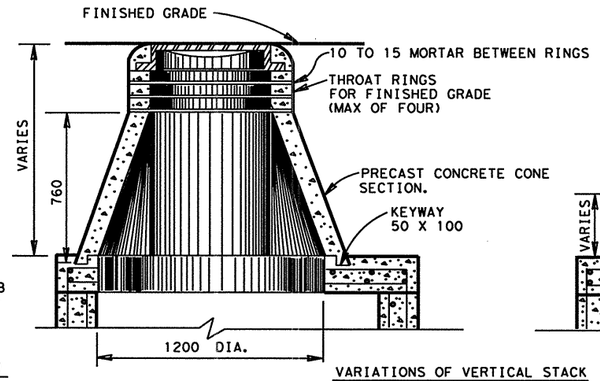


VARIATIONS OF VERTICAL STACK

VERTICAL STACK DESIGN SHALL BE GOVERNED BY THE DEPTH FROM THE TOP OF THE LOWER UNIT TO FINISHED GRADE.

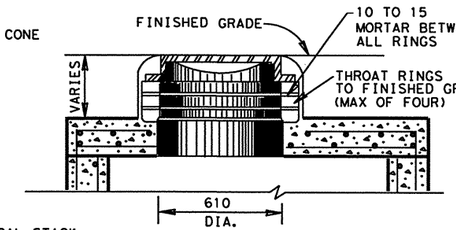


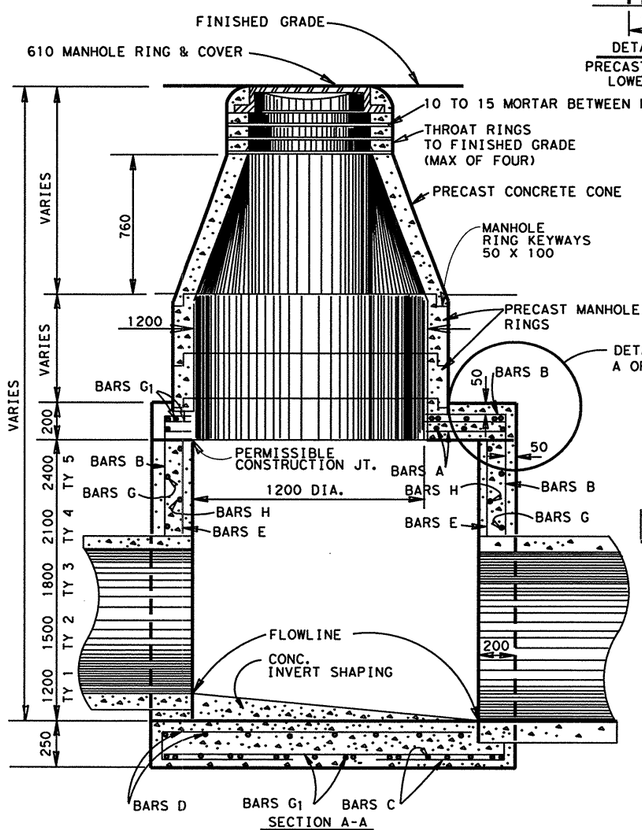


SECTION A-A

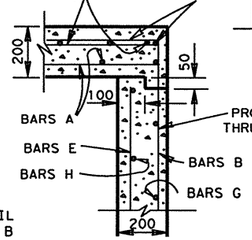


DETAIL B
CAST-IN-PLACE UPPER UNIT W/PRECAST LOWER UNIT

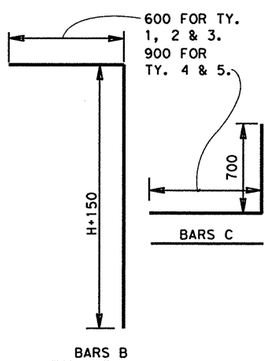


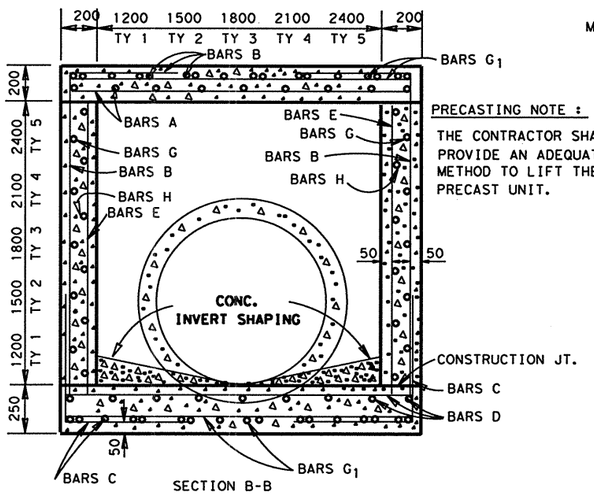


SECTION B-B

PRECASTING NOTE :

THE CONTRACTOR SHALL PROVIDE AN ADEQUATE METHOD TO LIFT THE PRECAST UNIT.

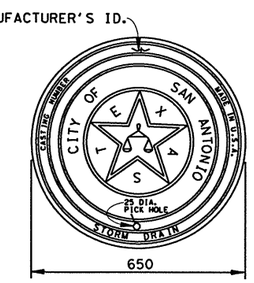


MINIMUM OF SIX RIBS SPACED EVENLY AROUND OUTSIDE DIAMETER OF RING.

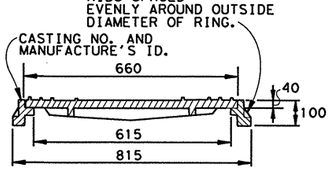


GENERAL NOTES:

DIMENSIONS FOR REINFORCING STEEL ARE TO CENTER OF BARS.
ALL BARS INTERCEPTING MANHOLE AND PIPE OPENINGS SHALL BE FIELD CUT OR BEND.
WHEN THE MANHOLE IS CLOSE TO EXISTING UTILITIES, IT SHALL BE THE CONTRACTOR'S RESPONSIBILITY TO PROTECT AND MAINTAIN THESE LINES.

MANHOLE RING AND COVER SHALL BE DESIGNED FOR HEAVY DUTY ROADWAY SERVICE. THE COVER SHALL BE SECURED BY BOLTS OR A LOCKING DEVICE. FOR COVER NOT ON SAN ANTONIO CITY STREET, DELETE "CITY OF SAN ANTONIO & SCALES OF JUSTICE". THE LOAD BEARING SURFACE SHALL BE MACHINE GROUND.

THE NUMBER, SIZE AND LOCATION OF PIPES WILL VARY; SEE THE CULVERT SECTIONS.

ALL DIMENSIONS ARE IN mm UNLESS SHOWN OTHERWISE.

# SAN ANTONIO DISTRICT STANDARD
# MANHOLE
## TYPE 1 THRU 5 (M)

© 1998 Texas Department of Transportation

| FED. RD. DIV. NO. | PROJECT NO. | | SHEET NO. |
|---|---|---|---|
| 6 | NH 2000 (704), etc. | | 481 |
| STATE | STATE DISTRICT | COUNTY | |
| TEXAS | SAT | BEXAR | |
| CONT. | SECT. | JOB | HIGHWAY NO. |
| 2452 | 01 | 000, etc. | LP 1604 |

12/95

STRUCTURE DESIGN
/BRIDGE/STDS/DMHOLE1T5.DGN

DISCLAIMER:
The use of this standard is governed by the "Texas Engineering Practice Act". No warranty of any kind is made by TxDOT for any purpose whatsoever. TxDOT assumes no responsibility for the conversion of this standard to other formats or for incorrect results or damages resulting from its use.

(LV=1.3 for Metric)

LEVELS G. RED 1 3

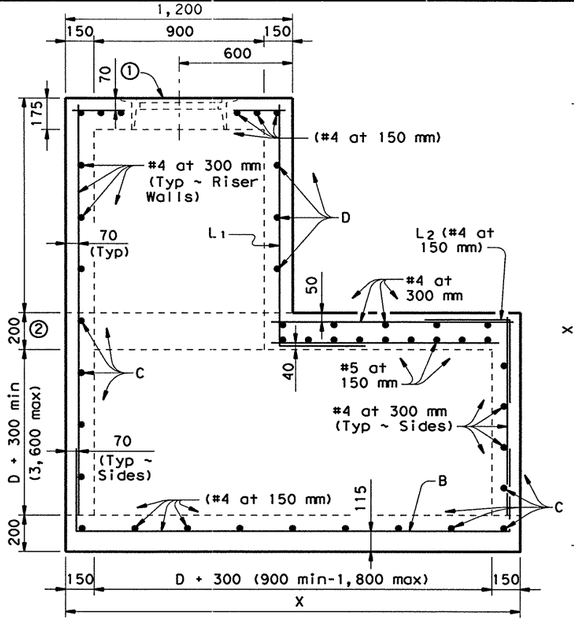


ELEVATION

D = maximum inside diameter of any Pipe entering the side shown or the opposite side

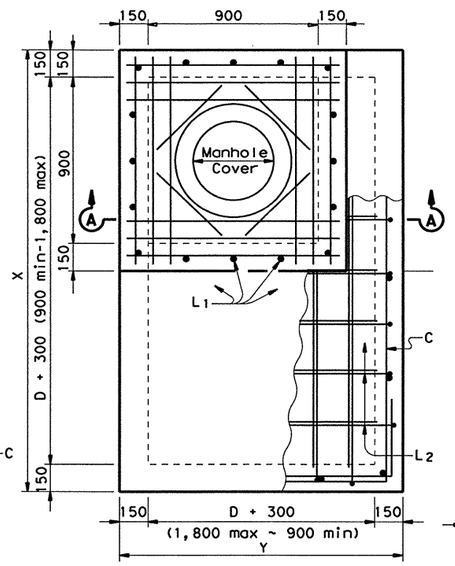


PLAN

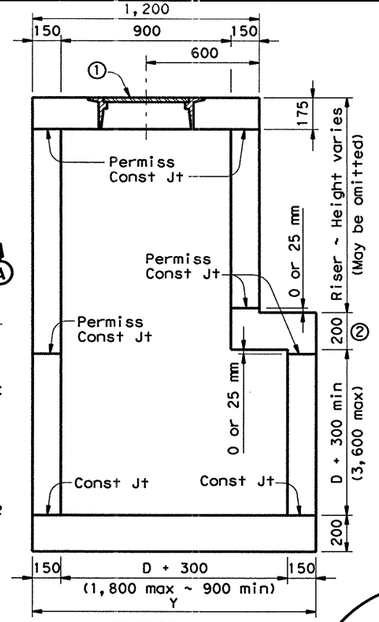


SECTION A-A

## MANHOLE WITH CAST-IN-PLACE RISER

① See Ring and Cover Details

② for 0-4,500 mm of Fill

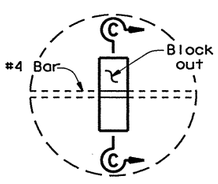


DETAIL "A"

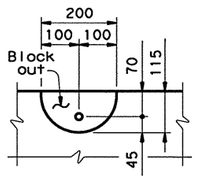


SECTION C-C

## LIFTING CATCH

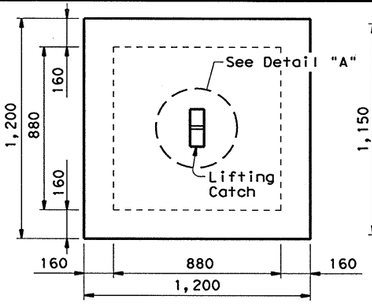


PLAN

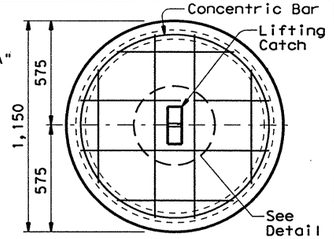


PLAN

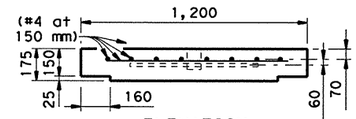


ELEVATION

CAST-IN-PLACE RISER COVER

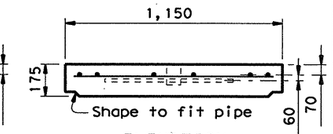


ELEVATION

CONCRETE PIPE RISER COVER

## OPTIONAL PRECAST CONCRETE LIFT-OFF COVERS

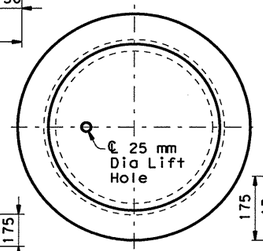


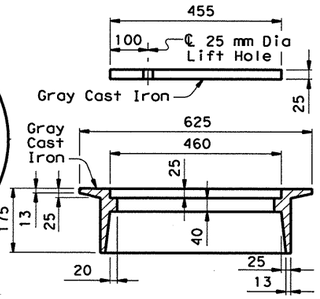


## RING AND COVER DETAILS (TYPE C)

Approximate Weight = 90 kg ③

③ Rings and covers of slightly different dimensions but approximately the same weight may be substituted if approved by the Engineer.

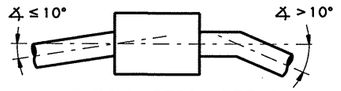


PIPE CONNECTION DETAIL

Connecting pipes should enter within 10° of normal to inlet wall. If necessary, pipe elbow or curved approach alignment should be used to stay within this limit.

### GENERAL NOTES:

Unless otherwise shown in the plans, payment will be made for each manhole of the Type M.

Exposed edges shall be chamfered 20 mm.

Alternate design drawings bearing the seal of a registered professional engineer will be acceptable for precast construction of the manholes.

Shop drawings will not be required.

The Contractor may with the approval of the Engineer furnish manholes of equivalent structural design.

In areas of conflict between reinforcing steel, blockouts, pipes, anchor bolts or other reinforcing steel, the reinforcement shall be bent or adjusted to clear as directed by the Engineer.

The riser may be constructed of reinforced concrete as shown or of Reinforced Concrete Pipe , Class III, in accordance with ASTM Designation C-76. If pipe is used, joints shall conform to the Item "Reinforced Concrete Pipe Culverts". Precast Concrete Lift Off Cover may be substituted for "Ring and Cover".

The riser, either cast-in-place or concrete pipe, may be located in any corner.

All reinforcing steel shall be #4 unless otherwise noted.

Pipes may enter any or all walls. The maximum size of pipe that can be accomodated is 1,500 mm. More than one pipe may enter a side, subject to the maximum box dimension shown. The clear distance between adjacent pipes should be 225 mm minimum.

All lengths are in millimeters and masses are in kilograms unless otherwise noted.

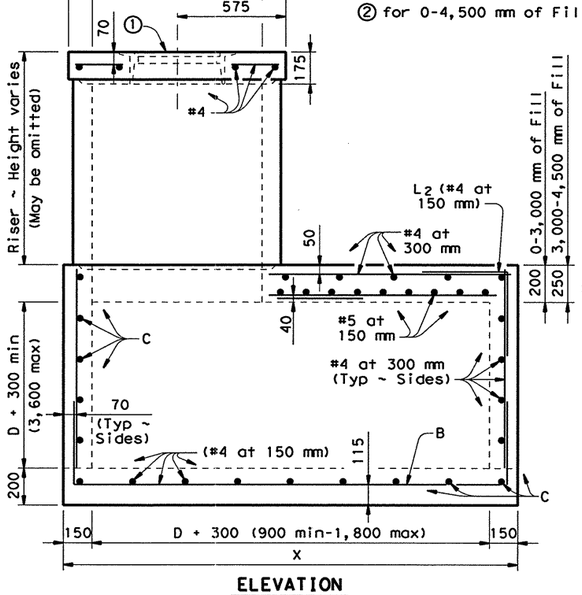


ELEVATION

D = maximum inside diameter of any Pipe entering the side shown or the opposite side

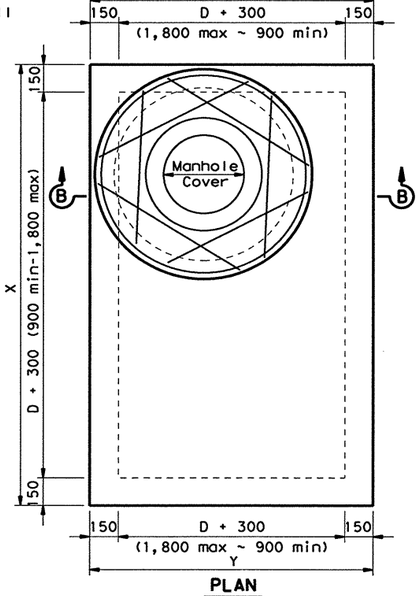


PLAN

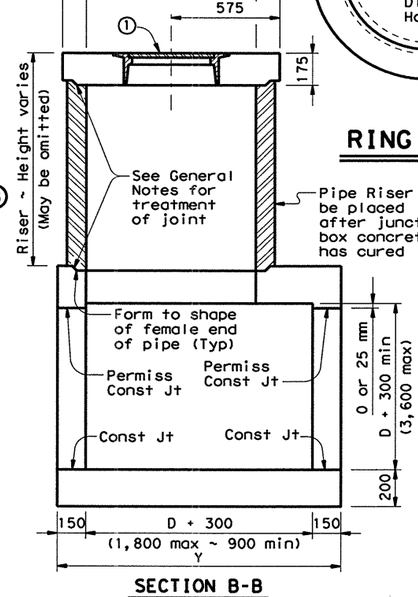


SECTION B-B

## OPTIONAL MANHOLE WITH CONCRETE PIPE RISER

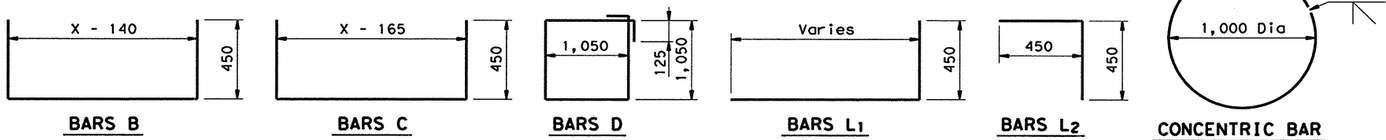


Texas Department of Transportation
Design Division (Bridge)

# MANHOLE TYPE M
## (JUNCTION BOX WITH ACCESS)

## MH-M(M)

| FILE: mh-mmstd.dgn | DN: TXDOT | CK: TER | DW: MCB | CK: TER | STD: B483M |
|---|---|---|---|---|---|
| ©TxDOT September 1996 | DIST | FED REG | FEDERAL AID PROJECT • | | SHEET |
| REVISIONS | SAT | 6 | NH 2000 (704), etc. | | 482 |
| | COUNTY | | CONTROL | SECT | JOB | HIGHWAY |
| | BEXAR | | 2452 | 01 | 036, etc. | LP1604 |

| | |
|---|---|
| DESIGN SPEED: | 110 km/h |
| FUNCT. CLASS: | URBAN FREEWAY |
| EXISTING ADT: | 19,400(2000) |
| PROJECTED ADT: | 35,000(2020) |
| PERM STR. NO.: | 15-015-2452-01-173 |

NOTES:

1. DESIGNED ACCORDING TO 1996 AASHTO STANDARD SPECIFICATIONS AND INTERIMS THERETO.
2. ELEVATIONS SHOWN ARE IN METERS.
3. ALL DIMENSIONS ARE IN METERS UNLESS SHOWN OTHERWISE.
4. BEAM END CONDITIONS:
   D-DENOTES DOWEL IN OUTSIDE BEAM ONLY
   BLANK-DENOTES NO DOWEL
5. CONE PENETROMETER READING ARE IN MILLIMETERS.

● BORING LOCATION
✳ ELEVATION SHOWN AT PGL

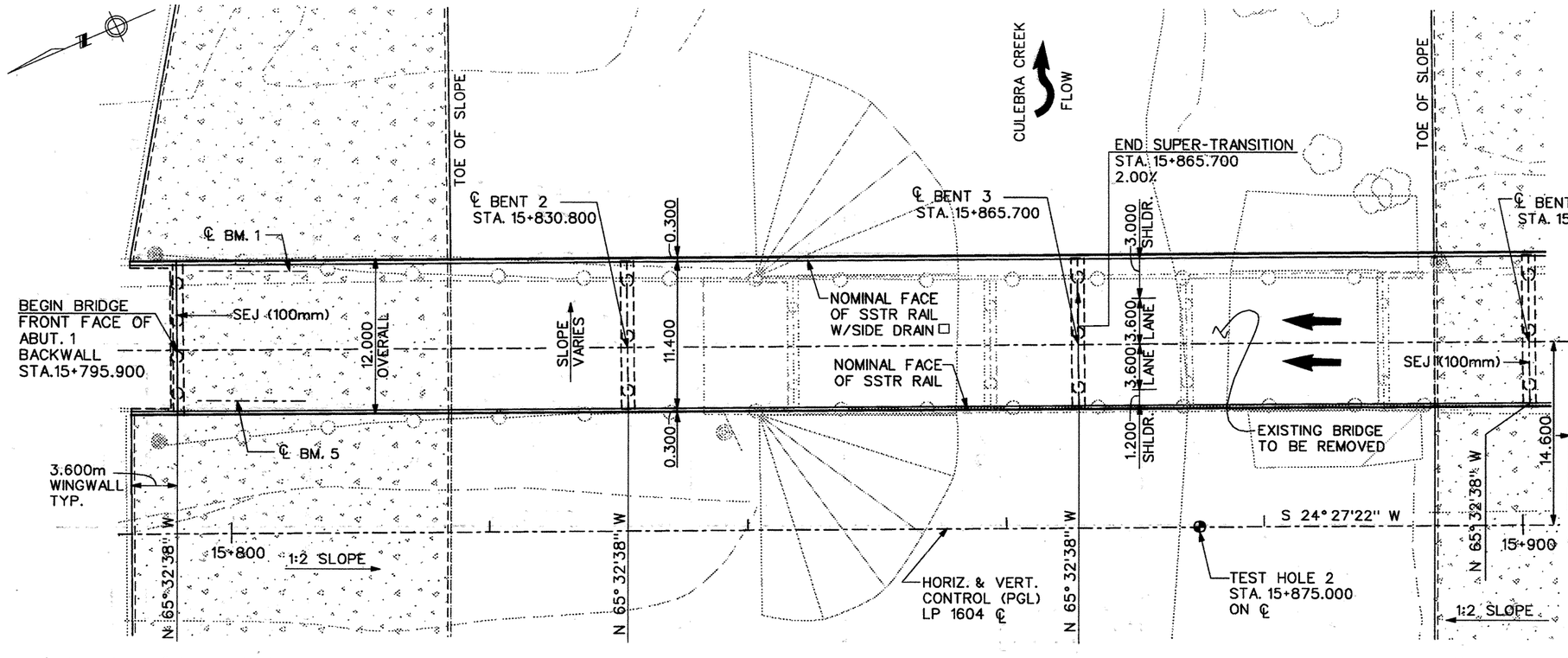


PLAN

SECTION
NO TO SCALE

□ PROVIDE SIDE DRAIN AT LEFT SSTR RAIL FROM ABUT. 1 TO BENT 6 ONLY

0 1 2 4 8 12
SCALE

MS18 LOADING

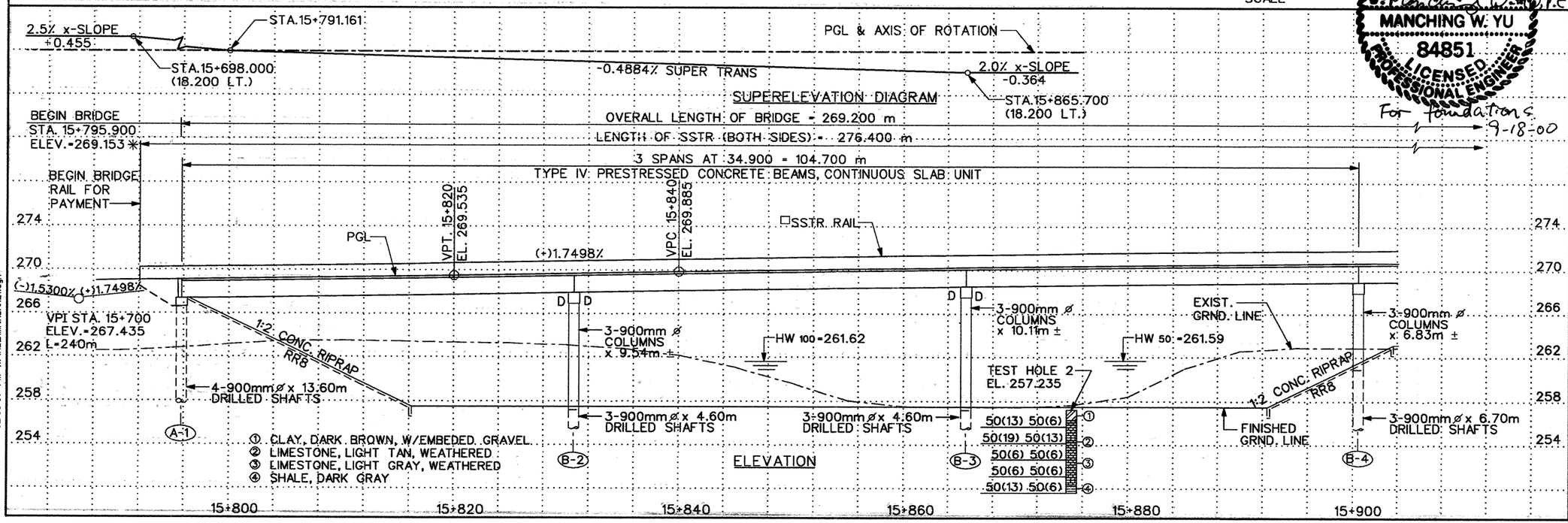


ELEVATION

STATE OF TEXAS
MANCHING W. YU
84851
LICENSED
PROFESSIONAL ENGINEER
For Foundations
9-18-00

STATE OF TEXAS
CHIN-WAN CHING
67603
REGISTERED
PROFESSIONAL ENGINEER
9-14-00
For Geometrics

# LP 1604 NB MAINLANE OVERPASS AT CULEBRA CREEK AND FM 471 (CULEBRA ROAD)

SHEET 1 OF 3 SHEET

STRUCTURAL ENGINEERING ASSOCIATES, INC.
CONSULTING ENGINEERS
SAN ANTONIO, TEXAS

© 2000 Texas Department of Transportation

| FED.RD. DIV.NO. | FEDERAL AID PROJECT NO. | | SHEET NO. |
|---|---|---|---|
| 6 | NH 2000 (704), etc. | | 483 |
| STATE | STATE DIST.NO. | COUNTY | |
| TEXAS | SAT | BEXAR | |
| CONT. | SECT. | JOB | HIGHWAY NO. |
| 2452 | 01 | 036,etc. | LP 1604 |

09/14/2000 02:59:37 PM ...\NB_MAINLANE1.dgn

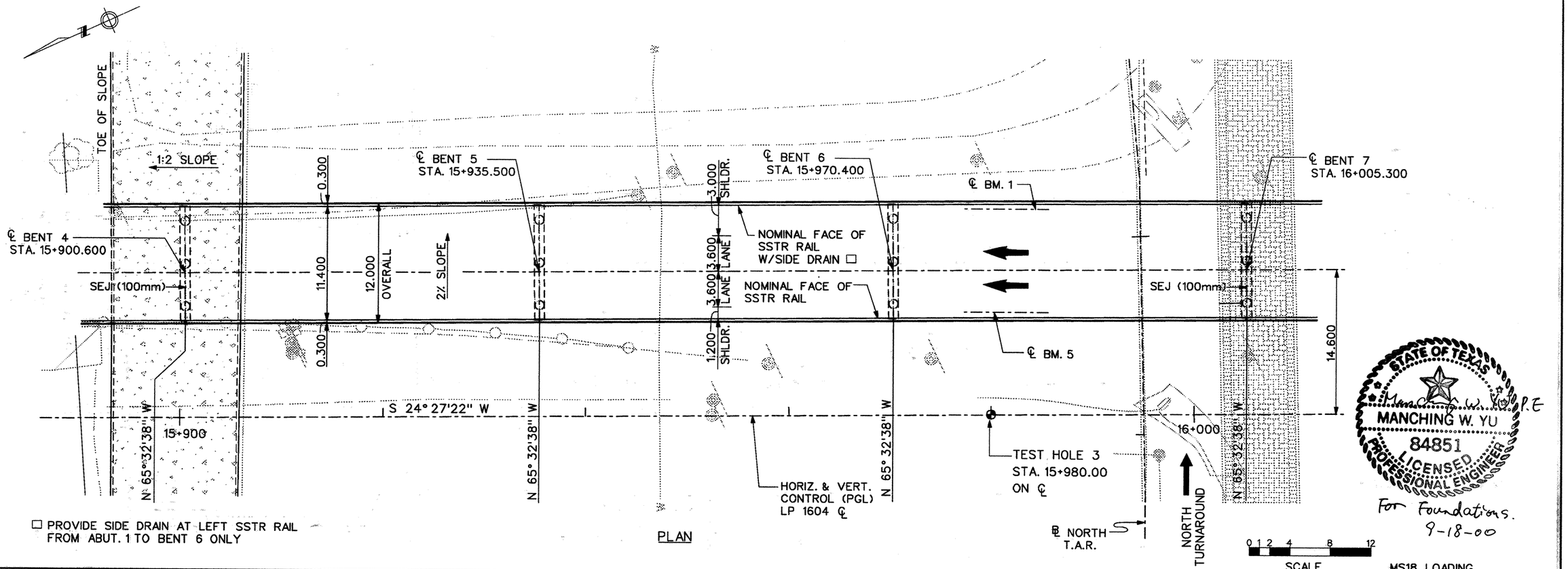


□ PROVIDE SIDE DRAIN AT LEFT SSTR RAIL FROM ABUT. 1 TO BENT 6 ONLY

PLAN

MS18 LOADING

OVERALL LENGTH OF BRIDGE = 269.200 m
LENGTH OF SSTR (BOTH SIDES) = 276.400 m
3 SPANS AT 34.900 + 104.700 m
TYPE IV PRESTRESSED CONCRETE BEAMS, CONTINUOUS SLAB UNIT

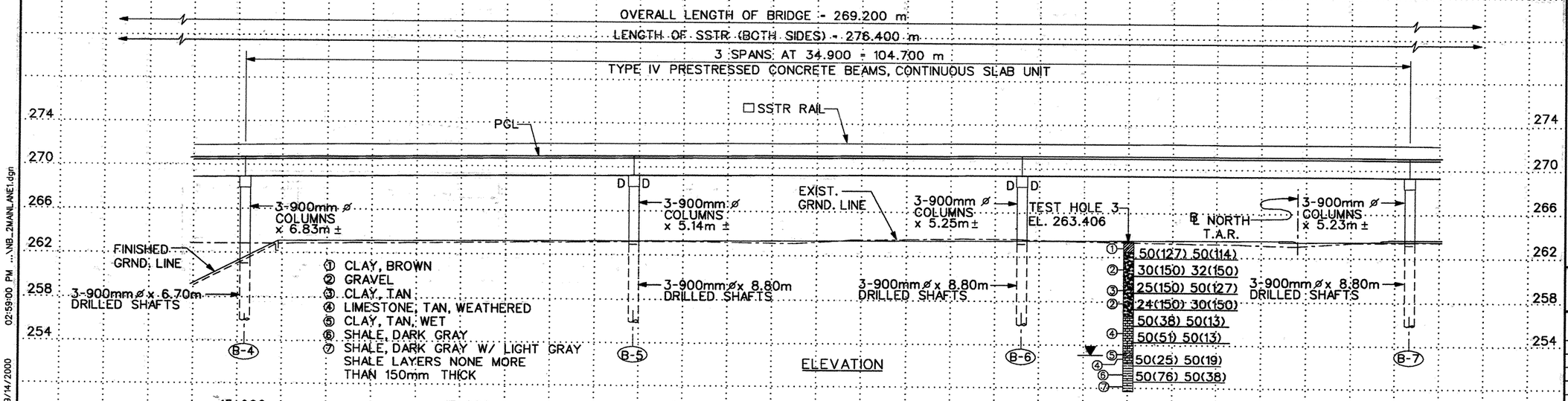


ELEVATION

STATE OF TEXAS
MANCHING W. YU
84851
LICENSED PROFESSIONAL ENGINEER
For Foundations.
9-18-00

STATE OF TEXAS
CHIN- WAN CHING
67603
REGISTERED PROFESSIONAL ENGINEER
9-14-00
For Geometrics

# LP 1604 NB MAINLANE OVERPASS AT CULEBRA CREEK AND FM 471 (CULEBRA ROAD)

SHEET 2 OF 3 SHEET

STRUCTURAL ENGINEERING ASSOCIATES, INC.
CONSULTING ENGINEERS
SAN ANTONIO, TEXAS

© 2000 Texas Department of Transportation

| FED.RD. DIV.NO. | FEDERAL AID PROJECT NO. | | SHEET NO. |
|---|---|---|---|
| 6 | NH 2000 (704), etc. | | 484 |
| STATE | STATE DIST.NO. | COUNTY | |
| TEXAS | SAT | BEXAR | |
| CONT. | SECT. | JOB | HIGHWAY NO. |
| 2452 | 01 | 036,etc. | LP 1604 |

09/14/2000 02:59:00 PM ...\NB_2MAINLANE1.dgn

℄ BENT 7
STA. 16+005.300

℄ BM. 1

NOMINAL FACE OF SSTR RAIL W/SIDE DRAIN □

NOMINAL FACE OF SSTR RAIL

SEJ (100mm)

℄ BM. 5

2.314 HORIZ. CLR.

0.300 | 11.400 | 0.300

3.600 LANE | 3.600 LANE

1.200 SHLDR. | 3.000 SHLDR.

12.000 OVERALL

2% SLOPE

℄ BM. 6

N 65° 32' 38" W

16+000

℄ NORTH T.A.R.

NORTH TURNAROUND

LP 1604ML STA. 16+023.703
= FM 471 STA. 10+269.548

FM 471 (CULEBRA ROAD)
S 66° 21' 19" E

℄ SIGN & BRACKET

℄ BENT 8
STA. 16+042.100

6.158m

℄ BM. 1

1.868 HORIZ. CLR.

℄ BM. 1

LUMINAIRE (TYP.)

℄ BM. 5

N 65° 32' 38" W

HORIZ. & VERT. CONTROL (PGL) LP 1604 ℄

SOUTH TURNAROUND

℄ SOUTH T.A.R.

END BRIDGE
FRONT FACE
ABUT. 9 BACKWALL
STA. 16+065.100

SEJ (100mm)

3.600m WINGWALL TYP.

14.600

S 24° 27' 22" W

16+100

TEST HOLE 4
STA. 16+075.000
ON ℄

1:2 SLOPE

□ PROVIDE SIDE DRAIN AT LEFT SSTR RAIL FROM ABUT. 1 TO BENT 6 ONLY

PLAN

0 1 2 4 8 12
SCALE

MS18 LOADING

OVERALL LENGTH OF BRIDGE = 269.200m
LENGTH OF SSTR (BOTH SIDES) = 276.400 m
2 SPANS AT 36.800-23.00 = 59.800m
TYPE IV PRESTRESSED CONCRETE BEAMS, CONTINUOUS SLAB UNIT

END BRIDGE
STA. 16+065.100
ELEV. = 270.747 *

END BRIDGE RAIL FOR PAYMENT

SSTR RAIL □

VPI STA. 16+015
ELEV.=272.947
L=350m

(+)1.7498% (-)2.5000%

PGL

CALC. MIN. VERT. CLR.=4.931m AT SB MAINLANE S. TURNAROUND

1:2 CONC. PAVERS & CONC. RIPRAP FOR DETAILS SEE SHEET 338-341

274
270
266
262
258
254

3-900mm ø COLUMNS x 5.23m ±

℄ FM 471 (CULEBRA RD.)

FINISHED GRND. LINE

D D

3-900mm ø COLUMNS x 4.61m ±

℄ NORTH T.A.R.

3-900mm ø x 8.80m DRILLED SHAFTS

EXIST. GRND. LINE

3-900mm ø x 7.20m DRILLED SHAFTS

℄ SOUTH T.A.R.

4-900mm ø x 10.80m DRILLED SHAFTS

B-7 B-8 A-9

TEST HOLE 4
EL. 262.639

① 50(114) 50(102)
② ③ 50(140) 50(150)
② ③ 28(150) 50(140)
② 50(38) 50(13)
② 50(51) 50(13)
50(25) 50(6)

① CLAY, BROWN
② LIMESTONE, TAN, WEATHERED
③ GRAVEL

ELEVATION

16+000 16+020 16+040 16+060 16+080 16+100

STATE OF TEXAS
MANCHING W. YU
84851
LICENSED PROFESSIONAL ENGINEER

Manching W. YU
FOR FOUNDATIONS
10-26-2000

* ELEVATION SHOWN AT PGL

STATE OF TEXAS
CHIN-WAN CHING
67603
REGISTERED PROFESSIONAL ENGINEER

Rev 10-26-00
For Geometrics

# LP 1604 NB MAINLANE OVERPASS AT CULEBRA CREEK AND FM 471 (CULEBRA ROAD)

SHEET 3 OF 3 SHEET

STRUCTURAL ENGINEERING ASSOCIATES, INC.
CONSULTING ENGINEERS
SAN ANTONIO, TEXAS

© 2000 Texas Department of Transportation

| FED.RD. DIV.NO. | FEDERAL AID PROJECT NO. | | SHEET NO. |
|---|---|---|---|
| 6 | NH 2000 (704), etc. | | 485 |
| STATE | STATE DIST.NO. | COUNTY | |
| TEXAS | SAT | BEXAR | |
| CONT. | SECT. | JOB | HIGHWAY NO. |
| 2452 | 01 | 036,etc. | LP 1604 |

10/24/2000 11:34:53 AM ...\NB_3MAINLANE1.dgn

## BRIDGE SUMMARY

| Item Number | | Description | Unit | NB Mainlane Overpass @ Culebra Creek |
|---|---|---|---|---|
| 110 | 5002 | Excavation (Channel) | M3 | 8,529 |
| 416 | 5006 | Drilled Shaft (900MM) | M | 246.1 |
| 420 | 5013 | Class "C" Concrete (Abut) | M3 | 37.0 |
| 420 | 5014 | Class "C" Concrete (Bent) | M3 | 168.2 |
| 422 | 5001 | Reinforced Concrete Slab | M2 | 3,230.4 |
| | | | | |
| 425 | 5006 | Prestressed Conc Bm (Type IV) | M | 1,378.7 |
| 428 | 5001 | Concrete Surface Treatment | M2 | 3,069 |
| 432 | 5001 | Riprap (Conc) (Cl B) | M3 | 302 |
| 444 | 5003 | Protect Angle W/Sign Brackets | EA | 1 |
| 444 | 5005 | Sign & Bracket | EA | 1 |
| | | | | |
| 450 | 5045 | Rail (Ty SSTR) | M | 552.8 |
| 454 | 5006 | Sealed Exp Jt SEJ-A (100MM) | M | 48.0 |
| 5027 | 5001 | Landscaping Pavers | M2 | 436 |

## NB MAINLANE @ CULEBRA CREEK BEARING SEAT ELEVATION SUMMARY

| Pier | Abut.1 | Bent 2 | | Bent 3 | | Bent 4 | | Bent 5 | | Bent 6 | | Bent 7 | | Bent 8 | | Abut.9 |
|---|---|---|---|---|---|---|---|---|---|---|---|---|---|---|---|---|
| | Fwd. | Bkwd. | Fwd. | Bkwd. | Fwd. | Bkwd. | Fwd. | Bkwd. | Fwd. | Bkwd. | Fwd. | Bkwd. | Fwd. | Bkwd. | Fwd. | Bkwd. |
| 1 | 267.439 | 267.812 | 267.817 | 268.190 | 268.196 | 268.618 | 268.622 | 268.899 | 268.901 | 269.032 | 269.033 | 269.017 | 269.016 | 268.841 | 268.838 | 268.648 |
| 2 | 267.442 | 267.839 | 267.845 | 268.241 | 268.247 | 268.669 | 268.673 | 268.950 | 268.952 | 269.083 | 269.084 | 269.068 | 269.057 | 268.882 | 268.889 | 268.699 |
| 3 | 267.445 | 267.866 | 267.872 | 268.292 | 268.298 | 268.720 | 268.724 | 269.001 | 269.003 | 269.134 | 269.135 | 269.119 | 269.097 | 268.923 | 268.940 | 268.750 |
| 4 | 267.449 | 267.893 | 267.899 | 268.343 | 268.349 | 268.771 | 268.775 | 269.052 | 269.054 | 269.185 | 269.186 | 269.170 | 269.138 | 268.963 | 268.991 | 268.801 |
| 5 | 267.452 | 267.920 | 267.926 | 268.394 | 268.400 | 268.822 | 268.826 | 269.103 | 269.105 | 269.236 | 269.237 | 269.221 | 269.179 | 269.004 | 269.042 | 268.852 |
| 6 | | | | | | | | | | | | | 269.220 | 269.045 | | |

Manching W. Yu
10-26-2000

S & B INFRASTRUCTURE, LTD.

©2000
TEXAS DEPARTMENT OF TRANSPORTATION

**LOOP 1604 NB MAINLANE OVERPASS AT CULEBRA CREEK SUMMARY SHEET**

| | | | |
|---|---|---|---|
| DESIGNED BY: DE | CHECKED BY: KL | DATE: 09-18-00 | |
| DRAWN BY: TC | CHECKED BY: MW | DATE: 09-18-00 | |
| APPROVED BY: MW | DATE: 09-18-00 | PROJECT NO: 9432 | |

| FED.RD. DIV.NO. | FEDERAL AID PROJECT NO. | SHEET NO. |
|---|---|---|
| 6 | NH 2000 (704), etc. | 486 |

| STATE | STATE DIST.NO. | COUNTY | |
|---|---|---|---|
| TEXAS | SAT | BEXAR | |
| CONT. | SECT. | JOB | HIGHWAY NO. |
| 2452 | 01 | 036, etc. | LP 1604 |

26 OCT 2000 16:28:24 s:\project\u9432.200\design\data\cadd\dgn\nbml@culebra\9432nbml*cul*summary.dgn

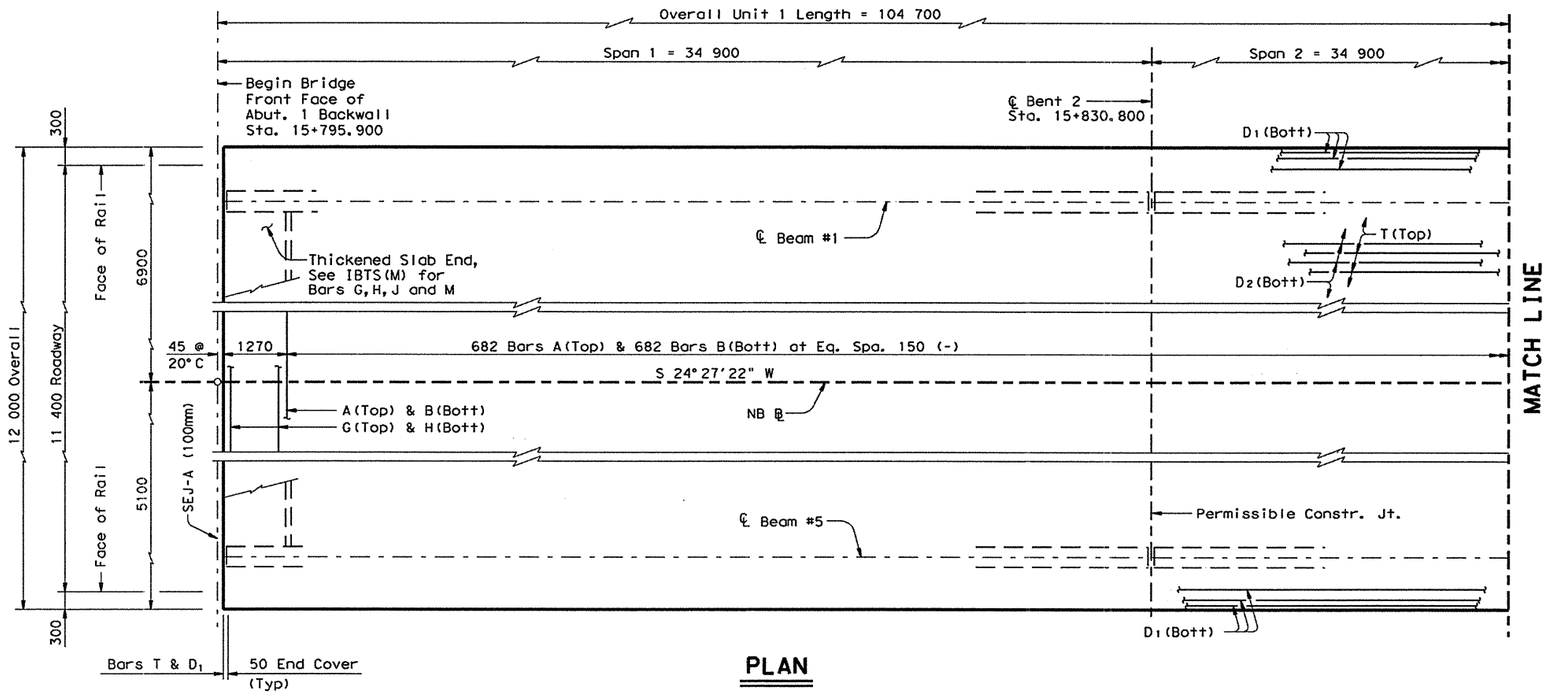


PLAN

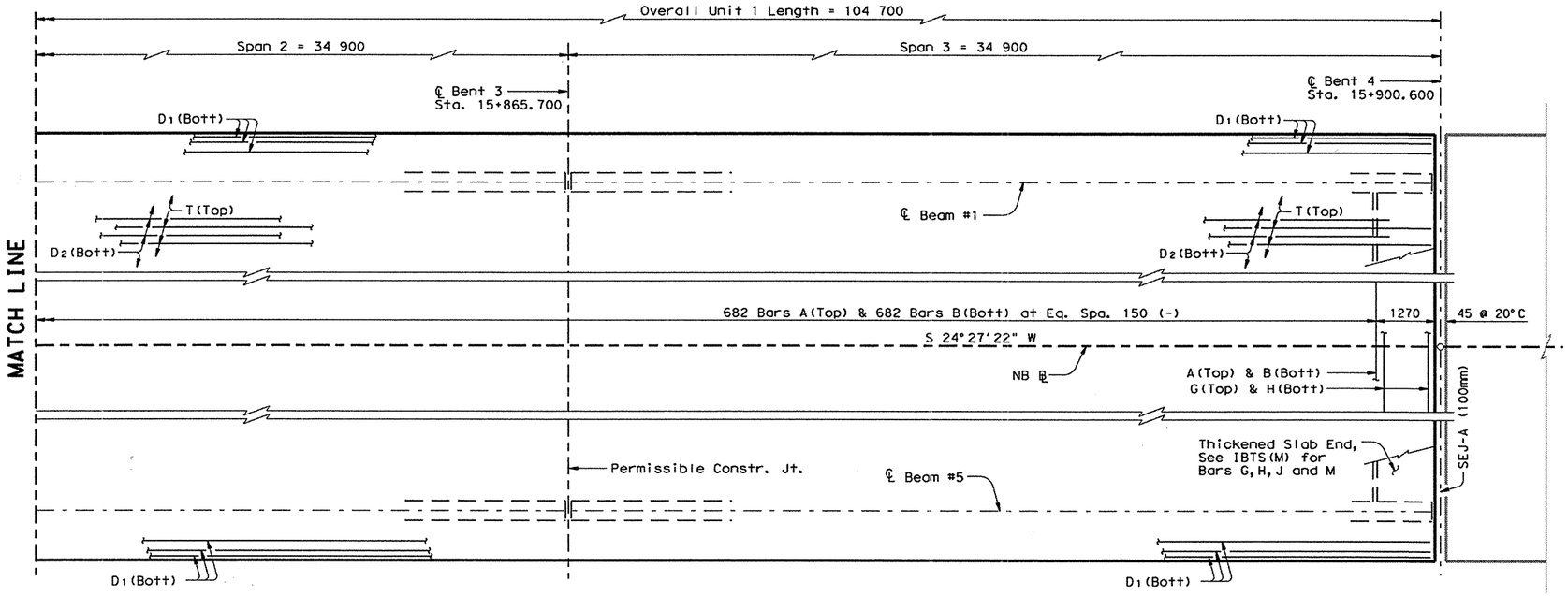


PLAN

Manching W. Yu, P.E
9-18-00

S & B INFRASTRUCTURE, LTD.

©2000 TEXAS DEPARTMENT OF TRANSPORTATION

# LOOP 1604 NB MAINLANE OVERPASS AT CULEBRA CREEK UNIT 1 SLAB PLAN

| | | | |
|---|---|---|---|
| DESIGNED BY: DE | CHECKED BY: KL | DATE: 09-18-00 | |
| DRAWN BY: TC | CHECKED BY: MW | DATE: 09-18-00 | |
| APPROVED BY: MW | DATE: 09-18-00 | PROJECT NO: 9432 | |

| FED.RD. DIV.NO. | FEDERAL AID PROJECT NO. | SHEET NO. |
|---|---|---|
| 6 | NH 2000 (704), etc. | 487 |

| STATE | STATE DIST. NO. | COUNTY | |
|---|---|---|---|
| TEXAS | SAT | BEXAR | |
| CONT. | SECT. | JOB | HIGHWAY NO. |
| 2452 | 01 | 036, etc. | LP 1604 |

18 SEP 2000 10:51:54 s:\project\u9432.200\design*data\cadd\dgn\nbml@culebra\9432nbml*culebra*unitlslab.dgn

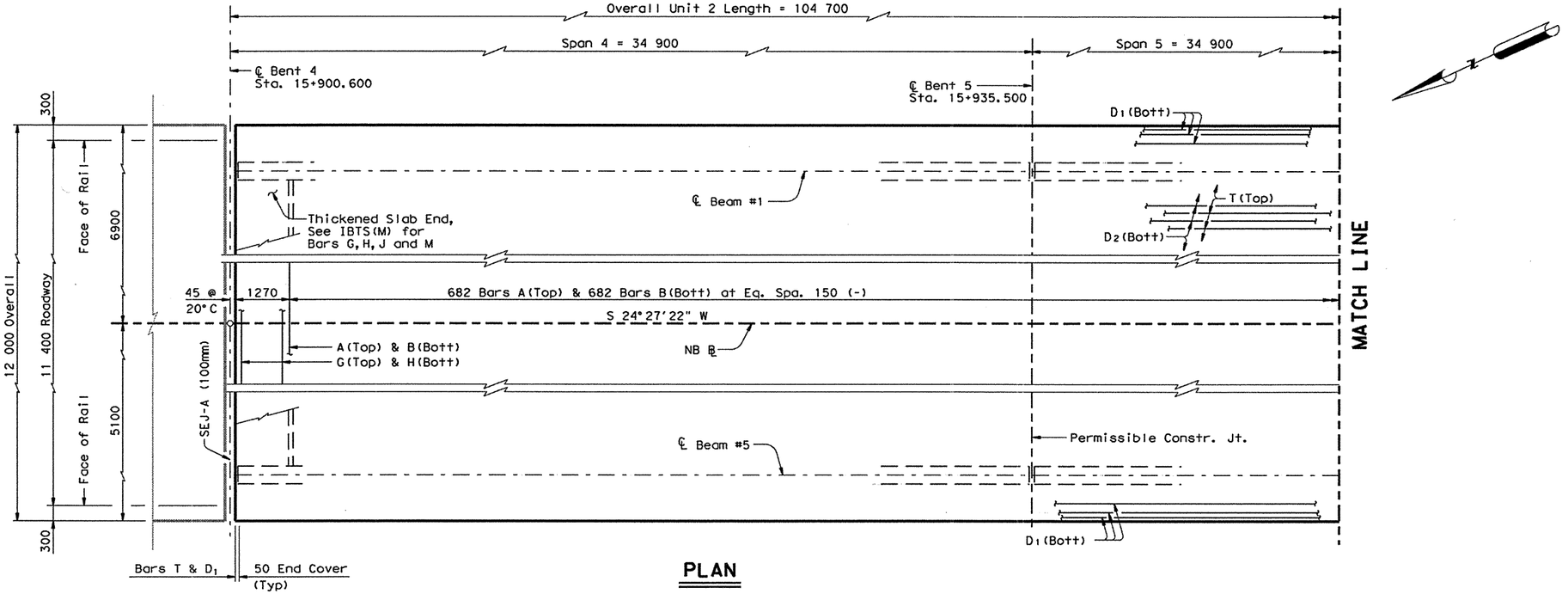


PLAN

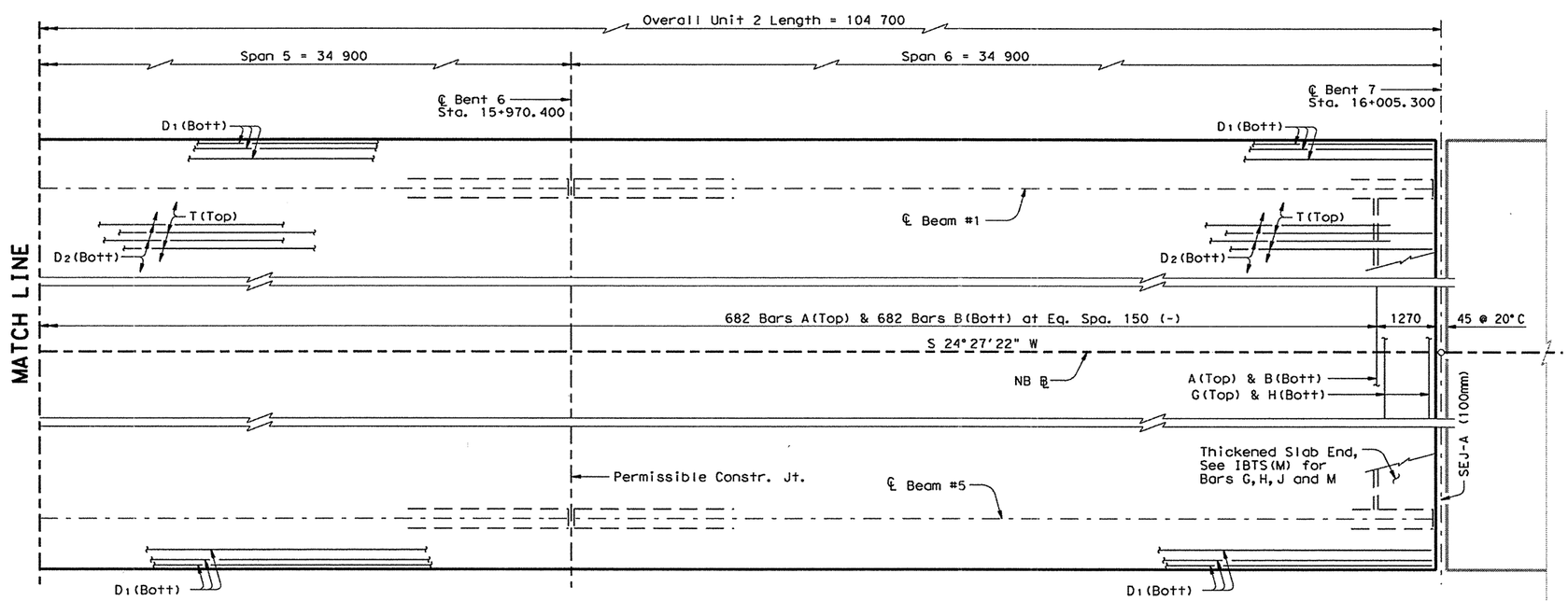


PLAN

Manching W. Yu
84851
REGISTERED PROFESSIONAL ENGINEER
STATE OF TEXAS

Manching W. Yu, P.E
9-18-00

S & B INFRASTRUCTURE, LTD.

©2000 TEXAS DEPARTMENT OF TRANSPORTATION

# LOOP 1604 NB MAINLANE OVERPASS AT CULEBRA CREEK UNIT 2 SLAB PLAN

| | | | |
|---|---|---|---|
| DESIGNED BY: DE | CHECKED BY: KL | DATE: 09-18-00 | |
| DRAWN BY: TC | CHECKED BY: MW | DATE: 09-18-00 | |
| APPROVED BY: MW | DATE: 09-18-00 | PROJECT NO: 9432 | |

| FED. RD. DIV. NO. | FEDERAL AID PROJECT NO. | SHEET NO. |
|---|---|---|
| 6 | NH 2000 (704), etc. | 488 |

| STATE | STATE DIST. NO. | COUNTY | |
|---|---|---|---|
| TEXAS | SAT | BEXAR | |
| CONT. | SECT. | JOB | HIGHWAY NO. |
| 2452 | 01 | 036, etc. | LP 1604 |

18 SEP 2000 10:51:55 s:\project\u9432.200\design\data\cadd\dgn\nbml@culebra\9432nbml*cul*unit2slab.dgn

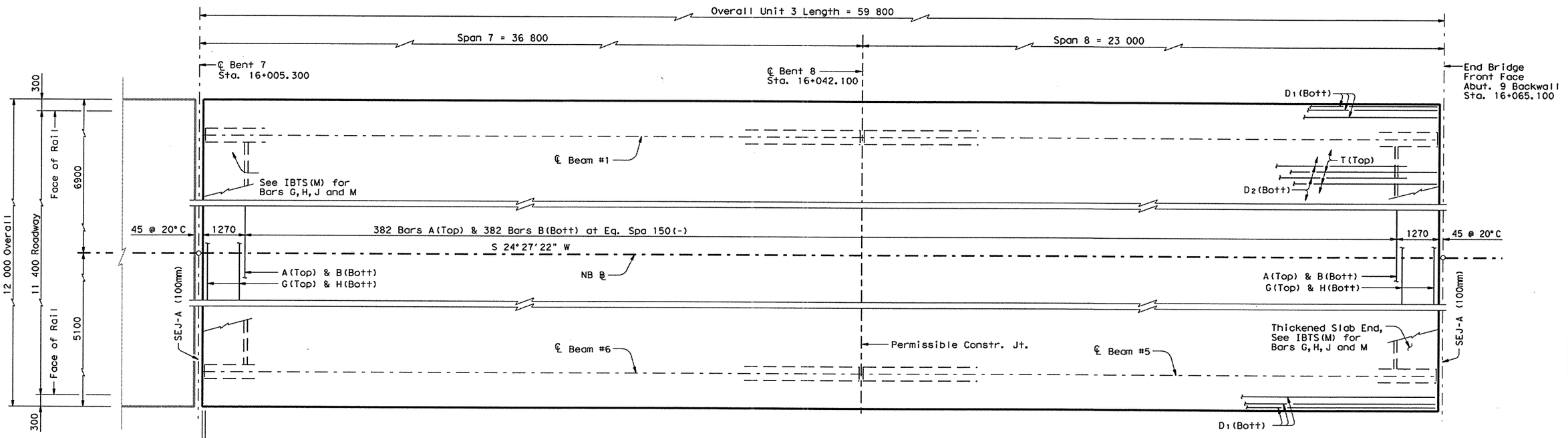


**PLAN**

Manching W. YU, P.E
9-18-00

S & B INFRASTRUCTURE, LTD.

©2000
TEXAS DEPARTMENT OF TRANSPORTATION

# LOOP 1604 NB MAINLANE OVERPASS AT CULEBRA CREEK UNIT 3 SLAB PLAN

| | | | |
|---|---|---|---|
| DESIGNED BY: DE | CHECKED BY: KL | DATE: 09-18-00 | |
| DRAWN BY: TC | CHECKED BY: MW | DATE: 09-18-00 | |
| APPROVED BY: MW | DATE: 09-18-00 | PROJECT NO: 9432 | |

| FED. RD. DIV. NO. | FEDERAL AID PROJECT NO. | SHEET NO. |
|---|---|---|
| 6 | NH 2000 (704), etc. | 489 |

| STATE | STATE DIST. NO. | COUNTY | |
|---|---|---|---|
| TEXAS | SAT | BEXAR | |
| CONT. | SECT. | JOB | HIGHWAY NO. |
| 2452 | 01 | 036, etc. | LP 1604 |

18 SEP 2000 10:51:56 s:\project\u9432.200\design*data\cadd\dgn\nbml@culebra\9432nbml*cul*unit3slab.dgn

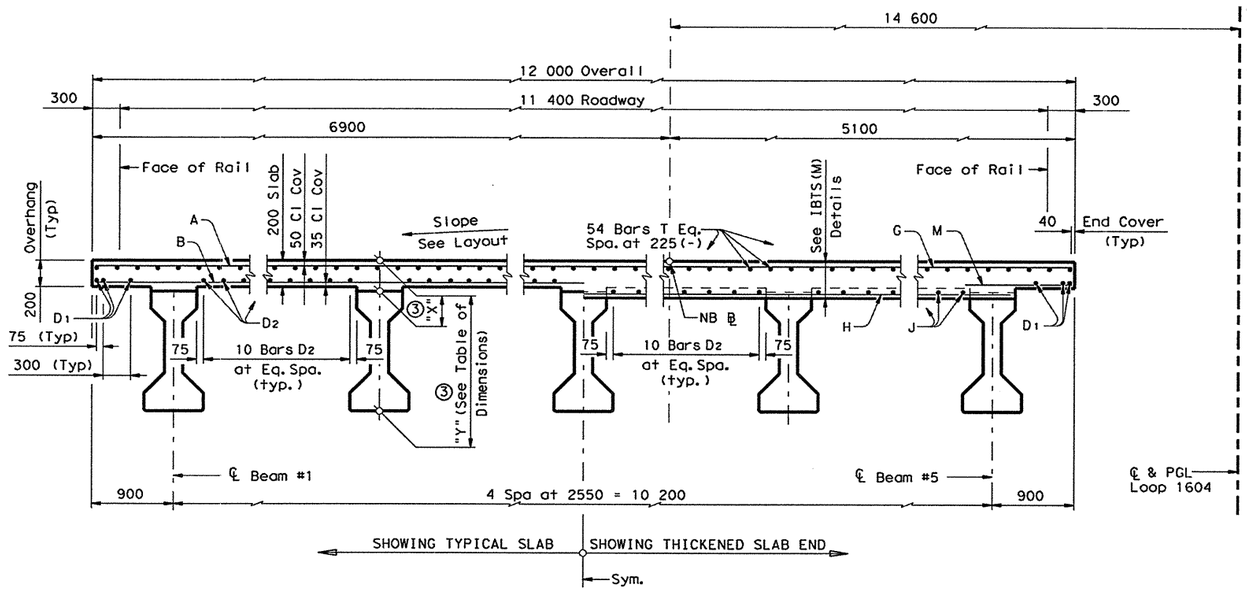


## UNITS 1 & 2 AND SPAN 8
## TYPICAL TRANSVERSE SECTION

(LOOKING UPSTATION)

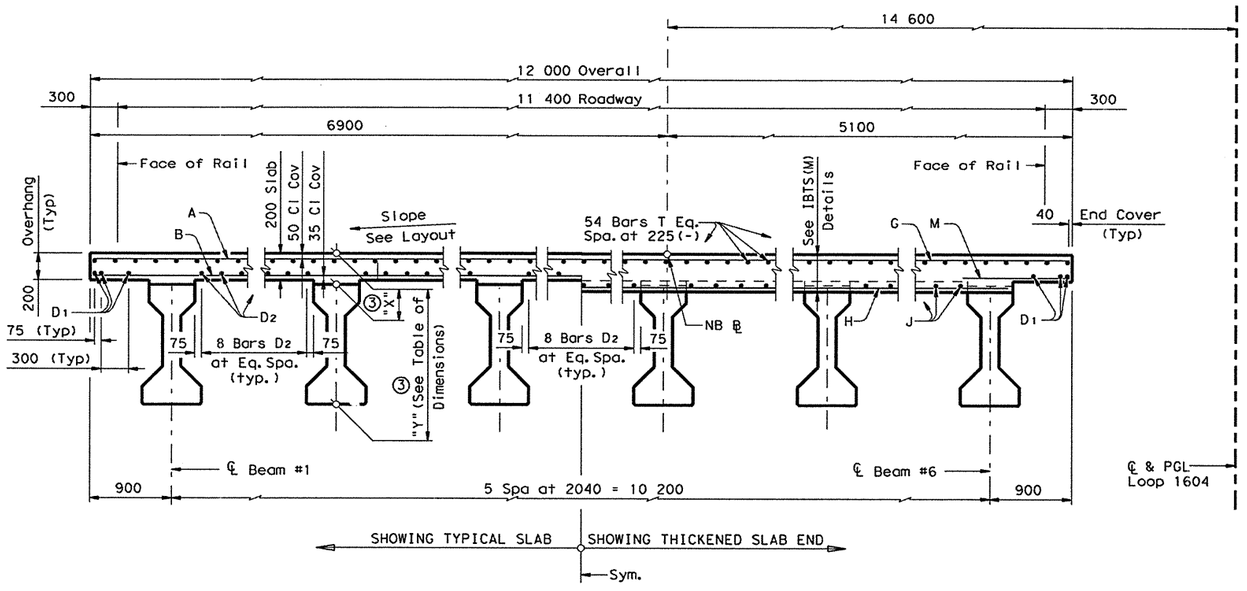


## SPAN 7
## TYPICAL TRANSVERSE SECTION

(LOOKING UPSTATION)

| Span | "A" | "B" |
|---|---|---|
| m | mm | mm |
| 34.900 | 41 | 58 |
| 36.800 | 39 | 54 |
| 23.000 | 8 | 11 |

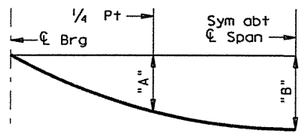


## DEAD LOAD DEFLECTION DIAGRAM

NOTE: Deflections shown are due to concrete slab only. ($E_c$ = 35,000 MPa) Calculated deflections shown are theoretical and actual dimensions may be less. Deflections shall be adjusted based on field observations.

## BAR TABLE

| Bar | Size |
|---|---|
| A | #5 |
| B | #5 |
| D | #5 |
| G | #5 |
| H | #5 |
| J | #5 |
| M | #5 |
| T | #5 |

## TABLE OF ESTIMATED QUANTITIES

| Unit | Reinf Concrete Slab | Prestressed Concrete ① Beams (Ty IV) | Class "S" Concrete | ②Total Reinf Steel |
|---|---|---|---|---|
| | $m^2$ | m | $m^3$ | kg |
| 1 | 1256.4 | 522.0 | 255.2 | 40,205 |
| 2 | 1256.4 | 522.0 | 255.2 | 40,205 |
| 3 | 717.6 | 334.7 | 146.1 | 22,963 |

① Fabricator shall adjust beam lengths for beam slopes as required.

② Reinforcing steel mass is calculated using an approximate factor of 32 kg/$m^2$.

## ③ TABLE OF DIMENSIONS (mm)

| | X | Y |
|---|---|---|
| Abut 1 Front | 255 | 1627 |
| Middle Span 1 | 212 | 1584 |
| Bent 2 Back | 255 | 1627 |
| Bent 2 Front | 255 | 1627 |
| Middle Span 2 | 244 | 1616 |
| Bent 3 Back | 255 | 1627 |

X= 255, Y= 1627 unless otherwise specified in above table.

**GENERAL NOTES:**

1. Designed according to current AASHTO Standard and Interim Specifications.
2. See IBTS(M) Standard for Thickened Slab End Details and quantity adjustments.
3. See PCP(C)(M) or PMDF(C)(M) Standards for details and quantity adjustments if either of these options are used.
4. All reinforcing shall be Grade 420. Concrete strength f'c = 28 MPa.
5. All dimensions are in millimeters unless otherwise shown.
6. Bar laps, where required, shall be as follows:
   Uncoated ~ #5 = 560 mm

STATE OF TEXAS
Manching W. Yu
84851
REGISTERED PROFESSIONAL ENGINEER

Manching W. Yu, P.E
9-18-00

S & B INFRASTRUCTURE, LTD.

©2000
TEXAS DEPARTMENT OF TRANSPORTATION

**LOOP 1604 NB MAINLANE OVERPASS AT CULEBRA CREEK TYPICAL SECTIONS**

| | | | |
|---|---|---|---|
| DESIGNED BY: DE | CHECKED BY: KL | DATE: 09-18-00 | |
| DRAWN BY: TC | CHECKED BY: MW | DATE: 09-18-00 | |
| APPROVED BY: MW | DATE: 09-18-00 | PROJECT NO: 9432 | |

| FED. RD. DIV. NO. | FEDERAL AID PROJECT NO. | SHEET NO. |
|---|---|---|
| 6 | NH 2000 (704), etc. | 490 |

| STATE | STATE DIST. NO. | COUNTY |
|---|---|---|
| TEXAS | SAT | BEXAR |

| CONT. | SECT. | JOB | HIGHWAY NO. |
|---|---|---|---|
| 2452 | 01 | 036, etc. | LP 1604 |

18 SEP 2000 10:51:53 s:\project\u9432.200\design\data\cadd\dgn\nbml@culebra\9432nbml*culvtypsections.dgn

18 SEP 2000 10:51:45 s:\project\u9432.200\design*data\cadd\dgn\nbml@culebra\9432nbml*cul*abut1.dgn

*Abut 9 shown, Abut 1 is opposite hand.

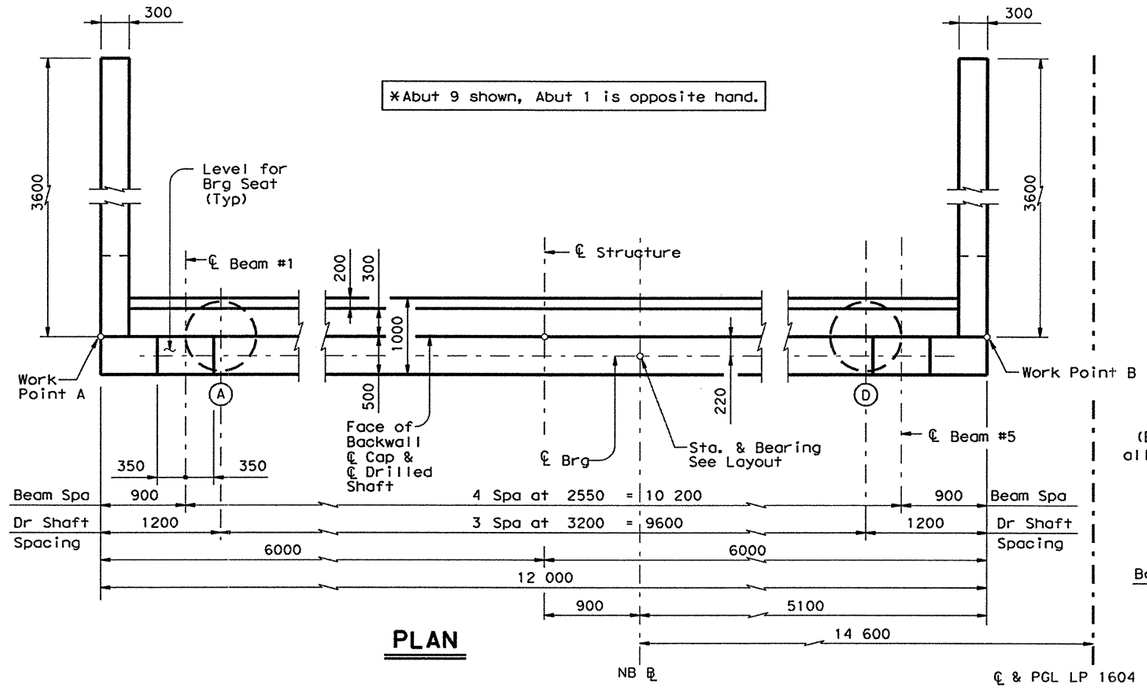


## PLAN

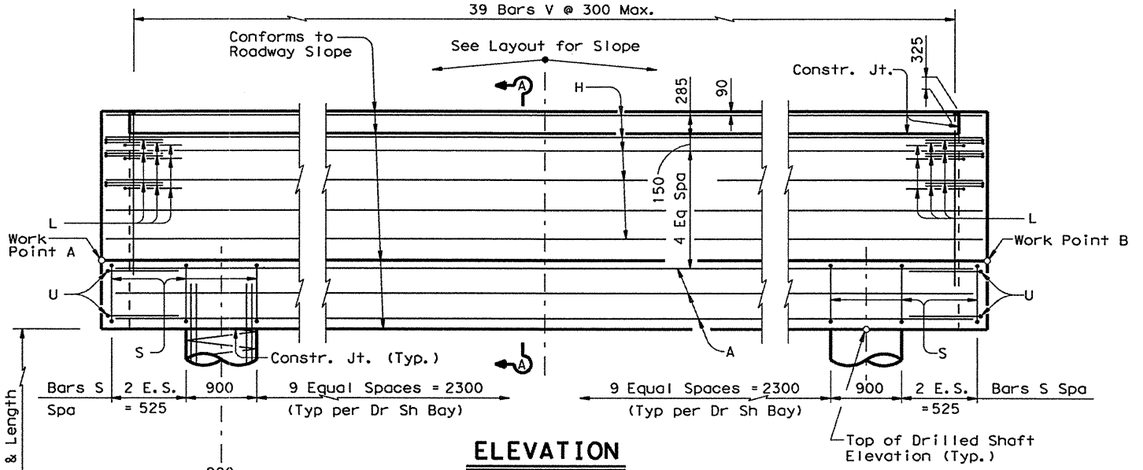


## ELEVATION

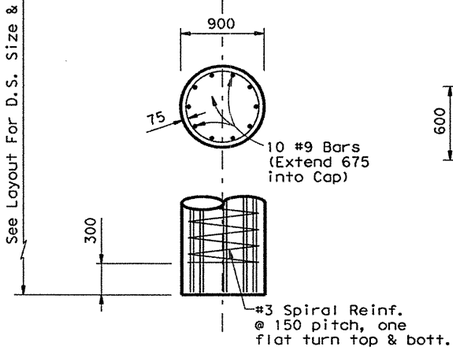


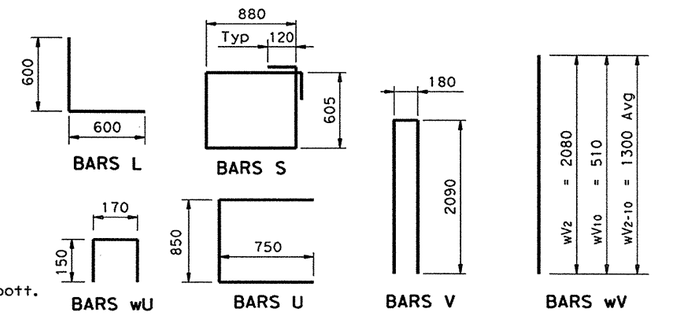


## TOP OF DRILLED SHAFT ELEV. (m)

| Abut No. | D.S.A. | D.S.B. | D.S.C. | D.S.D. | W.P. A | W.P. B |
|---|---|---|---|---|---|---|
| 1 | 266.649 | 266.653 | 267.657 | 266.662 | 267.397 | 267.413 |
| 9 | 267.864 | 267.928 | 267.992 | 268.056 | 268.590 | 268.830 |

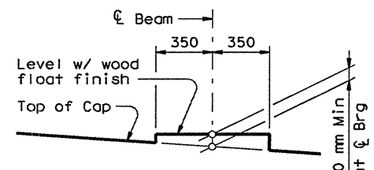


## BEARING SEAT DETAIL

(Bearing surface shall be clean and free of all loose material before placing bearing pad.)

NOTE: Built up portion of bearing seat shall be cast integrally with cap or constructed as follows. Area under built up portion to be bush hammered. Then pedestal shall be formed from mortar which has been treated with doraweld or weldcrete bonding agent or an approved equal. The bonding agent shall be mixed with the mortar in accordance with the manufacturer's recommendations.

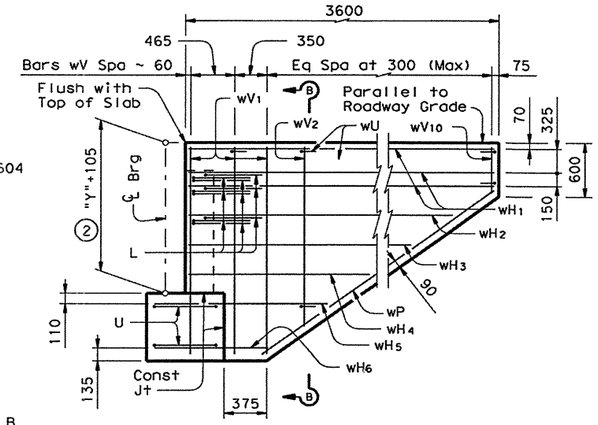


## WINGWALL ELEVATION

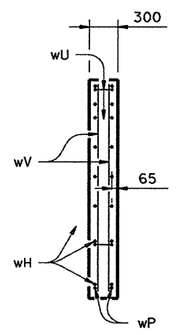


## SECTION B-B

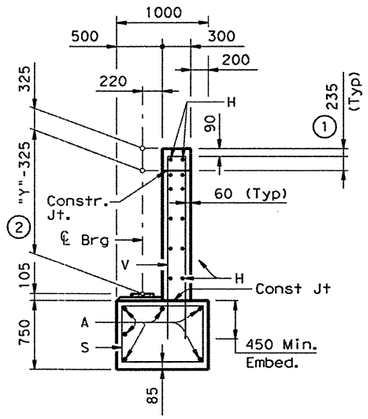


## SECTION A-A

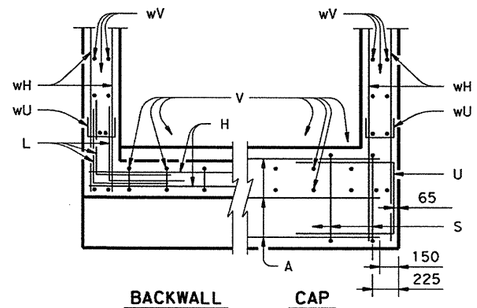


BACKWALL CAP

## CORNER DETAILS

## TABLE OF ESTIMATED QUANTITIES

| Bar | No. | Size | Length | Mass |
|---|---|---|---|---|
| A | 6 | #11 | 11 700 | 555 |
| H | 12 | #5 | 11 900 | 222 |
| L | 18 | #6 | 1200 | 48 |
| S | 36 | #4 | 3210 | 115 |
| U | 4 | #6 | 2350 | 21 |
| V | 39 | #5 | 4360 | 264 |
| wH1 | 12 | #6 | 3500 | 94 |
| wH2 | 4 | #6 | 2960 | 26 |
| wH3 | 4 | #6 | 2490 | 22 |
| wH4 | 4 | #6 | 2020 | 18 |
| wH5 | 4 | #6 | 2050 | 18 |
| wH6 | 4 | #6 | 1320 | 12 |
| wP | 4 | #6 | 3280 | 29 |
| wU | 16 | #4 | 470 | 7 |
| wV1 | 12 | #5 | 2350 | 44 |
| wV2-10 | 36 | #5 | 1300Av | 73 |
| | | | | |
| | | | | |
| *Reinforcing Steel | | | kg | 1568 |
| Class "C" Concrete | | | m3 | 18.5 |
| | | | | |

*For Contractors Information Only

1. Increase as required to maintain 90 mm from Finished Grade.
2. See Slab Typ. Section sheet for "Y".

**GENERAL NOTES:**

1. All cap and backwall concrete shall be Class "C", f'c = 25 MPa.
2. All cap and wall reinforcing shall be Grade 420.
3. See Foundation Detail Standard Sheet, FD(M), for all foundation details and notes.
4. Calculated Drilled Shaft Load = 908 kN each.
5. All dimensions are in millimeters unless otherwise specified.
6. Chamfer an exposed corner 20mm unless otherwise specified.

STATE OF TEXAS
Manching W. Yu
84851
REGISTERED PROFESSIONAL ENGINEER

Manching W. Yu, P.E
9-18-00

S & B INFRASTRUCTURE, LTD.

©2000 TEXAS DEPARTMENT OF TRANSPORTATION

# LOOP 1604 NB MAINLANE OVERPASS AT CULEBRA CREEK ABUTMENTS 1 & 9

| DESIGNED BY: DE | CHECKED BY: KL | DATE: 09-18-00 |
|---|---|---|
| DRAWN BY: TC | CHECKED BY: MW | DATE: 09-18-00 |
| APPROVED BY: MW | DATE: 09-18-00 | PROJECT NO: 9432 |

| FED.RD. DIV.NO. | FEDERAL AID PROJECT NO. | SHEET NO. |
|---|---|---|
| 6 | NH 2000 (704), etc. | 491 |

| STATE | STATE DIST.NO. | COUNTY |
|---|---|---|
| TEXAS | SAT | BEXAR |

| CONT. | SECT. | JOB | HIGHWAY NO. |
|---|---|---|---|
| 2452 | 01 | 036, etc. | LP 1604 |

| TOP OF COLUMN ELEVATIONS (m) | | | | | |
|---|---|---|---|---|---|
| Bent No. | Col. A | Col. B | Col. C | W.P. A | W.P. B |
| 2 | 266.781 | 266.826 | 266.871 | 267.766 | 267.886 |
| 3 | 267.166 | 267.252 | 267.338 | 268.138 | 268.366 |
| 4 | 267.594 | 267.680 | 267.766 | 268.566 | 268.794 |
| 5 | 267.875 | 267.961 | 268.047 | 268.847 | 269.075 |
| 6 | 268.008 | 268.094 | 268.180 | 268.980 | 269.208 |

| TABLE OF VARIABLE QUANTITIES FOR 3 COLUMNS | | | | | | ESTIMATED QUANTITIES FOR 3 COLS | |
|---|---|---|---|---|---|---|---|
| Bent No. | "H" | Bars V 30 ~ #9 | | Bars Z 3 ~ #3 Spiral | | Reinf Steel | Class "C" Conc |
| | mm | Length | Mass | Length | Mass | kg | $m^3$ |
| 2 | 9540 | 10 390 | 1577 | 153 400 | 257 | 1834 | 18.2 |
| 3 | 10 110 | 10 960 | 1664 | 162 300 | 272 | 1936 | 19.3 |
| 4 | 6830 | 7680 | 1166 | 110 800 | 186 | 1352 | 13.0 |
| 5 | 5140 | 5990 | 909 | 84 300 | 141 | 1050 | 9.8 |
| 6 | 5250 | 6100 | 926 | 86 000 | 144 | 1070 | 10.0 |

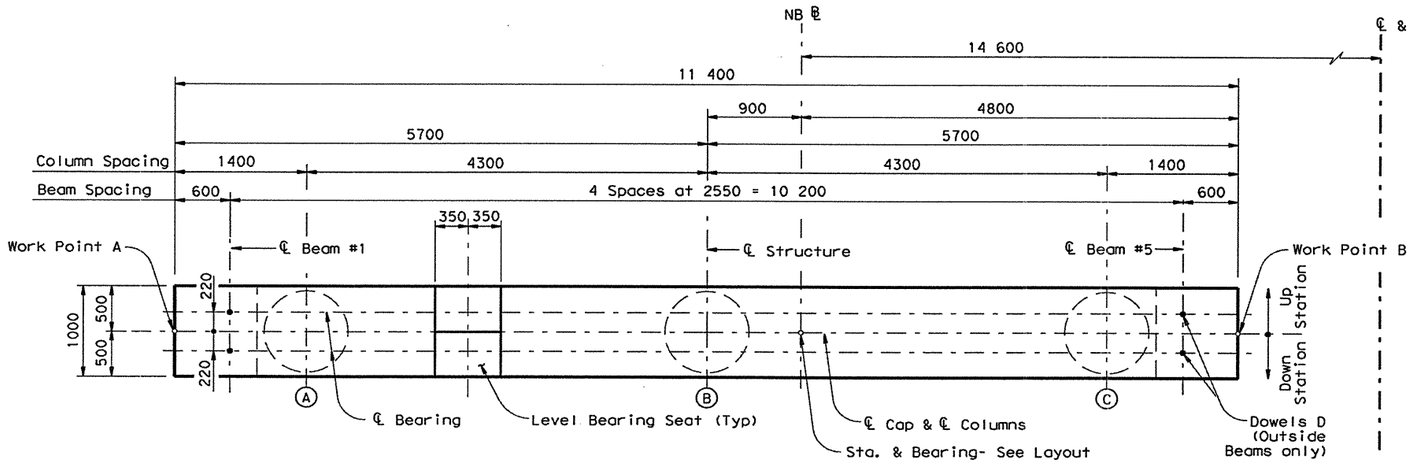


## PLAN

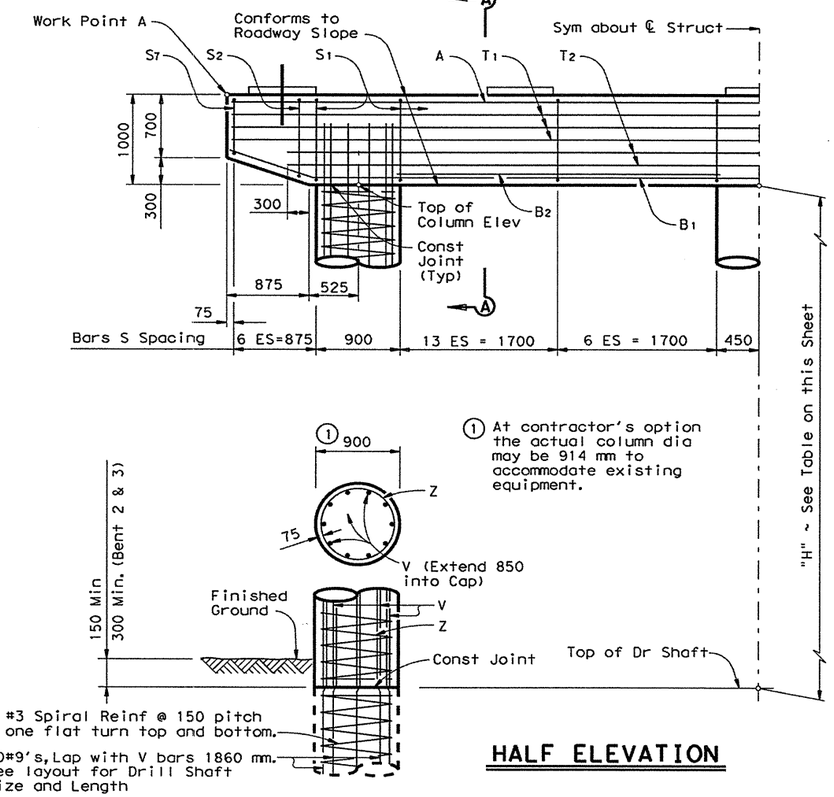


## HALF ELEVATION

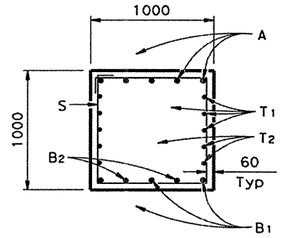


## SECTION A-A

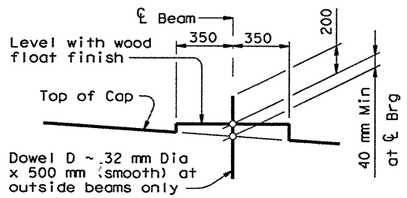


## BEARING SEAT DETAIL

(Bearing surface shall be clean and free of all loose material before placing bearing pad.)

NOTE: Built up portion of bearing seat shall be cast integrally with cap or constructed as follows. Area under built up portion to be bush hammered. Then pedestal shall be formed from mortar which has been treated with doraweld or weldcrete bonding agent or an approved equal. The bonding agent shall be mixed with the mortar in accordance with the manufacturer's recommendations.

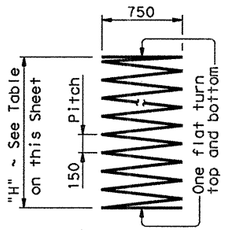


BARS Z

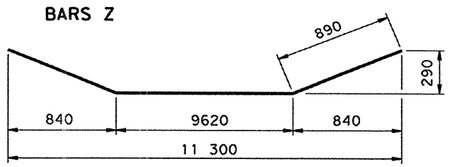


BARS B1

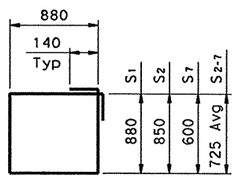


BARS S

| TABLES OF CONSTANT QUANTITIES FOR ONE CAP | | | | |
|---|---|---|---|---|
| Bar | No. | Size | Length | Mass |
| A | 5 | #11 | 11 300 | 447 |
| B1 | 3 | #11 | 11 400 | 270 |
| B2 | 4 | #11 | 3400 | 108 |
| D | 4 | 32 D | 500 | 12 |
| S1 | 42 | #5 | 3800 | 248 |
| S2-7 | 12 | #5 | 3490 Av | 65 |
| T1 | 6 | #4 | 11 300 | 67 |
| T2 | 4 | #4 | 10 250 | 41 |
| | | | | |
| *Reinforcing Steel | | | kg | 1258 |
| Class "C" Concrete | | | $m^3$ | 11.3 |

*For Contractors Information Only

## GENERAL NOTES:

1. All cap and column concrete shall be Class "C", fc' = 25 MPa.
2. All cap and column reinforcing shall be Grade 420.
3. See layout for drilled shaft length.
4. Calculated drilled shaft load = 2232 kN Each.
5. All dimensions are in millimeters unless otherwise specified.
6. Chamfer all exposed corners 20mm unless otherwise specified.

STATE OF TEXAS
Manching W. Yu
84851
REGISTERED PROFESSIONAL ENGINEER

Manching W. YU, P.E
9-18-00

S & B INFRASTRUCTURE, LTD.

©2000
TEXAS DEPARTMENT OF TRANSPORTATION

LOOP 1604 NB MAINLANE OVERPASS AT CULEBRA CREEK BENTS 2-6

| | | | |
|---|---|---|---|
| DESIGNED BY: DE | CHECKED BY: KL | DATE: 09-18-00 | |
| DRAWN BY: TC | CHECKED BY: MW | DATE: 09-18-00 | |
| APPROVED BY: MW | DATE: 09-18-00 | PROJECT NO: 9432 | |
| FED. RD. DIV. NO. | FEDERAL AID PROJECT NO. | | SHEET NO. |
| 6 | NH 2000 (704), etc. | | 492 |
| STATE | STATE DIST. NO. | COUNTY | |
| TEXAS | SAT | BEXAR | |
| CONT. | SECT. | JOB | HIGHWAY NO. |
| 2452 | 01 | 036, etc. | LP 1604 |

18 SEP 2000 10:51:51 s:\project\u9432.200\design\data\cadd\dgn\nbml@culebra\9432nbml*culbents.dgn

| TOP OF COLUMN ELEVATIONS (m) | | | | |
|---|---|---|---|---|
| Col. A | Col. B | Col. C | W.P. A | W.P. B |
| 267.992 | 268.078 | 268.164 | 268.964 | 269.192 |

## TABLES OF CONSTANT QUANTITIES FOR BENT

| Bar | No. | Size | Length | Mass |
|---|---|---|---|---|
| A | 5 | #11 | 11 300 | 447 |
| $B_1$ | 3 | #11 | 11 400 | 270 |
| $B_2$ | 4 | #11 | 3400 | 108 |
| D | 4 | 32 D | 500 | 12 |
| $S_1$ | 54 | #5 | 3800 | 319 |
| $S_{2-7}$ | 12 | #5 | 3490 Av | 65 |
| $T_1$ | 6 | #4 | 11 300 | 67 |
| $T_2$ | 4 | #4 | 10 250 | 41 |
| V | 30 | #9 | 6080 | 923 |
| Z | 3 | #3 | 85 700 | 144 |
| * Reinforcing Steel | | | kg | 2396 |
| Class "C" Concrete | | | $m^3$ | 21.3 |

* For Contractor Information Only

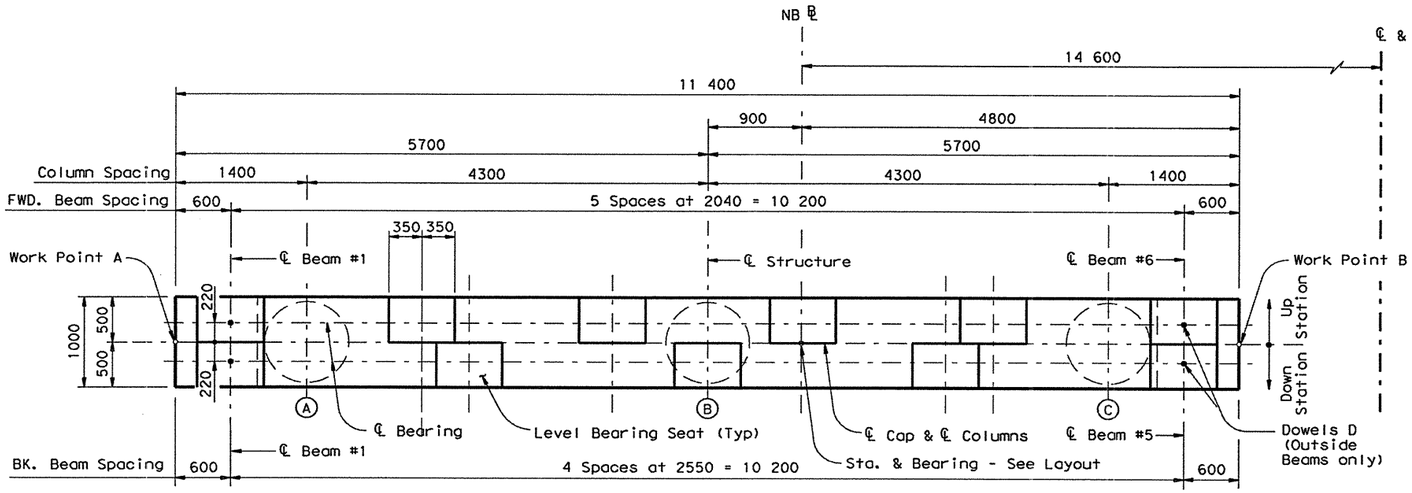


## PLAN

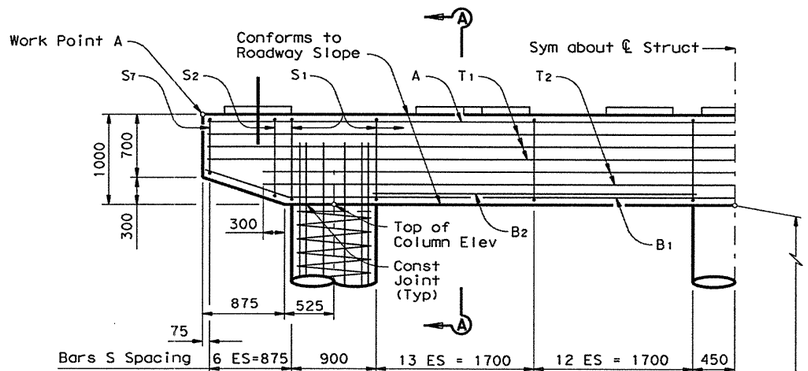


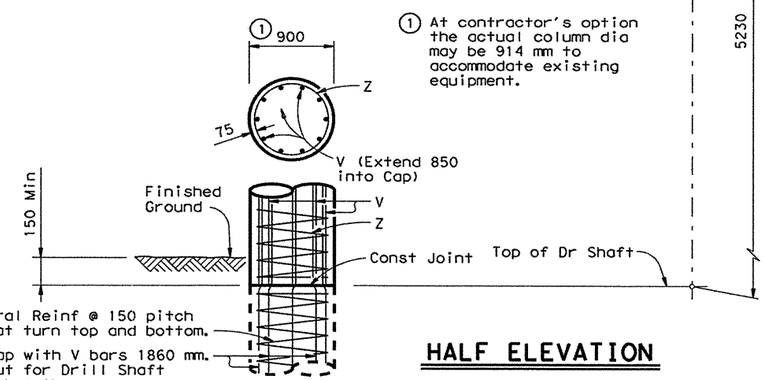


## HALF ELEVATION

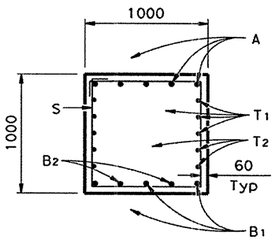


## SECTION A-A

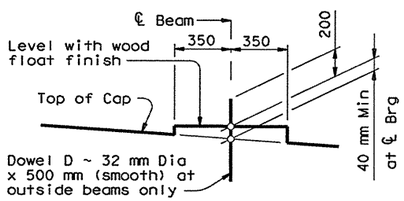


## BEARING SEAT DETAIL

(Bearing surface shall be clean and free of all loose material before placing bearing pad.)

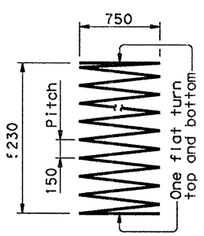


BARS Z

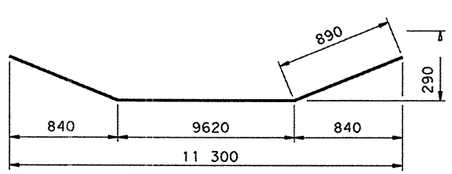


BARS B1

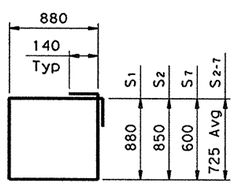


BARS S

NOTE: Built up portion of bearing seat shall be cast integrally with cap or constructed as follows. Area under built up portion to be bush hammered. Then pedestal shall be formed from mortar which has been treated with doraweld or weldcrete bonding agent or an approved equal. The bonding agent shall be mixed with the mortar in accordance with the manufacturer's recommendations.

### GENERAL NOTES:

1. All cap and column concrete shall be Class "C", fc'= 25 MPa.
2. All cap and column reinforcing shall be Grade 420.
3. See layout for drilled shaft length.
4. Calculated drilled shaft load = 2290 kN Each.
5. All dimensions are in millimeters unless otherwise specified.
6. Chamfer all exposed corners 20mm unless otherwise specified.

STATE OF TEXAS
Manching W. Yu
84851
REGISTERED PROFESSIONAL ENGINEER

Manching W. Yu, P.E
9-18-00

S & B INFRASTRUCTURE, LTD.

©2000
TEXAS DEPARTMENT OF TRANSPORTATION

# LOOP 1604 NB MAINLANE OVERPASS AT CULEBRA CREEK BENT 7

| | | | |
|---|---|---|---|
| DESIGNED BY: DE | CHECKED BY: KL | DATE: 09-18-00 | |
| DRAWN BY: TC | CHECKED BY: MW | DATE: 09-18-00 | |
| APPROVED BY: MW | DATE: 09-18-00 | PROJECT NO: 9432 | |

| FED. RD. DIV. NO. | FEDERAL AID PROJECT NO. | SHEET NO. |
|---|---|---|
| 6 | NH 2000 (704), etc. | 493 |

| STATE | STATE DIST. NO. | COUNTY |
|---|---|---|
| TEXAS | SAT | BEXAR |

| CONT. | SECT. | JOB | HIGHWAY NO. |
|---|---|---|---|
| 2452 | 01 | 036, etc. | LP 1604 |

18 SEP 2000 10:51:48 s:\project\u9432.200\design\data\cadd\dgn\nbml@culebra\9432nbml*cul*bent7.dgn

| TOP OF COLUMN ELEVATIONS (m) | | | | |
|---|---|---|---|---|
| Col. A | Col. B | Col. C | W.P. A | W.P. B |
| 267.814 | 267.900 | 267.986 | 268.786 | 269.014 |

## TABLES OF CONSTANT QUANTITIES FOR BENT

| Bar | No. | Size | Length | Mass |
|---|---|---|---|---|
| A | 5 | #11 | 11 300 | 447 |
| $B_1$ | 3 | #11 | 11 400 | 270 |
| $B_2$ | 4 | #11 | 3400 | 108 |
| D | 4 | 32 D | 500 | 12 |
| $S_1$ | 54 | #5 | 3800 | 319 |
| $S_{2\text{-}7}$ | 12 | #5 | 3490 Av | 65 |
| $T_1$ | 6 | #4 | 11 300 | 67 |
| $T_2$ | 4 | #4 | 10 250 | 41 |
| V | 30 | #9 | 5460 | 829 |
| Z | 3 | #3 | 75 900 | 127 |
| * Reinforcing Steel | | | kg | 2285 |
| Class "C" Concrete | | | $m^3$ | 20.1 |

* For Contractor Information Only

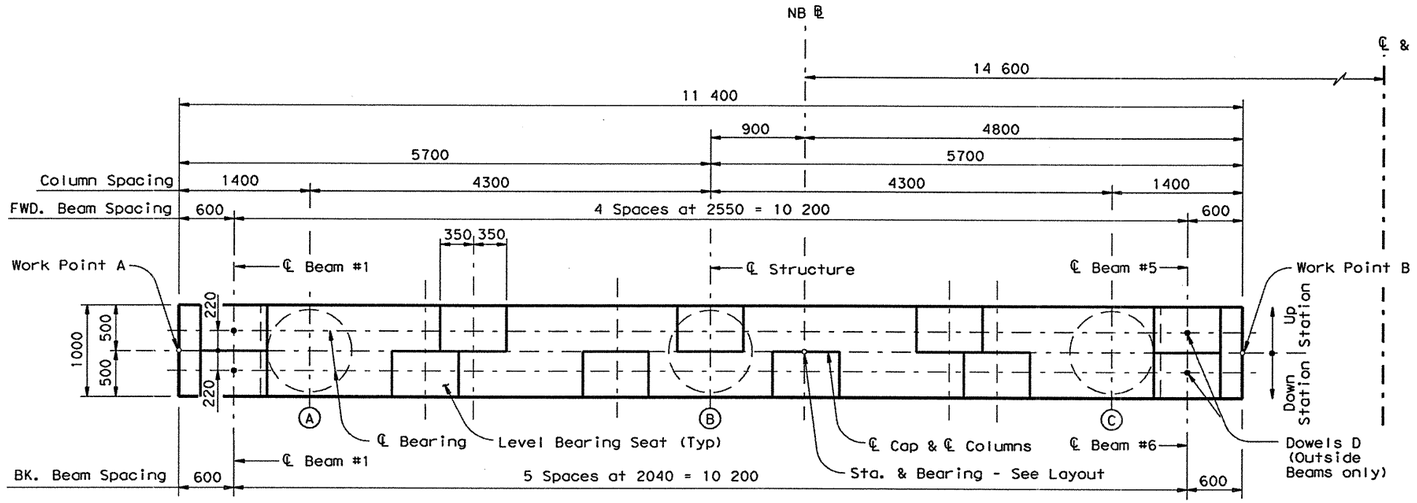


## PLAN

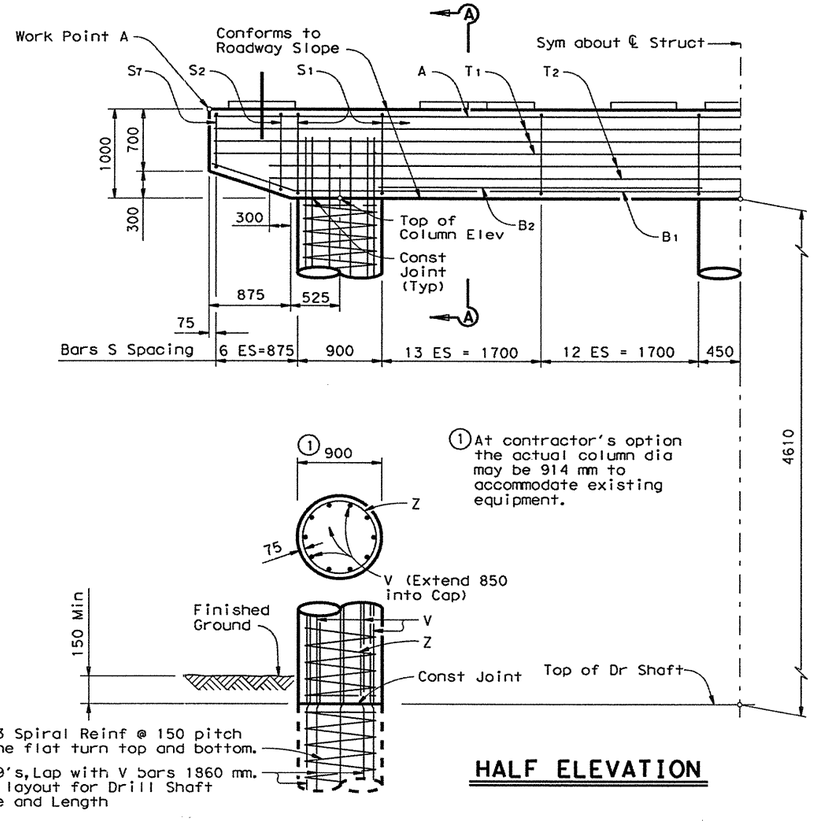


## HALF ELEVATION

1 At contractor's option the actual column dia may be 914 mm to accommodate existing equipment.

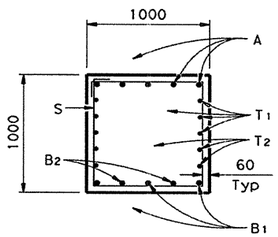


## SECTION A-A

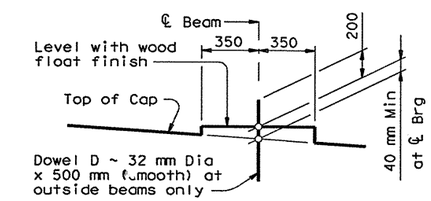


## BEARING SEAT DETAIL

(Bearing surface shall be clean and free of all loose material before placing bearing pad.)

NOTE: Built up portion of bearing seat shall be cast integrally with cap or constructed as follows. Area under built up portion to be bush hammered. Then pedestal shall be formed from mortar which has been treated with doraweld or weldcrete bonding agent or an approved equal. The bonding agent shall be mixed with the mortar in accordance with the manufacturer's recommendations.

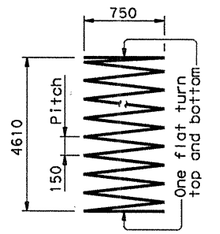


BARS Z

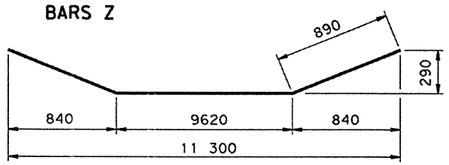


BARS B1

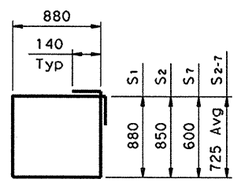


BARS S

### GENERAL NOTES:

1. All cap and column concrete shall be Class "C", fc' = 25 MPa.
2. All cap and column reinforcing shall be Grade 420.
3. See layout for drilled shaft length.
4. Calculated drilled shaft load = 1963 kN Each.
5. All dimensions are in millimeters unless otherwise specified.
6. Chamfer all exposed corners 20mm unless otherwise specified.

STATE OF TEXAS
Manching W. Yu
84851
REGISTERED PROFESSIONAL ENGINEER

Manching W. Yu, P.E.
9-18-00

S & B INFRASTRUCTURE, LTD.

©2000 TEXAS DEPARTMENT OF TRANSPORTATION

**LOOP 1604 NB MAINLANE OVERPASS AT CULEBRA CREEK BENT 8**

| DESIGNED BY: DE | CHECKED BY: KL | DATE: 09-18-00 |
|---|---|---|
| DRAWN BY: TC | CHECKED BY: MW | DATE: 09-18-00 |
| APPROVED BY: MW | DATE: 09-18-00 | PROJECT NO: 9432 |

| FED. RD. DIV. NO. | FEDERAL AID PROJECT NO. | SHEET NO. |
|---|---|---|
| 6 | NH 2000 (704), etc. | 494 |

| STATE | STATE DIST. NO. | COUNTY | |
|---|---|---|---|
| TEXAS | SAT | BEXAR | |
| CONT. | SECT. | JOB | HIGHWAY NO. |
| 2452 | 01 | 036, etc. | LP 1604 |

18 SEP 2000 10:51:50 s:\project\u9432.200\design*data\caddv\dgn\nbml@culebra\9432nbml*cul*bent8.dgn

| | |
|---|---|
| DESIGN SPEED: | 110 km/h |
| FUNCT. CLASS: | URBAN FREEWAY |
| EXISTING ADT: | 19,400(2000) |
| PROJECTED ADT: | 35,000(2020) |
| PERM STR. NO.: | 15-015-2452-01-174 |

NOTES:

1. DESIGNED ACCORDING TO 1996 AASHTO STANDARD SPECIFICATIONS AND INTERIMS THERETO.
2. ELEVATIONS SHOWN ARE IN METERS.
3. ALL DIMENSIONS ARE IN METERS UNLESS SHOWN OTHERWISE.
4. BEAM END CONDITIONS:
   D-DENOTES DOWEL IN OUTSIDE BEAM ONLY
   BLANK-DENOTES NO DOWEL
5. CONE PENETROMETER READING ARE IN MILLIMETERS.

● BORING LOCATION
✳ ELEVATION SHOWN AT PGL

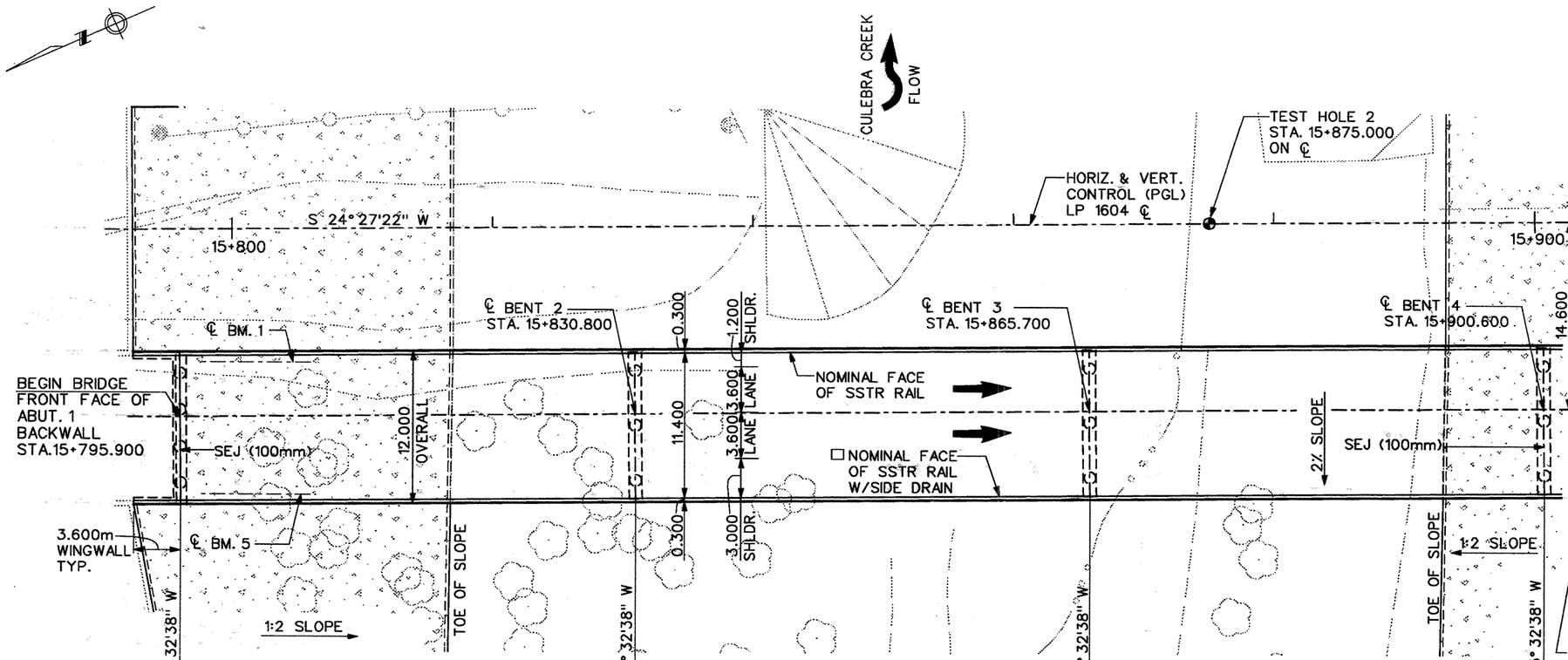


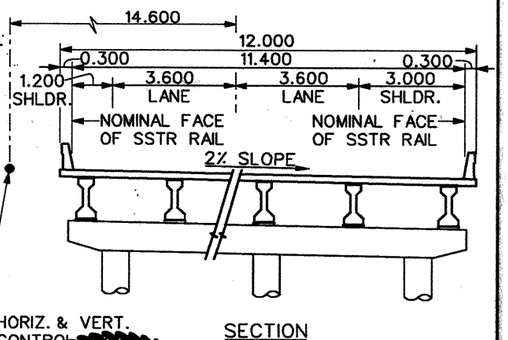


SECTION
NOT TO SCALE

MS18 LOADING

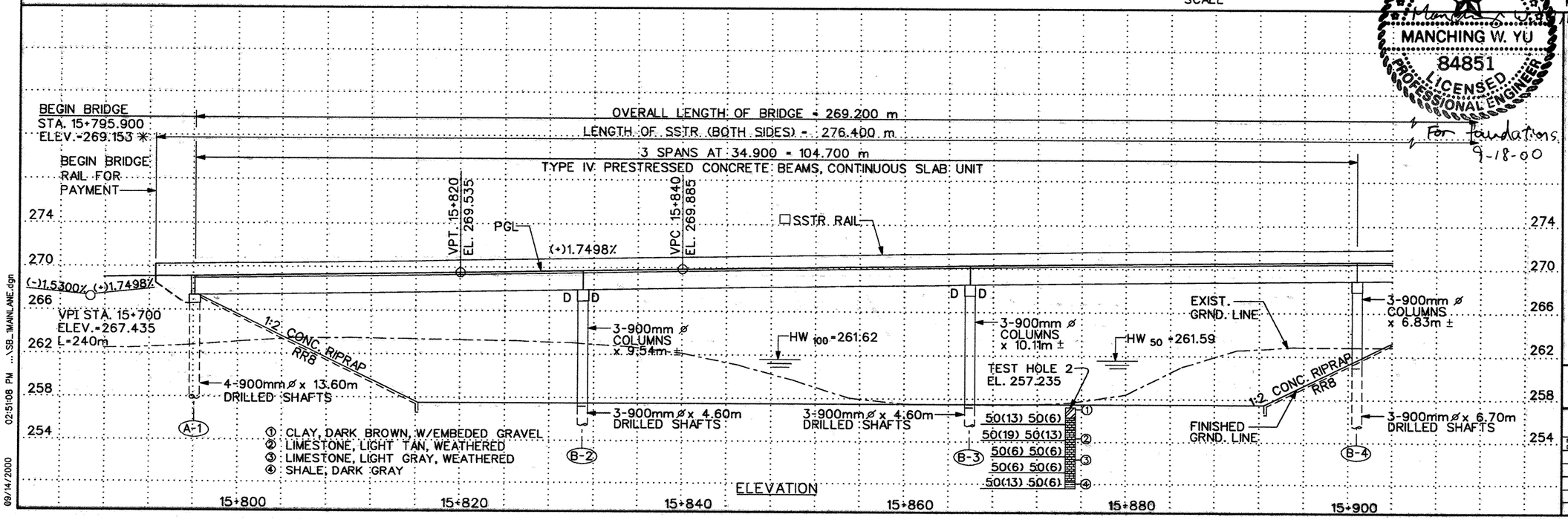


ELEVATION

STATE OF TEXAS
MANCHING W. YU
84851
LICENSED PROFESSIONAL ENGINEER
For Foundations
9-18-00

STATE OF TEXAS
CHIN-WAN CHING
67603
REGISTERED PROFESSIONAL ENGINEER
9-14-00
For Geometrics

# LP 1604 SB MAINLANE OVERPASS AT CULEBRA CREEK AND FM 471 (CULEBRA ROAD)

SHEET 1 OF 3 SHEET

STRUCTURAL ENGINEERING ASSOCIATES, INC.
CONSULTING ENGINEERS
SAN ANTONIO, TEXAS

© 2000 Texas Department of Transportation

| FED.RD. DIV.NO. | FEDERAL AID PROJECT NO. | | SHEET NO. |
|---|---|---|---|
| 6 | NH 2000 (704), etc. | | 495 |
| STATE | STATE DIST.NO. | COUNTY | |
| TEXAS | SAT | BEXAR | |
| CONT. | SECT. | JOB | HIGHWAY NO. |
| 2452 | 01 | 036, etc. | LP 1604 |

09/14/2000 02:51:08 PM ...\SB_MAINLANE.dgn

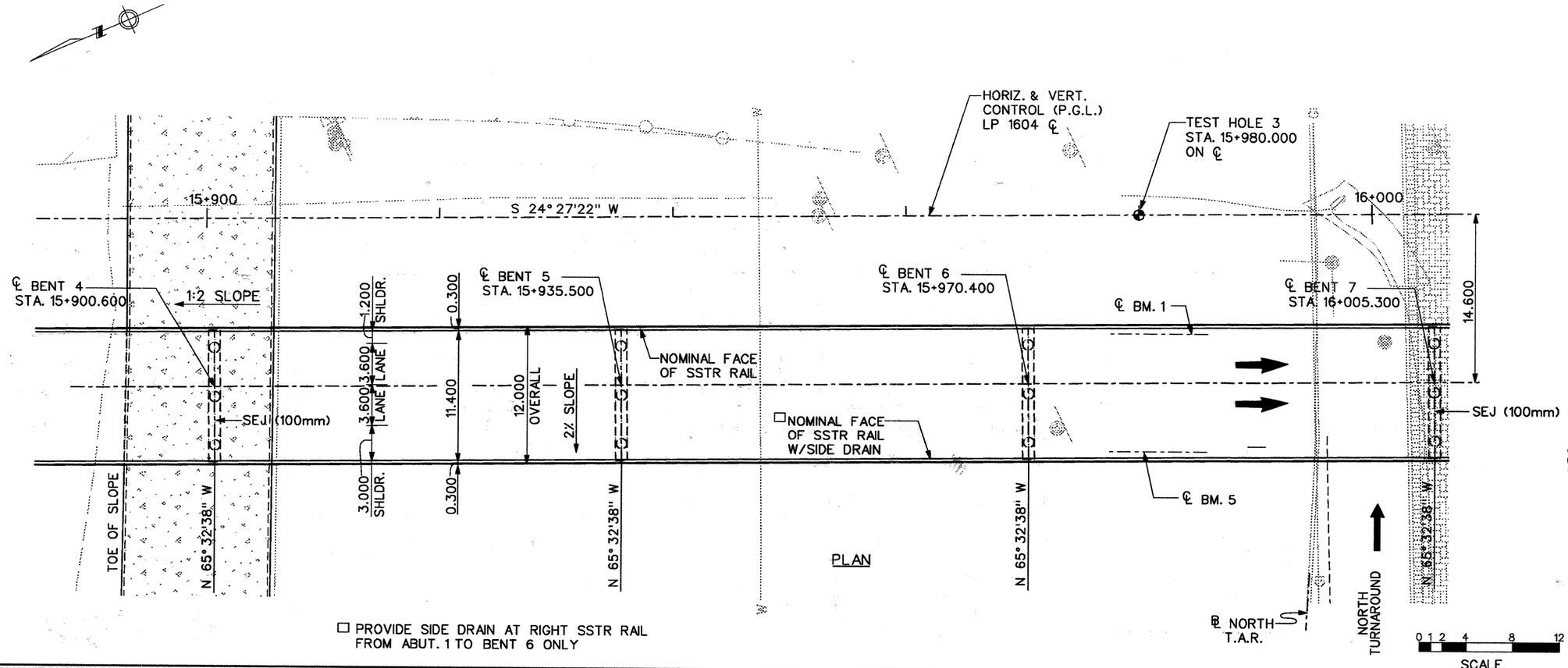


STATE OF TEXAS
MANCHING W. YU
84851
LICENSED PROFESSIONAL ENGINEER
Manching W. Yu, P.E
For foundations.
9-18-00

STATE OF TEXAS
CHIN-WAN CHING
67603
REGISTERED PROFESSIONAL ENGINEER
9-14-00
For Geometrics

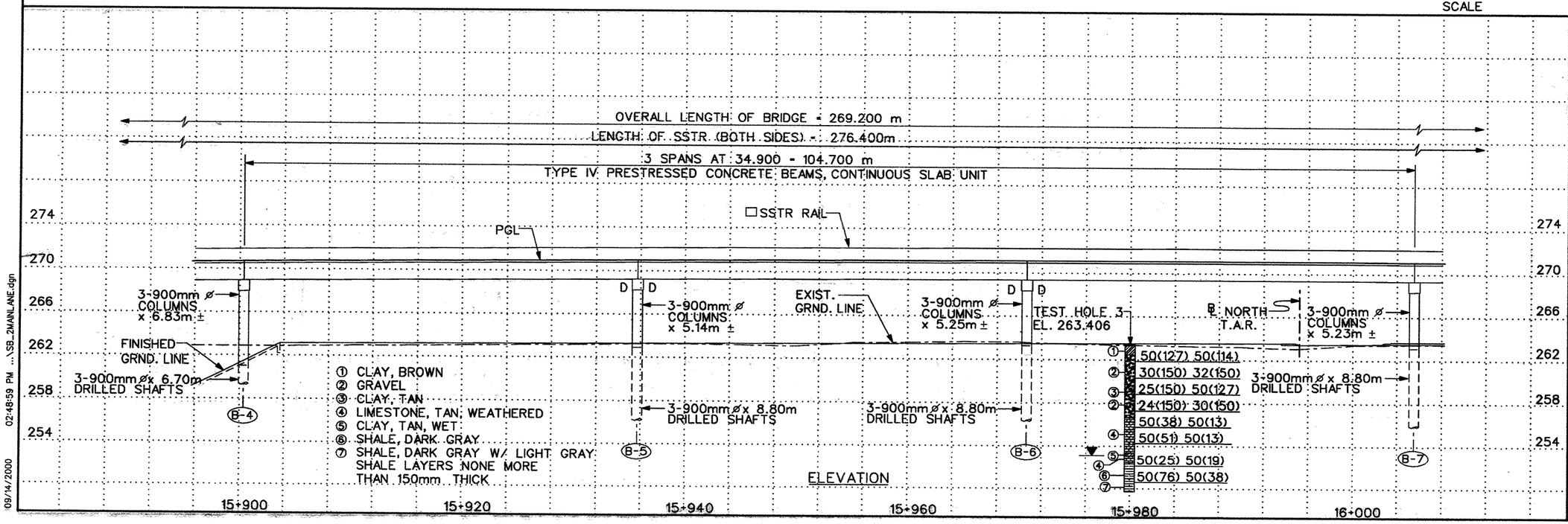


09/14/2000 02:48:59 PM ...\SB_2MAINLANE.dgn

LP 1604 SB MAINLANE OVERPASS AT CULEBRA CREEK AND FM 471 (CULEBRA ROAD)

SHEET 2 OF 3 SHEET

SEA STRUCTURAL ENGINEERING ASSOCIATES, INC. CONSULTING ENGINEERS SAN ANTONIO, TEXAS

© 2000 Texas Department of Transportation

| FED.RD. DIV.NO. | FEDERAL AID PROJECT NO. | | SHEET NO. |
|---|---|---|---|
| 6 | NH 2000 (704), etc. | | 496 |
| STATE | STATE DIST.NO. | COUNTY | |
| TEXAS | SAT | BEXAR | |
| CONT. | SECT. | JOB | HIGHWAY NO. |
| 2452 | 01 | 036,etc. | LP 1604 |

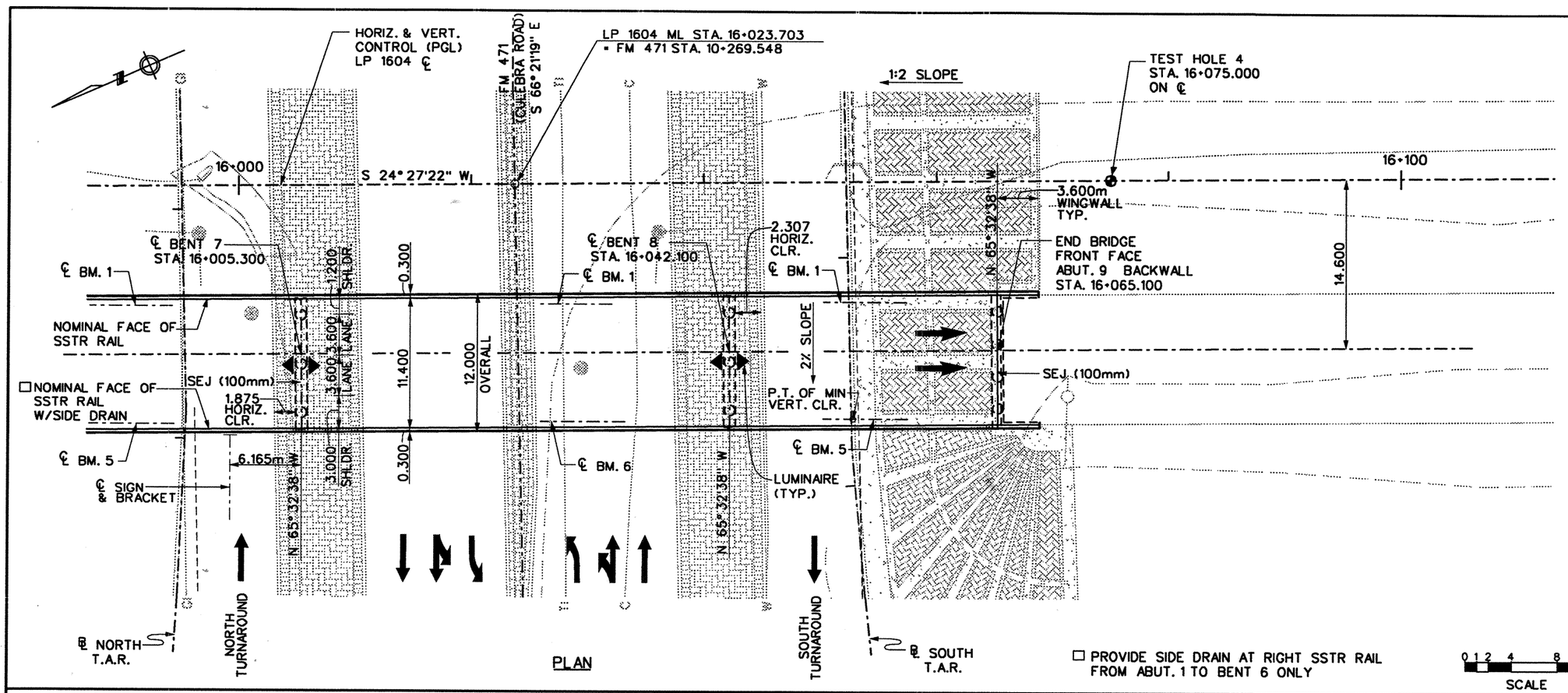


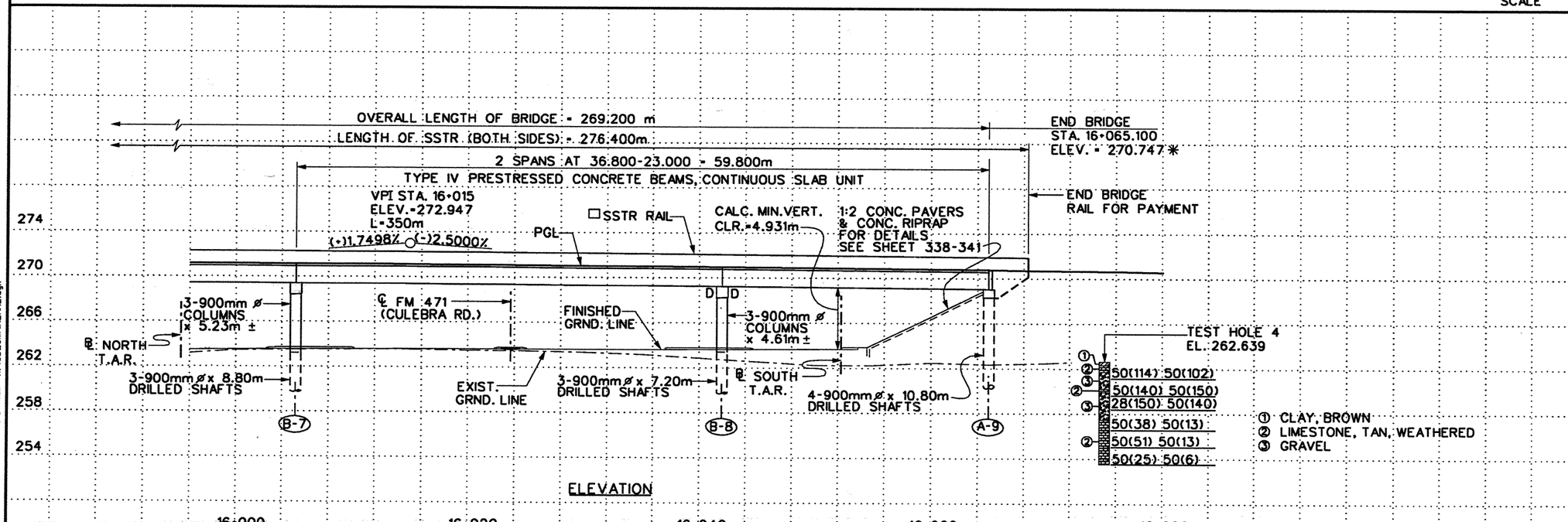


ELEVATION

10/24/2000 11:40:34 AM ...\SB_3MAINLANE.dgn

STATE OF TEXAS
MANCHING W. YU
84851
LICENSED PROFESSIONAL ENGINEER

Manching W. Yu
FOR FOUNDATIONS
10-26-2000

* ELEVATION SHOWN AT PGL

STATE OF TEXAS
CHIN-WAN CHING
67603
REGISTERED PROFESSIONAL ENGINEER

Chin-Wan Ching
Revised
For Geometrics

# LP 1604 SB MAINLANE OVERPASS AT CULEBRA CREEK AND FM 471 (CULEBRA ROAD)

SHEET 3 OF 3 SHEET

STRUCTURAL ENGINEERING ASSOCIATES, INC.
CONSULTING ENGINEERS
SAN ANTONIO, TEXAS

© 2000 Texas Department of Transportation

| FED.RD. DIV.NO. | FEDERAL AID PROJECT NO. | | SHEET NO. |
|---|---|---|---|
| 6 | NH 2000 (704), etc. | | 497 |
| STATE | STATE DIST.NO. | COUNTY | |
| TEXAS | SAT | BEXAR | |
| CONT. | SECT. | JOB | HIGHWAY NO. |
| 2452 | 01 | 036,etc. | LP 1604 |

## BRIDGE SUMMARY

| Item Number | | Description | Unit | SB Mainlane Overpass @ Culebra Creek |
|---|---|---|---|---|
| 110 | 5002 | Excavation (Channel) | M3 | 8,529 |
| 416 | 5006 | Drilled Shaft (900MM) | M | 246.1 |
| 420 | 5013 | Class "C" Concrete (Abut) | M3 | 37.0 |
| 420 | 5014 | Class "C" Concrete (Bent) | M3 | 168.2 |
| 422 | 5001 | Reinforced Concrete Slab | M2 | 3,230.4 |
| | | | | |
| 425 | 5006 | Prestressed Conc Bm (Type IV) | M | 1,378.7 |
| 428 | 5001 | Concrete Surface Treatment | M2 | 3,069 |
| 432 | 5001 | Riprap (Conc) (Cl B) | M3 | 284 |
| 444 | 5003 | Protect Angle W/Sign Brackets | EA | 1 |
| 444 | 5005 | Sign & Bracket | EA | 1 |
| | | | | |
| 450 | 5045 | Rail (Ty SSTR) | M | 552.6 |
| 454 | 5006 | Sealed Exp Jt SEJ-A (100MM) | M | 48.0 |
| 5027 | 5001 | Landscaping Pavers | M2 | 436 |
| | | | | |
| | | | | |
| | | | | |
| | | | | |
| | | | | |

## SB MAINLANE @ CULEBRA CREEK BEARING SEAT ELEVATION SUMMARY

| Pier | Abut.1 | Bent 2 | | Bent 3 | | Bent 4 | | Bent 5 | | Bent 6 | | Bent 7 | | Bent 8 | | Abut.9 |
|---|---|---|---|---|---|---|---|---|---|---|---|---|---|---|---|---|
| | Fwd. | Bkwd. | Fwd. | Bkwd. | Fwd. | Bkwd. | Fwd. | Bkwd. | Fwd. | Bkwd. | Fwd. | Bkwd. | Fwd. | Bkwd. | Fwd. | Bkwd. |
| | | | | | | | | | | | | | | | | |
| 1 | 267.258 | 267.822 | 267.830 | 268.393 | 268.400 | 268.822 | 268.826 | 269.103 | 269.105 | 269.236 | 269.237 | 269.221 | 269.220 | 269.045 | 269.042 | 268.852 |
| 2 | 267.207 | 267.771 | 267.779 | 268.342 | 268.349 | 268.771 | 268.775 | 269.052 | 269.054 | 269.185 | 269.186 | 269.170 | 269.179 | 269.004 | 268.991 | 268.801 |
| 3 | 267.156 | 267.720 | 267.728 | 268.291 | 268.298 | 268.720 | 268.724 | 269.001 | 269.003 | 269.134 | 269.135 | 269.119 | 269.138 | 268.963 | 268.940 | 268.750 |
| 4 | 267.105 | 267.669 | 267.677 | 268.240 | 268.247 | 268.669 | 268.673 | 268.950 | 268.952 | 269.083 | 269.084 | 269.068 | 269.097 | 268.923 | 268.889 | 268.699 |
| 5 | 267.054 | 267.618 | 267.626 | 268.189 | 268.196 | 268.618 | 268.622 | 268.899 | 268.901 | 269.032 | 269.033 | 269.017 | 269.057 | 268.882 | 268.838 | 268.648 |
| 6 | | | | | | | | | | | | | 269.016 | 268.841 | | |

STATE OF TEXAS
Manching W. Yu
84851
REGISTERED
PROFESSIONAL ENGINEER

Manching W. Yu
10-26-2000

S & B INFRASTRUCTURE, LTD.

©2000
TEXAS DEPARTMENT OF TRANSPORTATION

# LOOP 1604 SB MAINLANE OVERPASS AT CULEBRA CREEK SUMMARY SHEET

| | | | |
|---|---|---|---|
| DESIGNED BY: DE | CHECKED BY: KL | DATE: 09-18-00 | |
| DRAWN BY: TC | CHECKED BY: MW | DATE: 09-18-00 | |
| APPROVED BY: MW | DATE: 09-18-00 | PROJECT NO: 9432 | |

| FED. RD. DIV. NO. | FEDERAL AID PROJECT NO. | SHEET NO. |
|---|---|---|
| 6 | NH 2000 (704), etc. | 498 |

| STATE | STATE DIST. NO. | COUNTY | |
|---|---|---|---|
| TEXAS | SAT | BEXAR | |
| CONT. | SECT. | JOB | HIGHWAY NO. |
| 2452 | 01 | 036, etc. | LP 1604 |

26 OCT 2000 16:22:43 s:\project\u9432.200\design\data\cadd\dgn\sbml@culebra\9432sbml*cul*summary.dgn

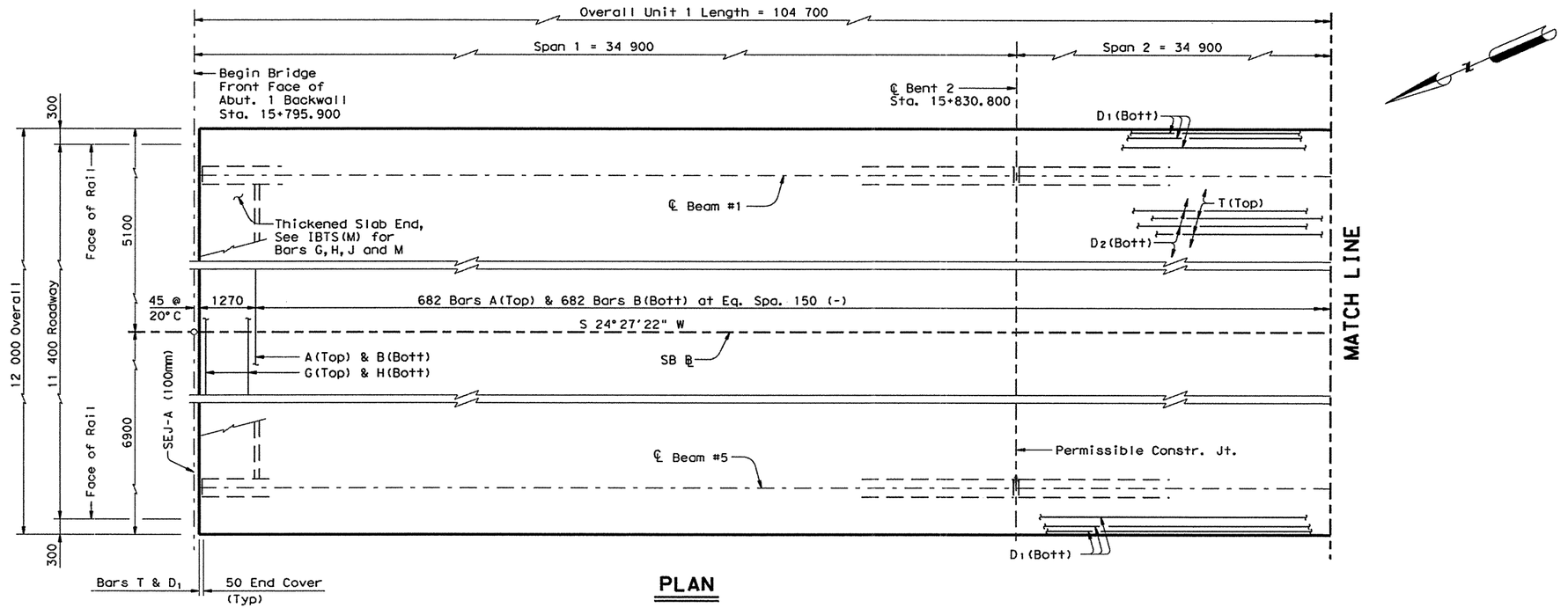


**PLAN**

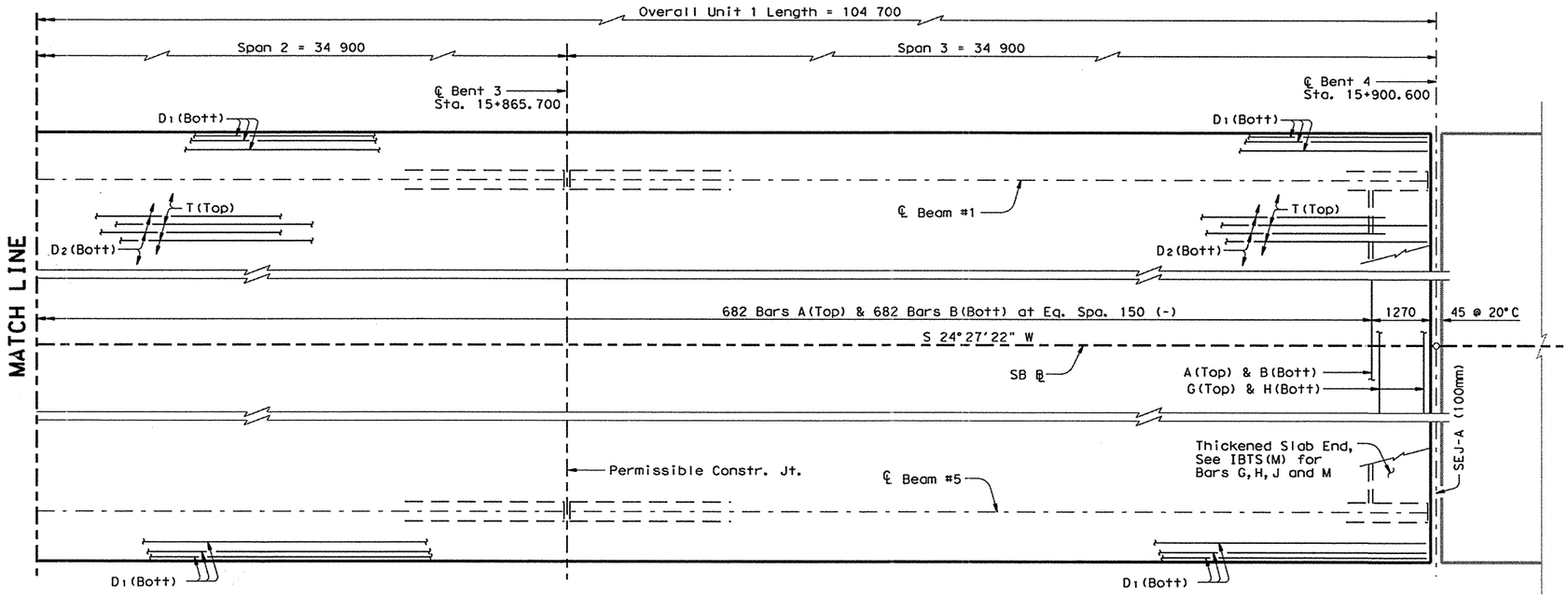


**PLAN**

Manching W. Yu
84851
REGISTERED
PROFESSIONAL ENGINEER
STATE OF TEXAS

Manching W. Yu, P.E
9-18-00

S & B INFRASTRUCTURE, LTD.

©2000
TEXAS DEPARTMENT OF TRANSPORTATION

# LOOP 1604 SB MAINLANE OVERPASS AT CULEBRA CREEK UNIT 1 SLAB PLAN

| | | | |
|---|---|---|---|
| DESIGNED BY: DE | CHECKED BY: KL | DATE: 09-18-00 | |
| DRAWN BY: TC | CHECKED BY: MW | DATE: 09-18-00 | |
| APPROVED BY: MW | DATE: 09-18-00 | PROJECT NO: 9432 | |

| FED.RD. DIV.NO. | FEDERAL AID PROJECT NO. | SHEET NO. |
|---|---|---|
| 6 | NH 2000 (704), etc. | 499 |

| STATE | STATE DIST. NO. | COUNTY |
|---|---|---|
| TEXAS | SAT | BEXAR |

| CONT. | SECT. | JOB | HIGHWAY NO. |
|---|---|---|---|
| 2452 | 01 | 036, etc. | LP 1604 |

18 SEP 2000 11:06:55 s:\project\u9432.200\design*data\cadd\dgn\sbm1@culebra\9432sbm1*culunit1slab.dgn

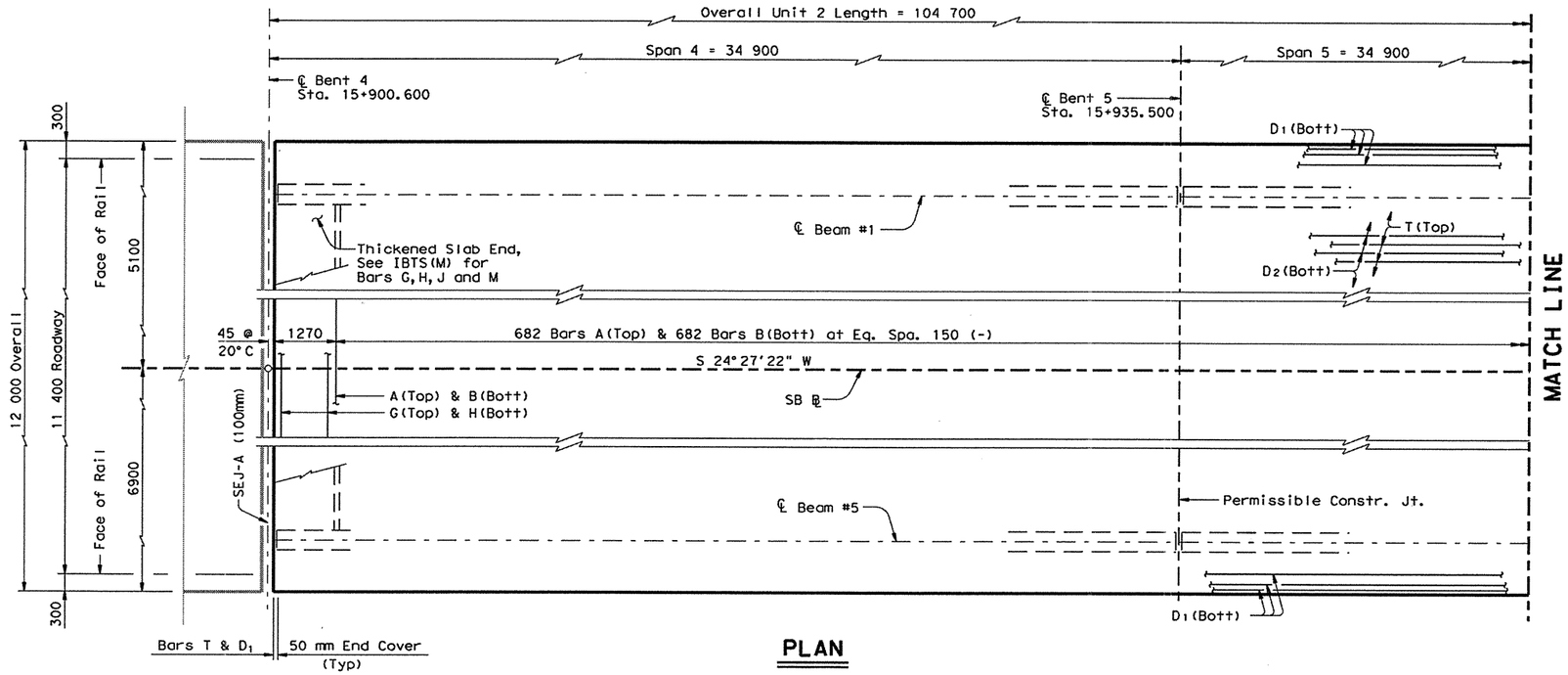


**PLAN**

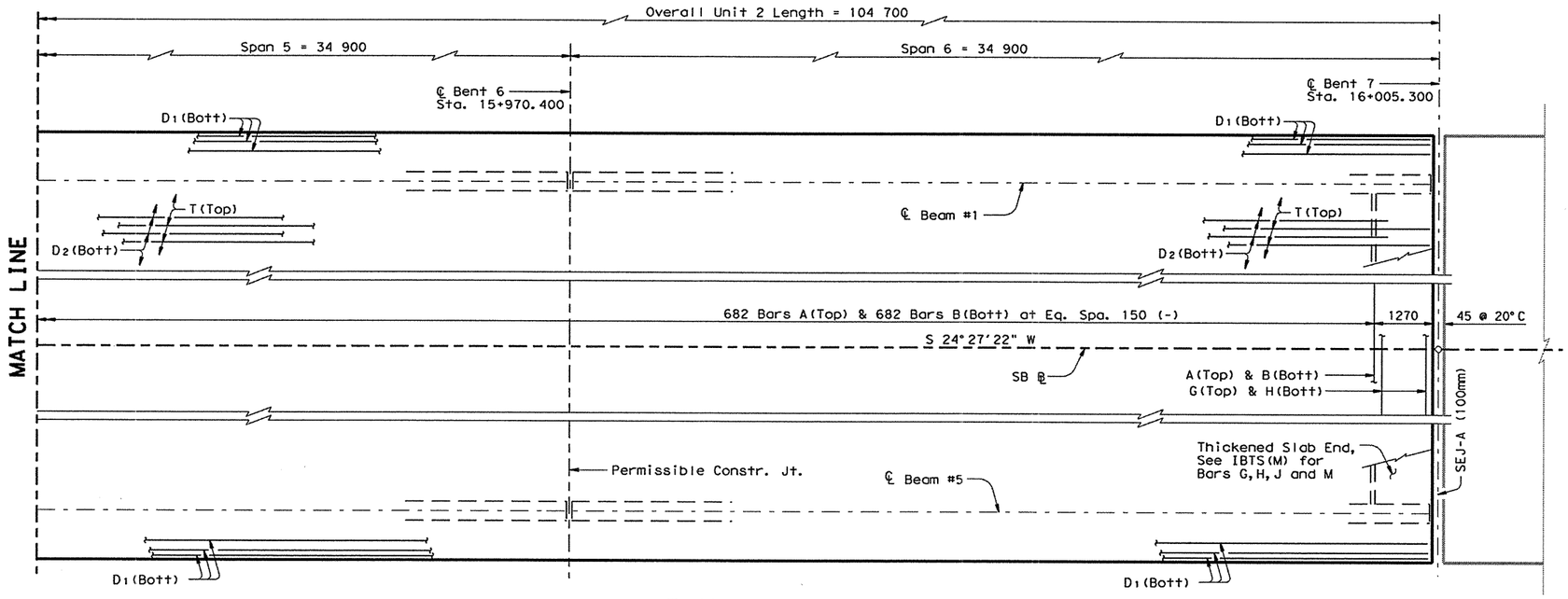


**PLAN**

STATE OF TEXAS
Manching W. Yu
84851
REGISTERED PROFESSIONAL ENGINEER

Manching W. Yu, P.E
9-18-00

S & B INFRASTRUCTURE, LTD.

©2000 TEXAS DEPARTMENT OF TRANSPORTATION

# LOOP 1604 SB MAINLANE OVERPASS AT CULEBRA CREEK UNIT 2 SLAB PLAN

| | | | | | |
|---|---|---|---|---|---|
| DESIGNED BY: | DE | CHECKED BY: | KL | DATE: | 09-18-00 |
| DRAWN BY: | TC | CHECKED BY: | MW | DATE: | 09-18-00 |
| APPROVED BY: | MW | DATE: | 09-18-00 | PROJECT NO: | 9432 |

| FED. RD. DIV. NO. | FEDERAL AID PROJECT NO. | SHEET NO. |
|---|---|---|
| 6 | NH 2000 (704), etc. | 500 |

| STATE | STATE DIST. NO. | COUNTY | |
|---|---|---|---|
| TEXAS | SAT | BEXAR | |
| CONT. | SECT. | JOB | HIGHWAY NO. |
| 2452 | 01 | 036, etc. | LP 1604 |

18 SEP 2000 11:06:56 s:\project\u9432.200\design*data\cadd\dgn\sbml@culebra\9432sbml*cul*unit2slab.dgn

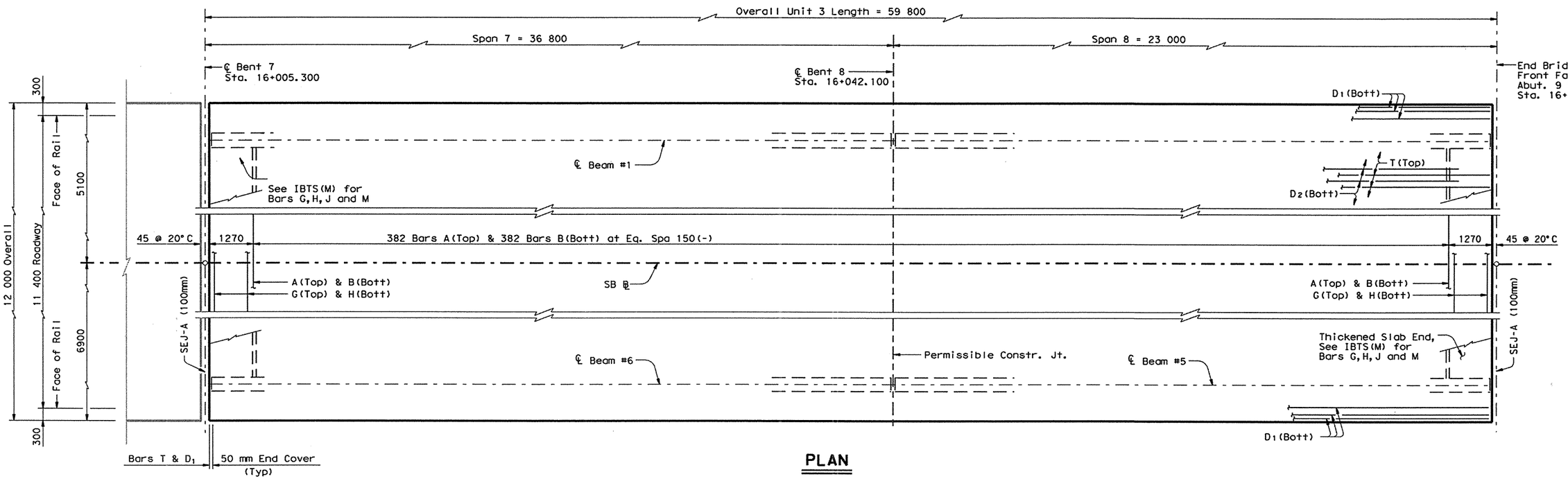


**PLAN**

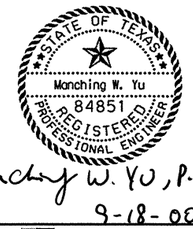


Manching W. YU, P.E
9-18-00

S & B INFRASTRUCTURE, LTD.

©2000 TEXAS DEPARTMENT OF TRANSPORTATION

# LOOP 1604 SB MAINLANE OVERPASS AT CULEBRA CREEK UNIT 3 SLAB PLAN

| | | | | | |
|---|---|---|---|---|---|
| DESIGNED BY: | DE | CHECKED BY: | KL | DATE: | 09-18-00 |
| DRAWN BY: | TC | CHECKED BY: | MW | DATE: | 09-18-00 |
| APPROVED BY: | MW | DATE: | 09-18-00 | PROJECT NO: | 9432 |

| FED. RD. DIV. NO. | FEDERAL AID PROJECT NO. | SHEET NO. |
|---|---|---|
| 6 | NH 2000 (704), etc. | 501 |

| STATE | STATE DIST. NO. | COUNTY | |
|---|---|---|---|
| TEXAS | SAT | BEXAR | |
| CONT. | SECT. | JOB | HIGHWAY NO. |
| 2452 | 01 | 036, etc. | LP 1604 |

18 SEP 2000 11:06:56 s:\project\u9432.200\design*data\cadd\dgn\sbml@culebra\9432sbml*cul*unit3slab.dgn

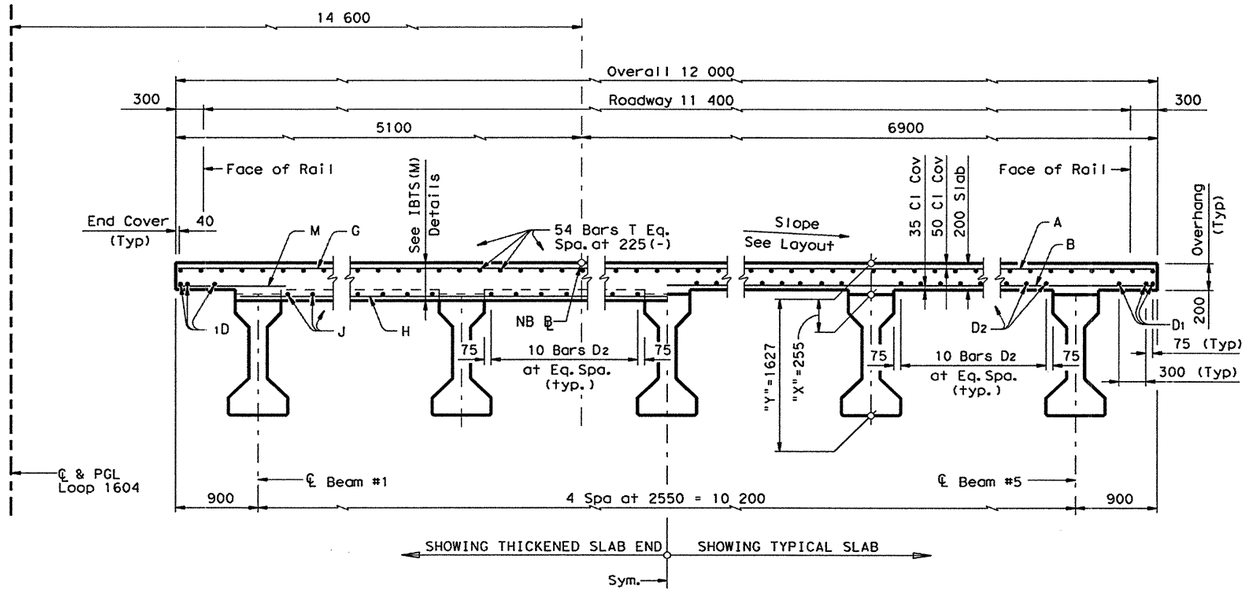


## UNITS 1 & 2 AND SPAN 8
## TYPICAL TRANSVERSE SECTION

(LOOKING UPSTATION)

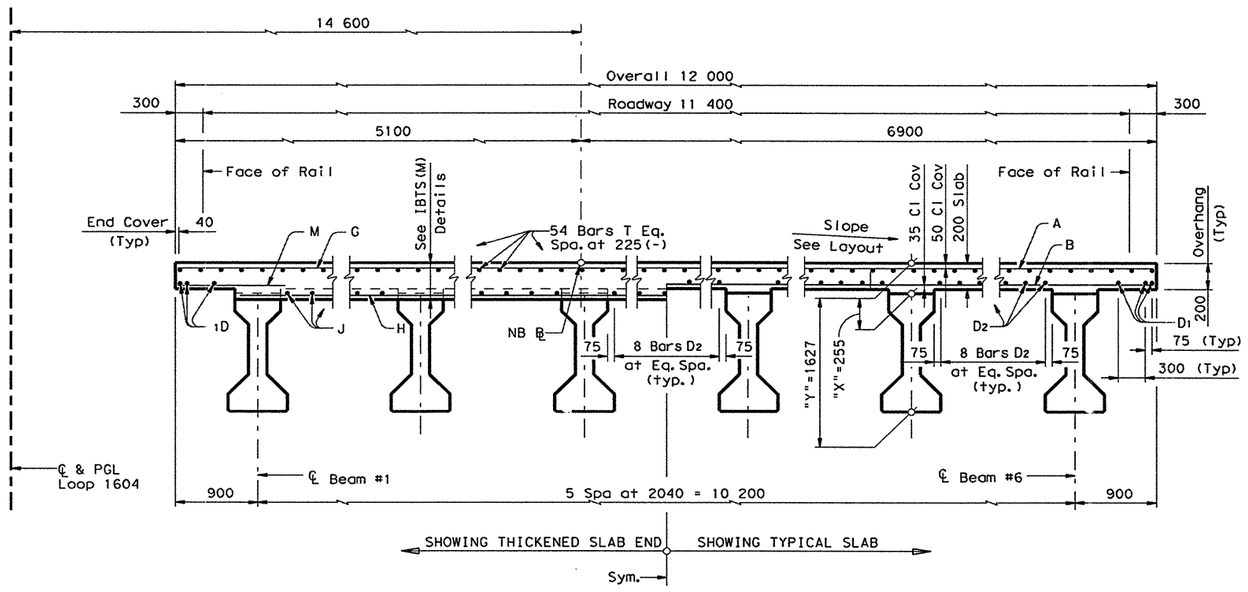


## SPAN 7
## TYPICAL TRANSVERSE SECTION

(LOOKING UPSTATION)

| Span | "A" | "B" |
|---|---|---|
| m | mm | mm |
| 34.900 | 41 | 58 |
| 36.800 | 39 | 54 |
| 23.000 | 8 | 11 |

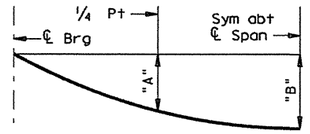


## DEAD LOAD DEFLECTION DIAGRAM

NOTE: Deflections shown are due to concrete slab only. ($E_c$ = 35,000 MPa) Calculated deflections shown are theoretical and actual dimensions may be less. Deflections shall be adjusted based on field observations.

## BAR TABLE

| Bar | Size |
|---|---|
| A | #5 |
| B | #5 |
| D | #5 |
| G | #5 |
| H | #5 |
| J | #5 |
| M | #5 |
| T | #5 |

## TABLE OF ESTIMATED QUANTITIES

| Unit | Reinf Concrete Slab | Prestressed Concrete ① Beams (Ty IV) | Class "S" Concrete | ②Total Reinf Steel |
|---|---|---|---|---|
| | $m^2$ | m | $m^3$ | kg |
| 1 | 1256.4 | 522.0 | 255.2 | 40,205 |
| 2 | 1256.4 | 522.0 | 255.2 | 40,205 |
| 3 | 717.6 | 334.7 | 146.1 | 22,963 |

① Fabricator shall adjust beam lengths for beam slopes as required.

② Reinforcing steel mass is calculated using an approximate factor of 32 kg/$m^2$.

**GENERAL NOTES:**

1. Designed according to current AASHTO Standard and Interim Specifications.
2. See IBTS(M) Standard for Thickened Slab End Details and quantity adjustments.
3. See PCP(C)(M) or PMDF(C)(M) Standards for details and quantity adjustments if either of these options are used.
4. All reinforcing shall be Grade 420. Concrete strength f'c = 28 MPa.
5. All dimensions are in millimeters unless otherwise shown.
6. Bar laps, where required, shall be as follows:
   Uncoated ~ #5 = 560 mm

STATE OF TEXAS
Manching W. Yu
84851
REGISTERED PROFESSIONAL ENGINEER

Manching W. Yu, P.E
9-18-00

S & B INFRASTRUCTURE, LTD.

©2000 TEXAS DEPARTMENT OF TRANSPORTATION

**LOOP 1604 SB MAINLANE OVERPASS AT CULEBRA CREEK TYPICAL SECTIONS**

| | | | |
|---|---|---|---|
| DESIGNED BY: DE | CHECKED BY: KL | DATE: 09-18-00 | |
| DRAWN BY: TC | CHECKED BY: MW | DATE: 09-18-00 | |
| APPROVED BY: MW | DATE: 09-18-00 | PROJECT NO: 9432 | |

| FED.RD. DIV.NO. | FEDERAL AID PROJECT NO. | SHEET NO. |
|---|---|---|
| 6 | NH 2000 (704), etc. | 502 |

| STATE | STATE DIST.NO. | COUNTY | |
|---|---|---|---|
| TEXAS | SAT | BEXAR | |
| CONT. | SECT. | JOB | HIGHWAY NO. |
| 2452 | 01 | 036, etc. | LP 1604 |

18 SEP 2000 11:06:54 s:\project\u9432.200\design*data\cadd\dgn\sbml@culebra\9432sbml*cul*typsection.dgn

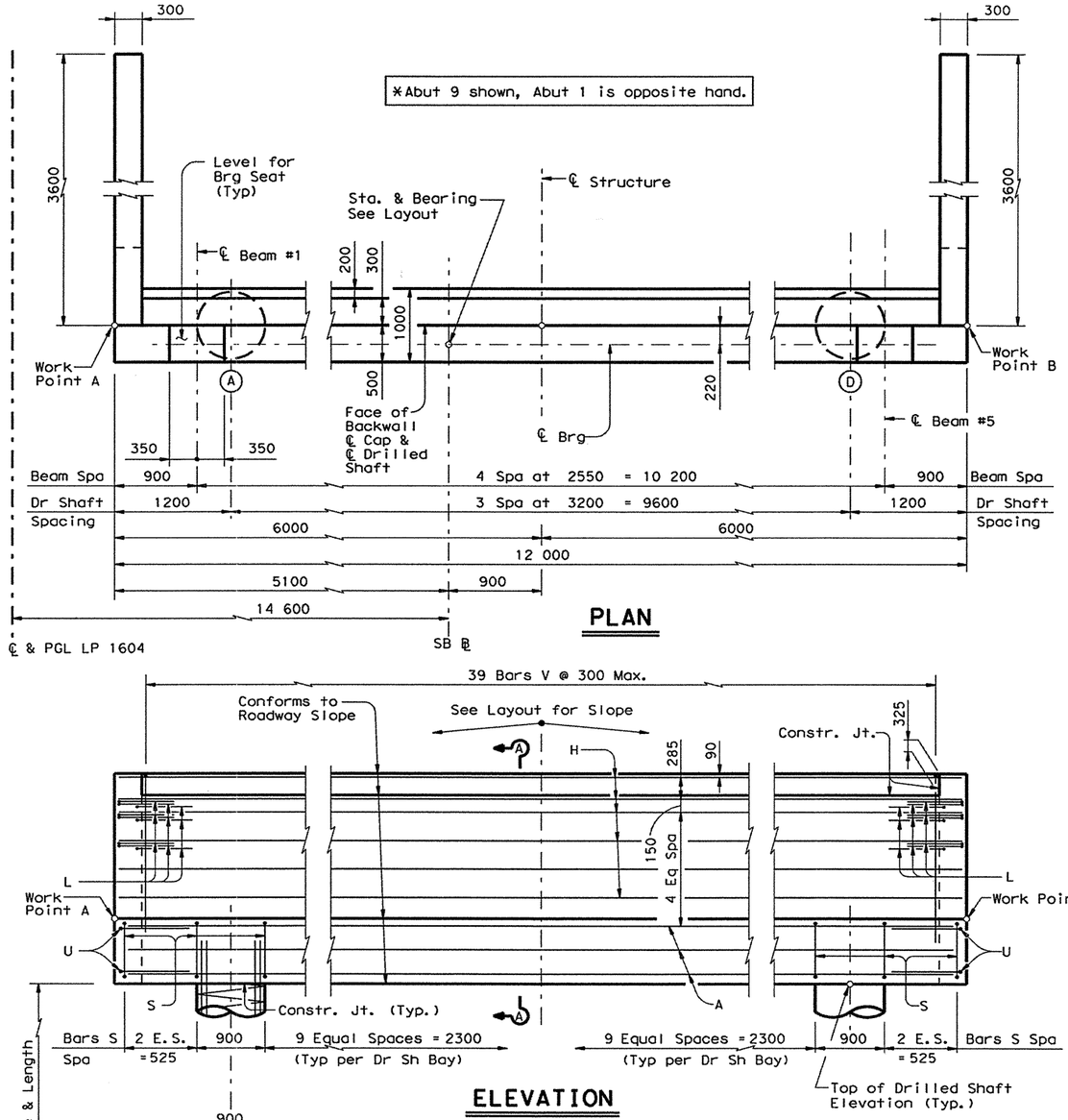


## PLAN

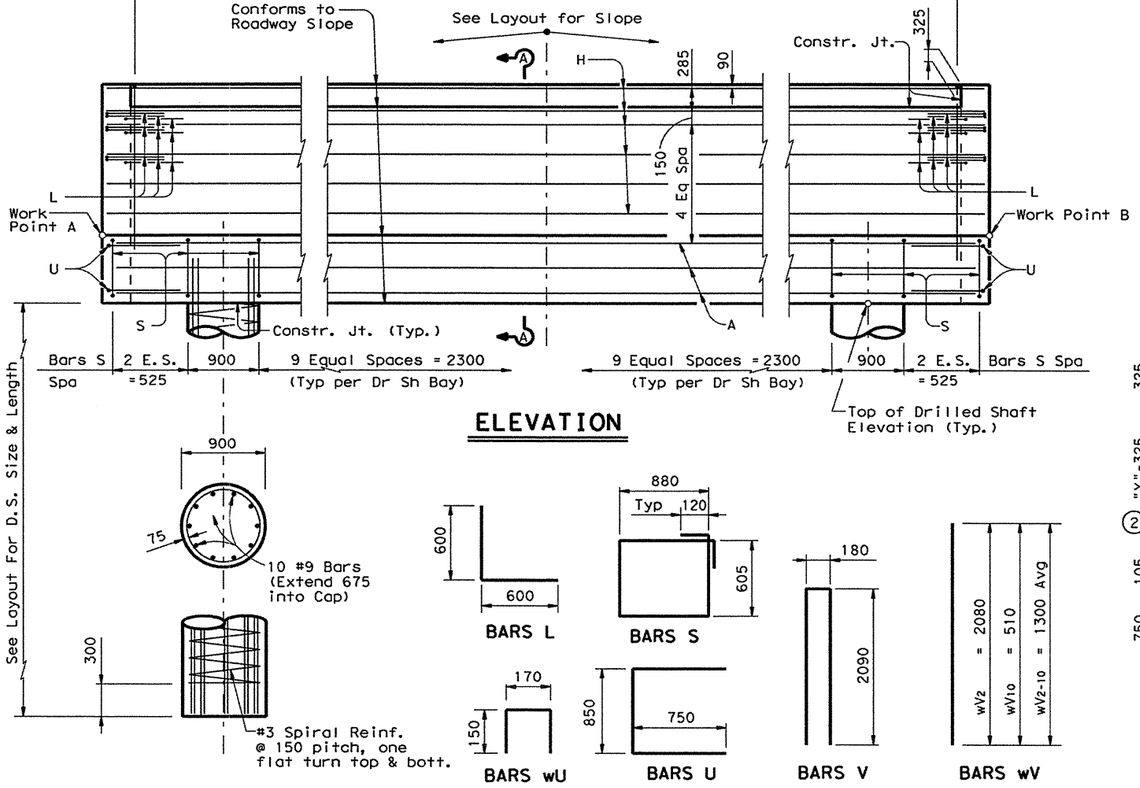


## ELEVATION




## TOP OF DRILLED SHAFT ELEV. (m)

| Abut No. | D.S.A. | D.S.B. | D.S.C. | D.S.D. | W.P. A | W.P. B |
|---|---|---|---|---|---|---|
| 1 | 266.462 | 266.398 | 266.334 | 266.270 | 267.236 | 268.830 |
| 9 | 268.056 | 267.992 | 267.928 | 267.864 | 266.996 | 268.590 |

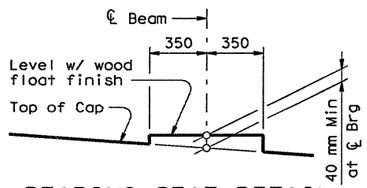


## BEARING SEAT DETAIL

(Bearing surface shall be clean and free of all loose material before placing bearing pad.)

NOTE: Built up portion of bearing seat shall be cast integrally with cap or constructed as follows. Area under built up portion to be bush hammered. Then pedestal shall be formed from mortar which has been treated with doraweld or weldcrete bonding agent or an approved equal. The bonding agent shall be mixed with the mortar in accordance with the manufacturer's recommendations.

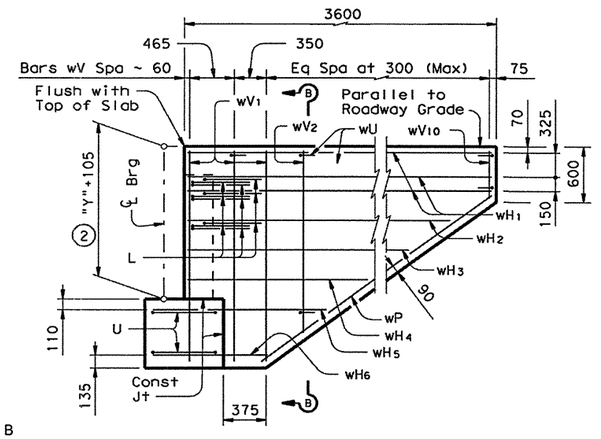


## WINGWALL ELEVATION

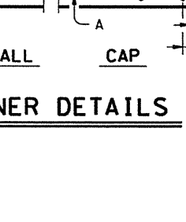


## SECTION B-B

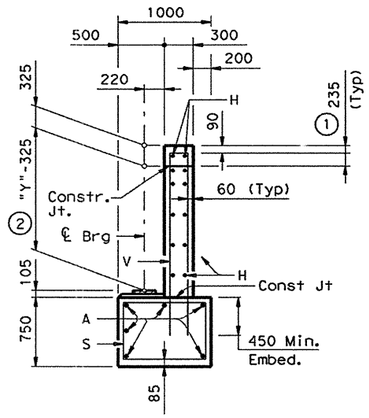


## SECTION A-A

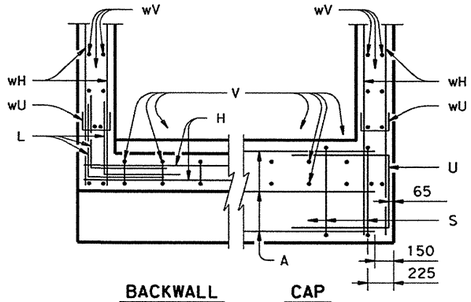


BACKWALL CAP

## CORNER DETAILS

## TABLE OF ESTIMATED QUANTITIES

| Bar | No. | Size | Length | Mass |
|---|---|---|---|---|
| A | 6 | #11 | 11 700 | 555 |
| H | 12 | #5 | 11 900 | 222 |
| L | 18 | #6 | 1200 | 48 |
| S | 36 | #4 | 3210 | 115 |
| U | 4 | #6 | 2350 | 21 |
| V | 39 | #5 | 4360 | 264 |
| wH 1 | 12 | #6 | 3500 | 94 |
| wH 2 | 4 | #6 | 2960 | 26 |
| wH 3 | 4 | #6 | 2490 | 22 |
| wH 4 | 4 | #6 | 2020 | 18 |
| wH 5 | 4 | #6 | 2050 | 18 |
| wH 6 | 4 | #6 | 1320 | 12 |
| wP | 4 | #6 | 3280 | 29 |
| wU | 16 | #4 | 470 | 7 |
| wV 1 | 12 | #5 | 2350 | 44 |
| wV 2-10 | 36 | #5 | 1300Av | 73 |
| | | | | |
| | | | | |
| *Reinforcing Steel | | | kg | 1568 |
| Class "C" Concrete | | | $m^3$ | 18.5 |
| | | | | |

*For Contractors Information Only

1. Increase as required to maintain 90 mm from Finished Grade.
2. See Slab Typ. Section sheet for "Y".

### GENERAL NOTES:

1. All cap and backwall concrete shall be Class "C", f'c = 25 MPa.
2. All cap and wall reinforcing shall be Grade 420.
3. See Foundation Detail Standard Sheet, FD(M), for all foundation details and notes.
4. Calculated Drilled Shaft Load = 908 kN each.
5. All dimensions are in millimeters unless otherwise specified.
6. Chamfer an exposed corner 20mm unless otherwise specified.

STATE OF TEXAS
Monching W. Yu
84851
REGISTERED PROFESSIONAL ENGINEER

Monching W. Yu, P.E
9-18-00

S & B INFRASTRUCTURE, LTD.

©2000 TEXAS DEPARTMENT OF TRANSPORTATION

# LOOP 1604 SB MAINLANE OVERPASS AT CULEBRA CREEK ABUTMENTS 1 & 9

| | | | |
|---|---|---|---|
| DESIGNED BY: DE | CHECKED BY: KL | DATE: 09-18-00 | |
| DRAWN BY: TC | CHECKED BY: MW | DATE: 09-18-00 | |
| APPROVED BY: MW | DATE: 09-18-00 | PROJECT NO: 9432 | |

| FED. RD. DIV. NO. | FEDERAL AID PROJECT NO. | SHEET NO. |
|---|---|---|
| 6 | NH 2000 (704), etc. | 503 |

| STATE | STATE DIST. NO. | COUNTY | |
|---|---|---|---|
| TEXAS | SAT | BEXAR | |
| CONT. | SECT. | JOB | HIGHWAY NO. |
| 2452 | 01 | 036, etc. | LP 1604 |

18 SEP 2000 11:06:46 s:\project\u9432.200\design\data\cadd\dgn\sbml@culebra\9432sbml*cul*abut1.dgn

| TOP OF COLUMN ELEVATIONS (m) | | | | | |
|---|---|---|---|---|---|
| Bent No. | Col. A | Col. B | Col. C | W.P. A | W.P. B |
| 2 | 266.766 | 266.680 | 266.594 | 267.794 | 267.566 |
| 3 | 267.337 | 267.251 | 267.165 | 268.365 | 268.137 |
| 4 | 267.766 | 267.680 | 267.594 | 268.794 | 268.566 |
| 5 | 268.047 | 267.961 | 267.875 | 269.075 | 268.847 |
| 6 | 268.180 | 268.094 | 268.008 | 269.208 | 268.980 |

| TABLE OF VARIABLE QUANTITIES FOR 3 COLUMNS | | | | | | ESTIMATED QUANTITIES FOR 3 COLS | |
|---|---|---|---|---|---|---|---|
| Bent No. | "H" | Bars V 30 ~ #9 | | Bars Z 3 ~ #3 Spiral | | Reinf Steel | Class "C" Conc |
| | mm | Length | Mass | Length | Mass | kg | $m^3$ |
| 2 | 9540 | 10 390 | 1577 | 153 400 | 257 | 1834 | 18.2 |
| 3 | 10 110 | 10 960 | 1664 | 162 300 | 272 | 1936 | 19.3 |
| 4 | 6830 | 7680 | 1166 | 110 800 | 186 | 1352 | 13.0 |
| 5 | 5140 | 5990 | 909 | 84 300 | 141 | 1050 | 9.8 |
| 6 | 5250 | 6100 | 926 | 86 000 | 144 | 1070 | 10.0 |

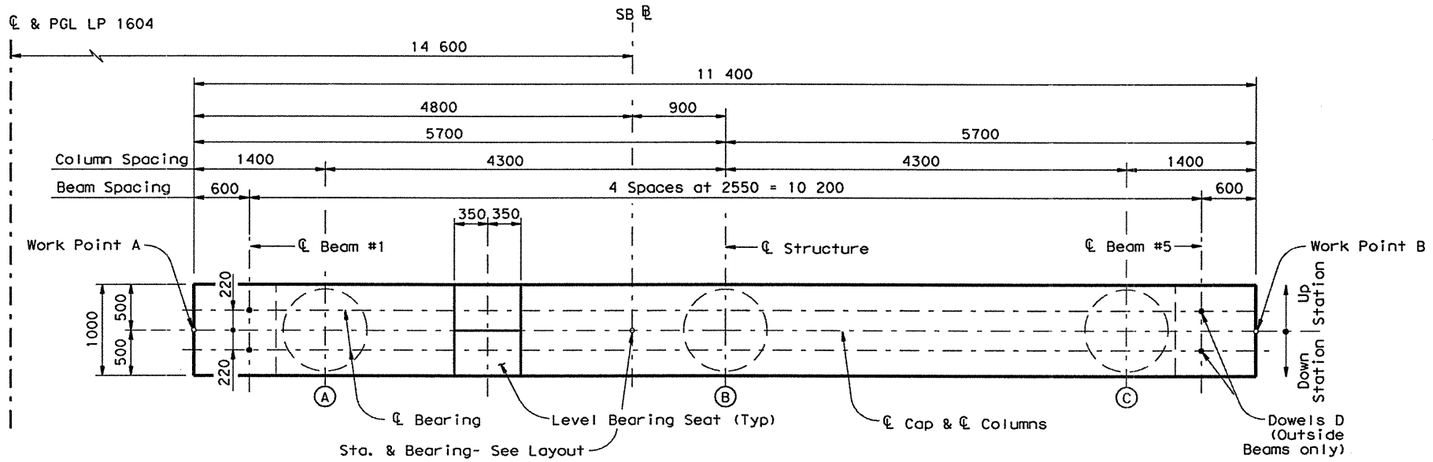


## PLAN

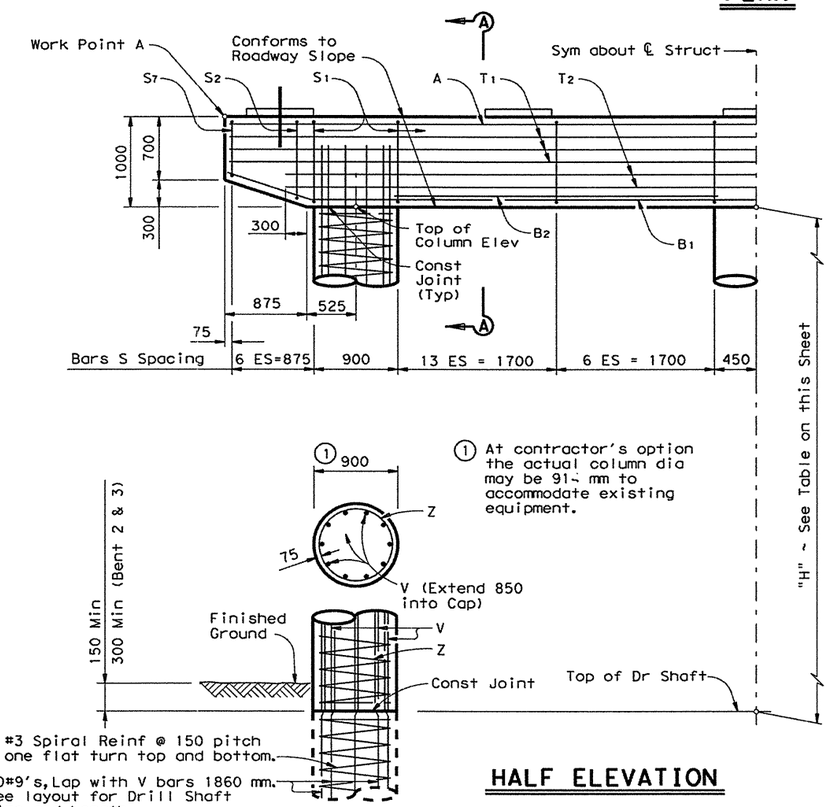


## HALF ELEVATION

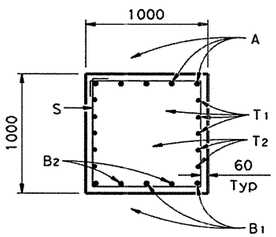


## SECTION A-A

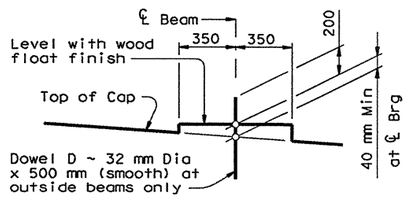


## BEARING SEAT DETAIL

(Bearing surface shall be clean and free of all loose material before placing bearing pad.)

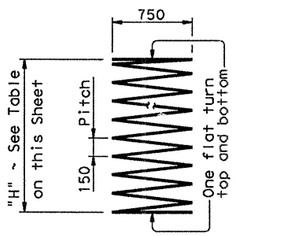


BARS Z

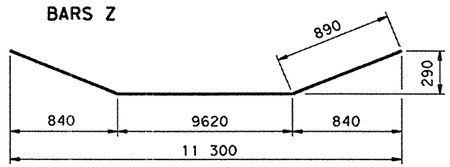


BARS B1

NOTE: Built up portion of bearing seat shall be cast integrally with cap or constructed as follows. Area under built up portion to be bush hammered. Then pedestal shall be formed from mortar which has been treated with doraweld or weldcrete bonding agent or an approved equal. The bonding agent shall be mixed with the mortar in accordance with the manufacturer's recommendations.

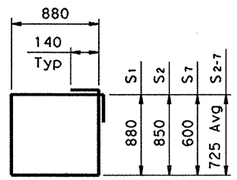


BARS S

| TABLES OF CONSTANT QUANTITIES FOR ONE CAP | | | | |
|---|---|---|---|---|
| Bar | No. | Size | Length | Mass |
| A | 5 | #11 | 11 300 | 447 |
| $B_1$ | 3 | #11 | 11 400 | 270 |
| $B_2$ | 4 | #11 | 3400 | 108 |
| D | 4 | 32 D | 500 | 12 |
| $S_1$ | 42 | #5 | 3800 | 248 |
| $S_{2-7}$ | 12 | #5 | 3490 Av | 65 |
| $T_1$ | 6 | #4 | 11 300 | 67 |
| $T_2$ | 4 | #4 | 10 250 | 41 |
| | | | | |
| *Reinforcing Steel | | | kg | 1258 |
| Class "C" Concrete | | | $m^3$ | 11.3 |

*For Contractor Information Only

## GENERAL NOTES:

1. All cap and column concrete shall be Class "C", fc' = 25 MPa.
2. All cap and column reinforcing shall be Grade 420.
3. See layout for drilled shaft length.
4. Calculated drilled shaft load = 2232 kN Each.
5. All dimensions are in millimeters unless otherwise specified.
6. Chamfer all exposed corners 20mm unless otherwise specified.

STATE OF TEXAS
Manching W. Yu
84851
REGISTERED PROFESSIONAL ENGINEER

Manching W. Yu, P.E
9-18-00

S & B INFRASTRUCTURE, LTD.

©2000 TEXAS DEPARTMENT OF TRANSPORTATION

**LOOP 1604 SB MAINLANE OVERPASS AT CULEBRA CREEK BENTS 2-6**

| | | | |
|---|---|---|---|
| DESIGNED BY: DE | CHECKED BY: KL | DATE: 09-18-00 | |
| DRAWN BY: TC | CHECKED BY: MW | DATE: 09-18-00 | |
| APPROVED BY: MW | DATE: 09-18-00 | PROJECT NO: 9432 | |
| FED. RD. DIV. NO. | FEDERAL AID PROJECT NO. | | SHEET NO. |
| 6 | NH 2000 (704), etc. | | 504 |
| STATE | STATE DIST. NO. | COUNTY | |
| TEXAS | SAT | BEXAR | |
| CONT. | SECT. | JOB | HIGHWAY NO. |
| 2452 | 01 | 036, etc. | LP 1604 |

18 SEP 2000 11:06:50 s:\project\u9432.200\design\data\cadd\dgn\sbml@culebra\9432sbml*cul*bents.dgn

| TOP OF COLUMN ELEVATIONS (m) | | | | |
|---|---|---|---|---|
| Col. A | Col. B | Col. C | W.P. A | W.P. B |
| 268.164 | 268.078 | 267.992 | 269.192 | 268.964 |

## TABLES OF CONSTANT QUANTITIES FOR BENT

| Bar | No. | Size | Length | Mass |
|---|---|---|---|---|
| A | 5 | #11 | 11 300 | 447 |
| $B_1$ | 3 | #11 | 11 400 | 270 |
| $B_2$ | 4 | #11 | 3400 | 108 |
| D | 4 | 32 D | 500 | 12 |
| $S_1$ | 54 | #5 | 3800 | 319 |
| $S_{2-7}$ | 12 | #5 | 3490 Av | 65 |
| $T_1$ | 6 | #4 | 11 300 | 67 |
| $T_2$ | 4 | #4 | 10 250 | 41 |
| V | 30 | #9 | 6080 | 923 |
| Z | 3 | #3 | 85 700 | 144 |
| * Reinforcing Steel | | | kg | 2396 |
| Class "C" Concrete | | | $m^3$ | 21.3 |

* For Contractor Information Only

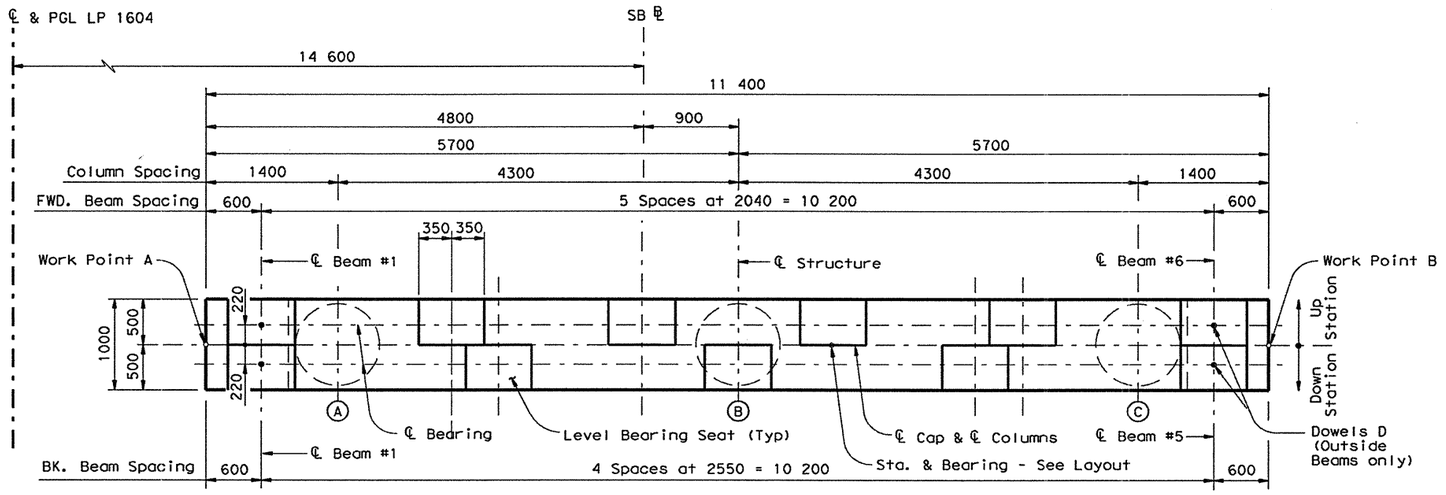


## PLAN

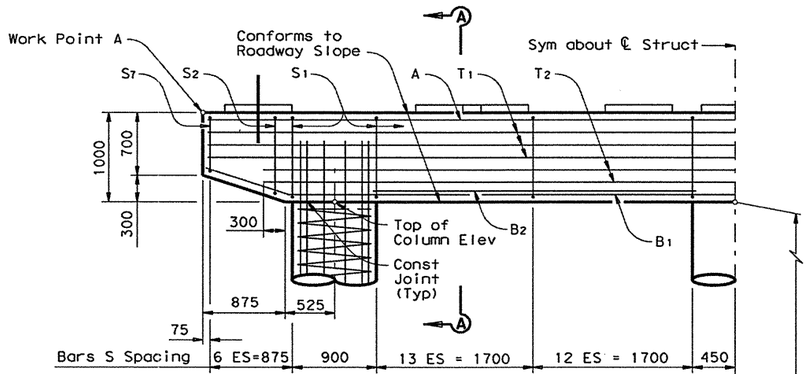


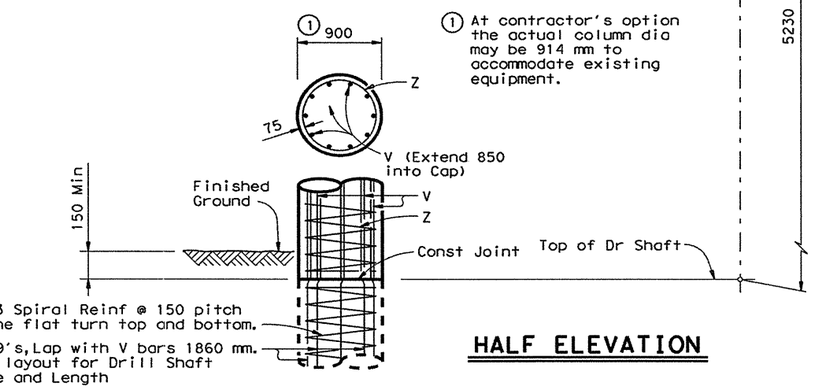


① At contractor's option the actual column dia may be 914 mm to accommodate existing equipment.

## HALF ELEVATION

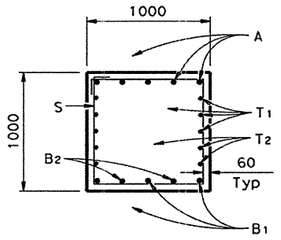


## SECTION A-A

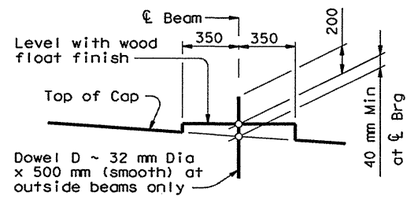


## BEARING SEAT DETAIL

(Bearing surface shall be clean and free of all loose material before placing bearing pad.)

### GENERAL NOTES:

1. All cap and column concrete shall be Class "C", fc' = 25 MPa.
2. All cap and column reinforcing shall be Grade 420.
3. See layout for drilled shaft length.
4. Calculated drilled shaft load = 2290 kN Each.
5. All dimensions are in millimeters unless otherwise specified.
6. Chamfer all exposed corners 20mm unless otherwise specified.

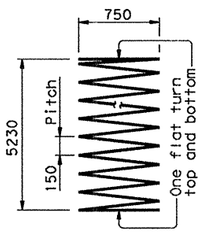


BARS Z

NOTE: Built up portion of bearing seat shall be cast integrally with cap or constructed as follows. Area under built up portion to be bush hammered. Then pedestal shall be formed from mortar which has been treated with doraweld or weldcrete bonding agent or an approved equal. The bonding agent shall be mixed with the mortar in accordance with the manufacturer's recommendations.

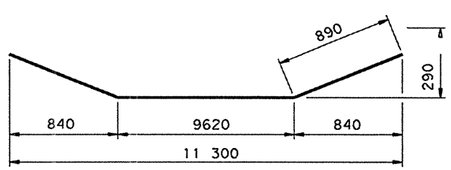


BARS B1

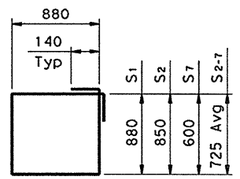


BARS S

Manching W. Yu, P.E
9-18-00

S & B INFRASTRUCTURE, LTD.

©2000 TEXAS DEPARTMENT OF TRANSPORTATION

**LOOP 1604 SB MAINLANE OVERPASS AT CULEBRA CREEK BENT 7**

| DESIGNED BY: DE | CHECKED BY: KL | DATE: 09-18-00 |
|---|---|---|
| DRAWN BY: TC | CHECKED BY: MW | DATE: 09-18-00 |
| APPROVED BY: MW | DATE: 09-18-00 | PROJECT NO: 9432 |

| FED.RD. DIV.NO. | FEDERAL AID PROJECT NO. | SHEET NO. |
|---|---|---|
| 6 | NH 2000 (704), etc. | 505 |

| STATE | STATE DIST.NO. | COUNTY | |
|---|---|---|---|
| TEXAS | SAT | BEXAR | |
| CONT. | SECT. | JOB | HIGHWAY NO. |
| 2452 | 01 | 036, etc. | LP 1604 |

18 SEP 2000 11:06:47 s:\project\u9432.200\design*data\cadd\dgn\sbml@culebra\9432sbml*cul*bent7.dgn

| TOP OF COLUMN ELEVATIONS (m) | | | | |
|---|---|---|---|---|
| Col. A | Col. B | Col. C | W.P. A | W.P. B |
| 267.986 | 267.900 | 267.814 | 269.014 | 268.786 |

## TABLES OF CONSTANT QUANTITIES FOR BENT

| Bar | No. | Size | Length | Mass |
|---|---|---|---|---|
| A | 5 | #11 | 11 300 | 447 |
| $B_1$ | 3 | #11 | 11 400 | 270 |
| $B_2$ | 4 | #11 | 3400 | 108 |
| D | 4 | 32 D | 500 | 12 |
| $S_1$ | 54 | #5 | 3800 | 319 |
| $S_{2\text{-}7}$ | 12 | #5 | 3490 Av | 65 |
| $T_1$ | 6 | #4 | 11 300 | 67 |
| $T_2$ | 4 | #4 | 10 250 | 41 |
| V | 30 | #9 | 5460 | 829 |
| Z | 3 | #3 | 75900 | 127 |
| * Reinforcing Steel | | | kg | 2285 |
| Class "C" Concrete | | | $m^3$ | 20.1 |

* For Contractor Information Only

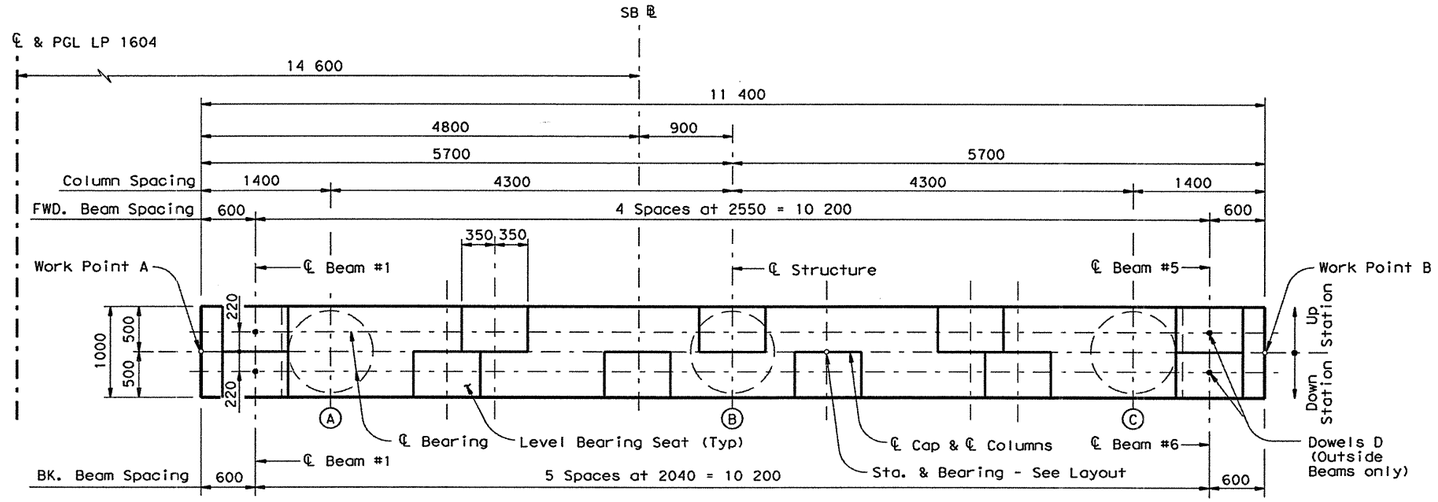


## PLAN

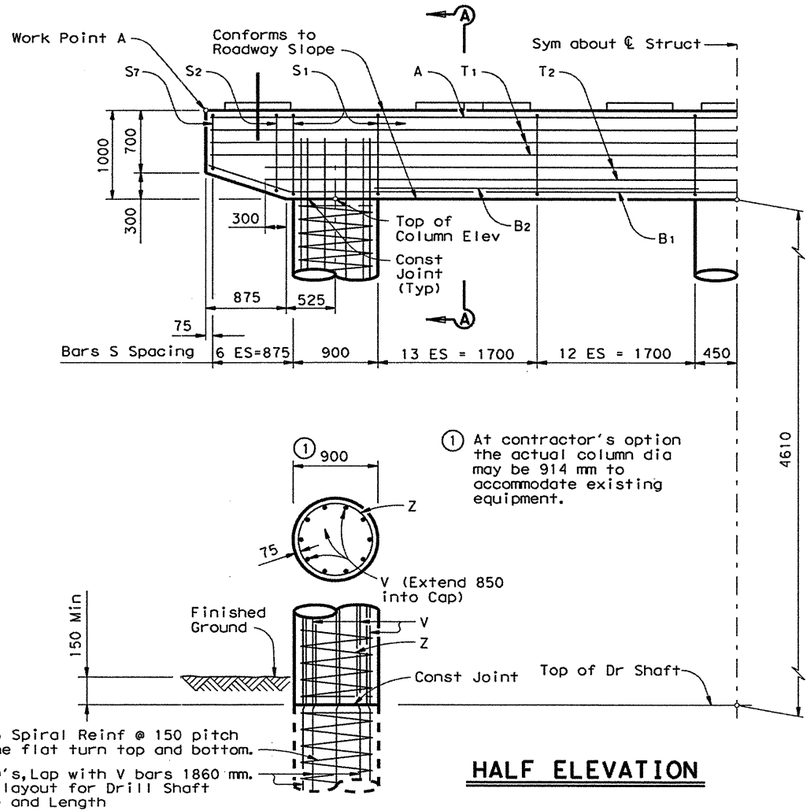


① At contractor's option the actual column dia may be 914 mm to accommodate existing equipment.

## HALF ELEVATION

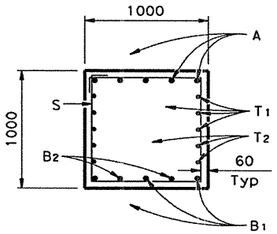


## SECTION A-A

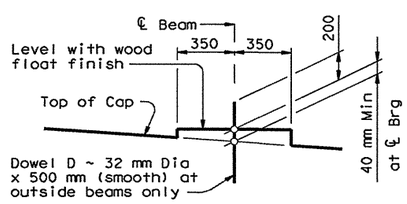


## BEARING SEAT DETAIL

(Bearing surface shall be clean and free of all loose material before placing bearing pad.)

### GENERAL NOTES:

1. All cap and column concrete shall be Class "C", fc' = 25 MPa.
2. All cap and column reinforcing shall be Grade 420.
3. See layout for drilled shaft length.
4. Calculated drilled shaft load = 1963 kN Each.
5. All dimensions are in millimeters unless otherwise specified.
6. Chamfer all exposed corners 20mm unless otherwise specified.

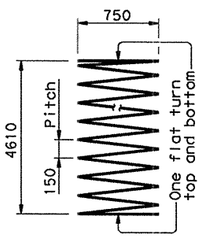


BARS Z

NOTE: Built up portion of bearing seat shall be cast integrally with cap or constructed as follows. Area under built up portion to be bush hammered. Then pedestal shall be formed from mortar which has been treated with doraweld or weldcrete bonding agent or an approved equal. The bonding agent shall be mixed with the mortar in accordance with the manufacturer's recommendations.

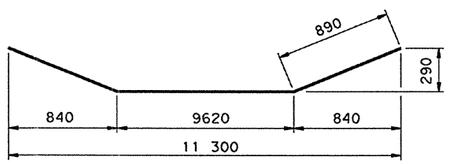


BARS B1

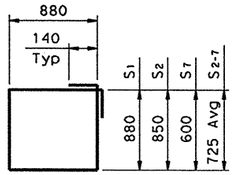


BARS S

STATE OF TEXAS
Manching W. Yu
84851
REGISTERED PROFESSIONAL ENGINEER

Manching W. Yu, P.E.
9-18-00

S & B INFRASTRUCTURE, LTD.

©2000 TEXAS DEPARTMENT OF TRANSPORTATION

# LOOP 1604 SB MAINLANE OVERPASS AT CULEBRA CREEK BENT 8

| DESIGNED BY: DE | CHECKED BY: KL | DATE: 09-18-00 |
|---|---|---|
| DRAWN BY: TC | CHECKED BY: MW | DATE: 09-18-00 |
| APPROVED BY: MW | DATE: 09-18-00 | PROJECT NO: 9432 |

| FED.RD. DIV.NO. | FEDERAL AID PROJECT NO. | SHEET NO. |
|---|---|---|
| 6 | NH 2000 (704), etc. | 506 |

| STATE | STATE DIST.NO. | COUNTY | |
|---|---|---|---|
| TEXAS | SAT | BEXAR | |
| CONT. | SECT. | JOB | HIGHWAY NO. |
| 2452 | 01 | 036, etc. | LP 1604 |

18 SEP 2000 11:06:49 s:\project\u9432.200\design*data\cadd\dgn\sbml@culebra\9432sbml*cul*bent8.dgn

| | |
|---|---|
| DESIGN SPEED: | 90 km/h |
| FUNCT. CLASS: | URBAN FREEWAY |
| EXISTING ADT: | 19,400(2000) |
| PROJECTED ADT: | 35,000(2020) |
| PERM STR. NO.: | 15-015-2452-01-175 |

NOTES:

1. DESIGNED ACCORDING TO 1996 AASHTO STANDARD SPECIFICATIONS AND INTERIMS THERETO.
2. ELEVATIONS SHOWN ARE IN METERS.
3. ALL DIMENSIONS ARE IN METERS UNLESS SHOWN OTHERWISE.
4. BEAM END CONDITIONS:
   D-DENOTES DOWEL IN OUTSIDE BEAM ONLY
   BLANK-DENOTES NO DOWEL
5. CONE PENETROMETER READING ARE IN MILLIMETERS.

◒ BORING LOCATION
✳ ELEVATION SHOWN AT PGL
✳✳ 50-YR AND 100-YR ELEVATIONS-ULTIMATE IMPROVE CHANNEL DESIGN 25-YR ELEVATIONS-CURRENT CONSTRUCTION

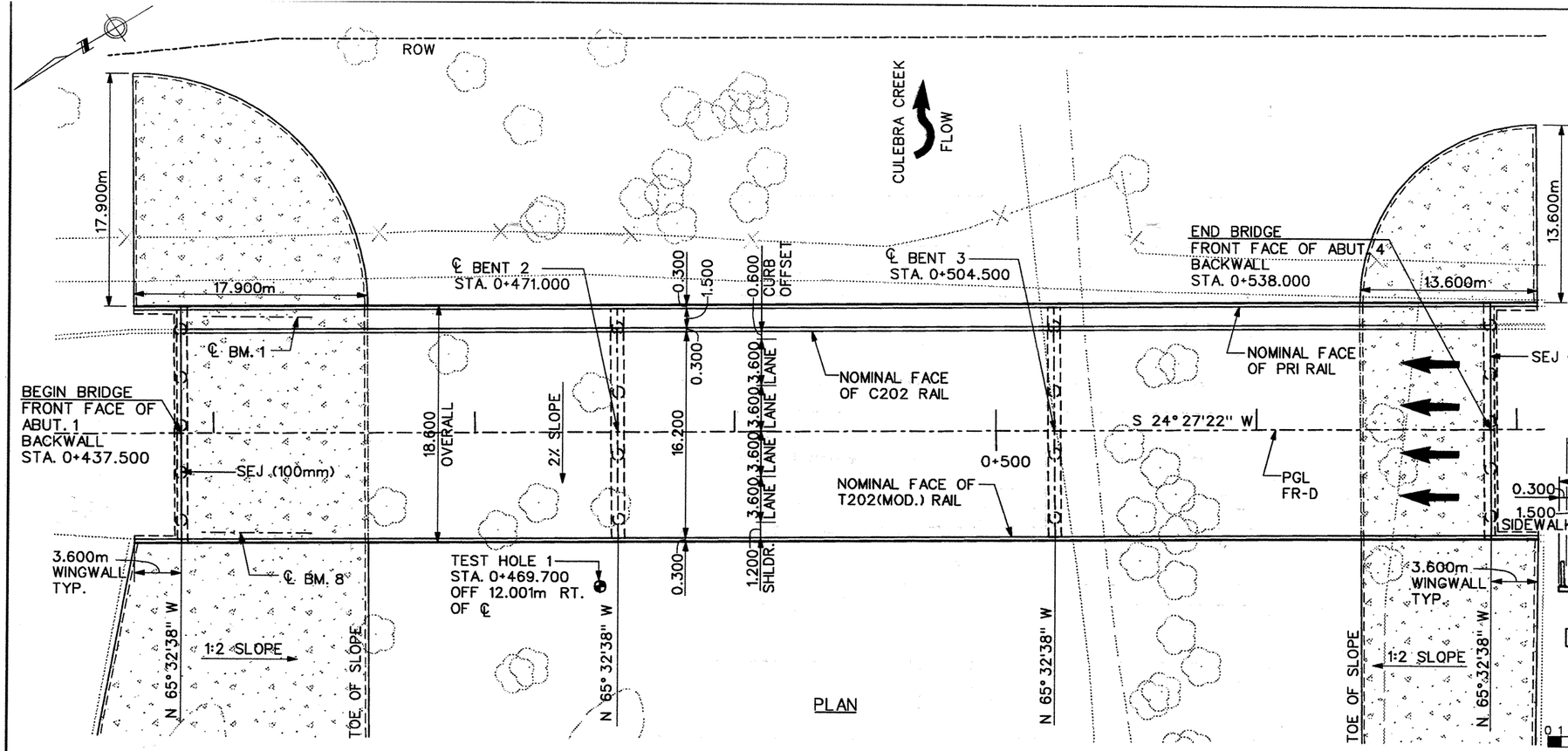


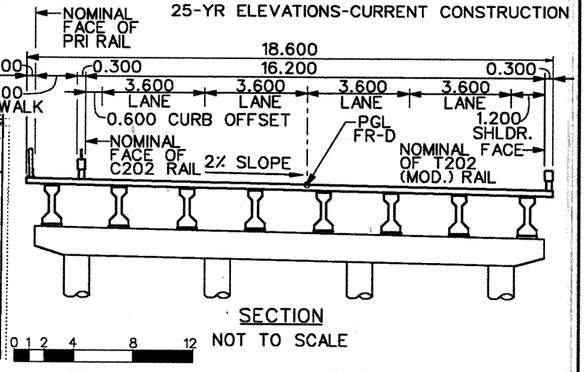


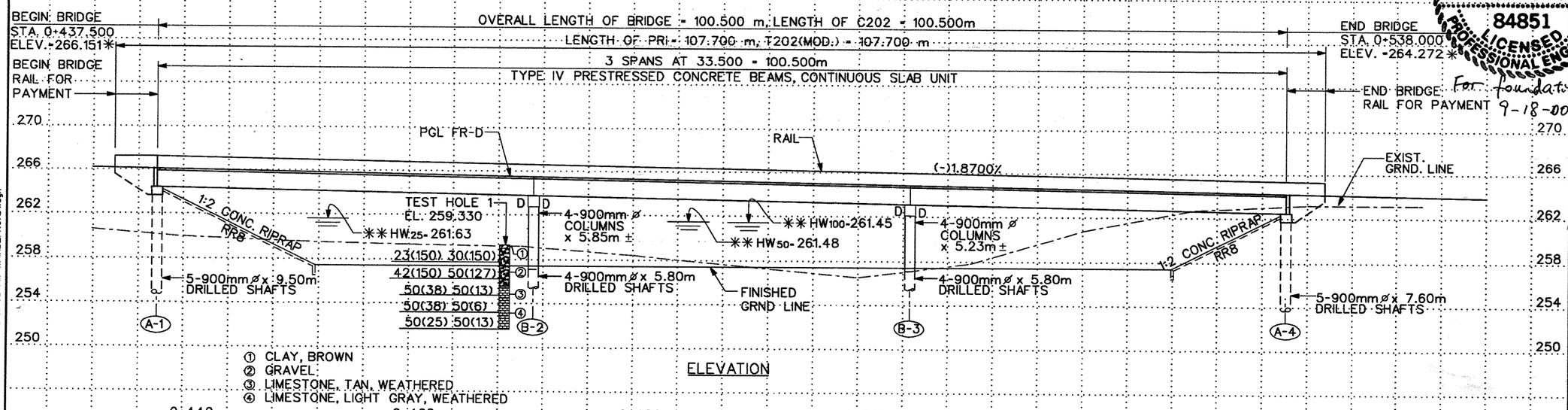


STATE OF TEXAS
MANCHING W. YU
84851
LICENSED PROFESSIONAL ENGINEER
9-14-00
For Foundations

STATE OF TEXAS
CHIN-WAN CHING
67603
REGISTERED PROFESSIONAL ENGINEER
9-14-00
For Geometrics

# LP 1604 NB FRONTAGE ROAD OVERPASS AT CULEBRA CREEK

SHEET 1 OF 1 SHEET

STRUCTURAL ENGINEERING ASSOCIATES, INC.
CONSULTING ENGINEERS
SAN ANTONIO, TEXAS

© 2000 Texas Department of Transportation

| FED.RD. DIV.NO. | FEDERAL AID PROJECT NO. | | SHEET NO. |
|---|---|---|---|
| 6 | NH 2000 (704), etc. | | 507 |
| STATE | STATE DIST.NO. | COUNTY | |
| TEXAS | SAT | BEXAR | |
| CONT. | SECT. | JOB | HIGHWAY NO. |
| 2452 | 01 | 036,etc. | LP 1604 |

09/14/2000 02:57:32 PM ...\NB_FROAD1.dgn

| | |
|---|---|
| DESIGN SPEED: | 90 km/h |
| FUNCT. CLASS: | URBAN FREEWAY |
| EXISTING ADT: | 19,400(2000) |
| PROJECTED ADT: | 35,000(2020) |
| PERM STR. NO.: | 15-015-2452-01-175 |

NOTES:

1. DESIGNED ACCORDING TO 1996 AASHTO STANDARD SPECIFICATIONS AND INTERIMS THERETO.
2. ELEVATIONS SHOWN ARE IN METERS.
3. ALL DIMENSIONS ARE IN METERS UNLESS SHOWN OTHERWISE.
4. BEAM END CONDITIONS:
   D-DENOTES DOWEL IN OUTSIDE BEAM ONLY
   BLANK-DENOTES NO DOWEL
5. CONE PENETROMETER READING ARE IN MILLIMETERS.

● BORING LOCATION
✳ ELEVATION SHOWN AT PGL
✳✳ 50-YR AND 100-YR ELEVATIONS-ULTIMATE IMPROVE CHANNEL DESIGN
25-YR ELEVATIONS-CURRENT CONSTRUCTION

**CHANGE ORDER NO. 20**
-UPDATED VIEW OF PLAN SHEET
-UPDATED BRIDGE RAIL TO REFLECT NEW STANDARDS

ROW
PR1 RAIL (RAIL ENDS AT WINGWALL)
C203 RAIL (ENDS AT ABUTMENT; NOTE: USE C202 RAIL STD FOR HANDRAIL TERMINAL DETAIL ONLY)
17.900m
BEGIN BRIDGE
FRONT FACE OF ABUT. 1
BACKWALL
STA. 0+437.500
SEJ. (100mm)
℄ BM. 1
℄ BENT 2
STA. 0+471.000
18.600 OVERALL
2% SLOPE
0.300
1.500
0.600 CURB OFFSET
16.200
3.600 LANE
3.600 LANE
3.600 LANE
3.600 LANE
1.200 SHLDR.
NOMINAL FACE OF C203 RAIL
NOMINAL FACE OF T203 RAIL
0+500
TEST HOLE 1
STA. 0+469.700
OFF 12.001m RT. OF ℄
N 65°32'38" W
3.600m WINGWALL TYP.
1:2 SLOPE
TOE OF SLOPE
T203 RAIL (THRIE BEAM CONNECTION)
CULEBRA CREEK
FLOW
PLAN

℄ BENT 3
STA. 0+504.500
PR1 (RAIL ENDS AT WINGWALL
C203 RAIL (EXTENDS PAST THE ABUTMENT, BUILD TRAFFIC RAIL FOUNDATION-EST @ 0.38M3, THRIE BEAM CONNECTION W/MBGF ATTACHED)
END BRIDGE
FRONT FACE OF ABUT. 4
BACKWALL
STA. 0+538.000
13.600m
NOMINAL FACE OF PRI RAIL
SEJ (100mm)
S 24°27'22" W
PGL FR-D
T203 RAIL (ENDS AT WINGWALL, THRIE BEAM CONNECTION W/MBGF ATTACHED)
3.600m WINGWALL TYP.
1:2 SLOPE

NOMINAL FACE OF PRI RAIL
18.600
0.300
16.200
0.300
1.500 SIDEWALK
3.600 LANE
3.600 LANE
3.600 LANE
3.600 LANE
0.600 CURB OFFSET
PGL FR-D
1.200 SHLDR.
NOMINAL FACE OF C203 RAIL
2% SLOPE
NOMINAL FACE OF T203 RAIL
SECTION
NOT TO SCALE
0 1 2 4 8 12
SCALE
MS18 LOADING

OVERALL LENGTH OF BRIDGE = 100.500 m
LENGTH OF C203 = 102.328m
LENGTH OF PRI = 107.700 m, T203 = 107.700 m
3 SPANS AT 33.500 = 100.500m
TYPE IV PRESTRESSED CONCRETE BEAMS, CONTINUOUS SLAB UNIT

BEGIN BRIDGE
STA. 0+437.500
ELEV. =266.1✳
BEGIN BRIDGE RAIL FOR PAYMENT
END BRIDGE
STA. 0+538.000
ELEV. =264.272✳
END BRIDGE RAIL FOR PAYMENT

PGL FR-D
RAIL
(-)1.8700%
EXIST. GRND. LINE
1:2 CONC. RIPRAP RR8
TEST HOLE 1
EL. 259.330
✳✳ HW25=261.63
✳✳ HW100=261.45
✳✳ HW50=261.48
4-900mm ⌀ COLUMNS x 5.85m±
4-900mm ⌀ COLUMNS x 5.23m±
23(150) 30(150) ③
42(150) 50(12) ②
50(38) 50(1) ③
50(38) 50(6) ④
50(25) 50(1) ④
5-900mm ⌀ x 9.50m DRILLED SHAFTS
4-900mm ⌀ x 5.80m DRILLED SHAFTS
FINISHED GRND LINE
4-900mm ⌀ x 5.80m DRILLED SHAFTS
5-900mm ⌀ x 7.60m DRILLED SHAFTS
A-1
B-2
B-3
A-4

270 266 262 258 254 250

① CLAY, BROWN
② GRAVEL
③ LIMESTONE, TAN, WEATHERED
④ LIMESTONE, LIGHT GRAY, WEATHERED

ELEVATION

0+440 0+460 0+480 0+500 0+520 0+540

STATE OF TEXAS
JENNIFER L. MOCZYGEMBA
84734
REGISTERED PROFESSIONAL ENGINEER

P.E. 8-7-02
Jennifer L. Moczygemba, P.E./84734 Date

For CO only

LP 1604 NB
FRONTAGE ROAD
OVERPASS
AT CULEBRA CREEK

SHEET1 OF 1 SHEET

CHANGE ORDER NO 20

© 2000 Texas Department of Transportation

| FED.RD. DIV.NO. | FEDERAL AID PROJECT NO. | SHEET NO. |
|---|---|---|
| 6 | NH 2000 (704), etc,507A | |

| STATE | STATE DIST.NO. | COUNTY |
|---|---|---|
| TEXAS | SAT | BEXAR |

| CONT. | SECT. | JOB | HIGHWAY NO. |
|---|---|---|---|
| 2452 | 01 | 036 etc | LP 1604 |

08/07/02 &FILENAME& &TIME&

# BRIDGE SUMMARY

| Item Number | | Description | Unit | NB Frontage Rd. Overpass @ Culebra Creek |
|---|---|---|---|---|
| 110 | 5002 | Excavation (Channel) | M3 | 8,529 |
| 416 | 5006 | Drilled Shaft (900MM) | M | 131.9 |
| 420 | 5013 | Class "C" Concrete (Abut) | M3 | 53.8 |
| 420 | 5014 | Class "C" Concrete (Bent) | M3 | 64.0 |
| 422 | 5001 | Reinforced Concrete Slab | M2 | 1,869.3 |
| | | | | |
| 425 | 5006 | Prestressed Conc Bm (Type IV) | M | 801.6 |
| 428 | 5001 | Concrete Surface Treatment | M2 | 1,809 |
| 432 | 5001 | Riprap (Conc) (Cl B) | M3 | 250 |
| 450 | 5016 | Rail (Ty C202) | M | 100.5 |
| 450 | 5054 | Rail (Ty T202) (Mod) | M | 107.7 |
| | | | | |
| 450 | 5060 | Rail (Ty PR1) | M | 107.7 |
| 454 | 5006 | Sealed Exp Jt SEJ-A (100MM) | M | 37.2 |

# NB FRONTAGE RD. @ CULEBRA CREEK BEARING SEAT ELEVATION SUMMARY

| Pier | Abut. 1 | Bent 2 | | Bent 3 | | Abut. 4 |
|---|---|---|---|---|---|---|
| | Fwd. | Bkwd. | Fwd. | Bkwd. | Fwd. | Bkwd. |
| 1 | 264.637 | 264.019 | 264.011 | 263.392 | 263.384 | 262.766 |
| 2 | 264.589 | 263.971 | 263.963 | 263.344 | 263.336 | 262.718 |
| 3 | 264.541 | 263.923 | 263.915 | 263.296 | 263.288 | 262.670 |
| 4 | 264.493 | 263.875 | 263.867 | 263.248 | 263.240 | 262.622 |
| 5 | 264.445 | 263.827 | 263.819 | 263.200 | 263.192 | 262.574 |
| 6 | 264.397 | 263.779 | 263.771 | 263.152 | 263.144 | 262.526 |
| 7 | 264.349 | 263.731 | 263.723 | 263.104 | 263.096 | 262.478 |
| 8 | 264.301 | 263.683 | 263.675 | 263.056 | 263.048 | 262.430 |

STATE OF TEXAS
Manching W. Yu
84851
REGISTERED
PROFESSIONAL ENGINEER

Manching W. Yu, P.E
9-18-00

S & B INFRASTRUCTURE, LTD.

©2000 TEXAS DEPARTMENT OF TRANSPORTATION

**LOOP 1604 NB FRONTAGE ROAD OVERPASS AT CULEBRA CREEK SUMMARY SHEET**

| | | | |
|---|---|---|---|
| DESIGNED BY: DE | CHECKED BY: KL | DATE: 09-18-00 | |
| DRAWN BY: TC | CHECKED BY: MW | DATE: 09-18-00 | |
| APPROVED BY: MW | DATE: 09-18-00 | PROJECT NO: 9432 | |

| FED. RD. DIV. NO. | FEDERAL AID PROJECT NO. | SHEET NO. |
|---|---|---|
| 6 | NH 2000 (704), etc. | 508 |

| STATE | STATE DIST. NO. | COUNTY | |
|---|---|---|---|
| TEXAS | SAT | BEXAR | |
| CONT. | SECT. | JOB | HIGHWAY NO. |
| 2452 | 01 | 036, etc. | LP 1604 |

18 SEP 2000 11:14:58 s:\project\u9432.200\design\data\cadd\dgn\nbfr@culebra\9432nbfr*cul*summary.dgn

## BRIDGE SUMMARY

| Item Number | | Description | Unit | NB Frontage Rd. Overpass @ Culebra Creek |
|---|---|---|---|---|
| 110 | 5002 | Excavation (Channel) | M3 | 8,529 |
| 416 | 5006 | Drilled Shaft (900MM) | M | 131.9 |
| 420 | 5013 | Class "C" Concrete (Abut) | M3 | 53.8 |
| 420 | 5014 | Class "C" Concrete (Bent) | M3 | 64.0 |
| 422 | 5001 | Reinforced Concrete Slab | M2 | 1,869.3 |
| | | | | |
| 425 | 5006 | Prestressed Conc Bm (Type IV) | M | 801.6 |
| 428 | 5001 | Concrete Surface Treatment | M2 | 1,809 |
| ~~432~~ | ~~5001~~ | ~~Riprap (Conc) (Cl B)~~ | ~~M3~~ | ~~250~~ |
| 450 | 5016 | Rail (Ty ~~C202~~) C203 | M | ~~100.5~~ 107.7 |
| 450 | 5054 | Rail (Ty ~~T202) (Mod)~~ T203 | M | 107.7 |
| | | | | |
| 450 | 5060 | Rail (Ty PR1) | M | 107.7 |
| 454 | 5006 | Sealed Exp Jt SEJ-A (100MM) | M | 37.2 |

## NB FRONTAGE RD. @ CULEBRA CREEK BEARING SEAT ELEVATION SUMMARY

| Pier | Abut. 1 | Bent 2 | | Bent 3 | | Abut. 4 |
|---|---|---|---|---|---|---|
| | Fwd. | Bkwd. | Fwd. | Bkwd. | Fwd. | Bkwd. |
| 1 | 264.637 | 264.019 | 264.011 | 263.392 | 263.384 | 262.766 |
| 2 | 264.589 | 263.971 | 263.963 | 263.344 | 263.336 | 262.718 |
| 3 | 264.541 | 263.923 | 263.915 | 263.296 | 263.288 | 262.670 |
| 4 | 264.493 | 263.875 | 263.867 | 263.248 | 263.240 | 262.622 |
| 5 | 264.445 | 263.827 | 263.819 | 263.200 | 263.192 | 262.574 |
| 6 | 264.397 | 263.779 | 263.771 | 263.152 | 263.144 | 262.526 |
| 7 | 264.349 | 263.731 | 263.723 | 263.104 | 263.096 | 262.478 |
| 8 | 264.301 | 263.683 | 263.675 | 263.056 | 263.048 | 262.430 |

STATE OF TEXAS
Wanching W. Yu
84851
REGISTERED PROFESSIONAL ENGINEER

Wanching W. Yu, P.E
9-18-00

S & B INFRASTRUCTURE, LTD.

©2000
TEXAS DEPARTMENT OF TRANSPORTATION

LOOP 1604 NB
FRONTAGE ROAD OVERPASS
AT CULEBRA CREEK
SUMMARY SHEET

| | | | |
|---|---|---|---|
| DESIGNED BY: DE | CHECKED BY: KL | DATE: 09-18-00 | |
| DRAWN BY: TC | CHECKED BY: WW | DATE: 09-18-00 | |
| APPROVED BY: WW | DATE: 09-18-00 | PROJECT NO: 9432 | |
| FED. RD. DIV. NO. | FEDERAL AID PROJECT NO. | | SHEET NO. |
| 6 | NH 2000 (704), etc. | | 508A |
| STATE | STATE DIST. NO. | COUNTY | |
| TEXAS | SAT | BEXAR | |
| CONT. | SECT. | JOB | HIGHWAY NO. |
| 2452 | 01 | 036, etc. | LP 1604 |

COA 10

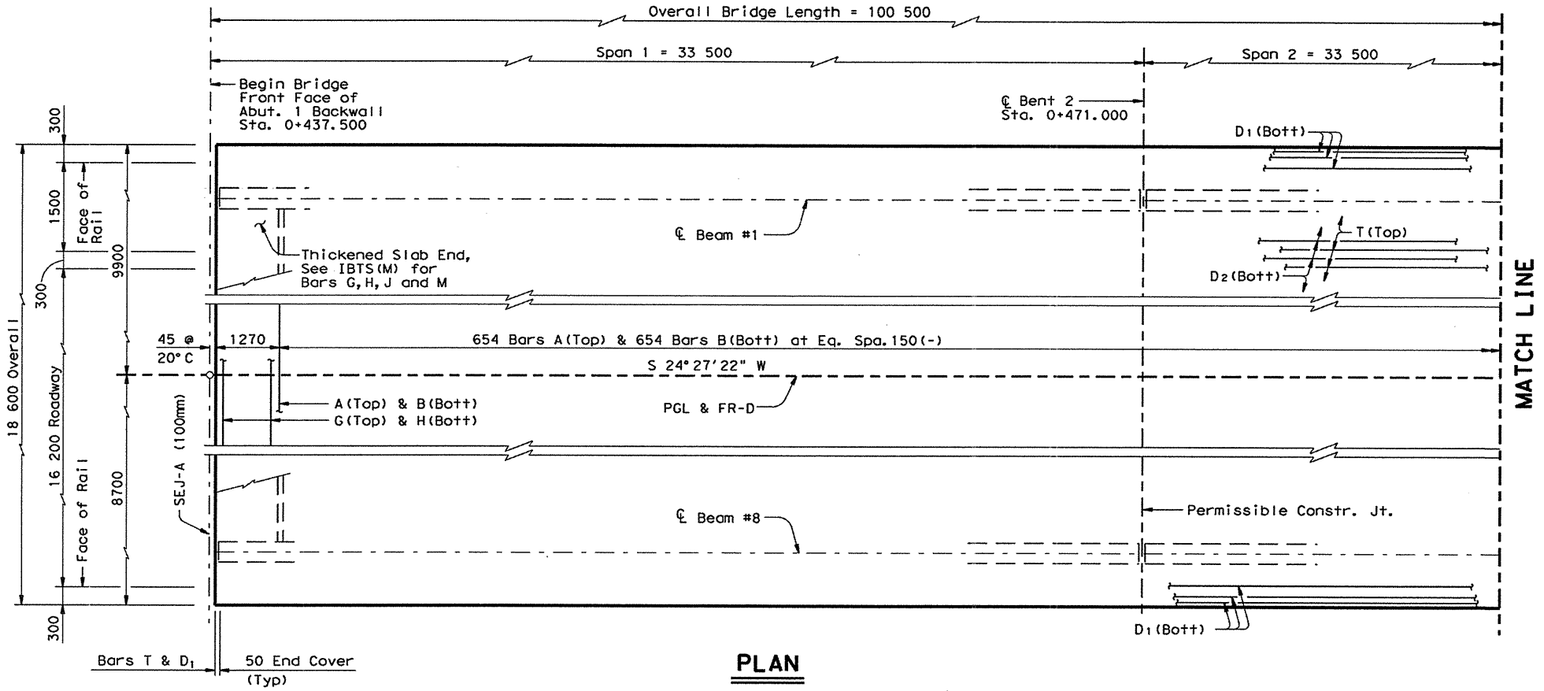


PLAN

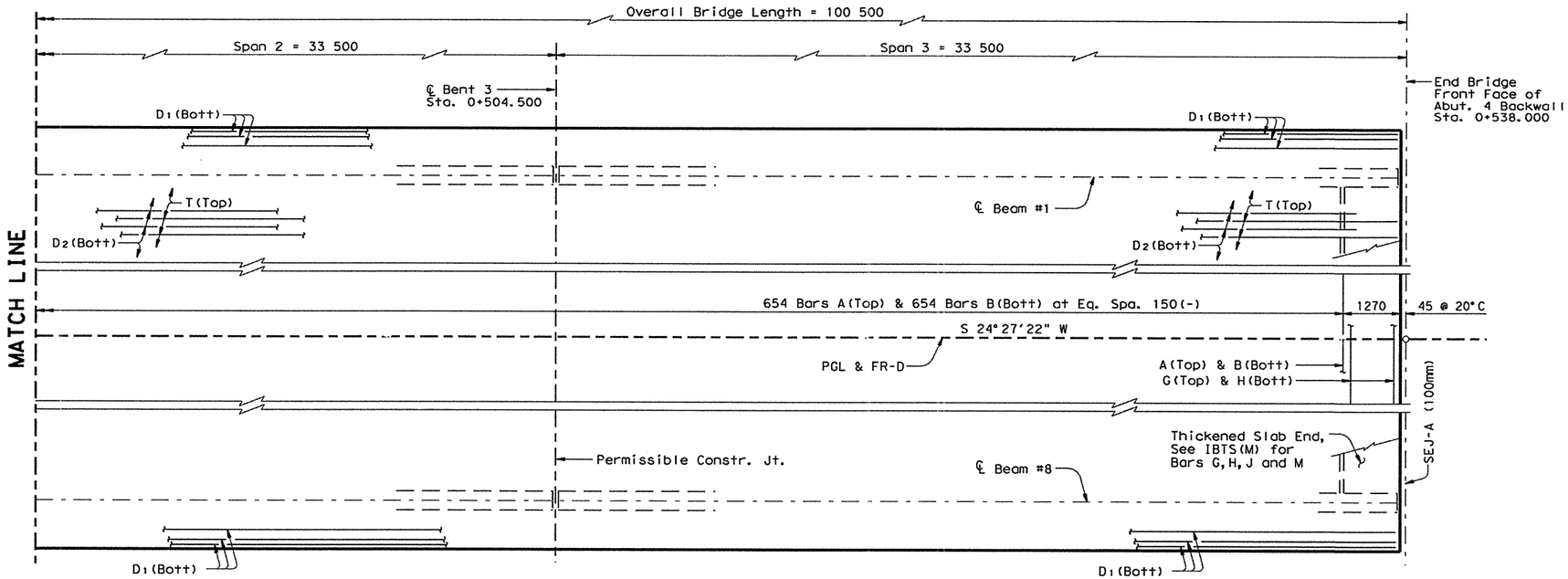


PLAN

Manching W. Yu
84851
REGISTERED PROFESSIONAL ENGINEER
STATE OF TEXAS

Manching W. Yu, P.E
9-18-00

S & B INFRASTRUCTURE, LTD.

©2000 TEXAS DEPARTMENT OF TRANSPORTATION

# LOOP 1604 NB FRONTAGE ROAD OVERPASS AT CULEBRA CREEK SLAB PLAN

| | | | |
|---|---|---|---|
| DESIGNED BY: DE | CHECKED BY: KL | DATE: 09-18-00 | |
| DRAWN BY: TC | CHECKED BY: MW | DATE: 09-18-00 | |
| APPROVED BY: MW | DATE: 09-18-00 | PROJECT NO: 9432 | |

| FED.RD. DIV.NO. | FEDERAL AID PROJECT NO. | SHEET NO. |
|---|---|---|
| 6 | NH 2000 (704), etc. | 509 |

| STATE | STATE DIST.NO. | COUNTY | |
|---|---|---|---|
| TEXAS | SAT | BEXAR | |
| CONT. | SECT. | JOB | HIGHWAY NO. |
| 2452 | 01 | 036, etc. | LP 1604 |

18 SEP 2000 11:14:58 s:\project\u9432.200\design\data\cadd\dgn\nbfr@culebra\9432nbfr*cul*slab.dgn

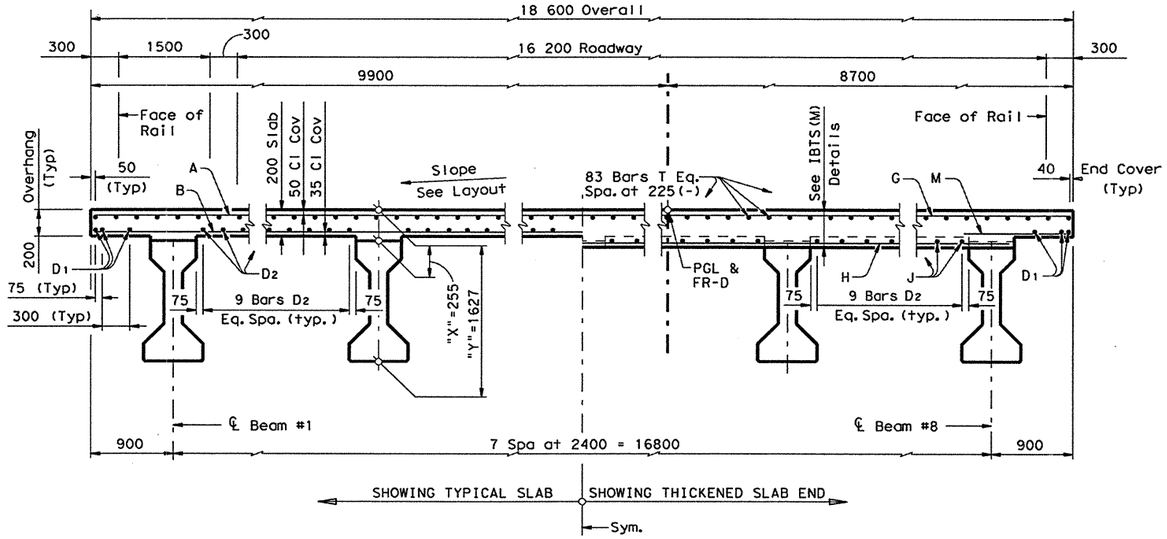


## TYPICAL TRANSVERSE SECTION

(LOOKING UPSTATION)

| Span | "A" | "B" |
|---|---|---|
| m | mm | mm |
| 33.500 | 33 | 46 |

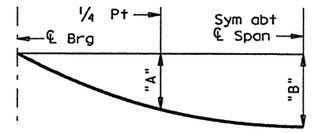


## DEAD LOAD DEFLECTION DIAGRAM

NOTE: Deflections shown are due to concrete slab only. ($E_c$ = 35,000 MPa) Calculated deflections shown are theoretical and actual dimensions may be less. Deflections shall be adjusted based on field observations.

## BAR TABLE

| BAR | SIZE |
|---|---|
| A | #5 |
| B | #5 |
| D | #5 |
| G | #5 |
| H | #5 |
| J | #5 |
| M | #5 |
| T | #5 |

## TABLE OF ESTIMATED QUANTITIES

| REINF CONCRETE SLAB | PRESTRESSED CONCRETE ① BEAMS (TY IV) | CLASS "S" CONCRETE | ②TOTAL REINF STEEL |
|---|---|---|---|
| $m^2$ | m | $m^3$ | kg |
| 1869.3 | 801.6 | 380.3 | 59,818 |

① Fabricator shall adjust beam lengths for beam slopes as required.

② Reinforcing steel mass is calculated using an approximate factor of 32 kg/$m^2$.

**GENERAL NOTES:**

1. Designed according to current AASHTO Standard and Interim Specifications.
2. See IBTS(M) Standard for Thickened Slab End Details and quantity adjustments.
3. See PCP(C)(M) or PMDF(C)(M) Standards for details and quantity adjustments if either of these options are used.
4. All reinforcing shall be Grade 420. Concrete strength f'c = 28 MPa.
5. All dimensions are in millimeters unless otherwise shown.
6. Bar laps, where required, shall be as follows:
   Uncoated ~ #5 = 560 mm

STATE OF TEXAS
Manching W. Yu
84851
REGISTERED PROFESSIONAL ENGINEER

Manching W. Yu, P.E.
9-18-00

S & B INFRASTRUCTURE, LTD.

©2000 TEXAS DEPARTMENT OF TRANSPORTATION

**LOOP 1604 NB FRONTAGE ROAD OVERPASS AT CULEBRA CREEK TYPICAL SECTION**

| DESIGNED BY: DE | CHECKED BY: KL | DATE: 09-18-00 |
|---|---|---|
| DRAWN BY: TC | CHECKED BY: MW | DATE: 09-18-00 |
| APPROVED BY: MW | DATE: 09-18-00 | PROJECT NO: 9432 |

| FED.RD. DIV.NO. | FEDERAL AID PROJECT NO. | SHEET NO. |
|---|---|---|
| 6 | NH 2000 (704), etc. | 510 |

| STATE | STATE DIST.NO. | COUNTY | |
|---|---|---|---|
| TEXAS | SAT | BEXAR | |
| CONT. | SECT. | JOB | HIGHWAY NO. |
| 2452 | 01 | 036, etc. | LP 1604 |

18 SEP 2000 11:15:00 s:\project\u9432.200\design\data\cadd\dgn\nbfr@culebra\9432nbfr*cul*typsection.dgn

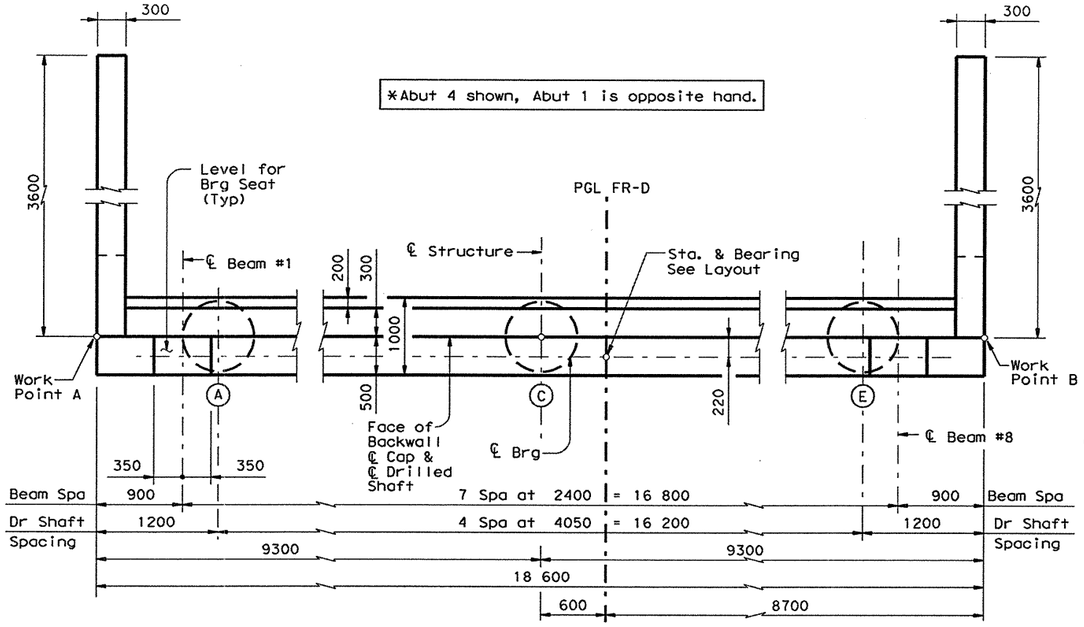


## PLAN

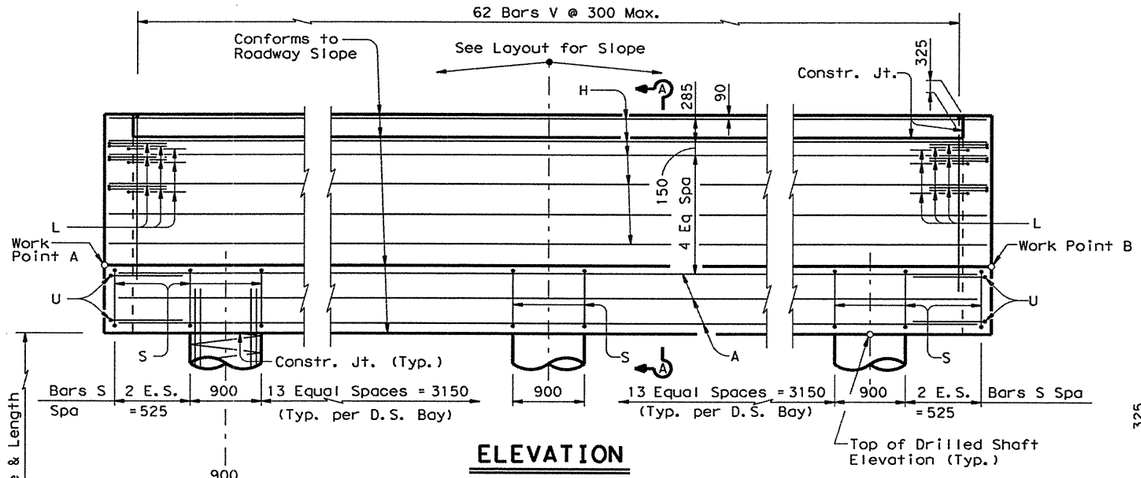


## ELEVATION

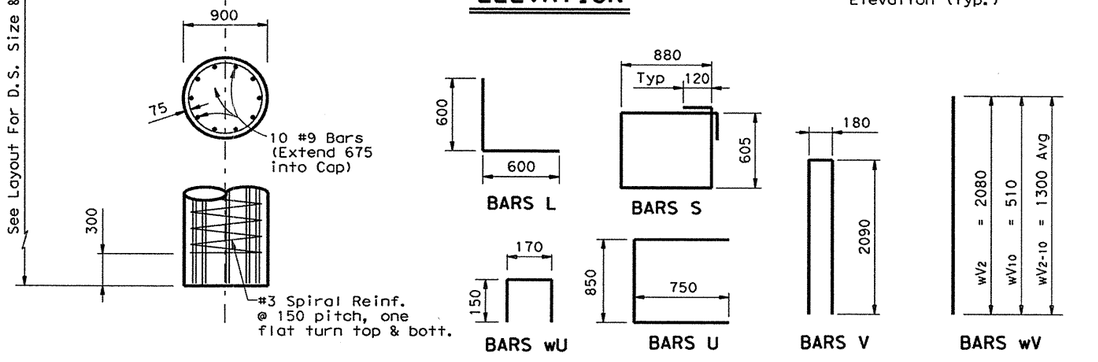


## TOP OF DRILLED SHAFT ELEV. (m)

| Abut No. | D.S.A. | D.S.B. | D.S.C. | D.S.D. | D.S.E. | W.P. A | W.P. B |
|---|---|---|---|---|---|---|---|
| 1 | 263.841 | 263.760 | 263.679 | 263.598 | 263.517 | 264.615 | 264.243 |
| 4 | 261.970 | 261.889 | 261.808 | 261.727 | 261.646 | 262.744 | 262.372 |

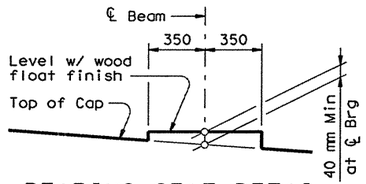


## BEARING SEAT DETAIL

(Bearing surface shall be clean and free of all loose material before placing bearing pad.)

NOTE: Built up portion of bearing seat shall be cast integrally with cap or constructed as follows. Area under built up portion to be bush hammered. Then pedestal shall be formed from mortar which has been treated with doraweld or weldcrete bonding agent or an approved equal. The bonding agent shall be mixed with the mortar in accordance with the manufacturer's recommendations.

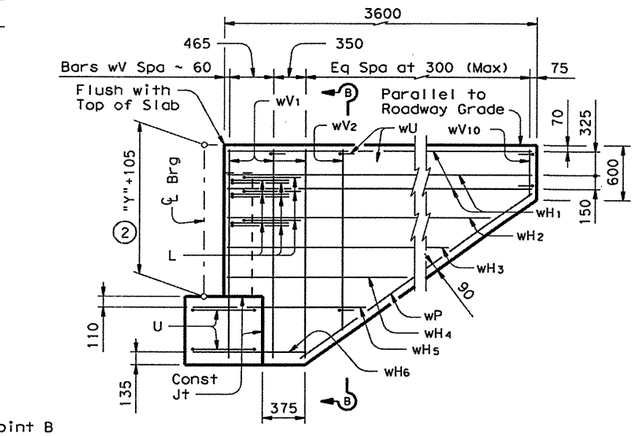


## WINGWALL ELEVATION

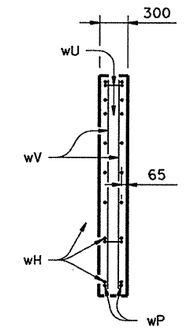


## SECTION B-B

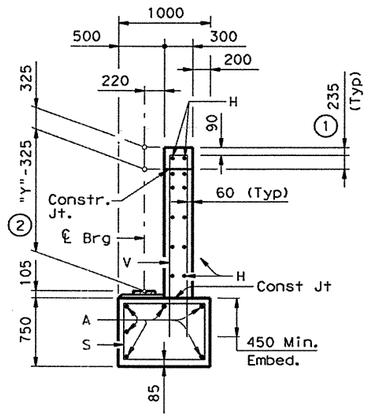


## SECTION A-A

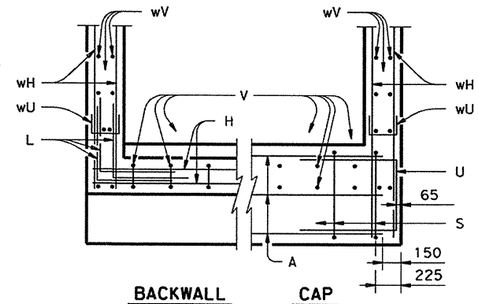


BACKWALL CAP

## CORNER DETAILS

## TABLE OF ESTIMATED QUANTITIES

| Bar | No. | Size | Length | Mass |
|---|---|---|---|---|
| A | 6 | #11 | 18 300 | 868 |
| H | 12 | #5 | 18 500 | 345 |
| L | 18 | #6 | 1200 | 48 |
| S | 62 | #4 | 3210 | 198 |
| U | 4 | #6 | 2350 | 21 |
| V | 61 | #5 | 4360 | 413 |
| wH 1 | 12 | #6 | 3500 | 94 |
| wH 2 | 4 | #6 | 2960 | 26 |
| wH 3 | 4 | #6 | 2490 | 22 |
| wH 4 | 4 | #6 | 2020 | 18 |
| wH 5 | 4 | #6 | 2050 | 18 |
| wH 6 | 4 | #6 | 1320 | 12 |
| wP | 4 | #6 | 3280 | 29 |
| wU | 16 | #4 | 470 | 7 |
| wV 1 | 12 | #5 | 2350 | 44 |
| wV 2-10 | 36 | #5 | 1300Av | 73 |
| | | | | |
| | | | | |
| *Reinforcing Steel | | | kg | 2236 |
| Class "C" Concrete | | | $m^3$ | 26.9 |
| | | | | |

*For Contractors Information Only

1. Increase as required to maintain 90 mm from Finished Grade.
2. See Slab Typ. Section sheet for "Y".

### GENERAL NOTES:

1. All cap and backwall concrete shall be Class "C", f'c = 25 MPa.
2. All cap and wall reinforcing shall be Grade 420.
3. See Foundation Detail Standard Sheet, FD(M), for all foundation details and notes.
4. Calculated Drilled Shaft Load = 1023 kN each.
5. All dimensions are in millimeters unless otherwise specified.
6. Chamfer an exposed corner 20mm unless otherwise specified.

STATE OF TEXAS
Manching W. Yu
84851
REGISTERED PROFESSIONAL ENGINEER

Manching W. Yu, P.E
9-18-00

S & B INFRASTRUCTURE, LTD.

©2000 TEXAS DEPARTMENT OF TRANSPORTATION

**LOOP 1604 NB FRONTAGE ROAD OVERPASS AT CULEBRA CREEK ABUTMENTS 1 & 4**

| | | | |
|---|---|---|---|
| DESIGNED BY: DE | CHECKED BY: KL | DATE: 09-18-00 | |
| DRAWN BY: TC | CHECKED BY: MW | DATE: 09-18-00 | |
| APPROVED BY: MW | DATE: 09-18-00 | PROJECT NO: 9432 | |

| FED. RD. DIV. NO. | FEDERAL AID PROJECT NO. | SHEET NO. |
|---|---|---|
| 6 | NH 2000 (704), etc. | 511 |

| STATE | STATE DIST. NO. | COUNTY | HIGHWAY NO. |
|---|---|---|---|
| TEXAS | SAT | BEXAR | |
| CONT. | SECT. | JOB | |
| 2452 | 01 | 036, etc. | LP 1604 |

18 SEP 2000 11:14:54 s:\project\u9432.200\design*data\cadd\dgn\nbfr*culebra\9432nbfr*cul*abut1.dgn

| TOP OF COLUMN ELEVATIONS (m) | | | | | | |
|---|---|---|---|---|---|---|
| Bent No. | Col. A | Col. B | Col. C | Col. D | W.P. A | W.P. B |
| 2 | 262.953 | 262.853 | 262.753 | 262.653 | 263.983 | 263.623 |
| 3 | 262.326 | 262.226 | 262.126 | 262.026 | 263.356 | 262.996 |

| TABLE OF VARIABLE QUANTITIES FOR 4 COLUMNS | | | | | | ESTIMATED QUANTITIES FOR 4 COLS | |
|---|---|---|---|---|---|---|---|
| Bent No. | "H" | Bars V 40 ~ #9 | | Bars Z 4 ~ #3 Spiral | | Reinf Steel | Class "C" Conc |
| | mm | Length | Mass | Length | Mass | kg | $m^3$ |
| 2 | 5850 | 6700 | 1356 | 95 400 | 213 | 1569 | 14.9 |
| 3 | 5230 | 6080 | 1231 | 85 700 | 192 | 1423 | 13.3 |

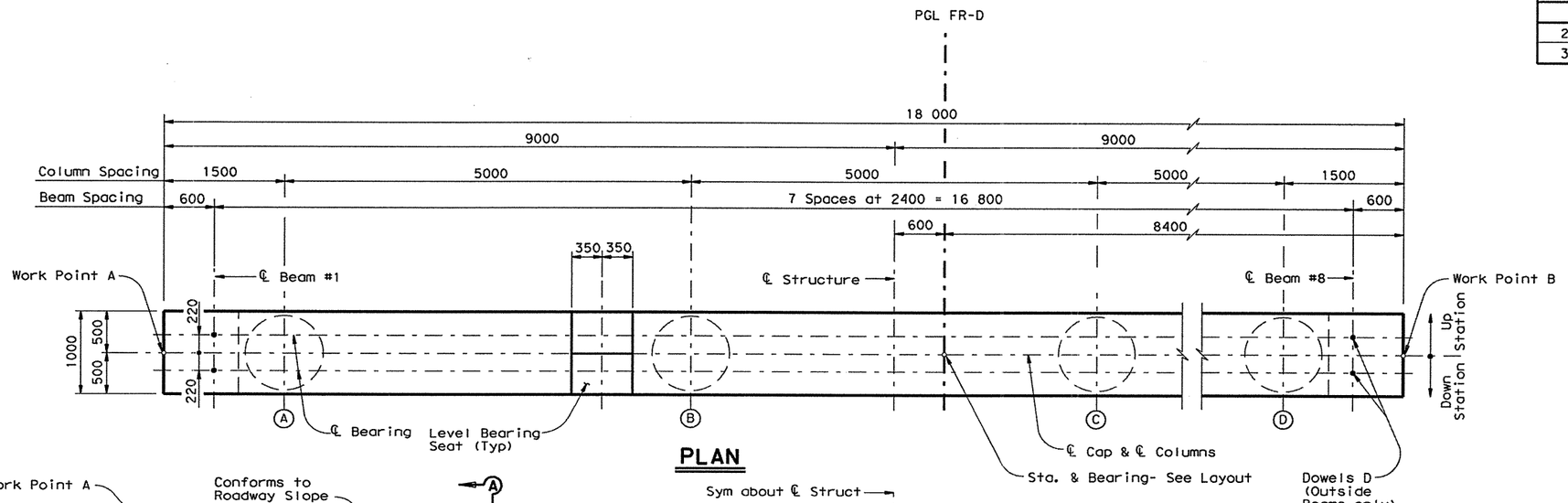


## PLAN

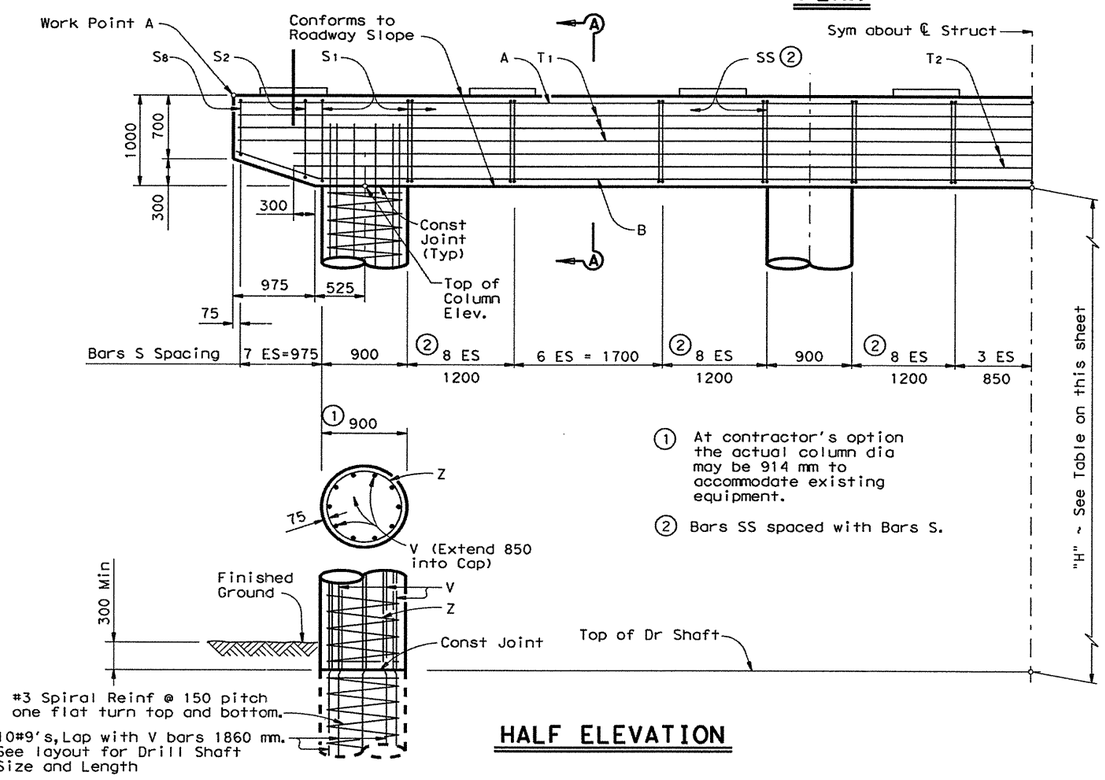


(1) At contractor's option the actual column dia may be 914 mm to accommodate existing equipment.

(2) Bars SS spaced with Bars S.

## HALF ELEVATION

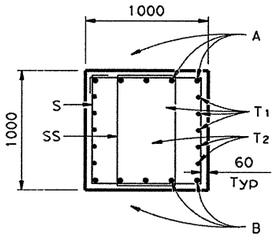


## SECTION A-A

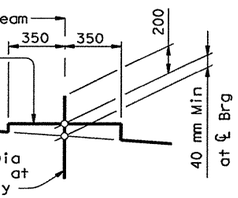


## BEARING SEAT DETAIL

(Bearing surface shall be clean and free of all loose material before placing bearing pad.)

NOTE: Built up portion of bearing seat shall be cast integrally with cap or constructed as follows. Area under built up portion to be bush hammered. Then pedestal shall be formed from mortar which has been treated with doraweld or weldcrete bonding agent or an approved equal. The bonding agent shall be mixed with the mortar in accordance with the manufacturer's recommendations.

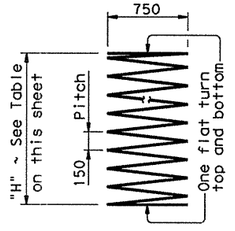


BARS Z

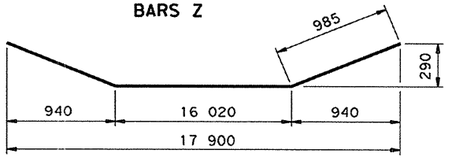


BARS B

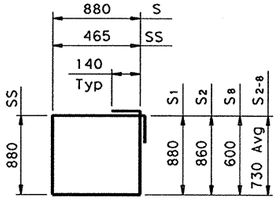


BARS S & SS

## GENERAL NOTES:

1. All cap and column concrete shall be Class "C", fc' = 25 MPa.
2. All cap and column reinforcing shall be Grade 420.
3. See layout for drilled shaft length.
4. Calculated drilled shaft load = 2294 kN Each.
5. All dimensions are in millimeters unless otherwise specified.
6. Chamfer all exposed corners 20mm unless otherwise specified.

| TABLES OF CONSTANT QUANTITIES FOR ONE CAP | | | | |
|---|---|---|---|---|
| Bar | No. | Size | Length | Mass |
| A | 5 | #11 | 17 900 | 708 |
| B | 5 | #11 | 17 990 | 711 |
| D | 4 | 32 D | 500 | 12 |
| S1 | 71 | #5 | 3800 | 419 |
| S2-8 | 14 | #5 | 3490 Av | 76 |
| SS | 54 | #5 | 2970 | 249 |
| T1 | 6 | #4 | 17 900 | 107 |
| T2 | 4 | #4 | 16 650 | 66 |
| | | | | |
| *Reinforcing Steel | | | kg | 2348 |
| Class "C" Concrete | | | $m^3$ | 17.9 |

*For Contractor Information Only.

Manching W. Yu, P.E
9-18-00

S & B INFRASTRUCTURE, LTD.

©2000 TEXAS DEPARTMENT OF TRANSPORTATION

**LOOP 1604 NB FRONTAGE ROAD OVERPASS AT CULEBRA CREEK BENTS 2 & 3**

| | | | |
|---|---|---|---|
| DESIGNED BY: DE | CHECKED BY: KL | DATE: 09-18-00 | |
| DRAWN BY: TC | CHECKED BY: MW | DATE: 09-18-00 | |
| APPROVED BY: MW | DATE: 09-18-00 | PROJECT NO: 9432 | |
| FED. RD. DIV. NO. | FEDERAL AID PROJECT NO. | | SHEET NO. |
| 6 | NH 2000 (704), etc. | | 512 |
| STATE | STATE DIST. NO. | COUNTY | |
| TEXAS | SAT | BEXAR | |
| CONT. | SECT. | JOB | HIGHWAY NO. |
| 2452 | 01 | 036, etc. | LP 1604 |

18 SEP 2000 11:14:56 s:\project\u9432.200\design*data\cadd\dgn\nbfr*culebra\9432nbfr*culbents.dgn

| | |
|---|---|
| DESIGN SPEED: | 90 km/h |
| FUNCT. CLASS: | URBAN FREEWAY |
| EXISTING ADT: | 19,400(2000) |
| PROJECTED ADT: | 35,000(2020) |
| PERM STR. NO.: | 15-015-2452-01-176 |

NOTES:

1. DESIGNED ACCORDING TO 1996 AASHTO STANDARD SPECIFICATIONS AND INTERIMS THERETO.
2. ELEVATIONS SHOWN ARE IN METERS.
3. ALL DIMENSIONS ARE IN METERS UNLESS SHOWN OTHERWISE.
4. BEAM END CONDITIONS:
   D-DENOTES DOWEL IN OUTSIDE BEAM ONLY
   BLANK-DENOTES NO DOWEL
5. CONE PENETROMETER READING ARE IN MILLIMETERS.

◕ BORING LOCATION
✳ ELEVATION SHOWN AT PGL
✳✳ 50-YR AND 100-YR ELEVATIONS-ULTIMATE IMPROVE CHANNEL DESIGN
25-YR ELEVATIONS-CURRENT CONSTRUCTION

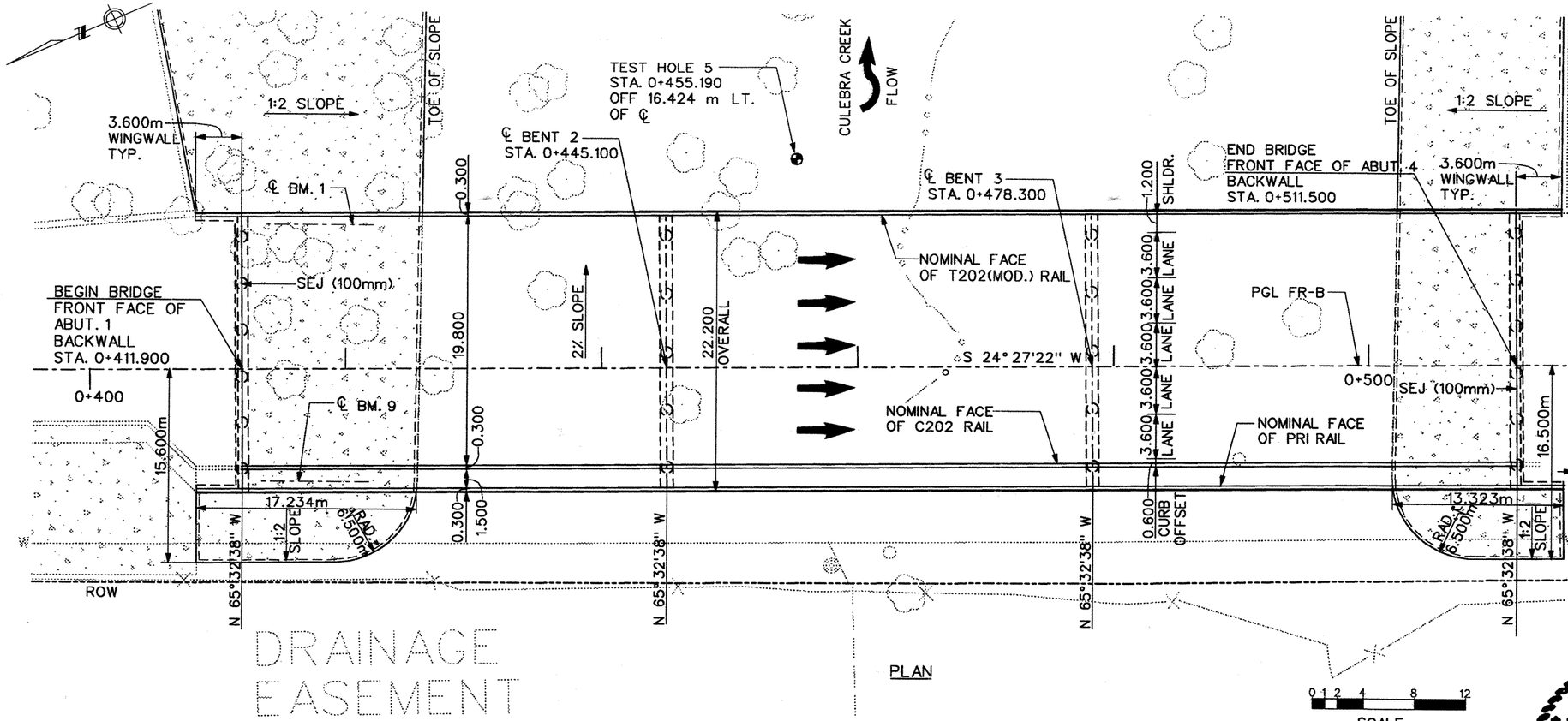


MS18 LOADING

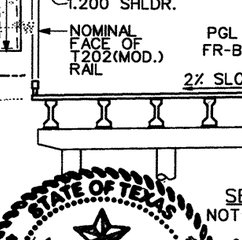


For foundations 9-18-00

9-14-00
For Geometrics

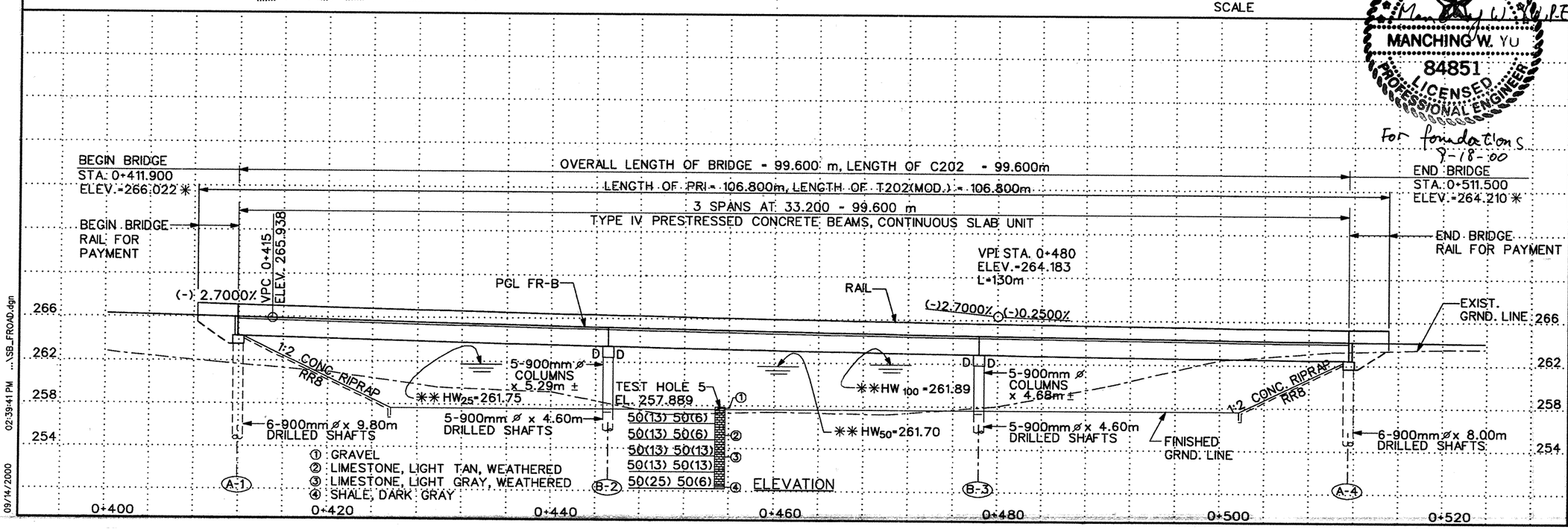


LP 1604 SB
FRONTAGE ROAD
OVERPASS
AT CULEBRA CREEK

SHEET 1 OF 1 SHEET

STRUCTURAL ENGINEERING ASSOCIATES, INC.
CONSULTING ENGINEERS
SAN ANTONIO, TEXAS

© 2000 Texas Department of Transportation

| FED.RD. DIV.NO. | FEDERAL AID PROJECT NO. | SHEET NO. |
|---|---|---|
| 6 | NH 2000 (704), etc. | 513 |
| STATE | STATE DIST.NO. | COUNTY |
| TEXAS | SAT | BEXAR |
| CONT. | SECT. | JOB | HIGHWAY NO. |
| 2452 | 01 | 036,etc. | LP 1604 |

09/14/2000 02:39:41 PM ...\SB_FROAD.dgn

| | |
|---|---|
| DESIGN SPEED: | 90 km/h |
| FUNCT. CLASS: | URBAN FREEWAY |
| EXISTING ADT: | 19,400(2000) |
| PROJECTED ADT: | 35,000(2020) |
| PERM STR. NO.: | 15-015-2452-01-176 |

NOTES:

1. DESIGNED ACCORDING TO 1996 AASHTO STANDARD SPECIFICATIONS AND INTERIMS THERETO.
2. ELEVATIONS SHOWN ARE IN METERS.
3. ALL DIMENSIONS ARE IN METERS UNLESS SHOWN OTHERWISE.
4. BEAM END CONDITIONS:
   D-DENOTES DOWEL IN OUTSIDE BEAM ONLY
   BLANK-DENOTES NO DOWEL
5. CONE PENETROMETER READING ARE IN MILLIMETERS.

⊕ BORING LOCATION
* ELEVATION SHOWN AT PGL
** 50-YR AND 100-YR ELEVATIONS-ULTIMATE IMPROVE CHANNEL DESIGN
25-YR ELEVATIONS-CURRENT CONSTRUCTION

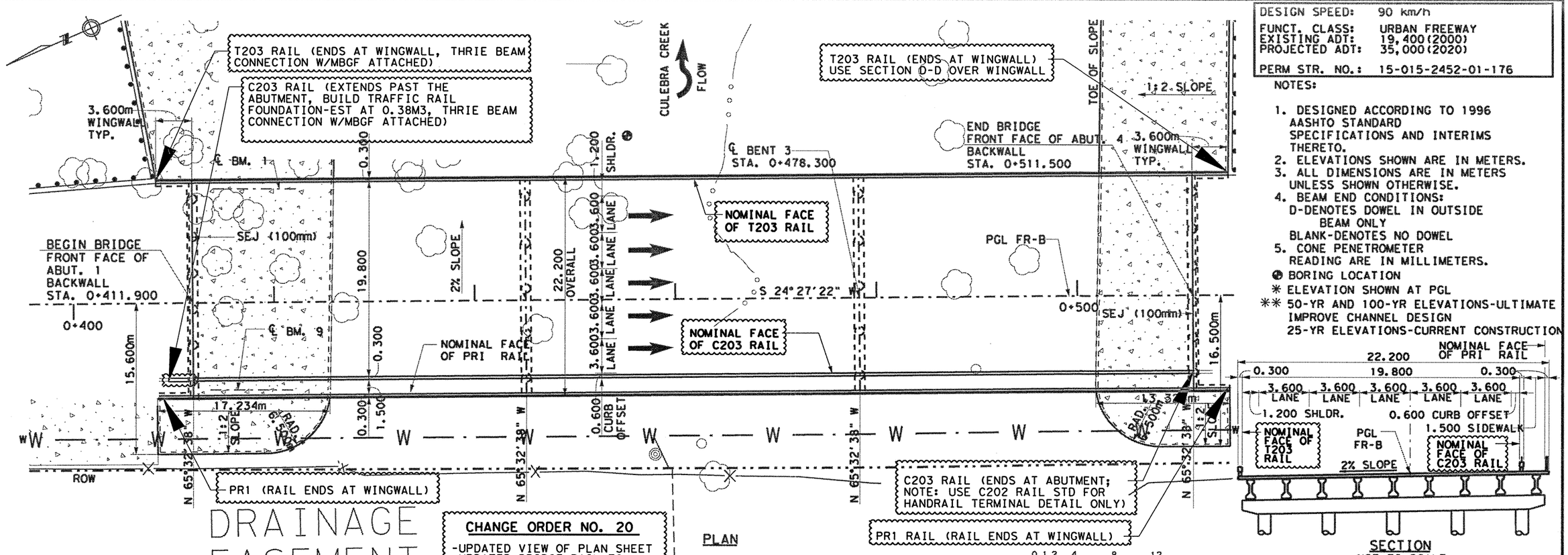


DRAINAGE EASEMENT

PLAN

**CHANGE ORDER NO. 20**

-UPDATED VIEW OF PLAN SHEET
-UPDATED BRIDGE RAIL TO REFLECT NEW STANDARDS




SECTION
NOT TO SCALE

MS18 LOADING

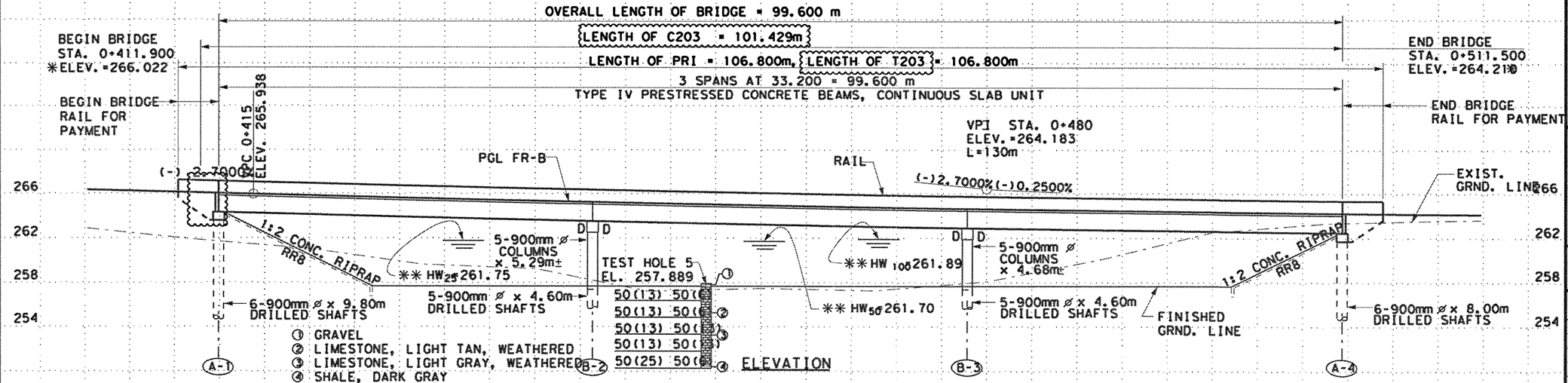


08/07/02 @FILENAME @TIME

Jennifer L. Moczygemba, P.E. 84734 — Date 8-8-02
For CO only

LP 1604 SB
FRONTAGE ROAD
OVERPASS
AT CULEBRA CREEK

SHEET 1 OF SHEET

CHANGE ORDER NO 20

© 2000 Texas Department of Transportation

| FED.RD. DIV.NO. | FEDERAL AID PROJECT NO. | SHEET NO. |
|---|---|---|
| 6 | NH 2000 (704), etc. | 513A |
| STATE | STATE DIST.NO. | COUNTY |
| TEXAS | SAT | BEXAR |
| CONT. | SECT. | JOB | HIGHWAY NO. |
| 2452 | 01 | 036,etc. | LP 1604 |

## BRIDGE SUMMARY

| Item Number | | Description | Unit | SB Frontage Rd. Overpass @ Culebra Creek |
|---|---|---|---|---|
| 110 | 5002 | Excavation (Channel) | M3 | 8,529 |
| 416 | 5006 | Drilled Shaft (900MM) | M | 152.8 |
| 420 | 5013 | Class "C" Concrete (Abut) | M3 | 63.0 |
| 420 | 5014 | Class "C" Concrete (Bent) | M3 | 74.9 |
| 422 | 5001 | Reinforced Concrete Slab | M2 | 2,211.1 |
| | | | | |
| 425 | 5006 | Prestressed Conc Bm (Type IV) | M | 893.7 |
| 428 | 5001 | Concrete Surface Treatment | M2 | 2,151 |
| 432 | 5001 | Riprap (Conc) (Cl B) | M3 | 205 |
| 450 | 5016 | Rail (Ty C202) | M | 99.6 |
| 450 | 5054 | Rail (Ty T202) (Mod) | M | 106.8 |
| | | | | |
| 450 | 5060 | Rail (Ty PR1) | M | 106.8 |
| 454 | 5006 | Sealed Exp Jt SEJ-A (100MM) | M | 44.4 |

## SB FRONTAGE RD. @ CULEBRA CREEK
## BEARING SEAT ELEVATION SUMMARY

| Pier | Abut. 1 | Bent 2 | | Bent 3 | | Abut. 4 |
|---|---|---|---|---|---|---|
| | Fwd. | Bkwd. | Fwd. | Bkwd. | Fwd. | Bkwd. |
| 1 | 264.098 | 263.297 | 263.288 | 262.692 | 262.685 | 262.294 |
| 2 | 264.149 | 263.348 | 263.339 | 262.743 | 262.736 | 262.345 |
| 3 | 264.200 | 263.399 | 263.390 | 262.794 | 262.787 | 262.396 |
| 4 | 264.251 | 263.450 | 263.441 | 262.845 | 262.838 | 262.447 |
| 5 | 264.302 | 263.501 | 263.492 | 262.896 | 262.889 | 262.498 |
| 6 | 264.353 | 263.552 | 263.543 | 262.947 | 262.940 | 262.549 |
| 7 | 264.404 | 263.603 | 263.594 | 262.998 | 262.991 | 262.600 |
| 8 | 264.455 | 263.654 | 263.645 | 263.049 | 263.042 | 262.651 |
| 9 | 264.506 | 263.705 | 263.696 | 263.100 | 263.093 | 262.702 |

STATE OF TEXAS
Monching W. Yu
84851
REGISTERED
PROFESSIONAL ENGINEER

Monching W. Yu, P.E
9-18-00

S & B INFRASTRUCTURE, LTD.

©2000
TEXAS DEPARTMENT OF TRANSPORTATION

**LOOP 1604 SB**
**FRONTAGE ROAD OVERPASS**
**AT CULEBRA CREEK**
**SUMMARY SHEET**

| | | | |
|---|---|---|---|
| DESIGNED BY: DE | CHECKED BY: KL | DATE: 09-18-00 | |
| DRAWN BY: TC | CHECKED BY: MW | DATE: 09-18-00 | |
| APPROVED BY: MW | DATE: 09-18-00 | PROJECT NO: 9432 | |

| FED. RD. DIV. NO. | FEDERAL AID PROJECT NO. | SHEET NO. |
|---|---|---|
| 6 | NH 2000 (704), etc. | 514 |

| STATE | STATE DIST. NO. | COUNTY | |
|---|---|---|---|
| TEXAS | SAT | BEXAR | |
| CONT. | SECT. | JOB | HIGHWAY NO. |
| 2452 | 01 | 036, etc. | LP 1604 |

18 SEP 2000 11:20:05 s:\project\u9432.200\design\data\cadd\dgn\sbfr@culebra\9432sbfr*cul*summary.dgn

## BRIDGE SUMMARY

| Item Number | | Description | Unit | SB Frontage Rd. Overpass @ Culebra Creek |
|---|---|---|---|---|
| 110 | 5002 | Excavation (Channel) | M3 | 8,529 |
| 416 | 5006 | Drilled Shaft (900MM) | M | 152.8 |
| 420 | 5013 | Class "C" Concrete (Abut) | M3 | 63.0 |
| 420 | 5014 | Class "C" Concrete (Bent) | M3 | 74.9 |
| 422 | 5001 | Reinforced Concrete Slab | M2 | 2,211.1 |
| | | | | |
| 425 | 5006 | Prestressed Conc Bm (Type IV) | M | 893.7 |
| 428 | 5001 | Concrete Surface Treatment | M2 | 2,151 |
| ~~432~~ | ~~5001~~ | ~~Riprap (Conc) (Cl B)~~ | M3 | 205 |
| 450 | 5016 | Rail (Ty ~~C202~~ T203) | M | ~~99.6~~ 101.4 |
| 450 | 5054 | Rail (Ty ~~T202) (Mod~~ T203) | M | 106.8 |
| | | | | |
| 450 | 5060 | Rail (Ty PR1) | M | 106.8 |
| 454 | 5006 | Sealed Exp Jt SEJ-A (100MM) | M | 44.4 |

## SB FRONTAGE RD. @ CULEBRA CREEK
## BEARING SEAT ELEVATION SUMMARY

| Pier | Abut. 1 | Bent 2 | | Bent 3 | | Abut. 4 |
|---|---|---|---|---|---|---|
| | Fwd. | Bkwd. | Fwd. | Bkwd. | Fwd. | Bkwd. |
| | | | | | | |
| 1 | 264.098 | 263.297 | 263.288 | 262.692 | 262.685 | 262.294 |
| 2 | 264.149 | 263.348 | 263.339 | 262.743 | 262.736 | 262.345 |
| 3 | 264.200 | 263.399 | 263.390 | 262.794 | 262.787 | 262.396 |
| 4 | 264.251 | 263.450 | 263.441 | 262.845 | 262.838 | 262.447 |
| 5 | 264.302 | 263.501 | 263.492 | 262.896 | 262.889 | 262.498 |
| 6 | 264.353 | 263.552 | 263.543 | 262.947 | 262.940 | 262.549 |
| 7 | 264.404 | 263.603 | 263.594 | 262.998 | 262.991 | 262.600 |
| 8 | 264.455 | 263.654 | 263.645 | 263.049 | 263.042 | 262.651 |
| 9 | 264.506 | 263.705 | 263.696 | 263.100 | 263.093 | 262.702 |

STATE OF TEXAS
Manching W. Yu
84851
REGISTERED
PROFESSIONAL ENGINEER

Manching W. Yu, P.E
9-18-00

S & B INFRASTRUCTURE, LTD.

©2000 TEXAS DEPARTMENT OF TRANSPORTATION

LOOP 1604 SB
FRONTAGE ROAD OVERPASS
AT CULEBRA CREEK
SUMMARY SHEET

| | | | |
|---|---|---|---|
| DESIGNED BY: OE | CHECKED BY: KL | DATE: 09-18-00 | |
| DRAWN BY: TC | CHECKED BY: MW | DATE: 09-18-00 | |
| APPROVED BY: MW | DATE: 09-18-00 | PROJECT NO: 9432 | |
| FED. RD. DIV. NO. | FEDERAL AID PROJECT NO. | | SHEET NO. |
| 6 | NH 2000 (704), etc. | | 514 |
| STATE | STATE DIST. NO. | COUNTY | |
| TEXAS | SAT | BEXAR | |
| CONT. | SECT. | JOB | HIGHWAY NO. |
| 2452 | 01 | 036, etc. | LP 1604 |

60#10

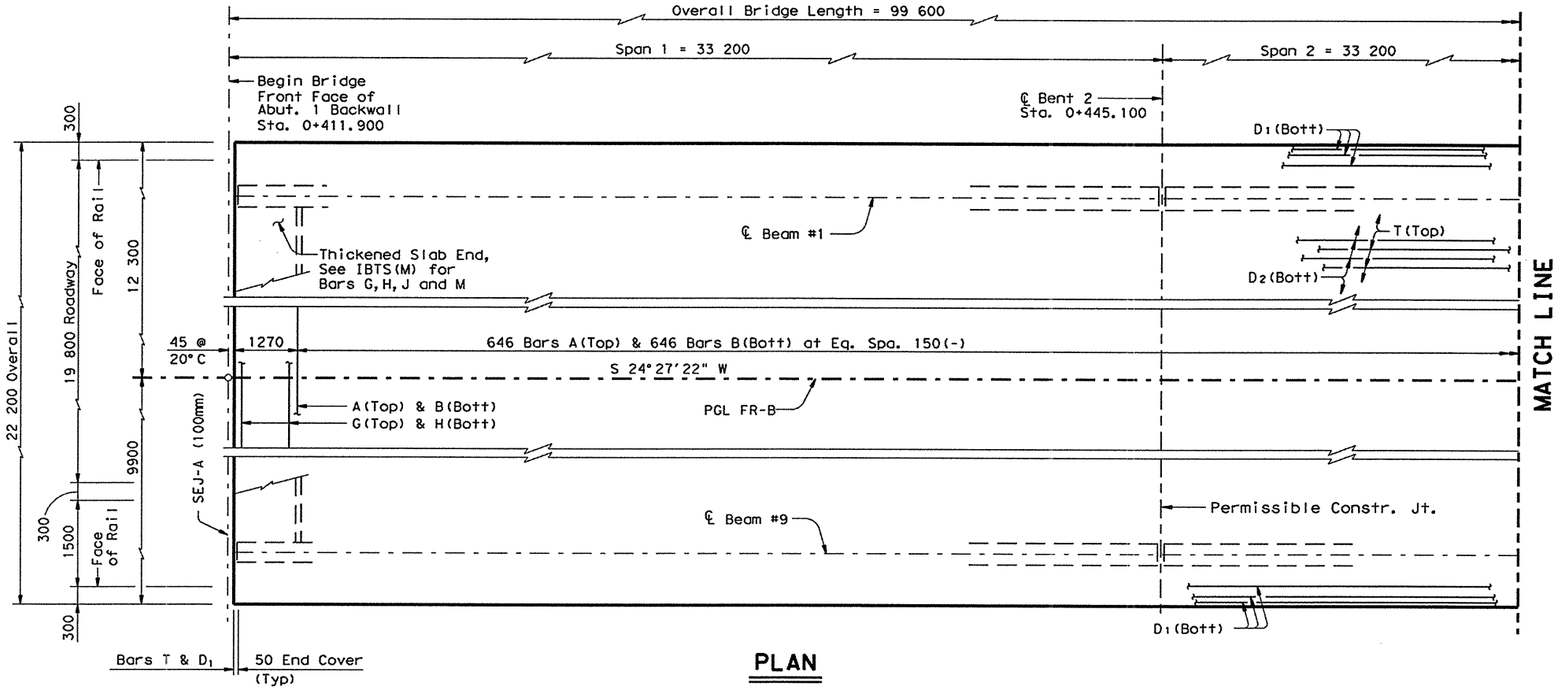


PLAN

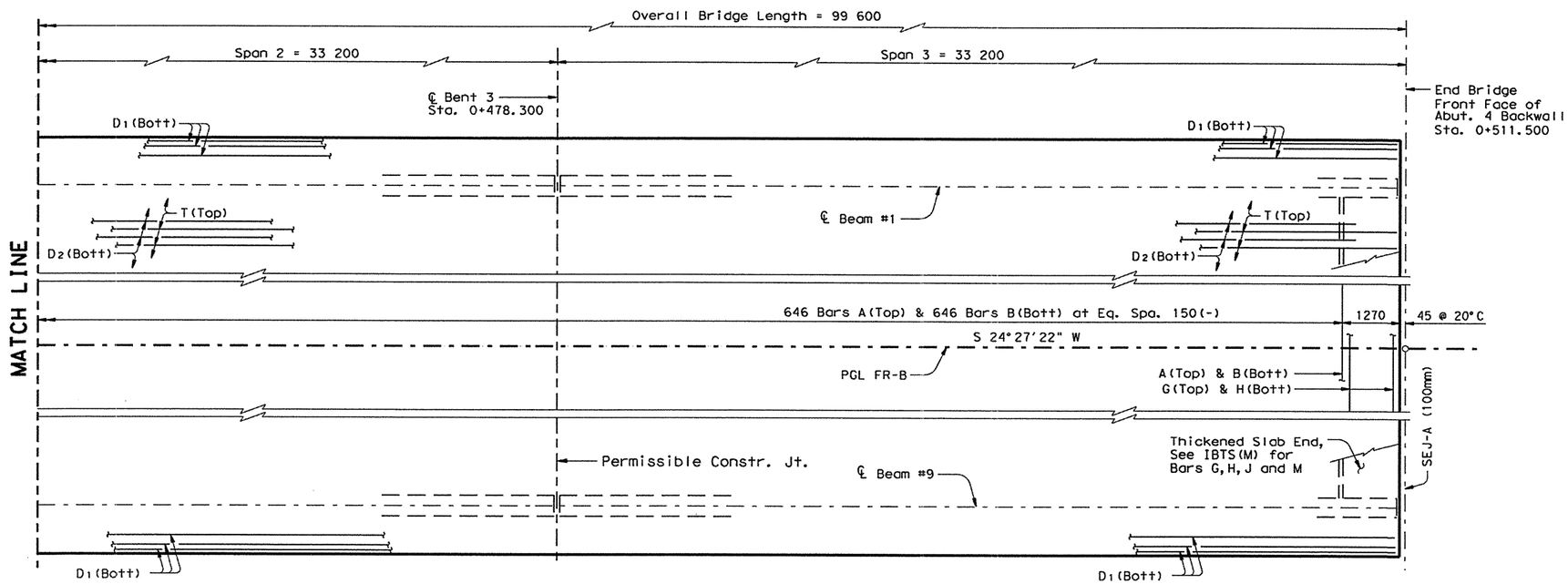


PLAN

Manching W. YU, P.E
9-18-00

S & B INFRASTRUCTURE, LTD.

©2000 TEXAS DEPARTMENT OF TRANSPORTATION

# LOOP 1604 SB FRONTAGE ROAD OVERPASS AT CULEBRA CREEK SLAB PLAN

| | | | |
|---|---|---|---|
| DESIGNED BY: DE | CHECKED BY: KL | DATE: 09-18-00 | |
| DRAWN BY: TC | CHECKED BY: MW | DATE: 09-18-00 | |
| APPROVED BY: MW | DATE: 09-18-00 | PROJECT NO: 9432 | |

| FED.RD. DIV.NO. | FEDERAL AID PROJECT NO. | SHEET NO. |
|---|---|---|
| 6 | NH 2000 (704), etc. | 515 |

| STATE | STATE DIST.NO. | COUNTY | |
|---|---|---|---|
| TEXAS | SAT | BEXAR | |
| CONT. | SECT. | JOB | HIGHWAY NO. |
| 2452 | 01 | 036, etc. | LP 1604 |

18 SEP 2000 11:20:04 s:\project\u9432.200\design\data\cadd\dgn\sbfr@culebra\9432sbfr_culslab.dgn

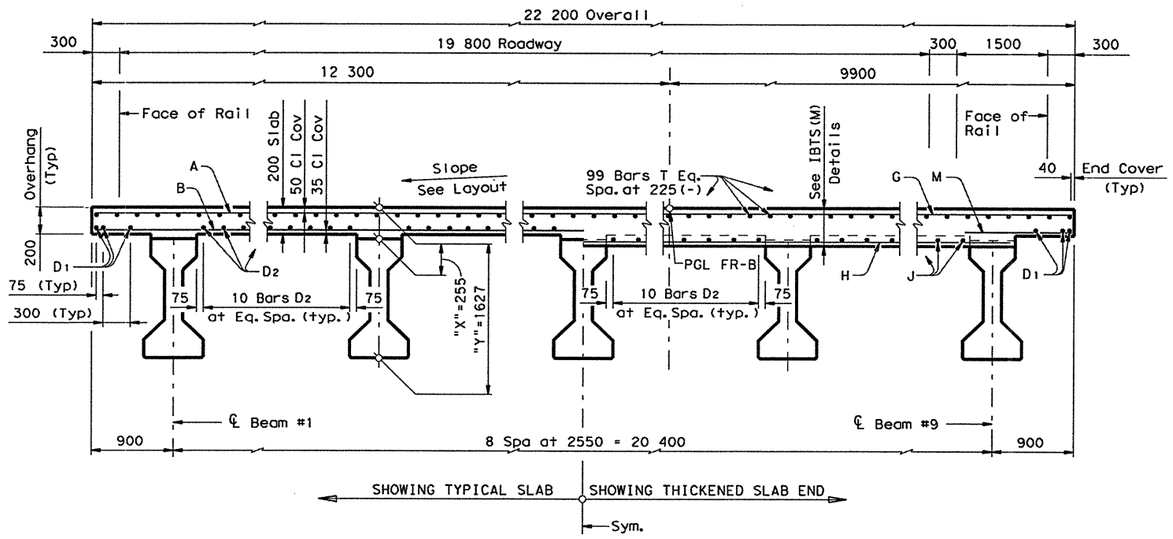


## TYPICAL TRANSVERSE SECTION

(LOOKING UPSTATION)

| Span | "A" | "B" |
|---|---|---|
| m | mm | mm |
| 33.200 | 34 | 48 |

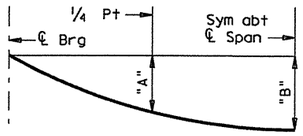


## DEAD LOAD DEFLECTION DIAGRAM

NOTE: Deflections shown are due to concrete slab only. ($E_c$ = 35,000 MPa) Calculated deflections shown are theoretical and actual dimensions may be less. Deflections shall be adjusted based on field observations.

## BAR TABLE

| Bar | Size |
|---|---|
| A | #5 |
| B | #5 |
| D | #5 |
| G | #5 |
| H | #5 |
| J | #5 |
| M | #5 |
| T | #5 |

## TABLE OF ESTIMATED QUANTITIES

| Reinf Concrete Slab | Prestressed Concrete ① Beams (Ty IV) | Class "S" Concrete | ②Total Reinf Steel |
|---|---|---|---|
| $m^2$ | m | $m^3$ | kg |
| 2211.1 | 893.7 | 450.2 | 70,755 |

① Fabricator shall adjust beam lengths for beam slopes as required.

② Reinforcing steel mass is calculated using an approximate factor of 32 kg/$m^2$.

### GENERAL NOTES:

1. Designed according to current AASHTO Standard and Interim Specifications.
2. See IBTS(M) Standard for Thickened Slab End Details and quantity adjustments.
3. See PCP(C)(M) or PMDF(C)(M) Standards for details and quantity adjustments if either of these options are used.
4. All reinforcing shall be Grade 420. Concrete strength f'c = 28 MPa.
5. All dimensions are in millimeters unless otherwise shown.
6. Bar laps, where required, shall be as follows:
   Uncoated ~ #5 = 560 mm

STATE OF TEXAS
Manching W. Yu
84851
REGISTERED PROFESSIONAL ENGINEER

Manching W. Yu, P.E
9-18-00

S & B INFRASTRUCTURE, LTD.

©2000 TEXAS DEPARTMENT OF TRANSPORTATION

**LOOP 1604 SB FRONTAGE ROAD OVERPASS AT CULEBRA CREEK TYPICAL SECTION**

| | | | |
|---|---|---|---|
| DESIGNED BY: DE | CHECKED BY: KL | DATE: 09-18-00 | |
| DRAWN BY: TC | CHECKED BY: MW | DATE: 09-18-00 | |
| APPROVED BY: MW | DATE: 09-18-00 | PROJECT NO: 9432 | |
| FED. RD. DIV. NO. | FEDERAL AID PROJECT NO. | | SHEET NO. |
| 6 | NH 2000 (704), etc. | | 516 |
| STATE | STATE DIST. NO. | COUNTY | |
| TEXAS | SAT | BEXAR | |
| CONT. | SECT. | JOB | HIGHWAY NO. |
| 2452 | 01 | 036, etc. | LP 1604 |

18 SEP 2000 11:20:06 s:\project\u9432.200\design*data\cadd\dgn\sbfr@culebra\9432sbfr*cul*typsection.dgn

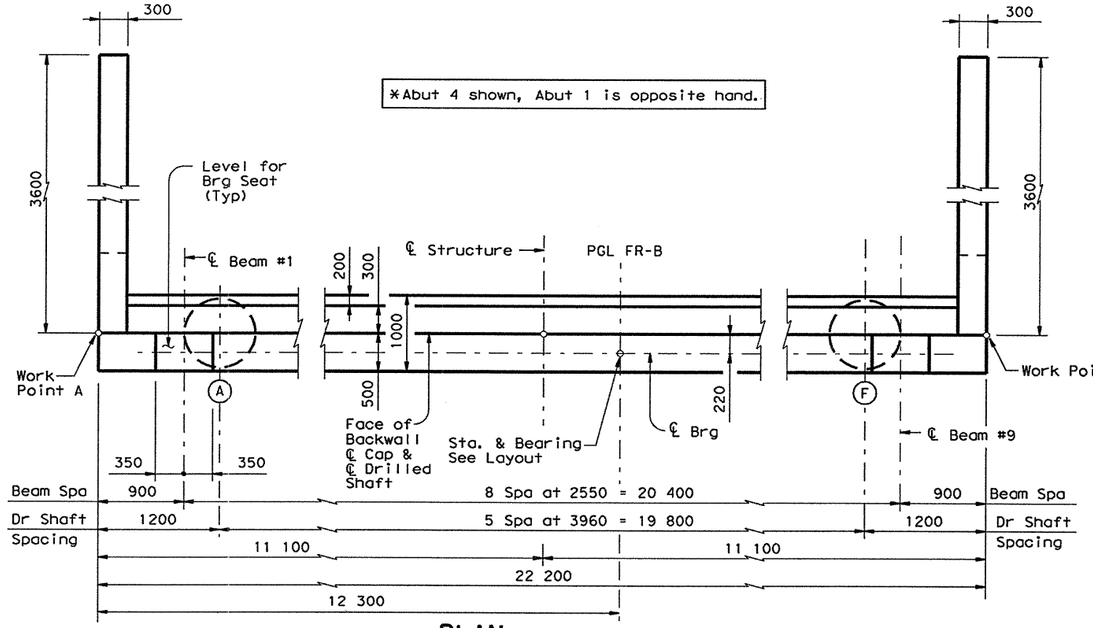


## PLAN

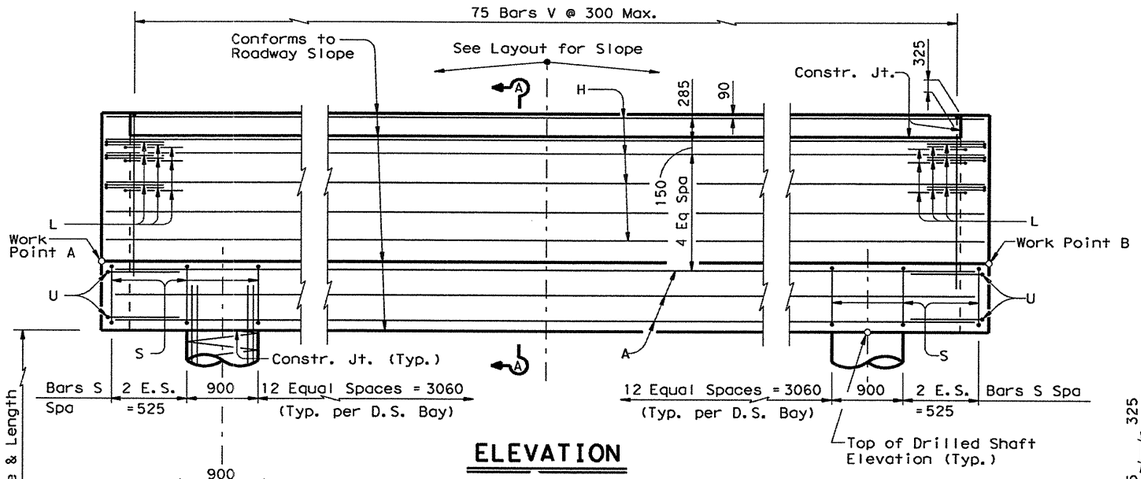


## ELEVATION

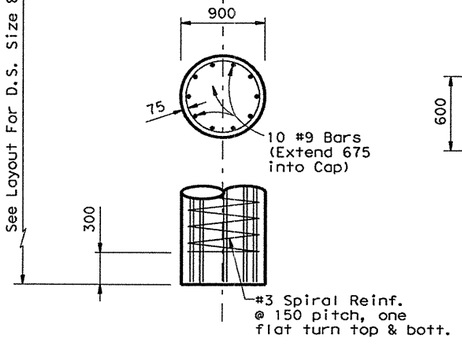


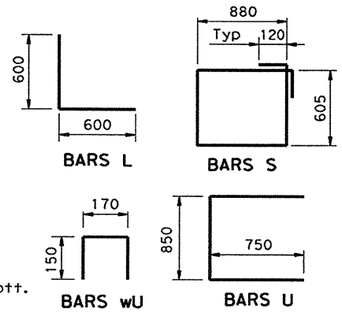


## TOP OF DRILLED SHAFT ELEV. (m)

| Abut No. | D.S.A. | D.S.B. | D.S.C. | D.S.D. | D.S.E. | D.S.F. | W.P. A | W.P. B |
|---|---|---|---|---|---|---|---|---|
| 1 | 263.314 | 263.393 | 263.472 | 263.551 | 263.631 | 263.710 | 264.040 | 264.484 |
| 4 | 261.510 | 261.589 | 261.668 | 261.748 | 261.827 | 261.906 | 262.236 | 262.680 |

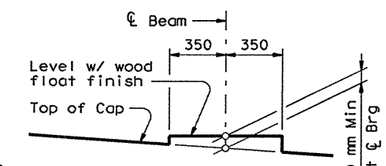


## BEARING SEAT DETAIL

(Bearing surface shall be clean and free of all loose material before placing bearing pad.)

NOTE: Built up portion of bearing seat shall be cast integrally with cap or constructed as follows. Area under built up portion to be bush hammered. Then pedestal shall be formed from mortar which has been treated with doraweld or weldcrete bonding agent or an approved equal. The bonding agent shall be mixed with the mortar in accordance with the manufacturer's recommendations.

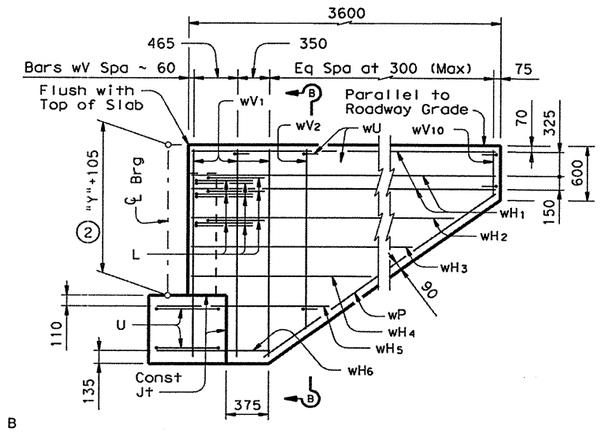


## WINGWALL ELEVATION

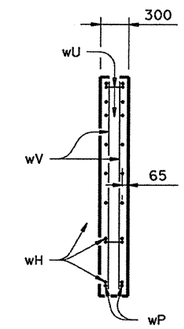


## SECTION B-B

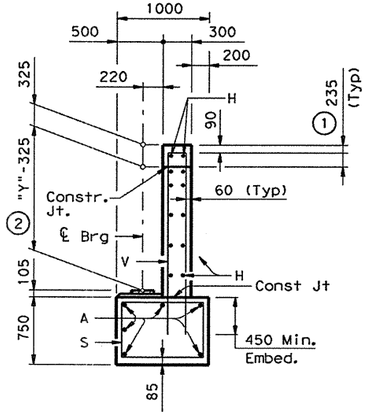


## SECTION A-A

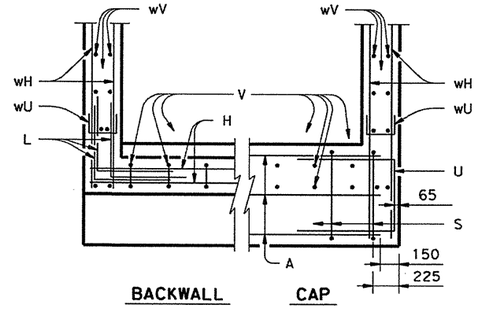


BACKWALL CAP

## CORNER DETAILS

## TABLE OF ESTIMATED QUANTITIES

| Bar | No. | Size | Length | Mass |
|---|---|---|---|---|
| ** A | 6 | #11 | 25 120 | 1192 |
| ** H | 12 | #5 | 22 520 | 419 |
| L | 18 | #6 | 1200 | 48 |
| S | 71 | #4 | 3210 | 227 |
| U | 4 | #6 | 2350 | 21 |
| V | 73 | #5 | 4360 | 494 |
| wH 1 | 12 | #6 | 3500 | 94 |
| wH 2 | 4 | #6 | 2960 | 26 |
| wH 3 | 4 | #6 | 2490 | 22 |
| wH 4 | 4 | #6 | 2020 | 18 |
| wH 5 | 4 | #6 | 2050 | 18 |
| wH 6 | 4 | #6 | 1320 | 12 |
| wP | 4 | #6 | 3280 | 29 |
| wU | 16 | #4 | 470 | 7 |
| wV 1 | 12 | #5 | 2350 | 44 |
| wV 2-10 | 36 | #5 | 1300Av | 73 |
| | | | | |
| *Reinforcing Steel | | | kg | 2744 |
| Class "C" Concrete | | | $m^3$ | 31.5 |

*For Contractors Information Only
**Including one lap length
Lap Length: A=3220
H=420

(1) Increase as required to maintain 90 mm from Finished Grade.
(2) See Slab Typ. Section sheet for "Y".

### GENERAL NOTES:

1. All cap and backwall concrete shall be Class "C", f'c = 25 MPa.
2. All cap and wall reinforcing shall be Grade 420.
3. See Foundation Detail Standard Sheet, FD(M), for all foundation details and notes.
4. Calculated Drilled Shaft Load = 988 kN each.
5. All dimensions are in millimeters unless otherwise specified.
6. Chamfer an exposed corner 20mm unless otherwise specified.

STATE OF TEXAS
Manching W. Yu
84851
REGISTERED
PROFESSIONAL ENGINEER

Manching W. Yu, P.E
9-18-00

S & B INFRASTRUCTURE, LTD.

©2000
TEXAS DEPARTMENT OF TRANSPORTATION

**LOOP 1604 SB FRONTAGE ROAD OVERPASS AT CULEBRA CREEK ABUTMENTS 1 & 4**

| | | | |
|---|---|---|---|
| DESIGNED BY: DE | CHECKED BY: KL | DATE: 09-18-00 | |
| DRAWN BY: TC | CHECKED BY: MW | DATE: 09-18-00 | |
| APPROVED BY: MW | DATE: 09-18-00 | PROJECT NO: 9432 | |

| FED.RD. DIV.NO. | FEDERAL AID PROJECT NO. | SHEET NO. |
|---|---|---|
| 6 | NH 2000 (704), etc. | 517 |

| STATE | STATE DIST.NO. | COUNTY | |
|---|---|---|---|
| TEXAS | SAT | BEXAR | |
| CONT. | SECT. | JOB | HIGHWAY NO. |
| 2452 | 01 | 036, etc. | LP 1604 |

18 SEP 2000 11:26:04 s:\project\u9432.200\design*data\cadd\dgn\sbfr*culebra\9432sbfr*culabut1.dgn

## TOP OF COLUMN ELEVATIONS (m)

| Bent No. | Col. A | Col. B | Col. C | Col. D | Col. E | W.P. A | W.P. B |
|---|---|---|---|---|---|---|---|
| 2 | 262.264 | 262.358 | 262.452 | 262.546 | 262.640 | 263.236 | 263.668 |
| 3 | 261.661 | 261.755 | 261.849 | 261.943 | 262.037 | 262.633 | 263.065 |

## TABLE OF VARIABLE QUANTITIES FOR 5 COLUMNS

## ESTIMATED QUANTITIES FOR 5 COLS

| Bent No. | "H" | Bars V 50 ~ #9 | | Bars Z 5 ~ #3 Spiral | | Reinf Steel | Class "C" Conc |
|---|---|---|---|---|---|---|---|
| | mm | Length | Mass | Length | Mass | kg | $m^3$ |
| 2 | 5290 | 6140 | 1554 | 86 600 | 242 | 1796 | 16.8 |
| 3 | 4680 | 5530 | 1399 | 77 000 | 215 | 1614 | 14.9 |

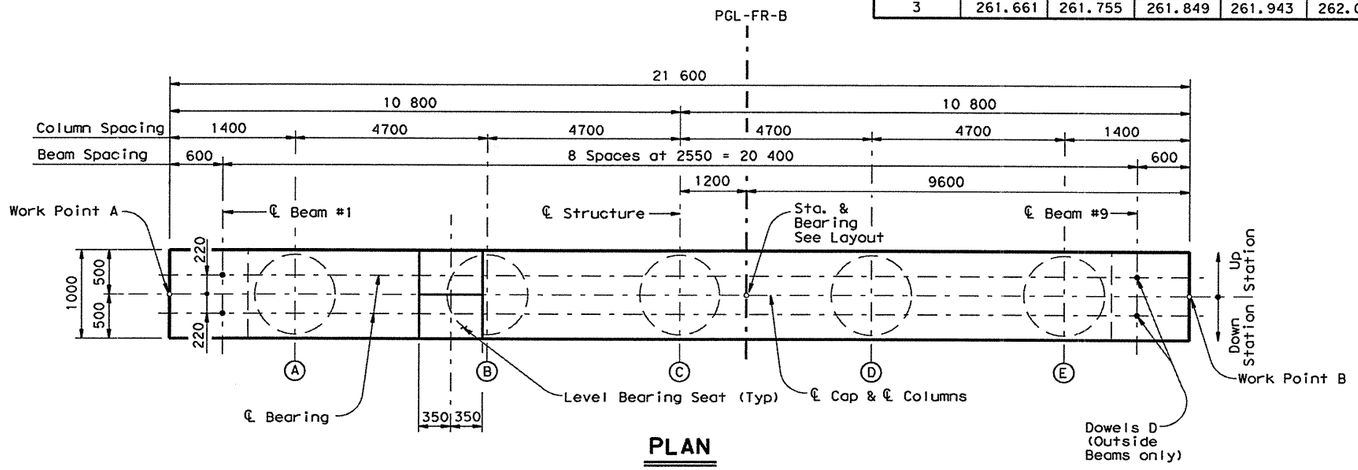


**PLAN**

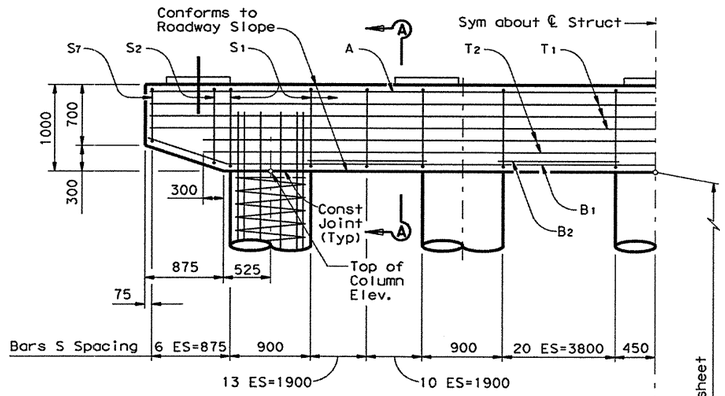


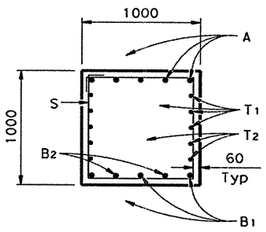


**SECTION A-A**

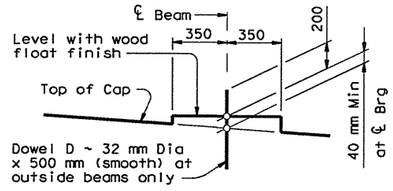


**BEARING SEAT DETAIL**

(Bearing surface shall be clean and free of all loose material before placing bearing pad.)

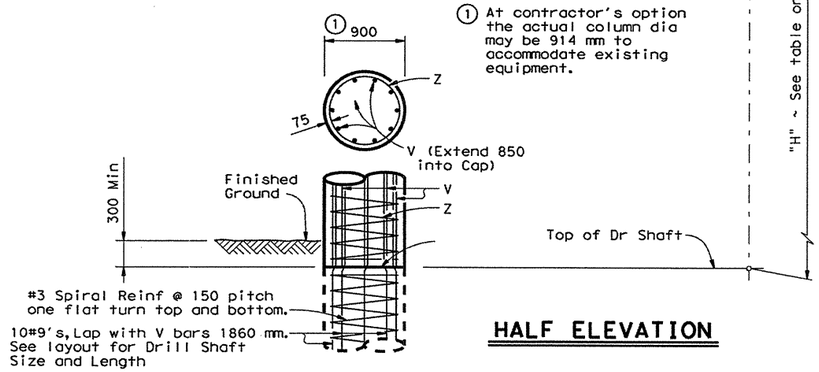


① At contractor's option the actual column dia may be 914 mm to accommodate existing equipment.

**HALF ELEVATION**

## TABLES OF CONSTANT QUANTITIES FOR ONE CAP

| Bar | No. | Size | Length | Mass |
|---|---|---|---|---|
| **A | 5 | #11 | 24 720 | 977 |
| **$B_1$ | 3 | #11 | 23 900 | 567 |
| $B_2$ | 8 | #11 | 3800 | 240 |
| D | 4 | 32 D | 500 | 12 |
| $S_1$ | 92 | #5 | 3800 | 543 |
| $S_{2\text{-}7}$ | 12 | #5 | 3490 Av | 65 |
| **$T_1$ | 6 | #4 | 21 820 | 130 |
| **$T_2$ | 4 | #4 | 20 770 | 83 |
| | | | | |
| *Reinforcing Steel | | | kg | 2617 |
| Class "C" Concrete | | | $m^3$ | 21.6 |

*For Contractors Information Only

**Including one lap length.

Lap Length: A = 3220
$B_1$ = 2300
$T_1$ & $T_2$ = 320

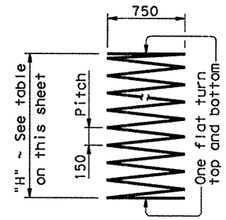


**BARS Z**

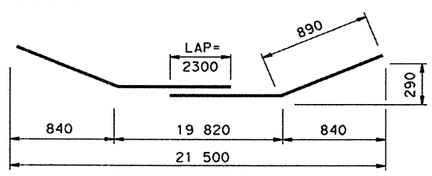


**BARS B1**

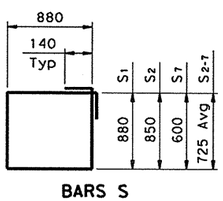


**BARS S**

### GENERAL NOTES:

1. All cap and column concrete shall be Class "C", fc' = 25 MPa.
2. All cap and column reinforcing shall be Grade 420.
3. See layout for drilled shaft length.
4. Calculated drilled shaft load = 2112 kN Each.
5. All dimensions are in millimeters unless otherwise specified.
6. Chamfer all exposed corners 20mm unless otherwise specified.

NOTE: Built up portion of bearing seat shall be cast integrally with cap or constructed as follows. Area under built up portion to be bush hammered. Then pedestal shall be formed from mortar which has been treated with doraweld or weldcrete bonding agent or an approved equal. The bonding agent shall be mixed with the mortar in accordance with the manufacturer's recommendations.

STATE OF TEXAS
Manching W. Yu
84851
REGISTERED PROFESSIONAL ENGINEER

Manching W. Yu, P.E
9-18-00

S & B INFRASTRUCTURE, LTD.

©2000 TEXAS DEPARTMENT OF TRANSPORTATION

**LOOP 1604 SB FRONTAGE ROAD OVERPASS AT CULEBRA CREEK BENTS 2 & 3**

| | | | |
|---|---|---|---|
| DESIGNED BY: DE | CHECKED BY: KL | DATE: 09-18-00 | |
| DRAWN BY: TC | CHECKED BY: MW | DATE: 09-18-00 | |
| APPROVED BY: MW | DATE: 09-18-00 | PROJECT NO: 9432 | |
| FED. RD. DIV. NO. | FEDERAL AID PROJECT NO. | | SHEET NO. |
| 6 | NH 2000 (704), etc. | | 518 |
| STATE | STATE DIST. NO. | COUNTY | |
| TEXAS | SAT | BEXAR | |
| CONT. | SECT. | JOB | HIGHWAY NO. |
| 2452 | 01 | 036, etc. | LP 1604 |

18 SEP 2000 11:20:03 s:\project\u9432.200\design*data\cadd\dgn\sbfr@culebra\9432sbfr*cul*bents.dgn

Plotted on: 09/19/00

| ESTIMATED QUANTITIES | | | |
|---|---|---|---|
| DESCRIPTION | UNIT | EST. | FINAL |
| EXCAVATION (CHANNEL) | M3 | 34114 | |

# QUANTITIES THIS SHEET
# CSJ 2452-01-038

NOTE: 1.) ALL DIMENSIONS ARE IN METERS UNLESS NOTED OTHERWISE.

2.) QUANTITIES ARE SUMMARIZED ON THE LARGE STRUCTURE SUMMARY SHEET.

3.) PROPOSED CONTOURS SHOWN ARE FOR EVERY WHOLE METER UNLESS OTHERWISE SHOWN

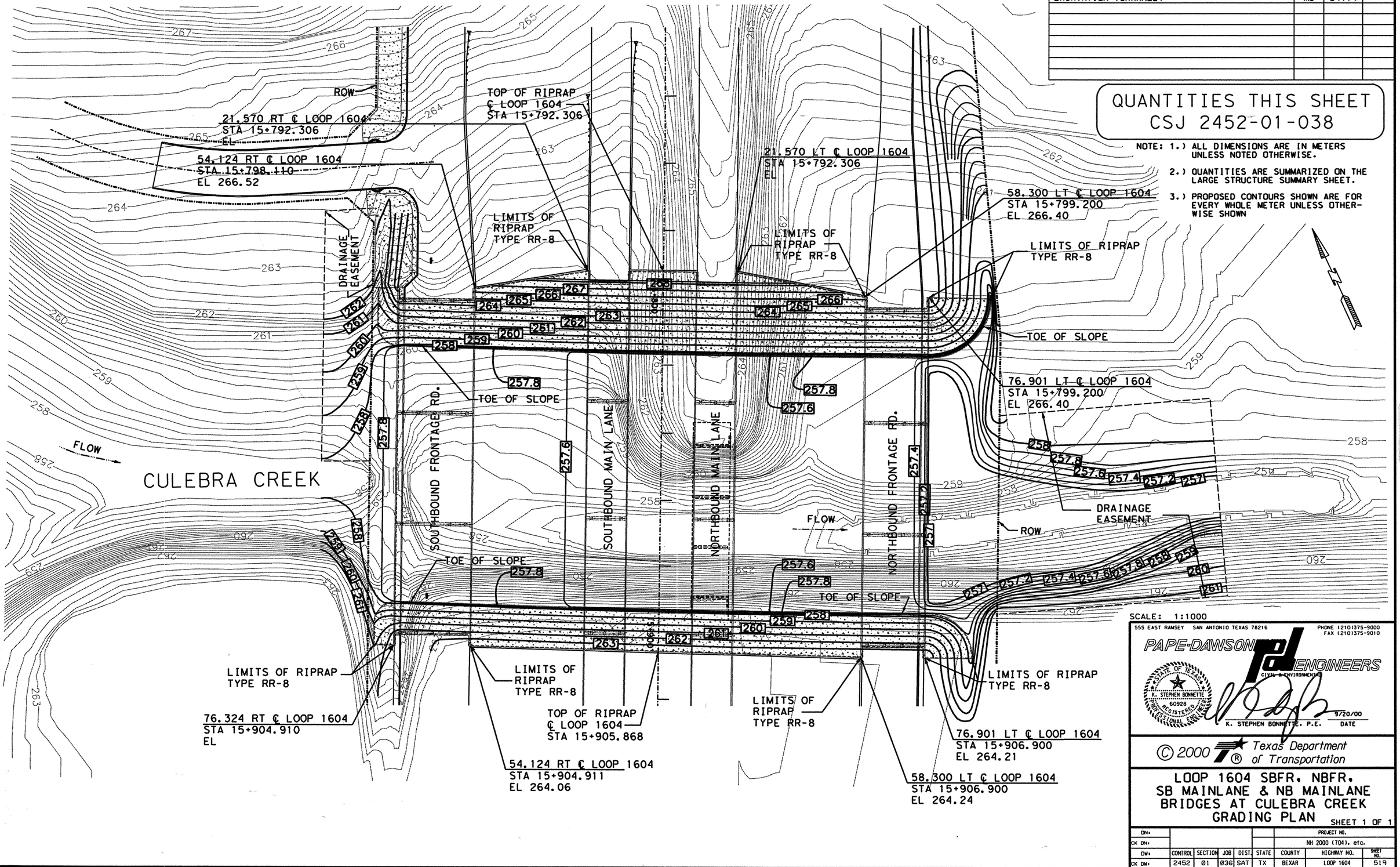


SCALE: 1:1000

555 EAST RAMSEY SAN ANTONIO TEXAS 78216
PHONE (210)375-9000
FAX (210)375-9010
PAPE-DAWSON ENGINEERS
CIVIL & ENVIRONMENTAL

STATE OF TEXAS
K. STEPHEN BONNETTE
60928
REGISTERED PROFESSIONAL ENGINEER

9/20/00
K. STEPHEN BONNETTE, P.E. DATE

© 2000 Texas Department of Transportation

# LOOP 1604 SBFR, NBFR, SB MAINLANE & NB MAINLANE BRIDGES AT CULEBRA CREEK GRADING PLAN

SHEET 1 OF 1

| DN: | | | | | PROJECT NO. | | |
|---|---|---|---|---|---|---|---|
| CK DN: | | | | | NH 2000 (704), etc. | | |
| DW: | CONTROL | SECTION | JOB | DIST. | STATE | COUNTY | HIGHWAY NO. | SHEET NO. |
| CK DW: | 2452 | 01 | 036 etc. | SAT | TX | BEXAR | LOOP 1604 | 519 |

Design Filename: j:\3941\16\civil\design\plansheets\3941l6gr01.dgn

| ESTIMATED QUANTITIES | | | |
|---|---|---|---|
| DESCRIPTION | UNIT | EST. | FINAL |
| EXCAVATION (CHAN) | M3 | 34228 | |
| FURN AND PLAC TPSL (CL 2) (150 MM) | M2 | 18760 | |
| BRDCST SEED (PERM) (URBAN) (CLAY) | M2 | 18760 | |
| VEGETATIVE WATERING | KL | 555.32 | |
| SOIL RET BLNKT (CL 2) (TY F) | M2 | 18760 | |

## QUANTITIES THIS SHEET
## CSJ 2452-01-038

NOTE: 1.) ALL DIMENSIONS ARE IN METERS UNLESS NOTED OTHERWISE.

2.) QUANTITIES ARE SUMMARIZED ON THE LARGE STRUCTURE SUMMARY SHEET.

3.) PROPOSED CONTOURS SHOWN ARE FOR EVERY WHOLE METER UNLESS OTHERWISE SHOWN

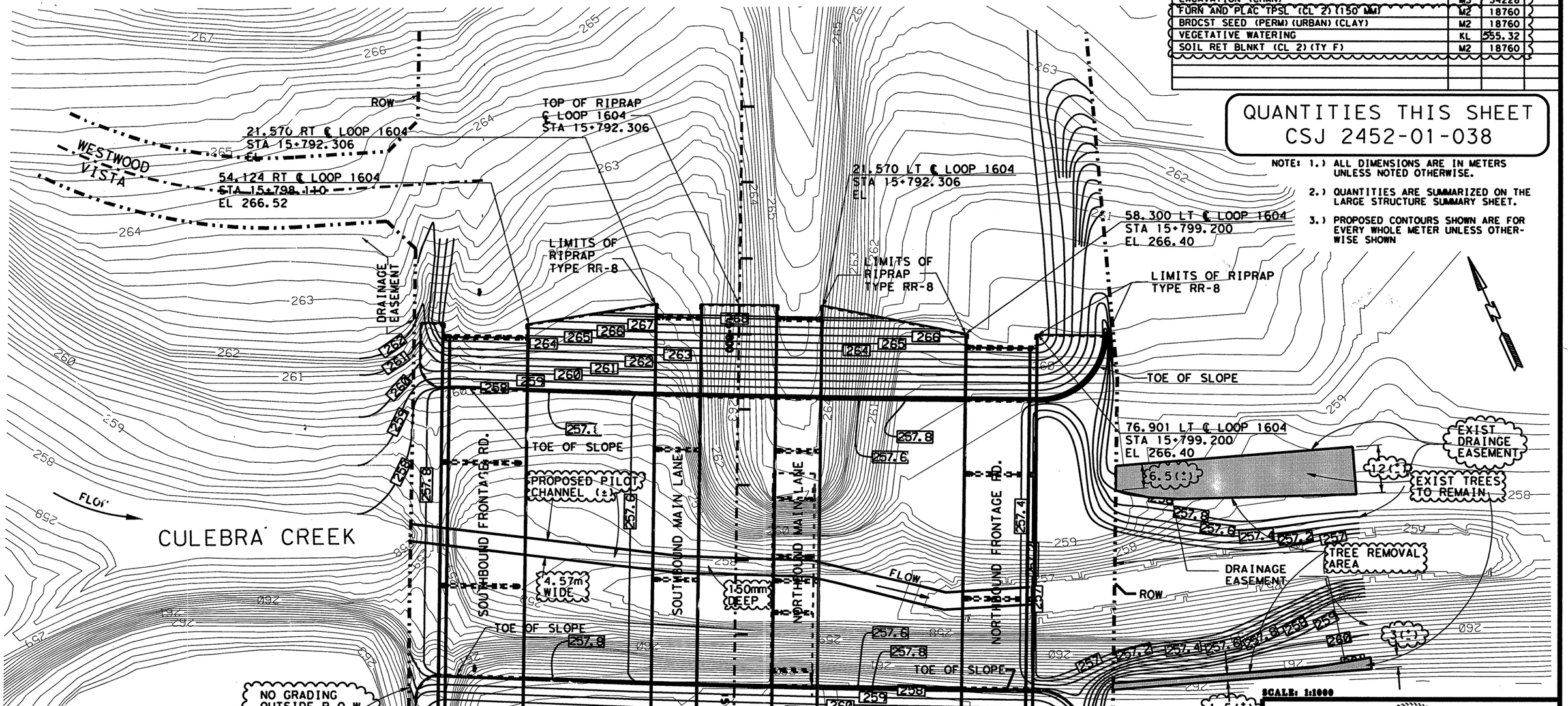


SCALE: 1:1000

CHANGE ORDER # 35 (USACE MITIGATION)

- ELIMINATED GRADING REQUIREMENTS S.W. CORNER OF CREEK CHANNEL
- ADDED PILOT CHANNEL REQUIREMENT (4.57M WIDE X 150MM DEEP)
- ALL DISTURBED AREAS ARE TO BE REVEGETATED
- AREAS WHERE TREES ARE TO REMAIN WITHIN EXISTING DRAINAGE EASEMENT (DOWNSTREAM) ARE SHADED

FOR MORE INFORMATION IN REGARDS TO REQUIRED USACE MITIGATION, SEE PROJECT CORRESPONDENCE AND SHEET(S) 374A, 881A, AND 881B.

CHANGE ORDER NO. 35

STATE OF TEXAS
JENNIFER L. MOCZYGEMBA
84734
REGISTERED PROFESSIONAL ENGINEER

For Co# 35 only -

Jennifer L. Moczygemba, P.E. 84734 — 10-11-02 Date

© 2001 Texas Department of Transportation

LOOP 1604 SBFR, NBFR, SB MAINLANE & NB MAINLANE BRIDGES AT CULEBRA CREEK GRADING PLAN

SHEET 1 OF 1

| DN: | | | | | | PROJECT NO. | |
|---|---|---|---|---|---|---|---|
| CK DN: | | | | | | NH 2000 (704), etc. | |
| DW: | CONTROL | SECTION | JOB | DIST. | STATE | COUNTY | HIGHWAY NO. | SHEET NO. |
| CK DW: | 2452 | 01 | 036 | SAT | TX | BEXAR | LOOP 1604 | 519A |

etc. 10-11-01

394116gr01#35.dgn

SCALE: 1:1000

NOTE(S):
ALL DIMENSIONS ARE IN METERS
UNLESS OTHERWISE NOTED.

R.O.W.

WESTWOOD VISTA

R.O.W.

BEGIN BRIDGE
STA 0+411.900

BEGIN MAINLANE BRIDGE
STA 15+795.900

BEGIN BRIDGE
STA 0+437..500

0+400

15+800

0+400

R.O.W.

( EXISTING )
DRAINAGE EASEMENT

FUTURE ADDITIONAL
DRAINAGE EASEMENT
(TO BE ACQUIRED BY OTHERS)

127.5

S 24° 27' 22" W

S.B. FRONTAGE RD.

S.B. MAINLANES

℄ LP 1604

N.B. MAINLANES

N.B. FRONTAGE RD.

TOE OF SLOPE

101.5

FUTURE ADDITONAL
DRAINAGE EASEMENT
(TO BE ACQUIRED BY OTHERS)

89.5

CULEBRA CREEK

CULEBRA CREEK

( EXISTING )
DRAINAGE EASEMENT

0+500

TOE OF SLOPE

0+500

15+900

0+500

0+600

34

15.5

END BRIDGE
STA 0+511.500

END BRIDGE
STA 0+538.000

R.O.W.

R.O.W.

LEVELS DISPLAYED
1 2 3 4 5 6 7 8 9 10 11 12 13 14 15 16
17 18 19 20 21 22 23 24 25 26 27 28 29 30 31 32
33 34 35 36 37 38 39 40 41 42 43 44 45 46 47 48
49 50 51 52 53 54 55 56 57 58 59 60 61 62 63

ACC: t:\go\design\lp1604fm471-90\
FILE: culebra*easement.dgn

STATE OF TEXAS
JOEL K. DAVENPORT, JR.
79276
REGISTERED
PROFESSIONAL ENGINEER

Joel K. Davenport, Jr. 9/18/00
Joel K. Davenport, Jr. P.E. 79276 Date

©2000
Texas Department of Transportation

# FUTURE CULEBRA CREEK DRAINAGE EASEMENT LAYOUT

| FED.RD. DIV.NO. | FEDERAL AID PROJECT NO. | | SHEET NO. |
|---|---|---|---|
| 6 | NH 2000(704), etc. | | 520 |
| STATE | DIST. | COUNTY | |
| TEXAS | SAT | BEXAR | |
| CONT. | SECT. | JOB | HIGHWAY NO. |
| 2452 | 01 | 036, etc. | LP 1604 |

| | |
|---|---|
| DESIGN SPEED: | 100 km/h |
| FUNCT. CLASS: | URBAN FREEWAY |
| EXISTING ADT: | 19,400(2000) |
| PROJECTED ADT: | 35,000(2020) |
| PERM STR. NO.: | 15-015-2452-01-172 |

NOTES:

1. DESIGNED ACCORDING TO 1996 AASHTO STANDARD SPECIFICATIONS AND INTERIMS THERETO.
2. ELEVATIONS SHOWN ARE IN METERS.
3. ALL DIMENSIONS ARE IN METERS UNLESS SHOWN OTHERWISE.
4. BEAM END CONDITIONS:
   D-DENOTES DOWEL IN OUTSIDE BEAM ONLY
   BLANK-DENOTES NO DOWEL
5. CONE PENETROMETER READING ARE IN MILLIMETERS.

● BORING LOCATION
✳ ELEVATION SHOWN AT PGL

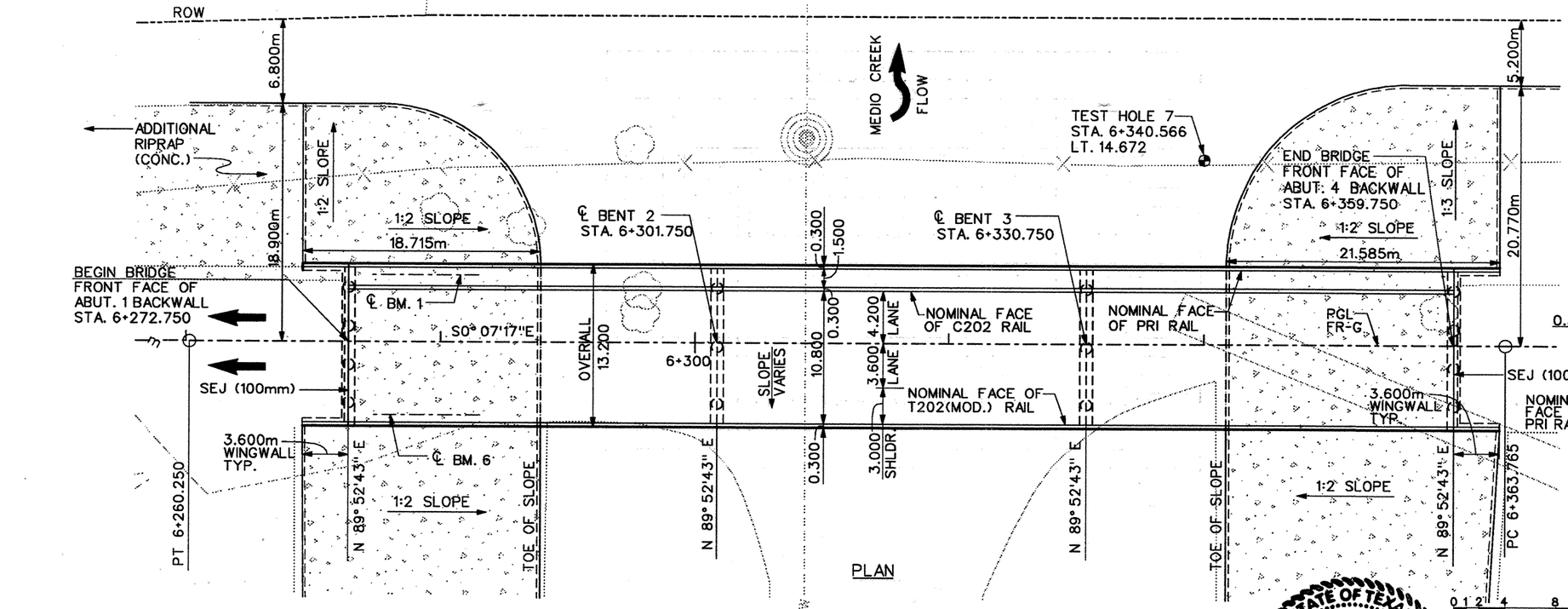


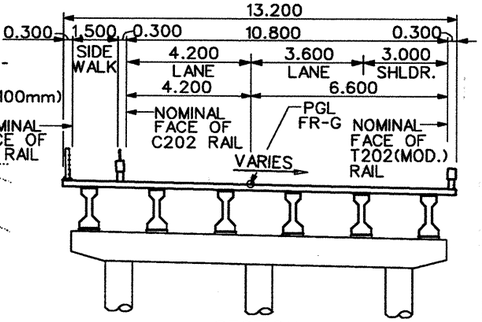


SECTION
NOT TO SCALE

0 1 2 4 8 12
SCALE

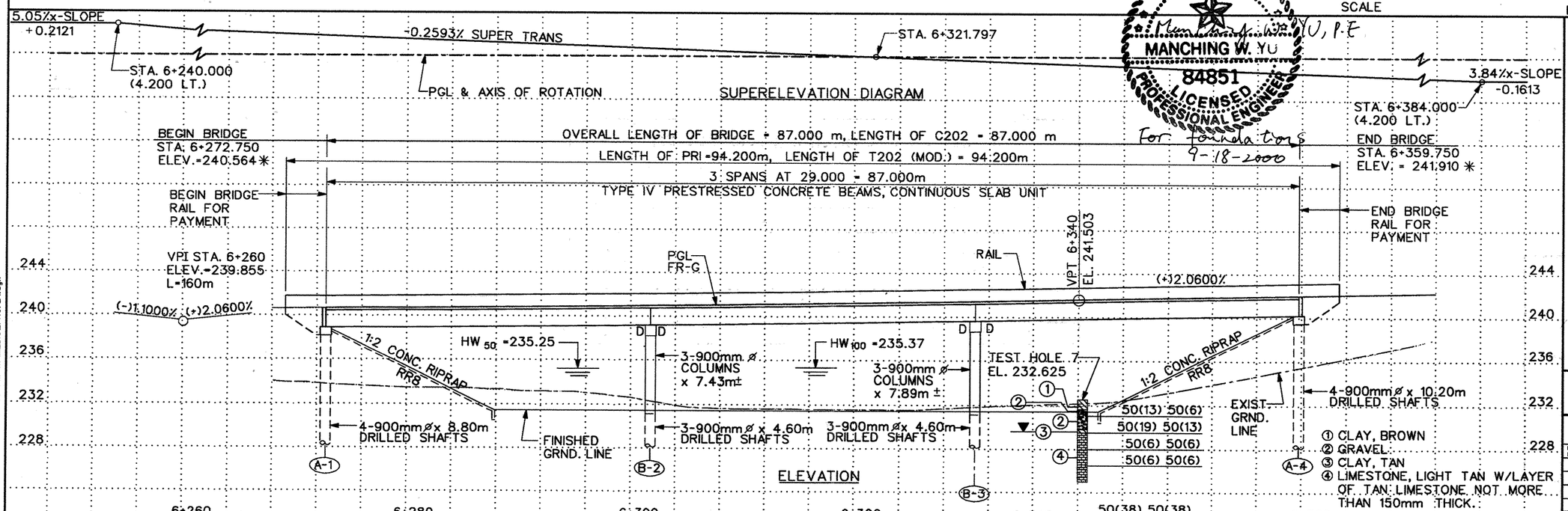


① CLAY, BROWN
② GRAVEL
③ CLAY, TAN
④ LIMESTONE, LIGHT TAN W/LAYER OF TAN LIMESTONE NOT MORE THAN 150mm THICK.

MS18 LOADING

STATE OF TEXAS
MANCHING W. YU
84851
LICENSED PROFESSIONAL ENGINEER
Manching W. Yu, P.E
For Foundations
9-18-2000

STATE OF TEXAS
CHIN-WAN CHING
67603
REGISTERED PROFESSIONAL ENGINEER
9-14-00
For Geometrics

# LP 1604 NB FRONTAGE ROAD OVERPASS AT MEDIO CREEK

SHEET 1 OF 1 SHEET

SEA STRUCTURAL ENGINEERING ASSOCIATES, INC. CONSULTING ENGINEERS SAN ANTONIO, TEXAS

© 2000 Texas Department of Transportation

| FED.RD. DIV.NO. | FEDERAL AID PROJECT NO. | | SHEET NO. |
|---|---|---|---|
| 6 | NH 2000 (704), etc. | | 521 |
| STATE | STATE DIST.NO. | COUNTY | |
| TEXAS | SAT | BEXAR | |
| CONT. | SECT. | JOB | HIGHWAY NO. |
| 2452 | 01 | 036,etc. | LP 1604 |

eng\ms

09/14/2000 03:04:43 PM ...\MEDIO_FROAD1.dgn

| | |
|---|---|
| DESIGN SPEED: | 100 km/h |
| FUNCT. CLASS: | URBAN FREEWAY |
| EXISTING ADT: | 19,400(2000) |
| PROJECTED ADT: | 35,000(2020) |
| PERM STR. NO.: | 15-015-2452-01-172 |

**CHANGE ORDER NO. 20**
-UPDATED VIEW OF PLAN SHEET
-UPDATED BRIDGE RAIL TO REFLECT NEW STANDARDS

PR 1 RAIL (RAIL ENDS AT WINGWALL)

ROW

6.800m

ADDITIONAL RIPRAP (CONC.)

1:2 SLOPE

8.990m

1:2 SLOPE 16.715m

T203 RAIL (EXTENDS PAST THE ABUTMENT, TRAFFIC RAIL FOUNDATION-EST@0.38M3, THRIE BEAM CONNECTION W/MBGF ATTACHED

℄ BENT 2
STA. 6+301.750

BEGIN BRIDGE
FRONT FACE OF
ABUT. 1 BACKWALL
STA. 6+272.750

℄ BM. 1

S0°07'17"E

SEJ (100mm)

3.600m WINGWALL TYP.

℄ BM. 6

N 89°52'43" E

1:2 SLOPE

TOE OF SLOPE

PT 6+260.250

T203 RAIL (ENDS AT WINGWALL, THRIE BEAM CONNECTION W/MBGF ATTACHED

WW

MEDIO CREEK FLOW

6.300

1.500

OVERALL 13.200

6+300

SLOPE VARIES

10.800

0.300

3.600 4.200 LANE LANE

3.000 SHLDR.

NOMINAL FACE OF T203 RAIL

NOMINAL FACE OF T203 RAIL

0.300

N 89°52'43" E

WW

PLAN

PR 1 RAIL (RAIL ENDS AT WINGWALL)

T203 RAIL (EXTENDS PAST THE ABUTMENT, TRAFFIC RAIL FOUNDATION-EST@0.38M3, THRIE BEAM CONNECTION W/MBGF ATTACHED

TEST HOLE 7
STA. 6+340.566
LT. 14.672

℄ BENT 3
STA. 6+330.750

END BRIDGE
FRONT FACE OF
ABUT. 4 BACKWALL
STA. 6+359.750

1:2 SLOPE

21.585m

5.200m

1:2 SLOPE

20.770m

NOMINAL FACE OF PRI RAIL

PGL FR-G

SEJ (100mm)

3.600m WINGWALL TYP.

NOMINAL FACE OF PRI RAIL

1:2 SLOPE

TOE OF SLOPE

N 89°52'43" E

PC 6+363.765

T203 RAIL (ENDS AT WINGWALL, THRIE BEAM CONNECTION W/MBGF ATTACHED

0 1 2 4 8 12
SCALE

NOTES:

1. DESIGNED ACCORDING TO 1996 AASHTO STANDARD SPECIFICATIONS AND INTERIMS THERETO.
2. ELEVATIONS SHOWN ARE IN METERS.
3. ALL DIMENSIONS ARE IN METERS UNLESS SHOWN OTHERWISE.
4. BEAM END CONDITIONS:
   D-DENOTES DOWEL IN OUTSIDE BEAM ONLY
   BLANK-DENOTES NO DOWEL
5. CONE PENETROMETER READING ARE IN MILLIMETERS.

● BORING LOCATION
✳ ELEVATION SHOWN AT PGL

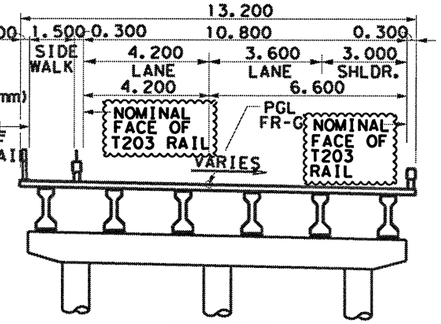


SECTION
NOT TO SCALE

MS18 LOADING

5.05%x-SLOPE
+0.2121

-0.2593% SUPER TRANS

STA. 6+321.797

3.84%x-SLOPE
-0.1613

STA. 6+240.000
(4.200 LT.)

PGL & AXIS OF ROTATION

SUPERELEVATION DIAGRAM

STA. 6+384.000
(4.200 LT.)

OVERALL LENGTH OF BRIDGE = 87.000 m
LENGTH OF T203 (4.2 M LT) = 90.658m
LENGTH OF PRI =94.200m, LENGTH OF T203 (6.6 M RT) = 94.200m
3 SPANS AT 29.000 = 87.000m
TYPE IV PRESTRESSED CONCRETE BEAMS, CONTINUOUS SLAB UNIT

BEGIN BRIDGE
STA. 6+272.750
ELEV. =240.56✳

BEGIN BRIDGE
RAIL FOR
PAYMENT

END BRIDGE
STA. 6+359.750
ELEV. = 241.9✳0

END BRIDGE
RAIL FOR
PAYMENT

VPI STA. 6+260
ELEV. =239.855
L=160m

PGL FR-G

RAIL

VPT 6+340
EL. 241.503

(-)1.1000% (+)2.0600%

(+)2.0600%

244
240
236
232
228

1:2 CONC. RIPRAP RR8

HW 50=235.25

HW 100=235.37

D D

3-900mm ⌀ COLUMNS × 7.43m

3-900mm ⌀ COLUMNS × 7.89m

TEST HOLE 7
EL. 232.625

1:2 CONC. RIPRAP RR8

4-900mm ⌀ x 8.80m DRILLED SHAFTS

FINISHED GRND. LINE

3-900mm ⌀ x 4.60m DRILLED SHAFTS

3-900mm ⌀x 4.60m DRILLED SHAFTS

4-900mm ⌀ x 10.20m DRILLED SHAFTS

EXIST. GRND. LINE

50(13) 50(6)
50(19) 50(13)
50(6) 50(6)
50(6) 50(6)
50(38) 50(38)

A-1 B-2 B-3 A-4

ELEVATION

① CLAY, BROWN
② GRAVEL
③ CLAY, TAN
④ LIMESTONE, LIGHT TAN W/LAYER OF TAN LIMESTONE NOT MORE THAN 150mm THICK.

6+260 6+280 6+300 6+320 6+340 6+360

STATE OF TEXAS
JENNIFER L. MCCOY-GEMBLA
84734
REGISTERED PROFESSIONAL ENGINEER

Jennifer L. McCoy-Gembla, P.E. 84734 — Date
For CO only

LP 1604 NB
FRONTAGE ROAD
OVERPASS
AT MEDIO CREEK

SHEET 1 OF SHEET

CHANGE ORDER NO 20

© 2000 Texas Department of Transportation

| FED.RD. DIV.NO. | FEDERAL AID PROJECT NO. | SHEET NO. |
|---|---|---|
| 6 | NH 2000 (704), etc | 521A |
| STATE | STATE DIST./NO. | COUNTY |
| TEXAS | SAT | BEXAR |
| CONT. | SECT. | JOB | HIGHWAY NO. |
| 2452 | 01 | 036,etc | LP 1604 |

DATE/TIME 08/06/02 — FILENAMES

## BRIDGE SUMMARY

| Item Number | | Description | Unit | NB Frontage Rd. Overpass @ Medio Creek |
|---|---|---|---|---|
| 110 | 5002 | Excavation (Channel) | M3 | 7,107 |
| 416 | 5006 | Drilled Shaft (900MM) | M | 103.6 |
| 420 | 5013 | Class "C" Concrete (Abut) | M3 | 40.0 |
| 420 | 5014 | Class "C" Concrete (Bent) | M3 | 54.3 |
| 422 | 5001 | Reinforced Concrete Slab | M2 | 1,148.4 |
| | | | | |
| 425 | 5006 | Prestressed Conc Bm (Type IV) | M | 520.2 |
| 428 | 5001 | Concrete Surface Treatment | M2 | 1,096 |
| 432 | 5001 | Riprap (Conc) (Cl B) | M3 | 199 |
| 450 | 5016 | Rail (Ty C202) | M | 87.0 |
| 450 | 5054 | Rail (Ty T202) (Mod) | M | 94.2 |
| | | | | |
| 450 | 5060 | Rail (Ty PR1) | M | 94.2 |
| 454 | 5006 | Sealed Exp Jt SEJ-A (100MM) | M | 26.4 |

## NB FRONTAGE RD. @ MEDIO CREEK
## BEARING SEAT ELEVATION SUMMARY

| Pier | Abut. 1 | Bent 2 | | Bent 3 | | Abut. 4 |
|---|---|---|---|---|---|---|
| | Fwd. | Bkwd. | Fwd | Bkwd. | Fwd. | Bkwd. |
| 1 | 239.039 | 239.234 | 239.239 | 239.598 | 239.604 | 240.090 |
| 2 | 238.970 | 239.206 | 239.211 | 239.610 | 239.617 | 240.143 |
| 3 | 238.901 | 239.177 | 239.183 | 239.622 | 239.630 | 240.196 |
| 4 | 238.832 | 239.149 | 239.155 | 239.635 | 239.643 | 240.249 |
| 5 | 238.764 | 239.120 | 239.127 | 239.647 | 239.656 | 240.302 |
| 6 | 238.695 | 239.092 | 239.099 | 239.659 | 239.669 | 240.355 |

STATE OF TEXAS
Manching W. Yu
84851
REGISTERED PROFESSIONAL ENGINEER

Manching W. Yu, P.E.
9-18-00

S & B INFRASTRUCTURE, LTD.

©2000 TEXAS DEPARTMENT OF TRANSPORTATION

# LOOP 1604 NB FRONTAGE ROAD OVERPASS AT MEDIO CREEK SUMMARY SHEET

| | | | |
|---|---|---|---|
| DESIGNED BY: DE | CHECKED BY: KL | DATE: 09-18-00 | |
| DRAWN BY: TC | CHECKED BY: MW | DATE: 09-18-00 | |
| APPROVED BY: MW | DATE: 09-16-00 | PROJECT NO: 9432 | |

| FED. RD. DIV. NO. | FEDERAL AID PROJECT NO. | SHEET NO. |
|---|---|---|
| 6 | NH 2000 (704), etc. | 522 |

| STATE | STATE DIST. NO. | COUNTY | |
|---|---|---|---|
| TEXAS | SAT | BEXAR | |

| CONT. | SECT. | JOB | HIGHWAY NO. |
|---|---|---|---|
| 2452 | 01 | 036, etc. | LP 1604 |

18 SEP 2000 11:27:10 s:\project\u9432.200\design\data\cadd\dgn\nbfr@medio\9432nbfr_med_summary.dgn

## BRIDGE SUMMARY

| Item Number | | Description | Unit | NB Frontage Rd. Overpass @ Medio Creek |
|---|---|---|---|---|
| 110 | 5002 | Excavation (Channel) | M3 | 7,107 |
| 416 | 5006 | Drilled Shaft (900MM) | M | 103.6 |
| 420 | 5013 | Class "C" Concrete (Abut) | M3 | 40.0 |
| 420 | 5014 | Class "C" Concrete (Bent) | M3 | 54.3 |
| 422 | 5001 | Reinforced Concrete Slab | M2 | 1,148.4 |
| | | | | |
| 425 | 5006 | Prestressed Conc Bm (Type IV) | M | 520.2 |
| 428 | 5001 | Concrete Surface Treatment | M2 | 1,096 |
| ~~432~~ | ~~5001~~ | ~~Riprap (Conc) (Cl B)~~ | ~~M3~~ | ~~199~~ |
| ~~450~~ | ~~5016~~ | ~~Rail (Ty C202)~~ | ~~M~~ | ~~87.8~~ 0 |
| 450 | 5054 | Rail ~~(Ty T202) (Mod)~~ T203 | M | ~~94.2~~ 184.9 |
| | | | | |
| 450 | 5060 | Rail (Ty PR1) | M | 94.2 |
| 454 | 5006 | Sealed Exp Jt SEJ-A (100MM) | M | 26.4 |

## NB FRONTAGE RD. @ MEDIO CREEK
## BEARING SEAT ELEVATION SUMMARY

| Pier | Abut. 1 | Bent 2 | | Bent 3 | | Abut. 4 |
|---|---|---|---|---|---|---|
| | Fwd. | Bkwd. | Fwd | Bkwd. | Fwd. | Bkwd. |
| 1 | 239.039 | 239.234 | 239.239 | 239.598 | 239.604 | 240.090 |
| 2 | 238.970 | 239.206 | 239.211 | 239.610 | 239.617 | 240.143 |
| 3 | 238.901 | 239.177 | 239.183 | 239.622 | 239.630 | 240.196 |
| 4 | 238.832 | 239.149 | 239.155 | 239.635 | 239.643 | 240.249 |
| 5 | 238.764 | 239.120 | 239.127 | 239.647 | 239.656 | 240.302 |
| 6 | 238.695 | 239.092 | 239.099 | 239.659 | 239.669 | 240.355 |

STATE OF TEXAS
Wanching W. Yu
84851
REGISTERED PROFESSIONAL ENGINEER

Wanching W. Yu, P.E
9-18-00

S & B INFRASTRUCTURE, LTD.

©2000
TEXAS DEPARTMENT OF TRANSPORTATION

LOOP 1604 NB
FRONTAGE ROAD OVERPASS
AT MEDIO CREEK
SUMMARY SHEET

| | | | |
|---|---|---|---|
| DESIGNED BY: DE | CHECKED BY: KL | DATE: 09-18-00 | |
| DRAWN BY: TC | CHECKED BY: WW | DATE: 09-18-00 | PROJECT NO: 9432 |
| APPROVED BY: WW | DATE: 09-18-00 | | |

| FED. RD. DIV. NO. | FEDERAL AID PROJECT NO. | SHEET NO. |
|---|---|---|
| 6 | NH 2000 (704), etc. | 522A |

| STATE | STATE DIST. NO. | COUNTY | |
|---|---|---|---|
| TEXAS | SAT | BEXAR | |
| CONT. | SECT. | JOB | HIGHWAY NO. |
| 2452 | 01 | 036, etc. | LP 1604 |

CR#20

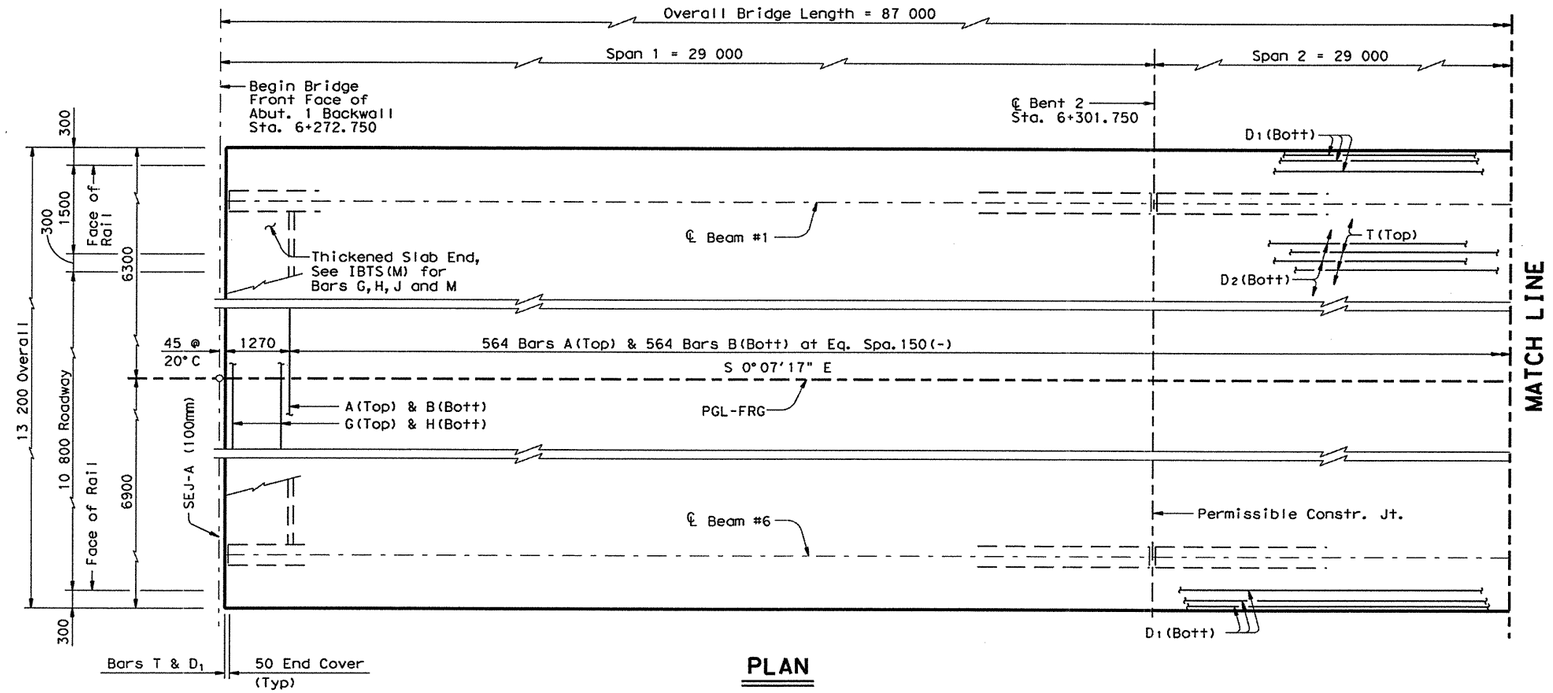


**PLAN**

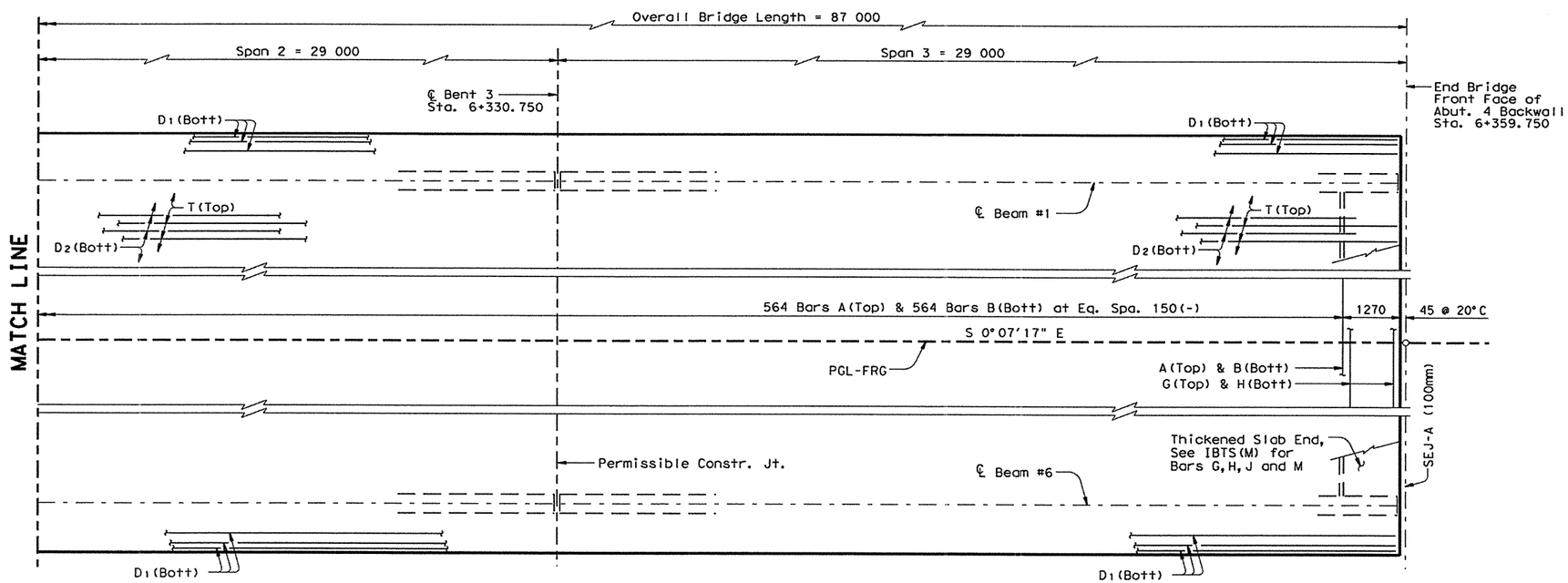


**PLAN**

Manching W. Yu, P.E
9-18-00

S & B INFRASTRUCTURE, LTD.

©2000 TEXAS DEPARTMENT OF TRANSPORTATION

# LOOP 1604 NB FRONTAGE ROAD OVERPASS AT MEDIO CREEK SLAB PLAN

| | | | | | |
|---|---|---|---|---|---|
| DESIGNED BY: | DE | CHECKED BY: | KL | DATE: | 09-18-00 |
| DRAWN BY: | TC | CHECKED BY: | MW | DATE: | 09-18-00 |
| APPROVED BY: | MW | DATE: | 09-18-00 | PROJECT NO: | 9432 |

| FED. RD. DIV. NO. | FEDERAL AID PROJECT NO. | SHEET NO. |
|---|---|---|
| 6 | NH 2000 (704), etc. | 523 |

| STATE | STATE DIST. NO. | COUNTY | |
|---|---|---|---|
| TEXAS | SAT | BEXAR | |
| CONT. | SECT. | JOB | HIGHWAY NO. |
| 2452 | 01 | 036, etc. | LP 1604 |

18 SEP 2000 11:27:09 s:\project\u9432.200\design\data\cadd\dgn\nbfr@medio\9432nbfr*medslab.dgn

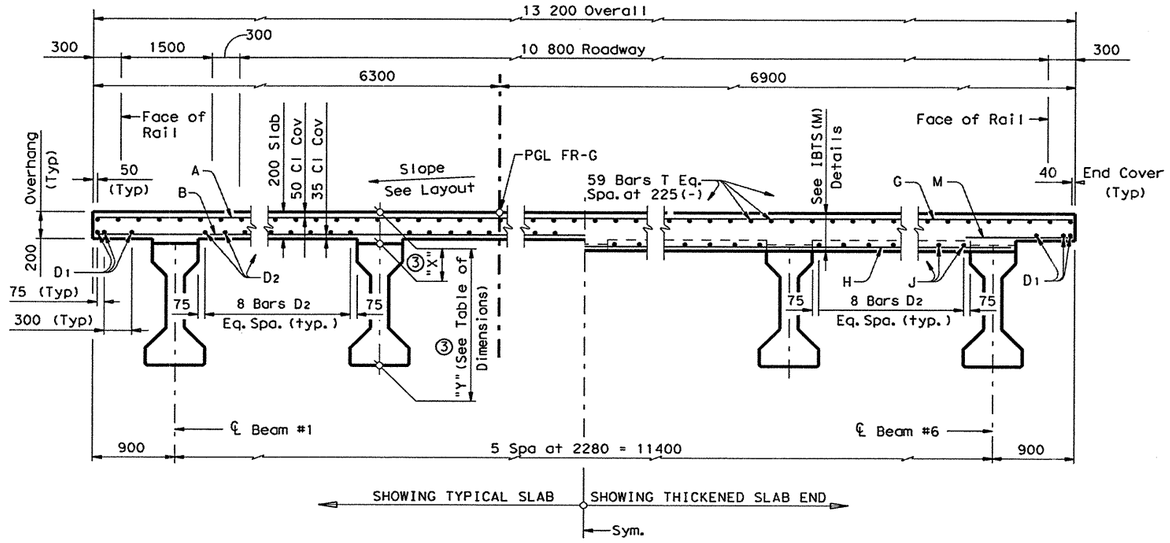


## TYPICAL TRANSVERSE SECTION

(LOOKING UPSTATION)

| Span | "A" | "B" |
|---|---|---|
| m | mm | mm |
| 29.000 | 17 | 25 |

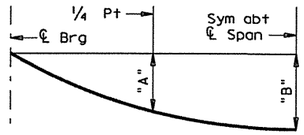


## DEAD LOAD DEFLECTION DIAGRAM

NOTE: Deflections shown are due to concrete slab only. ($E_c$ = 35,000 MPa) Calculated deflections shown are theoretical and actual dimensions may be less. Deflections shall be adjusted based on field observations.

## BAR TABLE

| Bar | Size |
|---|---|
| A | #5 |
| B | #5 |
| D | #5 |
| G | #5 |
| H | #5 |
| J | #5 |
| M | #5 |
| T | #5 |

## TABLE OF ESTIMATED QUANTITIES

| Reinf Concrete Slab | Prestressed Concrete ① Beams (Ty. IV) | Class "S" Concrete | ② Total Reinf Steel |
|---|---|---|---|
| $m^2$ | m | $m^3$ | kg |
| 1148.4 | 520.2 | 234.3 | 36,749 |

① Fabricator shall adjust beam lengths for beam slopes as required.

② Reinforcing steel mass is calculated using an approximate factor of 32 kg/$m^2$.

## ③ TABLE OF DIMENSIONS

| | X | Y |
|---|---|---|
| Abut 1 Front | 255 | 1627 |
| Middle Span 1 | 220 | 1592 |
| Bent 2 Back | 255 | 1627 |
| Bent 2 Front | 255 | 1627 |
| Middle Span 2 | 220 | 1592 |
| Bent 3 Back | 255 | 1627 |
| Bent 3 Front | 255 | 1627 |
| Middle Span 3 | 236 | 1608 |
| Abut 4 Back | 255 | 1627 |

**GENERAL NOTES:**

1. Designed according to current AASHTO Standard and Interim Specifications.
2. See IBTS(M) Standard for Thickened Slab End Details and quantity adjustments.
3. See PCP(C)(M) or PMDF(C)(M) Standards for details and quantity adjustments if either of these options are used.
4. All reinforcing shall be Grade 420. Concrete strength f'c = 28 MPa.
5. All dimensions are in millimeters unless otherwise shown.
6. Bar laps, where required, shall be as follows:
   Uncoated ~ #5 = 560 mm

STATE OF TEXAS
Manching W. Yu
84851
REGISTERED PROFESSIONAL ENGINEER

Manching W. Yu, P.E
9-18-00

S & B INFRASTRUCTURE, LTD.

©2000 TEXAS DEPARTMENT OF TRANSPORTATION

**LOOP 1604 NB FRONTAGE ROAD OVERPASS AT MEDIO CREEK TYPICAL SECTION**

| DESIGNED BY: DE | CHECKED BY: KL | DATE: 09-18-00 |
|---|---|---|
| DRAWN BY: TC | CHECKED BY: MW | DATE: 09-18-00 |
| APPROVED BY: MW | DATE: 09-18-00 | PROJECT NO: 9432 |

| FED. RD. DIV. NO. | FEDERAL AID PROJECT NO. | SHEET NO. |
|---|---|---|
| 6 | NH 2000 (704), etc. | 524 |

| STATE | STATE DIST. NO. | COUNTY | |
|---|---|---|---|
| TEXAS | SAT | BEXAR | |
| CONT. | SECT. | JOB | HIGHWAY NO. |
| 2452 | 01 | 036, etc. | LP 1604 |

18 SEP 2000 11:27:11 s:\project\u9432.200\design*data\cadd\dgn\nbfr@medio\9432nbfr*med*typsection.dgn

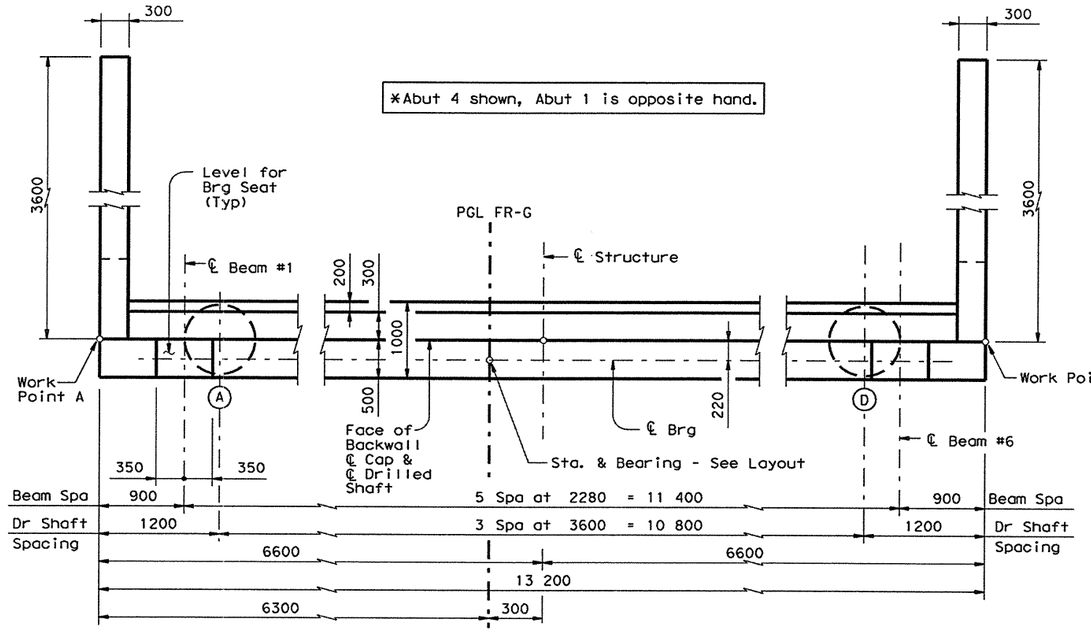


## PLAN

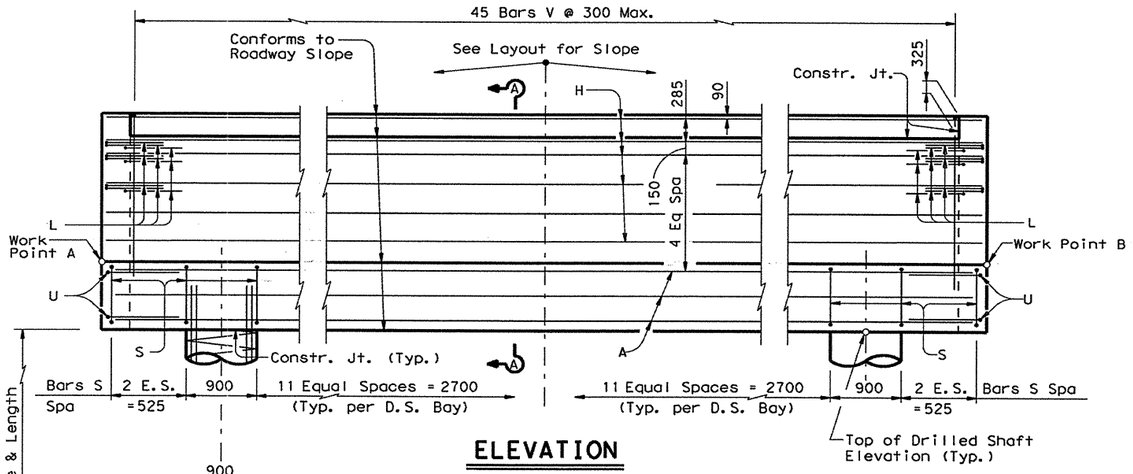


## ELEVATION

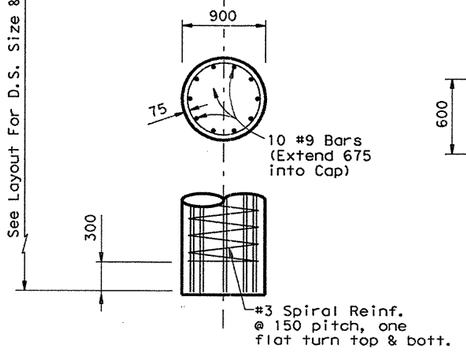


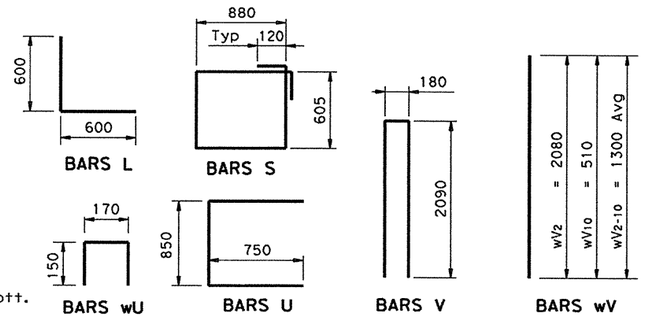


## TOP OF DRILLED SHAFT ELEV. (m)

| Abut No. | D.S.A. | D.S.B. | D.S.C. | D.S.D. | W.P. A | W.P. B |
|---|---|---|---|---|---|---|
| 1 | 238.240 | 238.131 | 238.023 | 237.914 | 239.026 | 238.628 |
| 4 | 239.307 | 239.390 | 239.474 | 239.558 | 240.029 | 240.336 |

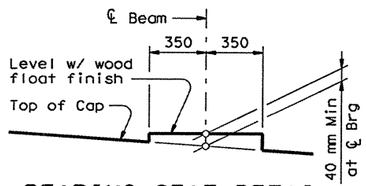


## BEARING SEAT DETAIL

(Bearing surface shall be clean and free of all loose material before placing bearing pad.)

NOTE: Built up portion of bearing seat shall be cast integrally with cap or constructed as follows. Area under built up portion to be bush hammered. Then pedestal shall be formed from mortar which has been treated with doraweld or weldcrete bonding agent or an approved equal. The bonding agent shall be mixed with the mortar in accordance with the manufacturer's recommendations.

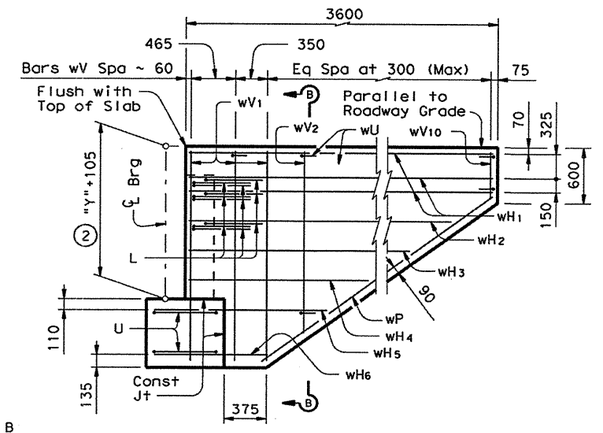


## WINGWALL ELEVATION

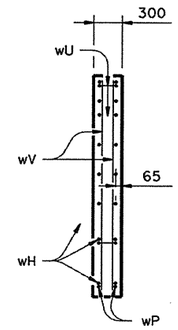


## SECTION B-B

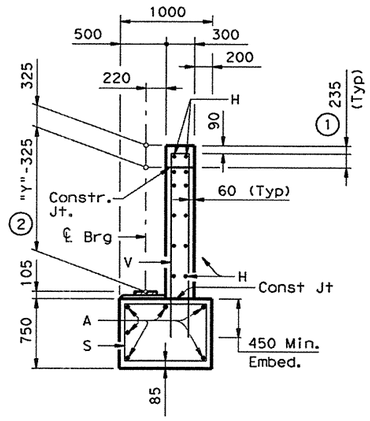


## SECTION A-A

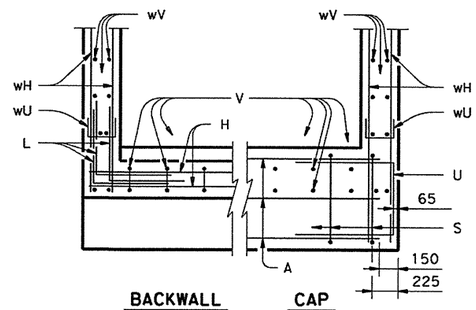


BACKWALL CAP

## CORNER DETAILS

## TABLE OF ESTIMATED QUANTITIES

| Bar | No. | Size | Length | Mass |
|---|---|---|---|---|
| A | 6 | #11 | 12 900 | 612 |
| H | 12 | #5 | 13 100 | 244 |
| L | 18 | #6 | 1200 | 48 |
| S | 42 | #4 | 3210 | 134 |
| U | 4 | #6 | 2350 | 21 |
| V | 43 | #5 | 4360 | 291 |
| wH1 | 12 | #6 | 3500 | 94 |
| wH2 | 4 | #6 | 2960 | 26 |
| wH3 | 4 | #6 | 2490 | 22 |
| wH4 | 4 | #6 | 2020 | 18 |
| wH5 | 4 | #6 | 2050 | 18 |
| wH6 | 4 | #6 | 1320 | 12 |
| wP | 4 | #6 | 3280 | 29 |
| wU | 16 | #4 | 470 | 7 |
| wV1 | 12 | #5 | 2350 | 44 |
| wV2-10 | 36 | #5 | 1300Av | 73 |
| | | | | |
| | | | | |
| *Reinforcing Steel | | | kg | 1693 |
| Class "C" Concrete | | | m3 | 20.0 |

*For Contractors Information Only

(1) Increase as required to maintain 90 mm from Finished Grade.

(2) See Slab Typ. Section sheet for "Y".

### GENERAL NOTES:

1. All cap and backwall concrete shall be Class "C", f'c = 25 MPa.
2. All cap and wall reinforcing shall be Grade 420.
3. See Foundation Detail Standard Sheet, FD(M), for all foundation details and notes.
4. Calculated Drilled Shaft Load = 856 kN each.
5. All dimensions are in millimeters unless otherwise specified.
6. Chamfer an exposed corner 20mm unless otherwise specified.

STATE OF TEXAS
Manching W. Yu
84851
REGISTERED PROFESSIONAL ENGINEER

Manching W. Yu, P.E
9-18-00

S & B INFRASTRUCTURE, LTD.

©2000 TEXAS DEPARTMENT OF TRANSPORTATION

**LOOP 1604 NB FRONTAGE ROAD OVERPASS AT MEDIO CREEK ABUTMENTS 1 & 4**

| DESIGNED BY: DE | CHECKED BY: KL | DATE: 09-18-00 |
|---|---|---|
| DRAWN BY: TC | CHECKED BY: MW | DATE: 09-18-00 |
| APPROVED BY: MW | DATE: 09-18-00 | PROJECT NO: 9432 |

| FED.RD. DIV.NO. | FEDERAL AID PROJECT NO. | SHEET NO. |
|---|---|---|
| 6 | NH 2000 (704), etc. | 525 |

| STATE | STATE DIST. NO. | COUNTY |
|---|---|---|
| TEXAS | SAT | BEXAR |

| CONT. | SECT. | JOB | HIGHWAY NO. |
|---|---|---|---|
| 2452 | 01 | 036, etc. | LP 1604 |

18 SEP 2000 11:27:06 s:\project\u9432.200\design*data\cadd\dgn\nbfr@medio\9432nbfr*medxabut.dgn

| TOP OF COLUMN ELEVATIONS (m) | | | | | |
|---|---|---|---|---|---|
| Bent No. | Col. A | Col. B | Col. C | W.P. A | W.P. B |
| 2 | 238.184 | 238.123 | 238.062 | 239.202 | 239.044 |
| 3 | 238.562 | 238.588 | 238.615 | 239.554 | 239.622 |

| TABLE OF VARIABLE QUANTITIES FOR 3 COLUMNS | | | | | | ESTIMATED QUANTITIES FOR 3 COLS | |
|---|---|---|---|---|---|---|---|
| Bent No. | "H" | Bars V 30 ~ #9 | | Bars Z 3 ~ #3 Spiral | | Reinf Steel | Class "C" Conc |
| | mm | Length | Mass | Length | Mass | kg | $m^3$ |
| 2 | 7430 | 8280 | 1257 | 120 200 | 202 | 1459 | 14.2 |
| 3 | 7890 | 8740 | 1327 | 127 500 | 214 | 1541 | 15.1 |

| TABLE OF BENT QUANTITIES | | | | |
|---|---|---|---|---|
| Bar | No. | Size | Length | Mass |
| A | 5 | #11 | 12 500 | 494 |
| B | 5 | #11 | 12 600 | 498 |
| D | 4 | 32 D | 500 | 12 |
| $S_1$ | 42 | #5 | 3,800 | 248 |
| $S_{2-7}$ | 12 | #5 | 3490 Av | 65 |
| SS | 30 | #5 | 2970 | 138 |
| $T_1$ | 6 | #4 | 12 500 | 75 |
| $T_2$ | 4 | #4 | 11 450 | 46 |
| | | | | |
| *Reinforcing Steel | | | kg | 1576 |
| Class "C" Concrete | | | $m^3$ | 12.5 |

*For Contractors Information Only

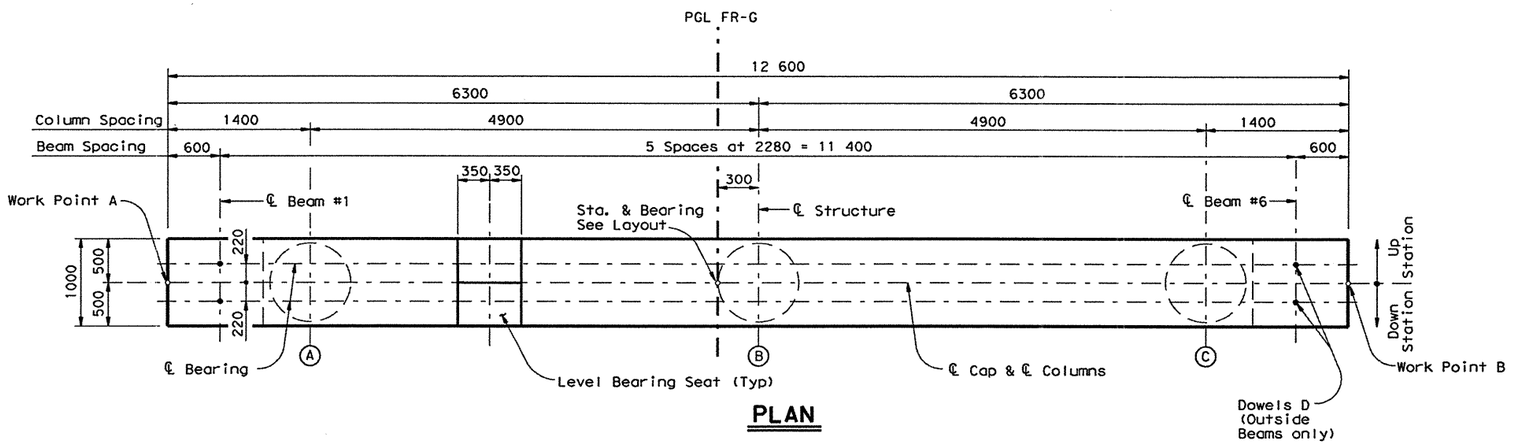


PLAN

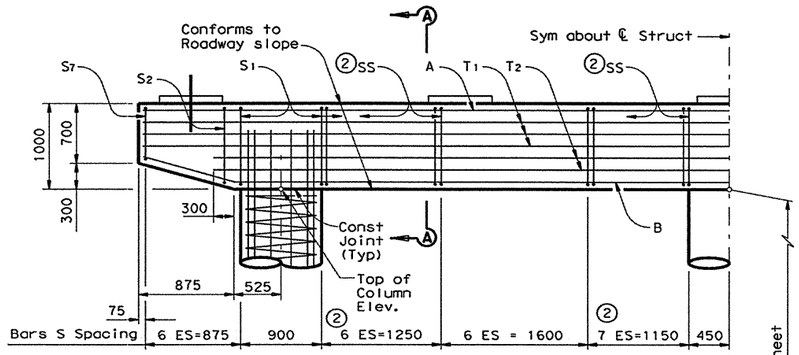


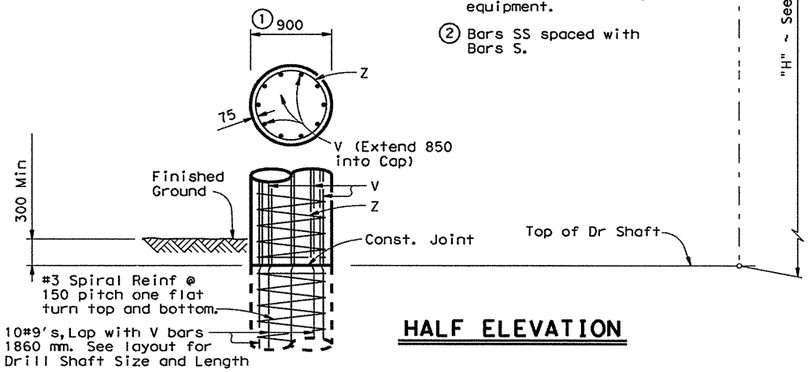


HALF ELEVATION

① At contractor's option the actual column dia may be 914 mm to accommodate existing equipment.

② Bars SS spaced with Bars S.

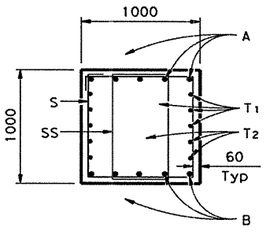


SECTION A-A

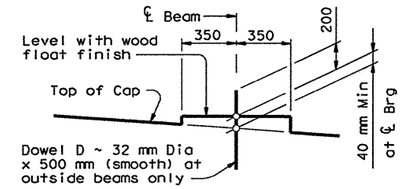


BEARING SEAT DETAIL

(Bearing surface shall be clean and free of all loose material before placing bearing pad.)

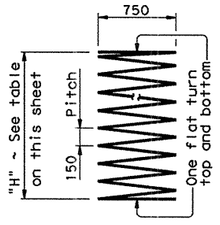


BARS Z

NOTE: Built up portion of bearing seat shall be cast integrally with cap or constructed as follows. Area under built up portion to be bush hammered. Then pedestal shall be formed from mortar which has been treated with doraweld or weldcrete bonding agent or an approved equal. The bonding agent shall be mixed with the mortar in accordance with the manufacturer's recommendations.

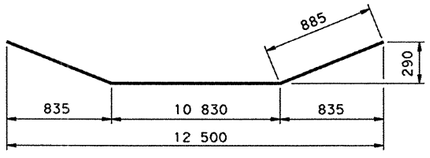


BARS B

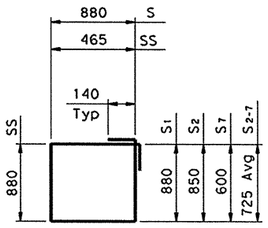


BARS S & SS

## GENERAL NOTES:

1. All cap and column concrete shall be Class "C", fc' = 25 MPa.
2. All cap and column reinforcing shall be Grade 420.
3. See layout for drilled shaft length.
4. Calculated drilled shaft load = 2021 kN Each.
5. All dimensions are in millimeters unless otherwise specified.
6. Chamfer all exposed corners 20mm unless otherwise specified.

STATE OF TEXAS
Manching W. Yu
84851
REGISTERED PROFESSIONAL ENGINEER

Manching W. Yu, P.E
9-18-00

S & B INFRASTRUCTURE, LTD.

©2000 TEXAS DEPARTMENT OF TRANSPORTATION

# LOOP 1604 NB FRONTAGE ROAD OVERPASS AT MEDIO CREEK BENTS 2 & 3

| | | | |
|---|---|---|---|
| DESIGNED BY: DE | CHECKED BY: KL | DATE: 09-18-00 | |
| DRAWN BY: TC | CHECKED BY: MW | DATE: 09-18-00 | |
| APPROVED BY: MW | DATE: 09-18-00 | PROJECT NO: 9432 | |

| FED. RD. DIV. NO. | FEDERAL AID PROJECT NO. | SHEET NO. |
|---|---|---|
| 6 | NH 2000 (704), etc. | 526 |

| STATE | STATE DIST. NO. | COUNTY | |
|---|---|---|---|
| TEXAS | SAT | BEXAR | |
| CONT. | SECT. | JOB | HIGHWAY NO. |
| 2452 | 01 | 036, etc. | LP 1604 |

18 SEP 2000 11:27:08 s:\project\u9432.200\design\data\cadd\dgn\nbfr\medio\9432nbfr_med_bt.dgn

| | |
|---|---|
| DESIGN SPEED: | 110 km/h |
| FUNCT. CLASS: | URBAN FREEWAY |
| EXISTING ADT: | 19,400(2000) |
| PROJECTED ADT: | 35,000(2020) |
| PERM STR. NO.: | 15-015-2452-01-171 |

NOTES:

1. DESIGNED ACCORDING TO 1996 AASHTO STANDARD SPECIFICATIONS AND INTERIMS THERETO.
2. ELEVATIONS SHOWN ARE IN METERS.
3. ALL DIMENSIONS ARE IN METERS UNLESS SHOWN OTHERWISE.
4. BEAM END CONDITIONS:
   D-DENOTES DOWEL IN OUTSIDE BEAM ONLY
   BLANK-DENOTES NO DOWEL
5. CONE PENETROMETER READING ARE IN MILLIMETERS.

● BORING LOCATION
✳ ELEVATION SHOWN AT PGL

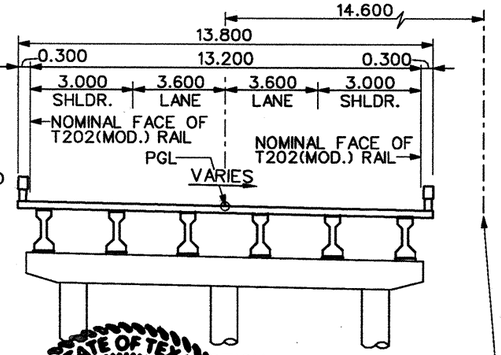


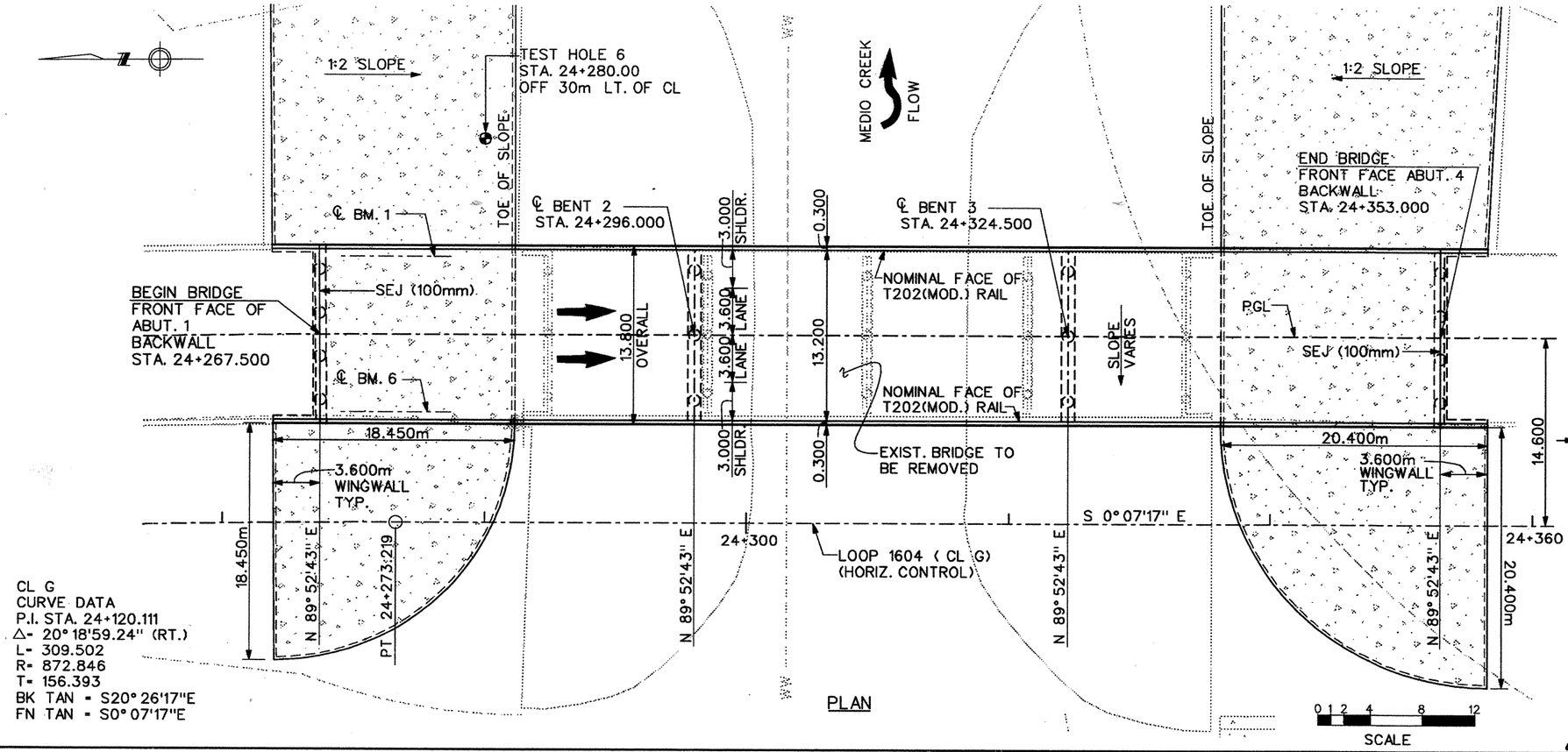


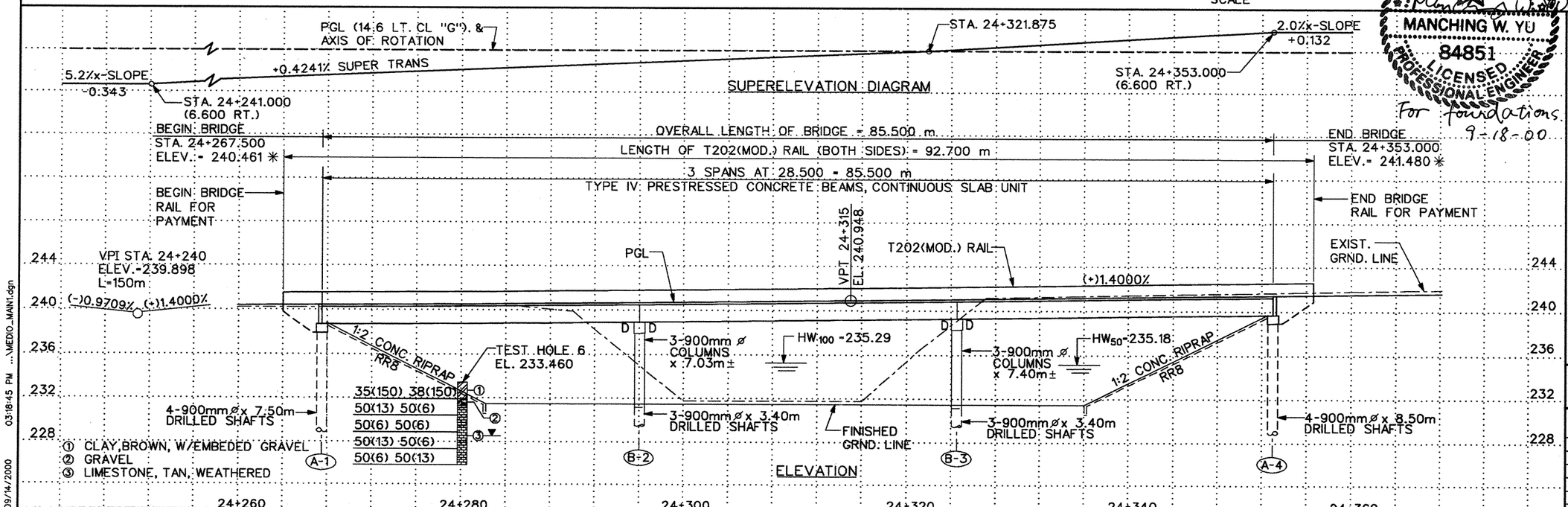


NOT TO SCALE

LOOP 1604 (CL G)
(HORIZ. CONTROL)

STATE OF TEXAS
MANCHING W. YU
84851
LICENSED
PROFESSIONAL ENGINEER
For foundations
9-18-00

STATE OF TEXAS
CHIN-WAN CHING
67603
REGISTERED
PROFESSIONAL ENGINEER
9-14-00
For Geometrics

LP 1604 SB MAINLANE
(FUTURE NB ML)
OVERPASS
AT MEDIO CREEK

SHEET 1 OF 1 SHEET

STRUCTURAL ENGINEERING ASSOCIATES, INC.
CONSULTING ENGINEERS
SAN ANTONIO, TEXAS

© 2000 Texas Department of Transportation

| FED.RD. DIV.NO. | FEDERAL AID PROJECT NO. | | SHEET NO. |
|---|---|---|---|
| 6 | NH 2000 (704), etc. | | 527 |
| STATE | STATE DIST.NO. | COUNTY | |
| TEXAS | SAT | BEXAR | |
| CONT. | SECT. | JOB | HIGHWAY NO. |
| 2452 | 01 | 036,etc. | LP 1604 |

09/14/2000 03:18:45 PM ...\MEDIO_MAIN1.dgn

| | |
|---|---|
| DESIGN SPEED: | 110 km/h |
| FUNCT. CLASS: | URBAN FREEWAY |
| EXISTING ADT: | 19,400 (2000) |
| PROJECTED ADT: | 35,000 (2020) |
| PERM STR. NO.: | 15-015-2452-01-171 |

NOTES:

1. DESIGNED ACCORDING TO 1996 AASHTO STANDARD SPECIFICATIONS AND INTERIMS THERETO.
2. ELEVATIONS SHOWN ARE IN METERS.
3. ALL DIMENSIONS ARE IN METERS UNLESS SHOWN OTHERWISE.
4. BEAM END CONDITIONS:
   D-DENOTES DOWEL IN OUTSIDE BEAM ONLY
   BLANK-DENOTES NO DOWEL
5. CONE PENETROMETER READING ARE IN MILLIMETERS.

● BORING LOCATION
✳ ELEVATION SHOWN AT PGL

**CHANGE ORDER NO. 20**

-UPDATED VIEW OF PLAN SHEET
-UPDATED BRIDGE RAIL TO REFLECT NEW STANDARDS

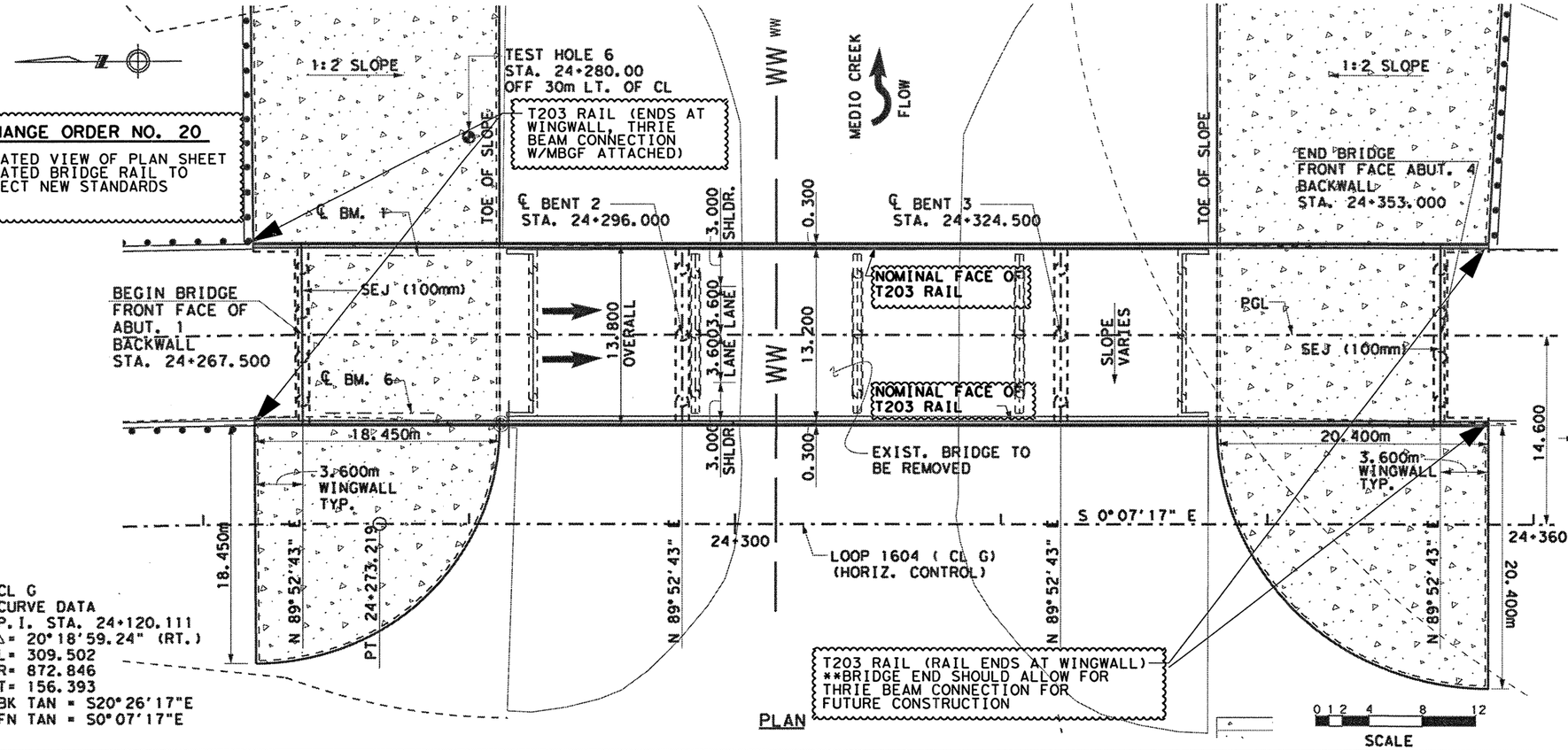


PLAN

SCALE 0 1 2 4 8 12

CL G
CURVE DATA
P.I. STA. 24+120.111
△= 20°18'59.24" (RT.)
L= 309.502
R= 872.846
T= 156.393
BK TAN = S20°26'17"E
FN TAN = S0°07'17"E

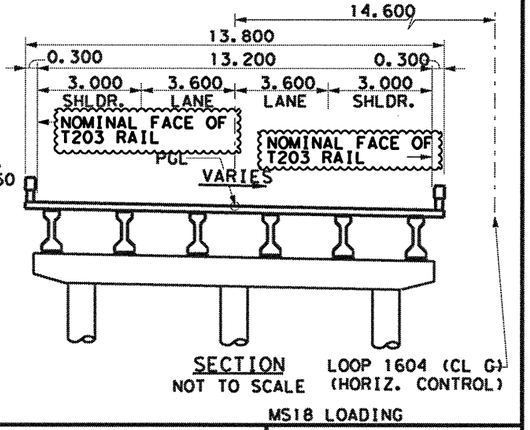


SECTION
NOT TO SCALE

LOOP 1604 (CL G)
(HORIZ. CONTROL)

MS18 LOADING

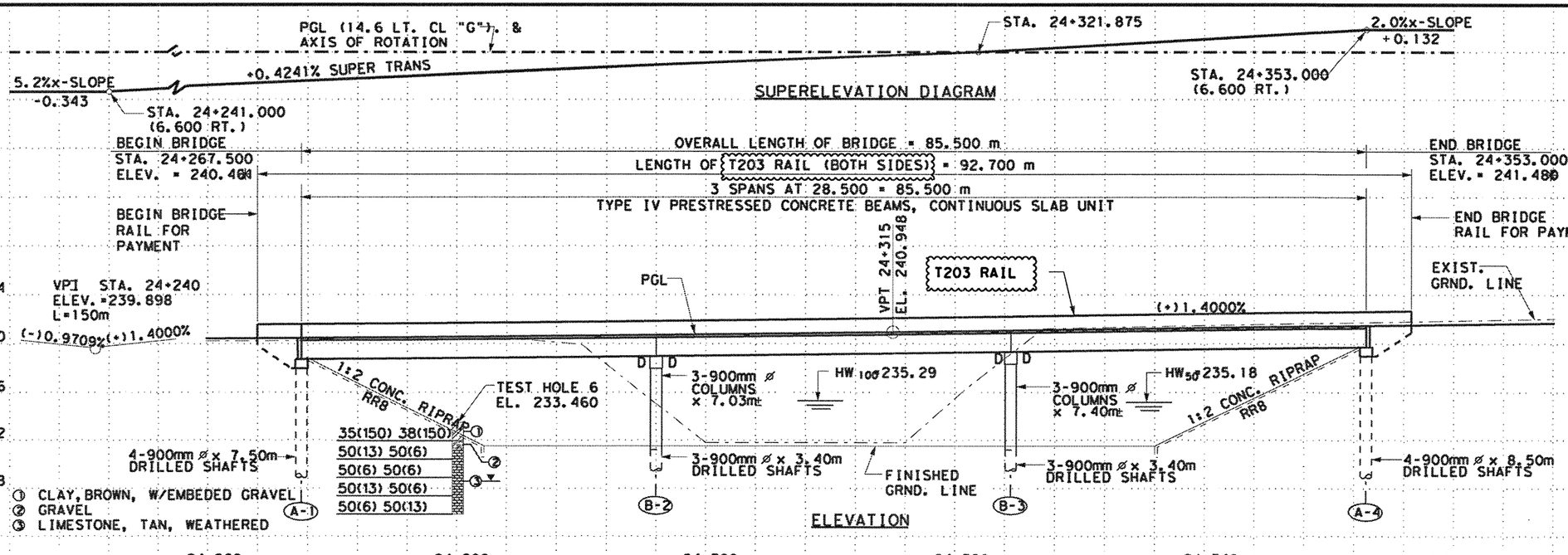


JENNIFER L. MOCZYGEMBA
84734
REGISTERED PROFESSIONAL ENGINEER

Jennifer L. Moczygemba, P.E. 84734 P.E. 8-8-02
Date
For CO only

LP 1604 SB MAINLANE (FUTURE NB ML) OVERPASS AT MEDIO CREEK

SHEET 1 OF SHEET

CHANGE ORDER NO 20

© 2000 Texas Department of Transportation

| FED. RD. DIV. NO. | FEDERAL AID PROJECT NO. | | SHEET NO. |
|---|---|---|---|
| 6 | NH 2000 (704), etc. | | 527A |
| STATE | STATE DIST. NO. | COUNTY | |
| TEXAS | SAT | BEXAR | |
| CONT. | SECT. | JOB | HIGHWAY NO. |
| 2452 | 01 | 036,etc. | LP 1604 |

08/07/02 $TIMES $FILENAME$

# BRIDGE SUMMARY

| Item Number | | Description | Unit | SB Mainlane Overpass @ Medio Creek |
|---|---|---|---|---|
| 110 | 5002 | Excavation (Channel) | M3 | 7,107 |
| 416 | 5006 | Drilled Shaft (900MM) | M | 84.4 |
| 420 | 5013 | Class "C" Concrete (Abut) | M3 | 41.6 |
| 420 | 5014 | Class "C" Concrete (Bent) | M3 | 53.5 |
| 422 | 5001 | Reinforced Concrete Slab | M2 | 1,179.9 |
| | | | | |
| 425 | 5006 | Prestressed Conc Bm (Type IV) | M | 511.2 |
| 428 | 5001 | Concrete Surface Treatment | M2 | 1,129 |
| 432 | 5001 | Riprap (Conc) (Cl B) | M3 | 217 |
| 450 | 5054 | Rail (Ty T202) (Mod) | M | 185.4 |
| 454 | 5006 | Sealed Exp Jt SEJ-A (100MM) | M | 27.6 |

# SB MAINLANE @ MEDIO CREEK
# BEARING SEAT ELEVATION SUMMARY

| Pier | Abut. 1 | Bent 2 | | Bent 3 | | Abut. 4 |
|---|---|---|---|---|---|---|
| | Fwd. | Bkwd. | Fwd. | Bkwd. | Fwd. | Bkwd. |
| 1 | 238.564 | 238.917 | 238.924 | 239.397 | 239.405 | 239.906 |
| 2 | 238.648 | 238.958 | 238.964 | 239.393 | 239.401 | 239.858 |
| 3 | 238.731 | 238.998 | 239.003 | 239.390 | 239.396 | 239.811 |
| 4 | 238.815 | 239.038 | 239.043 | 239.386 | 239.392 | 239.763 |
| 5 | 238.898 | 239.079 | 239.082 | 239.382 | 239.388 | 239.715 |
| 6 | 238.982 | 239.119 | 239.122 | 239.379 | 239.383 | 239.668 |

STATE OF TEXAS
Manching W. Yu
84851
REGISTERED PROFESSIONAL ENGINEER

Manching W. Yu, P.E
9-18-00

S & B INFRASTRUCTURE, LTD.

©2000
TEXAS DEPARTMENT OF TRANSPORTATION

## LOOP 1604 SB MAINLANE OVERPASS AT MEDIO CREEK SUMMARY SHEET

| | | | |
|---|---|---|---|
| DESIGNED BY: DE | CHECKED BY: KL | DATE: 09-18-00 | |
| DRAWN BY: TC | CHECKED BY: MW | DATE: 09-18-00 | |
| APPROVED BY: MW | DATE: 09-18-00 | PROJECT NO: 9432 | |

| FED. RD. DIV. NO. | FEDERAL AID PROJECT NO. | SHEET NO. |
|---|---|---|
| 6 | NH 2000 (704), etc. | 528 |

| STATE | STATE DIST. NO. | COUNTY | |
|---|---|---|---|
| TEXAS | SAT | BEXAR | |
| CONT. | SECT. | JOB | HIGHWAY NO. |
| 2452 | 01 | 036, etc. | LP 1604 |

18 SEP 2000 11:32:07 s:\project\u9432.200\design*data\cadd\dgn\sbml@medio\9432sbml*medsummary.dgn

## BRIDGE SUMMARY

| Item Number | | Description | Unit | SB Mainlane Overpass @ Medio Creek |
|---|---|---|---|---|
| 110 | 5002 | Excavation (Channel) | M3 | 7,107 |
| 416 | 5006 | Drilled Shaft (900MM) | M | 84.4 |
| 420 | 5013 | Class "C" Concrete (Abut) | M3 | 41.6 |
| 420 | 5014 | Class "C" Concrete (Bent) | M3 | 53.5 |
| 422 | 5001 | Reinforced Concrete Slab | M2 | 1,179.9 |
| | | | | |
| 425 | 5006 | Prestressed Conc Bm (Type IV) | M | 511.2 |
| 428 | 5001 | Concrete Surface Treatment | M2 | 1,129 |
| 432 | 5001 | ~~Riprap (Conc) (CL B)~~ | M3 | 217 |
| 450 | 5054 | Rail (Ty ~~T202) (Mod)~~ T203 | M | 185.4 |
| 454 | 5006 | ~~Sealed Exp Jt SEJ-A (100MM)~~ | M | 27.6 |

## SB MAINLANE @ MEDIO CREEK
## BEARING SEAT ELEVATION SUMMARY

| Pier | Abut. 1 | Bent 2 | | Bent 3 | | Abut. 4 |
|---|---|---|---|---|---|---|
| | Fwd. | Bkwd. | Fwd. | Bkwd. | Fwd. | Bkwd. |
| 1 | 238.564 | 238.917 | 238.924 | 239.397 | 239.405 | 239.906 |
| 2 | 238.648 | 238.958 | 238.964 | 239.393 | 239.401 | 239.858 |
| 3 | 238.731 | 238.998 | 239.003 | 239.390 | 239.396 | 239.811 |
| 4 | 238.815 | 239.038 | 239.043 | 239.386 | 239.392 | 239.763 |
| 5 | 238.898 | 239.079 | 239.082 | 239.382 | 239.388 | 239.715 |
| 6 | 238.982 | 239.119 | 239.122 | 239.379 | 239.383 | 239.668 |

STATE OF TEXAS
Manching W. Yu
84851
REGISTERED PROFESSIONAL ENGINEER

Manching W. Yu, P.E.
9-18-00

S & B INFRASTRUCTURE, LTD.

©2000 TEXAS DEPARTMENT OF TRANSPORTATION

LOOP 1604 SB
MAINLANE OVERPASS
AT MEDIO CREEK
SUMMARY SHEET

| | | | |
|---|---|---|---|
| DESIGNED BY: DE | CHECKED BY: KL | DATE: 09-18-00 | |
| DRAWN BY: TC | CHECKED BY: MW | DATE: 09-18-00 | |
| APPROVED BY: MW | DATE: 09-18-00 | PROJECT NO: 9432 | |
| FED. RD. DIV. NO. | FEDERAL AID PROJECT NO. | | SHEET NO. |
| 6 | NH 2000 (704), etc. | | 528A |
| STATE | STATE DIST. NO. | COUNTY | |
| TEXAS | SAT | BEXAR | |
| CONT. | SECT. | JOB | HIGHWAY NO. |
| 2452 | 01 | 036, etc. | LP 1604 |

COS#20

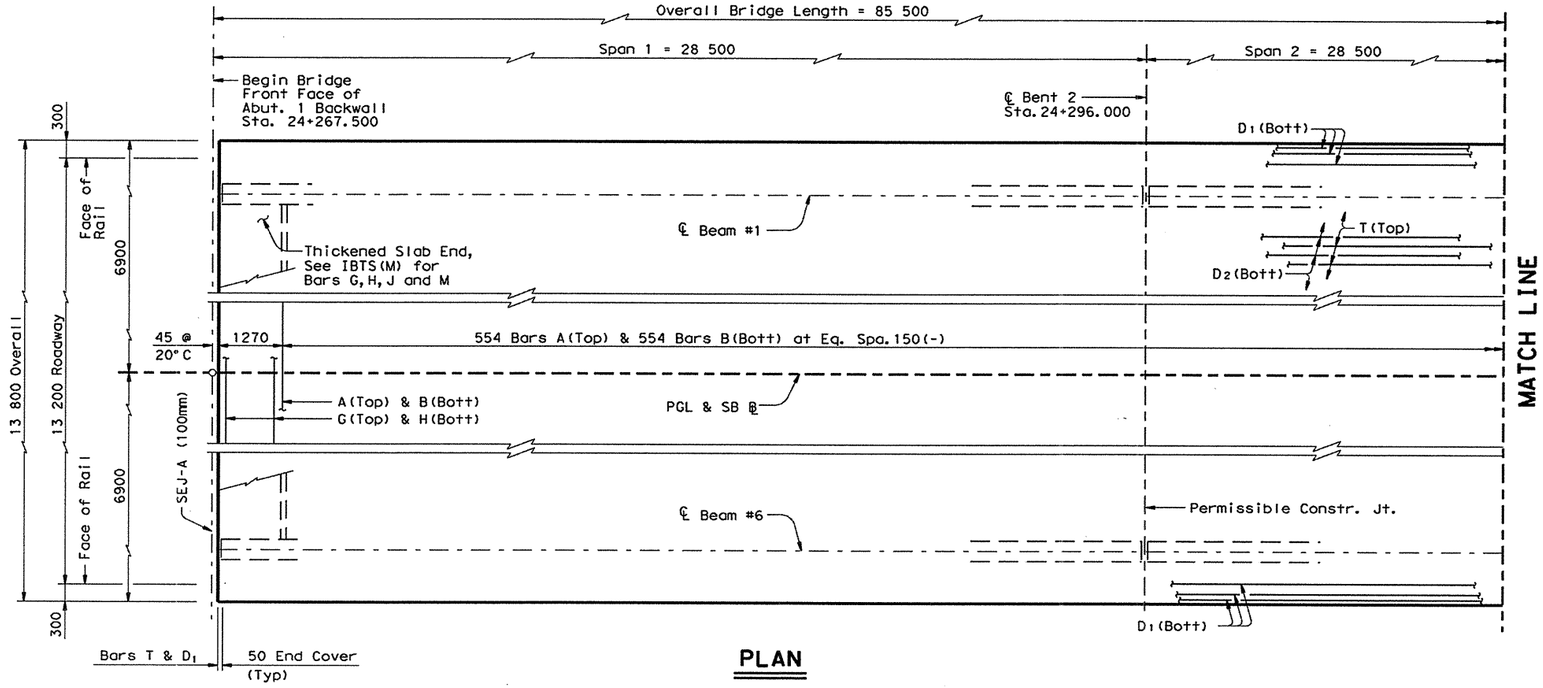


**PLAN**

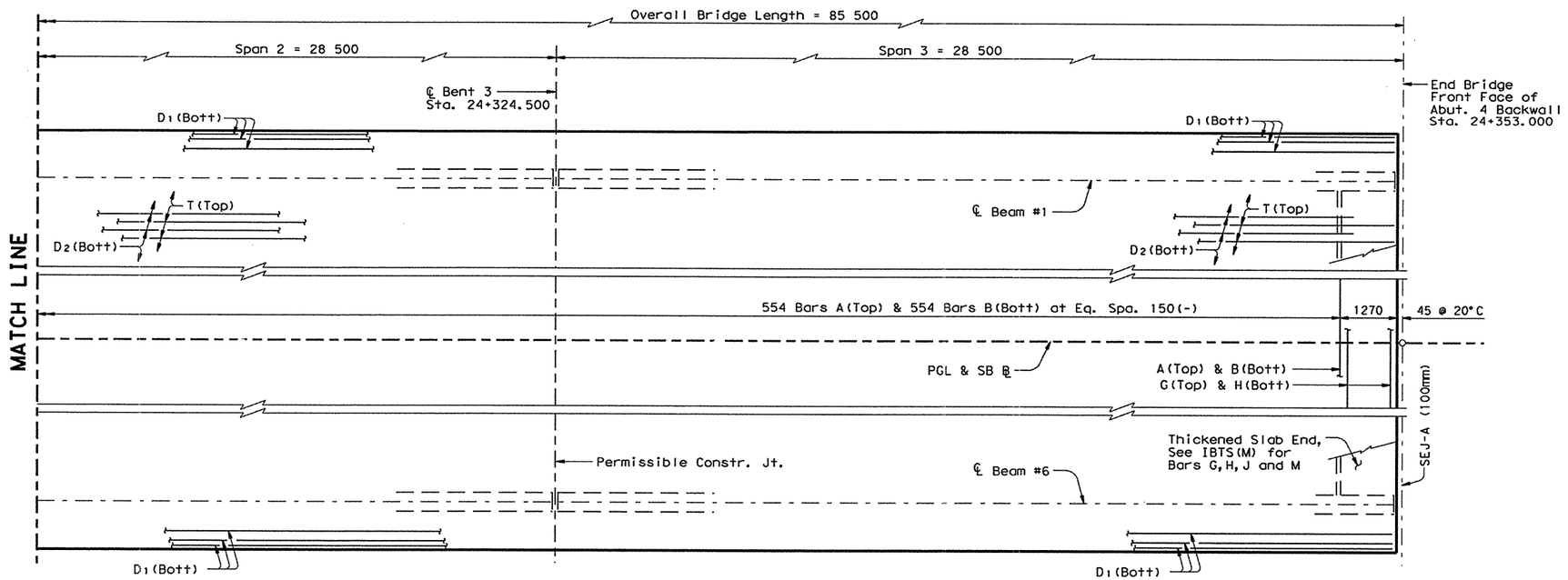


**PLAN**

STATE OF TEXAS
Manching W. Yu
84851
REGISTERED
PROFESSIONAL ENGINEER

Manching W. Yu, P.E
9-18-00

S & B INFRASTRUCTURE, LTD.

©2000 TEXAS DEPARTMENT OF TRANSPORTATION

# LOOP 1604 SB MAINLANE OVERPASS AT MEDIO CREEK SLAB PLAN

| | | | |
|---|---|---|---|
| DESIGNED BY: DE | CHECKED BY: KL | DATE: 09-18-00 | |
| DRAWN BY: TC | CHECKED BY: MW | DATE: 09-18-00 | |
| APPROVED BY: MW | DATE: 09-18-00 | PROJECT NO: 9432 | |

| FED. RD. DIV. NO. | FEDERAL AID PROJECT NO. | SHEET NO. |
|---|---|---|
| 6 | NH 2000 (704), etc. | 529 |

| STATE | STATE DIST. NO. | COUNTY | |
|---|---|---|---|
| TEXAS | SAT | BEXAR | |
| CONT. | SECT. | JOB | HIGHWAY NO. |
| 2452 | 01 | 036, etc. | LP 1604 |

18 SEP 2000 11:32:06 s:\project\u9432.200\design\data\cadd\dgn\sbml@medio\9432sbml*medsslab.dgn

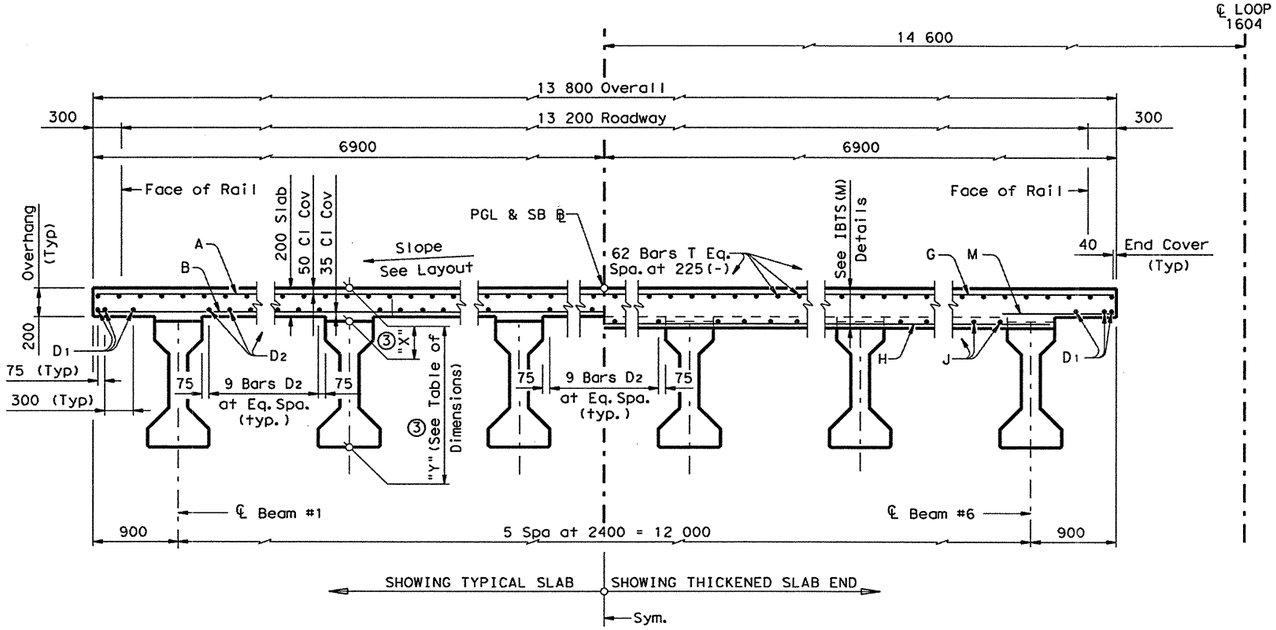


## TYPICAL TRANSVERSE SECTION

(LOOKING UPSTATION)

| Span | "A" | "B" |
|---|---|---|
| m | mm | mm |
| 28.500 | 17 | 24 |

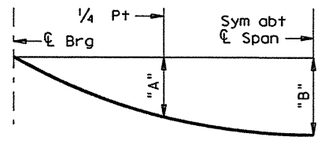


## DEAD LOAD DEFLECTION DIAGRAM

NOTE: Deflections shown are due to concrete slab only. ($E_c$ = 35,000 MPa) Calculated deflections shown are theoretical and actual dimensions may be less. Deflections shall be adjusted based on field observations.

## BAR TABLE

| Bar | Size |
|---|---|
| A | #5 |
| B | #5 |
| D | #5 |
| G | #5 |
| H | #5 |
| J | #5 |
| M | #5 |
| T | #5 |

## TABLE OF ESTIMATED QUANTITIES

| Reinf Concrete Slab | Prestressed Concrete ① Beams (Ty IV) | Class "S" Concrete | ②Total Reinf Steel |
|---|---|---|---|
| $m^2$ | m | $m^3$ | kg |
| 1179.9 | 511.2 | 240.8 | 37,757 |

① Fabricator shall adjust beam lengths for beam slopes as required.

② Reinforcing steel mass is calculated using an approximate factor of 32 kg/$m^2$.

## ③ TABLE OF DIMENSIONS

| | X | Y |
|---|---|---|
| Abut 1 Front | 255 | 1627 |
| Middle Span 1 | 223 | 1595 |
| Bent 2 Back | 255 | 1627 |
| Bent 2 Front | 255 | 1627 |
| Middle Span 2 | 226 | 1598 |
| Bent 3 Back | 255 | 1627 |
| Bent 3 Front | 255 | 1627 |
| Middle Span 3 | 238 | 1610 |
| Abut 4 Back | 255 | 1627 |

**GENERAL NOTES:**

1. Designed according to current AASHTO Standard and Interim Specifications.
2. See IBTS(M) Standard for Thickened Slab End Details and quantity adjustments.
3. See PCP(C)(M) or PMDF(C)(M) Standards for details and quantity adjustments if either of these options are used.
4. All reinforcing shall be Grade 420. Concrete strength f'c = 28 MPa.
5. All dimensions are in millimeters unless otherwise shown.
6. Bar laps, where required, shall be as follows:
   Uncoated ~ #5 = 560 mm

STATE OF TEXAS
Manching W. Yu
84851
REGISTERED PROFESSIONAL ENGINEER

Manching W. Yu, P.E
9-18-00

S & B INFRASTRUCTURE, LTD.

©2000 TEXAS DEPARTMENT OF TRANSPORTATION

**LOOP 1604 SB MAINLANE OVERPASS AT MEDIO CREEK TYPICAL SECTIONS**

| | | | |
|---|---|---|---|
| DESIGNED BY: DE | CHECKED BY: KL | DATE: 09-18-00 | |
| DRAWN BY: TC | CHECKED BY: MW | DATE: 09-18-00 | |
| APPROVED BY: MW | DATE: 09-18-00 | PROJECT NO: 9432 | |

| FED.RD. DIV.NO. | FEDERAL AID PROJECT NO. | SHEET NO. |
|---|---|---|
| 6 | NH 2000 (704), etc. | 530 |

| STATE | STATE DIST.NO. | COUNTY | |
|---|---|---|---|
| TEXAS | SAT | BEXAR | |
| CONT. | SECT. | JOB | HIGHWAY NO. |
| 2452 | 01 | 036, etc. | LP 1604 |

18 SEP 2000 11:32:08 s:\project\u9432.200\design*data\cadd\dgn\sbml@medio\9432sbml*medio*typsections.dgn

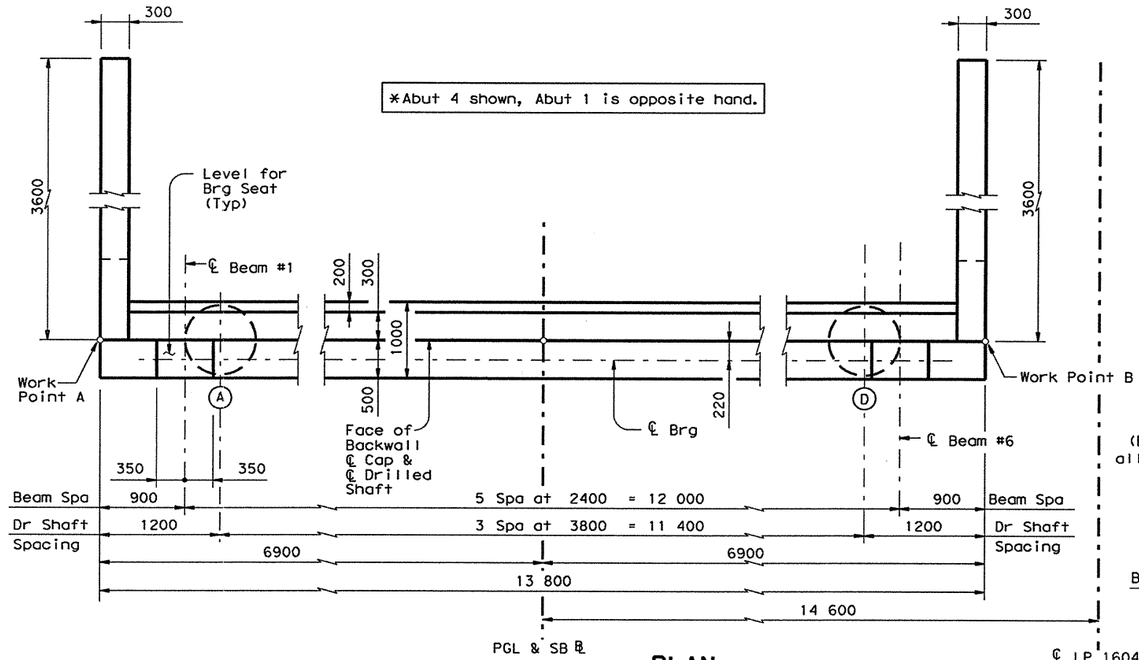


## PLAN

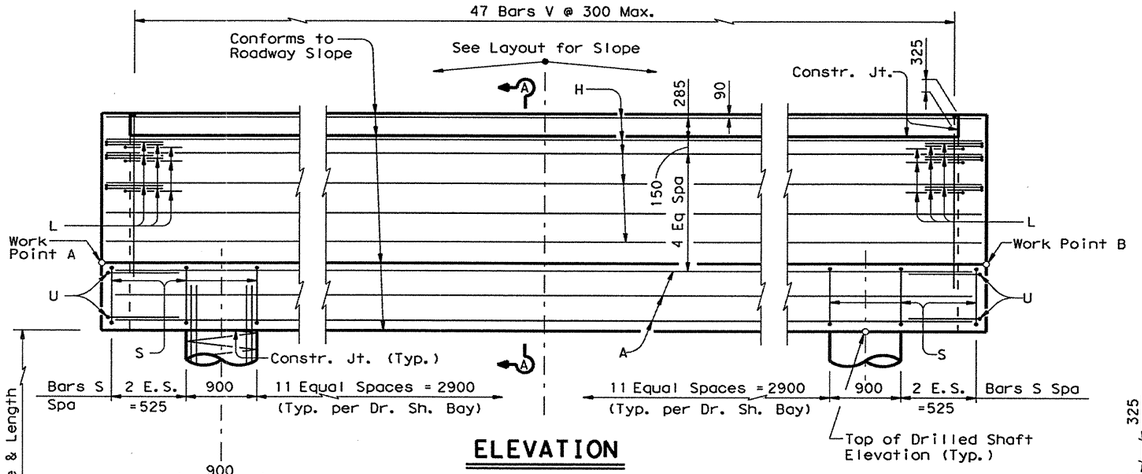


## ELEVATION

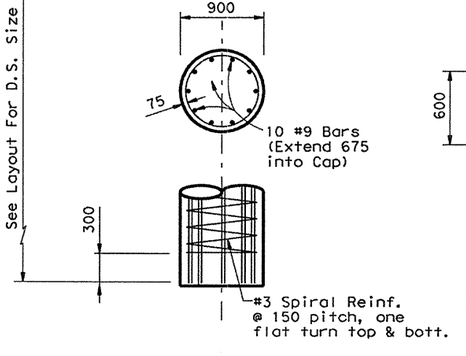


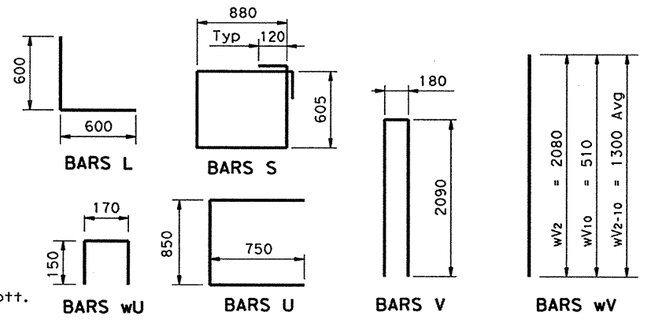


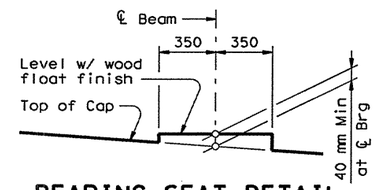


## BEARING SEAT DETAIL

(Bearing surface shall be clean and free of all loose material before placing bearing pad.)

NOTE: Built up portion of bearing seat shall be cast integrally with cap or constructed as follows. Area under built up portion to be bush hammered. Then pedestal shall be formed from mortar which has been treated with doraweld or weldcrete bonding agent or an approved equal. The bonding agent shall be mixed with the mortar in accordance with the manufacturer's recommendations.

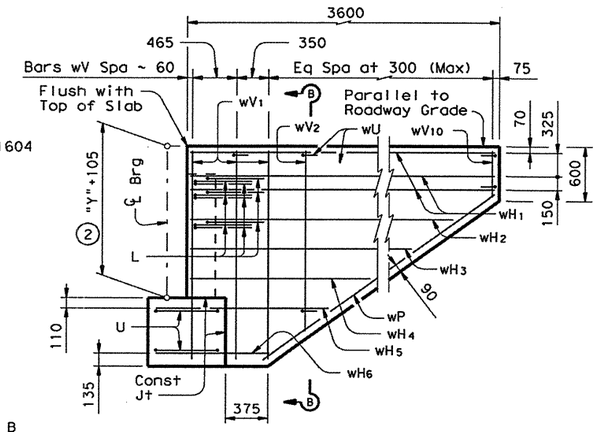


## WINGWALL ELEVATION

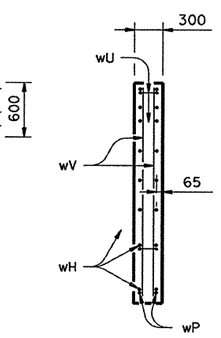


## SECTION B-B

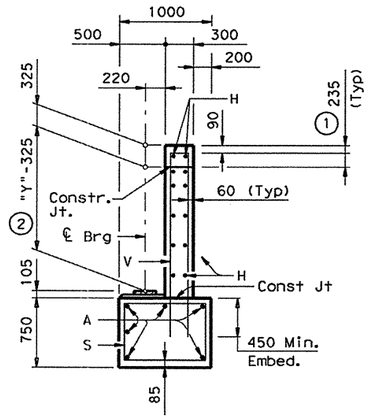


## SECTION A-A

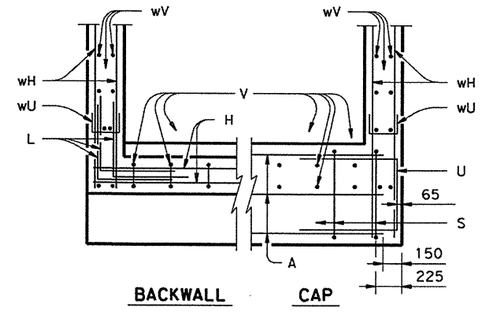


BACKWALL CAP

## CORNER DETAILS

### TOP OF DRILLED SHAFT ELEV. (m)

| Abut No. | D.S.A. | D.S.B. | D.S.C. | D.S.D. | W.P. A | W.P. B |
|---|---|---|---|---|---|---|
| 1 | 237.784 | 237.917 | 238.049 | 238.181 | 238.492 | 238.973 |
| 4 | 239.110 | 239.035 | 238.959 | 238.884 | 239.884 | 239.610 |

### TABLE OF ESTIMATED QUANTITIES

| Bar | No. | Size | Length | Mass |
|---|---|---|---|---|
| A | 6 | #11 | 13 500 | 640 |
| H | 12 | #5 | 13 700 | 255 |
| L | 18 | #6 | 1200 | 48 |
| S | 42 | #4 | 3210 | 134 |
| U | 4 | #6 | 2350 | 21 |
| V | 45 | #5 | 4360 | 305 |
| wH1 | 12 | #6 | 3500 | 94 |
| wH2 | 4 | #6 | 2960 | 26 |
| wH3 | 4 | #6 | 2490 | 22 |
| wH4 | 4 | #6 | 2020 | 18 |
| wH5 | 4 | #6 | 2050 | 18 |
| wH6 | 4 | #6 | 1320 | 12 |
| wP | 4 | #6 | 3280 | 29 |
| wU | 16 | #4 | 470 | 7 |
| wV1 | 12 | #5 | 2350 | 44 |
| wV2-10 | 36 | #5 | 1300Av | 73 |
| | | | | |
| | | | | |
| *Reinforcing Steel | | | kg | 1746 |
| Class "C" Concrete | | | m3 | 20.8 |

*For Contractors Information Only

1. Increase as required to maintain 90 mm from Finished Grade.
2. See Slab Typ. Section sheet for "Y".

### GENERAL NOTES:

1. All cap and backwall concrete shall be Class "C", f'c = 25 MPa.
2. All cap and wall reinforcing shall be Grade 420.
3. See Foundation Detail Standard Sheet, FD(M), for all foundation details and notes.
4. Calculated Drilled Shaft Load = 847 kN each.
5. All dimensions are in millimeters unless otherwise specified.
6. Chamfer an exposed corner 20mm unless otherwise specified.

STATE OF TEXAS
Manching W. Yu
84851
REGISTERED PROFESSIONAL ENGINEER

Manching W. Yu, P.E
9-18-00

S & B INFRASTRUCTURE, LTD.

©2000
TEXAS DEPARTMENT OF TRANSPORTATION

**LOOP 1604 SB MAINLANE OVERPASS AT MEDIO CREEK ABUTMENTS 1 & 4**

| | | | |
|---|---|---|---|
| DESIGNED BY: DE | CHECKED BY: KL | DATE: 09-18-00 | |
| DRAWN BY: TC | CHECKED BY: MW | DATE: 09-18-00 | |
| APPROVED BY: MW | DATE: 09-18-00 | PROJECT NO: 9432 | |

| FED.RD. DIV.NO. | FEDERAL AID PROJECT NO. | SHEET NO. |
|---|---|---|
| 6 | NH 2000 (704), etc. | 531 |

| STATE | STATE DIST. NO. | COUNTY | |
|---|---|---|---|
| TEXAS | SAT | BEXAR | |
| CONT. | SECT. | JOB | HIGHWAY NO. |
| 2452 | 01 | 036, etc. | LP 1604 |

18 SEP 2000 11:32:03 s:\project\u9432.200\design*data\cadd\dgn\sbml@medio\9432sbml*medabut.dgn

| TOP OF COLUMN ELEVATIONS (m) | | | | | |
|---|---|---|---|---|---|
| Bent No. | Col. A | Col. B | Col. C | W.P. A | W.P. B |
| 2 | 237.894 | 237.978 | 238.062 | 238.867 | 239.089 |
| 3 | 238.356 | 238.348 | 238.340 | 239.358 | 239.338 |

| TABLE OF VARIABLE QUANTITIES FOR 3 COLUMNS | | | | | | ESTIMATED QUANTITIES FOR 3 COLS | |
|---|---|---|---|---|---|---|---|
| Bent No. | "H" | Bars V 30 ~ #9 | | Bars Z 3 ~ #3 Spiral | | Reinf Steel | Class "C" Conc |
| | mm | Length | Mass | Length | Mass | kg | $m^3$ |
| 2 | 7030 | 7880 | 1196 | 114 000 | 191 | 1387 | 13.4 |
| 3 | 7400 | 8250 | 1252 | 119 800 | 201 | 1453 | 14.1 |

| TABLE OF BENT QUANTITIES | | | | |
|---|---|---|---|---|
| Bar | No. | Size | Length | Mass |
| A | 5 | #11 | 13 100 | 518 |
| B | 4 | #11 | 13 180 | 417 |
| D | 4 | 32 D | 500 | 12 |
| $S_1$ | 42 | #5 | 3 800 | 248 |
| $S_{2\text{-}9}$ | 16 | #5 | 3 500 Av | 87 |
| SS | 32 | #5 | 2970 | 148 |
| $T_1$ | 6 | #4 | 13 100 | 78 |
| $T_2$ | 4 | #4 | 11 650 | 46 |
| | | | | |
| *Reinforcing Steel | | | kg | 1554 |
| Class "C" Concrete | | | $m^3$ | 13.0 |

*For Contractors Information Only

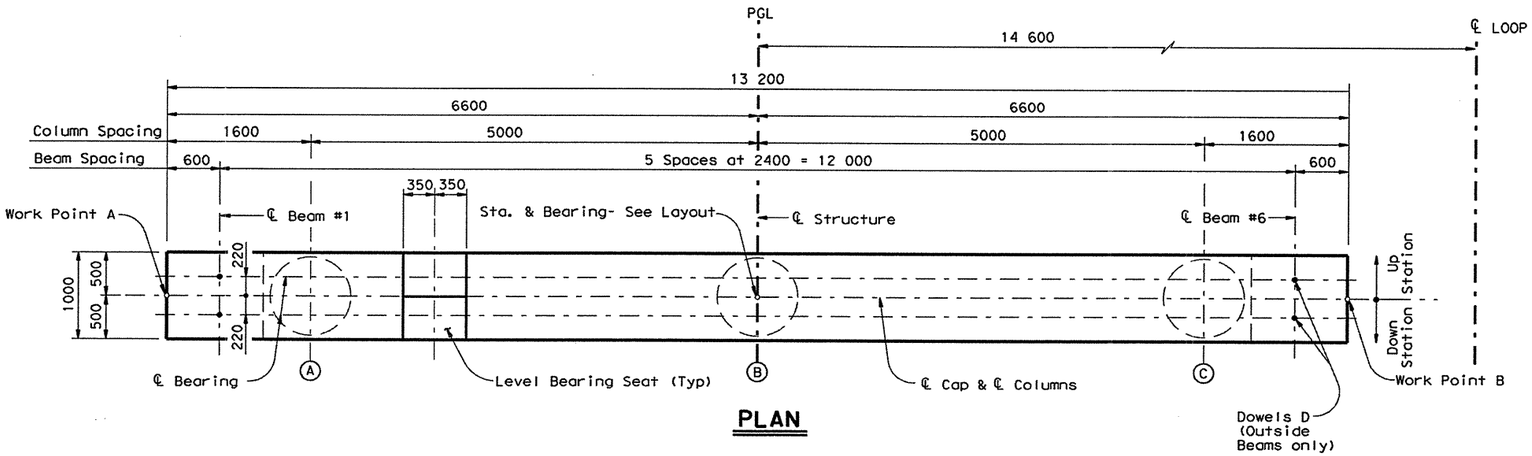


## PLAN

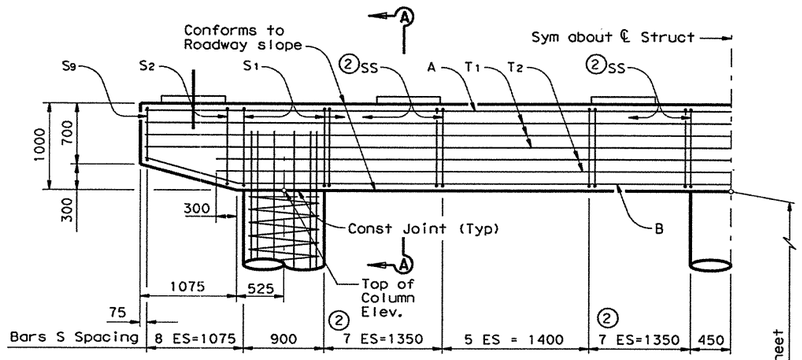


① At contractor's option the actual column dia may be 914 mm to accommodate existing equipment.

② Bars SS spaced with Bars S.

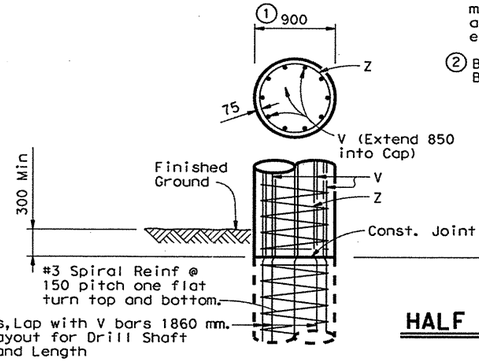


## HALF ELEVATION

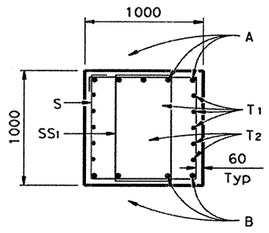


## SECTION A-A

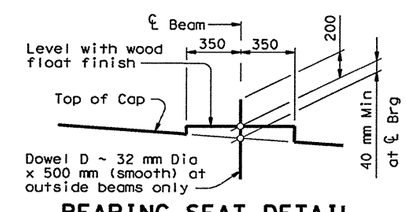


## BEARING SEAT DETAIL

(Bearing surface shall be clean and free of all loose material before placing bearing pad.)

### GENERAL NOTES:

1. All cap and column concrete shall be Class "C", fc' = 25 MPa.
2. All cap and column reinforcing shall be Grade 420.
3. See layout for drilled shaft length.
4. Calculated drilled shaft load = 1982 kN Each.
5. All dimensions are in millimeters unless otherwise specified.
6. Chamfer all exposed corners 20mm unless otherwise specified.

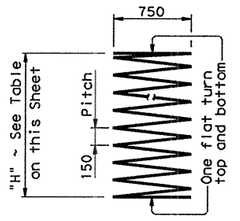


BARS Z

NOTE: Built up portion of bearing seat shall be cast integrally with cap or constructed as follows. Area under built up portion to be bush hammered. Then pedestal shall be formed from mortar which has been treated with doraweld or weldcrete bonding agent or an approved equal. The bonding agent shall be mixed with the mortar in accordance with the manufacturer's recommendations.

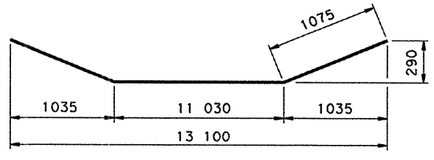


BARS B

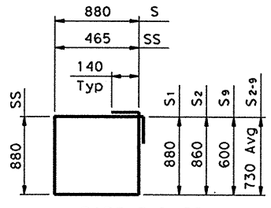


BARS S & SS

STATE OF TEXAS
Manching W. Yu
84851
REGISTERED PROFESSIONAL ENGINEER

Manching W. Yu, P.E.
9-18-00

S & B INFRASTRUCTURE, LTD.

©2000 TEXAS DEPARTMENT OF TRANSPORTATION

**LOOP 1604 SB MAINLANE OVERPASS AT MEDIO CREEK BENTS 2 & 3**

| DESIGNED BY: DE | CHECKED BY: KL | DATE: 09-18-00 |
|---|---|---|
| DRAWN BY: TC | CHECKED BY: MW | DATE: 09-18-00 |
| APPROVED BY: MW | DATE: 09-18-00 | PROJECT NO: 9432 |

| FED. RD. DIV. NO. | FEDERAL AID PROJECT NO. | SHEET NO. |
|---|---|---|
| 6 | NH 2000 (704), etc. | 532 |

| STATE | STATE DIST. NO. | COUNTY | |
|---|---|---|---|
| TEXAS | SAT | BEXAR | |
| CONT. | SECT. | JOB | HIGHWAY NO. |
| 2452 | 01 | 036, etc. | LP 1604 |

18 SEP 2000 11:32:05 s:\project\u9432.200\design\data\cadd\dgn\sbml@medio\9432sbml*med*bents.dgn

| STRUCTURE | DESIGNED BEAMS (DEPRESSED STRANDS) | | | | | | | | | | | | | OPTIONAL DESIGN | | |
|---|---|---|---|---|---|---|---|---|---|---|---|---|---|---|---|---|
| | SPAN NO. | BEAM NO. | BEAM TYPE | NON-STD STRAND PATTERN | PRESTRESSING STRANDS | | | | | | | CONCRETE | | DESIGN LOAD COMP STRESS (TOP ℄) | DESIGN LOAD TENSILE STRESS (BOTT ℄) | REQUIRED MINIMUM ULTIMATE MOMENT CAPACITY |
| | | | | | TOTAL | | | | | DEPRESSED | | RELEASE STRGTH | MINIMUM 28 DAY COMP STRGTH | | | |
| | | | | | NO. | SIZE (mm) | STRGTH f's (MPa) | "e" ℄ (mm) | "e" END (mm) | NO. | TO (mm) | f'ci (MPa) | f'c (MPa) | fct (MPa) | fcb (MPa) | (kN•m) |
| LP 1604 NB MAINLANE OVERPASS AT CULEBRA CREEK AND FM 471 (CULEBRA ROAD) | 1 - 6 | ALL | IV | | 56 | 13 | 1860 | 477 | 263 | 12 | 1305 | 40.7 | 50.9 | 27.8 | -30.3 | 9926 |
| | 7 | ALL | IV | | 56 | 13 | 1860 | 477 | 263 | 12 | 1305 | 40.9 | 51.9 | 28.3 | -30.7 | 9620 |
| | 8 | ALL | IV | | 20 | 13 | 1860 | 554 | 464 | 4 | 555 | 27.6 | 34.5 | 12.4 | -14.5 | 5174 |
| LP 1604 SB MAINLANE OVERPASS AT CULEBRA CREEK AND FM 471 (CULEBRA ROAD) | 1 - 6 | ALL | IV | | 56 | 13 | 1860 | 477 | 263 | 12 | 1305 | 40.7 | 50.9 | 27.8 | -30.3 | 9926 |
| | 7 | ALL | IV | | 56 | 13 | 1860 | 477 | 263 | 12 | 1305 | 40.9 | 51.9 | 28.3 | -30.7 | 9620 |
| | 8 | ALL | IV | | 20 | 13 | 1860 | 554 | 464 | 4 | 555 | 27.6 | 34.5 | 12.4 | -14.5 | 5174 |
| LP 1604 NB FRONTAGE ROAD OVERPASS AT CULEBRA CREEK | ALL | ALL | IV | | 46 | 13 | 1860 | 502 | 311 | 8 | 1305 | 36.4 | 44.3 | 24.9 | -26.9 | 8803 |
| LP 1604 SB FRONTAGE ROAD OVERPASS AT CULEBRA CREEK | ALL | ALL | IV | | 48 | 13 | 1860 | 497 | 278 | 10 | 1305 | 35.9 | 44.8 | 25.1 | -27.4 | 9068 |
| LP 1604 NB FRONTAGE ROAD OVERPASS AT MEDIO CREEK | ALL | ALL | IV | | 32 | 13 | 1860 | 530 | 352 | 6 | 1105 | 27.6 | 34.5 | 18.5 | -20.4 | 6808 |
| LP 1604 SB MAINLANE (FUTURE NBML) OVERPASS AT MEDIO CREEK | ALL | ALL | IV | | 32 | 13 | 1860 | 530 | 352 | 6 | 1105 | 27.6 | 34.5 | 18.2 | -20.0 | 6752 |

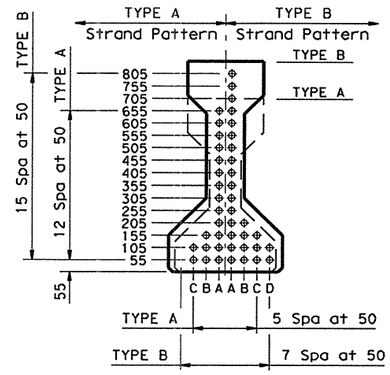


TYPE A & TYPE B BMS

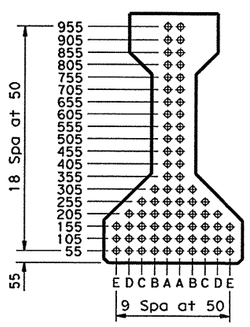


TYPE C BM

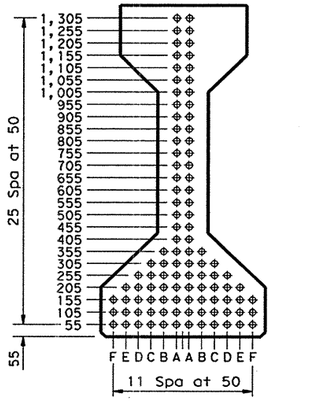


TYPE IV BM
(AASHTO TYPE IV BM)

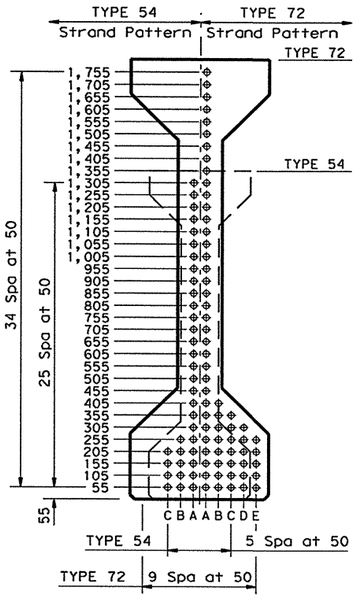


TYPE 54 & TYPE 72 BMS

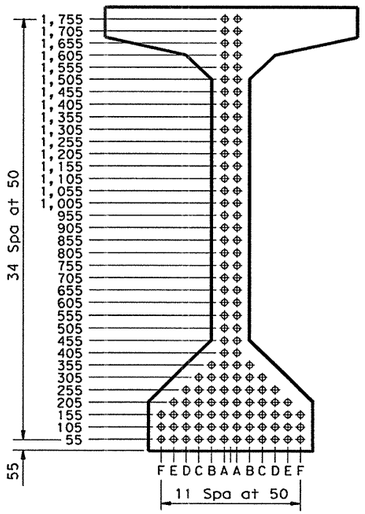


TYPE VIM BM
(AASHTO TYPE VI (MOD) BM)

GENERAL NOTES:

Designed in accordance with current AASHTO Standard Specifications.

All concrete shall be Class H. All reinforcing bars shall be Grade 420.

When shown on this sheet, the Fabricator has the option of furnishing either the designed depressed strand beam or an approved optional design. All optional design submittals and shop drawings shall be signed, sealed and dated by a registered Professional Engineer.

Optional designs for beams 36,000 mm or longer shall have a calculated residual camber equal to or greater than that of the designed beam.

Prestress losses for the designed beams have been calculated for a relative humidity of 75 percent. Optional designs shall likewise conform.

Certain beams with depressed strands are subject to cracking in the end of the beam. When such cracks occur, all subsequent beams of the same type and strand pattern shall have strands debonded in the following manner:

1. Alternate rows of depressed strands shall be debonded for 600 mm from each end of the beam.
2. One half of the straight strands, as nearly as possible, shall be debonded for 1,200 mm from each end of the beam.
3. The debonding pattern shall be symmetrical about the vertical axis of the beam for both depressed and straight strands.
4. Strands shall be debonded so that the centers of gravity of the depressed strands and the straight strands will remain within 25 mm of their original location.
5. Strands shall be encased in plastic tubing along entire debonded length, and ends of tubing shall be sealed with waterproof tape. Split plastic tubing may be used provided the seam of the tubing is sufficiently sealed with waterproof tape to prohibit grout infiltration. Wrapping of strands with tape to provide debonding will not be permitted.
6. Revised shop drawings will not be required.

For depressed strand designed beams, strands shall be located as low as possible on the 50 mm grid system unless a Non-Standard Strand Pattern is indicated. Fill row "55", then row "105", then row "155", etc., beginning each row in the "A" position and working outward until the required number of strands is reached. All strands in the "A" position shall be depressed, maintaining the 50 mm spacing so that, at the beam ends, the upper two strands are in the position shown in the table.

Strands for the designed beam shall be 13 mm 1860 MPa low relaxation strands pretensioned to 138 kN each.

Type 54 Beams shall not be used for new structures, but may be used to widen existing bridges built with Type 54 Beams.

Manching W. Yu, P.E
9-18-00

S & B INFRASTRUCTURE, LTD.

©2000 TEXAS DEPARTMENT OF TRANSPORTATION

**LOOP 1604 PRESTRESSED CONC. I-BEAMS**

| DESIGNED BY: DE | CHECKED BY: KL | DATE: 09-18-00 |
|---|---|---|
| DRAWN BY: TC | CHECKED BY: MW | DATE: 09-18-00 |
| APPROVED BY: MW | DATE: 09-18-00 | PROJECT NO: 9432 |

| FED. RD. DIV. NO. | FEDERAL AID PROJECT NO. | SHEET NO. |
|---|---|---|
| 6 | NH 2000 (704), etc. | 533 |

| STATE | STATE DIST. NO. | COUNTY | |
|---|---|---|---|
| TEXAS | SAT | BEXAR | |
| CONT. | SECT. | JOB | HIGHWAY NO. |
| 2452 | 01 | 036, etc. | LP 1604 |

18 SEP 2000 10:51:47 s:\project\u9432.200\design*data\cadd\dgn\nbml@culebra\9432nbml*culebra_nbml*beams.dgn

| ESTIMATED QUANTITIES | | | |
|---|---|---|---|
| DESCRIPTION | UNIT | EST. | FINAL |
| EXCAVATION (CHANNEL) | M3 | 14214 | |

QUANTITIES THIS SHEET
CSJ 2452-01-036

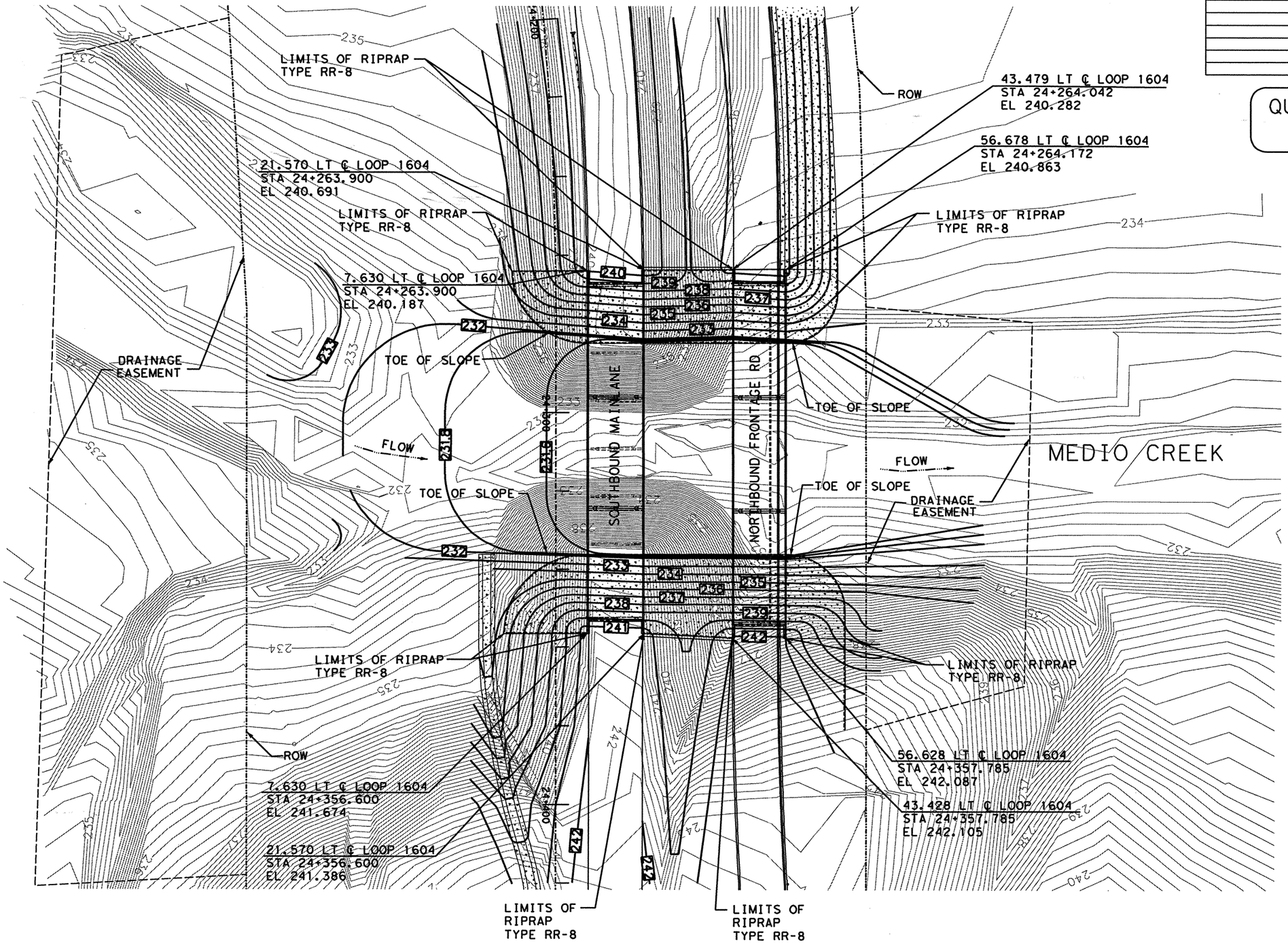


NOTE: 1.) ALL DIMENSIONS ARE IN METERS UNLESS NOTED OTHERWISE.

2.) QUANTITIES ARE SUMMARIZED ON THE LARGE STRUCTURE SUMMARY SHEET.

3.) PROPOSED CONTOURS SHOWN ARE FOR EVERY WHOLE METER UNLESS OTHERWISE SHOWN.

SCALE: 1:1000


555 EAST RAMSEY SAN ANTONIO TEXAS 78216 PHONE (210)375-9000 FAX (210)375-9010

PAPE-DAWSON ENGINEERS CIVIL & ENVIRONMENTAL

STATE OF TEXAS K. STEPHEN BONNETTE 60928 REGISTERED PROFESSIONAL ENGINEER

K. STEPHEN BONNETTE, P.E. 9/20/00 DATE



© 2000 Texas Department of Transportation


# SB MAINLANE AND NB FRONTAGE ROAD BRIDGE AT MEDIO CREEK GRADING PLAN

SHEET 1 OF 1

| DN: | | | | | PROJECT NO. | | |
|---|---|---|---|---|---|---|---|
| CK DN: | | | | | NH 2000 (704), etc. | | |
| DW: | CONTROL | SECTION | JOB | DIST. | COUNTY | HIGHWAY NO. | SHEET NO. |
| CK DW: | 2452 | 01 | 036 etc. | SAT | BEXAR | LOOP 1604 | 534 |

Plotted on: 09/19/00

Design Filename: j:\3941\16\civil\design\plansheets\3941l6gr02.dgn

DISCLAIMER:
The use of this standard is governed by the "Texas Engineering Practice Act". No warranty of any kind is made by TxDOT for any purpose whatsoever. TxDOT assumes no responsibility for the conversion of this standard to other formats or for incorrect results or damages resulting from its use.

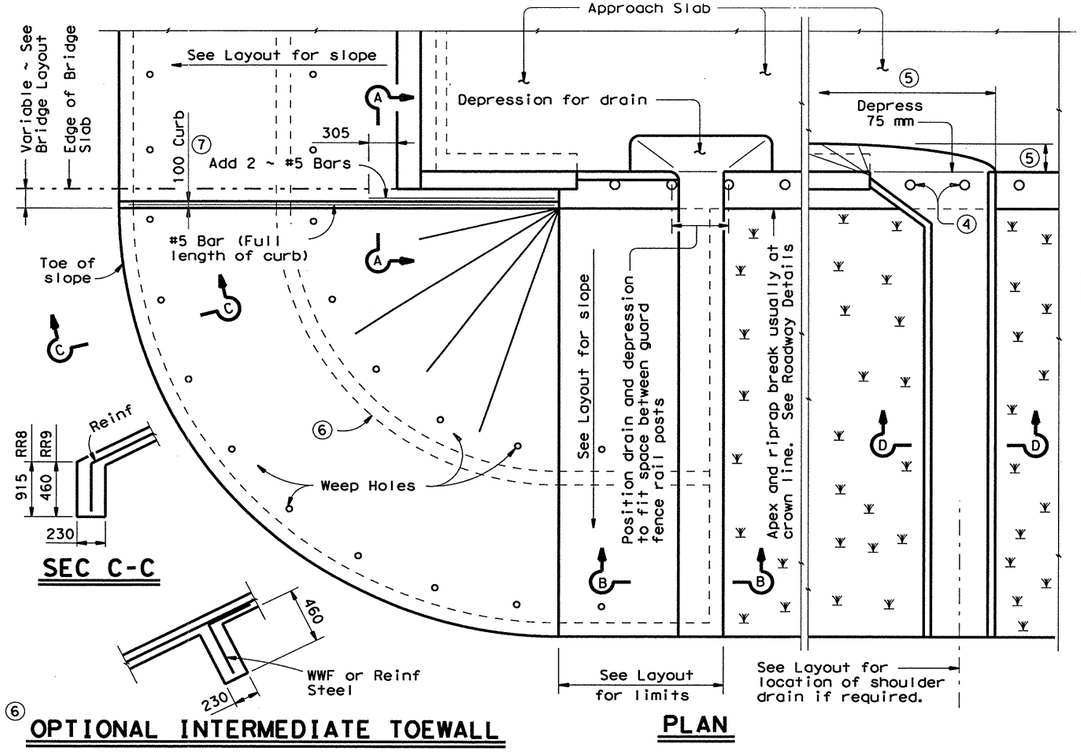


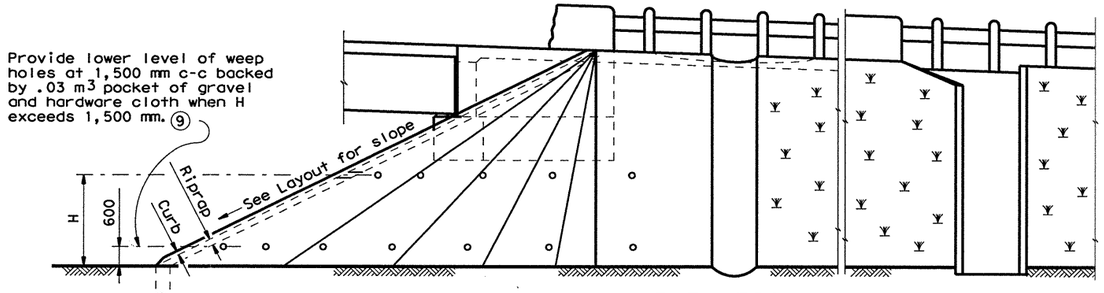


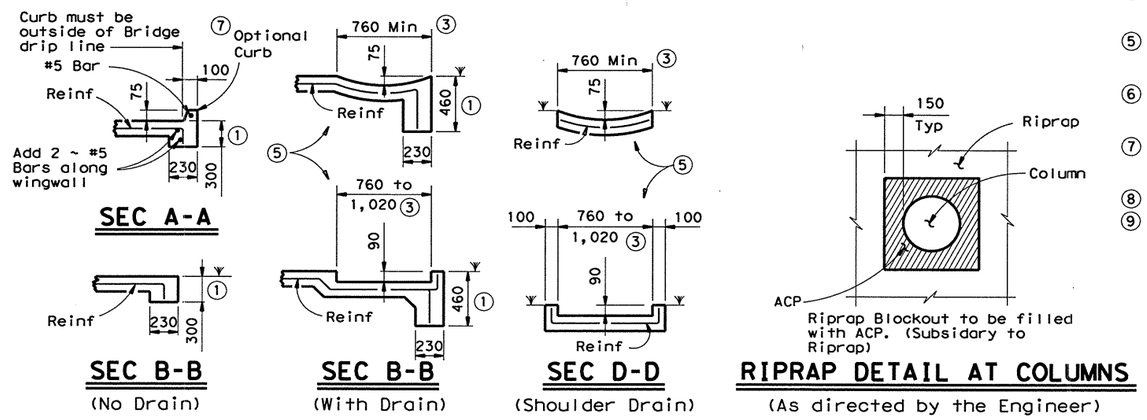


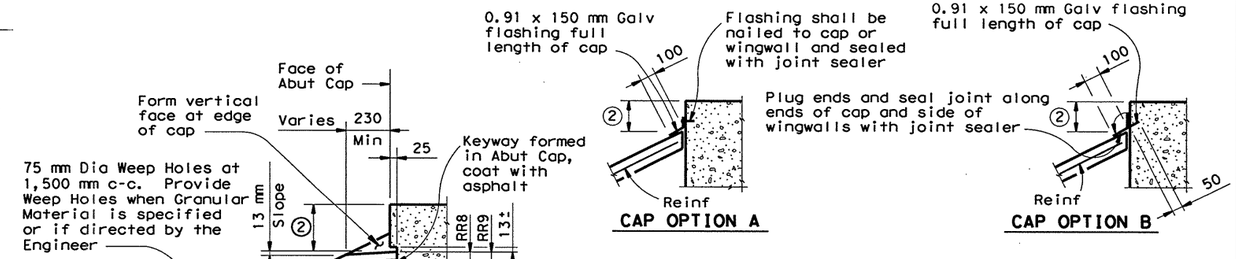


Note: The sealing option of the joint between the face of cap and riprap shall be as designated by the Engineer or as shown elsewhere on plans.

Note: Flashing (shown in Cap Option A) may be used at wingwall in addition to Exp Jt Mat'l if shown on plans or directed by the Engineer.

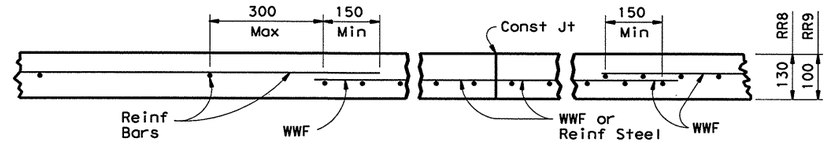


Note: Reinforcing bars shall be #3 at 450 mm spac c-c. Welded wire fabric shall be 152 x 152 - MW19 x MW19. Combinations of WWF and reinforcing bars may be used if both are permitted. Lap splices shall be a minimum of 150 mm, measured from the transverse wire of WWF, and the ends of reinforcing bars.

## DETAILS OF WWF, REINF AND CONST JOINT

1. Wall extension may be reduced or modified if approved by the Engineer. Wall extension shall be increased to 460 mm whenever the optional Intermediate Toewall is called for in the plans.
2. Top of cap to top of riprap dimension varies as directed by the Engineer. Should be 230 mm Min for stringer type bridges and 460 mm for slab type bridges.
3. Wider or other drain configurations shall be used if shown elsewhere in plans or if directed by the Engineer.
4. A 300 mm Dia void should be provided in the riprap at the guard fence location. Backfill with 100 mm of ACP if directed by the Engineer.
5. Limits and configuration of drains and depressions shall be as shown elsewhere in plans or as directed by the Engineer.
6. The optional Intermediate toe wall shall be constructed when designated elsewhere in the plans or included in the specifications.
7. When riprap is shown extended around header on layout, extend slab and toewall as shown and eliminate 100 mm curb.
8. 1.21 x 200 mm Galv Sheet Metal
9. If erodable soils occur in the embankment

FOR CONTRACTOR'S INFORMATION ONLY:
130 mm of RR8 = .130 $m^3/m^2$
100 mm of RR9 = .100 $m^3/m^2$
#3 Reinf at 450 mm c-c = 2.49 $kg/m^2$
152 x 152 - MW19 x MW19 = 2.05 $kg/m^2$

GENERAL NOTES

Concrete shall be Class B unless noted elsewhere in plans.

Reinforcing other than that shown may be used by substituting reinforcement of equal or greater unit cross-sectional area. The Maximum reinforcement spacing shall be 450 mm.

Construction joints or grooved joints extending the full slant slope height shall be at intervals of approximately 6,000 mm unless otherwise directed by the Engineer.

Porous Concrete Filter Blanket and Gravel Backfill shall be placed if shown elsewhere in the plans or if directed by the Engineer.

Hardware cloth, loose graded stone behind weep holes, flashing, or other sealing material shall not be paid for directly but shall be subsidiary to the bid item, Riprap.

Unless specified elsewhere in the plans to be only reinforcing bars, the riprap reinforcing may be composed of reinforcing bars, welded wire fabric, or any suitable combination of both types.

See Layout for limits of riprap.
RR8 is to be used on stream crossings.
RR9 is to be used on other embankments.
All dimensions are in millimeters unless otherwise shown.

Texas Department of Transportation
Design Division (Bridge)

# CONCRETE RIPRAP
## FOR EMBANKMENT SLOPES UNDER BRIDGE ENDS (TYPES RR8 & RR9)

# CRR (M)

| FILE: crrstdm1.dgn | DN: JJP | CK: THD | DW: DRG | CK: LDS | NEG: | B202M |
|---|---|---|---|---|---|---|
| © TxDOT September 1998 | DIST | FED REG | FEDERAL AID PROJECT • | | | SHEET |
| REVISIONS | SAT | 6 | NH 2000 (704), etc | | | 535 |
| | COUNTY | | CONTROL | SECT | JOB | HIGHWAY |
| | BEXAR | | 2452 | 01 | 036, etc. | LP1604 |

ACC: (LV=1,3 for Metric)
LEVELS Dis—ayED
1 3

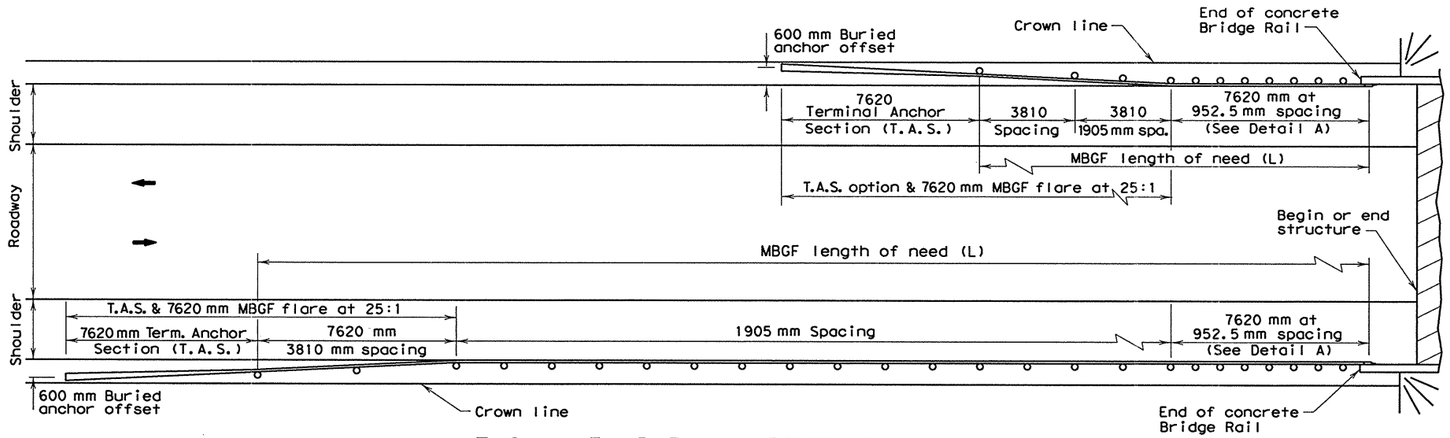


## TWO LANE (RURAL) HIGHWAYS

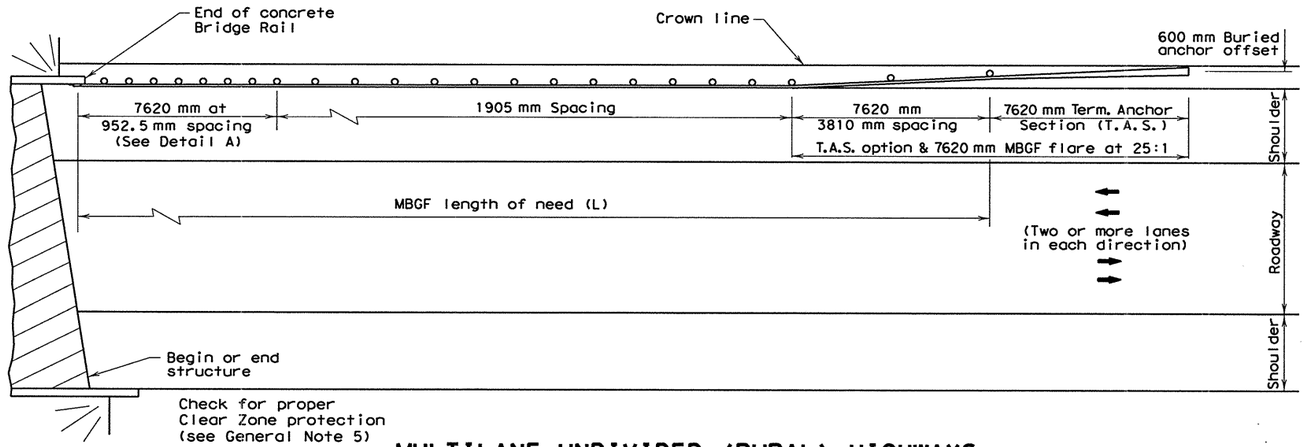


## MULTILANE UNDIVIDED (RURAL) HIGHWAYS

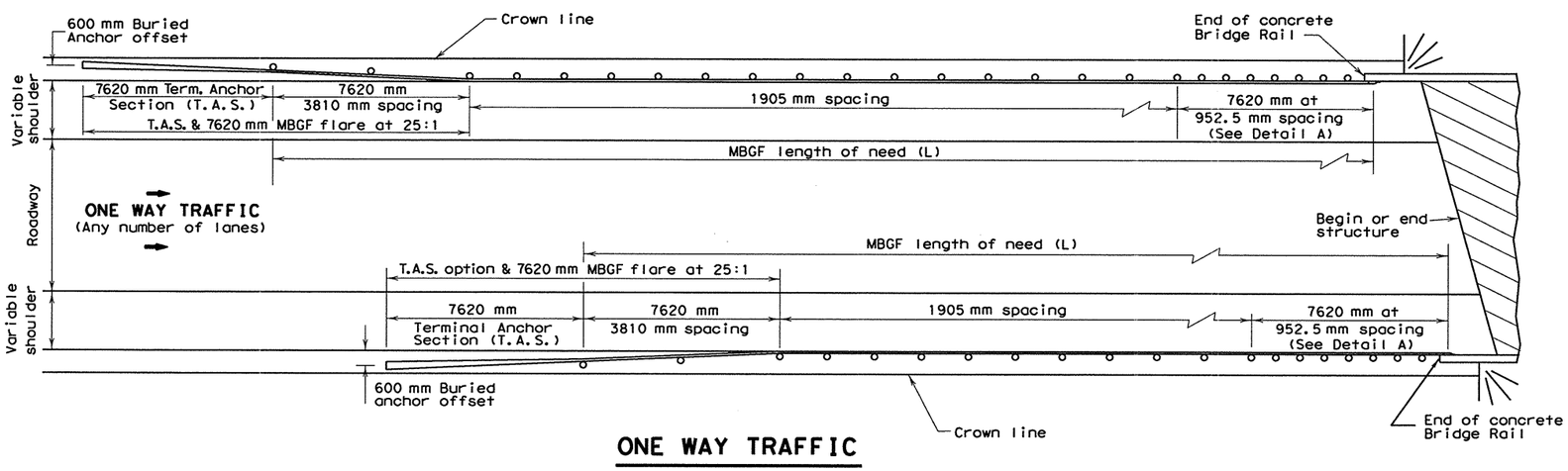


## ONE WAY TRAFFIC

## GENERAL NOTES

1. For metal beam guard fence details, see MBGF plan sheet.
2. Quantities of metal beam guard fence (MBGF) at individual bridge ends are shown elsewhere in plans.
3. Use average daily traffic (ADT) for the current year to determine MBGF length of need in accordance with the Operations and Procedures (Design) Manual unless otherwise specified. Where significant traffic volume growth is anticipated on low volume (0-750 ADT) highways use length determinations for the higher volume category.
4. Where length (L) of MBGF used is 15,240 mm, post spacing shall be as detailed hereon (See plan layout for two lane (rural) highways, left side of traffic approaching bridge). Where length (L) of MBGF is 22,860 mm or more, post spacing shall be 952.5 mm for the 7620 mm section adjacent to the bridge, 3810 mm for the 7620 mm section ajacent to the T.A.S., and 1905 mm for the remaining intervening length. When T6 bridge rail is used, the min. MBGF post spacing shall be 1905 mm.
5. MBGF may not be required to shield departure end of bridge unless other hazards within the clear zone warrant MBGF. Where installed on the departure end, 1905 mm post spacing is acceptable throughout the placement length including adjacent to bridge end.
6. When specified, the T.A.S. and typically adjacent 7620 mm MBGF should be flared from the shoulder edge at 25:1 (longitudinal:lateral) to provide a 600 mm usual offset to buried anchor.
7. When end treatments other than T.A.S. are used, post spacing shall be 952.5 mm for the 7620 mm section adjacent to the bridge and 1905 mm for the remaining length of need. See the end treatment detail sheet(s) for additional information.
8. The crown will be widened to accommodate MBGF. Typically the crown line should be 610 mm from the back of the MBGF post. This applies to new construction on new alignment or where existing roadway cross section is to be widened to increase roadway width. This does not apply to rehabilitation work where existing roadway crown width is to be retained (See Typical Cross Section).
9. For restrictive width bridges, a 7620 mm tangent section of MBGF should connect to the wingwall. The adjoining MBGF that lies within the roadway (Lanes & Shoulder area) crown should be flared at the rate of 25:1 (Longitudinal : Lateral). Length at these bridges should be determined as stated above or the length necessary to locate the buried anchor at a 600 mm offset from shoulder edge, whichever is greater.
10. Variations in post spacings and/or the use of spacer blocks or shims may be required by the Engineer in order to accommodate the required rail connection to existing structures.

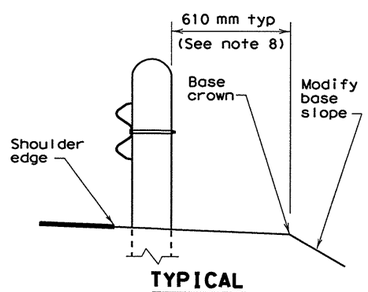


**TYPICAL CROSS SECTION**

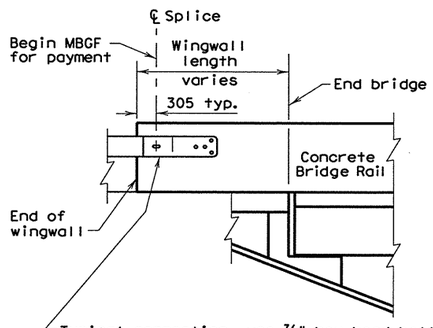


Typical connection, use 7/8" hex head bolts with washers under nut and bolt head (See Bridge Rail or other plansheets for details of MBGF to Bridge Rail connection).

**DETAIL A**

R = Radius
D = Diameter

All unit-less dimensions are millimeters

Texas Department of Transportation
Design Division (Roadway)

# BRIDGE END DETAILS

# BED-95 (M)

| FILE: BED95M.DGN | DN: GTH | CK: GTH | DW: BGD | CK: TGM | NEG: | |
|---|---|---|---|---|---|---|
| © TxDOT 1995 | DIST | FED REG | FEDERAL AID PROJECT • | | | SHEET |
| REVISIONS | SAT | 6 | NH 2000 (704), etc. | | | 536 |
| | COUNTY | | CONTROL | SECT | JOB | HIGHWAY |
| | BEXAR | | 2452 | 01 | 036, etc. | LP1604 |

DISCLAIMER:
The use of this standard is governed by the "Texas Engineering Practice Act". No warranty of any kind is made by TxDOT for any purpose whatsoever. TxDOT assumes no responsibility for the conversion of this standard to other formats or for incorrect results or damages resulting from its use.

LEVELS DESIGNATED
1 2 3 4 5 6 7 8 9 10 11 12 13 14 15 16
17 18 19 20 21 22 23 24 25 26 27 28 29 30 31 32
33 34 35 36 37 38 39 40 41 42 43 44 45 46 47 48
49 50 51 52 53 54 55 56 57 58 59 60 61 62 63

DISCLAIMER:
The use of this standard is governed by the "Texas Engineering Practice Act". No warranty of any kind is made by TxDOT for any purpose whatsoever. TxDOT assumes no responsibility for the conversion of this standard to other formats or for incorrect results or damages resulting from its use.

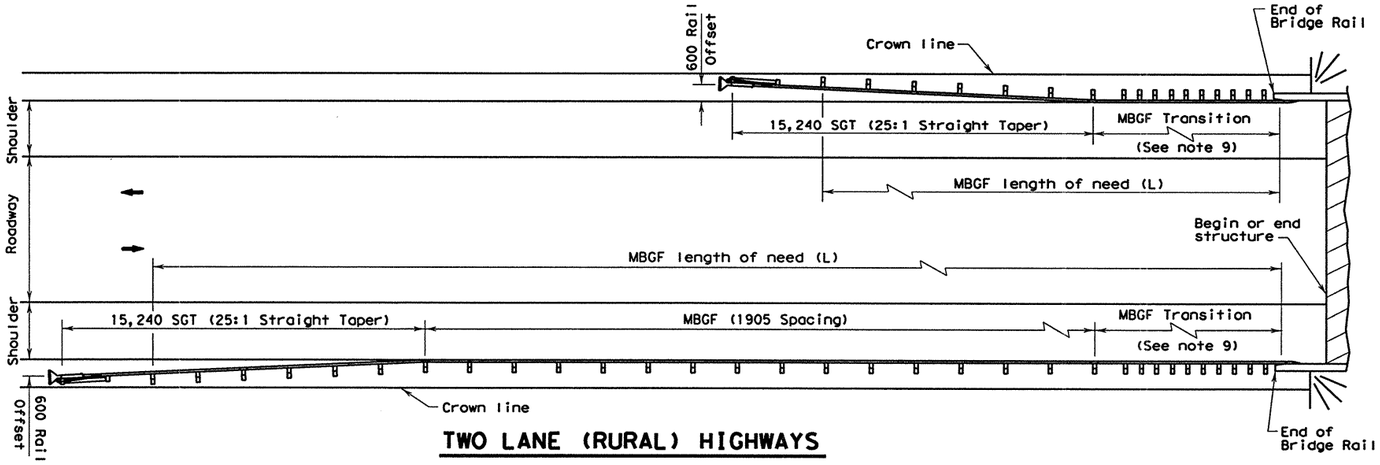


## TWO LANE (RURAL) HIGHWAYS

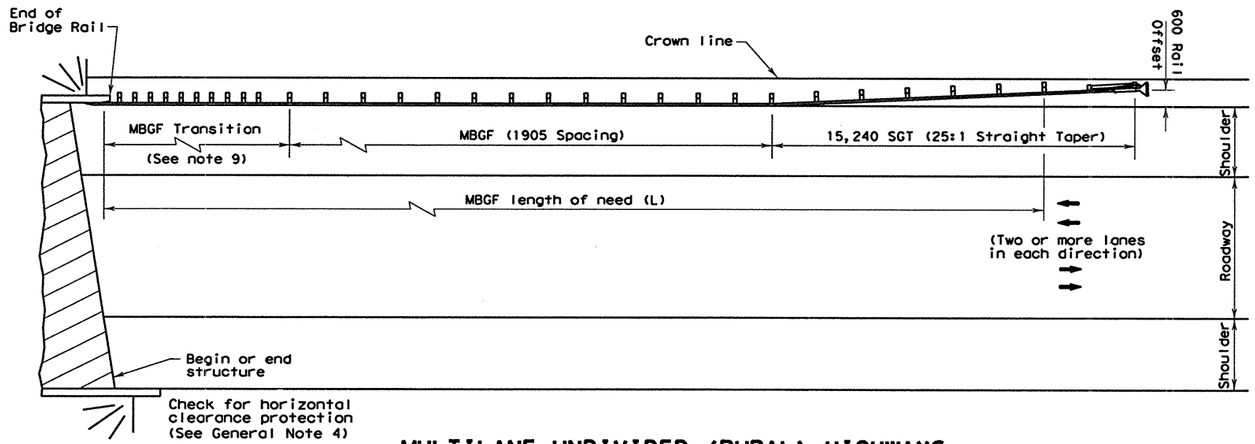


## MULTILANE UNDIVIDED (RURAL) HIGHWAYS

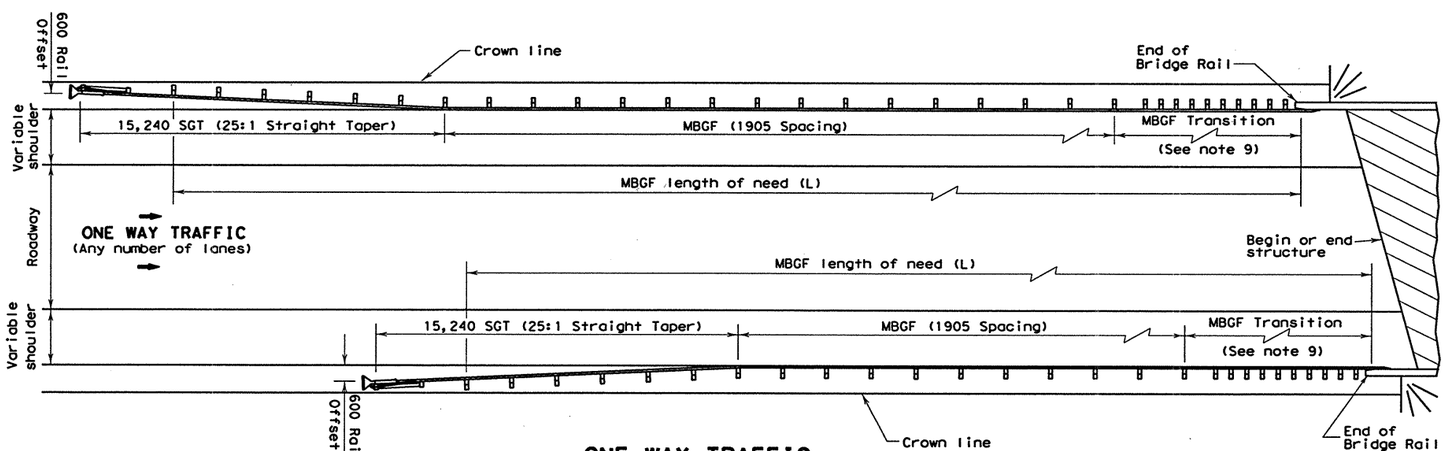


## ONE WAY TRAFFIC

## GENERAL NOTES

1. For more detail: See MBGF, SGT, and MBGF transition standard sheets.
2. Quantities of metal beam guard fence (MBGF) at individual bridge ends are shown elsewhere in plans.
3. Use average daily traffic (ADT) for the current year to determine MBGF length of need in accordance with the Roadway Design Manual unless otherwise specified. Where significant traffic volume growth is anticipated on low volume (0-750 ADT) highways, use length determinations for the higher volume category.
4. MBGF may not be required to shield departure end of bridge unless other obstacles within the horizontal clearance limits or opposing traffic indicate a MBGF consideration.
5. Terminal anchor sections (T.A.S) are only for downstream end anchorage usage outside the horizontal clearance area of opposing traffic.
6. The crown will be widened to accommodate MBGF. Typically the crown line should be 600 mm from the back of the MBGF post. This applies to new construction on new alignment or where existing roadway cross section is to be widened to increase roadway width. This does not apply to rehabilitation work where existing roadway crown width is to be retained (See Typical Cross Section at MBGF).
7. For restrictive width bridges, a 5715 mm tangent section of MBGF should connect to the wingwall. The adjoining MBGF that lies within the roadway (Lanes & Shoulder area) crown should be flared at the rate of 25:1 (Longitudinal : Lateral). Length at these bridges should be determined as stated above or the length necessary to locate the terminal end at a 600 mm offset from shoulder edge, whichever is greater.
8. Variations in post spacings and/or the use of spacer blocks or shims may be required by the Engineer in order to accommodate the required rail connection to existing structures.
9. Transition length and post spacing will vary depending on transition type. Transition type will be shown elsewhere in the plans.

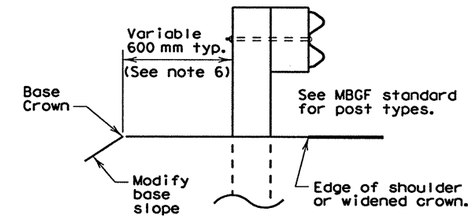


## TYPICAL CROSS SECTION AT MBGF

All unit-less dimensions are millimeters

Texas Department of Transportation
Design Division (Roadway)

# BRIDGE END DETAILS

# BED-02(M)

| FILE: bed02m.dgn | DN: MAM | CK: MAM | DW: BGD | CK: MAM | NEG: | |
|---|---|---|---|---|---|---|
| ©TxDOT 1995 | DIST | FED REG | FEDERAL AID PROJECT • | | | SHEET |
| REVISIONS | 15 | 6 | NH 2000(704), etc | | | 536A |
| | COUNTY | | CONTROL | SECT | JOB | HIGHWAY |
| | BEXAR | | 2452 | 01 | 036, etc | LP 1604 |

DISCLAIMER:
The use of this standard is governed by the "Texas Engineering Practice Act". No warranty of any kind is made by TxDOT for any purpose whatsoever. TxDOT assumes no responsibility for the conversion of this standard to other formats or for incorrect results or damages resulting from its use.

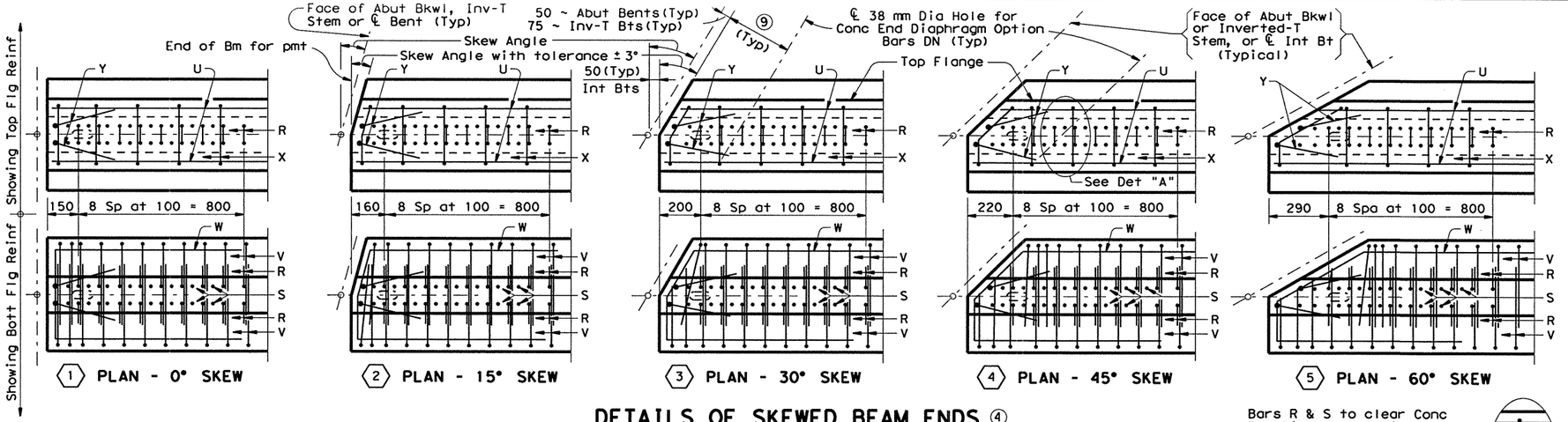


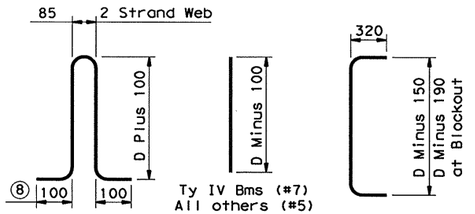


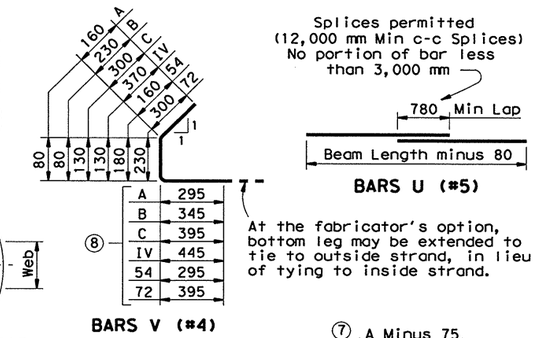


## DETAILS OF SKEWED BEAM ENDS ④

④ Reinforcing patterns shown above are to be used as guides in determining the reinforcement for the actual beam type (Type C shown) and the skew angle used. In general, the distance between consecutive Bars R and/or S shall be 50 mm. This spacing may be varied in order to avoid Dowel Holes or Conc End Diaphragm Option holes (See Detail "A"). However, a minimum cross sectional area equivalent to that of Bars R & S in square beam end shall be provided.

Note: It is permissible for bars or strands to come in contact with materials used in forming anchor and diaphragm holes.

Note: See span details for location of interior diaphragms, if any. For skewed spans, location of diaphragms may vary from beam to beam.

① Note: Anchorage holes may be tapered (120 x 40 mm) at base. If holes are formed with sheet metal, forms may be left in place.

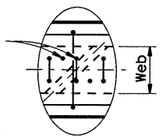


DETAIL "A"

⑧ Bars may be cut or bent at skewed end as required

⑦ Increase for first bar at skewed end

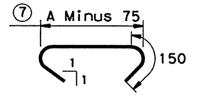


BARS X (#3)

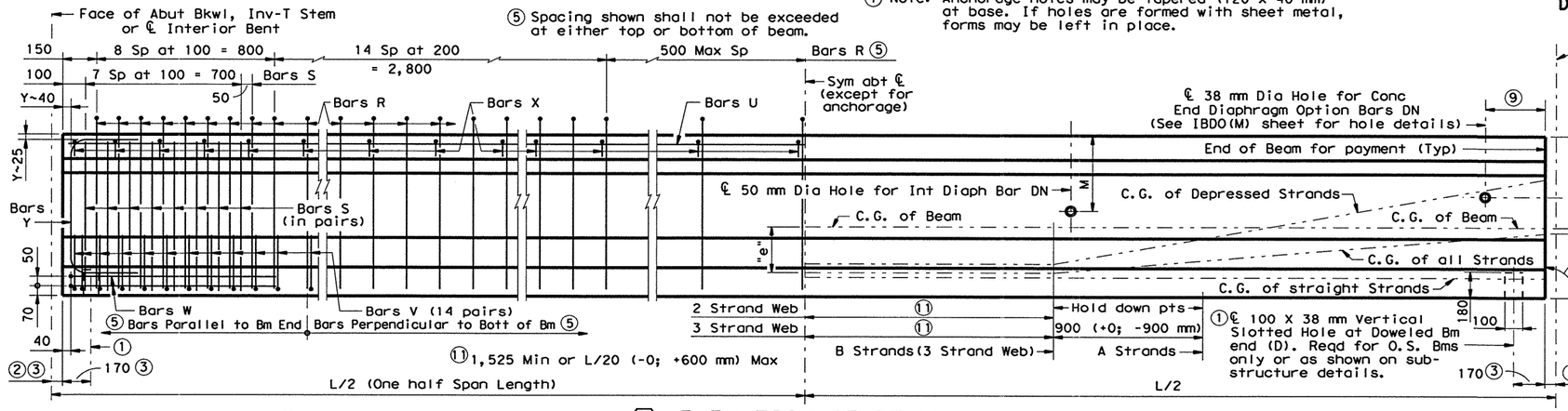


⑥ ELEVATION OF BEAM

Face of Abut Bkwl, Inverted-T Stem or ℄ Interior Bent

⑨ [370 - Cos Skew Angle x 50] at Int Bts
[320] at Abut Bts & Inv-T Bts
Perpendicular to Face of Abut Bkwl or Inv-T Stem.

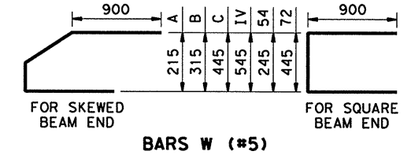


BARS W (#5)

90° At Int Bents ~ End of beam shall be vertical at Abut Bkwl & Inv-T (1° Tolerance)

GENERAL NOTES:
Designed in accordance with current AASHTO Specifications.
All concrete shall be Class H.
Bottom corners of all beam flanges and outside corners of exterior beam ends shall be chamfered 20 mm or rounded to a 40 mm radius.
Diaphragm holes in ends of beam only for use with concrete end diaphragm option.
The use of diaphragm holes for lifting purposes will not be permitted.
All reinforcing bars for beams shall be Grade 420.
An equal area of welded wire fabric may be substituted for Bars R, V, S or X if approved by the Engineer.
All dimensions are in millimeters unless otherwise shown.

② 75 mm ~ Inv-T Stem
50 mm ~ Abut Bkwl & Int Bts

③ Measured along ℄ beam at Int Bts; perpendicular to Abut Bkwl or Inv-T Stem

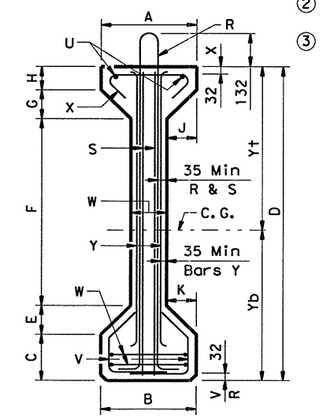


⑦ TYPES 54 & 72 BEAMS

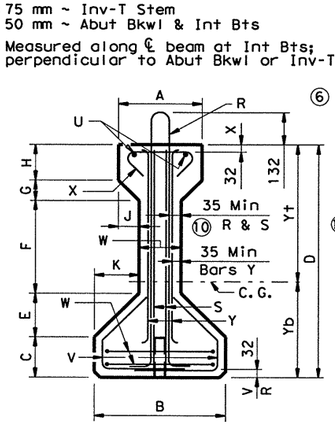


⑧ TYPES A, B, C & IV BEAMS

⑥ 1,200 mm / Cosine of Skew Angle

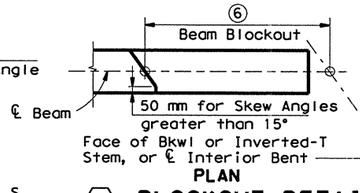


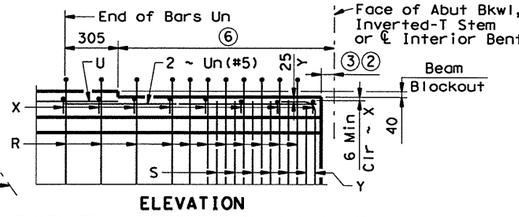


⑨ BLOCKOUT DETAIL FOR THICKENED SLAB END

Note: Beam blockout required only when beam haunch at ℄ Brg is less than 50 mm.

⑩ 70 mm for Bars S ~ with 3-Strand Web only

**BEAM DIMENSIONS AND SECTION PROPERTIES**

| BEAM TYPE | A (mm) | B (mm) | C (mm) | D (mm) | E (mm) | F (mm) | G (mm) | H (mm) | J (mm) | K (mm) | M (mm) | N (mm) | W (mm) | Yt (mm) | Yb (mm) | AREA ($10^2$mm$^2$) | I ($10^6$mm$^4$) | *MASS (kg/m) |
|---|---|---|---|---|---|---|---|---|---|---|---|---|---|---|---|---|---|---|
| A | 300 | 410 | 125 | 710 | 130 | 280 | 75 | 100 | 75 | 130 | 330 | 380 | 150 | 392.8 | 317.2 | 1,761 | 9,309 | 424 |
| B | 300 | 460 | 150 | 865 | 150 | 355 | 70 | 140 | 65 | 145 | 430 | 380 | 170 | 486.3 | 378.7 | 2,347 | 18,014 | 564 |
| C | 360 | 560 | 180 | 1,015 | 190 | 405 | 90 | 150 | 90 | 190 | 535 | 380 | 180 | 580.7 | 434.3 | 3,219 | 34,532 | 774 |
| IV | 510 | 660 | 200 | 1,370 | 230 | 585 | 155 | 200 | 155 | 230 | 840 | 455 | 200 | 741.4 | 628.6 | 5,045 | 107,801 | 1,213 |
| 54 | 410 | 410 | 205 | 1,370 | 125 | 815 | 125 | 100 | 130 | 130 | 890 | 380 | 150 | 724.6 | 645.4 | 3,169 | 68,185 | 762 |
| 72 | 560 | 560 | 280 | 1,830 | 190 | 1,030 | 190 | 140 | 190 | 190 | 1,195 | 380 | 180 | 972.2 | 857.8 | 5,608 | 222,662 | 1,348 |

Note: Tolerance for Dimensions M & N = (+10 mm; -25 mm) (Same tolerance to be applied to all holes for a given Diaphragm Bar DN).

*Assumes 2,403 kg/m$^3$ unit density of concrete

MS18 LOADING

Texas Department of Transportation
Design Division (Bridge)

# PRESTRESSED CONCRETE I-BEAM DETAILS

# IBA (M)

| FILE: ibastdm1.dgn | DN: THD | CK: MLR | DW: DRG | CK: LDS | STD: B207M |
|---|---|---|---|---|---|
| ©TxDOT September 1998 | DIST | FED REG | FEDERAL AID PROJECT • | | SHEET |
| REVISIONS | SAT | 6 | NH 2000 (704), etc. | | 537 |
| | COUNTY | | CONTROL | SECT | JOB | HIGHWAY |
| | BEXAR | | 2452 | 01 | 036, etc. | LP1604 |

LEVELS DISPLAYED 1 3 ACC: (LV=1,3 for Metric)

DISCLAIMER:
The use of this standard is governed by the "Texas Engineering Practice Act". No warranty is made by TxDOT for any purpose whatsoever. TxDOT assumes no responsibility for the conversion of this standard to other formats or for incorrect results or damages resulting from its use.

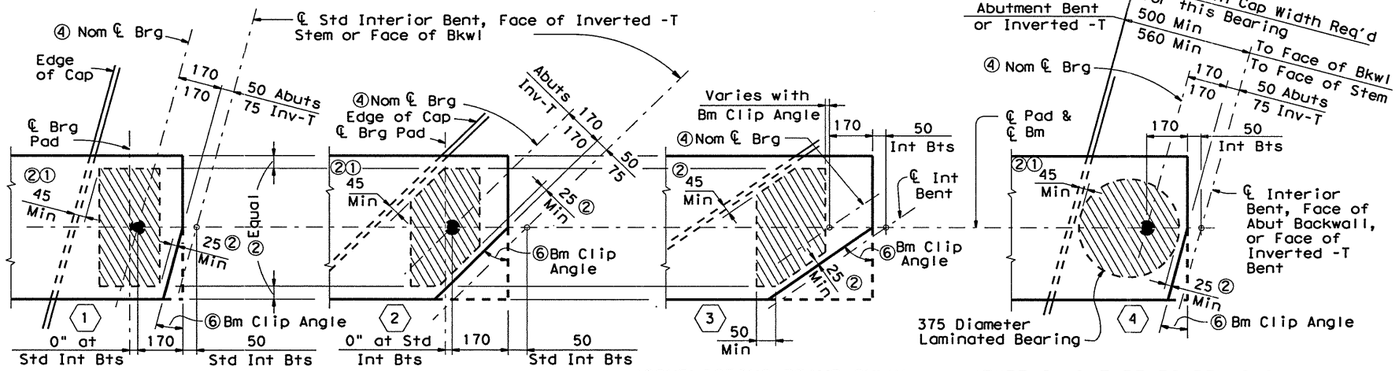


(CONFLICTING BEAMS ONLY) (TYPE IV & TYPE 72 BEAMS ONLY)

## ELASTOMERIC BEARING PLACEMENT DIAGRAMS

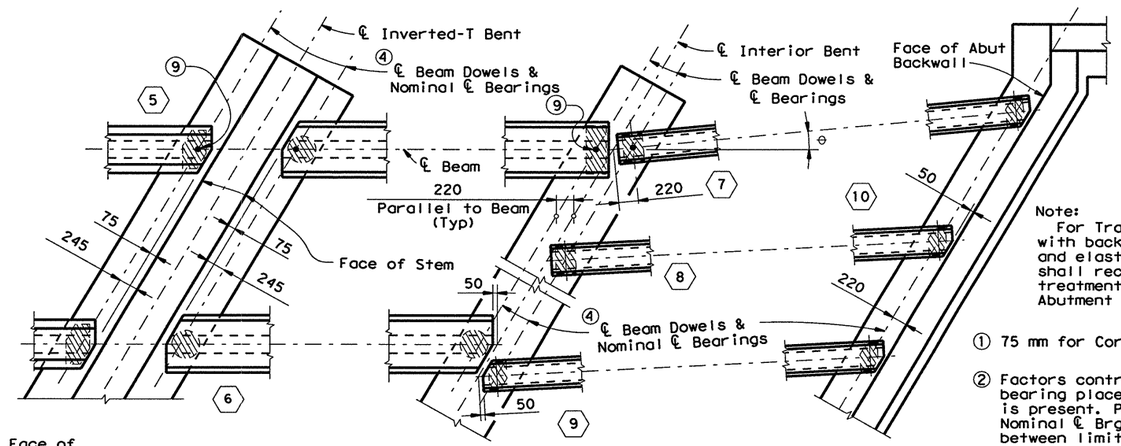


Note: When angle ⊖ exceeds 10°, the beam ends shall be clipped to the bisector of the angle between beams as shown in view ⑮.

## BEAM END DETAILS

Note:
For Transition Bents with backwall, beams and elastomeric bearings shall receive the same treatment as shown for Abutment Bents

① 75 mm for Corbels of Inverted -T.

② Factors controlling laminated bearing placement if no dowel is present. Place ℄ Pad as near Nominal ℄ Brg as possible between limits shown.

③ Provide 50 mm Dia Hole (always on beam end side of centerline pad) only at locations required. See substructure details for location.

④ For purposes of computing Bearing Seat Elevations, nominal centerline of bearing shall be defined as shown. The actual center of bearing pad may vary from this line, according to the "C" value shown in Table. If table shows no "C" value, See ②

⑤ Interpolate "C" values for angles not shown between 30° & 40°, 40° & 50°, 50° & 60°.

⑥ Complement of Beam Angle except at some conflicting beams. See ⑮

⑦ Locate "BRG TYPE" identification here

⑧ Locate Permanent Mark here

⑨ Provide Beam Dowels for outside beams only when shown (D) on Layout (Beams adjacent to a longitudinal joint at the median are considered as outside beams).

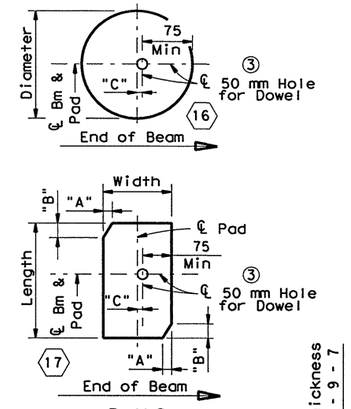


PLANS

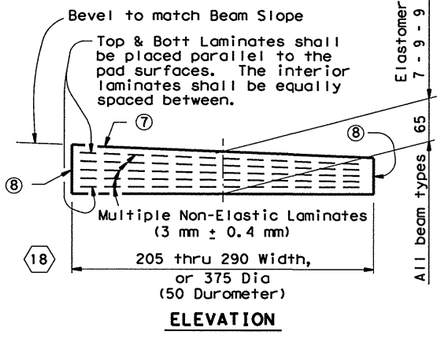


ELEVATION

## FABRICATION DETAILS

GENERAL NOTES:
Beams shall be seated on elastomeric bearings of the dimensions shown.
Constant thickness bearings may be used for moderate beam slopes if the variation is within the allowable dimensional tolerances given in the specifications.
Shop drawings will be required for all pads not shown or modified in the table.
Cost of furnishing and installing elastomeric bearings shall be included in unit price bid for "Prestressed Concrete Beams".

Note: The use of Polyisoprene (natural rubber), for the manufacture of bearing pads, shall not be permitted.

### ELASTOMERIC BEARING FABRICATION DATA TABLE

| Loc. | Beam Type | Brg Type | Bm End Clip Angle Range | Pad Size Wdth x Lgth | "A" | "B" | "C" ③ |
|---|---|---|---|---|---|---|---|
| AT ABUTMENTS, INVERTED - T & TRANSITION BENTS WITH BACKWALLS | A | A-1M | 0° thru 15° | 205 x 355 | — | — | 10 |
| | A | A-2M | 15° + thru 45° | 205 x 355 | 65 | 65 | 10 |
| | A | A-3M | 45° + thru 60° | 205 x 355 | 110 | 65 | 10 |
| | B | B-1M | 0° thru 15° | 205 x 405 | — | — | 10 |
| | B | B-2M | 15° + thru 45° | 205 x 405 | 90 | 90 | 10 |
| | B | B-3M | 45° + thru 60° | 230 x 405 | 165 | 105 | 10 |
| | C | C-1M | 0° thru 8° | 230 x 480 | — | — | 10 |
| | C | C-2M | 8° + thru 20° | 230 x 480 | 45 | 115 | 10 |
| | C | C-3M | 20° + thru 45° | 260 x 480 | 155 | 155 | 10 |
| | C | C-4M | 45° + thru 60° | 290 x 480 | 260 | 170 | 10 |
| | 54 | 54-1M | 0° thru 13° | 230 x 355 | — | — | 10 |
| | 54 | 54-2M | 13° + thru 25° | 230 x 355 | 35 | 70 | 10 |
| | 54 | 54-3M | 25° + thru 45° | 230 x 355 | 80 | 80 | 10 |
| | 54 | 54-4M | 45° + thru 60° | 230 x 355 | 125 | 80 | 10 |
| | IV | IV-1M | 0° thru 15° | 230 x 560 | — | — | 40 |
| | IV | IV-2M | 15° + thru 29° | 230 x 560 | 80 | 130 | 40 |
| | IV & 72 | IV-3M | ⑤ 30° | 375 Dia | — | — | 251 |
| | IV & 72 | IV-4M | ⑤ 40° | 375 Dia | — | — | 59 |
| | IV & 72 | IV-5M | ⑤ 50° | 375 Dia | — | — | 70 |
| | IV & 72 | IV-6M | ⑤ 60° | 375 Dia | — | — | 90 |
| | 72 | 72-1M | 0° thru 15° | 230 x 505 | — | — | 40 |
| | 72 | 72-2M | 15° + thru 30° | 230 x 505 | 55 | 95 | 40 |
| AT INTERIOR BENTS ⑨ & ⑮ Clipped Bm Ends ~ See ⑨ Square Bm Ends | A | A-4M | ALL | 205 x 355 | — | — | 0 |
| | B | B-4M | ALL | 205 x 405 | — | — | 0 |
| | C | C-5M | 0° thru 15° | 230 x 480 | — | — | 0 |
| | C | C-6M | 15° + thru 55° | 230 x 480 | 40 | 60 | 0 |
| | C | C-7M | 55° + thru 60° | 230 x 480 | — | — | 0 |
| | 54 | 54-5M | ALL | 230 x 355 | — | — | 0 |
| | IV | IV-7M | ALL | 230 x 560 | — | — | 0 |
| | 72 | 72-3M | ALL | 230 x 505 | — | — | 0 |
| | A | A-5M | 0° thru 15° | 205 x 355 | — | — | 17 |
| | A | A-6M | 18° + thru 45° | 205 x 355 | 55 | 55 | — |
| | A | A-7M | 45° + thru 60° | 205 x 355 | 75 | 55 | — |
| | B | B-5M | 0° thru 15° | 205 x 405 | — | — | 15 |
| | B | B-6M | 15° + thru 45° | 205 x 405 | 80 | 80 | — |
| | B | B-7M | 45° + thru 60° | 205 x 405 | 120 | 80 | — |
| | C | C-8M | 0° thru 9° | 230 x 480 | — | — | 10 |
| | C | C-9M | 9° + thru 25° | 230 x 480 | 60 | 130 | 30 |
| | C | C-10M | 25° + thru 45° | 260 x 480 | 145 | 160 | — |
| | C | C-11M | 45° + thru 60° | 290 x 480 | 230 | 160 | — |
| | 54 | 54-6M | 0° thru 13° | 230 x 355 | — | — | 13 |
| | 54 | 54-7M | 13° + thru 45° | 230 x 355 | 70 | 70 | — |
| | 54 | 54-8M | 45° + thru 60° | 230 x 355 | 95 | 70 | — |
| | IV | IV-8M | 0° thru 13° | 230 x 560 | — | — | 40 |
| | IV | IV-9M | 13° + thru 30° | 230 x 560 | 60 | 100 | — |
| | IV & 72 | IV-10M | 30° thru 60° | 375 Dia | — | — | — |
| | 72 | 72-4M | 0° thru 15° | 230 x 505 | — | — | 40 |
| | 72 | 72-5M | 15° + thru 30° | 230 x 505 | 40 | 70 | — |

Table based on 1,000 mm cap width for Type 72 and IV Beams; 850 mm cap width for all other type beams.
Table based on 560 mm Inverted - T corbel width for Type 72 and IV Beams; 500 mm corbel width for all other type beams.

MS18 LOADING

Texas Department of Transportation
Design Division (Bridge)

# ELASTOMERIC BEARING AND BEAM END DETAILS
## (FOR PRESTR CONC I-BEAMS)

## IBB(M)

| FILE: ibbstdm1.dgn | DN: TxDOT | CK: JCC | DW: DRG | CK: LDS | STD: B208M |
|---|---|---|---|---|---|
| ©TxDOT September 1998 | DIST | FED REG | FEDERAL AID PROJECT • | | SHEET |
| REVISIONS | SAT | 6 | NH 2000 (704), etc. | | 538 |
| | COUNTY | | CONTROL | SECT | JOB | HIGHWAY |
| | BEXAR | | 2452 | 01 | 036; etc. | LP1604 |

LEVELS Displayed: 1 3 ACC: (LV=1,3 for Metric)

DISCLAIMER:
The use of this standard is governed by the "Texas Engineering Practice Act". No warranty of any kind is made by TxDOT for any purpose whatsoever. TxDOT assumes no responsibility for the conversion of this standard to other formats or for incorrect results or damages resulting from its use.

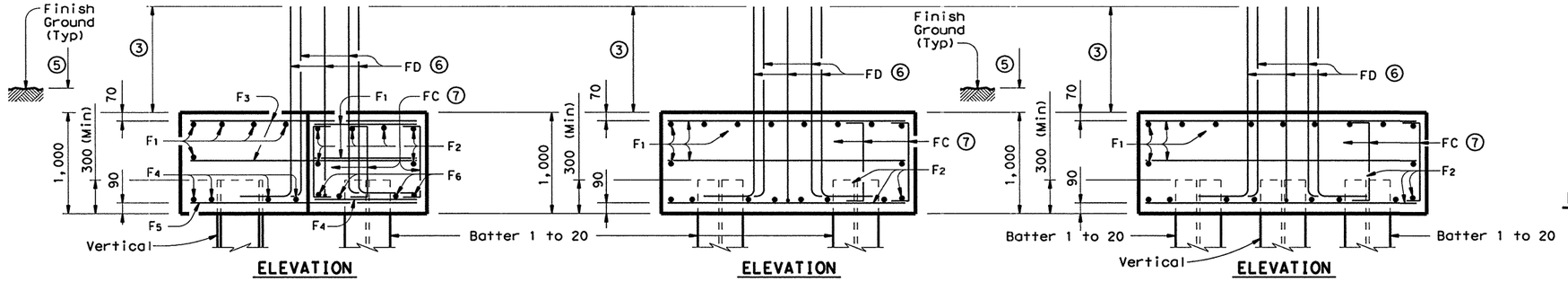


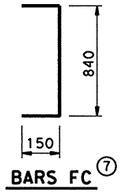


BARS FC ⑦

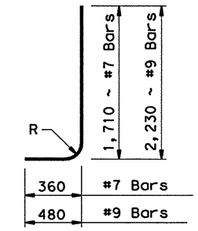


BARS FD ⑥

R = 80 ~ #7 Bars
and 130 ~ #9 Bars

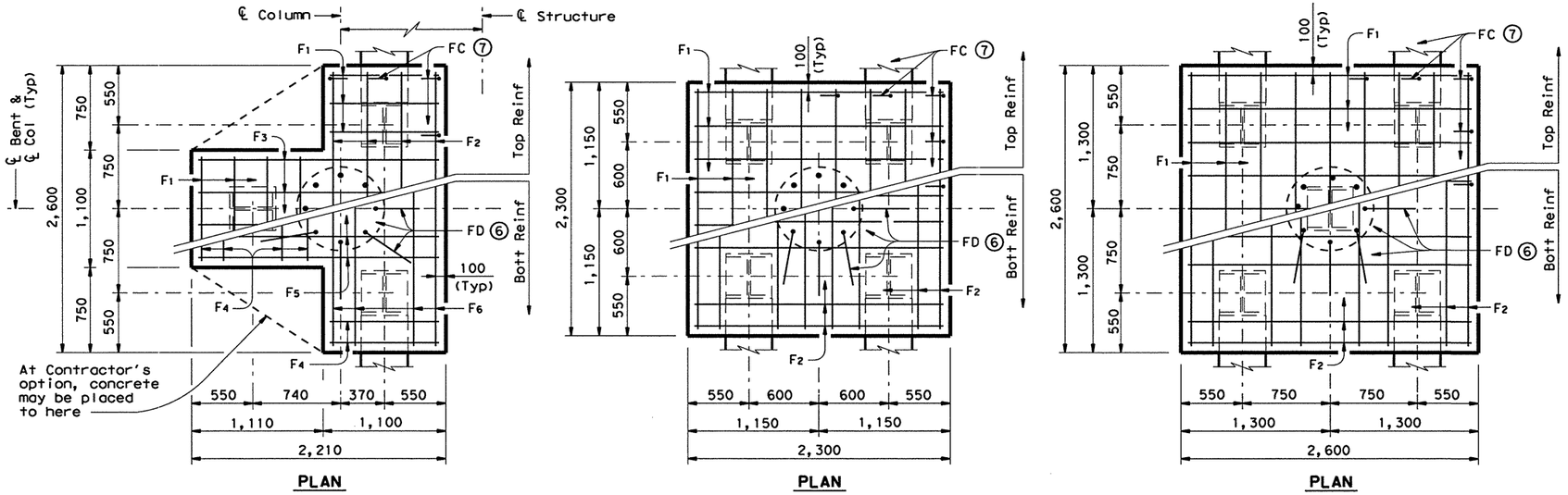


THREE PILE FOOTING

FOUR PILE FOOTING

FIVE PILE FOOTING

## TABLE OF FOOTING QUANTITIES FOR 750 mm COLUMNS

| | Bar | No. | Size | Length | Weight |
|---|---|---|---|---|---|
| | ONE 3 PILE FOOTING | | | | |
| | F1 | 13 | # 4 | 1,000 | 13 |
| | F2 | 6 | # 4 | 2,500 | 15 |
| | F3 | 6 | # 4 | 2,110 | 13 |
| | F4 | 8 | # 9 | 1,000 | 40 |
| | F5 | 4 | # 9 | 2,110 | 43 |
| | F6 | 4 | # 9 | 2,500 | 51 |
| | FC | 20 | # 4 | 1,140 | 23 |
| ⑧ | FD | 8 | # 9 | 2,650 | 107 |
| | Reinforcing Steel | | kg | | 305 |
| | Class "C" Concrete | | $m^3$ | | 4.1 |
| | ONE 4 PILE FOOTING | | | | |
| | F1 | 20 | # 4 | 2,200 | 44 |
| | F2 | 16 | # 8 | 2,200 | 140 |
| | FC | 20 | # 4 | 1,140 | 23 |
| ⑧ | FD | 8 | # 9 | 2,650 | 107 |
| | Reinforcing Steel | | kg | | 314 |
| | Class "C" Concrete | | $m^3$ | | 5.3 |
| | ONE 5 PILE FOOTING | | | | |
| | F1 | 22 | # 4 | 2,500 | 55 |
| | F2 | 16 | # 9 | 2,500 | 202 |
| | FC | 22 | # 4 | 1,140 | 25 |
| ⑧ | FD | 8 | # 9 | 2,650 | 107 |
| | Reinforcing Steel | | kg | | 389 |
| | Class "C" Concrete | | $m^3$ | | 6.8 |

⑧ For 600 mm Cols, use #7 FD bars (2,040 mm) in place of #9 bars and deduct 57 kg.
For 900 mm Cols, add 2 FD bars (27 kg)

① #3 Spiral at 150 mm pitch (One flat turn top & bottom)

② Min extension into Abutment
Wingwalls = 360 mm
Min extension into Abutment
Caps ~ 600 Dia = 480 mm
750 Dia and 900 Dia = 650 mm

③ Min lap with Column reinf:
#7 Bars = 800 mm
#9 Bars = 1,320 mm
Note: Number and size of Col reinf must match FD bars

④ Or as shown on plans

⑤ 150 mm (Min) at Grade Crossing
300 mm (Min) In Channel

⑥ FD bars shall be tied to the top of the bottom mat of reinforcing

⑦ FC bar spacing = 450 mm ±

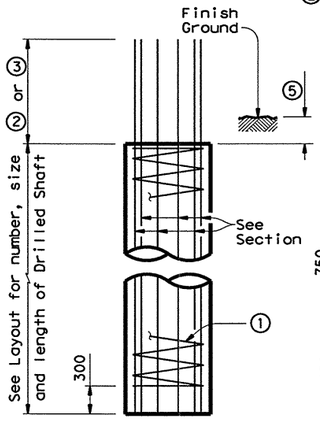


ELEVATION

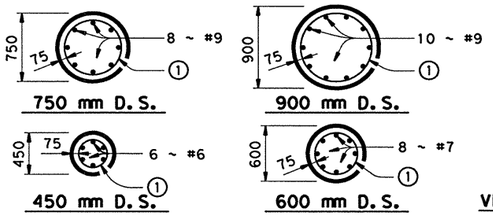


SECTIONS

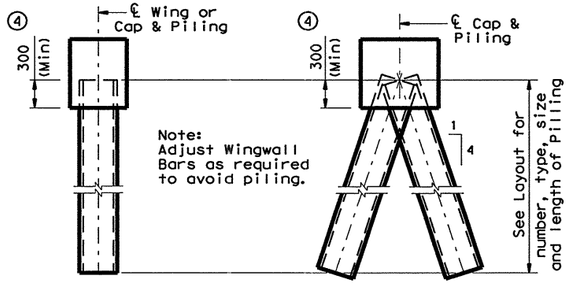


VERTICAL WING OR CAP PILE

BATTERED CAP PILE

PILING DETAILS
(Concrete or Steel H)

ABUTMENT, WINGWALL, AND INTERIOR BENT DRILLED SHAFTS

### GENERAL NOTES:

Designed according to current AASHTO Standard Specifications for Highway Bridges.

See Bridge Layout of each Structure for Foundation Type to be used.

Details shown on this standard to be used unless shown otherwise in the plans.

Maximum Pile Load for the footings shown shall be as follows : 740 kN/Pile with 600 Dia Column
860 kN/Pile with 750 Dia Column
890 kN/Pile with 900 Dia Column

Standard Footings shall not be used in salt water conditions.

Drilled Shaft reinforcing may be Grade 300.

Oversized Drilled Shafts may be used to accommodate existing equipment.

Piling under wings to be driven to a minimum resistance of 90 kN.

All dimensions are in millimeters unless otherwise shown.

MS18 LOADING

Texas Department of Transportation
Design Division (Bridge)

# COMMON FOUNDATION DETAILS

## FD(M)

| FILE: fdstdm01.dgn | DN: JMH | CK: DWM | DW: RNP | CK: JMH | STD: B205M |
|---|---|---|---|---|---|
| ©TxDOT September 1998 | DIST | FED REG | FEDERAL AID PROJECT • | | SHEET |
| REVISIONS | SAT | 6 | NH 2000 (704), etc. | | 539 |
| | COUNTY | | CONTROL | SECT | JOB | HIGHWAY |
| | BEXAR | | 2452 | 01 | 036, etc. | LP1604 |

ACC: (LV=1,3 for Metric)
LEVELS Di...AYED
1 3

DISCLAIMER:
The use of this standard is governed by the "Texas Engineering Practice Act". No warranty of any kind is made by TxDOT for any purpose whatsoever. TxDOT assumes no responsibility for the conversion of this standard to other formats or for incorrect results or damages resulting from its use.

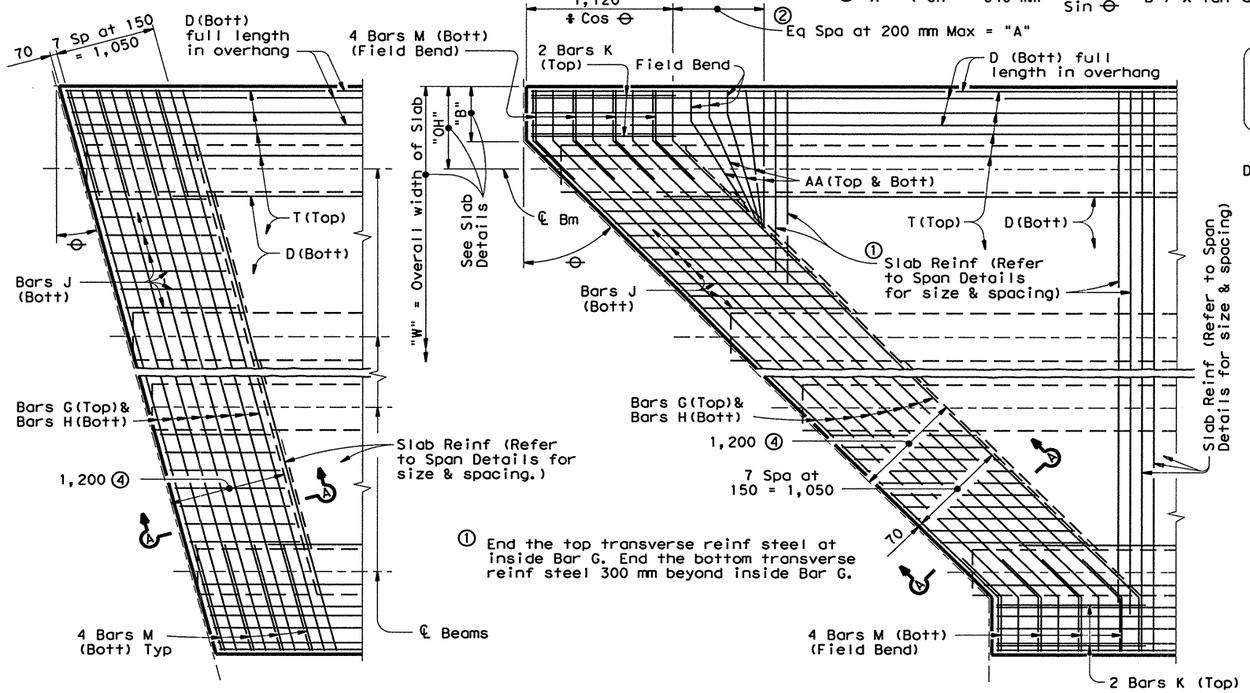


## PARTIAL PLAN FOR SLABS WITHOUT BREAKBACK




## PARTIAL PLAN FOR SLABS WITH BREAKBACK

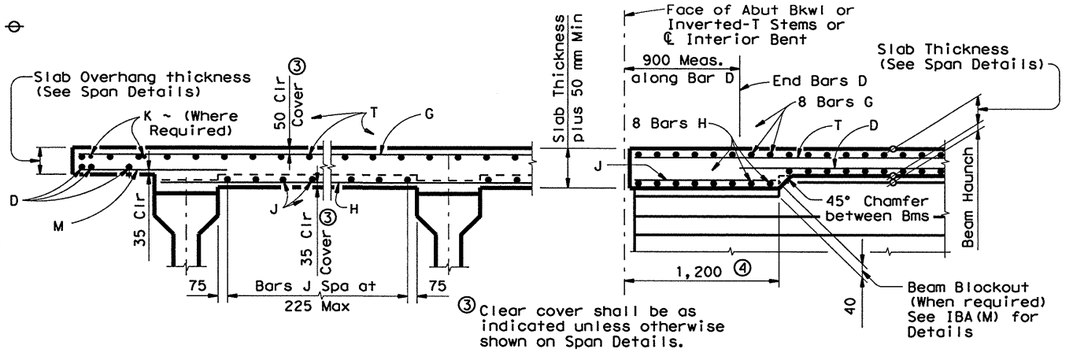


## TYPICAL TRANSVERSE SECTION

## SECTION A-A

③ Clear cover shall be as indicated unless otherwise shown on Span Details.

④ Thickened Slab End dimensioned perpendicular to Face of Abutment Backwall or Inverted-T Stems or ℄ Interior Bents.

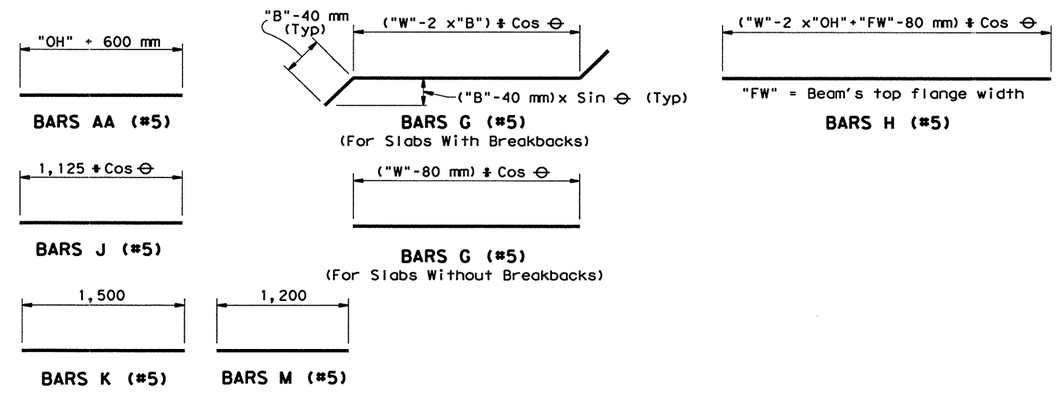


### GENERAL NOTES:

Designed according to current AASHTO Standard Specifications for Highway Bridges.

All reinforcing bars shall be Grade 420 steel.

Unless otherwise shown or noted hereon, all Span Details remain unchanged.

If the top and/or bottom layer of reinforcing steel is shown on the Slab Details to be epoxy coated, then the G & K and/or H, J & M bars shall be epoxy coated.

All dimensions are in millimeters unless otherwise shown.

Bar laps, where required, shall be as follows:

Uncoated ~ #4 = 440 mm
~ #5 = 560 mm
Epoxy Coated ~ #4 = 660 mm
~ #5 = 820 mm

MS18 LOADING

Texas Department of Transportation
Design Division (Bridge)

# THICKENED SLAB END DETAILS FOR PRESTR I-BEAM SPANS

# IBTS(M)

| FILE: ibtsstdm.dgn | DN: THD | CK: DWM | DW: DRG | CK: LDS | STD: B212M |
|---|---|---|---|---|---|
| ©TxDOT September 1998 | DIST | FED REG | FEDERAL AID PROJECT • | | SHEET |
| REVISIONS | SAT | 6 | NH 2000 (704), etc. | | 540 |
| | COUNTY | | CONTROL | SECT | JOB | HIGHWAY |
| | BEXAR | | 2452 | 01 | 036, etc. | LP1604 |

LEVELS DISPLAYED: 1 3
ACC: (LV=1,3 for Metric)

DISCLAIMER:
The use of this standard is governed by the "Texas Engineering Practice Act". No warranty of any kind is made by TxDOT for any purpose whatsoever. TxDOT assumes no responsibility for the conversion of this standard to other formats or for incorrect results or damages resulting from its use.

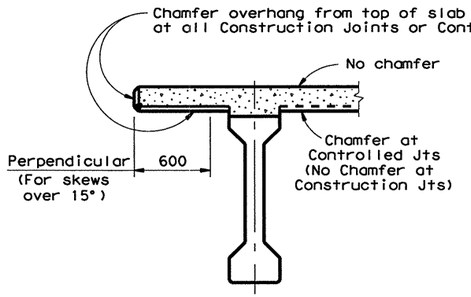


## CHAMFER LIMITS DETAIL

Note: See Span details for type of joint and joint locations.

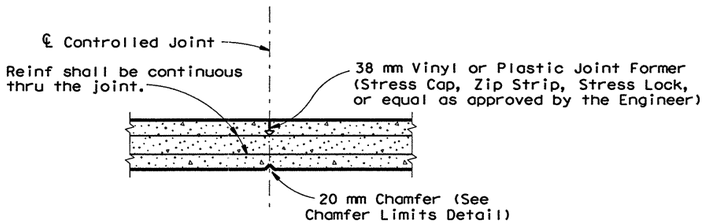


## CONTROLLED JOINT DETAIL

(Controlled Joints shall not be used for simple spans)

Note: For continuous placement, the minimum rate of concrete placing and finishing shall not be less than 9,000 linear mm of bridge deck per hour.

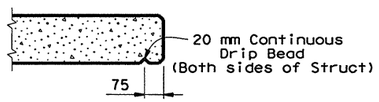


## DRIP BEAD DETAIL

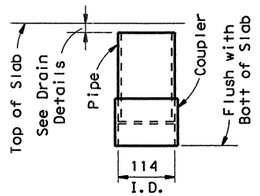


## C.I.P. DRAIN DETAIL

Note: Roughen outside of PVC with coarse rasp or equal to ensure bond with cast-in-place concrete.

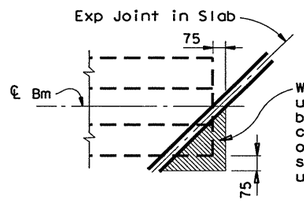


Where corners of Beam Flanges project under slab of adjacent span, care shall be taken to provide a minimum of 13 mm clearance between top of beam and bottom of adjacent slab. Polystyrene or other suitable compresssible material may be used as a filler.

## TREATMENT AT BEAM END FOR SKEWED SPANS

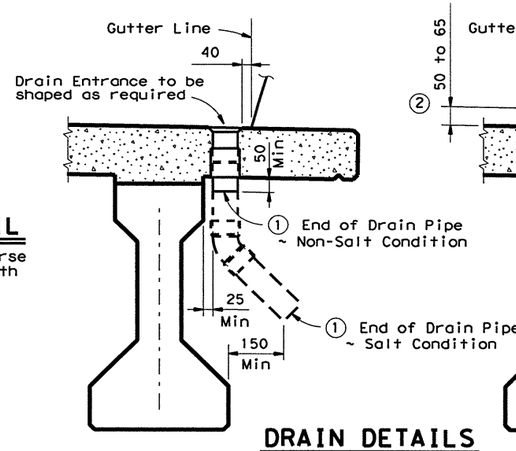


## DRAIN DETAILS

① The longer drain length shown shall be used on structures where the use of deicing salts is anticipated.

Note: All drain pipe and fittings to be 102 mm diameter (Sch 40) PVC. See Item 481 "PVC Pipe for Bridge Drains" for pipe, connections and solent welding. Bend reinforcing steel to clear PVC 25 mm. Drain length and location shall be as directed by the Engineer. No drains shall be permitted over roadways or railways, or within 3,000 mm of Bent Caps. Degrease outside of exposed PVC, apply acrylic water base primer, then coat with same surface finishing material as used for outside girder face. Variations of the above designs, as required for the type of rail used and it's location on the structure, shall be installed with the approval and direction of the Engineer. No water shall be discharged onto girders.

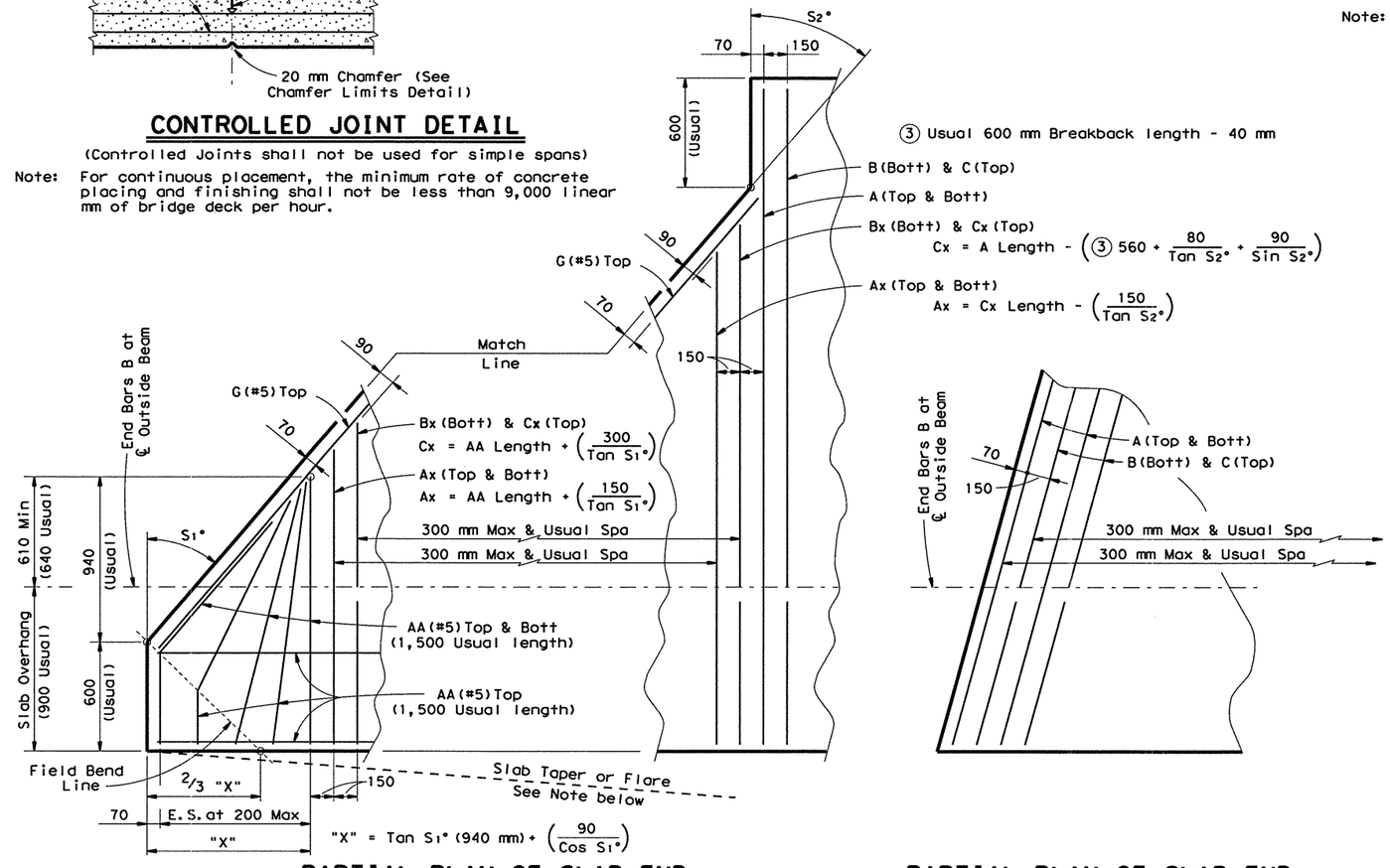


## PARTIAL PLAN OF SLAB END WITH BREAKBACK

(For use with Concrete End Diafram Option ~ See IBDO(M) Standard)

Note: Bar length formulas shown for constant width slabs. Adjustment shall be made for slab taper or flare.




## PARTIAL PLAN OF SLAB END WITHOUT BREAKBACK

(For use with Concrete End Diafram Option ~ See IBDO(M) Standard)

GENERAL NOTES:

Designed in accordance with current AASHTO Specifications.

All cast-in-place concrete shall be Class S unless otherwise shown on span details.

All reinforcing steel shall be Grade 420.

See Span Detail sheet for epoxy coating requirements and lap lengths, if required.

All dimensions are in millimeters unless otherwise shown.

MS18 LOADING

Texas Department of Transportation
Design Division (Bridge)

# MISCELLANEOUS SLAB DETAILS FOR PRESTRESSED I-BEAMS

# IBMS(M)

| FILE: ibmsstdm.dgn | DN: THD | CK: THD | DW: DRG | CK: LDS | STD: B210M |
|---|---|---|---|---|---|
| ©TxDOT September 1998 | DIST | FED REG | FEDERAL AID PROJECT • | | SHEET |
| REVISIONS | SAT | 6 | NH 2000 (704), etc. | | 541 |
| | COUNTY | | CONTROL | SECT | JOB | HIGHWAY |
| | BEXAR | | 2452 | 01 | 036, etc: | LP1604 |

ACC: (LV=1,3 for Metric)
LEVELS DISPLAYED 1 3

DISCLAIMER:
The use of this standard is governed by the "Texas Engineering Practice Act". No warranty of any kind is made by TxDOT for any purpose whatsoever. TxDOT assumes no responsibility for the conversion of this standard to other formats or for incorrect results or damages resulting from its use.

ACC: (LV=1,3 for Metric)

LEVELS DISPLAYED 1 3

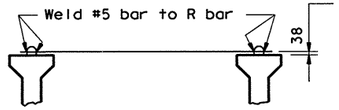


Place #5 bar in plane of bottom slab reinforcement for conventional or PMD Forming. #5 bars to rest on Panels and bent down to beam reinforcement when Prestressed Panels are used.

## PERMANENT TOP BRACING (5)

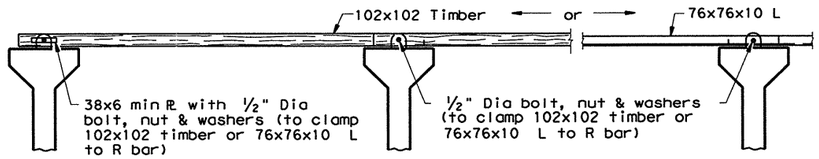


ELELVATION

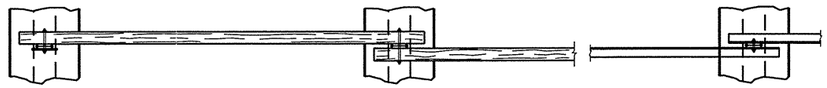

PLAN

## TEMPORARY TOP BRACING (4)

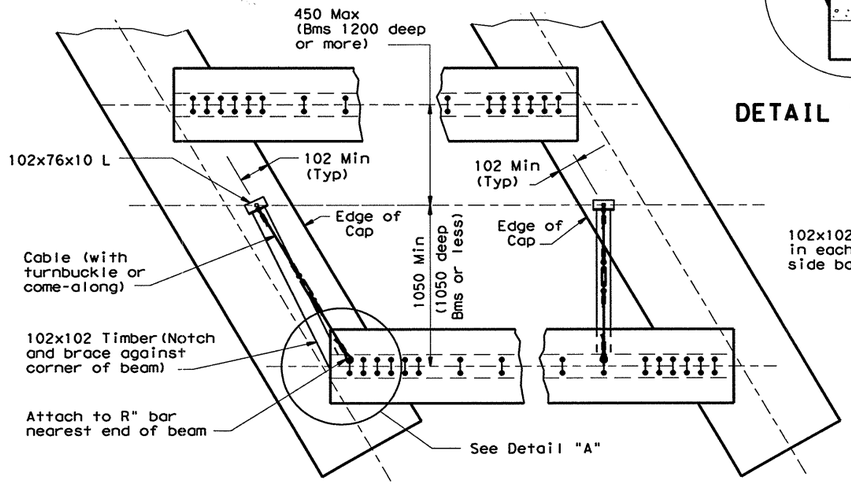


PLAN

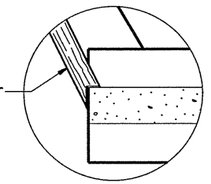


DETAIL "A"

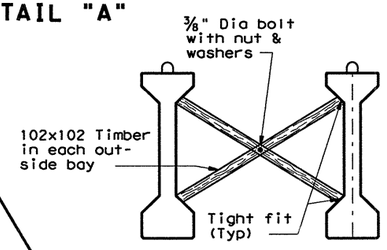


## "X" BRACING (3)

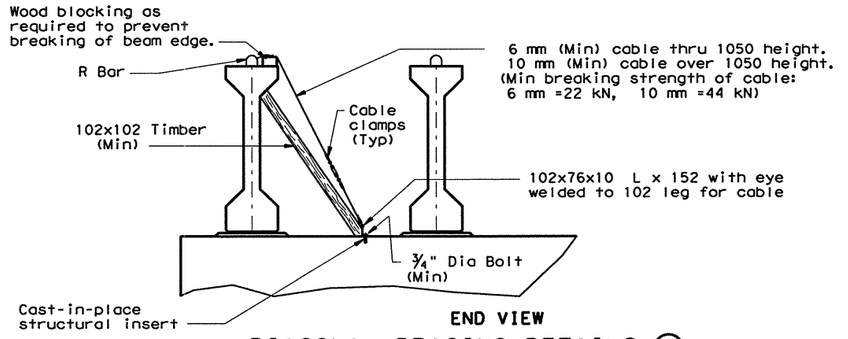


END VIEW

## DIAGONAL BRACING DETAILS (1)

(To be used on both ends of the first beam erected in the span.)

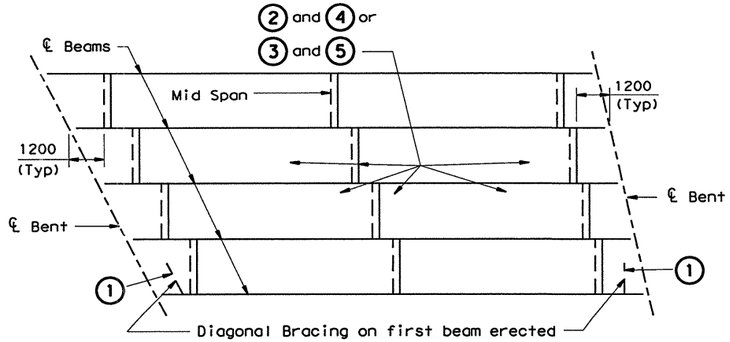


## ERECTION BRACING

(NORMAL SPANS AND ALL SKEWS)

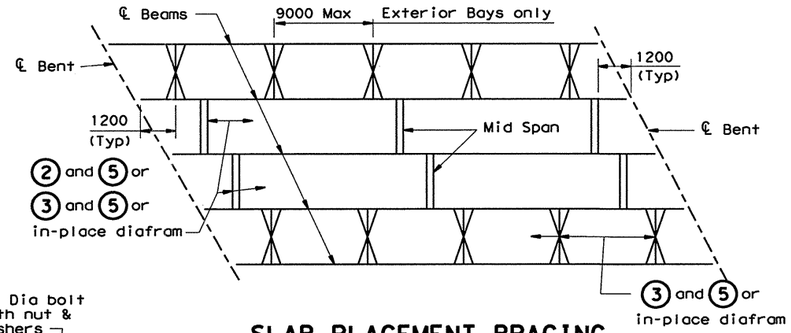


## SLAB PLACEMENT BRACING

(NORMAL SPANS AND ALL SKEWS)

Indicates Diagonal Bracing (1)

Indicates Bottom Bracing (2) with Temporary Top Bracing (4) or "X" Bracing (3) with Permanent Top Bracing (5).

Indicates Permanent Top Bracing (5)

Indicates Bottom Bracing (2) or "X" Bracing (3), either one with Permanent Top Bracing (5) or an in-place diafram only.

Indicates "X" Bracing (3) & Permanent Top Bracing (5) or an in-place diafram only.

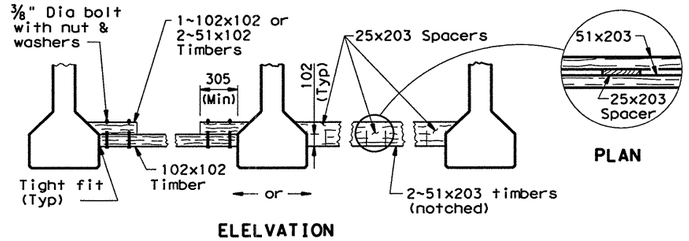


PLAN

ELELVATION

## BOTTOM FLANGE BRACING DETAILS (2)

## GENERAL NOTES:

### ERECTION BRACING:

Erection bracing details are considered minimum for fulfilling the requirements of Specification Item 425 for bracing Types A, B, C, III, IV, and V prestressed concrete beams erected in the span over a traveled way or railroad, and in those spans generally parallel to a traveled way or railroad and within a distance equal to the difference in elevation between the top of cap upon which the beams are being erected and the traveled way, or 9000, whichever is greater.

Required erection bracing shall be placed immediately after erection of each beam and remain in place until diafram bars DN are tightened or additional bracing as required for slab placement is in place. This standard is needed in all cases to meet requirements for Slab Placement Bracing.

### SLAB PLACEMENT BRACING:

The details for slab placement bracing are considered minimum for fulfilling the requirements of Specification Item 420 regardless of where erected.

Required slab placement bracing shall remain in place until slab concrete has attained a flexural strength of 3 MPa.

### GENERAL:

Bracing details for closely spaced beams (as on ramps or railroad structures) are not included herein. The Contractor shall submit his proposed bracing details for such conditions to the Engineer for approval prior to erection.

Systems equal to or better than those shown may be used provided details of such systems are submitted to and approved by the Engineer prior to erection.

Use of these systems and/or details does not relieve the Contractor of the responsibility for the adequacy of the bracing and the safety of the structure.

Removal of bracing for short periods of time to align beams is permissible.

Bottom flange bracing at beam ends may be omitted when all beams are fixed with dowel bars or when erection is on steel caps or floor beams containing bearing seats which restrict lateral movement.

All turn-buckles, come-alongs and other connections shall be capable of developing the full strength of the cable shown hereon.

All dimensions are in millimeters unless otherwise shown.

Texas Department of Transportation
Design Division (Bridge)

# MINIMUM ERECTION AND BRACING REQUIREMENTS

## PRESTRESSED CONCRETE BEAM TYPES A, B, C, III, IV & V

## MEBR(C)-1(M)

| FILE: mebc1stm.dgn | DN: THD | CK: THD | DW: LW | CK: LDS | NEG: B112AM |
|---|---|---|---|---|---|
| ©TxDOT September 1998 | DIST | FED REG | FEDERAL AID PROJECT • | | SHEET |
| REVISIONS | SAT | 6 | NH 2000 (704), etc. | | 542 |
| | COUNTY | | CONTROL | SECT | JOB | HIGHWAY |
| | BEXAR | | 2452 | 01 | 036, etc. | LP1604 |

DISCLAIMER:
The use of this standard is governed by the "Texas Engineering Practice Act". No warranty of any kind is made by TxDOT for any purpose whatsoever. TxDOT assumes no responsibility for the conversion of this standard to other formats or for incorrect results or damages resulting from its use.

LEVELS DISPLAYED 1 3 | ACC: (LV=1,3 for Metric)

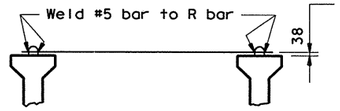


Place #5 bar in plane of bottom slab reinforcement for conventional or PMD Forming. #5 bars to rest on Panels and bent down to beam reinforcement when Prestressed Panels are used.

## PERMANENT TOP BRACING (5)

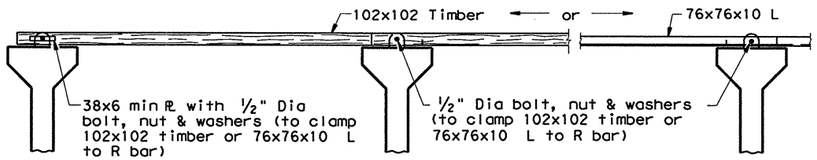


ELELVATION

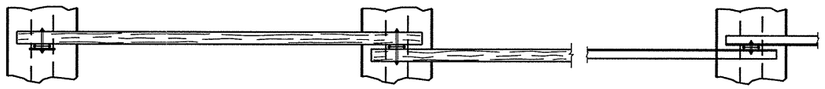

PLAN

## TEMPORARY TOP BRACING (4)

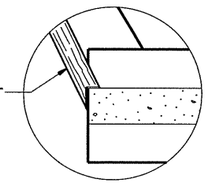


DETAIL "A"

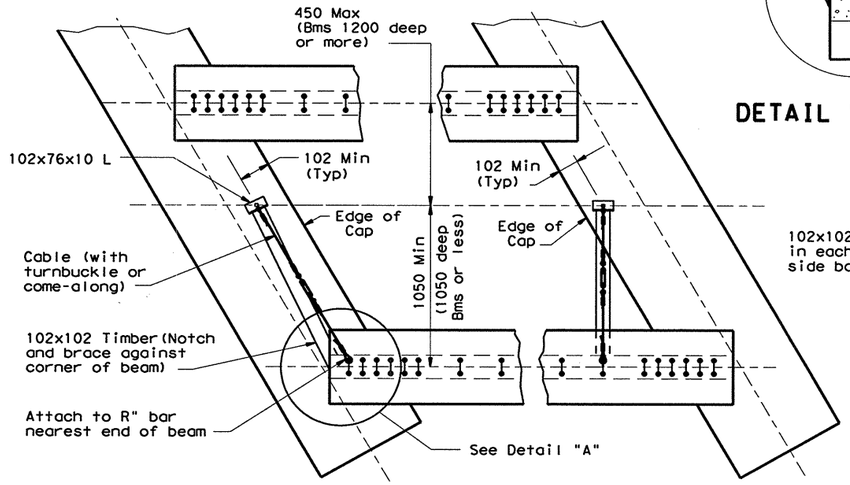


PLAN

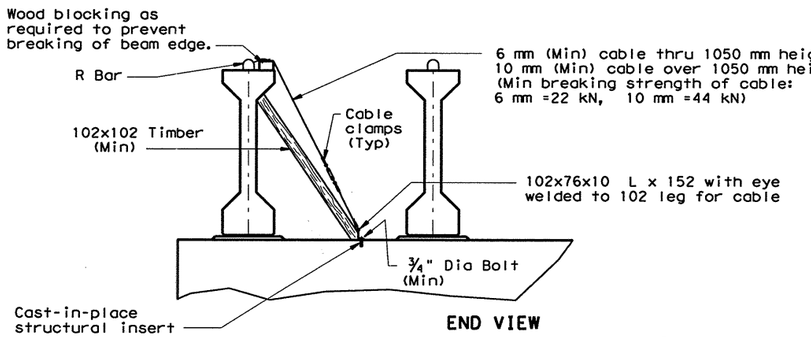


END VIEW

## DIAGONAL BRACING DETAILS (1)

(To be used on both ends of the first beam erected in the span.)

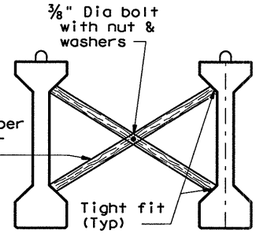


## "X" BRACING (3)

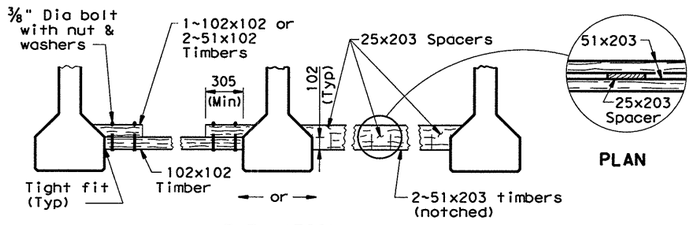


PLAN

ELELVATION

## BOTTOM FLANGE BRACING DETAILS (2)

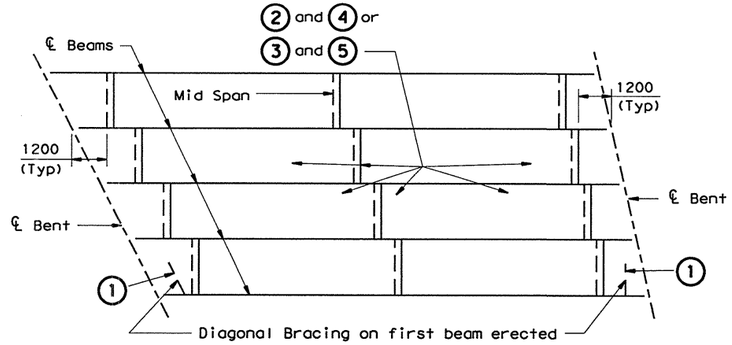


## ERECTION BRACING

(NORMAL SPANS AND ALL SKEWS)

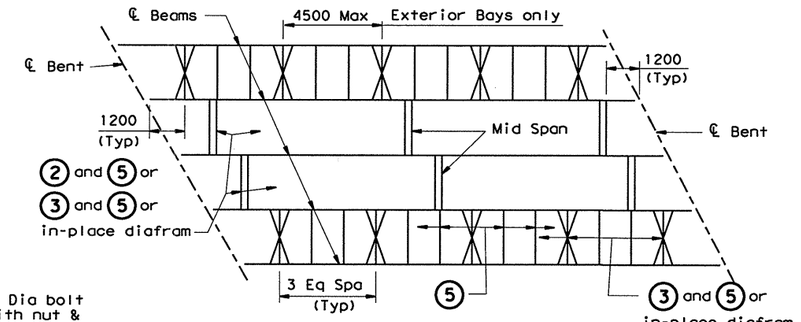


## SLAB PLACEMENT BRACING

(NORMAL SPANS AND ALL SKEWS)

Indicates Diagonal Bracing (1)

Indicates Bottom Bracing (2) with Temporary Top Bracing (4) or "X" Bracing (3) with Permanent Top Bracing (5).

Indicates Permanent Top Bracing (5)

Indicates Bottom Bracing (2) or "X" Bracing (3), either one with Permanent Top Bracing (5) or an in-place diafram only.

Indicates "X" Bracing (3) & Permanent Top Bracing (5) or an in-place diafram only.

## GENERAL NOTES:

### HAULING & ERECTION

The Contractor's attention is directed to the possible lateral instability of Type 48 thru 72 prestressed concrete beams, especially during hauling and erection. The use of the following methods of improving the stability of these beams is encouraged and shall be used when required: Location of lifting devices at the maximum practical distance from the beam ends; use of external lateral stiffening devices during hauling and erection; lifting with vertical lines using two machines and care in handling to minimize inertial and impact forces. External adjustable stiffening devices (hog rods) will be required for any beam in excess of the following actual beam lengths.

| | | | |
|---|---|---|---|
| Type 48 | 26,500 | Type 66 | 34,400 |
| Type 54 | 29,200 | Type 72 | 37,200 |
| Type 60 | 31,700 | Type 54 Mod(305Web) | 34,400 |

These devices shall remain on the beam during hauling from the casting yard and during erection until the required bracing is installed.

### ERECTION BRACING:

Erection bracing details are considered minimum for bracing Types 48, 54, 60, 66, 72 and 54 Mod (305Web) prestressed concrete beams regardless of where erected.

Required erection bracing shall be placed immediately after erection of each beam and remain in place until diafram bars DN are tightened or additional bracing as required for slab placement is in place. This standard is needed in cases to meet requirements for Slab Placement Bracing.

### SLAB PLACEMENT BRACING:

The details for slab placement bracing are considered minimum for fulfilling the requirements of Specification Item 420 regardless of where erected.

Required slab placement bracing shall remain in place until slab concrete has attained a flexural strength of 3 MPa.

### GENERAL:

Bracing details for closely spaced beams (as on ramps or railroad structures) are not included herein. The Contractor shall submit his proposed bracing details for such conditions to the Engineer for approval prior to erection.

Systems equal to or better than those shown may be used provided details of such systems are submitted to and approved by the Engineer prior to erection.

Use of these systems and/or details does not relieve the Contractor of the responsibility for the adequacy of the bracing and the saftey of the structure.

Removal of bracing for short periods of time to align beams is permissible.

Bottom flange bracing at beam ends may be omitted when all beams are fixed with dowel bars or when erection is on steel caps or floor beams containing bearing seats which restrict lateral movement.

All turn-buckles, come-alongs and other connections shall be capable of developing the full strength of the cable shown hereon.

All dimensions are in millimeters unless otherwise shown.

Texas Department of Transportation
Design Division (Bridge)

# MINIMUM ERECTION AND BRACING REQUIREMENTS

## PRESTRESSED CONCRETE BEAM TYPES 48, 54, 60, 66 & 72

## MEBR(C)-2(M)

| FILE: mebc2stm.dgn | DN: THD | CK: THD | DW: LW | CK: LDS | NEG: B112B M |
|---|---|---|---|---|---|
| ©TxDOT September 1998 | DIST | FED REG | FEDERAL AID PROJECT • | | SHEET |
| REVISIONS | SAT | 6 | NH 2000 (704), etc. | | 543 |
| | COUNTY | | CONTROL | SECT | JOB | HIGHWAY |
| | BEXAR | | 2452 | 01 | 036, etc. | LP1604 |

DISCLAIMER:
The use of this standard is governed by the "Texas Engineering Practice Act". No warranty of any kind is made by TxDOT for any purpose whatsoever. TxDOT assumes no responsibility for the conversion of this standard to other formats or for incorrect results or damages resulting from its use.

LEVELS DISPLAYED 1 3 ACC: (LV=1,3 for Metric)

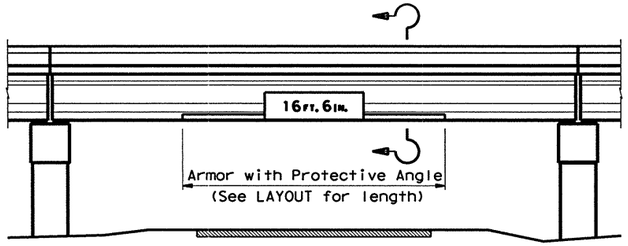


## TYPICAL BRIDGE ELEVATION

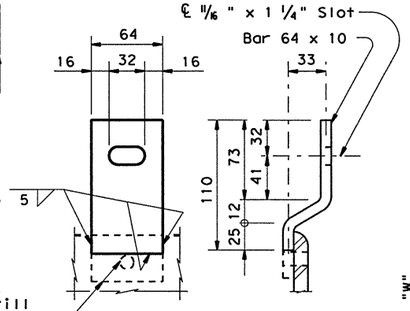


12 m CG (PAN FORM) SPANS
& PCI TYPE BOX BEAMS

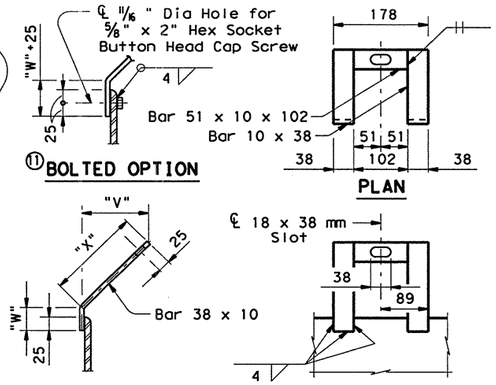


PRESTRESSED CONCRETE I-BEAMS

| BEAM | "V" | ⑪"W" | "X" | "Y" | "Z" |
|---|---|---|---|---|---|
| TYPE A | 113 | 33 | 160 | 65 | 92 |
| TYPE B | 140 | 60 | 198 | 57 | 81 |
| TYPE C | 184 | 34 | 261 | 57 | 81 |
| TYPE 54 | 121 | 60 | 171 | 57 | 81 |
| TYPE 72 | 185 | 136 | 261 | 57 | 81 |
| TYPE IV | 122 | 60 | 172 | 158 | 223 |

⑪ Add 25 mm to "W" dimension when "BOLTED OPTION" is used. Notch Redwood Plank to accomodate bolt and nut.

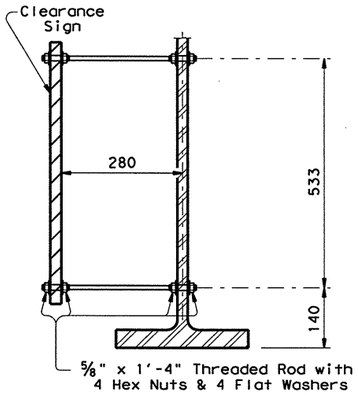


CLEARANCE SIGN MOUNTING BOLTS

## STEEL GIRDER & I-BEAM UNITS

## PROTECTIVE ANGLE SUPPORT BRACKETS

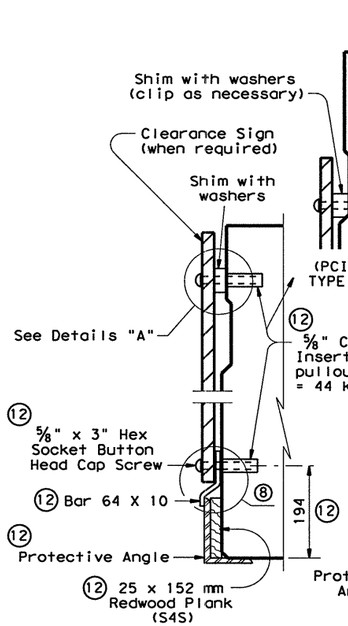


DETAILS "A"

PCI TYPE BOX BEAMS
(SHOWN WITH SIGN ON TYPE B33)

⑫ Typical all PCI type boxes

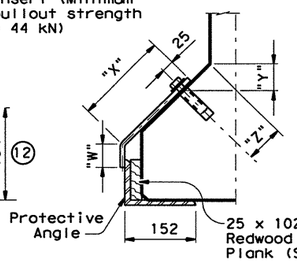


TYPE A & B BEAMS &
TYPE 20 & 28 BOX BEAMS
(SHOWN WITHOUT SIGN)

PRESTRESSED CONCRETE BEAMS

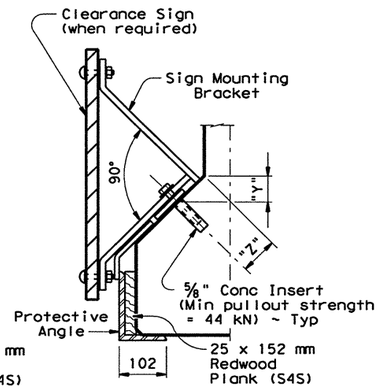


TYPE C,54,72,IV BEAMS &
TYPE 34 & 40 BOX BEAMS
(SHOWN WITH SIGN)

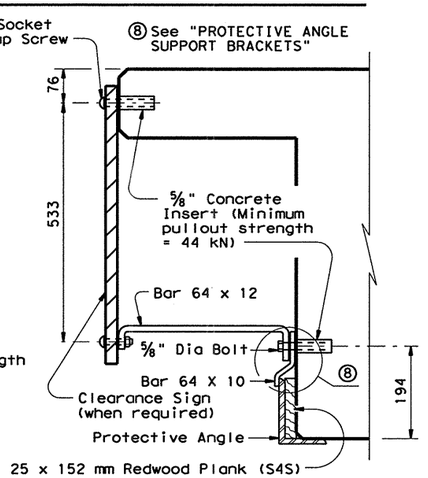


12 m CG (PAN FORM) SPANS
(SHOWN WITH SIGN)

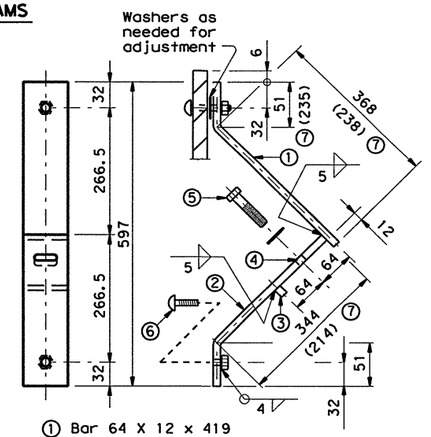


① Bar 64 X 12 x 419
② Bar 64 X 12 x 395
③ Bar 12 x 12 x 64
④ 11/16 " x 1 1/4" Slot
⑤ 5/8" x 3" Bolt with Flat Washer
⑥ 5/8" x 2" Hex Socket
Button Head Cap Screw
⑦ For Type A Beams only.

PRESTRESSED CONCRETE I-BEAMS

## CLEARANCE SIGN MOUNTING BRACKET

(2 REQUIRED PER SIGN)

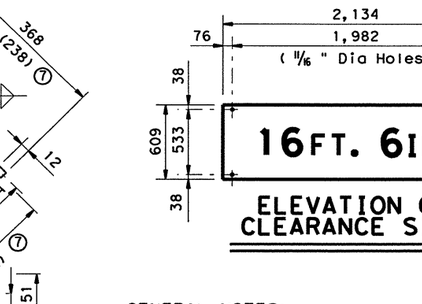


## ELEVATION OF CLEARANCE SIGN

## SECTIONS THRU BRIDGE ELEVATION

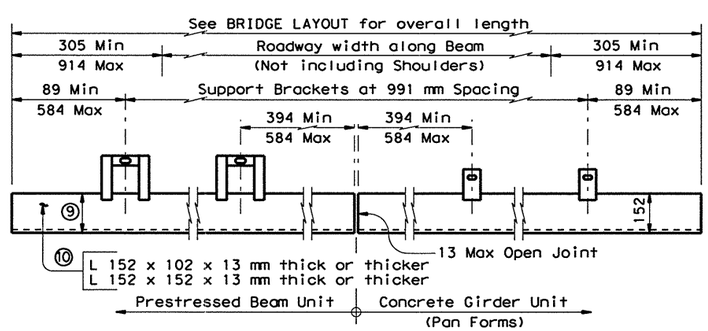


## ELEVATION OF PROTECTIVE ANGLE

⑨ See Prestressed Concrete Beam Sections.
⑩ "V", "W" & "X" Dimensions may need adjusting for thicker Protective Angles.

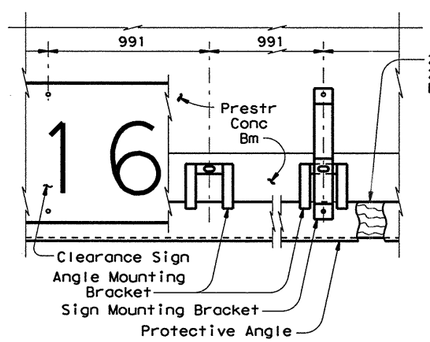


## TYPICAL INSTALLATION OF CLEARANCE SIGN AND PROTECTIVE ANGLE

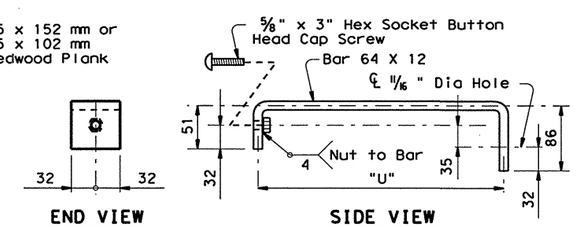


| OVERHANG | 134 | 120 |
|---|---|---|
| "U" | 112 | 98 |

NOTE: If no overhang is present, omit Bracket, space with washers as necessary, re-position upper anchors and/or holes in sign.

12 m CG (PAN FORM) SPANS

## CLEARANCE SIGN MOUNTING BRACKET

(2 REQUIRED PER SIGN)

**GENERAL NOTES:**

Designed according to current AASHTO Standard Specifications.

Protective Angles and Support Brackets shall be Structural Steel conforming to ASTM designation A36M, A572M or A588M and may be shipped in convenient lengths (3,350 mm Min).

Redwood Planks shall be beveled to clear inside radius of Protective Angle and shall be full length of angle. Joints in plank shall not coincide with joints in angle.

Either clearance signs, protective angles or both together may be installed using these details. For clearance signs these details are appropriate for skew angles up to 30°. For protective angles these details are appropriate for any skew.

Plans may require the complete assembly, consisting of protective angle and mounting brackets, sign and sign mounting brackets, or may require only portions of this assembly, all as noted on the structure Layout sheet

All dimensions are in millimeters unless otherwise shown.

For clearance sign details in excess of 30°, include BPA-2(M).

Texas Department of Transportation
Design Division (Bridge)

# BRIDGE PROTECTIVE ASSEMBLY
## WITH SIGN MOUNT BRACKET FOR SKEWS THRU 30°
## BPA-1 (M)

| FILE: bpa1stdm.dgn | DN: THD | CK: THD | DW: DRG | CK: LDS | STD: B113AM |
|---|---|---|---|---|---|
| ©TxDOT September 1998 | DIST | FED REG | FEDERAL AID PROJECT • | | SHEET |
| REVISIONS | SAT | 6 | NH 2000 (704), etc | | 544 |
| | COUNTY | | CONTROL | SECT | JOB | HIGHWAY |
| | BEXAR | | 2452 | 01 | 036, etc. | LP1604 |

DISCLAIMER:
The use of this standard is governed by the "Texas Engineering Practice Act". No warranty of any kind is made by TxDOT for any purpose whatsoever. TxDOT assumes no responsibility for the conversion of this standard to other formats or for incorrect results or damages resulting from its use.

ACC:
(LV=1,3 for Metric)
LEVELS DISPLAYED
1 3

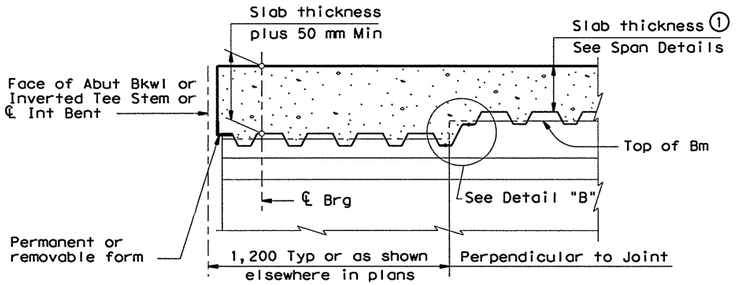


**THICKENED SLAB END AT ABUTMENT OR INTERIOR BENT**

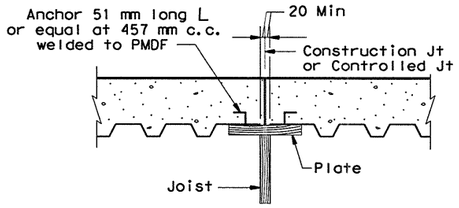


## SECTION THRU CONSTRUCTION JOINT

Note: In spans where PMD forms are used, timber forms shall be used at construction joints.

Adequate provision shall be made to support edge of metal form and to provide anchorage of metal form to slab concrete where joined to wood forms.

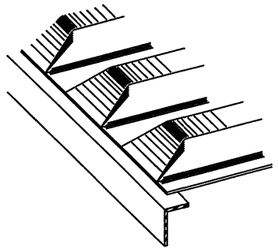

**PRECLOSED**

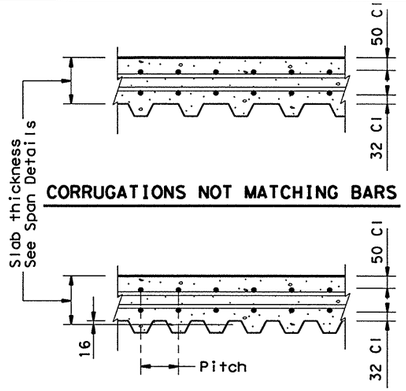


**CORRUGATIONS NOT MATCHING BARS**

**CORRUGATIONS MATCHING BARS**

The Contractor has the option of furnishing either system, if practical.

## TYPICAL LONGITUDINAL SLAB SECTIONS

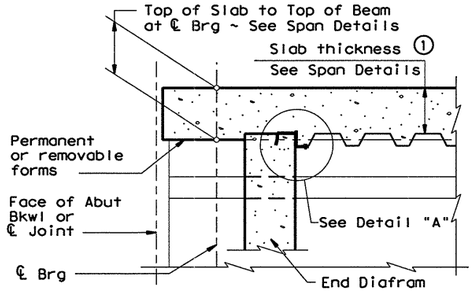


**SLAB END WITH CONC END DIAF OPTION AT ABUTMENT OR INTERIOR BENT**

① Slab thickness minus 16 mm if corrugations match reinforcing bars

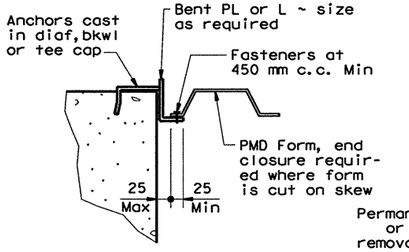


**DETAIL "A"**

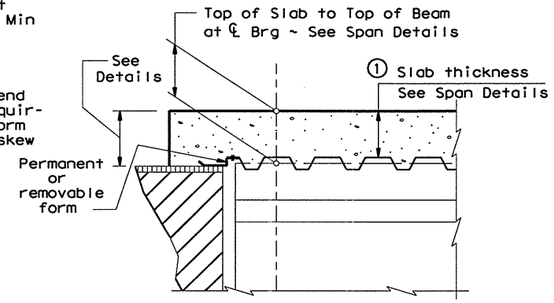


## SECTION THRU SLAB OVER ABUTMENT BACKWALL OR INVERTED TEE STEM

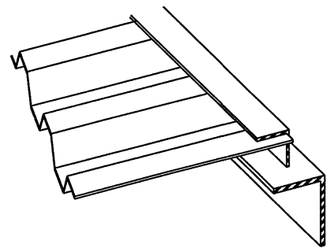

**ANGLE HEADER**

NOTE: This type is to be used for skewed ends only.

## TYPES OF END CLOSURES

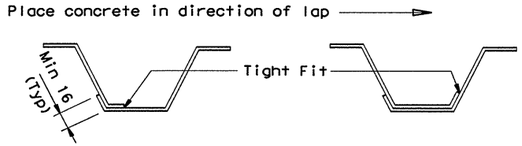


## SIDE LAP DETAILS

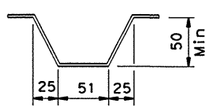


**TYPICAL CORRUGATION**

## DETAILS AT BEAM ENDS

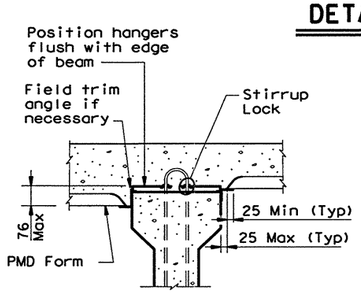


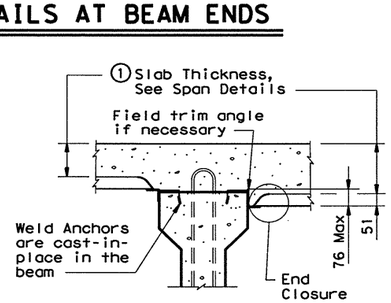


## TYPICAL TRANSVERSE SECTIONS

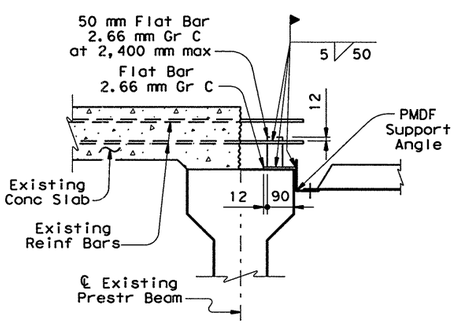


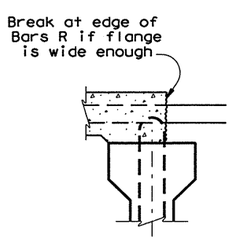


## SECTION THRU BREAKBACK FOR WIDENING

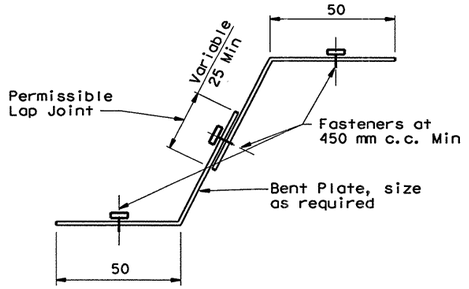


**DETAIL "B"**

APPROXIMATE QUANTITIES FOR ONE SQUARE METER OF SLAB (for Contractors information only)

| Slab Thickness mm | Reinf Steel kg/m² | Class S Concrete m³/m² |
|---|---|---|
| 185 | 32.52 | .2109 |
| 190 | 32.52 | .2146 |
| 195 | 32.52 | .2202 |
| 200 | 32.52 | .2258 |
| 210 | 32.52 | .2345 |

These approximate quantities are for a typical square meter of cast-in-place slab over the average PMDF with corrugations not matching bars. The quantities do not include an allowance for slab overhangs, thickened slab ends, or possible haunch over beams.

**GENERAL NOTES:**

Permenant Metal Deck Forms (PMDF) shall be designed for the dead load of form, reinforcement and concrete plus 244 kilograms per square meter for construction loads. The following allowable stresses shall be used in the design:

| ASTM A653M, Grade | Yield (MPa ) | Allowable Stress (MPa ) |
|---|---|---|
| 230 | 227.5 | 164.8 |
| 255 | 255.1 | 184.8 |
| 275 | 275.8 | 199.9 |
| 340 | 344.7 | 248.2 |
| 550 | 551.6 | 248.2 |
| Weld Metal | | 85.5 |

Maximum deflection under the weight of forms, reinforcement and concrete, or a minimum of 586 kilograms per square meter shall not exceed 1/180 of the form span or 13 mm, whichever is less. The design span for forms shall be clear distance between beam flanges measured parallel to the form flutes minus 50 mm. The minimum thickness of the forms shall be 0.91 mm and that of the support angles shall be 1.90 mm. All forms shall be securely fastened to supports.

All dimensions are in millimeters unless otherwise shown.

This Standard shall be used as a guide in the preparation of shop detail drawings.

Texas Department of Transportation
Design Division (Bridge)

# PERMANENT METAL DECK FORMS (CONCRETE)

# PMDF (C) (M)

| FILE: mdfcstdm.dgn | DN: THD | CK: THD | DW: LW | CK: LDS | STD: B488M |
|---|---|---|---|---|---|
| ©TxDOT September 1998 | DIST | FED REG | FEDERAL AID PROJECT • | | SHEET |
| REVISIONS | SAT | 6 | NH 2000 (704), etc. | | 545 |
| | COUNTY | | CONTROL | SECT | JOB | HIGHWAY |
| | BEXAR | | 2452 | 01 | 036, etc. | LP1604 |

DISCLAIMER:
The use of this standard is governed by the "Texas Engineering Practice Act". No warranty of any kind is made by TxDOT for any purpose whatsoever. TxDOT assumes no responsibility for the conversion of this standard to other formats or for incorrect results or damages resulting from its use.

ACC: (LV=1,3 for Metric)
LEVELS DISPLAYED 1 3

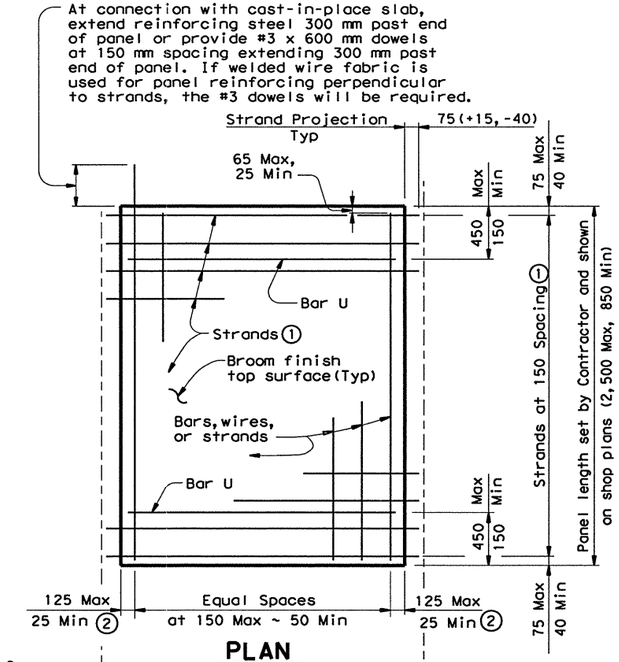


## PLAN

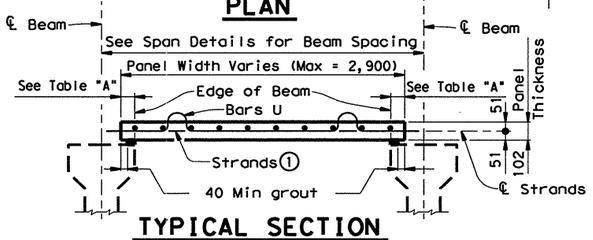


## TYPICAL SECTION

(1) Reinforcing steel #4 (Gr 420) at 150 mm spacing may be substituted for strands in panels 1,500 mm in width or less and shall be required in panels 1,050 mm in width or less. Spacing may be increased to 152 mm to accommodate existing forms. Non - prestressed concrete panels shall have the same dimensional tolerance as prestressed concrete panels in accordance with the Item "Precast Concrete Structures".

(2) May be reduced to 0 mm with welded wire fabric or welded bar mats.

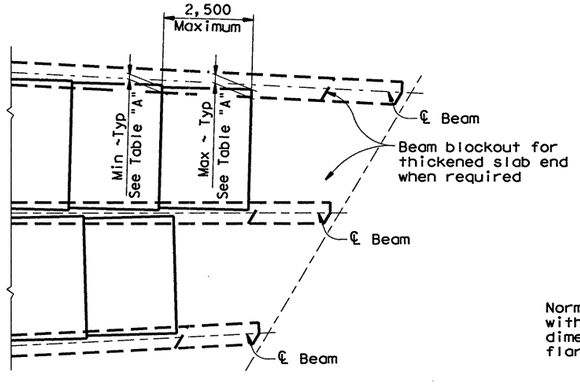


FLARED BEAM SPANS

## PART PLAN
(Showing thickened slab end condition)

| TABLE "A" | | | |
|---|---|---|---|
| Beam Type | Normal (mm) | Min (mm) | Max (mm) |
| A | 75 | 65 | 90 |
| B | 75 | 65 | 90 |
| C | 90 | 65 | 100 |
| 54 | 100 | 75 | 125 |
| IV | 140 | 90 | 180 |
| 72 | 140 | 90 | 200 |
| | | | |

Normal dimensions shall be used on spans with parallel beams. Maximum and Minimum dimensions shall apply only to spans with flared beams.

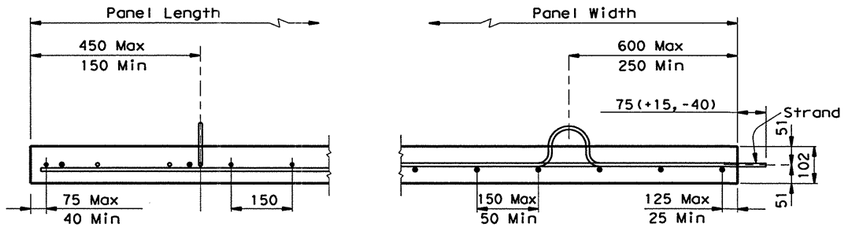


## REINFORCING BELOW STRANDS

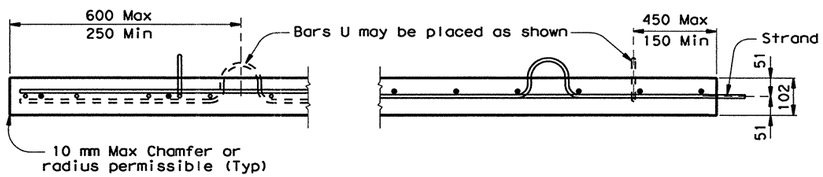


## REINFORCING ABOVE STRANDS

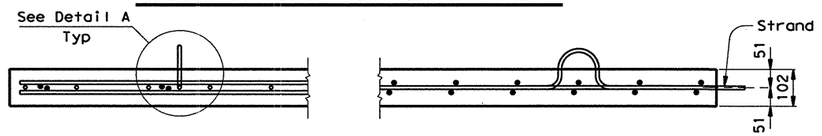


## REINFORCING ABOVE & BELOW STRANDS

Reinforcing steel may be deformed reinforcing bars, welded wire fabric or welded deformed bar mats. Minimum area of reinforcing perpendicular to strands shall be 473 $mm^2/m$. Prestressing strands may also be used, spaced at 150 mm for 13 mm strands and 110 mm for 9 mm strands. Individual bars or wires shall be no larger than #3. Reinforcing parallel to strands shall be as required to ensure proper handling of the fabric or bar mat. A reasonable amount of form oil will be permitted on welded fabric or bar mats.

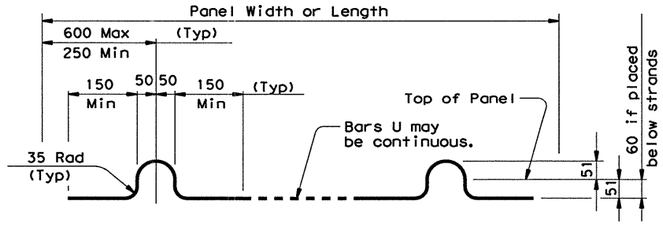


BARS U (#3)
Note: Four loops required per panel.

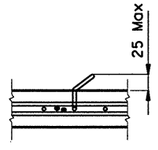


For Panels used with Epoxy Coated slab reinforcing, the loops of Bars U shall be field bent as shown. Bars U may be field bent to clear slab reinforcing.

## DETAIL A

GENERAL NOTES:

Designed for MS18 Loading in accordance with AASHTO 1992 Standard and Interim Specifications.

See Span Details for possible restrictions on the use of Prestressed Concrete Panels.

All concrete for panels to be Class H. Release strength f'ci = 28 MPa. Minimum 28 day strength f'c = 35 MPa.

Prestressing strands to be 9 mm - Grade 1860 with an initial tension of 71.62 kN per strand. Larger strands may be used with the same spacing and initial tension.

Suitable holes or anchorage devices for lifting panels may be cast in the panels provided they are shown on the shop plans and approved by the Engineer.

Erected panels shall bear uniformly on bedding strips of fiberboard or extruded polystyrene placed along the outer edge of each beam. A 10 mm gap shall be left at 1,200 mm ± intervals to permit escape of trapped air in the cast-in-place concrete. If additional blocking is needed, special grading details for supporting the panels and extra reinforcing between beam and slab will be required. The cost of this additional blocking will be considered subsidiary to deck construction.

Care must be taken to ensure proper cleaning of construction debris and consolidation of concrete mortar under the edges of the panels. It is also important that the bedding strips be placed at the edges of beams so that adequate space is provided for the mortar to flow a minimum of 40 mm under the panels as the slab concrete is placed. Roadway cross-slope reduces the opening required for proper entry of the mortar. Bedding strips varying in thickness across the beam are therefore required. To allow the proper amount of mortar to flow under the panel, the minimum opening shall be 10 mm.

All reinforcing steel in the cast-in-place slab shall be Grade 420. See Table on Sheet 2 of 3 for size and spacing of reinforcement. Orientation of reinforcement (normal or skewed) shall match that shown on the Span Details.

If the top and/or bottom layer of reinforcing steel is shown on the Span Details to be epoxy coated, then the OT, OC, OA, & OM and/or OD, OB, & OE bars shall be epoxy coated.

Bar laps, where required, shall be as follows:
Uncoated ~ #4 = 440 mm
~ #5 = 560 mm
Epoxy Coated ~ #4 = 660 mm
~ #5 = 820 mm

Contractor Note: Details as shown on the PCP Standard sheet are to be used in conjunction with the Span Details and applicable Standard sheets.

All dimensions are in millimeters unless otherwise shown.

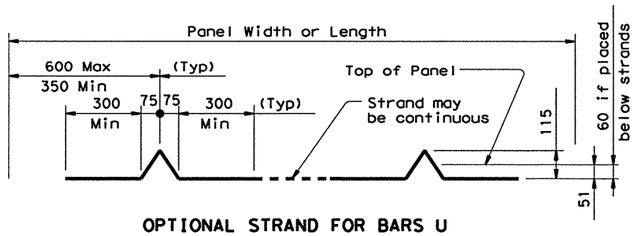


OPTIONAL STRAND FOR BARS U
Note: Four loops required per panel.
9 mm or 13 mm strands may be used.

# PRESTRESSED PANEL DETAILS

MS18 LOADING Sheet 1 of 3

Texas Department of Transportation
Design Division (Bridge)

# PRESTRESSED CONCRETE PANELS
## OPTIONAL DECK DETAILS FOR PRESTRESSED CONC BEAM SPANS

## PCP (C) (M)

| FILE: pcpcstdm.dgn | DN: TxDOT | CK: DWM | DW: RNP | CK: DWM | STD: B489M |
|---|---|---|---|---|---|
| ©TxDOT September 1998 | DIST | FED REG | FEDERAL AID PROJECT • | | SHEET |
| REVISIONS | SAT | 6 | NH 2000 (704), etc. | | 546 |
| | COUNTY | | CONTROL | SECT | JOB | HIGHWAY |
| | BEXAR | | 2452 | 01 | 036, etc. | LP1604 |

DISCLAIMER:
The use of this standard is governed by the "Texas Engineering Practice Act". No warranty of any kind is made by TxDOT for any purpose whatsoever. TxDOT assumes no responsibility for the conversion of this standard to other formats or for incorrect results or damages resulting from its use.

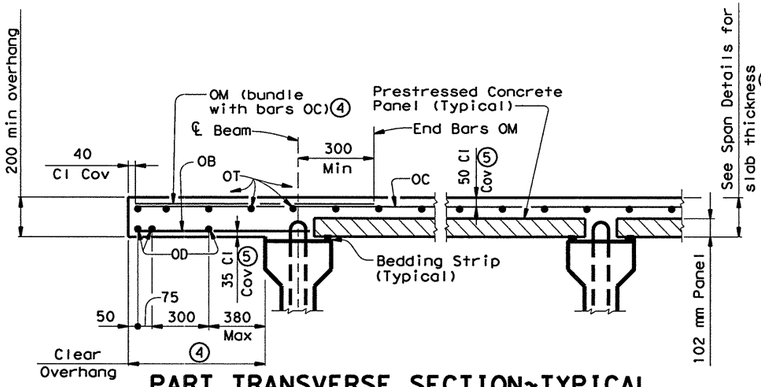


## PART TRANSVERSE SECTION~TYPICAL

(3) The actual thickness constructed may exceed the slab thickness shown on Span Details but, at mid-span of beams the extra thickness shall be no more than 50 mm. Bearing Seat Elevations or finished grade may be adjusted.

(4) Bars OM required when slab clear overhang exceeds the following:
830 at end of unit or other slab discontinuity
1520 at midspan

(5) Clear cover shall be as indicated unless otherwise shown on Span Details. Bars OT may rest on top of prestressed concrete panels if necessary to maintain clear cover.

| TABLE OF REINFORCING STEEL | | |
|---|---|---|
| BAR | SIZE | MAX SPA (mm) |
| OA | #5 | ~ |
| OB | #4 | 450 |
| OC | #5 | 150 |
| OD | #5 | 225 |
| OE | #5 | 150 |
| OM | #4 | ~ |
| OT | #4 | 225 |
| | | |

Max Spa as listed unless otherwise shown.

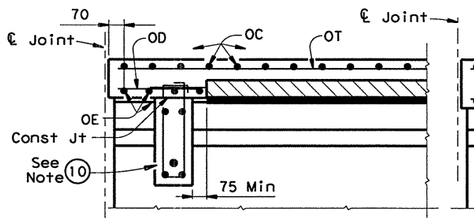


## SECTION AT END DIAPHRAGM

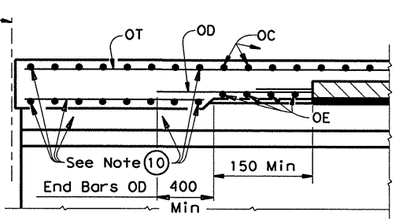


## SECTION AT THICKENED SLAB ENDS

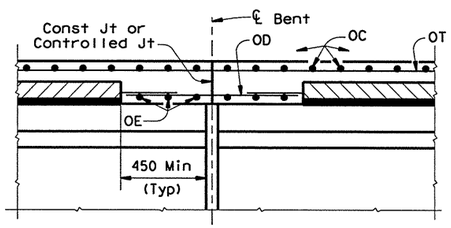


## SECTION AT CONVENTIONAL INTERIOR BENT w/o DIAPHRAGM

(10) For size and spacing of reinforcing steel, see appropriate details elsewhere in plans.

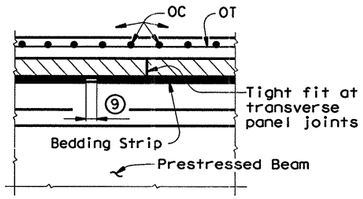


(9) 10 mm Open Joint in bedding strip at 1,200 mm c/c ±. Place 150 mm long piece of bedding strip 10 mm behind opening if necessary to reduce grout leakage.

## SECTION AT TRANSVERSE PANEL JOINTS

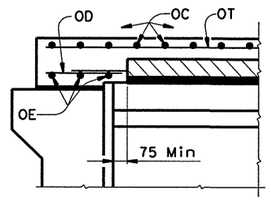


## SECTION AT ABUTMENT WITH SLAB OVER BACKWALL

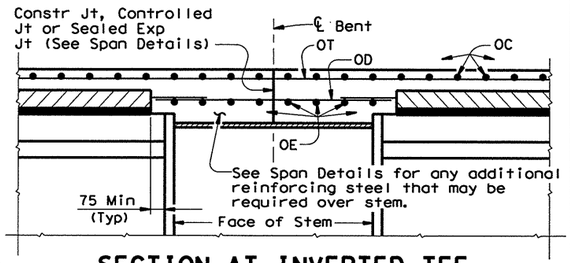


## SECTION AT INVERTED TEE INTERIOR BENT

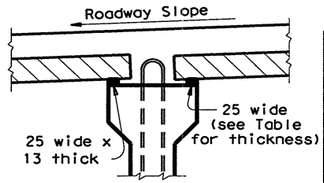


| BEDDING STRIP THICKNESS (mm) | | | | |
|---|---|---|---|---|
| | MAXIMUM ROADWAY SLOPE | | | |
| BEAM | 80 mm/m | 60 mm/m | 40 mm/m | 20 mm/m |
| A, B, C | 25 | 19 | 19 | 19 |
| S4 | 25 | 25 | 19 | 19 |
| IV, 72 | 32 | 25 | 25 | 19 |

## NORMAL GRADING DETAIL

Minimum bedding strip dimensions shall be as shown above. To reduce the quantity of cast-in-place concrete, thickness shown may may be increased by 6 mm increments to a maximum of 40 mm. Strips may be comprised of one layer or two, except that no layer shall be less than 13 mm thick. All layers of bedding strips shall be bonded to the beam and to each other with an approved adhesive. The same thickness strip shall be used under any one panel edge and the maximum change in thickness between adjacent panels shall be 6 mm. Panels may be supported by an alternate method, using a commercial product, if approved by the Engineer of Bridge Design, Design Division.

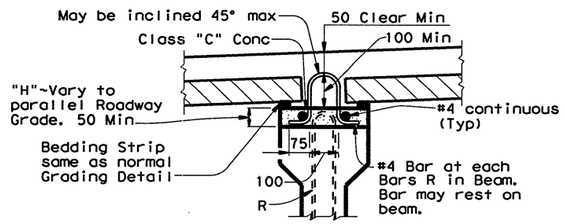


(6) Concrete blocks used for special grading shall be any convenient plan dimension with a minimum of 50 x 100 mm and a maximum of 100 x 200 mm. Heights may be from 30 mm to 140 mm.

(7) Concrete blocks from 30 mm high to 50 mm high may be used without the additional R bar extensions or longitudinal #4 bars.

(8) For blocks up to 90 mm high, Use 1.61 x 25 x 150 galvanized sheet metal angle and for blocks 90 to 140 mm high, use 1.61 x 25 x 200 galvanized sheet metal angle. Tie sheet metal thru holes in angle at 300 mm centers with 2.0 mm minimum Dia galvanized wire. Sheet metal angles are to be overlapped at splices and left in place. Vent holes 10 mm in diameter are to be placed in angles within the upper 25 mm, spaced at 900 mm centers.

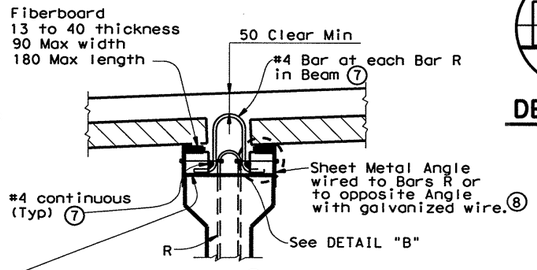


## SPECIAL GRADING DETAILS

For use where the distance between top of beam and finished grade can not be achieved within tolerances on cast-in-place slab thickness and thickness of bedding strips. Panels may be supported by an alternate method, using a commercial product, if approved by the Engineer of Bridge Design, Design Division.

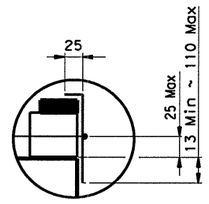


## DETAIL "B"

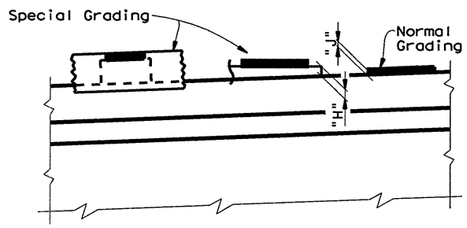


At grading method changes along the beam, the special grading "H" dimension may be reduced to 45 mm and the normal grading "J" dimension may be increased to 50 mm. Some cross-slope conditions may require further H and J adjustments as directed by the Engineer.

560 Min lap (820 Min lap for epoxy coated reinforcing steel). See Span Details for possible special lap or splice requirements.

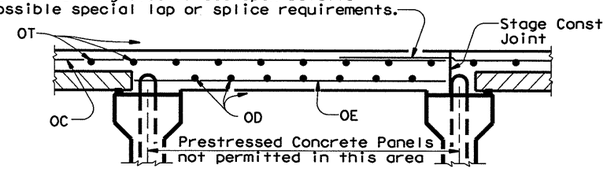


## STAGE CONSTRUCTION

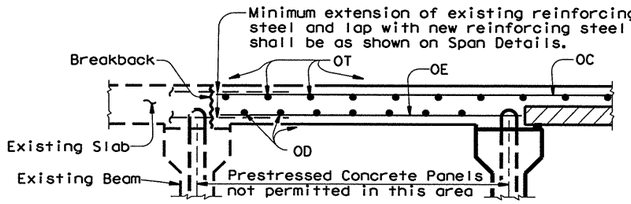


## BRIDGE WIDENINGS

## PART TRANSVERSE SECTIONS

Examples of potential situations where prestressed concrete panels may not be permitted. Refer to Span Details for limitations on their use.

MS18 LOADING



ACC: (LV=1,3 for Metric)
LEVELS DISPLAYED 1 3

Texas Department of Transportation
Design Division (Bridge)

# PRESTRESSED CONCRETE PANELS
## OPTIONAL DECK DETAILS FOR PRESTRESSED CONC BEAM SPANS

## PCP(C)(M)

| FILE: pcpcstdm.dgn | DN: TxDOT | CK: DWM | DW: RNP | CK: DWM | STD: B489M |
|---|---|---|---|---|---|
| ©TxDOT September 1998 | DIST | FED REG | FEDERAL AID PROJECT • | | SHEET |
| REVISIONS | SAT | 6 | NH 2000 (704), etc. | | 547 |
| | COUNTY | | CONTROL | SECT | JOB | HIGHWAY |
| | BEXAR | | 2452 | 01 | 036, etc. | LP1604 |

DISCLAIMER:
The use of this standard is governed by the "Texas Engineering Practice Act". No warranty of any kind is made by TxDOT for any purpose whatsoever. TxDOT assumes no responsibility for the conversion of this standard to other formats or for incorrect results or damages resulting from its use.

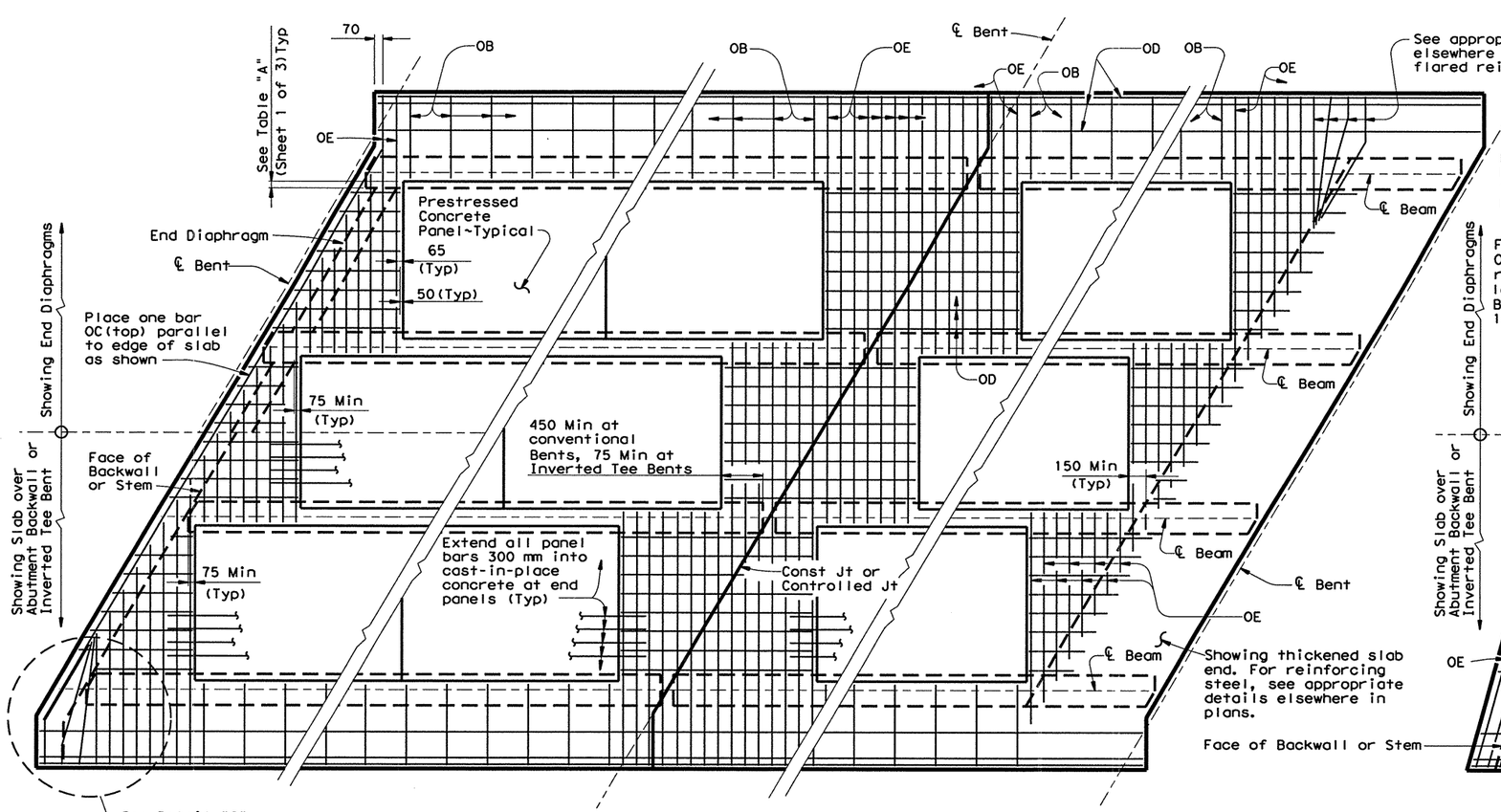


## PLAN~SLABS WITH NORMAL REINFORCEMENT

(Showing bottom reinforcing steel. For top reinforcement see Transverse Sections on Sheet 2 of 3 and Detail "A".)

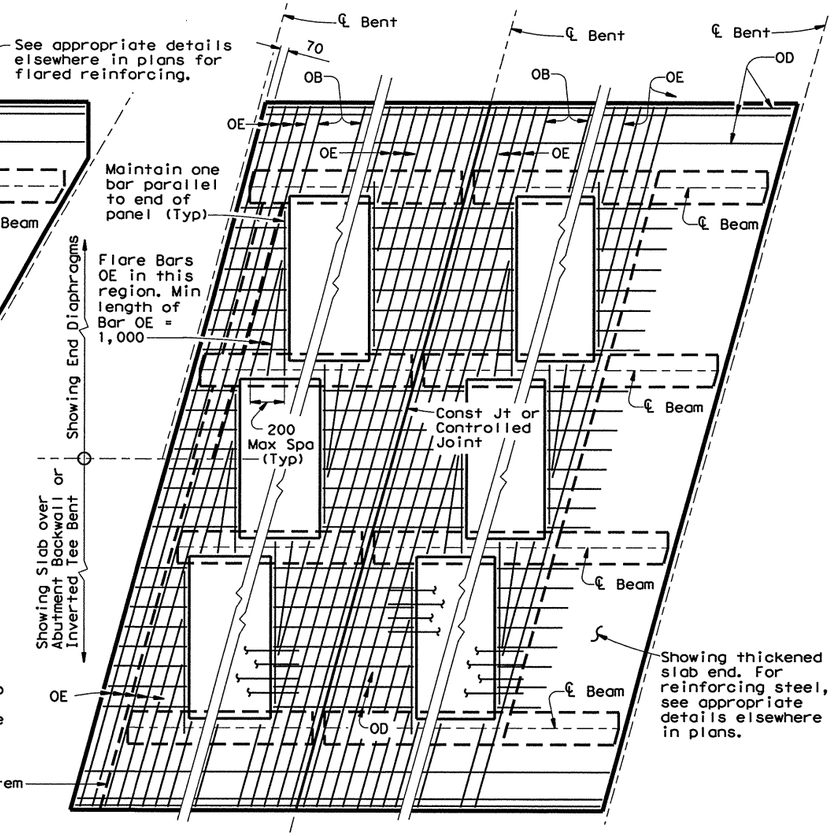


## PLAN~SLABS WITH SKEWED REINFORCEMENT

(Showing bottom reinforcing steel. For top reinforcement see Transverse Sections on Sheet 2 of 3.)

### APPROXIMATE QUANTITIES FOR ONE SQUARE METER OF CIP SLAB OVER PCP

(For Contractor's information only)

| Slab Thickness (mm) | Reinf Steel (kg) | Class S Concrete ($m^3$) |
|---|---|---|
| | | |
| | | |
| 190 | 14.55 | 0.088 |
| 195 | 14.55 | 0.093 |
| 200 | 14.55 | 0.098 |
| 210 | 14.55 | 0.108 |
| | | |

Quantities shown do not include an allowance for slab overhangs, thickened ends or diaframs, or the portion between panels over the beams.

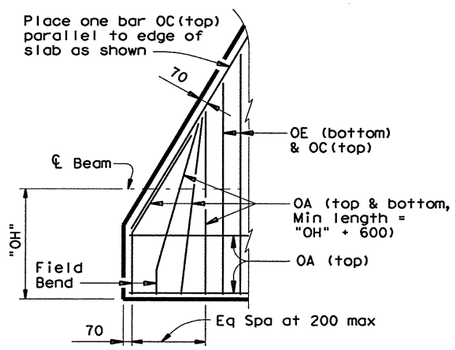


## DETAIL "C"

Showing top and bottom reinforcing. Bars OD and OT omitted for clarity.

MS18 LOADING



Texas Department of Transportation
Design Division (Bridge)

# PRESTRESSED CONCRETE PANELS
## OPTIONAL DECK DETAILS FOR PRESTRESSED CONC BEAM SPANS
## PCP(C) (M)

| FILE: pcpcstdm.dgn | DN: TxDOT | CK: DWM | DW: RNP | CK: DWM | STD: B489M |
|---|---|---|---|---|---|
| ©TxDOT September 1998 | DIST | FED REG | FEDERAL AID PROJECT • | | SHEET |
| REVISIONS | SAT | 6 | NH 2000 (704), etc. | | 548 |
| | COUNTY | | CONTROL | SECT | JOB | HIGHWAY |
| | BEXAR | | 2452 | 01 | 036, etc. | LP1604 |

LEVELS DISREGARDED
ACC: (LV=1,3 for Metric)
1 3

DISCLAIMER:
The use of this standard is governed by the "Texas Engineering Practice Act". No warranty of any kind is made by TxDOT for any purpose whatsoever. TxDOT assumes no responsibility for the conversion of this standard to other formats or for incorrect results or damages resulting from its use.

ACC:
(LV=1,3 for Metric)
LEVELS DISPLAYED
1 3

① Transverse bars in conflict with SEJ studs in either the bridge slab or approach slab shall be moved to rest at the junction of the studs.

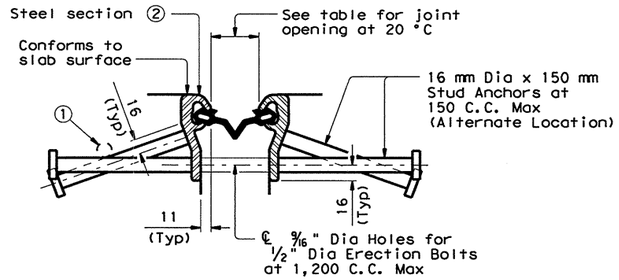


D S BROWN COMPANY

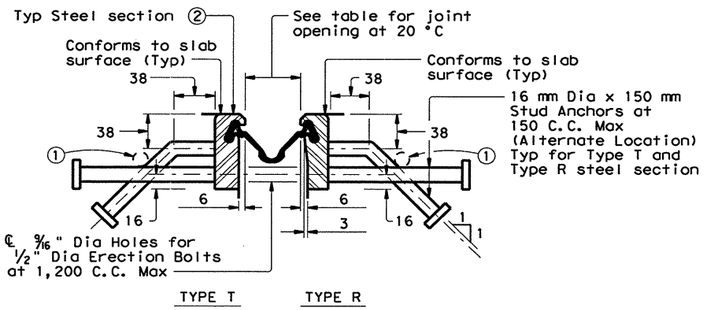


WATSON BOWMAN & ACME CORP

## SECTIONS THRU SEALED EXPANSION JOINT

NOTES:
Steel sections shall be shipped in convenient lengths of 7,300 mm Max and 3,000 mm Min unless otherwise necessary for stage construction or widenings. One shop splice will be permitted in each shipping length provided no piece is less than 600 mm in length and sufficient studs are added to limit the stud to shop or field splice distance to 50 mm Min and 100 mm Max .
Shop and field splices shall be made by butt welding with areas in contact with preformed joint sealer to be ground smooth.
Corresponding sections shall be match marked and bolted together for shipment.
All steel parts are not to be painted or primed unless designated elsewhere on the plans.

D.S. BROWN COMPANY

WATSON BOWMAN & ACME CORP

## NEOPRENE SEAL

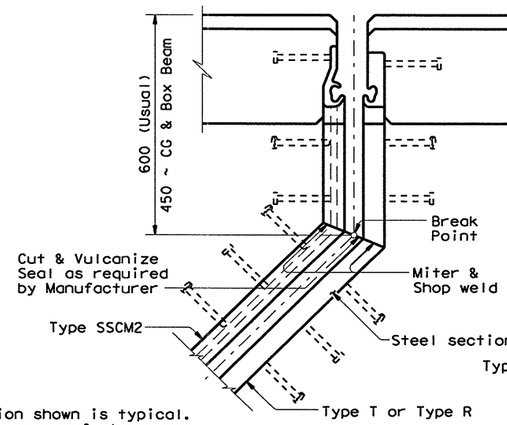


SKEWS WITH SLAB BREAK

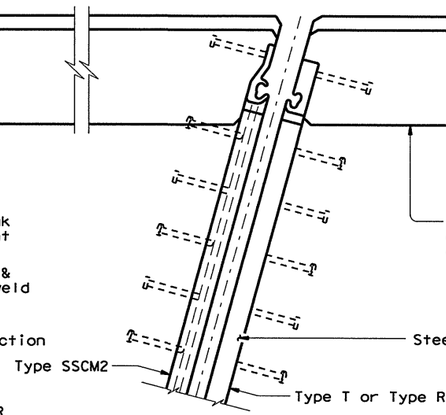


SKEWS WITHOUT SLAB BREAK

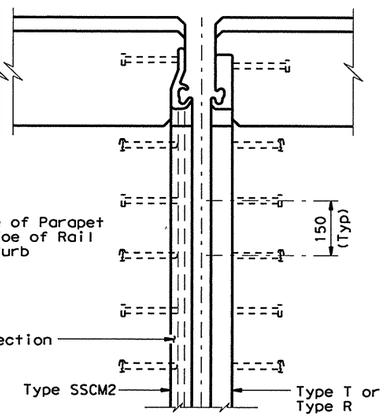


NORMAL

② Shape of steel section shown is typical. Variations depending on manufacturer are permissible.

③ Remove all burrs which will be in contact with seal prior to making splice.

| MANUFACTURER | STEEL SECTION ② | NEOPRENE STRIP SEAL 100 mm JOINT | |
|---|---|---|---|
| | | Seal Type | Joint Opening |
| D.S. Brown | Type SSCM2 | A2X | 45 |
| Watson Bowmon & Acme Corp | Type T | SE400 | 45 |
| Watson Bowmon & Acme Corp | Type R | SE400 | 45 |

## PLANS OF END CONDITIONS

④ 3 mm Bevel weld, for Type SSCM2 steel section.
5 mm Bevel weld, for Type T and Type R steel sections.

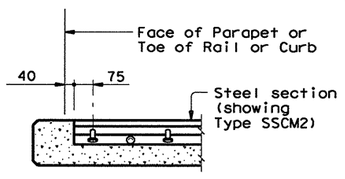


## SECTION THRU SLAB

(HIGH SIDE)

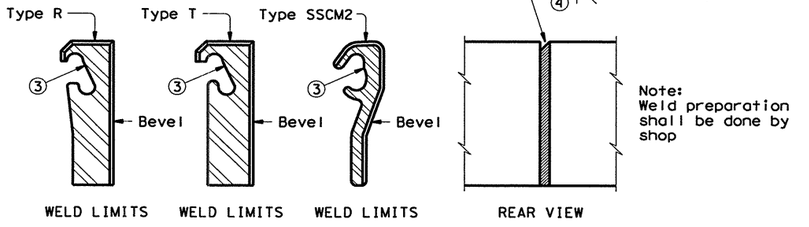


## BEVEL AT FIELD SPLICE

(Not to Scale)

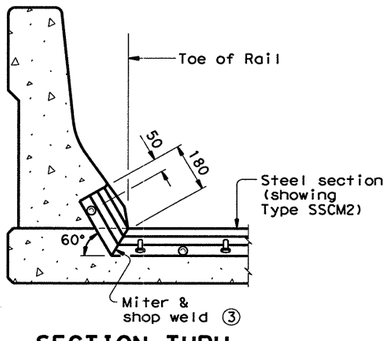


## SECTION THRU BARRIER RAIL

(LOW SIDE)

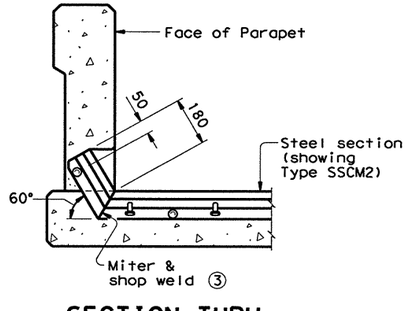


## SECTION THRU OTHER PARAPET RAILS

(LOW SIDE)

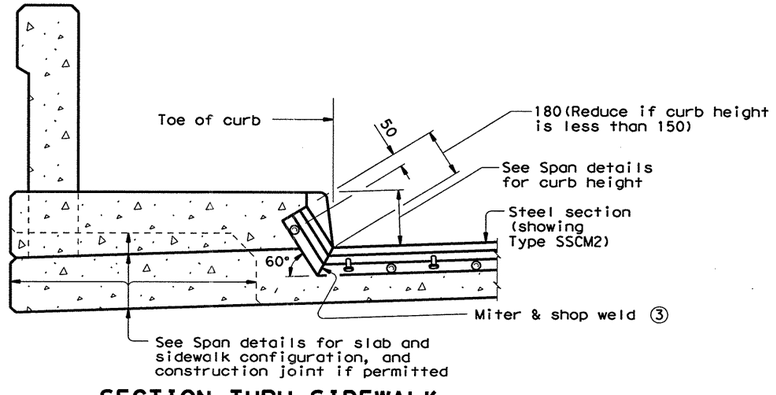


## SECTION THRU SIDEWALK

(LOW SIDE)

## GENERAL NOTES:

Sealed Exp Jts shall be provided in the size and at locations shown on plans.
Minimum slab thickness required for the use of SEJ-A(M) is 165 mm.
Shop fabrication will be required at all intersections of cross slope and at break points.
Corresponding sections of Sealed Exp Jts shall be temporarily shop assembled, checked for fit, and match marked for shipment.
Erection holes shall be punched so as to line up when Sealed Exp Jts are in their final position.
Stud anchors shall be electric arc end-welded with complete fusion.
The neoprene seal shall be continuous and included in the price bid for Sealed Exp Jt .
The Contractor shall arrange for securing the Sealed Exp Jt in position, and placing to the proper grade and alignment by welding braces to adjacent reinf steel, to prestressed beam stirrups, or to anchors cast in concrete diaframs. Cost of temporary bracing is to be included in the price bid for Sealed Exp Jt .
After bracing and welding the steel section, the erection bolts and spacers shall be removed and erection holes sealed before placing slab concrete.
All dimensions are in millimeters unless otherwise shown.

Texas Department of Transportation
Design Division (Bridge)

# SEALED EXPANSION JOINT DETAILS

## WITHOUT OVERLAY

## SEJ-A(M)

| FILE: sejastdm.dgn | DN: THD | CK: THD | DW: JTR | CK: LDS | NEG: | B272M |
|---|---|---|---|---|---|---|
| ©TxDOT September 1998 | DIST | FED REG | FEDERAL AID PROJECT • | | | SHEET |
| REVISIONS | SAT | 6 | NH 2000 (704), ETC. | | | 549 |
| | COUNTY | | CONTROL | SECT | JOB | HIGHWAY |
| | BEXAR | | 2452 | 01 | 936, etc: | LP1604 |

DISCLAIMER:
The use of this standard is governed by the "Texas Engineering Practice Act". No warranty of any kind is made by TxDOT for any purpose whatsoever. TxDOT assumes no responsibility for the conversion of this standard to other formats or for incorrect results or damages resulting from its use.

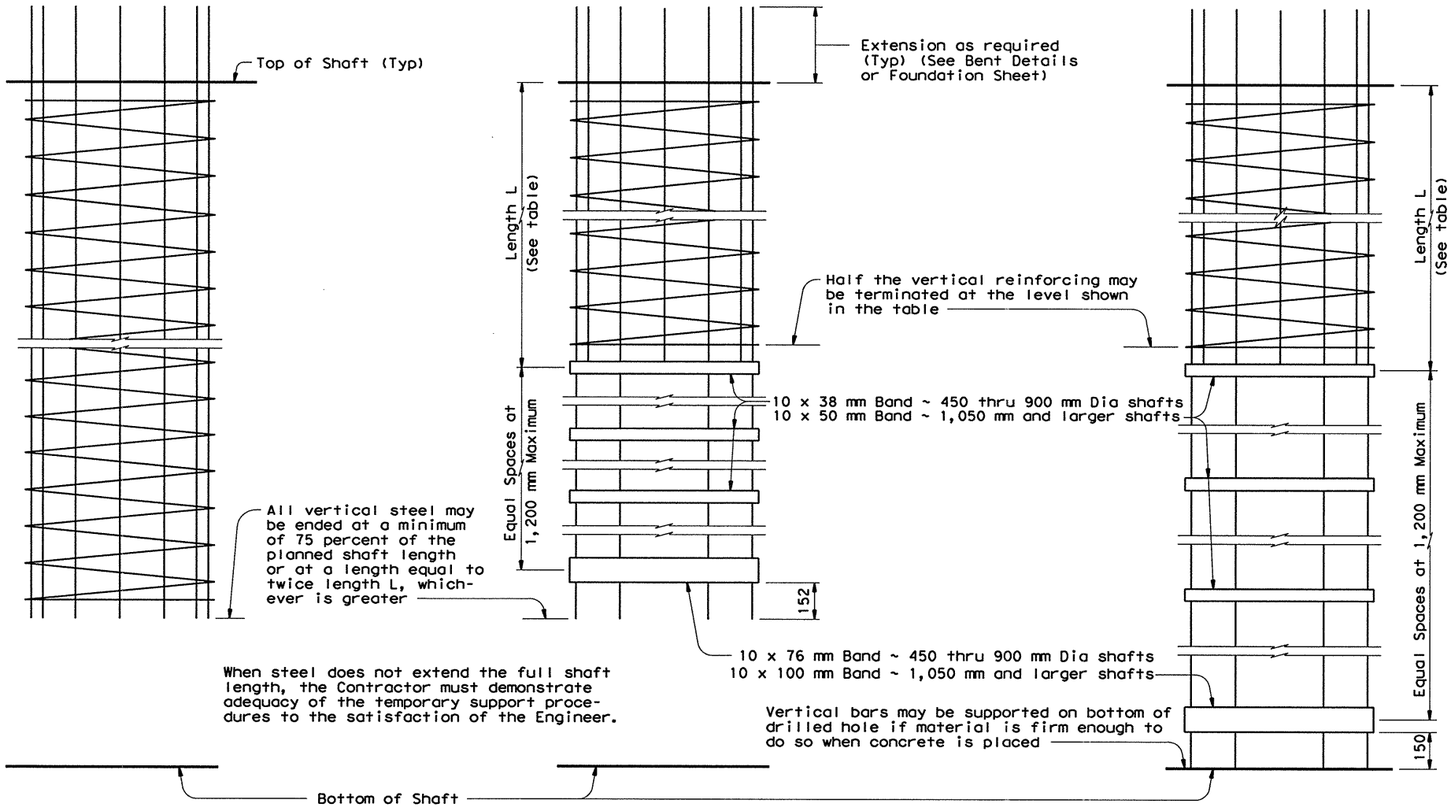


## ELEVATIONS

| LENGTH L | | |
|---|---|---|
| Drilled Shaft Diameter (mm) | Length L (mm) | Note |
| 450 & 600 | 7,300 | The length L is measured from top of shaft, natural ground, or finished ground, whichever results in the longer length of full reinforcement. |
| 750 & 900 | 9,100 | |
| 1,050 & larger | 10 Shaft Diameters | |

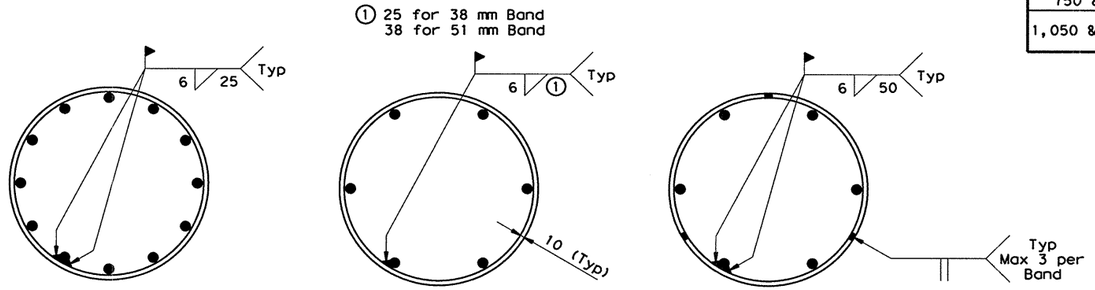


TOP

INTERIOR

BOTTOM

## BAND DETAILS

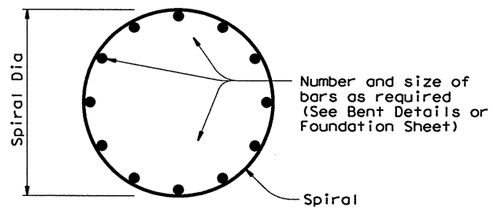


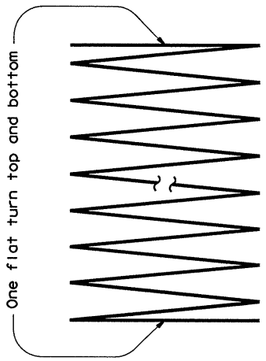


Spiral to be at the pitch and diameter as shown elsewhere in the plans.

## SPIRAL DETAIL

### GENERAL NOTES:

At the Contractor's option, any or all drilled shafts may be constructed using these details in lieu of the drilled shaft details shown elsewhere in the plans.

These details shall not be applied to single column bents supported by a single shaft, or to overhead sign bridge towers supported by a single shaft, or to high mast illumination pole foundations. Unless otherwise noted, all drilled shafts on stream crossings and any others specifically noted in the plans shall have full reinforcement and be excluded from applications of these details.

All welded bands and reinforcing steel, including that projecting the required amount from the top of the shaft, shall not be paid for directly, but shall be subsidiary to the bid item, "Drilled Shaft Foundations"

Tack welding of spiral to main steel will not be allowed in the upper 4,500 mm of drilled shaft.

All dimensions are in millimeters unless otherwise shown.

LEVELS DISPLAYED: 1 3
ACC: (LV=1,3 for Metric)

Texas Department of Transportation
Design Division (Bridge)

# OPTIONAL DRILLED SHAFT REINFORCING

## ODSR(M)

| FILE: odsstdm1.dgn | DN: THD | CK: GHO | DW: KC | CK: LDS | STD: B109M |
|---|---|---|---|---|---|
| ©TxDOT September 1998 | DIST | FED REG | FEDERAL AID PROJECT • | | SHEET |
| REVISIONS | SAT | 6 | NH 2000 (704), etc. | | 550 |
| | COUNTY | | CONTROL | SECT | JOB | HIGHWAY |
| | BEXAR | | 2452 | 01 | 036, etc. | LP1604 |

DISCLAIMER:
The use of this standard is governed by the "Texas Engineering Practice Act". No warranty of any kind is made by TxDOT for any purpose whatsoever. TxDOT assumes no responsibility for the conversion of this standard to other formats or for incorrect results or damages resulting from its use.

ACC:
(LV=1,2 for English; 1,3 for Metric)
LEVELS DISPLAYED
1 3

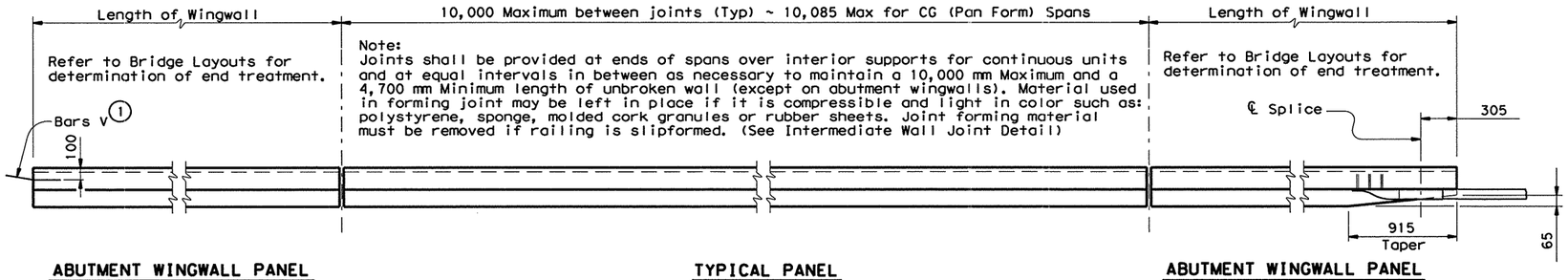


**ABUTMENT WINGWALL PANEL**
(Showing dowels for connection to approach Concrete Traffic Barrier)

**TYPICAL PANEL**

**ABUTMENT WINGWALL PANEL**
(Showing MBGF Attachment)

## PLAN

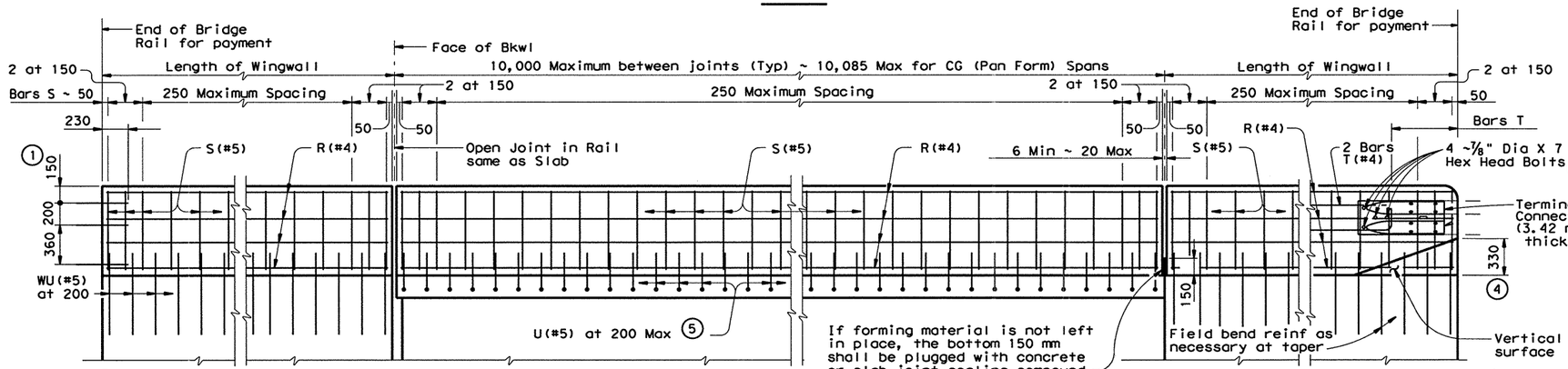


(1) Connection to be same as for approach CTB if dowels are not used.
(2) 1 ¾" Dia washer required under ⅞" Dia Bolt Heads and Nuts.
(4) Increase 50 mm for Structure with overlay
(5) For ACP Overlay exceeding 75 mm, reduced bar spacing may be required.

## ROADWAY ELEVATION OF RAIL

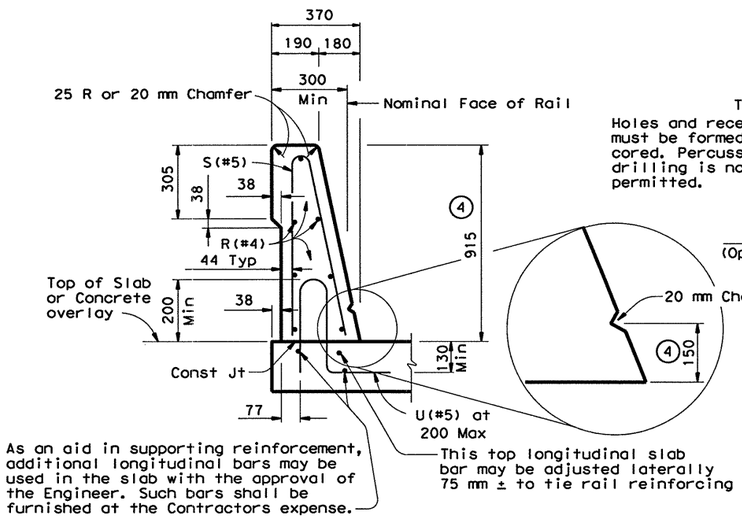


## TYPICAL SECTION
(SHOWING CONVENTIONAL REINF)

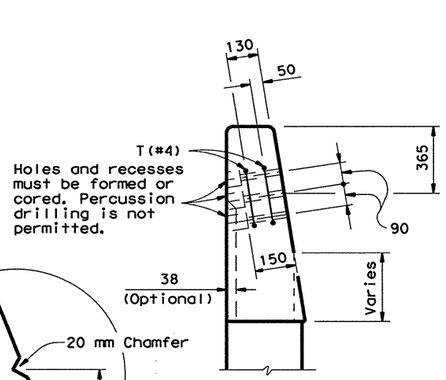


## SECTION A-A

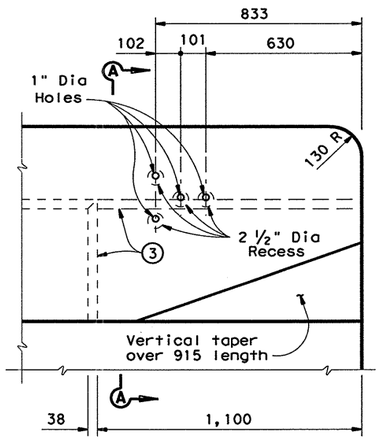


(3) Back offset may optionally be continued to end of railing.

## END TREATMENT AT MBGF

GENERAL NOTES:

Designed according to current AASHTO Standard Specifications for Highway Bridges. Structurally evaluated to be equivalent or greater in strength to other safety-shape railings which have been crash tested to NCHRP Report 230 SL-2 criteria. Also equivalent to railings tested to 1989 AASHTO Guide Specification PL-2 criteria and Texas Transportation Institute research project No. 9429 CDK.

All parts of the railing including concrete parapet wall, reinforcing, terminal connector, bolts, nuts and washers are included in the price bid per linear meter of rail.

All steel components except reinforcing shall be galvanized unless otherwise shown in plans.

All concrete for railing wall shall be Class "C".

All reinforcing steel shall be grade 420.

Metal Beam Guard Fence or Concrete Traffic Barrier is usually attached to the abutment wingwall panel. See plan sheet for details and length for payment. The splice between the approach guard fence and the terminal connector shall be with the normal eight bolts. The dowel connection to the approach traffic barrier shall be grouted the same as other barrier joints.

Shop drawings will not be required for this rail.

This railing may be constructed with slip-forms when shown on the plans or approved by the Engineer, with equipment approved by the Engineer. Sensor control for both line and grade must be provided. When slip-forming is used, the concrete may be cured with membrane curing compound.

Additional reinforcing may be tack welded to the upper two thirds of the reinforcing cage to provide bracing when slip-forming is used. Additional anchorage devices may be added when welding is necessary in the lower one third of the cage. Do not weld to U or S bars in the lower one third of the cage.

The back of railing shall be vertical unless otherwise shown in the plans or approved by the Engineer. Deformed welded wire fabric may be used as an option to conventional reinforcement and shall be made in accordance with ASTM A497 (Deformed Wire).

Welded Wire Fabric Detail shown is for MD55. longitudinal wires and MD54 vertical wires. Combinations of Reinforcing Steel and Welded Wire Fabric or configurations of Welded Wire Fabric other than shown will be permitted when the conditions in the table are satisfied and the dimension from end of section to first welded vertical wire does not exceed 75 mm.

Epoxy coat bars U and WU if slab bars are epoxy coated.

All dimensions are in millimeters unless otherwise shown.

Average mass of railing (with no overlay) is 560 kg/m.



Texas Department of Transportation
Design Division (Bridge)

# SINGLE SLOPE TRAFFIC RAILING

# TYPE SSTR(M)

| FILE: ristd037.dgn | DN: GHO | CK: THD | DW: TGG | CK: LDS | STD: B566M |
|---|---|---|---|---|---|
| ©TxDOT January 1996 | DIST | FED REG | FEDERAL AID PROJECT • | | SHEET |
| REVISIONS | SAT | 6 | NH 2000 (704), etc. | | 551 |
| | COUNTY | | CONTROL | SECT | JOB | HIGHWAY |
| | BEXAR | | 2452 | 01 | 036: etc. | LP1604 |

DISCLAIMER:
The use of this standard is governed by the "Texas Engineering Practice Act". No warranty of any kind is made by TxDOT for any purpose whatsoever. TxDOT assumes no responsibility for the conversion of this standard to other formats or for incorrect results or damages resulting from its use.

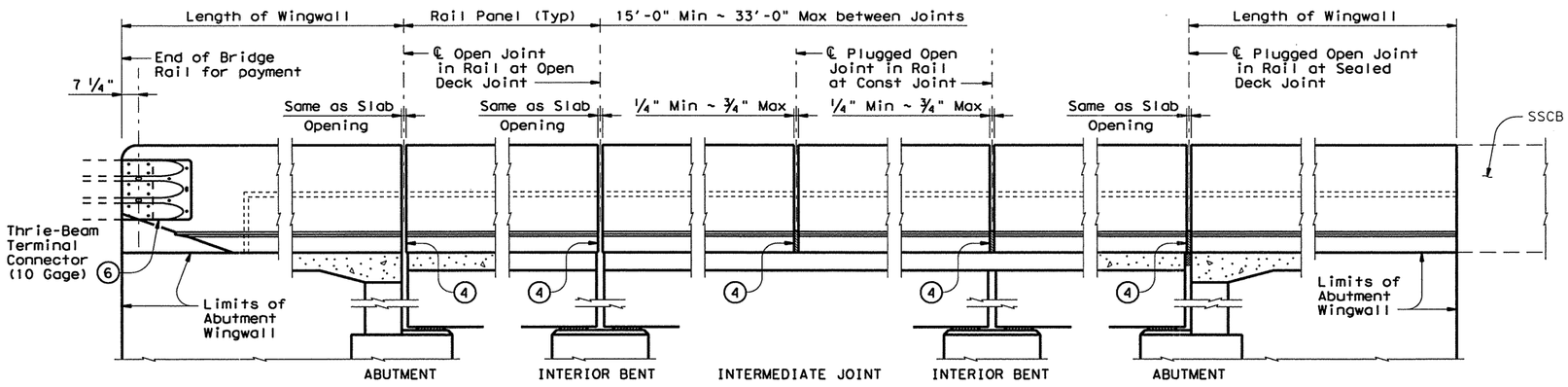


**ABUTMENT WINGWALL PANEL**
Showing MBGF Attachment (1)

Note: Bolt recesses are only required when pedestrian sidewalks are adjacent to back of rail.

**BRIDGE DECK PANELS**
**ROADWAY ELEVATION**
Showing Geometry

**ABUTMENT WINGWALL PANEL**
Showing connection to approach Single Slope Concrete Barrier (1)

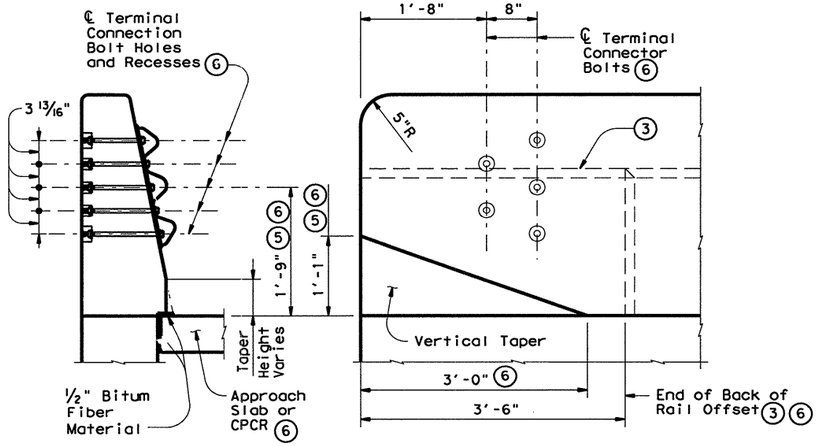


**SECTION** **ROADSIDE ELEVATION**

## END TREATMENT AT MBGF TERMINAL CONNECTION

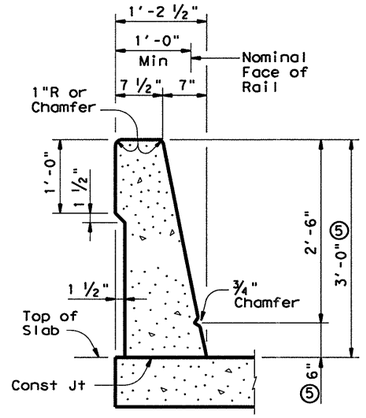


## TYPICAL SECTION THRU DECK RAIL
Showing Conventional Geometry

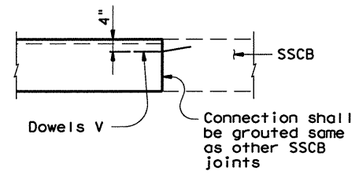


**SHOWING OPTION FOR APPROACH CONNECTION FOR SSCB (2)**

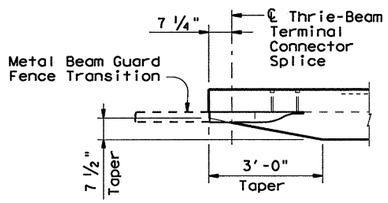


**SHOWING OPTION FOR MBGF ATTACHMENT (6)**

## ABUTMENT WINGWALL PARTIAL PLANS (1)

### GENERAL NOTES:

This rail has been evaluated and accepted to be of equal strength to other safety-shaped railings with like geometry, which have been crash tested to meet NCHRP Report 350 TL-3 criteria and can be used for design speeds of 50 mph and greater.

All steel components except reinforcing shall be galvanized unless otherwise shown on plans. Epoxy coat bars U and WU if slab bars are epoxy coated.

All concrete for railing wall shall be Class "C".

All reinforcing steel shall be Grade 60. Deformed welded wire fabric may be used as an option to conventional reinforcement and shall be made in accordance with ASTM A497 (Deformed Wire). Welded Wire Fabric Detail shown is for D8.5 longitudinal wires and D8.3 vertical wires. Combinations of Reinforcing Steel and Welded Wire Fabric or configurations of Welded Wire Fabric other than shown will be permitted when the conditions in the table are satisfied and the dimension from end of section to first welded vertical wire does not exceed 3".

This railing may be constructed with slip-forms when shown on the plans or approved by the Engineer, with equipment approved by the Engineer. Sensor control for both line and grade must be provided. When slip-forming is used, the concrete may be cured with membrane curing compound.

Additional reinforcing may be tack welded to the upper two thirds of the reinforcing cage to provide bracing when slip-forming is used. Additional anchorage devices may be added when welding is necessary in the lower one third of the cage. Do not weld to U or S bars in the lower one third of the cage.

The back of railing shall be vertical unless otherwise shown on the plans or approved by the Engineer.

All parts of the railing including concrete parapet wall, MBGF Terminal Connections, bolts, nuts, washers, and reinforcing, are included in the price bid per linear foot of rail.

Shop drawings will not be required for this rail.

Average weight of railing (with no overlay) is 376 plf.

### MBGF TERMINAL CONNECTION SPECIAL NOTES:

Metal Beam Guard Fence shall be attached to the bridge rail and extend along the embankment using the Thrie-Beam Terminal Connection unless shown otherwise on the plans. The Thrie-Beam Terminal Connection shall be attached to the railing using 5 ~ 7/8" diameter A325 Hex Head Bolts, each with 2 ~ 1 3/4" O.D. washers. Place washer under each head and nut.

The 5 Terminal Connection Bolt Holes shall be 1" diameter holes perpendicular to the back face of the railing. Each Bolt Hole shall have a 2 1/2" diameter x 2" deep recess, as shown, when pedestrian sidewalks are adjacent to back of rail. Adjust placement of reinforcing steel as necessary to avoid bolt holes and recesses. Holes and recesses must be formed or cored. Percussion drilling is not permitted.

The 5 Terminal Connection Bolts shall be tightened in a well distributed pattern so to prevent damage or distortion of the Thrie-Beam Connection and the MBGF Transition. Bolts shall be cut off after installation so as to extend no more than 3/4" beyond nut. End of cut-off bolt shall be painted with Zinc-rich paint.

The splice between the Approach Guard Rail and the Terminal Connection shall be with the normal 12 Connection Bolts. The Terminal Connector shall receive the same protective coating as the attached Metal Beam Guard Fence.

METAL BEAM GUARD FENCE TRANSITION and METAL BEAM GUARD FENCE detail sheets must be referred to for additional details and information not shown herein.

(1) Refer to Bridge Layouts for determination of end treatment.

(2) See approach SSCB to determine if dowels V are to be used.

(3) Back of Rail Offset may, with Engineer's approval, be continued to the end of the Railing.

(4) Rail Joints shall be provided at ends of all spans and at equal intervals in between as necessary to maintain a 33' maximum and a 15' minimum length of unbroken wall (except on Abutment Wingwalls). Rail Joints shall be the same width as deck joint openings, except that Intermediate Rail Joints and Joints over deck construction joints shall be 1/4" minimum to 3/4" maximum in width. Joints shall be open if slab joint opening is not sealed. Joints over construction joints and over sealed deck joints shall be plugged. Forming material used in joints may be left in place if it is light in color and compressible, such as the following materials: polystyrene, molded cork granules, sponge rubber sheet, etc. If forming material is not left in place, the bottom 6" shall be plugged with slab joint sealing compound to prevent drainage and staining.

(5) Increase 2" for structures with overlay.

(6) See MBGF TERMINAL CONNECTION SPECIAL NOTES for additional information. Omit if Metal Beam Guard Fence is not used.



Texas Department of Transportation
Bridge Division

# SINGLE SLOPE TRAFFIC RAILING

# TYPE SSTR

| FILE: ristde37.dgn | DN: TxDOT | CK: TxDOT | DW: TxDOT | CK: TxDOT |
|---|---|---|---|---|
| ©TxDOT December 2001 | DISTRICT | FEDERAL AID PROJECT | | SHEET |
| REVISIONS | 15 | NH 2000 (704), etc | | 551A |
| | COUNTY | CONTROL | SECT | JOB | HIGHWAY |
| | BEXAR | 2452 | 01 | 836,etc | LP1604 |

ACC:
LEVELS DISPLAYED
1

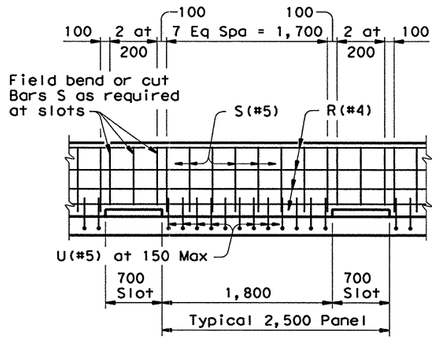


## SIDE DRAIN DETAIL

Local Deck or Side Drains may be used where shown elsewhere on the plans or as directed by the Engineer. Modify Bars S as required. No drains should be placed over railroad tracks, lower roadways, or within 1,830 mm of the face of an adjacent bent cap.

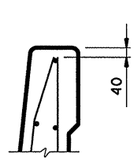


Bars S may be constructed as two separate bars at the contractors's option.

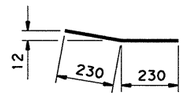


**BARS V (#8)**
(3 at each connection)

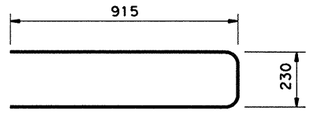


**BARS T (#4)**
(2 at each terminal)

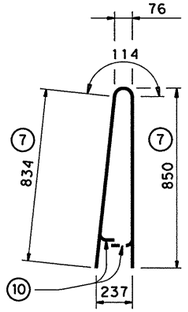


**BARS S (#5)**

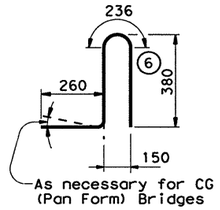


**BARS U (#5)**

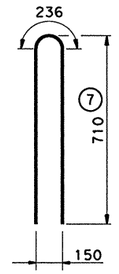


**BARS WU (#5)**

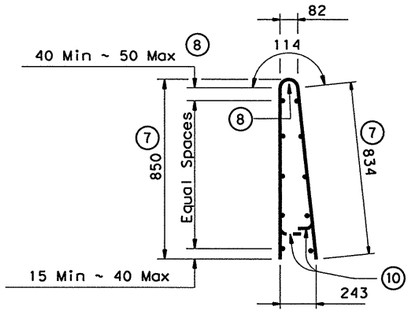


**WELDED WIRE FABRIC**
(OPTIONAL)

(6) Increase to slab thickness plus 140 mm for slabs over 250 mm. Dimension given is permissible without increase for slabs 250 mm or less. Increase by nominal overlay thickness if over 50 mm.

(7) Dimension given is permissible for structures with up to 50 mm of overlay.

(8) No longitudinal wires may be within upper bend.

(9) Place additional #4 longitudinal bar (included as part of railing reinforcement) when U bars are embedded less than 130 mm.

(10) Bend or cut as required to clear drain slots.

| DESCRIPTION | LONGITUDINAL WIRES | VERTICAL WIRES |
|---|---|---|
| Minimum (Cumulative Total) Wire Area | 1,120 $mm^2$ | 640 $mm^2/m$ |
| | No. of Wires | Spacing |
| Minimum | 6 | 102 |
| Maximum | 11 | 305 |
| Maximum Wire Size Differential | The smaller wire shall have an area of 40% or more of the larger wire. | |

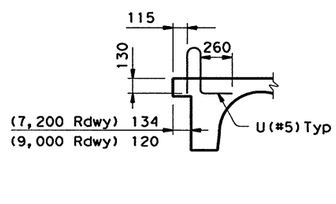


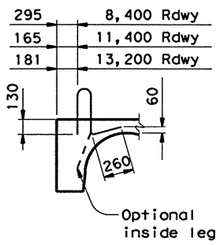


**CG (PAN FORM) BRIDGES**

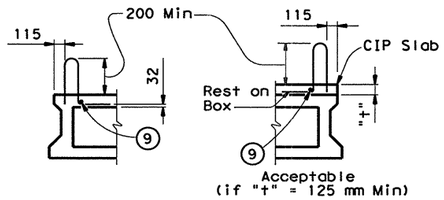


**BOX BEAM**

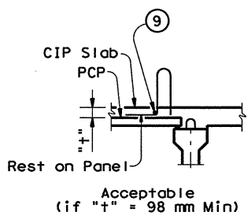


**PRECAST PANELS**

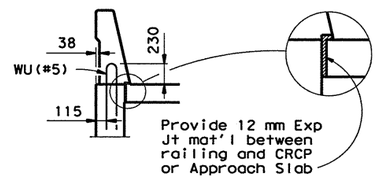


**WINGWALLS AND CIP RETAINING WALLS**

## TYPICAL U AND WU BAR PLACEMENT

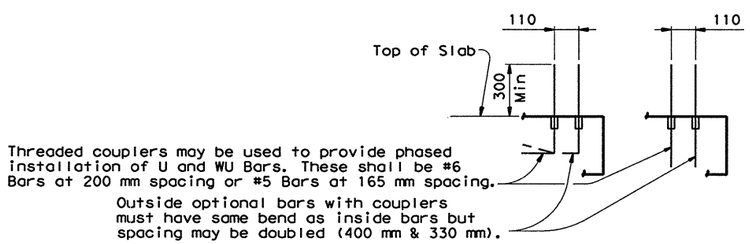


**OPTIONAL BARS U(#6) OR WU(#6)**

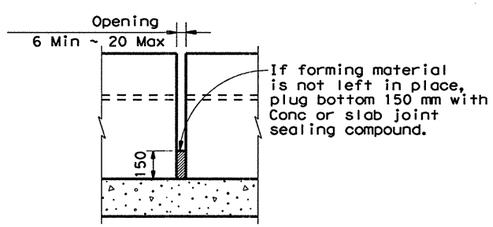


**INTERMEDIATE WALL JOINT DETAIL**

DISCLAIMER:
The use of this standard is governed by the "Texas Engineering Practice Act". No warranty of any kind is made by TxDOT for any purpose whatsoever. TxDOT assumes no responsibility for the conversion of this standard to other formats or for incorrect results or damages resulting from its use.

ACC: (LV=1,2 for English; 1,3 for Metric)
LEVELS Displayed: 1 3

Sheet 2 of 2

Texas Department of Transportation
Design Division (Bridge)

# SINGLE SLOPE TRAFFIC RAILING

# TYPE SSTR(M)

| FILE: rlstd037.dgn | DN: GHO | CK: THD | DW: TGG | CK: LDS | STD: B566M |
|---|---|---|---|---|---|
| ©TxDOT January 1996 | DIST | FED REG | FEDERAL AID PROJECT • | | SHEET |
| REVISIONS | SAT | 6 | NH 2000 (704), etc. | | 552 |
| | COUNTY | | CONTROL | SECT | JOB | HIGHWAY |
| | BEXAR | | 2452 | 01 | 036, etc. | LP1604 |

DISCLAIMER:
The use of this standard is governed by the "Texas Engineering Practice Act". No warranty of any kind is made by TxDOT for any purpose whatsoever. TxDOT assumes no responsibility for the conversion of this standard to other formats or for incorrect results or damages resulting from its use.

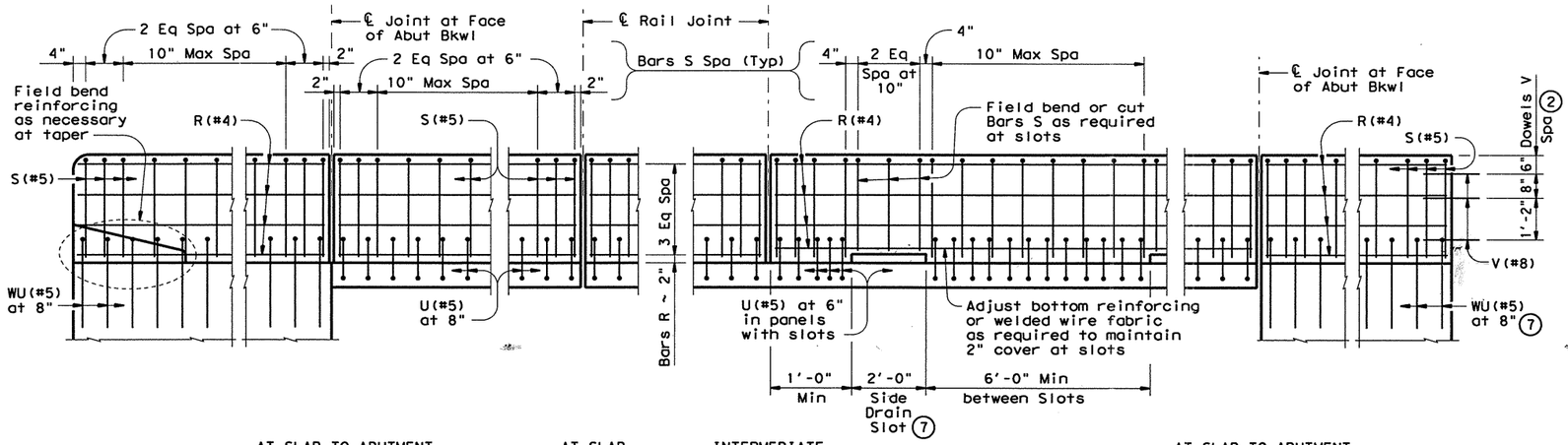


AT SLAB TO ABUTMENT CONSTRUCTION JOINT | AT SLAB EXPANSION JOINT | INTERMEDIATE JOINT | OPTIONAL SIDE DRAINS (7) | AT SLAB TO ABUTMENT EXPANSION JOINT

**AT ABUTMENT WINGWALLS**
Shown for MBGF Attachment

**TYPICAL DECK PANELS**

## ROADWAY ELEVATION

Showing Reinforcing and Optional Side Drain

**AT ABUTMENT WINGWALLS**
Showing dowels for connection to approach Single Slope Concrete Barrier

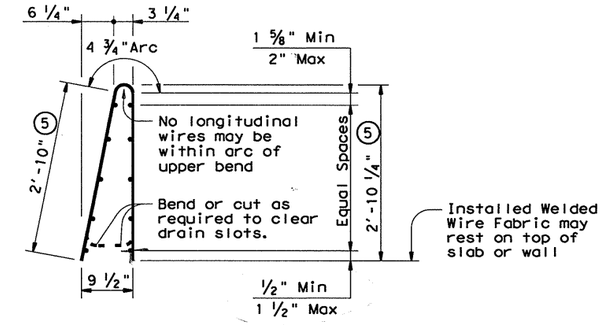


| DESCRIPTION | LONGITUDINAL WIRES | VERTICAL WIRES |
|---|---|---|
| Minimum (Cumulative Total) Wire Area | 0.933 Sq In | 0.248 Sq In per Ft |
| Minimum | No. of Wires 6 | Spacing 4" |
| Maximum | 11 | 12" |
| Maximum Wire Size Differential | The smaller wire shall have an area of 40% or more of the larger wire. | |

**BARS S WELDED WIRE FABRIC OPTION**

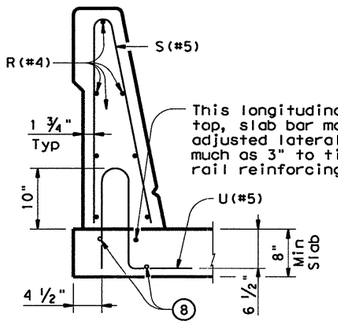


**ON BRIDGE SLAB**

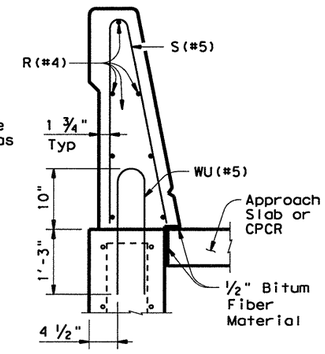


**ON CANTILEVERED WINGWALL OR CIP RETAINING WALL**

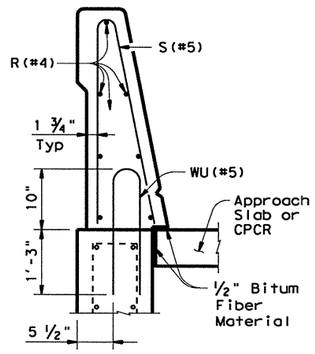


**ON FOUNDED WINGWALL**

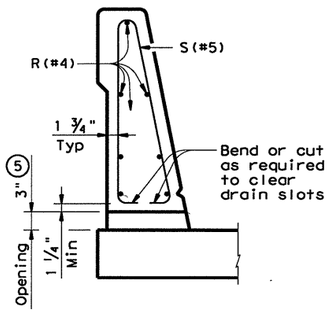


**AT OPTIONAL SIDE DRAIN ON BRIDGE SLAB**

## TYPICAL SECTIONS THRU RAIL

Showing Reinforcing

(2) See approach SSCB to determine if dowels V are to be used.

(5) Increase 2" for structures with overlay.

(7) Side Drains may be used where shown elsewhere on the plans or as directed by the Engineer. No drains should be placed over railroad tracks, lower roadways, or within 6 ft of the face of an adjacent bent cap.

(8) As an aid in supporting reinforcement, additional longitudinal bars may be used in the slab with the approval of the Engineer. Such bars shall be furnished at the Contractors expense.

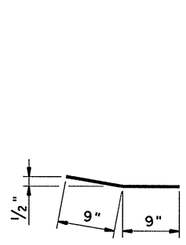


**BARS V (#8)**
(3 at each connection)

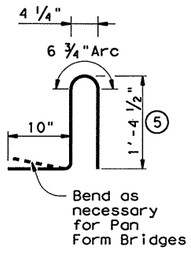


**BARS U (#5)**

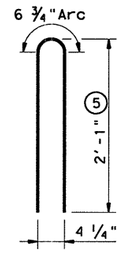


**BARS WU (#5)**

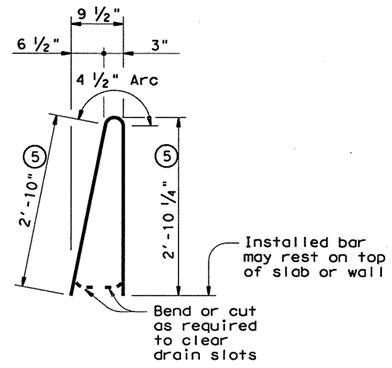


**BARS S (#5)**

SHEET 2 OF 2

Texas Department of Transportation
Bridge Division

# SINGLE SLOPE TRAFFIC RAILING

# TYPE SSTR

| FILE: rlstde37.dgn | DN: TxDOT | CK: TxDOT | DW: TxDOT | CK: TxDOT |
|---|---|---|---|---|
| ©TxDOT December 2001 | DISTRICT | FEDERAL AID PROJECT | | SHEET |
| REVISIONS | 15 | NH 2000 (704), etc | | 552A |
| | COUNTY | CONTROL | SECT | JOB | HIGHWAY |
| | BEXAR | 2452 | 01 | 035,etc | LP1604 |

ACC:
LEVELS D... ED
1

DISCLAIMER:
The use of this standard is governed by the "Texas Engineering Practice Act". No warranty of any kind is made by TxDOT for any purpose whatsoever. TxDOT assumes no responsibility for the conversion of this standard to other formats or for incorrect results or damages resulting from its use.

LEVELS DISPLAYED 1 3 ACC: (LV=1,2 for English; 1,3 for Metric)

② Metal Beam Guard Fence must be attached to the bridge rail and extended along the embankment unless shown otherwise on the plans. See plan sheet for details and length for payment. The Splice between the approach guard rail and the Terminal Connector shall be with the normal 8 bolts.

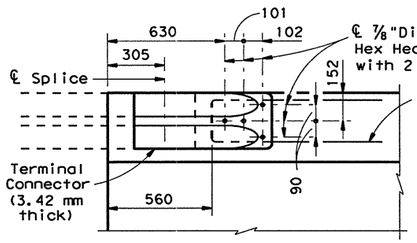


## TERMINAL CONNECTION

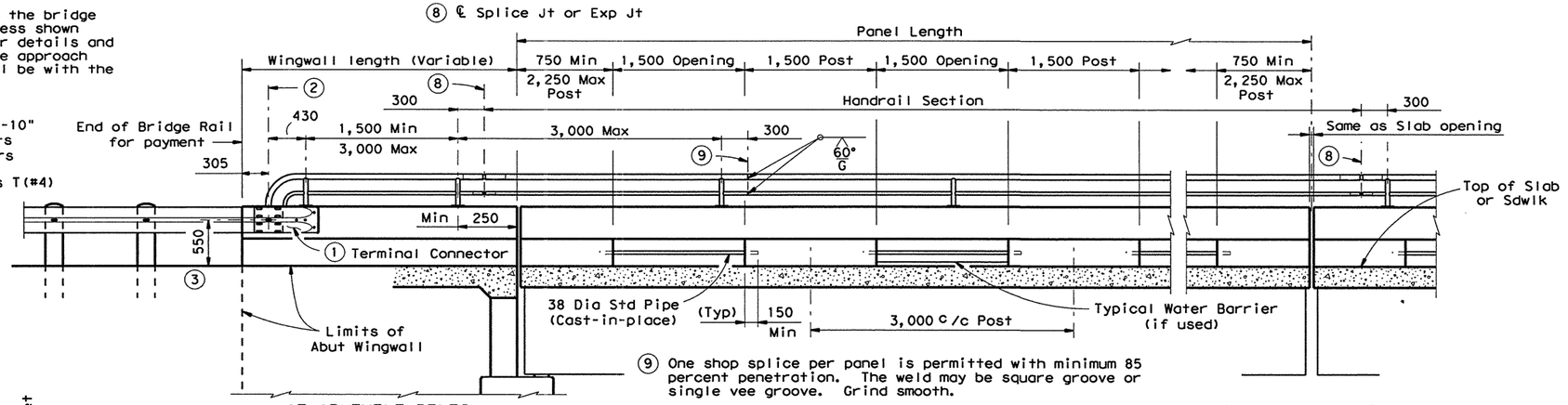


AT ABUTMENT BENTS

AT SLAB EXP JOINTS

⑨ One shop splice per panel is permitted with minimum 85 percent penetration. The weld may be square groove or single vee groove. Grind smooth.

① Terminal Connector shall receive the same protective coating as the attached Metal Beam Guard Fence.

## INSIDE ELEVATION OF RAIL

⑥ Place additional longitudinal bar (included as part of railing reinforcement) when W bars are embedded less than 130 mm.

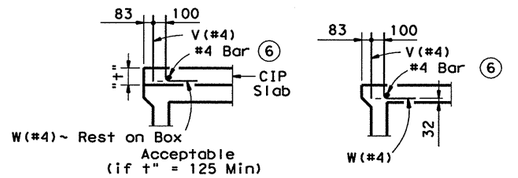


BOX BEAM

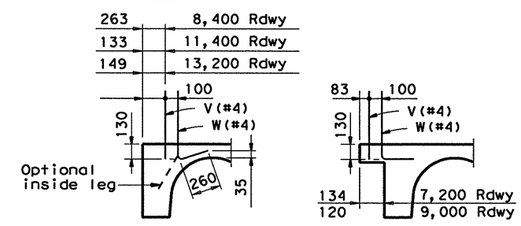


CG (PAN FORM)

## TYPICAL REINFORCEMENT PLACEMENT DETAILS

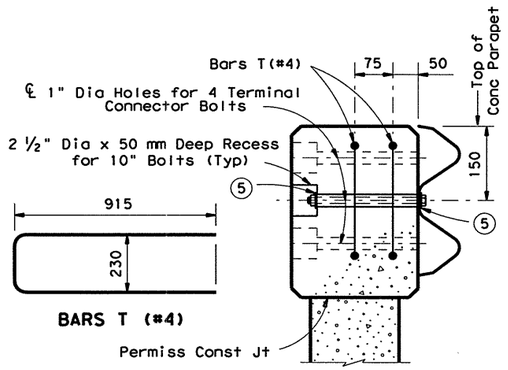


## SECTION THRU TERMINAL CONNECTION

⑤ 1 ¾" O.D. Washers req'd under bolt Heads & Nuts

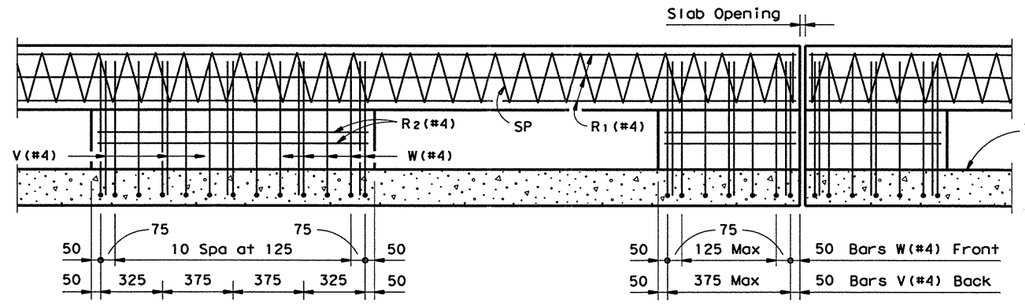


## ELEVATION SHOWING TYPICAL REINFORCING PLACEMENT

If two or more SP bars are used in a continuous panel length, they shall be butted within the center 900 mm of a rail post. At Contractor's option, Bars S spaced at 150 mm may be substituted for Bars SP.

BARS SP (MW25) ASTM A82

⑦ Length shown for 130 mm bar embedment with no overlay. Adjust as required.

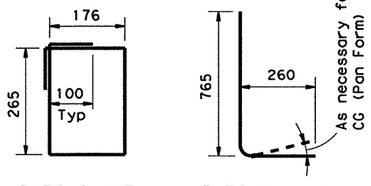


BARS S (#3) BARS W (#4)

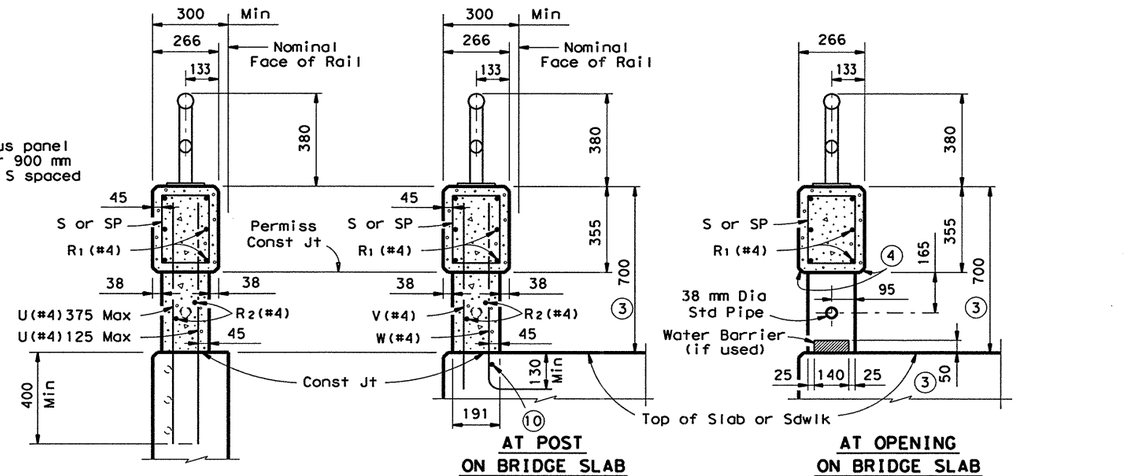


ON ABUT WING OR CIP RETAINING WALL

AT POST ON BRIDGE SLAB

AT OPENING ON BRIDGE SLAB

③ Increase 50 mm for Structures with Overlay

④ 38 x 20 or 20 x 20 Chamfer (Typ at all openings)

⑩ Top longitudinal slab bar may be adjusted laterally 75 mm ± to tie reinforcing.

## SECTIONS THRU RAIL

SHEET 1 OF 2

Texas Department of Transportation
Design Division (Bridge)

# COMBINATION RAIL

# TYPE C202(M)

| FILE: rlstd028.dgn | DN: JJP | CK: THD | DW: DRG | CK: LDS | STD: B576M |
|---|---|---|---|---|---|
| ©TxDOT January 1996 | DIST | FED REG | FEDERAL AID PROJECT • | | SHEET |
| REVISIONS | SAT | 6 | NH 2000 (704), etc. | | 553 |
| | COUNTY | | CONTROL | SECT | JOB | HIGHWAY |
| | BEXAR | | 2452 | 01 | 036, etc. | LP1604 |

DISCLAIMER:
The use of this standard is governed by the "Texas Engineering Practice Act". No warranty of any kind is made by TxDOT for any purpose whatsoever. TxDOT assumes no responsibility for the conversion of this standard to other formats or for incorrect results or damages resulting from its use.

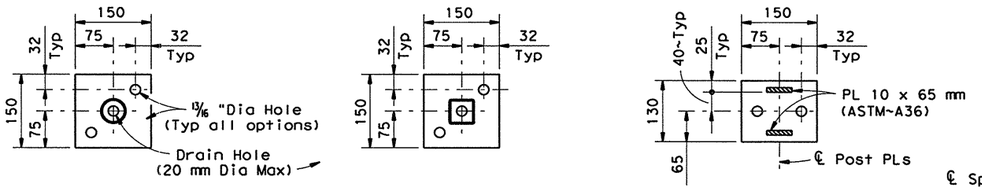


## SECTIONS THRU HANDRAIL POSTS

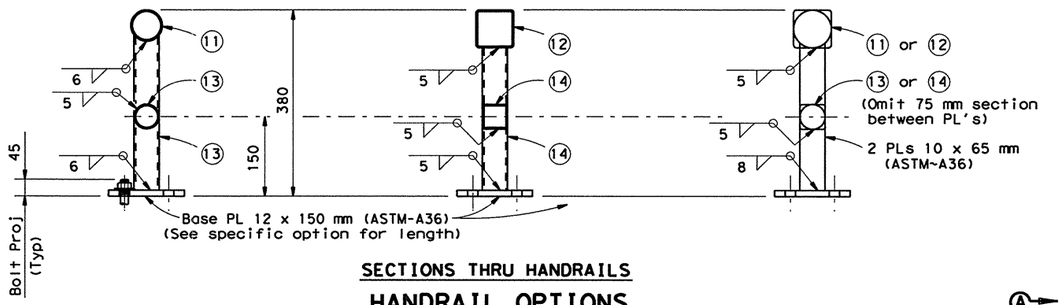


## SECTIONS THRU HANDRAILS

## HANDRAIL OPTIONS

⑪ 65 mm Std Pipe (ASTM-A53) (E or S, Gr A or B) or
73 mm OD Pipe x 3.1 (API-5LX42) or
73 mm OD Pipe x 2.7 (API-5LX42)

⑫ TS 75 x 75 x 3.0 mm (A36 or A500 Gr B)

⑬ 50 mm Std Pipe (ASTM-A53) (E or S, Gr A or B) or
60 mm OD Pipe x 3.2 (API-5LX42) or
60 mm OD Pipe x 2.8 (API-5LX52)

⑭ TS 50 x 50 x 3.0 mm (A36 or A500 Gr B)

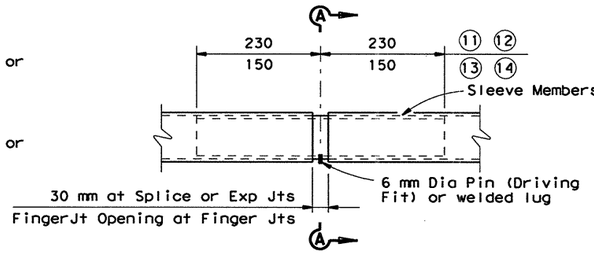


## HANDRAIL SPLICE DETAIL

Note: The difference between the outside dimension of sleeve and inside dimension of rail member shall not exceed 4.3 mm before galvanizing. Minimum wall thickness of sleeve shall be 3.1 mm.

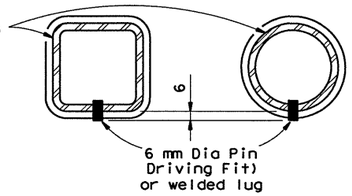


## SECTIONS A-A

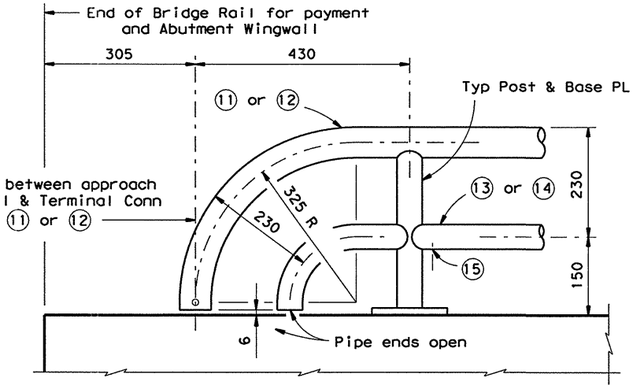


## HANDRAIL TERMINAL DETAIL

⑮ 10 mm Dia Hole in bottom of pipe or tube (Minimum of 1 hole between posts ~ Typ)

## RAIL DATA FOR HORIZONTAL CURVES

| | RADIUS TO FACE OF RAIL | MAX CHORD LENGTH | CONSTRUCT OR FABRICATE |
|---|---|---|---|
| Handrail | Over 840 m | 9.00 m | Straight rail sections |
| | Over 420 m thru 840 m | 4.50 m | ⑯ To required radius or to chords shown |
| | Over 210 m thru 420 m | 2.25 m | |
| | Thru 210 m | Zero | ⑯ To required radius |
| | | | |

⑯ Shop drawings required (may be submitted as 280 mm x 432 mm prints provided they are clearly legible).

For railing not requiring shop drawings, erection drawings showing handrail section lengths, post spacing, and anchor bolt setting shall be submitted to the Area Engineer for approval. If handrail requires shop and erection drawings, these drawings shall be submitted to the Bridge Engineer for approval.

GENERAL NOTES:

This rail has been successfully evaluated without handrail by full scale crash tests to meet NCHRP Report 230 SL-2 criteria.

Rail Type C202(M) is comprised of the following parts: concrete parapet, concrete posts, concrete above wingwall, all reinforcing shown, including that embedded in the slab or wingwalls, water barrier, Terminal Connector, handrail, CIP pipe and all anchorage provisions including bolts, nuts and washers. All these parts are included in price bid per meter of rail.

All steel components except reinforcing shall be galvanized unless otherwise shown on plans.

All concrete shall be Class C. Chamfer all exposed corners.

Epoxy coat Bars V, W and U if slab bars are epoxy coated.

All reinforcing shall be grade 420 except spirals.

Anchor bolts shall be ⅝" Dia ASTM A307 Grade A bolts (or A36 threaded rods with one tack welded hex nut each) with one hex nut and one hardened steel washer at each bolt. Threaded rods may be 0.557" minimum diameter with rolled threads. Nuts shall conform to A563 requirements. The untapped blanks shall be galvanized prior to cutting the threads. Threads for bolts and nuts shall have Class 2A and 2B fit tolerances in accordance with ANSI B1.1.

Face of rail, posts and parapet shall be vertical transversely unless otherwise approved by the Engineer. Handrail posts and opening end faces shall be perpendicular to top of adjacent concrete parapet grade. Grout may be used under handrail post base plates if necessary.

Water barriers shall be provided at openings draining onto undercrossing roadways and sidewalks. They may be cast-in-place or precast in convenient lengths and bonded to the bridge deck with an approved epoxy cement.

Only one handrail option shall be used throughout an entire project.

Handrail sections shall include not less than two posts nor more than four (except at Abutments).

Exposed edges of handrail and handrail posts shall be rounded or chamfered to approximately 2 mm by grinding.

All dimensions are in millimeters unless otherwise shown.

Average mass of railing: 304 kg/m ~ Conc (with no Overlay)
18 kg/m ~ Steel (Std Pipe option)

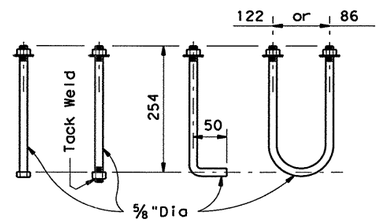


## HANDRAIL ANCHOR BOLT OPTIONS



Texas Department of Transportation
Design Division (Bridge)

# COMBINATION RAIL

# TYPE C202(M)

| FILE: rlstd028.dgn | DN: JJP | CK: THD | DW: DRG | CK: LDS | STD: B576M |
|---|---|---|---|---|---|
| ©TxDOT January 1996 | DIST | FED REG | FEDERAL AID PROJECT • | | SHEET |
| REVISIONS | SAT | 6 | NH 2000 (704), etc. | | 554 |
| | COUNTY | | CONTROL | SECT | JOB | HIGHWAY |
| | BEXAR | | 2452 | 01 | 036, etc. | LP1604 |

ACC:
(LV=1,2 for English; 1,3 for Metric)
LEVELS DISPLAYED
1 3

DISCLAIMER:
The use of this standard is governed by the "Texas Engineering Practice Act". No warranty of any kind is made by TxDOT for any purpose whatsoever. TxDOT assumes no responsibility for the conversion of this standard to other formats or for incorrect results or damages resulting from its use.

ACC:

LEVELS DISPLAYED

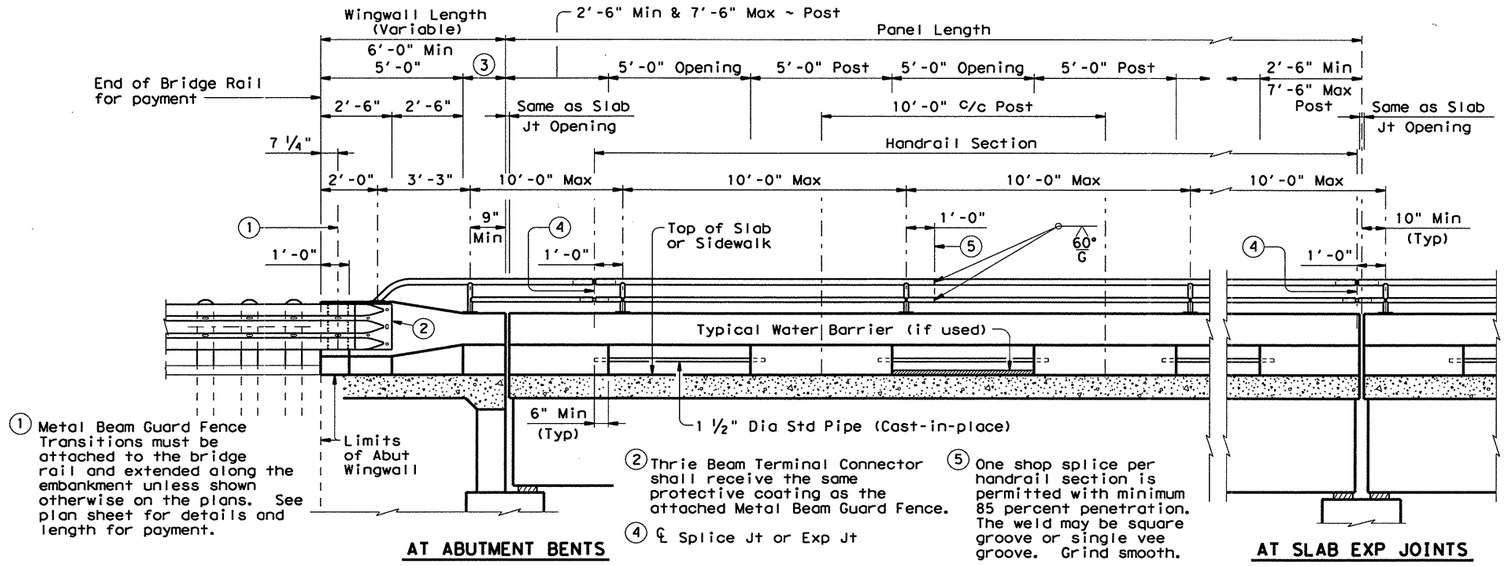


① Metal Beam Guard Fence Transitions must be attached to the bridge rail and extended along the embankment unless shown otherwise on the plans. See plan sheet for details and length for payment.

② Thrie Beam Terminal Connector shall receive the same protective coating as the attached Metal Beam Guard Fence.

④ ℄ Splice Jt or Exp Jt

⑤ One shop splice per handrail section is permitted with minimum 85 percent penetration. The weld may be square groove or single vee groove. Grind smooth.

AT ABUTMENT BENTS

AT SLAB EXP JOINTS

## ROADWAY ELEVATION OF RAIL

## RAIL DATA FOR HORIZONTAL CURVES

| | RADIUS TO FACE OF RAIL | MAX CHORD LENGTH | CONSTRUCT OR FABRICATE |
|---|---|---|---|
| Handrail | Over 2800' | 29'-0" | Straight rail sections |
| | Over 1400' thru 2800' | 14'-6" | To required radius ⑧ or to chords shown |
| | Over 700' thru 1400' | 7'-3" | |
| | Thru 700' | Zero | To required radius ⑧ |
| | | | |

⑧ Shop drawings required (may be submitted as 11"x 17" prints provided they are clearly legible).

For railing not requiring shop drawings, erection drawings showing handrail section lengths, post spacing, and anchor bolt setting shall be submitted to the Area Engineer for approval. If handrail requires shop and erection drawings, these drawings shall be submitted to the Bridge Engineer for approval.

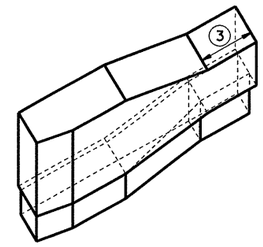


## ISOMETRIC VIEW AT END OF BRIDGE RAIL

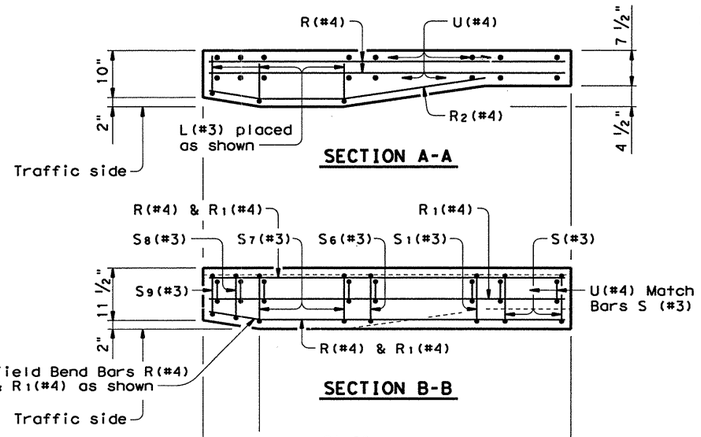


SECTION A-A

SECTION B-B

AT ABUT WINGWALL

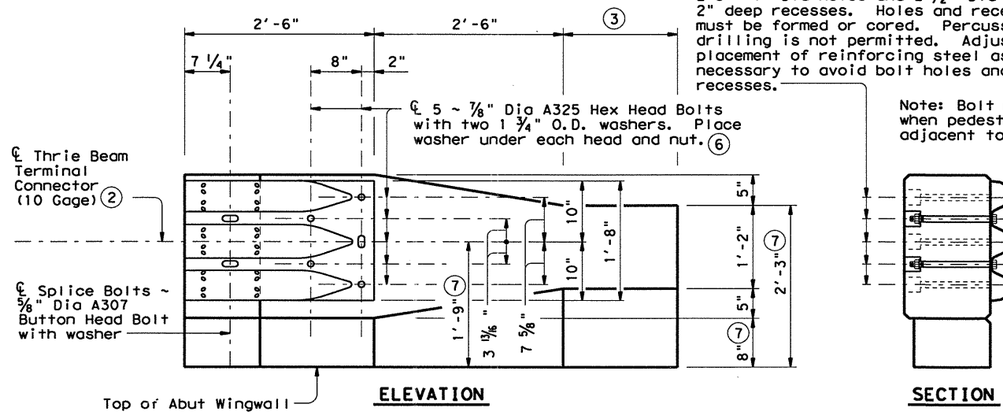


ELEVATION

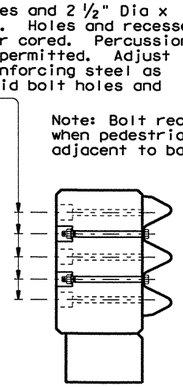

SECTION

Note: Bolt recesses are only required when pedestrian sidewalks are adjacent to back of rail.

③ Wingwall Length minus 5'-0" (Varies)

⑥ Bolts shall be sufficient length to extend 1/2" to 3/4" beyond nut.

⑦ Increase 2" for structures with overlay.

## TERMINAL CONNECTION DETAILS

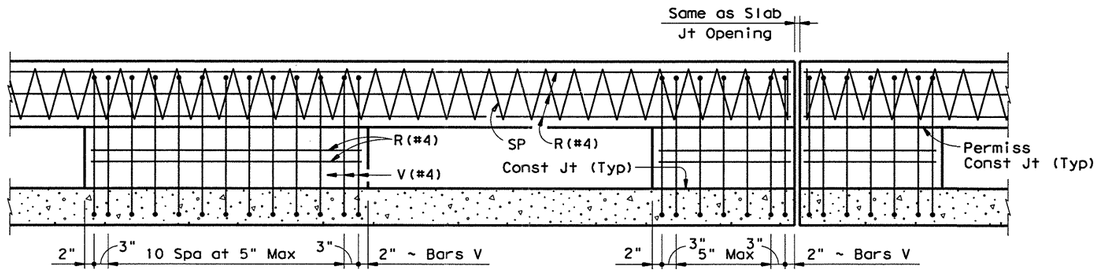


AT 5'-0" POST

AT SLAB EXPANSION JOINT

## ELEVATION SHOWING TYPICAL REINFORCING PLACEMENT

**The use of this railing is restricted to design speeds of 45 mph or less.**

SHEET 1 OF 2

Texas Department of Transportation
Bridge Division

# COMBINATION RAIL

# TYPE C203

| FILE: rlstde28.dgn | DN: JJP | CK: TxDOT | DW: JTR | CK: DWM |
|---|---|---|---|---|
| ©TxDOT December 2001 | DISTRICT | FEDERAL AID PROJECT | | SHEET |
| REVISIONS | SAT | NH 2000 (704), etc | | 554A |
| | COUNTY | CONTROL | SECT | JOB | HIGHWAY |
| | BEXAR | 2452 | 01 | 036,etc | LP1604 |

DISCLAIMER:
The use of this standard is governed by the "Texas Engineering Practice Act". No warranty of any kind is made by TxDOT for any purpose whatsoever. TxDOT assumes no responsibility for the conversion of this standard to other formats or for incorrect results or damages resulting from its use.

ACC:

LEVELS DISPLAYED

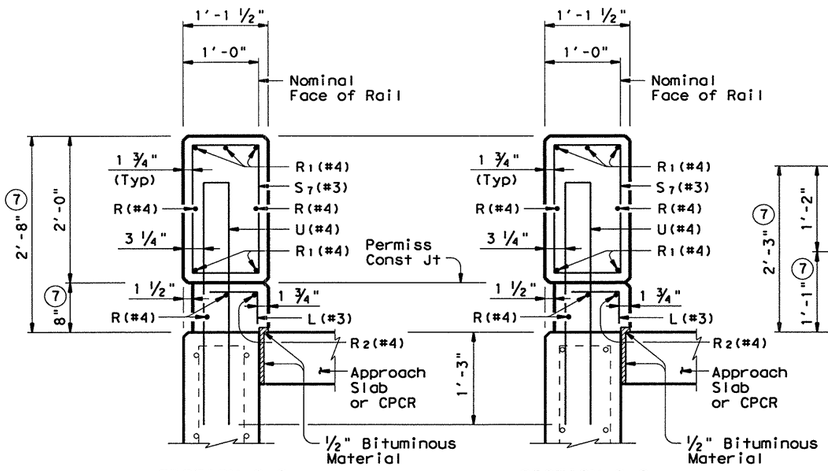


**SECTION C-C ON CANTILEVER ABUT WINGWALLS OR CIP RETAINING WALLS**

**SECTION C-C ON FOUNDED ABUT WINGWALLS**

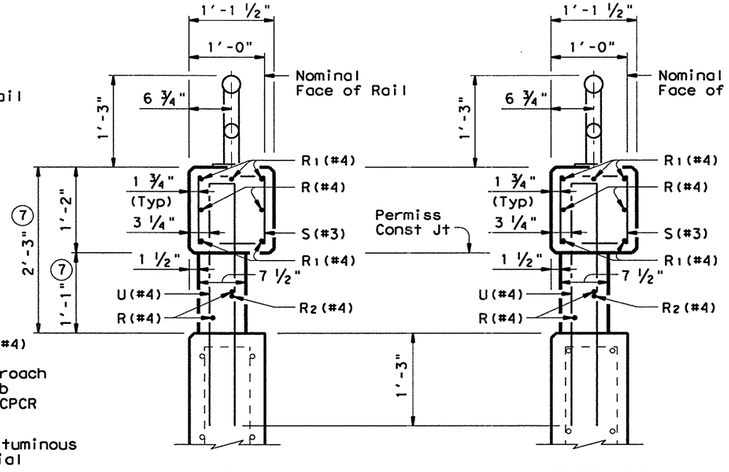


**SECTION D-D ON CANTILEVER ABUT WINGWALLS OR CIP RETAINING WALLS**

**SECTION D-D ON FOUNDED ABUT WINGWALLS**

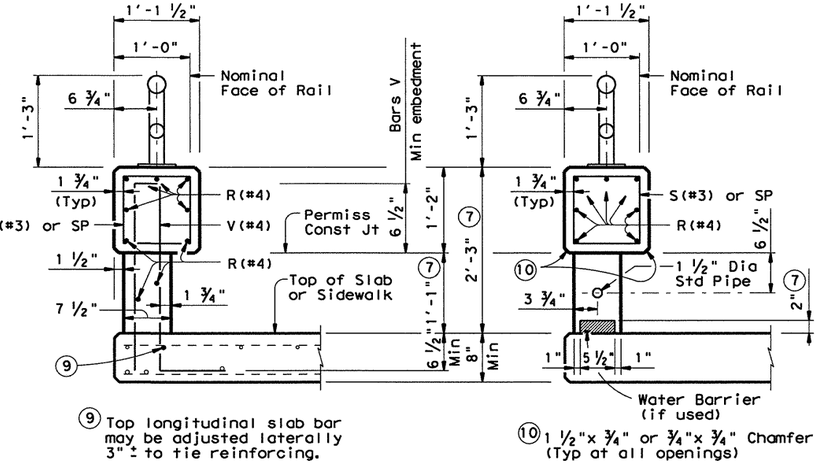


(9) Top longitudinal slab bar may be adjusted laterally 3" ± to tie reinforcing.

**AT POST ON BRIDGE SLAB**

(10) 1 ½"x ¾" or ¾"x ¾" Chamfer (Typ at all openings)

**AT OPENING ON BRIDGE SLAB**

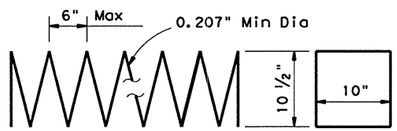


If two or more SP bars are used in a continuous panel length, they shall be butted within the center 3 ft of a rail post. At Contractor's option, Bars S spaced at 6" may be substituted for Bars SP.

**BARS SP (0.207" Smooth Wire)**

## SECTIONS THRU RAIL

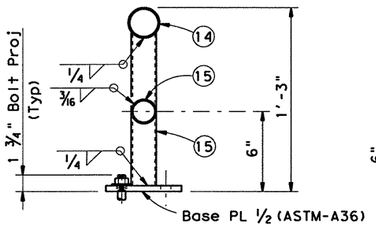


**SECTION THRU HANDRAIL**

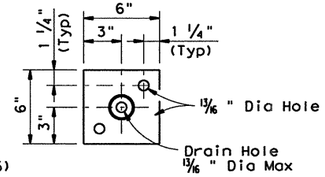


**SECTION THRU HANDRAIL POST**

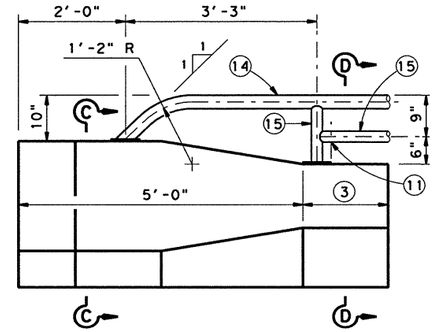


**ELEVATION AT ABUTMENT WINGWALL WITH HANDRAIL TERMINAL DETAIL**

## HANDRAIL DETAILS

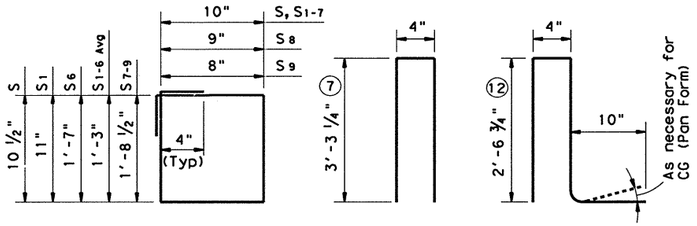


**BARS S (#3)** **BARS U (#4)** **BARS V (#4)**

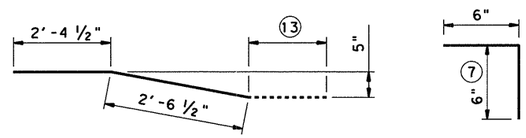


**BARS R1(#4)** **BARS L (#3)**

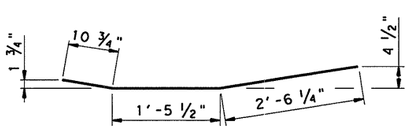


**BARS R2(#4)**

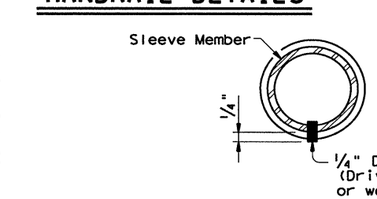


**SECTION E-E**

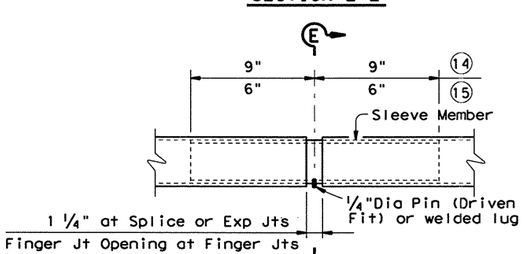


## HANDRAIL SPLICE DETAIL

Note: The difference between the outside dimension of sleeve and inside dimension of rail member shall not exceed 0.167" before galvanizing. Minimum wall thickness of sleeve shall be 0.120".

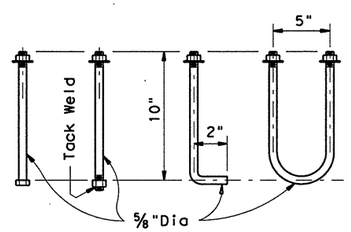


## HANDRAIL ANCHOR BOLT OPTIONS

(3) Wingwall Length minus 5'-0" (Varies)

(7) Increase 2" for structures with overlay.

(11) ⅜" Dia Hole in bottom of pipe or tube (Minimum of 1 hole between posts ~ Typ)

(12) Length shown for 6 ½" Min bar embedment with no overlay. Adjust as required.

(13) Wingwall Length minus 4'-10 ½"

(14) 2 ½" Std Pipe (2.875" O.D., 0.203" wall thickness)

(15) 2" Std Pipe (2.375" O.D., 0.154" wall thickness)

**GENERAL NOTES:**

This rail, without the handrail, has been successfully evaluated by full-scale crash tests to meet NCHRP Report 350 TL-3 criteria. However, its use is limited to design speeds of 45 mph or less because the handrail presents an occupant compartment intrusion threat to high speed vehicular traffic.

Rail Type C203 is comprised of the following parts: concrete parapet, concrete posts, concrete above wingwall, all reinforcing shown, including that embedded in the slab or wingwalls, water barrier, MBGF connections, handrail, CIP pipe and all anchorage provisions including bolts, nuts and washers. All these parts are included in price bid per linear foot of rail.

All steel components except reinforcing shall be galvanized unless otherwise shown on plans.

All concrete shall be Class C. Chamfer all exposed corners. Epoxy coat Bars V and U if slab bars are epoxy coated.

All reinforcing shall be grade 60 except spirals.

Anchor bolts shall be ⅝" Dia ASTM A307 Grade A bolts (or A36 threaded rods with one tack welded hex nut each) with one hex nut and one hardened steel washer at each bolt. Nuts shall conform to A563 requirements. The untapped blanks shall be galvanized prior to cutting the threads. Threads for bolts and nuts shall have Class 2A and 2B fit tolerances in accordance with ANSI B1.1.

Pipe for handrail shall conform to ASTM A53 Grade B or A501.

Face of rail, posts and parapet shall be vertical transversely unless otherwise approved by the Engineer. Handrail posts and opening end faces shall be perpendicular to top of adjacent concrete parapet grade. Grout may be used under handrail post base plates if necessary.

Water barriers shall be provided at openings draining onto undercrossing roadways and sidewalks. They may be cast-in-place or precast in convenient lengths and bonded to the bridge deck with an approved epoxy cement.

Handrail sections shall include not less than two posts nor more than four (except at Abutments).

Exposed edges of handrail and handrail posts shall be rounded or chamfered to approximately 1/16" by grinding.

Average weight of railing: 250 plf ~ Conc
12 plf ~ Steel



Texas Department of Transportation
Bridge Division

# COMBINATION RAIL

# TYPE C203

| | | | | | |
|---|---|---|---|---|---|
| FILE: ristde28.dgn | DN: JJP | CK: TxDOT | DW: JTR | | CK: DWM |
| © TxDOT December 2001 | DISTRICT | FEDERAL AID PROJECT | | | SHEET |
| REVISIONS | SAT | NH 2000 (704), etc | | | 554B |
| | COUNTY | | CONTROL | SECT | JOB | HIGHWAY |
| | BEXAR | | 2452 | 01 | 036,etc | LP1604 |

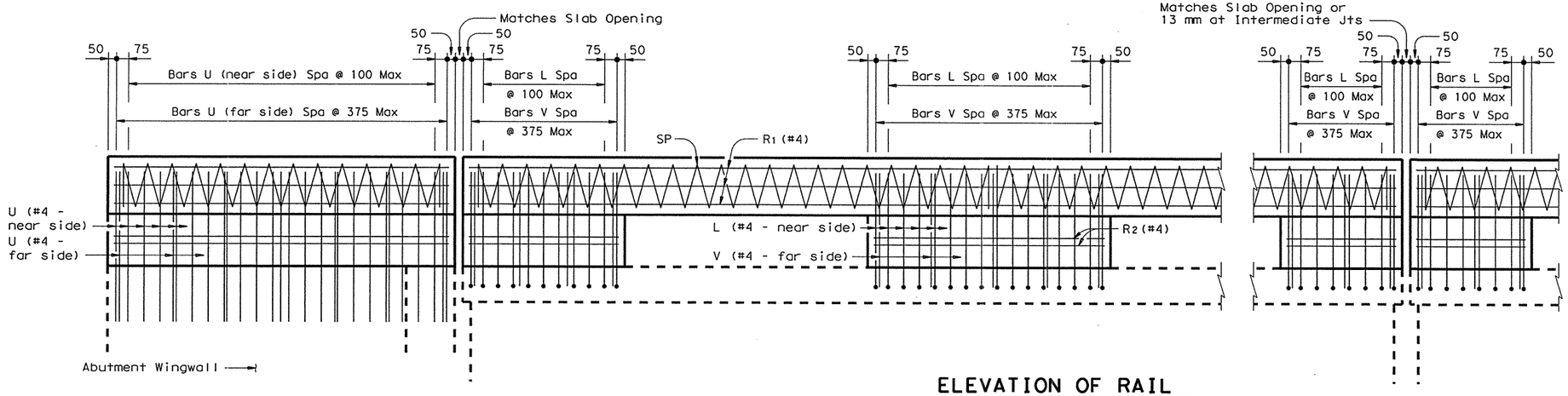


## ELEVATION OF RAIL

(Showing Reinforcing)

### Intermediate Rail Joint Notes:

Provide Intermediate Rail Joints over all bridge slab construction joints and at equal intervals in between as necessary to maintain a 9,900 mm maximum length of unbroken railing. Material used in forming the joint may be left in place if it is compressible and light in color, such as the following listed materials: polystyrene, molded cork granules, sponge rubber sheet, etc. If forming material is not left in place, plug bottom 6" of Railing Joint opening with concrete or slab joint sealing compound.

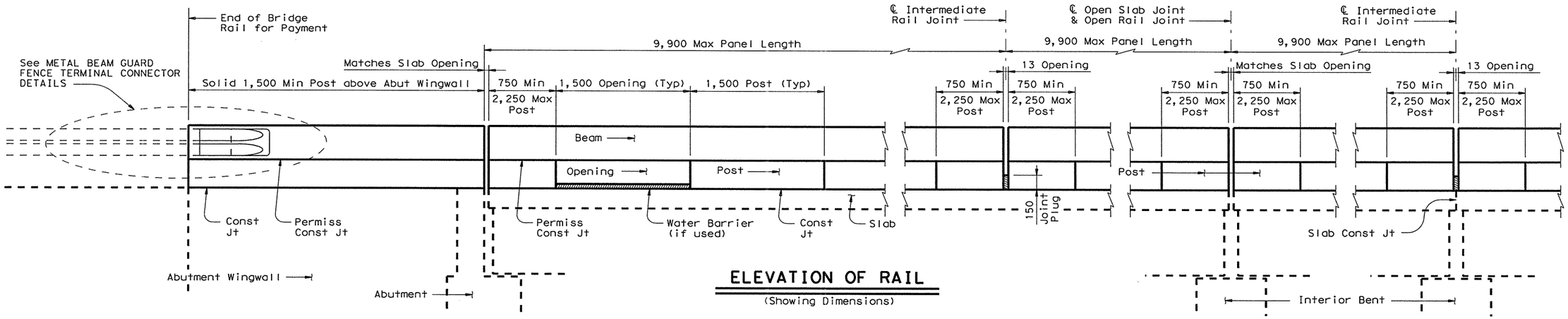


## ELEVATION OF RAIL

(Showing Dimensions)

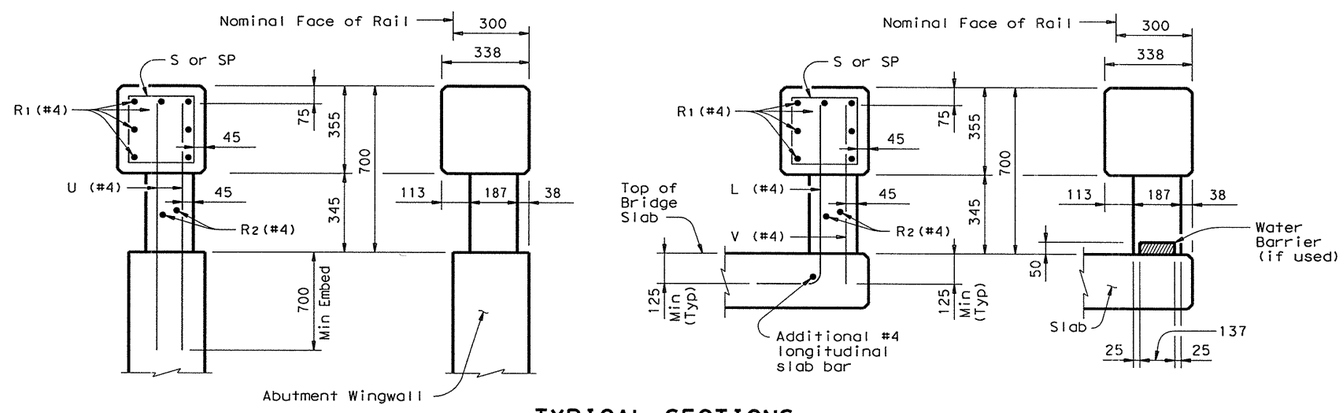


## TYPICAL SECTIONS

SHEET 1 OF 2

STATE OF TEXAS
MARK J. BLOSCHOCK
52996
REGISTERED PROFESSIONAL ENGINEER

11-27-00

Texas Department of Transportation
Design Division (Bridge)

# TYPE T202M (MOD) BRIDGE RAIL

| FILE: T202SSPL.DGN | DN: TxDOT | CK: LMW | DW: JRP | CK: LMW |
|---|---|---|---|---|
| ©TxDOT JANUARY 2000 | DISTRICT | FEDERAL AID PROJECT | | SHEET |
| REVISIONS | SAT | NH 2000(704)ETC | | 555 |
| | COUNTY | CONTROL | SECT | JOB | HIGHWAY |
| | BEXAR | 2452 | 01 | 036 | LP1604 |

LEVELS 1 3 4 5 6 7 8 9 10 11 12 13 14 15 16 17 18 19 20 21 22 23 24 25 26 27 28 29 30 31 32 33 34 35 36 37 38 39 40 41 42 43 44 45 46 47 48 49 50 51 52 53 54 55 56 57 58 59 60 61 62 63 PATH:

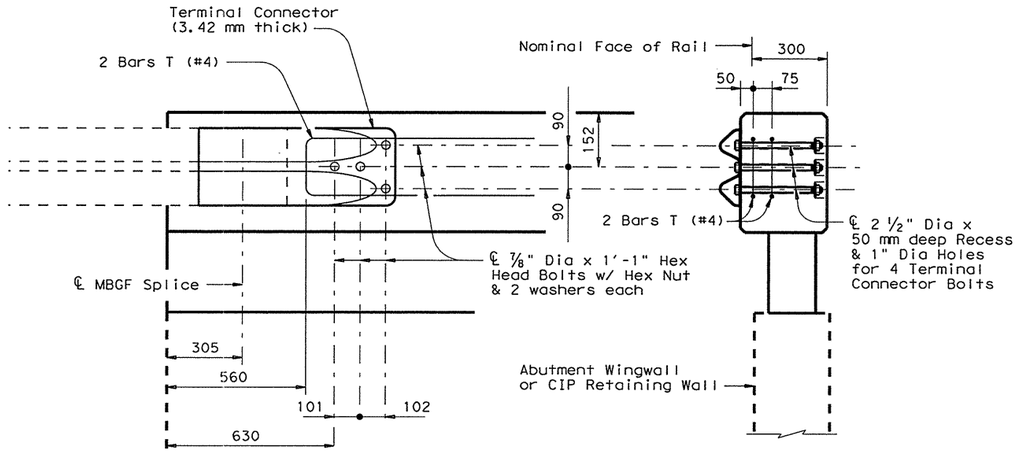


INSIDE ELEVATION

SECTION

# METAL BEAM GUARD FENCE TERMINAL CONNECTOR DETAILS

## Terminal Connector Notes:

Metal Beam Guard Fence shall be attached to the Rail and extended along the embankment unless shown otherwise on the plans. See the Layout sheets for details and lengths for payment. The splice between the Approach Guard Rail and the Terminal Connector shall be with the normal 8 bolts. The Terminal Connector shall receive the same protective coating as the attached Metal Beam Guard Fence.

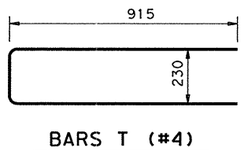


BARS T (#4)

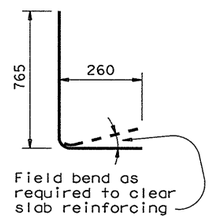


BARS L (#4)

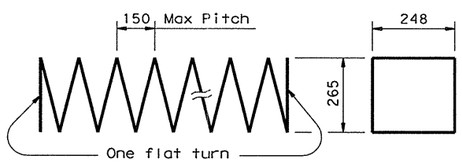


If two or more SP bars are used in a continuous panel length, they shall be butted within the center 900 mm of a rail post. At the Contractor's option, Bars S spaced at 150 mm may be substituted for spiral Bars SP.

BARS SP (MW25) ASTM A82

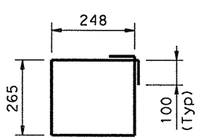


BARS S (#3)

## GENERAL NOTES:

This rail has been successfully evaluated by full-scale crash tests to meet NCHRP Report 350 Test Level 3 (TL-3) criteria. (Note that the transition attachment is currently under development and testing.)

Reinforcing for the railing shall be Grade 420, except spirals. Bar splices shall be a minimum of 24 times the nominal diameter of the bar. All concrete shall be Class "C". Chamfer all exposed corners (either 38 mm x 19 mm or 19 mm x 19 mm chamfers may be used).

The axis of the traffic railing shall be vertical, except where the roadway is superelevated the axis shall be normal to roadway surface. Openings shall have end faces perpendicular to adjacent roadway grade.

The rail is comprised of the following listed parts: concrete parapet, concrete posts, all reinforcing shown (including that embedded in the slab, wingwalls, or retaining walls), water barrier, MBGF connections, and all anchorage provisions (including bolts, nuts and washers). All these parts are included in the price bid per linear foot of rail.

Water barriers shall be provided at openings as shown elsewhere in the plans. Such water barriers shall normally be placed at openings draining onto undercrossing roadways and sidewalks. They may be cast-in-place or precast in convenient lengths and bonded to the foundation with an approved epoxy cement.

All steel components, excepting reinforcing, shall be galvanized unless otherwise shown on plans.

Average mass of this railing is 370 kg per linear meter.

Shop drawings will not be required for this rail.

11-27-00

SHEET 2 OF 2

Texas Department of Transportation
Design Division (Bridge)

# TYPE T202M (MOD) BRIDGE RAIL

| FILE: T202SSPL.DGN | DN: TxDOT | CK: LMW | DW: JRP | CK: LMW |
|---|---|---|---|---|
| ©TxDOT JANUARY 2000 | DISTRICT | FEDERAL AID PROJECT | | SHEET |
| REVISIONS | SAT | NH 2000(709) ETC. | | 555A |
| | COUNTY | CONTROL | SECT | JOB | HIGHWAY |
| | BEXAR | 2452 | 01 | 036 | LP1604 |

LEVELS
1 3 4 5 6 7 8 9
17 18 19 Unit
1 2 21 22 23 24 25 26 27 28 29 30 31 32 33 34 35 36 37 38 39 40 41 42 43 44 45 46 47 48
49 50 51 52 53 54 55 56 57 58 59 60 61 62 63

PATH:

DISCLAIMER:
The use of this standard is governed by the "Texas Engineering Practice Act". No warranty of any kind is made by TxDOT for any purpose whatsoever. TxDOT assumes no responsibility for the conversion of this standard to other formats or for incorrect results or damages resulting from its use.

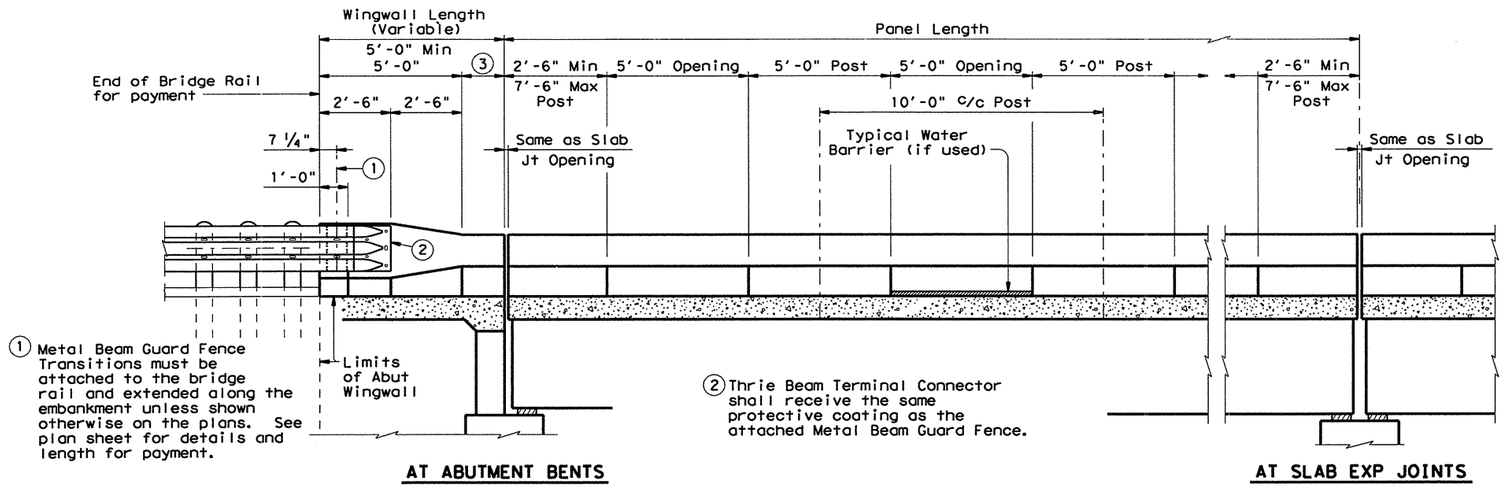


## ROADWAY ELEVATION OF RAIL

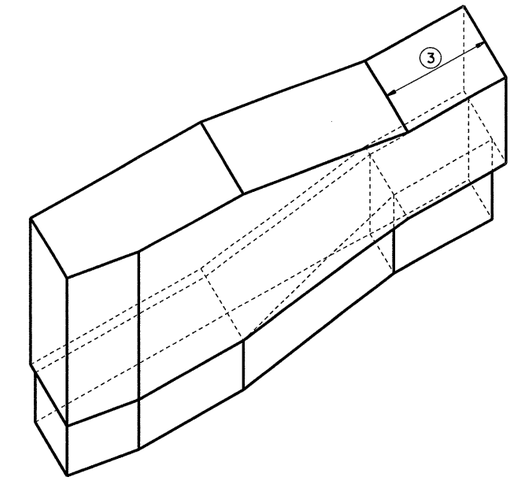


## ISOMETRIC VIEW AT END OF BRIDGE RAIL

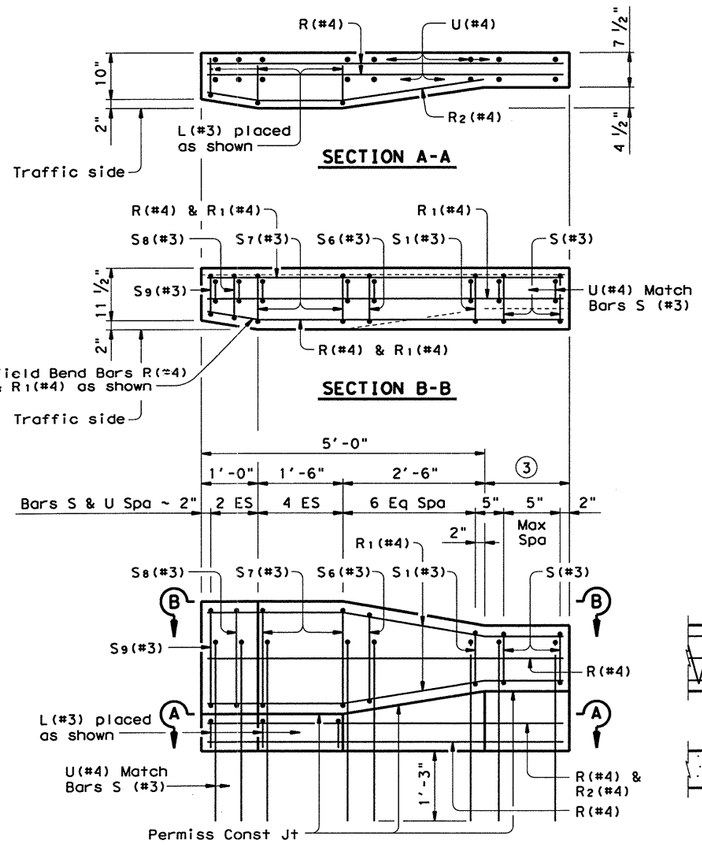


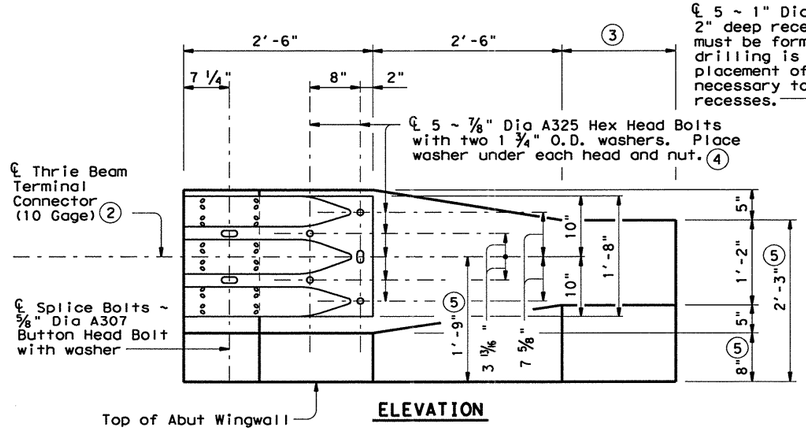


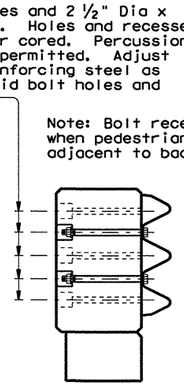


℄ 5 ~ 1" Dia holes and 2 1/2" Dia x 2" deep recesses. Holes and recesses must be formed or cored. Percussion drilling is not permitted. Adjust placement of reinforcing steel as necessary to avoid bolt holes and recesses.

Note: Bolt recesses are only required when pedestrian sidewalks are adjacent to back of rail.

3 Wingwall Length minus 5'-0" (Varies)

4 Bolts shall be sufficient length to extend 1/2" to 3/4" beyond nut.

5 Increase 2" for structures with overlay.

## TERMINAL CONNECTION DETAILS

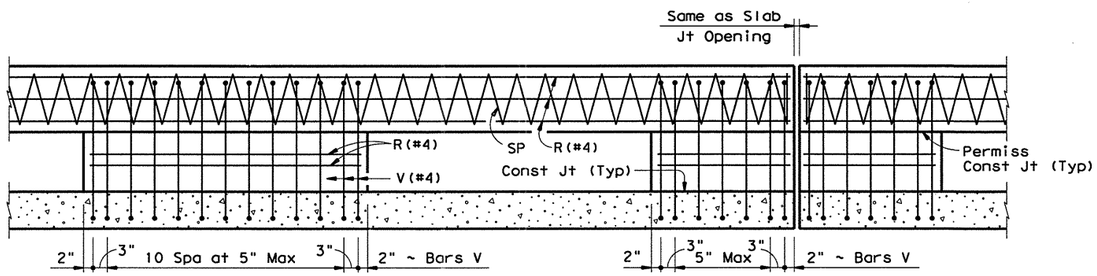


## ELEVATION SHOWING TYPICAL REINFORCING PLACEMENT

SHEET 1 OF 2

Texas Department of Transportation
Bridge Division

# TRAFFIC RAIL

# TYPE T203

| | | | | | | |
|---|---|---|---|---|---|---|
| FILE: ristde12.dgn | DN: JJP | CK: TxDOT | DW: JTR/BWH | | CK: DWM | |
| ©TxDOT December 2001 | DISTRICT | FEDERAL AID PROJECT | | | | SHEET |
| REVISIONS | 15 | NH 2000 (704), etc | | | | 5558 |
| | COUNTY | | | CONTROL | SECT | JOB | HIGHWAY |
| | BEXAR | | | 2452 | 01 | 05,etc | LP1604 |

ACC:
LEVELS DI... ED
1

DISCLAIMER:
The use of this standard is governed by the "Texas Engineering Practice Act". No warranty of any kind is made by TxDOT for any purpose whatsoever. TxDOT assumes no responsibility for the conversion of this standard to other formats or for incorrect results or damages resulting from its use.

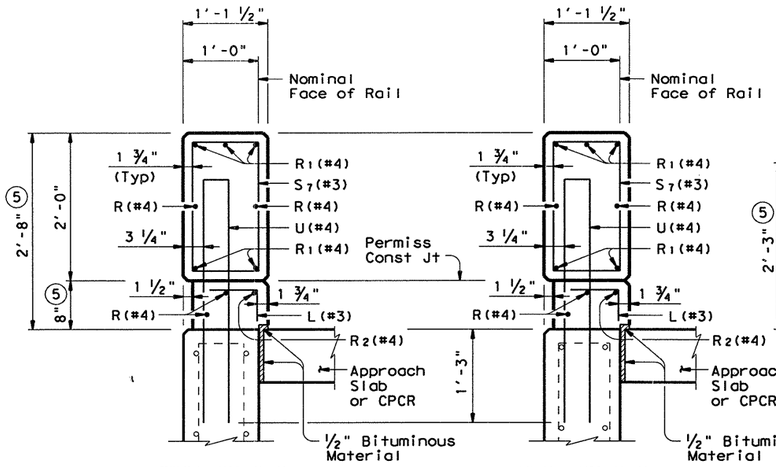


SECTION C-C
ON CANTILEVER ABUT WINGWALLS
OR CIP RETAINING WALLS




SECTION C-C
ON FOUNDED
ABUT WINGWALLS

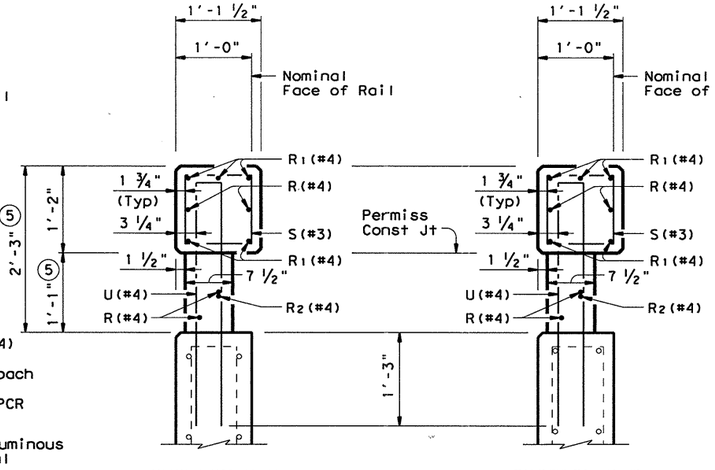


SECTION D-D
ON CANTILEVER ABUT WINGWALLS
OR CIP RETAINING WALLS

SECTION D-D
ON FOUNDED
ABUT WINGWALLS

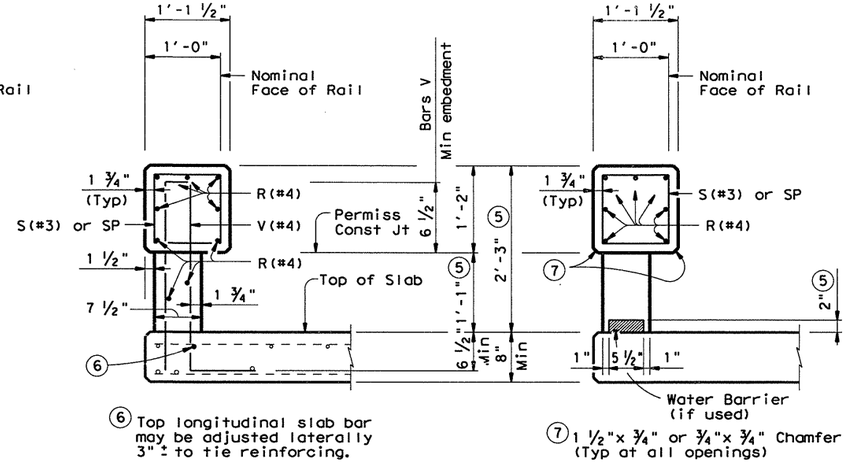


⑥ Top longitudinal slab bar may be adjusted laterally 3" ± to tie reinforcing.

AT POST
ON BRIDGE SLAB

⑦ 1 ½"x ¾" or ¾"x ¾" Chamfer (Typ at all openings)

AT OPENING
ON BRIDGE SLAB

## SECTIONS THRU RAIL

③ Wingwall Length minus 5'-0" (Varies)

⑤ Increase 2" for structures with overlay.

⑧ Length shown for 6 ½" Min bar embedment with no overlay. Adjust as required.

⑨ Wingwall Length minus 4'-10 ½"

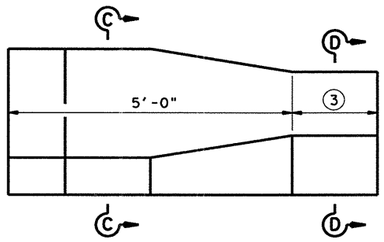


## ELEVATION AT ABUTMENT WINGWALL

If two or more SP bars are used in a continuous panel length, they shall be butted within the center 3 ft of a rail post. At Contractor's option, Bars S spaced at 6" may be substituted for Bars SP.

BARS SP (0.207" Smooth Wire)

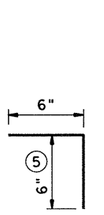


BARS L (#3)

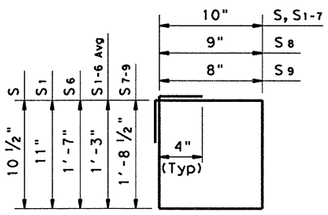


BARS S (#3)

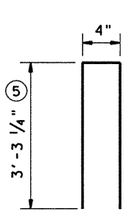


BARS U (#4)

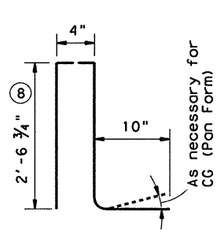


BARS V (#4)

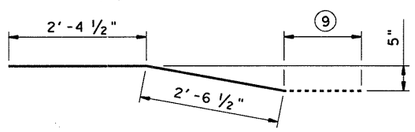


BARS R1(#4)

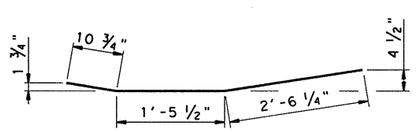


BARS R2(#4)

**GENERAL NOTES:**

This rail has been successfully evaluated by full-scale crash tests to meet NCHRP Report 350 TL-3 criteria and can be used for design speeds of 50 mph and greater.

Rail Type T203 is comprised of the following parts: concrete parapet, concrete posts, concrete above wingwall, all reinforcing shown, including that embedded in the slab or wingwalls, water barrier, MBGF connections, and all anchorage provisions including bolts, nuts and washers. All these parts are included in price bid per linear foot of rail.

All steel components, except reinforcing, shall be galvanized unless otherwise shown on plans.

All concrete shall be Class "C". Chamfer all exposed corners.

Epoxy coat Bars V and U if slab bars are epoxy coated.

All reinforcing shall be Grade 60 except spirals.

Face of rail and parapet shall be vertical transversely unless otherwise shown in the plans or approved by the Engineer. Openings shall have end faces perpendicular to adjacent roadway grade.

Water barriers shall be provided at openings draining onto undercrossing roadways and sidewalks. They may be cast-in-place or precast in convenient lengths and bonded to the bridge deck with an approved epoxy cement.

Shop drawings will not be required for this rail.

Average weight of railing with no overlay is 250 plf.



Texas Department of Transportation
Bridge Division

# TRAFFIC RAIL

# TYPE T203

| | | | | | | |
|---|---|---|---|---|---|---|
| FILE: rlstde12.dgn | DN: JJP | CK: TxDOT | DW: JTR/BWH | | CK: DWM | |
| ©TxDOT December 2001 | DISTRICT | FEDERAL AID PROJECT | | | | SHEET |
| REVISIONS | 15 | NH 2000 (704), etc | | | | 555C |
| | COUNTY | | CONTROL | SECT | JOB | HIGHWAY |
| | BEXAR | | 2452 | 01 | 0%,etc | LP1604 |

ACC:
LEVELS DISPLAYED
1

DISCLAIMER:
The use of this standard is governed by the "Texas Engineering Practice Act". No warranty is made by TxDOT for any purpose whatsoever. TxDOT assumes no responsibility for errors that may appear in other formats or for incorrect results or damages resulting from its use.

ACC:
(LV=1,2 for English; 1,3 for Metric)
LEVELS DISPLAYED 1 3

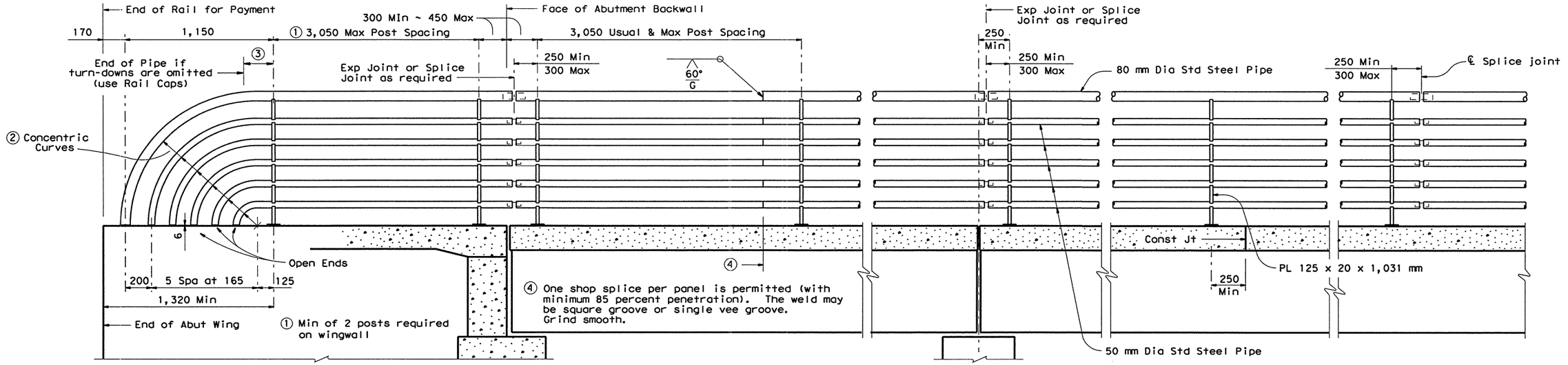


AT ABUTMENT BENTS | AT SHOP SPLICE | AT ENDS OF UNIT | AT SLAB CONST JOINT | AT SPLICE JOINT

② Portion of railing with turn-downs to be used or omitted as indicated on Bridge Layout.

③ 250 mm Min ~ 450 mm Max if turn-downs are omitted.

## ROADWAY ELEVATION OF RAIL

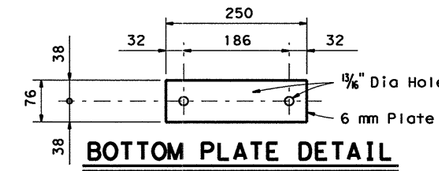


## BOTTOM PLATE DETAIL

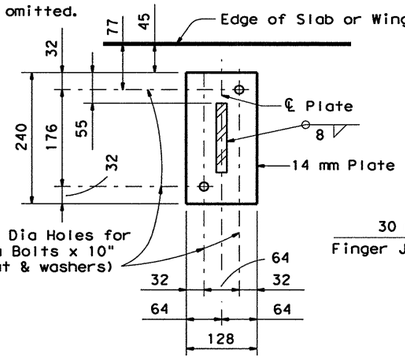


## BASE PLATE DETAIL

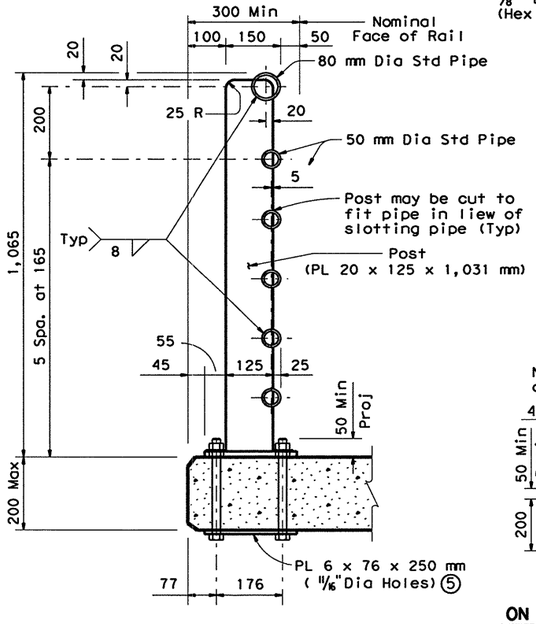


## BASIC CONDITION

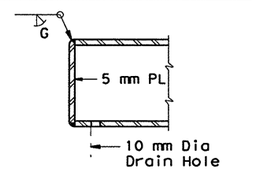


## RAIL CAP DETAIL

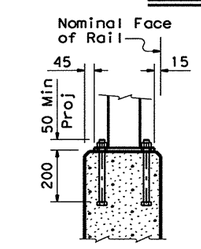


ON ABUT WING OR CIP RETAINING WALL

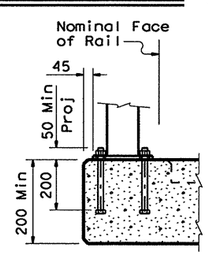


ON CULVERTS OR SLABS OVER 8" THICK

## POST MOUNTING DETAILS

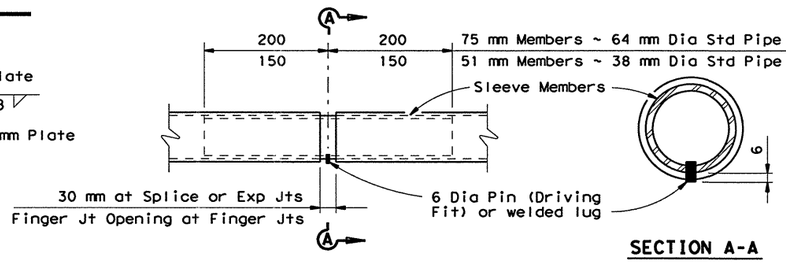


AT SPLICE OR EXP JTS

## HANDRAIL SPLICE DETAIL

SECTION A-A

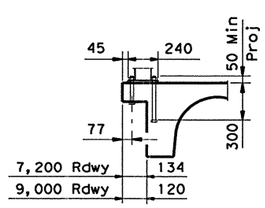


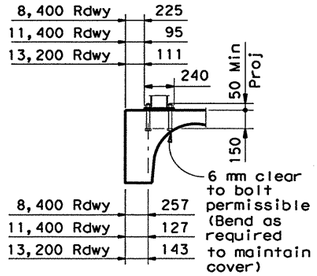


⑥ For CIP slabs under 150 mm add PL (tack weld to bolt heads) and an additional longitudinal #4 bar as shown (included as part of rail for payment).

CG (PAN FORM)

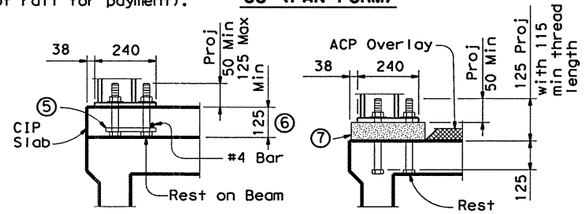


BOX BEAM

⑦ A 152 x 240 mm min x 75 mm max thickness grout pad may be used under the rail post base plate to adjust the rail for vertical grade and box beam camber.

GENERAL NOTES:

Designed according to current AASHTO Standard Specifications for Highway Bridges.

Pipe for railing shall be Std Pipe (ASTM A-53) (E or S Grade A or B).

All anchor bolts, nuts, washers and bottom plates to be included in unit price bid for railing.

Panel lengths of railing shall be attached to a minimum of three posts except at abutment wingwalls.

All steel components to be galvanized unless otherwise shown in plans.

Anchor bolts shall be ⅝" Dia ASTM A307 Grade A bolts (or A36 threaded rods with one tack welded nex nut each) with one hex nut and one 1 ¾" O.D. hardened steel washer at each bolt. Threaded rods may be 0.557" minimum diameter with rolled threads. Nuts shall conform to to A563 requirements. The untapped blanks shall be galvanized prior to cutting the threads. Threads for bolts and nuts shall have Class 2A and 2B fit tolerances in accordance with ANSI B1.1.

Face of rail and posts shall be vertical transversely unless otherwise approved by the Engineer. Posts shall be perpendicular to adjacent roadway grade. Grout may be used under base plates if necessary.

Shop drawings to be submitted to the Bridge Engineer for approval will be required only for rails on horizontal curves in which case the rail members shall be fabricated to the required radius for radii of 183 meters or less. For rails not requiring shop drawings, erection drawings showing panel lengths, splice locations, rail post spacing and anchor bolt setting shall be submitted to the Area Engineer for approval.

Shop drawings may be submitted as 280 mm x 432 mm prints provided they are clearly legible.

Exposed edges of handrail and handrail posts shall be rounded or chamfered to approximately 2 mm by grinding.

All dimensions are in millimeters unless otherwise shown.

Average mass of railing is 45 kg/m.

Texas Department of Transportation
Design Division (Bridge)

# PEDESTRIAN RAIL

# TYPE PR1 (M)

| FILE: rlstd034.dgn | DN: THD | CK: THD | DW: DRG | CK: LDS | NEG: | B583M |
|---|---|---|---|---|---|---|
| ©TxDOT January 1996 | DIST | FED REG | FEDERAL AID PROJECT • | | | SHEET |
| REVISIONS | SAT | 6 | NH 2000 (704), etc. | | | 556 |
| | COUNTY | | CONTROL | SECT | JOB | HIGHWAY |
| | BEXAR | | 2452 | 01 | 036, etc. | LP1604 |

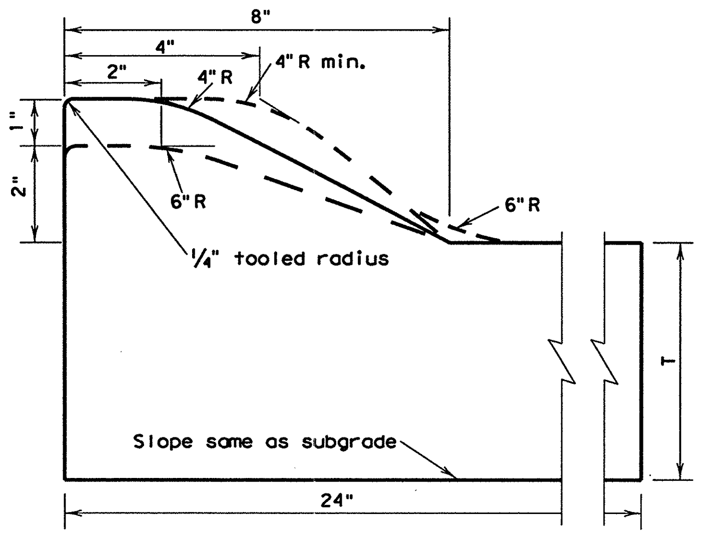


**TYPE I CURB AND GUTTER**

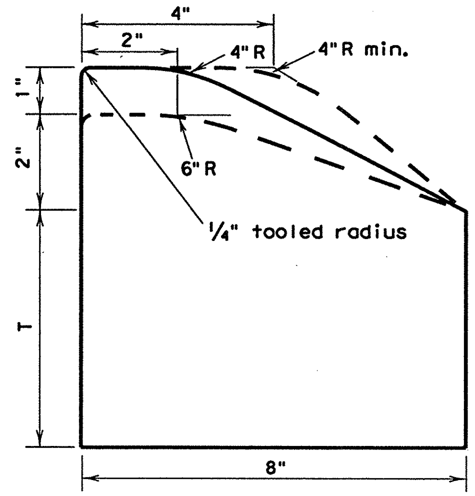


**TYPE I CURB**

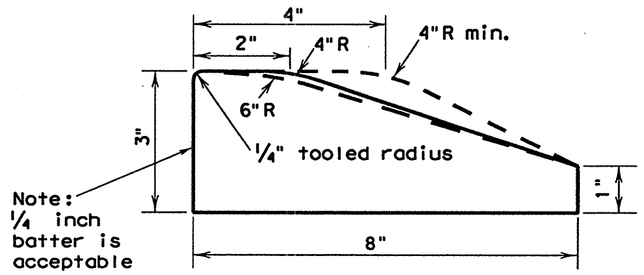


**TYPE I MONO CURB OR CURB PLACED ON PAVEMENT**

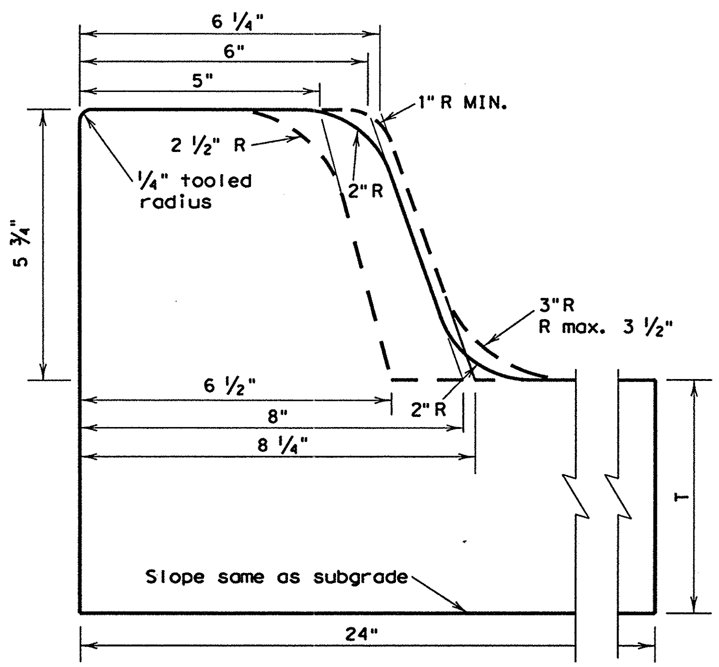


**TYPE II CURB AND GUTTER**

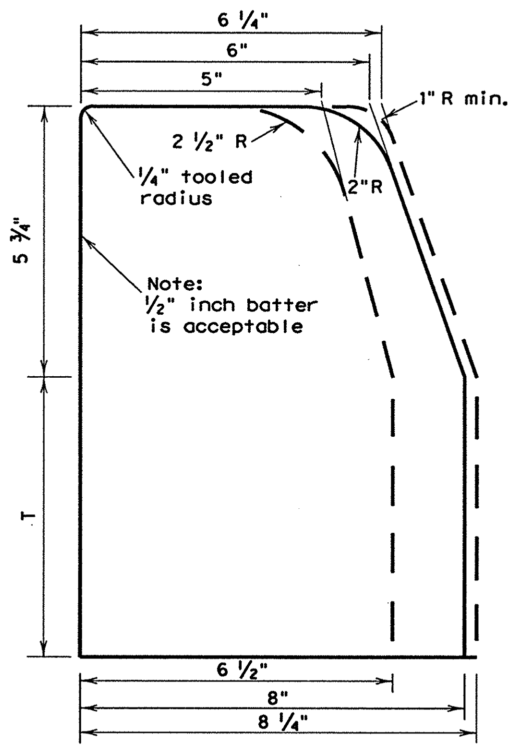


**TYPE II CURB**

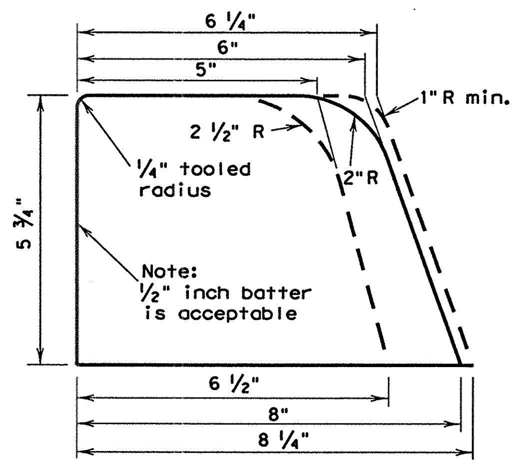


**TYPE II MONO CURB OR CURB PLACED ON PAVEMENT**

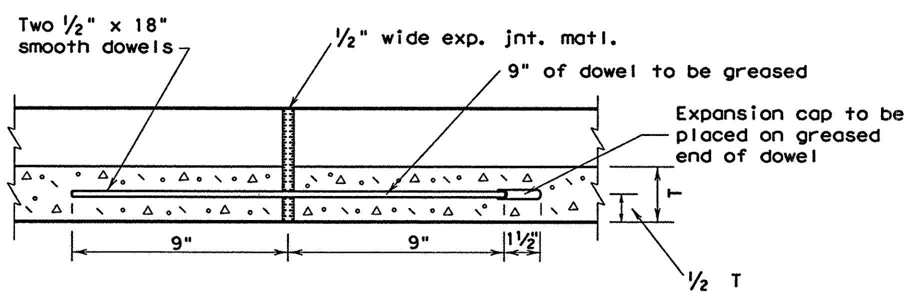


Longitudinal section thru curb and gutter showing typical expansion joint details.

Reinforcing steel (when used) shall not cross expansion joints. Steel shall be terminated 3" ± 1" from face of the joint.

## GENERAL NOTES

1. Contractor may use existing forms if the cross section lies within the band shown by dotted lines. If new forms are to be purchased, leased, or constructed they shall conform to the solid line.

2. When reinforcing steel is required or placed at contractor's option, one of the following schemes of reinforcement shall be required. The manner of placement and location shall be to the satisfaction of the Engineer.

   a. Type I, or Type II, curb and gutter reinforcement shall have longitudinal reinforcing bars as follows: Three #3, two #4, two #5, or one #6.

   b. All types of curb (reinf.) shall have one #3 or #4 bar for for longitudinal reinforcement.

3. Reinforcing bars shall be lapped a minimum of 15".

4. When curb or curb and gutter is placed by a separate pour adjacent to or atop concrete pavement, curb or curb and gutter shall be tied to pavement in a manner satisfactory to the engineer with 8-inch long #3 or #4 bars spaced at 5 feet and expansion and/or contraction joints of curb or curb and gutter shall match those of pavement.

   When curb and curb and gutter is not constructed adjacent to concrete pavement, the following shall govern:

   a. Reinforced curb or curb and gutter shall have no contraction joints.

   b. Non-reinforced curb or curb and gutter shall have formed, tooled or sawed contraction joints at 10'±. The depth of these joints shall be sufficient to ensure cracking at the joints.

   c. Reinforcing curb or curb and gutter shall have expansion joints at points of curvature and at intervals no greater than 120' in all curves and at structures such as bridges, box culverts, curb inlets, etc.

   d. Non-reinforced curb or curb and gutter shall have expansion joints at points of curvature on curves of radius less than 25' and at structures such as bridges, box culverts, curb inlets, etc.

5. One-half inch expansion joint material shall be provided where curb or curb gutter is adjacent to sidewalk or riprap.

6. Unless otherwise shown, transitions between curbs or curbs and gutters of differing cross section shall be accomplished over a 20 foot length or as approved by the Engineer.

7. At contractor's option, dimension "T" may be thickness of pavement structure. In no case shall it be less than 6".

8. See the RAMP standard sheet for information on curb ramps and sidewalks crossing driveways.


DISCLAIMER:
The use of this standard is governed by the "Texas Engineering Practice Act". No warranty of any kind is made by TxDOT for any purpose whatsoever. TxDOT assumes no responsibility for the conversion of this standard to other formats or for incorrect results or damages resulting from its use.


LEVELS DISPLAYED

| | | | | | | | | | | | | | | | |
|---|---|---|---|---|---|---|---|---|---|---|---|---|---|---|---|
| 1 | | 3 | 4 | 5 | 6 | 7 | 8 | 9 | 10 | 11 | 12 | 13 | 14 | 15 | 16 |
| 17 | 18 | 19 | 20 | 21 | 22 | 23 | 24 | 25 | 26 | 27 | 28 | 29 | 30 | 31 | 32 |
| 33 | 34 | 35 | 36 | 37 | 38 | 39 | 40 | 41 | 42 | 43 | 44 | 45 | 46 | 47 | 48 |
| 49 | 50 | 51 | 52 | 53 | 54 | 55 | 56 | 57 | 58 | 59 | 60 | 61 | 62 | 63 | |

*Texas Department of Transportation*
*Design Division (Roadway)*

# CONCRETE CURB AND CURB AND GUTTER

# CCCG-01

| FILE: cccg01.DGN | DN: MAM | CK: RAR | DW: RAR | CK: MAM | NEG: | |
|---|---|---|---|---|---|---|
| © TxDOT 1995 | DIST | FED REG | FEDERAL AID PROJECT • | | | SHEET |
| REVISIONS | 15 | 6 | NH 2000 (704) ,etc | | | 556B |
| | COUNTY | | CONTROL | SECT | JOB | HIGHWAY |
| | BEXAR | | 2452 | 01 | 036,etc | LP1604 |

## SIGNAL FACES

300 mm SIGNAL SECTIONS

SIGNAL NO. 1 (R Y G)

SIGNAL NO. 2 (R Y G, Y G)

SIGNAL NO. 3

## LEGEND

- PROP. LOOP DETECTOR
- PROP. GROUND BOX (TYPE "A")
- PROP. GROUND BOX (TYPE "D")
- PROP. 75 mm PVC SCHEDULE 80
- PROP. 50 mm PVC SCHEDULE 80
- PROP. 32 mm PVC SCHEDULE 80
- PROP. MAST ARM POLE AND FOUNDATION
- PROP. SIGNAL FACE
- PROP. CONTROLLER, SLAB AND FOUNDATION
- PROP. PEDESTRIAN SIGNAL HEAD WITH PUSH BUTTON
- PROP. PEDESTAL POLE AND FOUNDATION
- PROP. ELECTRICAL SERVICE
- TMS MANHOLE (BY OTHERS)

F.M. 471 (CULEBRA RD.)

ROW

LOOP 1604 NBD. F.R.

LOOP 1604

1.8 X 9.5 LOOPS

16S

16P

18P

18S

1.8 X 9.6 LOOPS

1.8 X 10.9 LOOP

SPL NO. 2a

SR10-9 SIGN

POLE "A"

POLE "B"

POLE "C"

POLE "D"

A-1 A-2 A-3 A-4 A-5 A-6

B C D E

D-1 D-2 D-3 D-4

16.5 30.2 49.7 79.2 93

14.6 13.4 13.4

MATCH LINE

**NOTES:**

THE ENGINEER SHALL CONTACT MR. GILBERT MEIER TXDOT SIGNAL SHOP) AT 615-5975 96 HOURS PRIOR TO CONSTRUCTION, PRIOR TO PICKING UP STATE FURNISHED MATERIALS AND PRIOR TO CONNECTING FIELD WIRING TO CONTROLLER.

STATE FORCES SHALL CONNECT FIELD WIRING TO CONTROLLER.

ALL PVC SHALL BE SCHEDULE 80.

ALL DIMENSIONS SHOWN ARE IN METERS UNLESS SPECIFIED OTHERWISE.

STATE OF TEXAS
ARNULFO RAMIREZ
56890
REGISTERED PROFESSIONAL ENGINEER

Arnulfo Ramirez 9-18-00

Arnulfo Ramirez, P.E. Date

SHEET 1 OF 5

# TRAFFIC SIGNAL INTERSECTION LAYOUT

## LOOP 1604 FRONTAGE RDS. AT F.M. 471 (CULEBRA RD.)

© 2000 Texas Department of Transportation

SCALE IN METERS

0 5 10 20

SCALE: 1:500

| FED. RD. DIV. NO. | FEDERAL AID PROJECT NO. | | SHEET NO. |
|---|---|---|---|
| 6 | NH 2000(704), Etc. | | 557 |
| STATE | DIST. | COUNTY | |
| TEXAS | SAT | BEXAR | |
| CONT. | SECT. | JOB | HIGHWAY NO. |
| 2452 | 01 | 036, Etc. | LOOP 1604 |

## SIGNAL FACES

300 mm SIGNAL SECTIONS




SIGNAL NO. 1




SIGNAL NO. 2



SIGNAL NO. 3

## LEGEND

- PROP. LOOP DETECTOR
- PROP. GROUND BOX(TYPE "A")
- PROP. GROUND BOX(TYPE "D")
- PROP. 75 mm PVC SCHEDULE 80
- PROP. 50 mm PVC SCHEDULE 80
- PROP. MAST ARM POLE AND FOUNDATION
- PROP. SIGNAL FACE
- PROP. CONTROLLER, SLAB AND FOUNDATION
- PROP. PEDESTRIAN SIGNAL HEAD WITH PUSH BUTTON
- PROP. PEDESTAL POLE AND FOUNDATION
- PROP. ELECTRICAL SERVICE
- TMS MANHOLE(BY OTHERS)
- VIVDS CAMERA ASSEMBLY (1)

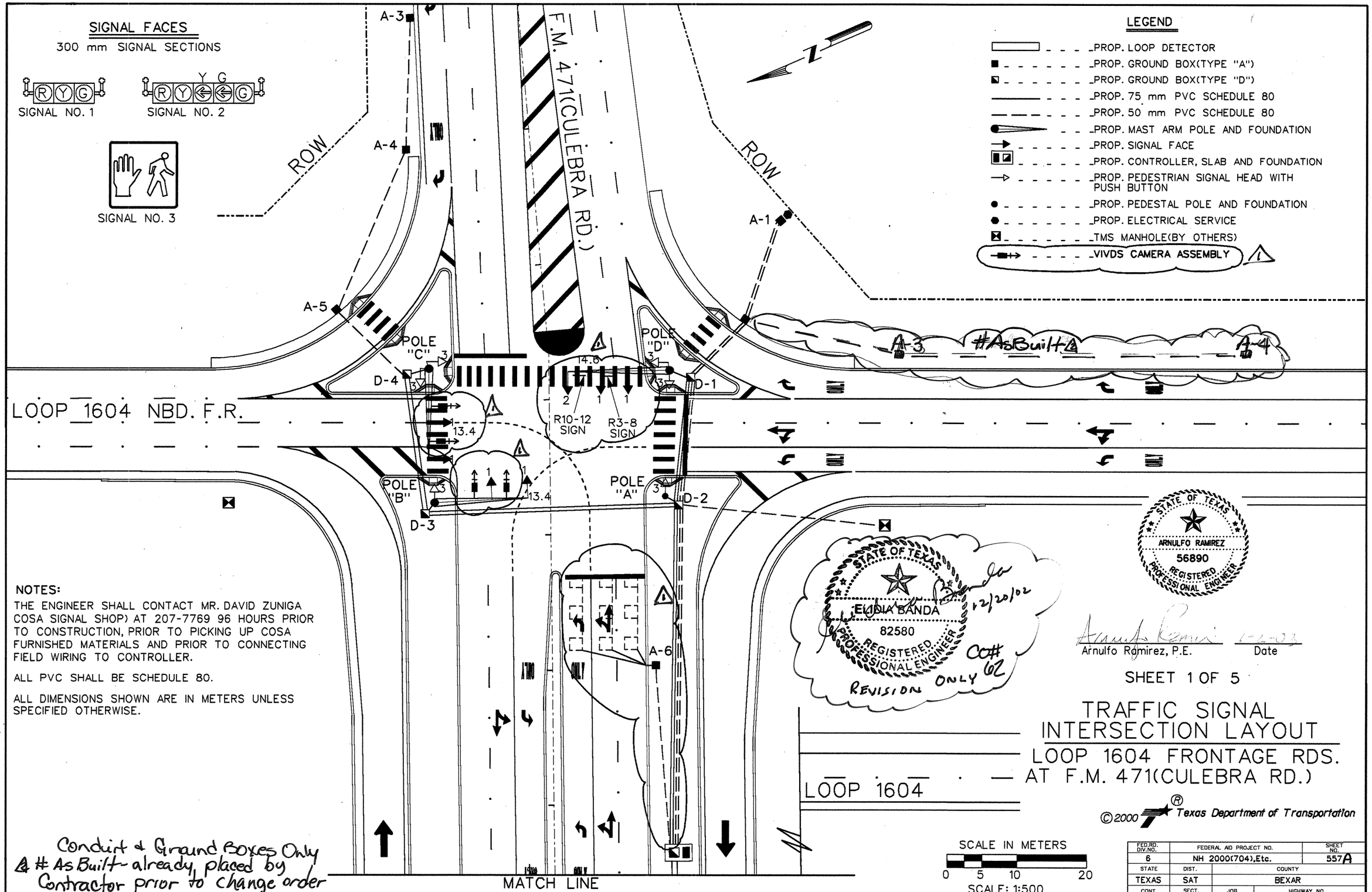


NOTES:

THE ENGINEER SHALL CONTACT MR. DAVID ZUNIGA COSA SIGNAL SHOP) AT 207-7769 96 HOURS PRIOR TO CONSTRUCTION, PRIOR TO PICKING UP COSA FURNISHED MATERIALS AND PRIOR TO CONNECTING FIELD WIRING TO CONTROLLER.

ALL PVC SHALL BE SCHEDULE 80.

ALL DIMENSIONS SHOWN ARE IN METERS UNLESS SPECIFIED OTHERWISE.

Conduit & Ground Boxes Only
& #AsBuilt- already placed by Contractor prior to change order

STATE OF TEXAS
EWDIA BANDA
82580
REGISTERED PROFESSIONAL ENGINEER
12/20/02
REVISION ONLY
CO# 62

STATE OF TEXAS
ARNULFO RAMIREZ
56890
REGISTERED PROFESSIONAL ENGINEER

Arnulfo Ramirez, P.E. — Date

SHEET 1 OF 5

# TRAFFIC SIGNAL INTERSECTION LAYOUT

## LOOP 1604 FRONTAGE RDS. AT F.M. 471(CULEBRA RD.)

©2000 Texas Department of Transportation

SCALE IN METERS
0 5 10 20
SCALE: 1:500

| FED.RD. DIV.NO. | FEDERAL AID PROJECT NO. | | SHEET NO. |
|---|---|---|---|
| 6 | NH 2000(704),Etc. | | 557A |
| STATE | DIST. | COUNTY | |
| TEXAS | SAT | BEXAR | |
| CONT. | SECT. | JOB | HIGHWAY NO. |
| 2452 | 01 | 036,Etc. | LOOP 1604 |

## LEGEND

- PROP. LOOP DETECTOR
- PROP. GROUND BOX(TYPE "A")
- PROP. GROUND BOX(TYPE "D")
- PROP. 75 mm PVC SCHEDULE 80
- PROP. 50 mm PVC SCHEDULE 80
- PROP. 32 mm PVC SCHEDULE 80
- PROP. MAST ARM POLE AND FOUNDATION
- PROP. SIGNAL FACE
- PROP. CONTROLLER, SLAB AND FOUNDATION
- PROP. PEDESTRIAN SIGNAL HEAD WITH PUSH BUTTON
- PROP. PEDESTAL POLE AND FOUNDATION
- PROP. ELECTRICAL SERVICE

MATCH LINE

LOOP 1604

LOOP 1604 SBD. F.R.

F.M. 471 (CULEBRA RD.)

ROW

ROW

SPL NO. 1a
1.8 X 10.5 LOOP

POLE "H"
POLE "E"
POLE "F"
POLE "G"

D-8
D-5
D-7
D-6

SR10-9 SIGN

E 1.8 X 9.6 LOOPS D C 1.8 X 9.6 LOOPS B A

45S
45P
25P
25S
1.8 X 9.6 LOOPS

93
79.2
49.7
30.2
16.5
9.8
12.2
13.4
30.2
16.5
49.7

A-11
A-10
A-9
A-8
A-7

ONLY

### SIGNAL FACES

300 mm SIGNAL SECTIONS

SIGNAL NO. 1 (R Y G)

SIGNAL NO. 2 (Y G; R Y G)

SIGNAL NO. 3

**NOTES:**

THE ENGINEER SHALL CONTACT MR. GILBERT MEIER(TXDOT SIGNAL SHOP) AT 615-5975 96 HOURS PRIOR TO CONSTRUCTION, PRIOR TO PICKING UP STATE FURNISHED MATERIALS AND PRIOR TO CONNECTING FIELD WIRING TO CONTROLLER.

STATE FORCES SHALL CONNECT FIELD WIRING TO CONTROLLER.

ALL PVC SHALL BE SCHEDULE 80.

ALL DIMENSIONS SHOWN ARE IN METERS UNLESS SPECIFIED OTHERWISE.

STATE OF TEXAS
ARNULFO RAMIREZ
56890
REGISTERED PROFESSIONAL ENGINEER

Arnulfo Ramirez, P.E. 9-18-00
Date

SHEET 2 OF 5

# TRAFFIC SIGNAL INTERSECTION LAYOUT

## LOOP 1604 FRONTAGE RDS. AT F.M. 471 (CULEBRA RD.)

©2000 Texas Department of Transportation

SCALE IN METERS
0 5 10 20
SCALE: 1:500

| FED. RD. DIV. NO. | FEDERAL AID PROJECT NO. | | SHEET NO. |
|---|---|---|---|
| 6 | NH 2000(704), Etc. | | 558 |
| STATE | DIST. | COUNTY | |
| TEXAS | SAT | BEXAR | |
| CONT. | SECT. | JOB | HIGHWAY NO. |
| 2452 | 01 | 036, Etc. | LOOP 1604 |

## LEGEND

- PROP. LOOP DETECTOR
- PROP. GROUND BOX(TYPE "A")
- PROP. GROUND BOX(TYPE "D")
- PROP. 75 mm PVC SCHEDULE 80
- PROP. 50 mm PVC SCHEDULE 80
- PROP. MAST ARM POLE AND FOUNDATION
- PROP. SIGNAL FACE
- PROP. CONTROLLER, SLAB AND FOUNDATION
- PROP. PEDESTRIAN SIGNAL HEAD WITH PUSH BUTTON
- PROP. PEDESTAL POLE AND FOUNDATION
- PROP. ELECTRICAL SERVICE
- VIVDS CAMERA ASSEMBLY (1)

MATCH LINE

LOOP 1604

LOOP 1604 SBD. F.R.

A-11 A-10 A-9 A-8 A-7

POLE "H" D-8

POLE "E" D-5

POLE "G" D-7

POLE "F" D-6

R3-8 SIGN

R10-12 SIGN

F.M. 471 (CULEBRA RD.)

ROW

ROW

## SIGNAL FACES

300 mm SIGNAL SECTIONS

SIGNAL NO. 1 (R Y G)

SIGNAL NO. 2 (R Y Y G G)

SIGNAL NO. 3

NOTES:

THE ENGINEER SHALL CONTACT MR. DAVID ZUNIGA COSA SIGNAL SHOP) AT 207-7769 96 HOURS PRIOR TO CONSTRUCTION, PRIOR TO PICKING UP COSA FURNISHED MATERIALS AND PRIOR TO CONNECTING FIELD WIRING TO CONTROLLER. (1)

ALL PVC SHALL BE SCHEDULE 80.

ALL DIMENSIONS SHOWN ARE IN METERS UNLESS SPECIFIED OTHERWISE.

STATE OF TEXAS
ELIDIA BANDA
82580
REGISTERED PROFESSIONAL ENGINEER
12/20/02

REVISIONS ONLY
CO#62

Conduit & Ground Boxes Only
(2) #As Built - already placed by Contractor
Prior to change order

STATE OF TEXAS
ARNULFO RAMIREZ
56890
REGISTERED PROFESSIONAL ENGINEER

Arnulfo Ramirez 1-6-03
Arnulfo Ramirez, P.E. Date

SHEET 2 OF 5

# TRAFFIC SIGNAL INTERSECTION LAYOUT

## LOOP 1604 FRONTAGE RDS. AT F.M. 471 (CULEBRA RD.)

©2000 Texas Department of Transportation

SCALE IN METERS
0 5 10 20
SCALE: 1:500

| FED.RD. DIV.NO. | FEDERAL AID PROJECT NO. | | SHEET NO. |
|---|---|---|---|
| 6 | NH 2000(704),Etc. | | 558 A |
| STATE | DIST. | COUNTY | |
| TEXAS | SAT | BEXAR | |
| CONT. | SECT. | JOB | HIGHWAY NO. |
| 2452 | 01 | 036,Etc. | LOOP 1604 |

## POLE AND CABLE SCHEDULE

| POLE NO. | SIGNAL CABLE | | | ELEC CONDR |
|---|---|---|---|---|
| | 7/C#12 | 4/C#12 | 2/C#14 | 1/C#6 BARE |
| A | - | 1 | 1 | 1 |
| B | 2 | 1 | 1 | 1 |
| C | 2 | 2 | 2 | 1 |
| D | 3 | 2 | 2 | 1 |
| | | | | |

## LEGEND

- PROP. LOOP DETECTOR
- PROP. GROUND BOX(TYPE "A")
- PROP. GROUND BOX(TYPE "D")
- PROP. 75 mm PVC SCHEDULE 80
- PROP. 50 mm PVC SCHEDULE 80
- PROP. 32 mm PVC SCHEDULE 80
- PROP. MAST ARM POLE AND FOUNDATION
- PROP. SIGNAL FACE
- PROP. CONTROLLER, SLAB AND FOUNDATION
- PROP. PEDESTRIAN SIGNAL HEAD WITH PUSH BUTTON
- PROP. PEDESTAL POLE AND FOUNDATION
- PROP. ELECTRICAL SERVICE
- TMS MANHOLE(BY OTHERS)

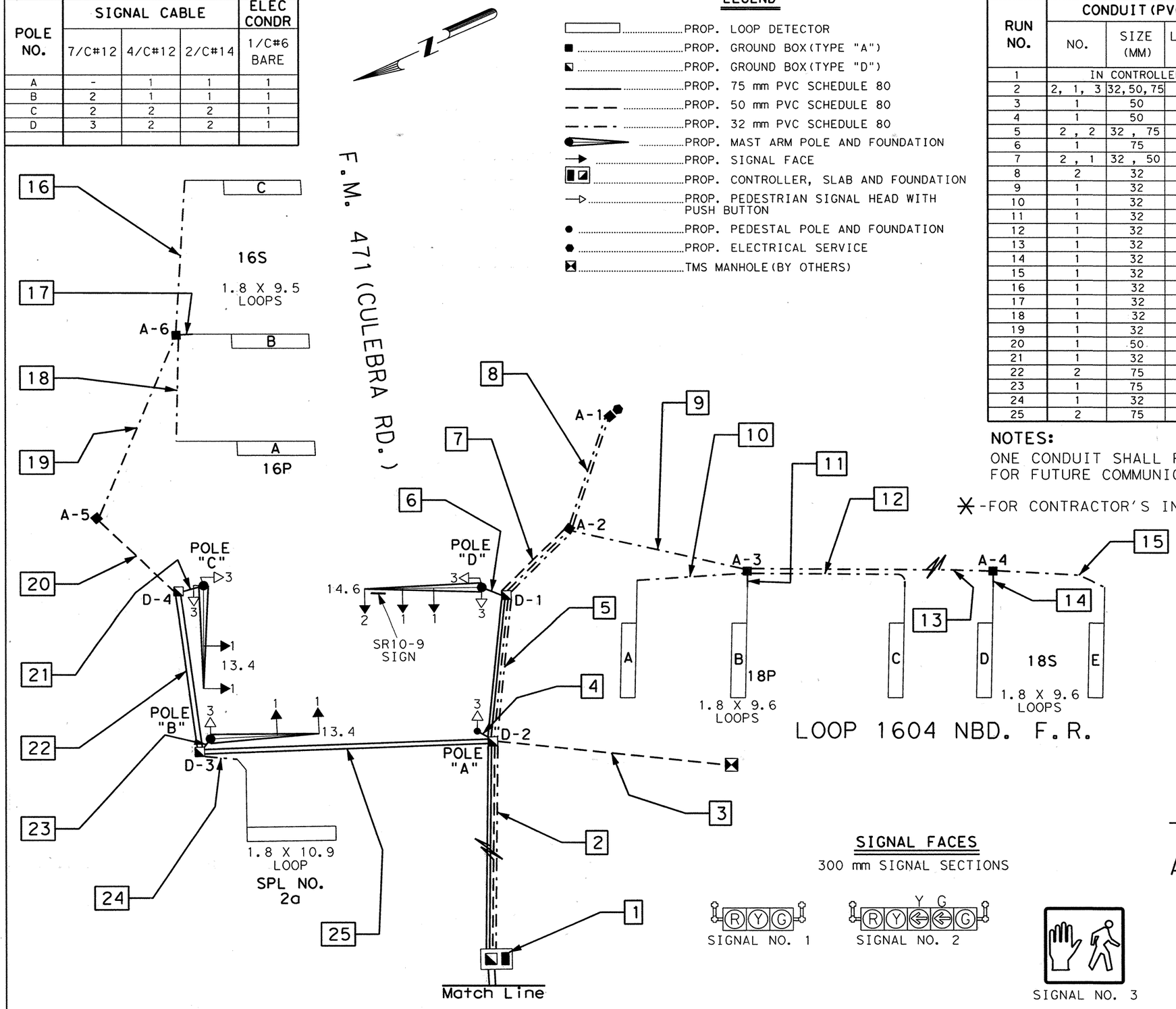


## CONDUIT AND CABLE SCHEDULE

| RUN NO. | CONDUIT(PVC) | | | SIGNAL CABLE | | | | ELEC CONDR | |
|---|---|---|---|---|---|---|---|---|---|
| | NO. | SIZE (MM) | LENGTH (M) | 7/C#12 | 4/C#12 | 2/C#14 | 1/C#14 ✳ | 1/C#6 | 1/C#6 BARE |
| 1 | IN CONTROLLER | | | 6 | 12 | 22 | - | 2 | 2 |
| 2 | 2, 1, 3 | 32, 50, 75 | 50 | 3 | 6 | 11 | - | 2 | 1 |
| 3 | 1 | 50 | 31 | - | - | - | - | - | - |
| 4 | 1 | 50 | 2 | - | 1 | 1 | - | - | 1 |
| 5 | 2 , 2 | 32 , 75 | 19 | 1 | 2 | 4 | - | 2 | 1 |
| 6 | 1 | 75 | 3 | 1 | 2 | 2 | - | - | 1 |
| 7 | 2 , 1 | 32 , 50 | 12 | - | - | 2 | - | 2 | 1 |
| 8 | 2 | 32 | 16 | - | - | - | - | 2 | 1 |
| 9 | 1 | 32 | 24 | - | - | 2 | - | - | - |
| 10 | 1 | 32 | 14 | - | - | - | 2 | - | - |
| 11 | 1 | 32 | 2 | - | - | - | 2 | - | - |
| 12 | 1 | 32 | 21 | - | - | - | 2 | - | - |
| 13 | 1 | 32 | 49 | - | - | 1 | - | - | - |
| 14 | 1 | 32 | 2 | - | - | - | 2 | - | - |
| 15 | 1 | 32 | 15 | - | - | - | 2 | - | - |
| 16 | 1 | 32 | 20 | - | - | - | 2 | - | - |
| 17 | 1 | 32 | 2 | - | - | - | 2 | - | - |
| 18 | 1 | 32 | 14 | - | - | - | 2 | - | - |
| 19 | 1 | 32 | 26 | - | - | 2 | - | - | - |
| 20 | 1 | 50 | 15 | - | - | 2 | - | - | - |
| 21 | 1 | 32 | 3 | 1 | 2 | 2 | - | - | 1 |
| 22 | 2 | 75 | 22 | 1 | 2 | 4 | - | - | 1 |
| 23 | 1 | 75 | 2 | 1 | 1 | 1 | - | - | 1 |
| 24 | 1 | 32 | 5 | - | - | - | 2 | - | - |
| 25 | 2 | 75 | 37 | 2 | 3 | 6 | - | - | 1 |

**NOTES:**

ONE CONDUIT SHALL REMAIN OPEN IN RUN #2(50 mm) FOR FUTURE COMMUNICATION CABLE(TMS).

✳-FOR CONTRACTOR'S INFORMATION ONLY.

## SIGNAL FACES

300 mm SIGNAL SECTIONS




SIGNAL NO. 1




SIGNAL NO. 2



SIGNAL NO. 3

STATE OF TEXAS
ARNULFO RAMIREZ
56890
REGISTERED PROFESSIONAL ENGINEER

Arnulfo Ramirez, P.E. — 9-18-00 Date

SHEET 3 OF 5

# TRAFFIC SIGNAL WIRING DIAGRAM AND CONDUIT LAYOUT

## LOOP 1604 FRONTAGE RDS. AT F.M. 471 (CULEBRA RD.)

©2000 Texas Department of Transportation

| FED. RD. DIV. NO. | FEDERAL AID PROJECT NO. | | SHEET NO. |
|---|---|---|---|
| 6 | NH 2000(704), Etc. | | 559 |
| STATE | DIST. | COUNTY | |
| TEXAS | SAT | BEXAR | |
| CONT. | SECT. | JOB | HIGHWAY NO. |
| 2452 | 01 | 036, Etc. | LOOP 1604 |

| LOOP* | PHASE | SIZE(M) |
|---|---|---|
| 1,4,7 | Ø1 | 1.8 x 1.8 |
| 2,5,8 | OLA | 1.8 x 1.8 |
| 3,6,9 | OLA | 1.8 x 1.8 |
| | | |

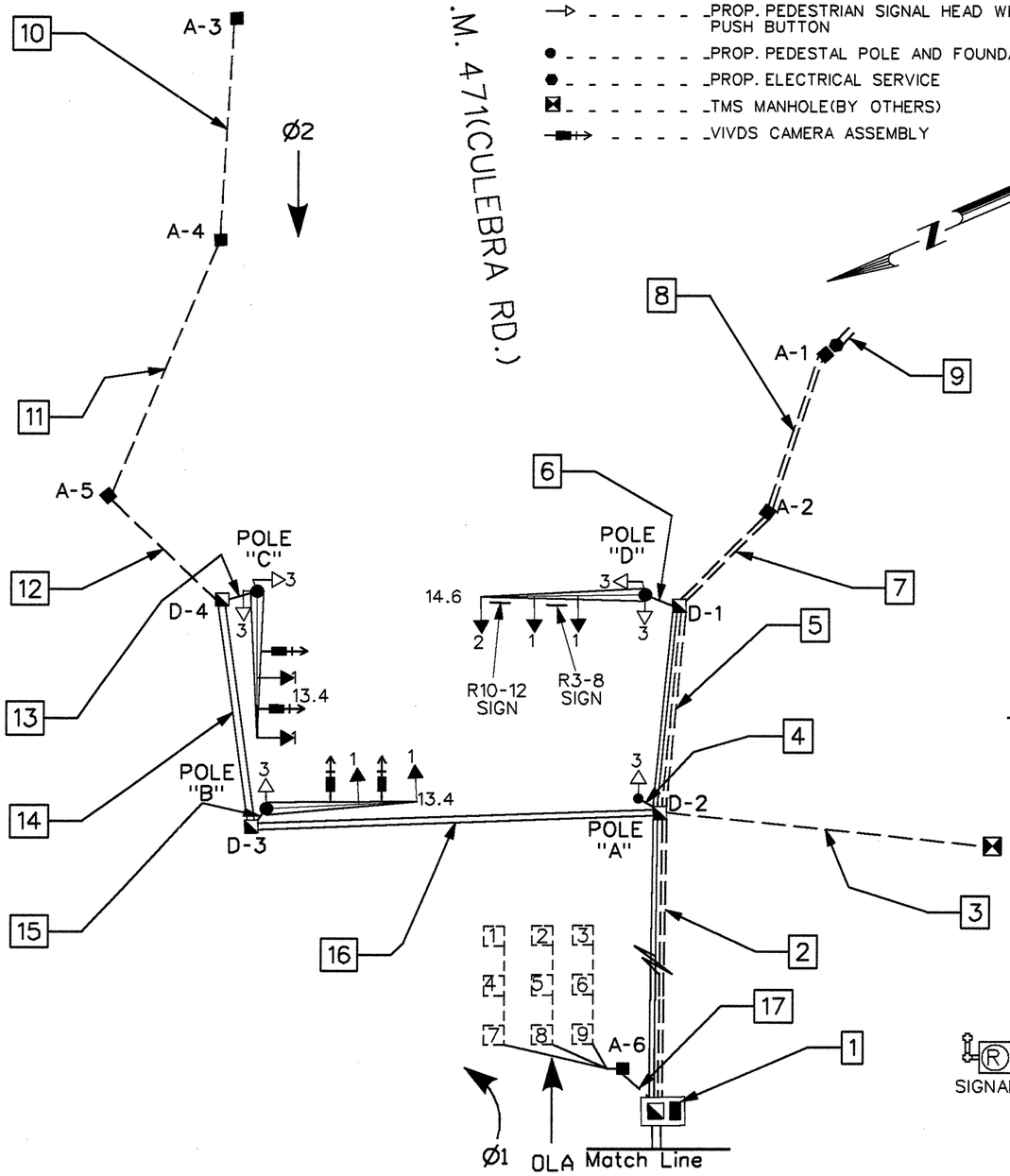


LEGEND

- _PROP. LOOP DETECTOR
- _PROP. GROUND BOX(TYPE "A")
- _PROP. GROUND BOX(TYPE "D")
- _PROP. 75 mm PVC SCHEDULE 80
- _PROP. 50 mm PVC SCHEDULE 80
- _PROP. MAST ARM POLE AND FOUNDATION
- _PROP. SIGNAL FACE
- _PROP. CONTROLLER, SLAB AND FOUNDATION
- _PROP. PEDESTRIAN SIGNAL HEAD WITH PUSH BUTTON
- _PROP. PEDESTAL POLE AND FOUNDATION
- _PROP. ELECTRICAL SERVICE
- _TMS MANHOLE(BY OTHERS)
- _VIVDS CAMERA ASSEMBLY

## CONDUCTOR & CONDUIT SCHEDULE

| | CONDUIT/SPAN RUN NUMBER | 1 | 2 | 3 | 4 | 5 | 6 | 7 | 8 | 9 | 10 | 11 | 12 | 13 | 14 | 15 | 16 | 17 |
|---|---|---|---|---|---|---|---|---|---|---|---|---|---|---|---|---|---|---|
| | CONDUIT SIZE IN mm | 4-50 2-75 | 1-75 2-50 | 50 | 50 | 1-75 2-50 | 50 | 2-50 | 2-50 | | 50 | 50 | 50 | 50 | 75 | 50 | 75 | 50 |
| | CONDUIT/SPAN RUN LGTH.(M) | IC | 50 | 31 | 2 | 19 | 3 | 12 | 16 | | 20 | 26 | 15 | 3 | 22 | 2 | 37 | 40 |
| AWG | CIRCUIT | NUMBER OF WIRES | | | | | | | | | | | | | | | | |
| #14 7-COND. IMSA CABLE | SIGNALS | | | | | | | | | | | | | | | | | |
| | Ø1 AND OVERLAP A | 1 | 1 | | | 1 | 1 | | | | | | | | | | | |
| | Ø2 | 1 | 1 | | | | | | | | | | | | | 1 | 1 | |
| | OVERLAP C | 1 | 1 | | | | | | | | | | | 1 | 1 | | 1 | |
| #14 9-COND. IMSA CABLE | PED. SIGNAL & BUTTON | | | | | | | | | | | | | | | | | |
| | POLE A | 1 | 1 | | 1 | | | | | | | | | | | | | |
| | B | 1 | 1 | | | | | | | | | | | | | 1 | 1 | |
| | C | 1 | 1 | | | | | | | | | | | 1 | 1 | | 1 | |
| | D | 1 | 1 | | | 1 | 1 | | | | | | | | | | | |
| #6 THHN/ THWN | 120 POWER HOT | 1 | 1 | | | 1 | | 1 | 1 | | | | | | | | | |
| | 120 POWER COMMON | 1 | 1 | | | 1 | | 1 | 1 | | | | | | | | | |
| #8 BARE | BARE BOND GROUND | 1 | 1 | | | 1 | | 1 | 1 | | | | | | | | | |
| RG-59 COMM CABLE* | VIVDS VIDEO DETECTION | | | | | | | | | | | | | | | | | |
| | Ø2(STOPBAR) | 1 | 1 | | | | | | | | | | | | | 1 | 1 | |
| | Ø2(SETBACK) | 1 | 1 | | | | | | | | | | | | | 1 | 1 | |
| | OVERLAP C(STOPBAR) | 1 | 1 | | | | | | | | | | | 1 | 1 | | 1 | |
| | OVERLAP C(SETBACK) | 1 | 1 | | | | | | | | | | | 1 | 1 | | 1 | |
| #18 3 / C * ⊛ | VIVDS POWER CABLE | | | | | | | | | | | | | | | | | |
| | Ø2(STOPBAR) | 1 | 1 | | | | | | | | | | | | | 1 | 1 | |
| | Ø2(SETBACK) | 1 | 1 | | | | | | | | | | | | | 1 | 1 | |
| | OVERLAP C(STOPBAR) | 1 | 1 | | | | | | | | | | | 1 | 1 | | 1 | |
| | OVERLAP C(SETBACK) | 1 | 1 | | | | | | | | | | | 1 | 1 | | 1 | |
| #14 2-COND. IMSA CABLE | LOOP DETECTORS | | | | | | | | | | | | | | | | | |
| | Ø1 | 1 | | | | | | | | | | | | | | | | 1 |
| | OVERLAP A | 1 | | | | | | | | | | | | | | | | 1 |
| #19 6 PAIR TY B | INTERCONNECT | 1 | 1 | | | | | | | | 1 | 1 | 1 | | 1 | | 1 | |

WIRED BY CITY PUBLIC SERVICE

B=BORED CONDUIT T=TRENCHED CONDUIT ES=EXISTING SPAN WIRE TO REMAIN S=SPAN WIRE R=RIGID METAL CONDUIT
*OR IN ACCORDANCE WITH MANUFACTURE'S RECOMMENDATIONS IC=INSIDE THE CONTROLLER

NOTES:
ONE CONDUIT SHALL REMAIN OPEN IN RUN *2(50 mm) FOR FUTURE COMMUNICATION CABLE(TMS).
⊛ FOR CONTRACTOR'S INFORMATION ONLY.

← OLC

LOOP 1604 NBD. F.R.

SIGNAL FACES
300 mm SIGNAL SECTIONS

SIGNAL NO. 1

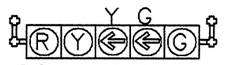

SIGNAL NO. 2

SIGNAL NO. 3

ELIDIA BANDA 82580 REGISTERED PROFESSIONAL ENGINEER STATE OF TEXAS 12/20/02

# TRAFFIC SIGNAL WIRING DIAGRAM AND CONDUIT LAYOUT

## LOOP 1604 FRONTAGE RDS. AT F.M. 471(CULEBRA RD.)

©2000 Texas Department of Transportation

SHEET 3 OF 5

CO#62

| FED.RD. DIV.NO. | FEDERAL AID PROJECT NO. | | SHEET NO. |
|---|---|---|---|
| 6 | NH 2000(704),Etc. | | 559A |
| STATE | DIST. | COUNTY | |
| TEXAS | SAT | BEXAR | |
| CONT. | SECT. | JOB | HIGHWAY NO. |
| 2452 | 01 | 036,Etc. | LOOP 1604 |

## CONDUIT AND CABLE SCHEDULE

| RUN NO. | CONDUIT (PVC) | | | SIGNAL CABLE | | | | ELEC CONDR | |
|---|---|---|---|---|---|---|---|---|---|
| | NO. | SIZE (MM) | LENGTH (M) | 7/C#12 | 4/C#12 | 2/C#14 | 1/C#14 ✳ | 1/C#6 | 1/C#6 BARE |
| 26 | 3 | 75 | 54 | 3 | 6 | 11 | - | - | 1 |
| 27 | 1 | 32 | 6 | - | - | - | 2 | - | - |
| 28 | 1 | 75 | 2 | 1 | 1 | 1 | - | - | 1 |
| 29 | 2 | 75 | 20 | 1 | 2 | 4 | - | - | 1 |
| 30 | 1 | 75 | 3 | 1 | 2 | 2 | - | - | 1 |
| 31 | 1 | 50 | 13 | - | - | 2 | - | - | - |
| 32 | 1 | 32 | 28 | - | - | 2 | - | - | - |
| 33 | 1 | 32 | 14 | - | - | - | 2 | - | - |
| 34 | 1 | 32 | 2 | - | - | - | 2 | - | - |
| 35 | 1 | 32 | 20 | - | - | - | 2 | - | - |
| 36 | 1 | 32 | 14 | - | - | - | 2 | - | - |
| 37 | 1 | 32 | 2 | - | - | - | 2 | - | - |
| 38 | 1 | 32 | 50 | - | - | 1 | - | - | - |
| 39 | 1 | 32 | 22 | - | - | - | 2 | - | - |
| 40 | 1 | 32 | 2 | - | - | - | 2 | - | - |
| 41 | 1 | 32 | 14 | - | - | - | 2 | - | - |
| 42 | 1 | 32 | 22 | - | - | 2 | - | - | - |
| 43 | 1 | 50 | 13 | - | - | 2 | - | - | - |
| 44 | 1 | 75 | 5 | 1 | 2 | 2 | - | - | 1 |
| 45 | 2 | 75 | 19 | 1 | 2 | 4 | - | - | 1 |
| 46 | 1 | 50 | 2 | - | 1 | 1 | - | - | 1 |
| 47 | 2 | 75 | 38 | 1 | 3 | 5 | - | - | 1 |
| | | | | | | | | | |

NOTES:
✳-FOR CONTRACTOR'S INFORMATION ONLY.

## POLE AND CABLE SCHEDULE

| POLE NO. | SIGNAL CABLE | | | ELEC CONDR |
|---|---|---|---|---|
| | 7/C#12 | 4/C#12 | 2/C#14 | 1/C#6 BARE |
| E | 2 | 1 | 1 | 1 |
| F | 2 | 2 | 2 | 1 |
| G | 3 | 2 | 2 | 1 |
| H | - | 1 | 1 | 1 |
| | | | | |

## SIGNAL FACES

300 mm SIGNAL SECTIONS

SIGNAL NO. 1

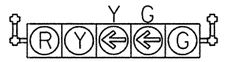


SIGNAL NO. 2

SIGNAL NO. 3

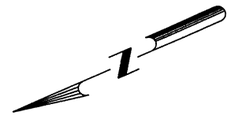

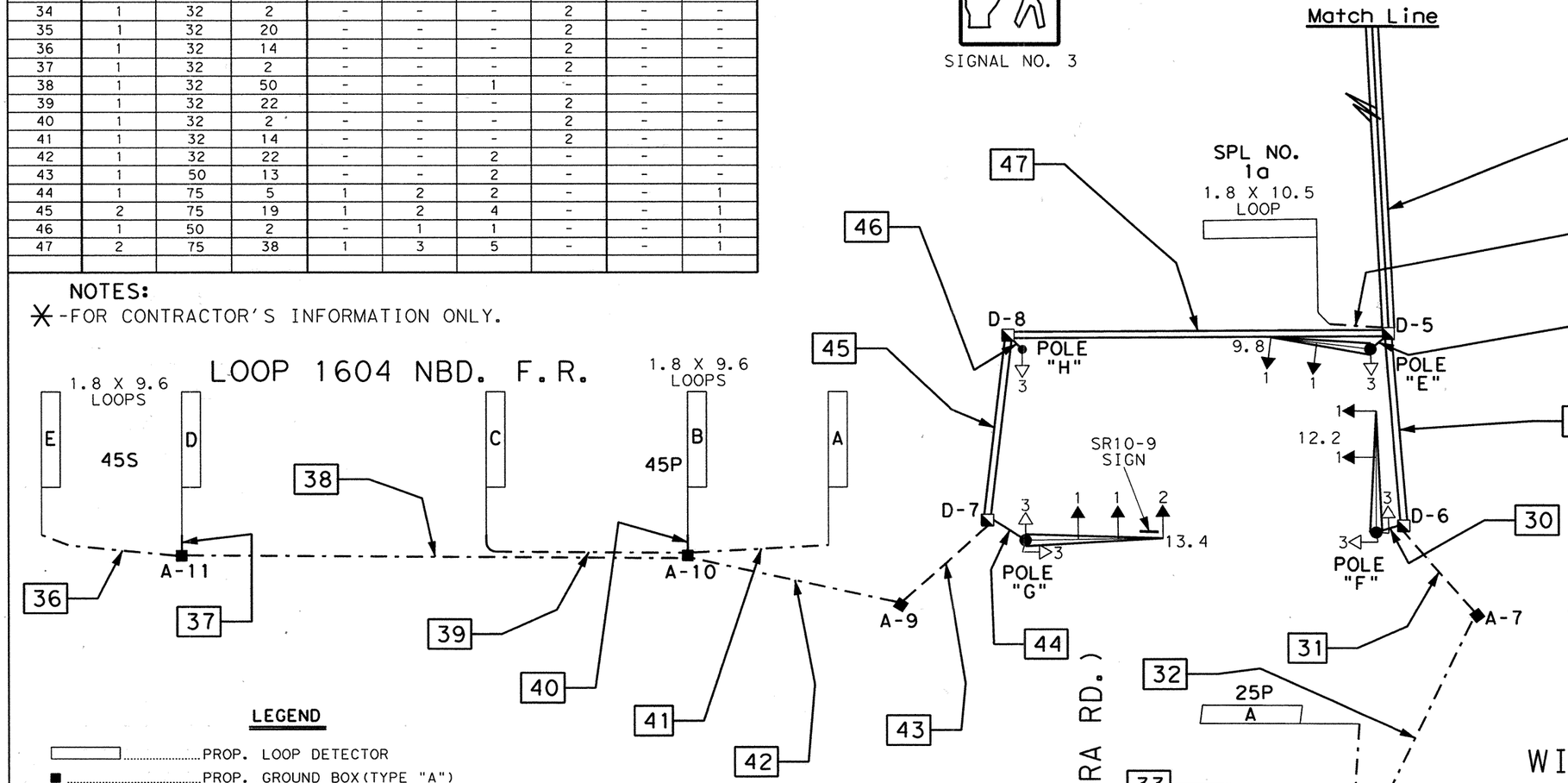


### LEGEND

- PROP. LOOP DETECTOR
- PROP. GROUND BOX (TYPE "A")
- PROP. GROUND BOX (TYPE "D")
- PROP. 75 mm PVC SCHEDULE 80
- PROP. 50 mm PVC SCHEDULE 80
- PROP. 32 mm PVC SCHEDULE 80
- PROP. MAST ARM POLE AND FOUNDATION
- PROP. SIGNAL FACE
- PROP. CONTROLLER, SLAB AND FOUNDATION
- PROP. PEDESTRIAN SIGNAL HEAD WITH PUSH BUTTON
- PROP. PEDESTAL POLE AND FOUNDATION
- PROP. ELECTRICAL SERVICE

STATE OF TEXAS
ARNULFO RAMIREZ
56890
REGISTERED PROFESSIONAL ENGINEER

Arnulfo Ramirez, P.E. 9-18-00 Date

SHEET 4 OF 5

# TRAFFIC SIGNAL WIRING DIAGRAM AND CONDUIT LAYOUT

## LOOP 1604 FRONTAGE RDS. AT F.M. 471 (CULEBRA RD.)

©2000 Texas Department of Transportation

| FED.RD. DIV.NO. | FEDERAL AID PROJECT NO. | | SHEET NO. |
|---|---|---|---|
| 6 | NH 2000(704), Etc. | | 560 |
| STATE | DIST. | COUNTY | |
| TEXAS | SAT | BEXAR | |
| CONT. | SECT. | JOB | HIGHWAY NO. |
| 2452 | 01 | 036, Etc. | LOOP 1604 |

## CONDUCTOR & CONDUIT SCHEDULE

| AWG | CIRCUIT | 1 | 18 | 19 | 20 | 21 | 22 | 23 | 24 | 25 | 26 | 27 | 28 | 29 | 30 |
|---|---|---|---|---|---|---|---|---|---|---|---|---|---|---|---|
| | CONDUIT/SPAN RUN NUMBER | 1 | 18 | 19 | 20 | 21 | 22 | 23 | 24 | 25 | 26 | 27 | 28 | 29 | 30 |
| | CONDUIT SIZE IN mm | 4-50 2-75 | 1-75 2-50 | 50 | 75 | 50 | 75 | 50 | 50 | 50 | 75 | 75 | 50 | 50 | 75 |
| | CONDUIT/SPAN RUN LGTH.(M) | IC | 54 | 2 | 20 | 3 | 13 | 28 | 20 | 5 | 13 | 19 | 2 | 23 | 38 |
| | NUMBER OF WIRES | | | | | | | | | | | | | | |
| #14 7-COND. IMSA CABLE | SIGNALS | | | | | | | | | | | | | | |
| | Ø5 AND OVERLAP B | 1 | 1 | | | | | | | 1 | | 1 | | | 1 |
| | Ø6 | 1 | 1 | 1 | | | | | | | | | | | |
| | OVERLAP D | 1 | 1 | | 1 | 1 | | | | | | | | | |
| #14 9-COND. IMSA CABLE | PED. SIGNAL & BUTTON | | | | | | | | | | | | | | |
| | POLE E | 1 | 1 | 1 | | | | | | | | | | | |
| | F | 1 | 1 | | 1 | 1 | | | | | | | | | |
| | G | 1 | 1 | | | | | | | 1 | | 1 | | | 1 |
| | H | 1 | 1 | | | | | | | | | | 1 | | 1 |
| #6 THHN/ THWN | 120 POWER HOT | | | | | | | | | | | | | | |
| | 120 POWER COMMON | | | | | | | | | | | | | | |
| #8 BARE | BARE BOND GROUND | 1 | 1 | 1 | 1 | 1 | | | | 1 | | 1 | 1 | | 1 |
| RG-59 COMM CABLE* | VIVDS VIDEO DETECTION | | | | | | | | | | | | | | |
| | Ø6 (STOPBAR) | 1 | 1 | 1 | | | | | | | | | | | |
| | Ø6 (SETBACK) | 1 | 1 | 1 | | | | | | | | | | | |
| | OVERLAP D (STOPBAR) | 1 | 1 | | 1 | 1 | | | | | | | | | |
| | OVERLAP D (SETBACK) | 1 | 1 | | 1 | 1 | | | | | | | | | |
| #18 3 / C * ⊛ | VIVDS POWER CABLE | | | | | | | | | | | | | | |
| | Ø6 (STOPBAR) | 1 | 1 | 1 | | | | | | | | | | | |
| | Ø6 (SETBACK) | 1 | 1 | 1 | | | | | | | | | | | |
| | OVERLAP D (STOPBAR) | 1 | 1 | | 1 | 1 | | | | | | | | | |
| | OVERLAP D (SETBACK) | 1 | 1 | | 1 | 1 | | | | | | | | | |
| #14 2-COND. IMSA CABLE | LOOP DETECTORS | | | | | | | | | | | | | | |
| | Ø5 | 1 | 1 | | | | | | | | | | | 1 | 1 |
| | OVERLAP B | 1 | 1 | | | | | | | | | | | 1 | 1 |
| #19 6 PAIR TY B | INTERCONNECT | 1 | 1 | | 1 | | 1 | 1 | 1 | | | | | | |

B=BORED CONDUIT T=TRENCHED CONDUIT ES=EXISTING SPAN WIRE TO REMAIN S=SPAN WIRE R=RIGID METAL CONDUIT
ESR=ENSURE CLEARANCE WITH MANUFACTURE'S RECOMMENDATIONS IC=INSIDE THE CONTROLLER

NOTES:

⊛ FOR CONTRACTOR'S INFORMATION ONLY.

OLD →

# LOOP 1604 SBD. F.R.

**LEGEND**

- _PROP. LOOP DETECTOR
- _PROP. GROUND BOX(TYPE "A")
- _PROP. GROUND BOX(TYPE "D")
- _PROP. 75 mm PVC SCHEDULE 80
- _PROP. 50 mm PVC SCHEDULE 80
- _PROP. MAST ARM POLE AND FOUNDATION
- _PROP. SIGNAL FACE
- _PROP. CONTROLLER, SLAB AND FOUNDATION
- _PROP. PEDESTRIAN SIGNAL HEAD WITH PUSH BUTTON
- _PROP. PEDESTAL POLE AND FOUNDATION
- _PROP. ELECTRICAL SERVICE
- _VIVDS CAMERA ASSEMBLY

| LOOP* | PHASE | SIZE(M) |
|---|---|---|
| 1,4,7 | Ø5 | 1.8 x 1.8 |
| 2,5,8 | OLB | 1.8 x 1.8 |
| 3,6,9 | OLB | 1.8 x 1.8 |
| | | |

## SIGNAL FACES

300 mm SIGNAL SECTIONS

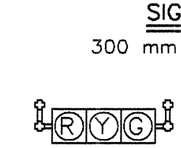


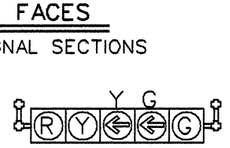

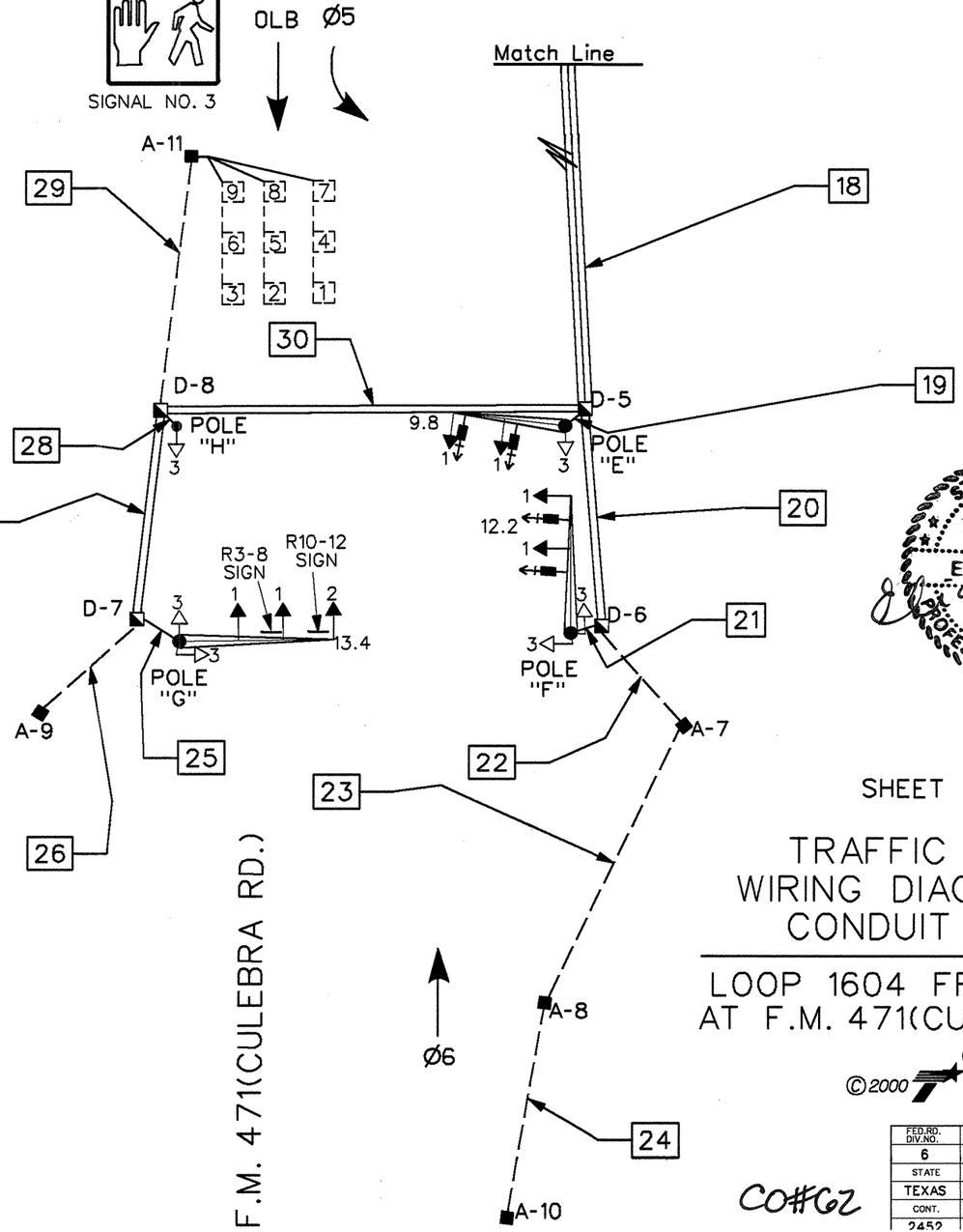


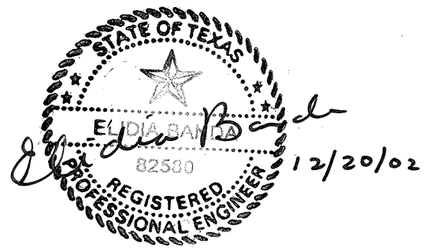


SHEET 4 OF 5

# TRAFFIC SIGNAL WIRING DIAGRAM AND CONDUIT LAYOUT

## LOOP 1604 FRONTAGE RDS. AT F.M. 471(CULEBRA RD.)

©2000 Texas Department of Transportation

| FED.RD. DIV.NO. | FEDERAL AID PROJECT NO. | | SHEET NO. |
|---|---|---|---|
| 6 | NH 2000(704),Etc. | | 560 A |
| STATE | DIST. | COUNTY | |
| TEXAS | SAT | BEXAR | |
| CONT. | SECT. | JOB | HIGHWAY NO. |
| 2452 | 01 | 036 Etc | LOOP 1604 |

CO#62

## MATERIALS TO BE FURNISHED AND INSTALLED BY THE CONTRACTOR

| ITEM NO. | DESCRIPTION | UNIT | QUANTITY |
|---|---|---|---|
| 618 | CONDUIT: PVC (SCH. 80)(32 mm) | M | 587 |
| 618 | PVC (SCH. 80)(50 mm) | M | 138 |
| 618 | PVC (SCH. 80)(75 mm) | M | 615 |
| 620 | ELECTRICAL CONDUCTOR(NO. 6) BARE | M | 330 |
| 620 | ELECTRICAL CONDUCTOR(NO. 6) INSULATED | M | 205 |
| 624 | GROUND BOX(TYPE A) W/APRON | EA. | 11 |
| 624 | GROUND BOX(TYPE D) W/APRON | EA. | 8 |
| 628 | ELEC SERV TYT(120/240)000(NS)GS(N)TP(O) | EA. | 1 |
| 656 | TRAFFIC SIGNAL CONTROLLER FND. | EA. | 1 |
| 656 | FND FOR TRAF SIG(600 mm DRIL SH) | M | 3.4 |
| 656 | FND FOR TRAF SIG(TY A)(750 mm DRIL SH) | M | 3.4 |
| 656 | FND FOR TRAF SIG(TY A)(900 mm DRIL SH) | M | 20 |
| 680 | INSTALLATION OF HWY. TRAF. SIGNAL | EA. | 1 |
| 681 | TEMPORARY TRAFFIC SIGNALS | EA. | 1 |
| 682 | VEHICLE SIGNAL SECTION(300 mm) | EA. | 46 |
| 682 | PED SIG SEC(300 mm)(2 INDICATIONS) | EA. | 12 |
| 684 | TRAF. SIG. CBL.(TY A)(4 CONDR.)(12 AWG) | M | 1,125 |
| 684 | TRAF. SIG. CBL.(TY A)(7 CONDR.)(12 AWG) | M | 775 |
| 684 | TRAF. SIG. CBL.(TY C)(2 CONDR.)(14 AWG) | M | 2,410 |
| 686 | TRAF SIG POLE ASM(STL)1 ARM(9.8 M) | EA. | 1 |
| 686 | TRAF SIG POLE ASM(STL)1 ARM(12.2 M) | EA. | 1 |
| 686 | TRAF SIG POLE ASM(STL)1 ARM(13.4 M) | EA. | 3 |
| 686 | TRAF SIG POLE ASM(STL)1 ARM(14.6 M) | EA. | 1 |
| 688 | PEDESTRIAN DETECTOR(PUSH BUTTON) | EA. | 12 |
| 688 | VEHICLE DETECTOR(14 AWG)(SAWCUT LOOPS) | M | 600 |
| 6008 | SALVAGE TRAFFIC SIGNALS | EA. | 1 |
| 6023 | PEDESTAL POLE ASSEMBLY | EA. | 2 |
| 6438 | VIVDS PROCESSOR SYSTEM * | EA. | 1 |
| 6438 | VIVDS CAMERA ASSEMBLY * | EA. | 4 |
| 6438 | VIVDS SET-UP SYSTEM * | EA. | 1 |
| 6438 | VIVDS COMMUNICATION CABLE(COAXIAL) | M | 200 |
| 6438 | VIVDS TEMPORARY | EA. | 1 |
| | | | |

**NOTE:**
ALL SIGNAL POLE FOUNDATIONS SHALL BE INSTALLED ACCORDING TO TS-FD STANDARD SHEET.

INSTALLATION OF SIGNS TO BE CONSIDERED SUBSIDIARY TO BID ITEM 680.

*-FOR CONTRACTOR'S INFORMATION ONLY

## MATERIALS TO BE FURNISHED AND INSTALLED BY THE STATE

| DESCRIPTION | UNIT | QUANTITY |
|---|---|---|
| CONTROLLER WITH CABINET | EA. | 1 |
| SR10-9 SIGN (FURNISH ONLY) | EA. | 2 |
| R10-4b PUSH BUTTON SIGN (FURNISH ONLY) | EA. | 12 |
| | | |
| | | |

STATE OF TEXAS
ARNULFO RAMIREZ
56890
REGISTERED PROFESSIONAL ENGINEER

Arnulfo Ramirez, P.E.

9-18-00
Date

SHEET 5 OF 5

# TRAFFIC SIGNAL INTERSECTION LAYOUT

## LOOP 1604 FRONTAGE RDS. AT F.M. 471 (CULEBRA RD.)

©2000 Texas Department of Transportation

| FED. RD. DIV. NO. | FEDERAL AID PROJECT NO. | | SHEET NO. |
|---|---|---|---|
| 6 | NH 2000(704), Etc. | | 561 |
| STATE | DIST. | COUNTY | |
| TEXAS | SAT | BEXAR | |
| CONT. | SECT. | JOB | HIGHWAY NO. |
| 2452 | 01 | 036, Etc. | LOOP 1604 |

## MATERIALS TO BE FURNISHED AND INSTALLED BY THE CONTRACTOR

| ITEM NO. | DESCRIPTION | UNIT | QUANTITY |
|---|---|---|---|
| 618 | CONDUIT: PVC (SCH. 80)(32 mm) | M | 587 |
| 618 | PVC (SCH. 80)(50 mm) | M | 138 |
| 618 | PVC (SCH. 80)(75 mm) | M | 615 |
| 620 | ELECTRICAL CONDUCTOR(NO. 6) BARE | M | 330 |
| 620 | ELECTRICAL CONDUCTOR(NO. 6) INSULATED | M | 205 |
| 624 | GROUND BOX(TYPE A) W/APRON | EA. | 11 |
| 624 | GROUND BOX(TYPE D) W/APRON | EA. | 8 |
| 628 | ELEC SERV TYT(120/240)000(NS)GS(N)TP(0) | EA. | 1 |
| 656 | TRAFFIC SIGNAL CONTROLLER FND. | EA. | 1 |
| 656 | FND FOR TRAF SIG(600 mm DRIL SH) | M | 3.4 |
| 656 | FND FOR TRAF SIG(TY A)(750 mm DRIL SH) | M | 3.4 |
| 656 | FND FOR TRAF SIG(TY A)(900 mm DRIL SH) | M | 20 |
| 680 | INSTALLATION OF HWY. TRAF. SIGNAL | EA. | 1 |
| 681 | TEMPORARY TRAFFIC SIGNALS | EA. | 1 |
| 682 | VEHICLE SIGNAL SECTION(300 mm) | EA. | 46 |
| 682 | PED SIG SEC(300 mm)(2 INDICATIONS) | EA. | 12 |
| 684 | TRAF. SIG. CBL.(TY A)(4 CONDR.)(12 AWG) | M | 1,125 |
| 684 | TRAF. SIG. CBL.(TY A)(7 CONDR.)(12 AWG) | M | 775 |
| 684 | TRAF. SIG. CBL.(TY C)(2 CONDR.)(14 AWG) | M | 2,410 |
| 686 | TRAF SIG POLE ASM(STL)1 ARM(9.8 M) | EA. | 1 |
| 686 | TRAF SIG POLE ASM(STL)1 ARM(12.2 M) | EA. | 1 |
| 686 | TRAF SIG POLE ASM(STL)1 ARM(13.4 M) | EA. | 3 |
| 686 | TRAF SIG POLE ASM(STL)1 ARM(14.6 M) | EA. | 1 |
| 688 | PEDESTRIAN DETECTOR(PUSH BUTTON) | EA. | 12 |
| 688 | VEHICLE DETECTOR(14 AWG)(SAWCUT LOOPS) | M | 600 |
| 6008 | SALVAGE TRAFFIC SIGNALS | EA. | 1 |
| 6023 | PEDESTAL POLE ASSEMBLY | EA. | 2 |
| 6438 | VIVDS PROCESSOR SYSTEM * | EA. | 1 |
| 6438 | VIVDS CAMERA ASSEMBLY * | EA. | 6 ◆ |
| 6438 | VIVDS SET-UP SYSTEM * | EA. | 1 |
| 6438 | VIVDS COMMUNICATION CABLE(COAXIAL) | M | 200 |
| 6438 | VIVDS TEMPORARY | EA. | 1 |
| | | | |

**NOTE:**
ALL SIGNAL POLE FOUNDATIONS SHALL BE INSTALLED ACCORDING TO TS-FD STANDARD SHEET.

INSTALLATION OF SIGNS TO BE CONSIDERED SUBSIDIARY TO BID ITEM 680.

*-FOR CONTRACTOR'S INFORMATION ONLY

## MATERIALS TO BE FURNISHED AND INSTALLED BY THE STATE

| DESCRIPTION | UNIT | QUANTITY |
|---|---|---|
| CONTROLLER WITH CABINET | EA. | 1 |
| SR10-9 SIGN (FURNISH ONLY) | EA. | 2 |
| R10-4b PUSH BUTTON SIGN (FURNISH ONLY) | EA. | 12 |
| | | |
| | | |

STATE OF TEXAS
ARNULFO RAMIREZ
56890
REGISTERED PROFESSIONAL ENGINEER

Arnulfo Ramirez 4-25-01
Arnulfo Ramirez, P.E. Date

◆ CHANGE ORDER NO 3

SHEET 5 OF 5

# TRAFFIC SIGNAL INTERSECTION LAYOUT

## LOOP 1604 FRONTAGE RDS. AT F.M. 471 (CULEBRA RD.)

©2000 Texas Department of Transportation

| FED.RD. DIV.NO. | FEDERAL AID PROJECT NO. | | SHEET NO. |
|---|---|---|---|
| 6 | NH 2000(704), Etc. | | 561A |
| STATE | DIST. | COUNTY | |
| TEXAS | SAT | BEXAR | |
| CONT. | SECT. | JOB | HIGHWAY NO. |
| 2452 | 01 | 036, Etc. | LOOP 1604 |

## MATERIALS TO BE FURNISHED AND INSTALLED BY THE CONTRACTOR

| ITEM NO. | DESCRIPTION | UNIT | QUANTITY |
|---|---|---|---|
| 618 | CONDUIT PVC (SCH. 80)(50 mm) | M | 527 |
| 618 | CONDUIT PVC (SCH. 80)(75 mm) | M | 285 |
| 620 | ELECTRICAL CONDUCTOR(NO. 8) BARE | M | 240 |
| 620 | ELECTRICAL CONDUCTOR(NO. 6) INSULATED | M | 194 |
| 624 | GROUND BOX(TYPE A) W/APRON | EA. | 11 |
| 624 | GROUND BOX(TYPE D) W/APRON | EA. | 8 |
| 628 | ELEC SERV TYT(120/240)000(NS)GS(N)TP(0) | EA. | 1 |
| 656 | TRAFFIC SIGNAL CONTROLLER FND. (CITY TYPE) | EA. | 1 |
| 656 | FND FOR TRAF SIG(600 mm DRIL SH) | M | 3.4 |
| 656 | FND FOR TRAF SIG(TY A)(750 mm DRIL SH) | M | 3.4 |
| 656 | FND FOR TRAF SIG(TY A)(900 mm DRIL SH) | M | 20 |
| 680 | INSTALLATION OF HWY. TRAF. SIGNAL | EA. | 1 |
| 681 | TEMPORARY TRAFFIC SIGNALS | EA. | 1 |
| 682 | VEHICLE SIGNAL SECTION(300 mm) | EA. | 46 |
| 682 | PED SIG SEC(300 mm)(2 INDICATIONS) | EA. | 12 |
| 684 | TRAF. SIG. CBL.(TY A)(9 CONDR.)(14 AWG) | M | 668 |
| 684 | TRAF. SIG. CBL.(TY A)(7 CONDR.)(14 AWG) | M | 522 |
| 684 | TRAF. SIG. CBL.(TY C)(2 CONDR.)(14 AWG) | M | 310 |
| 684 | TRAF. SIG. CBL.(TY A)(6 PAIR)(19 AWG) | M | 305 |
| 686 | TRAF SIG POLE ASM(STL)1 ARM(9.8 M) | EA. | 1 |
| 686 | TRAF SIG POLE ASM(STL)1 ARM(12.2 M) | EA. | 1 |
| 686 | TRAF SIG POLE ASM(STL)1 ARM(13.4 M) | EA. | 3 |
| 686 | TRAF SIG POLE ASM(STL)1 ARM(14.6 M) | EA. | 1 |
| 688 | PEDESTRIAN DETECTOR(PUSH BUTTON) | EA. | 12 |
| 688 | VEHICLE DETECTOR(14 AWG)(19MM PVC)(COND ENC) | M | 140 |
| 6008 | SALVAGE TRAFFIC SIGNALS | EA. | 1 |
| 6023 | PEDESTAL POLE ASSEMBLY | EA. | 2 |
| 6438 | VIVDS PROCESSOR SYSTEM | EA. | 1 |
| 6438 | VIVDS CAMERA ASSEMBLY | EA. | 9 |
| 6438 | VIVDS SET-UP SYSTEM | EA. | 1 |
| 6438 | VIVDS COMMUNICATION CABLE(COAXIAL) | M | 668 |
| 6438 | VIVDS TEMPORARY | EA. | 1 |
| 8230 | LED PED. SIGNAL LAMP UNIT(SYMBOLIC) | EA. | 24 |

**NOTE:**
ALL SIGNAL POLE FOUNDATIONS SHALL BE INSTALLED ACCORDING TO TS-FD STANDARD SHEET.

INSTALLATION OF SIGNS TO BE CONSIDERED SUBSIDIARY TO BID ITEM 680.

## MATERIALS TO BE FURNISHED AND INSTALLED BY THE STATE

| DESCRIPTION | UNIT | QUANTITY |
|---|---|---|
| CONTROLLER WITH CABINET | EA. | 1 |
| R10-12 SIGN (FURNISH ONLY) | EA. | 2 |
| R10-4b PUSH BUTTON SIGN (FURNISH ONLY) | EA. | 12 |
| R3-8 SIGN (FURNISH ONLY) | EA. | 2 |

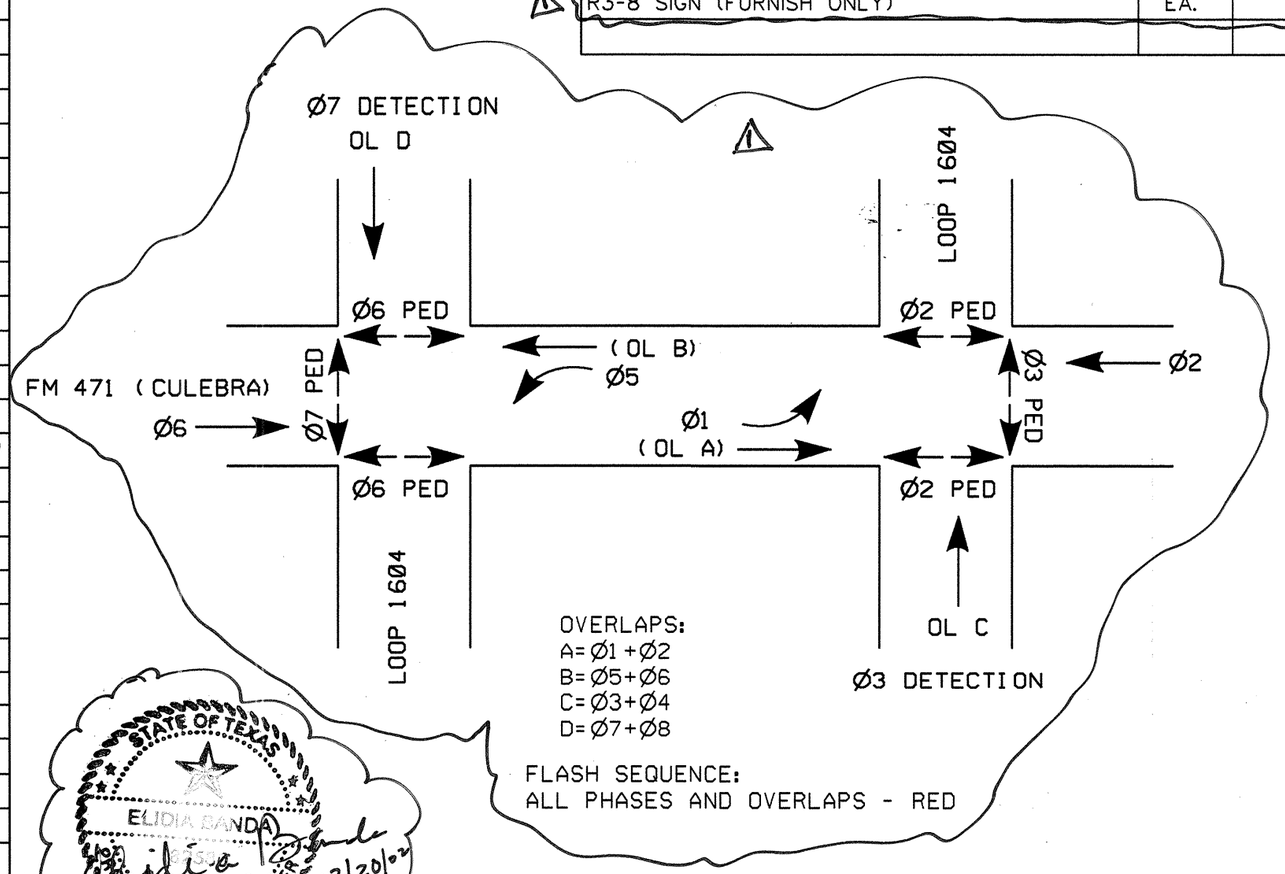


STATE OF TEXAS
ELIDIA BANDA
REGISTERED PROFESSIONAL ENGINEER
12/20/02
Revisions Only
CO#62

STATE OF TEXAS
ARNULFO RAMIREZ
56890
REGISTERED PROFESSIONAL ENGINEER

Arnulfo Ramirez 1-2-03
Arnulfo Ramirez, P.E. Date

SHEET 5 OF 5

# TRAFFIC SIGNAL INTERSECTION LAYOUT

## LOOP 1604 FRONTAGE RDS. AT F.M. 471(CULEBRA RD.)

©2000 Texas Department of Transportation

| FED.RD. DIV.NO. | FEDERAL AID PROJECT NO. | | SHEET NO. |
|---|---|---|---|
| 6 | NH 2000(704),Etc. | | 561A |
| STATE | DIST. | COUNTY | |
| TEXAS | SAT | BEXAR | |
| CONT. | SECT. | JOB | HIGHWAY NO. |
| 2452 | 01 | 036 Etc | LOOP 1604 |

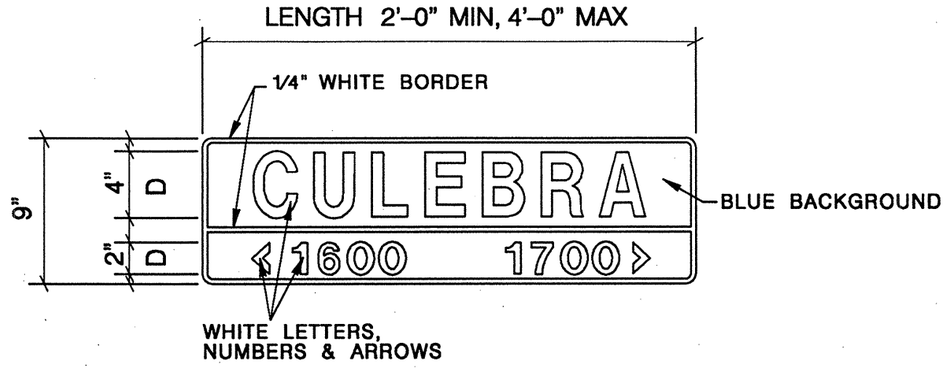


9" GROUND MOUNT STREET NAME SIGNS

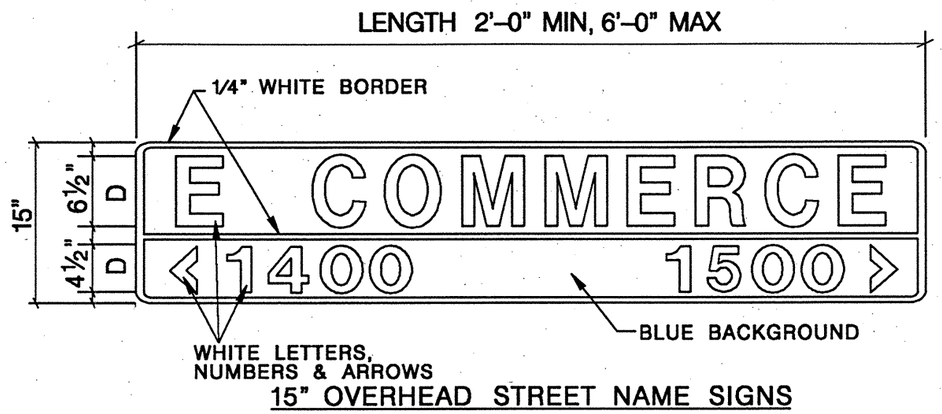


15" OVERHEAD STREET NAME SIGNS

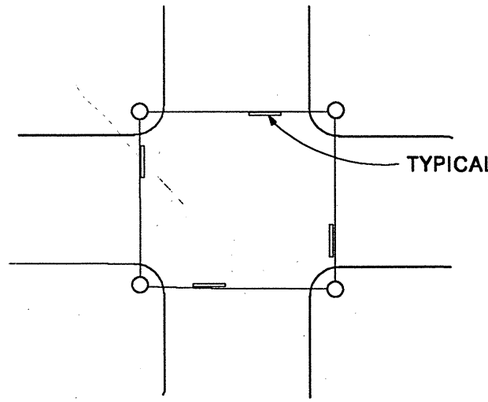


SPAN WIRE INSTALLATION

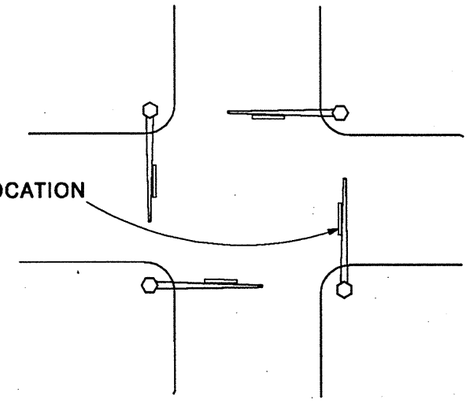

MAST ARM INSTALLATION

# STREET NAME SIGNING

| | 15" OVERHEAD SIGN | 9" GROUND MOUNT SIGNS |
|---|---|---|
| HEIGHT | 15" (381 mm) | 9" (228 mm) |
| LENGTH | 48" (1200 mm) MIN.<br>72" (1800 mm) MAX.<br>1' (300mm) INCREMENTS OF LENGTH | 24" (600mm) MIN.<br>48" (1200mm) MAX.<br>6" (150mm) INCREMENTS OF LENGTH |
| THICKNESS | 0.125" (3mm) | |
| SUBSTRATE | ALUMINUM ALLOY, 5052-H38 (ASTM B-209)<br>GOLD CHROMATE FINISH | |
| SIGN FACE MATERIALS | BLUE FILM OVER<br>TY III (HIGH INTENSITY)<br>FP-85, SECTION 718<br>AND L-S-300C | BLUE FILM OVER<br>TYII (ENGR. GRADE)<br>FP-85, SECTION 718<br>AND L-S-300C |
| LEGENDS AND SYMBOLS | SERIES D (USUAL)<br>SERIES C OR B FOR MAXIMUM LENGTH SIGN BLANK, IF NECESSARY | |
| COLOR | WHITE LEGEND ON BLUE BACKGROUND | |
| LETTER TRACKING | 17% (USUAL)<br>10% (MIN.) | 10% |

R10-4b(R)

R10-4b(L)

PEDESTRIAN PUSHBUTTON SIGNS

* TY III HIGH INTENSITY SHEETING 5052-H38 ALUMINUM SUBSTRATE

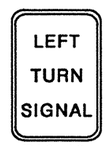


R10-10
*(24" X 30")

R3-5L
*(30" X 36")

R10-9
*(30" X 24")

R10-12
*(30" X 36")

LEFT TURN SIGNS

CO#62

ENGINEER'S SEAL:
STATE OF TEXAS
JAMES M. CLEMENTS
80610
REGISTERED PROFESSIONAL ENGINEER

10-15-99

| NO. | REVISION | BY | DATE |
|---|---|---|---|
| 1 | DETAIL D-3 SIGNS | JDF | 9/28/99 |
| 2 | CHANGE SIGNAL SIGN SIZE | JDF | 10/15/99 |

Texas Department of Transportation

CITY OF SAN ANTONIO

DEPARTMENT OF PUBLIC WORKS

CITY OF SAN ANTONIO
TRAFFIC SIGNAL DETAILS
SIGNAGE

| DESIGNED: JDF | FED. RD. DIV. NO. | STATE | | | SHT. NO. |
|---|---|---|---|---|---|
| CHECKED: JMC | | TEXAS | | | 5 of 8 |
| DRAWN: DPT | STATE DIST. NO. | COUNTY | CONTROL NO. | SECT. NO. | JOB NO. | HIGHWAY NO. |
| CHECKED: | | BEXAR | 2452 | 01 | 036 | |

# CONDUIT DETAILS

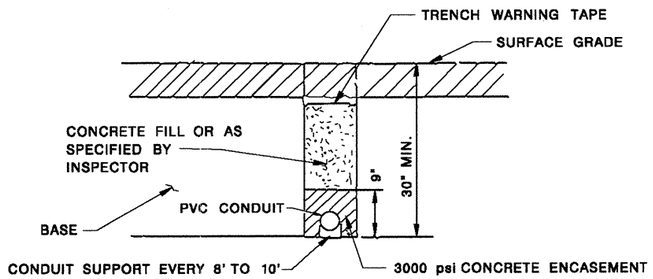


## CONDUIT TRENCHED IN STREET

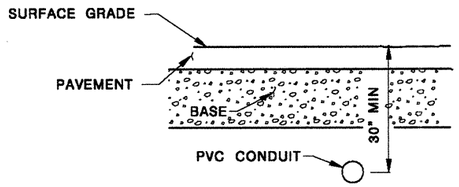


## CONDUIT BORED UNDER PAVEMENT

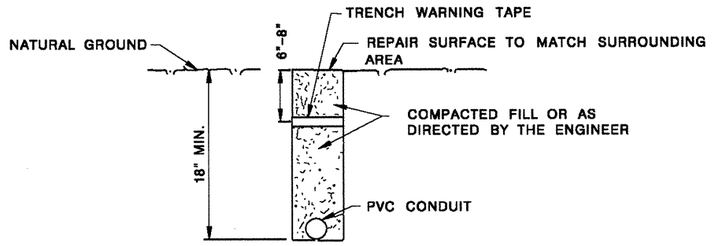


## CONDUIT OUTSIDE STREET

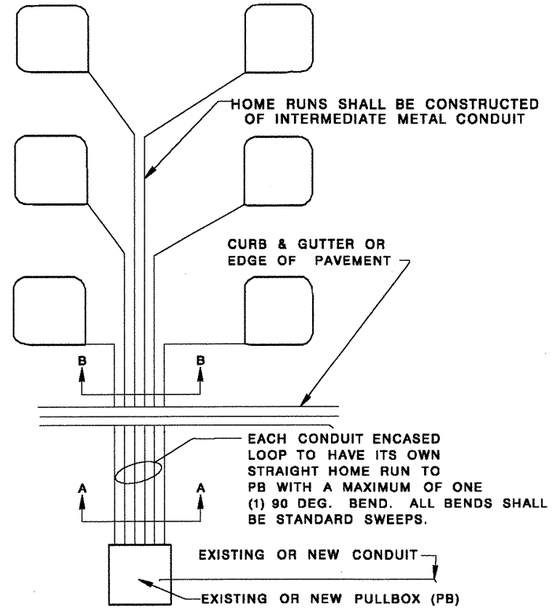


## CONDUIT ENCASED LOOP DETAILS

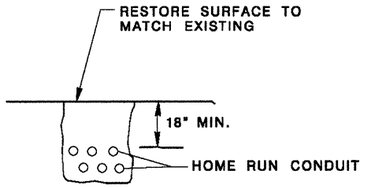


## SECTION A–A

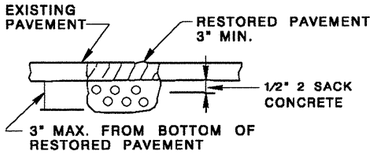


## SECTION B–B

### LOOP NOTES

ALL CONNECTIONS BETWEEN THE LOOP WIRE AND SHIELDED LEAD-IN CABLE SHALL BE MADE AS FOLLOWS

A) TIN THE WIRES WITH SOLDER.
B) MAKE A BUTT CONNECTION BETWEEN THE WIRES WITH A TINNED COPPER COMPRESSION FITTING.
C) JOIN THE WIRES AND FITTING WITH SOLDER IN A COMPLETE AND ACCEPTABLE MANNER.
D) TAPE THE CONNECTION WITH AN ACCEPTABLE ELECTRICAL TAPE.
E) SEAL THE CONNECTION IN A RE-ENTERABLE ENCAPSULATING SPLICE KIT.

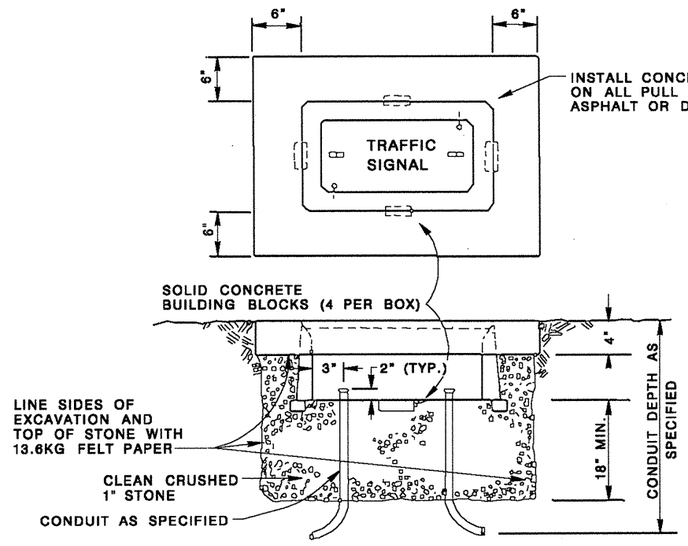


## TYPICAL PULLBOX INSTALLATION DETAIL

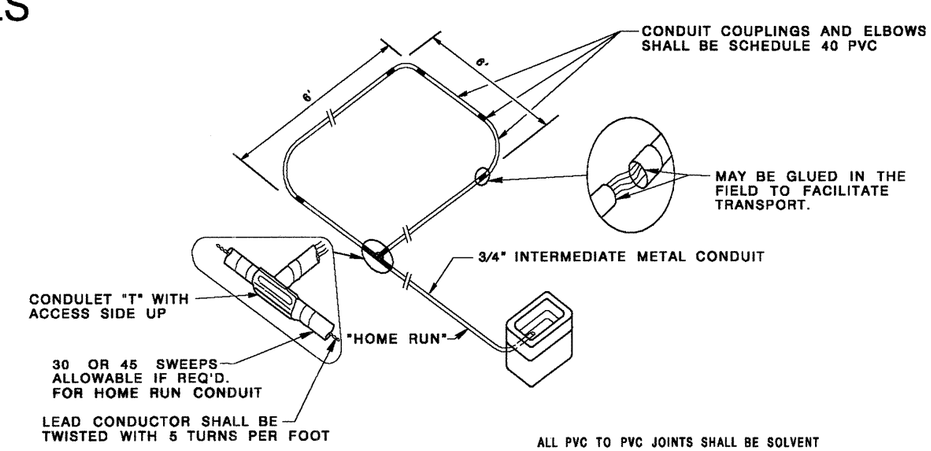


ALL PVC TO PVC JOINTS SHALL BE SOLVENT WELD CONNECTED AND WATERPROOF.

1.) CONTRACTOR SHALL INSTALL CONDUIT ENCASED LOOPS AT THE LOCATIONS SHOWN ON THE PLANS USING 3/4" DIAMETER PVC SCHEDULE 40 CONDUIT OR AT NO ADDITIONAL COST 1" DIAMETER PVC SCHEDULE 80 CONDUIT.
2.) LOOP LOCATIONS MAY BE STAGGERED SLIGHTLY (+/–6") TO ACCOMODATE HOME RUN PLACEMENT.
3.) INDIVIDUAL HOME RUN CONDUITS SHALL BE EXTENDED TO THE PULL BOX SHOWN ON THE PLANS FOR EACH LOOP INSTALLED.
4.) ALL LOOP AND HOME RUN CONDUIT SHALL BE PLACED IN COMPACTED SUBGRADE MATERIAL AT 4" TO 6" DEEP AND ALL ROCKS, PROTUSIONS OR IRREGULARITIES WHICH MAY DAMAGE. THE CONDUIT SHALL BE REMOVED.
5.) THE CONTRACTOR SHALL BE RESPONSIBLE TO DEVISE HIS OWN METHOD FOR EXCAVATING FOR LOOPS. ALL AREAS DISTURBED BY THE CONTRACTOR'S OPERATION SHALL BE RESTORED TO THEIR ORIGINAL CONDITION.
6.) ALL LOOPS SHALL BE WOUND FOUR TIMES IN A COUNTER CLOCKWISE DIRECTION.

## CONDUIT– ENCASED LOOP

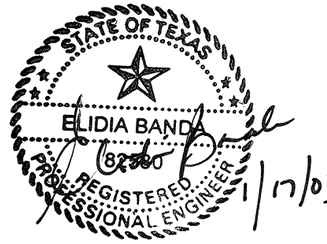


| NO. | REVISION | BY | DATE |
|---|---|---|---|
| | | | |

Texas Department of Transportation

CITY OF SAN ANTONIO

DEPARTMENT OF PUBLIC WORKS

CITY OF SAN ANTONIO
TRAFFIC SIGNAL DETAILS
PULLBOXES & ENCASED LOOPS

| DESIGNED: | FED. RD. DIV. NO. | STATE | FEDERAL AID PROJECT NO. | | SHT. NO. |
|---|---|---|---|---|---|
| CHECKED: | | TEXAS | STP97(419)MM | | 36C |
| DRAWN: OPT | STATE DIST. NO. | COUNTY | CONTROL NO. | SECT. NO. | JOB NO. | HIGHWAY NO. |
| CHECKED: | 15 | BEXAR | 0915 | 12 | 120 | NACOGDOCHES RD |

CO#62

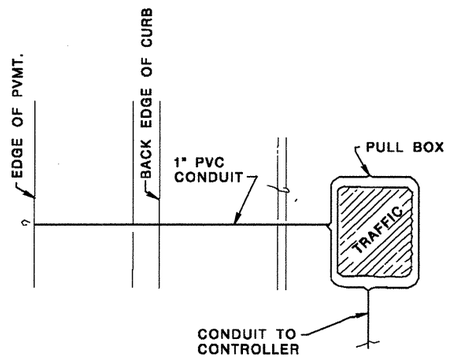


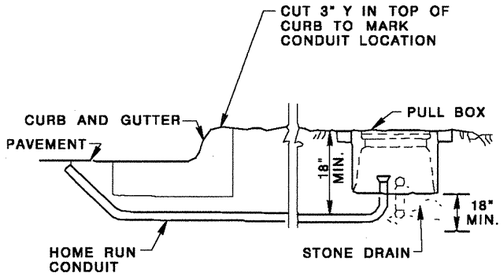


## CONDUIT LEAD-IN CURB SECTION

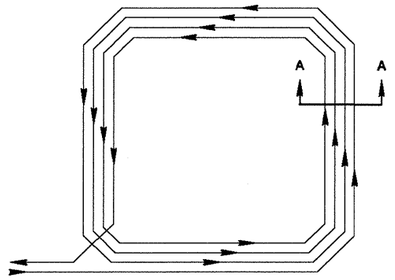


## WIRE LAYOUT

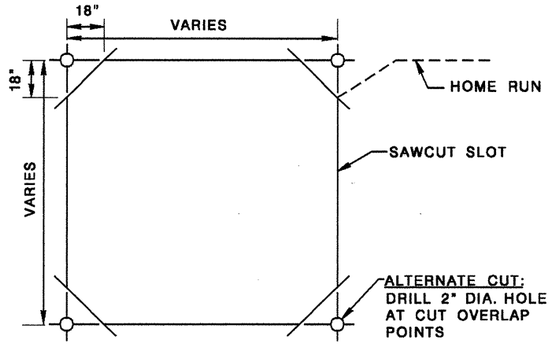


## SAWCUT LAYOUT

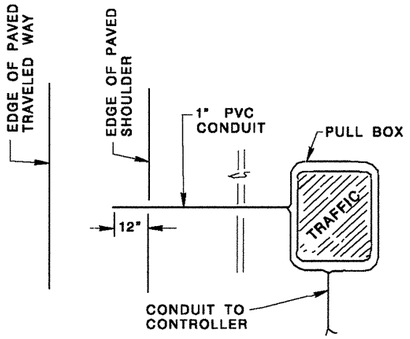


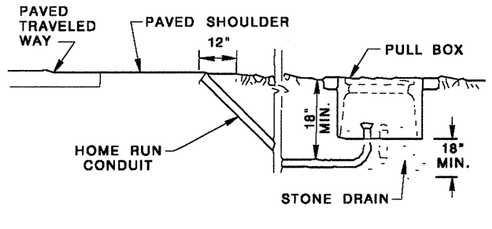


## CONDUIT LEAD-IN PAVED SHOULDER SECTION

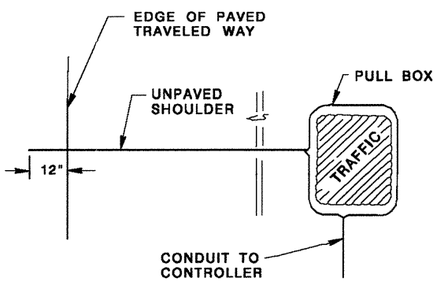


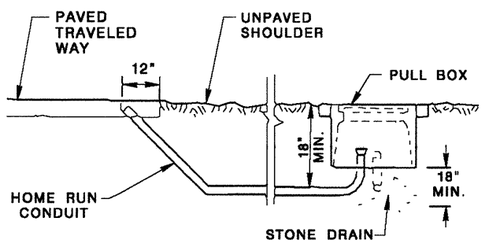


## CONDUIT LEAD-IN UNPAVED SHOULDER SECTION

# SAWCUT LOOP DETECTOR STUB-OUT DETAILS

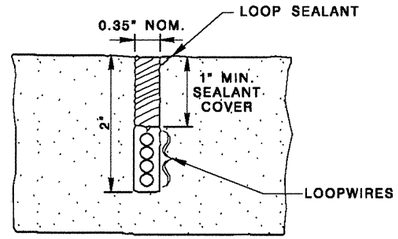


LOOP CROSS SECTION A - A

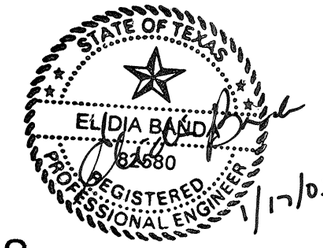


# SAWCUT LOOP DETAILS

**NOTES:**

1.) LOOP WIRE TO BE A CONTINUOUS RUN WITH NO SPLICES TO PULL BOX OR POLE MOUNT SPLICE BOX.

2.) EACH LOOP TO BE A SEPARATE RUN.

3.) UNLESS OTHERWISE SPECIFIED ALL LOOPS TO TAKE 4 TURNS.

4.) THE PAVEMENT CUT IS TO BE MADE WITH A CONCRETE SAW TO NEAT LINES AND LOOSE MATERIAL REMOVED. THE CUT SHALL BE CLEAN AND DRY WHEN THE WIRE AND SEALING COMPOUND IS PLACED.

5.) WIRE FROM THE LOOP TO THE PULLBOX SHALL BE TWISTED A MINIMUM OF FIVE TURNS PER FOOT, NO SPLICES SHALL BE PERMITTED IN THE LOOP OR IN THE RUN TO THE PULLBOX.

6.) THE HOME RUN CABLE FROM THE PULLBOX TO THE CONTROLLER SHALL BE SOLDERED TO THE LOOP WIRE, THE SOLDER JOINTS SHALL BE SEALED WITH AN ENCAPSULATOR RESIN. ENDS OF WIRE TUBE TO BE SEALED.

CO#62

| NO. | REVISION | BY | DATE |
|---|---|---|---|
| | | | |

Texas Department of Transportation

CITY OF SAN ANTONIO

DEPARTMENT OF PUBLIC WORKS

CITY OF SAN ANTONIO
TRAFFIC SIGNAL DETAILS
LOOP DETECTORS-1

| DESIGNED: | FED. RD. DIV. NO. | STATE | FEDERAL AID PROJECT NO. | | | SHT. NO. |
|---|---|---|---|---|---|---|
| CHECKED: | | TEXAS | STP97(419)NM | | | 9610 |
| DRAWN: DPT | STATE DIST. NO. | COUNTY | CONTROL NO. | SECT. NO. | JOB NO. | HIGHWAY NO. |
| CHECKED: | 15 | BEXAR | 0915 | 12 | 120 | WACODOCHES RD |

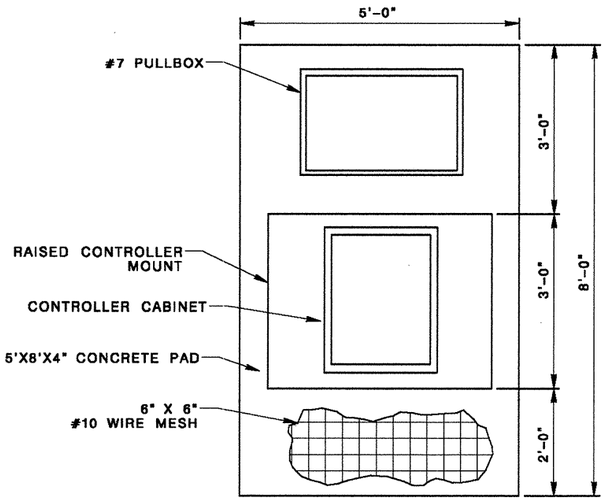


TOP VIEW

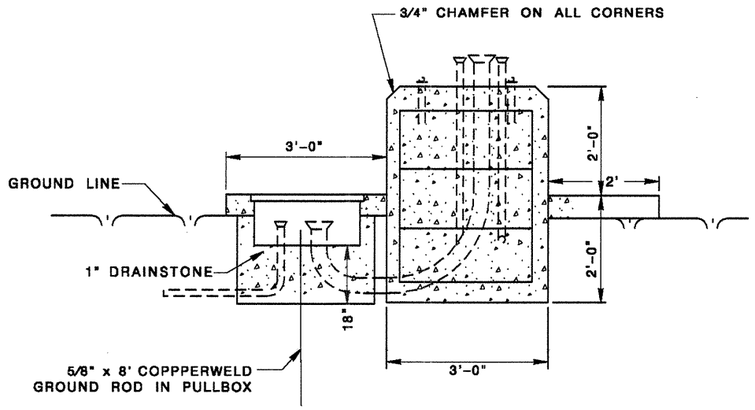


NOTE:

CONTRACTOR TO INSTALL PULLBOX, CONDUIT, CONTROLLER FOUNDATION, CONCRETE SLAB AND CONDUIT FROM PULLBOX TO CABINET

SIDE VIEW

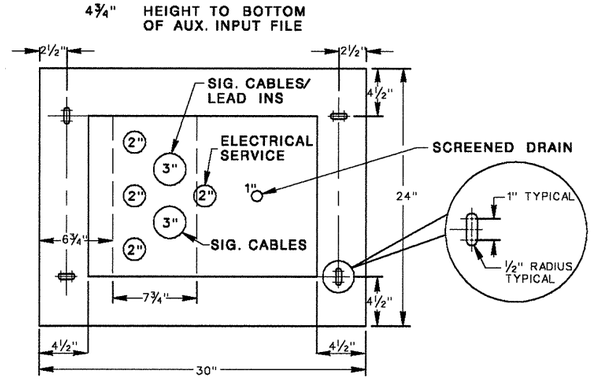


SIGNAL CONTROL CO.
332 BASE PLATE TEMPLATE
FOR ANCHOR BOLTS
PART #332-4300

HANS 081087

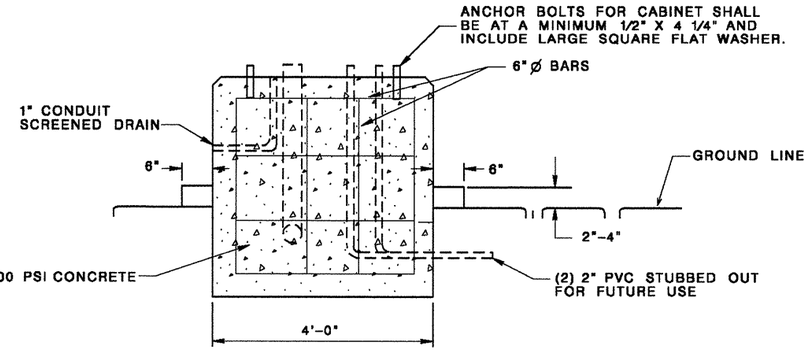


FRONT VIEW

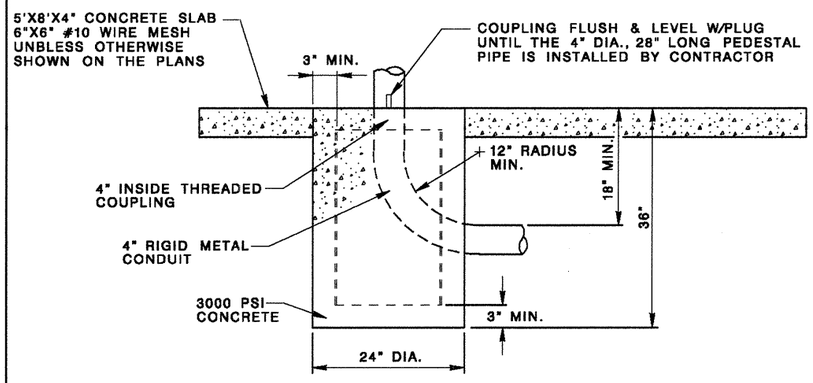


ELEVATION

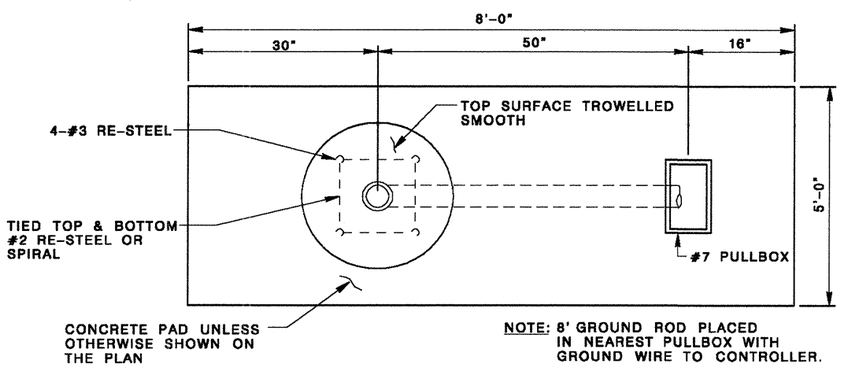


NOTE: 8' GROUND ROD PLACED IN NEAREST PULLBOX WITH GROUND WIRE TO CONTROLLER.

TOP VIEW

# CONTROLLER FOUNDATION (TY332)

# 4" PIPE PEDESTAL CONTROLLER FOUNDATION (TY336)

ELIDIA BANDA
82300
PROFESSIONAL ENGINEER
STATE OF TEXAS
1/11/02

CO#62

| NO. | REVISION | BY | DATE |
|---|---|---|---|
| | | | |

Texas Department of Transportation

CITY OF SAN ANTONIO

DEPARTMENT OF PUBLIC WORKS

CITY OF SAN ANTONIO
TRAFFIC SIGNAL DETAILS
CONDUIT & FOUNDATIONS

| DESIGNED: | FED. RD. DIV. NO. | STATE | FEDERAL AID PROJECT NO. | SHT. NO. |
|---|---|---|---|---|
| CHECKED: | | TEXAS | STP97(419)MM | 601E |
| DRAWN: GPT | STATE DIST. NO. | COUNTY | CONTROL NO. | SECT. NO. | JOB NO. | HIGHWAY NO. |
| CHECKED: | 15 | BEXAR | 0915 | 12 | 120 | MACDOUGHIES RD |

| | CONNECTION CONFIGURATION (# OF TURNS PER LOOP) | | | |
|---|---|---|---|---|
| # OF LOOPS IN SET-----> | 1 | 2 | 3 | 4 |
| 6' x 6' | (4) | (4) SERIES | (4) SERIES | (4) S/P |
| 6' x 35' OR SMALLER | (3) | (3) SERIES | (3) SERIES | (3) S/P |
| LARGER THAN 6' x 35' | (2) | (2) SERIES | (2) SERIES | (2) S/P |

S/P = SERIES/PARALLEL LOOP CONNECTIONS

EACH SPLICE MADE THE SAME AS BELOW

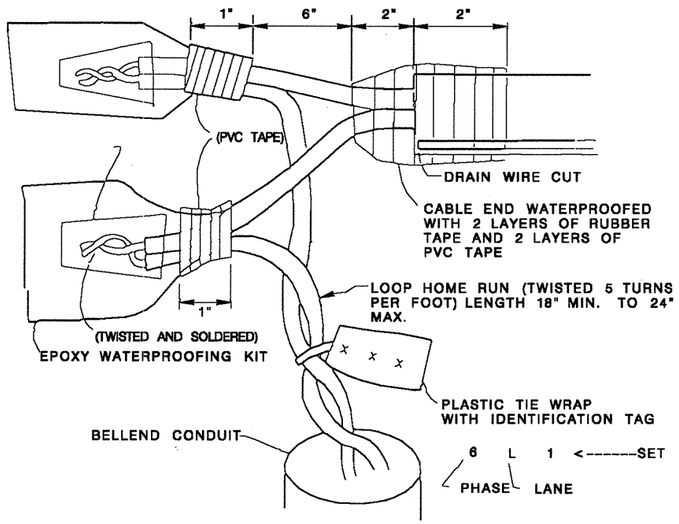


## DETECTOR LOOP SPLICING
(TYPICAL SINGLE PAIR)

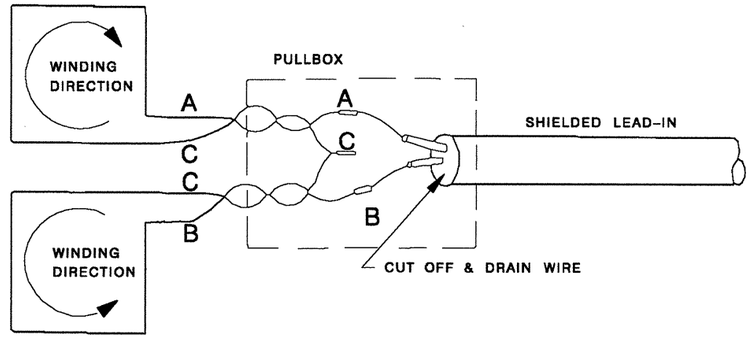


## SERIES LOOP CONNECTIONS

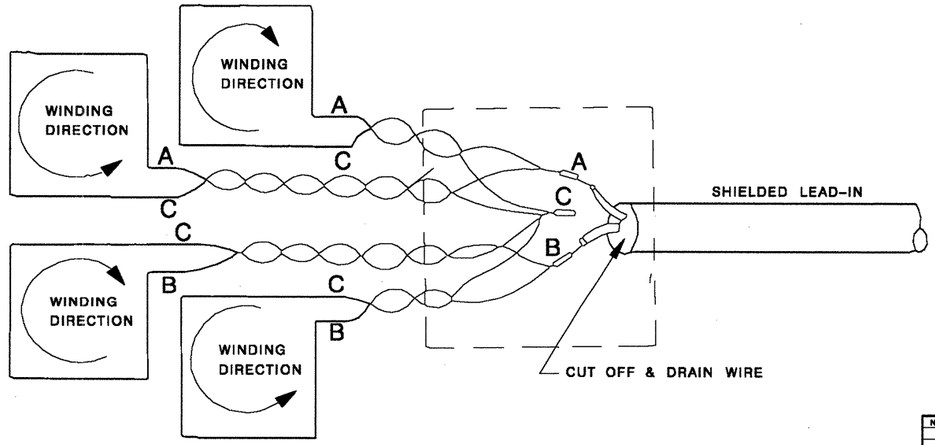


## SERIES/PARALLEL LOOP CONNECTIONS

## DETECTOR LOOP SPLICING
(TYPICAL SINGLE PAIR)

STATE OF TEXAS
ELIDIA BANDA
82560
REGISTERED
PROFESSIONAL ENGINEER
1/17/03

C0#62

| NO. | REVISION | BY | DATE |
|---|---|---|---|
| | | | |

Texas Department of Transportation

CITY OF SAN ANTONIO

DEPARTMENT OF PUBLIC WORKS

CITY OF SAN ANTONIO
TRAFFIC SIGNAL DETAILS
LOOP DETECTORS-2

| DESIGNED: | FED.RD. DIV.NO. | STATE | FEDERAL AID PROJECT NO. | | | SHT. NO. |
|---|---|---|---|---|---|---|
| CHECKED: | | TEXAS | STP07(418)NM | | | 5618 |
| DRAWN: CPT | STATE DIST. NO. | COUNTY | CONTROL NO. | SECT. NO. | JOB NO. | HIGHWAY NO. |
| CHECKED: | 15 | BEXAR | 0915 | 12 | 133 | RACOSOCCHER RD. |

## TYPICAL LOOP LAYOUT
## (MAJOR STREET APPROACHES)

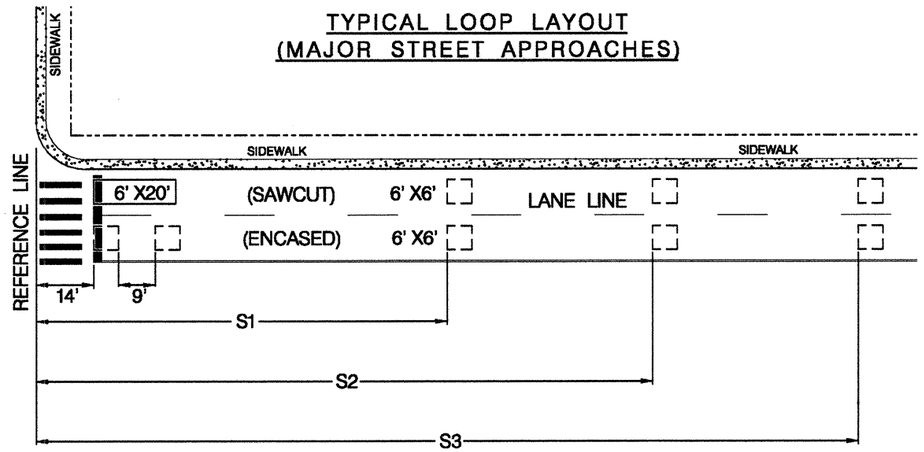


| DESIGN SPEED | SET-BACK DISTANCE | | | TYP. PASSAGE TIME (SEC .) |
|---|---|---|---|---|
| | S1 | S2 | S3 | |
| 70 | 365 | 490 | 615 | 1.3 |
| 65 | 335 | 445 | 555 | 1.2 |
| 60 | 290 | 390 | 490 | 1.4 |
| 55 | 240 | 335 | 430 | 1.2 |
| 50 | 235 | 365 | — | 2.0 |
| 45 | 210 | 330 | — | 2.0 |
| 40 | 190 | 285 | — | 2.0 |
| 35 | 170 | 255 | — | 2.0 |

| CITY OF SAN ANTONIO, TEXAS | | |
|---|---|---|
| DEPT. OF PUBLIC WORKS TRAFFIC SIGNAL ENGINEERING DIV. | | |
| LOOP STANDARD | | |
| DWN. BY: O. TREVINO | APPR. BY: J.D. FRIEBELE | NO SCALE |
| DSGN. BY: J.D. FRIEBELE | TRAFFIC DESIGN ENGR. | AUG. 20, 1997 |

## EXISTING TYPICAL LAYOUT
## THROUGH LANE STOP BAR DETECTORS

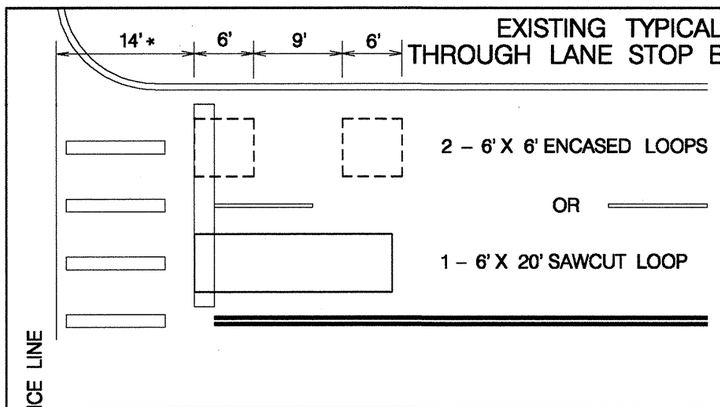


## REVISED LOOP LAYOUT FOR REVISED CROSSWALK & STOP BAR LOCATION

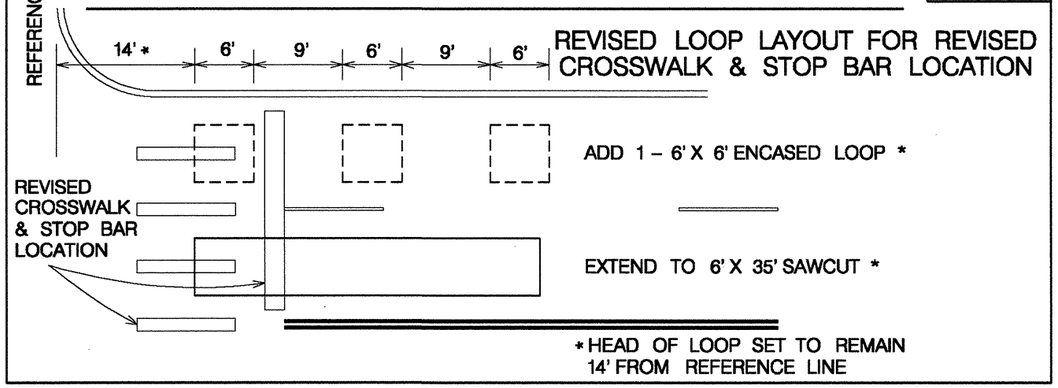


| CITY OF SAN ANTONIO, TEXAS | | |
|---|---|---|
| DEPT. OF PUBLIC WORKS TRAFFIC SIGNAL ENGINEERING DIV. | | |
| LOOP STANDARD REVISION | | |
| DWN. BY: V. VASQUEZ | APPR. BY: J.D. FRIEBELE | SCALE: 1"=10' |
| DSGN. BY: J.D. FRIEBELE | TRAFFIC DESIGN ENGR. | MAY 11, 1998 |

STATE OF TEXAS
ELIDIA BANDA
83960
REGISTERED PROFESSIONAL ENGINEER
1/12/03

CO# 62 Sht
2452-01-036 561G

**NOTES:**
THE ENGINEER SHALL CONTACT MR. GILBERT MEIER(TXDOT SIGNAL SHOP) AT 615-5975 96 HOURS PRIOR TO CONSTRUCTION, PRIOR TO PICKING UP STATE FURNISHED MATERIALS AND PRIOR TO CONNECTING FIELD WIRING TO CONTROLLER.

STATE FORCES SHALL CONNECT FIELD WIRING TO CONTROLLER.

ALL PVC SHALL BE SCHEDULE 80.

ALL DIMENSIONS SHOWN ARE IN METERS UNLESS SPECIFIED OTHERWISE.

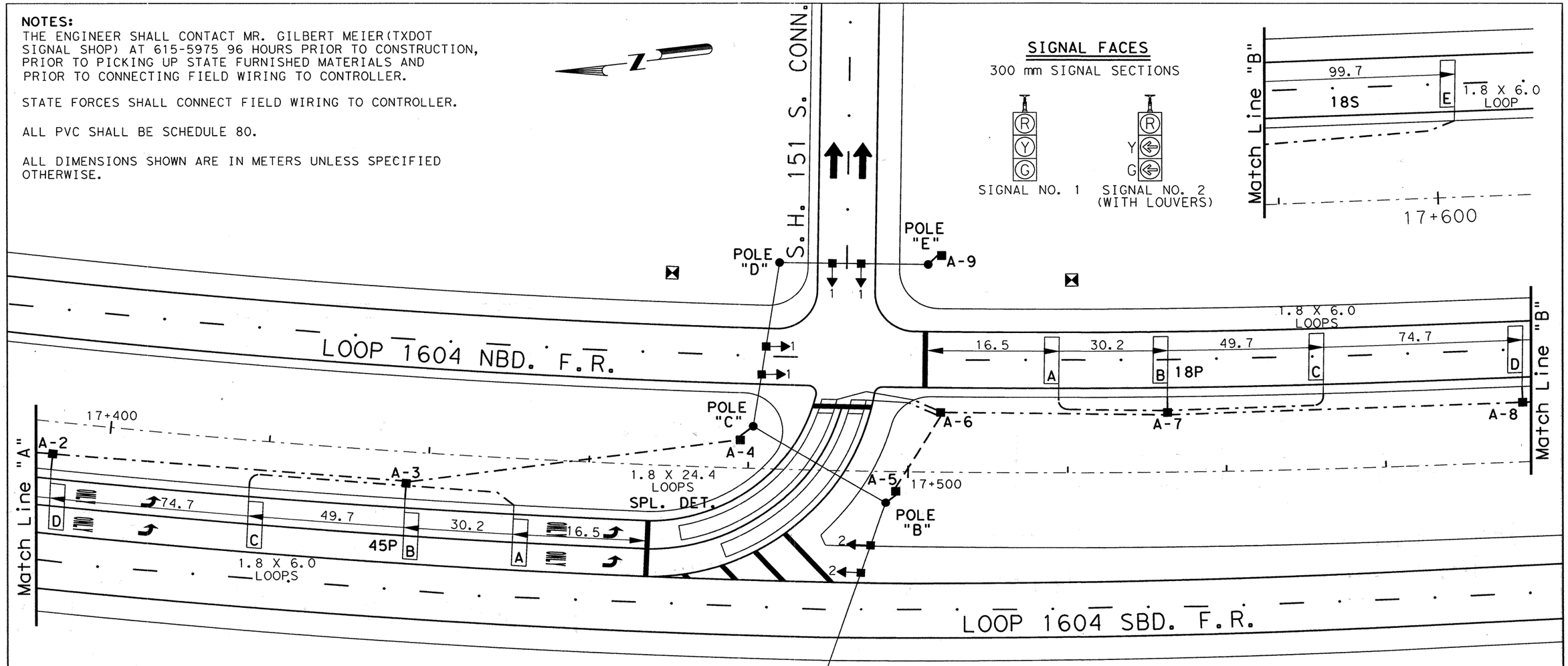


## SIGNAL FACES

300 mm SIGNAL SECTIONS




SIGNAL NO. 1




SIGNAL NO. 2 (WITH LOUVERS)

## LEGEND

- PROP. LOOP DETECTOR
- PROP. GROUND BOX(TYPE "A")
- PROP. GROUND BOX(TYPE "D")
- PROP. 75 mm PVC SCHEDULE 80
- PROP. 50 mm PVC SCHEDULE 80
- PROP. 32 mm PVC SCHEDULE 80
- PROP. STEEL STRAIN POLES W/ SPAN AND FOUNDATIONS
- PROP. SIGNAL FACE
- PROP. CONTROLLER, SLAB AND FOUNDATION
- PROP. ELECTRICAL SERVICE
- TMS MANHOLE(BY OTHERS)

SCALE IN METERS

0 5 10 20

SCALE: 1:500

SHEET 1 OF 3

# TRAFFIC SIGNAL INTERSECTION LAYOUT

## LOOP 1604 FRONTAGE RDS. AT S.H. 151

STATE OF TEXAS
ARNULFO RAMIREZ
56890
REGISTERED PROFESSIONAL ENGINEER

Arnulfo Ramirez, P.E. 9-18-00 Date

©2000 Texas Department of Transportation

| FED. RD. DIV. NO. | FEDERAL AID PROJECT NO. | | SHEET NO. |
|---|---|---|---|
| 6 | NH 2000(704), Etc. | | 562 |
| STATE | DIST. | COUNTY | |
| TEXAS | SAT | BEXAR | |
| CONT. | SECT. | JOB | HIGHWAY NO. |
| 2452 | 01 | 036, Etc. | LOOP 1604 |

## CONDUIT AND CABLE SCHEDULE

| RUN NO. | CONDUIT (PVC) | | | SIGNAL CABLE | | | ELEC CONDR | |
|---|---|---|---|---|---|---|---|---|
| | NO. | SIZE (MM) | LENGTH (M) | 4/C#12 | 2/C#14 | 1/C#14 ✳ | 1/C#6 | 1/C#6 BARE |
| 1 | IN CONTROLLER | | | 3 | 6 | - | 2 | 2 |
| 2 | 2 | 32 | 15 | - | - | - | 2 | 1 |
| 3 | 3 | 75 | 15 | 3 | 6 | - | - | 1 |
| 4 | 3 | 75 | 2 | 3 | 6 | - | - | 1 |
| 5 | - | ON SPAN | 16 | 3 | 6 | - | - | 1 |
| 6 | - | ON SPAN | 4 | 3 | 6 | - | - | 1 |
| 7 | - | ON SPAN | 6 | 2 | 6 | - | - | 1 |
| 8 | - | ON SPAN | 20 | 2 | 2 | - | - | 1 |
| 9 | 1 | 75 | 2 | - | 4 | - | - | - |
| 10 | 1 | 50 | 12 | - | 4 | - | - | - |
| 11 | 2 | 32 | 5 | - | - | 4 | - | - |
| 12 | 1 | 32 | 29 | - | 2 | - | - | - |
| 13 | 1 | 32 | 15 | - | - | 2 | - | - |
| 14 | 1 | 32 | 2 | - | - | 2 | - | - |
| 15 | 1 | 32 | 21 | - | - | 2 | - | - |
| 16 | 1 | 32 | 45 | - | 1 | - | - | - |
| 17 | 1 | 32 | 2 | - | - | 2 | - | - |
| 18 | 1 | 32 | 26 | - | - | 2 | - | - |
| 19 | 1 | 75 | 2 | - | - | - | - | - |
| 20 | - | ON SPAN | 8 | - | - | - | - | 1 |
| 21 | - | ON SPAN | 4 | 1 | - | - | - | 1 |
| 22 | - | ON SPAN | 7 | 1 | - | - | - | 1 |
| 23 | - | ON SPAN | 11 | 1 | - | - | - | 1 |
| 24 | - | ON SPAN | 4 | 2 | - | - | - | 1 |
| 25 | - | ON SPAN | 7 | 2 | - | - | - | 1 |
| 26 | 1 | 75 | 3 | - | 2 | - | - | - |
| 27 | 1 | 32 | 43 | - | 2 | - | - | - |
| 28 | 1 | 32 | 15 | - | - | 2 | - | - |
| 29 | 1 | 32 | 2 | - | - | 2 | - | - |
| 30 | 1 | 32 | 22 | - | - | 2 | - | - |
| 31 | 1 | 32 | 45 | - | 1 | - | - | - |
| 32 | 1 | 32 | 2 | - | - | 2 | - | - |
| 33 | 1 | 32 | 26 | - | - | 2 | - | - |

**NOTES:**

ONE CONDUIT SHALL REMAIN OPEN IN RUN #2 (50 mm) FOR FUTURE COMMUNICATION CABLE (TMS).

✳ - FOR CONTRACTOR'S INFORMATION ONLY.

## POLE AND CABLE SCHEDULE

| POLE NO. | SIGNAL CABLE | | | ELEC CONDR |
|---|---|---|---|---|
| | 7/C#12 | 4/C#12 | 2/C#14 | 1/C#6 BARE |
| A | - | 3 | 6 | 1 |
| B | - | - | 4 | 1 |
| C | - | - | 2 | 1 |
| D | - | - | - | 1 |
| E | - | - | - | 1 |

## SIGNAL FACES

300 mm SIGNAL SECTIONS




SIGNAL NO. 1




SIGNAL NO. 2 (WITH LOUVERS)

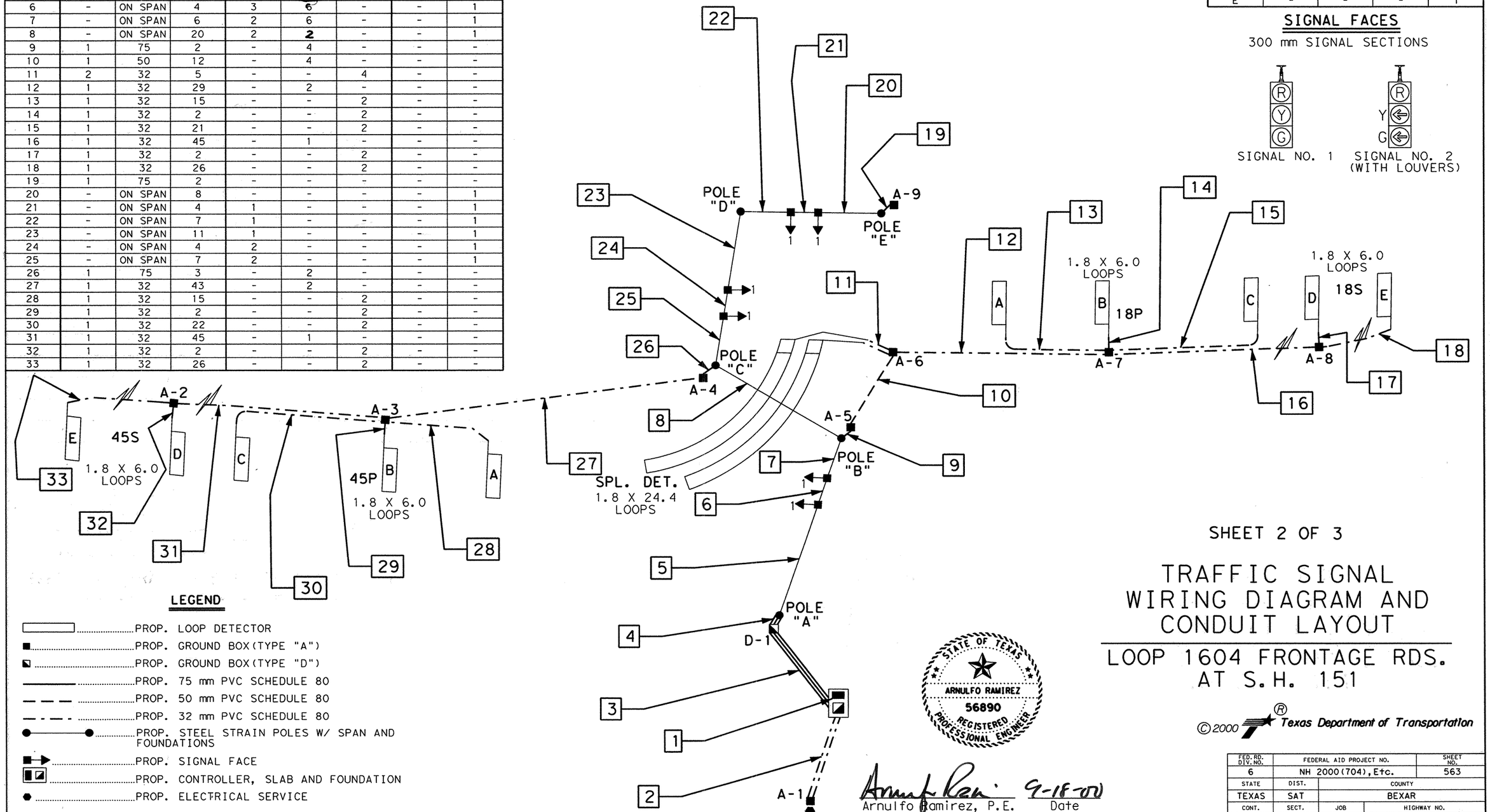


### LEGEND

- PROP. LOOP DETECTOR
- PROP. GROUND BOX (TYPE "A")
- PROP. GROUND BOX (TYPE "D")
- PROP. 75 mm PVC SCHEDULE 80
- PROP. 50 mm PVC SCHEDULE 80
- PROP. 32 mm PVC SCHEDULE 80
- PROP. STEEL STRAIN POLES W/ SPAN AND FOUNDATIONS
- PROP. SIGNAL FACE
- PROP. CONTROLLER, SLAB AND FOUNDATION
- PROP. ELECTRICAL SERVICE

STATE OF TEXAS
ARNULFO RAMIREZ
56890
REGISTERED PROFESSIONAL ENGINEER

Arnulfo Ramirez, P.E. 9-18-01
Date

SHEET 2 OF 3

# TRAFFIC SIGNAL WIRING DIAGRAM AND CONDUIT LAYOUT

## LOOP 1604 FRONTAGE RDS. AT S.H. 151

© 2000 Texas Department of Transportation

| FED. RD. DIV. NO. | FEDERAL AID PROJECT NO. | | SHEET NO. |
|---|---|---|---|
| 6 | NH 2000 (704), Etc. | | 563 |
| STATE | DIST. | COUNTY | |
| TEXAS | SAT | BEXAR | |
| CONT. | SECT. | JOB | HIGHWAY NO. |
| 2452 | 01 | 036, Etc. | LOOP 1604 |

| MATERIALS TO BE FURNISHED AND INSTALLED BY THE CONTRACTOR | | | |
|---|---|---|---|
| ITEM NO. | DESCRIPTION | UNIT | QUANTITY |
| 618 | CONDUIT: PVC (SCH. 80)(32 mm) | M | 335 |
| 618 | PVC (SCH. 80)(50 mm) | M | 12 |
| 618 | PVC (SCH. 80)(75 mm) | M | 58 |
| 620 | ELECTRICAL CONDUCTOR(NO. 6) BARE | M | 145 |
| 620 | ELECTRICAL CONDUCTOR(NO. 6) INSULATED | M | 40 |
| 624 | GROUND BOX(TYPE A) W/APRON | EA. | 9 |
| 624 | GROUND BOX(TYPE D) W/APRON | EA. | 1 |
| 625 | ZINC-COATED STEEL WIRE STRAND(7.94 mm)* | M | 100 |
| 628 | ELEC SERV TYT(120/240)000(NS)GS(N)TP(O) | EA. | 1 |
| 656 | TRAFFIC SIGNAL CONTROLLER FND. | EA. | 1 |
| 656 | FND FOR TRAF SIG(TY A)(900 mm DRIL SH) | M | 20 |
| 680 | INSTALLATION OF HWY. TRAF. SIGNAL | EA. | 1 |
| 682 | VEHICLE SIGNAL SECTION(300 mm) | EA. | 18 |
| 682 | LOUVERS(ADJUSTABLE) | EA. | 6 |
| 684 | TRAF. SIG. CBL.(TY A)(4 CONDR.)(12 AWG) | M | 250 |
| 684 | TRAF. SIG. CBL.(TY C)(2 CONDR.)(14 AWG) | M | 685 |
| 686 | TRAF SIG POLE ASM(STL)STR(TY B)(9.1 M) | EA. | 5 |
| 688 | VEHICLE DETECTOR(14 AWG)(SAWCUT LOOPS) | M | 300 |
| | | | |
| | | | |
| | | | |
| | | | |
| | | | |
| | | | |

| MATERIALS TO BE FURNISHED AND INSTALLED BY THE STATE | | |
|---|---|---|
| DESCRIPTION | UNIT | QUANTITY |
| CONTROLLER WITH CABINET | EA. | 1 |
| | | |
| | | |
| | | |
| | | |

**NOTE:**
ALL SIGNAL POLE FOUNDATIONS SHALL BE INSTALLED ACCORDING TO TS-FD STANDARD SHEET.

INSTALLATION OF SIGNS TO BE CONSIDERED SUBSIDIARY TO BID ITEM 680.

*-FOR CONTRACTOR'S INFORMATION ONLY(SHALL BE CONSIDERED SUBSIDIARY TO BID ITEM 680).

STATE OF TEXAS
ARNULFO RAMIREZ
56890
REGISTERED PROFESSIONAL ENGINEER

Arnulfo Ramirez, P.E. 9-14-00 Date

SHEET 3 OF 3

# TRAFFIC SIGNAL INTERSECTION LAYOUT
## LOOP 1604 FRONTAGE RDS. AT S.H. 151

©2000 Texas Department of Transportation

| FED.RD. DIV.NO. | FEDERAL AID PROJECT NO. | | SHEET NO. |
|---|---|---|---|
| 6 | NH 2000(704),Etc. | | 564 |
| STATE | DIST. | COUNTY | |
| TEXAS | SAT | BEXAR | |
| CONT. | SECT. | JOB | HIGHWAY NO. |
| 2452 | 01 | 036,Etc. | LOOP 1604 |

## MATERIALS TO BE FURNISHED AND INSTALLED BY THE CONTRACTOR

| ITEM NO. | DESCRIPTION | UNIT | QUANTITY |
|---|---|---|---|
| 618 | CONDUIT: PVC (SCH. 80) (50 mm) | M | 29 |
| 618 | PVC (SCH. 80) (50 mm) (BORE) | M | 38 |
| 620 | ELECTRICAL CONDUCTOR (NO. 6) BARE | M | 70 |
| 624 | GROUND BOX (TYPE A) W/APRON | EA. | 4 |
| 628 | ELEC SERV TYT (120/240) 000 (NS) GS (N) TP (O) | EA. | 1 |
| 656 | FND FOR TRAF SIG (600 mm DRIL SH) | M | 3.4 |
| 682 | VEHICLE SIGNAL SECTION (300 mm) | EA. | 10 |
| 684 | TRAF. SIG. CBL. (TY A) (4 CONDR.) (12 AWG) | M | 82 |
| 684 | TRAF. SIG. CBL. (TY A) (7 CONDR.) (12 AWG) | M | 35 |
| 6009 | ROADSIDE FLASHING BEACON ASSEMBLY | EA. | 2 |
| | | | |

**SIGNAL FACES**
300 mm SIGNAL SECTIONS

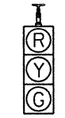

SIGNAL NO. 1

SCALE IN METERS
0 5 10 20
SCALE: 1:1000

## MATERIALS TO BE FURNISHED BY THE STATE AND INSTALLED BY THE CONTRACTOR

| DESCRIPTION | UNIT | QUANTITY |
|---|---|---|
| FLASHER CABINET | EA. | 1 |
| 12 INCH LED TRAF SIG LAMP UNIT (YEL) | EA. | 4 |
| | | |

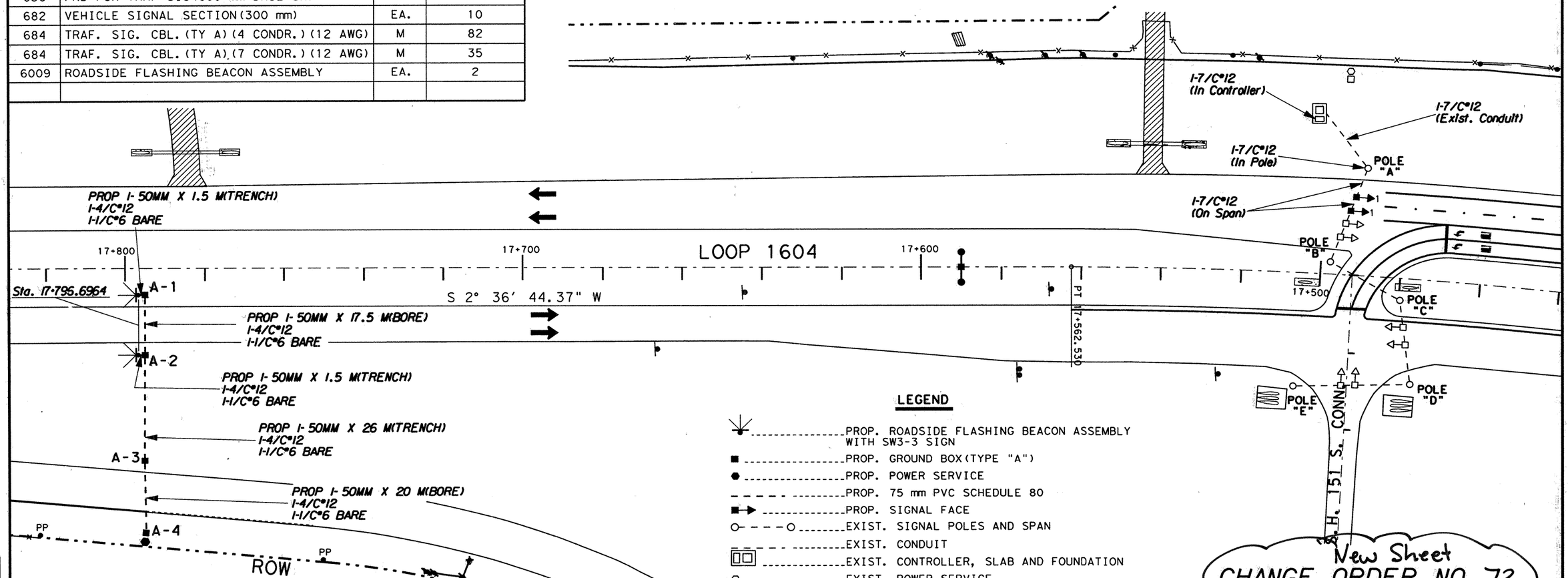


**LEGEND**

- PROP. ROADSIDE FLASHING BEACON ASSEMBLY WITH SW3-3 SIGN
- PROP. GROUND BOX (TYPE "A")
- PROP. POWER SERVICE
- PROP. 75 mm PVC SCHEDULE 80
- PROP. SIGNAL FACE
- EXIST. SIGNAL POLES AND SPAN
- EXIST. CONDUIT
- EXIST. CONTROLLER, SLAB AND FOUNDATION
- EXIST. POWER SERVICE
- EXIST. GROUND BOX

**NOTES:**
THE ENGINEER SHALL CONTACT MR. GILBERT MEIER (TXDOT SIGNAL SHOP) AT 615-5975 96 HOURS PRIOR TO CONSTRUCTION AND PRIOR TO PICKING UP STATE FURNISHED MATERIALS.

THE CONTRACTOR SHALL CONNECT FIELD WIRING TO CONTROLLER.

ALL PVC SHALL BE SCHEDULE 80.

ALL DIMENSIONS SHOWN ARE IN METERS UNLESS SPECIFIED OTHERWISE.

ANY EXISTING SIGNAL EQUIPMENT DAMAGED DURING CONSTRUCTION SHALL BE REPLACED IN IT'S ENTIRETY BY THE CONTRACTOR AT THEIR EXPENSE.

LEVELS DISPLAYED
1 2 3 4 | 5 6 7 8 9 10 11 12 | 13 14 15 16
17 18 19 20 21 22 23 24 | 25 26 27 28 29 30 31 32
33 34 35 36 37 38 39 40 | 41 42 43 44 45 46 47 48
49 50 | 51 52 53 54 55 65 | 75 85 95 96 06 16 26 83

ACC:

FILE: .DGN

STATE OF TEXAS
DALE L. PICHA
85552
REGISTERED PROFESSIONAL ENGINEER

Dale L. Picha, P.E. 10/22/03
Dale L. Picha, P.E. Date

New Sheet
CHANGE ORDER NO. 72

# TRAFFIC SIGNAL INTERSECTION LAYOUT
## LOOP 1604 FRONTAGE RDS. AT S.H. 151

©2003 Texas Department of Transportation

| FED.RD. DIV.NO. | FEDERAL AID PROJECT NO. | | SHEET NO. |
|---|---|---|---|
| 6 | NH 2000 (704), Etc. | | 364A |
| STATE | DIST. | COUNTY | |
| TEXAS | SAT | BEXAR | |
| CONT. | SECT. | JOB | HIGHWAY NO. |
| 2452 | 01 | 036, Etc. | LOOP 1604 |

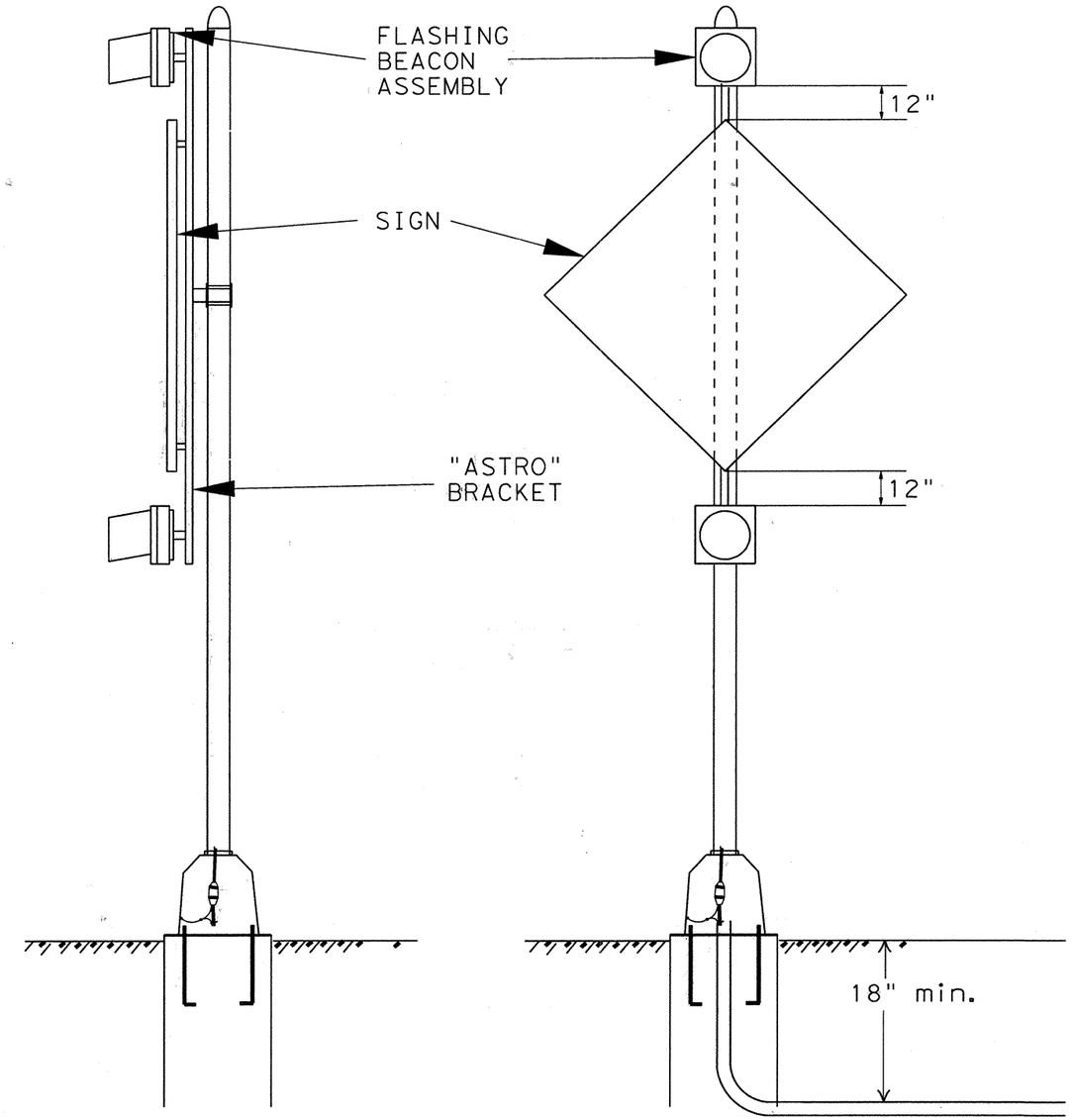


CHANGE ORDER #72

NEW SHEET

STATE OF TEXAS
DALE L. PICHA
85552
REGISTERED
PROFESSIONAL ENGINEER

Dale L. Picha, P.E. 10/22/03
Dale L. Picha, P.E. Date

# TYPICAL ROADSIDE FLASHING BEACON ASSEMBLIES DETAIL

N.T.S.

SEE STATE STANDARD RFBA FOR ADDITIONAL DETAILS

© 2003 Texas Department of Transportation

| FED. RD. DIV. NO. | FEDERAL AID PROJECT NO. | | SHEET NO. |
|---|---|---|---|
| 6 | NH 2000(704), ETC. | | 5643 |
| STATE | DIST. | COUNTY | |
| TEXAS | SAT | BEXAR | |
| CONT. | SECT. | JOB | HIGHWAY NO. |
| 2452 | 01 | 036 | LOOP 1604 |

LEVELS D
1 2 3 4 5 6
7 8 9 10 11 12 13 14 15 16
17 18 19 20 21 22 23 24 25 26 27 28 29 30 31 32
33 34 35 36 37 38 39 40 41 42 43 44 45 46 47 48
49 50 51 52 53 54 55 56 57 58 59 60 61 62 63
ACC:
FILE: DGN
PLAN

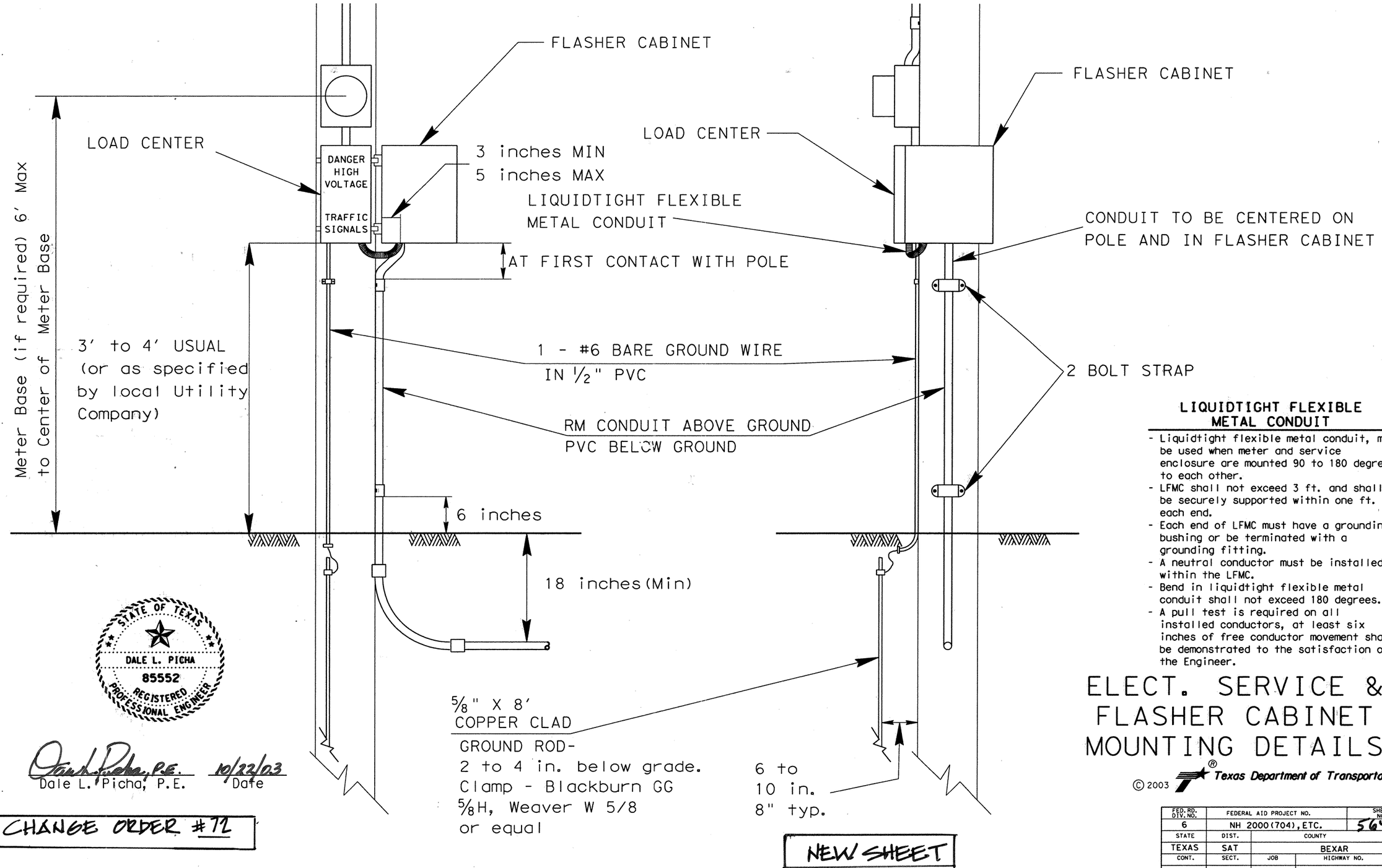


**LIQUIDTIGHT FLEXIBLE METAL CONDUIT**

- Liquidtight flexible metal conduit, may be used when meter and service enclosure are mounted 90 to 180 degrees to each other.
- LFMC shall not exceed 3 ft. and shall be securely supported within one ft. of each end.
- Each end of LFMC must have a grounding bushing or be terminated with a grounding fitting.
- A neutral conductor must be installed within the LFMC.
- Bend in liquidtight flexible metal conduit shall not exceed 180 degrees.
- A pull test is required on all installed conductors, at least six inches of free conductor movement shall be demonstrated to the satisfaction of the Engineer.

# ELECT. SERVICE & FLASHER CABINET MOUNTING DETAILS

© 2003 Texas Department of Transportation

STATE OF TEXAS
DALE L. PICHA
85552
REGISTERED PROFESSIONAL ENGINEER

Dale L. Picha, P.E. 10/22/03
Dale L. Picha, P.E. Date

CHANGE ORDER #72

NEW SHEET

| FED. RD. DIV. NO. | FEDERAL AID PROJECT NO. | | SHEET NO. |
|---|---|---|---|
| 6 | NH 2000(704), ETC. | | 564C |
| STATE | DIST. | COUNTY | |
| TEXAS | SAT | BEXAR | |
| CONT. | SECT. | JOB | HIGHWAY NO. |
| 2452 | 01 | 036 | LOOP 1604 |

LEVELS 0 b 11 17 18 19 ACC: FILE: .DGN

PLAN

DISCLAIMER
The use of this standard is governed by the "Texas Engineering Practice Act". No warranty of any kind is made by TxDOT for any purpose whatsoever. TxDOT assumes no responsibility for the conversion of this standard to other formats or for incorrect results or damages resulting from its use.

DATE:
ACC: d58hp1c/usr/d580504
FILE:
DN: LR CK: CW DW: DN CK: MT

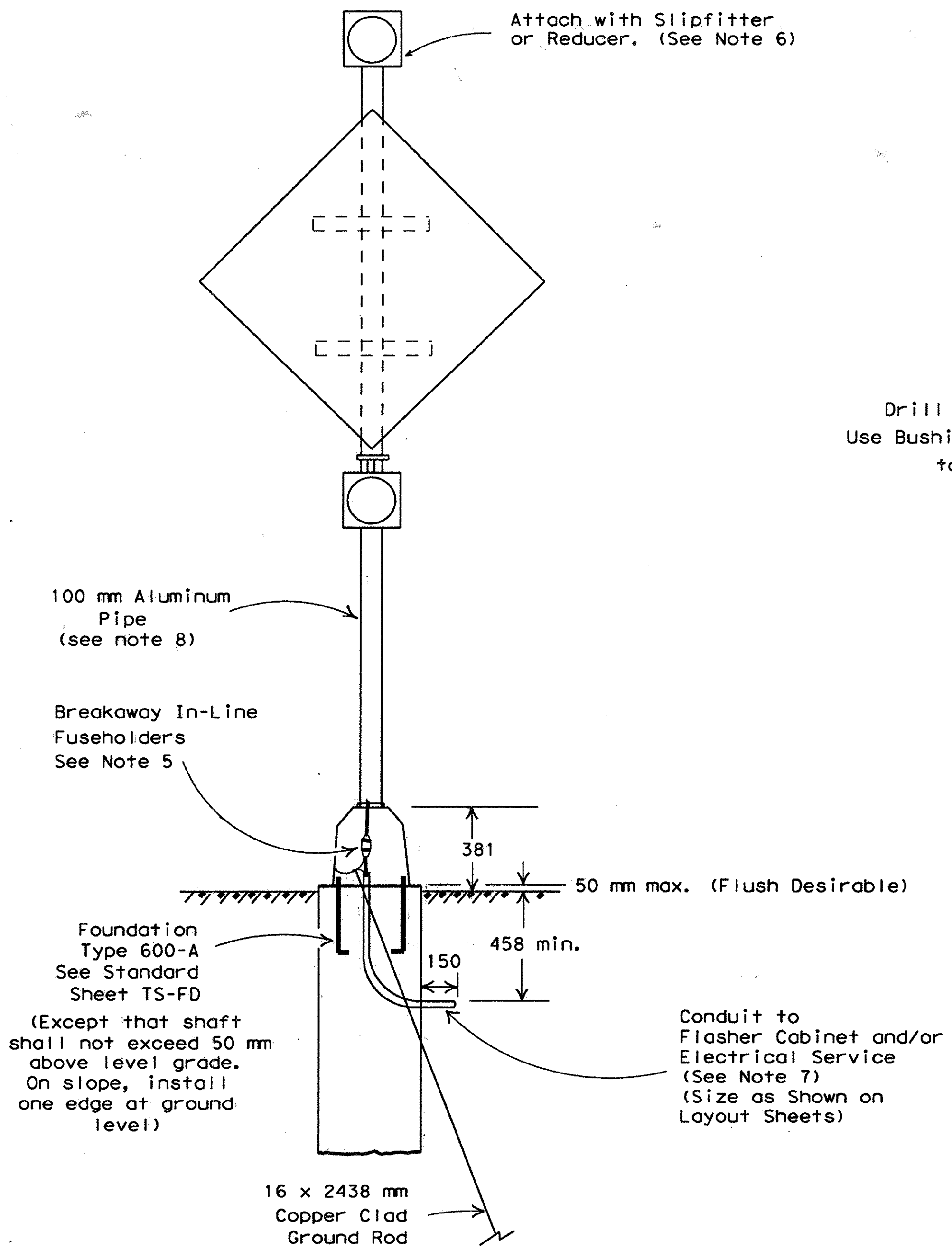


## FRONT

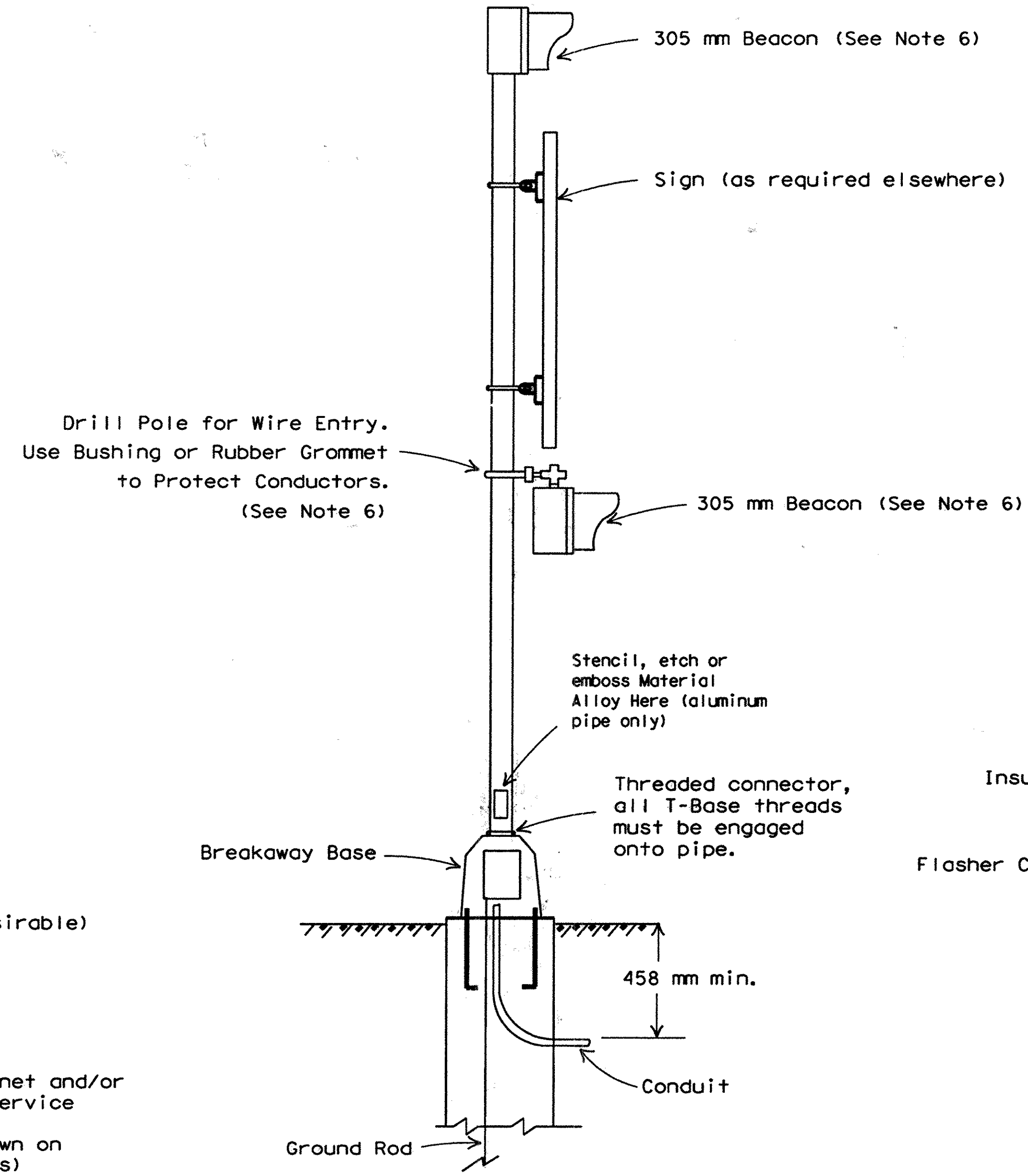


## SIDE

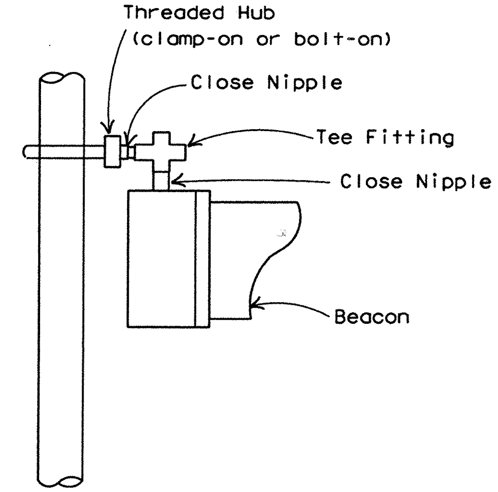


## LOWER BEACON MOUNTING DETAIL

(See Note 6)

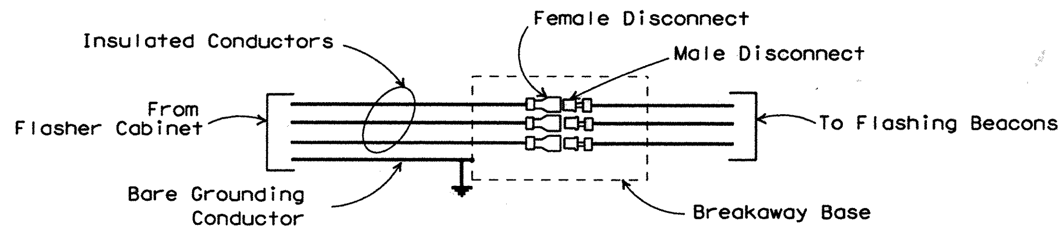


## BREAKAWAY IN-LINE FUSEHOLDERS

New Sheet

CHANGE ORDER #72

NOTES:

1. The Roadside Flashing Beacon Assembly is designed for small signs where electrical power is needed with a breakaway sign pole, (e.g. warning signs or school zone signs). See signing layouts for actual sign to be installed.

2. Details depicted herein show a typical warning sign with two flashing beacon heads.

3. See SMD Standard sheets for lateral and vertical clearances and sign mounting details.

4. See Special Specification, "Roadside Flashing Beacon Assembly" for further requirements.

5. All electrical connectors for breakaway poles shall be water tight breakaway fuseholders (Buchannan 65U, Bussmann HEBW, Lettelfuse LEB, or equal). All electrical connections for neutrals shall be breakaway and shall have a white color marking and a permanently installed solid neutral (Buchannan 20U, Bussmann HET, littelfuse LET, or equal). Fuses shall be 10 amp time delay.

6. Beacon heads and mounting shall be as shown elsewhere on the plans or, when no other details are shown, shall be as shown here or as otherwise approved by the Engineer.

7. Conduit in foundation and within 150 mm of foundation is subsidiary to the Item, "Roadside Flashing Beacon Assembly."

8. Unless otherwise shown on the plans, pole shaft shall be schedule 40 Aluminum pipe, alloy 6061-T6 only. Aluminum conduit will not develop the necessary strength and will not be allowed. When specifially shown elsewhere on the plans, pipe may be 100 mm Schedule 40 Rigid Metal Conduit or 75 mm Rigid Metal Conduit with reducer.

All dimensions are in millimeters unless otherwise noted.

STANDARD PLANS
TEXAS DEPARTMENT OF TRANSPORTATION
*Traffic Operations Division*

# ROADSIDE FLASHING BEACON ASSEMBLY

## RFBA-98 (M)

©TxDOT January 1992 DN: KB CK: TB DW: RS CK: TB NEG NO.:

| REVISIONS | STATE DISTRICT | FEDERAL REGION | FEDERAL AID PROJECT | | | SHEET |
|---|---|---|---|---|---|---|
| 5-93 10-93 4-98 | | 6 | NH 2000(704), ETC. | | | 564D |
| | COUNTY | | CONTROL | SECTION | JOB | HIGHWAY |
| | BEXAR | | 2452 | 01 | 036, ETC | LOOP 1604 |

Plotted on: $DATE$

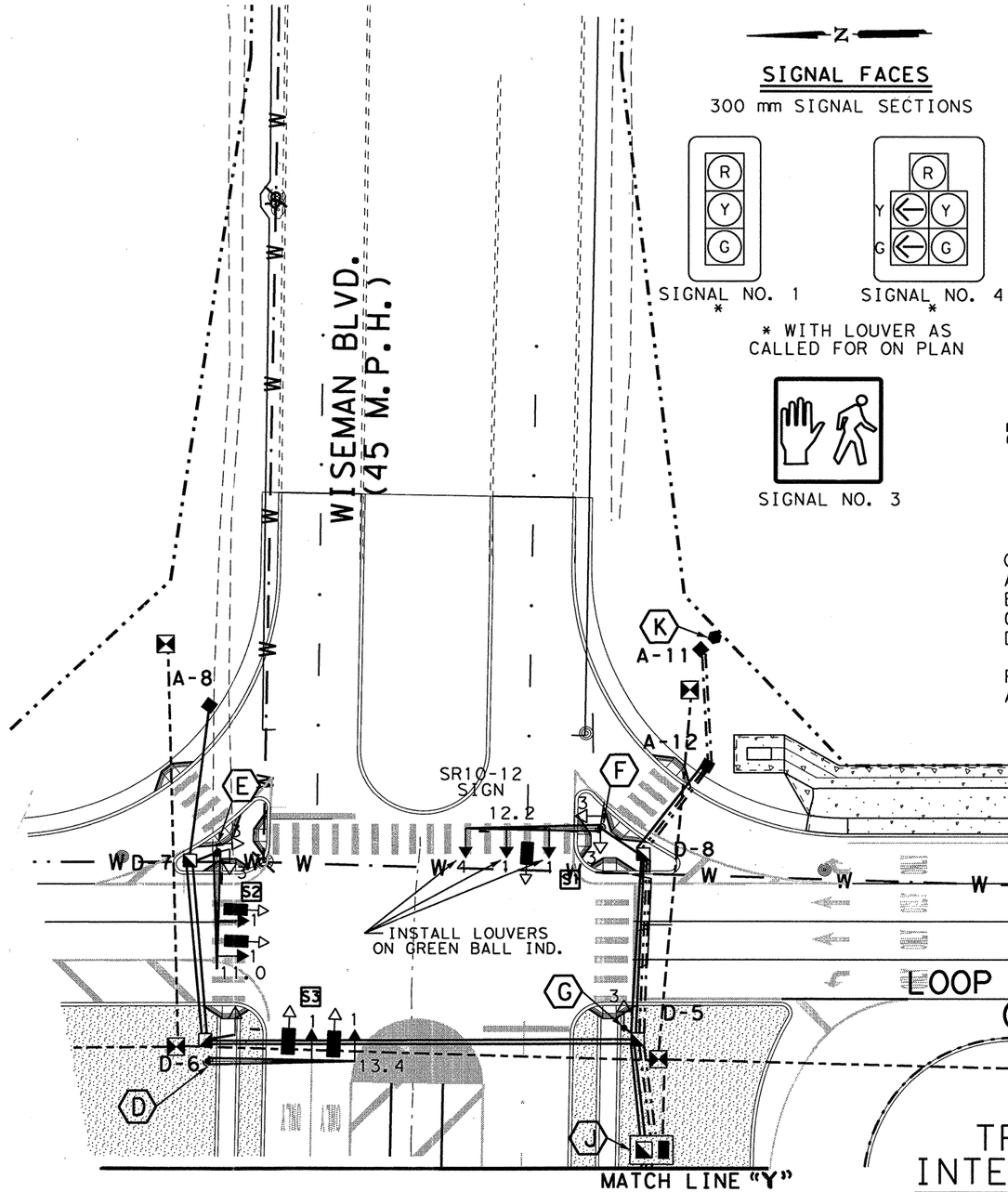





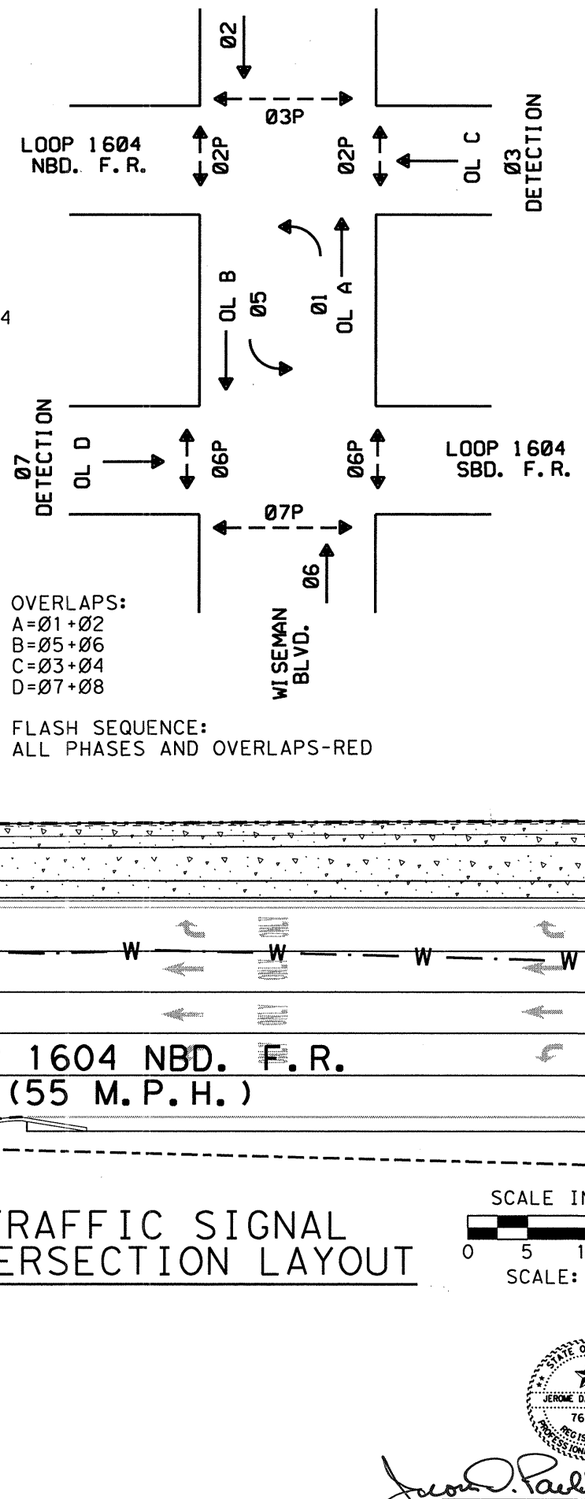


OVERLAPS:
A=Ø1+Ø2
B=Ø5+Ø6
C=Ø3+Ø4
D=Ø7+Ø8

FLASH SEQUENCE:
ALL PHASES AND OVERLAPS-RED

## LEGEND

- PROP. VIDEO IMAGING VEH. DETECTION SYSTEM CAMERA (VIVDS)
- PROP. GROUND BOX (TYPE "A")
- PROP. GROUND BOX (TYPE "D")
- PROP. 75 mm PVC SCHEDULE 80
- PROP. 50 mm PVC SCHEDULE 80
- PROP. 32 mm PVC SCHEDULE 80
- PROP. MAST ARM POLE AND FOUNDATION
- PROP. SIGNAL FACE
- PROP. CONTROLLER, SLAB AND FOUNDATION
- PROP. PEDESTRIAN SIGNAL HEAD WITH PUSH BUTTON
- PROP. PEDESTAL POLE AND FOUNDATION
- PROP. ELECTRICAL SERVICE
- TxDOT TMS MANHOLE (BY OTHERS) (REFER TO TRAFFIC MANAGEMENT SYSTEM LAYOUT FOR INFORMATION)
- TxDOT TMS MULTI DUCT (REFER TO TRAFFIC MANAGEMENT SYSTEM LAYOUT FOR INFORMATION)

| | | | |
|---|---|---|---|
| S1 | ANDERSON LOOP <XXXX YYYY> | LEFT TURN YIELD ON GREEN | SR10-12 (750 x 900) |
| S2 | WISEMAN BLVD <YYYY XXXX> | PUSH BUTTON FOR S2 | R10-4BL (225 x 300) |
| S3 | ANDERSON LOOP <YYYY XXXX> | PUSH BUTTON FOR S3 | R10-4BR (225 x 300) |
| S4 | WISEMAN BLVD <XXXX YYYY> | | |

# TRAFFIC SIGNAL INTERSECTION LAYOUT

SCALE IN METERS
0 5 10 20
SCALE: 1:500

**CHANGE ORDER NO. 79**

**NEW SHEET**

SHEET 1 OF 5

**NOTES:**

ALL PVC SHALL BE SCHEDULE 80.

ALL DIMENSIONS SHOWN ARE IN METERS UNLESS SPECIFIED OTHERWISE.

REFER TO ILLUMINATION LAYOUT SHEETS FOR ADDIITONAL CONDUIT AND GROUND BOX LOCATIONS.

REFER TO TRAFFIC SIGNAL NOTES FOR ADDITIONAL INFORMATION.

SEE NOTES, SHEET 1 OF 1. **(SHT. 580F)**

STATE OF TEXAS
JEROME D. PAVLISKA
76075
REGISTERED PROFESSIONAL ENGINEER

Jerome D. Pavliska, P.E. 4-23-04
Jerome D. Pavliska, P.E. — Date

©2004 Texas Department of Transportation

LOOP 1604
TRAFFIC SIGNAL INTERSECTION LAYOUT
LOOP 1604 AT WISEMAN BLVD.

| DN: | | PROJECT NO. | | SHEET NO. |
|---|---|---|---|---|
| CK DN: | | NH 2000(704), etc. | | 564 E |
| DW: | | STATE | DIST. | COUNTY |
| | | TEXAS | SAT | BEXAR |
| CK DW: | CONT. | SECT. | JOB | HIGHWAY NO. |
| | 2452 | 01 | 036, etc. | LP 1604 |

Design Filename: $FILE$

Plotted on: $DATE$

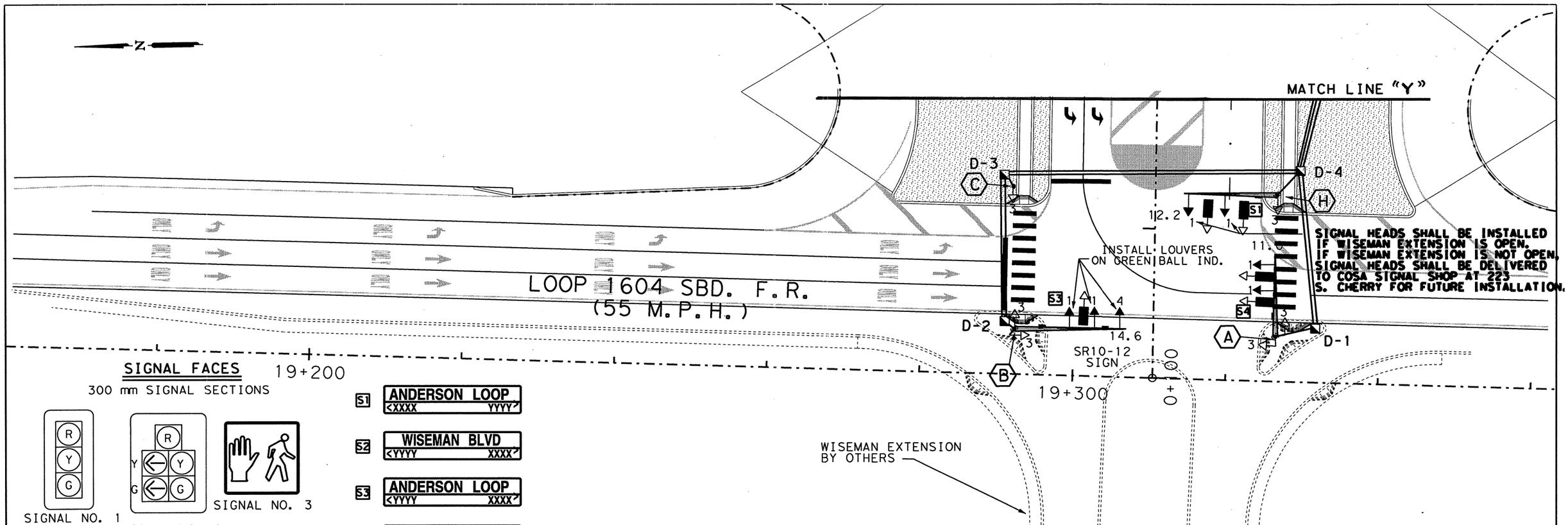


## SIGNAL FACES 19+200

300 mm SIGNAL SECTIONS




* WITH LOUVER AS CALLED FOR ON PLAN

S1 ANDERSON LOOP <XXXX YYYY>

S2 WISEMAN BLVD <YYYY XXXX>

S3 ANDERSON LOOP <YYYY XXXX>

S4 WISEMAN BLVD <XXXX YYYY>

SR10-12
(750 x 900)

R10-4BL
(225 x 300)

R10-4BR
(225 x 300)

SCALE IN METERS

0 5 10 20

SCALE: 1:500

### LEGEND

- PROP. VIDEO IMAGING VEH. DETECTION SYSTEM CAMERA (VIVDS)
- PROP. GROUND BOX (TYPE "A")
- PROP. GROUND BOX (TYPE "D")
- PROP. 75 mm PVC SCHEDULE 80
- PROP. 50 mm PVC SCHEDULE 80
- PROP. 32 mm PVC SCHEDULE 80
- PROP. MAST ARM POLE AND FOUNDATION
- PROP. SIGNAL FACE
- PROP. CONTROLLER, SLAB AND FOUNDATION
- PROP. PEDESTRIAN SIGNAL HEAD WITH PUSH BUTTON
- PROP. PEDESTAL POLE AND FOUNDATION
- PROP. ELECTRICAL SERVICE
- TxDOT TMS MANHOLE (BY OTHERS) (REFER TO TRAFFIC MANAGEMENT SYSTEM LAYOUT FOR INFORMATION)
- TxDOT TMS MULTI DUCT (REFER TO TRAFFIC MANAGEMENT SYSTEM LAYOUT FOR INFORMATION)

# TRAFFIC SIGNAL INTERSECTION LAYOUT

NOTES:

ALL PVC SHALL BE SCHEDULE 80.

ALL DIMENSIONS SHOWN ARE IN METERS UNLESS SPECIFIED OTHERWISE.

REFER TO ILLUMINATION LAYOUT SHEETS FOR ADDIITONAL CONDUIT AND GROUND BOX LOCATIONS.

SEE NOTES, SHEET 1 OF 1. **(SHT. 580F)**

**CHANGE ORDER NO. 79**

**NEW SHEET**

STATE OF TEXAS
JEROME D. PAVLISKA
76075
REGISTERED
PROFESSIONAL ENGINEER

Jerome D. Pavliska, P.E. 4-23-04
Jerome D. Pavliska, P.E. Date

SHEET 2 OF 5

©2004 Texas Department of Transportation

LOOP 1604
TRAFFIC SIGNAL INTERSECTION LAYOUT
LOOP 1604 AT WISEMAN BLVD.

| DN: | | PROJECT NO. | | SHEET NO. |
|---|---|---|---|---|
| CK DN: | | NH 2000(704), etc. | | 564 F |
| DW: | | STATE | DIST. | COUNTY |
| | | TEXAS | SAT | BEXAR |
| CK DW: | CONT. | SECT. | JOB | HIGHWAY NO. |
| | 2452 | 01 | 036, etc. | LP 1604 |

Design Filename: $FILE$

Plotted on: $DATE$

S1 ANDERSON LOOP <XXXX YYYY>

S2 WISEMAN BLVD <YYYY XXXX>

S3 ANDERSON LOOP <YYYY XXXX>

S4 WISEMAN BLVD <XXXX YYYY>

SR10-12 (750 x 900)

R10-4BL (225 x 300)

R10-4BR (225 x 300)

WISEMAN BLVD. (45 M.P.H.)

**LEGEND**

- PROP. VIDEO IMAGING VEH. DETECTION SYSTEM CAMERA (VIVDS)
- PROP. GROUND BOX (TYPE "A")
- PROP. GROUND BOX (TYPE "D")
- PROP. 75 mm PVC SCHEDULE 80
- PROP. 50 mm PVC SCHEDULE 80
- PROP. 32 mm PVC SCHEDULE 80
- PROP. MAST ARM POLE AND FOUNDATION
- PROP. SIGNAL FACE
- PROP. CONTROLLER, SLAB AND FOUNDATION
- PROP. PEDESTRIAN SIGNAL HEAD WITH PUSH BUTTON
- PROP. PEDESTAL POLE AND FOUNDATION
- PROP. ELECTRICAL SERVICE
- TxDOT TMS MANHOLE (BY OTHERS) (REFER TO TRAFFIC MANAGEMENT SYSTEM LAYOUT FOR INFORMATION)
- TxDOT TMS MULTI DUCT (REFER TO TRAFFIC MANAGEMENT SYSTEM LAYOUT FOR INFORMATION)

| POLE AND CABLE SCHEDULE | | | |
|---|---|---|---|
| POLE NO. | SIGNAL CABLE 7/C#14 (SIG.) | SIGNAL CABLE 9/C#14 (PED.) | ELEC CONDR 1/C#8 BARE |
| D | - | 1 | 1 |
| E | 2 | 1 | 1 |
| F | 2 | 2 | 1 |
| G | 3 | 2 | 1 |
| | | | |

| CONDUIT AND CABLE SCHEDULE | | | | | | | | | |
|---|---|---|---|---|---|---|---|---|---|
| RUN NO. | CONDUIT (PVC) NO. | CONDUIT (PVC) SIZE (MM) | CONDUIT (PVC) LENGTH (M) | SIGNAL CABLE 7/C#14 (SIG.) | SIGNAL CABLE 9/C#14 (PED.) | SIGNAL CABLE 2/C#14 | SIGNAL CABLE 1/C#14 * | ELEC CONDR 1/C#6 | ELEC CONDR 1/C#8 BARE |
| 1 | IN CONTROLLER | | | 6 | 8 | | - | 2 | 2 |
| 2 | 1 | 50 | 6 | - | - | - | - | - | - |
| 3 | 2, 2 | 32, 75 | 8 | 3 | 4 | | - | 2 | 4 |
| 4 | 1 | 50 | 2 | - | 1 | - | - | - | 1 |
| 5 | 2, 2 | 32, 75 | 16 | 1 | 1 | | - | 2 | 4 |
| 6 | 1 | 75 | 4 | 1 | 1 | - | - | - | 1 |
| | | | | | | | | | |
| 8 | 2, 1 | 32, 75 | 10 | - | - | | - | 2 | 3 |
| 9 | 2 | 32 | 10 | - | - | - | - | 2 | 2 |
| | | | | | | | | | |
| 16 | 2 | 75 | 38 | 2 | 2 | | - | - | 2 |
| | | | | | | | | | |
| 18 | 1 | 75 | 3 | 1 | 1 | - | - | - | 1 |
| 19 | 2 | 75 | 16 | 1 | 1 | | - | - | 2 |
| 20 | 1 | 75 | 14 | - | - | | - | - | 1 |
| 21 | 1 | 75 | 2 | 1 | 1 | - | - | - | 1 |
| | | | | | | | | | |
| | | | | | | | | | |
| | | | | | | | | | |
| | | | | | | | | | |
| | | | | | | | | | |

**NOTES:**

ONE CONDUIT SHALL REMAIN OPEN IN RUN #3 (50 mm) FOR FUTURE COMMUNICATION CABLE (TMS).
ONE SPARE 2/C #14 AWG IS INSTALLED IN RUNS 3, 16, 19, & 20 FOR FUTURE USE.

* -FOR CONTRACTOR'S INFORMATION ONLY.

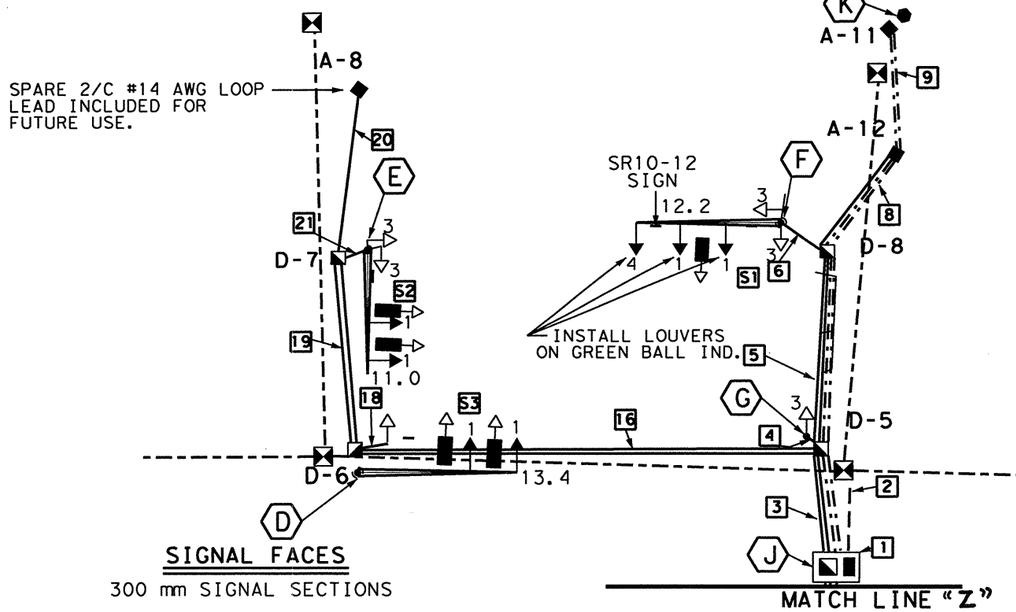


**SIGNAL FACES**

300 mm SIGNAL SECTIONS

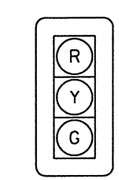


SIGNAL NO. 1 *

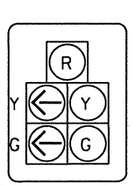


SIGNAL NO. 4 *

SIGNAL NO. 3

* WITH LOUVER AS CALLED FOR ON PLAN

# LOOP 1604 NBD. F.R. (55 M.P.H.)

# TRAFFIC SIGNAL WIRING DIAGRAM AND CONDUIT LAYOUT

**CHANGE ORDER NO. 79**

**NEW SHEET**

STATE OF TEXAS — JEROME D. PAVLISKA — 76075 — REGISTERED PROFESSIONAL ENGINEER

Jerome D. Pavliska P.E. 4-23-04

Jerome D. Pavliska, P.E. — Date

SHEET 3 OF 5

©2004 Texas Department of Transportation

LOOP 1604
TRAFFIC SIGNAL LAYOUT
LOOP 1604 AT WISEMAN BLVD.

| DN: | | PROJECT NO. | | SHEET NO. |
|---|---|---|---|---|
| CK DN: | | NH 2000(704), etc. | | 564 G |
| DW: | | STATE | DIST. | COUNTY |
| CK DW: | | TEXAS | SAT | BEXAR |
| | CONT. | SECT. | JOB | HIGHWAY NO. |
| | 2452 | 01 | 036, etc. | LP 1604 |

Design Filename: $FILE$

Plotted on: $DATE$

| POLE AND CABLE SCHEDULE | | | |
|---|---|---|---|
| POLE NO. | SIGNAL CABLE | | ELEC CONDR |
| | 7/C#14 (SIG.) | 9/C#14 (PED.) | 1/C#6 BARE |
| A | 1 | 1 | 1 |
| B | 1 | 1 | 1 |
| C | - | 1 | 1 |
| H | 1 | 1 | 1 |
| | | | |

Z

## SIGNAL FACES

300 mm SIGNAL SECTIONS

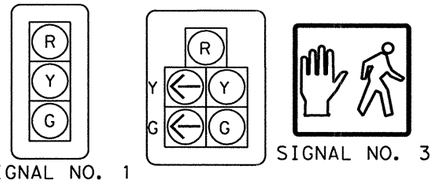


SIGNAL NO. 1 * SIGNAL NO. 4 * SIGNAL NO. 3

* WITH LOUVER AS CALLED FOR ON PLAN

# LOOP 1604 SBD. F.R. (55 M.P.H.)

✳-FOR CONTRACTOR'S INFORMATION ONLY.

| CONDUIT AND CABLE SCHEDULE | | | | | | | | | |
|---|---|---|---|---|---|---|---|---|---|
| RUN NO. | CONDUIT (PVC) | | | SIGNAL CABLE | | | | ELEC CONDR | |
| | NO. | SIZE (MM) | LENGTH (M) | 7/C#14 (SIG.) | 9/C#14 (PED.) | 2/C#14 | 1/C#14 ✳ | 1/C#6 | 1/C#8 BARE |
| 27 | 3 | 75 | 10 | 3 | 4 | | - | - | 1 |
| | | | | | | | | | |
| 29 | 1 | 75 | 3 | 1 | 1 | - | - | - | 1 |
| 30 | 2 | 75 | 21 | 1 | 1 | | - | - | 1 |
| 31 | 1 | 75 | 3 | 1 | 1 | - | - | - | 1 |
| | | | | | | | | | |
| 38 | 2 | 75 | 38 | 1 | 2 | | - | - | 1 |
| 39 | 1 | 75 | 2 | - | 1 | - | - | - | 1 |
| 40 | 2 | 75 | 19 | 1 | 1 | | - | - | 1 |
| | | | | | | | | | |
| 42 | 1 | 75 | 2 | 1 | 1 | - | - | - | 1 |
| | | | | | | | | | |
| | | | | | | | | | |

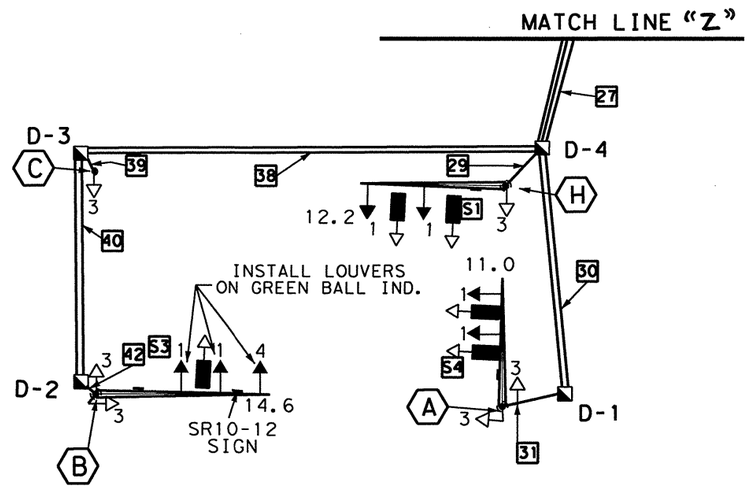


S1 ANDERSON LOOP <XXXX YYYY> — LEFT TURN YIELD ON GREEN — SR10-12 (750 x 900)

S2 WISEMAN BLVD <YYYY XXXX> — PUSH BUTTON FOR — R10-4BL (225 x 300)

S3 ANDERSON LOOP <YYYY XXXX> — PUSH BUTTON FOR — R10-4BR (225 x 300)

S4 WISEMAN BLVD <XXXX YYYY>

## LEGEND

- PROP. VIDEO IMAGING VEH. DETECTION SYSTEM CAMERA (VIVDS)
- PROP. GROUND BOX (TYPE "A")
- PROP. GROUND BOX (TYPE "D")
- PROP. 75 mm PVC SCHEDULE 80
- PROP. 50 mm PVC SCHEDULE 80
- PROP. 32 mm PVC SCHEDULE 80
- PROP. MAST ARM POLE AND FOUNDATION
- PROP. SIGNAL FACE
- PROP. CONTROLLER, SLAB AND FOUNDATION
- PROP. PEDESTRIAN SIGNAL HEAD WITH PUSH BUTTON
- PROP. PEDESTAL POLE AND FOUNDATION
- PROP. ELECTRICAL SERVICE
- TxDOT TMS MANHOLE (BY OTHERS) (REFER TO TRAFFIC MANAGEMENT SYSTEM LAYOUT FOR INFORMATION)
- TxDOT TMS MULTI DUCT (REFER TO TRAFFIC MANAGEMENT SYSTEM LAYOUT FOR INFORMATION)

# TRAFFIC SIGNAL WIRING DIAGRAM AND CONDUIT LAYOUT

STATE OF TEXAS — JEROME D. PAVLISKA — 76075 — REGISTERED PROFESSIONAL ENGINEER

Jerome D. Pavliska, P.E. 4-23-04

Jerome D. Pavliska, P.E. — Date

**CHANGE ORDER NO. 79**

**NEW SHEET**

SHEET 4 OF 5

©2004 Texas Department of Transportation

LOOP 1604
TRAFFIC SIGNAL LAYOUT
LOOP 1604 AT WISEMAN BLVD.

| DN: | | PROJECT NO. | | SHEET NO. |
|---|---|---|---|---|
| CK DN: | | NH 2000(704), etc. | | 564 H |
| DW: | | STATE | DIST. | COUNTY |
| | | TEXAS | SAT | BEXAR |
| CK DW: | CONT. | SECT. | JOB | HIGHWAY NO. |
| | 2452 | 01 | 036, etc. | LP 1604 |

Design Filename: $FILE$

Plotted on: $DATE$

## MATERIALS TO BE FURNISHED AND INSTALLED BY THE CONTRACTOR

| ITEM NO. | DESCRIPTION | UNIT | QUAN. |
|---|---|---|---|
| 618-5016 | CONDUIT (PVC) (SCHD 80)(32 mm) | M | 88 |
| 618-5018 | CONDUIT (PVC) (SCHD 80)(50 mm) | M | 8 |
| 618-5020 | CONDUIT (PVC) (SCHD 80)(75 mm) | M | 385 |
| 618-5021 | CONDUIT (PVC) (SCHD 80)(100 mm) | M | 2 |
| 620-5003 | ELEC CONDUCTOR(NO. 8) BARE | M | 329 |
| 620-5010 | ELEC CONDUCTOR(NO. 6) INSULATED | M | 88 |
| 624-5001 | GROUND BOX(TYPE A)(122311) W/APRON | EA. | 3 |
| 624-5004 | GROUND BOX(TYPE D)(162922) W/APRON | EA. | 8 |
| 628-5222 | ELEC SERV TYT(120/240)000(NS)GS(N)SP(U) | EA. | 1 |
| 656-5026 | TRAF SIG CNTRL FND (CITY TYPE 332) | EA. | 1 |
| 656-5003 | FND FOR TRAF SIG(600 mm DRIL SH) | M | 3.4 |
| 656-5004 | FND FOR TRAF SIG(TY A)(750 mm DRIL SH) | M | 0 |
| 656-5005 | FND FOR TRAF SIG(TY A)(900 mm DRIL SH) | M | 24 |
| 680-5001 | INSTAL OF HWY TRAF SIG(ISOLATED) | EA. | 1 |
| 682-5009 | BACK PLATE(3 SEC)(300 MM) | EA. | 12 |
| 682-5011 | BACK PLATE(5 SEC)(300 MM) | EA. | 2 |
| 682-5002 | VEH SIG SEC(300 mm) | EA. | 46 |
| 682-5005 | PED SIG SEC(2 INDICATIONS IN 1 SEC) | EA. | 12 |
| 682-5019 | LOUVERS (ADJUSTABLE) (300 MM) | EA. | 6 |
| 684-5044 | TRAF SIG CBL(TY C)(2 CONDR)(14 AWG) | M | 0 |
| 684-5047 | TRAF SIG CBL(TY A)(7 CONDR)(14 AWG) | M | 367 |
| 684-5048 | TRAF SIG CBL(TY A)(9 CONDR)(14 AWG) | M | 341 |
| 686-5012 | TRAF SIG POLE ASM(STL)1 ARM(11.0 M) | EA. | 2 |
| 686-5013 | TRAF SIG POLE ASM(STL)1 ARM(12.2 M) | EA. | 2 |
| 686-5014 | TRAF SIG POLE ASM(STL)1 ARM(13.4 M) | EA. | 1 |
| 686-5015 | TRAF SIG POLE ASM(STL)1 ARM(14.6 M) | EA. | 1 |
| 688-5001 | PED DETECT(PUSH BTN) | EA. | 12 |
| 688-5011 | VEHICLE DETECT(14 AWG)(SAWCUT) | M | 0 |
| 688-5012 | VEH DETECT (14 AWG) (19MM PVC) (COD ENC) | M | 0 |
| 6XXX-XXXX | DETECTOR AMPLIFIERS (2 CHANNEL) *** | EA. | 16 |
| 6023-5001 | PEDESTAL POLE ASSEMBLY | EA. | 2 |
| **6438-5005** | **VIVDS COMMUNICATION CABLE (COAXIAL)** | **M** | **417** |
| | | | |
| | | | |
| | | | |
| | | | |
| | | | |
| ** - - | BRACKET ASSY (SYMBOLIC PEDESTRIAN HEAD) | EA. | 12 |
| *** - - | ASTRO-BRAC SIGNAL HEAD MOUNTS | EA. | 14 |
| *** - - | MAST ARMS SIGN MOUNTS (VARIOUS SIZES) | EA. | 8 |
| | | | |

## PROPOSED POLE & EQUIPMENT INFORMATION

| ID NO. | DESCRIPTION/ATTACHMENTS | STATION | OFFSET | FND. ELEV | FND. TYPE |
|---|---|---|---|---|---|
| A | INSTALL SMA-130, 11.0M ARM ON 900mm DRILLED SHAFT FND(900-A), W/TWO SYMBOLIC PED SIGNALS, TWO PUSHBUTTONS, AND TWO R10-4BL SIGN | 19+326.393 | 6.035 LT | 75MM ABOVE GRADE | 4.0M (900-A) |
| B | INSTALL SMA-130, 14.6M ARM ON 900mm DRILLED SHAFT FND(900-A), W/TWO SYMBOLIC PED SIGNALS, TWO PUSHBUTTONS, AND TWO R10-4BR SIGNS | 19+292.230 | 6.059 LT | 75MM ABOVE GRADE | 4.0M (900-A) |
| C | INSTALL 114mm OD STEEL PEDESTAL POLE ON 600mm DRILLED SHAFT FND(600-A) ASSEMBLY WITH ONE SYMBOLIC LED PED SIGNAL HEAD, ONE PUSHBUTTON, AND ONE R10-4BL SIGN | 19+291.488 | 25.103 LT | 75MM ABOVE GRADE | 1.7M (600-A) |
| D | INSTALL SMA-130, 13.4M ARM ON 900mm DRILLED SHAFT FND(900-A), W/ONE SYMBOLIC PED SIGNAL, ONE PUSHBUTTON, AND ONE R10-4BR SIGN | 19+290.878 | 46.635 LT | 75MM ABOVE GRADE | 4.0M (900-A) |
| E | INSTALL SMA-130, 11.0M ARM ON 900mm DRILLED SHAFT FND(900-A), W/TWO SYMBOLIC PED SIGNALS, TWO PUSHBUTTONS, AND TWO R10-4BL SIGNS | 19+291.128 | 66.167 LT | 75MM ABOVE GRADE | 4.0M (900-A) |
| F | INSTALL SMA-130, 12.2M ARM ON 900mm DRILLED SHAFT FND(900-A), W/TWO SYMBOLIC PED SIGNALS, TWO PUSHBUTTONS, AND TWO R10-4BL SIGNS | 19+325.858 | 69.567 LT | 75MM ABOVE GRADE | 4.0M (900-A) |
| G | INSTALL 114mm OD STEEL PEDESTAL POLE ON 600mm DRILLED SHAFT FND(600-A) ASSEMBLY WITH ONE SYMBOLIC LED PED SIGNAL HEAD, ONE PUSHBUTTON, AND ONE R10-4BL SIGN | 19+328.580 | 50.809 LT | 75MM ABOVE GRADE | 1.7M (600-A) |
| H | INSTALL SMA-130, 12.2M ARM ON 900mm DRILLED SHAFT FND(900-A), W/ONE SYMBOLIC PED SIGNALS, ONE PUSHBUTTONS, AND ONE R10-4BR SIGN | 19+326.095 | 24.975 LT | 75MM ABOVE GRADE | 4.0M (900-A) |
| J | PROPOSED CITY OF SAN ANTONIO MODEL 332 CONTROLLER CABINET AND FOUNDATION | 19+331.402 | 39.678 LT | N/A | N/A |
| K | PROP. ELECTRICAL SERVICE PEDESTAL | | | N/A | N/A |

STATION & OFFSET REFRENCED FROM MAINLANE CENTERLINE.

## MATERIALS TO BE FURNISHED BY COSA AND INSTALLED BY THE CONTRACTOR

| DESCRIPTION | UNIT | QUANTITY |
|---|---|---|
| CONTROLLER WITH CABINET(TY 332) | EA. | 1 |
| SR10-12 SIGN (FURNISH ONLY) | EA. | 2 |
| R10-4b PUSH BUTTON SIGN (FURNISH ONLY) | EA. | 12 |
| SIGNS, METRO STREET NAME (FURNISH ONLY) | EA. | 6 |
| | | |

STATE OF TEXAS
JEROME D. PAVLISKA
76075
REGISTERED PROFESSIONAL ENGINEER

Jerome D. Pavliska, P.E. 5-18-04
Jerome D. Pavliska, P.E. Date

* -FOR CONTRACTOR'S INFORMATION ONLY.
** SUBSIDIARY TO ITEM 0682
*** SUBSIDIARY TO ITEM 0680

NOTES:
SEE NOTES, SHEET 1 OF 1.

CHANGE ORDER NO. 79

NEW SHEET

# TRAFFIC SIGNAL INTERSECTION LAYOUT

SHEET 5 OF 5

©2004 Texas Department of Transportation

LOOP 1604
TRAFFIC SIGNAL LAYOUT
LOOP 1604 AT WISEMAN BLVD.

| DN: | | PROJECT NO. | | SHEET NO. |
|---|---|---|---|---|
| CK DN: | | NH 2000(704),etc. | | 564 I |
| DW: | | STATE | DIST. | COUNTY |
| CK DW: | | TEXAS | SAT | BEXAR |
| | CONT. | SECT. | JOB | HIGHWAY NO. |
| | 2452 | 01 | 036,etc. | LP 1604 |

Design Filename: $FILE$

**LEGEND**

PROP. VIDEO IMAGING VEH. DETECTION SYSTEM CAMERA (VIVDS)

PROP. TEMPORARY SIGNAL POLES (TIMBER) W\ SPAN

PROP. TEMPORARY SIGNAL HEAD

EXIST. GROUND BOX

| MATERIALS TO BE FURNISHED AND INSTALLED BY THE CONTRACTOR | | | |
|---|---|---|---|
| ITEM NO. | DESCRIPTION | UNIT | QUAN. |
| 681-5001 | TEMP TRAF SIGNALS FOR CONSTRUCTION | EA. | 1 |
| 6438-5001 | VIVDS PROCESSOR SYSTEM * | EA. | 1 |
| 6438-5002 | VIVDS CAMERA ASSEMBLY * | EA. | 5 |
| 6438-5003 | VIVDS SET-UP SYSTEM * | EA. | 1 |
| 6438-5005 | VIVDS COMMUNICATION CABLE (COAXIAL) * | M | 145 |

*-FOR CONTRACTOR'S INFORMATION ONLY.

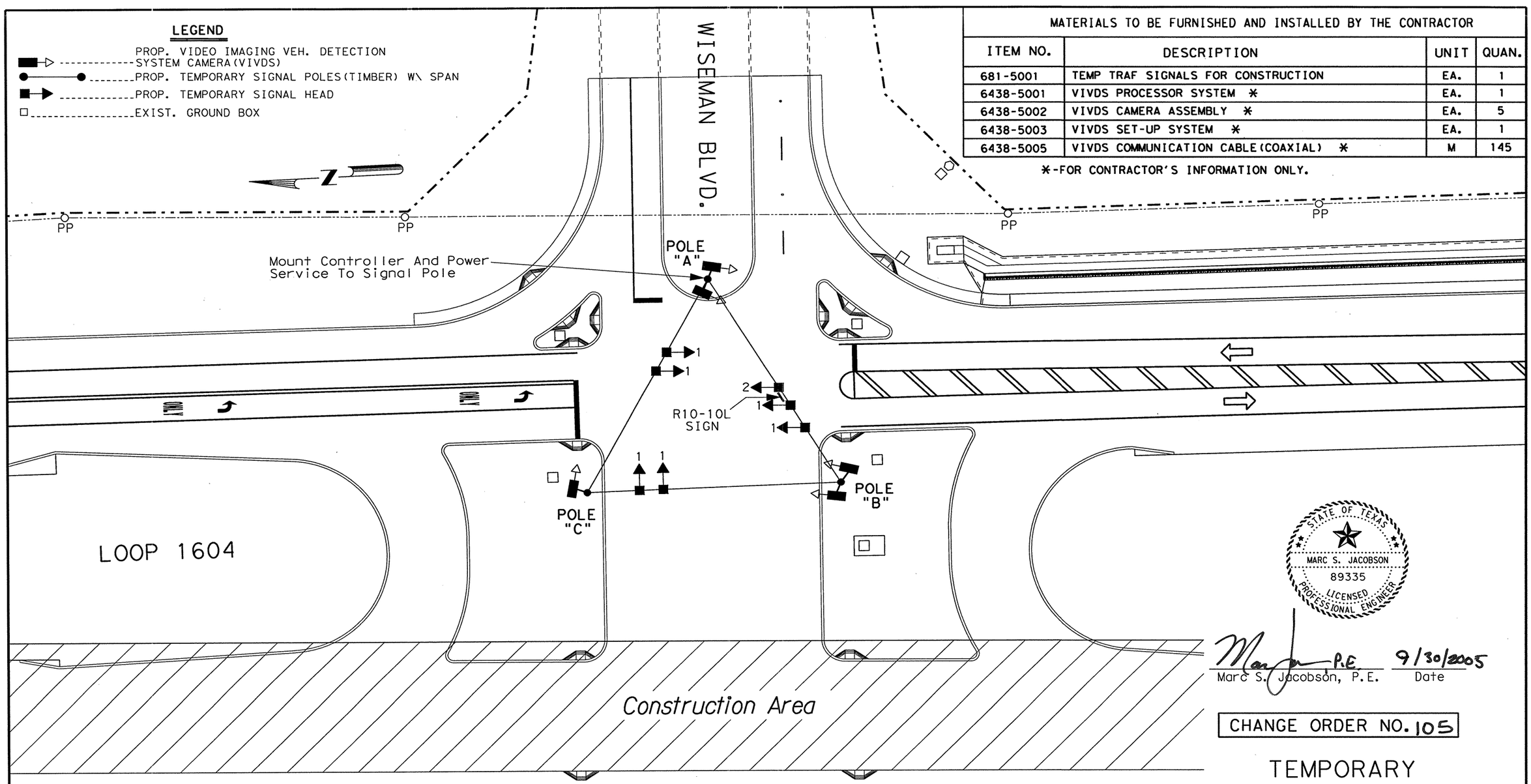


STATE OF TEXAS
MARC S. JACOBSON
89335
LICENSED PROFESSIONAL ENGINEER

Marc S. Jacobson, P.E. 9/30/2005
Marc S. Jacobson, P.E. Date

CHANGE ORDER NO. 105

**NOTES:**

THE CONTRACTOR SHALL CONTACT THE CITY OF SAN ANTONIO SIGNAL SHOP AT 207-7765 PRIOR TO TEMPORARY TRAFFIC SIGNAL BECOMING OPERATIONAL.

THE CONTRACTOR SHALL CONNECT FIELD WIRING TO CONTROLLER.

THE CONTRACTOR SHALL MOUNT TEMPORARY TRAFFIC SIGNAL CONTROLLER AND POWER SERVICE ON SIGNAL POLE "A".

**SIGNAL FACES**

300 mm SIGNAL SECTIONS

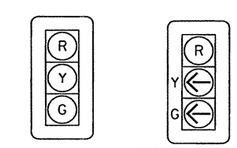


SIGNAL NO. 1 SIGNAL NO. 2

SCALE IN METERS

0 5 10 20

SCALE: 1:500

# TEMPORARY TRAFFIC SIGNAL INTERSECTION LAYOUT

## LOOP 1604 AT WISEMAN RD.

©2005 Texas Department of Transportation

| FED. RD. DIV. NO. | FEDERAL AID PROJECT NO. | | SHEET NO. |
|---|---|---|---|
| 6 | NH 2000(704), Etc. | | 564J |
| STATE | DIST. | COUNTY | |
| TEXAS | SAT | BEXAR | |
| CONT. | SECT. | JOB | HIGHWAY NO. |
| 2452 | 01 | 036, Etc. | LOOP 1604 |

LEVELS DISPLAYED
1 2 3 4 5 6 7 8 9 10 11 12 13 14 15 16
17 18 19 20 21 22 23 24 25 26 27 28 29 30 31 32
33 34 35 36 37 38 39 40 41 42 43 44 45 46 47 48
49 50 51 52 53 54 55 56 57 58 59 60 61 62 63

ACC:

FILE: .DGN

## LEGEND

- PROP. VIDEO IMAGING VEHICLE DETECTION SYSTEM CAMERA (VIVDS)
- PROP. TEMPORARY SIGNAL HEAD
- EXIST. GROUND BOX TO REMAIN
- EXIST. SIGNAL POLES (TIMBER) WITH SPAN TO REMAIN
- EXIST. VIVDS CAMERA ASSEMBLY TO REMAIN
- EXIST. TEMPORARY SIGNAL HEAD TO REMAIN

| MATERIALS TO BE FURNISHED AND INSTALLED BY THE CONTRACTOR | | | |
|---|---|---|---|
| ITEM NO. | DESCRIPTION | UNIT | QUAN. |
| 681-5001 | TEMP TRAF SIGNALS FOR CONSTRUCTION | EA. | 1 |
| 6438-5002 | VIVDS CAMERA ASSEMBLY * | EA. | 1 |
| 6438-5005 | VIVDS COMMUNICATION CABLE (COAXIAL) * | M | 45 |
| | | | |

*-FOR CONTRACTOR'S INFORMATION ONLY.

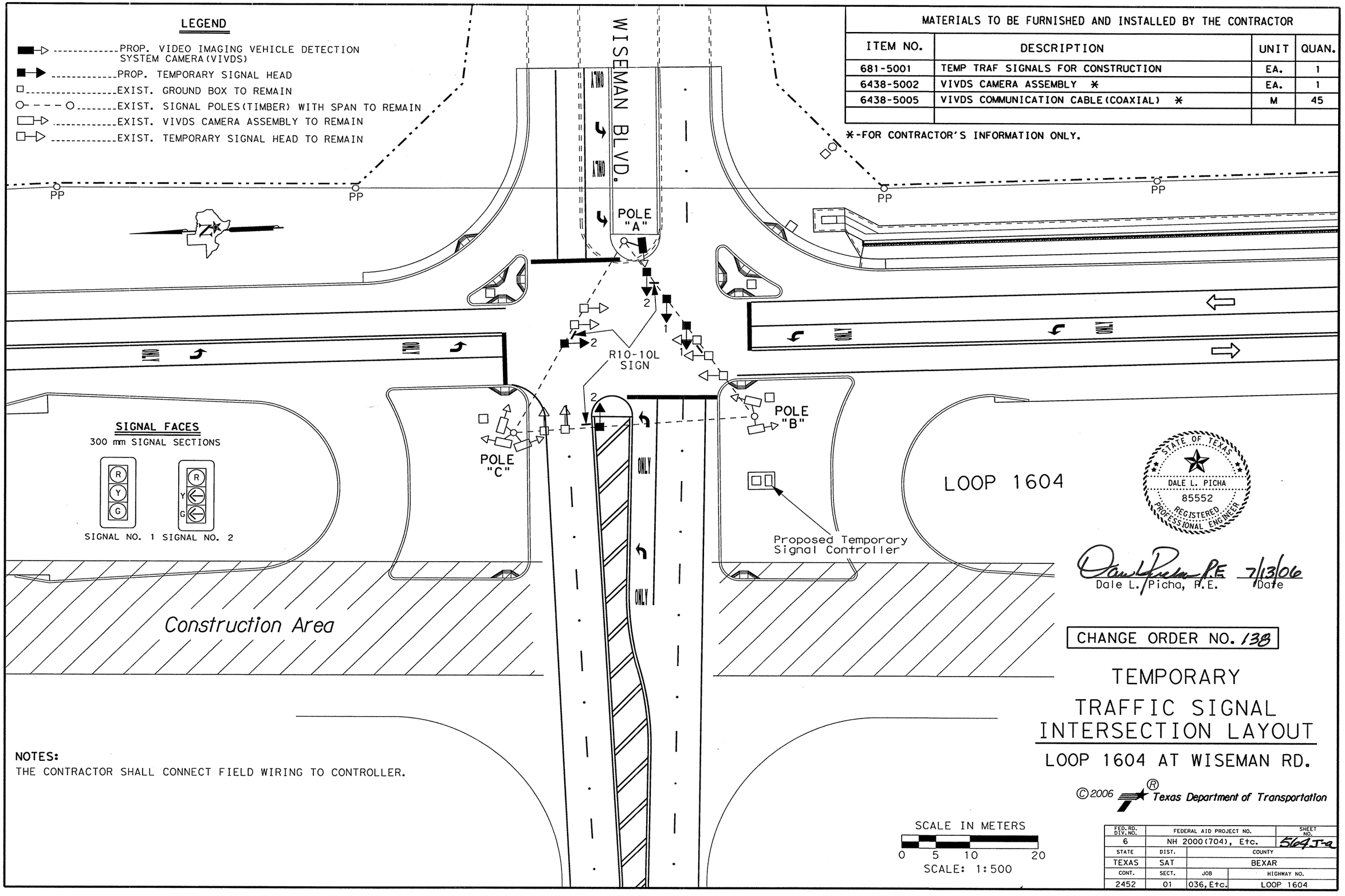


### SIGNAL FACES

300 mm SIGNAL SECTIONS




SIGNAL NO. 1 SIGNAL NO. 2

**NOTES:**

THE CONTRACTOR SHALL CONNECT FIELD WIRING TO CONTROLLER.

STATE OF TEXAS
DALE L. PICHA
85552
REGISTERED PROFESSIONAL ENGINEER

Dale L. Picha, P.E. 7/13/06
Dale L. Picha, P.E. Date

CHANGE ORDER NO. 138

# TEMPORARY TRAFFIC SIGNAL INTERSECTION LAYOUT

## LOOP 1604 AT WISEMAN RD.

©2006 Texas Department of Transportation

SCALE IN METERS
0 5 10 20
SCALE: 1:500

| FED. RD. DIV. NO. | FEDERAL AID PROJECT NO. | | SHEET NO. |
|---|---|---|---|
| 6 | NH 2000(704), Etc. | | 564J-a |
| STATE | DIST. | COUNTY | |
| TEXAS | SAT | BEXAR | |
| CONT. | SECT. | JOB | HIGHWAY NO. |
| 2452 | 01 | 036, Etc. | LOOP 1604 |

LEVELS DISPLAYED
1 2 3 4 5 6 7 8 9 10 11 12 13 14 15 16
17 18 19 20 21 22 23 24 25 26 27 28 29 30 31 32
33 34 35 36 37 38 39 40 41 42 43 44 45 46 47 48
49 50 51 52 53 54 55 56 57 58 59 60 61 62 63

ACC:
FILE: .DGN

9:31:12 AM
6/7/2006
U:\vargdata\jesse\bexar\loop1604\loop1604wisemantemp.dgn

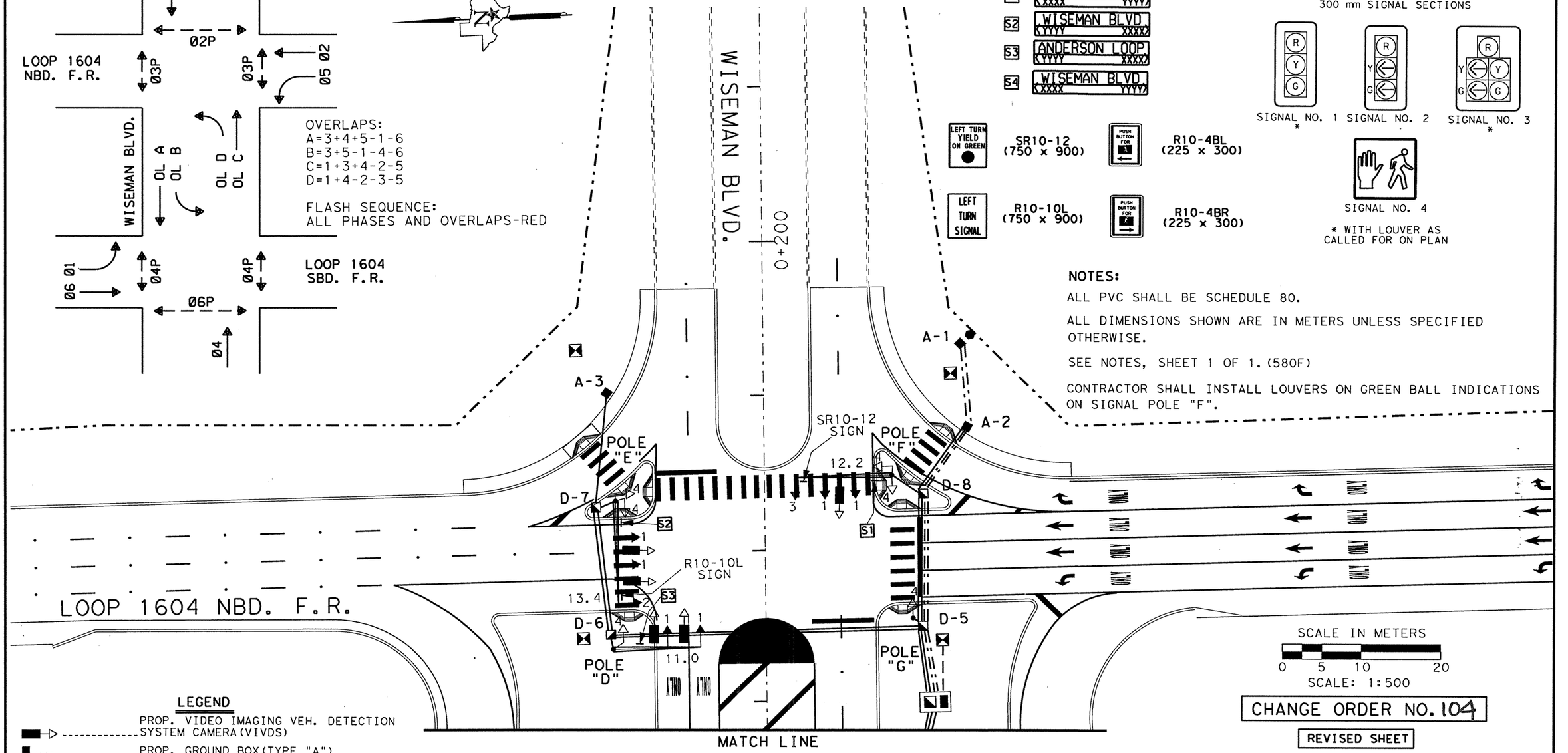


SIGNAL FACES

300 mm SIGNAL SECTIONS




SIGNAL NO. 1 * SIGNAL NO. 2 SIGNAL NO. 3 *



SIGNAL NO. 4

* WITH LOUVER AS CALLED FOR ON PLAN

LEFT TURN YIELD ON GREEN — SR10-12 (750 x 900) — PUSH BUTTON FOR — R10-4BL (225 x 300)

LEFT TURN SIGNAL — R10-10L (750 x 900) — PUSH BUTTON FOR — R10-4BR (225 x 300)

**NOTES:**

ALL PVC SHALL BE SCHEDULE 80.

ALL DIMENSIONS SHOWN ARE IN METERS UNLESS SPECIFIED OTHERWISE.

SEE NOTES, SHEET 1 OF 1. (580F)

CONTRACTOR SHALL INSTALL LOUVERS ON GREEN BALL INDICATIONS ON SIGNAL POLE "F".

**LEGEND**

- PROP. VIDEO IMAGING VEH. DETECTION SYSTEM CAMERA (VIVDS)
- PROP. GROUND BOX (TYPE "A")
- PROP. GROUND BOX (TYPE "D")
- PROP. 75 mm PVC SCHEDULE 80
- PROP. 50 mm PVC SCHEDULE 80
- PROP. 32 mm PVC SCHEDULE 80
- PROP. MAST ARM POLE AND FOUNDATION
- PROP. SIGNAL FACE
- PROP. CONTROLLER, SLAB AND FOUNDATION
- PROP. PEDESTRIAN SIGNAL HEAD WITH PUSH BUTTON
- PROP. PEDESTAL POLE AND FOUNDATION
- PROP. ELECTRICAL SERVICE
- TMS MANHOLE (BY OTHERS)

**CHANGE ORDER NO. 104**

-SWAPPED SIGNAL POLES "D" & "E"

-ADDED 3-SECTION HEAD AND SIGN FOR LEFT TURNS ON LOOP 1604 F.R.

SCALE IN METERS

0 5 10 20

SCALE: 1:500

**CHANGE ORDER NO. 104**

**REVISED SHEET**

SHEET 1 OF 5

# LOOP 1604
# TRAFFIC SIGNAL INTERSECTION LAYOUT
# LOOP 1604 AT WISEMAN BLVD.

© 2005 Texas Department of Transportation

STATE OF TEXAS — MARC S. JACOBSON — 89335 — LICENSED PROFESSIONAL ENGINEER

Marc S. Jacobson, P.E. 12/27/2005

Marc S. Jacobson, P.E. — Date

| FED. RD. DIV. NO. | FEDERAL AID PROJECT NO. | | SHEET NO. |
|---|---|---|---|
| 6 | NH 2000(704), Etc. | | 5b4EE |
| STATE | DIST. | COUNTY | |
| TEXAS | SAT | BEXAR | |
| CONT. | SECT. | JOB | HIGHWAY NO. |
| 2452 | 01 | 036, Etc. | LOOP 1604 |

LEVELS DISPLAYED 1 2 3 4 5 6 7 8 9 10 11 12 13 14 15 16 17 18 19 20 21 22 23 24 25 26 27 28 29 30 31 32 33 34 35 36 37 38 39 40 41 42 43 44 45 46 47 48 49 50 51 52 53 54 55 56 57 58 59 60 61 62 63 ACC: FILE: .DGN

1:33:31 PM 12/23/2005 u:\engdata\jesse\bexar\loop1604\loop1604wisemanCO.dgn

## LEGEND

- PROP. VIDEO IMAGING VEH. DETECTION SYSTEM CAMERA (VIVDS)
- PROP. GROUND BOX (TYPE "D")
- PROP. 75 mm PVC SCHEDULE 80
- PROP. 50 mm PVC SCHEDULE 80
- PROP. 32 mm PVC SCHEDULE 80
- PROP. MAST ARM POLE AND FOUNDATION
- PROP. SIGNAL FACE
- PROP. PEDESTRIAN SIGNAL HEAD WITH PUSH BUTTON
- PROP. PEDESTAL POLE AND FOUNDATION

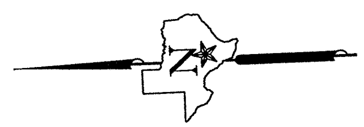

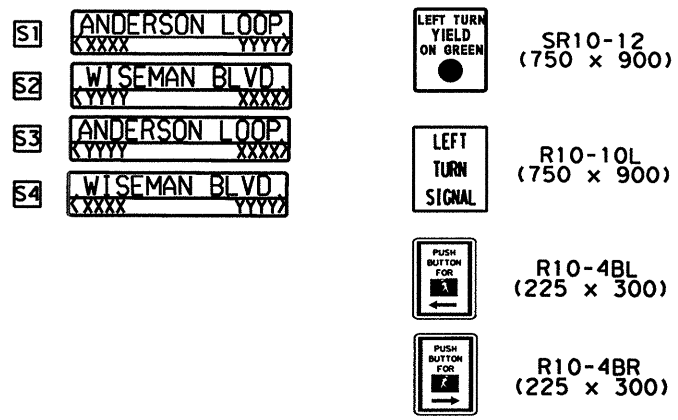


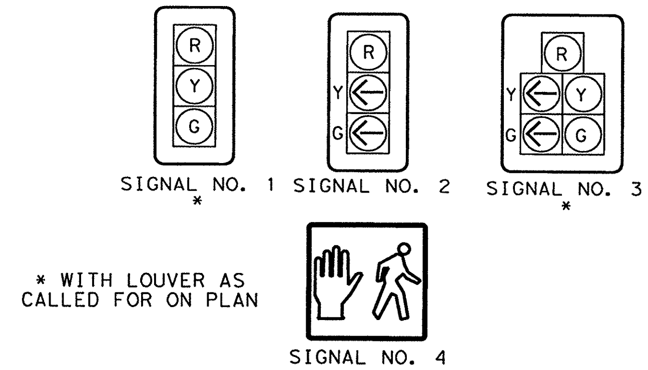


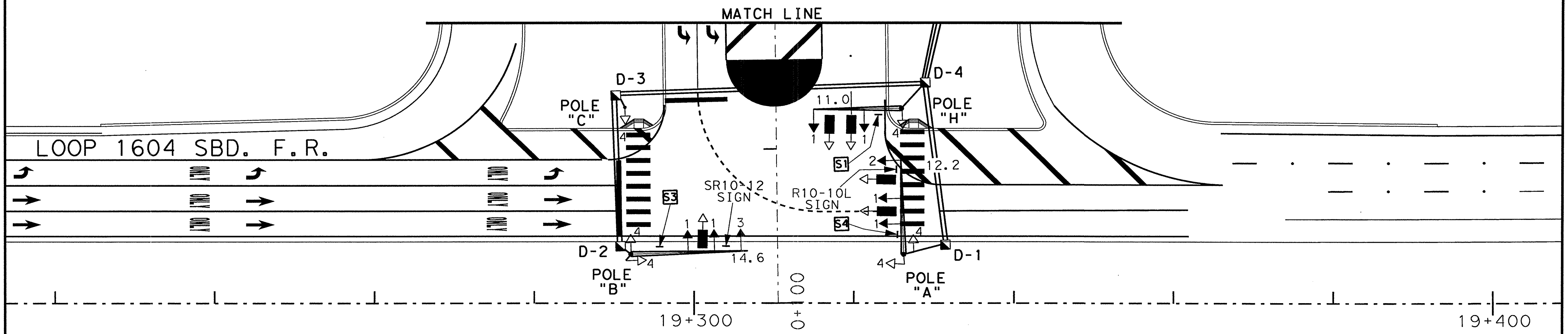


SCALE IN METERS

0 5 10 20

SCALE: 1:500

NOTES:

ALL PVC SHALL BE SCHEDULE 80.

ALL DIMENSIONS SHOWN ARE IN METERS UNLESS SPECIFIED OTHERWISE.

SEE NOTES, SHEET 1 OF 1. (580F)

CONTRACTOR SHALL INSTALL LOUVERS ON GREEN BALL INDICATIONS ON SIGNAL POLE "B".

SIGNAL POLE "B": 5-SECTION SIGNAL AND SIGN SHALL BE INSTALLED AND COVERED IF WISEMAN EXTENSION IS NOT OPEN.

SIGNAL POLE "H": SIGNAL HEADS SHALL BE INSTALLED IF WISEMAN EXTENSION IS OPEN. IF WISEMAN EXTENSION IS NOT OPEN, SIGNAL HEADS SHALL BE DELIVERED TO CITY OF SAN ANTONIO SIGNAL SHOP AT 223 S. CHERRY FOR FUTURE INSTALLATION.

**CHANGE ORDER NO. 104**

- SWAPPED SIGNAL POLES "A" & "H"
- ADDED 3-SECTION HEAD AND SIGN FOR LEFT TURNS ON LOOP 1604 F.R.

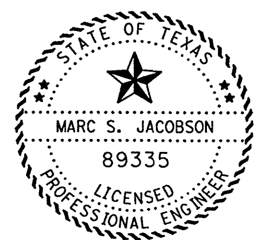


Marc S. Jacobson, P.E. 12/27/2005

Marc S. Jacobson, P.E. Date

CHANGE ORDER NO. 104

REVISED SHEET

SHEET 2 OF 5

# LOOP 1604
## TRAFFIC SIGNAL INTERSECTION LAYOUT LOOP 1604 AT WISEMAN BLVD.

©2005 Texas Department of Transportation

| FED. RD. DIV. NO. | FEDERAL AID PROJECT NO. | | SHEET NO. |
|---|---|---|---|
| 6 | NH 2000(704), Etc. | | 564FF |
| STATE | DIST. | COUNTY | |
| TEXAS | SAT | BEXAR | |
| CONT. | SECT. | JOB | HIGHWAY NO. |
| 2452 | 01 | 036, Etc. | LOOP 1604 |

LEVELS DISPLAYED | ACC: | FILE: .DGN

1:33:46 PM 12/27/2005 ui\engdata\jesse\bexar\loop1604\loop1604wiseman00.dgn

## POLE SCHEDULE

| | POLE NUMBER | D | E | F | G |
|---|---|---|---|---|---|
| | MAST ARM LENGTH (M) | 11.0 | 13.4 | 12.2 | Ped. |
| | FOUNDATION TYPE | 900-A | 900-A | 900-A | 600-A |
| | FOUNDATION DEPTH (M) | 4.0 | 4.0 | 4.0 | 1.7 |
| CABLE | CIRCUIT | NO. OF CONDUCTORS | | | |
| #6 BARE | BARE BOND GROUND | 1 | 1 | 1 | 1 |
| 7/C#14 SOLID TYPE "A" | SIGNALS Ø2 | | 2 | | |
| | Ø3 | 2 | | | |
| | Ø5 | | 1 | | |
| | Overlap C & D | | | 3 | |
| 9/C#14 SOLID TYPE "A" | PED. SIGNALS Ø2 | | | | |
| | Ø3 | 1 | | | 1 |
| | Ø2 & Ø3 | | 1 | 1 | |
| COAXIAL | VIVDS(COMM.) | 2 | 2 | 1 | |

S1 ANDERSON LOOP XXXXX YYYY
S2 WISEMAN BLVD YYYY XXXX
S3 ANDERSON LOOP YYYY XXXX
S4 WISEMAN BLVD XXXX YYYY

LEFT TURN YIELD ON GREEN — SR10-12 (750 x 900)

LEFT TURN SIGNAL — R10-10L (750 x 900)

PUSH BUTTON FOR 3 — R10-4BL (225 x 300)

PUSH BUTTON FOR 2 — R10-4BR (225 x 300)

### LEGEND

- PROP. VIDEO IMAGING VEH. DETECTION SYSTEM CAMERA(VIVDS)
- PROP. GROUND BOX(TYPE "A")
- PROP. GROUND BOX(TYPE "D")
- PROP. 75 mm PVC SCHEDULE 80
- PROP. 50 mm PVC SCHEDULE 80
- PROP. 32 mm PVC SCHEDULE 80
- PROP. MAST ARM POLE AND FOUNDATION
- PROP. SIGNAL FACE
- PROP. CONTROLLER, SLAB AND FOUNDATION
- PROP. PEDESTRIAN SIGNAL HEAD WITH PUSH BUTTON
- PROP. PEDESTAL POLE AND FOUNDATION
- PROP. ELECTRICAL SERVICE
- TMS MANHOLE(BY OTHERS)

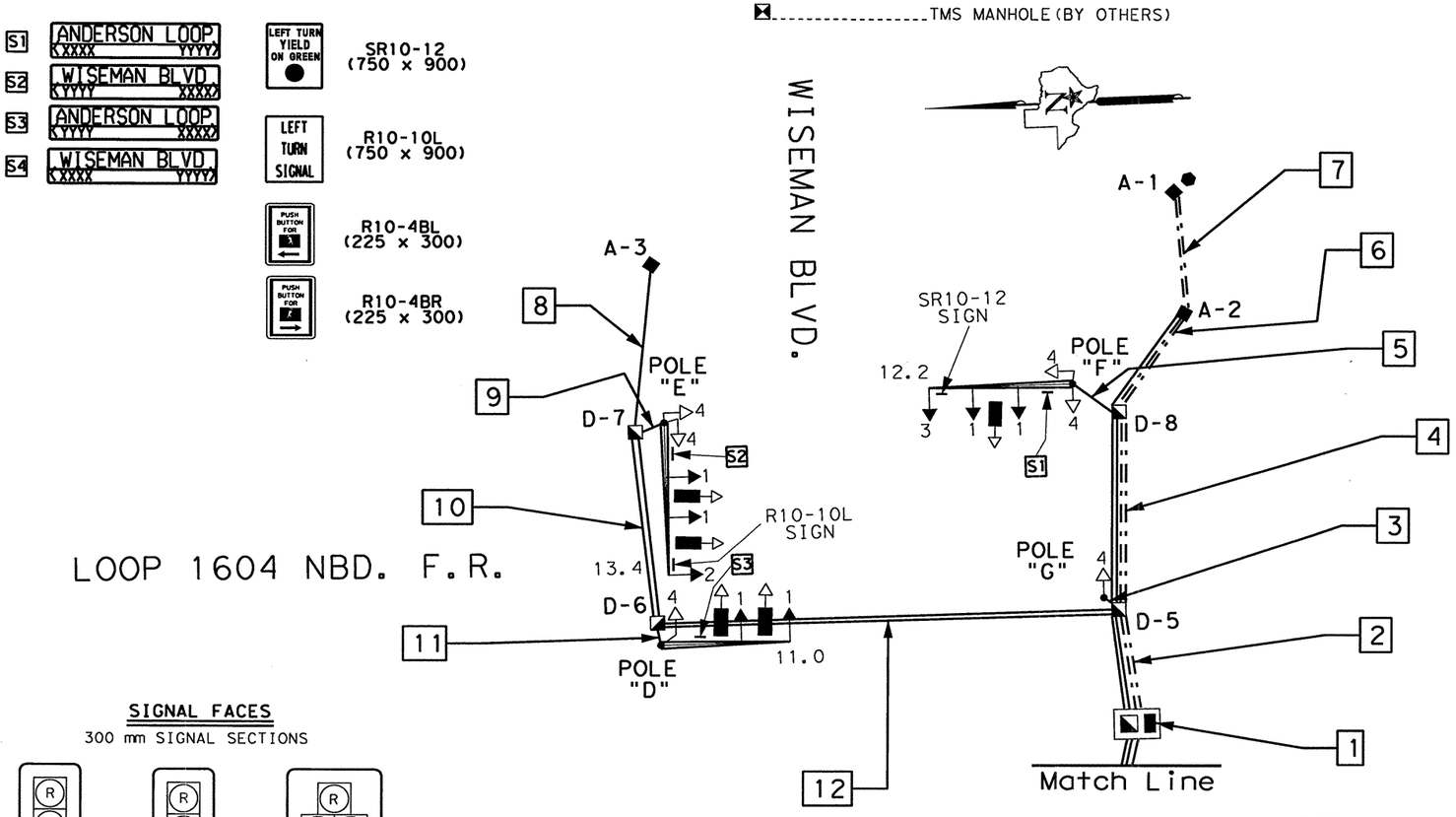


## CONDUIT AND CABLE SCHEDULE

| | RUN NUMBER | 1 | 2 | 3 | 4 | 5 | 6 | 7 | 8 | 9 | 10 | 11 | 12 |
|---|---|---|---|---|---|---|---|---|---|---|---|---|---|
| | CONDUIT SIZE (MM) | C | 32/75 | 50 | 32/75 | 75 | 32/75 | 32 | 75 | 75 | 75 | 75 | 75 |
| | NUMBER OF CONDUITS | | 2/2 | 1 | 2/2 | 1 | 2/1 | 2 | 1 | 1 | 2 | 1 | 2 |
| | COND / RUN LENGTH (M) | 3 | 10 | 2 | 18 | 5 | 11 | 11 | 15 | 3 | 17 | 2 | 40 |
| | TRENCH(T) / BORE(B) | | T | T | T | T | T | T | T | T | T | T | T |
| CABLE | CIRCUIT | NUMBER OF CONDUCTORS | | | | | | | | | | | |
| #6 XHHW | 120 POWER HOT | 1 | 1 | | 1 | | 1 | 1 | | | | | |
| | 120 POWER COMMON | 1 | 1 | | 1 | | 1 | 1 | | | | | |
| #6 BARE | BARE BOND GROUND | 1 | 1 | 1 | 1 | 1 | 1 | 1 | | 1 | 1 | 1 | 1 |
| 7/C#14 SOLID TYPE "A" | SIGNALS Ø1 | 1 | | | | | | | | | | | |
| | Ø2 | 1 | 1 | | | | | | | 1 | 1 | | 1 |
| | Ø3 | 1 | 1 | | | | | | | | | 1 | 1 |
| | Ø4 | 1 | | | | | | | | | | | |
| | Ø5 | 1 | 1 | | | | | | | 1 | 1 | | 1 |
| | Ø6 | 1 | | | | | | | | | | | |
| | Overlap A & B | 1 | | | | | | | | | | | |
| | Overlap C & D | 1 | 1 | | 1 | 1 | | | | | | | |
| 9/C#14 SOLID TYPE "A" | PED. SIGNALS Ø2 & Ø3 | 2 | 2 | | 1 | 1 | | | | 1 | 1 | | 1 |
| | Ø3 | 2 | 2 | 1 | | | | | | | | 1 | 1 |
| | Ø4 & Ø6 | 2 | | | | | | | | | | | |
| | Ø4 | 2 | | | | | | | | | | | |
| VIVDS COAXIAL CABLE | VIVDS(COMM.) Ø2 | 1 | 1 | | | | | | | 1 | 1 | | 1 |
| | Ø3 | 2 | 2 | | | | | | | | | 2 | 2 |
| | Ø4 | 2 | | | | | | | | | | | |
| | Ø6 | 1 | | | | | | | | | | | |
| | Ø1 & Ø6 | 1 | | | | | | | | | | | |
| | Ø2 & Ø5 | 1 | 1 | | | | | | | 1 | 1 | | 1 |
| | Overlap A & B | 1 | | | | | | | | | | | |
| | Overlap C & D | 1 | 1 | | 1 | 1 | | | | | | | |

C=IN CONTROLLER

**NOTES:**

ONE CONDUIT(50 mm) SHALL REMAIN OPEN IN RUN #2 FOR FUTURE COMMUNICATION CABLE(TMS).

**SIGNAL FACES**

300 mm SIGNAL SECTIONS

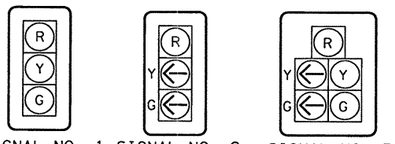


SIGNAL NO. 1 * SIGNAL NO. 2 SIGNAL NO. 3 *

SIGNAL NO. 4

* WITH LOUVER AS CALLED FOR ON PLAN

**CHANGE ORDER NO. 104**

-SWAPPED SIGNAL POLES "D" & "E"

-ADDED 3-SECTION HEAD AND SIGN FOR LEFT TURNS ON LOOP 1604 F.R.

STATE OF TEXAS
MARC S. JACOBSON
89335
LICENSED PROFESSIONAL ENGINEER

Marc S. Jacobson, P.E. 12/27/2005
Marc S. Jacobson, P.E. Date

CHANGE ORDER NO. 104

REVISED SHEET

SHEET 3 OF 5

# WIRING DIAGRAM AND CONDUIT LAYOUT

## LOOP 1604

### TRAFFIC SIGNAL INTERSECTION LAYOUT LOOP 1604 AT WISEMAN BLVD.

©2005 Texas Department of Transportation

SCALE IN METERS
0 5 10 20
SCALE: 1:500

| FED.RD. DIV.NO. | FEDERAL AID PROJECT NO. | | SHEET NO. |
|---|---|---|---|
| 6 | NH 2000(704), Etc. | | 564GG |
| STATE | DIST. | COUNTY | |
| TEXAS | SAT | BEXAR | |
| CONT. | SECT. | JOB | HIGHWAY NO. |
| 2452 | 01 | 036, Etc. | LOOP 1604 |

LEVELS DISPLAYED
1 2 3 4 5 6 7 8 9 10 11 12 13 14 15 16
17 18 19 20 21 22 23 24 25 26 27 28 29 30 31 32
33 34 35 36 37 38 39 40 41 42 43 44 45 46 47 48
49 50 51 52 53 54 55 56 57 58 59 60 61 62

ACC:
FILE: .DGN

12/23/2005 11:39:17 PM
u:\engdata\traffic\jesse\exgr\loop1604\loop1604wisemanCO.dgn

## POLE SCHEDULE

| | POLE NUMBER | A | B | C | H |
|---|---|---|---|---|---|
| | MAST ARM LENGTH (M) | 12.2 | 14.6 | Ped. | 11.0 |
| | FOUNDATION TYPE | 900-A | 900-A | 600-A | 900-A |
| | FOUNDATION DEPTH (M) | 4.0 | 4.0 | 1.7 | 4.0 |
| CABLE | CIRCUIT | NO. OF CONDUCTORS | | | |
| #6 BARE | BARE BOND GROUND | 1 | 1 | 1 | 1 |
| 7/C#14 SOLID TYPE "A" | SIGNALS Ø1 | 1 | | | |
| | Ø4 | | | | 2 |
| | Ø6 | 2 | | | |
| | Overlap A & B | | 3 | | |
| 9/C#14 SOLID TYPE "A" | PED. SIGNALS Ø4 | | | 1 | 1 |
| | Ø4 & Ø6 | 1 | 1 | | |
| | | | | | |
| COAXIAL | VIVDS(COMM.) | 2 | 1 | | 2 |

## CONDUIT AND CABLE SCHEDULE

| | RUN NUMBER | 13 | 14 | 15 | 16 | 17 | 18 | 19 | 20 |
|---|---|---|---|---|---|---|---|---|---|
| | CONDUIT SIZE (MM) | 75 | 75 | 50 | 75 | 75 | 75 | 75 | 75 |
| | NUMBER OF CONDUITS | 3 | 2 | 1 | 2 | 1 | 1 | 2 | 1 |
| | COND / RUN LENGTH (M) | 11 | 40 | 2 | 20 | 2 | 6 | 22 | 5 |
| | TRENCH(T) / BORE(B) | T | T | T | T | T | T | T | T |
| CABLE | CIRCUIT | NO. OF CONDUCTORS | | | | | | | |
| #6 BARE | BARE BOND GROUND | 1 | 1 | 1 | 1 | 1 | 1 | 1 | 1 |
| 7/C#14 SOLID TYPE "A" | SIGNALS Ø1 | 1 | | | | | 1 | 1 | |
| | Ø4 | 1 | | | | | | | 1 |
| | Ø6 | 1 | | | | | 1 | 1 | |
| | Overlap A & B | 1 | 1 | | 1 | 1 | | | |
| 9/C#14 SOLID TYPE "A" | PED. SIGNALS Ø4 | 2 | 1 | 1 | | | | | 1 |
| | Ø4 & Ø6 | 2 | 1 | | 1 | 1 | 1 | 1 | |
| | | | | | | | | | |
| VIVDS COAXIAL CABLE | VIVDS(COMM.) Ø4 | 2 | | | | | | | 2 |
| | Ø6 | 1 | | | | | 1 | 1 | |
| | Ø1 & Ø6 | 1 | | | | | 1 | 1 | |
| | Overlap A & B | 1 | 1 | | 1 | 1 | | | |
| | | C=IN CONTROLLER | | | | | | | |

### SIGNAL FACES

300 mm SIGNAL SECTIONS

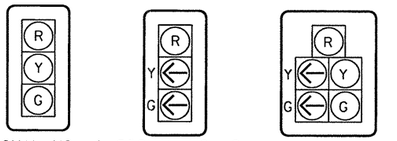


* WITH LOUVER AS CALLED FOR ON PLAN

S1 ANDERSON LOOP XXXXX YYYYY
S2 WISEMAN BLVD YYYYY XXXXX
S3 ANDERSON LOOP YYYYY XXXXX
S4 WISEMAN BLVD XXXXX YYYYY

LEFT TURN YIELD ON GREEN — SR10-12 (750 x 900)

LEFT TURN SIGNAL — R10-10L (750 x 900)

PUSH BUTTON FOR — R10-4BL (225 x 300)

PUSH BUTTON FOR — R10-4BR (225 x 300)

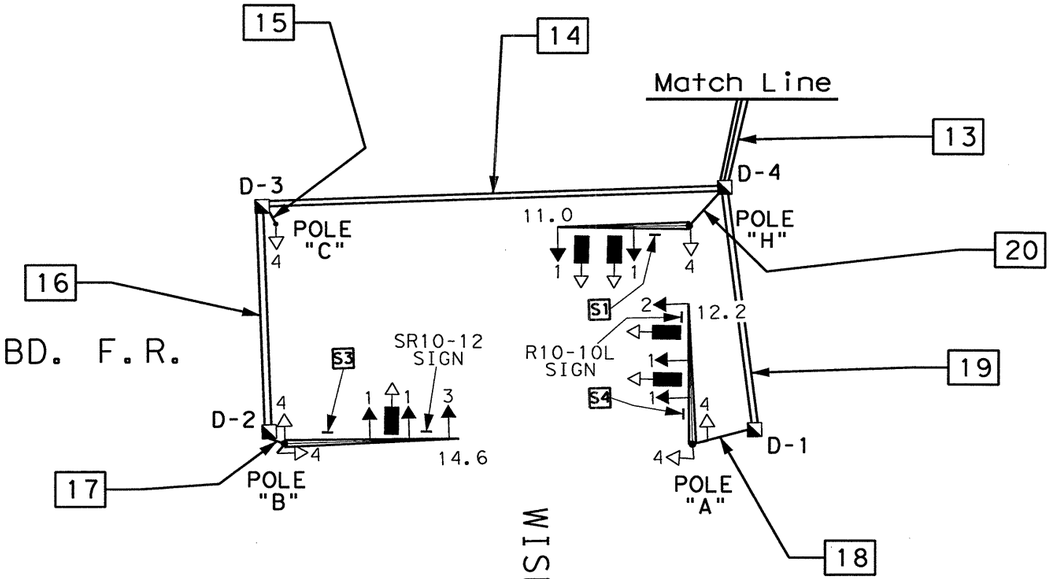


### LEGEND

- PROP. VIDEO IMAGING VEH. DETECTION SYSTEM CAMERA (VIVDS)
- PROP. GROUND BOX (TYPE "D")
- PROP. 75 mm PVC SCHEDULE 80
- PROP. 50 mm PVC SCHEDULE 80
- PROP. 32 mm PVC SCHEDULE 80
- PROP. MAST ARM POLE AND FOUNDATION
- PROP. SIGNAL FACE
- PROP. PEDESTRIAN SIGNAL HEAD WITH PUSH BUTTON
- PROP. PEDESTAL POLE AND FOUNDATION

CHANGE ORDER NO. 104
-SWAPPED SIGNAL POLES "A" & "H"
-ADDED 3-SECTION HEAD AND SIGN FOR LEFT TURNS ON LOOP 1604 F.R.

SCALE IN METERS
0 5 10 20
SCALE: 1:500

CHANGE ORDER NO. 104
REVISED SHEET

SHEET 4 OF 5

# WIRING DIAGRAM AND CONDUIT LAYOUT

## LOOP 1604

### TRAFFIC SIGNAL INTERSECTION LAYOUT LOOP 1604 AT WISEMAN BLVD.

©2005 Texas Department of Transportation

STATE OF TEXAS — MARC S. JACOBSON — 89335 — LICENSED PROFESSIONAL ENGINEER

Marc S. Jacobson, P.E. — 12/27/2005 Date

| FED.RD. DIV.NO. | FEDERAL AID PROJECT NO. | | SHEET NO. |
|---|---|---|---|
| 6 | NH 2000(704), Etc. | | 564HH |
| STATE | DIST. | COUNTY | |
| TEXAS | SAT | BEXAR | |
| CONT. | SECT. | JOB | HIGHWAY NO. |
| 2452 | 01 | 036, Etc. | LOOP 1604 |

LEVELS DISPLAYED
1 2 3 4 5 6 7 8 9 10 11 12 13 14 15 16
17 18 19 20 21 22 23 24 25 26 27 28 29 30 31 32
33 34 35 36 37 38 39 40 41 42 43 44 45 46 47 48
49 50 51 52 53 54 55 65 75 85 96 06 16 62

ACC:

FILE: .DGN

1:34:15 PM
12/23/2005
u:\engdata\jesse\bexar\loop1604\loop1604wisemanCO.dgn

## MATERIALS TO BE FURNISHED AND INSTALLED BY THE CONTRACTOR

| ITEM NO. | DESCRIPTION | UNIT | QUAN. | |
|---|---|---|---|---|
| 618-5016 | CONDUIT (PVC) (SCHD 80)(32 mm) | M | 88 | |
| 618-5018 | CONDUIT (PVC) (SCHD 80)(50 mm) | M | 8 | |
| 618-5020 | CONDUIT (PVC) (SCHD 80)(75 mm) | M | 385 | |
| 618-5021 | CONDUIT (PVC) (SCHD 80)(100 mm) | M | 2 | |
| 620-5003 | ELEC CONDUCTOR(NO. 8) BARE | M | 329 | |
| 620-5010 | ELEC CONDUCTOR(NO. 6) INSULATED | M | 88 | |
| 624-5001 | GROUND BOX(TYPE A)(122311) W/APRON | EA. | 3 | |
| 624-5004 | GROUND BOX(TYPE D)(162922) W/APRON | EA. | 8 | |
| 628-5222 | ELEC SERV TYT(120/240)000(NS)GS(N)SP(U) | EA. | 1 | |
| 656-5026 | TRAF SIG CNTRL FND (CITY TYPE 332) | EA. | 1 | |
| 656-5003 | FND FOR TRAF SIG(600 mm DRIL SH) | M | 3.4 | |
| 656-5004 | FND FOR TRAF SIG(TY A)(750 mm DRIL SH) | M | 0 | |
| 656-5005 | FND FOR TRAF SIG(TY A)(900 mm DRIL SH) | M | 24 | |
| 680-5001 | INSTAL OF HWY TRAF SIG(ISOLATED) | EA. | 1 | |
| 682-5009 | BACK PLATE(3 SEC)(300 MM) | EA. | 12 | 14 |
| 682-5011 | BACK PLATE(5 SEC)(300 MM) | EA. | 2 | |
| 682-5002 | VEH SIG SEC(300 mm) | EA. | 46 | 52 |
| 682-5005 | PED SIG SEC(2 INDICATIONS IN 1 SEC) | EA. | 12 | |
| 682-5019 | LOUVERS (ADJUSTABLE) (300 MM) | EA. | 6 | |
| 684-5044 | TRAF SIG CBL(TY C)(2 CONDR)(14 AWG) | M | 0 | |
| 684-5047 | TRAF SIG CBL(TY A)(7 CONDR)(14 AWG) | M | 367 | 660 |
| 684-5048 | TRAF SIG CBL(TY A)(9 CONDR)(14 AWG) | M | 341 | 400 |
| 686-5012 | TRAF SIG POLE ASM(STL)1 ARM(11.0 M) | EA. | 2 | |
| 686-5013 | TRAF SIG POLE ASM(STL)1 ARM(12.2 M) | EA. | 2 | |
| 686-5014 | TRAF SIG POLE ASM(STL)1 ARM(13.4 M) | EA. | 1 | |
| 686-5015 | TRAF SIG POLE ASM(STL)1 ARM(14.6 M) | EA. | 1 | |
| 688-5001 | PED DETECT(PUSH BTN) | EA. | 12 | |
| 688-5011 | VEHICLE DETECT(14 AWG)(SAWCUT) | M | 0 | |
| 688-5012 | VEH DETECT (14 AWG) (19MM PVC) (COD ENC) | M | 0 | |
| 6XXX-XXXX | DETECTOR AMPLIFIERS (2 CHANNEL) *** | EA. | 16 | |
| 6023-5001 | PEDESTAL POLE ASSEMBLY | EA. | 2 | |
| 6438-5005 | VIVDS COMMUNICATION CABLE(COAXIAL) | M | 417 | 680 |
| 6438-5001 | VIVDS PROCESSOR SYSTEM } Provided By COSA | EA. | 1 | 2 |
| 6438-5002 | VIVDS CAMERA ASSEMBLY ** } Provided By COSA | EA. | 4 | 10 |
| 6438-5003 | VIVDS SET-UP SYSTEM * } Provided By COSA | EA. | 1 | |
| 6438-5005 | VIVDS COMMUNICATION CABLE(COAXIAL) | M | 200 | 0 |
| 6438-5007 | VIVDS TEMPORARY | EA. | 1 | |
| **- - | BRACKET ASSY (SYMBOLIC PEDESTRIAN HEAD) | EA. | 12 | |
| ***- - | ASTRO-BRAC SIGNAL HEAD MOUNTS | EA. | 14 | 16 |
| ***- - | MAST ARMS SIGN MOUNTS (VARIOUS SIZES) | EA. | 8 | |
| | | | | |

## MATERIALS TO BE FURNISHED AND INSTALLED BY THE CONTRACTOR

| ITEM NO. | DESCRIPTION | UNIT | QUAN. |
|---|---|---|---|
| 6298-5001 | 300 MM LED TRAF SIGNAL LAMP(RED) | EA. | 16 |
| 6298-5002 | 300 MM LED TRAF SIGNAL LAMP(YELLOW) | EA. | 14 |
| 6298-5003 | 300 MM LED TRAF SIGNAL LAMP(GREEN) SUB. TO Item 682 | EA. | 14 |
| 6298-5004 | 300 MM LED TRAF SIGNAL LAMP(YEL ARW) | EA. | 4 |
| 6298-5005 | 300 MM LED TRAF SIGNAL LAMP(GRN ARW) | EA. | 4 |
| 8230-0501 | LED PED SIG LAMP (SYMB)(2 IND/1 SEC) | EA. | 12 |
| | | | |
| | | | |

## MATERIALS TO BE FURNISHED BY COSA AND INSTALLED BY THE CONTRACTOR

| DESCRIPTION | UNIT | QUANTITY |
|---|---|---|
| CONTROLLER WITH CABINET(TY 332) | EA. | 1 |
| SR10-12 SIGN (FURNISH ONLY) | EA. | 2 |
| R10-4b PUSH BUTTON SIGN (FURNISH ONLY) | EA. | 12 |
| SIGNS, METRO STREET NAME (FURNISH ONLY) | EA. | 6 |
| R10-10L SIGN (FURNISH ONLY) | EA. | 2 |

CHANGE ORDER NO. 104

-CHANGED QUANTITIES TO REFLECT REVISIONS

-~~ADDED LED SIGNAL SECTIONS~~

* -FOR CONTRACTOR'S INFORMATION ONLY.

** SUBSIDIARY TO ITEM 0682

*** SUBSIDIARY TO ITEM 0680

STATE OF TEXAS
MARC S. JACOBSON
89335
LICENSED PROFESSIONAL ENGINEER

Marc S. Jacobson, P.E. 12/27/2005
Marc S. Jacobson, P.E. Date

SHEET 5 OF 5

# LOOP 1604
## TRAFFIC SIGNAL INTERSECTION LAYOUT
## LOOP 1604 AT WISEMAN BLVD.

©2005 Texas Department of Transportation

CHANGE ORDER NO. 104

REVISED SHEET

| FED.RD. DIV.NO. | FEDERAL AID PROJECT NO. | | SHEET NO. |
|---|---|---|---|
| 6 | NH 2000(704),Etc. | | 564II |
| STATE | DIST. | COUNTY | |
| TEXAS | SAT | BEXAR | |
| CONT. | SECT. | JOB | HIGHWAY NO. |
| 2452 | 01 | 036,Etc. | LOOP 1604 |

LEVELS DISPLAYED
1 2 3 4 5 6 7 8 9 10 11 12 13 14 15 16
17 18 19 20 21 22 23 24 25 26 27 28 29 30 31 32
33 34 35 36 37 38 39 40 41 42 43 44 45 46 47 48
49 50 51 52 53 54 55 56 57 58 59 60 61 62
ACC:
FILE: .DGN
12/23/2005 11:41:30 PM
u:\tpgpw010\jesse\bexar\loop1604\loop1604fisemarCO.dgn

## SIGNAL FACES

300 mm SIGNAL SECTIONS

SIGNAL NO. 1 (R Y G)

SIGNAL NO. 2 (Y G / R Y ⇐ ⇐ G)

SIGNAL NO. 3

## LEGEND

- PROP. LOOP DETECTOR
- PROP. GROUND BOX (TYPE "A")
- PROP. GROUND BOX (TYPE "D")
- PROP. 75 mm PVC SCHEDULE 80
- PROP. 50 mm PVC SCHEDULE 80
- PROP. 32 mm PVC SCHEDULE 80
- PROP. MAST ARM POLE AND FOUNDATION
- PROP. SIGNAL FACE
- PROP. CONTROLLER, SLAB AND FOUNDATION
- PROP. PEDESTRIAN SIGNAL HEAD WITH PUSH BUTTON
- PROP. PEDESTAL POLE AND FOUNDATION
- PROP. ELECTRICAL SERVICE
- TMS MANHOLE (BY OTHERS)

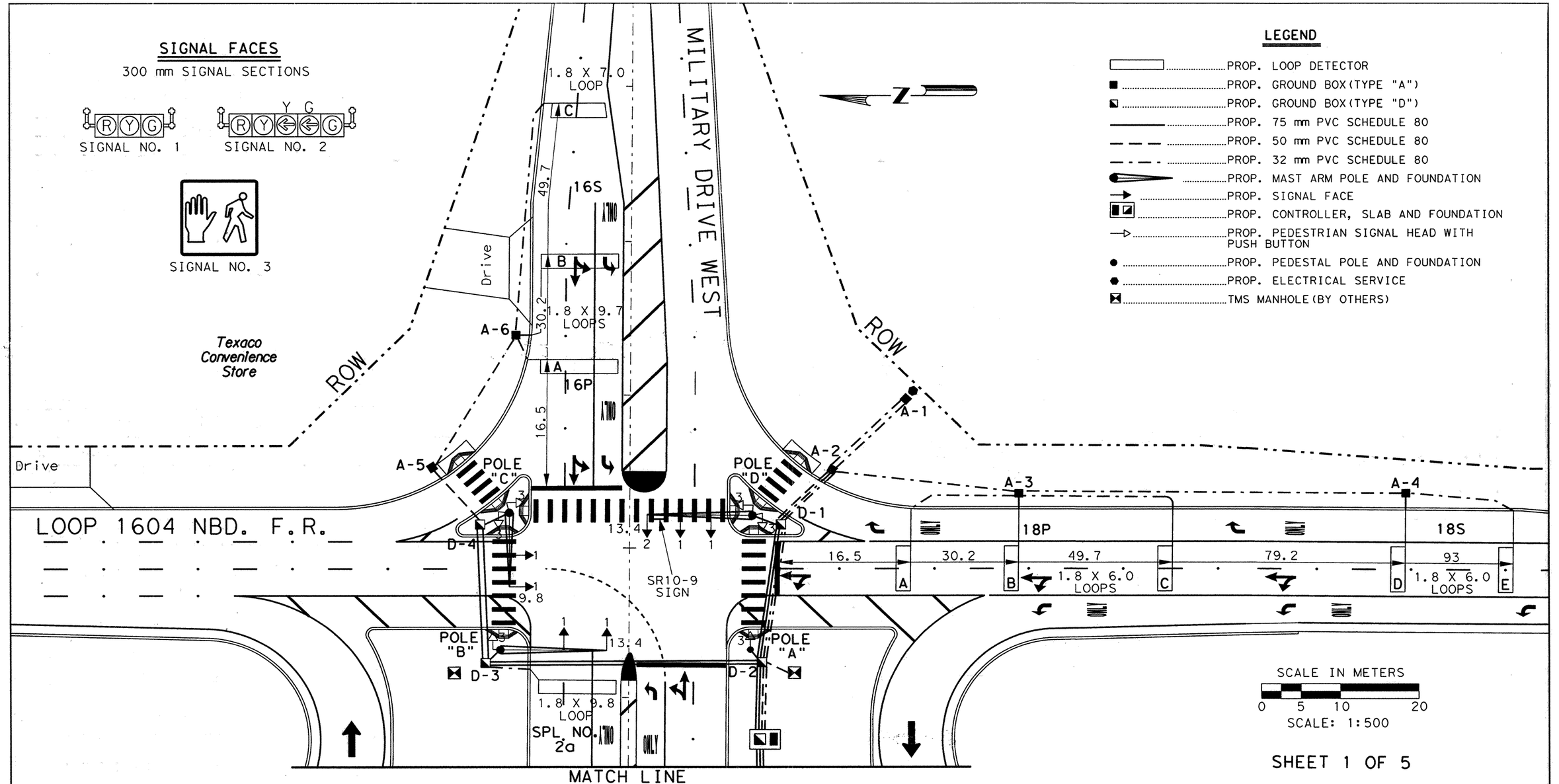


SCALE IN METERS

0 5 10 20

SCALE: 1:500

SHEET 1 OF 5

# TRAFFIC SIGNAL INTERSECTION LAYOUT

## LOOP 1604 FRONTAGE RDS. AT MILITARY DRIVE WEST

**NOTES:**

THE ENGINEER SHALL CONTACT MR. GILBERT MEIER (TXDOT SIGNAL SHOP) AT 615-5975 96 HOURS PRIOR TO CONSTRUCTION, PRIOR TO PICKING UP STATE FURNISHED MATERIALS AND PRIOR TO CONNECTING FIELD WIRING TO CONTROLLER.

STATE FORCES SHALL CONNECT FIELD WIRING TO CONTROLLER.

ALL PVC SHALL BE SCHEDULE 80.

ALL DIMENSIONS SHOWN ARE IN METERS UNLESS SPECIFIED OTHERWISE.

STATE OF TEXAS
ARNULFO RAMIREZ
56890
REGISTERED PROFESSIONAL ENGINEER

Arnulfo Ramirez, P.E. — Date 9-18-00

©2000 Texas Department of Transportation

| FED. RD. DIV. NO. | FEDERAL AID PROJECT NO. | | SHEET NO. |
|---|---|---|---|
| 6 | NH 2000(704), Etc. | | 565 |
| STATE | DIST. | COUNTY | |
| TEXAS | SAT | BEXAR | |
| CONT. | SECT. | JOB | HIGHWAY NO. |
| 2452 | 01 | 036, Etc. | LOOP 1604 |

Plotted on: $DATE$

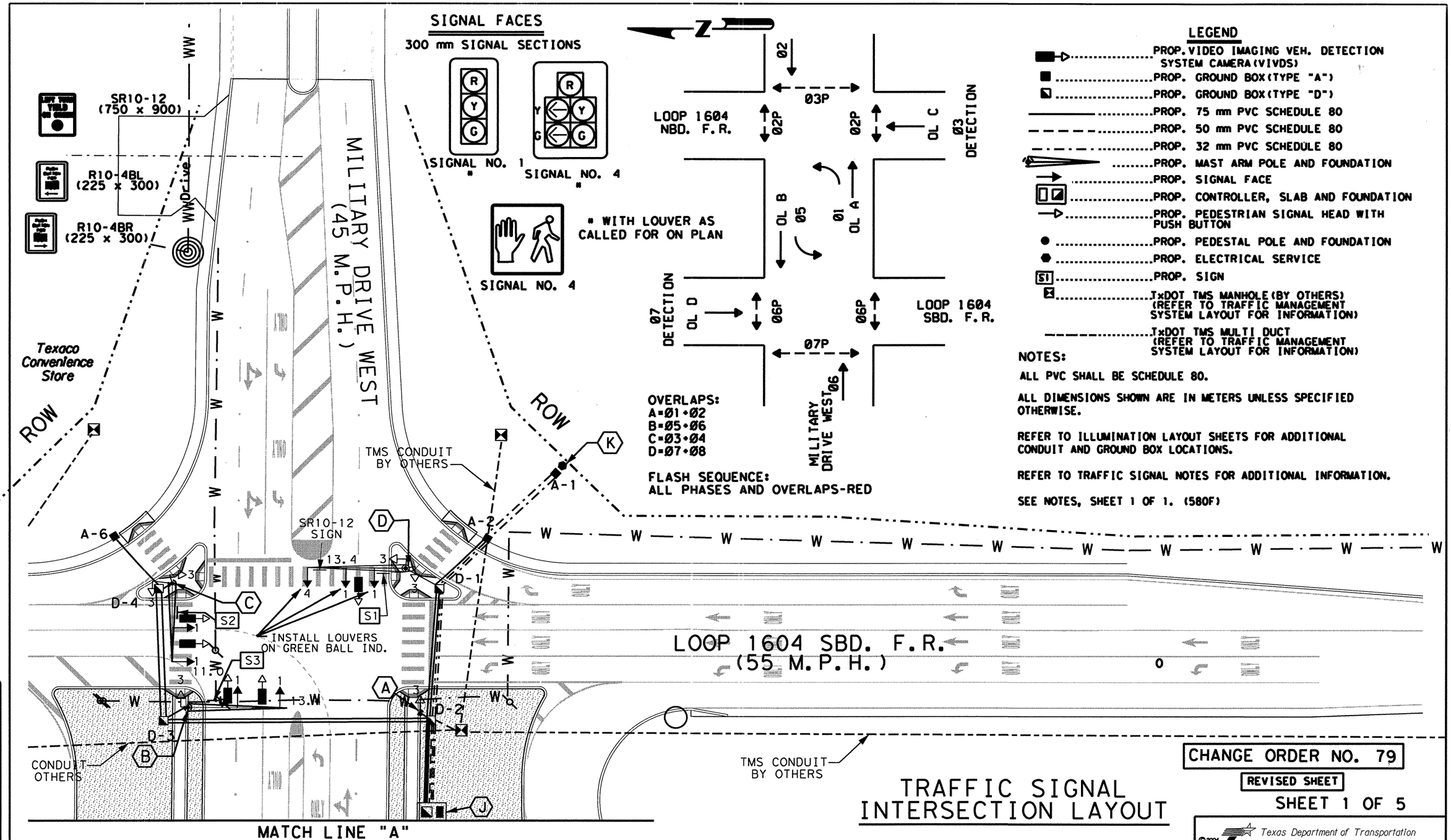


## SIGNAL FACES

300 mm SIGNAL SECTIONS







* WITH LOUVER AS CALLED FOR ON PLAN

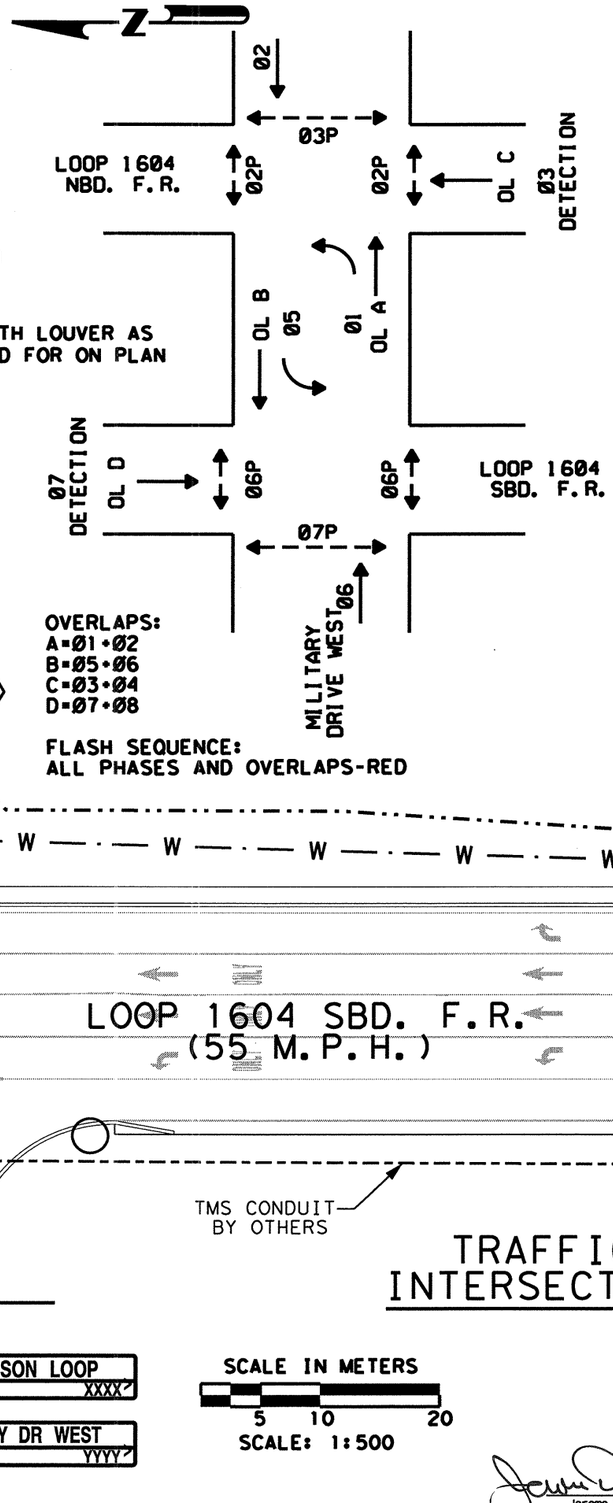


OVERLAPS:
A=01+02
B=05+06
C=03+04
D=07+08

FLASH SEQUENCE:
ALL PHASES AND OVERLAPS-RED

## LEGEND

- PROP. VIDEO IMAGING VEH. DETECTION SYSTEM CAMERA (VIVDS)
- PROP. GROUND BOX (TYPE "A")
- PROP. GROUND BOX (TYPE "D")
- PROP. 75 mm PVC SCHEDULE 80
- PROP. 50 mm PVC SCHEDULE 80
- PROP. 32 mm PVC SCHEDULE 80
- PROP. MAST ARM POLE AND FOUNDATION
- PROP. SIGNAL FACE
- PROP. CONTROLLER, SLAB AND FOUNDATION
- PROP. PEDESTRIAN SIGNAL HEAD WITH PUSH BUTTON
- PROP. PEDESTAL POLE AND FOUNDATION
- PROP. ELECTRICAL SERVICE
- S1 PROP. SIGN
- TxDOT TMS MANHOLE (BY OTHERS) (REFER TO TRAFFIC MANAGEMENT SYSTEM LAYOUT FOR INFORMATION)
- TxDOT TMS MULTI DUCT (REFER TO TRAFFIC MANAGEMENT SYSTEM LAYOUT FOR INFORMATION)

NOTES:

ALL PVC SHALL BE SCHEDULE 80.

ALL DIMENSIONS SHOWN ARE IN METERS UNLESS SPECIFIED OTHERWISE.

REFER TO ILLUMINATION LAYOUT SHEETS FOR ADDITIONAL CONDUIT AND GROUND BOX LOCATIONS.

REFER TO TRAFFIC SIGNAL NOTES FOR ADDITIONAL INFORMATION.

SEE NOTES, SHEET 1 OF 1. (580F)

CHANGE ORDER NO. 79
-REVISED RDWY GEOMETRICS AND LANE CONFIGURATIONS
-REPLACES LOOP DECTECTORS w/VIVDS
-REVISIONS TO ACCOMMODATE COSA SPECS

S1 ANDERSON LOOP <XXXX YYYY>

S2 MILITARY DR WEST <YYYY XXXX>

S3 ANDERSON LOOP <YYYY XXXX>

S4 MILITARY DR WEST <XXXX YYYY>

SCALE IN METERS
5 10 20
SCALE: 1:500

# TRAFFIC SIGNAL INTERSECTION LAYOUT

STATE OF TEXAS
JEROME D. PAVLISKA
76075
REGISTERED PROFESSIONAL ENGINEER

Jerome D. Pavliska P.E. 4-23-04
Jerome D. Pavliska, P.E. — Date

CHANGE ORDER NO. 79

REVISED SHEET

SHEET 1 OF 5

©2004 Texas Department of Transportation

LOOP 1604
TRAFFIC SIGNAL INTERSECTION LAYOUT
LOOP 1604 AT MILITARY DRIVE WEST

| FED.RD. DIV.NO. | FEDERAL AID PROJECT NO. | | SHEET NO. |
|---|---|---|---|
| 6 | NH 2000(704), Etc. | | 565 A |
| STATE | DIST. | COUNTY | |
| TEXAS | SAT | BEXAR | |
| CONT. | SECT. | JOB | HIGHWAY NO. |
| 2452 | 01 | 036, Etc. | LOOP 1604 |

Design Filename: $FILE$
DRAWN: ((CAD SYSTEM)) CHECKED: ACC: FILE: .DGN

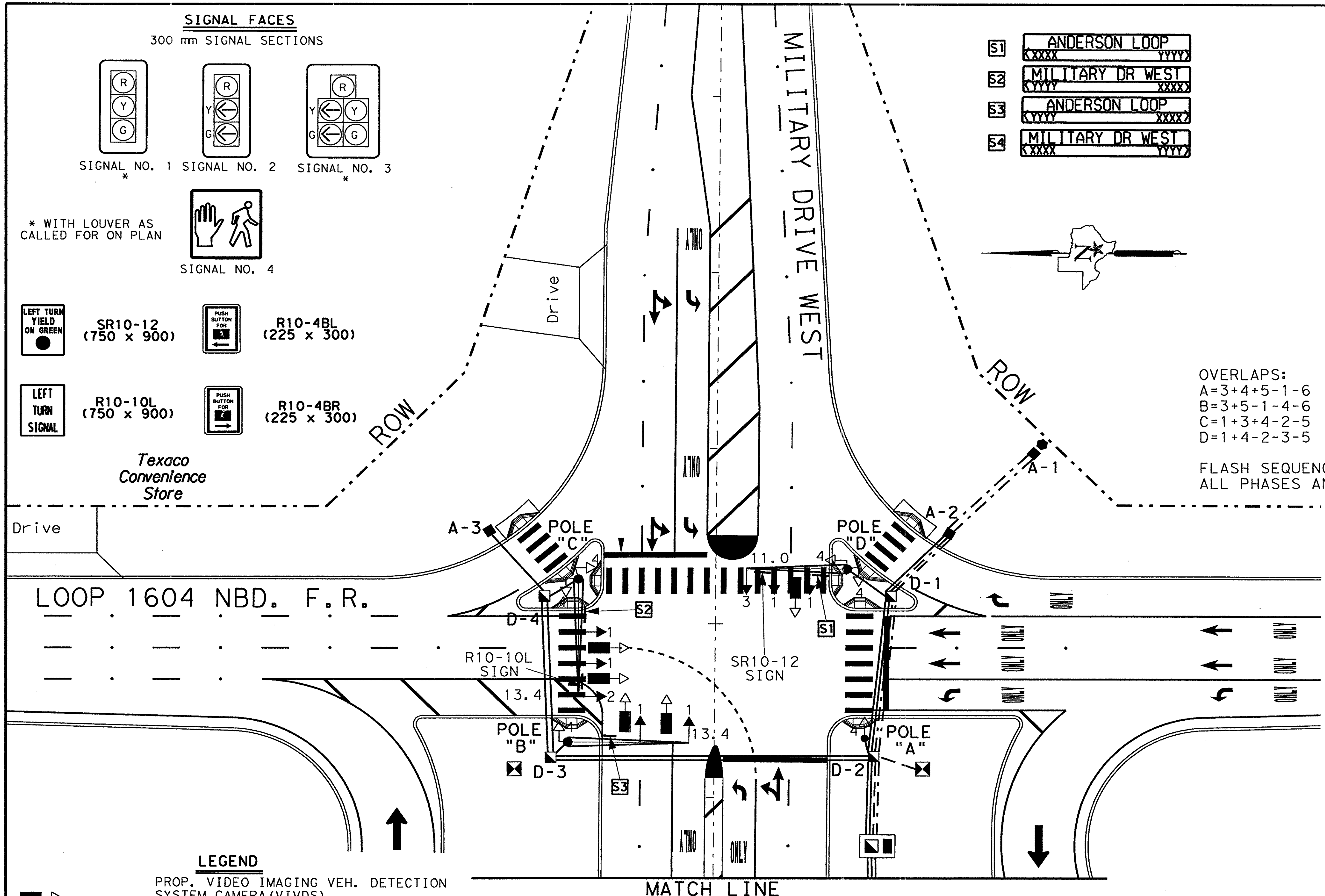


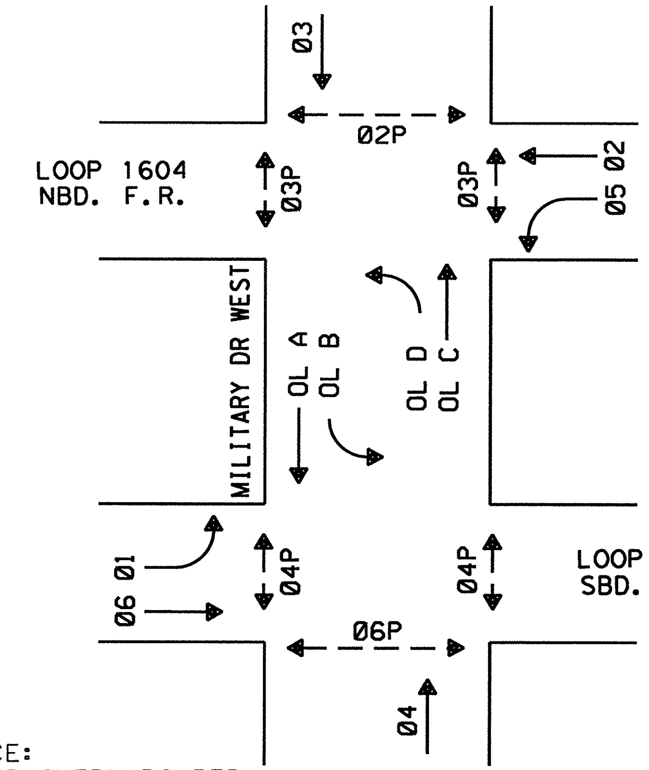


**CHANGE ORDER NO. 104**

- SWAPPED SIGNAL POLES "C" & "D"
- ADDED 3-SECTION HEAD AND SIGN FOR LEFT TURNS ON LOOP 1604 F.R.
- ~~ADDED LED SIGNAL SECTIONS~~

SCALE IN METERS
0 5 10 20
SCALE: 1:500

CHANGE ORDER NO. 104

REVISED SHEET

SHEET 1 OF 5

# TRAFFIC SIGNAL INTERSECTION LAYOUT

## LOOP 1604 FRONTAGE RDS. AT MILITARY DRIVE WEST

## LEGEND

| | |
|---|---|
| ▬▷ | PROP. VIDEO IMAGING VEH. DETECTION SYSTEM CAMERA (VIVDS) |
| ■ | PROP. GROUND BOX (TYPE "A") |
| ◪ | PROP. GROUND BOX (TYPE "D") |
| ——— | PROP. 75 mm PVC SCHEDULE 80 |
| — — — | PROP. 75 mm PVC SCHEDULE 80 |
| — · — | PROP. 32 mm PVC SCHEDULE 80 |
| ●— | PROP. MAST ARM POLE AND FOUNDATION |
| → | PROP. SIGNAL FACE |
| ■◪ | PROP. CONTROLLER, SLAB AND FOUNDATION |
| —▷ | PROP. PEDESTRIAN SIGNAL HEAD WITH PUSH BUTTON |
| ● | PROP. PEDESTAL POLE AND FOUNDATION |
| ⬢ | PROP. ELECTRICAL SERVICE |
| ⧗ | TMS MANHOLE (BY OTHERS) |

**NOTES:**

ALL PVC SHALL BE SCHEDULE 80.

ALL DIMENSIONS SHOWN ARE IN METERS UNLESS SPECIFIED OTHERWISE.

SEE NOTES, SHEET 1 OF 1. (580F)

CONTRACTOR SHALL INSTALL LOUVERS ON GREEN BALL INDICATIONS ON SIGNAL POLE "B".

STATE OF TEXAS
MARC S. JACOBSON
89335
LICENSED PROFESSIONAL ENGINEER

Marc S. Jacobson, P.E. 12/27/2005
Marc S. Jacobson, P.E. — Date

©2005 Texas Department of Transportation

| FED. RD. DIV. NO. | FEDERAL AID PROJECT NO. | | SHEET NO. |
|---|---|---|---|
| 6 | NH 2000(704),Etc. | | 565B |
| STATE | DIST. | COUNTY | |
| TEXAS | SAT | BEXAR | |
| CONT. | SECT. | JOB | HIGHWAY NO. |
| 2452 | 01 | 036,Etc. | LOOP 1604 |

LEVELS DISPLAYED
1 2 3 4 5 6 7 8 9 10 11 12 13 14 15 16 17 18 19 20 21 22 23 24 25 26 27 28 29 30 31 32 33 34 35 36 37 38 39 40 41 42 43 44 45 46 47 48 49 50 51 52 53 54 55 56 57 58 59 60 61 62 63
ACC:
FILE: .DGN

## LEGEND

- PROP. LOOP DETECTOR
- PROP. GROUND BOX (TYPE "A")
- PROP. GROUND BOX (TYPE "D")
- PROP. 75 mm PVC SCHEDULE 80
- PROP. 50 mm PVC SCHEDULE 80
- PROP. 32 mm PVC SCHEDULE 80
- PROP. MAST ARM POLE AND FOUNDATION
- PROP. SIGNAL FACE
- PROP. CONTROLLER, SLAB AND FOUNDATION
- PROP. PEDESTRIAN SIGNAL HEAD WITH PUSH BUTTON
- PROP. PEDESTAL POLE AND FOUNDATION
- PROP. ELECTRICAL SERVICE

## SIGNAL FACES

300 mm SIGNAL SECTIONS

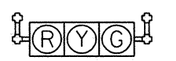


SIGNAL NO. 1

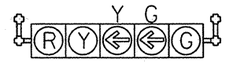


SIGNAL NO. 2

SIGNAL NO. 3

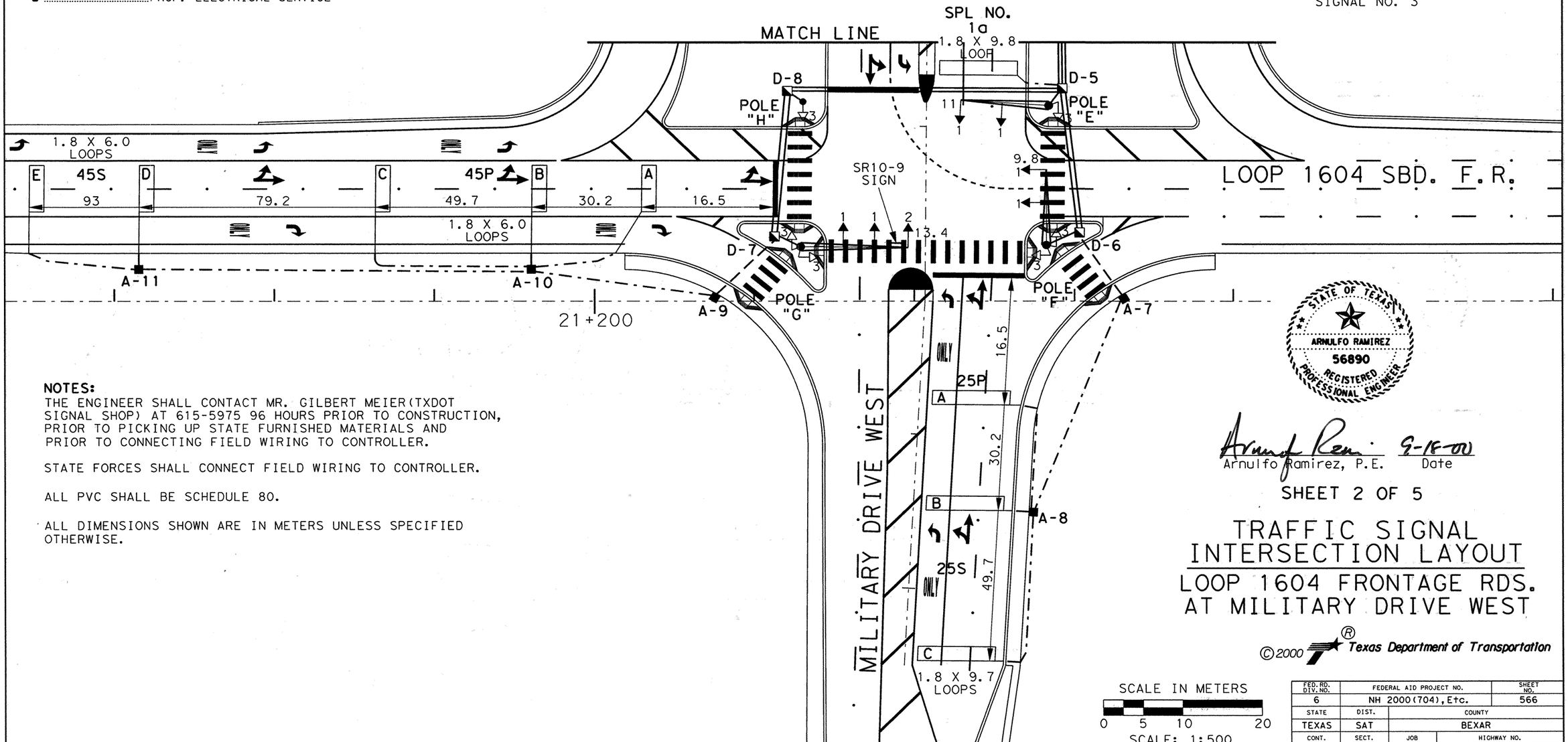


**NOTES:**

THE ENGINEER SHALL CONTACT MR. GILBERT MEIER (TXDOT SIGNAL SHOP) AT 615-5975 96 HOURS PRIOR TO CONSTRUCTION, PRIOR TO PICKING UP STATE FURNISHED MATERIALS AND PRIOR TO CONNECTING FIELD WIRING TO CONTROLLER.

STATE FORCES SHALL CONNECT FIELD WIRING TO CONTROLLER.

ALL PVC SHALL BE SCHEDULE 80.

ALL DIMENSIONS SHOWN ARE IN METERS UNLESS SPECIFIED OTHERWISE.

STATE OF TEXAS
ARNULFO RAMIREZ
56890
REGISTERED PROFESSIONAL ENGINEER

Arnulfo Ramirez, P.E. — Date: 9-15-00

SHEET 2 OF 5

# TRAFFIC SIGNAL INTERSECTION LAYOUT

## LOOP 1604 FRONTAGE RDS. AT MILITARY DRIVE WEST

©2000 Texas Department of Transportation

SCALE IN METERS

0 5 10 20

SCALE: 1:500

| FED. RD. DIV. NO. | FEDERAL AID PROJECT NO. | | SHEET NO. |
|---|---|---|---|
| 6 | NH 2000(704), Etc. | | 566 |
| STATE | DIST. | COUNTY | |
| TEXAS | SAT | BEXAR | |
| CONT. | SECT. | JOB | HIGHWAY NO. |
| 2452 | 01 | 036, Etc. | LOOP 1604 |

NOTES:
ALL PVC SHALL BE SCHEDULE 80.

ALL DIMENSIONS SHOWN ARE IN METERS UNLESS SPECIFIED OTHERWISE.

REFER TO ILLUMINATION LAYOUT SHEETS FOR ADDITIONAL CONDUIT AND GROUND BOX LOCATIONS.

REFER TO TRAFFIC SIGNAL NOTES FOR ADDITIONAL INFORMATION.

SEE NOTES, SHEET 1 OF 1. (580F)

## SIGNAL FACES

300 mm SIGNAL SECTIONS

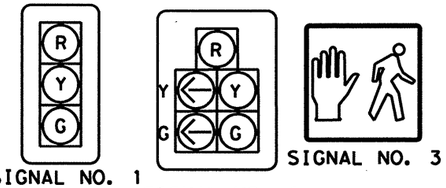


SIGNAL NO. 1 *

SIGNAL NO. 4 *

SIGNAL NO. 3

* WITH LOUVER AS CALLED FOR ON PLAN

S1 ANDERSON LOOP <XXXX YYYY>

S2 MILITARY DR WEST <YYYY XXXX>

S3 ANDERSON LOOP <YYYY XXXX>

S4 MILITARY DR WEST <XXXX YYYY>

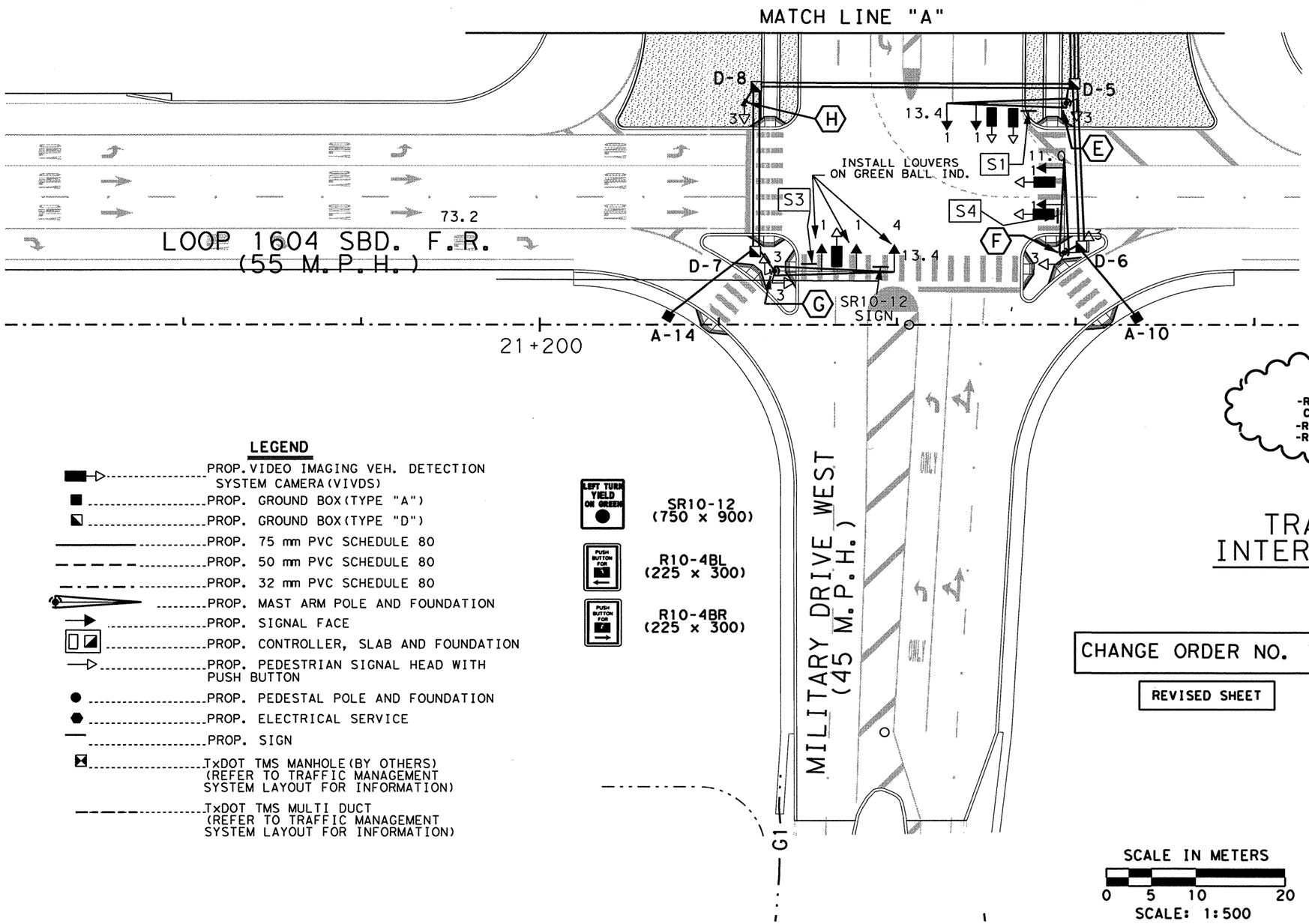


CHANGE ORDER NO. 79

-REVISED RDWY GEOMETRICS AND LANE CONFIGURATIONS
-REPLACES LOOP DECTECTORS w/VIVDS
-REVISIONS TO ACCOMMODATE COSA SPECS

## LEGEND

- PROP. VIDEO IMAGING VEH. DETECTION SYSTEM CAMERA (VIVDS)
- PROP. GROUND BOX (TYPE "A")
- PROP. GROUND BOX (TYPE "D")
- PROP. 75 mm PVC SCHEDULE 80
- PROP. 50 mm PVC SCHEDULE 80
- PROP. 32 mm PVC SCHEDULE 80
- PROP. MAST ARM POLE AND FOUNDATION
- PROP. SIGNAL FACE
- PROP. CONTROLLER, SLAB AND FOUNDATION
- PROP. PEDESTRIAN SIGNAL HEAD WITH PUSH BUTTON
- PROP. PEDESTAL POLE AND FOUNDATION
- PROP. ELECTRICAL SERVICE
- PROP. SIGN
- TxDOT TMS MANHOLE (BY OTHERS) (REFER TO TRAFFIC MANAGEMENT SYSTEM LAYOUT FOR INFORMATION)
- TxDOT TMS MULTI DUCT (REFER TO TRAFFIC MANAGEMENT SYSTEM LAYOUT FOR INFORMATION)




SR10-12 (750 x 900)




R10-4BL (225 x 300)




R10-4BR (225 x 300)

SCALE IN METERS
0 5 10 20
SCALE: 1:500

# TRAFFIC SIGNAL INTERSECTION LAYOUT

SHEET 2 OF 5

CHANGE ORDER NO. 79

REVISED SHEET

Jerome D. Pavliska, P.E. 4-23-04
Jerome D. Pavliska, P.E. Date

©2004 Texas Department of Transportation

LOOP 1604
TRAFFIC SIGNAL INTERSECTION LAYOUT
LOOP 1604 AT MILITARY DRIVE WEST

| FED. RD. DIV. NO. | FEDERAL AID PROJECT NO. | | SHEET NO. |
|---|---|---|---|
| 6 | NH 2000(704), Etc. | | 566 A |
| STATE | DIST. | COUNTY | |
| TEXAS | SAT | BEXAR | |
| CONT. | SECT. | JOB | HIGHWAY NO. |
| 2452 | 01 | 036, Etc. | LOOP 1604 |

LEVELS DISPLAYED
1 2 3 4 5 6 7 8 9 10 11 12 13 14 15 16 17 18 19 20 21 22 23 24 25 26 27 28 29 30 31 32 33 34 35 36 37 38 39 40 41 42 43 44 45 46 47 48 49 50 51 52 53 54 55 56 57 58 59 60 61 62 63

ACC:

FILE: .DGN

Plotted on: $DATE$

Design Filename: $FILE$

## SIGNAL FACES

300 mm SIGNAL SECTIONS

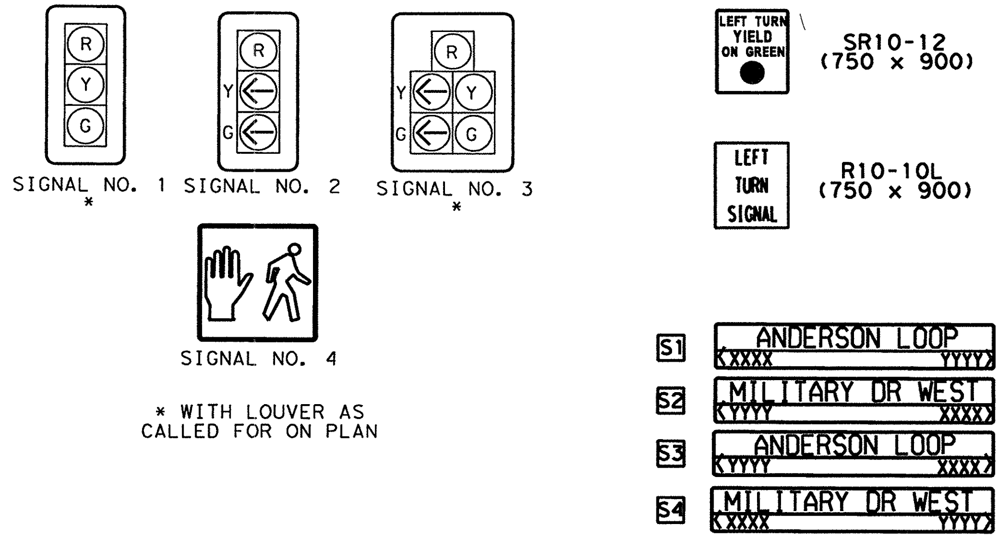


* WITH LOUVER AS CALLED FOR ON PLAN

## LEGEND

- PROP. VIDEO IMAGING VEH. DETECTION SYSTEM CAMERA (VIVDS)
- PROP. GROUND BOX (TYPE "D")
- PROP. 75 mm PVC SCHEDULE 80
- PROP. 50 mm PVC SCHEDULE 80
- PROP. MAST ARM POLE AND FOUNDATION
- PROP. SIGNAL FACE
- PROP. PEDESTRIAN SIGNAL HEAD WITH PUSH BUTTON
- PROP. PEDESTAL POLE AND FOUNDATION

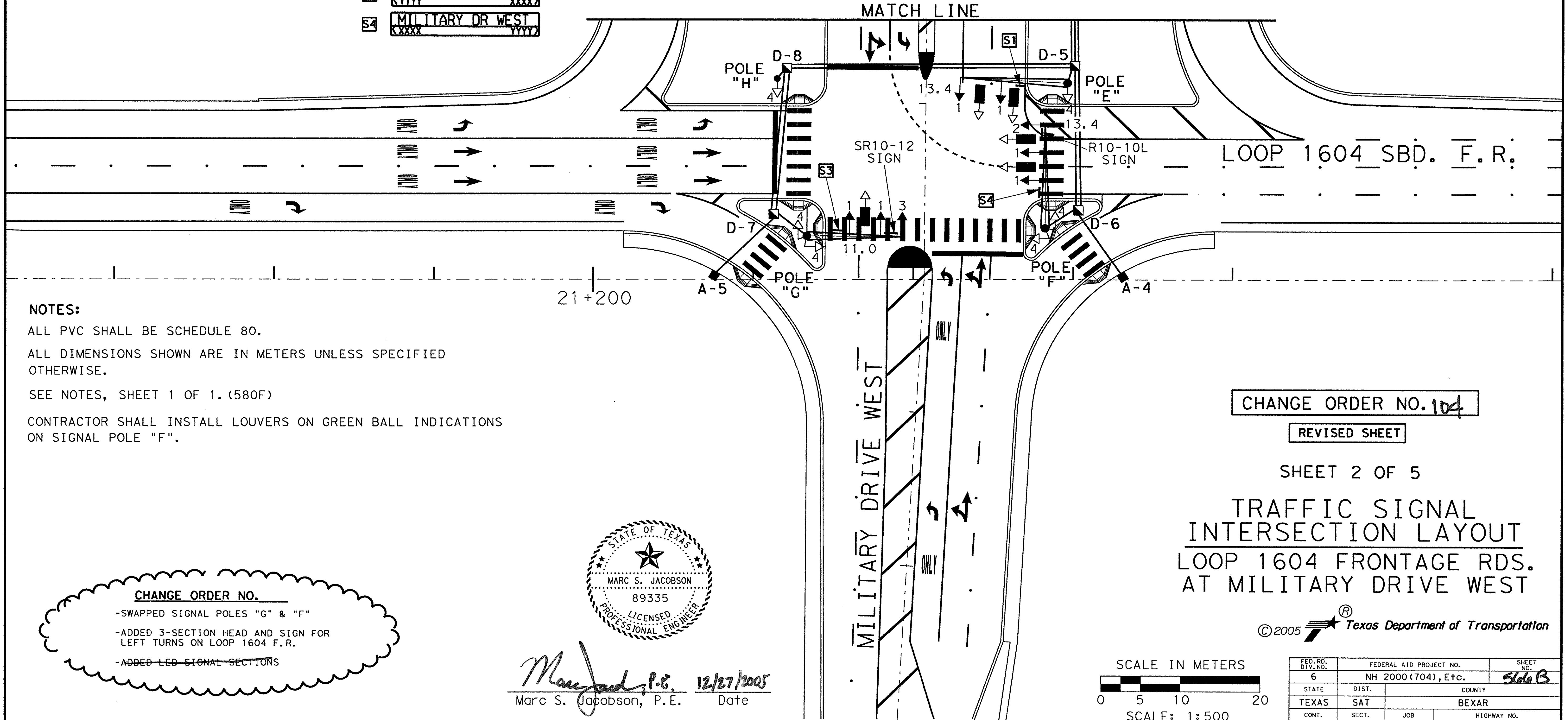


**NOTES:**

ALL PVC SHALL BE SCHEDULE 80.

ALL DIMENSIONS SHOWN ARE IN METERS UNLESS SPECIFIED OTHERWISE.

SEE NOTES, SHEET 1 OF 1. (580F)

CONTRACTOR SHALL INSTALL LOUVERS ON GREEN BALL INDICATIONS ON SIGNAL POLE "F".

**CHANGE ORDER NO.**

- SWAPPED SIGNAL POLES "G" & "F"
- ADDED 3-SECTION HEAD AND SIGN FOR LEFT TURNS ON LOOP 1604 F.R.
- ~~ADDED LED SIGNAL SECTIONS~~

STATE OF TEXAS
MARC S. JACOBSON
89335
LICENSED PROFESSIONAL ENGINEER

Marc S. Jacobson, P.E. — 12/27/2005
Date

CHANGE ORDER NO. 104

REVISED SHEET

SHEET 2 OF 5

# TRAFFIC SIGNAL INTERSECTION LAYOUT

## LOOP 1604 FRONTAGE RDS. AT MILITARY DRIVE WEST

©2005 Texas Department of Transportation

SCALE IN METERS
0 5 10 20
SCALE: 1:500

| FED. RD. DIV. NO. | FEDERAL AID PROJECT NO. | | SHEET NO. |
|---|---|---|---|
| 6 | NH 2000(704), Etc. | | 566B |
| STATE | DIST. | COUNTY | |
| TEXAS | SAT | BEXAR | |
| CONT. | SECT. | JOB | HIGHWAY NO. |
| 2452 | 01 | 036, Etc. | LOOP 1604 |

LEVELS DISPLAYED
ACC:
FILE: .DGN

## POLE AND CABLE SCHEDULE

| POLE NO. | SIGNAL CABLE | | | ELEC CONDR |
|---|---|---|---|---|
| | 7/C#12 | 4/C#12 | 2/C#14 | 1/C#6 BARE |
| A | - | 1 | 1 | 1 |
| B | 2 | 1 | 1 | 1 |
| C | 2 | 2 | 2 | 1 |
| D | 3 | 2 | 2 | 1 |
| | | | | |

## LEGEND

- PROP. LOOP DETECTOR
- PROP. GROUND BOX (TYPE "A")
- PROP. GROUND BOX (TYPE "D")
- PROP. 75 mm PVC SCHEDULE 80
- PROP. 50 mm PVC SCHEDULE 80
- PROP. 32 mm PVC SCHEDULE 80
- PROP. MAST ARM POLE AND FOUNDATION
- PROP. SIGNAL FACE
- PROP. CONTROLLER, SLAB AND FOUNDATION
- PROP. PEDESTRIAN SIGNAL HEAD WITH PUSH BUTTON
- PROP. PEDESTAL POLE AND FOUNDATION
- PROP. ELECTRICAL SERVICE
- TMS MANHOLE (BY OTHERS)

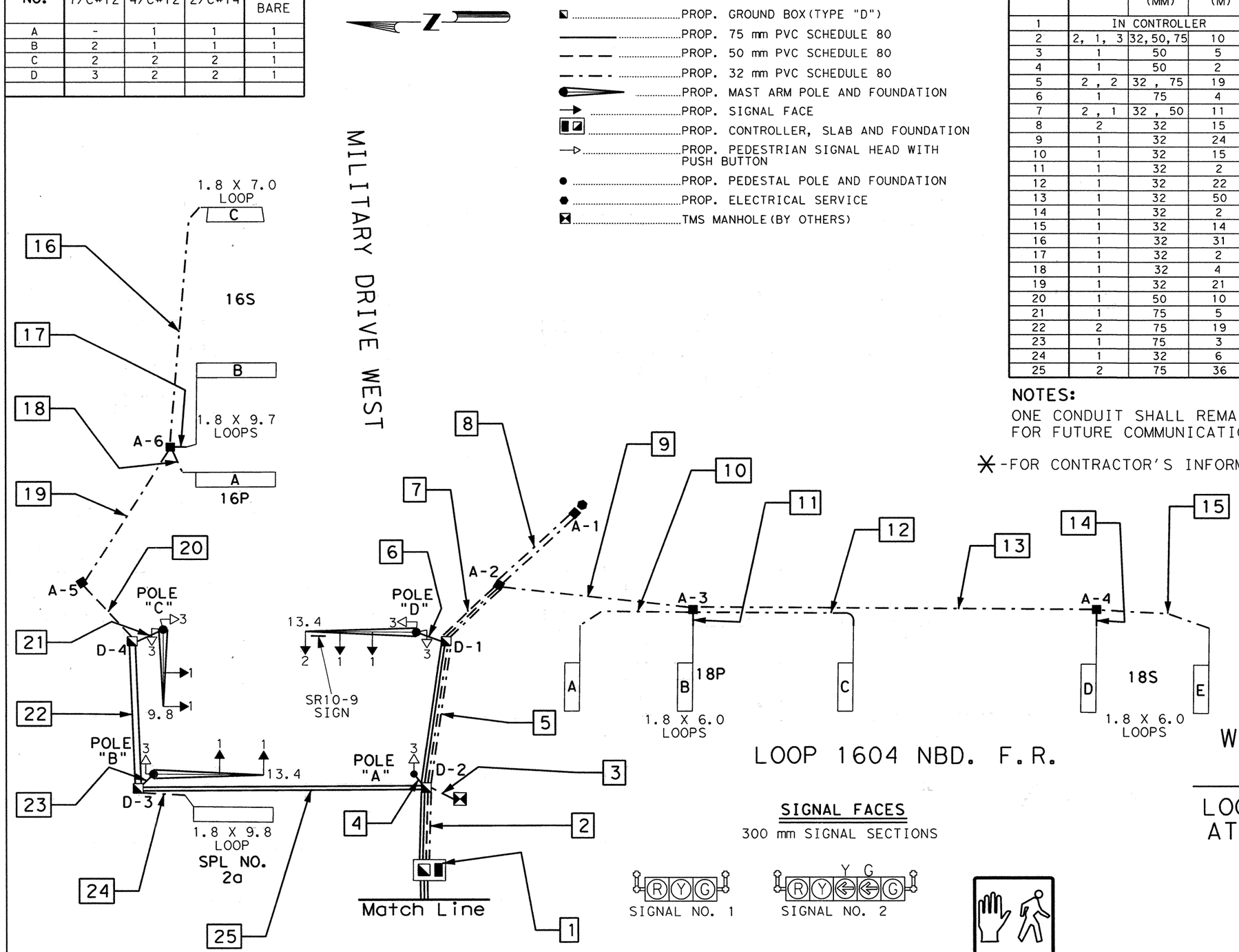


LOOP 1604 NBD. F.R.

## SIGNAL FACES

300 mm SIGNAL SECTIONS




SIGNAL NO. 1




SIGNAL NO. 2



SIGNAL NO. 3

## CONDUIT AND CABLE SCHEDULE

| RUN NO. | CONDUIT (PVC) | | | SIGNAL CABLE | | | | ELEC CONDR | |
|---|---|---|---|---|---|---|---|---|---|
| | NO. | SIZE (MM) | LENGTH (M) | 7/C#12 | 4/C#12 | 2/C#14 | 1/C#14 * | 1/C#6 | 1/C#6 BARE |
| 1 | IN CONTROLLER | | | 6 | 12 | 22 | - | 2 | 2 |
| 2 | 2, 1, 3 | 32, 50, 75 | 10 | 3 | 6 | 11 | - | 2 | 1 |
| 3 | 1 | 50 | 5 | - | - | - | - | - | - |
| 4 | 1 | 50 | 2 | - | 1 | 1 | - | - | 1 |
| 5 | 2 , 2 | 32 , 75 | 19 | 1 | 2 | 4 | - | 2 | 1 |
| 6 | 1 | 75 | 4 | 1 | 2 | 2 | - | - | 1 |
| 7 | 2 , 1 | 32 , 50 | 11 | - | - | 2 | - | 2 | 1 |
| 8 | 2 | 32 | 15 | - | - | - | - | 2 | 1 |
| 9 | 1 | 32 | 24 | - | - | 2 | - | - | - |
| 10 | 1 | 32 | 15 | - | - | - | 2 | - | - |
| 11 | 1 | 32 | 2 | - | - | - | 2 | - | - |
| 12 | 1 | 32 | 22 | - | - | - | 2 | - | - |
| 13 | 1 | 32 | 50 | - | - | 1 | - | - | - |
| 14 | 1 | 32 | 2 | - | - | - | 2 | - | - |
| 15 | 1 | 32 | 14 | - | - | - | 2 | - | - |
| 16 | 1 | 32 | 31 | - | - | - | 2 | - | - |
| 17 | 1 | 32 | 2 | - | - | - | 2 | - | - |
| 18 | 1 | 32 | 4 | - | - | - | 2 | - | - |
| 19 | 1 | 32 | 21 | - | - | 2 | - | - | - |
| 20 | 1 | 50 | 10 | - | - | 2 | - | - | - |
| 21 | 1 | 75 | 5 | 1 | 2 | 2 | - | - | 1 |
| 22 | 2 | 75 | 19 | 1 | 2 | 4 | - | - | 1 |
| 23 | 1 | 75 | 3 | 1 | 1 | 1 | - | - | 1 |
| 24 | 1 | 32 | 6 | - | - | - | 2 | - | - |
| 25 | 2 | 75 | 36 | 2 | 3 | 6 | - | - | 1 |

**NOTES:**

ONE CONDUIT SHALL REMAIN OPEN IN RUN #2 (50 mm) FOR FUTURE COMMUNICATION CABLE (TMS).

* - FOR CONTRACTOR'S INFORMATION ONLY.

STATE OF TEXAS
ARNULFO RAMIREZ
56890
REGISTERED PROFESSIONAL ENGINEER

Arnulfo Ramirez, P.E. 9-18-00
Date

SHEET 3 OF 5

# TRAFFIC SIGNAL WIRING DIAGRAM AND CONDUIT LAYOUT

## LOOP 1604 FRONTAGE RDS. AT MILITARY DRIVE WEST

©2000 Texas Department of Transportation

| FED. RD. DIV. NO. | FEDERAL AID PROJECT NO. | | SHEET NO. |
|---|---|---|---|
| 6 | NH 2000 (704), Etc. | | 567 |
| STATE | DIST. | COUNTY | |
| TEXAS | SAT | BEXAR | |
| CONT. | SECT. | JOB | HIGHWAY NO. |
| 2452 | 01 | 036, Etc. | LOOP 1604 |

Plotted on: $DATE$

| POLE AND CABLE SCHEDULE | | | |
|---|---|---|---|
| POLE NO. | SIGNAL CABLE | | ELEC CONDR |
| | 7/C#14 | 9/C#14 | 1/C#8 BARE |
| A | - | 1 | 1 |
| B | 1 | 1 | 1 |
| C | 1 | 1 | 1 |
| D | 1 | 1 | 1 |
| | | | |

| CONDUIT AND CABLE SCHEDULE | | | | | | | | | |
|---|---|---|---|---|---|---|---|---|---|
| RUN NO. | CONDUIT (PVC) | | | SIGNAL CABLE | | | | ELEC CONDR | |
| | NO. | SIZE (MM) | LENGTH (M) | 7/C#14 (SIG) | 9/C#14 (PED) | 2/C#14 | 1/C#14 * | 1/C#6 | 1/C#8 BARE |
| 1 | IN CONTROLLER | | | 6 | 8 | - | - | 2 | 8 |
| 2 | 2, 1, 2 | 75, 50, 32 | 12 | 3 | 4 | - | - | 2 | 4 |
| 3 | 1 | 50 | 4 | - | - | - | - | - | - |
| 4 | 1 | 50 | 4 | - | 1 | - | - | - | 1 |
| 5 | 2, 2 | 32, 75 | 18 | 1 | 1 | - | - | 2 | 3 |
| 6 | 1 | 75 | 6 | 1 | 1 | - | - | - | 1 |
| 7 | 1 , 2 | 32, 75 | 10 | - | - | - | - | 2 | 2 |
| 9 | 2 | 32 | 70 | - | - | - | - | 2 | - |
| 16 | 2 | 75 | 37 | 2 | 2 | - | - | - | - |
| | | | | | | | | | |
| 18 | 1 | 75 | 4 | 1 | 1 | - | - | - | 1 |
| 19 | 2 | 75 | 18 | 1 | 1 | | - | - | 2 |
| 20 | 1 | 75 | 2 | 1 | 1 | - | - | - | 1 |
| 21 | 1 | 75 | 10 | - | - | - | - | - | 1 |

## LEGEND

- PROP. VIDEO IMAGING VEH. DETECTION SYSTEM CAMERA (VIVDS)
- PROP. GROUND BOX (TYPE "A")
- PROP. GROUND BOX (TYPE "D")
- PROP. 75 mm PVC SCHEDULE 80
- PROP. 50 mm PVC SCHEDULE 80
- PROP. 32 mm PVC SCHEDULE 80
- PROP. MAST ARM POLE AND FOUNDATION
- PROP. SIGNAL FACE
- PROP. CONTROLLER, SLAB AND FOUNDATION
- PROP. PEDESTRIAN SIGNAL HEAD WITH PUSH BUTTON
- PROP. PEDESTAL POLE AND FOUNDATION
- PROP. ELECTRICAL SERVICE
- TMS MANHOLE (BY OTHERS)
- SI PROP. SIGN

## SIGNAL FACES

300 mm SIGNAL SECTIONS

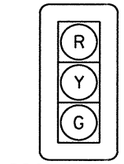


SIGNAL NO. 1 *

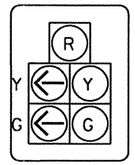


SIGNAL NO. 4 *

SIGNAL NO. 3

* WITH LOUVER AS CALLED FOR ON PLAN

MILITARY DRIVE WEST (45 M.P.H.)

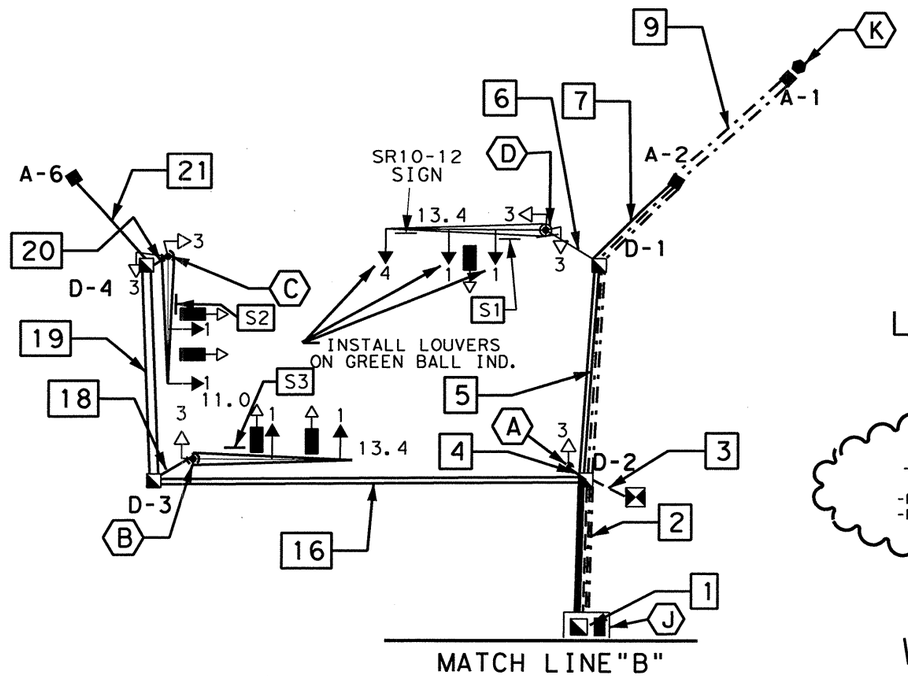


NOTES:

ONE CONDUIT SHALL REMAIN OPEN IN RUN #2 (50 mm) FOR FUTURE COMMUNICATION CABLE (TMS).

* -FOR CONTRACTOR'S INFORMATION ONLY.

# LOOP 1604 SBD. F.R. (55 M.P.H.)

**CHANGE ORDER NO. 79**

-REVISED RDWY GEOMETRICS AND LANE CONFIGURATIONS
-REPLACES LOOP DECTECTORS w/VIVDS
-REVISIONS TO ACCOMMODATE COSA SPECS

# TRAFFIC SIGNAL WIRING DIAGRAM AND CONDUIT LAYOUT

CHANGE ORDER NO. 79

REVISED SHEET

STATE OF TEXAS
JEROME D. PAVLISKA
76075
REGISTERED PROFESSIONAL ENGINEER

Jerome D. Pavliska, P.E 4-23-04
Jerome D. Pavliska, P.E. — Date

SHEET 3 OF 5

©2004 Texas Department of Transportation

LOOP 1604
TRAFFIC SIGNAL INTERSECTION LAYOUT
LOOP 1604 AT MILITARY DRIVE WEST

| FED. RD. DIV. NO. | FEDERAL AID PROJECT NO. | | SHEET NO. |
|---|---|---|---|
| 6 | NH 2000 (704), Etc. | | 567 A |
| STATE | DIST. | COUNTY | |
| TEXAS | SAT | BEXAR | |
| CONT. | SECT. | JOB | HIGHWAY NO. |
| 2452 | 01 | 036, Etc. | LOOP 1604 |

Design Filename: $FILE$
LEVELS DISPLAYED
ACC:
FILE: .DGN

## POLE SCHEDULE

| | POLE NUMBER | A | B | C | D |
|---|---|---|---|---|---|
| | MAST ARM LENGTH (M) | Ped. | 13.4 | 13.4 | 11.0 |
| | FOUNDATION TYPE | 600-A | 900-A | 900-A | 900-A |
| | FOUNDATION DEPTH (M) | 1.7 | 4.0 | 4.0 | 4.0 |
| CABLE | CIRCUIT | NO. OF CONDUCTORS | | | |
| #6 BARE | BARE BOND GROUND | 1 | 1 | 1 | 1 |
| 7/C#14 SOLID TYPE "A" | SIGNALS Ø2 | | | 2 | |
| | Ø3 | | 2 | | |
| | Ø5 | | | 1 | |
| | Overlap C & D | | | | 3 |
| 9/C#14 SOLID TYPE "A" | PED. SIGNALS Ø3 | 1 | 1 | | |
| | Ø2 & Ø3 | | | 1 | 1 |
| | | | | | |
| COAXIAL | VIVDS(COMM.) | | 2 | 2 | 1 |

LEFT TURN YIELD ON GREEN — SR10-12 (750 x 900)

LEFT TURN SIGNAL — R10-10L (750 x 900)

PUSH BUTTON FOR — R10-4BL (225 x 300)

PUSH BUTTON FOR — R10-4BR (225 x 300)

S1 ANDERSON LOOP <XXXX YYYY>

S2 MILITARY DR WEST <YYYY XXXX>

S3 ANDERSON LOOP <YYYY XXXX>

S4 MILITARY DR WEST <XXXX YYYY>

LOOP 1604 NBD. F.R.

MILITARY DRIVE WEST

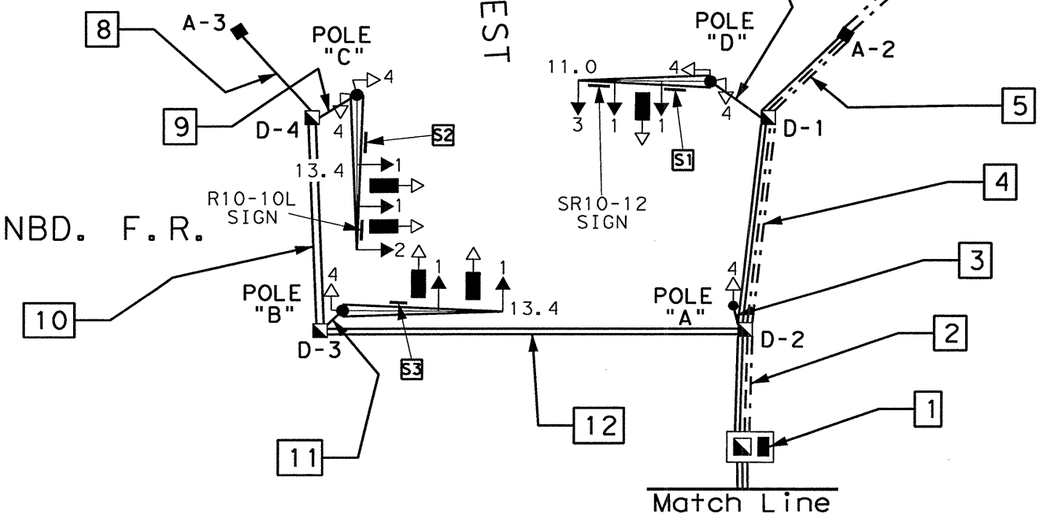


## SIGNAL FACES

300 mm SIGNAL SECTIONS

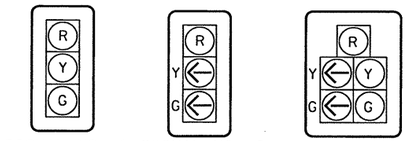


SIGNAL NO. 1 * SIGNAL NO. 2 SIGNAL NO. 3 *

SIGNAL NO. 4

* WITH LOUVER AS CALLED FOR ON PLAN

## CONDUIT AND CABLE SCHEDULE

| | RUN NUMBER | 1 | 2 | 3 | 4 | 5 | 6 | 7 | 8 | 9 | 10 | 11 | 12 |
|---|---|---|---|---|---|---|---|---|---|---|---|---|---|
| | CONDUIT SIZE (MM) | C | 32/15 | 50 | 32/15 | 32/15 | 32 | 75 | 75 | 75 | 75 | 75 | 75 |
| | NUMBER OF CONDUITS | | 2/2 | 1 | 2/2 | 2/1 | 2 | 1 | 1 | 1 | 2 | 1 | 2 |
| | COND / RUN LENGTH (M) | 3 | 10 | 2 | 19 | 10 | 13 | 6 | 10 | 4 | 19 | 3 | 36 |
| | TRENCH(T) / BORE(B) | | T | T | T | T | T | T | T | T | T | T | T |
| CABLE | CIRCUIT | NUMBER OF CONDUCTORS | | | | | | | | | | | |
| #6 XHHW | 120 POWER HOT | 1 | 1 | | 1 | 1 | 1 | | | | | | |
| | 120 POWER COMMON | 1 | 1 | | 1 | 1 | 1 | | | | | | |
| #6 BARE | BARE BOND GROUND | 1 | 1 | 1 | 1 | 1 | 1 | 1 | | 1 | 1 | 1 | 1 |
| 7/C#14 SOLID TYPE "A" | SIGNALS Ø1 | 1 | | | | | | | | | | | |
| | Ø2 | 1 | 1 | | | | | | | 1 | 1 | | 1 |
| | Ø3 | 1 | 1 | | | | | | | | | 1 | 1 |
| | Ø4 | 1 | | | | | | | | | | | |
| | Ø5 | 1 | 1 | | | | | | | 1 | 1 | | 1 |
| | Ø6 | 1 | | | | | | | | | | | |
| | Overlap A & B | 1 | | | | | | | | | | | |
| | Overlap C & D | 1 | 1 | | 1 | | | 1 | | | | | |
| 9/C#14 SOLID TYPE "A" | PED. SIGNALS Ø2 & Ø3 | 2 | 2 | | 1 | | | 1 | | 1 | 1 | | 1 |
| | Ø3 | 2 | 2 | 1 | | | | | | | | 1 | 1 |
| | Ø4 & Ø6 | 2 | | | | | | | | | | | |
| | Ø4 | 2 | | | | | | | | | | | |
| VIVDS COAXIAL CABLE | VIVDS(COMM.) Ø2 | 1 | 1 | | | | | | | 1 | 1 | | 1 |
| | Ø3 | 2 | 2 | | | | | | | | | 2 | 2 |
| | Ø4 | 2 | | | | | | | | | | | |
| | Ø6 | 1 | | | | | | | | | | | |
| | Ø1 & Ø6 | 1 | | | | | | | | | | | |
| | Ø2 & Ø5 | 1 | 1 | | | | | | | 1 | 1 | | 1 |
| | Overlap A & B | 1 | | | | | | | | | | | |
| | Overlap C & D | 1 | 1 | | 1 | | | 1 | | | | | |
| | C=IN CONTROLLER | | | | | | | | | | | | |

**NOTES:**

ONE CONDUIT(50 mm) SHALL REMAIN OPEN IN RUN #2 FOR FUTURE COMMUNICATION CABLE(TMS).

**LEGEND**

- PROP. VIDEO IMAGING VEH. DETECTION SYSTEM CAMERA(VIVDS)
- PROP. GROUND BOX(TYPE "A")
- PROP. GROUND BOX(TYPE "D")
- PROP. 75 mm PVC SCHEDULE 80
- PROP. 75 mm PVC SCHEDULE 80
- PROP. 32 mm PVC SCHEDULE 80
- PROP. MAST ARM POLE AND FOUNDATION
- PROP. SIGNAL FACE
- PROP. CONTROLLER, SLAB AND FOUNDATION
- PROP. PEDESTRIAN SIGNAL HEAD WITH PUSH BUTTON
- PROP. PEDESTAL POLE AND FOUNDATION
- PROP. ELECTRICAL SERVICE

**CHANGE ORDER NO. 104**

-SWAPPED SIGNAL POLES "C" & "D"

-ADDED 3-SECTION HEAD AND SIGN FOR LEFT TURNS ON LOOP 1604 F.R.

-~~ADDED LED SIGNAL SECTIONS~~

STATE OF TEXAS — MARC S. JACOBSON — 89335 — LICENSED PROFESSIONAL ENGINEER

Marc S. Jacobson, P.E. 12/27/2005

Marc S. Jacobson, P.E. Date

CHANGE ORDER NO. 104

REVISED SHEET

SHEET 3 OF 5

# TRAFFIC SIGNAL WIRING DIAGRAM AND CONDUIT LAYOUT

## LOOP 1604 FRONTAGE RDS. AT MILITARY DRIVE WEST

©2005 Texas Department of Transportation

| FED.RD. DIV.NO. | FEDERAL AID PROJECT NO. | | SHEET NO. |
|---|---|---|---|
| 6 | NH 2000(704), Etc. | | 567B |
| STATE | DIST. | COUNTY | |
| TEXAS | SAT | BEXAR | |
| CONT. | SECT. | JOB | HIGHWAY NO. |
| 2452 | 01 | 036, Etc. | LOOP 1604 |

LEVELS DISPLAYED
1 2 3 4 5 6 7 8 9 10 11 12 13 14 15 16 17 18 19 20 21 22 23 24 25 26 27 28 29 30 31 32
17 18 19 20 21 22 23 24 25 26 27 28 29 30 31 32
33 34 35 36 37 38 39 40 41 42 43 44 45 46 47 48
49 50 51 52 53 54 55 56 57 58 59 60 61 62 63
ACC:
FILE: .DGN

12:51:20 PM
12/23/2005
U:\dfg0201\Projects\Loop1604\loop1604final\story01.dgn

| POLE AND CABLE SCHEDULE | | | | |
|---|---|---|---|---|
| POLE NO. | SIGNAL CABLE | | | ELEC CONDR |
| | 7/C#12 | 4/C#12 | 2/C#14 | 1/C#6 BARE |
| E | 2 | 1 | 1 | 1 |
| F | 2 | 2 | 2 | 1 |
| G | 3 | 2 | 2 | 1 |
| H | - | 1 | 1 | 1 |
| | | | | |

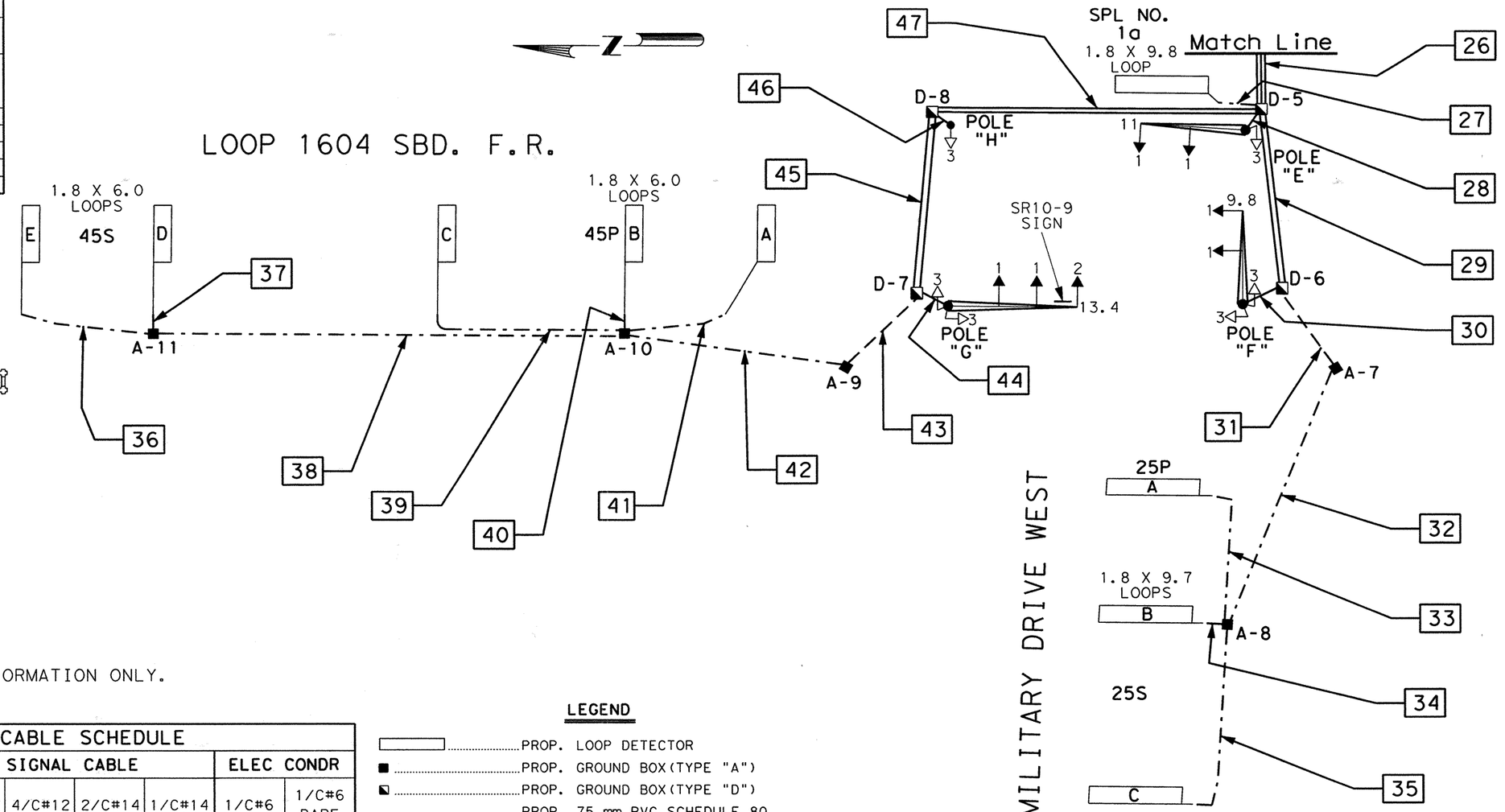


**SIGNAL FACES**

300 mm SIGNAL SECTIONS

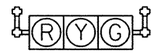


SIGNAL NO. 1

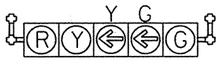


SIGNAL NO. 2

SIGNAL NO. 3

✳-FOR CONTRACTOR'S INFORMATION ONLY.

| CONDUIT AND CABLE SCHEDULE | | | | | | | | | |
|---|---|---|---|---|---|---|---|---|---|
| RUN NO. | CONDUIT (PVC) | | | SIGNAL CABLE | | | | ELEC CONDR | |
| | NO. | SIZE (MM) | LENGTH (M) | 7/C#12 | 4/C#12 | 2/C#14 | 1/C#14 ✳ | 1/C#6 | 1/C#6 BARE |
| 26 | 3 | 75 | 11 | 3 | 6 | 11 | - | - | 1 |
| 27 | 1 | 32 | 5 | - | - | - | 2 | - | - |
| 28 | 1 | 75 | 2 | 1 | 1 | 1 | - | - | 1 |
| 29 | 2 | 75 | 20 | 1 | 2 | 4 | - | - | 1 |
| 30 | 1 | 75 | 5 | 1 | 2 | 2 | - | - | 1 |
| 31 | 1 | 50 | 11 | - | - | 2 | - | - | - |
| 32 | 1 | 32 | 30 | - | - | 2 | - | - | - |
| 33 | 1 | 32 | 15 | - | - | - | 2 | - | - |
| 34 | 1 | 32 | 2 | - | - | - | 2 | - | - |
| 35 | 1 | 32 | 20 | - | - | - | 2 | - | - |
| 36 | 1 | 32 | 14 | - | - | - | 2 | - | - |
| 37 | 1 | 32 | 2 | - | - | - | 2 | - | - |
| 38 | 1 | 32 | 50 | - | - | 1 | - | - | - |
| 39 | 1 | 32 | 22 | - | - | - | 2 | - | - |
| 40 | 1 | 32 | 2 | - | - | - | 2 | - | - |
| 41 | 1 | 32 | 12 | - | - | - | 2 | - | - |
| 42 | 1 | 32 | 24 | - | - | 2 | - | - | - |
| 43 | 1 | 50 | 12 | - | - | 2 | - | - | - |
| 44 | 1 | 75 | 4 | 1 | 2 | 2 | - | - | 1 |
| 45 | 2 | 75 | 20 | 1 | 2 | 4 | - | - | 1 |
| 46 | 1 | 50 | 2 | - | 1 | 1 | - | - | 1 |
| 47 | 2 | 75 | 35 | 1 | 3 | 5 | - | - | 1 |
| | | | | | | | | | |
| | | | | | | | | | |

**LEGEND**

- PROP. LOOP DETECTOR
- PROP. GROUND BOX (TYPE "A")
- PROP. GROUND BOX (TYPE "D")
- PROP. 75 mm PVC SCHEDULE 80
- PROP. 50 mm PVC SCHEDULE 80
- PROP. 32 mm PVC SCHEDULE 80
- PROP. MAST ARM POLE AND FOUNDATION
- PROP. SIGNAL FACE
- PROP. CONTROLLER, SLAB AND FOUNDATION
- PROP. PEDESTRIAN SIGNAL HEAD WITH PUSH BUTTON
- PROP. PEDESTAL POLE AND FOUNDATION
- PROP. ELECTRICAL SERVICE

STATE OF TEXAS
ARNULFO RAMIREZ
56890
REGISTERED PROFESSIONAL ENGINEER

Arnulfo Ramirez, P.E. 9-18-00 Date

SHEET 4 OF 5

# TRAFFIC SIGNAL WIRING DIAGRAM AND CONDUIT LAYOUT

## LOOP 1604 FRONTAGE RDS. AT MILITARY DRIVE WEST

©2000 Texas Department of Transportation

| FED. RD. DIV. NO. | FEDERAL AID PROJECT NO. | | SHEET NO. |
|---|---|---|---|
| 6 | NH 2000(704), Etc. | | 568 |
| STATE | DIST. | COUNTY | |
| TEXAS | SAT | BEXAR | |
| CONT. | SECT. | JOB | HIGHWAY NO. |
| 2452 | 01 | 036, Etc. | LOOP 1604 |

Plotted on: $DATE$

Z

**CHANGE ORDER NO. 79**

-REVISED RDWY GEOMETRICS AND LANE CONFIGURATIONS
-REPLACES LOOP DECTECTORS w/VIVDS
-REVISIONS TO ACCOMMODATE COSA SPECS

# LOOP 1604 SBD. F.R. (55 M.P.H.)

MATCH LINE "B"

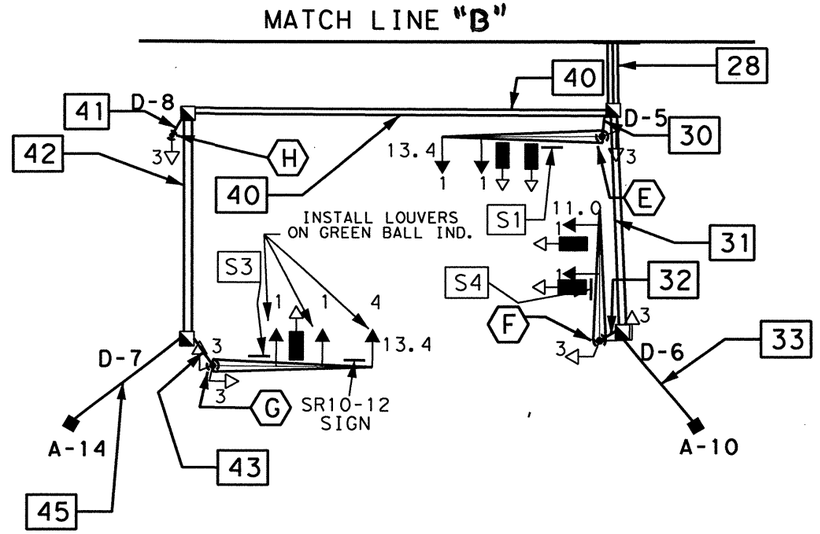


MILITARY DRIVE WEST (45 M.P.H.)

| POLE AND CABLE SCHEDULE | | | |
|---|---|---|---|
| POLE NO. | SIGNAL CABLE | | ELEC CONDR |
| | 7/C#14 (SIG) | 7/C#14 (PED) | 1/C#8 BARE |
| E | 1 | 1 | 1 |
| F | 1 | 1 | 1 |
| G | 1 | 1 | 1 |
| H | - | 1 | 1 |
| | | | |

✳-FOR CONTRACTOR'S INFORMATION ONLY.

| CONDUIT AND CABLE SCHEDULE | | | | | | | | | |
|---|---|---|---|---|---|---|---|---|---|
| RUN NO. | CONDUIT (PVC) | | | SIGNAL CABLE | | | | ELEC CONDR | |
| | NO. | SIZE (MM) | LENGTH (M) | 7/C#14 (SIG) | 9/C#14 (PED) | 2/C#14 | 1/C#14 ✳ | 1/C#6 | 1/C#8 BARE |
| 28 | 3 | 75 | 7 | 3 | 4 | | - | - | 3 |
| | | | | | | | | | |
| 30 | 1 | 75 | 4 | 1 | 1 | - | - | - | 1 |
| 31 | 2 | 75 | 19 | 1 | 1 | | - | - | 2 |
| 32 | 1 | 75 | 2 | 1 | 1 | - | - | - | 1 |
| 33 | 1 | 75 | 10 | - | - | | - | - | 1 |
| | | | | | | | | | |
| 40 | 2 | 75 | 36 | 1 | 2 | | - | - | 2 |
| 41 | 1 | 50 | 2 | - | 1 | - | - | - | 1 |
| 42 | 2 | 75 | 19 | 1 | 1 | | - | - | 2 |
| 43 | 1 | 75 | 3 | 1 | 1 | - | - | - | 1 |
| | | | | | | | | | |
| 45 | 1 | 75 | 12 | - | - | 5 | - | - | - |

## SIGNAL FACES

300 mm SIGNAL SECTIONS

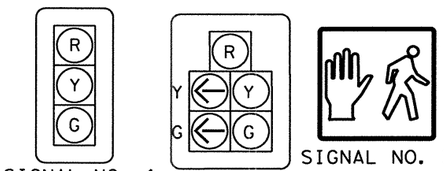


* WITH LOUVER AS CALLED FOR ON PLAN

## LEGEND

- PROP. VIDEO IMAGING VEH. DETECTION SYSTEM CAMERA (VIVDS)
- PROP. GROUND BOX (TYPE "A")
- PROP. GROUND BOX (TYPE "D")
- PROP. 75 mm PVC SCHEDULE 80
- PROP. 50 mm PVC SCHEDULE 80
- PROP. 32 mm PVC SCHEDULE 80
- PROP. MAST ARM POLE AND FOUNDATION
- PROP. SIGNAL FACE
- PROP. CONTROLLER, SLAB AND FOUNDATION
- PROP. PEDESTRIAN SIGNAL HEAD WITH PUSH BUTTON
- PROP. PEDESTAL POLE AND FOUNDATION
- PROP. ELECTRICAL SERVICE
- TMS MANHOLE (BY OTHERS)
- S1 PROP. SIGN

# TRAFFIC SIGNAL WIRING DIAGRAM AND CONDUIT LAYOUT

STATE OF TEXAS
JEROME D. PAVLISKA
76075
REGISTERED PROFESSIONAL ENGINEER

Jerome D. Pavliska, P.E. 4-23-04
Jerome D. Pavliska, P.E. Date

CHANGE ORDER NO. 79

REVISED SHEET

SHEET 4 OF 5

©2004 Texas Department of Transportation

LOOP 1604
TRAFFIC SIGNAL INTERSECTION LAYOUT
LOOP 1604 AT MILITARY DRIVE WEST

| FED.RD. DIV.NO. | FEDERAL AID PROJECT NO. | | SHEET NO. |
|---|---|---|---|
| 6 | NH 2000(704),Etc. | | 568 A |
| STATE | DIST. | COUNTY | |
| TEXAS | SAT | BEXAR | |
| CONT. | SECT. | JOB | HIGHWAY NO. |
| 2452 | 01 | 036,Etc. | LOOP 1604 |

Design Filename: $FILE$
LEVELS DISPLAYED 1 2 3 4 5 6 7 8 9 10 11 12 13 14 15 16 17 18 19 20 21 22 23 24 25 26 27 28 29 30 31 32 33 34 35 36 37 38 39 40 41 42 43 44 45 46 47 48 49 50 51 52 53 54 55 56 57 58 59 60 61 62 63
ACC:
FILE: .DGN

## CONDUIT AND CABLE SCHEDULE

| | RUN NUMBER | 13 | 14 | 15 | 16 | 17 | 18 | 19 | 20 | 21 | 22 |
|---|---|---|---|---|---|---|---|---|---|---|---|
| | CONDUIT SIZE (MM) | 75 | 75 | 75 | 50 | 75 | 75 | 75 | 75 | 75 | 75 |
| | NUMBER OF CONDUITS | 3 | 1 | 2 | 1 | 2 | 1 | 1 | 1 | 1 | 2 |
| | COND / RUN LENGTH (M) | 10 | 2 | 36 | 2 | 19 | 11 | 5 | 5 | 10 | 19 |
| | TRENCH(T) / BORE(B) | T | T | T | T | T | T | T | T | T | T |
| CABLE | CIRCUIT | NO. OF CONDUCTORS | | | | | | | | | |
| #6 BARE | BARE BOND GROUND | 1 | 1 | 1 | 1 | 1 | | 1 | 1 | | 1 |
| 7/C#14 SOLID TYPE "A" | SIGNALS Ø1 | 1 | | | | | | | 1 | | 1 |
| | Ø4 | 1 | 1 | | | | | | | | |
| | Ø6 | 1 | | | | | | | 1 | | 1 |
| | Overlap A & B | 1 | | 1 | | 1 | | 1 | | | |
| 9/C#14 SOLID TYPE "A" | PED. SIGNALS Ø4 | 2 | 1 | 1 | 1 | | | | | | |
| | Ø4 & Ø6 | 2 | | 1 | | 1 | | 1 | 1 | | 1 |
| | | | | | | | | | | | |
| VIVDS COAXIAL CABLE | VIVDS(COMM.) Ø4 | 2 | 2 | | | | | | | | |
| | Ø6 | 1 | | | | | | | 1 | | 1 |
| | Ø1 & Ø6 | 1 | | | | | | | 1 | | 1 |
| | Overlap A & B | 1 | | 1 | | 1 | | 1 | | | |
| | C=IN CONTROLLER | | | | | | | | | | |

## LEGEND

- PROP. VIDEO IMAGING VEH. DETECTION SYSTEM CAMERA (VIVDS)
- PROP. GROUND BOX (TYPE "D")
- PROP. 75 mm PVC SCHEDULE 80
- PROP. 50 mm PVC SCHEDULE 80
- PROP. MAST ARM POLE AND FOUNDATION
- PROP. SIGNAL FACE
- PROP. PEDESTRIAN SIGNAL HEAD WITH PUSH BUTTON
- PROP. PEDESTAL POLE AND FOUNDATION

## POLE SCHEDULE

| | POLE NUMBER | E | F | G | H |
|---|---|---|---|---|---|
| | MAST ARM LENGTH (M) | 13.4 | 13.4 | 11.0 | Ped. |
| | FOUNDATION TYPE | 900-A | 900-A | 900-A | 600-A |
| | FOUNDATION DEPTH (M) | 4.0 | 4.0 | 4.0 | 1.7 |
| CABLE | CIRCUIT | NO. OF CONDUCTORS | | | |
| #6 BARE | BARE BOND GROUND | 1 | 1 | 1 | 1 |
| 7/C#14 SOLID TYPE "A" | SIGNALS Ø1 | | 1 | | |
| | Ø4 | 2 | | | |
| | Ø6 | | 2 | | |
| | Overlap A & B | | | 3 | |
| 9/C#14 SOLID TYPE "A" | PED. SIGNALS Ø4 | 1 | | | 1 |
| | Ø4 & Ø6 | | 1 | 1 | |
| | | | | | |
| COAXIAL | VIVDS(COMM.) | 2 | 2 | 1 | |

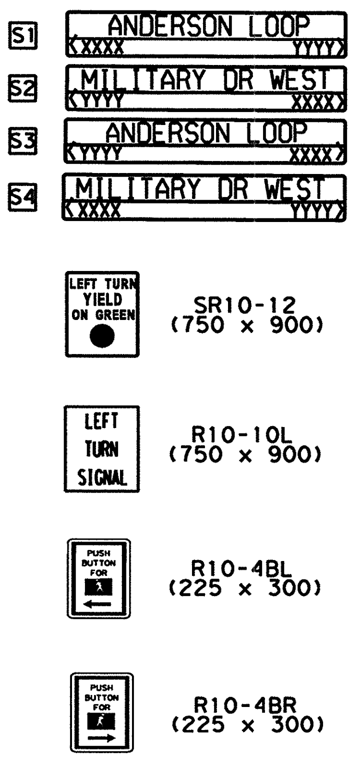


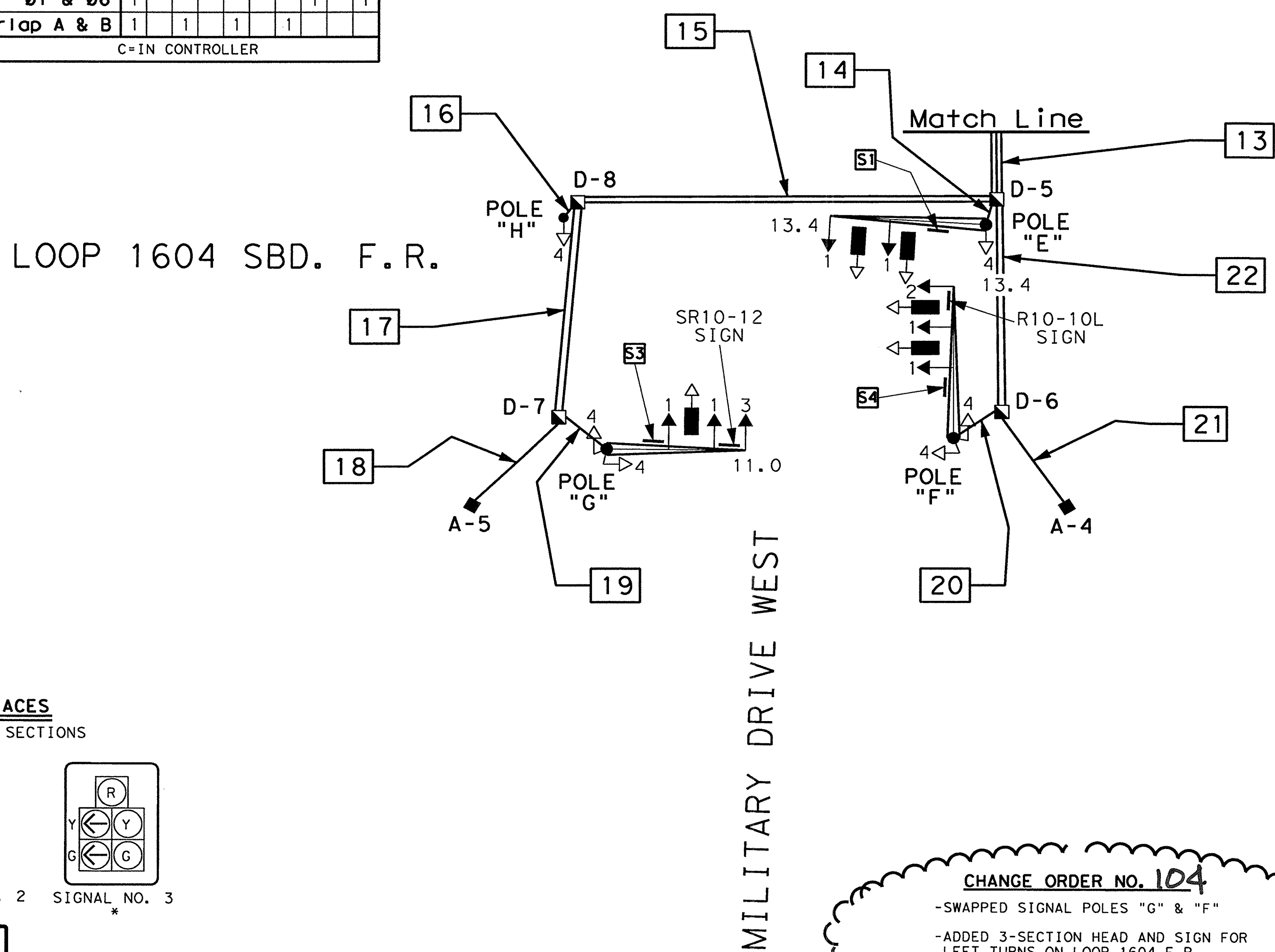


### SIGNAL FACES

300 mm SIGNAL SECTIONS

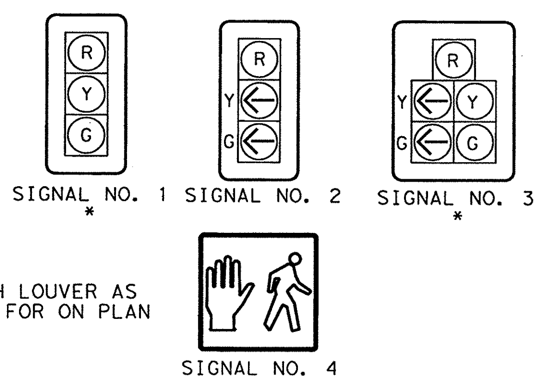


* WITH LOUVER AS CALLED FOR ON PLAN

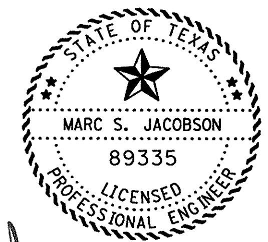


Marc S. Jacobson, P.E. 12/27/2005
Marc S. Jacobson, P.E. Date

CHANGE ORDER NO. 104

REVISED SHEET

SHEET 4 OF 5

# TRAFFIC SIGNAL WIRING DIAGRAM AND CONDUIT LAYOUT

## LOOP 1604 FRONTAGE RDS. AT MILITARY DRIVE WEST

**CHANGE ORDER NO. 104**

- SWAPPED SIGNAL POLES "G" & "F"
- ADDED 3-SECTION HEAD AND SIGN FOR LEFT TURNS ON LOOP 1604 F.R.
- ~~ADDED LED SIGNAL SECTIONS~~

©2005 Texas Department of Transportation

| FED. RD. DIV. NO. | FEDERAL AID PROJECT NO. | | | SHEET NO. |
|---|---|---|---|---|
| 6 | NH 2000(704), Etc. | | | 568B |
| STATE | DIST. | | COUNTY | |
| TEXAS | SAT | | BEXAR | |
| CONT. | SECT. | JOB | HIGHWAY NO. | |
| 2452 | 01 | 036, Etc. | LOOP 1604 | |

FILE: .DGN ACC: LEVELS DISPLAYED

## MATERIALS TO BE FURNISHED AND INSTALLED BY THE CONTRACTOR

| ITEM NO. | DESCRIPTION | UNIT | QUANTITY |
|---|---|---|---|
| 618 | CONDUIT: PVC (SCH. 80)(32 mm) | M | 501 |
| 618 | PVC (SCH. 80)(50 mm) | M | 63 |
| 618 | PVC (SCH. 80)(75 mm) | M | 384 |
| 620 | ELECTRICAL CONDUCTOR(NO. 6) BARE | M | 245 |
| 620 | ELECTRICAL CONDUCTOR(NO. 6) INSULATED | M | 120 |
| 624 | GROUND BOX(TYPE A) W/APRON | EA. | 11 |
| 624 | GROUND BOX(TYPE D) W/APRON | EA. | 8 |
| 628 | ELEC SERV TYT(120/240)000(NS)GS(N)TP(O) | EA. | 1 |
| 656 | TRAFFIC SIGNAL CONTROLLER FND. | EA. | 1 |
| 656 | FND FOR TRAF SIG(600 mm DRIL SH) | M | 3.4 |
| 656 | FND FOR TRAF SIG(TY A)(750 mm DRIL SH) | M | 10.2 |
| 656 | FND FOR TRAF SIG(TY A)(900 mm DRIL SH) | M | 12 |
| 680 | INSTALLATION OF HWY. TRAF. SIGNAL | EA. | 1 |
| 681 | TEMPORARY TRAFFIC SIGNALS | EA. | 1 |
| 682 | VEHICLE SIGNAL SECTION(300 mm) | EA. | 46 |
| 682 | PED SIG SEC(300 mm)(2 INDICATIONS) | EA. | 12 |
| 684 | TRAF. SIG. CBL.(TY A)(4 CONDR.)(12 AWG) | M | 620 |
| 684 | TRAF. SIG. CBL.(TY A)(7 CONDR.)(12 AWG) | M | 520 |
| 684 | TRAF. SIG. CBL.(TY C)(2 CONDR.)(14 AWG) | M | 1,360 |
| 686 | TRAF SIG POLE ASM(STL)1 ARM(9.8 M) | EA. | 2 |
| 686 | TRAF SIG POLE ASM(STL)1 ARM(11.0 M) | EA. | 1 |
| 686 | TRAF SIG POLE ASM(STL)1 ARM(13.4 M) | EA. | 3 |
| 688 | PEDESTRIAN DETECTOR(PUSH BUTTON) | EA. | 12 |
| 688 | VEHICLE DETECTOR(14 AWG)(SAWCUT LOOPS) | M | 425 |
| 6008 | SALVAGE TRAFFIC SIGNALS | EA. | 1 |
| 6023 | PEDESTAL POLE ASSEMBLY | EA. | 2 |
| 6438 | VIVDS PROCESSOR SYSTEM * | EA. | 1 |
| 6438 | VIVDS CAMERA ASSEMBLY * | EA. | 4 |
| 6438 | VIVDS SET-UP SYSTEM * | EA. | 1 |
| 6438 | VIVDS COMMUNICATION CABLE(COAXIAL) | M | 200 |
| 6438 | VIVDS TEMPORARY | EA. | 1 |
| | | | |
| | | | |
| | | | |

**NOTE:**
ALL SIGNAL POLE FOUNDATIONS SHALL BE INSTALLED ACCORDING TO TS-FD STANDARD SHEET.

INSTALLATION OF SIGNS TO BE CONSIDERED SUBSIDIARY TO BID ITEM 680.

*-FOR CONTRACTOR'S INFORMATION ONLY.

## MATERIALS TO BE FURNISHED AND INSTALLED BY THE STATE

| DESCRIPTION | UNIT | QUANTITY |
|---|---|---|
| CONTROLLER WITH CABINET | EA. | 1 |
| SR10-9 SIGN (FURNISH ONLY) | EA. | 2 |
| R10-4b PUSH BUTTON SIGN (FURNISH ONLY) | EA. | 12 |
| | | |
| | | |

STATE OF TEXAS
ARNULFO RAMIREZ
56890
REGISTERED PROFESSIONAL ENGINEER

Arnulfo Ramirez, P.E. 9-18-00 Date

SHEET 5 OF 5

# TRAFFIC SIGNAL INTERSECTION LAYOUT

## LOOP 1604 FRONTAGE RDS. AT MILITARY DRIVE WEST

©2000 Texas Department of Transportation

| FED.RD. DIV.NO. | FEDERAL AID PROJECT NO. | | SHEET NO. |
|---|---|---|---|
| 6 | NH 2000(704),Etc. | | 569 |
| STATE | DIST. | COUNTY | |
| TEXAS | SAT | BEXAR | |
| CONT. | SECT. | JOB | HIGHWAY NO. |
| 2452 | 01 | 036,Etc. | LOOP 1604 |

| MATERIALS TO BE FURNISHED AND INSTALLED BY THE CONTRACTOR | | | |
|---|---|---|---|
| ITEM NO. | DESCRIPTION | UNIT | QUANTITY |
| 618 | CONDUIT: PVC (SCH. 80) (32 mm) | M | 501 |
| 618 | PVC (SCH. 80) (50 mm) | M | 63 |
| 618 | PVC (SCH. 80) (75 mm) | M | 384 |
| 620 | ELECTRICAL CONDUCTOR (NO. 6) BARE | M | 245 |
| 620 | ELECTRICAL CONDUCTOR (NO. 6) INSULATED | M | 120 |
| 624 | GROUND BOX (TYPE A) W/APRON | EA. | 11 |
| 624 | GROUND BOX (TYPE D) W/APRON | EA. | 8 |
| 628 | ELEC SERV TYT (120/240) 000 (NS) GS (N) TP (O) | EA. | 1 |
| 656 | TRAFFIC SIGNAL CONTROLLER FND. | EA. | 1 |
| 656 | FND FOR TRAF SIG (600 mm DRIL SH) | M | 3.4 |
| 656 | FND FOR TRAF SIG (TY A) (750 mm DRIL SH) | M | 10.2 |
| 656 | FND FOR TRAF SIG (TY A) (900 mm DRIL SH) | M | 12 |
| 680 | INSTALLATION OF HWY. TRAF. SIGNAL | EA. | 1 |
| 681 | TEMPORARY TRAFFIC SIGNALS | EA. | 1 |
| 682 | VEHICLE SIGNAL SECTION (300 mm) | EA. | 46 |
| 682 | PED SIG SEC (300 mm) (2 INDICATIONS) | EA. | 12 |
| 684 | TRAF. SIG. CBL. (TY A) (4 CONDR.) (12 AWG) | M | 620 |
| 684 | TRAF. SIG. CBL. (TY A) (7 CONDR.) (12 AWG) | M | 520 |
| 684 | TRAF. SIG. CBL. (TY C) (2 CONDR.) (14 AWG) | M | 1,360 |
| 686 | TRAF SIG POLE ASM (STL) 1 ARM (9.8 M) | EA. | 2 |
| 686 | TRAF SIG POLE ASM (STL) 1 ARM (11.0 M) | EA. | 1 |
| 686 | TRAF SIG POLE ASM (STL) 1 ARM (13.4 M) | EA. | 3 |
| 688 | PEDESTRIAN DETECTOR (PUSH BUTTON) | EA. | 12 |
| 688 | VEHICLE DETECTOR (14 AWG) (SAWCUT LOOPS) | M | 425 |
| 6008 | SALVAGE TRAFFIC SIGNALS | EA. | 1 |
| 6023 | PEDESTAL POLE ASSEMBLY | EA. | 2 |
| 6438 | VIVDS PROCESSOR SYSTEM * | EA. | 1 |
| 6438 | VIVDS CAMERA ASSEMBLY * | EA. | 6 ◆ |
| 6438 | VIVDS SET-UP SYSTEM * | EA. | 0 ◆ |
| 6438 | VIVDS COMMUNICATION CABLE (COAXIAL) | M | 200 |
| 6438 | VIVDS TEMPORARY | EA. | 1 |
| | | | |
| | | | |
| | | | |

| MATERIALS TO BE FURNISHED AND INSTALLED BY THE STATE | | |
|---|---|---|
| DESCRIPTION | UNIT | QUANTITY |
| CONTROLLER WITH CABINET | EA. | 1 |
| SR10-9 SIGN (FURNISH ONLY) | EA. | 2 |
| R10-4b PUSH BUTTON SIGN (FURNISH ONLY) | EA. | 12 |
| | | |
| | | |

**NOTE:**
ALL SIGNAL POLE FOUNDATIONS SHALL BE INSTALLED ACCORDING TO TS-FD STANDARD SHEET.

INSTALLATION OF SIGNS TO BE CONSIDERED SUBSIDIARY TO BID ITEM 680.

*-FOR CONTRACTOR'S INFORMATION ONLY.

STATE OF TEXAS
ARNULFO RAMIREZ
56890
REGISTERED
PROFESSIONAL ENGINEER

Arnulfo Ramirez 6-25-01
Arnulfo Ramirez, P.E. Date

◆ CHANGE ORDER NO. 3

SHEET 5 OF 5

# TRAFFIC SIGNAL INTERSECTION LAYOUT

## LOOP 1604 FRONTAGE RDS. AT MILITARY DRIVE WEST

©2000 Texas Department of Transportation

| FED. RD. DIV. NO. | FEDERAL AID PROJECT NO. | | SHEET NO. |
|---|---|---|---|
| 6 | NH 2000 (704), Etc. | | 569A |
| STATE | DIST. | COUNTY | |
| TEXAS | SAT | BEXAR | |
| CONT. | SECT. | JOB | HIGHWAY NO. |
| 2452 | 01 | 036, Etc. | LOOP 1604 |

## MATERIALS TO BE FURNISHED AND INSTALLED BY THE CONTRACTOR

| ITEM NO. | DESCRIPTION | UNIT | QUANTITY |
|---|---|---|---|
| 618-5016 | CONDUIT (PVC)(SCHD 80)(32 mm) | M | 210 |
| 618-5018 | CONDUIT (PVC)(SCHD 80)(50 mm) | M | 22 |
| 618-5020 | CONDUIT (PVC)(SCHD 80)(75 mm) | M | 412 |
| 618-5021 | CONDUIT (PVC)(SCHD 80)(100 mm) | M | 2 |
| 620-5003 | ELEC CONDUCTOR(NO. 8) BARE | M | 374 |
| 620-5010 | ELEC CONDUCTOR(NO. 6) INSULATED | M | 224 |
| 624-5001 | GROUND BOX(TY A)(122311) W/APRON | EA. | 5 |
| 624-5004 | GROUND BOX(TY D)(162922) W/APRON | EA. | 8 |
| 628-5222 | ELEC SERV TYT(120/240)000(NS)GS(N)SP(U) | EA. | 1 |
| 656-5003 | FND FOR TRAF SIG(600 mm DRIL SHFT) | M | 3.4 |
| 656-5005 | FND FOR TRAF SIG(TY A)(900 mm DRIL SH) | M | 24 |
| 656-5026 | TRAF SIG CNTR FND(CITY TYPE 332) | EA. | 1 |
| 680-5001 | INSTAL OF HWY TRAF SIG(ISOLATED) | EA. | 1 |
| 682-5002 | VEH SIG SEC(300 mm) | EA. | 46 |
| 682-5005 | PED SIG SEC(2 INDICATIONS IN 1 SEC) | EA. | 12 |
| 682-5009 | BACK PLATE(3 SEC)(300 MM) | EA. | 12 |
| 682-5011 | BACK PLATE(5 SEC)(300 MM) | EA. | 2 |
| 682-5019 | LOUVERS (ADJUSTABLE) (300 MM) | EA. | 6 |
| 684-5044 | TRAF SIG CBL(TY C)(2 CONDR)(14 AWG) | M | 0 |
| 684-5047 | TRAF SIG CBL(TY A)(7 CONDR)(14 AWG) | M | 377 |
| 684-5048 | TRAF SIG CBL(TY A)(9 CONDR)(14 AWG) | M | 363 |
| 686-5012 | TRAF SIG POLE ASM(STL)1 ARM(11.0 M) | EA. | 2 |
| 686-5014 | TRAF SIG POLE ASM(STL)1 ARM(13.4 M) | EA. | 4 |
| 688-5001 | PED DETECT(PUSH BTN) | EA. | 12 |
| 688-5011 | VEHICLE DETECT(14 AWG)(SAWCUT) | M | 0 |
| 688-5012 | VEH DETECT(14 AWG)(19MM PVC)(COND ENC) | M | 0 |
| 6008-5001 | SALV TRAF SIGNALS | EA. | 1 |
| 6023-5001 | PEDESTAL POLE ASSEM | EA. | 2 |
| 6438-5005 | VIVDS COMMUNICATION CABLE(COAXIAL) | M | 406 |
| ** - - | BRACKET ASSY (SYMBOLIC PEDESTRIAN HEAD) | EA. | 12 |
| *** - - | ASTRO-BRAC SIGNAL HEAD MOUNTS | EA. | 14 |
| *** - - | MAST ARM SIGN MOUNTS (VARIOUS SIZES) | EA. | 8 |

## PROPOSED POLE & EQUIPMENT INFORMATION

| ID NO. | DESCRIPTION/ATTACHMENTS | STATION | OFFSET | FND. ELEV | |
|---|---|---|---|---|---|
| (A) | INSTALL 114mm OD STEEL PEDESTAL POLE ON 600mm DRILLED SHAFT FND(600-A)ASSEMBLY WITH ONE SYMBOLIC LED PED SIGNAL HEAD, ONE PUSHBUTTON, AND ONE R10-4BL SIGN | 21+256.586 | 48.558 LT | 75MM ABOVE GRADE | 1.7M (600-A) |
| (B) | INSTALL SMA-130, 13.4M ARM ON 900mm DRILLED SHAFT FND(900-A), W/ONE SYMBOLIC PED SIGNAL, ONE PUSHBUTTON, AND ONE R10-4BL SIGN | 21+227.000 | 49.276 LT | 75MM ABOVE GRADE | 4.0M (900-A) |
| (C) | INSTALL SMA-130, 11.0M ARM ON 900mm DRILLED SHAFT FND(900-A), W/TWO SYMBOLIC PED SIGNALS, TWO PUSHBUTTONS, AND TWO R10-4BL SIGNS | 21+224.844 | 66.604 LT | 75MM ABOVE GRADE | 4.0M (900-A) |
| (D) | INSTALL SMA-130, 13.4M ARM ON 900mm DRILLED SHAFT FND(900-A), W/TWO SYMBOLIC PED SIGNALS, TWO PUSHBUTTONS, AND TWO R10-4BRL SIGNS | 21+256.608 | 68.860 LT | 75MM ABOVE GRADE | 4.0M (900-A) |
| (E) | INSTALL SMA-130, 13.4M ARM ON 900mm DRILLED SHAFT FND(900-A), W/ONE SYMBOLIC PED SIGNAL, ONE PUSHBUTTON, AND ONE R10-4BR SIGN | 21+258.920 | 25.448 LT | 75MM ABOVE GRADE | 4.0M (900-A) |
| (F) | INSTALL SMA-130, 11.0M ARM ON 900mm DRILLED SHAFT FND(900-A), W/TWO SYMBOLIC PED SIGNALS, TWO PUSHBUTTONS, AND TWO R10-4BL SIGNS | 21+258.708 | 8.172 LT | 75MM ABOVE GRADE | 4.0M (900-A) |
| (G) | INSTALL SMA-130, 13.4M ARM ON 900mm DRILLED SHAFT FND(900-A), W/TWO SYMBOLIC PED SIGNALS, TWO PUSHBUTTONS, AND TWO R10-4BL SIGNS | 21+226.279 | 6.061 LT | 75MM ABOVE GRADE | 4.0M (900-A) |
| (H) | INSTALL 114mm OD STEEL PEDESTAL POLE ON 600mm DRILLED SHAFT FND(600-A)ASSEMBLY WITH ONE SYMBOLIC LED PED SIGNAL HEAD, ONE PUSHBUTTON, AND ONE R10-4BL SIGN | 21+222.844 | 25.500 LT | 75MM ABOVE GRADE | 1.7M (600-A) |
| (J) | PROPOSED CITY OF SAN ANTONIO MODEL 332 CONTROLLER CABINET AND FOUNDATION | 21+260.157 | 34.850 LT | N/A | N/A |
| (K) | PROP. ELECTRICAL SERVICE PEDESTAL | | | | |

## MATERIALS TO BE FURNISHED BY CITY

| DESCRIPTION | UNIT | QUANTITY |
|---|---|---|
| CONTROLLER WITH CABINET | EA. | 1 |
| SR10-12 SIGN (FURNISH ONLY) | EA. | 2 |
| R10-4b PUSH BUTTON SIGN (FURNISH ONLY) | EA. | 12 |
| SIGNS, METRO STREET NAME (FURNISH ONLY) | EA. | 6 |
| | | |

NOTES:

SEE NOTES, SHEET 1 OF 1.(580F)

CHANGE ORDER NO. 79

REVISED SHEET

SHEET 5 OF 5

*-FOR CONTRACTOR'S INFORMATION ONLY.

** SUBSIDIARY TO ITEM 0682

*** SUBSIDIARY TO ITEM 0680

STATE OF TEXAS
JEROME D. PAVLISKA
76075
REGISTERED PROFESSIONAL ENGINEER

Jerome D. Pavliska, P.E. 5-18-04
Jerome D. Pavliska, P.E. Date

**CHANGE ORDER NO. 79**

-REVISED RDWY GEOMETRICS AND LANE CONFIGURATIONS

-REPLACES LOOP DECTECTORS w/VIVDS
-REVISIONS TO ACCOMMODATE COSA SPECS

# TRAFFIC SIGNAL INTERSECTION LAYOUT

2004 Texas Department of Transportation

**LOOP 1604**
**TRAFFIC SIGNAL INTERSECTION LAYOUT**
**LOOP 1604 AT MILITARY DRIVE WEST**

| FED.RD. DIV.NO. | FEDERAL AID PROJECT NO. | | SHEET NO. |
|---|---|---|---|
| 6 | NH 2000(704),Etc. | | 569 A |
| STATE | DIST. | COUNTY | |
| TEXAS | SAT | BEXAR | |
| CONT. | SECT. | JOB | HIGHWAY NO. |
| 2452 | 01 | 036,Etc. | LOOP 1604 |

LEVELS DISPLAYED
1 2 3 4 5 6 7 8 9 10 11 12 13 14 15 16
17 18 19 20 21 22 23 24 25 26 27 28 29 30 31 32
33 34 35 36 37 38 39 40 41 42 43 44 45 46 47 48
49 50 51 52 53 54 55 56 57 58 59 60 61 62 63

ACC:

FILE: .DGN

## MATERIALS TO BE FURNISHED AND INSTALLED BY THE CONTRACTOR

| ITEM NO. | DESCRIPTION | UNIT | QUAN. | |
|---|---|---|---|---|
| 618-5016 | CONDUIT (PVC) (SCHD 80)(32 mm) | M | ~~88~~ | 210 |
| 618-5018 | CONDUIT (PVC) (SCHD 80)(50 mm) | M | ~~8~~ | 22 |
| 618-5020 | CONDUIT (PVC) (SCHD 80)(75 mm) | M | ~~385~~ | 412 |
| 618-5021 | CONDUIT (PVC) (SCHD 80)(100 mm) | M | 2 | |
| 620-5003 | ELEC CONDUCTOR(NO. 6) BARE | M | ~~329~~ | 379 |
| 620-5010 | ELEC CONDUCTOR(NO. 6) INSULATED | M | ~~88~~ | 224 |
| 624-5001 | GROUND BOX(TYPE A)(122311) W/APRON | EA. | ~~3~~ 5 | |
| 624-5004 | GROUND BOX(TYPE D)(162922) W/APRON | EA. | 8 | |
| 628-5222 | ELEC SERV TYT(120/240)000(NS)GS(N)SP(U) | EA. | 1 | |
| 656-5026 | TRAF SIG CNTRL FND (CITY TYPE 332) | EA. | 1 | |
| 656-5003 | FND FOR TRAF SIG(600 mm DRIL SH) | M | 3.4 | |
| 656-5004 | FND FOR TRAF SIG(TY A)(750 mm DRIL SH) | M | 0 | |
| 656-5005 | FND FOR TRAF SIG(TY A)(900 mm DRIL SH) | M | 24 | |
| 680-5001 | INSTAL OF HWY TRAF SIG(ISOLATED) | EA. | 1 | |
| 682-5009 | BACK PLATE(3 SEC)(300 MM) | EA. | 12 | 14 |
| 682-5011 | BACK PLATE(5 SEC)(300 MM) | EA. | 2 | |
| 682-5002 | VEH SIG SEC(300 mm) | EA. | 46 | 52 |
| 682-5005 | PED SIG SEC(2 INDICATIONS IN 1 SEC) | EA. | 12 | |
| 682-5019 | LOUVERS (ADJUSTABLE) (300 MM) | EA. | 6 | |
| 684-5044 | TRAF SIG CBL(TY C)(2 CONDR)(14 AWG) | M | 0 | |
| 684-5047 | TRAF SIG CBL(TY A)(7 CONDR)(14 AWG) | M | ~~367~~ | 377 |
| 684-5048 | TRAF SIG CBL(TY A)(9 CONDR)(14 AWG) | M | ~~341~~ | 363 |
| 686-5012 | TRAF SIG POLE ASM(STL)1 ARM(11.0 M) | EA. | 2 | |
| 686-5013 | TRAF SIG POLE ASM(STL)1 ARM(12.2 M) | EA. | ~~2~~ 0 | |
| 686-5014 | TRAF SIG POLE ASM(STL)1 ARM(13.4 M) | EA. | ~~1~~ 4 | |
| 686-5015 | TRAF SIG POLE ASM(STL)1 ARM(14.6 M) | EA. | ~~1~~ 0 | |
| 688-5001 | PED DETECT(PUSH BTN) | EA. | 12 | |
| 688-5011 | VEHICLE DETECT(14 AWG)(SAWCUT) | M | 0 | |
| 688-5012 | VEH DETECT (14 AWG) (19MM PVC) (COD ENC) | M | 0 | |
| 6XXX-XXXX | DETECTOR AMPLIFIERS (2 CHANNEL) *** | EA. | 16 | |
| 6023-5001 | PEDESTAL POLE ASSEMBLY | EA. | 2 | |
| 6438-5005 | VIVDS COMMUNICATION CABLE(COAXIAL) 406 | M | ~~417~~ | 637 |
| 6438-5001 | VIVDS PROCESSOR SYSTEM | EA. | 1 | 2 |
| 6438-5002 | VIVDS CAMERA ASSEMBLY ~~**~~ | EA. | 4 | 10 |
| 6438-5003 | VIVDS SET-UP SYSTEM * | EA. | 1 | |
| 6438-5005 | VIVDS COMMUNICATION CABLE(COAXIAL) | M | 200 | 0 |
| 6438-5007 | VIVDS TEMPORARY | EA. | 1 | |
| ** - - | BRACKET ASSY (SYMBOLIC PEDESTRIAN HEAD) | EA. | 12 | |
| *** - - | ASTRO-BRAC SIGNAL HEAD MOUNTS | EA. | 14 | 16 |
| *** - - | MAST ARMS SIGN MOUNTS (VARIOUS SIZES) | EA. | 8 | |

Provided by COSA (6438-5001, 6438-5002, 6438-5003)

## MATERIALS TO BE FURNISHED AND INSTALLED BY THE CONTRACTOR

| ITEM NO. | DESCRIPTION | UNIT | QUAN. |
|---|---|---|---|
| ~~6298-5001~~ | ~~300 MM LED TRAF SIGNAL LAMP(RED)~~ | EA. | 16 |
| ~~6298-5002~~ | ~~300 MM LED TRAF SIGNAL LAMP(YELLOW)~~ | EA. | 14 |
| ~~6298-5001~~ | ~~300 MM LED TRAF SIGNAL LAMP(GREEN)~~ | EA. | 14 |
| ~~6298-5001~~ | ~~300 MM LED TRAF SIGNAL LAMP(YEL ARW)~~ | EA. | 4 |
| ~~6298-5001~~ | ~~300 MM LED TRAF SIGNAL LAMP(GRN ARW)~~ | EA. | 4 |
| ~~8230-0501~~ | ~~LED PED SIG LAMP (SYMB)(2 IND/1 SEC)~~ | EA. | 12 |

SUB. TO Item 682

## MATERIALS TO BE FURNISHED BY COSA AND INSTALLED BY THE CONTRACTOR

| DESCRIPTION | UNIT | QUANTITY |
|---|---|---|
| CONTROLLER WITH CABINET(TY 332) | EA. | 1 |
| SR10-12 SIGN (FURNISH ONLY) | EA. | 2 |
| R10-4b PUSH BUTTON SIGN (FURNISH ONLY) | EA. | 12 |
| ~~SIGNS, METRO STREET NAME (FURNISH ONLY)~~ | EA. | 6 |
| R10-10L SIGN (FURNISH ONLY) | EA. | 2 |

STATE OF TEXAS
MARC S. JACOBSON
89335
LICENSED PROFESSIONAL ENGINEER

Marc S. Jacobson, P.E. 12/27/2005
Date

**CHANGE ORDER NO. 104**

-CHANGED QUANTITIES TO REFLECT REVISIONS

~~-ADDED LED SIGNAL SECTIONS~~

CHANGE ORDER NO. 104

REVISED SHEET

* -FOR CONTRACTOR'S INFORMATION ONLY.

** SUBSIDIARY TO ITEM 0682

*** SUBSIDIARY TO ITEM 0680

SHEET 5 OF 5

# TRAFFIC SIGNAL INTERSECTION LAYOUT

## LOOP 1604 FRONTAGE RDS. AT MILITARY DRIVE WEST

©2005 Texas Department of Transportation

| FED. RD. DIV. NO. | FEDERAL AID PROJECT NO. | | SHEET NO. |
|---|---|---|---|
| 6 | NH 2000(704),Etc. | | 569 B |
| STATE | DIST. | COUNTY | |
| TEXAS | SAT | BEXAR | |
| CONT. | SECT. | JOB | HIGHWAY NO. |
| 2452 | 01 | 036,Etc. | LOOP 1604 |

FILE: .DGN

## LEGEND

- PROP. LOOP DETECTOR
- PROP. GROUND BOX (TYPE "A")
- PROP. GROUND BOX (TYPE "D")
- PROP. 75 mm PVC SCHEDULE 80
- PROP. 50 mm PVC SCHEDULE 80
- PROP. 32 mm PVC SCHEDULE 80
- PROP. MAST ARM POLE AND FOUNDATION
- PROP. SIGNAL FACE
- PROP. CONTROLLER, SLAB AND FOUNDATION
- PROP. PEDESTRIAN SIGNAL HEAD WITH PUSH BUTTON
- PROP. PEDESTAL POLE AND FOUNDATION
- PROP. ELECTRICAL SERVICE
- TMS MANHOLE (BY OTHERS)

**NOTES:**

THE ENGINEER SHALL CONTACT MR. GILBERT MEIER (TXDOT SIGNAL SHOP) AT 615-5975 96 HOURS PRIOR TO CONSTRUCTION, PRIOR TO PICKING UP STATE FURNISHED MATERIALS AND PRIOR TO CONNECTING FIELD WIRING TO CONTROLLER.

STATE FORCES SHALL CONNECT FIELD WIRING TO CONTROLLER.

ALL PVC SHALL BE SCHEDULE 80.

ALL DIMENSIONS SHOWN ARE IN METERS UNLESS SPECIFIED OTHERWISE.

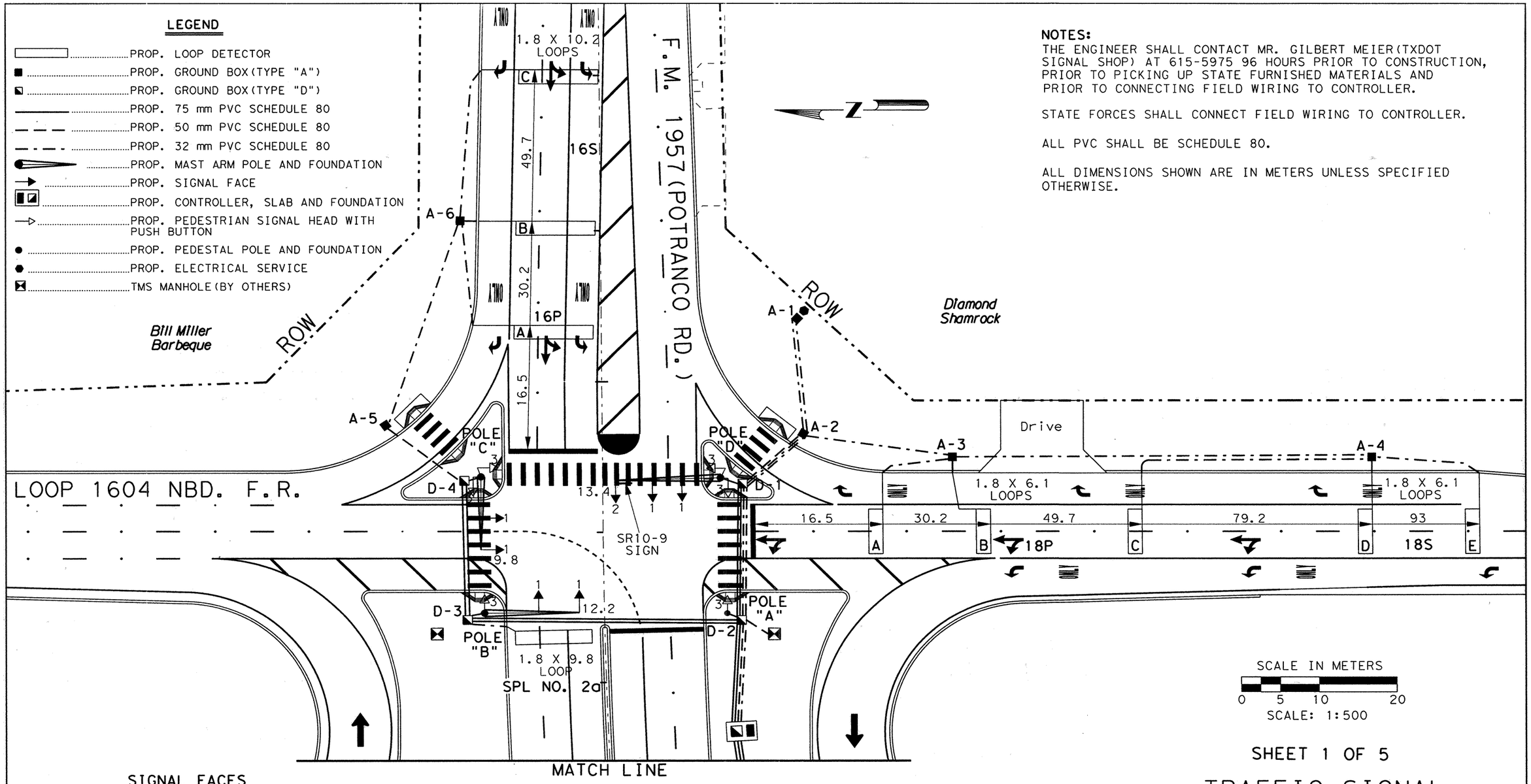


MATCH LINE

SCALE IN METERS

0 5 10 20

SCALE: 1:500

SHEET 1 OF 5

## SIGNAL FACES

300 mm SIGNAL SECTIONS

SIGNAL NO. 1 SIGNAL NO. 2

SIGNAL NO. 3

STATE OF TEXAS
ARNULFO RAMIREZ
56890
REGISTERED PROFESSIONAL ENGINEER

Arnulfo Ramirez, P.E. 9-18-00
Date

# TRAFFIC SIGNAL INTERSECTION LAYOUT

## LOOP 1604 FRONTAGE RDS. AT F.M. 1957 (POTRANCO RD.)

©2000 Texas Department of Transportation

| FED. RD. DIV. NO. | FEDERAL AID PROJECT NO. | | SHEET NO. |
|---|---|---|---|
| 6 | NH 2000(704), Etc. | | 570 |
| STATE | DIST. | COUNTY | |
| TEXAS | SAT | BEXAR | |
| CONT. | SECT. | JOB | HIGHWAY NO. |
| 2452 | 01 | 036, Etc. | LOOP 1604 |

Plotted on: $DATE$

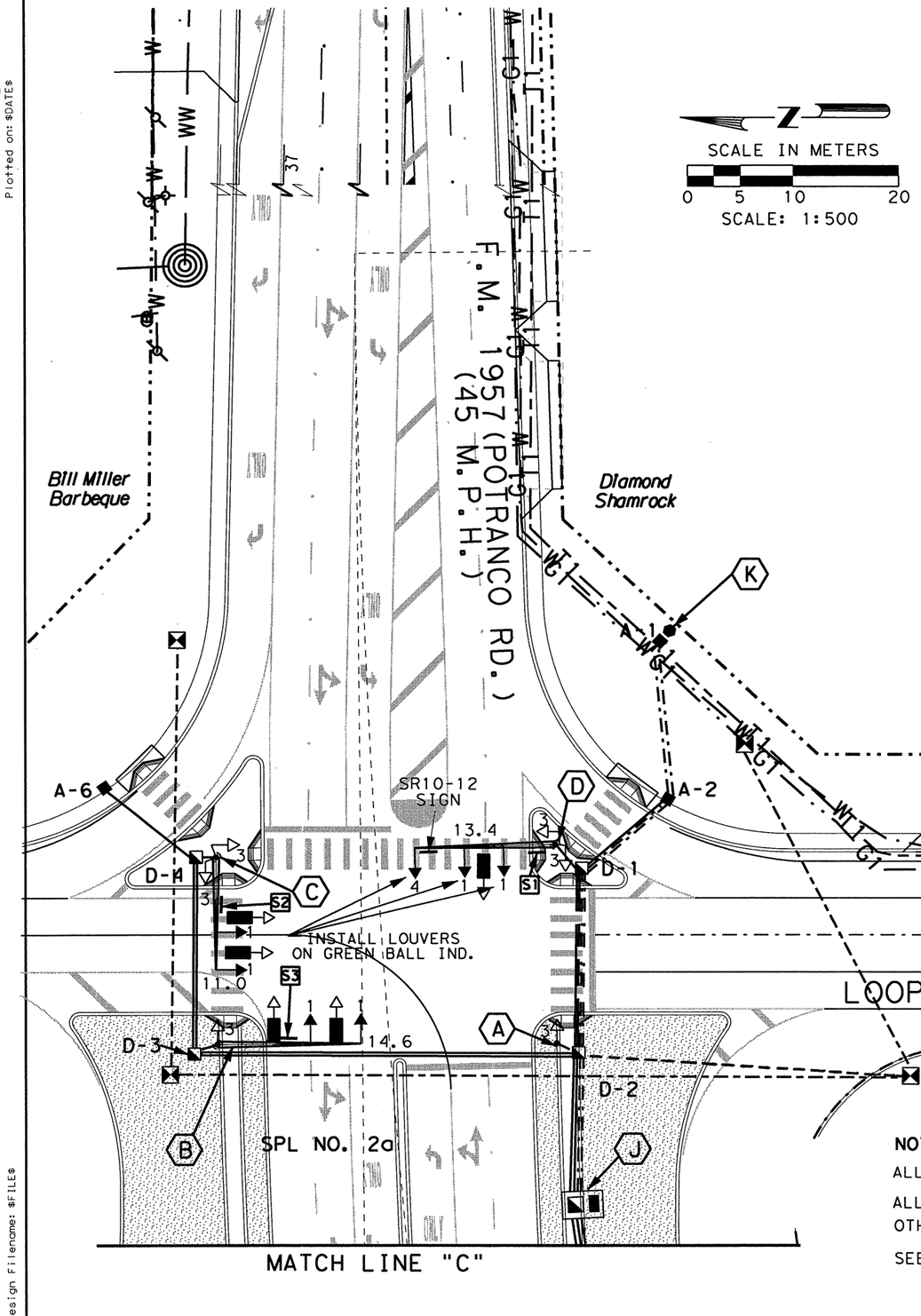


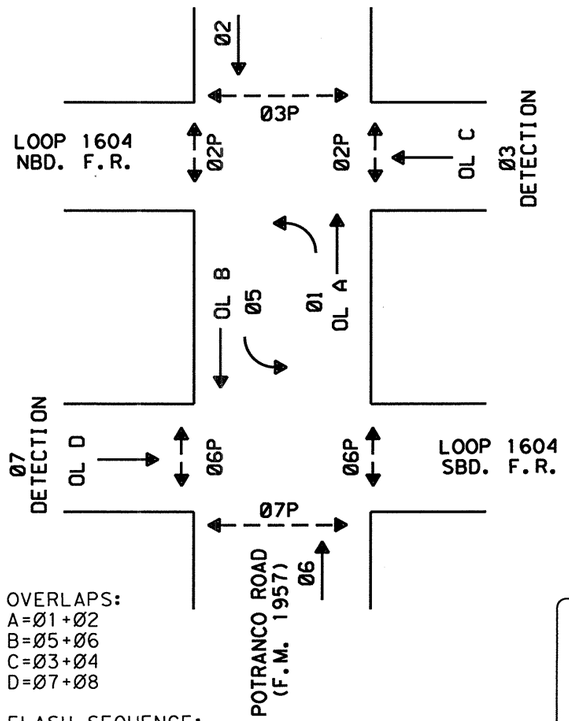


## LEGEND

- PROP. VIDEO IMAGING VEH. DETECTION SYSTEM CAMERA (VIVDS)
- PROP. GROUND BOX (TYPE "A")
- PROP. GROUND BOX (TYPE "D")
- PROP. 75 mm PVC SCHEDULE 80
- PROP. 50 mm PVC SCHEDULE 80
- PROP. 32 mm PVC SCHEDULE 80
- PROP. MAST ARM POLE AND FOUNDATION
- PROP. SIGNAL FACE
- PROP. CONTROLLER, SLAB AND FOUNDATION
- PROP. PEDESTRIAN SIGNAL HEAD WITH PUSH BUTTON
- PROP. PEDESTAL POLE AND FOUNDATION
- PROP. ELECTRICAL SERVICE
- TMS MANHOLE (BY OTHERS)

S1 ANDERSON LOOP <XXXX YYYY>
S2 POTRANCO RD <YYYY XXXX>
S3 ANDERSON LOOP <YYYY XXXX>
S4 POTRANCO RD <XXXX YYYY>

LEFT TURN YIELD ON GREEN — SR10-12 (750 x 900)

PUSH BUTTON FOR — R10-4BL (225 x 300)

PUSH BUTTON FOR — R10-4BR (225 x 300)

## SIGNAL FACES

300 mm SIGNAL SECTIONS

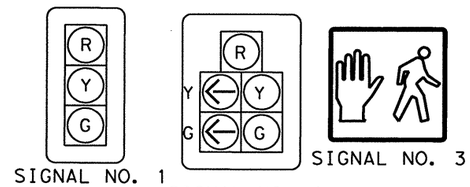


SIGNAL NO. 1 * SIGNAL NO. 4 *
SIGNAL NO. 3
* WITH LOUVER AS CALLED FOR ON PLAN

**CHANGE ORDER NO. 79**

-REVISED RDWY GEOMETRICS AND LANE CONFIGURATIONS.
- REPLACES LOOP DETECTORS W/VIVDS
-REVISIONS TO ACCOMMODATE COSA SPECS

CHANGE ORDER NO. 79

REVISED SHEET

**NOTES:**

ALL PVC SHALL BE SCHEDULE 80.

ALL DIMENSIONS SHOWN ARE IN METERS UNLESS SPECIFIED OTHERWISE.

SEE NOTES, SHEET 1 OF 1. (580F)

STATE OF TEXAS — JEROME D. PAVLISKA — 76075 — REGISTERED PROFESSIONAL ENGINEER

Jerome D. Pavliska, P.E. 4-23-04
Jerome D. Pavliska, P.E. — Date

SHEET 1 OF 5

©2004 Texas Department of Transportation

**LOOP 1604**
**TRAFFIC SIGNAL INTERSECTION LAYOUT**
**LOOP 1604 AT POTRANCO RD (F.M. 1957)**

| DN: | | PROJECT NO. | SHEET NO. |
|---|---|---|---|
| CK DN: | | NH 2000(704), etc. | 570 A |
| DW: | STATE | DIST. | COUNTY |
| CK DW: | TEXAS | SAT | BEXAR |
| | CONT. | SECT. | JOB | HIGHWAY NO. |
| | 2452 | 01 | 036, etc. | LP 1604 |

Design Filename: $FILE$

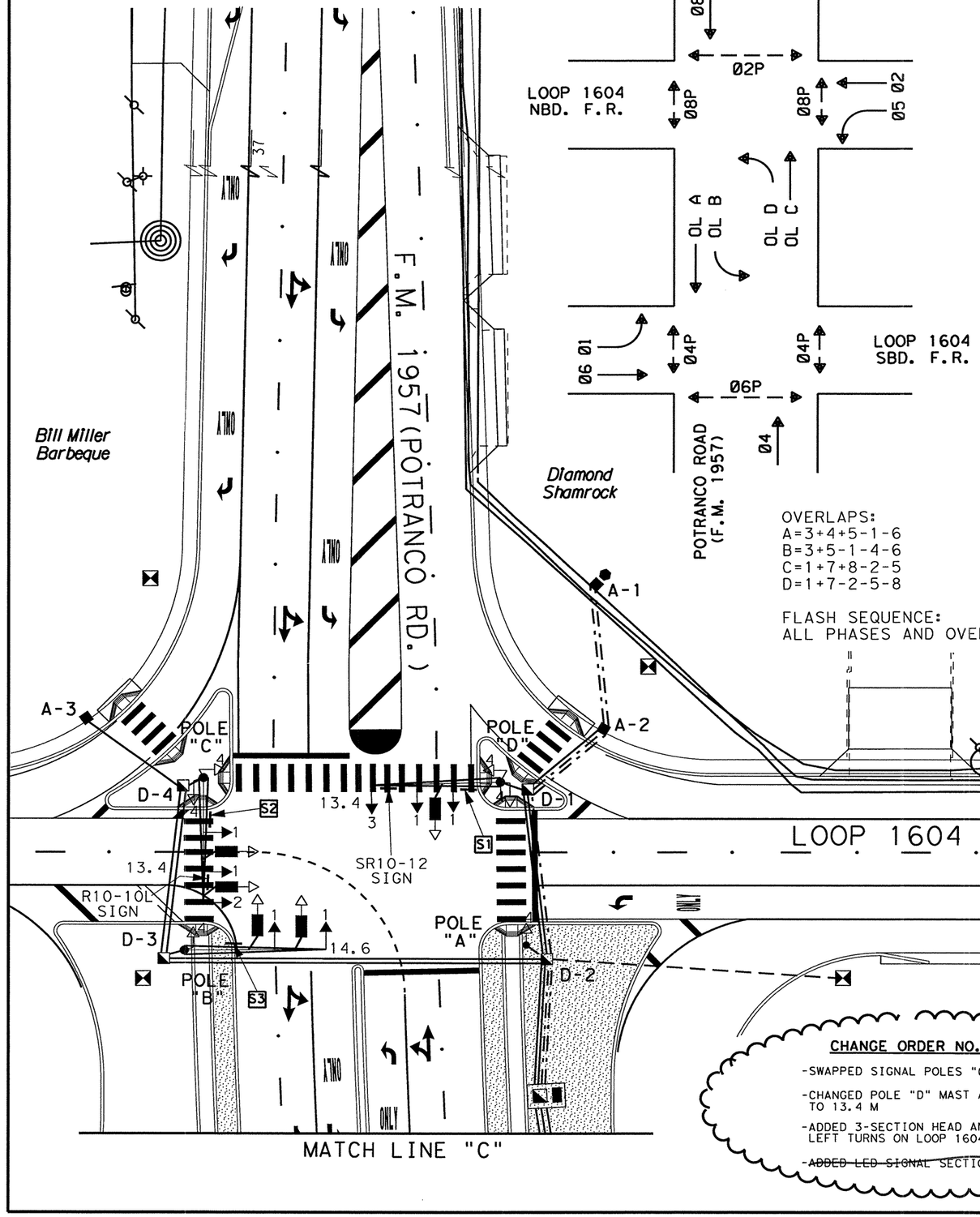


OVERLAPS:
A=3+4+5-1-6
B=3+5-1-4-6
C=1+7+8-2-5
D=1+7-2-5-8

FLASH SEQUENCE:
ALL PHASES AND OVERLAPS-RED

## SIGNAL FACES

300 mm SIGNAL SECTIONS

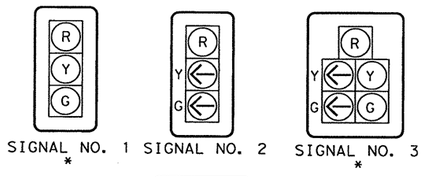


SIGNAL NO. 1 * SIGNAL NO. 2 SIGNAL NO. 3 *

SIGNAL NO. 4

* WITH LOUVER AS CALLED FOR ON PLAN

| | | |
|---|---|---|
| S1 | ANDERSON LOOP | XXXX YYYY |
| S2 | POTRANCO RD | YYYY XXXX |
| S3 | ANDERSON LOOP | YYYY XXXX |
| S4 | POTRANCO RD | XXXX YYYY |

## LEGEND

- PROP. VIDEO IMAGING VEH. DETECTION SYSTEM CAMERA (VIVDS)
- PROP. GROUND BOX (TYPE "A")
- PROP. GROUND BOX (TYPE "D")
- PROP. 75 mm PVC SCHEDULE 80
- PROP. 50 mm PVC SCHEDULE 80
- PROP. 32 mm PVC SCHEDULE 80
- PROP. MAST ARM POLE AND FOUNDATION
- PROP. SIGNAL FACE
- PROP. CONTROLLER, SLAB AND FOUNDATION
- PROP. PEDESTRIAN SIGNAL HEAD WITH PUSH BUTTON
- PROP. PEDESTAL POLE AND FOUNDATION
- PROP. ELECTRICAL SERVICE
- TMS MANHOLE (BY OTHERS)

SR10-12 (750 x 900)

R10-4BL (225 x 300)

R10-10L (750 x 900)

R10-4BR (225 x 300)

**NOTES:**

ALL PVC SHALL BE SCHEDULE 80.

ALL DIMENSIONS SHOWN ARE IN METERS UNLESS SPECIFIED OTHERWISE.

SEE NOTES, SHEET 1 OF 1. (580F)

CONTRACTOR SHALL INSTALL LOUVERS ON GREEN BALL INDICATIONS ON SIGNAL POLE "D".

SCALE IN METERS

0 5 10 20

SCALE: 1:500

CHANGE ORDER NO. 104

REVISED SHEET

SHEET 1 OF 5

# LOOP 1604
# TRAFFIC SIGNAL INTERSECTION LAYOUT
# LOOP 1604 AT POTRANCO RD (F.M. 1957)

CHANGE ORDER NO. 104

-SWAPPED SIGNAL POLES "C" & "D"

-CHANGED POLE "D" MAST ARM FROM 11.0 M TO 13.4 M

-ADDED 3-SECTION HEAD AND SIGN FOR LEFT TURNS ON LOOP 1604 F.R.

-~~ADDED LED SIGNAL SECTIONS~~

STATE OF TEXAS
MARC S. JACOBSON
89335
LICENSED
PROFESSIONAL ENGINEER

Marc S. Jacobson, P.E. 12/27/2005
Marc S. Jacobson, P.E. Date

©2005 Texas Department of Transportation

| FED.RD. DIV.NO. | FEDERAL AID PROJECT NO. | | SHEET NO. |
|---|---|---|---|
| 6 | NH 2000(704), Etc. | | 570B |
| STATE | DIST. | COUNTY | |
| TEXAS | SAT | BEXAR | |
| CONT. | SECT. | JOB | HIGHWAY NO. |
| 2452 | 01 | 036, Etc. | LOOP 1604 |

LEVELS DISPLAYED
1 2 3 4 5 6 7 8 9 10 11 12 13 14 15 16
17 18 19 20 21 22 23 24 25 26 27 28 29 30 31 32
33 34 35 36 37 38 39 40 41 42 43 44 45 46 47 48
49 50 51 52 53 54 55 56 57 58 59 60 61 62 63
ACC:
FILE: .DGN

1:42:07 PM
12/27/2005
u:\engdata\sjesse\bexcr\loop1604\loop1604portranco-CO.dgn

## LEGEND

- PROP. LOOP DETECTOR
- PROP. GROUND BOX(TYPE "A")
- PROP. GROUND BOX(TYPE "D")
- PROP. 75 mm PVC SCHEDULE 80
- PROP. 50 mm PVC SCHEDULE 80
- PROP. 32 mm PVC SCHEDULE 80
- PROP. MAST ARM POLE AND FOUNDATION
- PROP. SIGNAL FACE
- PROP. CONTROLLER, SLAB AND FOUNDATION
- PROP. PEDESTRIAN SIGNAL HEAD WITH PUSH BUTTON
- PROP. PEDESTAL POLE AND FOUNDATION
- PROP. ELECTRICAL SERVICE

## SIGNAL FACES

300 mm SIGNAL SECTIONS

SIGNAL NO. 1 SIGNAL NO. 2

SIGNAL NO. 3

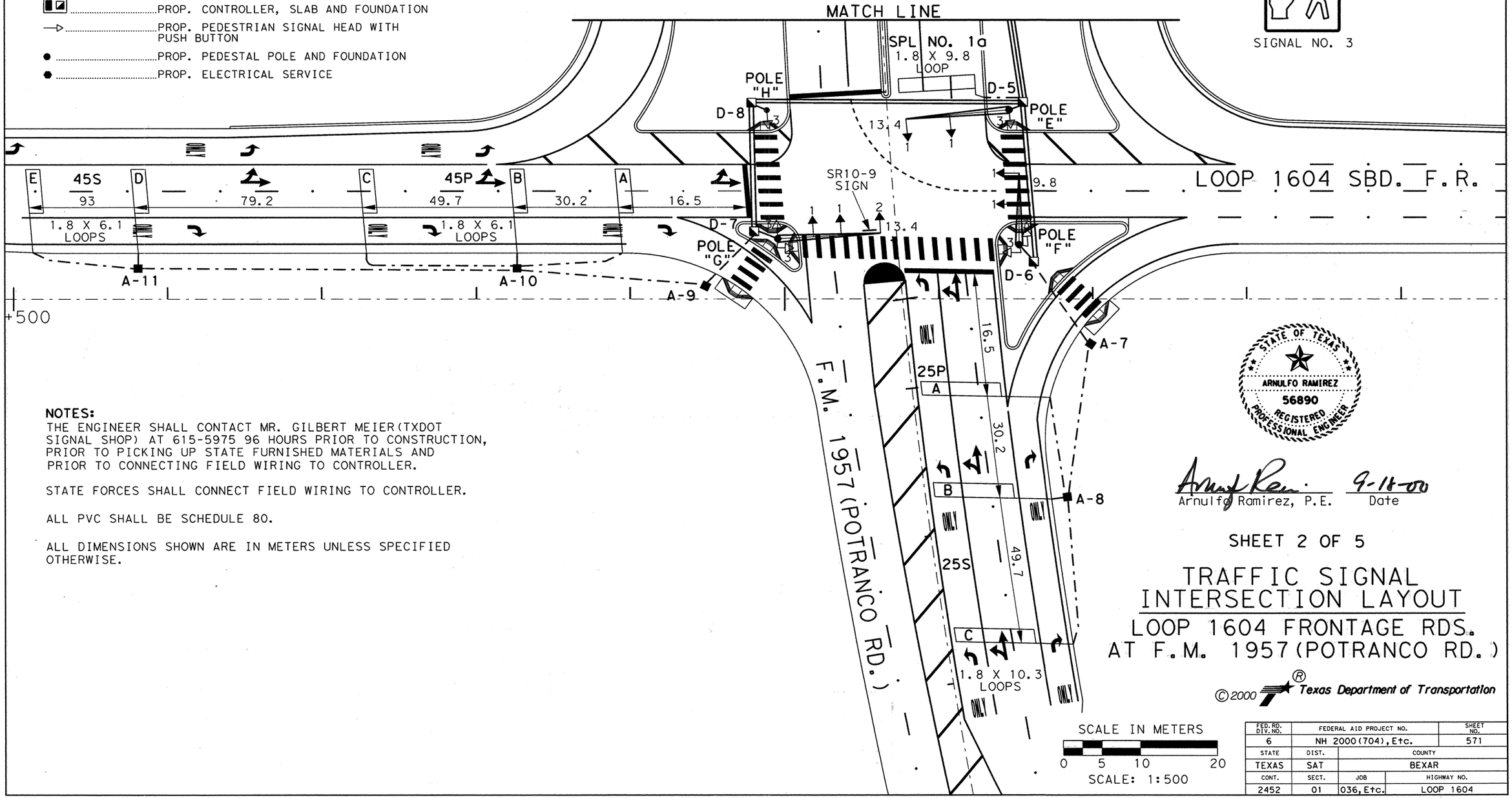


SCALE IN METERS

0 5 10 20

SCALE: 1:500

**NOTES:**

THE ENGINEER SHALL CONTACT MR. GILBERT MEIER(TXDOT SIGNAL SHOP) AT 615-5975 96 HOURS PRIOR TO CONSTRUCTION, PRIOR TO PICKING UP STATE FURNISHED MATERIALS AND PRIOR TO CONNECTING FIELD WIRING TO CONTROLLER.

STATE FORCES SHALL CONNECT FIELD WIRING TO CONTROLLER.

ALL PVC SHALL BE SCHEDULE 80.

ALL DIMENSIONS SHOWN ARE IN METERS UNLESS SPECIFIED OTHERWISE.

STATE OF TEXAS
ARNULFO RAMIREZ
56890
REGISTERED PROFESSIONAL ENGINEER

Arnulfo Ramirez, P.E. 9-18-00
Date

SHEET 2 OF 5

# TRAFFIC SIGNAL INTERSECTION LAYOUT

## LOOP 1604 FRONTAGE RDS. AT F.M. 1957 (POTRANCO RD.)

©2000 Texas Department of Transportation

| FED.RD. DIV.NO. | FEDERAL AID PROJECT NO. | | SHEET NO. |
|---|---|---|---|
| 6 | NH 2000(704), Etc. | | 571 |
| STATE | DIST. | COUNTY | |
| TEXAS | SAT | BEXAR | |
| CONT. | SECT. | JOB | HIGHWAY NO. |
| 2452 | 01 | 036, Etc. | LOOP 1604 |

Plotted on: $DATE$

SCALE IN METERS
0 5 10 20
SCALE: 1:500

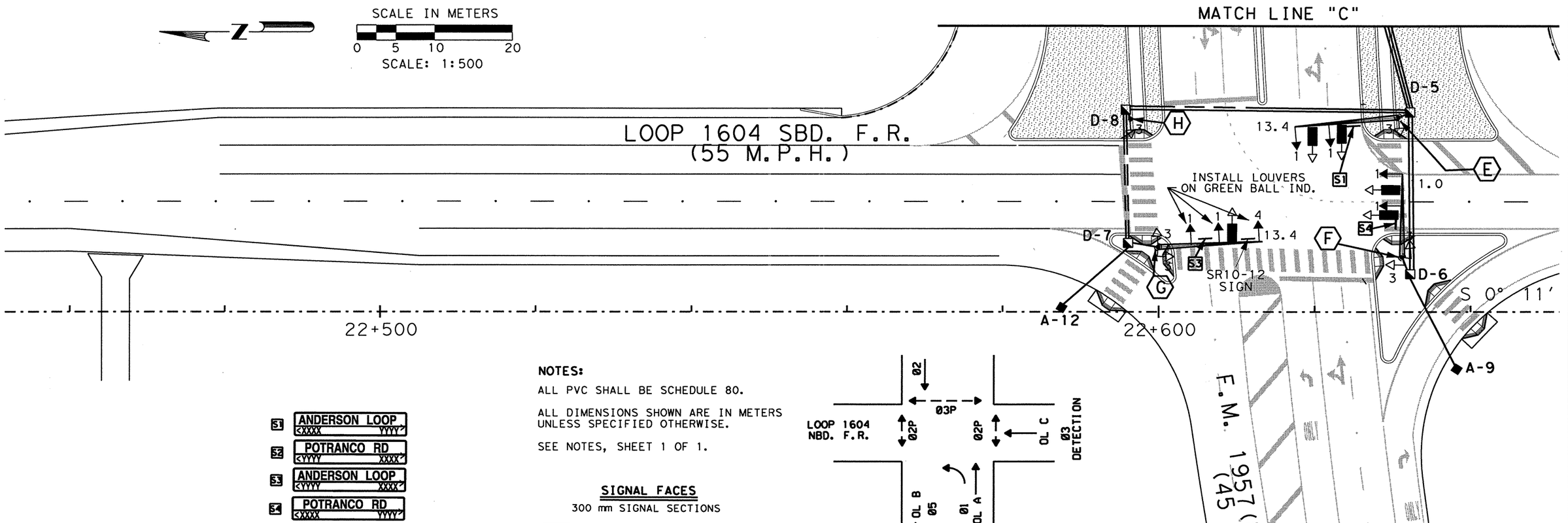


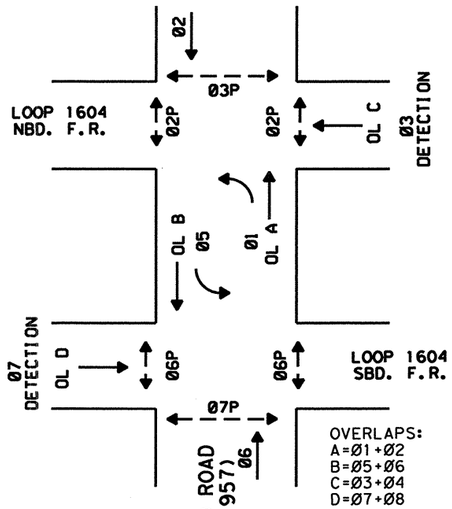


OVERLAPS:
A=Ø1+Ø2
B=Ø5+Ø6
C=Ø3+Ø4
D=Ø7+Ø8

FLASH SEQUENCE:
ALL PHASES AND OVERLAPS-RED

**NOTES:**

ALL PVC SHALL BE SCHEDULE 80.

ALL DIMENSIONS SHOWN ARE IN METERS UNLESS SPECIFIED OTHERWISE.

SEE NOTES, SHEET 1 OF 1.

S1 ANDERSON LOOP <XXXX YYYY'>
S2 POTRANCO RD <YYYY XXXX'>
S3 ANDERSON LOOP <YYYY XXXX'>
S4 POTRANCO RD <XXXX YYYY'>

LEFT TURN YIELD ON GREEN — SR10-12 (750 x 900)

PUSH BUTTON FOR 1 — R10-4BL (225 x 300)

PUSH BUTTON FOR 2 — R10-4BR (225 x 300)

**SIGNAL FACES**

300 mm SIGNAL SECTIONS

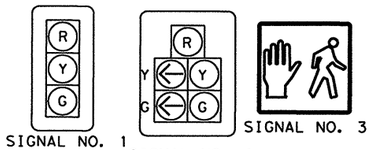


* WITH LOUVER AS CALLED FOR ON PLAN

**LEGEND**

- PROP. VIDEO IMAGING VEH. DETECTION SYSTEM CAMERA (VIVDS)
- PROP. GROUND BOX (TYPE "A")
- PROP. GROUND BOX (TYPE "D")
- PROP. 75 mm PVC SCHEDULE 80
- PROP. 50 mm PVC SCHEDULE 80
- PROP. 32 mm PVC SCHEDULE 80
- PROP. MAST ARM POLE AND FOUNDATION
- PROP. SIGNAL FACE
- PROP. CONTROLLER, SLAB AND FOUNDATION
- PROP. PEDESTRIAN SIGNAL HEAD WITH PUSH BUTTON
- PROP. PEDESTAL POLE AND FOUNDATION
- PROP. ELECTRICAL SERVICE
- TMS MANHOLE (BY OTHERS)

**CHANGE ORDER NO.**

-REVISED RDWY GEOMETRICS AND LANE CONFIGURATIONS.
- REPLACES LOOP DETECTORS W/VIVDS
-REVISIONS TO ACCOMMODATE COSA SPECS

CHANGE ORDER NO. 79

REVISED SHEET

STATE OF TEXAS — JEROME D. PAVLISKA — 76075 — REGISTERED PROFESSIONAL ENGINEER

Jerome D. Pavliska, P.E. 4-23-04
Jerome D. Pavliska, P.E. Date

SHEET 2 OF 5

©2004 Texas Department of Transportation

LOOP 1604
TRAFFIC SIGNAL INTERSECTION LAYOUT
LOOP 1604 AT POTRANCO RD (F.M. 1957)

| DN: | | PROJECT NO. | | SHEET NO. |
|---|---|---|---|---|
| CK DN: | | NH 2000(704), etc. | | 571 A |
| DW: | | STATE | DIST. | COUNTY |
| | | TEXAS | SAT | BEXAR |
| CK DW: | CONT. | SECT. | JOB | HIGHWAY NO. |
| | 2452 | 01 | 036, etc. | LP 1604 |

Design Filename: $FILE$

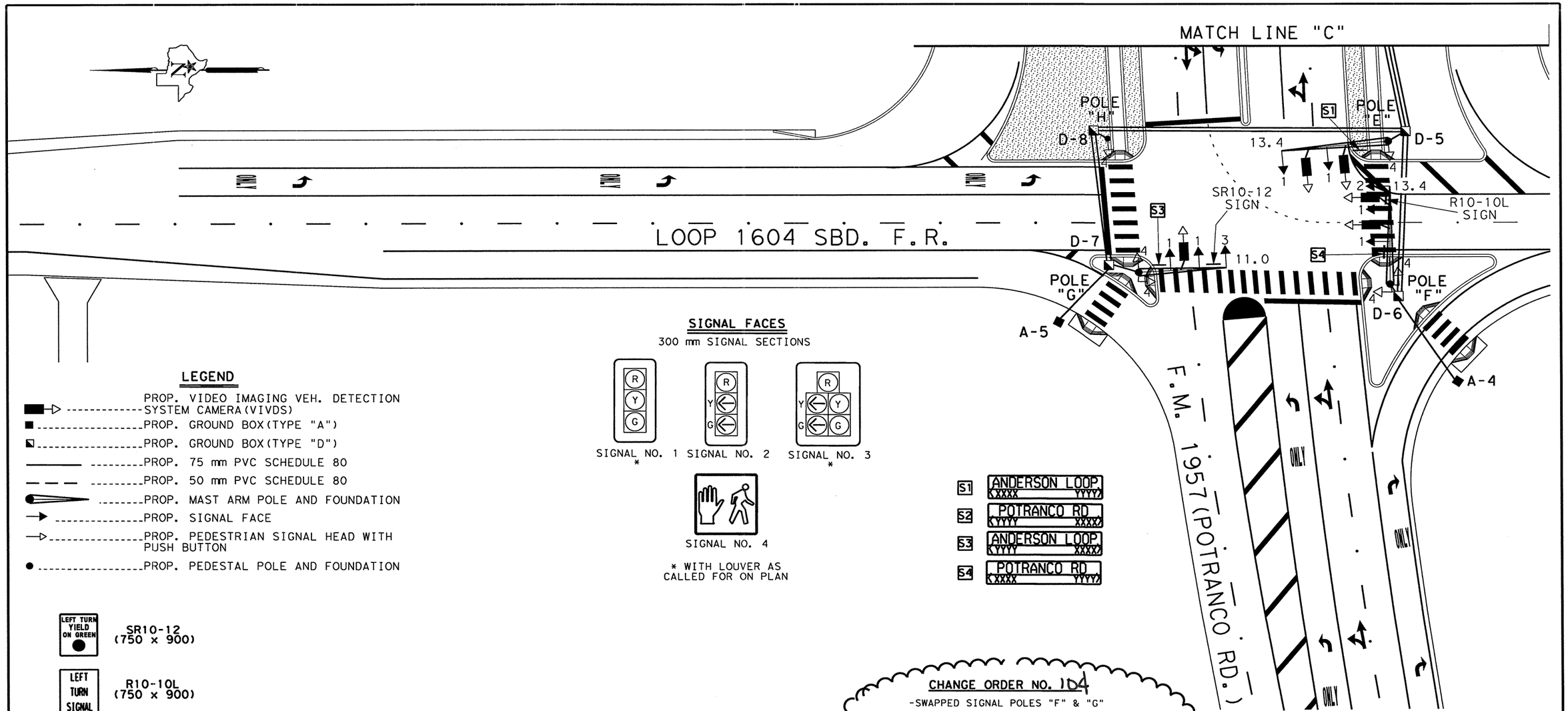


## LEGEND

- PROP. VIDEO IMAGING VEH. DETECTION SYSTEM CAMERA (VIVDS)
- PROP. GROUND BOX (TYPE "A")
- PROP. GROUND BOX (TYPE "D")
- PROP. 75 mm PVC SCHEDULE 80
- PROP. 50 mm PVC SCHEDULE 80
- PROP. MAST ARM POLE AND FOUNDATION
- PROP. SIGNAL FACE
- PROP. PEDESTRIAN SIGNAL HEAD WITH PUSH BUTTON
- PROP. PEDESTAL POLE AND FOUNDATION

## SIGNAL FACES

300 mm SIGNAL SECTIONS




SIGNAL NO. 1 * SIGNAL NO. 2 SIGNAL NO. 3 *



SIGNAL NO. 4

* WITH LOUVER AS CALLED FOR ON PLAN

| | |
|---|---|
| S1 | ANDERSON LOOP (XXXX YYYY) |
| S2 | POTRANCO RD (YYYY XXXX) |
| S3 | ANDERSON LOOP (YYYY XXXX) |
| S4 | POTRANCO RD (XXXX YYYY) |




SR10-12 (750 x 900)




R10-10L (750 x 900)

R10-4BL (225 x 300)

R10-4BR (225 x 300)

**NOTES:**

ALL PVC SHALL BE SCHEDULE 80.

ALL DIMENSIONS SHOWN ARE IN METERS UNLESS SPECIFIED OTHERWISE.

SEE NOTES, SHEET 1 OF 1. (580F)

CONTRACTOR SHALL INSTALL LOUVERS ON GREEN BALL INDICATIONS ON SIGNAL POLE "G".

**CHANGE ORDER NO. 104**

-SWAPPED SIGNAL POLES "F" & "G"

-ADDED 3-SECTION HEAD AND SIGN FOR LEFT TURNS ON LOOP 1604 F.R.

-ADDED LED SIGNAL SECTIONS

**CHANGE ORDER NO. 104**

**REVISED SHEET**

SHEET 2 OF 5

STATE OF TEXAS
MARC S. JACOBSON
89335
LICENSED PROFESSIONAL ENGINEER

Marc S. Jacobson, P.E. 12/27/2005
Marc S. Jacobson, P.E. Date

SCALE IN METERS
0 5 10 20
SCALE: 1:500

# LOOP 1604
## TRAFFIC SIGNAL INTERSECTION LAYOUT
## LOOP 1604 AT POTRANCO RD (F.M. 1957)

©2005 Texas Department of Transportation

| FED. RD. DIV. NO. | FEDERAL AID PROJECT NO. | | SHEET NO. |
|---|---|---|---|
| 6 | NH 2000(704), Etc. | | 571B |
| STATE | DIST. | COUNTY | |
| TEXAS | SAT | BEXAR | |
| CONT. | SECT. | JOB | HIGHWAY NO. |
| 2452 | 01 | 036, Etc. | LOOP 1604 |

LEVELS DISPLAYED
1 2 3 4 5 6 7 8 9 10 11 12 13 14 15 16
17 18 19 20 21 22 23 24 25 26 27 28 29 30 31 32
33 34 35 36 37 38 39 40 41 42 43 44 45 46 47 48
49 50 51 52 53 54 55 56 57 58 59 60 61 62 63
ACC:
FILE: .DGN

12/23/2005 11:42:27 PM
u:\engdata\jesse\bexar\loop1604\loop1604potranco-CO.dgn

## POLE AND CABLE SCHEDULE

| POLE NO. | SIGNAL CABLE | | | ELEC CONDR |
|---|---|---|---|---|
| | 7/C#12 | 4/C#12 | 2/C#14 | 1/C#6 BARE |
| A | - | 1 | 1 | 1 |
| B | 2 | 1 | 1 | 1 |
| C | 2 | 2 | 2 | 1 |
| D | 3 | 2 | 2 | 1 |
| | | | | |

F.M. 1957 (POTRANCO RD.)

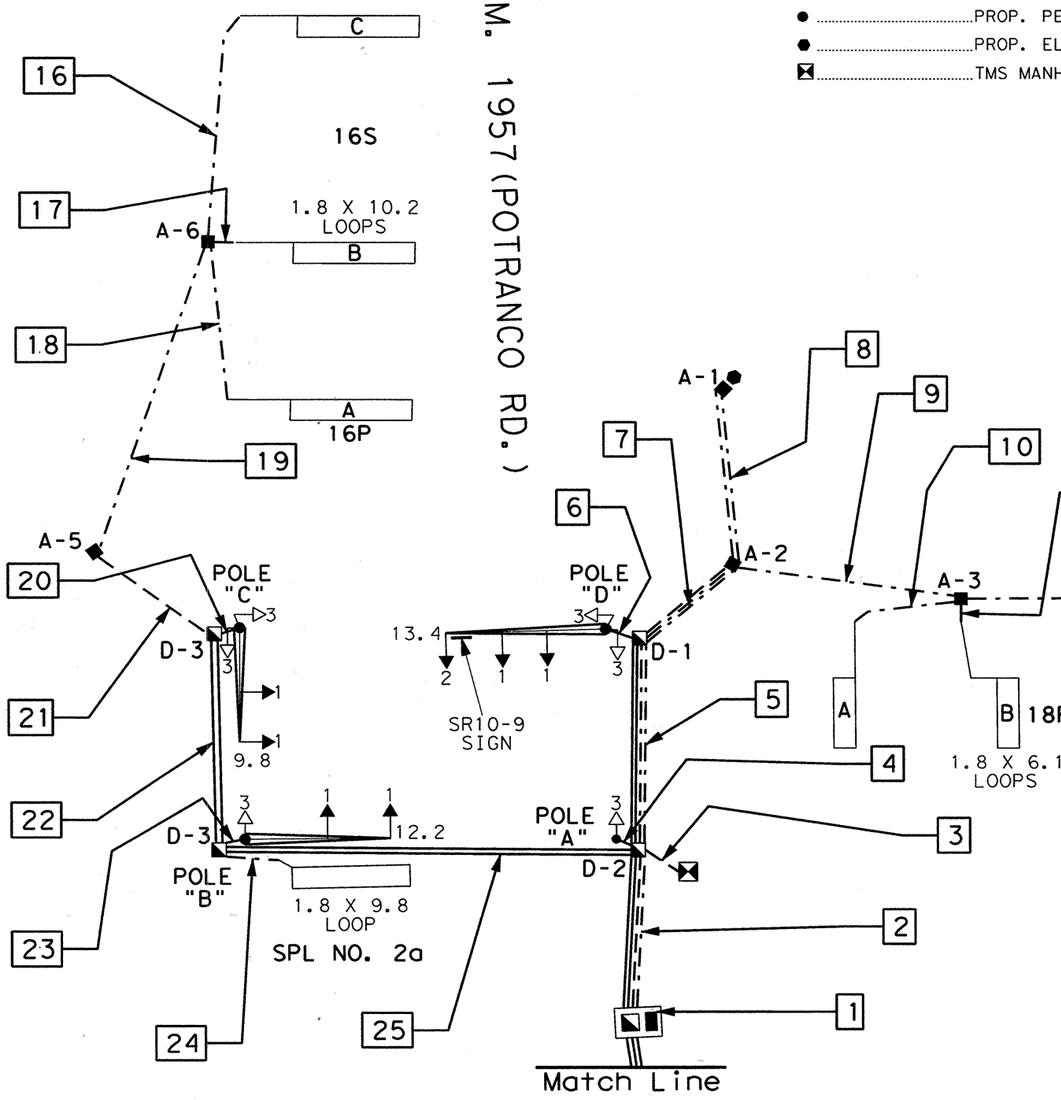


LOOP 1604 NBD. F.R.

### LEGEND

- PROP. LOOP DETECTOR
- PROP. GROUND BOX (TYPE "A")
- PROP. GROUND BOX (TYPE "D")
- PROP. 75 mm PVC SCHEDULE 80
- PROP. 50 mm PVC SCHEDULE 80
- PROP. 32 mm PVC SCHEDULE 80
- PROP. MAST ARM POLE AND FOUNDATION
- PROP. SIGNAL FACE
- PROP. CONTROLLER, SLAB AND FOUNDATION
- PROP. PEDESTRIAN SIGNAL HEAD WITH PUSH BUTTON
- PROP. PEDESTAL POLE AND FOUNDATION
- PROP. ELECTRICAL SERVICE
- TMS MANHOLE (BY OTHERS)

### SIGNAL FACES

300 mm SIGNAL SECTIONS

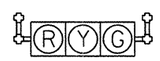


SIGNAL NO. 1

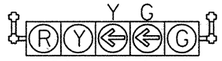


SIGNAL NO. 2

SIGNAL NO. 3

## CONDUIT AND CABLE SCHEDULE

| RUN NO. | CONDUIT (PVC) | | | SIGNAL CABLE | | | | ELEC CONDR | |
|---|---|---|---|---|---|---|---|---|---|
| | NO. | SIZE (MM) | LENGTH (M) | 7/C#12 | 4/C#12 | 2/C#14 | 1/C#14 ✳ | 1/C#6 | 1/C#6 BARE |
| 1 | IN CONTROLLER | | | 6 | 12 | 22 | - | 2 | 2 |
| 2 | 2, 1, 3 | 32, 50, 75 | 15 | 3 | 6 | 11 | - | 2 | 1 |
| 3 | 1 | 50 | 5 | - | - | - | - | - | - |
| 4 | 1 | 50 | 2 | - | 1 | 1 | - | - | 1 |
| 5 | 2 , 2 | 32 , 75 | 19 | 1 | 2 | 4 | - | 2 | 1 |
| 6 | 1 | 75 | 3 | 1 | 2 | 2 | - | - | 1 |
| 7 | 2 , 1 | 32 , 50 | 11 | - | - | 2 | - | 2 | 1 |
| 8 | 2 | 32 | 16 | - | - | - | - | 2 | 1 |
| 9 | 1 | 32 | 20 | - | - | 2 | - | - | - |
| 10 | 1 | 32 | 10 | - | - | - | 2 | - | - |
| 11 | 1 | 32 | 2 | - | - | - | 2 | - | - |
| 12 | 1 | 32 | 55 | - | - | 1 | - | - | - |
| 13 | 1 | 32 | 30 | - | - | - | 2 | - | - |
| 14 | 1 | 32 | 2 | - | - | - | 2 | - | - |
| 15 | 1 | 32 | 14 | - | - | - | 2 | - | - |
| 16 | 1 | 32 | 20 | - | - | - | 2 | - | - |
| 17 | 1 | 32 | 2 | - | - | - | 2 | - | - |
| 18 | 1 | 32 | 14 | - | - | - | 2 | - | - |
| 19 | 1 | 32 | 29 | - | - | 2 | - | - | - |
| 20 | 1 | 75 | 2 | 1 | 2 | 2 | - | - | 1 |
| 21 | 1 | 50 | 13 | - | - | 2 | - | - | - |
| 22 | 2 | 75 | 19 | 1 | 2 | 4 | - | - | 1 |
| 23 | 1 | 75 | 2 | 1 | 1 | 1 | - | - | 1 |
| 24 | 1 | 32 | 5 | - | - | - | 2 | - | - |
| 25 | 2 | 75 | 36 | 2 | 3 | 6 | - | - | 1 |

**NOTES:**

ONE CONDUIT SHALL REMAIN OPEN IN RUN #2 (50 mm) FOR FUTURE COMMUNICATION CABLE (TMS).

✳-FOR CONTRACTOR'S INFORMATION ONLY.

STATE OF TEXAS
ARNULFO RAMIREZ
56890
REGISTERED
PROFESSIONAL ENGINEER

Arnulfo Ramirez, P.E. 9-18-00
Date

SHEET 3 OF 5

# TRAFFIC SIGNAL WIRING DIAGRAM AND CONDUIT LAYOUT

## LOOP 1604 FRONTAGE RDS. AT F.M. 1957 (POTRANCO RD.)

©2000 Texas Department of Transportation

| FED.RD. DIV.NO. | FEDERAL AID PROJECT NO. | | SHEET NO. |
|---|---|---|---|
| 6 | NH 2000(704), Etc. | | 572 |
| STATE | DIST. | COUNTY | |
| TEXAS | SAT | BEXAR | |
| CONT. | SECT. | JOB | HIGHWAY NO. |
| 2452 | 01 | 036, Etc. | LOOP 1604 |

Plotted on: $DATE$

S1 ANDERSON LOOP <XXXX YYYY>
S2 POTRANCO RD <YYYY XXXX>
S3 ANDERSON LOOP <YYYY XXXX>
S4 POTRANCO RD <XXXX YYYY>

LEFT TURN YIELD ON GREEN — SR10-12 (750 x 900)

PUSH BUTTON FOR — R10-4BL (225 x 300)

PUSH BUTTON FOR — R10-4BR (225 x 300)

F.M. 1957 (POTRANCO RD.)
(45 M.P.H.)

SCALE IN METERS
0 5 10 20
SCALE: 1:500

| POLE NO. | SIGNAL CABLE 7/C#14 (SIG.) | SIGNAL CABLE 9/C#14 (PED.) | |
|---|---|---|---|
| A | - | 1 | |
| B | 1 | 1 | |
| C | 1 | 1 | |
| D | 1 | 1 | |
| | | | |

**LEGEND**

- PROP. VIDEO IMAGING VEH. DETECTION SYSTEM CAMERA (VIVDS)
- PROP. GROUND BOX (TYPE "A")
- PROP. GROUND BOX (TYPE "D")
- PROP. 75 mm PVC SCHEDULE 80
- PROP. 50 mm PVC SCHEDULE 80
- PROP. 32 mm PVC SCHEDULE 80
- PROP. MAST ARM POLE AND FOUNDATION
- PROP. SIGNAL FACE
- PROP. CONTROLLER, SLAB AND FOUNDATION
- PROP. PEDESTRIAN SIGNAL HEAD WITH PUSH BUTTON
- PROP. PEDESTAL POLE AND FOUNDATION
- PROP. ELECTRICAL SERVICE
- TMS MANHOLE (BY OTHERS)

| RUN NO. | CONDUIT (PVC) (SCHD 80) NO. | SIZE (MM) | LENGTH (M) | SIGNAL CABLE 7/C#14 (SIG.) | 9/C#14 (PED.) | 2/C#14 | 1/C#14 ✳ | ELEC CONDR 1/C#6 | 1/C#8 BARE |
|---|---|---|---|---|---|---|---|---|---|
| 1 | IN CONTROLLER | | | 6 | 8 | | - | 2 | 1 |
| 2 | 2, 2 | 75, 32 | 15 | 3 | 4 | | - | 2 | 4 |
| 3 | 1 | 50 | 35 | - | - | - | - | - | - |
| 4 | 1 | 50 | 2 | - | 1 | - | - | - | 1 |
| 5 | 2 , 2 | 75, 32 | 19 | 1 | 1 | | - | 2 | 4 |
| 6 | 1 | 75 | 3 | 1 | 1 | - | - | - | 1 |
| 7 | 1, 2 | 75, 32 | 11 | - | - | | - | 2 | 3 |
| 8 | 2 | 32 | 15 | - | - | - | - | 2 | 2 |
| | | | | | | | | | |
| 20 | 1 | 75 | 11 | - | - | 4 | - | - | - |
| | | | | | | | | | |
| 22 | 1 | 75 | 2 | 1 | 1 | - | - | - | 1 |
| 23 | 2 | 75 | 19 | 1 | 1 | | - | - | 2 |
| 24 | 1 | 75 | 4 | 1 | 1 | - | 18 | - | 1 |
| | | | | | | | | | |
| | | | | | | | | | - |
| 27 | 2 | 75 | 37 | 2 | 2 | | - | - | 2 |
| | | | | | | | | | |
| | | | | | | | | | |
| | | | | | | | | | |
| | | | | | | | | | |
| | | | | | | | | | |
| | | | | | | | | | |

✳ -FOR CONTRACTOR'S INFORMATION ONLY.

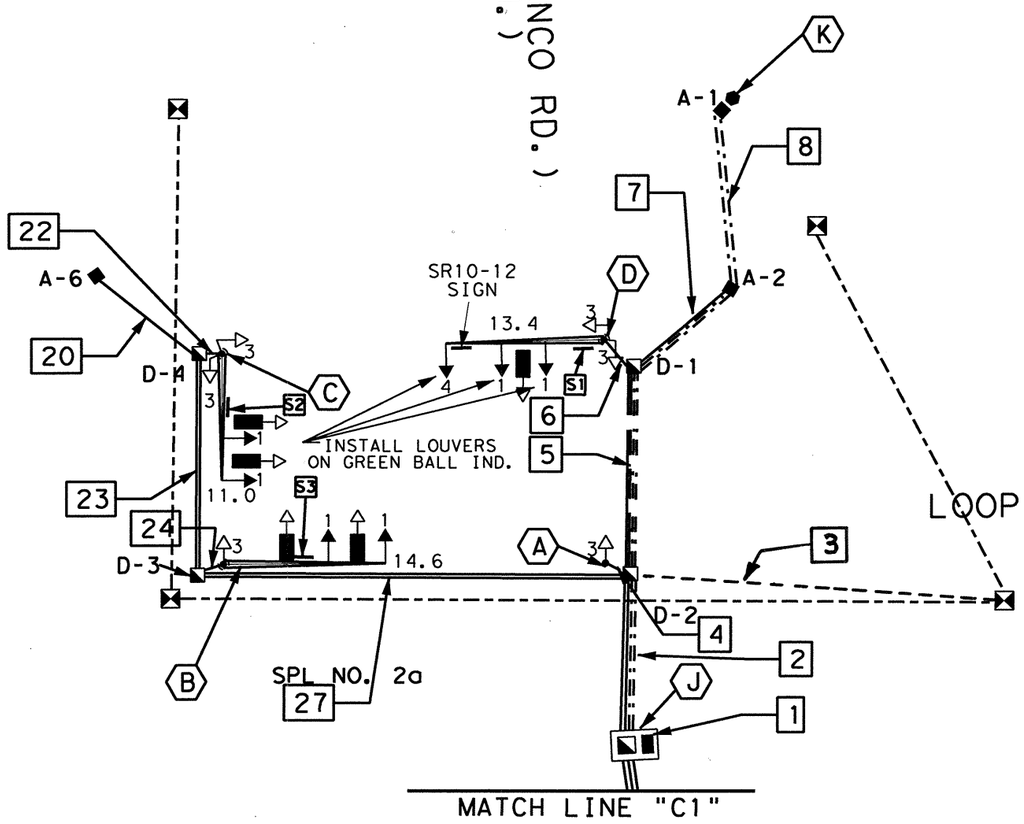


LOOP 1604 NBD. F.R.
(55 M.P.H.)

**SIGNAL FACES**
300 mm SIGNAL SECTIONS

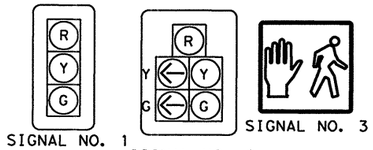


* WITH LOUVER AS CALLED FOR ON PLAN

**NOTES:**

ONE CONDUIT SHALL REMAIN OPEN IN RUN #2 (50 mm) FOR FUTURE COMMUNICATION CABLE (TMS).

CHANGE ORDER NO. 79

REVISED SHEET

STATE OF TEXAS — JEROME D. PAVLISKA — 76075 — REGISTERED PROFESSIONAL ENGINEER

Jerome D. Pavliska, P.E. 4-23-04
Jerome D. Pavliska, P.E. — Date

**CHANGE ORDER NO. 79**
-REVISED RDWY GEOMETRICS AND LANE CONFIGURATIONS.
- REPLACES LOOP DETECTORS W/VIVDS
-REVISIONS TO ACCOMMODATE COSA SPECS

# WIRING DIAGRAM AND CONDUIT LAYOUT



©2004 Texas Department of Transportation

LOOP 1604
TRAFFIC SIGNAL INTERSECTION LAYOUT
LOOP 1604 AT POTRANCO RD (F.M. 1957)

| DN: | | PROJECT NO. | | SHEET NO. |
|---|---|---|---|---|
| CK DN: | | NH 2000(704), etc. | | 572 A |
| DW: | | STATE | DIST. | COUNTY |
| | | TEXAS | SAT | BEXAR |
| CK DW: | CONT. | SECT. | JOB | HIGHWAY NO. |
| | 2452 | 01 | 036, etc. | LP 1604 |

Design Filename: $FILE$

## POLE SCHEDULE

| | POLE NUMBER | A | B | C | D |
|---|---|---|---|---|---|
| | MAST ARM LENGTH (M) | Ped. | 14.6 | 13.4 | 13.4 |
| | FOUNDATION TYPE | 600-A | 900-A | 900-A | 900-A |
| | FOUNDATION DEPTH (M) | 1.7 | 4.0 | 4.0 | 4.0 |
| CABLE | CIRCUIT | NO. OF CONDUCTORS | | | |
| #6 BARE | BARE BOND GROUND | 1 | 1 | 1 | 1 |
| 7/C#14 SOLID TYPE "A" | SIGNALS Ø2 | | | 2 | |
| | Ø5 | | | 1 | |
| | Ø8 | | 2 | | |
| | Overlap C & D | | | | 3 |
| 9/C#14 SOLID TYPE "A" | PED. SIGNALS Ø2 | | | | |
| | Ø8 | 1 | 1 | | |
| | Ø2 & Ø8 | | | 1 | 1 |
| COAXIAL | VIVDS(COMM.) | | 2 | 2 | 1 |

## LEGEND

- PROP. VIDEO IMAGING VEH. DETECTION SYSTEM CAMERA(VIVDS)
- PROP. GROUND BOX(TYPE "A")
- PROP. GROUND BOX(TYPE "D")
- PROP. 75 mm PVC SCHEDULE 80
- PROP. 50 mm PVC SCHEDULE 80
- PROP. 32 mm PVC SCHEDULE 80
- PROP. MAST ARM POLE AND FOUNDATION
- PROP. SIGNAL FACE
- PROP. CONTROLLER, SLAB AND FOUNDATION
- PROP. PEDESTRIAN SIGNAL HEAD WITH PUSH BUTTON
- PROP. PEDESTAL POLE AND FOUNDATION
- PROP. ELECTRICAL SERVICE
- TMS MANHOLE(BY OTHERS)

S1 ANDERSON LOOP XXXX YYYY

S2 POTRANCO RD YYYY XXXX

S3 ANDERSON LOOP YYYY XXXX

S4 POTRANCO RD XXXX YYYY

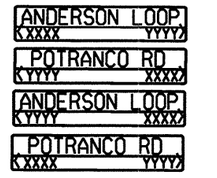


SR10-12 (750 x 900)

R10-10L (750 x 900)

R10-4BL (225 x 300)

R10-4BR (225 x 300)

F.M. 1957 (POTRANCO RD.)

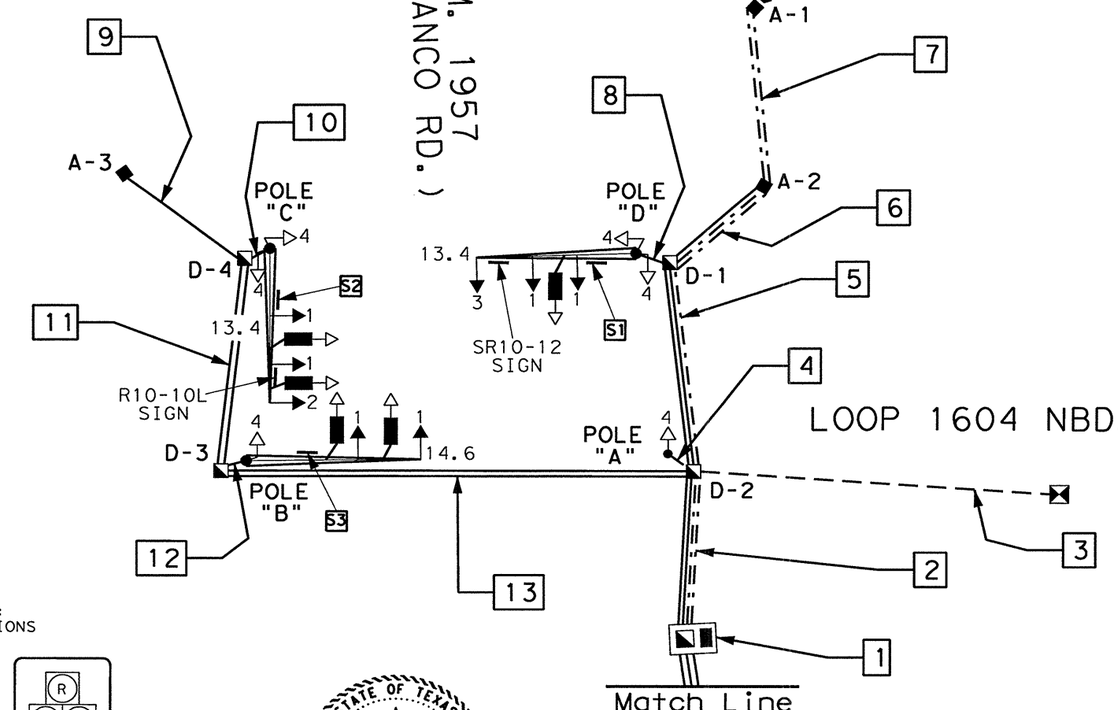


LOOP 1604 NBD. F.R.

## SIGNAL FACES

300 mm SIGNAL SECTIONS

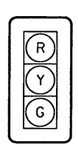


SIGNAL NO. 1 *

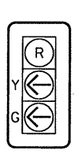


SIGNAL NO. 2

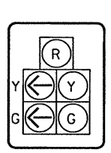


SIGNAL NO. 3 *

* WITH LOUVER AS CALLED FOR ON PLAN

SIGNAL NO. 4

STATE OF TEXAS
MARC S. JACOBSON
89335
LICENSED
PROFESSIONAL ENGINEER

Marc S. Jacobson, P.E. 12/27/2005

Marc S. Jacobson, P.E. Date

## CONDUIT AND CABLE SCHEDULE

| | RUN NUMBER | 1 | 2 | 3 | 4 | 5 | 6 | 7 | 8 | 9 | 10 | 11 | 12 | 13 |
|---|---|---|---|---|---|---|---|---|---|---|---|---|---|---|
| | CONDUIT SIZE (MM) | C | 32/75 | 50 | 50 | 32/75 | 32 | 32 | 75 | 50 | 75 | 75 | 75 | 75 |
| | NUMBER OF CONDUITS | | 2/2 | 1 | 1 | 1/2 | 2 | 2 | 1 | 1 | 1 | 2 | 1 | 2 |
| | COND / RUN LENGTH (M) | 3 | 15 | 31 | 3 | 19 | 11 | 16 | 3 | 13 | 3 | 19 | 3 | 40 |
| | TRENCH(T) / BORE(B) | | T | T | T | T | T | T | T | T | T | T | T | T |
| CABLE | CIRCUIT | NUMBER OF CONDUCTORS | | | | | | | | | | | | |
| #6 XHHW | 120 POWER HOT | 1 | 1 | | | 1 | 1 | 1 | | | | | | |
| | 120 POWER COMMON | 1 | 1 | | | 1 | 1 | 1 | | | | | | |
| #6 BARE | BARE BOND GROUND | 1 | 1 | | 1 | 1 | 1 | 1 | 1 | | 1 | 1 | 1 | 1 |
| 7/C#14 SOLID TYPE "A" | SIGNALS Ø1 | 1 | | | | | | | | | | | | |
| | Ø2 | 1 | 1 | | | | | | | | 1 | 1 | | 1 |
| | Ø4 | 1 | | | | | | | | | | | | |
| | Ø5 | 1 | 1 | | | | | | | | 1 | 1 | | 1 |
| | Ø6 | 1 | | | | | | | | | | | | |
| | Ø8 | 1 | 1 | | | | | | | | | | 1 | 1 |
| | Overlap A & B | 1 | | | | | | | | | | | | |
| | Overlap C & D | 1 | 1 | | | 1 | | | 1 | | | | | |
| 9/C#14 SOLID TYPE "A" | PED. SIGNALS Ø2 & Ø8 | 2 | 2 | | | 1 | | | 1 | | 1 | 1 | | 1 |
| | Ø4 | 2 | | | | | | | | | | | | |
| | Ø4 & Ø6 | 2 | | | | | | | | | | | | |
| | Ø8 | 2 | 2 | | 1 | | | | | | | | 1 | 1 |
| VIVDS COAXIAL CABLE | VIVDS(COMM.) Ø2 | 1 | 1 | | | | | | | | 1 | 1 | | 1 |
| | Ø4 | 2 | | | | | | | | | | | | |
| | Ø6 | 1 | | | | | | | | | | | | |
| | Ø8 | 2 | 2 | | | | | | | | | | 2 | 2 |
| | Ø1 & Ø6 | 1 | | | | | | | | | | | | |
| | Ø2 & Ø5 | 1 | 1 | | | | | | | | 1 | 1 | | 1 |
| | Overlap A & B | 1 | | | | | | | | | | | | |
| | Overlap C & D | 1 | 1 | | | 1 | | | 1 | | | | | |
| | C=IN CONTROLLER | | | | | | | | | | | | | |

NOTES:
ONE CONDUIT(50 mm) SHALL REMAIN OPEN IN RUN #2 FOR FUTURE COMMUNICATION CABLE(TMS).

SCALE IN METERS

0 5 10 20

SCALE: 1:500

CHANGE ORDER NO. 104

REVISED SHEET

SHEET 3 OF 5

# WIRING DIAGRAM AND CONDUIT LAYOUT

## LOOP 1604

## TRAFFIC SIGNAL INTERSECTION LAYOUT LOOP 1604 AT POTRANCO RD(F.M. 1957)

CHANGE ORDER NO. 104

-SWAPPED SIGNAL POLES "C" & "D"

-CHANGED POLE "D" MAST ARM FROM 11.0 M TO 13.4 M

-ADDED 3-SECTION HEAD AND SIGN FOR LEFT TURNS ON LOOP 1604 F.R.

-~~ADDED LED SIGNAL SECTIONS~~

©2005 Texas Department of Transportation

| FED.RD. DIV.NO. | FEDERAL AID PROJECT NO. | | SHEET NO. |
|---|---|---|---|
| 6 | NH 2000(704),Etc. | | 572B |
| STATE | DIST. | COUNTY | |
| TEXAS | SAT | BEXAR | |
| CONT. | SECT. | JOB | HIGHWAY NO. |
| 2452 | 01 | 036,Etc. | LOOP 1604 |

LEVELS DISPLAYED
1 2 3 4 5 6 7 8 9 10 11 12 21 31 41 51 61
7 18 19 20 21 22 23 24 25 26 27 28 29 30 31 32
33 45 55 65 75 85 94 04 14 24 34 44 54 64 74 84
95 05 15 25 35 45 55 65 75 85 96 06 16 26
ACC:
FILE: .DGN
11:42:44 PM
12/23/2005
U:\Projects\Jesse\bexar\1oop1604\loop1604potranco-CO.dgn

| POLE AND CABLE SCHEDULE | | | | |
|---|---|---|---|---|
| POLE NO. | SIGNAL CABLE | | | ELEC CONDR |
| | 7/C#12 | 4/C#12 | 2/C#14 | 1/C#6 BARE |
| E | 2 | 1 | 1 | 1 |
| F | 2 | 2 | 2 | 1 |
| G | 3 | 2 | 2 | 1 |
| H | - | 1 | 1 | 1 |
| | | | | |

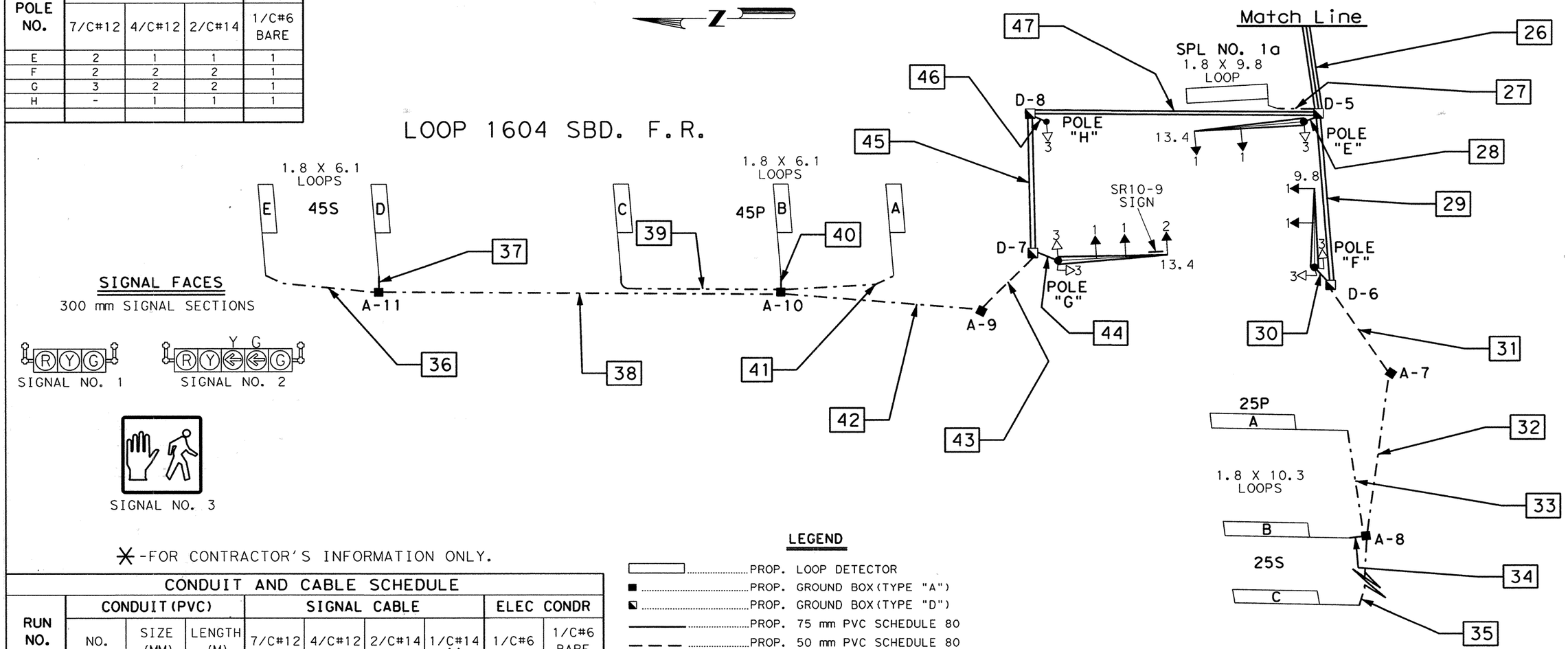


✳-FOR CONTRACTOR'S INFORMATION ONLY.

| CONDUIT AND CABLE SCHEDULE | | | | | | | | | |
|---|---|---|---|---|---|---|---|---|---|
| RUN NO. | CONDUIT (PVC) | | | SIGNAL CABLE | | | | ELEC CONDR | |
| | NO. | SIZE (MM) | LENGTH (M) | 7/C#12 | 4/C#12 | 2/C#14 | 1/C#14 ✳ | 1/C#6 | 1/C#6 BARE |
| 26 | 3 | 75 | 15 | 3 | 6 | 11 | - | - | 1 |
| 27 | 1 | 32 | 5 | - | - | - | 2 | - | - |
| 28 | 1 | 75 | 2 | 1 | 1 | 1 | - | - | 1 |
| 29 | 2 | 75 | 22 | 1 | 2 | 4 | - | - | 1 |
| 30 | 1 | 75 | 3 | 1 | 2 | 2 | - | - | 1 |
| 31 | 1 | 50 | 14 | - | - | 2 | - | - | - |
| 32 | 1 | 32 | 21 | - | - | 2 | - | - | - |
| 33 | 1 | 32 | 14 | - | - | - | 2 | - | - |
| 34 | 1 | 32 | 2 | - | - | - | 2 | - | - |
| 35 | 1 | 32 | 20 | - | - | - | 2 | - | - |
| 36 | 1 | 32 | 14 | - | - | - | 2 | - | - |
| 37 | 1 | 32 | 2 | - | - | - | 2 | - | - |
| 38 | 1 | 32 | 50 | - | - | 1 | - | - | - |
| 39 | 1 | 32 | 21 | - | - | - | 2 | - | - |
| 40 | 1 | 32 | 2 | - | - | - | 2 | - | - |
| 41 | 1 | 32 | 14 | - | - | - | 2 | - | - |
| 42 | 1 | 32 | 25 | - | - | 2 | - | - | - |
| 43 | 1 | 50 | 10 | - | - | 2 | - | - | - |
| 44 | 1 | 75 | 3 | 1 | 2 | 2 | - | - | 1 |
| 45 | 2 | 75 | 18 | 1 | 2 | 4 | - | - | 1 |
| 46 | 1 | 50 | 2 | - | 1 | 1 | - | - | 1 |
| 47 | 2 | 75 | 36 | 1 | 3 | 5 | - | - | 1 |
| | | | | | | | | | |
| | | | | | | | | | |

**LEGEND**

- PROP. LOOP DETECTOR
- PROP. GROUND BOX (TYPE "A")
- PROP. GROUND BOX (TYPE "D")
- PROP. 75 mm PVC SCHEDULE 80
- PROP. 50 mm PVC SCHEDULE 80
- PROP. 32 mm PVC SCHEDULE 80
- PROP. MAST ARM POLE AND FOUNDATION
- PROP. SIGNAL FACE
- PROP. CONTROLLER, SLAB AND FOUNDATION
- PROP. PEDESTRIAN SIGNAL HEAD WITH PUSH BUTTON
- PROP. PEDESTAL POLE AND FOUNDATION
- PROP. ELECTRICAL SERVICE

STATE OF TEXAS
ARNULFO RAMIREZ
56890
REGISTERED
PROFESSIONAL ENGINEER

Arnulfo Ramirez, P.E.

8-18-00
Date

SHEET 4 OF 5

# TRAFFIC SIGNAL WIRING DIAGRAM AND CONDUIT LAYOUT

## LOOP 1604 FRONTAGE RDS. AT F.M. 1957 (POTRANCO RD.)

©2000 Texas Department of Transportation

| FED. RD. DIV. NO. | FEDERAL AID PROJECT NO. | | SHEET NO. |
|---|---|---|---|
| 6 | NH 2000(704), Etc. | | 573 |
| STATE | DIST. | COUNTY | |
| TEXAS | SAT | BEXAR | |
| CONT. | SECT. | JOB | HIGHWAY NO. |
| 2452 | 01 | 036, Etc. | LOOP 1604 |

/loop1604/loop1604portrnco.dgn Sep 15, 2000 13:33:10

Plotted on: $DATE$

SCALE IN METERS

0 5 10 20

SCALE: 1:500

**NOTES:**

ONE CONDUIT SHALL REMAIN OPEN IN RUN #2(50 mm) FOR FUTURE COMMUNICATION CABLE(TMS).

# LOOP 1604 SBD. F.R. (55 M.P.H.)

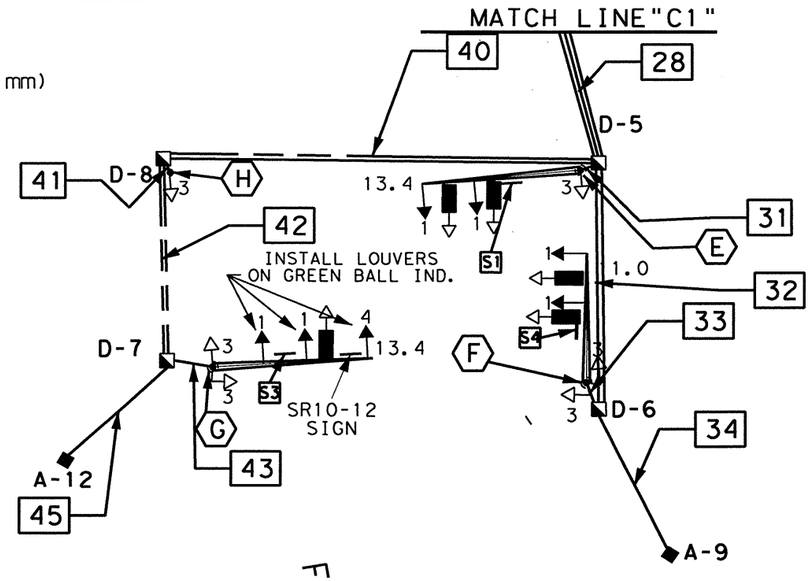


**SIGNAL FACES**

300 mm SIGNAL SECTIONS

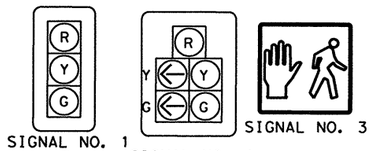


* WITH LOUVER AS CALLED FOR ON PLAN

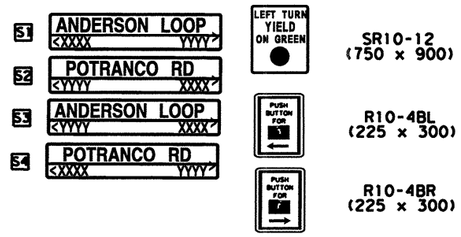


✳ -FOR CONTRACTOR'S INFORMATION ONLY.

**CONDUIT AND CABLE SCHEDULE**

| RUN NO. | CONDUIT(PVC) NO. | CONDUIT(PVC) SIZE (MM) | CONDUIT(PVC) LENGTH (M) | SIGNAL CABLE 7/C#14 (SIG.) | SIGNAL CABLE 9/C#14 (PED.) | SIGNAL CABLE 2/C#14 | SIGNAL CABLE 1/C#14 ✳ | ELEC CONDR 1/C#4 | ELEC CONDR 1/C#6 BARE |
|---|---|---|---|---|---|---|---|---|---|
| 28 | 3 | 75 | 15 | 3 | 4 | | - | - | 1 |
| | | | | | | | | | |
| | | | | | | | | | |
| 31 | 1 | 75 | 2 | 1 | 1 | - | - | - | 1 |
| 32 | 2 | 75 | 21 | 1 | 1 | | - | - | 1 |
| 33 | 1 | 75 | 2 | 1 | 1 | - | - | - | 1 |
| 34 | 1 | 75 | 14 | - | - | | - | - | 1 |
| | | | | | | | | | |
| 40 | 2 | 75 | 35 | 1 | 2 | | - | - | 1 |
| 41 | 1 | 50 | 2 | - | 1 | - | - | - | 1 |
| 42 | 2 | 75 | 17 | 1 | 1 | | - | - | 1 |
| 43 | 1 | 75 | 4 | 1 | 1 | - | - | - | 1 |
| | | | | | | | | | |
| 45 | 1 | 75 | 12 | - | - | | - | - | 1 |
| | | | | | | | | | |
| | | | | | | | | | |

**POLE AND CABLE SCHEDULE**

| POLE NO. | SIGNAL CABLE 7/C#14 (SIG.) | SIGNAL CABLE 9/C#14 (PED.) |
|---|---|---|
| E | 1 | 1 |
| F | 1 | 1 |
| G | 1 | 1 |
| H | - | 1 |
| | | |

**LEGEND**

- PROP. VIDEO IMAGING VEH. DETECTION SYSTEM CAMERA(VIVDS)
- PROP. GROUND BOX(TYPE "A")
- PROP. GROUND BOX(TYPE "D")
- PROP. 75 mm PVC SCHEDULE 80
- PROP. 50 mm PVC SCHEDULE 80
- PROP. 32 mm PVC SCHEDULE 80
- PROP. MAST ARM POLE AND FOUNDATION
- PROP. SIGNAL FACE
- PROP. CONTROLLER, SLAB AND FOUNDATION
- PROP. PEDESTRIAN SIGNAL HEAD WITH PUSH BUTTON
- PROP. PEDESTAL POLE AND FOUNDATION
- PROP. ELECTRICAL SERVICE
- TMS MANHOLE(BY OTHERS)

**CHANGE ORDER NO. 79**

-REVISED RDWY GEOMETRICS AND LANE CONFIGURATIONS.
- REPLACES LOOP DETECTORS W/VIVDS
-REVISIONS TO ACCOMMODATE COSA SPECS

# WIRING DIAGRAM AND CONDUIT LAYOUT

F.M. 1957 (POTRANCO RD.) (45 M.P.H.)

STATE OF TEXAS — JEROME D. PAVLISKA — 76075 — REGISTERED PROFESSIONAL ENGINEER

Jerome D. Pavliska, P.E. 4-23-04

Jerome D. Pavliska, P.E. — Date

**CHANGE ORDER NO. 79**

**REVISED SHEET**

SHEET 4 OF 5

©2004 Texas Department of Transportation

**LOOP 1604**
**TRAFFIC SIGNAL INTERSECTION LAYOUT**
**LOOP 1604 AT POTRANCO RD(F.M. 1957)**

| DN: | | PROJECT NO. | SHEET NO. |
|---|---|---|---|
| CK DN: | | NH 2000(704),etc. | 573 A |
| DW: | STATE | DIST. | COUNTY |
| CK DW: | TEXAS | SAT | BEXAR |

| CONT. | SECT. | JOB | HIGHWAY NO. |
|---|---|---|---|
| 2452 | 01 | 036,etc. | LP 1604 |

Design Filename: $FILE$

| POLE SCHEDULE | | | | | |
|---|---|---|---|---|---|
| | POLE NUMBER | E | F | G | H |
| | MAST ARM LENGTH (M) | 13.4 | 13.4 | 11.0 | Ped. |
| | FOUNDATION TYPE | 900-A | 900-A | 900-A | 600-A |
| | FOUNDATION DEPTH (M) | 4.0 | 4.0 | 4.0 | 1.7 |
| CABLE | CIRCUIT | NO. OF CONDUCTORS | | | |
| #6 BARE | BARE BOND GROUND | 1 | 1 | 1 | 1 |
| 7/C#14 SOLID TYPE "A" | SIGNALS Ø1 | | 1 | | |
| | Ø4 | 2 | | | |
| | Ø6 | | 2 | | |
| | Overlap A & B | | | 3 | |
| 9/C#14 SOLID TYPE "A" | PED. SIGNALS Ø4 | 1 | | | 1 |
| | Ø4 & Ø6 | | 1 | 1 | |
| | | | | | |
| COAXIAL | VIVDS (COMM.) | 2 | 2 | 1 | |

**SIGNAL FACES**

300 mm SIGNAL SECTIONS

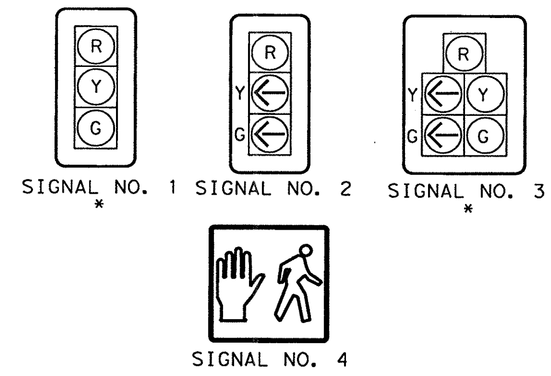


* WITH LOUVER AS CALLED FOR ON PLAN

| CONDUIT AND CABLE SCHEDULE | | | | | | | | | | | |
|---|---|---|---|---|---|---|---|---|---|---|---|
| | RUN NUMBER | 14 | 15 | 16 | 17 | 18 | 19 | 20 | 21 | 22 | 23 |
| | CONDUIT SIZE (MM) | 75 | 75 | 75 | 75 | 50 | 50 | 75 | 75 | 50 | 75 |
| | NUMBER OF CONDUITS | 3 | 1 | 2 | 1 | 1 | 1 | 1 | 2 | 1 | 2 |
| | COND / RUN LENGTH (M) | 16 | 3 | 22 | 2 | 14 | 11 | 4 | 18 | 2 | 40 |
| | TRENCH (T) / BORE (B) | T | T | T | T | T | T | T | T | T | T |
| CABLE | CIRCUIT | NUMBER OF CONDUCTORS | | | | | | | | | |
| #6 BARE | BARE BOND GROUND | 1 | 1 | 1 | 1 | | | 1 | 1 | 1 | 1 |
| 7/C#14 SOLID TYPE "A" | SIGNALS Ø1 | 1 | | 1 | 1 | | | | | | |
| | Ø4 | 1 | 1 | | | | | | | | |
| | Ø6 | 1 | | 1 | 1 | | | | | | |
| | Overlap A & B | 1 | | | | | | 1 | 1 | | 1 |
| 9/C#14 SOLID TYPE "A" | PED. SIGNALS Ø4 | 2 | 1 | | | | | | | 1 | 1 |
| | Ø4 & Ø6 | 2 | | 1 | 1 | | | 1 | 1 | | 1 |
| | | | | | | | | | | | |
| VIVDS COAXIAL CABLE | VIVDS (COMM.) Ø4 | 2 | 2 | | | | | | | | |
| | Ø6 | 1 | | 1 | 1 | | | | | | |
| | Ø1 & Ø6 | 1 | | 1 | 1 | | | | | | |
| | Overlap A & B | 1 | | | | | | 1 | 1 | | 1 |
| | C=IN CONTROLLER | | | | | | | | | | |

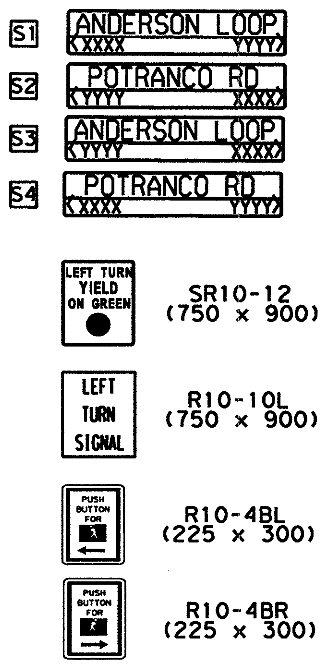


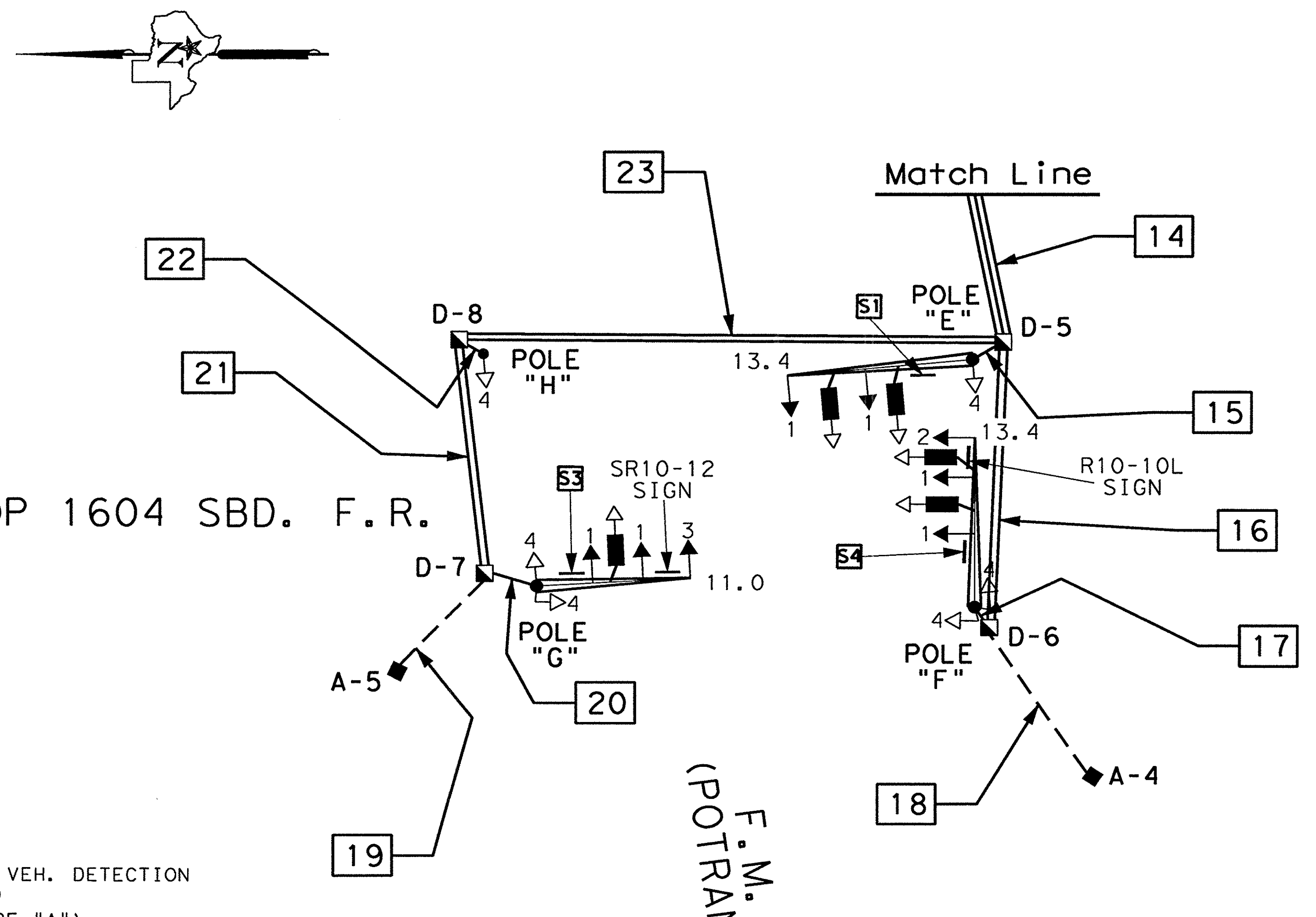


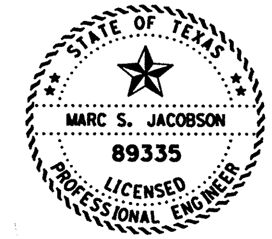


Marc S. Jacobson, P.E. 12/27/2005

Marc S. Jacobson, P.E. Date

SCALE IN METERS

0 5 10 20

SCALE: 1:500

CHANGE ORDER NO. 104

REVISED SHEET

SHEET 4 OF 5

# WIRING DIAGRAM AND CONDUIT LAYOUT

## LOOP 1604

TRAFFIC SIGNAL INTERSECTION LAYOUT

LOOP 1604 AT POTRANCO RD (F.M. 1957)

©2005 Texas Department of Transportation

**LEGEND**

PROP. VIDEO IMAGING VEH. DETECTION SYSTEM CAMERA (VIVDS)

PROP. GROUND BOX (TYPE "A")

PROP. GROUND BOX (TYPE "D")

PROP. 75 mm PVC SCHEDULE 80

PROP. 50 mm PVC SCHEDULE 80

PROP. MAST ARM POLE AND FOUNDATION

PROP. SIGNAL FACE

PROP. PEDESTRIAN SIGNAL HEAD WITH PUSH BUTTON

PROP. PEDESTAL POLE AND FOUNDATION

**CHANGE ORDER NO. 104**

- SWAPPED SIGNAL POLES "F" & "G"
- ADDED 3-SECTION HEAD AND SIGN FOR LEFT TURNS ON LOOP 1604 F.R.
- ~~ADDED LED SIGNAL SECTIONS~~

| FED. RD. DIV. NO. | FEDERAL AID PROJECT NO. | | SHEET NO. |
|---|---|---|---|
| 6 | NH 2000 (704), Etc. | | 573B |
| STATE | DIST. | COUNTY | |
| TEXAS | SAT | BEXAR | |
| CONT. | SECT. | JOB | HIGHWAY NO. |
| 2452 | 01 | 036, Etc. | LOOP 1604 |

1:42:58 PM
12/23/2005
u:\engdata\jesse\bexar\loop1604\loop1604potranco-CO.dgn

LEVELS DISPLAYED
ACC:
FILE: .DGN

## MATERIALS TO BE FURNISHED AND INSTALLED BY THE CONTRACTOR

| ITEM NO. | DESCRIPTION | UNIT | QUANTITY |
|---|---|---|---|
| 618 | CONDUIT: PVC (SCH. 80)(32 mm) | M | 515 |
| 618 | PVC (SCH. 80)(50 mm) | M | 72 |
| 618 | PVC (SCH. 80)(75 mm) | M | 405 |
| 620 | ELECTRICAL CONDUCTOR(NO. 6) BARE | M | 250 |
| 620 | ELECTRICAL CONDUCTOR(NO. 6) INSULATED | M | 135 |
| 624 | GROUND BOX(TYPE A) W/APRON | EA. | 11 |
| 624 | GROUND BOX(TYPE D) W/APRON | EA. | 8 |
| 628 | ELEC SERV TYT(120/240)000(NS)GS(N)TP(O) | EA. | 1 |
| 656 | TRAFFIC SIGNAL CONTROLLER FND. | EA. | 1 |
| 656 | FND FOR TRAF SIG(600 mm DRIL SH) | M | 3.4 |
| 656 | FND FOR TRAF SIG(TY A)(750 mm DRIL SH) | M | 6.8 |
| 656 | FND FOR TRAF SIG(TY A)(900 mm DRIL SH) | M | 16 |
| 680 | INSTALLATION OF HWY. TRAF. SIGNAL | EA. | 1 |
| 681 | TEMPORARY TRAFFIC SIGNALS | EA. | 1 |
| 682 | VEHICLE SIGNAL SECTION(300 mm) | EA. | 46 |
| 682 | PED SIG SEC(300 mm)(2 INDICATIONS) | EA. | 12 |
| 684 | TRAF. SIG. CBL.(TY A)(4 CONDR.)(12 AWG) | M | 660 |
| 684 | TRAF. SIG. CBL.(TY A)(7 CONDR.)(12 AWG) | M | 530 |
| 684 | TRAF. SIG. CBL.(TY C)(2 CONDR.)(14 AWG) | M | 1,550 |
| 686 | TRAF SIG POLE ASM(STL)1 ARM(9.8 M) | EA. | 2 |
| 686 | TRAF SIG POLE ASM(STL)1 ARM(12.2 M) | EA. | 1 |
| 686 | TRAF SIG POLE ASM(STL)1 ARM(13.4 M) | EA. | 3 |
| 688 | PEDESTRIAN DETECTOR(PUSH BUTTON) | EA. | 12 |
| 688 | VEHICLE DETECTOR(14 AWG)(SAWCUT LOOPS) | M | 435 |
| 6008 | SALVAGE TRAFFIC SIGNALS | EA. | 1 |
| 6023 | PEDESTAL POLE ASSEMBLY | EA. | 2 |
| 6438 | VIVDS PROCESSOR SYSTEM * | EA. | 1 |
| 6438 | VIVDS CAMERA ASSEMBLY * | EA. | 4 |
| 6438 | VIVDS SET-UP SYSTEM * | EA. | 1 |
| 6438 | VIVDS COMMUNICATION CABLE(COAXIAL) | M | 200 |
| 6438 | VIVDS TEMPORARY | EA. | 1 |
| | | | |
| | | | |

**NOTE:**
ALL SIGNAL POLE FOUNDATIONS SHALL BE INSTALLED ACCORDING TO TS-FD STANDARD SHEET.

INSTALLATION OF SIGNS TO BE CONSIDERED SUBSIDIARY TO BID ITEM 680.

*-FOR CONTRACTOR'S INFORMATION ONLY.

## MATERIALS TO BE FURNISHED AND INSTALLED BY THE STATE

| DESCRIPTION | UNIT | QUANTITY |
|---|---|---|
| CONTROLLER WITH CABINET | EA. | 1 |
| SR10-9 SIGN (FURNISH ONLY) | EA. | 2 |
| R10-4b PUSH BUTTON SIGN (FURNISH ONLY) | EA. | 12 |
| | | |
| | | |

STATE OF TEXAS
ARNULFO RAMIREZ
56890
REGISTERED PROFESSIONAL ENGINEER

Arnulfo Ramirez, P.E. 9-18-00
Date

SHEET 5 OF 5

# TRAFFIC SIGNAL INTERSECTION LAYOUT

## LOOP 1604 FRONTAGE RDS. AT F.M. 1957(POTRANCO RD.)

©2000 Texas Department of Transportation

| FED.RD. DIV.NO. | FEDERAL AID PROJECT NO. | | SHEET NO. |
|---|---|---|---|
| 6 | NH 2000(704),Etc. | | 574 |
| STATE | DIST. | COUNTY | |
| TEXAS | SAT | BEXAR | |
| CONT. | SECT. | JOB | HIGHWAY NO. |
| 2452 | 01 | 036,Etc. | LOOP 1604 |

| MATERIALS TO BE FURNISHED AND INSTALLED BY THE CONTRACTOR | | | | |
|---|---|---|---|---|
| ITEM NO. | DESCRIPTION | UNIT | QUANTITY | |
| 618 | CONDUIT: PVC (SCH. 80) (32 mm) | M | 515 | |
| 618 | PVC (SCH. 80) (50 mm) | M | 72 | |
| 618 | PVC (SCH. 80) (75 mm) | M | 405 | |
| 620 | ELECTRICAL CONDUCTOR (NO. 6) BARE | M | 250 | |
| 620 | ELECTRICAL CONDUCTOR (NO. 6) INSULATED | M | 135 | |
| 624 | GROUND BOX (TYPE A) W/APRON | EA. | 11 | |
| 624 | GROUND BOX (TYPE D) W/APRON | EA. | 8 | |
| 628 | ELEC SERV TYT (120/240) 000 (NS) GS (N) TP (O) | EA. | 1 | |
| 656 | TRAFFIC SIGNAL CONTROLLER FND. | EA. | 1 | |
| 656 | FND FOR TRAF SIG (600 mm DRIL SH) | M | 3.4 | |
| 656 | FND FOR TRAF SIG (TY A) (750 mm DRIL SH) | M | 6.8 | |
| 656 | FND FOR TRAF SIG (TY A) (900 mm DRIL SH) | M | 16 | |
| 680 | INSTALLATION OF HWY. TRAF. SIGNAL | EA. | 1 | |
| 681 | TEMPORARY TRAFFIC SIGNALS | EA. | 1 | |
| 682 | VEHICLE SIGNAL SECTION (300 mm) | EA. | 46 | |
| 682 | PED SIG SEC (300 mm) (2 INDICATIONS) | EA. | 12 | |
| 684 | TRAF. SIG. CBL. (TY A) (4 CONDR.) (12 AWG) | M | 660 | |
| 684 | TRAF. SIG. CBL. (TY A) (7 CONDR.) (12 AWG) | M | 530 | |
| 684 | TRAF. SIG. CBL. (TY C) (2 CONDR.) (14 AWG) | M | 1,550 | |
| 686 | TRAF SIG POLE ASM (STL) 1 ARM (9.8 M) | EA. | 2 | |
| 686 | TRAF SIG POLE ASM (STL) 1 ARM (12.2 M) | EA. | 1 | |
| 686 | TRAF SIG POLE ASM (STL) 1 ARM (13.4 M) | EA. | 3 | |
| 688 | PEDESTRIAN DETECTOR (PUSH BUTTON) | EA. | 12 | |
| 688 | VEHICLE DETECTOR (14 AWG) (SAWCUT LOOPS) | M | 435 | |
| 6008 | SALVAGE TRAFFIC SIGNALS | EA. | 1 | |
| 6023 | PEDESTAL POLE ASSEMBLY | EA. | 2 | |
| 6438 | VIVDS PROCESSOR SYSTEM * | EA. | 1 | |
| 6438 | VIVDS CAMERA ASSEMBLY * | EA. | 6 | ◆ |
| 6438 | VIVDS SET-UP SYSTEM * | EA. | 0 | ◆ |
| 6438 | VIVDS COMMUNICATION CABLE (COAXIAL) | M | 200 | |
| 6438 | VIVDS TEMPORARY | EA. | 1 | |
| | | | | |
| | | | | |

**NOTE:**
ALL SIGNAL POLE FOUNDATIONS SHALL BE INSTALLED ACCORDING TO TS-FD STANDARD SHEET.

INSTALLATION OF SIGNS TO BE CONSIDERED SUBSIDIARY TO BID ITEM 680.

*-FOR CONTRACTOR'S INFORMATION ONLY.

| MATERIALS TO BE FURNISHED AND INSTALLED BY THE STATE | | |
|---|---|---|
| DESCRIPTION | UNIT | QUANTITY |
| CONTROLLER WITH CABINET | EA. | 1 |
| SR10-9 SIGN (FURNISH ONLY) | EA. | 2 |
| R10-4b PUSH BUTTON SIGN (FURNISH ONLY) | EA. | 12 |
| | | |
| | | |

STATE OF TEXAS
ARNULFO RAMIREZ
56890
REGISTERED
PROFESSIONAL ENGINEER

Arnulfo Ramirez 6-25-01
Arnulfo Ramirez, P.E. Date

◆ CHANGE ORDER NO. 3

SHEET 5 OF 5

# TRAFFIC SIGNAL INTERSECTION LAYOUT

## LOOP 1604 FRONTAGE RDS. AT F.M. 1957 (POTRANCO RD.)

©2000 Texas Department of Transportation

| FED. RD. DIV. NO. | FEDERAL AID PROJECT NO. | | SHEET NO. |
|---|---|---|---|
| 6 | NH 2000 (704), Etc. | | 574A |
| STATE | DIST. | COUNTY | |
| TEXAS | SAT | BEXAR | |
| CONT. | SECT. | JOB | HIGHWAY NO. |
| 2452 | 01 | 036, Etc. | LOOP 1604 |

Plotted on: $DATE$

## MATERIALS TO BE FURNISHED AND INSTALLED BY THE CONTRACTOR

| ITEM NO. | DESCRIPTION | UNIT | QUAN. |
|---|---|---|---|
| 618-5016 | CONDUIT (PVC) (SCHD 80) (32 mm) | M | 120 |
| 618-5018 | CONDUIT (PVC) (SCHD 80) (50 mm) | M | 39 |
| 618-5020 | CONDUIT (PVC) (SCHD 80) (75 mm) | M | 436 |
| 618-5021 | CONDUIT (PVC) (SCHD 80) (100 mm) | M | 2 |
| 620-5003 | ELEC CONDUCTOR (NO. 8) BARE | M | 446 |
| 620-5010 | ELEC CONDUCTOR (NO. 6) INSULATED | M | 120 |
| 624-5001 | GROUND BOX (TYPE A) (122311) W/APRON | EA. | 5 |
| 624-5004 | GROUND BOX (TYPE D) (162922) W/APRON | EA. | 8 |
| 628-5222 | ELEC SERV TYT (120/240) 000 (NS) GS (N) SP (U) | EA. | 1 |
| 656-5026 | TRAF SIG CNTRL FND (CITY TYPE 332) | EA. | 1 |
| 656-5003 | FND FOR TRAF SIG (600 mm DRIL SH) | M | 3.4 |
| 656-5005 | FND FOR TRAF SIG (TY A) (900 mm DRIL SH) | M | 24.0 |
| 680-5001 | INSTAL OF HWY TRAF SIG (ISOLATED) | EA. | 1 |
| 682-5009 | BACK PLATE (3 SEC) (300 MM) | EA. | 12 |
| 682-5011 | BACK PLATE (5 SEC) (300 MM) | EA. | 2 |
| 682-5002 | VEH SIG SEC (300 mm) | EA. | 46 |
| 682-5005 | PED SIG SEC (2 INDICATIONS IN 1 SEC) | EA. | 12 |
| 682-5019 | LOUVERS (ADJUSTABLE) | EA. | 6 |
| 684-5044 | TRAF SIG CBL (TY C) (2 CONDR) (14 AWG) | M | 0 |
| 684-5047 | TRAF SIG CBL (TY A) (7 CONDR) (14 AWG) | M | 402 |
| 684-5048 | TRAF SIG CBL (TY A) (9 CONDR) (14 AWG) | M | 385 |
| 686-5012 | TRAF SIG POLE ASM (STL) 1 ARM (11.0 M) | EA. | 2 |
| 686-5014 | TRAF SIG POLE ASM (STL) 1 ARM (13.4 M) | EA. | 3 |
| 686-5015 | TRAF SIG POLE ASM (STL) 1 ARM (14.6 M) | EA. | 1 |
| 688-5001 | PED DETECT (PUSH BTN) | EA. | 12 |
| 688-5011 | VEH DETECT (14 AWG) (SAWCUT) | M | 0 |
| 688-5012 | VEH DETECT (14 AWG) (19MM PVC) (COND ENC) | M | 0 |
| 6008-5001 | SALVAGE TRAFFIC SIGNALS | EA. | 1 |
| 6023-5001 | PEDESTAL POLE ASSEMBLY | EA. | 2 |
| 6438-5005 | VIVDS COMMUNICATION CABLE (COAXIAL) | M | 328 |
| | | | |
| | | | |
| | | | |
| | | | |
| | | | |
| ** * | DETECTOR AMPLIFIERS (2 CHANNEL) RACK MOUNT | EA. | 16 |
| **- - | BRACKET ASSY (SYMBOLIC PEDESTRIAN HEAD) | EA. | 12 |
| ***- - | ASTRO-BRAC SIGNAL HEAD MOUNTS | EA. | 14 |
| ***- - | SIGN MOUNTS (VARIOUS SIZES) | EA. | 8 |

** SUBSIDIARY TO ITEM 0682

*** SUBSIDIARY TO ITEM 0680

## PROPOSED POLE & EQUIPMENT INFORMATION

| ID NO. | DESCRIPTION/ATTACHMENTS | STATION | OFFSET | FND. ELEV | FND. TYPE |
|---|---|---|---|---|---|
| A | INSTALL 114mm OD STEEL PEDESTAL POLE ASSEMBLY WITH ONE SYMBOLIC LED PED SIGNAL HEAD, ONE PUSHBUTTON, AND ONE R10-4BR SIGN | 22+627.101 | 57.142 LT | 75mm ABOVE GRADE | 1.7M (600-A) |
| B | INSTALL SMA-130, 14.6M ARM ON 900mm DRILLED SHAFT FND (900-A), W/ONE SYMBOLIC PED SIGNAL, ONE PUSHBUTTON, AND ONE R10-4BL SIGN | 22+594.869 | 56.999 LT | 75mm ABOVE GRADE | 4.0M (900-A) |
| C | INSTALL SMA-130, 11.0M ARM ON 900mm DRILLED SHAFT FND (900-A), W/TWO SYMBOLIC PED SIGNALS, TWO PUSHBUTTONS, AND TWO R10-4B (L&R) SIGNS | 22+594.703 | 75.291 LT | 75mm ABOVE GRADE | 4.0M (900-A) |
| D | INSTALL SMA-130, 13.4M ARM ON 900mm DRILLED SHAFT FND (900-A), W/TWO SYMBOLIC PED SIGNALS, TWO PUSHBUTTONS, AND TWO R10-4B (L&R) SIGNS | 22+626.920 | 76.530 LT | 75mm ABOVE GRADE | 4.0M (900-A) |
| E | INSTALL SMA-130, 13.4M ARM ON 900mm DRILLED SHAFT FND (900-A), W/ONE SYMBOLIC PED SIGNAL, ONE PUSHBUTTON, AND ONE R10-4BL SIGN | 22+630.767 | 25.491 LT | 75mm ABOVE GRADE | 4.0M (900-A) |
| F | INSTALL SMA-130, 11.0M ARM ON 900mm DRILLED SHAFT FND (900-A), W/TWO SYMBOLIC PED SIGNALS, TWO PUSHBUTTONS, AND TWO R10-4B (L&R) SIGNS | 22+631.270 | 7.255 LT | 75mm ABOVE GRADE | 4.0M (900-A) |
| G | INSTALL SMA-130, 13.4M ARM ON 900mm DRILLED SHAFT FND (900-A), W/TWO SYMBOLIC PED SIGNALS, TWO PUSHBUTTONS, AND TWO R10-4B (L&R) SIGNS | 22+599.910 | 8.548 LT | 75mm ABOVE GRADE | 4.0M (900-A) |
| H | INSTALL 114mm OD STEEL PEDESTAL POLE ASSEMBLY WITH ONE SYMBOLIC LED PED SIGNAL HEAD, ONE PUSHBUTTON, AND ONE R10-4BR SIGN | 22+596.222 | 25.243 LT | 75mm ABOVE GRADE | 1.7M (600-A) |
| J | PROPOSED CITY OF SAN ANTONIO, MODEL 332 TRAFFIC SIGNAL CONTROLLER CABINET ASSEMBLY AND FOUNDATION | 22+629.565 | 41.342 LT | N/A | CITY STD |
| K | PROPOSED ELECTRICAL SERVICE PEDESTAL | 22+637.683 | 97.294 LT | N/A | |

## MATERIALS TO BE FURNISHED BY COSA AND INSTALLED BY THE CONTRACTOR

| DESCRIPTION | UNIT | QUANTITY |
|---|---|---|
| CONTROLLER WITH CABINET (TY332) | EA. | 1 |
| SR10-12 SIGN (FURNISH ONLY) | EA. | 2 |
| R10-4b PUSH BUTTON SIGN (FURNISH ONLY) | EA. | 12 |
| SIGNS, METRO STREET NAME (FURNISH ONLY) | EA. | 6 |
| | | |

**CHANGE ORDER NO. 79**

-REVISED RDWY GEOMETRICS AND LANE CONFIGURATIONS.
- REPLACES LOOP DETECTORS W/VIVDS
-REVISIONS TO ACCOMMODATE COSA SPECS

STATE OF TEXAS
JEROME D. PAVLISKA
76075
REGISTERED
PROFESSIONAL ENGINEER

Jerome D. Pavliska, P.E. 5-18-04
Jerome D. Pavliska, P.E. — Date

SHEET 5 OF 5

CHANGE ORDER NO. 79

REVISED SHEET

©2004 Texas Department of Transportation

LOOP 1604
TRAFFIC SIGNAL INTERSECTION LAYOUT
LOOP 1604 AT POTRANCO RD (F.M. 1957)

| DN: | | PROJECT NO. | | SHEET NO. |
|---|---|---|---|---|
| CK DN: | | NH 2000 (704), etc. | | 574 B |
| DW: | | STATE | DIST. | COUNTY |
| CK DW: | | TEXAS | SAT | BEXAR |
| | CONT. | SECT. | JOB | HIGHWAY NO. |
| | 2452 | 01 | 036, etc. | LP 1604 |

Design Filename: $FILE$

## MATERIALS TO BE FURNISHED AND INSTALLED BY THE CONTRACTOR

| ITEM NO. | DESCRIPTION | UNIT | QUAN. | |
|---|---|---|---|---|
| 618-5016 | CONDUIT (PVC)(SCHD 80)(32 mm) | M | 120 | |
| 618-5018 | CONDUIT (PVC)(SCHD 80)(50 mm) | M | 39 | |
| 618-5020 | CONDUIT (PVC)(SCHD 80)(75 mm) | M | 436 | |
| 618-5021 | CONDUIT (PVC)(SCHD 80)(100 mm) | M | 2 | |
| 620-5003 | ELEC CONDUCTOR(NO. 6) BARE | M | 446 | |
| 620-5010 | ELEC CONDUCTOR(NO. 6) INSULATED | M | 120 | |
| 624-5001 | GROUND BOX(TYPE A)(122311) W/APRON | EA. | 5 | |
| 624-5004 | GROUND BOX(TYPE D)(162922) W/APRON | EA. | 8 | |
| 628-5222 | ELEC SERV TYT(120/240)000(NS)GS(N)SP(U) | EA. | 1 | |
| 656-5026 | TRAF SIG CNTRL FND(CITY TYPE 332) | EA. | 1 | |
| 656-5003 | FND FOR TRAF SIG(600 mm DRIL SH) | M | 3.4 | |
| 656-5005 | FND FOR TRAF SIG(TY A)(900 mm DRIL SH) | M | 24.0 | |
| 680-5001 | INSTAL OF HWY TRAF SIG(ISOLATED) | EA. | 1 | |
| 682-5009 | BACK PLATE(3 SEC)(300 MM) | EA. | **12** | 14 |
| 682-5011 | BACK PLATE(5 SEC)(300 MM) | EA. | 2 | |
| 682-5002 | VEH SIG SEC(300 mm) | EA. | **46** | 52 |
| 682-5005 | PED SIG SEC(2 INDICATIONS IN 1 SEC) | EA. | 12 | |
| 682-5019 | LOUVERS (ADJUSTABLE) | EA. | 6 | |
| 684-5044 | TRAF SIG CBL(TY C)(2 CONDR)(14 AWG) | M | 0 | |
| 684-5047 | TRAF SIG CBL(TY A)(7 CONDR)(14 AWG) | M | 402 | |
| 684-5048 | TRAF SIG CBL(TY A)(9 CONDR)(14 AWG) | M | 385 | |
| 686-5012 | TRAF SIG POLE ASM(STL)1 ARM(11.0 M) | EA. | 2 | |
| 686-5014 | TRAF SIG POLE ASM(STL)1 ARM(13.4 M) | EA. | 3 | 4 |
| 686-5015 | TRAF SIG POLE ASM(STL)1 ARM(14.6 M) | EA. | 1 | |
| 688-5001 | PED DETECT(PUSH BTN) | EA. | 12 | |
| 688-5011 | VEH DETECT(14 AWG)(SAWCUT) | M | 0 | |
| 688-5012 | VEH DETECT(14 AWG)(19MM PVC)(COND ENC) | M | 0 | |
| 6008-5001 | SALVAGE TRAFFIC SIGNALS | EA. | 1 | |
| 6023-5001 | PEDESTAL POLE ASSEMBLY | EA. | 2 | |
| 6438-5005 | VIVDS COMMUNICATION CABLE (COAXIAL) | M | **328** | 720 |
| 6438-5001 | VIVDS PROCESSOR SYSTEM } Provided by COSA | EA. | 1 | 2 |
| 6438-5002 | VIVDS CAMERA ASSEMBLY ** } Provided by COSA | EA. | 4 | 10 |
| 6438-5003 | VIVDS SET-UP SYSTEM * } Provided by COSA | EA. | **1** | |
| 6438-5007 | VIVDS TEMPORARY | EA. | **1** | |
| | | | | |
| *** | DETECTOR AMPLIFIERS (2 CHANNEL) RACK MOUNT | EA. | 16 | |
| **- - | BRACKET ASSY (SYMBOLIC PEDESTRIAN HEAD) | EA. | 12 | |
| ***- - | ASTRO-BRAC SIGNAL HEAD MOUNTS | EA. | **14** | 16 |
| ***- - | SIGN MOUNTS (VARIOUS SIZES) | EA. | 8 | |

* FOR CONTRACTOR'S INFORMATION ONLY.

** SUBSIDIARY TO ITEM 0682

*** SUBSIDIARY TO ITEM 0680

## MATERIALS TO BE FURNISHED AND INSTALLED BY THE CONTRACTOR

| ITEM NO. | DESCRIPTION | UNIT | QUAN. |
|---|---|---|---|
| ~~6298-5001~~ | ~~300 MM LED TRAF SIGNAL LAMP(RED)~~ | EA. | 16 |
| ~~6298-5002~~ | ~~300 MM LED TRAF SIGNAL LAMP(YELLOW)~~ | EA. | 14 |
| ~~6298-5003~~ | ~~300 MM LED TRAF SIGNAL LAMP(GREEN)~~ SUB to Item 682 | EA. | 14 |
| ~~6298-5004~~ | ~~300 MM LED TRAF SIGNAL LAMP(YEL ARW)~~ | EA. | 4 |
| ~~6298-5005~~ | ~~300 MM LED TRAF SIGNAL LAMP(GRN ARW)~~ | EA. | 4 |
| ~~8230-0501~~ | LED PED SIG LAMP (SYMB)(2 IND/1 SEC) | EA. | 12 |

## MATERIALS TO BE FURNISHED BY COSA AND INSTALLED BY THE CONTRACTOR

| DESCRIPTION | UNIT | QUANTITY |
|---|---|---|
| CONTROLLER WITH CABINET (TY332) | EA. | 1 |
| SR10-12 SIGN (FURNISH ONLY) | EA. | 2 |
| R10-4b PUSH BUTTON SIGN (FURNISH ONLY) | EA. | 12 |
| SIGNS, METRO STREET NAME (FURNISH ONLY) | EA. | 6 |
| R10-10L SIGN (FURNISH ONLY) | EA. | **2** |

STATE OF TEXAS
MARC S. JACOBSON
89335
LICENSED
PROFESSIONAL ENGINEER

Marc Jacobson, P.E.
12/27/2005

CHANGE ORDER NO. 104
-CHANGED QUANTITIES TO REFLECT REVISIONS
-~~ADDED LED SIGNAL SECTIONS~~

CHANGE ORDER NO. 104

REVISED SHEET

SHEET 5 OF 5

LOOP 1604
TRAFFIC SIGNAL INTERSECTION LAYOUT
LOOP 1604 AT POTRANCO RD(F.M. 1957)

©2005 Texas Department of Transportation

| FED.RD. DIV.NO. | FEDERAL AID PROJECT NO. | | SHEET NO. |
|---|---|---|---|
| 6 | NH 2000(704),Etc. | | 574C |
| STATE | DIST. | COUNTY | |
| TEXAS | SAT | BEXAR | |
| CONT. | SECT. | JOB | HIGHWAY NO. |
| 2452 | 01 | 036,Etc. | LOOP 1604 |

LEVELS DISPLAYED
1 2 3 4 5 6 7 8 9 10 11 21 31 41 51 61 ACC:
17 18 19 20 21 22 23 24 25 26 27 28 29 30 31 32
33 34 35 36 37 38 39 40 41 42 43 44 45 46 47 48
49 50 51 52 53 54 55 65 75 85 96 06 162 FILE: .DGN
12:44:46 PM
12/23/2005
u:\engdata\jeaves\bexar\1000\1604\1000l604potranco-C0.dgn

## SIGNAL FACES

300 mm SIGNAL SECTIONS

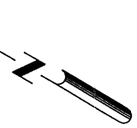

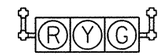


SIGNAL NO. 1




SIGNAL NO. 2

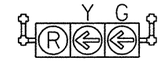


SIGNAL NO. 3
(WITH LOUVERS)



SIGNAL NO. 4

## LEGEND

- PROP. LOOP DETECTOR
- PROP. GROUND BOX(TYPE "A")
- PROP. GROUND BOX(TYPE "D")
- PROP. 75 mm PVC SCHEDULE 80
- PROP. 50 mm PVC SCHEDULE 80
- PROP. 32 mm PVC SCHEDULE 80
- PROP. MAST ARM POLE AND FOUNDATION
- PROP. SIGNAL FACE
- PROP. CONTROLLER, SLAB AND FOUNDATION
- PROP. PEDESTRIAN SIGNAL HEAD WITH PUSH BUTTON
- PROP. PEDESTAL POLE AND FOUNDATION
- PROP. ELECTRICAL SERVICE
- TMS MANHOLE(BY OTHERS)

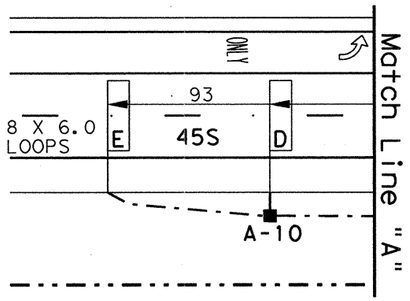





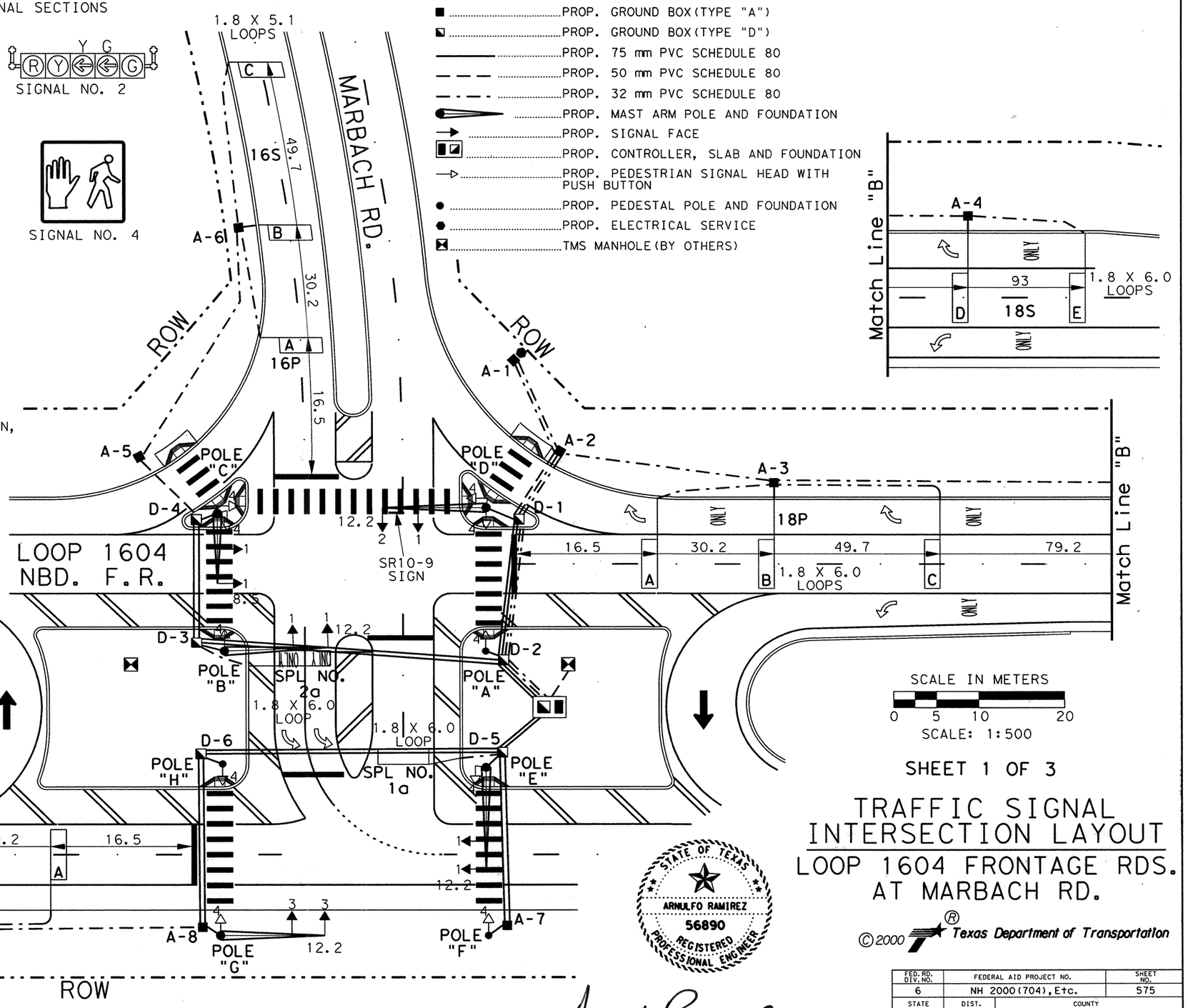


SCALE IN METERS

0 5 10 20

SCALE: 1:500

**NOTES:**

THE ENGINEER SHALL CONTACT MR. GILBERT MEIER(TXDOT SIGNAL SHOP) AT 615-5975 96 HOURS PRIOR TO CONSTRUCTION, PRIOR TO PICKING UP STATE FURNISHED MATERIALS AND PRIOR TO CONNECTING FIELD WIRING TO CONTROLLER.

STATE FORCES SHALL CONNECT FIELD WIRING TO CONTROLLER.

ALL PVC SHALL BE SCHEDULE 80.

ALL DIMENSIONS SHOWN ARE IN METERS UNLESS SPECIFIED OTHERWISE.

STATE OF TEXAS
ARNULFO RAMIREZ
56890
REGISTERED
PROFESSIONAL ENGINEER

Arnulfo Ramirez, P.E. — Date 8-18-00

SHEET 1 OF 3

# TRAFFIC SIGNAL INTERSECTION LAYOUT

## LOOP 1604 FRONTAGE RDS. AT MARBACH RD.

©2000 Texas Department of Transportation

| FED.RD. DIV.NO. | FEDERAL AID PROJECT NO. | | SHEET NO. |
|---|---|---|---|
| 6 | NH 2000(704), Etc. | | 575 |
| STATE | DIST. | COUNTY | |
| TEXAS | SAT | BEXAR | |
| CONT. | SECT. | JOB | HIGHWAY NO. |
| 2452 | 01 | 036, Etc. | LOOP 1604 |

Plotted on: 03/12/2003

Design Filename: n:\52\20\11\design\civil\plansheets\traffic\signal\loop1604marb-co.dgn

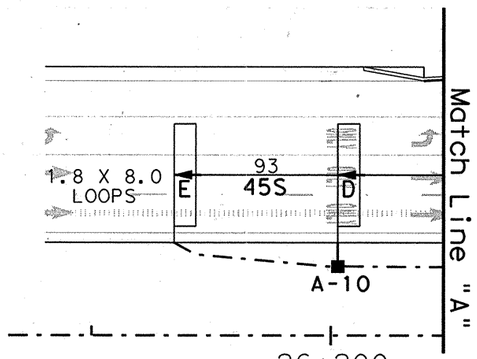


**NOTES:**

THE ENGINEER SHALL CONTACT MR. GILBERT MEIER(TXDOT SIGNAL SHOP) AT 615-5975 96 HOURS PRIOR TO CONSTRUCTION, PRIOR TO PICKING UP STATE FURNISHED MATERIALS AND PRIOR TO CONNECTING FIELD WIRING TO CONTROLLER.

STATE FORCES SHALL CONNECT FIELD WIRING TO CONTROLLER.

ALL PVC SHALL BE SCHEDULE 80.

ALL DIMENSIONS SHOWN ARE IN METERS UNLESS SPECIFIED OTHERWISE.

ALL LOOPS INSTALLED AT THIS LOCATION SHALL BE SAWCUT.

**SIGNAL FACES**

300 mm SIGNAL SECTIONS

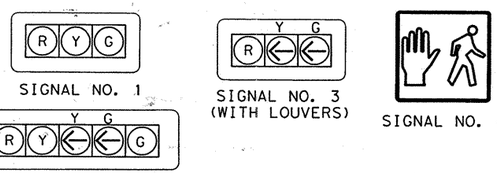


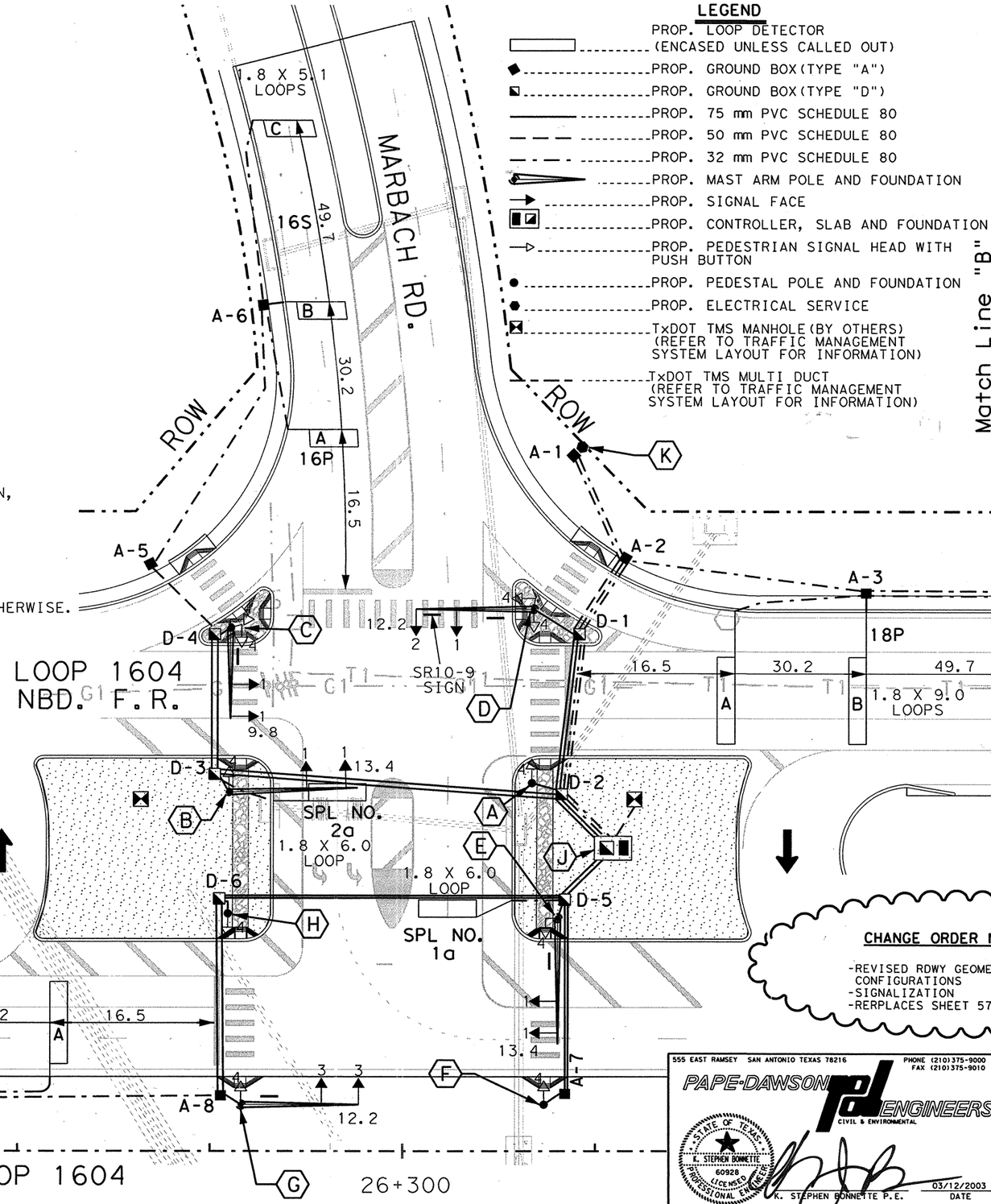


**LEGEND**

- PROP. LOOP DETECTOR (ENCASED UNLESS CALLED OUT)
- PROP. GROUND BOX(TYPE "A")
- PROP. GROUND BOX(TYPE "D")
- PROP. 75 mm PVC SCHEDULE 80
- PROP. 50 mm PVC SCHEDULE 80
- PROP. 32 mm PVC SCHEDULE 80
- PROP. MAST ARM POLE AND FOUNDATION
- PROP. SIGNAL FACE
- PROP. CONTROLLER, SLAB AND FOUNDATION
- PROP. PEDESTRIAN SIGNAL HEAD WITH PUSH BUTTON
- PROP. PEDESTAL POLE AND FOUNDATION
- PROP. ELECTRICAL SERVICE
- TxDOT TMS MANHOLE(BY OTHERS) (REFER TO TRAFFIC MANAGEMENT SYSTEM LAYOUT FOR INFORMATION)
- TxDOT TMS MULTI DUCT (REFER TO TRAFFIC MANAGEMENT SYSTEM LAYOUT FOR INFORMATION)

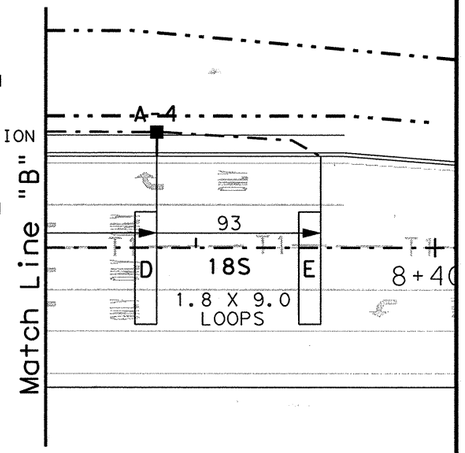


SCALE IN METERS

0 5 10 20

SCALE: 1:500

**CHANGE ORDER NO. 79**

-REVISED RDWY GEOMETRICS AND LANE CONFIGURATIONS
-SIGNALIZATION
-RERPLACES SHEET 575

SHEET 1 OF 3

555 EAST RAMSEY SAN ANTONIO TEXAS 78216
PHONE (210)375-9000
FAX (210)375-9010
PAPE-DAWSON ENGINEERS
CIVIL & ENVIRONMENTAL
STATE OF TEXAS
E. STEPHEN BONNETTE
60928
LICENSED PROFESSIONAL ENGINEER
K. STEPHEN BONNETTE P.E.
03/12/2003
DATE
FOR CHANGE ORDER ONLY

©2000 Texas Department of Transportation

**LOOP 1604**
**TRAFFIC SIGNAL INTERSECTION LAYOUT**
**LOOP 1604 AT MARBACH RD**

| DN: | | PROJECT NO. | | SHEET NO. |
|---|---|---|---|---|
| CK DN: | | NH 2000(704), etc. | | 575A |
| DW: | | STATE | DIST. | COUNTY |
| | | TEXAS | SAT | BEXAR |
| CK DW: | CONT. / SECT. / JOB | | | HIGHWAY NO. |
| | 2452 / 01 / 036, etc. | | | LP 1604 |

NOTES:

ALL PVC SHALL BE SCHEDULE 80.

ALL DIMENSIONS SHOWN ARE IN METERS UNLESS SPECIFIED OTHERWISE.

SEE NOTES, SHEET 1 OF 1. (580F)

CONTRACTOR SHALL INSTALL LOUVERS ON GREEN BALL INDICATIONS ON SIGNAL POLE "D".

SR10-12 (750 x 900)

R10-4BL (225 x 300)

R10-10L (750 x 900)

R10-4BR (225 x 300)

S1 ANDERSON LOOP (XXXX YYYY)

S2 MARBACH RD. (YYYY XXXX)

S3 ANDERSON LOOP (YYYY XXXX)

S4 MARBACH RD. (XXXX YYYY)



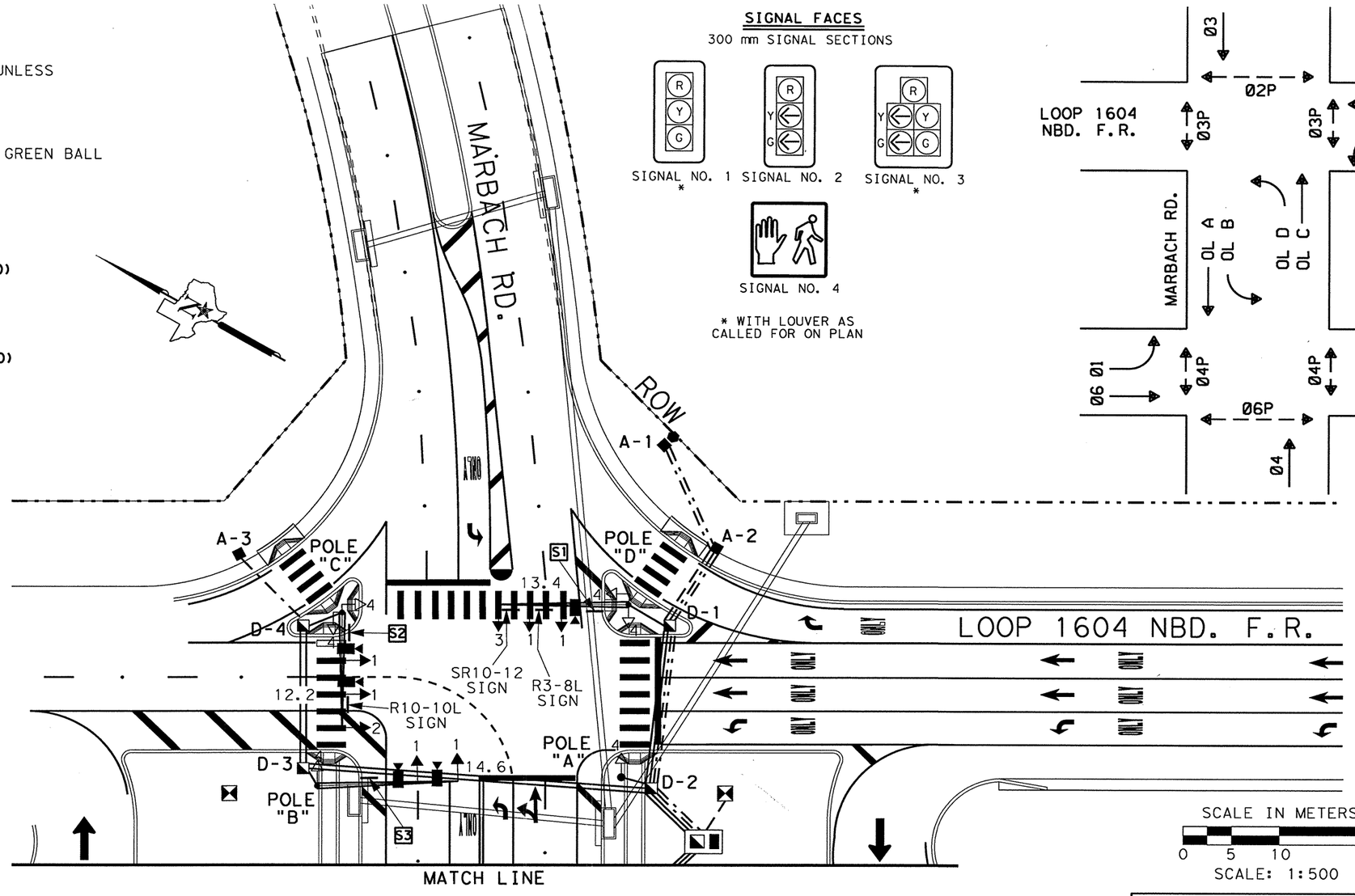


MATCH LINE

SIGNAL FACES

300 mm SIGNAL SECTIONS




SIGNAL NO. 1 *




SIGNAL NO. 2




SIGNAL NO. 3 *



SIGNAL NO. 4

* WITH LOUVER AS CALLED FOR ON PLAN

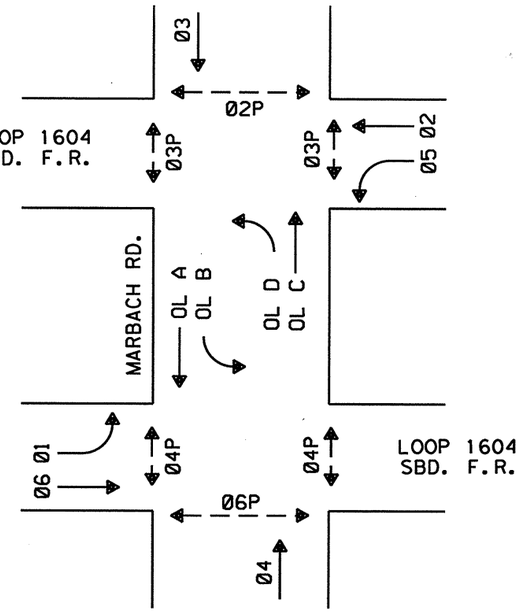


SCALE IN METERS

0 5 10 20

SCALE: 1:500

CHANGE ORDER NO. 104

REVISED SHEET

SHEET 1 OF 5

# LOOP 1604
# TRAFFIC SIGNAL INTERSECTION LAYOUT
# LOOP 1604 AT MARBACH RD.

©2005 Texas Department of Transportation

LEGEND

- PROP. VIDEO IMAGING VEH. DETECTION SYSTEM CAMERA (VIVDS)
- PROP. GROUND BOX (TYPE "A")
- PROP. GROUND BOX (TYPE "D")
- PROP. 75 mm PVC SCHEDULE 80
- PROP. 50 mm PVC SCHEDULE 80
- PROP. 32 mm PVC SCHEDULE 80
- PROP. MAST ARM POLE AND FOUNDATION
- PROP. SIGNAL FACE
- PROP. CONTROLLER, SLAB AND FOUNDATION
- PROP. PEDESTRIAN SIGNAL HEAD WITH PUSH BUTTON
- PROP. PEDESTAL POLE AND FOUNDATION
- PROP. ELECTRICAL SERVICE
- TMS MANHOLE (BY OTHERS)

CHANGE ORDER NO. 104

-SWAPPED SIGNAL POLES "C" & "D"

-ADDED 3-SECTION HEAD AND SIGN FOR LEFT TURNS ON LOOP 1604 F.R.

-REPLACED LOOP DETECTORS (SAW-CUT, CONDUIT AND GROUND BOXES) WITH VIVDS.

-CHANGED TO VERTICALLY ORIENTED SIGNAL HEADS

-ADDED BACKPLATES

STATE OF TEXAS
MARC S. JACOBSON
89335
LICENSED PROFESSIONAL ENGINEER

Marc S. Jacobson, P.E. 12/27/2005

Marc S. Jacobson, P.E. Date

| FED. RD. DIV. NO. | FEDERAL AID PROJECT NO. | | SHEET NO. |
|---|---|---|---|
| 6 | NH 2000(704), Etc. | | 575A |
| STATE | DIST. | COUNTY | |
| TEXAS | SAT | BEXAR | |
| CONT. | SECT. | JOB | HIGHWAY NO. |
| 2452 | 01 | 036, Etc. | LOOP 1604 |

LEVELS DISPLAYED 1 2 3 4 5 6 7 8 9 10 11 12 13 14 15 16 | 17 18 19 20 21 22 23 24 25 26 27 28 29 30 31 32 | 33 34 35 36 37 38 39 40 41 42 43 44 45 46 47 48 | 49 50 51 52 53 54 55 56 57 58 59 60 61 62 63 | ACC: | FILE: .DGN

12:28:23 PM
12/23/2005
u:\engdata\jesse\bexar\loop1604\loop1604narb-c03.dgn

## LEGEND

- PROP. VIDEO IMAGING VEH. DETECTION SYSTEM CAMERA (VIVDS)
- PROP. GROUND BOX (TYPE "D")
- PROP. 75 mm PVC SCHEDULE 80
- PROP. 50 mm PVC SCHEDULE 80
- PROP. 32 mm PVC SCHEDULE 80
- PROP. MAST ARM POLE AND FOUNDATION
- PROP. SIGNAL FACE
- PROP. PEDESTRIAN SIGNAL HEAD WITH PUSH BUTTON
- PROP. PEDESTAL POLE AND FOUNDATION

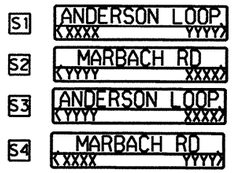


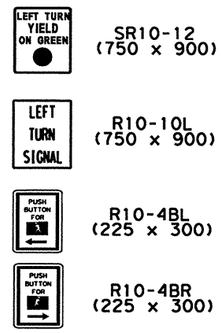


## SIGNAL FACES

300 mm SIGNAL SECTIONS

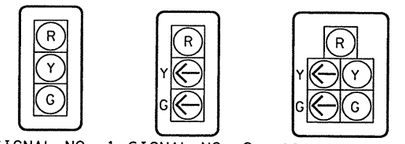


SIGNAL NO. 1 * SIGNAL NO. 2 SIGNAL NO. 3 *

SIGNAL NO. 4

* WITH LOUVER AS CALLED FOR ON PLAN

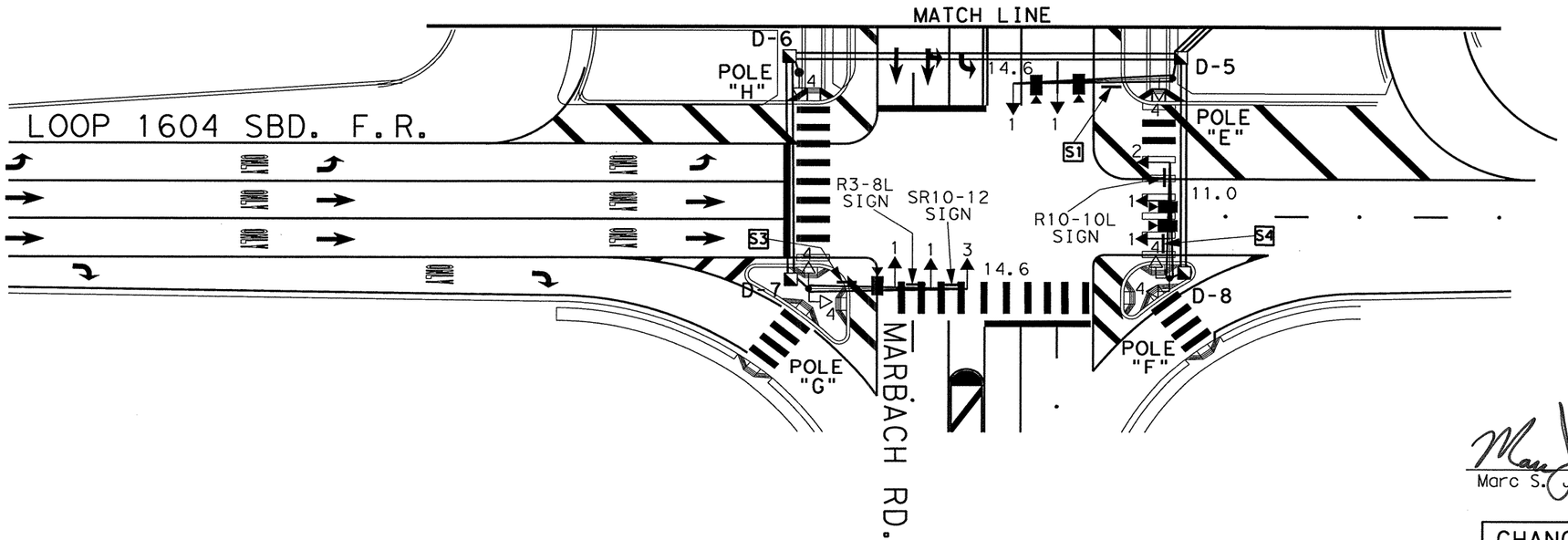


STATE OF TEXAS
MARC S. JACOBSON
89335
LICENSED PROFESSIONAL ENGINEER

Marc S. Jacobson, P.E. 12/27/2005
Marc S. Jacobson, P.E. Date

**CHANGE ORDER NO. 104**

**REVISED SHEET**

**NOTES:**

ALL PVC SHALL BE SCHEDULE 80.

ALL DIMENSIONS SHOWN ARE IN METERS UNLESS SPECIFIED OTHERWISE.

SEE NOTES, SHEET 1 OF 1. (580F)

CONTRACTOR SHALL INSTALL LOUVERS ON GREEN BALL INDICATIONS ON SIGNAL POLE "G".

SIGNAL POLE "G": 5-SECTION SIGNAL AND SIGN SHALL BE INSTALLED AND COVERED IF MARBACH RD. EXTENSION IS NOT OPEN.

**CHANGE ORDER NO. 104**

- -SWAPPED SIGNAL POLES "D" & "F"
- -CHANGED POLE "F" MAST ARM TO 11.0 FROM 9.8
- -ADDED 3-SECTION HEAD AND SIGN FOR LEFT TURNS ON LOOP 1604 F.R.
- -REPLACED LOOP DETECTORS (SAW-CUT, CONDUIT AND GROUND BOXES) WITH VIVDS.
- -CHANGED TO VERTICALLY ORIENTED SIGNAL HEADS
- -ADDED BACKPLATES

SCALE IN METERS
0 5 10 20
SCALE: 1:500

SHEET 2 OF 5

# LOOP 1604
## TRAFFIC SIGNAL INTERSECTION LAYOUT
## LOOP 1604 AT MARBACH RD.

©2005 Texas Department of Transportation

| FED. RD. DIV. NO. | FEDERAL AID PROJECT NO. | | SHEET NO. |
|---|---|---|---|
| 6 | NH 2000(704), Etc. | | 5758 |
| STATE | DIST. | COUNTY | |
| TEXAS | SAT | BEXAR | |
| CONT. | SECT. | JOB | HIGHWAY NO. |
| 2452 | 01 | 036, Etc. | LOOP 1604 |

LEVELS DISPLAYED
1 2 3 4 5 6 7 8 9 10 11 12 13 14 15 16
17 18 19 20 21 22 23 24 25 26 27 28 29 30 31 32
33 34 35 36 37 38 39 40 41 42 43 44 45 46 47 48
49 50 51 52 53 54 55 56 57 58 59 60 61 62 63
ACC:
FILE: .DGN
11:28:42 PM
12/23/2005
u:\engdata\jesse\texor\loop1604\loop1604mcrp-003.dgn

## CONDUIT AND CABLE SCHEDULE

| RUN NO. | CONDUIT (PVC) | | | SIGNAL CABLE | | | | ELEC CONDR | |
|---|---|---|---|---|---|---|---|---|---|
| | NO. | SIZE (MM) | LENGTH (M) | 7/C#12 | 4/C#12 | 2/C#14 | 1/C#14 * | 1/C#6 | 1/C#6 BARE |
| 1 | IN CONTROLLER | | | 5 | 10 | 18 | - | 2 | 2 |
| 2 | 2 | 75 | 8 | 2 | 4 | 7 | - | - | 1 |
| 3 | 1 | 75 | 3 | 1 | 1 | 1 | - | - | 1 |
| 4 | 1 | 32 | 5 | - | - | - | 2 | - | - |
| 5 | 2 | 75 | 21 | - | 1 | 1 | - | - | 1 |
| 6 | 1 | 50 | 3 | - | 1 | 1 | - | - | 1 |
| 7 | 1 | 75 | 3 | 1 | 1 | 1 | - | - | 1 |
| 8 | 1 | 32 | 32 | - | - | 2 | - | - | - |
| 9 | 1 | 32 | 15 | - | - | - | 2 | - | - |
| 10 | 1 | 32 | 2 | - | - | - | 2 | - | - |
| 11 | 1 | 32 | 20 | - | - | - | 2 | - | - |
| 12 | 1 | 32 | 49 | - | - | 1 | - | - | - |
| 13 | 1 | 32 | 2 | - | - | - | 2 | - | - |
| 14 | 1 | 32 | 14 | - | - | - | 2 | - | - |
| 15 | 2 | 75 | 22 | 1 | 1 | 3 | - | - | 1 |
| 16 | 1 | 50 | 3 | - | 1 | 1 | - | - | 1 |
| 17 | 2 | 75 | 36 | 1 | 2 | 4 | - | - | 1 |
| 18 | 1 | 32 | 7 | - | - | - | 2 | - | - |
| 19 | 1 | 75 | 3 | 1 | 1 | 1 | - | - | 1 |
| 20 | 2 | 75 | 37 | 2 | 3 | 6 | - | - | 1 |
| 21 | 2 | 75 | 16 | 1 | 2 | 4 | - | - | 1 |
| 22 | 1 | 75 | 3 | 1 | 2 | 2 | - | - | 1 |
| 23 | 1 | 32 | 11 | - | - | 2 | - | - | - |
| 24 | 1 | 32 | 32 | - | - | 2 | - | - | - |
| 25 | 1 | 32 | 14 | - | - | - | 2 | - | - |
| 26 | 1 | 32 | 2 | - | - | - | 2 | - | - |
| 27 | 1 | 32 | 21 | - | - | - | 2 | - | - |
| 28 | 1 | 75 | 5 | 1 | 2 | 2 | - | - | 1 |
| 29 | 2 , 1 | 32 , 50 | 10 | - | - | 2 | - | 2 | 1 |
| 30 | 2 | 32 | 13 | - | - | - | - | 2 | 1 |
| 31 | 1 | 32 | 26 | - | - | 2 | - | - | - |
| 32 | 1 | 32 | 14 | - | - | - | 2 | - | - |
| 33 | 1 | 32 | 2 | - | - | - | 2 | - | - |
| 34 | 1 | 32 | 21 | - | - | - | 2 | - | - |
| 35 | 1 | 32 | 49 | - | - | 1 | - | - | - |
| 36 | 1 | 32 | 2 | - | - | - | 2 | - | - |
| 37 | 1 | 32 | 15 | - | - | - | 2 | - | - |
| 38 | 2 , 2 | 32 , 75 | 18 | 1 | 2 | 4 | - | 2 | 1 |
| 39 | 1 | 50 | 2 | - | 1 | 1 | - | - | 1 |
| 40 | 2 , 2 | 32 , 75 | 8 | 3 | 6 | 11 | - | 2 | 1 |
| 41 | 1 | 50 | 6 | - | - | - | - | - | - |

NOTES:
CONDUIT SHALL REMAIN OPEN IN RUN #41 (50 mm) FOR FUTURE COMMUNICATION CABLE (TMS).

* -FOR CONTRACTOR'S INFORMATION ONLY.

## LOOP 1604 SBD. F.R.

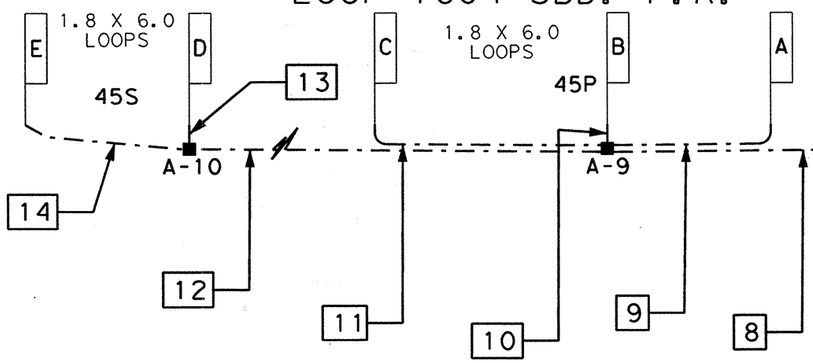


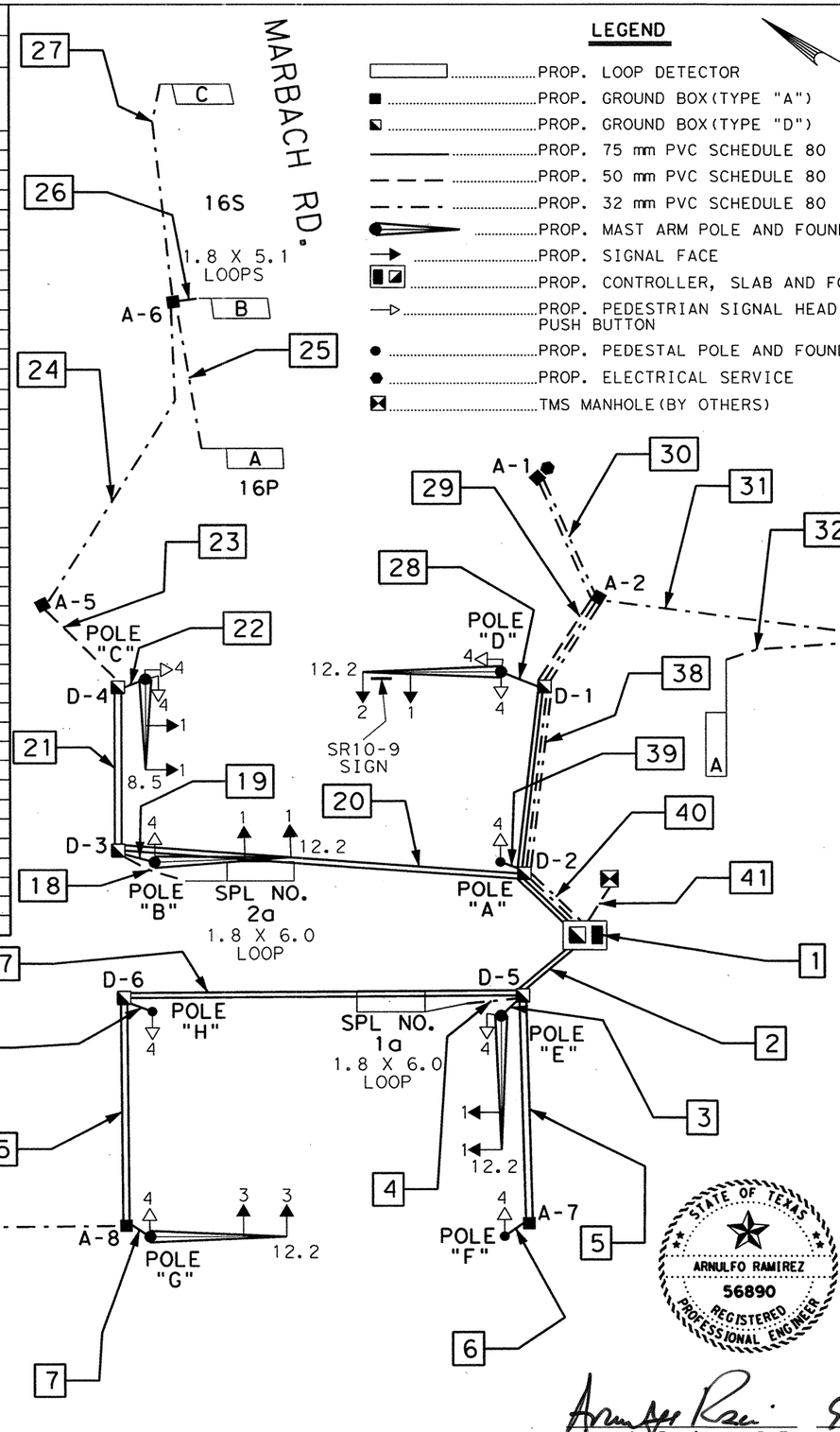


## LEGEND

- PROP. LOOP DETECTOR
- PROP. GROUND BOX (TYPE "A")
- PROP. GROUND BOX (TYPE "D")
- PROP. 75 mm PVC SCHEDULE 80
- PROP. 50 mm PVC SCHEDULE 80
- PROP. 32 mm PVC SCHEDULE 80
- PROP. MAST ARM POLE AND FOUNDATION
- PROP. SIGNAL FACE
- PROP. CONTROLLER, SLAB AND FOUNDATION
- PROP. PEDESTRIAN SIGNAL HEAD WITH PUSH BUTTON
- PROP. PEDESTAL POLE AND FOUNDATION
- PROP. ELECTRICAL SERVICE
- TMS MANHOLE (BY OTHERS)

## POLE AND CABLE SCHEDULE

| POLE NO. | SIGNAL CABLE | | | ELEC CONDR |
|---|---|---|---|---|
| | 7/C#12 | 4/C#12 | 2/C#14 | 1/C#6 BARE |
| A | - | 1 | 1 | 1 |
| B | 2 | 1 | 1 | 1 |
| C | 2 | 2 | 2 | 1 |
| D | 2 | 2 | 2 | 1 |
| E | 2 | 1 | 1 | 1 |
| F | - | 1 | 1 | 1 |
| G | 2 | 1 | 1 | 1 |
| H | - | 1 | 1 | 1 |

## SIGNAL FACES

300 mm SIGNAL SECTIONS

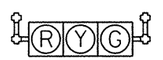

SIGNAL NO. 1

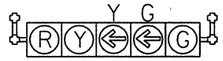

SIGNAL NO. 2

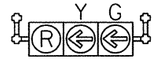

SIGNAL NO. 3 (WITH LOUVERS)

SIGNAL NO. 4

## LOOP 1604 NBD. F.R.

SHEET 2 OF 3

# TRAFFIC SIGNAL WIRING DIAGRAM AND CONDUIT LAYOUT

## LOOP 1604 FRONTAGE RDS. AT MARBACH RD.

©2000 Texas Department of Transportation

Arnulfo Ramirez, P.E. 5-18-00 Date

| FED. RD. DIV. NO. | FEDERAL AID PROJECT NO. | | SHEET NO. |
|---|---|---|---|
| 6 | NH 2000(704), Etc. | | 576 |
| STATE | DIST. | COUNTY | |
| TEXAS | SAT | BEXAR | |
| CONT. | SECT. | JOB | HIGHWAY NO. |
| 2452 | 01 | 036, Etc. | LOOP 1604 |

Plotted on: 03/12/2003

## CONDUIT AND CABLE SCHEDULE

| RUN NO. | CONDUIT (PVC) NO. | SIZE (MM) | LENGTH (M) | SIGNAL CABLE 7/C#12 | 4/C#12 | 2/C#14 | 1/C#14 * | ELEC CONDR 1/C#4 | 1/C#6 BARE |
|---|---|---|---|---|---|---|---|---|---|
| 1 | IN CONTROLLER | | | 5 | 10 | 18 | - | 2 | 2 |
| 2 | 2 | 75 | 8 | 2 | 4 | 7 | - | - | 1 |
| 3 | 1 | 75 | 3 | 1 | 1 | 1 | - | - | 1 |
| 4 | 1 | 32 | 5 | - | - | - | 2 | - | - |
| 5 | 2 | 75 | 21 | - | 1 | 1 | - | - | 1 |
| 6 | 1 | 50 | 3 | - | 1 | 1 | - | - | 1 |
| 7 | 1 | 75 | 3 | 1 | 1 | 1 | - | - | 1 |
| 8 | 1 | 32 | 32 | - | - | 2 | - | - | - |
| 9 | 1 | 32 | 15 | - | - | - | 2 | - | - |
| 10 | 1 | 32 | 2 | - | - | - | 2 | - | - |
| 11 | 1 | 32 | 20 | - | - | - | 2 | - | - |
| 12 | 1 | 32 | 49 | - | - | 1 | - | - | - |
| 13 | 1 | 32 | 2 | - | - | - | 2 | - | - |
| 14 | 1 | 32 | 14 | - | - | - | 2 | - | - |
| 15 | 2 | 75 | 22 | 1 | 1 | 3 | - | - | 1 |
| 16 | 1 | 50 | 3 | - | 1 | 1 | - | - | 1 |
| 17 | 2 | 75 | 36 | 1 | 2 | 4 | - | - | 1 |
| 18 | 1 | 32 | 7 | - | - | - | 2 | - | - |
| 19 | 1 | 75 | 3 | 1 | 1 | 1 | - | - | 1 |
| 20 | 2 | 75 | 37 | 2 | 3 | 6 | - | - | 1 |
| 21 | 2 | 75 | 16 | 1 | 2 | 4 | - | - | 1 |
| 22 | 1 | 75 | 3 | 1 | 2 | 2 | - | - | 1 |
| 23 | 1 | 32 | 11 | - | - | 2 | - | - | - |
| 24 | 1 | 32 | 32 | - | - | 2 | - | - | - |
| 25 | 1 | 32 | 14 | - | - | - | 2 | - | - |
| 26 | 1 | 32 | 2 | - | - | - | 2 | - | - |
| 27 | 1 | 32 | 21 | - | - | - | 2 | - | - |
| 28 | 1 | 75 | 5 | 1 | 2 | 2 | - | - | 1 |
| 29 | 2 , 1 | 32 , 50 | 10 | - | - | 2 | - | 2 | 1 |
| 30 | 2 | 32 | 13 | - | - | - | - | 2 | 1 |
| 31 | 1 | 32 | 26 | - | - | 2 | - | - | - |
| 32 | 1 | 32 | 14 | - | - | - | 2 | - | - |
| 33 | 1 | 32 | 2 | - | - | - | 2 | - | - |
| 34 | 1 | 32 | 21 | - | - | - | 2 | - | - |
| 35 | 1 | 32 | 49 | - | - | 1 | - | - | - |
| 36 | 1 | 32 | 2 | - | - | - | 2 | - | - |
| 37 | 1 | 32 | 15 | - | - | - | 2 | - | - |
| 38 | 2 , 2 | 32 , 75 | 18 | 1 | 2 | 4 | - | - | 1 |
| 39 | 1 | 50 | 2 | - | 1 | 1 | - | - | 1 |
| 40 | 2 , 2 | 32 , 75 | 8 | 3 | 6 | 11 | - | 2 | 1 |
| 41 | 1 | 50 | 6 | - | - | - | - | - | - |

* -FOR CONTRACTOR'S INFORMATION ONLY.

**NOTES:**
CONDUIT SHALL REMAIN OPEN IN RUN #41 (50 mm) FOR FUTURE COMMUNICATION CABLE (TMS).

## LOOP 1604 SBD. F.R.

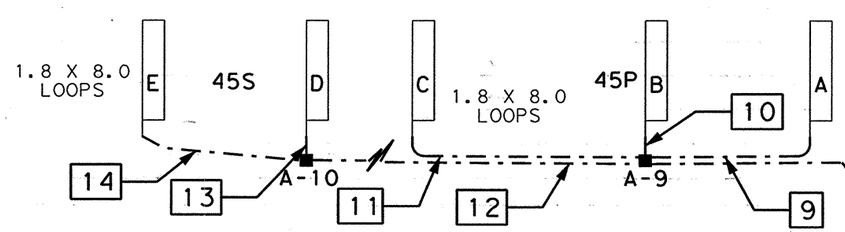


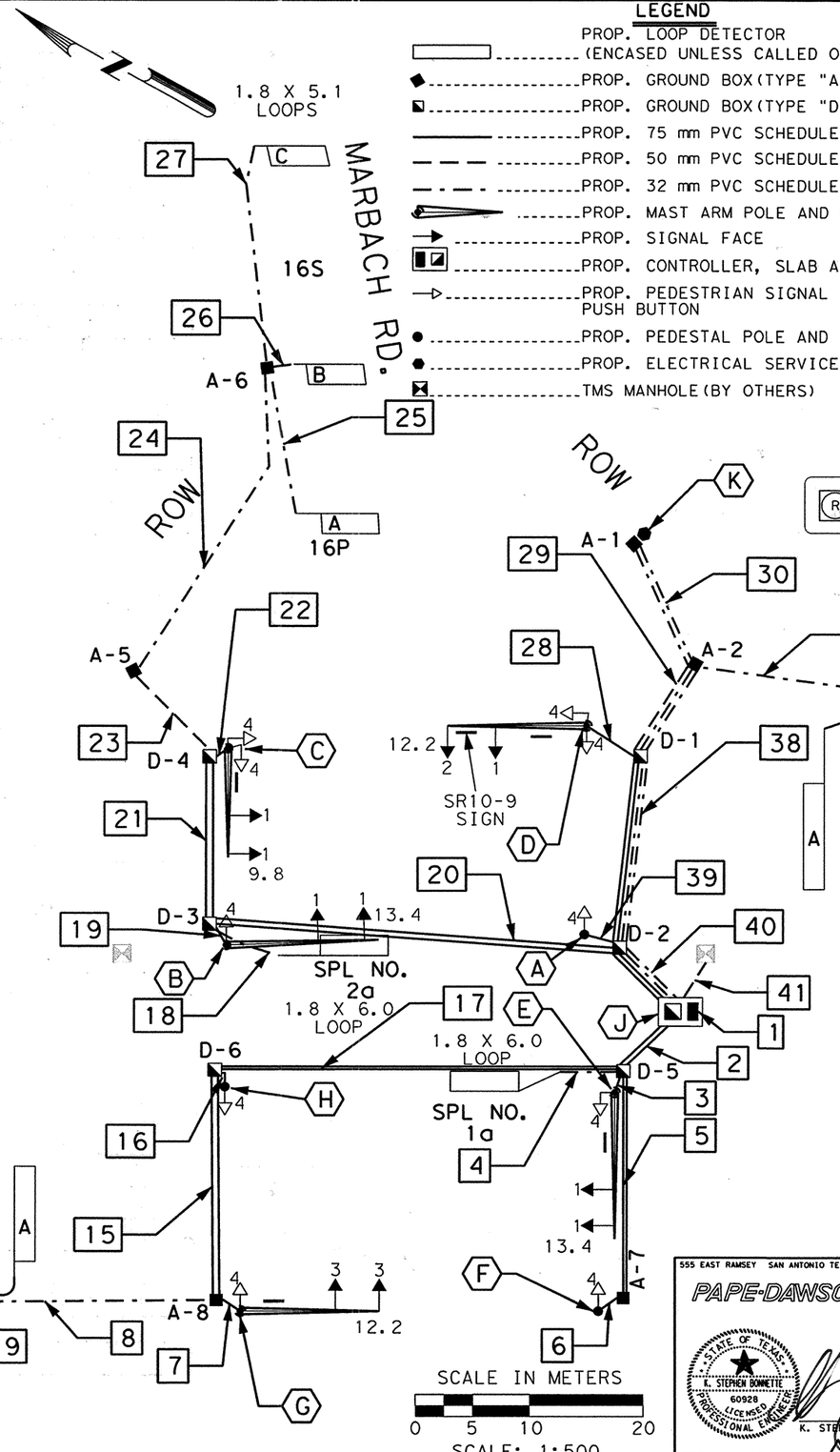


**LEGEND**

- PROP. LOOP DETECTOR (ENCASED UNLESS CALLED OUT)
- PROP. GROUND BOX (TYPE "A")
- PROP. GROUND BOX (TYPE "D")
- PROP. 75 mm PVC SCHEDULE 80
- PROP. 50 mm PVC SCHEDULE 80
- PROP. 32 mm PVC SCHEDULE 80
- PROP. MAST ARM POLE AND FOUNDATION
- PROP. SIGNAL FACE
- PROP. CONTROLLER, SLAB AND FOUNDATION
- PROP. PEDESTRIAN SIGNAL HEAD WITH PUSH BUTTON
- PROP. PEDESTAL POLE AND FOUNDATION
- PROP. ELECTRICAL SERVICE
- TMS MANHOLE (BY OTHERS)

## POLE AND CABLE SCHEDULE

| POLE NO. | SIGNAL CABLE 7/C#12 | 4/C#12 | 2/C#14 | ELEC CONDR 1/C#6 BARE |
|---|---|---|---|---|
| A | - | 1 | 1 | 1 |
| B | 2 | 1 | 1 | 1 |
| C | 2 | 2 | 2 | 1 |
| D | 2 | 2 | 2 | 1 |
| E | 2 | 1 | 1 | 1 |
| F | - | 1 | 1 | 1 |
| G | 2 | 1 | 1 | 1 |
| H | - | 1 | 1 | 1 |

**SIGNAL FACES**

300 mm SIGNAL SECTIONS

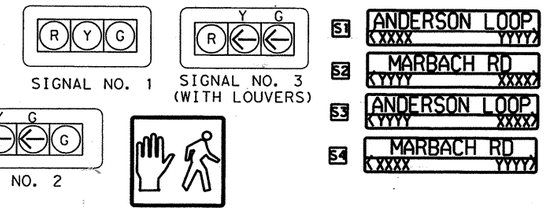


## LOOP 1604 NBD. F.R.

CHANGE ORDER NO. 79

-REVISED RDWY GEOMETRICS AND LANE CONFIGURATIONS
-SIGNALIZATION
-REPLACES SHEET 576

# WIRING DIAGRAM AND CONDUIT LAYOUT

SHEET 2 OF 3

555 EAST RAMSEY SAN ANTONIO TEXAS 78216 PHONE (210) 375-9000 FAX (210) 375-9010
PAPE-DAWSON ENGINEERS CIVIL & ENVIRONMENTAL
STATE OF TEXAS K. STEPHEN BONNETTE 60928 LICENSED PROFESSIONAL ENGINEER
K. STEPHEN BONNETTE P.E. 03/12/2003 DATE
FOR CHANGE ORDER ONLY

©2000 Texas Department of Transportation

**LOOP 1604**
**TRAFFIC SIGNAL INTERSECTION LAYOUT**
**LOOP 1604 AT MARBACH RD**

| | PROJECT NO. | SHEET NO. |
|---|---|---|
| DN: | NH 2000(704), etc. | 576A |
| CK DN: | STATE / DIST. / COUNTY | |
| DW: | TEXAS / SAT / BEXAR | |
| CK DW: | CONT. / SECT. / JOB / HIGHWAY NO. | |
| | 2452 / 01 / 036, etc. / LP 1604 | |

Design Filename: p:\52\20\11\design\civil\plansheets\traffic\signal\loop1604marb-co.dgn

## POLE SCHEDULE

| | POLE NUMBER | A | B | C | D |
|---|---|---|---|---|---|
| | MAST ARM LENGTH (M) | Ped. | 14.6 | 12.2 | 13.4 |
| | FOUNDATION TYPE | 600-A | 900-A | 900-A | 900-A |
| | FOUNDATION DEPTH (M) | 1.7 | 4.0 | 4.0 | 4.0 |
| CABLE | CIRCUIT | NO. OF CONDUCTORS | | | |
| #6 BARE | BARE BOND GROUND | 1 | 1 | 1 | 1 |
| 7/C#12 STRANDED TYPE "A" | SIGNALS Ø2 | | | 2 | |
| | Ø3 | | 2 | | |
| | Ø5 | | | 1 | |
| | Overlap C & D | | | | 3 |
| 4/C#12 STRANDED TYPE "A" | PED. SIGNALS Ø2 | | | 1 | 1 |
| | Ø3 | 1 | 1 | 1 | 1 |
| | | | | | |
| 2/C#14 TY"C" | PED. PUSH BUTTON | 1 | 1 | 2 | 2 |
| COAXIAL | VIVDS(COMM.) | | 2 | 2 | 1 |

S1 ANDERSON LOOP (XXXX YYYY)
S2 MARBACH RD (YYYY XXXX)
S3 ANDERSON LOOP (YYYY XXXX)
S4 MARBACH RD (XXXX YYYY)

LEFT TURN YIELD ON GREEN — SR10-12 (750 x 900)

LEFT TURN SIGNAL — R10-10L (750 x 900)

PUSH BUTTON FOR — R10-4BL (225 x 300)

PUSH BUTTON FOR — R10-4BR (225 x 300)

From CO#79
Run 24-27
already constructed
(32mm) 69m
(TyA) 1EA

## SIGNAL FACES

300 mm SIGNAL SECTIONS

SIGNAL NO. 1 * SIGNAL NO. 2 SIGNAL NO. 3 *

SIGNAL NO. 4

* WITH LOUVER AS CALLED FOR ON PLAN

MARBACH RD.

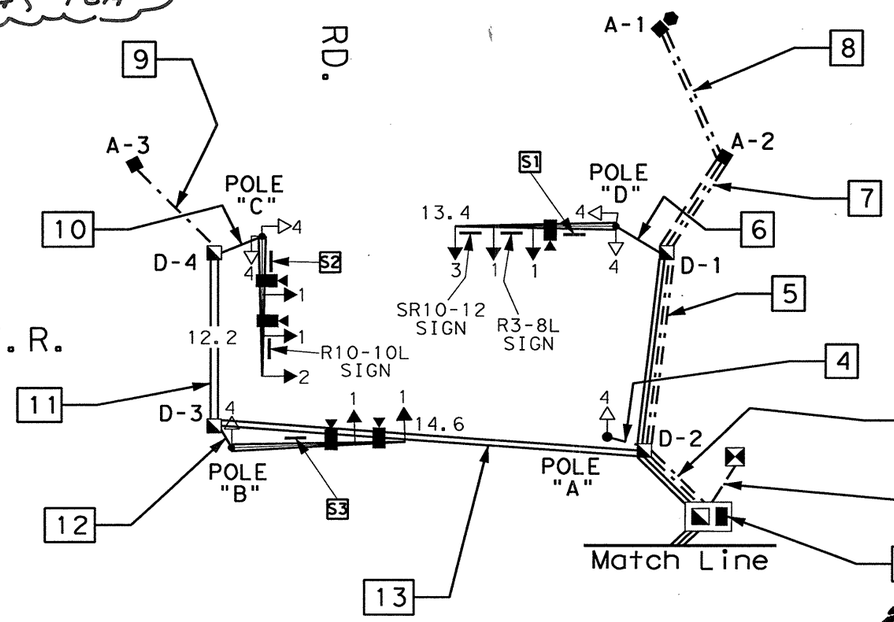


LOOP 1604 NBD. F.R.

## LEGEND

- PROP. VIDEO IMAGING VEH. DETECTION SYSTEM CAMERA (VIVDS)
- PROP. GROUND BOX (TYPE "A")
- PROP. GROUND BOX (TYPE "D")
- PROP. 75 mm PVC SCHEDULE 80
- PROP. 50 mm PVC SCHEDULE 80
- PROP. 32 mm PVC SCHEDULE 80
- PROP. MAST ARM POLE AND FOUNDATION
- PROP. SIGNAL FACE
- PROP. CONTROLLER, SLAB AND FOUNDATION
- PROP. PEDESTRIAN SIGNAL HEAD WITH PUSH BUTTON
- PROP. PEDESTAL POLE AND FOUNDATION
- PROP. ELECTRICAL SERVICE
- TMS MANHOLE (BY OTHERS)

**CHANGE ORDER NO. 104**

-SWAPPED SIGNAL POLES "C" & "D"

-ADDED 3-SECTION HEAD AND SIGN FOR LEFT TURNS ON LOOP 1604 F.R.

-REPLACED LOOP DETECTORS (SAW-CUT, CONDUIT AND GROUND BOXES) WITH VIVDS.

-CHANGED TO VERTICALLY ORIENTED SIGNAL HEADS

-ADDED BACKPLATES

## CONDUIT AND CABLE SCHEDULE

| | RUN NUMBER | 1 | 2 | 3 | 4 | 5 | 6 | 7 | 8 | 9 | 10 | 11 | 12 | 13 |
|---|---|---|---|---|---|---|---|---|---|---|---|---|---|---|
| | CONDUIT SIZE (MM) | C | 50 | 32/75 | 50 | 32/75 | 75 | 32/50 | 32 | 32 | 75 | 75 | 75 | 75 |
| | NUMBER OF CONDUITS | | 1 | 2/2 | 1 | 2/2 | 1 | 2/1 | 2 | 1 | 1 | 2 | 1 | 2 |
| | COND / RUN LENGTH (M) | 3 | 5 | 8 | 4 | 18 | 5 | 10 | 13 | 11 | 5 | 16 | 3 | 37 |
| | TRENCH(T) / BORE(B) | | T | T | T | T | T | T | T | T | T | T | T | T |
| CABLE | CIRCUIT | NUMBER OF CONDUCTORS | | | | | | | | | | | | |
| #6 XHHW | 120 POWER HOT | 1 | | 1 | | 1 | | 1 | 1 | | | | | |
| | 120 POWER COMMON | 1 | | 1 | | 1 | | 1 | 1 | | | | | |
| #6 BARE | BARE BOND GROUND | 1 | | 1 | 1 | 1 | 1 | 1 | 1 | | 1 | 1 | 1 | |
| 7/C#12 STRANDED TYPE "A" | SIGNALS Ø1 | 1 | | | | | | | | | | | | |
| | Ø2 | 1 | | 1 | | | | | | | 1 | 1 | | 1 |
| | Ø3 | 1 | | 1 | | | | | | | | | 1 | 1 |
| | Ø4 | 1 | | | | | | | | | | | | |
| | Ø5 | 1 | | 1 | | | | | | | 1 | 1 | | 1 |
| | Ø6 | 1 | | | | | | | | | | | | |
| | Overlap A & B | 1 | | | | | | | | | | | | |
| | Overlap C & D | 1 | | 1 | | 1 | 1 | | | | | | | |
| 4/C#12 STRANDED TYPE "A" | PED. SIGNALS Ø2 | 2 | | 2 | | 1 | 1 | | | | 1 | 1 | | 1 |
| | Ø3 | 4 | | 4 | 1 | 1 | 1 | | | | 1 | 1 | 1 | 2 |
| | Ø4 | 4 | | | | | | | | | | | | |
| | Ø6 | 2 | | | | | | | | | | | | |
| 2/C#14 TY "C" | PED. PUSH BUTTONS | 12 | | 6 | 1 | 2 | 2 | | | | 2 | 2 | 1 | 3 |
| VIVDS COAXIAL CABLE | VIVDS(COMM.) Ø2 | 1 | | 1 | | | | | | | 1 | 1 | | 1 |
| | Ø3 | 2 | | 2 | | | | | | | | | 2 | 2 |
| | Ø4 | 2 | | | | | | | | | | | | |
| | Ø6 | 1 | | | | | | | | | | | | |
| | Ø1 & Ø6 | 1 | | | | | | | | | | | | |
| | Ø2 & Ø5 | 1 | | 1 | | | | | | | 1 | 1 | | 1 |
| | Overlap A & B | 1 | | | | | | | | | | | | |
| | Overlap C & D | 1 | | 1 | | 1 | 1 | | | | | | | |
| | C=IN CONTROLLER | | | | | | | | | | | | | |

NOTES:

CONDUIT (50 mm) SHALL REMAIN OPEN IN RUN #2 FOR FUTURE COMMUNICATION CABLE (TMS).

CHANGE ORDER NO. 104

REVISED SHEET

SHEET 3 OF 5

# WIRING DIAGRAM AND CONDUIT LAYOUT

## LOOP 1604

### TRAFFIC SIGNAL INTERSECTION LAYOUT LOOP 1604 AT MARBACH RD.

STATE OF TEXAS
MARC S. JACOBSON
89335
LICENSED
PROFESSIONAL ENGINEER

Marc Jacobson, P.E. 12/27/2005

SCALE IN METERS

0 5 10 20

SCALE: 1:500

©2005 Texas Department of Transportation

| FED. RD. DIV. NO. | FEDERAL AID PROJECT NO. | | SHEET NO. |
|---|---|---|---|
| 6 | NH 2000(704), Etc. | | 516A |
| STATE | DIST. | COUNTY | |
| TEXAS | SAT | BEXAR | |
| CONT. | SECT. | JOB | HIGHWAY NO. |
| 2452 | 01 | 036, Etc. | LOOP 1604 |

LEVELS DISPLAYED
1 2 3 4 5 6 7 8 9 10 11 12 13 14 15 16
17 18 19 20 21 22 23 24 25 26 27 28 29 30 31 32
33 34 35 36 37 38 39 40 41 42 43 44 45 46 47 48
49 50 51 52 53 54 55 56 57 58 59 60 61 62
ACC:
FILE: .DGN

1:28:59 PM
12/23/2005
u:\engdata\projects\jesse\bexar\loop1604\loop1604marb-c003.dgn

| POLE SCHEDULE | | | | | |
|---|---|---|---|---|---|
| | POLE NUMBER | E | F | G | H |
| | MAST ARM LENGTH (M) | 14.6 | 11.0 | 14.6 | Ped. |
| | FOUNDATION TYPE | 900-A | 900-A | 900-A | 600-A |
| | FOUNDATION DEPTH (M) | 4.0 | 4.0 | 4.0 | 1.7 |
| CABLE | CIRCUIT | NO. OF CONDUCTORS | | | |
| #6 BARE | BARE BOND GROUND | 1 | 1 | 1 | 1 |
| 7/C#12 STRANDED TYPE "A" | SIGNALS Ø1 | | 1 | | |
| | Ø4 | 2 | | | |
| | Ø6 | | 2 | | |
| | Overlap A & B | | | 3 | |
| 4/C#12 STRANDED TYPE "A" | PED. SIGNALS Ø4 | 1 | 1 | 1 | 1 |
| | Ø6 | | 1 | 1 | |
| | | | | | |
| 2/C#14 TY"C" | PED. PUSH BUTTON | 1 | 2 | 2 | 1 |
| COAXIAL | VIVDS (COMM.) | 2 | 2 | 1 | |

**SIGNAL FACES**
300 mm SIGNAL SECTIONS

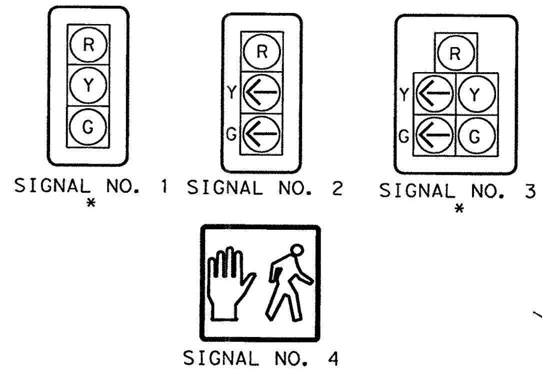


* WITH LOUVER AS CALLED FOR ON PLAN

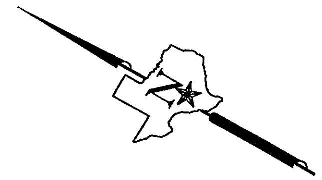

| CONDUIT AND CABLE SCHEDULE | | | | | | | | | |
|---|---|---|---|---|---|---|---|---|---|
| | RUN NUMBER | 14 | 15 | 16 | 17 | 18 | 19 | 20 | 21 |
| | CONDUIT SIZE (MM) | 75 | 75 | 75 | 50 | 75 | 75 | 75 | 75 |
| | NUMBER OF CONDUITS | 3 | 1 | 2 | 1 | 2 | 1 | 1 | 2 |
| | COND / RUN LENGTH (M) | 8 | 2 | 37 | 2 | 22 | 2 | 2 | 21 |
| | TRENCH (T) / BORE (B) | T | T | T | T | T | T | T | T |
| CABLE | CIRCUIT | NO. OF CONDUCTORS | | | | | | | |
| #6 BARE | BARE BOND GROUND | 1 | 1 | 1 | 1 | 1 | 1 | 1 | 1 |
| 7/C#12 STRANDED TYPE "A" | SIGNALS Ø1 | 1 | | | | | | 1 | 1 |
| | Ø4 | 1 | 1 | | | | | | 1 |
| | Ø6 | 1 | | | | | | 1 | 1 |
| | Overlap A & B | 1 | | 1 | | 1 | 1 | | |
| 4/C#12 STRANDED TYPE "A" | PED. SIGNALS Ø4 | 2 | 1 | 2 | 1 | 1 | 1 | 1 | 1 |
| | Ø6 | 4 | | 1 | | 1 | 1 | 1 | 1 |
| | | | | | | | | | |
| 2/C#14 TY"C" | PED. PUSH BUTTON | 6 | 1 | 3 | 1 | 2 | 2 | 2 | 2 |
| VIVDS COAXIAL CABLE | VIVDS (COMM.) Ø4 | 2 | 2 | | | | | | |
| | Ø6 | 1 | | | | | | 1 | 1 |
| | Ø1 & Ø6 | 1 | | | | | | 1 | 1 |
| | Overlap A & B | 1 | | 1 | | 1 | 1 | | |
| | C=IN CONTROLLER | | | | | | | | |

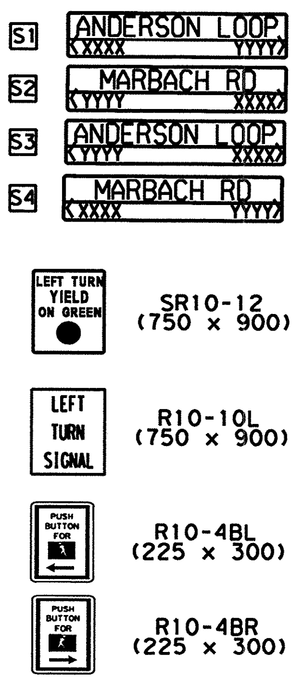


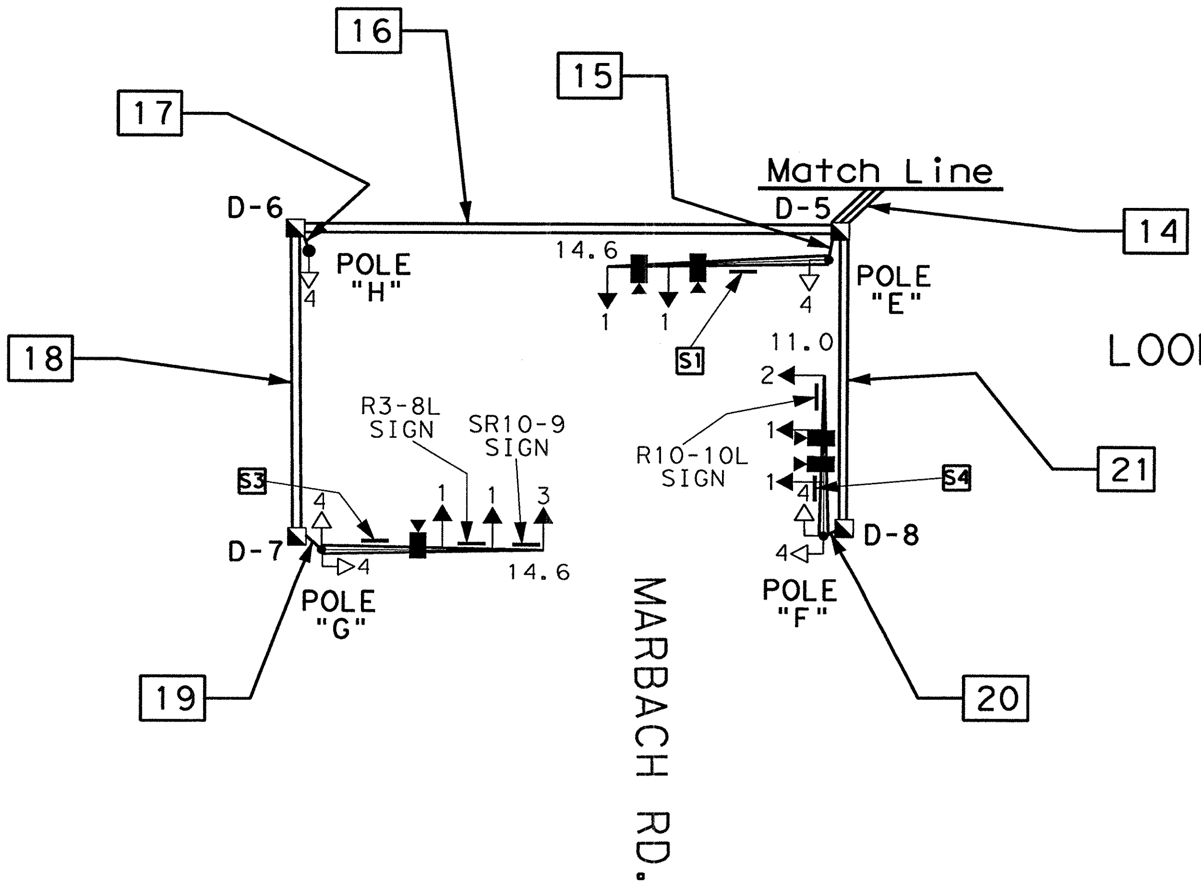


From CO#79 Run 31-37 already constructed (32mm) 129 M (Ty A) 2 EA

LOOP 1604 SBD. F.R.

SCALE IN METERS
0 5 10 20
SCALE: 1:500

CHANGE ORDER NO. 104

REVISED SHEET

SHEET 4 OF 5

# WIRING DIAGRAM AND CONDUIT LAYOUT

## LOOP 1604

TRAFFIC SIGNAL INTERSECTION LAYOUT
LOOP 1604 AT MARBACH RD.

©2005 Texas Department of Transportation

**LEGEND**

- PROP. VIDEO IMAGING VEH. DETECTION SYSTEM CAMERA (VIVDS)
- PROP. GROUND BOX (TYPE "D")
- PROP. 75 mm PVC SCHEDULE 80
- PROP. 50 mm PVC SCHEDULE 80
- PROP. 32 mm PVC SCHEDULE 80
- PROP. MAST ARM POLE AND FOUNDATION
- PROP. SIGNAL FACE
- PROP. PEDESTRIAN SIGNAL HEAD WITH PUSH BUTTON
- PROP. PEDESTAL POLE AND FOUNDATION

**CHANGE ORDER NO. 104**

- SWAPPED SIGNAL POLES "D" & "F"
- CHANGED POLE "F" MAST ARM TO 11.0 FROM 9.8
- ADDED 3-SECTION HEAD AND SIGN FOR LEFT TURNS ON LOOP 1604 F.R.
- REPLACED LOOP DETECTORS (SAW-CUT, CONDUIT AND GROUND BOXES) WITH VIVDS.
- CHANGED TO VERTICALLY ORIENTED SIGNAL HEADS
- ADDED BACKPLATES

STATE OF TEXAS
MARC S. JACOBSON
89335
LICENSED PROFESSIONAL ENGINEER

Marc S. Jacobson, P.E. 12/27/2005
Marc S. Jacobson, P.E. Date

| FED. RD. DIV. NO. | FEDERAL AID PROJECT NO. | | SHEET NO. |
|---|---|---|---|
| 6 | NH 2000(704), Etc. | | 576B |
| STATE | DIST. | COUNTY | |
| TEXAS | SAT | BEXAR | |
| CONT. | SECT. | JOB | HIGHWAY NO. |
| 2452 | 01 | 036, Etc. | LOOP 1604 |

1:29:15 PM 12/23/2005 u:\engdata\jesse\bexar\loop1604\loop1604marb-C03.dgn
LEVELS DISPLAYED ACC: FILE: .DGN

| MATERIALS TO BE FURNISHED AND INSTALLED BY THE CONTRACTOR | | | |
|---|---|---|---|
| ITEM NO. | DESCRIPTION | UNIT | QUANTITY |
| 618 | CONDUIT: PVC (SCH. 80)(32 mm) | M | 453 |
| 618 | PVC (SCH. 80)(50 mm) | M | 24 |
| 618 | PVC (SCH. 80)(75 mm) | M | 349 |
| 620 | ELECTRICAL CONDUCTOR(NO. 6) BARE | M | 235 |
| 620 | ELECTRICAL CONDUCTOR(NO. 6) INSULATED | M | 70 |
| 624 | GROUND BOX(TYPE A) W/APRON | EA. | 10 |
| 624 | GROUND BOX(TYPE D) W/APRON | EA. | 6 |
| 628 | ELEC SERV TYT(120/240)000(NS)GS(N)TP(O) | EA. | 1 |
| 656 | TRAFFIC SIGNAL CONTROLLER FND. | EA. | 1 |
| 656 | FND FOR TRAF SIG(600 mm DRIL SH) | M | 5.1 |
| 656 | FND FOR TRAF SIG(TY A)(750 mm DRIL SH) | M | 3.4 |
| 656 | FND FOR TRAF SIG(TY A)(900 mm DRIL SH) | M | 16 |
| 680 | INSTALLATION OF HWY. TRAF. SIGNAL | EA. | 1 |
| 681 | TEMPORARY TRAFFIC SIGNALS | EA. | 1 |
| 682 | VEHICLE SIGNAL SECTION(300 mm) | EA. | 34 |
| 682 | PED SIG SEC(300 mm)(2 INDICATIONS) | EA. | 10 |
| 682 | LOUVERS(ADJUSTABLE) | EA. | 6 |
| 684 | TRAF. SIG. CBL.(TY A)(4 CONDR.)(12 AWG) | M | 475 |
| 684 | TRAF. SIG. CBL.(TY A)(7 CONDR.)(12 AWG) | M | 410 |
| 684 | TRAF. SIG. CBL.(TY C)(2 CONDR.)(14 AWG) | M | 1,160 |
| 686 | TRAF SIG POLE ASM(STL)1 ARM(8.5 M) | EA. | 1 |
| 686 | TRAF SIG POLE ASM(STL)1 ARM(12.2 M) | EA. | 4 |
| 688 | PEDESTRIAN DETECTOR(PUSH BUTTON) | EA. | 10 |
| 688 | VEHICLE DETECTOR(14 AWG)(SAWCUT LOOPS) | M | 285 |
| 6008 | SALVAGE TRAFFIC SIGNALS | EA. | 1 |
| 6023 | PEDESTAL POLE ASSEMBLY | EA. | 3 |
| 6438 | VIVDS PROCESSOR SYSTEM ✳ | EA. | 1 |
| 6438 | VIVDS CAMERA ASSEMBLY ✳ | EA. | 4 |
| 6438 | VIVDS SET-UP SYSTEM ✳ | EA. | 1 |
| 6438 | VIVDS COMMUNICATION CABLE(COAXIAL) | M | 175 |
| 6438 | VIVDS TEMPORARY | EA. | 1 |
| | | | |
| | | | |

**NOTE:**
ALL SIGNAL POLE FOUNDATIONS SHALL BE INSTALLED ACCORDING TO TS-FD STANDARD SHEET.

INSTALLATION OF SIGNS TO BE CONSIDERED SUBSIDIARY TO BID ITEM 680.

✳-FOR CONTRACTOR'S INFORMATION ONLY.

| MATERIALS TO BE FURNISHED AND INSTALLED BY THE STATE | | |
|---|---|---|
| DESCRIPTION | UNIT | QUANTITY |
| CONTROLLER WITH CABINET | EA. | 1 |
| SR10-9 SIGN (FURNISH ONLY) | EA. | 1 |
| R10-4b PUSH BUTTON SIGN (FURNISH ONLY) | EA. | 10 |
| | | |
| | | |

STATE OF TEXAS
ARNULFO RAMIREZ
56890
REGISTERED
PROFESSIONAL ENGINEER

Arnulfo Ramirez, P.E. 9-18-00
Date

SHEET 3 OF 3

# TRAFFIC SIGNAL INTERSECTION LAYOUT

## LOOP 1604 FRONTAGE RDS. AT MARBACH RD.

©2000 Texas Department of Transportation

| FED.RD. DIV.NO. | FEDERAL AID PROJECT NO. | | SHEET NO. |
|---|---|---|---|
| 6 | NH 2000(704),Etc. | | 577 |
| STATE | DIST. | COUNTY | |
| TEXAS | SAT | BEXAR | |
| CONT. | SECT. | JOB | HIGHWAY NO. |
| 2452 | 01 | 036,Etc. | LOOP 1604 |

| MATERIALS TO BE FURNISHED AND INSTALLED BY THE CONTRACTOR | | | | |
|---|---|---|---|---|
| ITEM NO. | DESCRIPTION | UNIT | QUANTITY | |
| 618 | CONDUIT: PVC (SCH. 80) (32 mm) | M | 453 | |
| 618 | PVC (SCH. 80) (50 mm) | M | 24 | |
| 618 | PVC (SCH. 80) (75 mm) | M | 349 | |
| 620 | ELECTRICAL CONDUCTOR (NO. 6) BARE | M | 235 | |
| 620 | ELECTRICAL CONDUCTOR (NO. 6) INSULATED | M | 70 | |
| 624 | GROUND BOX (TYPE A) W/APRON | EA. | 10 | |
| 624 | GROUND BOX (TYPE D) W/APRON | EA. | 6 | |
| 628 | ELEC SERV TYT (120/240) 000 (NS) GS (N) TP (O) | EA. | 1 | |
| 656 | TRAFFIC SIGNAL CONTROLLER FND. | EA. | 1 | |
| 656 | FND FOR TRAF SIG (600 mm DRIL SH) | M | 5.1 | |
| 656 | FND FOR TRAF SIG (TY A) (750 mm DRIL SH) | M | 3.4 | |
| 656 | FND FOR TRAF SIG (TY A) (900 mm DRIL SH) | M | 16 | |
| 680 | INSTALLATION OF HWY. TRAF. SIGNAL | EA. | 1 | |
| 681 | TEMPORARY TRAFFIC SIGNALS | EA. | 1 | |
| 682 | VEHICLE SIGNAL SECTION (300 mm) | EA. | 34 | |
| 682 | PED SIG SEC (300 mm) (2 INDICATIONS) | EA. | 10 | |
| 682 | LOUVERS (ADJUSTABLE) | EA. | 6 | |
| 684 | TRAF. SIG. CBL. (TY A) (4 CONDR.) (12 AWG) | M | 475 | |
| 684 | TRAF. SIG. CBL. (TY A) (7 CONDR.) (12 AWG) | M | 410 | |
| 684 | TRAF. SIG. CBL. (TY C) (2 CONDR.) (14 AWG) | M | 1,160 | |
| 686 | TRAF SIG POLE ASM (STL) 1 ARM (8.5 M) | EA. | 1 | |
| 686 | TRAF SIG POLE ASM (STL) 1 ARM (12.2 M) | EA. | 4 | |
| 688 | PEDESTRIAN DETECTOR (PUSH BUTTON) | EA. | 10 | |
| 688 | VEHICLE DETECTOR (14 AWG) (SAWCUT LOOPS) | M | 285 | |
| 6008 | SALVAGE TRAFFIC SIGNALS | EA. | 1 | |
| 6023 | PEDESTAL POLE ASSEMBLY | EA. | 3 | |
| 6438 | VIVDS PROCESSOR SYSTEM ✳ | EA. | 1 | |
| 6438 | VIVDS CAMERA ASSEMBLY ✳ | EA. | 3 | ◆ |
| 6438 | VIVDS SET-UP SYSTEM ✳ | EA. | 0 | ◆ |
| 6438 | VIVDS COMMUNICATION CABLE (COAXIAL) | M | 175 | |
| 6438 | VIVDS TEMPORARY | EA. | 1 | |
| | | | | |
| | | | | |

**NOTE:**
ALL SIGNAL POLE FOUNDATIONS SHALL BE INSTALLED ACCORDING TO TS-FD STANDARD SHEET.

INSTALLATION OF SIGNS TO BE CONSIDERED SUBSIDIARY TO BID ITEM 680.

✳-FOR CONTRACTOR'S INFORMATION ONLY.

| MATERIALS TO BE FURNISHED AND INSTALLED BY THE STATE | | |
|---|---|---|
| DESCRIPTION | UNIT | QUANTITY |
| CONTROLLER WITH CABINET | EA. | 1 |
| SR10-9 SIGN (FURNISH ONLY) | EA. | 1 |
| R10-4b PUSH BUTTON SIGN (FURNISH ONLY) | EA. | 10 |
| | | |
| | | |

STATE OF TEXAS
ARNULFO RAMIREZ
56890
REGISTERED
PROFESSIONAL ENGINEER

Arnulfo Ramirez 6-25-01
Arnulfo Ramirez, P.E. Date

◆ CHANGE ORDER NO. 3

SHEET 3 OF 3

# TRAFFIC SIGNAL INTERSECTION LAYOUT
## LOOP 1604 FRONTAGE RDS. AT MARBACH RD.

©2000 Texas Department of Transportation

| FED. RD. DIV. NO. | FEDERAL AID PROJECT NO. | | SHEET NO. |
|---|---|---|---|
| 6 | NH 2000 (704), Etc. | | 577A |
| STATE | DIST. | COUNTY | |
| TEXAS | SAT | BEXAR | |
| CONT. | SECT. | JOB | HIGHWAY NO. |
| 2452 | 01 | 036, Etc. | LOOP 1604 |

Plotted on: 03/12/2003

Design Filename: p:\52\2011\design\civil\plansheets\traffic\signal\loop1604marb-co.dgn

## MATERIALS TO BE FURNISHED AND INSTALLED BY THE CONTRACTOR

| ITEM NO. | DESCRIPTION | UNIT | QUAN. |
|---|---|---|---|
| 618-5018 | CONDUIT (PVC) (SCHD 80) (32 mm) | M | 453 |
| 618-5018 | CONDUIT (PVC) (SCHD 80) (50 mm) | M | 24 |
| 618-5020 | CONDUIT (PVC) (SCHD 80) (75 mm) | M | 349 |
| 618-5021 | CONDUIT (PVC) (SCHD 80) (100 mm) | M | |
| 620-5004 | ELEC CONDUCTOR (NO. 6) BARE | M | 235 |
| 620-5011 | ELEC CONDUCTOR (NO. 4) INSULATED | M | 70 |
| 624-5001 | GROUND BOX (TYPE A) (122311) W/APRON | EA. | 10 |
| 624-5004 | GROUND BOX (TYPE D) (162922) W/APRON | EA. | 6 |
| 628-5129 | ELEC SERV TYT (120/240) 000 (NS) GS (N) TP (0) | EA. | 1 |
| 656-5003 | FND FOR TRAF SIG (600 mm DRIL SH) | M | 5.1 |
| 656-5004 | FND FOR TRAF SIG (TY A) (750 mm DRIL SH) | M | 3.4 |
| 656-5005 | FND FOR TRAF SIG (TY A) (900 mm DRIL SH) | M | 16 |
| 656-5026 | TRAF SIG CONTROLLER FND 1 EA | ~~M3~~ | ~~1.8~~ |
| 680-5001 | INSTAL OF HWY TRAF SIG (~~SYSTEM~~) (ISOLATED) | EA. | 1 |
| 682-5002 | VEHICLE SIGNAL SECTION (300 mm) | EA. | 32 |
| 682-5005 | PED SIG SEC (300 mm) (2 INDICATIONS) | EA. | 10 |
| 682-5019 | LOUVERS (ADJUSTABLE) | EA. | 6 |
| 684-5004 | TRAF SIG CBL (TY A) (4 CONDR.) (12 AWG) | M | 475 |
| 684-5007 | TRAF SIG CBL (TY A) (7 CONDR.) (12 AWG) | M | 410 |
| 684-5044 | TRAF SIG CBL (TY C) (2 CONDR.) (14 AWG) | M | 1,160 |
| 686-5011 | TRAF SIG POLE ASM (STL) 1 ARM (9.8 M) | EA. | 1 |
| 686-5013 | TRAF SIG POLE ASM (STL) 1 ARM (12.2 M) | EA. | 2 |
| 686-5014 | TRAF SIG POLE ASM (STL) 1 ARM (13.4 M) | EA. | 2 |
| 688-5001 | PED DETECT (PUSH BTN) | EA. | 10 |
| 688-5011 | VEHICLE DETECTOR (14 AWG) (SAWCUT LOOPS) | M | 301.6 |
| 6008-5001 | SALVAGE TRAFFIC SIGNALS | EA. | 1 |
| 6007-5001 | PEDESTAL POLE ASSEMBLY | EA. | 3 |
| 6298-5001 | 300 MM LED TRAF SIGNAL LAMP (RED) ** | EA. | ~~10~~ |
| 6298-5002 | 300 MM LED TRAF SIGNAL LAMP (YELLOW) ** | EA. | 8 |
| 6298-5003 | 300 MM LED TRAF SIGNAL LAMP (GREEN) ** | EA. | 8 |
| 6298-5004 | 300 MM LED TRAF SIGNAL LAMP (YEL ARW) ** | EA. | 3 |
| 6298-5005 | 300 MM LED TRAF SIGNAL LAMP (GRN ARW) ** | EA. | 3 |
| 8230-0501 | LED PED SIG LAMP (SYMB) (2 IND/1 SEC) ** | EA. | ~~10~~ |
| 6XXX-XXXX | DETECTOR AMPLIFIERS (2 CHANNEL) *** | EA. | 9 |
| **- - | BRACKET ASSY (SYMBOLIC PEDESTRIAN HEAD) | EA. | 12 |
| ***- - | HORIZONTAL SIGNAL HEAD MOUNTS | EA. | 14 |
| ***- - | SIGN MOUNTS (VARIOUS SIZES) | EA. | 1 |
| | | | |
| | | | |

Subsidiary to Item 682

NOTES:

SEE NOTES, SHEET 1 OF 1.

## PROPOSED POLE & EQUIPMENT INFORMATION

| ID NO. | DESCRIPTION/ATTACHMENTS | STATION | OFFSET | FND. ELEV | FND. TYPE |
|---|---|---|---|---|---|
| A | INSTALL 114mm OD STEEL PEDESTAL POLE ASSEMBLY WITH ONE SYMBOLIC LED PED SIGNAL HEAD, ONE PUSHBUTTON, AND ONE R10-4BR SIGN | 26+313.380 | 39.281 LT | 75MM ABOVE GRADE | 1.7M (600-A) |
| B | INSTALL SMA-130, 13.4M ARM ON 900mm DRILLED SHAFT FND(900-A), W/ONE SYMBOLIC PED SIGNAL, ONE PUSHBUTTON, AND ONE R10-4BL SIGN | 26+281.913 | 38.312 LT | 75MM ABOVE GRADE | 4.0M (900-A) |
| C | INSTALL SMA-130, 9.8M ARM ON 750mm DRILLED SHAFT FND(750-A), W/TWO SYMBOLIC PED SIGNALS, TWO PUSHBUTTONS, AND TWO R10-4BL SIGNS | 26+282.080 | 56.112 LT | 75MM ABOVE GRADE | 3.4M (750-A) |
| D | INSTALL SMA-130, 12.2M ARM ON 900mm DRILLED SHAFT FND(900-A), W/TWO SYMBOLIC PED SIGNALS, TWO PUSHBUTTONS, AND TWO R10-4BL SIGNS | 26+313.565 | 58.133 LT | 75MM ABOVE GRADE | 4.0M (900-A) |
| E | INSTALL SMA-130, 13.4M ARM ON 900mm DRILLED SHAFT FND(900-A), W/ONE SYMBOLIC PED SIGNAL, ONE PUSHBUTTON, AND ONE R10-4BR SIGN | 26+316.084 | 24.892 LT | 75MM ABOVE GRADE | 4.0M (900-A) |
| F | INSTALL 114mm OD STEEL PEDESTAL POLE ASSEMBLY WITH ONE SYMBOLIC LED PED SIGNAL HEAD, ONE PUSHBUTTON, AND ONE R10-4BL SIGN | 26+314.649 | 4.958 LT | 75MM ABOVE GRADE | 1.7M (600-A) |
| G | INSTALL SMA-130, 12.2M ARM ON 900mm DRILLED SHAFT FND(900-A), W/ONE SYMBOLIC PED SIGNALS, ONE PUSHBUTTONS, AND ONE R10-4BR SIGNS | 26+283.200 | 4.952 LT | 75MM ABOVE GRADE | 4.0M (900-A) |
| H | INSTALL 114mm OD STEEL PEDESTAL POLE ASSEMBLY WITH ONE SYMBOLIC LED PED SIGNAL HEAD, ONE PUSHBUTTON, AND ONE R10-4BL SIGN | 26+281.835 | 25.393 LT | 75MM ABOVE GRADE | 1.7M (600-A) |
| J | PROPOSED TxDOT STANDARD TRAFFIC SIGNAL CONTROLLER AND CONTROLLER CABINET ASSEMBLY AND FOUNDATION | 26+321.865 | 32.292 LT | N/A | TxDOT STD |
| K | PROPOSED ELECTRICAL SERVICE TIMBER POLE | 26+318.639 | 75.530 LT | N/A | TxDOT STD |

## MATERIALS TO BE FURNISHED AND INSTALLED BY THE STATE AND INSTALLED BY CONTRACTOR

| DESCRIPTION | UNIT | QUANTITY |
|---|---|---|
| CONTROLLER WITH CABINET (NEMA TxDOT) | EA. | 1 |
| SR10-9 SIGN (FURNISH ONLY) | EA. | 1 |
| R10-4b PUSH BUTTON SIGN (FURNISH ONLY) | EA. | 10 |
| | | |
| | | |

* -FOR CONTRACTOR'S INFORMATION ONLY.
** SUBSIDIARY TO ITEM 0682
*** SUBSIDIARY TO ITEM 0680

CHANGE ORDER NO. 19

-REVISED RDWY GEOMETRICS AND LANE CONFIGURATIONS
-SIGNALIZATION
-REPLACES SHEET 577

# TRAFFIC SIGNAL INTERSECTION LAYOUT

SHEET 3 OF 3

555 EAST RAMSEY SAN ANTONIO TEXAS 78216 PHONE (210)375-9000 FAX (210)375-9010
PAPE-DAWSON ENGINEERS CIVIL & ENVIRONMENTAL
STATE OF TEXAS K. STEPHEN BONNETTE 60928 LICENSED PROFESSIONAL ENGINEER
K. STEPHEN BONNETTE P.E. 03/12/2003 DATE
FOR CHANGE ORDER ONLY

©2000 Texas Department of Transportation

LOOP 1604
TRAFFIC SIGNAL INTERSECTION LAYOUT
LOOP 1604 AT MARBACH RD

| | | PROJECT NO. | | SHEET NO. |
|---|---|---|---|---|
| DN: | | NH 2000(704), etc. | | 577B |
| CK DN: | | STATE | DIST. | COUNTY |
| DW: | | TEXAS | SAT | BEXAR |
| CK DW: | CONT. / SECT. / JOB | 2452 | 01 | 036, etc. |
| | HIGHWAY NO. | LP 1604 | | |

LEVELS DISPLAYED 1 2 3 4 5 6 7 8 9 10 11 12 13 14 15 16 17 18 19 20 21 22 23 24 25 26 27 28 29 30 31 32 33 34 35 36 37 38 39 40 41 42 43 44 45 46 47 48 49 50 51 52 53 54 55 56 57 58 59 60 61 62 63
ACC:
FILE: .DGN

## MATERIALS TO BE FURNISHED AND INSTALLED BY THE CONTRACTOR

| ITEM NO. | DESCRIPTION | | UNIT | QUAN. | |
|---|---|---|---|---|---|
| 618-5018 | CONDUIT (PVC) (SCHD 80) (32 mm) | 453 | M | ~~470~~ | 109 +198 = 298 |
| 618-5018 | CONDUIT (PVC) (SCHD 80) (50 mm) | | M | 24 | |
| 618-5020 | CONDUIT (PVC) (SCHD 80) (75 mm) | | M | 349 | |
| 618-5021 | CONDUIT (PVC) (SCHD 80) (100 mm) | | M | | |
| 620-5004 | ELEC CONDUCTOR (NO. 6) BARE | | M | 235 | |
| 620-5010 | ELEC CONDUCTOR (NO. 6) INSULATED | | M | 110 | |
| 620-5011 | ELEC CONDUCTOR (NO. 4) INSULATED | | M | 70 | 0 |
| 624-5001 | GROUND BOX (TYPE A) (122311) W/APRON | 10 | EA. | ~~8~~ | 3 +3 = 6 |
| 624-5004 | GROUND BOX (TYPE D) (162922) W/APRON | | EA. | ~~86~~ | 8 |
| 628-5129 | ELEC SERV TYT (120/240) 000 (NS) GS (N) TP (O) | | EA. | 1 | |
| 656-5003 | FND FOR TRAF SIG (600 mm DRIL SH) | 5.1 | M | 3.4 | |
| 656-5004 | FND FOR TRAF SIG (TY A) (750 mm DRIL SH) | | M | 3.4 | 0 |
| 656-5005 | FND FOR TRAF SIG (TY A) (900 mm DRIL SH) | | M | ~~20~~ 16 | 24 |
| 656-5013 | TRAF SIG CONTROLLER FND | | EA M3 | ~~1~~ 8 1 | |
| 680-5002 | INSTAL OF HWY TRAF SIG (SYSTEM) | | EA. | 1 | |
| 682-5002 | VEHICLE SIGNAL SECTION (300 mm) | | EA. | ~~4632~~ | 52 |
| 682-5005 | PED SIG SEC (300 mm) (2 INDICATIONS) | 10 | EA. | 12 | |
| 682-5009 | BACK PLATE (3 SEC) (300 MM) | | EA. | 14 | |
| 682-5009 | BACK PLATE (5 SEC) (300 MM) | | EA. | 2 | |
| 682-5019 | LOUVERS (ADJUSTABLE) | 6 | EA. | 22 | |
| 684-5004 | TRAF SIG CBL (TY A) (4 CONDR.) (12 AWG) | 475 | M | 596 | |
| 684-5007 | TRAF SIG CBL (TY A) (7 CONDR.) (12 AWG) | 410 | M | ~~502~~ | 660 |
| 684-5044 | TRAF SIG CBL (TY C) (2 CONDR.) (14 AWG) | 1160 | M | ~~1,281~~ | 570 |
| 686-5011 | TRAF SIG POLE ASM (STL) 1 ARM (9.8 M) | | EA. | 1 | 0 |
| 686-5013 | TRAF SIG POLE ASM (STL) 1 ARM (11.0 M) | | EA. | 1 | |
| 686-5013 | TRAF SIG POLE ASM (STL) 1 ARM (12.2 M) | | EA. | 2 | |
| 686-5014 | TRAF SIG POLE ASM (STL) 1 ARM (13.4 M) | 2 | EA. | 3 | |
| 688-5001 | PED DETECT (PUSH BTN) | 10 | EA. | 12 | |
| 688-5011 | VEHICLE DETECTOR (14 AWG) (SAWCUT LOOPS) | 301.6 | M | ~~319.1~~ | 0 |
| 6008-5001 | SALVAGE TRAFFIC SIGNALS | | EA. | 1 | |
| 6607-5001 | PEDESTAL POLE ASSEMBLY | 3 | EA. | 2 | |
| 6298-5001 | 300 MM LED TRAF SIGNAL LAMP (RED) | 10 | EA. | ~~12~~ | 16 |
| 6298-5002 | 300 MM LED TRAF SIGNAL LAMP (YELLOW) SUB. to Item 682 | 8 | EA. | 14 | |
| 6298-5003 | 300 MM LED TRAF SIGNAL LAMP (GREEN) SUB. to Item 682 | 8 | EA. | 14 | |
| 6298-5004 | 300 MM LED TRAF SIGNAL LAMP (YEL ARW) | 3 | EA. | ~~2~~ | 4 |
| 6298-5005 | 300 MM LED TRAF SIGNAL LAMP (GRN ARW) | 3 | EA. | ~~2~~ | 4 |
| 8230-0501 | LED PED SIG LAMP (SYMB) (2 IND/1 SEC) | 10 | EA. | 12 | |
| 6XXX-XXXX | DETECTOR AMPLIFIERS (2 CHANNEL) *** | | EA. | 9 | |
| ** - - | BRACKET ASSY (SYMBOLIC PEDESTRIAN HEAD) | | EA. | 12 | |
| *** - - | HORIZONTAL SIGNAL HEAD MOUNTS | | EA. | 14 | 16 |
| *** - - | SIGN MOUNTS (VARIOUS SIZES) | | EA. | 1 | |

## MATERIALS TO BE FURNISHED AND INSTALLED BY THE CONTRACTOR

| ITEM NO. | DESCRIPTION | UNIT | QUAN. |
|---|---|---|---|
| 6044-2002 | VIVDS CAMERA ASSEMBLY | EA. | 2 10 |
| 6044-2001 | VIVDS PROCESSING SYSTEM | EA. | 1 2 |
| 6044-2003 | VIVDS SET-UP SYSTEM | EA. | 1 |
| 6044-2008 | VIVDS COMMUNICATION CABLE (COAX) | M | 70 450 |
| | | | |

## MATERIALS TO BE FURNISHED AND INSTALLED BY THE STATE AND INSTALLED BY CONTRACTOR

| DESCRIPTION | UNIT | QUANTITY |
|---|---|---|
| CONTROLLER WITH CABINET (NEMA TxDOT) | EA. | 1 |
| SR10-12 SIGN (FURNISH ONLY) | EA. | 2 |
| R10-4b PUSH BUTTON SIGN (FURNISH ONLY) | EA. | 12 |
| SIGNS, METRO STREET NAME (FURNISH ONLY) | EA. | 6 |
| R3-8L SIGN (FURNISH ONLY) | EA. | 2 |
| R10-10L SIGN (FURNISH ONLY) | EA. | 2 |

CHANGE ORDER NO. 104

-CHANGED QUANTITIES TO REFLECT REVISIONS

*-FOR CONTRACTOR'S INFORMATION ONLY.

** SUBSIDIARY TO ITEM 0682

*** SUBSIDIARY TO ITEM 0680

STATE OF TEXAS
MARC S. JACOBSON
89335
LICENSED PROFESSIONAL ENGINEER

Marc S. Jacobson, P.E. 12/27/2005
Marc S. Jacobson, P.E. Date

CHANGE ORDER NO. 104

REVISED SHEET

SHEET 5 OF 5

LOOP 1604

TRAFFIC SIGNAL INTERSECTION LAYOUT
LOOP 1604 AT MARBACH RD.

©2005 Texas Department of Transportation

| FED. RD. DIV. NO. | FEDERAL AID PROJECT NO. | | SHEET NO. |
|---|---|---|---|
| 6 | NH 2000(704), Etc. | | 577C |
| STATE | DIST. | COUNTY | |
| TEXAS | SAT | BEXAR | |
| CONT. | SECT. | JOB | HIGHWAY NO. |
| 2452 | 01 | 036, Etc. | LOOP 1604 |

12:29:31 PM
12/27/2005
U:\Mapinfo\Jesse\bexar\1oop1604\1oop1604mcrb-c03.dgn
LEVELS DISPLAYED
1 2 3 4 5 6 7 8 9 10 11 12 13 14 15 16
17 18 19 20 21 22 23 24 25 26 27 28 29 30 31 32
33 34 35 36 37 38 39 40 41 42 43 44 45 46 47 48
49 50 51 52 53 54 55 56 57 58 59 60 61 62
ACC:
FILE: .DGN

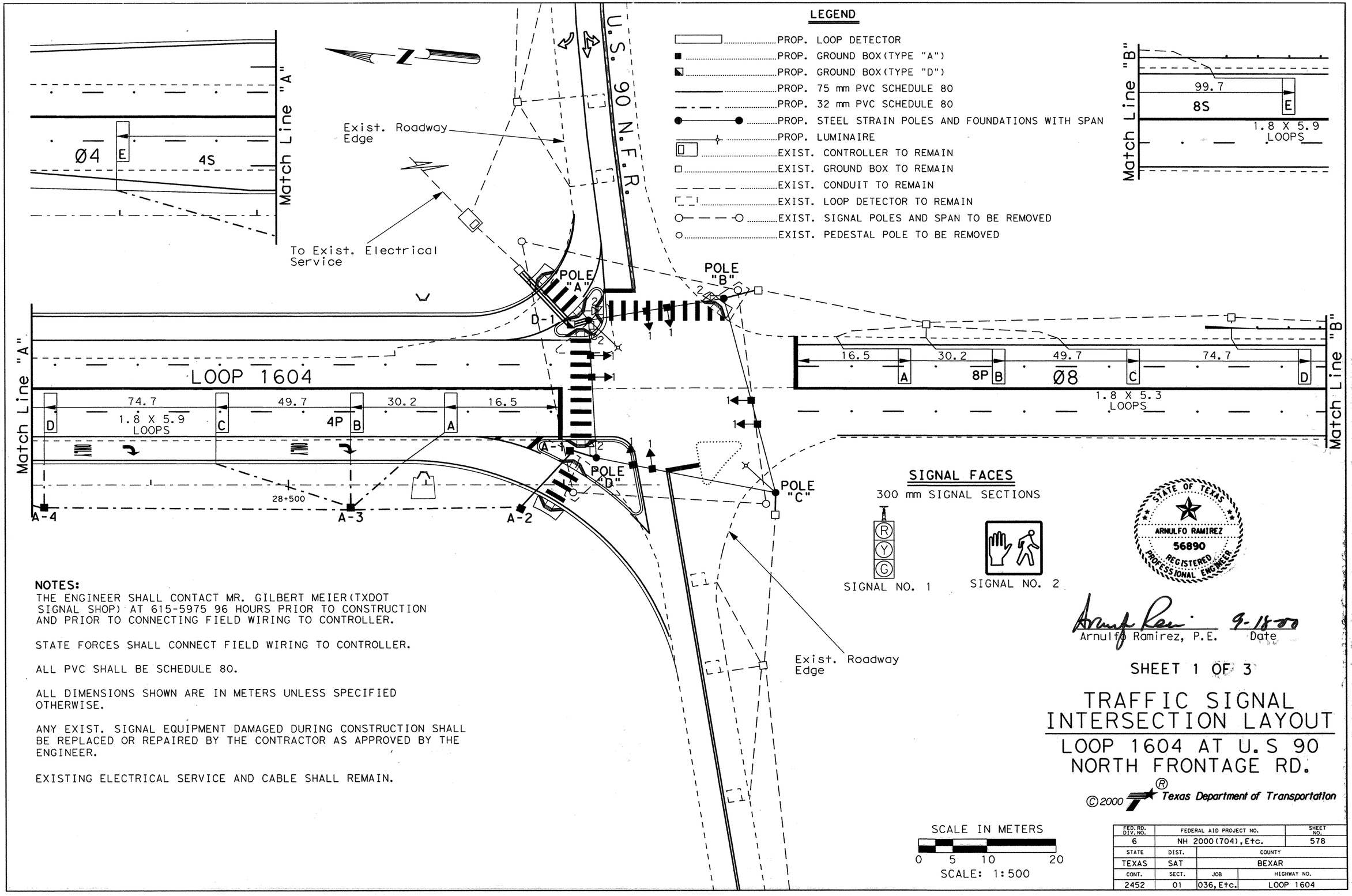


**NOTES:**

THE ENGINEER SHALL CONTACT MR. GILBERT MEIER(TXDOT SIGNAL SHOP) AT 615-5975 96 HOURS PRIOR TO CONSTRUCTION AND PRIOR TO CONNECTING FIELD WIRING TO CONTROLLER.

STATE FORCES SHALL CONNECT FIELD WIRING TO CONTROLLER.

ALL PVC SHALL BE SCHEDULE 80.

ALL DIMENSIONS SHOWN ARE IN METERS UNLESS SPECIFIED OTHERWISE.

ANY EXIST. SIGNAL EQUIPMENT DAMAGED DURING CONSTRUCTION SHALL BE REPLACED OR REPAIRED BY THE CONTRACTOR AS APPROVED BY THE ENGINEER.

EXISTING ELECTRICAL SERVICE AND CABLE SHALL REMAIN.

| FED.RD. DIV.NO. | FEDERAL AID PROJECT NO. | | SHEET NO. |
|---|---|---|---|
| 6 | NH 2000(704),Etc. | | 578 |
| STATE | DIST. | COUNTY | |
| TEXAS | SAT | BEXAR | |
| CONT. | SECT. | JOB | HIGHWAY NO. |
| 2452 | 01 | 036,Etc. | LOOP 1604 |

## POLE AND CABLE SCHEDULE

| POLE NO. | SIGNAL CABLE | | | ELEC CONDR | |
|---|---|---|---|---|---|
| | 7/C#12 | 4/C#12 | 2/C#14 | 1/C#10 | 1/C#6 BARE |
| A | 6 | 4 | 10 | 2 | 1 |
| B | - | 1 | 3 | - | 1 |
| C | - | - | 2 | - | 1 |
| D | - | 1 | 3 | - | 1 |

**NOTES:**

✳-FOR CONTRACTOR'S INFORMATION ONLY.

## LEGEND

- PROP. LOOP DETECTOR
- PROP. GROUND BOX(TYPE "A")
- PROP. GROUND BOX(TYPE "D")
- PROP. 75 mm PVC SCHEDULE 80
- PROP. 32 mm PVC SCHEDULE 80
- PROP. STEEL STRAIN POLES AND FOUNDATIONS WITH SPAN
- PROP. LUMINAIRE
- EXIST. CONTROLLER TO REMAIN
- EXIST. GROUND BOX TO REMAIN
- EXIST. CONDUIT TO REMAIN

## SIGNAL FACES

300 mm SIGNAL SECTIONS




SIGNAL NO. 1



SIGNAL NO. 2

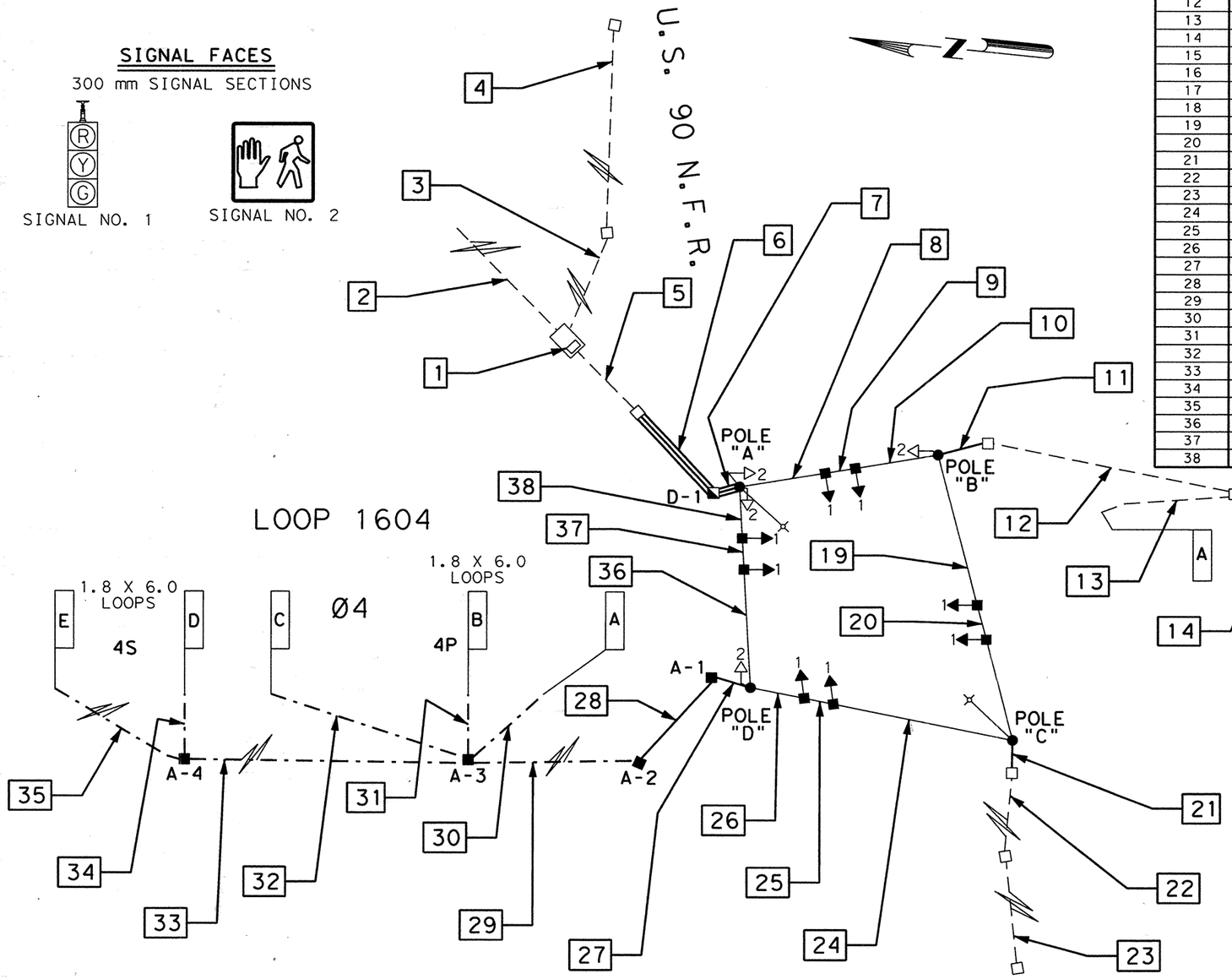


## CONDUIT AND CABLE SCHEDULE

| RUN NO. | CONDUIT(PVC) NO. | CONDUIT(PVC) SIZE (MM) | CONDUIT(PVC) LENGTH (M) | SIGNAL CABLE 7/C#12 | SIGNAL CABLE 4/C#12 | SIGNAL CABLE 2/C#14 | SIGNAL CABLE 1/C#14 ✳ | ELEC CONDR 1/C#10 | ELEC CONDR 1/C#6 ✳ | ELEC CONDR 1/C#6 BARE |
|---|---|---|---|---|---|---|---|---|---|---|
| 1 | IN CONTROLLER | | | 6 | 4 | 12 | - | - | 2 | 2 |
| 2 | EXIST. CONDUIT | | 95 | - | - | - | - | 2 | - | - |
| 3 | EXIST. CONDUIT AND LOOP DETECTOR CABLE TO REMAIN | | | | | | | | | |
| 4 | EXIST. CONDUIT AND LOOP DETECTOR CABLE TO REMAIN | | | | | | | | | |
| 5 | EXIST. CONDUIT | | 10 | 6 | 4 | 10 | - | 2 | - | 1 |
| 6 | 1 , 3 | 32 , 75 | 12 | 6 | 4 | 10 | - | 2 | - | 1 |
| 7 | 1 , 3 | 32 , 75 | 3 | 6 | 4 | 10 | - | 2 | - | 1 |
| 8 | - | ON SPAN | 9 | 3 | 1 | 3 | - | - | - | - |
| 9 | - | ON SPAN | 3 | 3 | 1 | 3 | - | - | - | - |
| 10 | - | ON SPAN | 9 | 2 | 1 | 3 | - | - | - | - |
| 11 | 1 | 75 | 5 | - | - | 2 | - | - | - | - |
| 12 | EXIST. CONDUIT | | 25 | - | - | 2 | - | - | - | - |
| 13 | EXIST. CONDUIT | | 13 | - | - | - | 2 | - | - | - |
| 14 | EXIST. CONDUIT | | 2 | - | - | - | 2 | - | - | - |
| 15 | EXIST. CONDUIT | | 20 | - | - | - | 2 | - | - | - |
| 16 | EXIST. CONDUIT | | 44 | - | - | 1 | - | - | - | - |
| 17 | EXIST. CONDUIT | | 2 | - | - | - | 2 | - | - | - |
| 18 | EXIST. CONDUIT | | 25 | - | - | - | 2 | - | - | - |
| 19 | - | ON SPAN | 16 | 2 | - | - | - | - | - | - |
| 20 | - | ON SPAN | 4 | 1 | - | - | - | - | - | - |
| 21 | 1 | 75 | 4 | - | - | 2 | - | - | - | - |
| 22 | EXIST. CONDUIT | | 22 | - | - | 2 | - | - | - | - |
| 23 | EXIST. CONDUIT | | 44 | - | - | 1 | - | - | - | - |
| 24 | - | ON SPAN | 18 | - | - | - | - | 2 | - | - |
| 25 | - | ON SPAN | 3 | 1 | - | - | - | 2 | - | - |
| 26 | - | ON SPAN | 6 | 1 | - | - | - | 2 | - | - |
| 27 | 1 | 75 | 4 | - | - | 2 | - | - | - | - |
| 28 | 1 | 75 | 12 | - | - | 2 | - | - | - | - |
| 29 | 1 | 75 | 25 | - | - | 2 | - | - | - | - |
| 30 | 1 | 32 | 11 | - | - | - | 2 | - | - | - |
| 31 | 2 | 32 | 7 | - | - | - | 2 | - | - | - |
| 32 | 1 | 32 | 21 | - | - | - | 2 | - | - | - |
| 33 | 1 | 32 | 45 | - | - | 1 | - | - | - | - |
| 34 | 1 | 32 | 7 | - | - | - | 2 | - | - | - |
| 35 | 1 | 32 | 26 | - | - | - | 2 | - | - | - |
| 36 | - | ON SPAN | 12 | 1 | 1 | 3 | - | 2 | - | - |
| 37 | - | ON SPAN | 3 | 2 | 1 | 3 | - | 2 | - | - |
| 38 | - | ON SPAN | 6 | 3 | 1 | 3 | - | 2 | - | - |

SHEET 2 OF 3

# TRAFFIC SIGNAL WIRING DIAGRAM AND CONDUIT LAYOUT

## LOOP 1604 AT U.S. 90 NORTH FRONTAGE RD.

STATE OF TEXAS
ARNULFO RAMIREZ
56890
REGISTERED PROFESSIONAL ENGINEER

©2000 Texas Department of Transportation®

Arnulfo Ramirez, P.E.

9-18-00
Date

| FED.RD. DIV.NO. | FEDERAL AID PROJECT NO. | | SHEET NO. |
|---|---|---|---|
| 6 | NH 2000(704), Etc. | | 579 |
| STATE | DIST. | COUNTY | |
| TEXAS | SAT | BEXAR | |
| CONT. | SECT. | JOB | HIGHWAY NO. |
| 2452 | 01 | 036, Etc. | LOOP 1604 |

| MATERIALS TO BE FURNISHED AND INSTALLED BY THE CONTRACTOR | | | |
|---|---|---|---|
| ITEM NO. | DESCRIPTION | UNIT | QUANTITY |
| 618 | CONDUIT: PVC (SCH. 80)(32 mm) | M | 132 |
| 618 | PVC (SCH. 80)(75 mm) | M | 95 |
| 620 | ELECTRICAL CONDUCTOR(NO. 6) BARE | M | 40 |
| 620 | ELECTRICAL CONDUCTOR(NO. 10) INSULATED | M | 360 |
| 624 | GROUND BOX(TYPE A) W/APRON | EA. | 4 |
| 624 | GROUND BOX(TYPE D) W/APRON | EA. | 1 |
| 625 | ZINC-COATED STEEL WIRE STRAND(7.94 mm)* | M | 110 |
| 656 | FND FOR TRAF SIG(TY A)(900 mm DRILL SH) | M | 16 |
| 680 | INSTALLATION OF HWY. TRAF. SIGNAL | EA. | 1 |
| 681 | TEMPORARY TRAFFIC SIGNALS | EA. | 1 |
| 682 | VEHICLE SIGNAL SECTION(300 mm) | EA. | 24 |
| 682 | PED SIG SEC(300 mm)(2 INDICATIONS) | EA. | 4 |
| 684 | TRAF. SIG. CBL.(TY A)(4 CONDR.)(12 AWG) | M | 310 |
| 684 | TRAF. SIG. CBL.(TY A)(7 CONDR.)(12 AWG) | M | 535 |
| 684 | TRAF. SIG. CBL.(TY C)(2 CONDR.)(14 AWG) | M | 1,320 |
| 686 | TRAF SIG POLE ASM(STL)STR(TY B)(9.1 M) | EA. | 2 |
| 686 | TRAF SIG POL ASM(STL)STR(TYB)(9.1M)LUM | EA. | 2 |
| 688 | PEDESTRIAN DETECTOR(PUSH BUTTON) | EA. | 4 |
| 688 | VEHICLE DETECTOR(14 AWG)(SAWCUT LOOPS) | M | 235 |
| 6008 | SALVAGE TRAFFIC SIGNALS | EA. | 1 |
| 6438 | VIVDS PROCESSOR SYSTEM ** | EA. | 1 |
| 6438 | VIVDS CAMERA ASSEMBLY ** | EA. | 4 |
| 6438 | VIVDS SET-UP SYSTEM ** | EA. | 1 |
| 6438 | VIVDS COMMUNICATION CABLE(COAXIAL) | M | 245 |
| 6438 | VIVDS TEMPORARY | EA. | 1 |
| | | | |
| | | | |

| MATERIALS TO BE FURNISHED AND INSTALLED BY THE STATE | | |
|---|---|---|
| DESCRIPTION | UNIT | QUANTITY |
| R10-4b PUSH BUTTON SIGN (FURNISH ONLY) | EA. | 4 |
| | | |
| | | |
| | | |
| | | |

**NOTE:**
ALL SIGNAL POLE FOUNDATIONS SHALL BE INSTALLED ACCORDING TO TS-FD STANDARD SHEET.

INSTALLATION OF SIGNS TO BE CONSIDERED SUBSIDIARY TO BID ITEM 680.

*-FOR CONTRACTOR'S INFORMATION ONLY(SHALL BE CONSIDERED SUBSIDIARY TO BID ITEM 680).

**-FOR CONTRACTOR'S INFORMATION ONLY

STATE OF TEXAS
ARNULFO RAMIREZ
56890
REGISTERED PROFESSIONAL ENGINEER

Arnulfo Ramirez, P.E. 9-18-00
Date

SHEET 3 OF 3

# TRAFFIC SIGNAL INTERSECTION LAYOUT

## LOOP 1604 AT U.S. 90 NORTH FRONTAGE RD.

©2000 Texas Department of Transportation

| FED. RD. DIV. NO. | FEDERAL AID PROJECT NO. | | SHEET NO. |
|---|---|---|---|
| 6 | NH 2000(704), Etc. | | 580 |
| STATE | DIST. | COUNTY | |
| TEXAS | SAT | BEXAR | |
| CONT. | SECT. | JOB | HIGHWAY NO. |
| 2452 | 01 | 036, Etc. | LOOP 1604 |

| MATERIALS TO BE FURNISHED AND INSTALLED BY THE CONTRACTOR | | | |
|---|---|---|---|
| ITEM NO. | DESCRIPTION | UNIT | QUANTITY |
| 618 | CONDUIT: PVC (SCH. 80) (32 mm) | M | 132 |
| 618 | PVC (SCH. 80) (75 mm) | M | 95 |
| 620 | ELECTRICAL CONDUCTOR (NO. 6) BARE | M | 40 |
| 620 | ELECTRICAL CONDUCTOR (NO. 10) INSULATED | M | 360 |
| 624 | GROUND BOX (TYPE A) W/APRON | EA. | 4 |
| 624 | GROUND BOX (TYPE D) W/APRON | EA. | 1 |
| 625 | ZINC-COATED STEEL WIRE STRAND (7.94 mm) ✳ | M | 110 |
| 656 | FND FOR TRAF SIG (TY A) (900 mm DRILL SH) | M | 16 |
| 680 | INSTALLATION OF HWY. TRAF. SIGNAL | EA. | 1 |
| 681 | TEMPORARY TRAFFIC SIGNALS | EA. | 1 |
| 682 | VEHICLE SIGNAL SECTION (300 mm) | EA. | 24 |
| 682 | PED SIG SEC (300 mm) (2 INDICATIONS) | EA. | 4 |
| 684 | TRAF. SIG. CBL. (TY A) (4 CONDR.) (12 AWG) | M | 310 |
| 684 | TRAF. SIG. CBL. (TY A) (7 CONDR.) (12 AWG) | M | 535 |
| 684 | TRAF. SIG. CBL. (TY C) (2 CONDR.) (14 AWG) | M | 1,320 |
| 686 | TRAF SIG POLE ASM (STL) STR (TY B) (9.1 M) | EA. | 2 |
| 686 | TRAF SIG POL ASM (STL) STR (TYB) (9.1M) LUM | EA. | 2 |
| 688 | PEDESTRIAN DETECTOR (PUSH BUTTON) | EA. | 4 |
| 688 | VEHICLE DETECTOR (14 AWG) (SAWCUT LOOPS) | M | 235 |
| 6008 | SALVAGE TRAFFIC SIGNALS | EA. | 1 |
| 6438 | VIVDS PROCESSOR SYSTEM ✳✳ | EA. | 1 |
| 6438 | VIVDS CAMERA ASSEMBLY ✳✳ | EA. | 4 |
| 6438 | VIVDS SET-UP SYSTEM ✳✳ | EA. | 0 ◆ |
| 6438 | VIVDS COMMUNICATION CABLE (COAXIAL) | M | 245 |
| 6438 | VIVDS TEMPORARY | EA. | 1 |
| | | | |
| | | | |

| MATERIALS TO BE FURNISHED AND INSTALLED BY THE STATE | | |
|---|---|---|
| DESCRIPTION | UNIT | QUANTITY |
| R10-4b PUSH BUTTON SIGN (FURNISH ONLY) | EA. | 4 |
| | | |
| | | |
| | | |
| | | |

**NOTE:**
ALL SIGNAL POLE FOUNDATIONS SHALL BE INSTALLED ACCORDING TO TS-FD STANDARD SHEET.

INSTALLATION OF SIGNS TO BE CONSIDERED SUBSIDIARY TO BID ITEM 680.

✳-FOR CONTRACTOR'S INFORMATION ONLY (SHALL BE CONSIDERED SUBSIDIARY TO BID ITEM 680).

✳✳-FOR CONTRACTOR'S INFORMATION ONLY

◆ CHANGE ORDER NO. 3

SHEET 3 OF 3

# TRAFFIC SIGNAL INTERSECTION LAYOUT

## LOOP 1604 AT U.S. 90 NORTH FRONTAGE RD.

STATE OF TEXAS
ARNULFO RAMIREZ
56890
REGISTERED PROFESSIONAL ENGINEER

Arnulfo Ramirez, P.E.

6-25-01
Date

©2000 Texas Department of Transportation

| FED. RD. DIV. NO. | FEDERAL AID PROJECT NO. | | SHEET NO. |
|---|---|---|---|
| 6 | NH 2000 (704), Etc. | | 580A |
| STATE | DIST. | COUNTY | |
| TEXAS | SAT | BEXAR | |
| CONT. | SECT. | JOB | HIGHWAY NO. |
| 2452 | 01 | 036, Etc. | LOOP 1604 |

Plotted on: 6 Feb '03

Design Filename: "...\52\20\11\design\civil\plansheets\traffic\signal\loop1604shden2.dgn

ANDERSON LOOP
55 MPH

LESLIE ROAD

SHAENFIELD ROAD
30 MPH

13+340 13+360 13+440 13+500 13+520 13+600 13+620

220M TO STOPLINE

25M 30M 70M 70M 30M 25M

EXIST PVMNT MRKNGS (TO BE REMOVED)

666-5013(TYP.)
666-5017(TYP.)
666-5024
666-5012(TYP.)
666-5003
677-5001
677-5006
666-5001

SPACING PER DETAILS ON SHEET NO. 825. (TYP.)

WHEELCHAIR RAMP (TY 2)

CONC CURB (TY A) EST @ 20M

CONC CURB (TY A) EST @ 16M

TO BE CLOSED BY OTHERS PRIOR TO SIGNAL TURN ON

SEE DETAIL "A" FOR PAVEMENT MARKING

RIGHT TURN LANE BY OTHERS

SEE NOTES, SHEET 4 OF 5

1.8X1.8 (TYP)

1.8X12

1.8X6

DETAIL "A"

ONLY

SCALE: 1:500

## SIGNAL PLAN LEGEND

- NO 3½ GROUND BOX (PROPOSED)(TY A)
- NO 7 GROUND BOX (PROPOSED)(TY D)
- STEEL STRAIN POLE & FOUNDATION.
- PEDESTAL POLE AND 600mm FOUNDATION
- CONTROLLER (PROPOSED)
- POWER SERVICE ON TIMBER POLE (PROPOSED)
- CONDUIT (PROPOSED)
- 621 LOOP DETECTOR W/ IDENTIFIER SAWCUT (PROPOSED)
- SIGNAL HEAD ON SPAN WIRE (PROPOSED)
- SIGN SXX
- PED SIGNAL AND PUSHBUTTON (PROPOSED)
- EXISTING PVMT MARKINGS
- ONLY PVMT MARKINGS (WHITE ARROW AND WORD)
- GUY WIRE (PROPOSED)
- AERIAL SPAN
- SPREAD SPECTRUM RADIO ANTENNA
- SIGN
- (A) POLE OR EQUIPMENT IDENTIFIER
- (7) CABLE/CONDUIT RUN
- (PB1) PUSHBUTTON ID
- S5 SIGN IDENTIFIER
- PEDSTRIAN RAMP (PROP)
- SIDEWALK (PROP)

| LOOP DET. | SAWCUT |
|---|---|
| PHASE 1 | 61M |
| PHASE 2 | 116M |
| PHASE 5 | 61M |
| PHASE 6 | 128M |
| PHASE 8 | 177M |

New Sheet
CHANGE ORDER #59

STATE OF TEXAS
GILMER D. GASTON
80472
LICENSED
PROFESSIONAL ENGINEER

GILMER D. GASTON P.E. — 05/15/03 DATE

©2000 Texas Department of Transportation

# LOOP 1604
TRAFFIC SIGNAL LAYOUT
LOOP 1604 AT SHAENFIELD ROAD
SHEET 1 OF 5

| DN: | | PROJECT NO. | | SHEET NO. |
|---|---|---|---|---|
| CK DN: | | NH 2000(704), etc. | | 580A |
| DW: | | STATE | DIST. | COUNTY |
| CK DW: | | TEXAS | SAT | BEXAR |
| | CONT. | SECT. | JOB | HIGHWAY NO. |
| | 2452 | 01 | 036, etc. | LP 1604 |

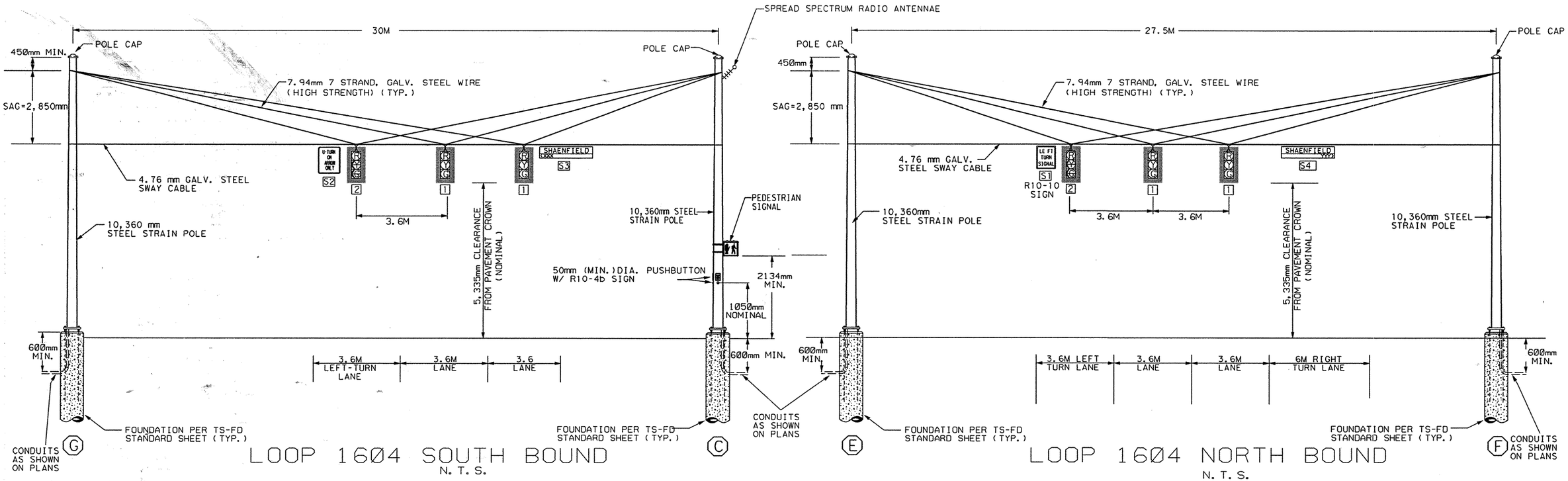


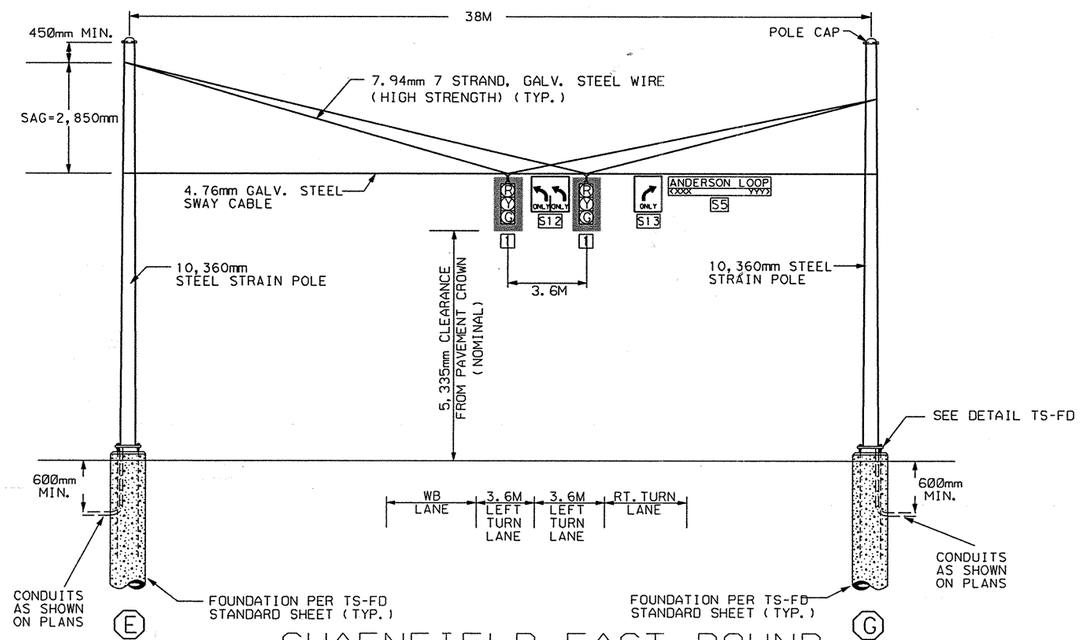


CHANGE ORDER # 59
-NEW SHEET

555 EAST RAMSEY SAN ANTONIO TEXAS 78216
PHONE (210)375-9000
FAX (210)375-9010
PAPE-DAWSON ENGINEERS
CIVIL & ENVIRONMENTAL
STATE OF TEXAS
GILMER D. GASTON
80472
LICENSED
PROFESSIONAL ENGINEER
GILMER D. GASTON P.E.
05/15/03
DATE

©2000 Texas Department of Transportation

# LOOP 1604 AT SHAENFIELD
STRAIN POLE ELEVATION VIEWS
SHEET 2 OF 5

| DN: | | PROJECT NO. | | SHEET NO. |
|---|---|---|---|---|
| CK DN: | | NH 2000(704), etc. | | 580B |
| DW: | | STATE | DIST. | COUNTY |
| | | TEXAS | SAT | BEXAR |
| CK DW: | CONT. | SECT. | JOB | HIGHWAY NO. |
| | 2452 | 01 | 036, etc. | LP 1604 |

Plotted on: 05/15/03
Design Filename: p:\52\20\11\design\civil\plansheets\traffic\signal\SP-80ELAV.dgn

Plotted on: 07/28/2003

## ELECTRICAL SCHEDULE

| ITEM | | | RUN/LENGTH (M) | | | | | | | | | | | | | | | | | | AERIAL SPANS | | | POLE | | | |
|---|---|---|---|---|---|---|---|---|---|---|---|---|---|---|---|---|---|---|---|---|---|---|---|---|---|---|---|
| | | | 1 | 2 | 3 | 4 | 5 | 6 | 7 | 8 | 9 | 10 | 11 | 12 | 13 | 14 | 15 | 16 | 17 | 18 | 19 | 20 | 21 | C | E | F | J |
| | | | 5 | 8 | 3 | 24 | 5 | 9 | 82 | 30 | 25 | 11 | 3 | 31 | | 74 | 30 | 25 | 2 | 9 | 25 | 36 | 32 | 6 | 6 | 6 | 6 |
| | | | NUMBER AND TYPE OF WIRE | | | | | | | | | | | | | | | | | | | | | | | | |
| POWER | 1/C #6 AWG XHHW | | 2 | | | | | | | | | | | | | | | | | | | | | | | | |
| | 1/C #6 AWG (BARE) | | 1 | | | | | | | | | | | | | | | | | | | | | | | | |
| | | POLE/PHASE | | | | | | | | | | | | | | | | | | | | | | | | | |
| SIGNAL CABLES | 7/C #12 AWG (SIG.) | C/PHASE 6 | | 1 | 1 | | | | | | | | | | | | | | | | | | 1 | | | | |
| | | E/PHASE 2 | | 1 | 1 | | | | | | | | | | | | | | | | 1 | 1 | 1 | | | | |
| | | G/PHASE 8 | | 1 | 1 | | | | | | | | | | | | | | | | | 1 | 1 | | | | |
| | 9/C #12 AWG (PED.) | D/PED 6 | | 1 | | 1 | | 1 | | | | | | | | | | | | | | | | | | | |
| | | C/PED 6 | | 1 | 1 | | | | | | | | | | | | | | | | | | | 1 | | | |
| BOND WIRE | 1/C #6 AWG (BARE) | | | 2 | 1 | 1 | 1 | 1 | | | | | 1 | 1 | NOT USED | | | | 1 | 1 | | | | 1 | 1 | 1 | 1 |
| LOOP DETECTOR | 2/C #14 AWG SHIELDED LOOP | PHASE 1 | | 2 | 2 | | | | | | | 2 | | | | | | | | | | 2 | 2 | | 2 | | |
| | | PHASE 2 | | 8 | 8 | | | | | | | | 8 | 8 | | 6 | 4 | 2 | | | 8 | 8 | 8 | 6 | | | |
| | | PHASE 5 | | 2 | 2 | | | | | | | | | | | | | | | | | | 2 | 2 | | | 2 |
| | | PHASE 6 | | 8 | | 8 | 2 | | 6 | 4 | 2 | | | | | | | | | | | | | | | | |
| | | PHASE 8 | | 6 | 1 | | | | | | | | | | | | | | 1 | | | | 1 | | | | |
| COMM. | SPREAD SPECTRUM COAXIAL CABLE | | | 1 | 1 | | | | | | | | | | | | | | | | | | | 1 | | | |
| CONDUIT | 38mm PVC | | 2 | | | | | | | | | | | | | | | | | | | | | | | | |
| | 50mm PVC | | | | | | 1 | 1 | 1 | 1 | 1 | 1 | 1 | 1 | | 1 | 1 | 1 | | 1 | | | | | | | |
| | 75mm PVC | | | 1 | 1 | 1 | | | | | | | | | | | | | 1 | | | | | | | | |
| | 100mm PVC | | | 1 | | | | | | | | | | | | | | | | | | | | | | | |

RUN 1 SHALL HAVE A MINIMUM COVER DEPTH OF 920mm.
AN EXTRA 50mm CONDUIT SHALL BE STUBBED OUT 0.6M FROM EACH FOUNDATION, INCL. CONTROLLER AND EACH 600-A & 900-B DRILL SHAFT.

## PROPOSED POLE & EQUIPMENT INFORMATION

| ID NO. | DESCRIPTION/ATTACHMENTS | STATION | OFFSET | FND. ELEV | FND. LENGTH & (TYPE) |
|---|---|---|---|---|---|
| A | PROP. ELECTRICAL SERVICE ON TIMBER POLE | 13+509.657 | 38.069 RT | N/A | N/A |
| B | PROP. CITY OF SAN ANTONIO, MODEL 332 CONTROLLER CABINET WITH MODEL 170 CONTROLLER ON CITY STANDARD 332 FOUNDATION (2.4M X 1.5M) | 13+506.478 | 36.693 RT | 276.224 +/- | CITY STD |
| C | INSTALL SP-130 10,360mm STEEL STRAIN POLE WITH ONE SYMBOLIC LED PED SIGNAL HEADS, ONE PUSHBUTTON, ONE R10-4BR SIGN, AND ONE SREAD SPECTRUM ANTENNAE | 13+501.159 | 28.787 RT | 275.27 +/- | 4.6M (900-B) |
| D | INSTALL 3.4M 114mm OD STEEL PEDESTAL POLE ASSEMBLY (ITEM 8254) WITH ONE SYMBOLIC LED PED SIGNAL HEAD, ONE PUSHBUTTON, AND ONE R10-4BL SIGN | 13+468.891 | 28.919 RT | 274.91 +/- | 1.7M (600-A) |
| E | INSTALL SP-130 10,360mm STEEL STRAIN POLE | 13+464.092 | 1.081 LT | 275.00 +/- | 4.6M (900-B) |
| F | INSTALL SP-130 10,360mm STEEL STRAIN POLE | 13+464.092 | 27.712 LT | 274.15 +/- | 4.6M (900-B) |
| G | INSTALL SP-130 10,360mm STEEL STRAIN POLE | 13+501.758 | 1.155 LT | 274.75 +/- | 4.6M (900-B) |

## ACTUATED SETTINGS

| PHASE | MIN. GREEN | VEH EXT | RECALL | MAX GREEN | CLEARANCE | | WALK | FDW= PCT-Y-AR |
|---|---|---|---|---|---|---|---|---|
| | | | | | YELLOW | ALL RED | | |
| 1 | 10 | 0.5 | OFF | 25 | 5.0 | 3.4 | N/A | N/A |
| 2 | 15 | 2.0 | ON | 90 | 5.0 | 1.7 | N/A | N/A |
| 5 | 10 | 0.5 | OFF | 25 | 5.0 | 3.4 | N/A | N/A |
| 6 | 15 | 2.0 | ON | 90 | 5.0 | 1.7 | 7 | 21 |
| 8 | 10 | 2.0 | OFF | 35 | 3.2 | 4.4 | 7 | N/A |

New Sheet
CHANGE ORDER #59

## PROPOSED TRAFFIC SIGNS

| SIGN | DESC. | DESIGNATION |
|---|---|---|
| LEFT TURN SIGNAL | R10-10L (600mm x 750mm) ALUM. | S1 |
| U-TURN ON ARROW ONLY | R10-5 SPL (750mm x 900mm) ALUM. SEE DETAIL 5 OF 5 | S2 |
| ONLY | R3-8 SPL (750mm x 900mm) ALUM. SEE DETAIL 5 OF 5 | S7 TYPE A MOUNT |
| PUSH BUTTON FOR | R10-4BL (230mm x 300mm) ALUM. | PB1 |
| PUSH BUTTON FOR | R10-4BR (230mm x 300mm) ALUM. | PB2 |
| | W3-3 (1200mm x 1200mm) PLYWOOD | S14 INSTALL 220M FROM STOPLINE FOR BOTH DIRECTIONS ON LOOP 1604 TYPE F MOUNT |
| | R9-3A (450mm x 450mm) ALUM. | S9 TYPE A MOUNT |
| RIGHT LANE MUST TURN RIGHT | R3-7R (750mm x 750mm) PLYWOOD | S10 TYPE F MOUNT |
| ONLY ONLY ONLY | R3-8 L(SPL) (1200mm x 750mm) (SEE SHT 725 FOR DTLS) PLYWOOD | S11 TYPE F MOUNT |
| ONLY ONLY | R3-8(SPL) (750mm x 900mm) ALUM. | S12 |
| ONLY | R3-5R (750mm x 900mm) ALUM. | S13 |
| SHAENFIELD <XXX | ALUM. | S3 |
| SHAENFIELD YYY> | ALUM. | S4 |
| ANDERSON LOOP <XXX YYY> | ALUM. | S5 |

ALL SIGNS FURNISHED BY CONTRACTOR SHALL BE FABRICATED WITH TYPE C HIGH INTENSITY REFLECTIVE SHEETING FOR ALL COLORS EXCEPT BLACK. BLACK SHALL BE VINYL NON-REFLECTIVE SHEETING.

## PROPOSED TRAFFIC SIGNAL HEADS

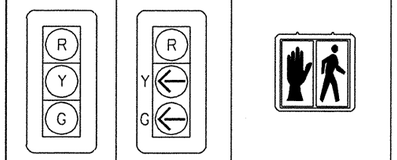


1 300mm SIGNAL FACES

2 300mm SIGNAL FACES

W1 - W2

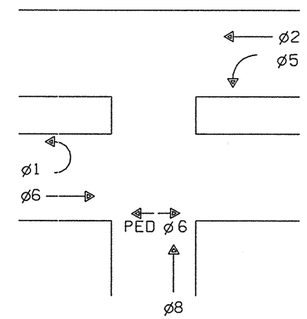


FR: ø1, ø5, ø8
FY: ø2, ø6

## SIGNAL PHASING DIAGRAM

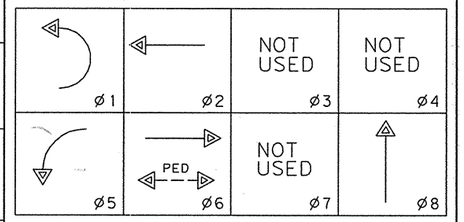


555 EAST RAMSEY SAN ANTONIO TEXAS 78216
PHONE (210)375-9000
FAX (210)375-9010
PAPE-DAWSON ENGINEERS
CIVIL & ENVIRONMENTAL
STATE OF TEXAS
GILMER D. GASTON
80472
LICENSED PROFESSIONAL ENGINEER
GILMER D. GASTON, P.E.
2/26/03
DATE

©2000 Texas Department of Transportation

# LOOP 1604

TRAFFIC SIGNAL LAYOUT
LOOP 1604 AT SHAENFIELD ROAD
SHEET 3 OF 5

| DN: | | PROJECT NO. | | SHEET NO. |
|---|---|---|---|---|
| CK DN: | | NH 2000(704),etc. | | ~~154~~ 580C |
| DW: | | STATE | DIST. | COUNTY |
| CK DW: | | TEXAS | SAT | BEXAR |
| | CONT. | SECT. | JOB | HIGHWAY NO. |
| | 2452 | 01 | 036,etc. | LP 1604 |

Design Filename: p:\52\20\11\design\civil\plansheets\traffic\signal\loop1604shaen2.dgn

Plotted on: 5/7/03

| MATERIALS TO BE FURNISHED AND INSTALLED BY THE CONTRACTOR | | | |
|---|---|---|---|
| ITEM NO. | DESCRIPTION | UNIT | APPROXIMATE QUANTITY |
| 529-5026 | CONC CURB (TY A) | M | 36 |
| 531- | WHEELCHAIR RAMP (TY 2) | EA | 2 |
| 618-5016 | CONDUIT PVC (SCH. 80)(38 mm) | M | 10 |
| 618-5018 | CONDUIT PVC (SCH. 80)(50 mm) | M | 336 |
| 618-5020 | CONDUIT PVC (SCH. 80)(75 mm) | M | 37 |
| 618-5021 | CONDUIT PVC (SCH. 80)(100 mm) | M | 8 |
| 620-5003 | ELECTRICAL CONDUCTOR(NO. 8) BARE | M | 101 |
| 620-5010 | ELECTRICAL CONDUCTOR(NO. 6) INSULATED | M | 10 |
| 624-5001 | GROUND BOX(TYPE A)(122311) W/APRON | EA | 10 |
| 624-5004 | GROUND BOX(TYPE D)(162922) W/APRON | EA | 4 |
| 625-5003 | ZINC - COAT STL WIRE STRAND (4.76mm) ✳ | M | 95 |
| 625-5004 | ZINC - COAT STL WIRE STRAND (7.94mm) ✳ | M | 248 |
| 628-5192 | ELEC SERV TYT(120/240)000(NS)GS(N)TP(O) | EA | 1 |
| 644-5001 | SMALL RDSD SGN ASSM (TY A) | EA | 9 |
| 644-5011 | SMALL RDSD SGN ASSM (TY F) | EA | 6 |
| 656-5006 | FND FOR TRAF SIG(TY B)(900mm DRIL SHFT) | M | 18.4 |
| 656-5003 | FND FOR TRAF SIG(600 mm DRIL SHFT) | M | 1.7 |
| 656-5027 | TRAF SIG CNTRL FND (CITY TYPE) | M3 | 1.7 |
| 666-5001 | REFL PAV MRK TY I (W)(SLD)(100M) | M | 53 |
| 666-5003 | REFL PAV MRK TY I (W)(DOT)(100MM) | M | 46 |
| 666-5024 | REFL PAV MRK TY I (Y)(SLD)(100MM) | M | 104 |
| 666-5012 | REFL PAV MRK TY I (W)(SLD)(600MM) | M | 80 |
| 666-5013 | REFL PAV MRK TY I (W)(ARROW) | EA | 10 |
| 666-5017 | REFL PAV MRK TY I (W)(WORD) | EA | 10 |
| 677-5001 | ELIM EXT PAV MRK & MRKR (100MM) | M | 32 |
| 677-5006 | ELIM EXT PAV MRK & MRKR (600MM) | M | 35 |
| 680-5002 | INSTALLATION OF HWY. TRAF. SIGNAL (SYS) | EA | 1 |
| 682-5002 | VEHICLE SIGNAL SECTION(300 mm) | EA | 24 |
| 682-5005 | PED SIG SEC (2 INDICATIONS IN 1 SEC) | EA | 2 |
| 682-5009 | BACKPLATE (3 SEC) 300mm | EA | 8 |
| 684-5047 | TRAF SIG CBL (TY A)(7 CONDR.)(14 AWG) | M | 259 |
| 684-5048 | TRAF SIG CBL (TY A)(9 CONDR.)(14 AWG) | M | 63 |
| 684-5044 | TRAF SIG CBL (TY C)(2 CONDR.)(14 AWG) | M | 3,324 |
| 686-5004 | TRAF SIG POLE ASM(STL) STR(TY D)(10.4M) | EA | 4 |
| 688-5001 | PEDESTRIAN DETECTOR(PUSH BUTTON) | EA | 2 |
| 688-5011 | VEHICLE DETECTOR(14 AWG)(SAWCUT LOOPS) | M | 543 |
| ~~6557-5001~~ | ~~SPREAD SPECTRUM RADIO~~ | ~~EA~~ | ~~2~~ |
| ~~6557-5003~~ | ~~ANTENNA (OMNI-DIRECTIONAL)~~ | ~~EA~~ | ~~2~~ |
| ~~6557-5004~~ | ~~COAXIAL CABLE~~ | ~~M~~ | ~~50~~ |
| 6023-5001 | PEDESTAL POLE ASSEM | EA | 1 |
| * | BRACKET ASSY (SYMBOLIC PED HEAD) | EA | 2 |

| MATERIALS TO BE FURNISHED BY THE CITY OF SAN ANTONIO AND INSTALLED BY THE CONTRACTOR UNDER ITEM 680 | | |
|---|---|---|
| DESCRIPTION | UNIT | QUANTITY |
| CONTROLLER WITH CABINET | EA | 1 |
| METRO STREET NAME SIGNS | EA | 3 |
| R10-4B SIGNS | EA | 2 |
| | | |
| | | |

NOTES:

1. ALL SIGNAL POLE FOUNDATIONS SHALL BE INSTALLED ACCORDING TO TS-FD STANDARD SHEET.
2. INSTALLATION OF SIGNS TO BE CONSIDERED SUBSIDIARY TO BID ITEM 680.
3. THE ENGINEER SHALL CONTACT THE CITY OF SAN ANTONIO AT 207-7765 96 HOURS PRIOR TO CONSTRUCTION, PRIOR TO PICKING UP COSA FURNISHED MATERIALS AND PRIOR TO CONNECTING FIELD WIRING TO CONTROLLER.
4. GROUND BOX IN CONTROLLER CABINET FOUNDATION SHALL BE FURNISHED AS INCIDENTAL AND SUBSIDIARY TO FURNISHING ITEM 0656-5027. THIS GROUND BOX SHALL NOT BE MEASURED OR PAID FOR SEPARATELY.
5. REMOVE EXISTING PAVEMENT MARKINGS AS NOTED ON THIS PLAN AND EXISTING TRAFFIC CONTROL PRIOR TO SIGNAL TURN ON.
6. CONTRACTOR SHALL EXPOSE UNDERGROUND UTILITIES MARKED WITHIN TWO FEET OF PROPOSED POLE LOCATIONS PRIOR TO DIGGING.
7. CONTRACTOR SHALL ACQUIRE METER ADDRESS FROM CPS.
8. ADDITIONAL QUANTITIES FOR ~~6557-5001, 6557-5003, AND 6557-5004~~ ARE PROVIDED FOR ~~INTERCONNECTION OF SHAENFIELD TRAFFIC SIGNAL WITH NEW GUILBEAU TRAFFIC SIGNAL. CONTRACTOR SHALL INSTALL RADIO ANTENNA AND CABLE AT NEW GUILBEAU TRAFFIC SIGNAL TO PROVIDE FULLY FUNCTIONING INTERCONNECTED SIGNAL.~~ VOID
9. ALL PAVEMENT MARKINGS PLACED SHOULD HAVE TY II MARKINGS AT EQUAL QUANTITIES AND SHALL BE A SEPARATE PAY ITEM.

SCALE: 1:500

STATE OF TEXAS
GILMER D. GASTON
80472
LICENSED
PROFESSIONAL ENGINEER

GILMER D. GASTON P.E. 05/16/03 DATE

✳ -FOR CONTRACTOR'S INFORMATION ONLY. SUBSIDIARY TO ITEM 680.5002

New Sheet
CHANGE ORDER # 54

©2000 Texas Department of Transportation

LOOP 1604
TRAFFIC SIGNAL LAYOUT
LOOP 1604 AT SHAENFIELD ROAD
SHEET 4 OF 5

| DN: | | PROJECT NO. | | SHEET NO. |
|---|---|---|---|---|
| CK DN: | | NH 2000(704), etc. | | 580D |
| DW: | | STATE | DIST. | COUNTY |
| | | TEXAS | SAT | BEXAR |
| CK DW: | CONT. | SECT. | JOB | HIGHWAY NO. |
| | 2452 | 01 | 036, etc. | LP 1604 |

Design Filename: ~\52\2011\design\civil\plansheets\traffic\signal\loop1604shaen2.dgn
LEVELS DISPLAYED 1 2 3 4 5 6 7 8 9 10 11 12 13 14 15 16 17 18 19 20 21 22 23 24 25 26 27 28 29 30 31 32 33 34 35 36 37 38 39 40 41 42 43 44 45 46 47 48 49 50 51 52 53 54 55 56 57 58 59 60 61 62 ACC: FILE: .DGN

Plotted on:: 07/27/2003

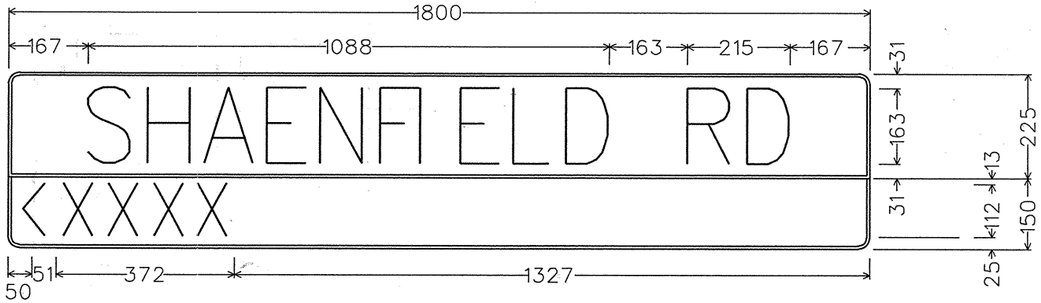


COSA OH Street Name; 25mm Radius, 6mm Border, White on Blue;

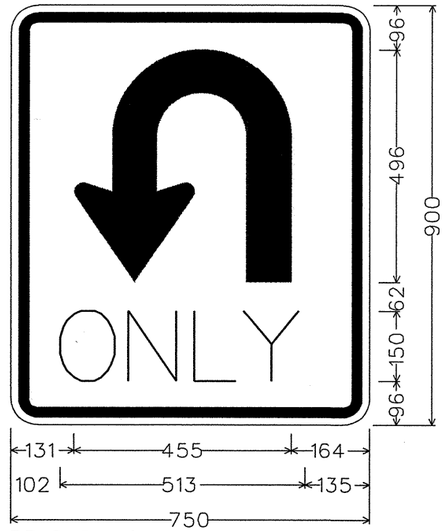


R3-8 Special
56mm Radius, 22mm Border, 16mm Indent, Black on White;

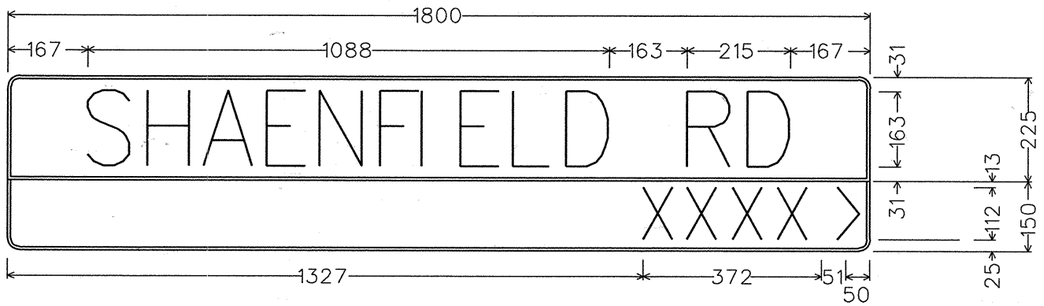


COSA OH Street Name; 25mm Radius, 6mm Border, White on Blue;

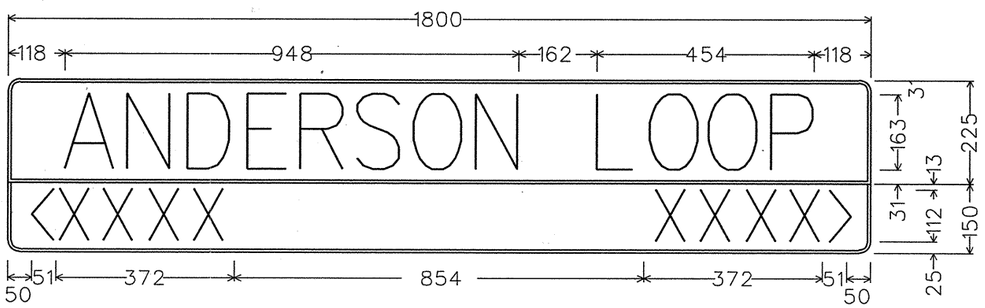


COSA OH STREET NAME 2; 25mm Radius, 6mm Border, White on Blue;

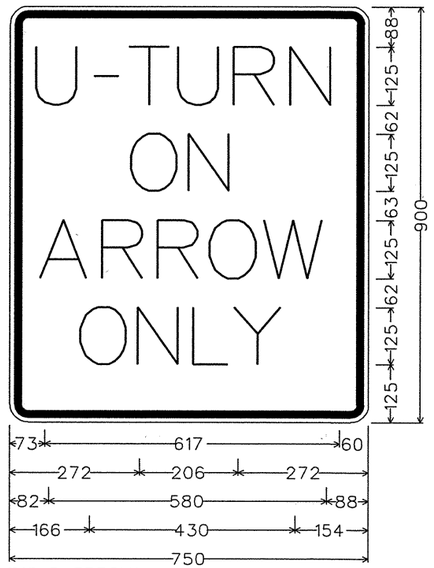


R10-5 SPECIAL
38mm Radius, 16mm Border, 9mm Indent, Black on White;

555 EAST RAMSEY SAN ANTONIO TEXAS 78216
PHONE (210)375-9000
FAX (210)375-9010
PAPE-DAWSON ENGINEERS
CIVIL & ENVIRONMENTAL

STATE OF TEXAS
GILMER D. GASTON
80472
LICENSED
PROFESSIONAL ENGINEER

GILMER D. GASTON, P.E. 2/28/03 DATE

©2000 Texas Department of Transportation

LOOP 1604
TRAFFIC SIGNAL LAYOUT
LOOP 1604 AT SHAENFIELD ROAD
SHEET 5 OF 5

580E

| | | | | |
|---|---|---|---|---|
| DN: | | PROJECT NO. | | SHEET NO. |
| CK DN: | | NH 2000(704),etc. | | ~~154~~ |
| DW: | | STATE | DIST. | COUNTY |
| CK DW: | | TEXAS | SAT | BEXAR |
| | CONT. | SECT. | JOB | HIGHWAY NO. |
| | 2452 | 01 | 036,etc. | LP 1604 |

New Sheet
CHANGE ORDER # 59

Design Filename:: p:\52\20\11\design\civil\plansheets\traffic\signal\loop1604shaen2.dgn

# TRAFFIC SIGNAL NOTES

UTILITY NOTES:

1. LOCATION OF UTILITIES SHOWN ARE APPROXIMATE. IT IS THE CONTRACTORS RESPONSIBILITY TO LOCATE ALL UTILITIES (PUBLIC AND PRIVATE) PRIOR TO COMMENCING WORK. THE CONTRACTOR IS FULLY RESPONSIBLE FOR ANY DAMAGES CAUSED BY HIS FAILURE TO LOCATE, PRESERVE, AND PROTECT THESE UTILITIES, WHETHER UNDERGROUND, ABOVE GROUND, OR OVERHEAD. THESE FACILITIES INCLUDE, BUT ARE NOT LIMITED TO, SOUTHWESTERN BELL TELEPHONE, CPS ELECTRIC & GAS, CABLE TV, SAWS WATER AND SEWER, AND EXISTING TRAFFIC SIGNAL FACILITIES. CONTRACTOR SHALL NOTIFY UTILITIES 48 HOURS PRIOR TO ANY EXCAVATION, BORING, TRENCHING, OR PUSHING PIPE IN AREA. THE FOLLOWING CONTACT NUMBERS MAY NOT BE INCLUSIVE, BUT ARE PROVIDED FOR THE CONTRACTOR'S INFORMATION.

TEXAS STATE-WIDE ONE CALL 800-545-6005
CPS ELECTRIC AND GAS: 800-545-6005 OR 210-978-3500
SAWS: 210-704-7109 OR 210-227-6143
TIME WARNER CABLE TV: 800-545-6005 OR 210-352-4672
SOUTHWESTERN BELL TEL: 800-545-6005
CITY OF SAN ANTONIO TRAFFIC SIGNAL: 210-207-7765
AT&T 800-252-1133
SPRINT 800-545-6005
BEXAR METRO 210-354-6546
CITY OF SAN ANTONIO TRAFFIC 210-207-7765
TXDOT TRAFFIC SIGNALS 210-615-5979
ENTEX GAS 800-545-6005
UNION PACIFIC RAILROAD (FIBER OPTIC) 800-336-9193
STATE-WIDE ONE CALL PROVIDERS
TESS 800-344-8377
TOCS 800-245-4545

THE EXISTENCE AND LOCATION OF UNDERGROUND UTILITIES INDICATED ON THE PLANS ARE TAKEN FROM THE BEST RECORDS AVAILABLE, BUT ARE NOT GUARANTEED ACCURATE. CONTRACTOR IS RESPONSIBLE FOR DETERMINING THE EXISTENCE AND LOCATION OF UNDERGROUND UTILITIES BEFORE COMMENCING WORK.

DUE TO FEDERAL REGULATION, TITLE-49, PART 192.181, CITY PUBLIC SERVICE (CPS) MUST MAINTAIN ACCESS TO GAS VALVES AT ALL TIMES. THE CONTRACTOR SHALL PROTECT AND WORK AROUND ANY GAS VALVES THAT ARE IN THE PROJECT AREA.

OVERHEAD UTILITIES MAY EXIST ON THE PROPERTY. WE HAVE NOT ATTEMPTED TO MARK THOSE SINCE THEY ARE CLEARLY VISIBLE. BUT YOU SHOULD LOCATE THEM BEFORE BEGINNING ANY CONSTRUCTION. TEXAS LAW, SECTION 752, HEALTH AND SAFETY CODE FORBIDS ALL ACTIVITIES IN WHICH PERSONS OR THINGS MAY COME WITHIN SIX (6) FEET OF LIVE OVERHEAD HIGH VOLTAGE LINES. CONTRACTORS AND OWNERS ARE LEGALLY RESPONSIBLE FOR SAFETY OF CONSTRUCTION WORKERS UNDER THIS LAW. THIS LAW CARRIES BOTH CRIMINAL AND CIVIL LIABILITY, TO ARRANGE FOR LINES TO BE TURNED OFF OR MOVED, CONTACT CPS AT 978-3500.

TRAFFIC SIGNAL GENERAL NOTES:

ALL ELECTRICAL WORK SHALL COMPLY WITH THE NATIONAL ELECTRIC CODE AND NATIONAL ELECTRICAL SAFETY CODE.

CONTRACTOR SHALL FURNISH AND MAINTAIN ALL TRAFFIC CONTROL DEVICES, LIGHTING, OR WARNING DEVICES REQUIRED TO COMPLETE THE WORK. ALL CONSTRUCTION SIGNS AND TRAFFIC CONTROL DEVICES SHALL CONFORM TO THE TEXAS MANUAL ON UNIFORM TRAFFIC CONTROL DEVICES.

CONTRACTOR SHALL BE RESPONSIBLE FOR ACQUIRING ALL PERMITS, TESTS, APPROVALS AND ACCEPTANCES REQUIRED TO COMPLETE CONSTRUCTION OF THIS PROJECT.

ALL SIGNAL POLE FOUNDATIONS SHALL BE INSTALLED ACCORDING TO TS-FD STANDARD SHEET.

INSTALLATION OF ALL TRAFFIC SIGNAL SIGNS TO BE CONSIDERED SUBSIDIARY TO BID ITEM 680.

GROUND BOX IN CONTROLLER CABINET FOUNDATION SHALL BE FURNISHED AS INCIDENTAL AND SUBSIDIARY TO FURNISHING ITEM 0656. THIS GROUND BOX SHALL NOT BE MEASURED OR PAID FOR SEPARATELY.

CONTRACTOR SHALL EXPOSE UNDERGROUND UTILITIES MARKED WITHIN TWO FEET OF PROPOSED FOUNDATIONS AND GROUND BOXES PRIOR TO DIGGING.

CONTRACTOR SHALL ACQUIRE METER ADDRESS FROM CPS.

MATERIALS FURNISHED BY THE CONTRACTOR SHALL BE NEW, UN-DEPRECIATED STOCK. ALL EQUIPMENT SHALL BE NEW, UNLESS NOTED OTHERWISE ON THE PLANS.

CONTRACTOR SHALL FURNISH AND INSTALL ALL PERMANENT SIGNS MOUNTED ON TRAFFIC SIGNAL EQUIPMENT. THE CONTRACTOR SHALL PROVIDE ALL NECESSARY HARDWARE FOR MOUNTING. THE COSTS OF FURNISHING AND INSTALLING THESE SIGNS SHALL BE SUBSIDIARY TO ITEM 680.

INSTALL GROUND MOUNT SIGNS, STOPLINES AND PAVEMENT MARKINGS AS SHOWN ON THE PLANS.

GROUND BOX COVERS SHALL BE POLYMER CONCRETE WITH "DANGER HIGH VOLTAGE - TRAFFIC SIGNAL" LEGIBLY IMPRINTED IN 1 INCH LETTERS (MINIMUM HEIGHT).

CONTRACTOR SHALL BE RESPONSIBLE FOR RESTORING TO ORIGINAL CONDITION, OR BETTER, ANY DAMAGE DONE TO EXISTING BUILDINGS, RETAINING WALLS, UTILITIES, FENCES, PAVEMENT, CURBS OR DRIVEWAYS (NO SEPARATE PAY ITEM). CONTRACTOR SHALL RESTORE THE CONSTRUCTION AREA TO ORIGINAL CONDITION, OR BETTER, PRIOR TO FINAL INSPECTION.

ANY CONFLICT BETWEEN ANY DEFINITION, MATERIAL SPECIFICATION, CONSTRUCTION SPECIFICATION, MEASUREMENT AND PAYMENT PROCEDURE, ETC., SHOWN IN THIS PLAN SET AND ANY TEXAS DEPARTMENT OF TRANSPORTATION OR CITY OF SAN ANTONIO STANDARD SPECIFICATION SHALL BE RESOLVED ONLY BY THE ENGINEER AND THE ENGINEER'S DECISION SHALL BE FINAL AND BINDING.

FINAL ADJUSTMENT OF TRAFFIC SIGNAL HEADS (VEHICLE AND PEDESTRIAN), AS REQUIRED BY THE ENGINEER, SHALL BE DONE BY THE CONTRACTOR AND SHALL BE SUBSIDIARY TO FURNISHING AND INSTALLING TRAFFIC SIGNAL HEADS OR SECTIONS.

ALL TRAFFIC SIGNAL SECTIONS SHALL BE MADE OF POLYCARBONATE RESIN AND SHALL BE BY THE SAME MANUFACTURER.

ALL VEHICLE AND PEDESTRIAN SIGNAL FACES SHALL BE COVERED SO THAT THE INDICATION(S) CANNOT BE SEEN FROM THE TIME OF INSTALLATION UNTIL PLACED IN OPERATION.

EXISTING TRAFFIC CONTROLS SHALL REMAIN IN OPERATION UNTIL NEW CONTROLS ARE READY. CONTRACTOR SHALL COORDINATE "TURN-ON" OF THE NEW TRAFFIC SIGNAL WITH THE ENGINEER.

WHEN NECESSARY TO TURN OFF AN EXISTING SIGNAL, CONTRACTOR SHALL PROVIDE AN OFF-DUTY UNIFORMED OFFICER TO CONTROL TRAFFIC UNTIL THE TRAFFIC SIGNAL IS BACK IN SATISFACTORY OPERATION.

ALL LED'S PROVIDED MUST BE PREQAULIFIED BY MOST CURRENT VERSION OF TxDOT'S QUALIFIED PRODUCT LIST.

PEDESTRIAN EQUIPMENT NOTES:

ALL PEDESTRIAN SIGNAL FACES SHALL BE SINGLE SECTION LED TYPE. DIE CAST POLYCARBONATE WILL BE AN ACCEPTABLE MATERIAL IN LIEU OF DIE CAST ALUMINUM. THE PEDESTRIAN SIGNAL SHALL DISPLAY THE SYMBOLIZED MESSAGE AS SHOWN ON THE PLANS.

THE PEDESTRIAN PUSHBUTTON SHALL BE RAISED OR FLUSH AND BE A MINIMUM OF 2 INCHES IN THE SMALLEST DIMENSION. THE FORCE TO ACTIVATE THE CONTROL SHALL BE NO GREATER THAN 5 LB/FT.

SPECIAL NOTES:

CONTRACTOR, AT CONTRACTORS EXPENSE, SHALL FIELD LOCATE AND STAKE THE LOCATION OF POLES, PULLBOXES, CABINETS, AND DETECTORS FOR APPROVAL BY THE ENGINEER PRIOR TO CONSTRUCTION. POLE AND PULL BOX LOCATIONS MAY BE MOVED BY THE ENGINEER PRIOR TO CONSTRUCTION TO ACCOMMODATE FIELD CONDITIONS.

ALL STEEL POLE ASSEMBLIES AND PEDESTAL POLES FURNISHED BY THE CONTRACTOR SHALL BE FROM THE SAME MANUFACTURER.

EACH POLE FOUNDATION SHALL HAVE ONE ADDITIONAL 2 INCH CONDUIT STUBBED OUT 2 FEET FROM THE FOUNDATION AND CAPPED. FURNISHING OF THIS CONDUIT SHALL BE SUBSIDIARY TO ITEM 656.

# SPECIAL NOTES TRAFFIC SIGNALS IN CITY OF SAN ANTONIO
## MILITARY DR. WEST
## POTRANCO RD.
## WISEMAN BLVD.

CITY FORCES SHALL CONNECT FIELD WIRING TO CONTROLLER.

CONTRACTOR SHALL CONTACT TRAFFIC OPERATIONS (207-7765) 48 HOURS PRIOR TO COMMENCING WORK.

PRIOR TO CONSTRUCTION, THE CITY SHALL APPROVE ALL LOCATIONS FOR POLES, CONTROLLER FOUNDATION AND ELECTRICAL SERVICE PEDESTAL. CONTRACTOR SHALL STAKE LOCATIONS BEFORE CONTACTING CITY FOR APPROVAL.

THREE (3) COPIES OF EQUIPMENT SUBMITTALS FOR ALL TRAFFIC SIGNAL COMPONENTS SHALL BE SENT TO THE TRAFFIC SIGNAL ENGINEER (733-4573). SUBMITTALS SHALL CONSIST OF THE APPROPRIATE COMBINATION OF CATALOG SHEETS, MATERIAL LISTS, MANUFACTURER'S BROCHURES, TECHNICAL BULLETINS, SPECIFICATIONS, DIAGRAMS, OR PRODUCT SAMPLES NECESSARY TO DESCRIBE A SYSTEM, PRODUCT, OR ITEM. SPECIFIC ITEM NUMBERS AND PRODUCT CODES WILL BE CLEARLY IDENTIFIED WHEN MULTIPLE PRODUCTS ARE LISTED ON THE SAME SHEET.

THE GROUND BOX IN THE CONTROLLER FOUNDATION SHALL BE SUBSIDIARY TO ITEM 656 "TRAF SIG CNTRL FND (CITY TYPE)."

EXISTING STREET NAME AND STOP SIGN SHALL BE SALVAGED AND RETURNED TO THE CITY TRAFFIC OPERATIONS CENTER. CONTRACTOR SHALL BE RESPONSIBLE FOR THE DISPOSAL OF ANY WASTE MATERIAL. ANY TRAFFIC SIGNAL EQUIPMENT SHALL BE SALVAGED TO THE CITY TRAFFIC OPERATIONS CENTER, OR AS DIRECTED BY THE TRAFFIC SIGNAL ENGINEER.

FOR EACH CABLE TERMINATING IN THE CONTROLER CABINET AN EXTRA 10 FEET LENGTH SHALL BE PROVIDED. ALL CABLES SHALL BE CONTINUOUS WITHOUT SPLICES FROM TERMINAL POINT TO TERMINAL POINT OR AS DIRECTED/APPROVED BY THE ENGINEER. ALL PROPOSED SIGNAL CABLE SHALL BE AWG #14 SOLID COPPER. THE NUMBER OF CONDUCTORS REQUIRED SHALL BE AS SHOWN ON THE PLANS.

FOR ALL PROPOSED MAST ARM POLE ASSEMBLIES, MOUNTING BRACKET ASSEMBLY OPTION "C" (ASTRO-BRACS) AS SHOWN ON THE STATE STANDARD SHEET(S) "SINGLE MAST ARM ASSEMBLIES (SMA)" SHALL BE SUPPLIED BY THE CONTRACTOR. MOUNTING BRACKET ASSEMBLIES (ASTRO-BRACS) SHALL BE SUBSIDIARY TO ITEM 682 "VEHICLES AND PEDESTRIAN SIGNAL HEADS".

CONTRACTOR SHALL SUPPLY ORNAMENTAL CAPS IN PLACE OF THE MAST ARM TENON ENDS.

THE ENGINEER SHALL CONTACT THE CITY OF SAN ANTONIO AT 207-7765 96 HOURS PRIOR TO CONSTRUCTION, PRIOR TO PICKING UP COSA FURNISHED MATERIALS AND PRIOR TO CONNECTING FIELD WIRING TO CONTROLLER.

## TRAFFIC SIGNAL NOTES

LOOP 1604 FRONTAGE RDS.
MILITARY DR. WEST (COSA)
POTRANCO (COSA)
WISEMAN (COSA)
MARBACH (TXDOT)

CHANGE ORDER NO. 79

-NEW SHEET

SHEET 1 OF 1

555 EAST RAMSEY SAN ANTONIO TEXAS 78216 PHONE (210)375-9000 FAX (210)375-9010
PAPE-DAWSON ENGINEERS CIVIL & ENVIRONMENTAL
STATE OF TEXAS K. STEPHEN BONNETTE 60928 LICENSED PROFESSIONAL ENGINEER
K. STEPHEN BONNETTE P.E. 03/12/2003 DATE

©2000 ® Texas Department of Transportation

| FED. RD. DIV. NO. | FEDERAL AID PROJECT NO. | | SHEET NO. |
|---|---|---|---|
| 6 | NH 2000(704), Etc. | | ~~570~~ 580F |
| STATE | DIST. | COUNTY | |
| TEXAS | SAT | BEXAR | |
| CONT. | SECT. | JOB | HIGHWAY NO. |
| 2452 | 01 | 036, Etc. | LOOP 1604 |

Plotted on: 03/12/2003
Design Filename: n:\52\20\11\design\civil\plansheets\traffic\signal\522011GENNOTES.dgn
LEVELS DISPLAYED 1 2 3 4 5 6 7 8 9 10 11 12 13 14 15 16 17 18 19 20 21 22 23 24 25 26 27 28 29 30 31 32 33 34 35 36 37 38 39 40 41 42 43 44 45 46 47 48 49 50 51 52 53 54 55 56 57 58 59 60 61 62 63 ACC: FILE: .DGN

**NOTES:**

THE ENGINEER SHALL CONTACT MR. GILBERT MEIER TXDOT SIGNAL SHOP) AT 615-5975 96 HOURS PRIOR TO CONSTRUCTION PHASE AND PRIOR TO CONNECTING FIELD WIRING TO CONTROLLER.

CONTRACTOR SHALL CONNECT FIELD WIRING TO TEMPORARY CONTROLLER.

ALL DIMENSIONS SHOWN ARE IN METERS UNLESS SPECIFIED OTHERWISE.

CONTRACTOR SHALL BE RESPONSIBLE FOR ALL SIGNAL HEAD ADJUSTMENTS DURING EACH PHASE OF CONSTRUCTION. TO ACCOMODATE SIGNAL HEAD ADJUSTMENTS, THE CONTRACTOR SHALL ENSURE THAT ADDITIONAL SIGNAL CABLE IS PROVIDED FOR ALL APPROACHES.

VIVDS CAMERA ASSEMBLY LOCATIONS SHALL BE AS DIRECTED BY THE ENGINEER.

**LEGEND**

- PROP. TEMPORARY SIGNAL POLES WITH SPAN
- PROP. SIGNAL FACE
- PROP. SIGNAL CONTROLLER (TEMPORARY)
- PROP. ELECTRICAL SERVICE
- PROP. VIVDS CAMERA ASSEMBLY
- EXIST. SIGNAL POLES AND SPAN TO BE REMOVED

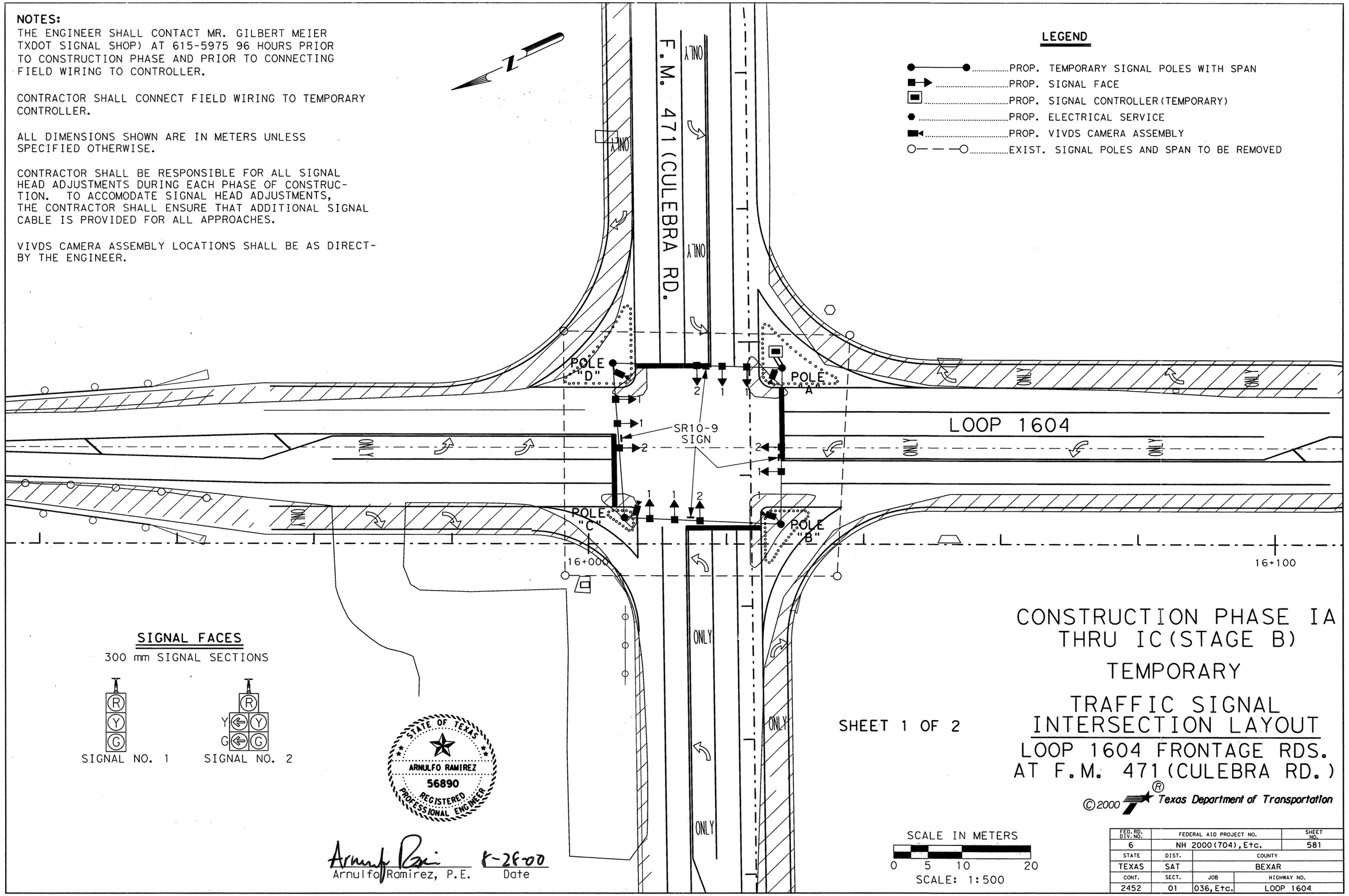


**SIGNAL FACES**

300 mm SIGNAL SECTIONS




SIGNAL NO. 1




SIGNAL NO. 2

STATE OF TEXAS
ARNULFO RAMIREZ
56890
REGISTERED PROFESSIONAL ENGINEER

Arnulfo Ramirez, P.E. 8-28-00 Date

SHEET 1 OF 2

# CONSTRUCTION PHASE IA THRU IC (STAGE B) TEMPORARY

# TRAFFIC SIGNAL INTERSECTION LAYOUT

## LOOP 1604 FRONTAGE RDS. AT F.M. 471 (CULEBRA RD.)

©2000 Texas Department of Transportation

SCALE IN METERS

0 5 10 20

SCALE: 1:500

| FED. RD. DIV. NO. | FEDERAL AID PROJECT NO. | | SHEET NO. |
|---|---|---|---|
| 6 | NH 2000(704), Etc. | | 581 |
| STATE | DIST. | COUNTY | |
| TEXAS | SAT | BEXAR | |
| CONT. | SECT. | JOB | HIGHWAY NO. |
| 2452 | 01 | 036, Etc. | LOOP 1604 |

**NOTES:**

THE ENGINEER SHALL CONTACT MR. GILBERT MEIER TXDOT SIGNAL SHOP) AT 615-5975 96 HOURS PRIOR TO CONSTRUCTION PHASE AND PRIOR TO CONNECTING FIELD WIRING TO CONTROLLER.

CONTRACTOR SHALL CONNECT FIELD WIRING TO TEMPORARY CONTROLLER.

ALL DIMENSIONS SHOWN ARE IN METERS UNLESS SPECIFIED OTHERWISE.

CONTRACTOR SHALL BE RESPONSIBLE FOR ALL SIGNAL HEAD ADJUSTMENTS DURING EACH PHASE OF CONSTRUCTION. TO ACCOMODATE SIGNAL HEAD ADJUSTMENTS, THE CONTRACTOR SHALL ENSURE THAT ADDITIONAL SIGNAL CABLE IS PROVIDED FOR ALL APPROACHES.

VIVDS CAMERA ASSEMBLY LOCATIONS SHALL BE AS APPROVED BY THE ENGINEER. EXTENSIONS FOR THE VIVDS CAMERAS, IF REQUIRED BY BY THE ENGINEER, SHALL BE CONSIDERED SUBSIDIARY TO ITEM 681.

ELECTRICAL SERVICE WITH GROUND BOX SHALL BE INSTALLED AS PERMANENT OR AS DIRECTED BY THE ENGINEER.

**LEGEND**

- PROP. TIMBER POLES WITH GUYS AND SPAN
- PROP. SIGNAL FACE
- PROP. SIGNAL CONTROLLER (TEMPORARY)
- PROP. ELECTRICAL SERVICE
- PROP. VIVDS CAMERA ASSEMBLY
- PROP. GROUND BOX (TYPE "A")
- EXIST. SIGNAL POLES AND SPAN TO BE REMOVED

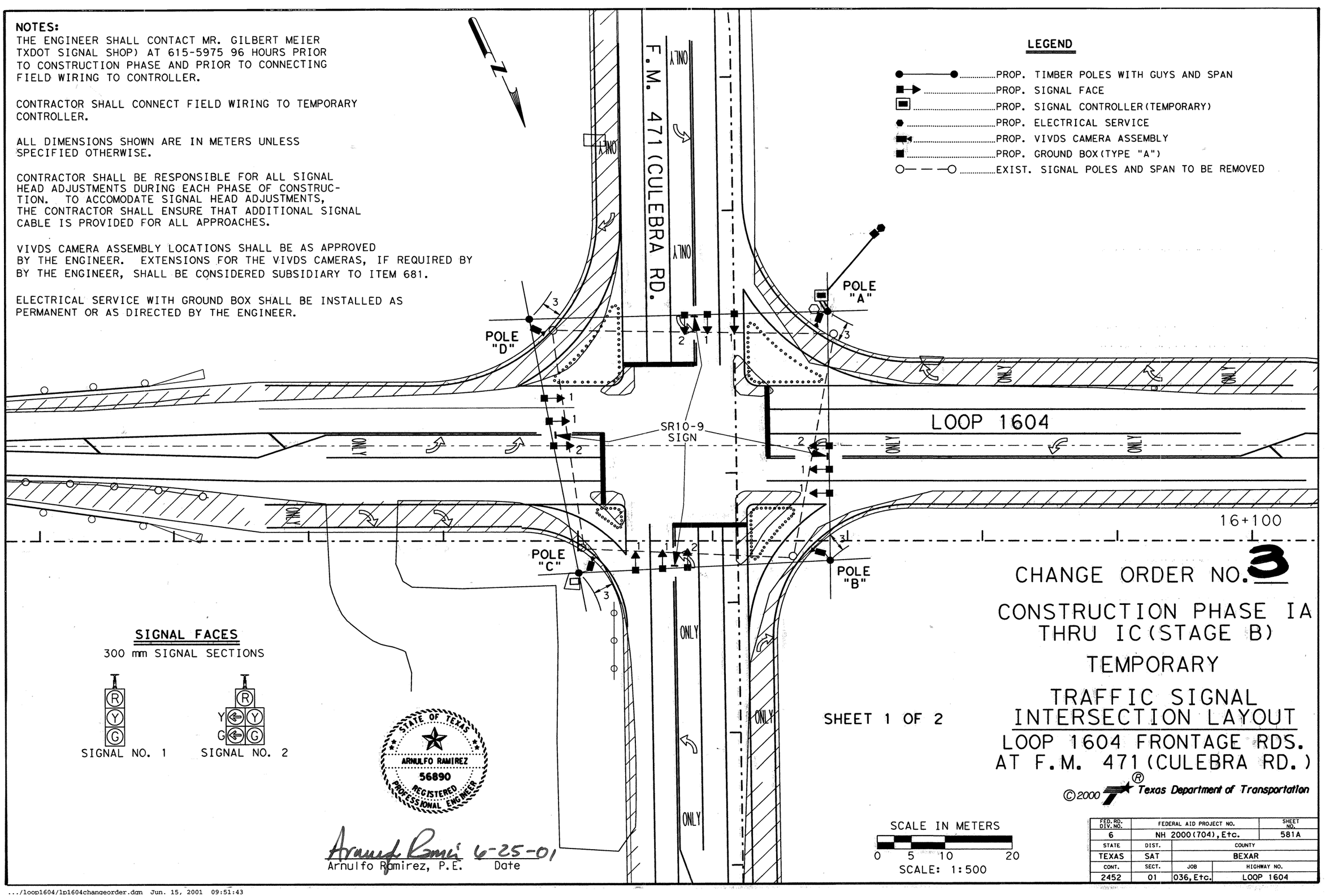


**SIGNAL FACES**

300 mm SIGNAL SECTIONS




SIGNAL NO. 1




SIGNAL NO. 2

STATE OF TEXAS
ARNULFO RAMIREZ
56890
REGISTERED PROFESSIONAL ENGINEER

Arnulfo Ramirez 6-25-01

Arnulfo Ramirez, P.E. Date

SCALE IN METERS

0 5 10 20

SCALE: 1:500

# CHANGE ORDER NO. 3

## CONSTRUCTION PHASE IA THRU IC (STAGE B)

## TEMPORARY

## TRAFFIC SIGNAL INTERSECTION LAYOUT

## LOOP 1604 FRONTAGE RDS. AT F.M. 471 (CULEBRA RD.)

SHEET 1 OF 2

©2000 Texas Department of Transportation

| FED. RD. DIV. NO. | FEDERAL AID PROJECT NO. | | SHEET NO. |
|---|---|---|---|
| 6 | NH 2000(704), Etc. | | 581A |
| STATE | DIST. | COUNTY | |
| TEXAS | SAT | BEXAR | |
| CONT. | SECT. | JOB | HIGHWAY NO. |
| 2452 | 01 | 036, Etc. | LOOP 1604 |

.../loop1604/lp1604changeorder.dgn Jun. 15, 2001 09:51:43

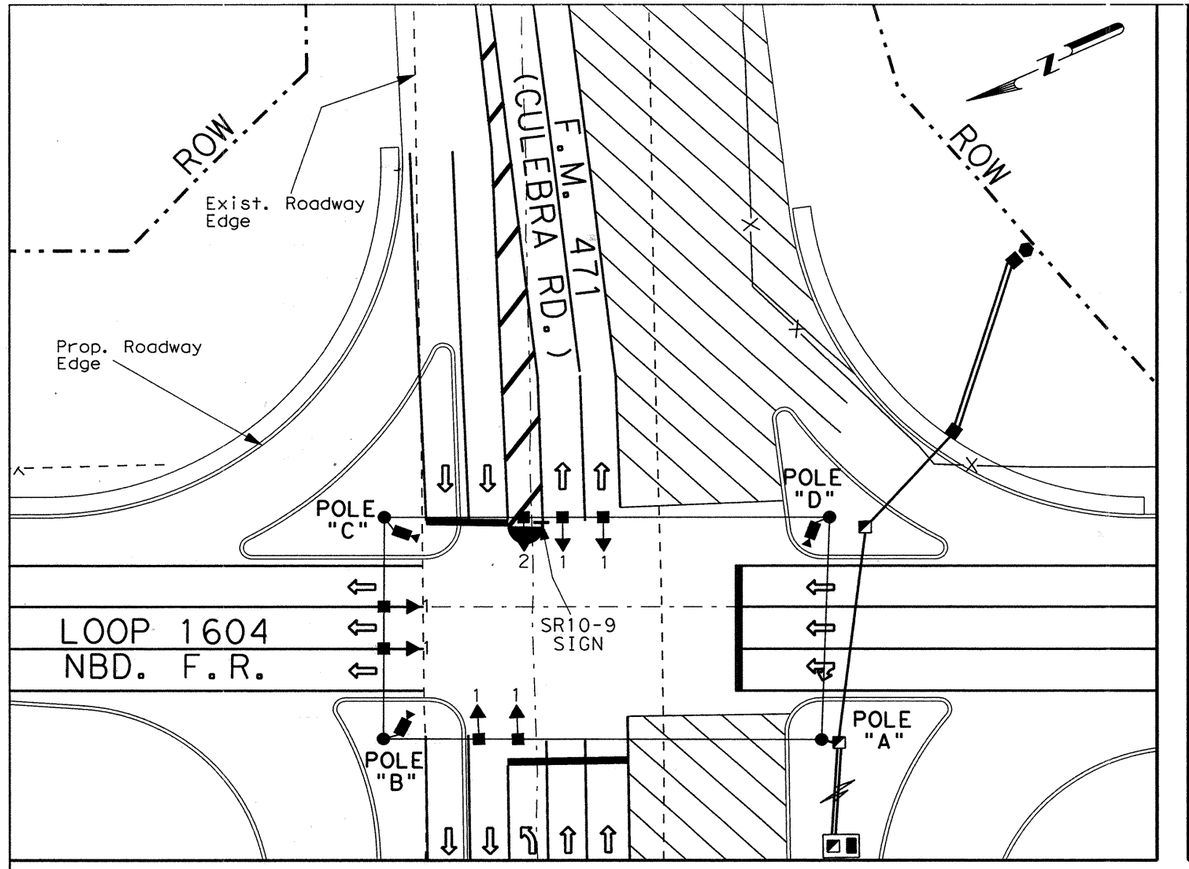


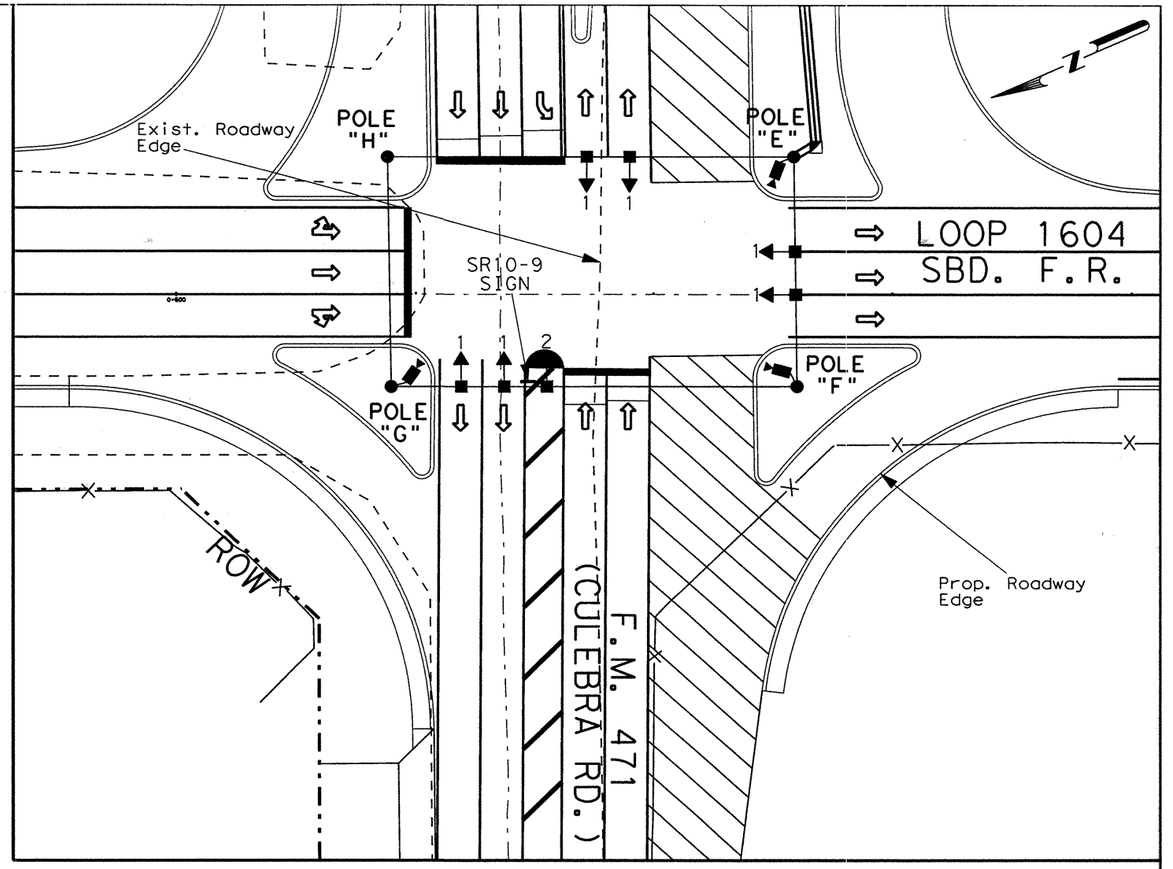


## PHASE IC-Stage C

**NOTES:**

THE ENGINEER SHALL CONTACT MR. GILBERT MEIER TXDOT SIGNAL SHOP) AT 615-5975 96 HOURS PRIOR TO CONSTRUCTION PHASE AND PRIOR TO CONNECTING FIELD WIRING TO CONTROLLER.

CONTRACTOR SHALL CONNECT TEMPORARY FIELD WIRING TO CONTROLLER.

ALL DIMENSIONS SHOWN ARE IN METERS UNLESS SPECIFIED OTHERWISE.

CONTRACTOR SHALL BE RESPONSIBLE FOR ALL SIGNAL HEAD ADJUSTMENTS DURING EACH PHASE OF CONSTRUCTION. TO ACCOMODATE SIGNAL HEAD ADJUSTMENTS, THE CONTRACTOR SHALL ENSURE THAT ADDITIONAL SIGNAL CABLE IS PROVIDED FOR ALL APPROACHES.

SIGNAL CONTROLLER, GROUND BOXES, CONDUIT AND ELECTRICAL SERVICE SHALL BE INSTALLED AS PERMANENT OR AS DIRECTED BY THE ENGINEER.

VIVDS CAMERA ASSEMBLY LOCATIONS SHALL BE AS DIRECTED BY THE ENGINEER.

### SIGNAL FACES

300 mm SIGNAL SECTIONS

SIGNAL NO. 1

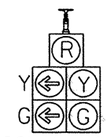


SIGNAL NO. 2

### LEGEND

- PROP. TEMPORARY SIGNAL POLES WITH SPAN
- PROP. SIGNAL FACE
- PROP. SIGNAL CONTROLLER (PERMANENT)
- PROP. ELECTRICAL SERVICE
- PROP. VIVDS CAMERA ASSEMBLY
- PROP. CONDUIT
- PROP. GROUND BOX (TYPE "A")
- PROP. GROUND BOX (TYPE "D")

STATE OF TEXAS
ARNULFO RAMIREZ
56890
REGISTERED PROFESSIONAL ENGINEER

Arnulfo Ramirez, P.E. 8-28-00 Date

## PHASE IC-Stage C

SCALE IN METERS

0 5 10 20

SCALE: 1:500

# CONSTRUCTION PHASE IC STAGE C & D

## TEMPORARY

## TRAFFIC SIGNAL INTERSECTION LAYOUT

## LOOP 1604 FRONTAGE RDS. AT F.M. 471 (CULEBRA RD.)

©2000 Texas Department of Transportation

SHEET 2 OF 2

| FED.RD. DIV.NO. | FEDERAL AID PROJECT NO. | | SHEET NO. |
|---|---|---|---|
| 6 | NH 2000(704),Etc. | | 581A |
| STATE | DIST. | COUNTY | |
| TEXAS | SAT | BEXAR | |
| CONT. | SECT. | JOB | HIGHWAY NO. |
| 2452 | 01 | 036,Etc. | LOOP 1604 |

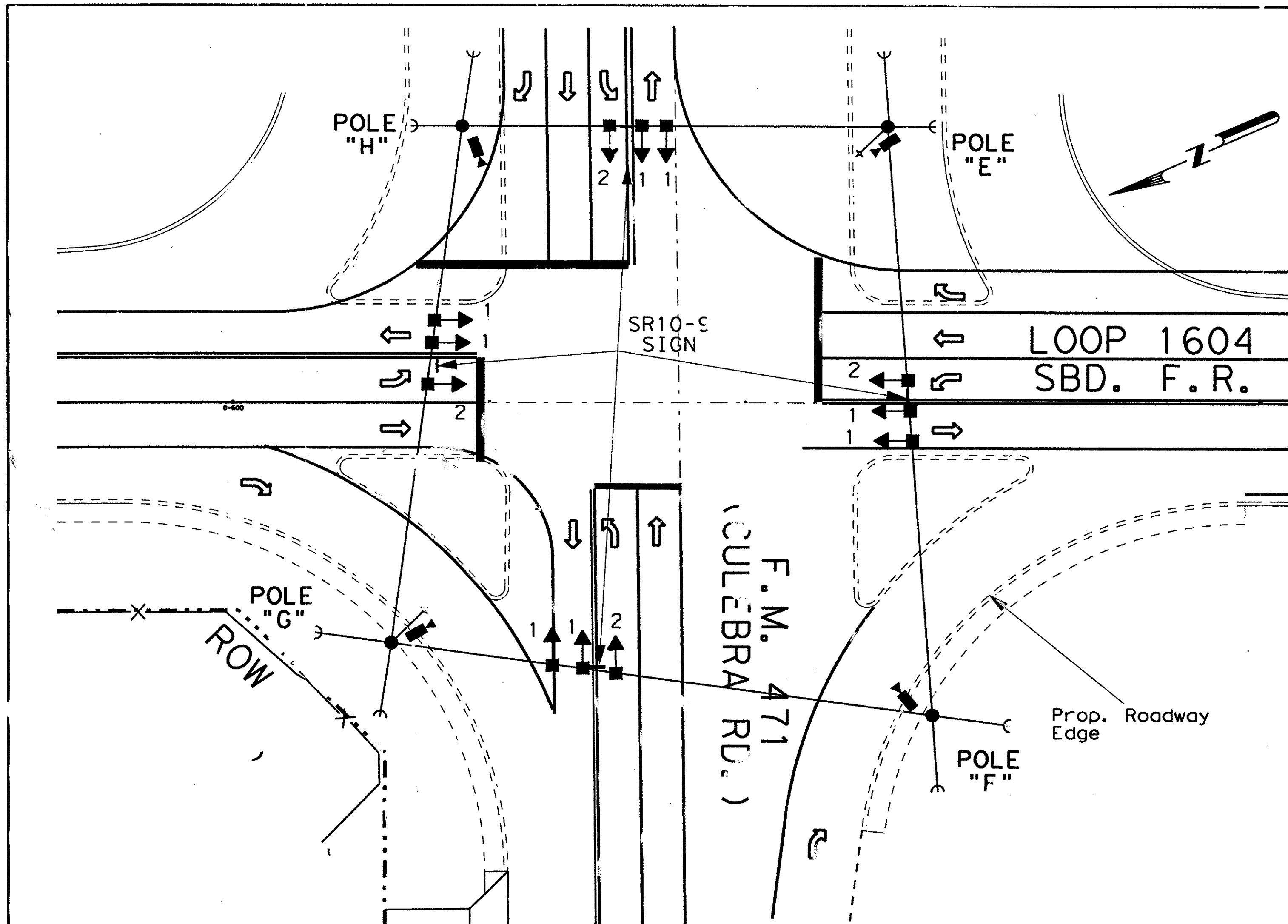


STAGE ~~B~~C

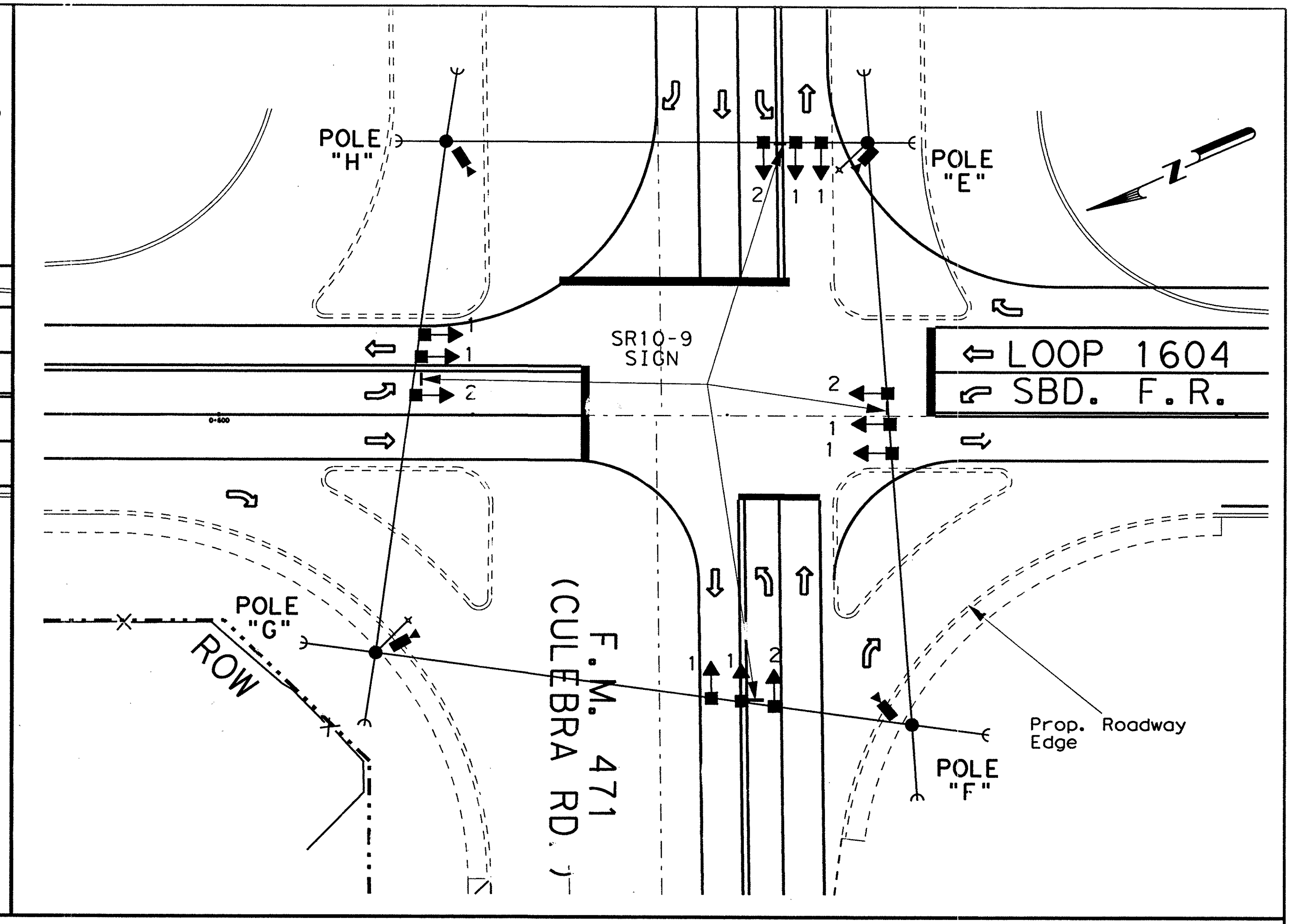


STAGE ~~B~~D

**NOTES:**

THE ENGINEER SHALL CONTACT MR. GILBERT MEIER TXDOT SIGNAL SHOP) AT 615-5975 96 HOURS PRIOR TO CONSTRUCTION PHASE AND PRIOR TO CONNECTING FIELD WIRING TO CONTROLLER.

CONTRACTOR SHALL CONNECT TEMPORARY FIELD WIRING TO CONTROLLER.

ALL DIMENSIONS SHOWN ARE IN METERS UNLESS SPECIFIED OTHERWISE.

CONTRACTOR SHALL BE RESPONSIBLE FOR ALL SIGNAL HEAD ADJUSTMENTS DURING EACH PHASE OF CONSTRUCTION. TO ACCOMODATE SIGNAL HEAD ADJUSTMENTS, THE CONTRACTOR SHALL ENSURE THAT ADDITIONAL SIGNAL CABLE IS PROVIDED FOR ALL APPROACHES.

VIVDS CAMERA ASSEMBLY LOCATIONS SHALL BE AS DIRECTED BY THE ENGINEER.

CONTROLLER AND ELECTRICAL SERVICE TO BE MOUNTED ON SIGNAL POLE "G"

**SIGNAL FACES**

300 mm SIGNAL SECTIONS

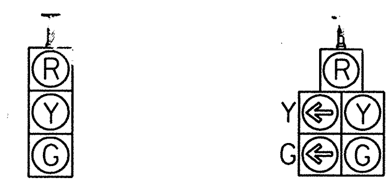


SIGNAL NO. 1 SIGNAL NO. 2

**LEGEND**

PROP. TEMPORARY SIGNAL POLES WITH SPAN AND GUY WIRES

PROP. SIGNAL FACE

PROP. VIVDS CAMERA ASSEMBLY

STATE OF TEXAS — ARNULFO RAMIREZ — 56890 — REGISTERED PROFESSIONAL ENGINEER

Arnulfo Ramirez, P.E. — Date: 10-11-02

New Sheet

CHANGE ORDER NO. 48

SCALE IN METERS

0 5 10 20

SCALE: 1:500

# CONSTRUCTION PHASE 1C

# TEMPORARY

# TRAFFIC SIGNAL INTERSECTION LAYOUT

## LOOP 1604 FRONTAGE RDS. AT F.M. 471 (CULEBRA RD.)

© 2002 Texas Department of Transportation

| FED. RD. DIV. NO. | FEDERAL AID PROJECT NO. | | SHEET NO. |
|---|---|---|---|
| 6 | NH 2000(704), Etc. | | 581B |
| STATE | DIST. | COUNTY | |
| TEXAS | SAT | BEXAR | |
| CONT. | SECT. | JOB | HIGHWAY NO. |
| 2452 | 01 | 036, Etc. | LOOP 1604 |

## SIGNAL FACES

300 mm SIGNAL SECTIONS




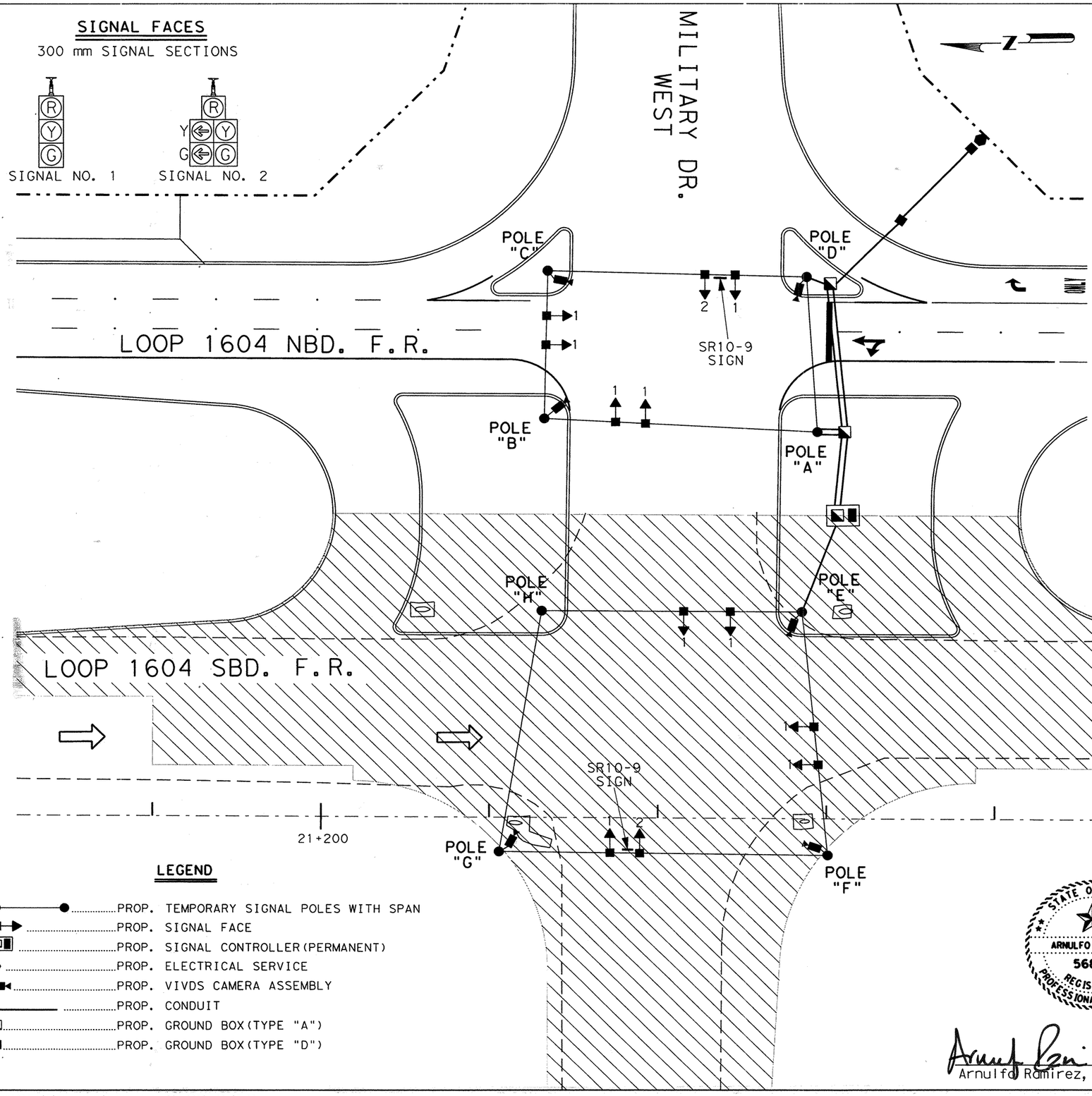


SCALE IN METERS

0 5 10 20

SCALE: 1:500

**NOTES:**

THE ENGINEER SHALL CONTACT MR. GILBERT MEIER TXDOT SIGNAL SHOP) AT 615-5975 96 HOURS PRIOR TO CONSTRUCTION PHASE AND PRIOR TO CONNECTING FIELD WIRING TO CONTROLLER.

CONTRACTOR SHALL CONNECT TEMORARY FIELD WIRING TO CONTROLLER.

ALL DIMENSIONS SHOWN ARE IN METERS UNLESS SPECIFIED OTHERWISE.

CONTRACTOR SHALL BE RESPONSIBLE FOR ALL SIGNAL HEAD ADJUSTMENTS DURING EACH PHASE OF CONSTRUCTION. TO ACCOMODATE SIGNAL HEAD ADJUSTMENTS, THE CONTRACTOR SHALL ENSURE THAT ADDITIONAL SIGNAL CABLE IS PROVIDED FOR ALL APPROACHES.

PRIOR TO PHASE 2B ROAD CONSTRUCTION, THE EXISTING TRAFFIC SIGNAL SHALL REMAIN IN OPERATION(WITH TEMPORARY CONTROLLER AND VIVDS) OR AS DIRECTED BY THE ENGINEER.

SIGNAL CONTROLLER, GROUND BOXES, CONDUIT AND ELECTRICAL SERVICE SHALL BE INSTALLED AS PERMANENT OR AS DIRECTED BY THE ENGINEER.

VIVDS CAMERA ASSEMBLY LOCATIONS SHALL BE AS DIRECTED BY THE ENGINEER.

## LEGEND

- PROP. TEMPORARY SIGNAL POLES WITH SPAN
- PROP. SIGNAL FACE
- PROP. SIGNAL CONTROLLER (PERMANENT)
- PROP. ELECTRICAL SERVICE
- PROP. VIVDS CAMERA ASSEMBLY
- PROP. CONDUIT
- PROP. GROUND BOX (TYPE "A")
- PROP. GROUND BOX (TYPE "D")

STATE OF TEXAS
ARNULFO RAMIREZ
56890
REGISTERED PROFESSIONAL ENGINEER

Arnulfo Ramirez, P.E.

8-28-00
Date

# CONSTRUCTION PHASE 2B TEMPORARY TRAFFIC SIGNAL INTERSECTION LAYOUT

## LOOP 1604 FRONTAGE RDS. AT MILITARY DR. WEST

©2000 Texas Department of Transportation

| FED. RD. DIV. NO. | FEDERAL AID PROJECT NO. | | SHEET NO. |
|---|---|---|---|
| 6 | NH 2000(704), Etc. | | 582 |
| STATE | DIST. | COUNTY | |
| TEXAS | SAT | BEXAR | |
| CONT. | SECT. | JOB | HIGHWAY NO. |
| 2452 | 01 | 036, Etc. | LOOP 1604 |

.../loop1604/militarytempsig.dgn Aug. 28, 2000 13:27:05

Plotted on: 03/07/2003

## SIGNAL PHASING DIAGRAM

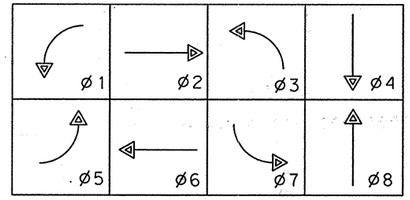


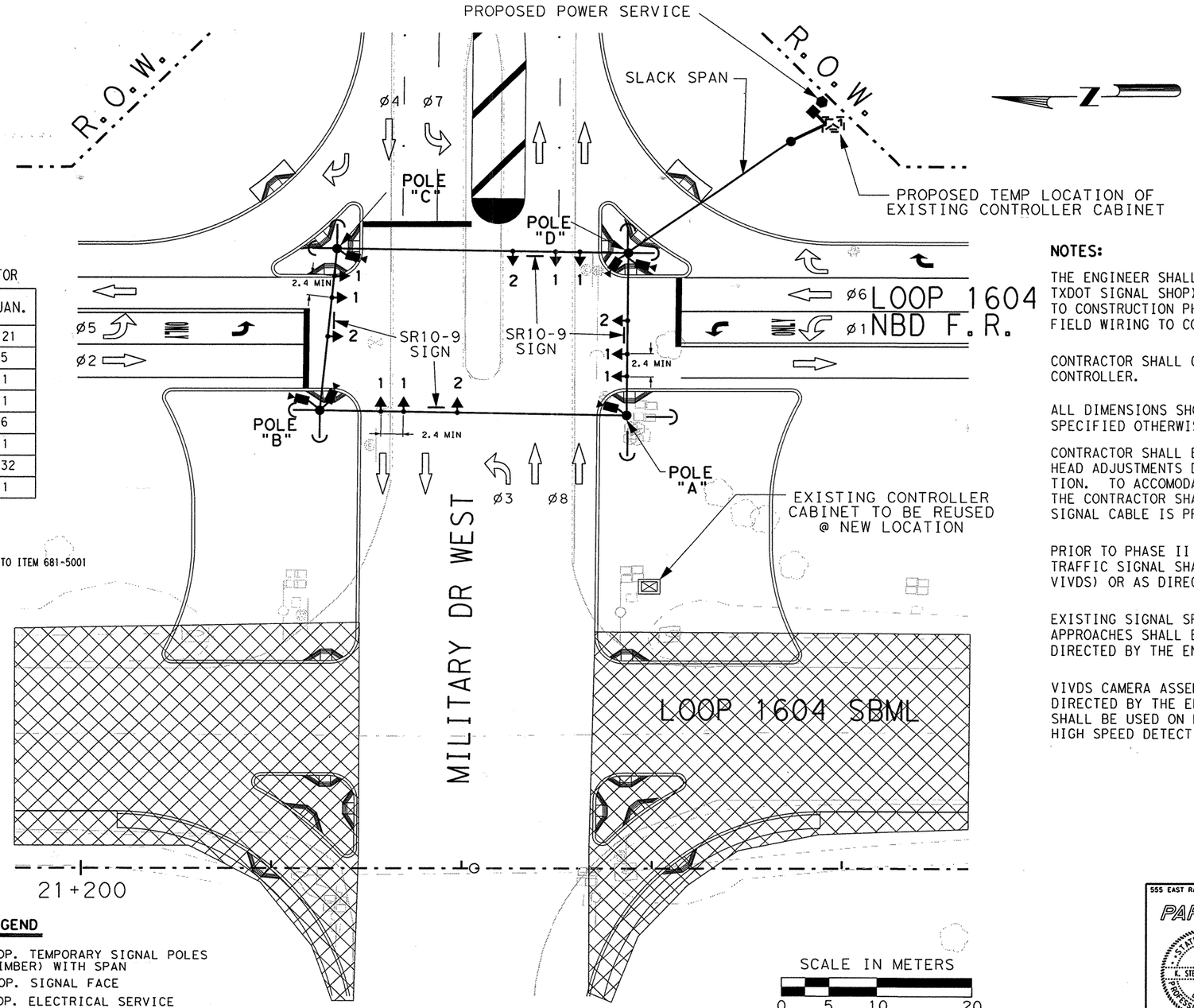


## MATERIALS TO BE FURNISHED AND INSTALLED BY THE CONTRACTOR

| ITEM NO. | DESCRIPTION | UNIT | QUAN. |
|---|---|---|---|
| 625-500X | ZINC-COAT STL WIRE STRAND(9.52mm)** | M | 121 |
| 627-5001 | TIMBER POLE(CL 2) 40 FT** | EA | 5 |
| 681-5001 | TEMP TRAF SIGNALS FOR CONSTRUCTION | EA | 1 |
| 6959-5001 | VIVDS PROCESSOR SYSTEM* | EA | 1 |
| 6959-5002 | VIVDS CAMERA ASSEMBLY* | EA | 6 |
| 6959-5003 | VIVDS SET-UP SYSTEM* | EA | 1 |
| 6959-5005 | VIVDS COMMUNICATION CABLE(COAXIAL)* | M | 332 |
| 6959-5007 | VIVDS TEMPORARY | EA. | 1 |

* FOR CONTRACTOR'S INFORMATION ONLY. ITEMS SUBSIDIARY TO ITEM 6959-5007

**FOR CONTRACTOR'S INFORMATION ONLY. ITEM SUBSIDIARY TO ITEM 681-5001.

SIGNS AND SIGN MOUNTS SHALL BE FURNISHED BY THE CONTRACTOR AND SHALL BE SUBSIDIARY TO ITEM 681-5001

### ACTUATED SETTINGS

| PHASE | MIN. GREEN | VEH EXT | RECALL | MAX GREEN | CLEARANCE YELLOW | CLEARANCE ALL RED | WALK | FDW= PCT-Y-AR |
|---|---|---|---|---|---|---|---|---|
| 1 | 5 | 0.5 | OFF | 25 | 5.0 | 2.2 | N/A | N/A |
| 2 | 22 | 1.2 | PED & MIN | 80 | 5.0 | 1.1 | 7 | 15 |
| 3 | 5 | 0.5 | OFF | 25 | 4.3 | 1.5 | N/A | N/A |
| 4 | 20 | 2.0 | PED & MIN | 30 | 4.3 | 1.1 | 7 | 13 |
| 5 | 5 | 0.5 | OFF | 25 | 5.0 | 2.2 | N/A | N/A |
| 6 | 22 | 1.2 | PED & MIN | 80 | 5.0 | 1.1 | 7 | 15 |
| 7 | 5 | 0.5 | OFF | 25 | 4.3 | 1.5 | N/A | N/A |
| 8 | 20 | 2.0 | PED & MIN | 30 | 4.3 | 1.1 | 7 | 13 |

VIVDS HIGH SPEED DETECTION ZONES SHALL BE LOCATED AT THE FOLLOWING DISTANCES FROM THE STOP LINE, AS FOLLOWS:

LOOP 1604 (55 MPH) - 69, 98, AND 127 METERS
MILITARY DR WEST (35 MPH) - STOPLINES ONLY

ADDITIONALLY, 20 METERS OF STOPLINE DETECTION SHALL BE PROVIDED FOR EACH LEFT-TURN LANE AND 6 METERS OF VIVDS DETECTION ZONE SHALL BE PROVIDED FOR EACH THROUGH LANE.

## SIGNAL FACES

300 mm
SIGNAL SECTIONS

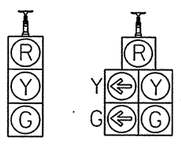


SIGNAL NO. 1 SIGNAL NO. 2

## LEGEND

- PROP. TEMPORARY SIGNAL POLES (TIMBER) WITH SPAN
- PROP. SIGNAL FACE
- PROP. ELECTRICAL SERVICE
- PROP. VIVDS CAMERA ASSEMBLY
- PROP. CONDUIT
- CONSTRUCTION WORK ZONE AREA
- EXIST. SIGNAL CONTROL CABINET
- TRAFFIC DIRECTIONAL FLOW ARROW
- DOWN GUY
- GROUND BOX (TY A)

SCALE IN METERS

0 5 10 20

SCALE: 1:500

**NOTES:**

THE ENGINEER SHALL CONTACT MR. GILBERT MEIER TXDOT SIGNAL SHOP) AT 615-5975 96 HOURS PRIOR TO CONSTRUCTION PHASE AND PRIOR TO CONNECTING FIELD WIRING TO CONTROLLER.

CONTRACTOR SHALL CONNECT FIELD WIRING TO TEMPORARY CONTROLLER.

ALL DIMENSIONS SHOWN ARE IN METERS UNLESS SPECIFIED OTHERWISE.

CONTRACTOR SHALL BE RESPONSIBLE FOR ALL SIGNAL HEAD ADJUSTMENTS DURING EACH PHASE OF CONSTRUCTION. TO ACCOMODATE SIGNAL HEAD ADJUSTMENTS, THE CONTRACTOR SHALL ENSURE THAT ADDITIONAL SIGNAL CABLE IS PROVIDED FOR ALL APPROACHES.

PRIOR TO PHASE II ROAD CONSTRUCTION, THE EXISTING TRAFFIC SIGNAL SHALL REMAIN IN OPERATION(WITH VIVDS) OR AS DIRECTED BY THE ENGINEER.

EXISTING SIGNAL SPAN, HEADS AND CABLE FOR LOOP 1604 APPROACHES SHALL BE REMOVED AND RELOCATED AS DIRECTED BY THE ENGINEER.

VIVDS CAMERA ASSEMBLY LOCATIONS SHALL BE AS DIRECTED BY THE ENGINEER. TWO VIVDS CAMERAS SHALL BE USED ON LOOP 1604 APPROACHES TO PROVIDE HIGH SPEED DETECTION.

**CHANGE ORDER NO. 18**

-REVISED RDWY GEOMETRICS AND LANE CONFIGURATIONS, REVISED WRK ZN CONSTR & TEMPORARY SIGNALS
-REPLACES SHEET 582

# TEMPORARY TRAFFIC SIGNAL INTERSECTION LAYOUT

555 EAST RAMSEY SAN ANTONIO TEXAS 78216
PHONE (210)375-9000
FAX (210)375-9010
PAPE-DAWSON ENGINEERS
CIVIL & ENVIRONMENTAL
STATE OF TEXAS
K. STEPHEN BONNETTE
60928
LICENSED PROFESSIONAL ENGINEER
K. STEPHEN BONNETTE P.E. 03/07/2003 DATE

©2000 Texas Department of Transportation

LOOP 1604
LOOP 1604 FRONTAGE RDS.
AT MILITARY DRIVE WEST

| | | PROJECT NO. | | SHEET NO. |
|---|---|---|---|---|
| DN: | | NH 2000(704),etc. | | 582A |
| CK DN: | | STATE | DIST. | COUNTY |
| DW: | | TEXAS | SAT | BEXAR |
| CK DW: | CONT. | SECT. | JOB | HIGHWAY NO. |
| | 2452 | 01 | 036,etc. | LP 1604 |

Design filename: p:\52\2011\design\civil\plansheets\traffic\signal\militempsig.dgn

**NOTES:**

THE ENGINEER SHALL CONTACT MR. GILBERT MEIER TXDOT SIGNAL SHOP) AT 615-5975 96 HOURS PRIOR TO CONSTRUCTION PHASE AND PRIOR TO CONNECTING FIELD WIRING TO CONTROLLER.

CONTRACTOR SHALL CONNECT FIELD WIRING TO TEMPORARY CONTROLLER.

ALL DIMENSIONS SHOWN ARE IN METERS UNLESS SPECIFIED OTHERWISE.

CONTRACTOR SHALL BE RESPONSIBLE FOR ALL SIGNAL HEAD ADJUSTMENTS DURING EACH PHASE OF CONSTRUCTION. TO ACCOMODATE SIGNAL HEAD ADJUSTMENTS, THE CONTRACTOR SHALL ENSURE THAT ADDITIONAL SIGNAL CABLE IS PROVIDED FOR ALL APPROACHES.

VIVDS CAMERA ASSEMBLY LOCATIONS SHALL BE AS DIRECTED BY THE ENGINEER.

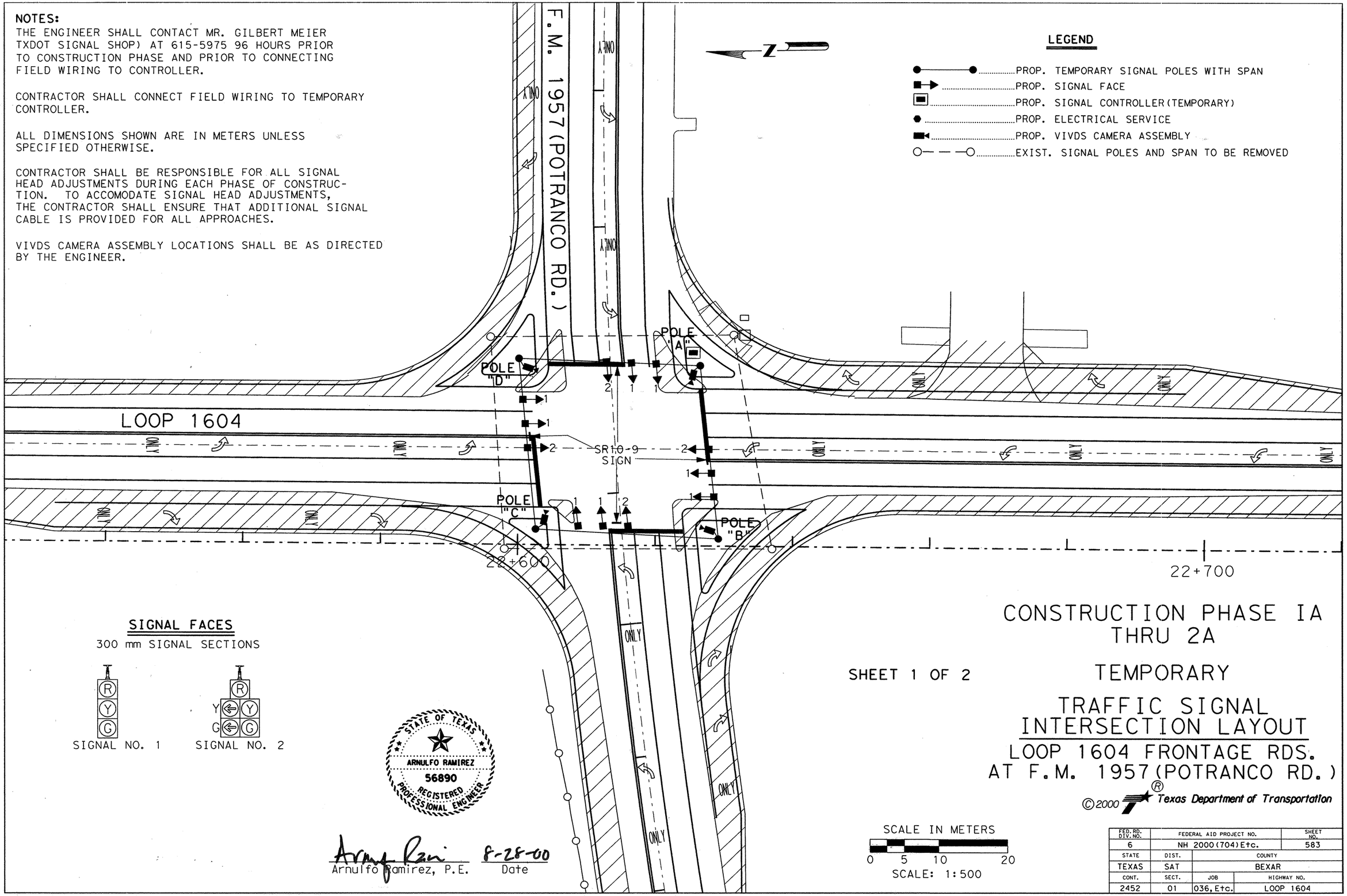


**LEGEND**

- PROP. TEMPORARY SIGNAL POLES WITH SPAN
- PROP. SIGNAL FACE
- PROP. SIGNAL CONTROLLER (TEMPORARY)
- PROP. ELECTRICAL SERVICE
- PROP. VIVDS CAMERA ASSEMBLY
- EXIST. SIGNAL POLES AND SPAN TO BE REMOVED

**SIGNAL FACES**

300 mm SIGNAL SECTIONS




SIGNAL NO. 1




SIGNAL NO. 2

STATE OF TEXAS
ARNULFO RAMIREZ
56890
REGISTERED
PROFESSIONAL ENGINEER

Arnulfo Ramirez, P.E. — 8-28-00 Date

SCALE IN METERS

0 5 10 20

SCALE: 1:500

SHEET 1 OF 2

# CONSTRUCTION PHASE IA THRU 2A

## TEMPORARY

## TRAFFIC SIGNAL INTERSECTION LAYOUT

## LOOP 1604 FRONTAGE RDS. AT F.M. 1957 (POTRANCO RD.)

©2000 Texas Department of Transportation

| FED. RD. DIV. NO. | FEDERAL AID PROJECT NO. | | SHEET NO. |
|---|---|---|---|
| 6 | NH 2000 (704) Etc. | | 583 |
| STATE | DIST. | COUNTY | |
| TEXAS | SAT | BEXAR | |
| CONT. | SECT. | JOB | HIGHWAY NO. |
| 2452 | 01 | 036, Etc. | LOOP 1604 |

**NOTES:**

THE ENGINEER SHALL CONTACT MR. GILBERT MEIER TXDOT SIGNAL SHOP) AT 615-5975 96 HOURS PRIOR TO CONSTRUCTION PHASE AND PRIOR TO CONNECTING FIELD WIRING TO CONTROLLER.

CONTRACTOR SHALL CONNECT FIELD WIRING TO TEMPORARY CONTROLLER.

ALL DIMENSIONS SHOWN ARE IN METERS UNLESS SPECIFIED OTHERWISE.

CONTRACTOR SHALL BE RESPONSIBLE FOR ALL SIGNAL HEAD ADJUSTMENTS DURING EACH PHASE OF CONSTRUCTION. TO ACCOMODATE SIGNAL HEAD ADJUSTMENTS, THE CONTRACTOR SHALL ENSURE THAT ADDITIONAL SIGNAL CABLE IS PROVIDED FOR ALL APPROACHES.

VIVDS CAMERA ASSEMBLY LOCATIONS SHALL BE AS APPROVED BY THE ENGINEER. EXTENSIONS FOR THE VIVDS CAMERAS, IF REQUIRED BY BY THE ENGINEER, SHALL BE CONSIDERED SUBSIDIARY TO ITEM 681.

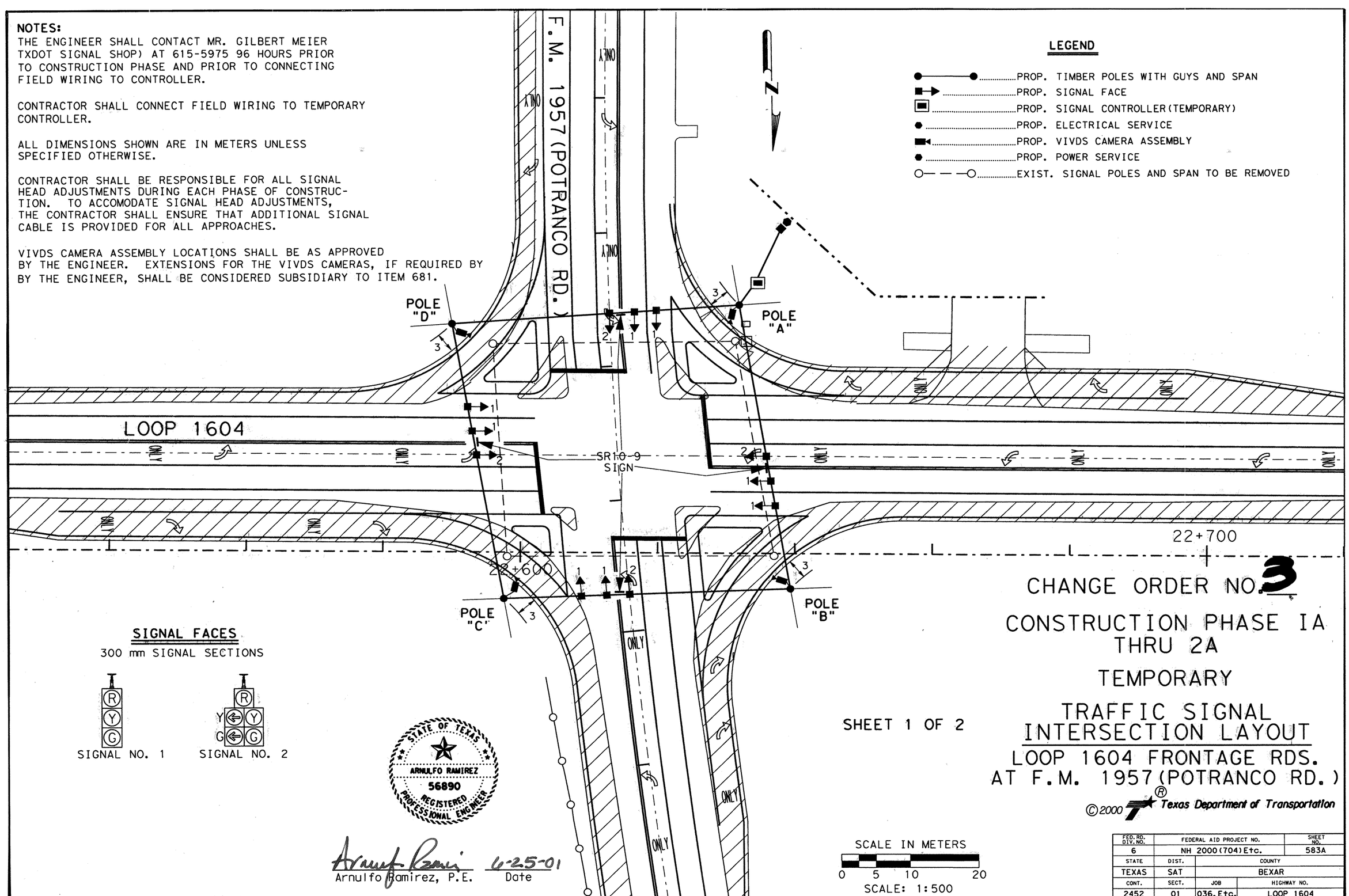


**LEGEND**

- PROP. TIMBER POLES WITH GUYS AND SPAN
- PROP. SIGNAL FACE
- PROP. SIGNAL CONTROLLER (TEMPORARY)
- PROP. ELECTRICAL SERVICE
- PROP. VIVDS CAMERA ASSEMBLY
- PROP. POWER SERVICE
- EXIST. SIGNAL POLES AND SPAN TO BE REMOVED

**SIGNAL FACES**

300 mm SIGNAL SECTIONS




STATE OF TEXAS
ARNULFO RAMIREZ
56890
REGISTERED PROFESSIONAL ENGINEER

Arnulfo Ramirez, P.E. — 6-25-01 Date

SCALE IN METERS

0 5 10 20

SCALE: 1:500

SHEET 1 OF 2

# CHANGE ORDER NO. 3

## CONSTRUCTION PHASE IA THRU 2A

## TEMPORARY

## TRAFFIC SIGNAL INTERSECTION LAYOUT

## LOOP 1604 FRONTAGE RDS. AT F.M. 1957 (POTRANCO RD.)

©2000 Texas Department of Transportation

| FED. RD. DIV. NO. | FEDERAL AID PROJECT NO. | | SHEET NO. |
|---|---|---|---|
| 6 | NH 2000(704)Etc. | | 583A |
| STATE | DIST. | COUNTY | |
| TEXAS | SAT | BEXAR | |
| CONT. | SECT. | JOB | HIGHWAY NO. |
| 2452 | 01 | 036, Etc. | LOOP 1604 |

.../loop1604/lp1604changeorder.dgn Jun. 15, 2001 09:52:00

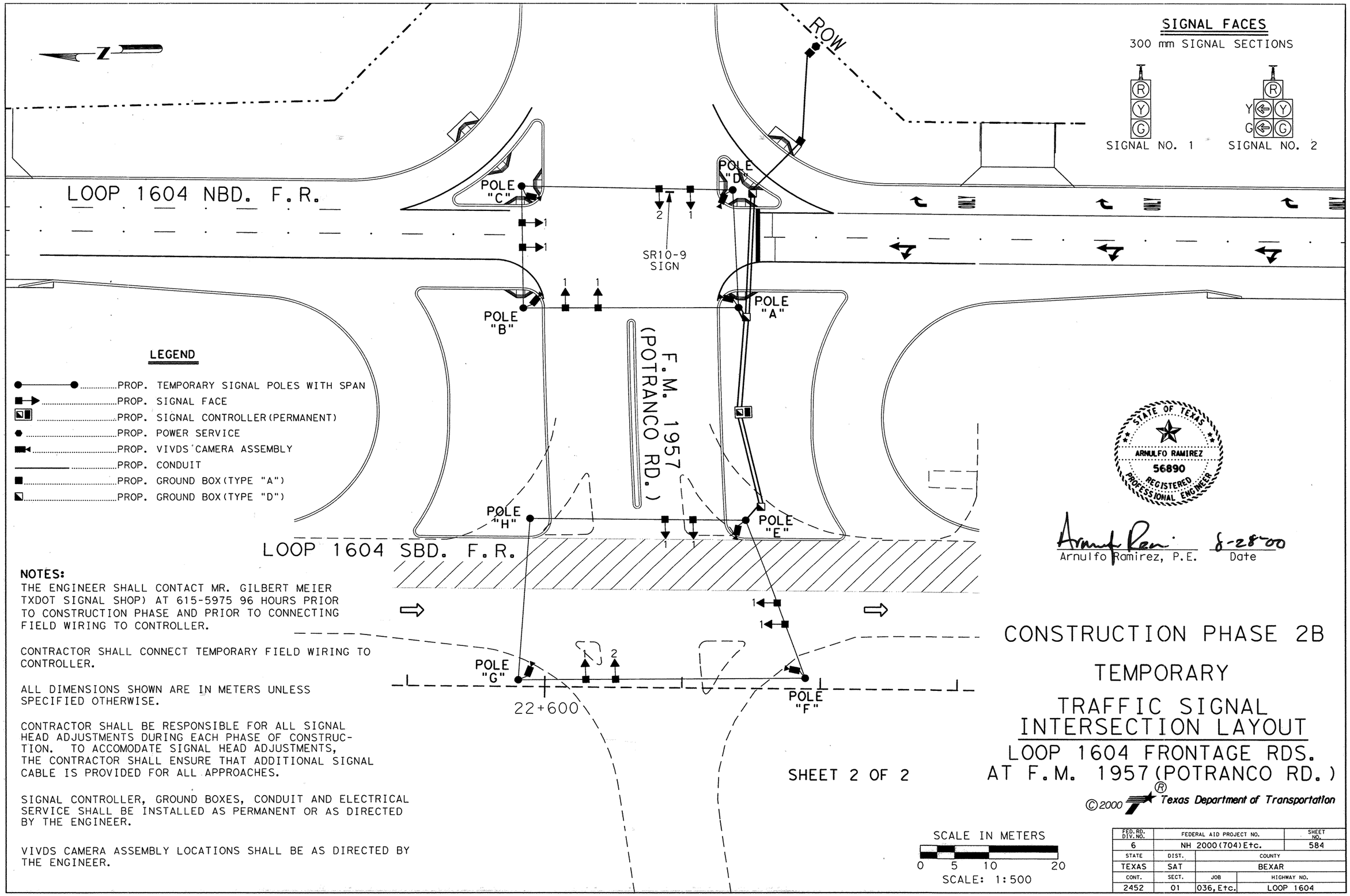


## SIGNAL FACES

300 mm SIGNAL SECTIONS

SIGNAL NO. 1 (R, Y, G)

SIGNAL NO. 2 (R, Y, G, Y, G)

## LEGEND

- PROP. TEMPORARY SIGNAL POLES WITH SPAN
- PROP. SIGNAL FACE
- PROP. SIGNAL CONTROLLER (PERMANENT)
- PROP. POWER SERVICE
- PROP. VIVDS CAMERA ASSEMBLY
- PROP. CONDUIT
- PROP. GROUND BOX (TYPE "A")
- PROP. GROUND BOX (TYPE "D")

**NOTES:**

THE ENGINEER SHALL CONTACT MR. GILBERT MEIER TXDOT SIGNAL SHOP) AT 615-5975 96 HOURS PRIOR TO CONSTRUCTION PHASE AND PRIOR TO CONNECTING FIELD WIRING TO CONTROLLER.

CONTRACTOR SHALL CONNECT TEMPORARY FIELD WIRING TO CONTROLLER.

ALL DIMENSIONS SHOWN ARE IN METERS UNLESS SPECIFIED OTHERWISE.

CONTRACTOR SHALL BE RESPONSIBLE FOR ALL SIGNAL HEAD ADJUSTMENTS DURING EACH PHASE OF CONSTRUCTION. TO ACCOMODATE SIGNAL HEAD ADJUSTMENTS, THE CONTRACTOR SHALL ENSURE THAT ADDITIONAL SIGNAL CABLE IS PROVIDED FOR ALL APPROACHES.

SIGNAL CONTROLLER, GROUND BOXES, CONDUIT AND ELECTRICAL SERVICE SHALL BE INSTALLED AS PERMANENT OR AS DIRECTED BY THE ENGINEER.

VIVDS CAMERA ASSEMBLY LOCATIONS SHALL BE AS DIRECTED BY THE ENGINEER.

STATE OF TEXAS
ARNULFO RAMIREZ
56890
REGISTERED PROFESSIONAL ENGINEER

Arnulfo Ramirez, P.E. 8-28-00
Date

# CONSTRUCTION PHASE 2B

# TEMPORARY

# TRAFFIC SIGNAL INTERSECTION LAYOUT

## LOOP 1604 FRONTAGE RDS. AT F.M. 1957 (POTRANCO RD.)

SHEET 2 OF 2

©2000 Texas Department of Transportation

SCALE IN METERS

0 5 10 20

SCALE: 1:500

| FED.RD. DIV.NO. | FEDERAL AID PROJECT NO. | | SHEET NO. |
|---|---|---|---|
| 6 | NH 2000(704)Etc. | | 584 |
| STATE | DIST. | COUNTY | |
| TEXAS | SAT | BEXAR | |
| CONT. | SECT. | JOB | HIGHWAY NO. |
| 2452 | 01 | 036, Etc. | LOOP 1604 |

◆-OMITTED VIVDS CAMERA FROM POLE "A".

## SIGNAL FACES

300 mm SIGNAL SECTIONS




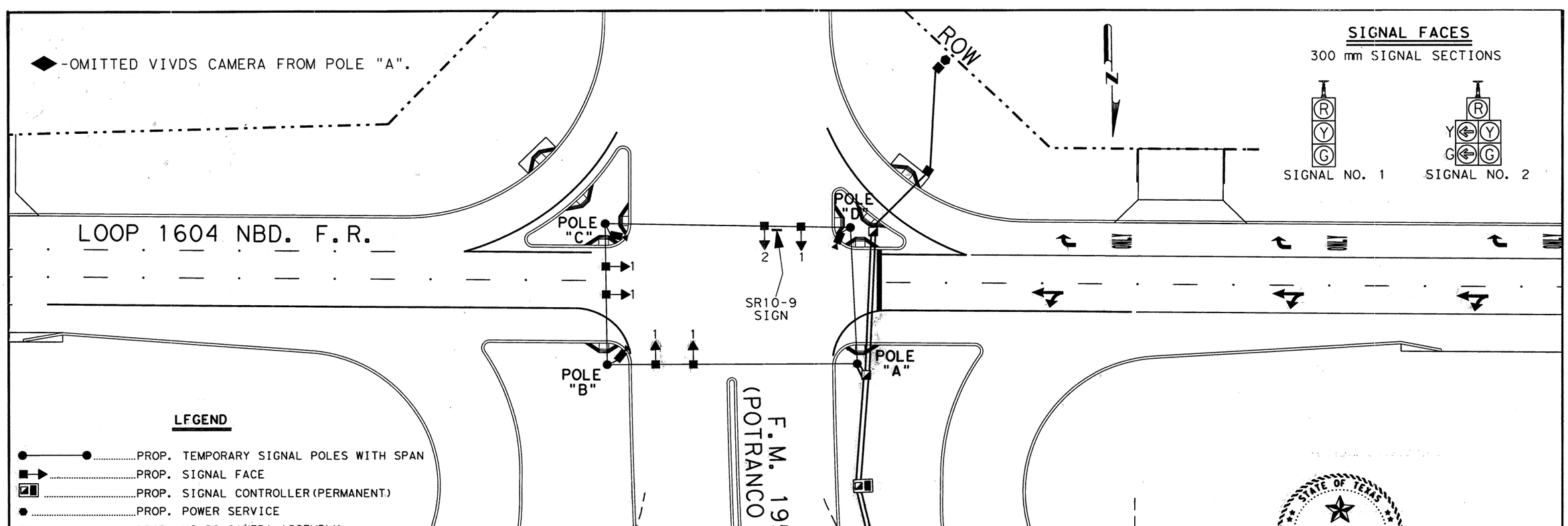


### LEGEND

- PROP. TEMPORARY SIGNAL POLES WITH SPAN
- PROP. SIGNAL FACE
- PROP. SIGNAL CONTROLLER (PERMANENT)
- PROP. POWER SERVICE
- PROP. VIVDS CAMERA ASSEMBLY
- PROP. CONDUIT
- PROP. GROUND BOX (TYPE "A")
- PROP. GROUND BOX (TYPE "D")

**NOTES:**

THE ENGINEER SHALL CONTACT MR. GILBERT MEIER TXDOT SIGNAL SHOP) AT 615-5975 96 HOURS PRIOR TO CONSTRUCTION PHASE AND PRIOR TO CONNECTING FIELD WIRING TO CONTROLLER.

CONTRACTOR SHALL CONNECT TEMPORARY FIELD WIRING TO CONTROLLER.

ALL DIMENSIONS SHOWN ARE IN METERS UNLESS SPECIFIED OTHERWISE.

CONTRACTOR SHALL BE RESPONSIBLE FOR ALL SIGNAL HEAD ADJUSTMENTS DURING EACH PHASE OF CONSTRUCTION. TO ACCOMODATE SIGNAL HEAD ADJUSTMENTS, THE CONTRACTOR SHALL ENSURE THAT ADDITIONAL SIGNAL CABLE IS PROVIDED FOR ALL APPROACHES.

SIGNAL CONTROLLER, GROUND BOXES, CONDUIT AND ELECTRICAL SERVICE SHALL BE INSTALLED AS PERMANENT OR AS DIRECTED BY THE ENGINEER.

VIVDS CAMERA ASSEMBLY LOCATIONS SHALL BE AS DIRECTED BY THE ENGINEER.

STATE OF TEXAS
ARNULFO RAMIREZ
56890
REGISTERED PROFESSIONAL ENGINEER

Arnulfo Ramirez 6-25-01

Arnulfo Ramirez, P.E. Date

◆CHANGE ORDER NO. 3

# CONSTRUCTION PHASE 2B

# TEMPORARY

# TRAFFIC SIGNAL INTERSECTION LAYOUT

## LOOP 1604 FRONTAGE RDS. AT F.M. 1957 (POTRANCO RD.)

SHEET 2 OF 2

©2000 Texas Department of Transportation

SCALE IN METERS

0 5 10 20

SCALE: 1:500

| FED. RD. DIV. NO. | FEDERAL AID PROJECT NO. | | SHEET NO. |
|---|---|---|---|
| 6 | NH 2000(704)Etc. | | 584A |
| STATE | DIST. | COUNTY | |
| TEXAS | SAT | BEXAR | |
| CONT. | SECT. | JOB | HIGHWAY NO. |
| 2452 | 01 | 036,Etc. | LOOP 1604 |

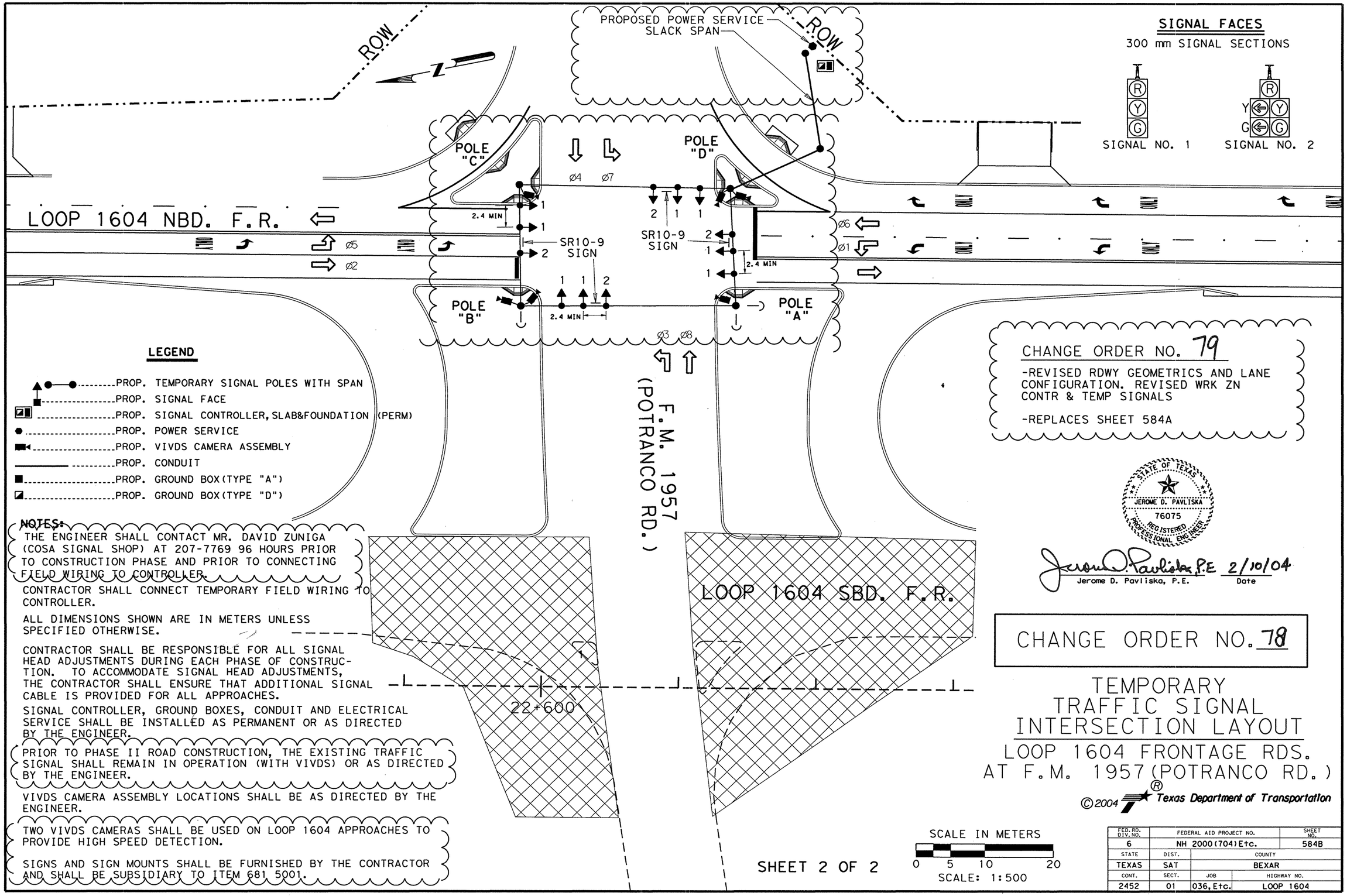


## SIGNAL FACES

300 mm SIGNAL SECTIONS

SIGNAL NO. 1 (R, Y, G)

SIGNAL NO. 2 (R, Y, Y, G, G)

## LEGEND

- PROP. TEMPORARY SIGNAL POLES WITH SPAN
- PROP. SIGNAL FACE
- PROP. SIGNAL CONTROLLER, SLAB&FOUNDATION (PERM)
- PROP. POWER SERVICE
- PROP. VIVDS CAMERA ASSEMBLY
- PROP. CONDUIT
- PROP. GROUND BOX(TYPE "A")
- PROP. GROUND BOX(TYPE "D")

## NOTES:

THE ENGINEER SHALL CONTACT MR. DAVID ZUNIGA (COSA SIGNAL SHOP) AT 207-7769 96 HOURS PRIOR TO CONSTRUCTION PHASE AND PRIOR TO CONNECTING FIELD WIRING TO CONTROLLER.

CONTRACTOR SHALL CONNECT TEMPORARY FIELD WIRING TO CONTROLLER.

ALL DIMENSIONS SHOWN ARE IN METERS UNLESS SPECIFIED OTHERWISE.

CONTRACTOR SHALL BE RESPONSIBLE FOR ALL SIGNAL HEAD ADJUSTMENTS DURING EACH PHASE OF CONSTRUCTION. TO ACCOMMODATE SIGNAL HEAD ADJUSTMENTS, THE CONTRACTOR SHALL ENSURE THAT ADDITIONAL SIGNAL CABLE IS PROVIDED FOR ALL APPROACHES.

SIGNAL CONTROLLER, GROUND BOXES, CONDUIT AND ELECTRICAL SERVICE SHALL BE INSTALLED AS PERMANENT OR AS DIRECTED BY THE ENGINEER.

PRIOR TO PHASE II ROAD CONSTRUCTION, THE EXISTING TRAFFIC SIGNAL SHALL REMAIN IN OPERATION (WITH VIVDS) OR AS DIRECTED BY THE ENGINEER.

VIVDS CAMERA ASSEMBLY LOCATIONS SHALL BE AS DIRECTED BY THE ENGINEER.

TWO VIVDS CAMERAS SHALL BE USED ON LOOP 1604 APPROACHES TO PROVIDE HIGH SPEED DETECTION.

SIGNS AND SIGN MOUNTS SHALL BE FURNISHED BY THE CONTRACTOR AND SHALL BE SUBSIDIARY TO ITEM 681 5001.

CHANGE ORDER NO. 79

-REVISED RDWY GEOMETRICS AND LANE CONFIGURATION. REVISED WRK ZN CONTR & TEMP SIGNALS

-REPLACES SHEET 584A

STATE OF TEXAS
JEROME D. PAVLISKA
76075
REGISTERED PROFESSIONAL ENGINEER

Jerome D. Pavliska, P.E. 2/10/04
Jerome D. Pavliska, P.E. Date

CHANGE ORDER NO. 78

# TEMPORARY TRAFFIC SIGNAL INTERSECTION LAYOUT

## LOOP 1604 FRONTAGE RDS. AT F.M. 1957 (POTRANCO RD.)

©2004 Texas Department of Transportation

SCALE IN METERS

0 5 10 20

SCALE: 1:500

SHEET 2 OF 2

| FED. RD. DIV. NO. | FEDERAL AID PROJECT NO. | | SHEET NO. |
|---|---|---|---|
| 6 | NH 2000(704)Etc. | | 584B |
| STATE | DIST. | COUNTY | |
| TEXAS | SAT | BEXAR | |
| CONT. | SECT. | JOB | HIGHWAY NO. |
| 2452 | 01 | 036, Etc. | LOOP 1604 |

LEVELS DISPLAYED
1 2 3 4 5 6 7 8 9 10 11 12 13 14 15 16
17 18 19 20 21 22 23 24 25 26 27 28 29 30 31 32
33 34 35 36 37 38 39 40 41 42 43 44 45 46 47 48
49 50 51 52 53 54 55 56 57 58 59 60 61 62 63

ACC:

FILE: T:AO/DESIGN/LP1604FM471 90/CHG ORDER FILES/LP1604TRAFFIC CH OR.DGN

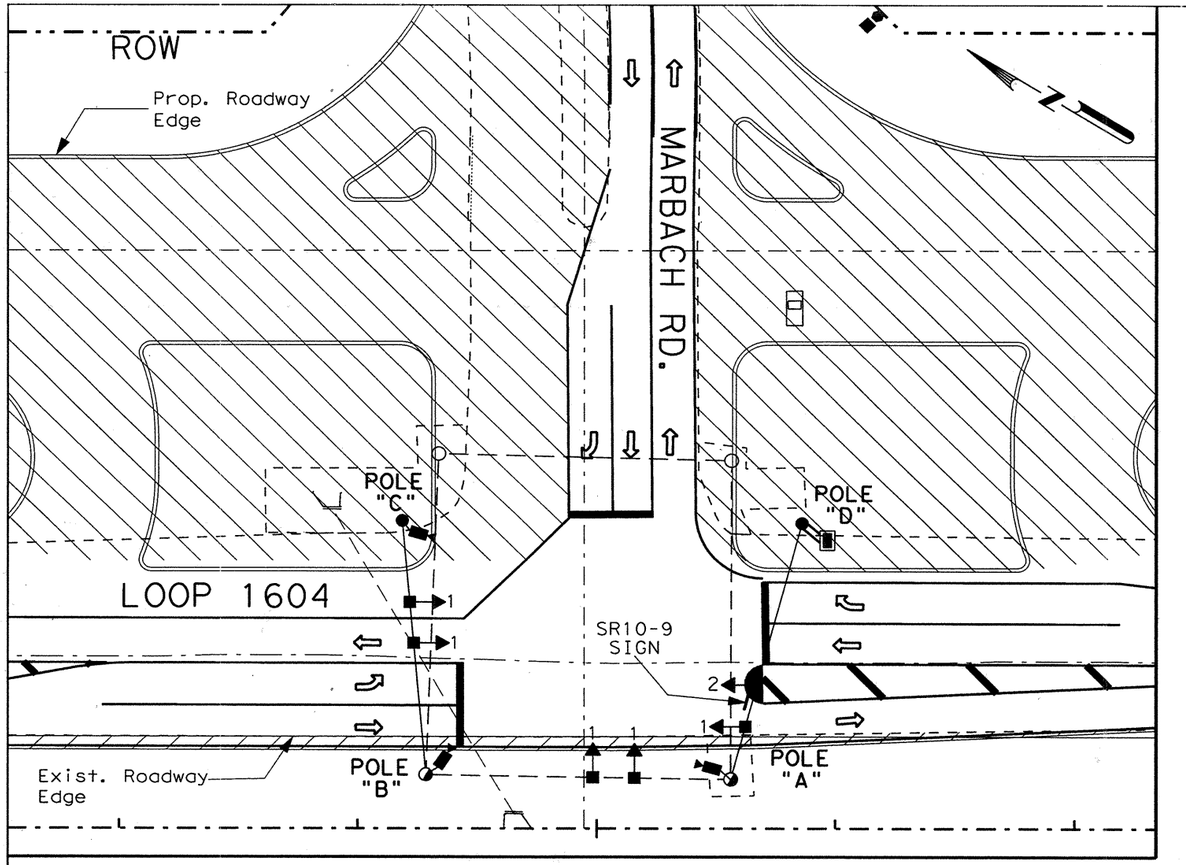


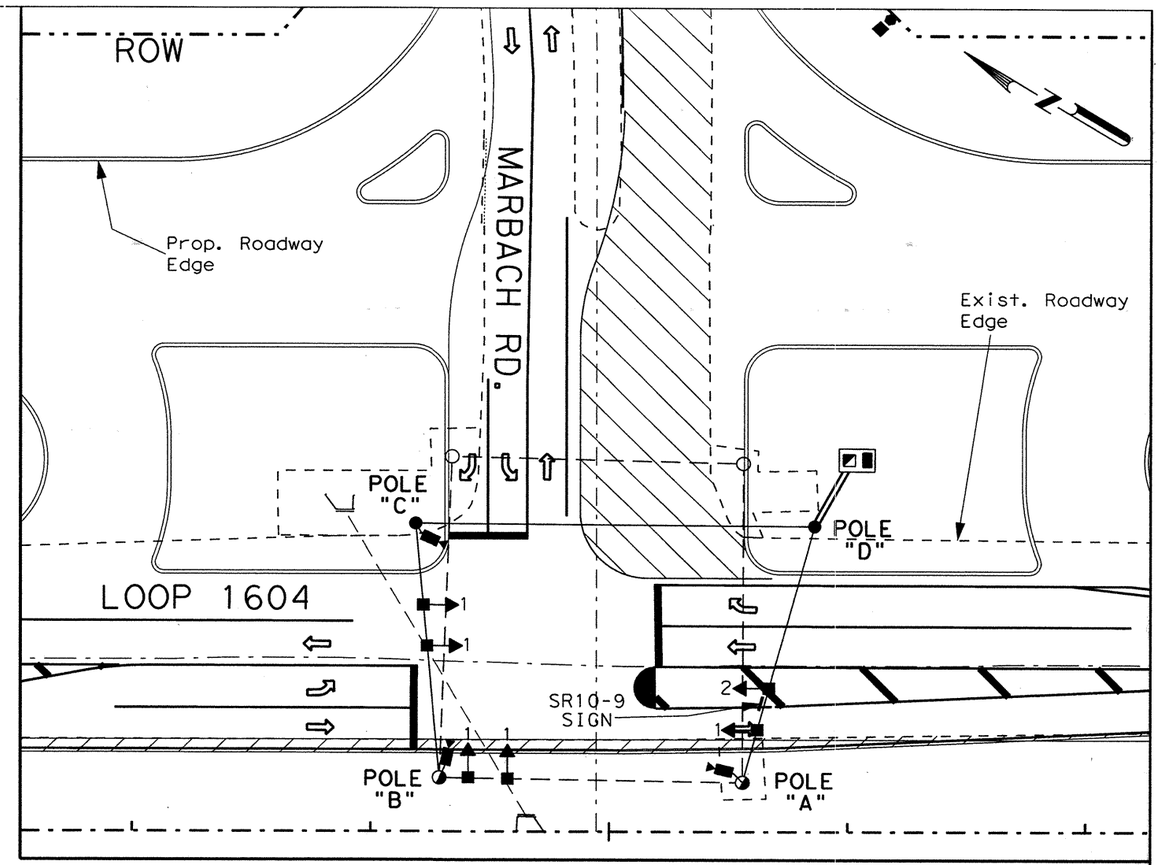


# CONSTRUCTION PHASE 2A
## Stage A

**NOTES:**

THE ENGINEER SHALL CONTACT MR. GILBERT MEIER TXDOT SIGNAL SHOP) AT 615-5975 96 HOURS PRIOR TO CONSTRUCTION PHASE AND PRIOR TO CONNECTING FIELD WIRING TO CONTROLLER.

CONTRACTOR SHALL CONNECT FIELD WIRING TO TEMPORARY CONTROLLER.

ALL DIMENSIONS SHOWN ARE IN METERS UNLESS SPECIFIED OTHERWISE.

CONTRACTOR SHALL BE RESPONSIBLE FOR ALL SIGNAL HEAD ADJUSTMENTS DURING EACH PHASE OF CONSTRUCTION. TO ACCOMODATE SIGNAL HEAD ADJUSTMENTS, THE CONTRACTOR SHALL ENSURE THAT ADDITIONAL SIGNAL CABLE IS PROVIDED FOR ALL APPROACHES.

PRIOR TO PHASE II ROAD CONSTRUCTION, THE EXISTING TRAFFIC SIGNAL SHALL REMAIN IN OPERATION(WITH VIVDS) OR AS DIRECTED BY THE ENGINEER.

EXISTING SIGNAL SPAN, HEADS AND CABLE FOR LOOP 1604 APPROACHES SHALL BE REMOVED AND RELOCATED AS DIRECTED BY THE ENGINEER.

VIVDS CAMERA ASSEMBLY LOCATIONS SHALL BE AS DIRECTED BY THE ENGINEER.

SCALE IN METERS

0 5 10 20

SCALE: 1:500

**LEGEND**

- PROP. TEMPORARY SIGNAL POLES WITH SPAN
- PROP. SIGNAL FACE
- PROP. SIGNAL CONTROLLER(TEMPORARY)
- PROP. ELECTRICAL SERVICE
- PROP. VIVDS CAMERA ASSEMBLY
- PROP. CONDUIT
- PROP. SIGNAL CONTROLLER, SLAB AND FOUNDATION(PERMANENT)
- EXIST. SIGNAL POLES AND SPAN TO REMAIN

**SIGNAL FACES**

300 mm SIGNAL SECTIONS

SIGNAL NO. 1

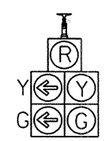


SIGNAL NO. 2

STATE OF TEXAS
ARNULFO RAMIREZ
56890
REGISTERED PROFESSIONAL ENGINEER

Arnulfo Ramirez, P.E.

8-29-00
Date


# CONSTRUCTION PHASE 2A
## Stage A


SHEET 1 OF 2

# TEMPORARY TRAFFIC SIGNAL INTERSECTION LAYOUT

## LOOP 1604 FRONTAGE RDS. AT MARBACH RD.

©2000 Texas Department of Transportation

| FED. RD. DIV. NO. | FEDERAL AID PROJECT NO. | | SHEET NO. |
|---|---|---|---|
| 6 | NH 2000(704),Etc. | | 585 |
| STATE | DIST. | COUNTY | |
| TEXAS | SAT | BEXAR | |
| CONT. | SECT. | JOB | HIGHWAY NO. |
| 2452 | 01 | 036,Etc. | LOOP 1604 |

.../loop1604/marbachtempsig.dgn Aug. 29, 2000 08:56:18

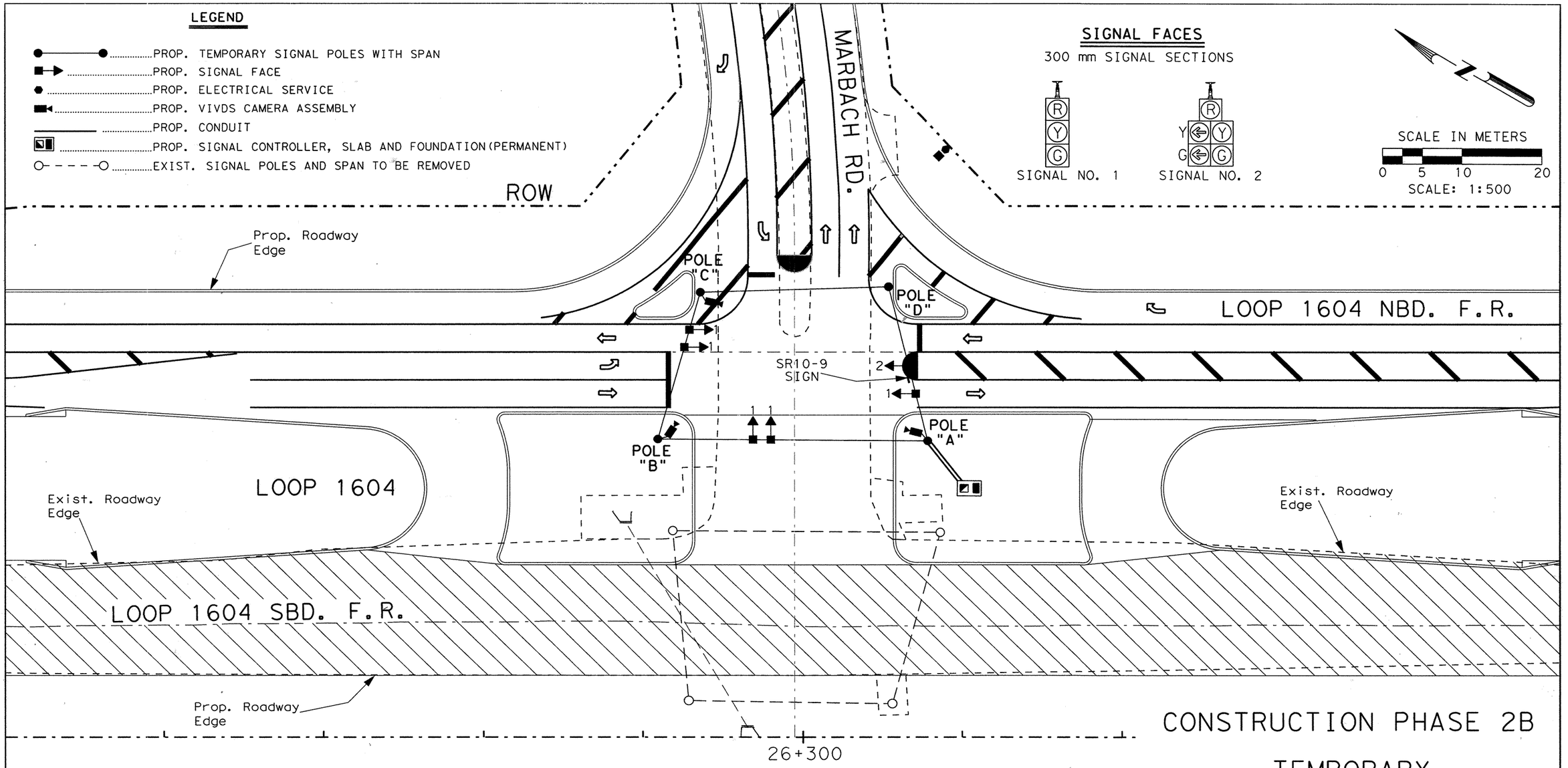


**NOTES:**

THE ENGINEER SHALL CONTACT MR. GILBERT MEIER TXDOT SIGNAL SHOP) AT 615-5975 96 HOURS PRIOR TO CONSTRUCTION PHASE AND PRIOR TO CONNECTING FIELD WIRING TO CONTROLLER.

CONTRACTOR SHALL CONNECT FIELD WIRING TO TEMPORARY CONTROLLER.

ALL DIMENSIONS SHOWN ARE IN METERS UNLESS SPECIFIED OTHERWISE.

VIVDS CAMERA ASSEMBLY LOCATIONS SHALL BE AS DIRECTED BY THE ENGINEER.

STATE OF TEXAS
ARNULFO RAMIREZ
56890
REGISTERED PROFESSIONAL ENGINEER

Arnulfo Ramirez, P.E. 8-29-00 Date

# CONSTRUCTION PHASE 2B

## TEMPORARY

## TRAFFIC SIGNAL INTERSECTION LAYOUT

## LOOP 1604 FRONTAGE RDS. AT MARBACH RD.

©2000 Texas Department of Transportation

SHEET 2 OF 2

| FED. RD. DIV. NO. | FEDERAL AID PROJECT NO. | | SHEET NO. |
|---|---|---|---|
| 6 | NH 2000(704), Etc. | | 586 |
| STATE | DIST. | COUNTY | |
| TEXAS | SAT | BEXAR | |
| CONT. | SECT. | JOB | HIGHWAY NO. |
| 2452 | 01 | 036, Etc. | LOOP 1604 |

LEGEND

- PROP. TEMPORARY SIGNAL POLES(TIMBER) WITH SPAN
- PROP. SIGNAL FACE
- PROP. ELECTRICAL SERVICE
- PROP. VIVDS CAMERA ASSEMBLY
- PROP. CONDUIT
- PROP. SIGNAL CONTROLLER, SLAB AND FOUNDATION(PERMANENT)
- EXIST. SIGNAL POLES AND SPAN TO BE REMOVED

SIGNAL FACES

300 mm SIGNAL SECTIONS

SIGNAL NO. 1 (R, Y, G)

SIGNAL NO. 2 (R, Y, G, Y, G)

SCALE IN METERS

0 5 10 20

SCALE: 1:500

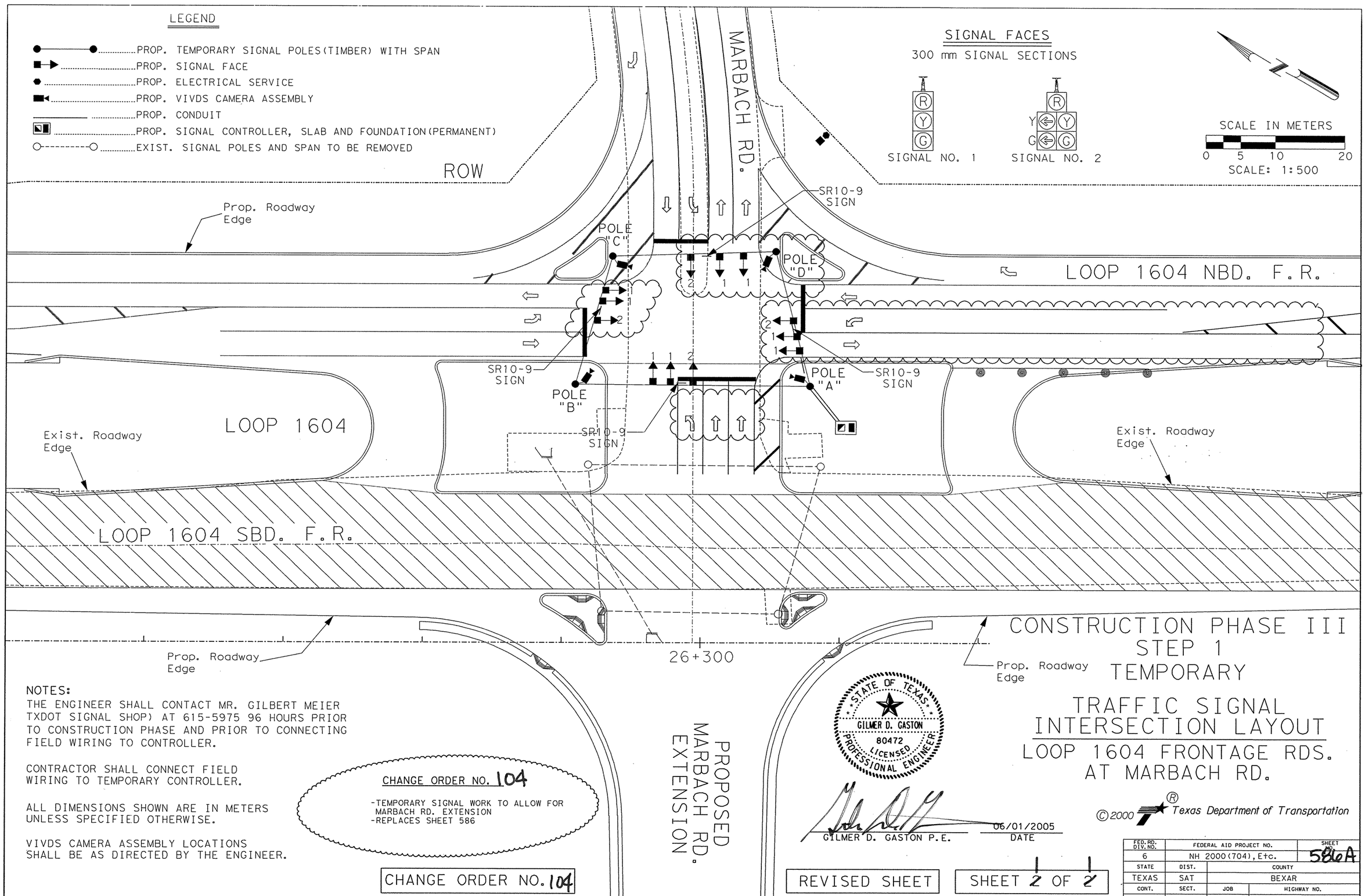


NOTES:

THE ENGINEER SHALL CONTACT MR. GILBERT MEIER TXDOT SIGNAL SHOP) AT 615-5975 96 HOURS PRIOR TO CONSTRUCTION PHASE AND PRIOR TO CONNECTING FIELD WIRING TO CONTROLLER.

CONTRACTOR SHALL CONNECT FIELD WIRING TO TEMPORARY CONTROLLER.

ALL DIMENSIONS SHOWN ARE IN METERS UNLESS SPECIFIED OTHERWISE.

VIVDS CAMERA ASSEMBLY LOCATIONS SHALL BE AS DIRECTED BY THE ENGINEER.

CHANGE ORDER NO. 104

-TEMPORARY SIGNAL WORK TO ALLOW FOR MARBACH RD. EXTENSION
-REPLACES SHEET 586

CHANGE ORDER NO. 104

PROPOSED MARBACH RD. EXTENSION

LEVELS DISPLAYED

| | 1 | 2 | 3 | 4 | 5 | 6 | 7 | 8 | 9 | 10 | 11 | 12 | 13 | 14 | 15 | 16 |
|---|---|---|---|---|---|---|---|---|---|---|---|---|---|---|---|---|
| 17 | 18 | 19 | 20 | 21 | 22 | 23 | 24 | 25 | 26 | 27 | 28 | 29 | 30 | 31 | 32 | 33 |
| 33 | 34 | 35 | 36 | 37 | 38 | 39 | 41 | 42 | 43 | 44 | 45 | 46 | 47 | 48 | | |
| 49 | 50 | 52 | 53 | 54 | 55 | 56 | 57 | 58 | 59 | 60 | 61 | 62 | 63 | 64 | | |

ACC:

FILE: .DGN

STATE OF TEXAS
GILMER D. GASTON
80472
LICENSED
PROFESSIONAL ENGINEER

GILMER D. GASTON P.E.

06/01/2005
DATE

CONSTRUCTION PHASE III
STEP 1
TEMPORARY

# TRAFFIC SIGNAL INTERSECTION LAYOUT

## LOOP 1604 FRONTAGE RDS. AT MARBACH RD.

©2000 Texas Department of Transportation

REVISED SHEET

SHEET 2 OF 2

| FED.RD. DIV.NO. | FEDERAL AID PROJECT NO. | | SHEET |
|---|---|---|---|
| 6 | NH 2000(704), Etc. | | 586A |
| STATE | DIST. | COUNTY | |
| TEXAS | SAT | BEXAR | |
| CONT. | SECT. | JOB | HIGHWAY NO. |
| 2452 | 01 | 036, Etc. | LOOP 1604 |

5-20-2005

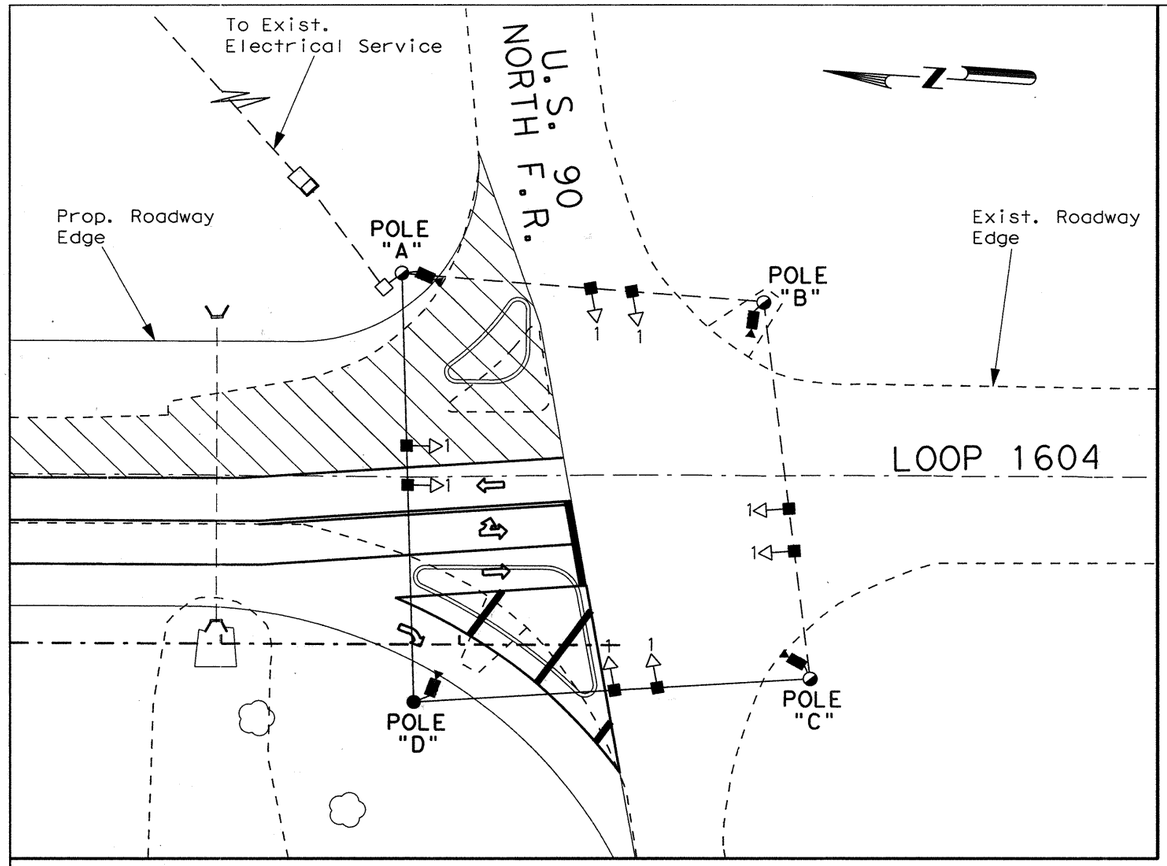


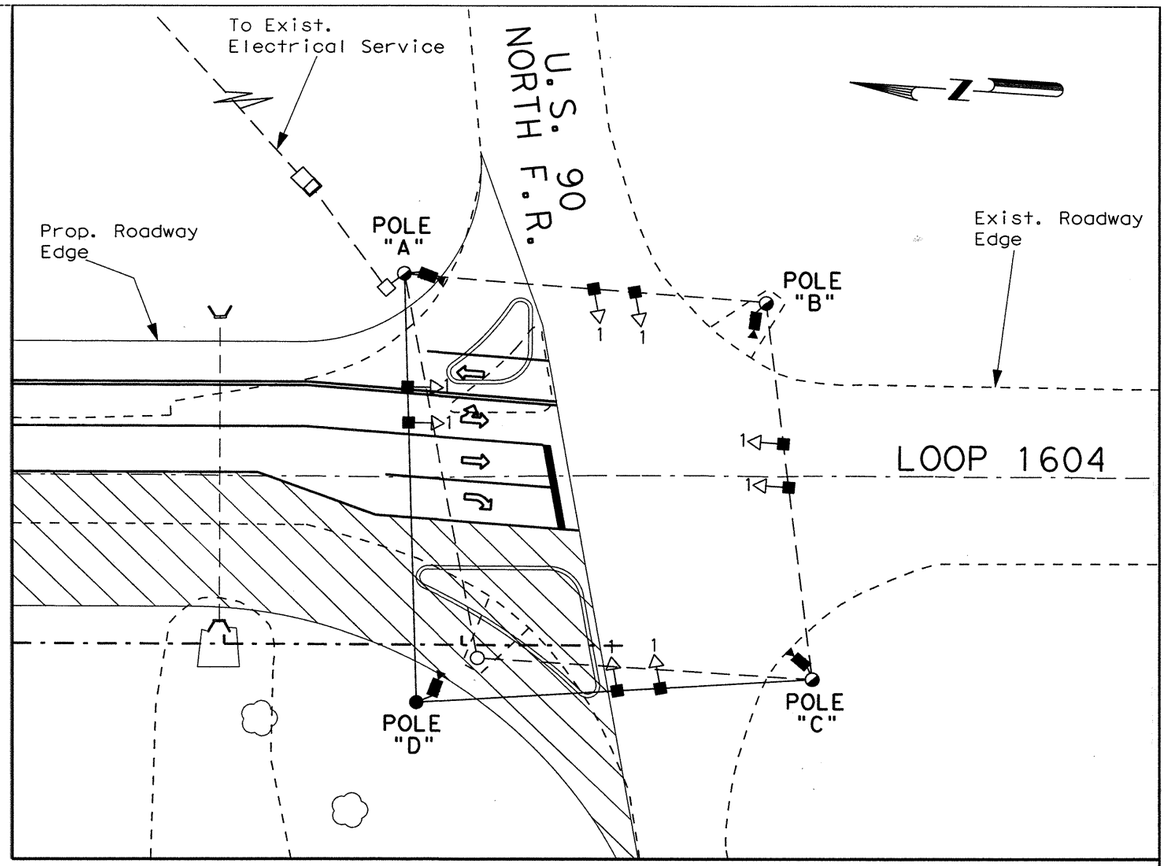


## CONSTRUCTION PHASE 2A

## CONSTRUCTION PHASE 2B

**NOTES:**

THE ENGINEER SHALL CONTACT MR. GILBERT MEIER TXDOT SIGNAL SHOP) AT 615-5975 96 HOURS PRIOR TO CONSTRUCTION PHASE AND PRIOR TO CONNECTING FIELD WIRING TO CONTROLLER.

CONTRACTOR SHALL CONNECT TEMPORARY FIELD WIRING TO EXISTING CONTROLLER.

ALL DIMENSIONS SHOWN ARE IN METERS UNLESS SPECIFIED OTHERWISE.

CONTRACTOR SHALL BE RESPONSIBLE FOR ALL SIGNAL HEAD ADJUSTMENTS DURING EACH PHASE OF CONSTRUCTION. TO ACCOMODATE SIGNAL HEAD ADJUSTMENTS, THE CONTRACTOR SHALL ENSURE THAT ADDITIONAL SIGNAL CABLE IS PROVIDED FOR ALL APPROACHES.

PRIOR TO PHASE 2B ROAD CONSTRUCTION, THE EXISTING TRAFFIC SIGNAL SHALL REMAIN IN OPERATION(WITH VIVDS) OR AS DIRECTED BY THE ENGINEER.

EXISTING SIGNAL SPAN, HEADS AND CABLE FOR LOOP 1604 APPROACHES SHALL BE REMOVED AND RELOCATED AS DIRECTED BY THE ENGINEER.

VIVDS CAMERA ASSEMBLY LOCATIONS SHALL BE AS DIRECTED BY THE ENGINEER.

**LEGEND**

- PROP. TEMPORARY SIGNAL POLES WITH SPAN
- RELOCATED SIGNAL FACE
- PROP. VIVDS CAMERA ASSEMBLY
- EXIST. SIGNAL CONTROLLER TO REMAIN
- EXIST. SIGNAL POLES AND SPAN TO REMAIN
- EXIST. GROUND BOX TO REMAIN
- EXIST. CONDUIT TO REMAIN
- EXIST. SIGNAL POLE AND SPAN TO BE REMOVED

**SIGNAL FACES**

300 mm SIGNAL SECTIONS

SIGNAL NO. 1
(EXIST.)

Arnulfo Ramirez, P.E. 8-29-00 Date

SCALE IN METERS

0 5 10 20

SCALE: 1:500

# TEMPORARY TRAFFIC SIGNAL INTERSECTION LAYOUT

## LOOP 1604 U.S. 90 NORTH FRONTAGE RD.

©2000 Texas Department of Transportation

| FED.RD. DIV.NO. | FEDERAL AID PROJECT NO. | | SHEET NO. |
|---|---|---|---|
| 6 | NH 2000(704),Etc. | | 587 |
| STATE | DIST. | COUNTY | |
| TEXAS | SAT | BEXAR | |
| CONT. | SECT. | JOB | HIGHWAY NO. |
| 2452 | 01 | 036,Etc. | LOOP 1604 |

Plotted on: 03/07/2003

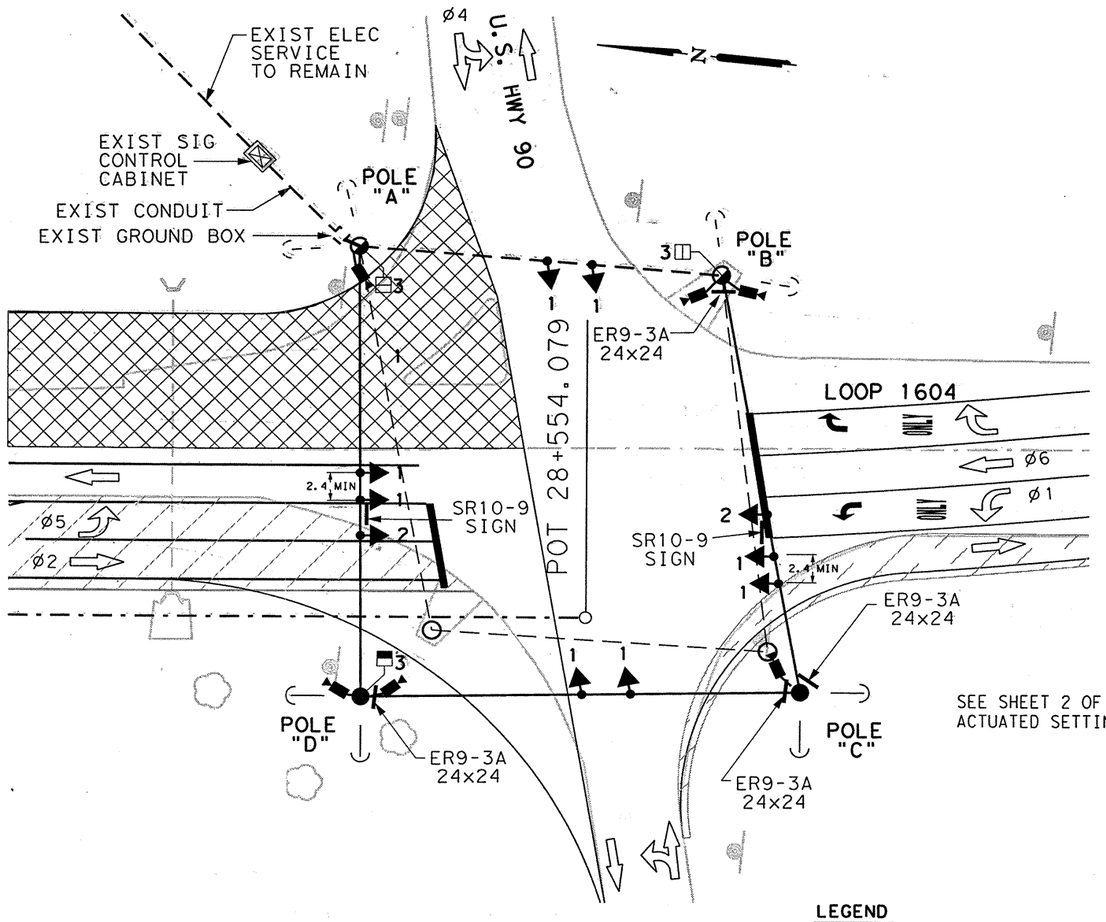


CONSTRUCTION PHASE 2A
STAGE A
STAGE B

SEE SHEET 2 OF 2 FOR GENERAL NOTES, ACTUATED SETTINGS AND LIST OF MATERIALS

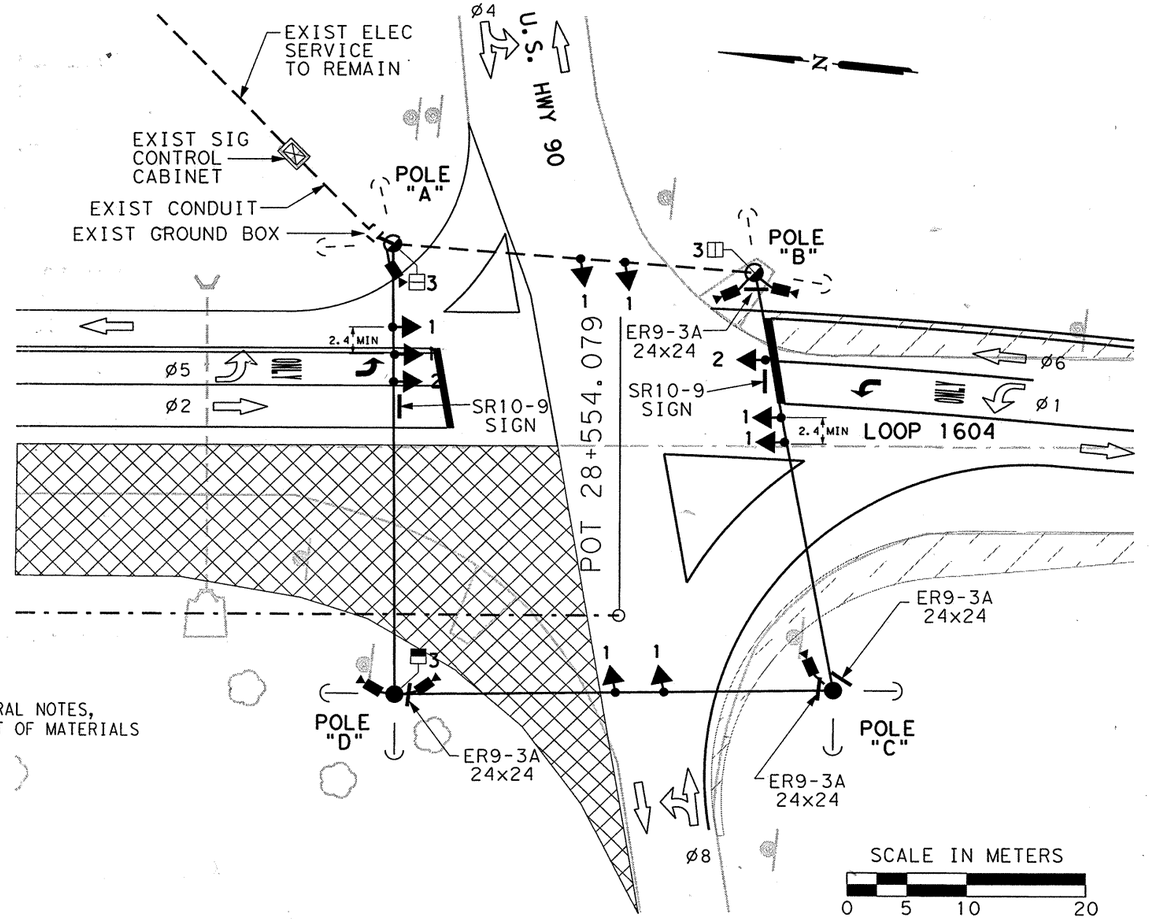


CONSTRUCTION PHASE 2B
STAGE A
STAGE B

SCALE IN METERS

0 5 10 20

SCALE: 1:500

## LEGEND

- PROP. TEMPORARY SIGNAL POLES (TIMBER) WITH SPAN
- PROP. SIGNAL FACE
- PROP. ELECTRICAL SERVICE
- PROP. VIVDS CAMERA ASSEMBLY
- PROP. CONDUIT
- EXIST. SIGNAL POLES AND SPAN TO BE REMOVED
- EXIST. SIGNAL POLES AND SPAN TO REMAIN
- CONSTRUCTION WORK ZONE AREA
- EXIST. SIGNAL CONTROL CABINET
- TRAFFIC DIRECTIONAL FLOW ARROW
- DOWN GUY
- EXIST GROUND BOX (TY A)
- EXIST DOWN GUY
- EXIST CONDUIT TO REMAIN
- EXIST ELECTRICAL SERVICE
- CONSTR PHASING DETOUR WIDENING
- (EXIST) (PROP) -- PEDESTRIAN SIGNAL & PUSHBUTTON

## SIGNAL PHASING DIAGRAM

| | | | |
|---|---|---|---|
| ø1 | ø2 | NOT USED ø3 | PED ø4 |
| ø5 | PED ø6 | NOT USED ø7 | ø8 |

## SIGNAL FACES

300 mm
SIGNAL SECTIONS

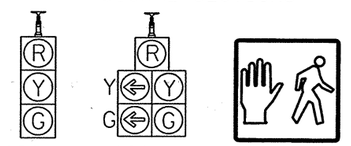


SIGNAL NO. 1 | SIGNAL NO. 2 | SIGNAL NO. 3

CHANGE ORDER NO. 78

-REVISED RDWY GEOMETRICS AND LANE CONFIGURATIONS
-REPLACES SHEET 587

# TEMPORARY TRAFFIC SIGNAL INTERSECTION LAYOUT

SHEET 1 OF 2

SCALE: 1:500

555 EAST RAMSEY SAN ANTONIO TEXAS 78216 PHONE (210)375-9000 FAX (210)375-9010
PAPE-DAWSON ENGINEERS CIVIL & ENVIRONMENTAL
K. STEPHEN BONNETTE 60928 LICENSED PROFESSIONAL ENGINEER STATE OF TEXAS
K. STEPHEN BONNETTE P.E. 03/07/2003 DATE

©2000 Texas Department of Transportation

LOOP 1604
LOOP 1604 FRONTAGE RDS.
AT U.S. HWY 90

| DN: | | PROJECT NO. | | SHEET NO. |
|---|---|---|---|---|
| CK DN: | | NH 2000(704), etc. | | 587A |
| DW: | | STATE | DIST. | COUNTY |
| | | TEXAS | SAT | BEXAR |
| CK DW: | CONT. | SECT. | JOB | HIGHWAY NO. |
| | 2452 | 01 | 036, etc. | LP 1604 |

Design Filename: p:\52\2011\design\civil\plansheets\traffic\signal\us90tempsig.dgn

Plotted on: 03/07/2003

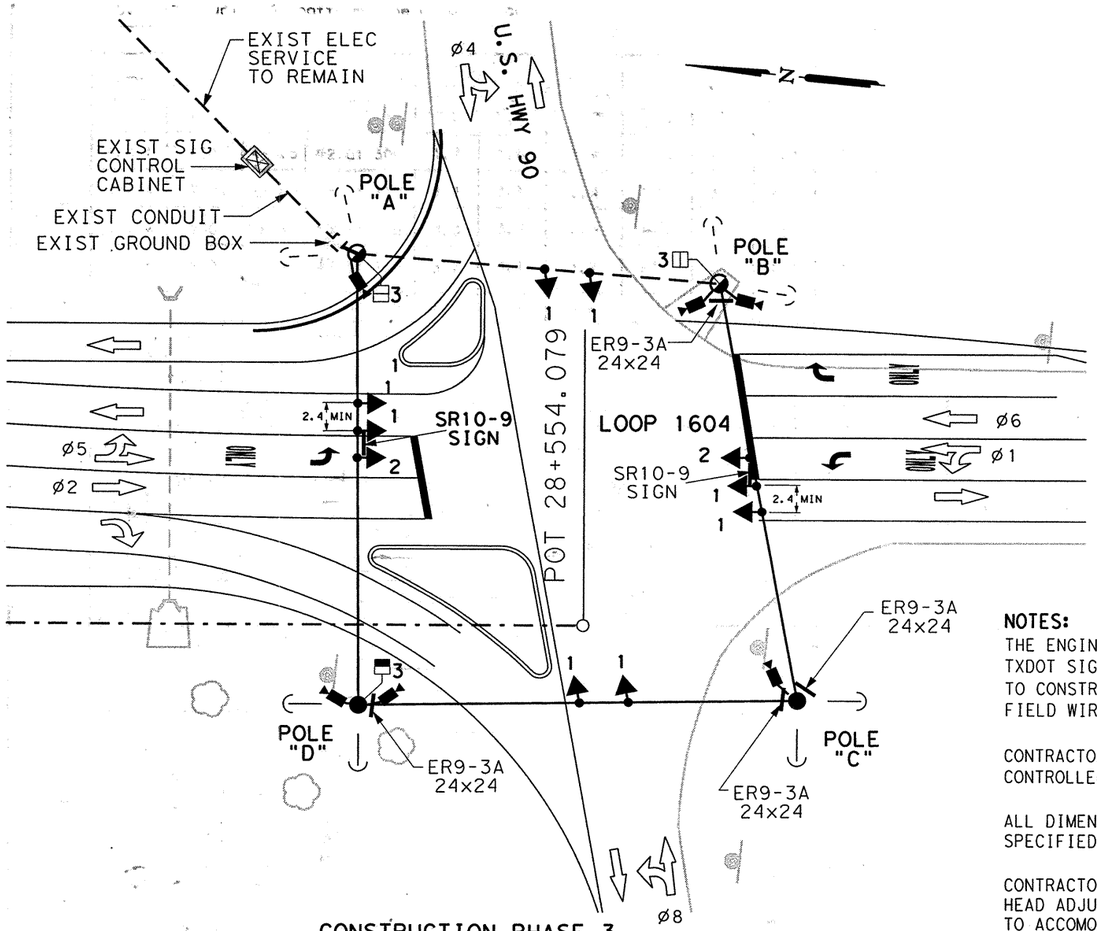


CONSTRUCTION PHASE 3

## LEGEND

- PROP. TEMPORARY SIGNAL POLES (TIMBER) WITH SPAN
- PROP. SIGNAL FACE
- PROP. ELECTRICAL SERVICE
- PROP. VIVDS CAMERA ASSEMBLY
- PROP. CONDUIT
- EXIST. SIGNAL POLES AND SPAN TO BE REMOVED
- EXIST. SIGNAL POLES AND SPAN TO REMAIN
- CONSTRUCTION WORK ZONE AREA
- EXIST. SIGNAL CONTROL CABINET
- TRAFFIC DIRECTIONAL FLOW ARROW
- DOWN GUY
- EXIST GROUND BOX (TY A)
- EXIST DOWN GUY
- EXIST CONDUIT TO REMAIN
- EXIST ELECTRICAL SERVICE
- (EXIST) (PROP) -- PEDESTRIAN SIGNAL & PUSHBUTTON

## SIGNAL PHASING DIAGRAM

| | | | |
|---|---|---|---|
| ø1 | ø2 | NOT USED ø3 | PED ø4 |
| ø5 | PED ø6 | NOT USED ø7 | ø8 |

## SIGNAL FACES

300 mm SIGNAL SECTIONS

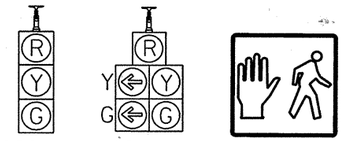


SIGNAL NO. 1 | SIGNAL NO. 2 | SIGNAL NO. 3

**NOTES:**

THE ENGINEER SHALL CONTACT MR. GILBERT MEIER TXDOT SIGNAL SHOP) AT 615-5975 96 HOURS PRIOR TO CONSTRUCTION PHASE AND PRIOR TO CONNECTING FIELD WIRING TO CONTROLLER.

CONTRACTOR SHALL CONNECT FIELD WIRING TO TEMPORARY CONTROLLER.

ALL DIMENSIONS SHOWN ARE IN METERS UNLESS SPECIFIED OTHERWISE.

CONTRACTOR SHALL BE RESPONSIBLE FOR ALL SIGNAL HEAD ADJUSTMENTS DURING EACH PHASE OF CONSTRUCTION TO ACCOMODATE SIGNAL HEAD ADJUSTMENTS, THE CONTRACTOR IS ADVISED TO ENSURE THAT ADDITIONAL SIGNAL CABLE IS PROVIDED FOR ALL APPROACHES.

PRIOR TO PHASE II ROAD CONSTRUCTION, THE EXISTING TRAFFIC SIGNAL SHALL REMAIN IN OPERATION(WITH VIVDS) OR AS DIRECTED BY THE ENGINEER.

EXISTING SIGNAL SPAN, HEADS AND CABLE FOR LOOP 1604 APPROACHES SHALL BE REMOVED AND RELOCATED AS DIRECTED BY THE ENGINEER.

VIVDS CAMERA ASSEMBLY LOCATIONS SHALL BE ADJUSTED AS DIRECTED BY THE ENGINEER. TWO VIVDS CAMERAS SHALL BE USED ON LOOP 1604 APPROACHES TO PROVIDE HIGH SPEED DETECTION. CONTRACTOR SHALL ADJUST VIVDS DETECTION ZONES AS REQUIRED FOR EACH SUBSEQUENT PHASE CHANGES AS DIRECTED BY THE ENGINEER.

PEDESTRIAN ACCESS TO POLE D SHALL BE MAINTAINED DURING ALL PHASES AND STAGES OF CONSTRUCTION.

△ CHANGE ORDER NO. 78

-REVISED RDWY GEOMETRICS AND LANE CONFIGURATIONS
-NEW SHEET

MATERIALS TO BE FURNISHED AND INSTALLED BY THE CONTRACTOR

| ITEM NO. | DESCRIPTION | UNIT | QUAN. |
|---|---|---|---|
| 625-500X | ZINC-COAT STL WIRE STRAND(9.52mm)** | M | 113 |
| 627-5001 | TIMBER POLE(CL 2) 40 FT** | EA | 2 |
| 681-5001 | TEMP TRAF SIGNALS FOR CONSTRUCTION | EA | 1 |
| 6959-5001 | VIVDS PROCESSOR SYSTEM* | EA | 1 |
| 6959-5002 | VIVDS CAMERA ASSEMBLY* | EA | 6 |
| 6959-5003 | VIVDS SET-UP SYSTEM* | EA | 1 |
| 6959-5005 | VIVDS COMMUNICATION CABLE(COAXIAL)* | M | 341 |
| 6959-5007 | VIVDS TEMPORARY | EA. | 1 |

* FOR CONTRACTOR'S INFORMATION ONLY. ITEMS SUBSIDIARY TO ITEM 6959-5007

**FOR CONTRACTOR'S INFORMATION ONLY. ITEM SUBSIDIARY TO ITEM 681-5001.

SIGNS AND SIGN MOUNTS SHALL BE FURNISHED BY THE CONTRACTOR AND SHALL BE SUBSIDIARY TO ITEM 681-5001

ITEMS INSTALLED DURING CONSTRUCTION PHASE 2A SHALL REMAIN THROUGHOUT CONSTRUCTION PHASE 2B & PHASE 3. NO ADDITIONAL ITEMS WILL BE REQUIRED. SIGNAL FACES SHALL RE MOVED TO ACCOMODATE VARYING LANE ALIGNMENTS AS DIRECTED BY THE ENGINEER.

ACTUATED SETTINGS

| PHASE | MIN. GREEN | VEH EXT | RECALL | MAX GREEN | CLEARANCE YELLOW | CLEARANCE ALL RED | WALK | FDW= PCT-Y-AR |
|---|---|---|---|---|---|---|---|---|
| 1 | 5 | 0.5 | OFF | 25 | 5.0 | 2.8 | N/A | N/A |
| 2 | 31 | 1.2 | PED & MIN | 80 | 5.0 | 1.3 | N/A | N/A |
| 3 | N/A | N/A | N/A | N/A | N/A | N/A | N/A | N/A |
| 4 | 15 | 2.0 | PED & MIN | 30 | 4.3 | 1.8 | 7 | 25 |
| 5 | 5 | 0.5 | OFF | 25 | 5.0 | 2.8 | N/A | N/A |
| 6 | 15 | 1.2 | MIN | 80 | 5.0 | 1.3 | 7 | 17 |
| 7 | N/A | N/A | N/A | N/A | N/A | N/A | N/A | N/A |
| 8 | 15 | 2.0 | MIN | 30 | 4.3 | 1.8 | N/A | N/A |

VIVDS HIGH SPEED DETECTION ZONES SHALL BE LOCATED AT THE FOLLOWING DISTANCES FROM THE STOP LINE, AS FOLLOWS:

LOOP 1604 (55 MPH) - 69, 98, AND 127 METERS
U.S. HWY 90 (35 MPH) - STOPLINES ONLY

ADDITIONALLY, 20 METERS OF STOPLINE DETECTION SHALL BE PROVIDED FOR EACH LEFT-TURN LANE AND 6 METERS OF VIVDS DETECTION ZONE SHALL BE PROVIDED FOR EACH THROUGH LANE.

CONSTRUCTION PHASES 2A, 2B & PHASE 3

# TEMPORARY TRAFFIC SIGNAL INTERSECTION LAYOUT

SHEET 2 OF 2

SCALE: 1:500

555 EAST RAMSEY SAN ANTONIO TEXAS 78216 PHONE (210)375-9000 FAX (210)375-9010
PAPE-DAWSON ENGINEERS
CIVIL & ENVIRONMENTAL
STATE OF TEXAS K. STEPHEN BONNETTE 60928 LICENSED PROFESSIONAL ENGINEER
K. STEPHEN BONNETTE P.E. 03/07/2003 DATE

©2000 Texas Department of Transportation

LOOP 1604
LOOP 1604 FRONTAGE RDS.
AT U.S. HWY 90

| DN: | | PROJECT NO. | | SHEET NO. |
|---|---|---|---|---|
| CK DN: | | NH 2000(704),etc. | | 587B |
| DW: | | STATE | DIST. | COUNTY |
| | | TEXAS | SAT | BEXAR |
| CK DW: | CONT. | SECT. | JOB | HIGHWAY NO. |
| | 2452 | 01 | 036,etc. | LP 1604 |

Design Filename: p:\52\2011\design\civil\plansheets\traffic\signal\us90tempsig.dgn

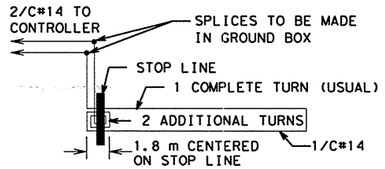


**APPROACH WITH LONG LOOP**

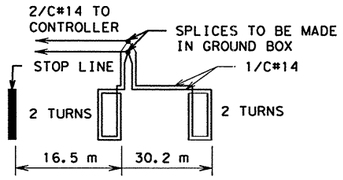


**APPROACH WITH 2 LOOPS**

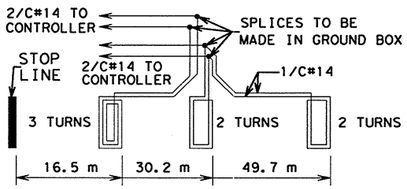


**APPROACH WITH 3 LOOPS**

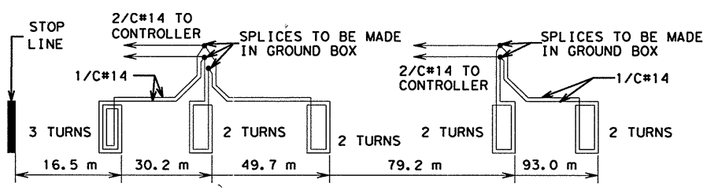


**APPROACH WITH 5 LOOPS (FRONTAGE ROAD APPROACH)**

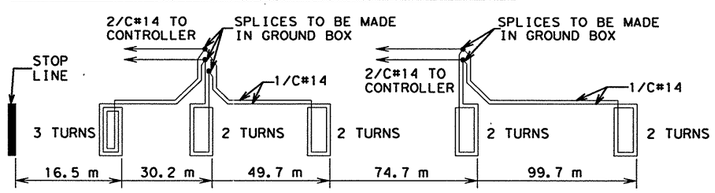


**APPROACH WITH 5 LOOPS**

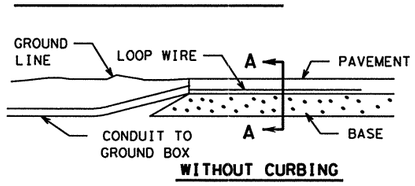


**WITHOUT CURBING**

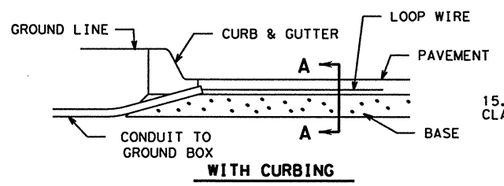


**WITH CURBING**

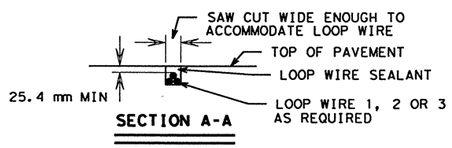


**SECTION A-A**

# TYPICAL LOOP DETECTOR DETAILS

## LOOP DETECTOR NOTES :

1. THE PAVEMENT CUT IS TO BE MADE WITH ANY EQUIPMENT THAT WILL PRODUCE A NEAT STRAIGHT LINE OF THE SIZE INDICATED. ALL LOOSE MATERIAL SHALL BE REMOVED. THE CUT SHALL BE CLEAN AND DRY WHEN THE WIRE AND THE SEALANT IS PLACED
2. WHERE MORE THAN ONE LOOP IS PLACED ON AN INTERSECTION APPROACH, THE WIRE FROM LOOP TO GROUND BOX SHALL NOT BE PLACED IN A SAW CUT WITH WIRE FROM OTHER LOOPS UNLESS OTHERWISE SHOWN IN THE PLANS
3. THE LOOP WIRE SHALL BE TWISTED A MINIMUM OF FIVE TURNS PER 305 mm FROM THE EDGE OF THE ROAD TO THE GROUND BOX AND NO SPLICES SHALL BE PERMITTED IN THE LOOP OR IN THE RUN TO THE PULL BOX
4. THE 1/C#14 LOOP WIRE SHALL BE SINGLE CONDUCTOR CROSSLINKED POLYETHYLENE (0.045) INSULATED WIRE, TYPE: USE, RHH, RHW,14 AWG STRANDED COPPER RATED AT 600 VOLTS
5. THE 2/C#14 LOOP CABLE SHALL BE TWO CONDUCTOR SHIELDED CABLE, 14 AWG, 19 X 27 STRANDED , 600 VOLT TINNED COPPER, POLYETHYLENE INSULATED, TWISTED PAIR, TWISTED A MINIMUM OF FIVE TWISTS PER FOOT, ALUMINUM-POLYESTER SHIELD, 16 AWG STRANDED TINNED COPPER DRAIN WIRE, CHROME VINYL JACKET, 100 % SHIELD COVERAGE THE LOOP CABLE SHALL BE CONTINUOUS WITHOUT SPLICES
6. THE LOOP WIRE SHALL BE SPLICED TO THE LOOP CABLE BY SOLDERING CONDUCTORS, SECURING WITH A WIRE NUT AND FULLY ENCAPSULATING INTO A WATER TIGHT COMMERCIAL SPLICING KIT
7. ALL LOOP WIRE PLACED IN A SAW CUT SHALL BE SEALED BY FULLY ENCAPSULATING IT WITH LOOP WIRE SEALANT
8. ALL LOOP WIRE AND LOOP CABLE SHALL BE TESTED. WIRE AND CABLE TESTING LESS THAN 50 MEGAOHMS INSULATION RESISTANCE AT 500 VOLTS SHALL BE REPLACED BY THE CONTRACTOR AT HIS EXPENSE. THIS TEST SHOULD BE MADE BEFORE, DURING AND AFTER EACH COMPLETE LOOP DETECTOR INSTALLATION
9. UPON COMPLETION OF THE COMPLETE LOOP DETECTOR SYSTEM, THE FINAL TEST WILL BE MADE AT ITS TERMINATION AT THE CONTROLLER BY THE ENGINEER. ANY LOOP DETECTOR NOT MEETING THE REQUIREMENTS OF NOTE 8 SHALL BE REPLACED BY THE CONTRACTOR AT THEIR EXPENSE. THE FINAL TEST SHALL BE MADE PRIOR TO THE FINAL MAT OF A. C. P.

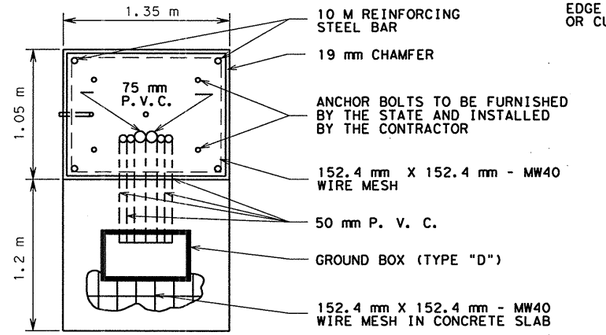


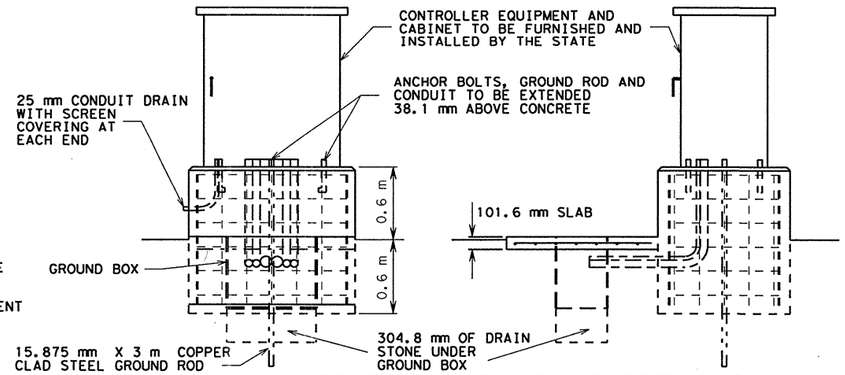


# TYPICAL CONTROLLER MOUNT DETAILS

## CONTROLLER MOUNT NOTES :

ALL WIRING TERMINATING IN THE CONTROLLER SHALL BE LABELLED IN A MANNER THAT CAN BE IDENTIFIED BY THE ENGINEER WHEN THE CONTROLLER IS INSTALLED

ONE 50 mm PVC SHALL REMAIN EMPTY FOR FUTURE USE

CLASS "A" CONCRETE SHALL BE USED FOR CONTROLLER FOUNDATION AND SLAB

CONCRETE SHALL BE TESTED AS MISCELLANEOUS CONCRETE

ALL MATERIALS AND LABOR TO INSTALL THE CONTROLLER FOUNDATION SHALL BE CONSIDERED SUBSIDIARY TO BID ITEM 656

CONTROLLER FOUNDATION MAY BE ALTERED TO ACCOMODATE FIELD CONDITIONS AS DIRECTED BY THE ENGINEER.

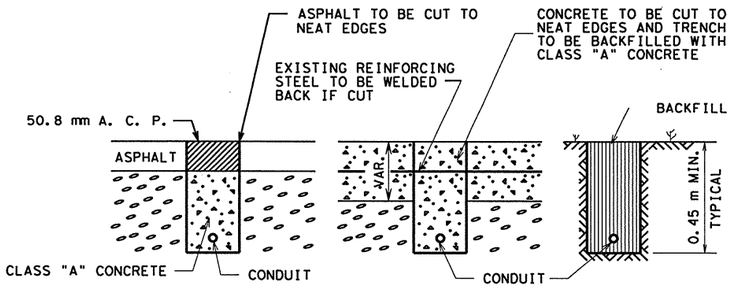


**ASPHALT PAVEMENT** **CONCRETE PAVEMENT** **NATURAL GROUND**

# TRENCH DETAILS

CONCRETE TO BE TESTED AS MISCELLANEOUS CONCRETE
WIDTH OF TRENCH SHALL BE WIDE ENOUGH TO ACCOMODATE CONDUIT

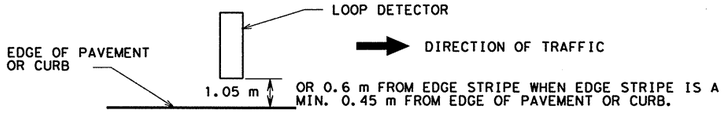


# LOOP DETECTOR PLACEMENT

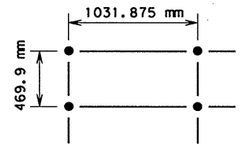


**ANCHOR BOLT PATTERN**

# LOOP DETECTOR CONTROLLER FOUNDATION AND CONDUIT TRENCH DETAILS

## SAN ANTONIO DISTRICT STANDARD METRIC

© 2000 Texas Department of Transportation

| FED. RD. DIV. NO. | FEDERAL AID PROJECT NO. | | SHEET NO. |
|---|---|---|---|
| 6 | NH 2000 (704), etc. | | 588 |
| STATE | DIST. | COUNTY | |
| TEXAS | SAT | BEXAR | |
| CONT. | SECT. | JOB | HIGHWAY NO. |
| 2452 | 01 | 036, etc | LOOP 1604 |

REV. AUG. 1999
OCTOBER, 1995

LEVELS DI: 1 2 3 4 5 6 7 8 9 10 11 12 13 14 15 16 17 18 19 20 21 22 23 24 25 26 27 28 29 30 31 32 33 34 35 36 37 38 39 40 41 42 43 44 45 46 47 48 49 50 51 52 53 54 55 56 57 58 59 60 61 62 63 64 ACC: FILE: .DGN

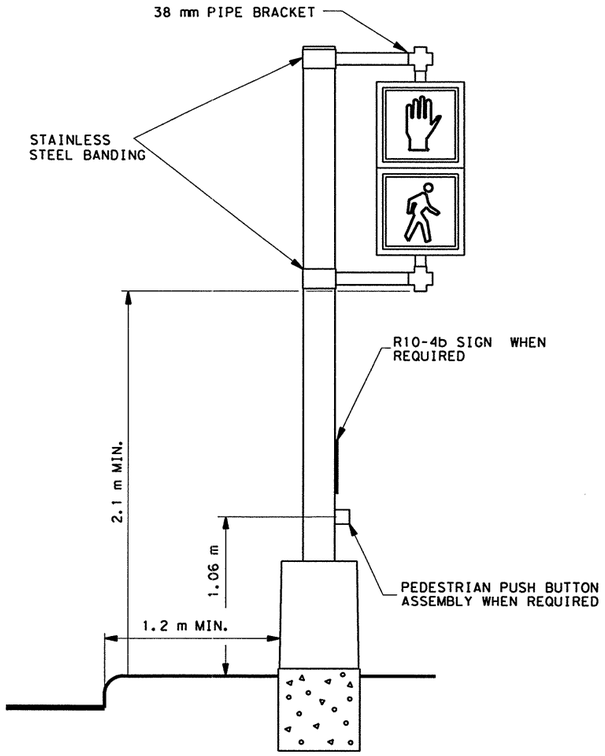


## PEDESTAL SIGNAL POLE ASSEMBLY

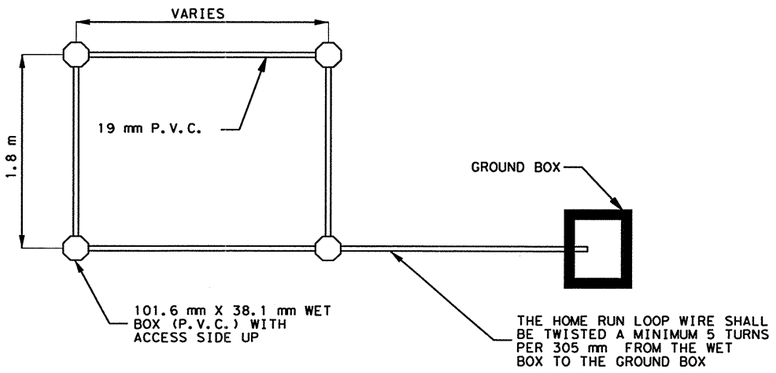


NOTES:

THE CONTRACTOR SHALL INSTALL CONDUIT ENCASED LOOPS AT THE LOCATIONS SHOWN ON THE PLANS USING 19.1 mm DIAMETER PVC SCHEDULE 40 OR AT NO ADDITIONAL COST 25.4 mm DIAMETER PVC SCHEDULE 80.

LOOP LOCATIONS MAY BE STAGGERED SLIGHTLY (152.4 mm) TO ACCOMODATE HOME RUN PLACEMENT.

INDIVIDUAL HOME RUN CONDUITS SHALL BE EXTENED TO THE GROUND BOX SHOWN ON THE PLANS FOR EACH LOOP INSTALLED.

THE NUMBER OF LOOP WIRE TURNS SHALL BE AS DETAILED IN THE TYPICAL LOOP DETECTOR DETAILS.

## CONDUIT ENCASED LOOPS

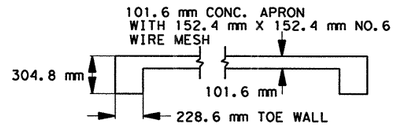


## CONCRETE ACCESS PAD DETAILS

THE FLEX BASE CUSHION UNDER ALL SIDEWALKS, WHEELCHAIR RAMPS, ACCESS PADS AND DIRECTIONAL ISLANDS MAY BE OF ANY TYPE AND GRADE APPROVED BY THE ENGINEER.

THE FLEX BASE WILL BE SPRINKLED AND ROLLED/TAMPED AS APPROVED BY THE ENGINEER.

FURNISHING AND PLACING THE BASE CUSHION WILL BE SUBSIDIARY TO THE VARIOUS BID ITEMS IN THIS CONTRACT.

CLASS "B" CONCRETE SHALL BE PLACED AS SHOWN IN THE DETAILS AND AS APPROVED BY THE ENGINEER.

CURB, IF REQUIRED, SHALL BE TYPE II MONO AS SHOWN ON STATE STANDARD SHEET CCCG-95(M).

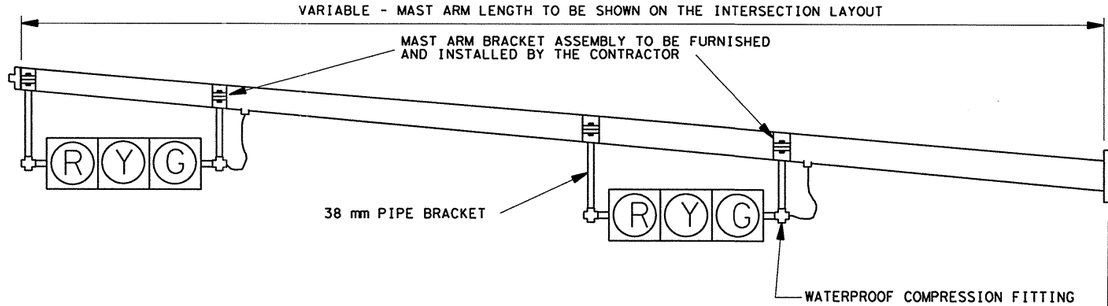


**NOTES :**

1. SIGNAL POLES AND MAST ARMS WILL BE FURNISHED AND INSTALLED BY THE CONTRACTOR .
2. THE POLES WILL BE FURNISHED WITH A HANDHOLE AND COVER . THE CONTRACTOR SHALL FURNISH AND INSTALL ALL TERMINAL BLOCKS INSIDE THE HANDHOLES. THE TERMINAL BLOCKS AND MOUNTING PROCEDURES SHALL BE AS APPROVED BY THE ENGINEER .
3. AT THE LOCATION SHOWN, PEDESTRIAN SIGNAL HEADS SHALL BE INSTALLED ON PEDESTAL POLES FURNISHED BY THE CONTRACTOR .
4. SIGNAL HEADS SHALL BE MOUNTED IN A LEVEL POSITION AND SHALL BE MOUNTED AT A MINIMUM HEIGHT OF 5.1 m FROM THE ROADWAY OR AS DIRECTED BY THE ENGINEER.

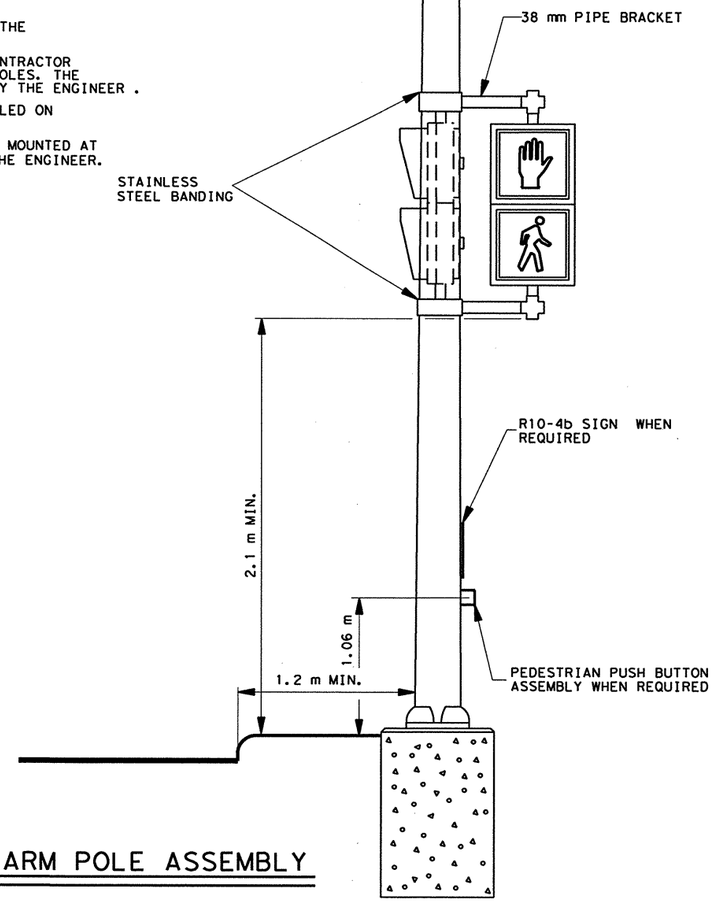


## MAST ARM POLE ASSEMBLY

# MAST ARM POLE ELEVATION DETAILS

## SAN ANTONIO DISTRICT STANDARD

© 2000 Texas Department of Transportation

METRIC

| FED. RD. DIV. NO. | FEDERAL AID PROJECT NO. | | SHEET NO. |
|---|---|---|---|
| 6 | NH 2000 (704), etc. | | 589 |
| STATE | DIST. | COUNTY | |
| TEXAS | SAT | BEXAR | |
| CONT. | SECT. | JOB | HIGHWAY NO. |
| 2452 | 01 | 036, etc | LOOP 1604 |

LEVELS DI: 1 2 3 4 5 6 7 8 9 10 11 12 13 14 15 16 17 18 19 20 21 22 23 24 25 26 27 28 29 30 31 32 33 34 35 36 37 38 39 40 41 42 43 44 45 46 47 48 49 50 51 52 53 54 55 56 57 58 59 60 61 62 63 64 ACC: FILE: .DGN

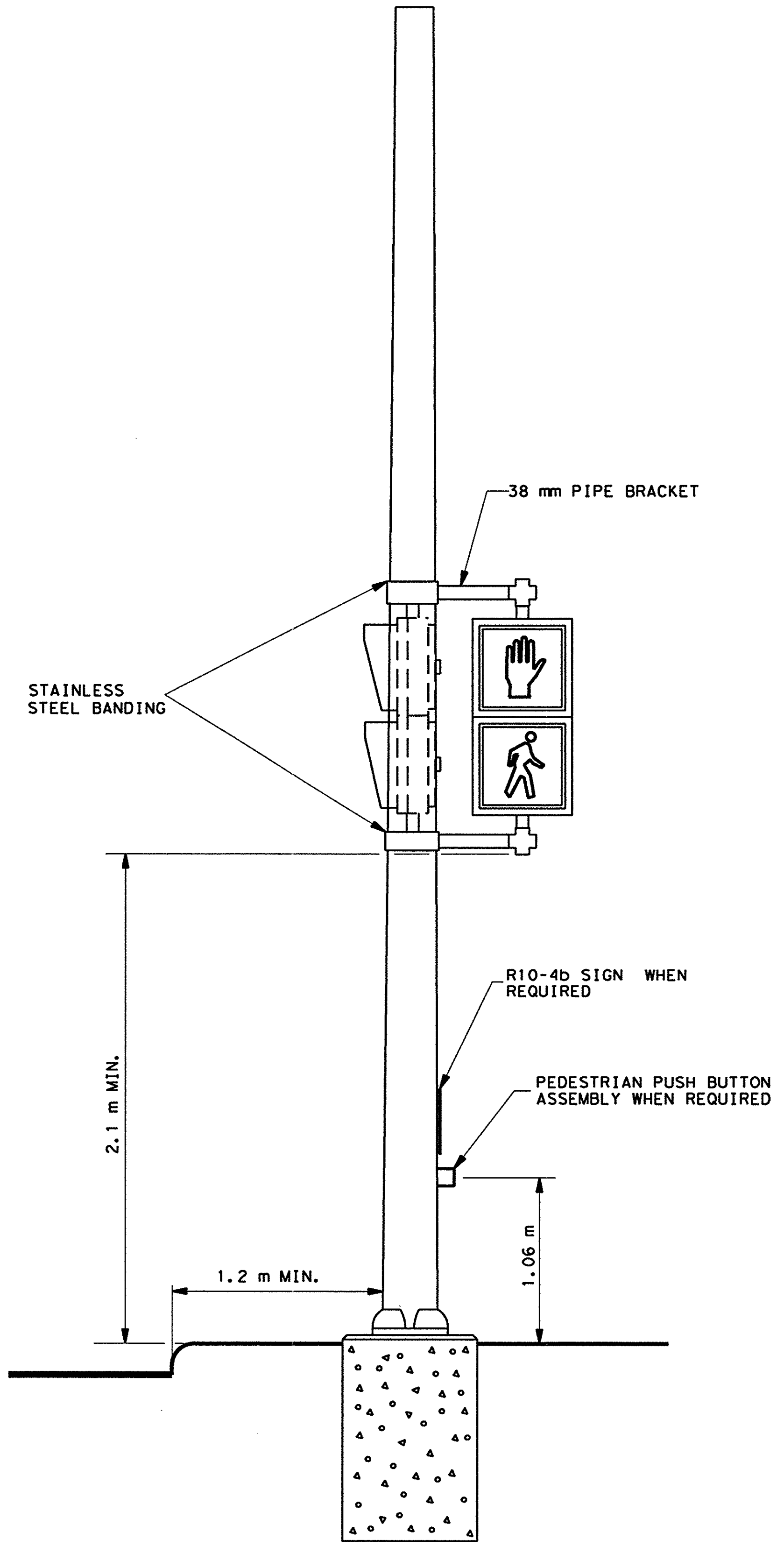


## STEEL STRAIN POLE ASSEMBLY

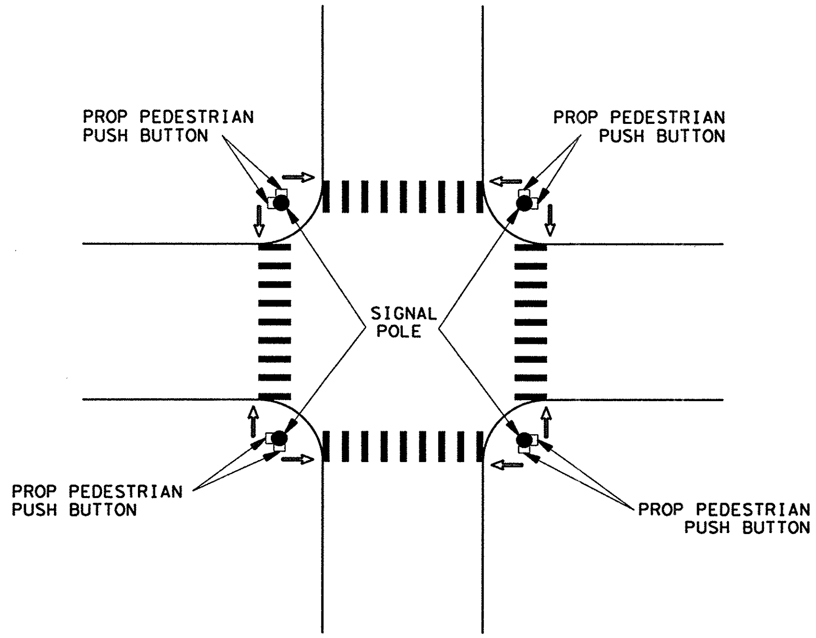


## TYPICAL PED PUSH BUTTON LOCATION

THE ENGINEER SHALL VERIFY ALL PEDESTRIAN SIGNAL AND PEDESTRIAN PUSH BUTTON LOCATIONS PRIOR TO THEIR INSTALLATION.

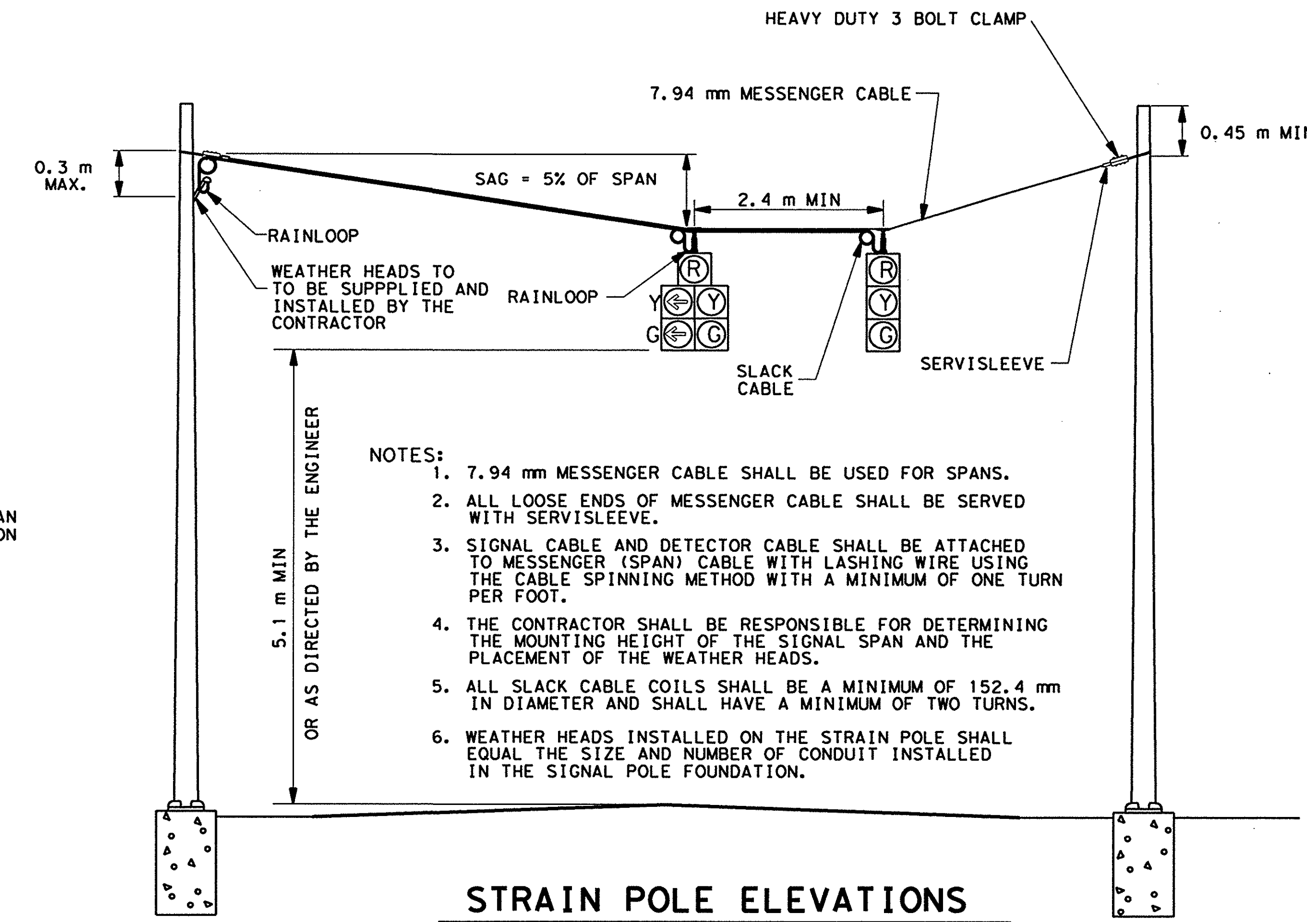


NOTES:
1. 7.94 mm MESSENGER CABLE SHALL BE USED FOR SPANS.
2. ALL LOOSE ENDS OF MESSENGER CABLE SHALL BE SERVED WITH SERVISLEEVE.
3. SIGNAL CABLE AND DETECTOR CABLE SHALL BE ATTACHED TO MESSENGER (SPAN) CABLE WITH LASHING WIRE USING THE CABLE SPINNING METHOD WITH A MINIMUM OF ONE TURN PER FOOT.
4. THE CONTRACTOR SHALL BE RESPONSIBLE FOR DETERMINING THE MOUNTING HEIGHT OF THE SIGNAL SPAN AND THE PLACEMENT OF THE WEATHER HEADS.
5. ALL SLACK CABLE COILS SHALL BE A MINIMUM OF 152.4 mm IN DIAMETER AND SHALL HAVE A MINIMUM OF TWO TURNS.
6. WEATHER HEADS INSTALLED ON THE STRAIN POLE SHALL EQUAL THE SIZE AND NUMBER OF CONDUIT INSTALLED IN THE SIGNAL POLE FOUNDATION.

## STRAIN POLE ELEVATIONS
## VERTICAL SIGNALS

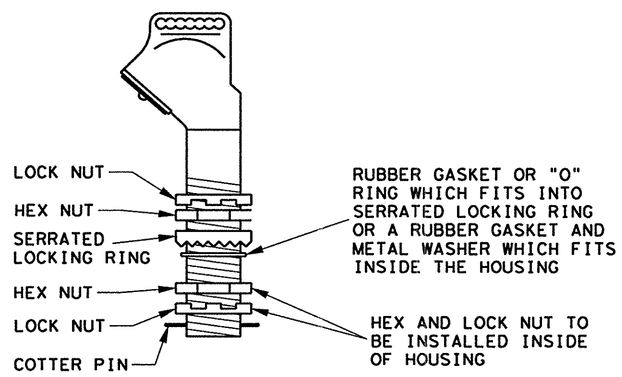


## WIRE ENTRANCE DETAILS

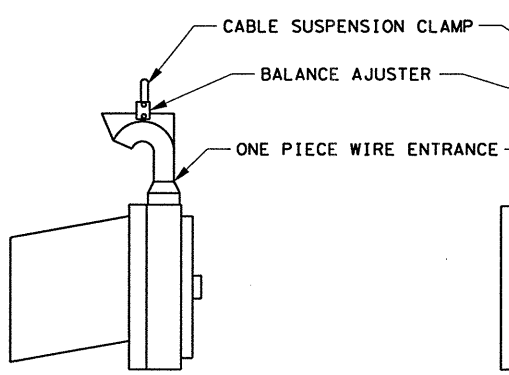


## TYPICAL SPAN WIRE CLAMP ASSEMBLY

NOTES:
1. THE WIRE OUTLET, BALANCE ADJUSTER, HUB AND SPAN WIRE CLAMP IS A TYPICAL DESIGN LABELING SPECIFIC ITEMS REQUIRED. OTHER WIRE OUTLETS BALANCE AJUSTERS, HUBS, AND SPAN WIRE CLAMPS OF SIMILAR DESIGN PROVIDING THE ITEMS LABELED WILL BE ACCEPTABLE AS APPROVED BY THE ENGINEER.
2. ANY OPEN END OF AN ASSEMBLED SIGNAL HOUSING SHALL BE PLUGGED WITH AN ORNAMENTAL CAP AND GASKET.
3. ALLEN SET SCREWS AND OTHER TYPES OF LOCKING OR SET SCREWS WILL NOT BE PERMITTED IN HEX NUTS SIGNAL HEAD HUBS, AND CROSS CONNECTION FITTINGS, NOR WILL HOLES BE PERMITTED FOR THESE SCREWS.
4. BALANCE ADJUSTERS WILL BE REQUIRED FOR ALL SIGNALS.

# STRAIN POLE ELEVATION DETAILS

SAN ANTONIO DISTRICT STANDARD

METRIC

© 2000 Texas Department of Transportation

| FED. RD. DIV. NO. | FEDERAL AID PROJECT NO. | | SHEET NO. |
|---|---|---|---|
| 6 | NH 2000 (704), etc. | | 590 |
| STATE | DIST. | COUNTY | |
| TEXAS | SAT | BEXAR | |
| CONT. | SECT. | JOB | HIGHWAY NO. |
| 2452 | 01 | 036, etc | LOOP 1604 |

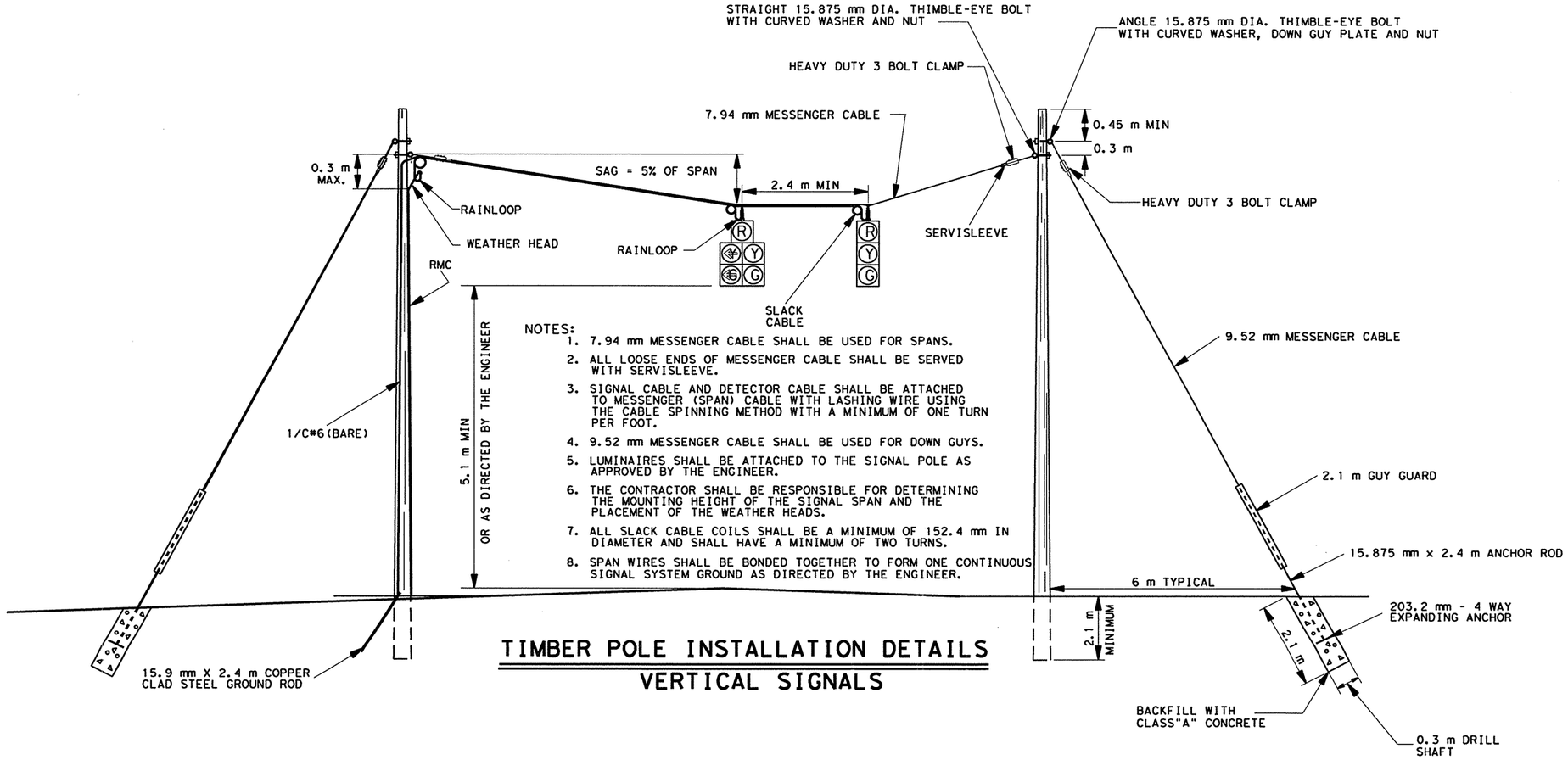


NOTES:

1. 7.94 mm MESSENGER CABLE SHALL BE USED FOR SPANS.
2. ALL LOOSE ENDS OF MESSENGER CABLE SHALL BE SERVED WITH SERVISLEEVE.
3. SIGNAL CABLE AND DETECTOR CABLE SHALL BE ATTACHED TO MESSENGER (SPAN) CABLE WITH LASHING WIRE USING THE CABLE SPINNING METHOD WITH A MINIMUM OF ONE TURN PER FOOT.
4. 9.52 mm MESSENGER CABLE SHALL BE USED FOR DOWN GUYS.
5. LUMINAIRES SHALL BE ATTACHED TO THE SIGNAL POLE AS APPROVED BY THE ENGINEER.
6. THE CONTRACTOR SHALL BE RESPONSIBLE FOR DETERMINING THE MOUNTING HEIGHT OF THE SIGNAL SPAN AND THE PLACEMENT OF THE WEATHER HEADS.
7. ALL SLACK CABLE COILS SHALL BE A MINIMUM OF 152.4 mm IN DIAMETER AND SHALL HAVE A MINIMUM OF TWO TURNS.
8. SPAN WIRES SHALL BE BONDED TOGETHER TO FORM ONE CONTINUOUS SIGNAL SYSTEM GROUND AS DIRECTED BY THE ENGINEER.

## TIMBER POLE INSTALLATION DETAILS
## VERTICAL SIGNALS

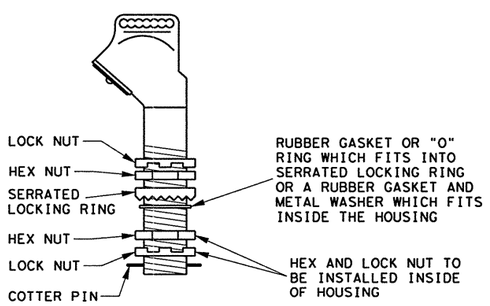


## WIRE ENTRANCE DETAILS

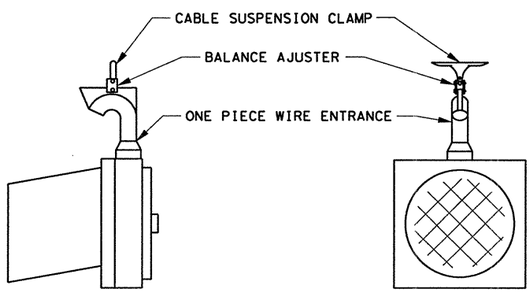


## TYPICAL SPAN WIRE CLAMP ASSEMBLY

NOTES:

1. THE WIRE OUTLET, BALANCE ADJUSTER, HUB AND SPAN WIRE CLAMP IS A TYPICAL DESIGN LABELING SPECIFIC ITEMS REQUIRED. OTHER WIRE OUTLETS BALANCE AJUSTERS, HUBS, AND SPAN WIRE CLAMPS OF SIMILAR DESIGN PROVIDING THE ITEMS LABELED WILL BE ACCEPTABLE AS APPROVED BY THE ENGINEER.
2. ANY OPEN END OF AN ASSEMBLED SIGNAL HOUSING SHALL BE PLUGGED WITH AN ORNAMENTAL CAP AND GASKET.
3. ALLEN SET SCREWS AND OTHER TYPES OF LOCKING OR SET SCREWS WILL NOT BE PERMITTED IN HEX NUTS SIGNAL HEAD HUBS, AND CROSS CONNECTION FITTINGS, NOR WILL HOLES BE PERMITTED FOR THESE SCREWS.
4. BALANCE ADJUSTERS WILL BE REQUIRED FOR ALL SIGNALS.

# TIMBER POLE ELEVATION DETAILS
## SAN ANTONIO DISTRICT STANDARD METRIC

© 2000 Texas Department of Transportation

| FED. RD. DIV. NO. | FEDERAL AID PROJECT NO. | | SHEET NO. |
|---|---|---|---|
| 6 | NH 2000 (704), etc. | | 591 |
| STATE | DIST. | COUNTY | |
| TEXAS | SAT | BEXAR | |
| CONT. | SECT. | JOB | HIGHWAY NO. |
| 2452 | 01 | 036, etc | LOOP 1604 |

LEVELS DIL
1 2 3 4 5 6 7 8 9 11 12 13 15 16
17 18 19 20 21 22 23 24 25 26 27 28 29 30 31 32
33 34 35 36 37 38 39 40 41 42 43 44 45 46 47 48
49 50 51 52 53 54 55 56 57 58 59 60 61 62 63 64
ACC:
FILE: .DGN

DISCLAIMER
The use of this standard is governed by the "Texas Engineering Practice Act". No warranty of any kind is made by TxDOT for any purpose whatsoever. TxDOT assumes no responsibility for the conversion of this standard to other formats or for incorrect results or damages resulting from its use.

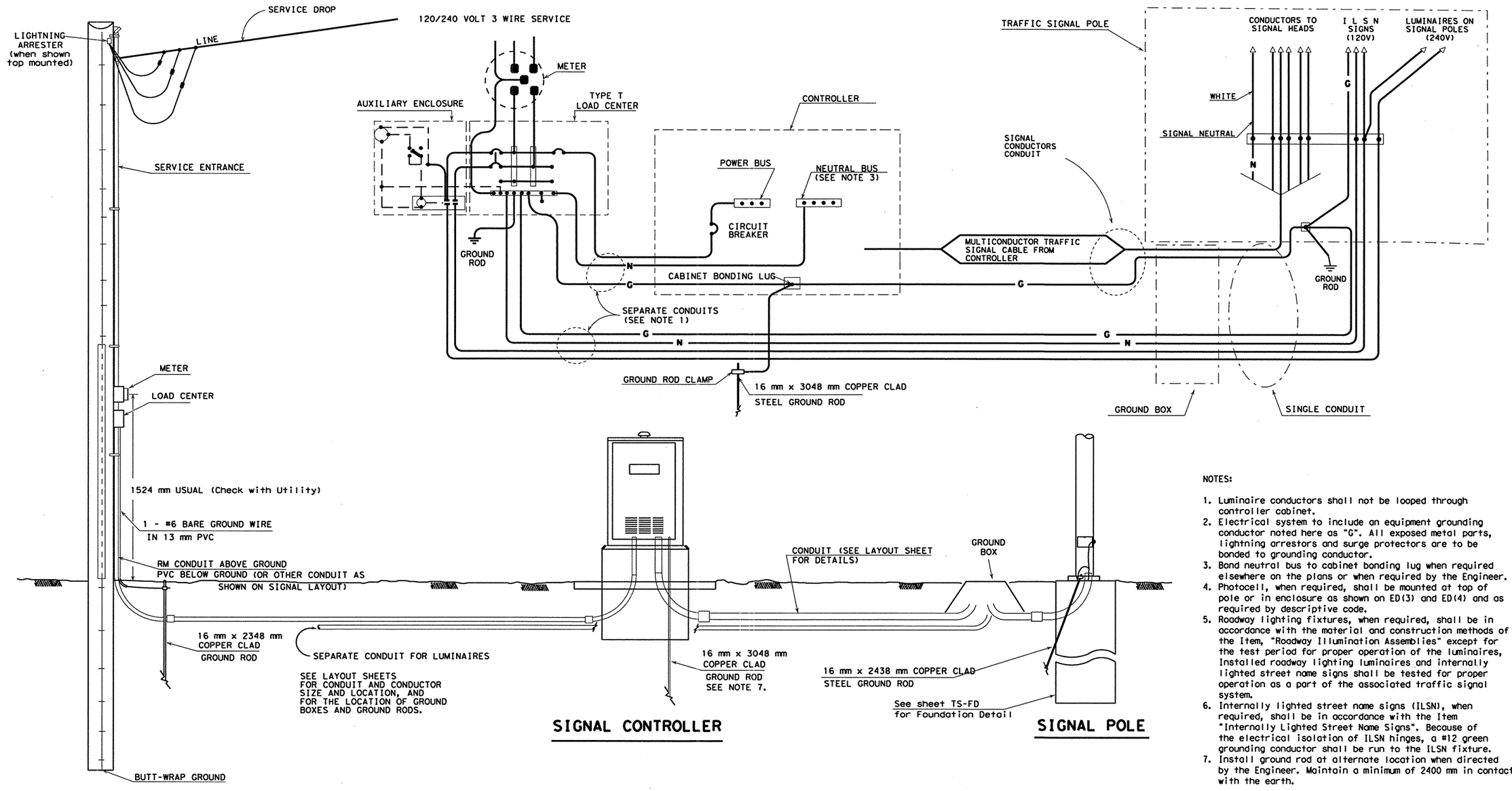


## ELECTRICAL SERVICE

(TYPE T TIMBER POLE SHOWN AS EXAMPLE, SEE ELECTRICAL DETAILS, LAYOUT SHEETS, AND ELECTRICAL SERVICE DATA SHEET FOR SERVICE REQUIRED AND FOR DETAILS.)

Unless shown elsewhere in the plans, electrical service data for Types D and T shall be as follows.

**ELECTRICAL SERVICE DATA**

| ELECTRICAL SERVICE DESCRIPTION(SEE ED(3)) | SERVICE CONDUIT SIZE (RMC) | SERVICE CONDUCTORS NO./SIZE | SAFETY SWITCH AMPS | MAIN DISCONNECT | | TWO-POLE CONTACTOR AMPS | PANELBD./ LOADCENTER AMP RATING (MIN) | CIRCUIT NO. | BRANCH CKT. BRK. POLE/AMPS | KVA LOAD |
|---|---|---|---|---|---|---|---|---|---|---|
| | | | | SWITCH AMP/FUSES | CKT. BRK. POLE/AMP | | | | | |
| TY D (120/240)070(NS)GS(E)**(*) | 38 mm | 3/#4 | N/A | N/A | 2P/70 | 20 | 70 | T.S. Lighting | 1P/50 2P/20 | <7.1 |
| TY T (120/240)000(NS)GS(E)**(*) | 38 mm | 3/#4 | N/A | None | None | 20 | 70 | T.S. Lighting | 1P/50 2P/20 | <7.1 |

** See descriptive code in estimate for service support type.
* See descriptive code in estimate for overhead or underground service.

NOTES:

1. Luminaire conductors shall not be looped through controller cabinet.
2. Electrical system to include an equipment grounding conductor noted here as "G". All exposed metal parts, lightning arrestors and surge protectors are to be bonded to grounding conductor.
3. Bond neutral bus to cabinet bonding lug when required elsewhere on the plans or when required by the Engineer.
4. Photocell, when required, shall be mounted at top of pole or in enclosure as shown on ED(3) and ED(4) and as required by descriptive code.
5. Roadway lighting fixtures, when required, shall be in accordance with the material and construction methods of the Item, "Roadway Illumination Assemblies" except for the test period for proper operation of the luminaires, Installed roadway lighting luminaires and internally lighted street name signs shall be tested for proper operation as a part of the associated traffic signal system.
6. Internally lighted street name signs (ILSN), when required, shall be in accordance with the Item "Internally Lighted Street Name Signs". Because of the electrical isolation of ILSN hinges, a #12 green grounding conductor shall be run to the ILSN fixture.
7. Install ground rod at alternate location when directed by the Engineer. Maintain a minimum of 2400 mm in contact with the earth.

All dimensions are in millimeters unless otherwise noted.

STANDARD PLANS
TEXAS DEPARTMENT OF TRANSPORTATION
*Traffic Operations Division*

# ELECTRICAL DETAILS- TYPICAL TRAFFIC SIGNAL SYSTEM DETAILS

## ED(7)-98(M)

| © TxDOT January 1992 | DN: KB | CK: TB | DW: RS | CK: TB | MEG NO.: |
|---|---|---|---|---|---|

| REVISIONS | STATE DISTRICT | FEDERAL REGION | FEDERAL AID PROJECT | SHEET |
|---|---|---|---|---|
| 5-93 | SAT | 6 | NH 2000 (704), etc. | 592 |
| 10-93 | | | | |
| 1-96 | COUNTY | | CONTROL SECTION JOB | HIGHWAY |
| 4-98 | BEXAR | | 2452 01 036, etc. | LP 1604 |

Metric 71G

LEVELS 1 2 3 4 5 6 7 8 9 10 11 12 13 14 15 16 17 18 19 20 21 22 23 24 25 26 27 28 29 30 31 32 33 34 35 36 37 38 39 40 41 42 43 44 45 46 47 48 49 50 51 52 53 54 55 56 57 58 59 60 61 62 63 64

DATE:
FILE: d58np1c/usr/d580504
DN:LR CK:CW DW:DN CK:MT

| STRAIN POLE DESCRIPTION | Pole Type | Foundation Type | Maximum Permissible Span Wire Load (N) |
|---|---|---|---|
| 7,930 mm Pole | A | 900-A | 23,100 |
| 9,150 mm Pole | B | 900-A | 20,500 |
| 9,150 mm Pole with Lum. | B | 900-A | 19,600 |
| 9,150 mm Pole with 6,100 mm Mast Arm | C | 900-B | 24,900 |
| 9,150 mm Pole with 7,300 mm Mast Arm | C | 900-B | 24,500 |
| 9,150 mm Pole with 8,500 mm Mast Arm | C | 900-B | 23,600 |
| 9,150 mm Pole with 9,800 mm Mast Arm | C | 900-B | 22,700 |
| 9,150 mm Pole with 11,000 mm Mast Arm | C | 900-B | 21,400 |
| 9,150 mm Pole with 6,100 mm Mast Arm & Lum. | C | 900-B | 23,600 |
| 9,150 mm Pole with 7,300 mm Mast Arm & Lum. | C | 900-B | 23,100 |
| 9,150 mm Pole with 8,500 mm Mast Arm & Lum. | C | 900-B | 22,200 |
| 9,150 mm Pole with 9,800 mm Mast Arm & Lum. | C | 900-B | 21,400 |
| 9,150 mm Pole with 11,000 mm Mast Arm & Lum. | C | 900-B | 20,000 |
| 10,360 mm Pole | D | 900-B | 24,900 |
| 10,360 mm Pole with Lum. | D | 900-B | 24,000 |

② Numbers on charts indicate the number of signal heads on the span. The total span wire design load is based on one 5-section head and one or more additional 3-section head(s). Design wind pressures on cables are assumed as 15 N/m. Weight of span wire cables (one per signal head) is assumed as 9.5 N/m which includes an allowance for conductor cables and miscellaneous hardware. The effect of the sway cable on load distribution is ignored as it is assumed to break at design wind conditions. When a pole supports 2 spans, the span wire design loads for both spans should be added vectorially to determine the design load for that pole.

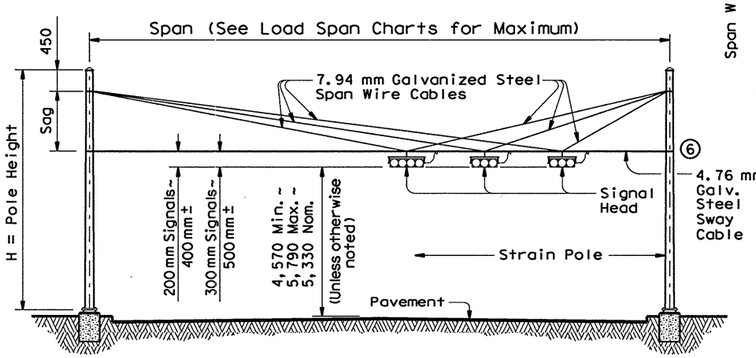


## STRAIN POLE ELEVATIONS HORIZONTAL SIGNALS

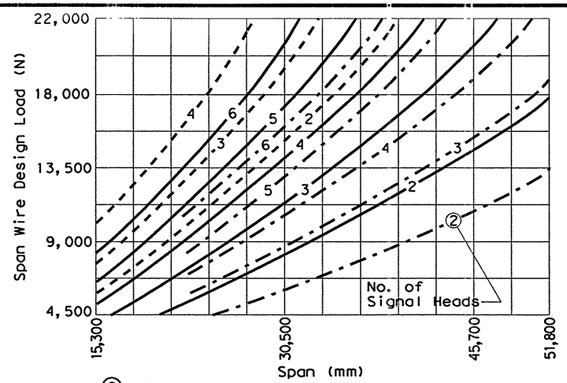


## ②SIGNALS WITH 300 mm LENS

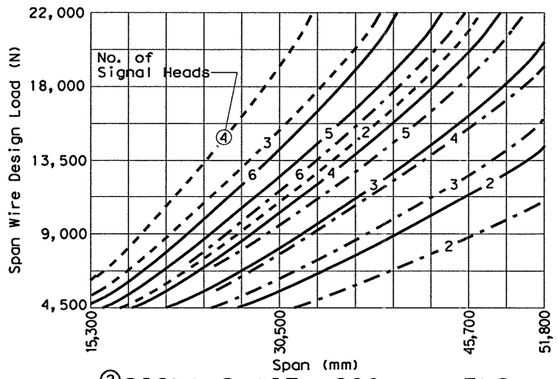


## ②SIGNALS WITH 200 mm LENS

| Signal Head Type | Mass Per Head | Wind Area ◆ |
|---|---|---|
| 5-Section, 300 mm Lens | 57 kg | .892 m² |
| 5-Section, 200 mm Lens | 32 kg | .446 m² |
| 3-Section, 300 mm Lens | 34 kg | .524 m² |
| 3-Section, 200 mm Lens | 20 kg | .279 m² |

◆ Effective projected design wind area (actual area times drag coefficient)

- - - - - - - - Sag = 1,370 mm (7,930 mm or 9,150 mm Pole)
——— Sag = 2,440 mm (9,150 mm or 10,360 mm Pole)
— · — · — Sag = 3,500 mm (10,360 mm Pole)

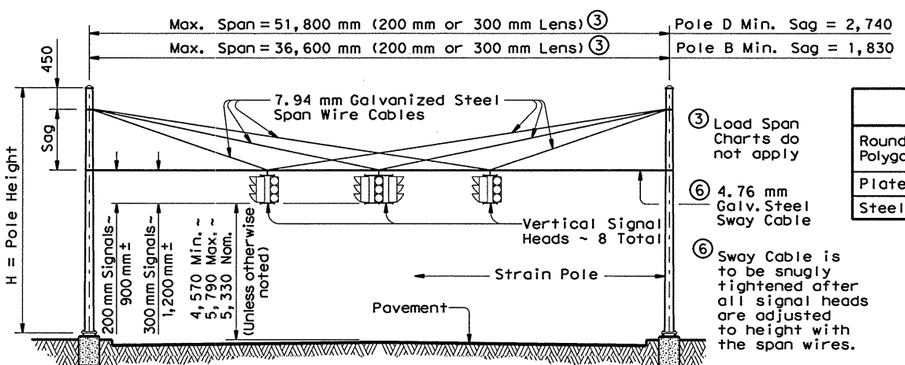


## STRAIN POLE ELEVATIONS VERTICAL SIGNALS

(Mast arms are not used with vertical signals)

③ Load Span Charts do not apply

⑥ 4.76 mm Galv. Steel Sway Cable

⑥ Sway Cable is to be snugly tightened after all signal heads are adjusted to height with the span wires.

## SHIPPING PARTS LIST

Poles (Without Traffic Signal Arm)

| Pole Type | Strain poles with Luminaire: Ship each pole with the following hardware attached: handhole at base, pole cap, 2 clamp-on simplex and 1 pipe plug. | | | Strain poles without Luminaire: Ship each pole with the following hardware attached: handhole at base, pole cap and 1 pipe plug. | | |
|---|---|---|---|---|---|---|
| | Description | Designation | Quantity | Description | Designation | Quantity |
| A | | | | 7,930 mm Strain Pole | SP 7,930 A-130 | |
| B | 9,150 mm Strain Pole | SPL 9,150 B-130 | | 9,150 mm Strain Pole | SP 9,150 B-130 | |
| D | 10,360 mm Strain Pole | SPL 10,360 D-130 | | 10,360 mm Strain Pole | SP 10,360 D-130 | |
| | | | | | | |

Poles (With Traffic Signal Arm)

| Pole Type | Strain poles with Luminaire: Ship each pole with the following hardware attached: handhole at base, pole cap, clamp-on simplex and 3 pipe plugs. | | | Strain poles without Luminaire: Ship each pole with the following hardware attached: handhole at base, pole cap and 3 pipe plugs. | | |
|---|---|---|---|---|---|---|
| | Description | Designation | Quantity | Description | Designation | Quantity |
| | | | | | | |
| C | 9,150 mm SPw/TS Arm | SPL 9,150 C-130 | | 9,150 mm SPw/TS Arm | SP 9,150 C-130 | |
| | | | | | | |

Traffic Signal Arms (For Type C poles)

| Nominal Arm Length | Type I Arm (1 Signal): Ship each Type I Arm with the following hardware attached: 2 CGB Connectors, 1 clamp with bolts and washers | | Type II Arm (2 Signals): Ship each Type II Arm with the following hardware attached: ① 1 Bracket Assembly, 3 CGB Connectors and 1 clamp with bolts and washers | | Type III Arm (3 Signals): Ship each Type III Arm with the following hardware attached: ① 2 Bracket Assemblies, 4 CGB Connectors and 1 clamp with bolts and washers | |
|---|---|---|---|---|---|---|
| mm | Designation | Quantity | Designation | Quantity | Designation | Quantity |
| 6,100 | 6,100 I-130 | | | | | |
| 7,300 | 7,300 I-130 | | 7,300 II -130 | | | |
| 8,500 | 8,500 I-130 | | 8,500 II -130 | | | |
| 9,800 | | | 9,800 II -130 | | 9,800 III -130 | |
| 11,000 | | | 11,000 II -130 | | 11,000 III -130 | |

Anchor Bolt Assemblies (1 per pole)

| Anchor Bolt Diameter | Anchor Bolt Length | Templates may be removed for shipment. Quantity |
|---|---|---|
| 1 ¾" | 3'-10" | |
| 2" | 4'-3" | |
| | | |

Each Anchor Bolt Assembly consists of the following: Top and Bottom templates, 4 anchor bolts, 8 nuts, 8 flat washers, 4 lock washers and 4 nut anchor devices (Type 2) per Standard Drawing "TS-FD"(M).

Luminaire Arms

| Nominal Arm Length | Quantity |
|---|---|
| 2,440 mm Arm | |
| | |

① Supply Option "A" unless otherwise noted. See Sheet "DMA-130(M)"

| MATERIALS | |
|---|---|
| Round Shafts or Polygonal Shafts | ASTM A595 GR A, ASTM A570M GR 345, ASTM A607 GR 50, ASTM A572M GR 345 or A36M MOD345 |
| Plates ⑦ | ASTM A36M OR A572M GR 345 OR A595 GR A OR A36M MOD345 |
| Steel Cable | ASTM A475, 7 Wire, Utilities Grade |

⑦ Any of the materials listed for plates may be used where the drawings do not specify a particular ASTM designation.

| Pole Type | ROUND POLES $D_B$ mm | $D_T$ mm | ⑤thk mm | H mm | POLYGONAL POLES $D_B$ mm | $D_T$ mm | ⑤thk mm | H mm |
|---|---|---|---|---|---|---|---|---|
| A | 318 | 226 | 6.07 | 7,930 | 330 | 229 | 6.07 | 7,930 |
| B | 343 | 336 | 6.07 | 9,150 | 356 | 229 | 6.07 | 9,150 |
| C | 394 | 287 | 6.07 | 9,150 | 406 | 279 | 6.07 | 9,150 |
| D | 394 | 272 | 6.07 | 10,360 | 406 | 279 | 6.07 | 10,360 |
| | | | | | | | | |

⑤ Thickness shown are minimum, thicker materials may be used.

$D_B$ = Pole Base O.D. $D_T$ = Pole Top O.D. H = Pole Height

Note: All dimensions are in millimeters (mm) except as noted.

SHEET 1 OF 2

Texas Department of Transportation
Traffic Operations Division

# TRAFFIC SIGNAL SUPPORT STRUCTURES STRAIN POLE ASSEMBLIES

## (130 KMPH WIND ZONE)

## SP-130(1)96(M)

| FILE: SP80.DGN | DN: MS | CK: JSY | DW: BR | CK: JSY | NEG: 15 |
|---|---|---|---|---|---|
| ©TxDOT March 1996 | DIST | FED REG | FEDERAL AID PROJECT • | | SHEET |
| REVISIONS 6-96 | SAT | 6 | NH 2000 (704), etc | | 593 |
| | COUNTY | | CONTROL | SECT | JOB | HIGHWAY |
| | BEXAR | | 2452 | 01 | 036, etc | LP 1604 |

DISCLAIMER:
The use of this standard is governed by the "Texas Engineering Practice Act". No warranty of any kind is made by TxDOT for any purpose whatsoever. TxDOT assumes no responsibility for the conversion of this standard to other formats or for incorrect results or damages resulting from its use.

LEVELS U. 1 3 63 FEL

| STRAIN POLE DESCRIPTION | Pole Type | Foundation Type | Maximum Permissible Span Wire Load (N) |
|---|---|---|---|
| 7,930 mm Pole | A | 900-A | 23,100 |
| 9,150 mm Pole | B | 900-A | 20,500 |
| 9,150 mm Pole with Lum. | B | 900-A | 19,600 |
| 9,150 mm Pole with 6,100 mm Mast Arm | C | 900-B | 24,900 |
| 9,150 mm Pole with 7,300 mm Mast Arm | C | 900-B | 24,500 |
| 9,150 mm Pole with 8,500 mm Mast Arm | C | 900-B | 23,600 |
| 9,150 mm Pole with 9,800 mm Mast Arm | C | 900-B | 22,700 |
| 9,150 mm Pole with 11,000 mm Mast Arm | C | 900-B | 21,400 |
| 9,150 mm Pole with 6,100 mm Mast Arm & Lum. | C | 900-B | 23,600 |
| 9,150 mm Pole with 7,300 mm Mast Arm & Lum. | C | 900-B | 23,100 |
| 9,150 mm Pole with 8,500 mm Mast Arm & Lum. | C | 900-B | 22,200 |
| 9,150 mm Pole with 9,800 mm Mast Arm & Lum. | C | 900-B | 21,400 |
| 9,150 mm Pole with 11,000 mm Mast Arm & Lum. | C | 900-B | 20,000 |
| 10,360 mm Pole | D | 900-B | 24,900 |
| 10,360 mm Pole with Lum. | D | 900-B | 24,000 |

② Numbers on charts indicate the number of signal heads on the span. The total span wire design load is based on one 5-section head and one or more additional 3-section head(s). Design wind pressures on cables are assumed as 15 N/m. Weight of span wire cables (one per signal head) is assumed as 9.5 N/m which includes an allowance for conductor cables and miscellaneous hardware. The effect of the sway cable on load distribution is ignored as it is assumed to break at design wind conditions. When a pole supports 2 spans, the span wire design loads for both spans should be added vectorially to determine the design load for that pole.

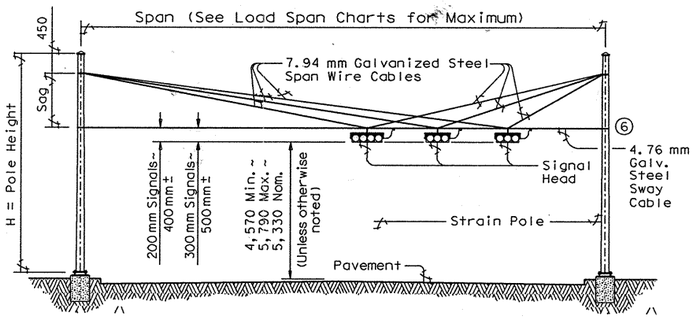


STRAIN POLE ELEVATIONS
HORIZONTAL SIGNALS

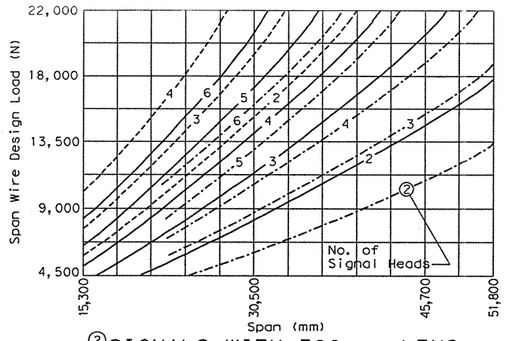


②SIGNALS WITH 300 mm LENS

| Signal Head Type | Mass Per Head | Wind Area ◆ |
|---|---|---|
| 5-Section, 300 mm Lens | 57 kg | .892 m² |
| 5-Section, 200 mm Lens | 32 kg | .446 m² |
| 3-Section, 300 mm Lens | 34 kg | .524 m² |
| 3-Section, 200 mm Lens | 20 kg | .279 m² |

◆ Effective projected design wind area (actual area times drag coefficient)

---------- Sag = 1,370 mm (7,930 mm or 9,150 mm Pole)
——————— Sag = 2,440 mm (9,150 mm or 10,360 mm Pole)
-·-·-·-·-·- Sag = 3,500 mm (10,360 mm Pole)

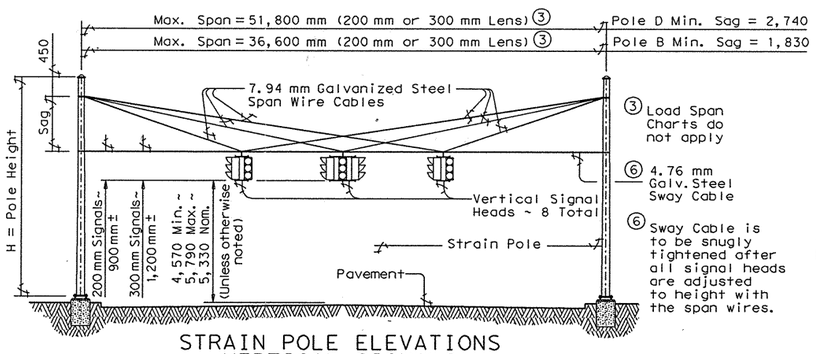


STRAIN POLE ELEVATIONS
VERTICAL SIGNALS
(Mast arms are not used with vertical signals)

| Pole Type | ROUND POLES | | | | POLYGONAL POLES | | | |
|---|---|---|---|---|---|---|---|---|
| | $D_B$ | $D_T$ | ⑤thk | H | $D_B$ | $D_T$ | ⑤thk | H |
| | mm | mm | mm | mm | mm | mm | mm | mm |
| A | 318 | 226 | 6.07 | 7,930 | 330 | 229 | 6.07 | 7,930 |
| B | 343 | 336 | 6.07 | 9,150 | 356 | 229 | 6.07 | 9,150 |
| C | 394 | 287 | 6.07 | 9,150 | 406 | 279 | 6.07 | 9,150 |
| D | 394 | 272 | 6.07 | 10,360 | 406 | 279 | 6.07 | 10,360 |
| | | | | | | | | |

$D_B$ = Pole Base O.D. $D_T$ = Pole Top O.D. H = Pole Height

⑤ Thickness shown are minimum, thicker materials may be used.

| MATERIALS | |
|---|---|
| Round Shafts or Polygonal Shafts | ASTM A595 GR A, ASTM A570M GR 345, ASTM A607 GR 50, ASTM A572M GR 345 or A36M MOD345 |
| Plates ⑦ | ASTM A36M OR A572M GR 345 OR A595 GR A OR A36M MOD345 |
| Steel Cable | ASTM A475, 7 Wire, Utilities Grade |

⑦ Any of the materials listed for plates may be used where the drawings do not specify a particular ASTM designation.

CHANGE ORDER NO. 59 - NEW SHEET

## SHIPPING PARTS LIST

Poles (Without Traffic Signal Arm)

| Pole Type | Strain poles with Luminaire: Ship each pole with the following hardware attached: handhole at base, pole cap, 2 clamp-on simplex and 1 pipe plug. | | | Strain poles without Luminaire: Ship each pole with the following hardware attached: handhole at base, pole cap and 1 pipe plug. | | |
|---|---|---|---|---|---|---|
| | Description | Designation | Quantity | Description | Designation | Quantity |
| A | | | | 7,930 mm Strain Pole | SP 7,930 A-130 | |
| B | 9,150 mm Strain Pole | SPL 9,150 B-130 | | 9,150 mm Strain Pole | SP 9,150 B-130 | |
| D | 10,360 mm Strain Pole | SPL 10,360 D-130 | | 10,360 mm Strain Pole | SP 10,360 D-130 | 4 |
| | | | | | | |

Poles (With Traffic Signal Arm)

| Pole Type | Strain poles with Luminaire: Ship each pole with the following hardware attached: handhole at base, pole cap, clamp-on simplex and 3 pipe plugs. | | | Strain poles without Luminaire: Ship each pole with the following hardware attached: handhole at base, pole cap and 3 pipe plugs. | | |
|---|---|---|---|---|---|---|
| | Description | Designation | Quantity | Description | Designation | Quantity |
| | | | | | | |
| C | 9,150 mm SPw/TS Arm | SPL 9,150 C-130 | | 9,150 mm SPw/TS Arm | SP 9,150 C-130 | |
| | | | | | | |

Traffic Signal Arms (For Type C poles)

| Nominal Arm Length | Type I Arm (1 Signal): Ship each Type I Arm with the following hardware attached: 2 CGB Connectors, 1 clamp with bolts and washers | | Type II Arm (2 Signals): Ship each Type II Arm with the following hardware attached: 1 Bracket Assembly ①, 3 CGB Connectors and 1 clamp with bolts and washers | | Type III Arm (3 Signals): Ship each Type III Arm with the following hardware attached: 2 Bracket Assemblies ①, 4 CGB Connectors and 1 clamp with bolts and washers | |
|---|---|---|---|---|---|---|
| mm | Designation | Quantity | Designation | Quantity | Designation | Quantity |
| 6,100 | 6,100 I-130 | | | | | |
| 7,300 | 7,300 I-130 | | 7,300 II -130 | | | |
| 8,500 | 8,500 I-130 | | 8,500 II -130 | | | |
| 9,800 | | | 9,800 II -130 | | 9,800 III -130 | |
| 11,000 | | | 11,000 II -130 | | 11,000 III -130 | |

Anchor Bolt Assemblies (1 per pole)

| Anchor Bolt Diameter | Anchor Bolt Length | Templates may be removed for shipment. Quantity |
|---|---|---|
| 1 ¾" | 3'-10" | |
| 2" | 4'-3" | |
| | | |

Each Anchor Bolt Assembly consists of the following: Top and Bottom templates, 4 anchor bolts, 8 nuts, 8 flat washers, 4 lock washers and 4 nut anchor devices (Type 2) per Standard Drawing "TS-FD"(M).

Luminaire Arms

| Nominal Arm Length | Quantity |
|---|---|
| 2,440 mm Arm | |
| | |

① Supply Option "A" unless otherwise noted. See Sheet "DMA-130(M)"

Note: All dimensions are in millimeters (mm) except as noted.

SHEET 1 OF 2

GILMER D. GASTON 80472 LICENSED PROFESSIONAL ENGINEER STATE OF TEXAS

GILMER D. GASTON, P.E. DATE 5/19/03

CHANGE ORDER # 59 - NEW SHEET

Texas Department of Transportation
Traffic Operations Division

# TRAFFIC SIGNAL SUPPORT STRUCTURES STRAIN POLE ASSEMBLIES

## (130 KMPH WIND ZONE)

## (MOD) SP-130(1)96(M)

| FILE: SP80.DGN | DN: MS | CK: JSY | DW: BR | CK: JSY | NEG: |
|---|---|---|---|---|---|
| © TxDOT March 1996 | DIST | FED REG | FEDERAL AID PROJECT • | | SHEET |
| REVISIONS 6-96 | SAT | 6 | NH 2002(704), etc. | | 59A |
| | COUNTY | CONTROL | SECT | JOB | HIGHWAY |
| | BEXAR | 2452 | 01 | 036, etc. | LP 1604 |

DISCLAIMER:
The use of this standard is governed by the "Texas Engineering Practice Act". No warranty of any kind is made by TxDOT for any purpose whatsoever. TxDOT assumes no responsibility for the conversion of this standard to other formats or for incorrect results or damages resulting from its use.

LEVELS 1 3 FED 63

DISCLAIMER:
The use of this standard is governed by the "Texas Engineering Practice Act". No warranty of any kind is made by TxDOT for any purpose whatsoever. TxDOT assumes no responsibility for the conversion of this standard to other formats or for incorrect results or damages resulting from its use.

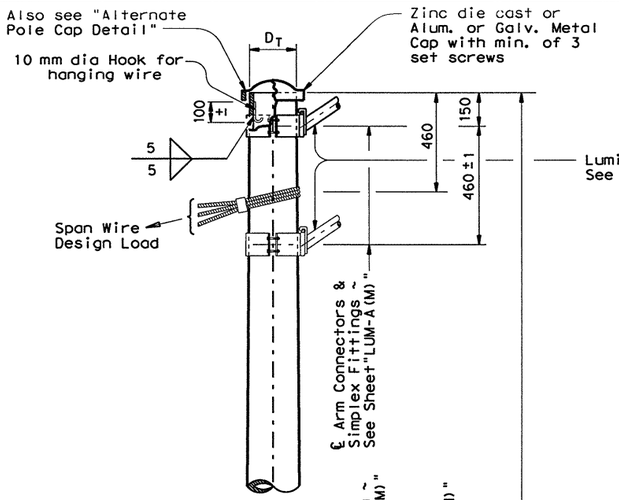


## DETAIL A

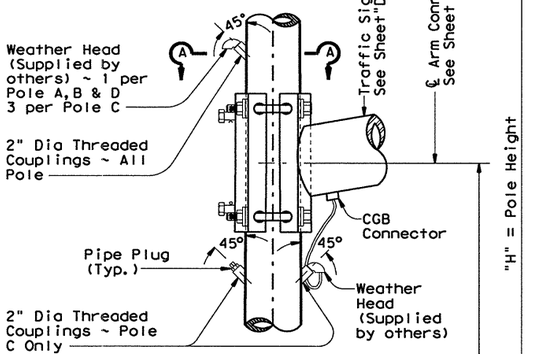


## DETAIL B

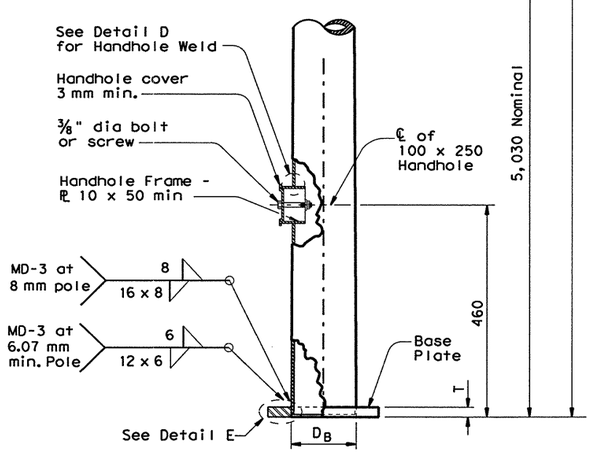


## DETAIL C

## POLE ELEVATION

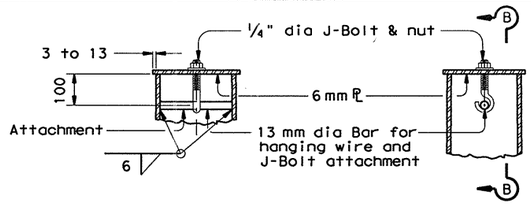


## SECTION B-B

## ALTERNATE POLE CAP DETAIL

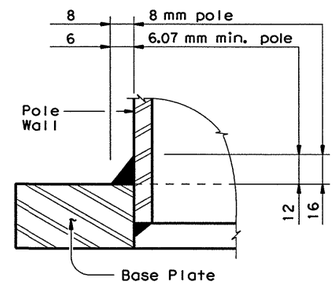


## DETAIL E

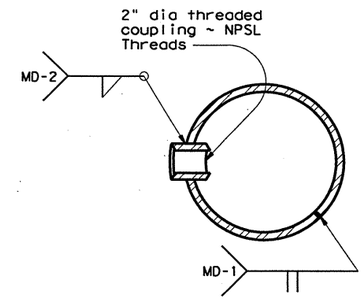


## SECTION A-A

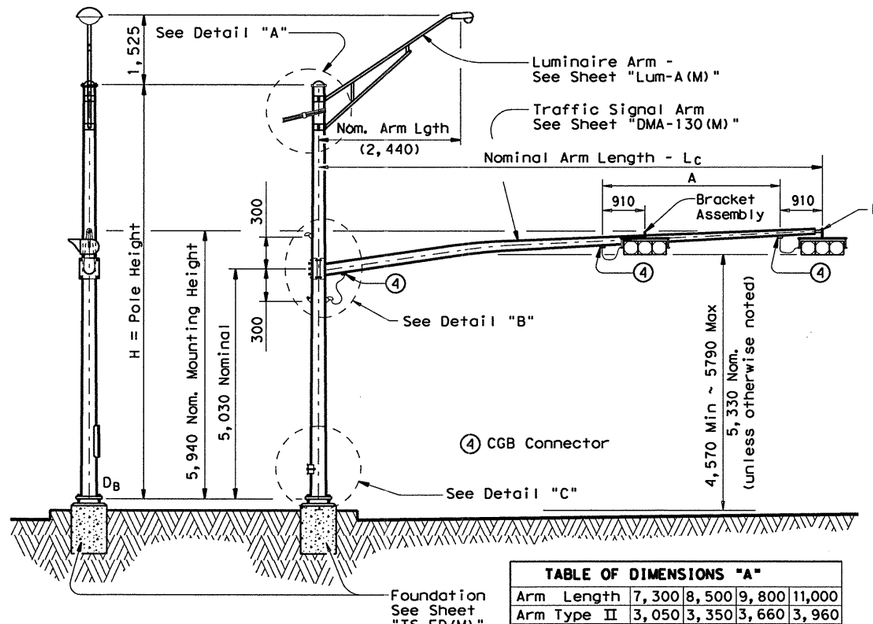


## STRUCTURE ASSEMBLY

| TABLE OF DIMENSIONS "A" | | | | |
|---|---|---|---|---|
| Arm Length | 7,300 | 8,500 | 9,800 | 11,000 |
| Arm Type II | 3,050 | 3,350 | 3,660 | 3,960 |
| Arm Type III | | | 3,050 | 3,350 |

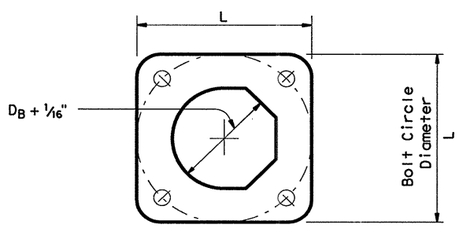


## BASE PLATE PLAN

| Foundation Type | Anchor Bolt Diameter | Bolt Hole Diameter | Bolt Circle Diameter | Base ℄ Dim. L x T |
|---|---|---|---|---|
| | | | | |
| 900-A | 1 ¾" | 2" | 483 | 480 x 45 |
| 900-B | 2" | 2 ¼" | 533 | 530 x 50 |

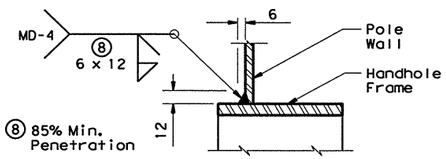


## DETAIL D

## GENERAL NOTES:

Design conforms to 1994 AASHTO Standard Specifications for Structural Supports for Highway Signs, Luminaires, and Traffic Signals and Interim Specifications thereto. Design Wind Speed equals 130 km/h plus a 1.3 gust factor. The maximum permissible span wire design loads tabulated are calculated at a stress load of 1.4 times the basic allowable stress. A simultaneous wind on the pole, mast arm, and luminaire is also included.

See standard sheet "DMA-130(M)" for details of clamp-on traffic signal arms, sheet "MA-C(M)" for traffic signal arm connection details, sheet "LUM-A(M)" for luminaire arm and connection details, and sheet "TS-FD(M)" for anchor bolt and foundation details.

Fabrication shall be in accordance with the Specifications and with the details, dimensions, and weld procedures shown herein. Weld references call for preapproved weld procedures which the Fabricator must obtain prior to fabrication. Materials, fabrication tolerances, and shipping practices shall meet the requirements of this sheet and the Specifications.

Unless otherwise noted, all parts shall be galvanized in accordance with the Specifications.

Special designs require submission of shop drawings in accordance with the item "Steel Structures".

Note: All dimensions are in millimeters (mm) except as noted.



Texas Department of Transportation
Traffic Operations Division

# TRAFFIC SIGNAL SUPPORT STRUCTURES STRAIN POLE ASSEMBLIES

## (130 KMPH WIND ZONE)

## SP-130(2)96(M)

| FILE: SP80.DGN | DN: MS | CK: JSY | DW: BR | CK: JSY | NEG: | |
|---|---|---|---|---|---|---|
| ©TxDOT March 1996 | DIST | FED REG | FEDERAL AID PROJECT • | | | SHEET |
| REVISIONS 6-96 | SAT | 6 | NH 2000 (704), etc | | | 594 |
| | COUNTY | | | CONTROL | SECT | JOB | HIGHWAY |
| | BEXAR | | | 2452 | 01 | 036, etc | LP 1604 |

1208

DISCLAIMER:
The use of this standard is governed by the "Texas Engineering Practice Act". No warranty of any kind is made by TxDOT for any purpose whatsoever. TxDOT assumes no responsibility for the conversion of this standard to other formats or for incorrect results or damages resulting from its use.

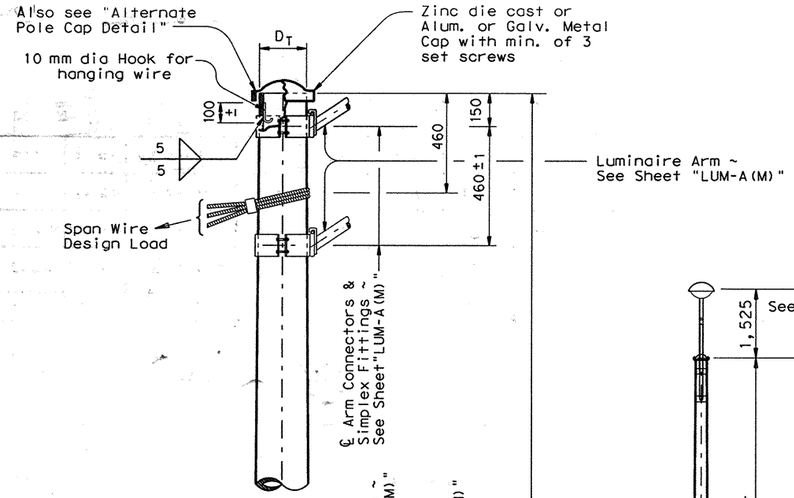


## DETAIL A

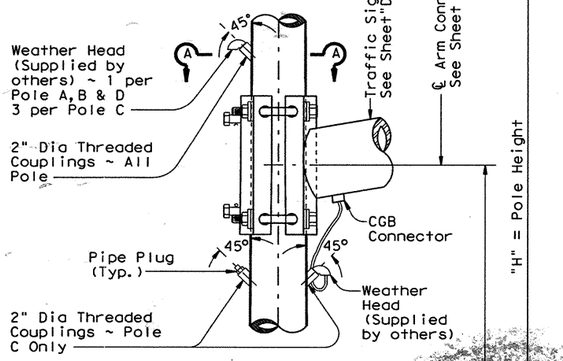


## DETAIL B

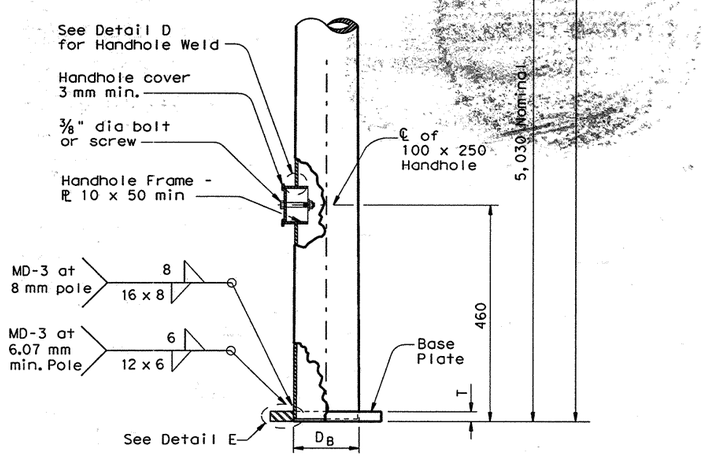


## DETAIL C

## POLE ELEVATION

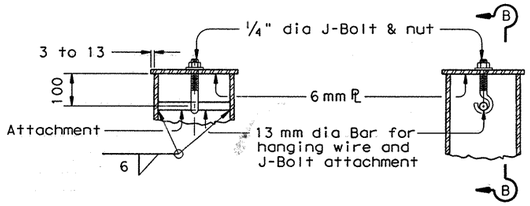


## SECTION B-B

## ALTERNATE POLE CAP DETAIL

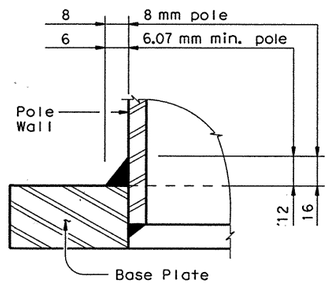


## DETAIL E

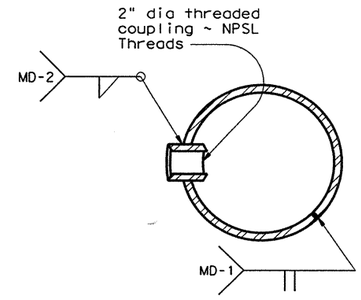


## SECTION A-A

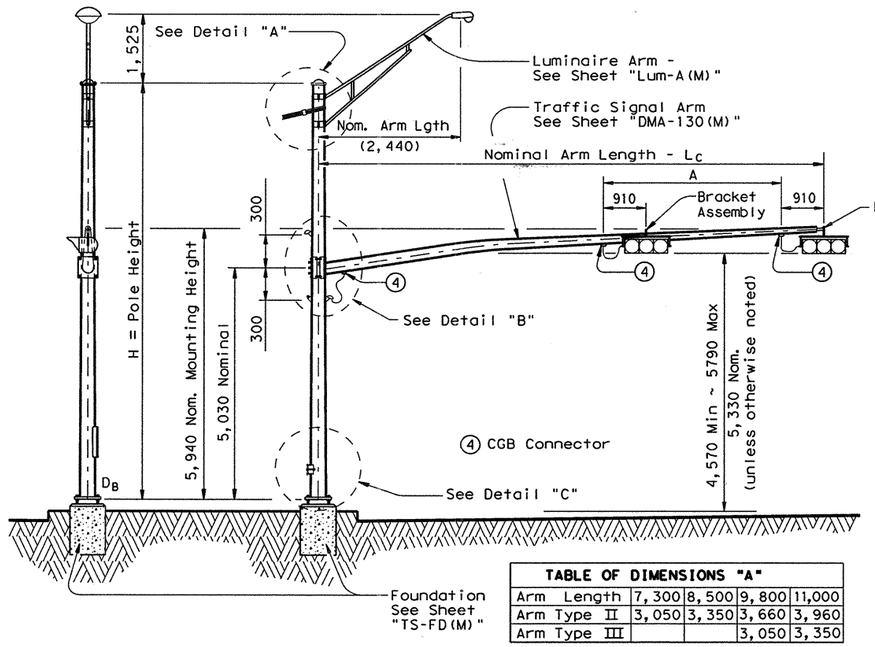


## STRUCTURE ASSEMBLY

| TABLE OF DIMENSIONS "A" | | | | |
|---|---|---|---|---|
| Arm Length | 7,300 | 8,500 | 9,800 | 11,000 |
| Arm Type II | 3,050 | 3,350 | 3,660 | 3,960 |
| Arm Type III | | | 3,050 | 3,350 |

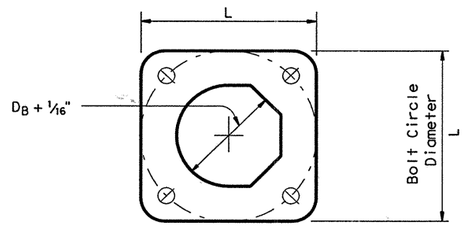


## BASE PLATE PLAN

| Foundation Type | Anchor Bolt Diameter | Bolt Hole Diameter | Bolt Circle Diameter | Base ℄ Dim. L x T |
|---|---|---|---|---|
| | | | | |
| 900-A | 1 ¾" | 2" | 483 | 480 x 45 |
| 900-B | 2" | 2 ¼" | 533 | 530 x 50 |

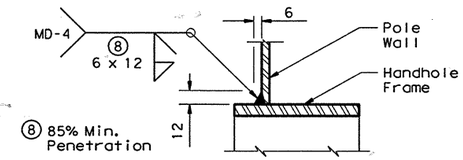


## DETAIL D

## GENERAL NOTES:

Design conforms to 1994 AASHTO Standard Specifications for Structural Supports for Highway Signs, Luminaires, and Traffic Signals and Interim Specifications thereto. Design Wind Speed equals 130 km/h plus a 1.3 gust factor. The maximum permissible span wire design loads tabulated are calculated at a stress load of 1.4 times the basic allowable stress. A simultaneous wind on the pole, mast arm, and luminaire is also included.

See standard sheet "DMA-130(M)" for details of clamp-on traffic signal arms, sheet "MA-C(M)" for traffic signal arm connection details, sheet "LUM-A(M)" for luminaire arm and connection details, and sheet "TS-FD(M)" for anchor bolt and foundation details.

Fabrication shall be in accordance with the Specifications and with the details, dimensions, and weld procedures shown herein. Weld references call for preapproved weld procedures which the Fabricator must obtain prior to fabrication. Materials, fabrication tolerances, and shipping practices shall meet the requirements of this sheet and the Specifications.

Unless otherwise noted, all parts shall be galvanized in accordance with the Specifications.

Special designs require submission of shop drawings in accordance with the item "Steel Structures".



Texas Department of Transportation
Traffic Operations Division

# TRAFFIC SIGNAL SUPPORT STRUCTURES STRAIN POLE ASSEMBLIES

## (130 KMPH WIND ZONE)

## SP-130(2)96(M)

| FILE: SP80.DGN | DN: MS | CK: JSY | DW: BR | CK: JSY | NEG: | |
|---|---|---|---|---|---|---|
| ©TxDOT March 1996 | DIST | FED REG | FEDERAL AID PROJECT • | | | SHEET |
| REVISIONS 6-96 | SAT | 6 | NH 2002(704), etc. | | | 9 of 24 |
| | COUNTY | | CONTROL | SECT | JOB | HIGHWAY |
| | BEXAR | | 2452 | 01 | 036, etc. | LP 1604 |

CHANGE ORDER # 59
- NEW SHEET

Note: All dimensions are in millimeters (mm) except as noted.

LEVELS D: ED 63 | 3 | 1

DISCLAIMER:
The use of this standard is governed by the "Texas Engineering Practice Act". No warranty of any kind is made by TxDOT for any purpose whatsoever. TxDOT assumes no responsibility for the conversion of this standard to other formats or for incorrect results or damages resulting from its use.

ACC: d48hp1q:/usr/d482517
LV=1,2 for English 1,3 for Metric

| Arm Length | ROUND POLES | | | | | POLYGONAL POLES | | | | | Foundation Type |
|---|---|---|---|---|---|---|---|---|---|---|---|
| | $D_B$ | $D_{19}$ | $D_{24}$ | $D_{30}$ | (1) thk | $D_B$ | $D_{19}$ | $D_{24}$ | $D_{30}$ | (1) thk | |
| mm | mm | mm | mm | mm | mm | mm | mm | mm | mm | mm | |
| 6,100 | 267 | 198 | 180 | 160 | 4.55 | 292 | 216 | 196 | 173 | 4.55 | 750-A |
| 7,300 | 279 | 211 | 193 | 173 | 4.55 | 305 | 229 | 208 | 185 | 4.55 | 750-A |
| 8,500 | 292 | 224 | 206 | 185 | 4.55 | 318 | 241 | 221 | 198 | 4.55 | 750-A |
| 9,800 | 318 | 249 | 231 | 211 | 4.55 | 305 | 229 | 208 | 185 | 6.07 | 750-A |
| ⚠1 11,000 | 305 | 236 | 218 | 198 | 6.07 | 318 | 241 | 221 | 198 | 6.07 | 900-A |
| 12,200 | 305 | 236 | 218 | 198 | 6.07 | 343 | 267 | 246 | 224 | 6.07 | 900-A |
| 13,400 | 318 | 249 | 231 | 211 | 6.07 | 356 | 279 | 259 | 236 | 6.07 | 900-A |
| 14,600 | 330 | 262 | 244 | 224 | 6.07 | 381 | 305 | 285 | 262 | 6.07 | 900-A |

| Arm Length | ROUND ARMS | | | | | POLYGONAL ARMS | | | | |
|---|---|---|---|---|---|---|---|---|---|---|
| | $L_1$ | $D_1$ | $D_2$ | (1) thk | Rise | $L_1$ | $D_1$ | (2) $D_2$ | (1) thk | Rise |
| mm | mm | mm | mm | mm | mm | mm | mm | mm | mm | mm |
| 6,100 | 5,822 | 165 | 97 | 4.55 | 533 | 5,822 | 180 | 89 | 4.55 | 508 |
| 7,300 | 7,041 | 190 | 109 | 4.55 | 559 | 7,041 | 190 | 89 | 4.55 | 533 |
| 8,500 | 8,260 | 205 | 107 | 4.55 | 584 | 8,260 | 205 | 89 | 4.55 | 559 |
| 9,800 | 9,449 | 230 | 119 | 4.55 | 635 | 9,449 | 230 | 89 | 4.55 | 610 |
| 11,000 | 10,668 | 245 | 117 | 4.55 | 711 | 10,668 | 255 | 89 | 4.55 | 635 |
| 12,200 | 11,887 | 245 | 104 | 6.07 | 813 | 11,887 | 245 | 89 | 6.07 | 686 |
| 13,400 | 13,106 | 255 | 104 | 6.07 | 889 | 13,106 | 255 | 89 | 6.07 | 762 |
| 14,600 | 14,326 | 270 | 104 | 6.07 | 1,016 | 14,326 | 280 | 89 | 6.07 | 838 |

$D_B$ = Pole Base O.D.
$D_{19}$ = Pole Top O.D. with no Luminaire and no ILSN
$D_{24}$ = Pole Top O.D. with ILSN w/out Luminaire
$D_{30}$ = Pole Top O.D. with Luminaire
$D_1$ = Arm Base O.D.
$D_2$ = Arm End O.D.
$L_1$ = Shaft Length
L = Nominal Arm Length

(1) Thickness shown are minimums, thicker materials may be used.

(2) $D_2$ may be increased by up to 25 mm for polygonal arms.

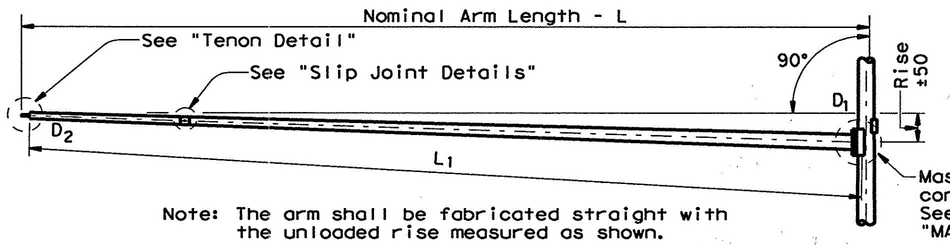


Note: The arm shall be fabricated straight with the unloaded rise measured as shown.

## TRAFFIC SIGNAL ARM

(Fixed Mount)

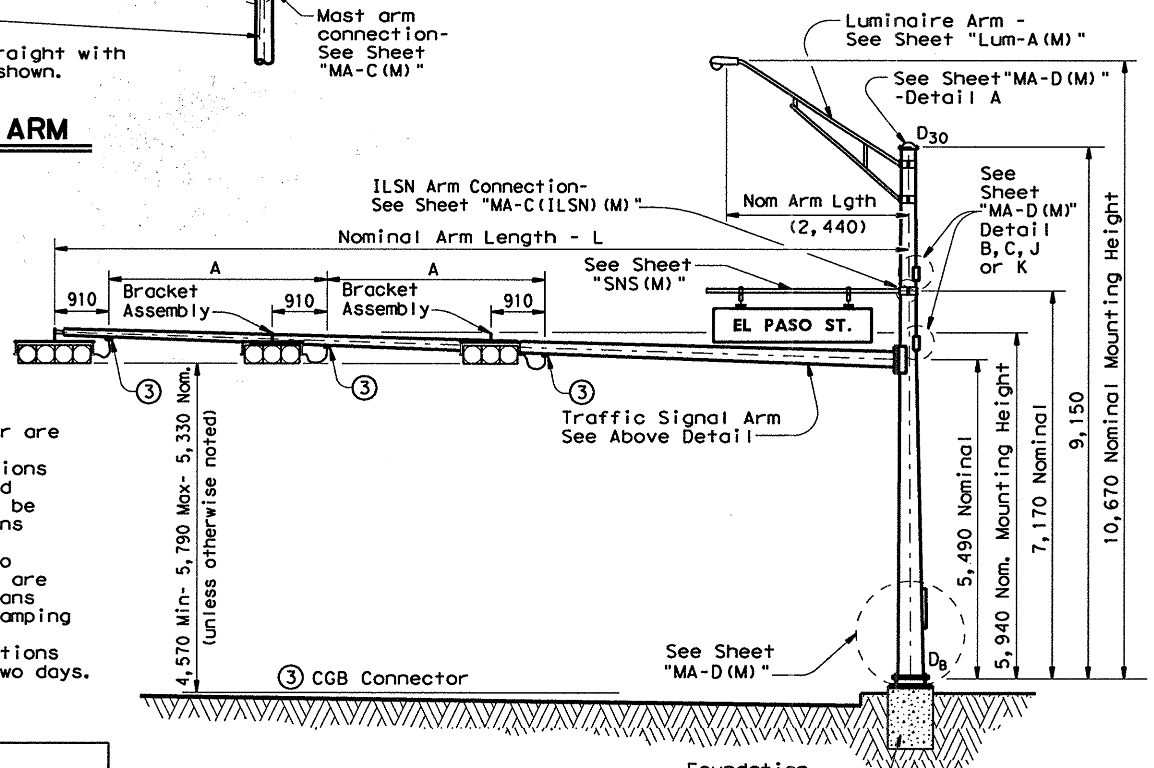


## STRUCTURE ASSEMBLY

## VIBRATION WARNING

Mast Arms of approximately 12,200 mm or longer are subject to possible harmonic vertical vibrations in light wind conditions due to unusual combinations of signal numbers, weights or positions, arm-wind orientation, and arm-pole stiffness. Arms shall be visually inspected in 8 to 32 kmph wind conditions after signal head installation and, if vertical movements with a total excursion (max positive to max negative) of more than approximately 200 mm are observed at arm tip, damping devices or other means shall be fitted to the arm(s). The necessary damping device(s) or other remedial measures shall be as recommended by the fabricator. Excessive vibrations shall not be allowed to continue for more than two days.

**TABLE OF DIMENSIONS "A"**

| Arm Length | 7,300 | 8,500 | 9,800 | 11,000 | 12,200 | 13,400 | 14,600 |
|---|---|---|---|---|---|---|---|
| Arm Type II | 3,050 | 3,350 | 3,660 | 3,960 | | | |
| Arm Type III | | | 3,050 | 3,350 | 3,660 | 3,660 | 3,660 |

## SHIPPING PARTS LIST

Ship each pole with the following attached: enlarged hand hole, pole cap, fixed-arm connection bolts and washers and any additional hardware listed in the table.

| Nominal Arm Length | 9,150 mm Poles With Luminaire | | 7,320 mm Poles With ILSN | | 5,800 mm Poles With No Luminaire and No ILSN | |
|---|---|---|---|---|---|---|
| | Above hardware plus: One (or two if ILSN attached) small hand hole, clamp-on simplex | | Above hardware plus one small hand hole | | See note above | |
| mm | Designation | Quantity | Designation | Quantity | Designation | Quantity |
| 6,100 | 6,100L-130 | | 6,100 S-130 | | 6,100-130 | |
| 7,300 | 7,300L-130 | | 7,300 S-130 | | 7,300-130 | |
| 8,500 | 8,500L-130 | | 8,500 S-130 | | 8,500-130 | |
| 9,800 | 9,800L-130 | | 9,800 S-130 | | 9,800-130 | |
| 11,000 | 11,000L-130 | | 11,000 S-130 | | 11,000-130 | |
| 12,200 | 12,200L-130 | | 12,200 S-130 | | 12,200-130 | |
| 13,400 | 13,400L-130 | | 13,400 S-130 | | 13,400-130 | |
| 14,600 | 14,600L-130 | | 14,600 S-130 | | 14,600-130 | |

Traffic Signal Arms (1 per Pole) Ship each arm with the listed equipment attached

| Nominal Arm Length | Type I Arm (1 Signal) | | Type II Arm (2 Signals) | | Type III Arm (3 Signals) | |
|---|---|---|---|---|---|---|
| | 1 CGB connector | | 1 Bracket Assembly and 2 CGB Connectors (4) | | 2 Bracket Assemblies and 3 CGB Connectors (4) | |
| mm | Designation | Quantity | Designation | Quantity | Designation | Quantity |
| 6,100 | 6,100I-130 | | | | | |
| 7,300 | 7,300I-130 | | 7,300II-130 | | | |
| 8,500 | 8,500I-130 | | 8,500II-130 | | | |
| 9,800 | | | 9,800II-130 | | 9,800III-130 | |
| 11,000 | | | 11,000II-130 | | 11,000III-130 | |
| 12,200 | | | | | 12,200III-130 | |
| 13,400 | | | | | 13,400III-130 | |
| 14,600 | | | | | 14,600III-130 | |

Luminaire Arms (1 per 9,150 mm pole)

| Nominal Arm Length | Quantity |
|---|---|
| 2,440 mm Arm | |
| | |

(4) Supply Option "A" unless otherwise noted

ILSN Arm (Max. 2 per pole) Ship with clamps, bolts and washers

| Nominal Arm Length | Quantity |
|---|---|
| 2,140 mm Arm | |
| 2,750 mm Arm | |
| | |

Anchor Bolt Assemblies (1 per pole)

| Anchor Bolt Diameter | Anchor Bolt Length | Quantity |
|---|---|---|
| 1 1/2" | 3'-4" | |
| 1 3/4" | 3'-10" | |
| | | |

Each anchor bolt assembly consists of the following: Top and Bottom templates, 4 anchor bolts, 8 nuts, 8 flat washers, 4 lock washers and 4 nut anchor devices (Type 2) per Standard Drawing "TS-FD(M)".

Templates may be removed for shipment.



Note: All dimensions are in millimeters (mm) except as noted.

11/99 Revision
⚠1 Changed to Facilitate new terminal strip enclosure

Texas Department of Transportation
Traffic Operations Division

# TRAFFIC SIGNAL SUPPORT STRUCTURES
## SINGLE MAST ARM ASSEMBLY
## (130 KMPH WIND ZONE)
## SMA-130(1)-99(M)

| FILE: SMA-80.DGN | DN: MS | CK: JSY | DW: MMF | CK: JSY |
|---|---|---|---|---|
| © TxDOT August 1995 | DIST: SAT | FED REG: 6 | FEDERAL AID PROJECT: NH 2000 (704), etc. | SHEET: 595 |
| REVISIONS: 5-96, 11-99 | COUNTY: BEXAR | CONTROL: 2452 | SECT: 01 / JOB: 036, etc. | HIGHWAY: LP1604 |

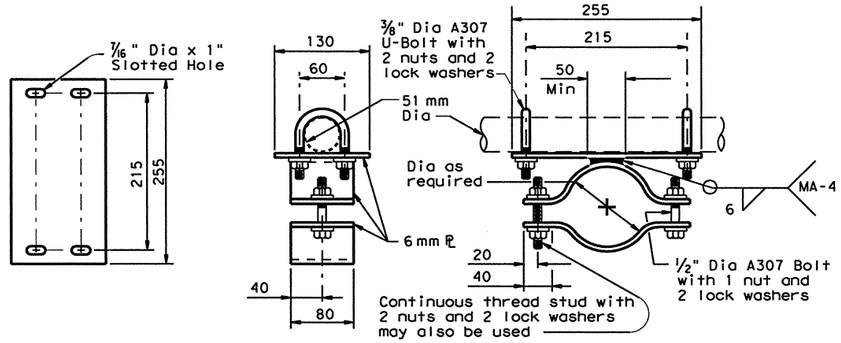


## BRACKET ASSEMBLY DETAILS OPTION A

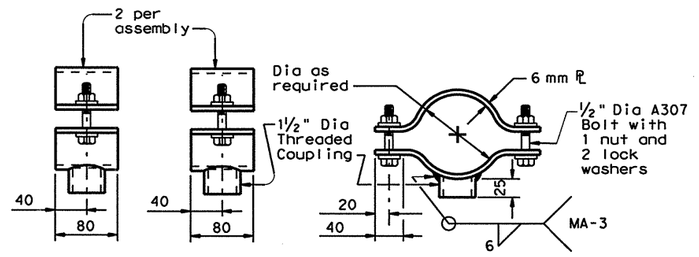


## BRACKET ASSEMBLY DETAILS OPTION B

Stainless steel bands and cast bracket as in "Astro-Brac" with 1 ½" Dia Threaded Coupling.

## BRACKET ASSEMBLY OPTION C

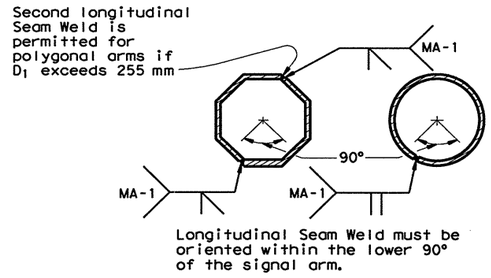


## ARM WELD DETAIL

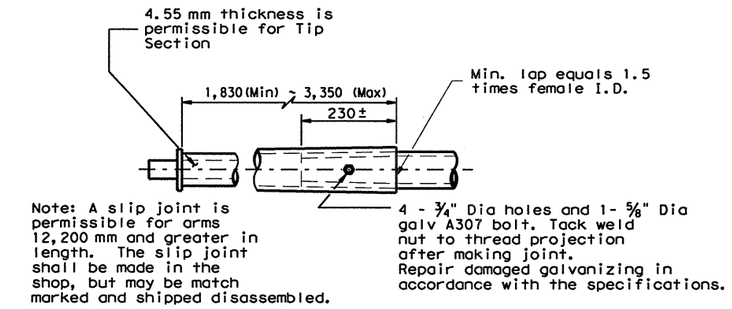


## SLIP JOINT DETAIL

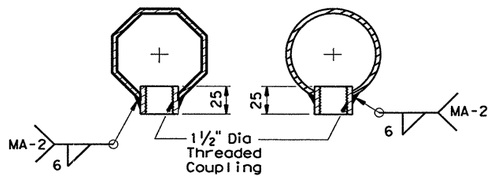


## COUPLING DETAILS

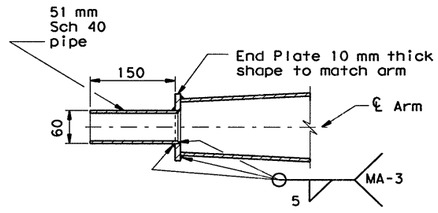


## TENON DETAIL

### GENERAL NOTES:

Design conforms to 1994 AASHTO Standard Specifications for Structural Supports for Highway Signs, Luminaires, and Traffic Signals and Interim Specifications thereto. Design Wind Speed equals 130 kmph plus a 1.3 gust factor.

Poles are designed to support one 2,440 mm luminaire arm, one 2,750 mm internally lighted street name sign and one traffic signal arm with a length as tabulated. The specified luminaire load applied at the end of the luminaire arm equals 335 N vertical dead load plus the horizontal wind load on an effective projected area of 0.14 sq meter. The specified internally lighted street name sign load applied 1,400 mm from the centerline of the pole equals 378 N vertical dead load plus horizontal wind load on an effective projected area of 1.07 sq meter. The specified signal load applied at the end of the traffic signal arm equals 800 N vertical dead load plus the horizontal wind load on an effective projected area of 3.0 sq meter (actual area times drag coefficient).

See Standard Sheet "MA-D(M)" for pole details, "MA-C(M)" for traffic signal arm connection details, "MA-C (ILSN)(M)" for internally lighted street name sign arm connection details, "LUM-A(M)" for luminaire arm and connection details, "SNS(M)" for internally lighted street name sign details, and "TS-FD(M)" for anchor bolt and foundation details. See "MA-C(M)" for material specifications.

Fabrication shall be in accordance with the Specifications and with the details, dimensions, and weld procedures shown herein. Weld references call for preapproved weld procedures which the Fabricator must obtain prior to fabrication. Miscellaneous welds which do not call for preapproved weld procedures are nevertheless subject to rejection for poor workmanship. Materials, fabrication tolerances, and shipping practices shall meet the requirements of this sheet and the Specifications.

Unless otherwise noted, all parts shall be galvanized in accordance with the Specifications.

Special design require submission of shop drawings in accordance with the item "Steel Structures".



Note: All dimensions are in millimeters (mm) except as noted.

Texas Department of Transportation
Traffic Operations Division

# TRAFFIC SIGNAL SUPPORT STRUCTURES

## SINGLE MAST ARM ASSEMBLY

## (130 KMPH WIND ZONE)

## SMA-130(2)-96(M)

| FILE: SMA-80.DGN | DN: MS | CK: JSY | DW: MMF | CK: JSY |
|---|---|---|---|---|
| ©TxDOT August 1995 | DIST | FED REG | FEDERAL AID PROJECT • | SHEET |
| REVISIONS 5-96 | SAT | 6 | NH 2000 (704), etc. | 596 |
| | COUNTY | | CONTROL SECT JOB | HIGHWAY |
| | BEXAR | | 2452 01 036, etc. | LP1604 |

1228

DISCLAIMER:
The use of this standard is governed by the "Texas Engineering Practice Act". No warranty of any kind is made by TxDOT for any purpose whatsoever. TxDOT assumes no responsibility for the conversion of this standard to other formats or for incorrect results or damages resulting from its use.

LEVELS DELETED 1 2 3 4 5 6 7 8 9 10 11 12 13 14 15 16 17 18 19 20 21 22 23 24 25 26 27 28 29 30 31 32 33 34 35 36 37 38 39 40 41 42 43 44 45 46 47 48 49 50 51 52 53 54 55 56 57 58 59 60 61 62 63

ACC: d48hplqi:/usr/d482517

LV=1,2 for English 1,3 for Metric

DISCLAIMER
The use of this standard is governed by the "Texas Engineering Practice Act". No warranty of any kind is made by TxDOT for any purpose whatsoever. TxDOT assumes no responsibility for the conversion of this standard to other formats or for incorrect results or damages resulting from its use.

| ARM SIZE D1 | ‡ | A | B | C | D | E | CONN BOLT DIA |
|---|---|---|---|---|---|---|---|
| mm | mm | mm | mm | mm | mm | mm | in. |
| 165 | 4.55 | 305 | 229 | 229 | 152 | 25 | 1 |
| 190 | 4.55 | 330 | 229 | 254 | 152 | 25 | 1 |
| 205 | 4.55 | 356 | 254 | 279 | 178 | 32 | 1 1/4 |
| 230 | 4.55 | 406 | 279 | 330 | 203 | 32 | 1 1/4 |
| 240 | 4.55 | 432 | 305 | 356 | 229 | 32 | 1 1/4 |
| 240 | 6.07 | 457 | 305 | 381 | 229 | 32 | 1 1/4 |
| 255 | 6.07 | 457 | 305 | 381 | 229 | 32 | 1 1/4 |
| 265 | 6.07 | 457 | 330 | 381 | 254 | 38 | 1 1/2 |
| 280 | 6.07 | 457 | 330 | 381 | 254 | 38 | 1 1/2 |

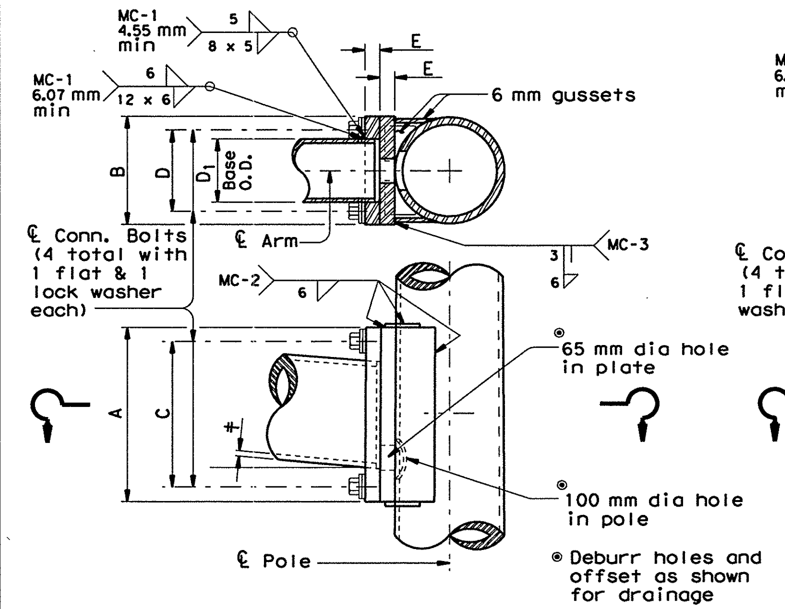


## FIXED MOUNT DETAIL 1

| ARM SIZE D1 | ‡ | A | B | C | D | E | CONN BOLT DIA |
|---|---|---|---|---|---|---|---|
| mm | mm | mm | mm | mm | mm | mm | in. |
| 180 | 4.55 | 279 | 279 | 203 | 203 | 32 | 1 1/4 |
| 190 | 4.55 | 279 | 279 | 203 | 203 | 32 | 1 1/4 |
| 205 | 4.55 | 279 | 279 | 203 | 203 | 32 | 1 1/4 |
| 230 | 4.55 | 330 | 330 | 254 | 254 | 32 | 1 1/4 |
| 255 | 4.55 | 330 | 330 | 254 | 254 | 32 | 1 1/4 |
| 240 | 6.07 | 330 | 330 | 254 | 254 | 32 | 1 1/4 |
| 255 | 6.07 | 356 | 356 | 279 | 279 | 38 | 1 1/2 |
| 280 | 6.07 | 356 | 356 | 279 | 279 | 38 | 1 1/2 |
| 290 | 6.07 | 356 | 356 | 279 | 279 | 38 | 1 1/2 |

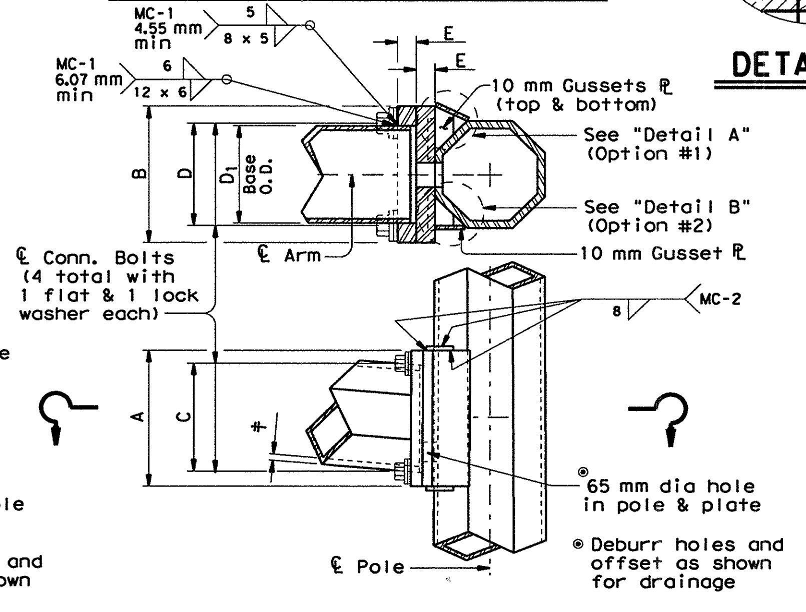


## FIXED MOUNT DETAIL 2

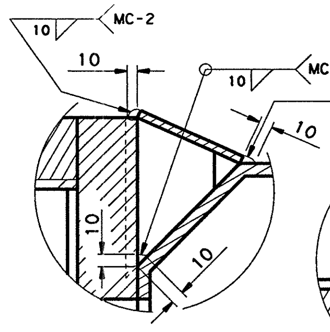


## DETAIL A

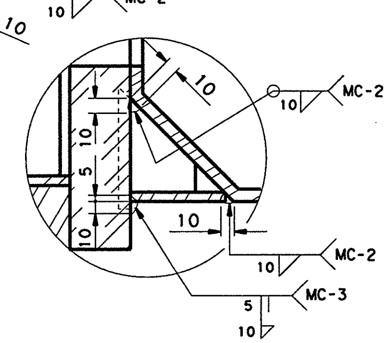


## DETAIL B

| MATERIALS | |
|---|---|
| Round Shafts or Polygonal Shafts | ASTM A595 GR A, ASTM A570M GR 345, ASTM A607 GR 50, ASTM A572M GR 345 or A36M MOD345 |
| Plates (1) | ASTM A36M OR A572M GR345 OR A595(2) OR A36M MOD345 |
| Connection Bolts | ASTM A325M except where noted |
| Pin Bolts | ASTM A325M |
| Pipe | ASTM A53 GR A or B, OR A501 |
| Misc. Hardware | Galvanized steel or stainless steel or as noted |

(1) Any of the materials listed for plates may be used where the drawings do not specify a particular Grade designation.

(2) If A 595 material is used, it need not be cold worked to A 595 requirments, but material must have 276 MPa minimum yield prior to fabrication.

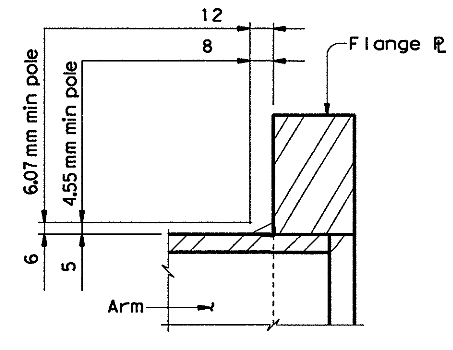


FIXED MOUNT ARM

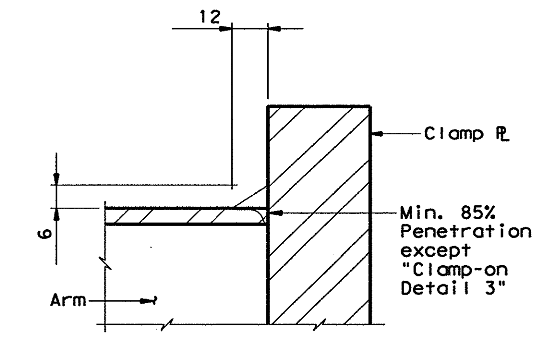


CLAMP-ON ARM

## ARM BASE WELD DETAILS

| ARM SIZE D1 | ‡ | A | F | CONN. BOLTS No. | CONN. BOLTS Dia | PIN BOLTS No. | PIN BOLTS Dia |
|---|---|---|---|---|---|---|---|
| mm | mm | mm | mm | ea. | in. | ea. | in. |
| 165 | 4.55 | 305 | 203 | 4 | *7/8 | 2 | 5/8 |
| 190 | 4.55 | 356 | 203 | 4 | 1 | 2 | 5/8 |
| 205 | 4.55 | 356 | 203 | 4 | 1 | 2 | 5/8 |
| 230 | 4.55 | 406 | 254 | 4 | 1 | 2 | 5/8 |
| 240 | 4.55 | 457 | 305 | 4 | 1 1/4 | 3 | 5/8 |
| 240 | 6.07 | 457 | 305 | 4 | 1 1/4 | 3 | 5/8 |
| 255 | 6.07 | 457 | 305 | 4 | 1 1/4 | 3 | 5/8 |

*1" Dia connection bolts are permissible

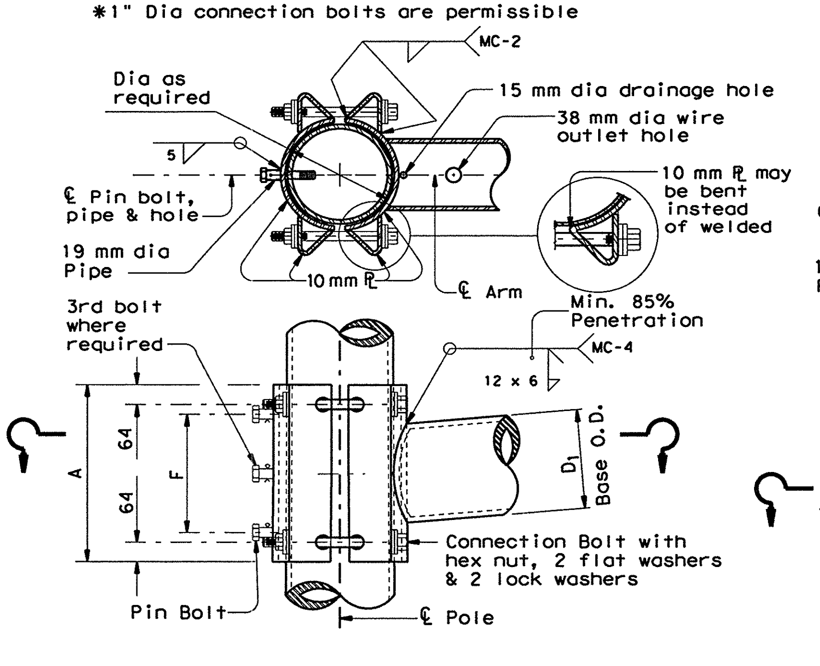


## CLAMP-ON DETAIL 1

| ARM SIZE D1 | ‡ | A | F | T | CONN. BOLTS No. | CONN. BOLTS Dia | PIN BOLTS No. | PIN BOLTS Dia |
|---|---|---|---|---|---|---|---|---|
| mm | mm | mm | mm | mm | ea. | in. | ea. | in. |
| 180 | 4.55 | 305 | 203 | 19 | 4 | 3/4 | 2 | 5/8 |
| 190 | 4.55 | 356 | 203 | 19 | 4 | 3/4 | 2 | 5/8 |
| 205 | 4.55 | 356 | 203 | 19 | 4 | 3/4 | 2 | 5/8 |
| 230 | 4.55 | 406 | 254 | 22 | 4 | 1 | 2 | 5/8 |
| 255 | 4.55 | 457 | 254 | 22 | 4 | 1 | 2 | 5/8 |
| 240 | 6.07 | 457 | 254 | 25 | 6 | 1 | 3 | 5/8 |
| 255 | 6.07 | 457 | 254 | 25 | 6 | 1 | 3 | 5/8 |

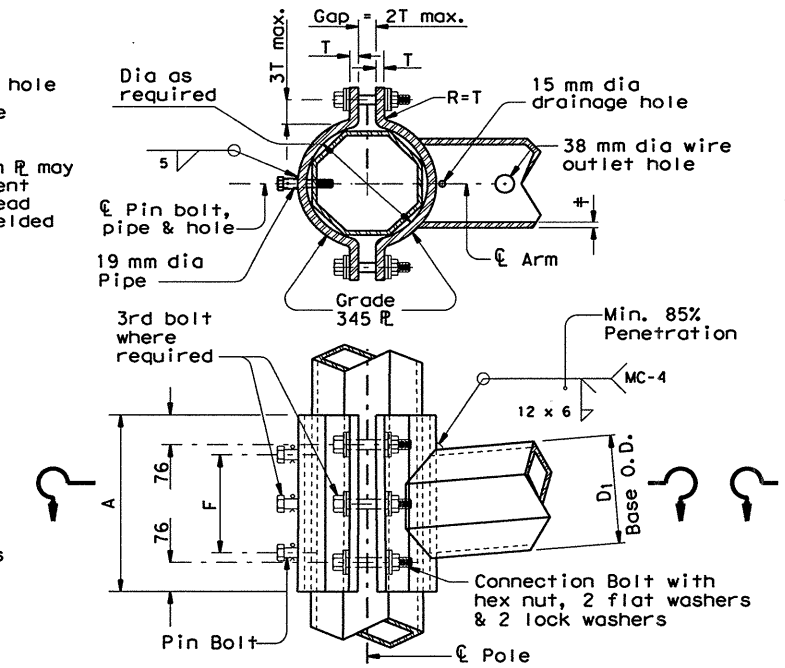


## CLAMP-ON DETAIL 2

| ARM SIZE D1 | ‡ | A | F | CONN. BOLTS No. | CONN. BOLTS Dia | PIN BOLTS No. | PIN BOLTS Dia |
|---|---|---|---|---|---|---|---|
| mm | mm | mm | mm | ea. | in. | ea. | in. |
| 165 | 4.55 | 305 | 203 | 4 | 1 | 2 | 5/8 |
| 190 | 4.55 | 356 | 203 | 4 | 1 | 2 | 5/8 |
| 205 | 4.55 | 356 | 203 | 4 | 1 | 2 | 5/8 |
| 230 | 4.55 | 406 | 254 | 4 | 1 | 2 | 5/8 |
| 240 | 4.55 | 457 | 305 | 6 | 1 | 3 | 5/8 |
| 240 | 6.07 | 457 | 305 | 6 | 1 | 3 | 5/8 |
| 255 | 6.07 | 457 | 305 | 6 | 1 | 3 | 5/8 |

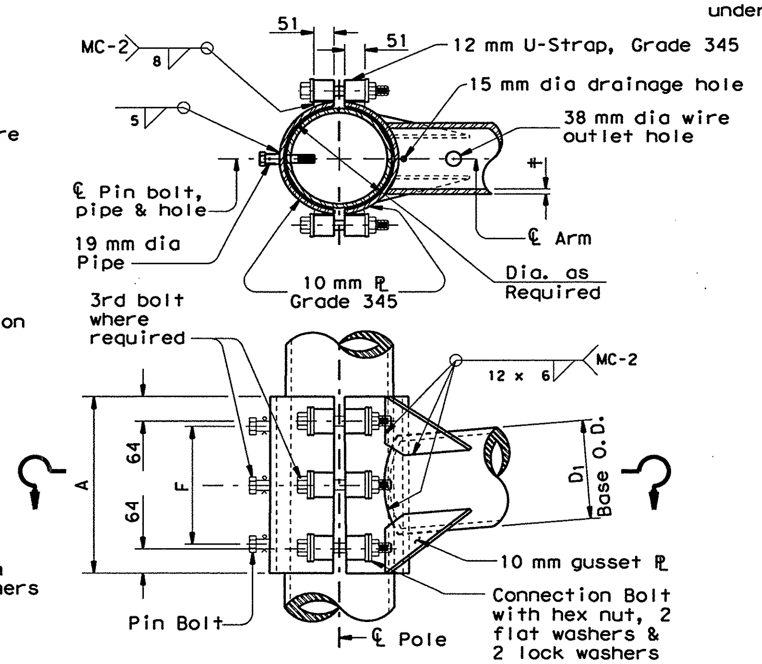


## CLAMP-ON DETAIL 3

## GENERAL NOTES:

Clamp-on details are used for the second arm on dual mast arm assemblies. A Maximum 38 mm wide vertical slotted hole may be cut in the front clamp plate to facilitate drainage during galvanizing. The slot shall be centered behind the arm and shall be no longer than the arm diameter minus 25 mm.

Fixed mount details are used for single mast arm assemblies and for the first arm on dual mast arm assemblies.

Where duplicate parts occur on a detail, welds shown for one part shall apply to all similar parts on the detail.

Pin bolts are required to prevent rotation of clamp-on arms under design wind forces.

**NOTE:**

Pin bolts shall be A325M with threads excluded from the shear plane. Pin bolt and 19 mm dia pipe shall have 5 mm dia holes for a 3 mm dia galvanized cotter pin. Back clamp plate shall be furnished with a 3/4" dia hole for each pin bolt. An 11/16" dia hole for each pin bolt shall be field drilled through the pole after arm orientations have been approved by the Engineer.

NOTE: All dimensions are in millimeters (mm) except as noted.

Texas Department of Transportation
Traffic Operations Division

# STANDARD ASSEMBLY FOR TRAFFIC SIGNAL SUPPORT STRUCTURES

## MAST ARM CONNECTIONS

## MA-C-96(M)

| FILE: MA-C.DGN | DN: MS | CK: JSY | DW: MMF | CK: JSY |
|---|---|---|---|---|
| ©TxDOT August 1995 | DIST SA | FED REG 6 | FEDERAL AID PROJECT NH 2000 (704), ETC. | SHEET 597 |
| REVISIONS 5-96 | COUNTY BEXAR | CONTROL 2452 | SECT 01 | JOB 036, etc. / HIGHWAY LP1604 |

DISCLAIMER
The use of this standard is governed by the "Texas Engineering Practice Act". No warranty of any kind is made by TxDOT for any purpose whatsoever. TxDOT assumes no responsibility for the conversion of this standard to other formats or for incorrect results or damages resulting from its use.

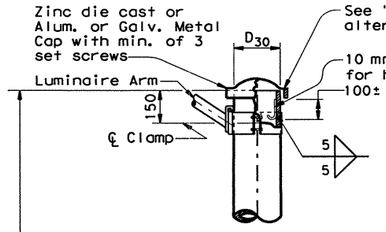


## DETAIL A
(for pole with luminaire)

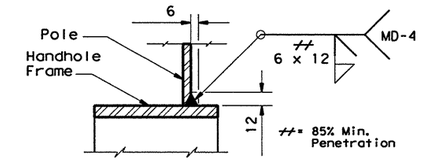


## DETAIL E

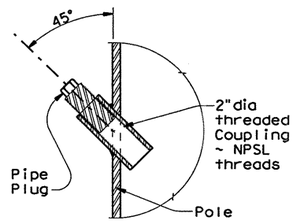


## COUPLING DETAIL

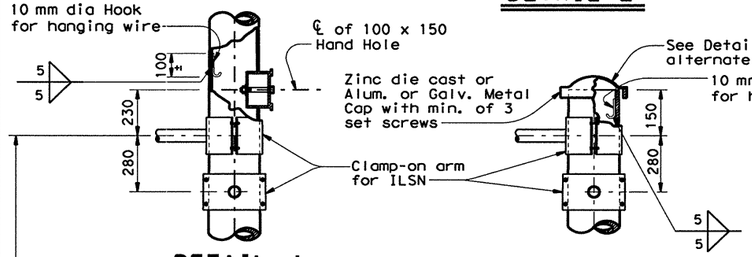


## DETAIL J
(if ILSN applied)

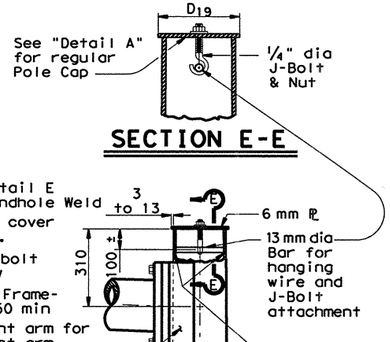


## SECTION E-E

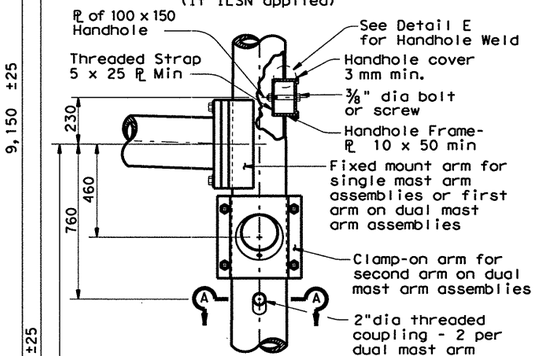


## DETAIL B
(for 9,150 mm pole with luminaire and ILSN sign)

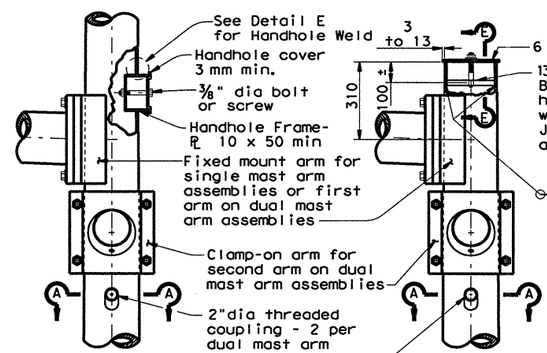


## DETAIL K
(for 7,320 mm pole with ILSN sign and no luminaire)

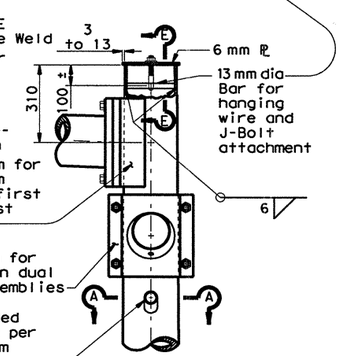


## DETAIL C
(for 5,800 mm pole with no ILSN sign and no luminaire)

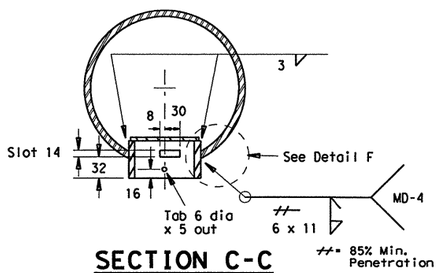


## SECTION C-C

Opening for access compartment shall be no more than 2 mm wider than the access compartment itself.

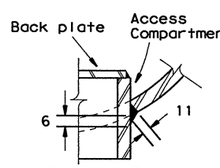


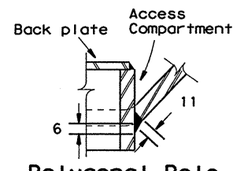


## DETAIL F

## DOUBLE FUSE BLOCK

For luminaire fuses Littelfuse #L60030M-2SQ or equal, supplied and installed by field contractor when required.

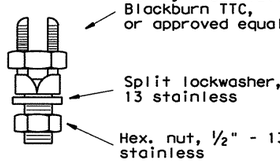


## COPPER GROUND CONNECTOR

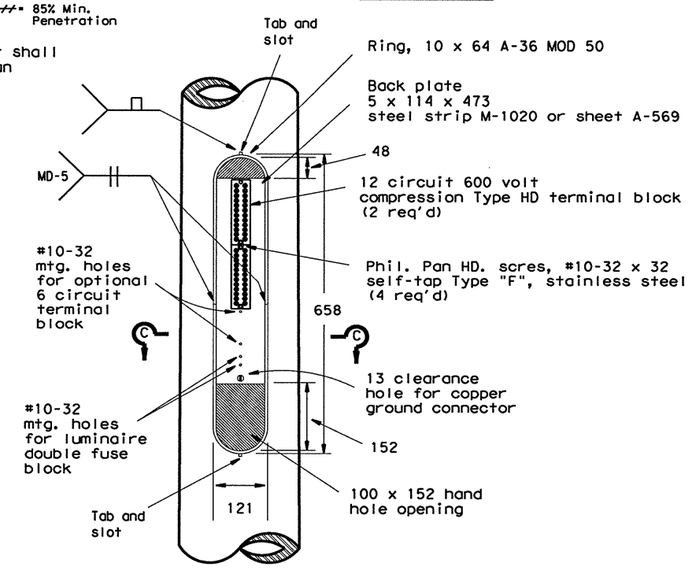


## ACCESS COMPARTMENT

1. The cover shall be one piece formed from ABS plastic, shall be a pearl gray color, and shall be suitable for exposure to harsh sunlight and extreme weather. Cover shall latch with two screw latches and shall fit tightly to the enclosure ring to create a rainproof seal. Latch screws shall be 1/4-20 stainless flat socket head screws with tamper proof feature.
2. The pole manufacturer shall provide with each pole a separate kit consisting of: one cover with two latching assemblies, two terminal strips (Marathon #985GP12CU or approved equal), four #10-32 x 32 self tapping type "F" stainless steel pan head screws, and one ground connector (Blackburn TTC, Burndy KC22J12T13, or Ilsco SSS-5). The traffic signal contractor shall install the kit items in the field.
3. The screw hole spacing on the enclosure back plate shall be for two Marathon #985GP12 terminal strips, one Marathon #985GP06CU terminal strip, and one Littelfuse #L60030M-2SQ fuse block. Arrangement of the items shall be as shown in the Access Compartment detail.

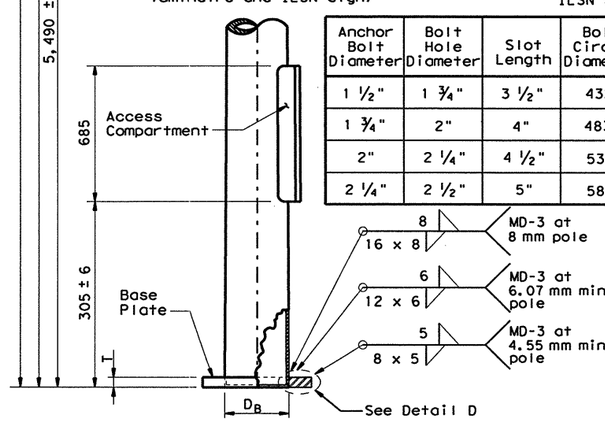


## POLE ELEVATION

| Anchor Bolt Diameter | Bolt Hole Diameter | Slot Length | Bolt Circle Diameter | Base ℄ Dim. L x T | Adjust. Range |
|---|---|---|---|---|---|
| 1 ½" | 1 ¾" | 3 ½" | 432 | 460 x 40 | 13.4° |
| 1 ¾" | 2" | 4" | 483 | 510 x 45 | 13.5° |
| 2" | 2 ¼" | 4 ½" | 533 | 560 x 50 | 13.6° |
| 2 ¼" | 2 ½" | 5" | 584 | 610 x 55 | 13.7° |

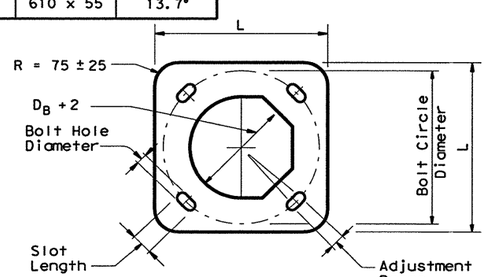


## BASE PLATE PLAN

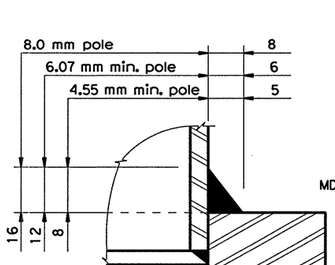


## DETAIL D

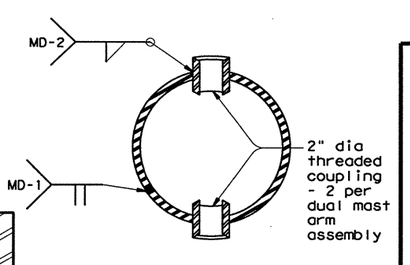


## SECTION A-A

All dimensions are in millimeters unless otherwise noted.

STANDARD PLANS
Texas Department of Transportation
Traffic Operations Division

# TRAFFIC SIGNAL SUPPORT STRUCTURES MAST ARM POLE DETAILS

**MA-D-99A(M)**

| ©TxDOT August 1995 | DN: MS | CK: JSY | DW: FDN | CK: CAL |
|---|---|---|---|---|

| REVISIONS | STATE DISTRICT | FEDERAL REGION | FEDERAL AID PROJECT | SHEET |
|---|---|---|---|---|
| 7-96 | SAT | 6 | NH 2000 (704), etc. | 598 |
| 8-99 | COUNTY | | CONTROL / SECTION / JOB | HIGHWAY |
| | BEXAR | | 2452 / 01 / 036, etc. | LP 1604 |

DN: CK: DW: CK:
DATE: ACC: FILE:
LEVELS 1 2 3 4 5 6 7 8
FIT 1 2 3 4 5 6

⑧ Oversized Drilled Shafts may be used to accommodate existing equipment.

## FOUNDATION DESIGN TABLE

| FDN TYPE | ⑧ DRILLED SHAFT DIA | REINFORCING STEEL: VERT BARS | REINFORCING STEEL: SPIRAL & PITCH | DRILL SHAFT LENGTH-m ④, ⑤, ⑥ TX CONE PENETROMETER N blows/300 mm: 10 | 15 | 40 | ANCHOR BOLT DESIGN ①: ANCHOR BOLT DIA | Fy (MPa) | BOLT CIR DIA | ANCHOR TYPE | FOUNDATION DESIGN LOAD ②: MOMENT kN·m | SHEAR kN | TYPICAL APPLICATION |
|---|---|---|---|---|---|---|---|---|---|---|---|---|---|
| 600-A | 600 | 4- #5 | #2 at 300 | 1.7 | 1.6 | 1.4 | ¾" | 250 | 324 | 1 | 14 | 4 | Pedestal pole, pedestal mounted controller. |
| 750-A | 750 | 8- #9 | #3 at 150 | 3.4 | 3.1 | 2.4 | 1 ½" | 380 | 432 | 2 | 118 | 13 | Mast arm assembly. (see Selection Table) |
| 900-A | 900 | 10- #9 | #3 at 150 | 4.0 | 3.7 | 2.9 | 1 ¾" | 380 | 483 | 2 | 178 | 22 | Mast arm assembly. (see Selection Table) 9150 mm strain pole with or w/out luminaire. |
| 900-B | 900 | 12- #9 | #3 at 150 | 4.6 | 4.1 | 3.2 | 2" | 380 | 533 | 2 | 258 | 31 | Mast arm assembly. (see Selection Table) Strain pole taller than 9150 mm & strain pole with mast arm |
| 1050-A | 1050 | 14- #9 | #3 at 150 | 5.3 | 4.8 | 3.6 | 2 ¼" | 380 | 584 | 2 | 367 | 40 | Mast arm assembly. (see Selection Table) |

## FOUNDATION SELECTION TABLE FOR STANDARD MAST ARM PLUS ILSN SUPPORT ASSEMBLIES (mm)

| | | FDN 750-A | FDN 900-A | FDN 900-B | FDN 1050-A |
|---|---|---|---|---|---|
| 130 km/h DESIGN WIND SPEED | MAX SINGLE ARM LENGTH | 9,750 ⚠1 | 14,600 | | |
| | MAXIMUM DOUBLE ARM LENGTH COMBINATIONS | 7,300 X 7,300 | | | |
| | | 8,500 X 8,500 | | | |
| | | 9,800 X 8,500 | 9,800 X 9,800 | | |
| | | | 11,000 X 11,000 | | |
| | | | 12,200 X 11,000 | | |
| | | | 13,400 X 8,500 | 13,400 X 11,000 | |
| 160 km/h DESIGN WIND SPEED | MAX SINGLE ARM LENGTH | ⚠1 | 11,000 | 13,400 | |
| | MAXIMUM DOUBLE ARM LENGTH COMBINATIONS | | 7,300 X 7,300 | | |
| | | | 8,500 X 8,500 | | |
| | | | 9,800 X 7,300 | 9,800 X 9,800 | |
| | | | | 11,000 X 11,000 | |
| | | | | 12,200 x 7,300 | 12,200 X 11,000 |
| | | | | | 13,400 x 11,000 |

EXAMPLE:

For 130 km/h design wind speed, foundation 750-A can support up to a 9750 mm arm with another arm up to 8530 mm .

For 160 km/h design wind speed, foundation 900-A can support a single 10,970 mm mast arm.

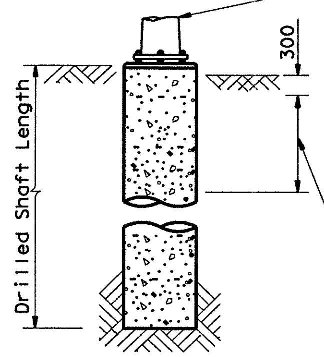


Use average N Value over the top third of the embeded shaft. Ignore the top 300 mm of soil.

## NOTES:

① Anchor bolt design develops the foundation capacity given under Foundation Design Loads.

② Foundation Design Loads are the allowable moments and shears at the base of the structure.

③ Foundations may be listed seperately or grouped according to similarity of location and type. Quantities are for the Contractor's information only.

④ Field Penetrometer readings at a depth of approximately 900 to 1500 mm may be used to adjust shaft lengths.

⑤ If rock is encountered, the Drilled Shaft shall extend a minimum of two diameters into solid rock.

⑥ Decimal lengths in Design Table are to allow interpolation for other penetrometer values. Round to nearest 0.1 m for entry into Summary Table.

### ANCHOR BOLT & TEMPLATE SIZES

| BOLT DIA | ⑦ BOLT LENGTH | TOP THREAD | BOTT THREAD | BOLT CIRCLE | R2 | R1 |
|---|---|---|---|---|---|---|
| | | | | | | |
| ¾" | 1'-6" | 3" | — | 324 | 181 | 143 |
| 1 ½" | 3'-4" | 6" | 2" | 432 | 254 | 178 |
| 1 ¾" | 3'-10" | 7" | 2 ¼" | 483 | 286 | 197 |
| 2" | 4'-3" | 8" | 2 ½" | 533 | 318 | 216 |
| 2 ¼" | 4'-9" | 9" | 3" | 584 | 349 | 235 |

⑦ Min dimensions given, longer bolts are acceptable.

## FOUNDATION SUMMARY TABLE ③

| LOCATION IDENTIFICATION | AVG. N BLOW (per 300 mm) | FDN TYPE | NO. EA | DRILLED SHAFT LENGTH ⑥ (m): 600-A | 750-A | 900-A | 900-B | 1050-A |
|---|---|---|---|---|---|---|---|---|
| | | | | | | | | |
| TOTAL DRILLED SHAFT LENGTHS | | | | | | | | |

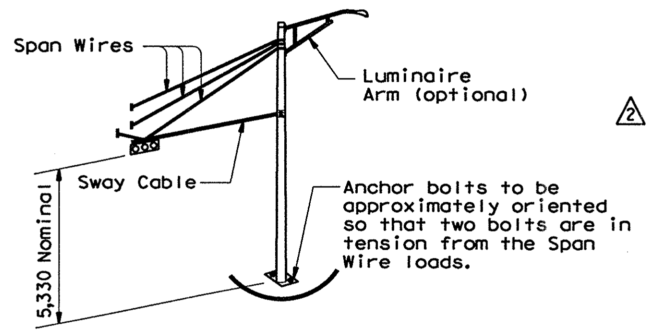


## TYPICAL STRAIN POLE ASSEMBLY

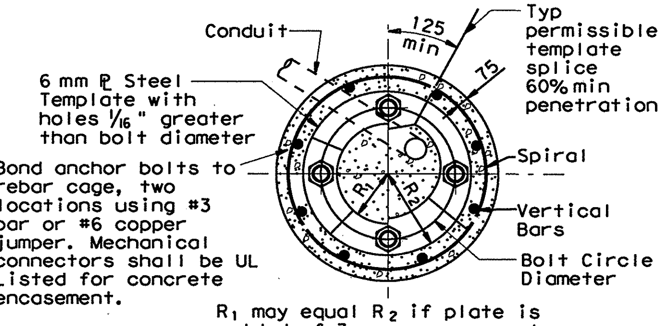


$R_1$ may equal $R_2$ if plate is welded of 3 or more segments.

### TOP VIEW

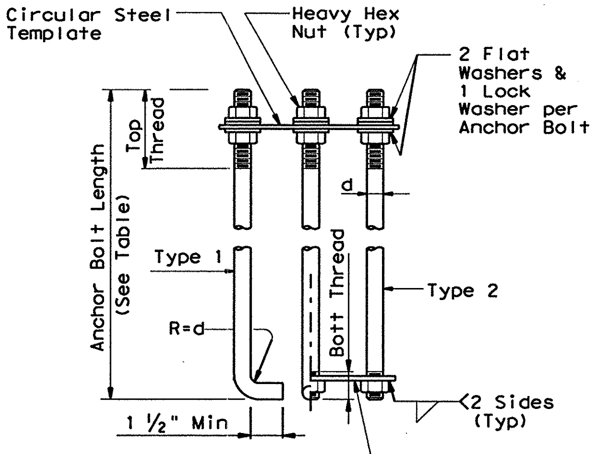


**HOOKED ANCHOR (TYPE 1)**

**NUT ANCHOR (TYPE 2)**

## ANCHOR BOLT ASSEMBLY

### INSTALLATION PROCEDURE:

Threads of anchor bolts shall be coated with pipe joint compound prior to installation of upper nuts when erecting pole. After pole is plumbed and in permanent alignment, the exposed threads of painted bolts shall be cleaned and an additional coating of zinc-rich paint applied to seal the bolt thread-nut joint.

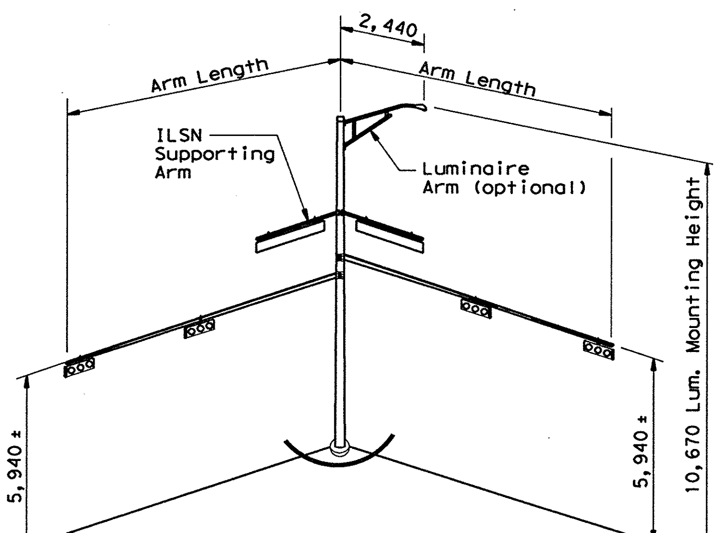


## TYPICAL MAST ARM ASSEMBLY

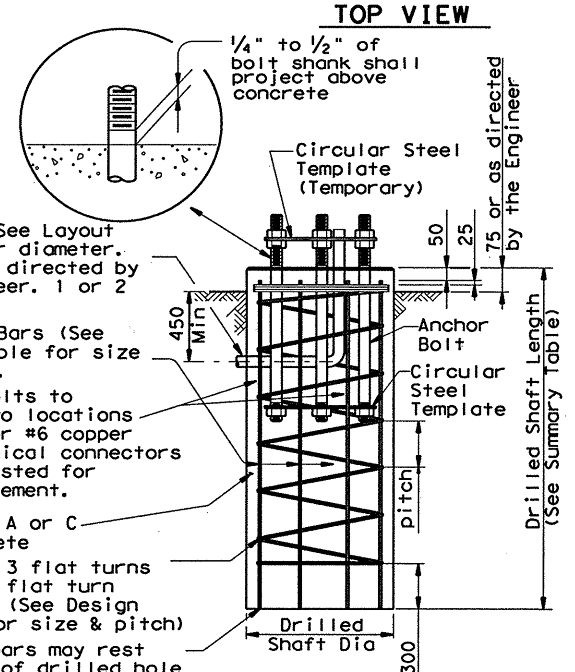


### ELEVATION

## FOUNDATION DETAILS

## GENERAL NOTES:

Design conforms to 1994 AASHTO Standard Spec. for Structural Supports for Highway Signs, Luminaires and Traffic Signals and interim revisions thereto.

Reinforcing steel shall conform to Item 440.

Concrete shall be Class A or C.

Threads for anchor bolts and nuts shall be rolled or cut threads of unified national coarse thread series except for A193M B7 bolts which shall have 8 pitch thread series. Bolts and nuts shall have Class 2A and 2B fit tolerances. Galvanized nuts shall be tapped after galvanizing.

Anchor bolts that are 1" in diameter or less shall conform to ASTM A36M. Anchor bolts larger than 1" in diameter shall conform to A36M Mod380 in accordance with the Item, "Anchor Bolts" or ASTM A193M B7 or A687. Galvanize or coat with zinc-rich paint a minimum of the upper 14 inches of all anchor bolts unless otherwise noted. Exposed nuts shall be galvanized or coated with zinc-rich paint. Washers shall be galvanized. Templates and embeded nuts need not be galvanized.

Note: "All dimensions are in millimeters (mm) except as noted"

11/99 Revision

⚠1 Changed to Facilitate new terminal strip enclosure

⚠2 Changed from ground rod to UFER ground

**STANDARD PLANS**
*Texas Department of Transportation*
*Traffic Operations Division*

# TRAFFIC SIGNAL POLE FOUNDATION

# TS-FD-99 (M)

| ©TxDOT August 1995 | DN: - MS | CK: - JSY | DW: - MAO/MMF | CK: - JSY/TEB |
|---|---|---|---|---|
| REVISIONS 5-96 11-99 | STATE DISTRICT: SAT | FEDERAL REGION: 6 | FEDERAL AID PROJECT: NH 2000 (704), etc. | SHEET: 599 |
| | COUNTY: BEXAR | CONTROL: 2452 | SECTION: 01 / JOB: 036, etc. | HIGHWAY: LP 1604 |


DISCLAIMER:
The use of this standard is governed by the "Texas Engineering Practice Act". No warranty of any kind is made by TxDOT for any purpose whatsoever. TxDOT assumes no responsibility for the conversion of this standard to other formats or for incorrect results or damages resulting from its use.



ACC: d48hp1q:/usr/d482517
LV=1,2 for English 1,3 for Metric
LEVELS USED

DISCLAIMER:
The use of this standard is governed by the "Texas Engineering Practice Act". No warranty of any kind is made by TxDOT for any purpose whatsoever. TxDOT assumes no responsibility for the conversion of this standard to other formats or for incorrect results or damages resulting from its use.

LEVELS
1 2 3 4 5 6 7 8 9 10 11 12 13 14 15 16
17 18 19 20 21 22 23 24 25 26 27 28 29 30 31 32
33 34 35 36 37 38 39 40 41 42 43 44 45 46 47 48
49 50 51 52 53 54 55 65 75 85 96 06 16 26 36

ACC: d48hp1a:/usr/d482517

LV=1, 2 for English 1, 3 for Metric

⑧ ~~Oversized~~ Drilled Shafts may be used to accommodate existing equipment.

## FOUNDATION DESIGN TABLE

| FDN TYPE | ⑧ DRILLED SHAFT DIA | REINFORCING STEEL | | DRILL SHAFT LENGTH-m ④, ⑤, ⑥ | | | ANCHOR BOLT DESIGN ① | | | | FOUNDATION DESIGN LOAD ② | | TYPICAL APPLICATION |
|---|---|---|---|---|---|---|---|---|---|---|---|---|---|
| | | VERT BARS | SPIRAL & PITCH | TX CONE PENETROMETER N blows/300 mm | | | ANCHOR BOLT DIA | Fy (MPa) | BOLT CIR DIA | ANCHOR TYPE | MOMENT kN·m | SHEAR kN | |
| | | | | 10 | 15 | 40 | | | | | | | |
| 600-A | 600 | 4- #5 | #2 at 300 | 1.7 | 1.6 | 1.4 | ¾" | 250 | 324 | 1 | 14 | 4 | Pedestal pole, pedestal mounted controller. |
| 750-A | 750 | 8- #9 | #3 at 150 | 3.4 | 3.1 | 2.4 | 1 ½" | 380 | 432 | 2 | 118 | 13 | Mast arm assembly. (see Selection Table) |
| 900-A | 900 | 10- #9 | #3 at 150 | 4.0 | 3.7 | 2.9 | 1 ¾" | 380 | 483 | 2 | 178 | 22 | Mast arm assembly. (see Selection Table) 9150 mm strain pole with or w/out luminaire. |
| 900-B | 900 | 12- #9 | #3 at 150 | 4.6 | 4.1 | 3.2 | 2" | 380 | 533 | 2 | 258 | 31 | Mast arm assembly. (see Selection Table) Strain pole taller than 9150 mm & strain pole with mast arm |
| 1050-A | 1050 | 14- #9 | #3 at 150 | 5.3 | 4.8 | 3.6 | 2 ¼" | 380 | 584 | 2 | 367 | 40 | Mast arm assembly. (see Selection Table) |

## FOUNDATION SELECTION TABLE FOR STANDARD MAST ARM PLUS ILSN SUPPORT ASSEMBLIES (mm)

| | | FDN 750-A | FDN 900-A | FDN 900-B | FDN 1050-A |
|---|---|---|---|---|---|
| 130 km/h DESIGN WIND SPEED | MAX SINGLE ARM LENGTH | 9,750 ⚠1 | 14,600 | | |
| | MAXIMUM DOUBLE ARM LENGTH COMBINATIONS | 7,300 X 7,300 | | | |
| | | 8,500 X 8,500 | | | |
| | | 9,800 X 8,500 | 9,800 X 9,800 | | |
| | | | 11,000 X 11,000 | | |
| | | | 12,200 X 11,000 | | |
| | | | 13,400 X 8,500 | 13,400 X 11,000 | |
| 160 km/h DESIGN WIND SPEED | MAX SINGLE ARM LENGTH | ⚠1 | 11,000 | 13,400 | |
| | MAXIMUM DOUBLE ARM LENGTH COMBINATIONS | | 7,300 X 7,300 | | |
| | | | 8,500 X 8,500 | | |
| | | | 9,800 X 7,300 | 9,800 X 9,800 | |
| | | | | 11,000 X 11,000 | |
| | | | | 12,200 x 7,300 | 12,200 X 11,000 |
| | | | | | 13,400 x 11,000 |

EXAMPLE:

For 130 km/h design wind speed, foundation 750-A can support up to a 9750 mm arm with another arm up to 8530 mm .

For 160 km/h design wind speed, foundation 900-A can support a single 10,970 mm mast arm.

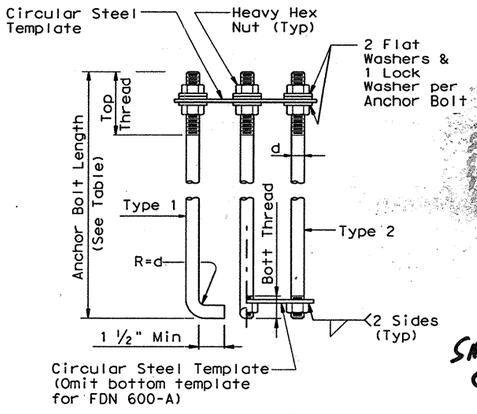


HOOKED ANCHOR (TYPE 1) NUT ANCHOR (TYPE 2)

## ANCHOR BOLT ASSEMBLY

**INSTALLATION PROCEDURE:**

Threads of anchor bolts shall be coated with pipe joint compound prior to installation of upper nuts when erecting pole. After pole is plumbed and in permanent alignment, the exposed threads of painted bolts shall be cleaned and an additional coating of zinc-rich paint applied to seal the bolt thread-nut joint.

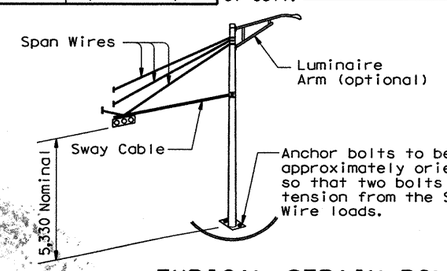


## TYPICAL STRAIN POLE ASSEMBLY

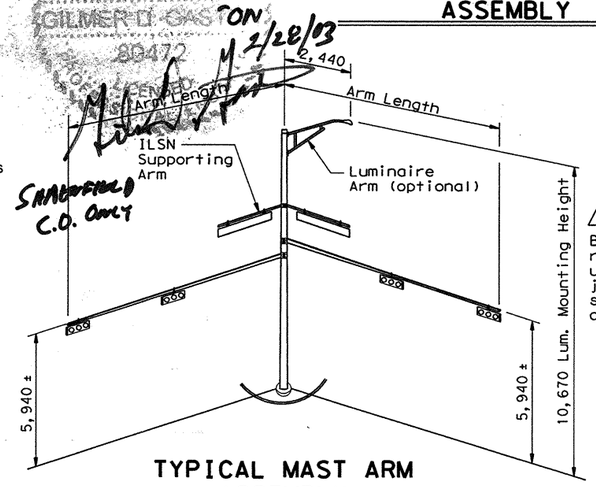


## TYPICAL MAST ARM ASSEMBLY

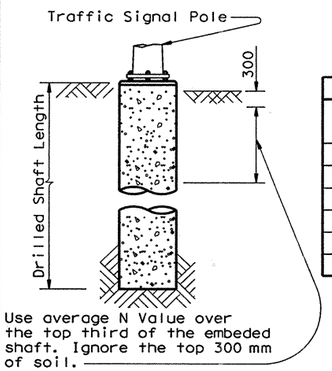


## NOTES:

① Anchor bolt design develops the foundation capacity given under Foundation Design Loads.

② Foundation Design Loads are the allowable moments and shears at the base of the structure.

③ Foundations may be listed seperately or grouped according to similarity of location and type. Quantities are for the Contractor's information only.

④ Field Penetrometer readings at a depth of approximately 900 to 1500 mm may be used to adjust shaft lengths.

⑤ If rock is encountered, the Drilled Shaft shall extend a minimum of two diameters into solid rock.

⑥ Decimal lengths in Design Table are to allow interpolation for other penetrometer values. Round to nearest 0.1 m for entry into Summary Table.

### ANCHOR BOLT & TEMPLATE SIZES

| BOLT DIA | ⑦ BOLT LENGTH | TOP THREAD | BOTT THREAD | BOLT CIRCLE | R2 | R1 |
|---|---|---|---|---|---|---|
| ¾" | 1'-6" | 3" | — | 324 | 181 | 143 |
| 1 ½" | 3'-4" | 6" | 2" | 432 | 254 | 178 |
| 1 ¾" | 3'-10" | 7" | 2 ¼" | 483 | 286 | 197 |
| 2" | 4'-3" | 8" | 2 ½" | 533 | 318 | 216 |
| 2 ¼" | 4'-9" | 9" | 3" | 584 | 349 | 235 |

⑦ Min dimensions given, longer bolts are acceptable.

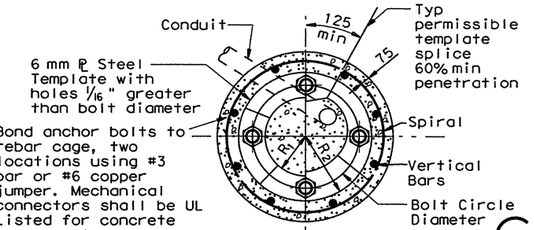


TOP VIEW

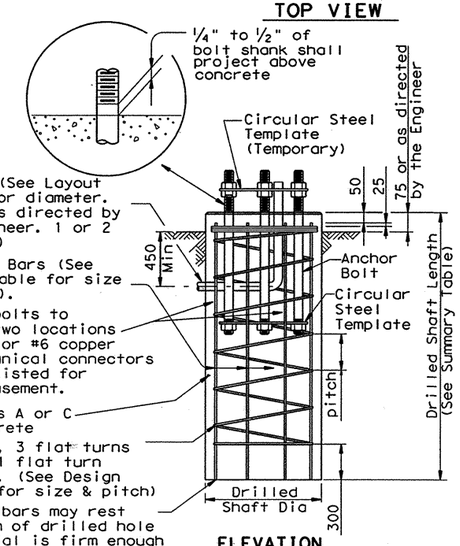


ELEVATION

## FOUNDATION DETAILS

## FOUNDATION SUMMARY TABLE ③

| LOCATION IDENTIFICATION | AVG. N BLOW (per 300 mm) | FDN TYPE | NO. EA | DRILLED SHAFT LENGTH ⑥ (m) 600-A | 750-A | 900-A | 900-B | 1050-A |
|---|---|---|---|---|---|---|---|---|
| LOOP 1604/ WISEMAN ROAD | | | | | | | | |
| A(11.0) | | 900-A | 1 | | | 4.0 | | |
| B(14.6) | | 900-A | 1 | | | 4.0 | | |
| C | | 600-A | 1 | 1.7 | | | | |
| D(11.0) | | 900-A | 1 | | | 4.0 | | |
| E(11.0) | | 900-A | 1 | | 3.4 | | | |
| F(12.2) | | 900-A | 1 | | | 4.0 | | |
| G | | 600-A | 1 | 1.7 | | | | |
| H(12.2) | | 900-A | 1 | | | 4.0 | | |
| SUB-TOTAL | | | | 3.4 | 3.4 | 20.0 | | |
| | | | | | | | | |
| LOOP 1604/ MILITARY DR | | | | | | | | |
| A | | 600-A | 1 | 1.7 | | | | |
| B(13.4) | | 900-A | 1 | | | 4.0 | | |
| C(11.0) | | 900-A | 1 | | | 4.0 | | |
| D(13.4) | | 900-A | 1 | | | 4.0 | | |
| E(13.4) | | 900-A | 1 | | | 4.0 | | |
| F(11.0) | | 900-A | 1 | | | 4.0 | | |
| G(13.4) | | 900-A | 1 | | | 4.0 | | |
| H | | 600-A | 1 | 1.7 | | | | |
| SUB-TOTAL | | | | 3.4 | | 24.0 | | |
| SHAENFIELD | | | | | | | | |
| C | | 900-B | 1 | | | | 4.6 | |
| D | | 600-A | 1 | 1.7 | | | | |
| E | | 900-B | 1 | | | | 4.6 | |
| F | | 900-B | 1 | | | | 4.6 | |
| G | | 900-B | 1 | | | | 4.6 | |
| SUB-TOTAL | | | | 1.7 | | | 18.4 | |
| SHEET 1 TOTALS | | | | 6.8 | 3.4 | 44.0 | | |
| TOTAL DRILLED SHAFT LENGTHS | | | | | | | | |

CHANGE ORDER NO. 59

### GENERAL NOTES:

Design conforms to 1994 AASHTO Standard Spec. for Structural Supports for Highway Signs, Luminaires and Traffic Signals and interim revisions thereto.

Reinforcing steel shall conform to Item 440.

Concrete shall be Class A or C.

Threads for anchor bolts and nuts shall be rolled or cut threads of unified national coarse thread series except for A193M B7 bolts which shall have 8 pitch thread series. Bolts and nuts shall have Class 2A and 2B fit tolerances. Galvanized nuts shall be tapped after galvanizing.

Anchor bolts that are 1" in diameter or less shall conform to ASTM A36M. Anchor bolts larger than 1" in diameter shall conform to A36M Mod380 in accordance with the Item, "Anchor Bolts" or ASTM A193M B7 or A687. Galvanize or coat with zinc-rich paint a minimum of the upper 14 inches of all anchor bolts unless otherwise noted. Exposed nuts shall be galvanized or coated with zinc-rich paint. Washers shall be galvanized. Templates and embeded nuts need not be galvanized.

SHEET 1 OF 2

Note: "All dimensions are in millimeters (mm) except as noted"

11/99 Revision

⚠1 Changed to Facilitate new terminal strip enclosure

⚠2 Changed from ground rod to UFER ground

STANDARD PLANS
Texas Department of Transportation
Traffic Operations Division

Change Order #59 - New Sheet

# TRAFFIC SIGNAL POLE FOUNDATION

# TS-FD-99(M)

| ©TxDOT August 1995 | DN: MS | CK: JSY | DW: MAO/MMF | CK: JSY/TEB |
|---|---|---|---|---|
| REVISIONS 5-96 11-99 | STATE DISTRICT | FEDERAL REGION | FEDERAL AID PROJECT | SHEET |
| | SAT | 6 | NH 2000 (704), etc. | 59A |
| | COUNTY | | CONTROL SECTION JOB | HIGHWAY |
| | BEXAR | | 2452 01 036,etc. | LP 1604 |

Metric 128

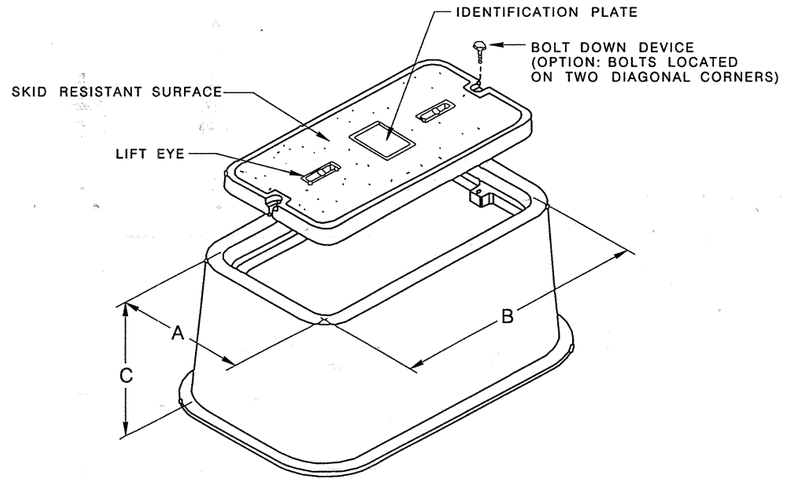


NOMINAL DIMENSIONS

| ⚠ GROUND BOX | A | B | C |
|---|---|---|---|
| # 3* | 10 1/4" | 17 1/4" | 12" |
| # 5 | 12"–13" | 23 5/8"–25" | 12" |
| # 7 | 16 3/8"–22" | 29 3/8"–82" | 12"–18" |

NOTE:

SEE SPECIFICATIONS FOR DETAILED INFORMATION.

## ⚠ GROUND BOX DETAIL

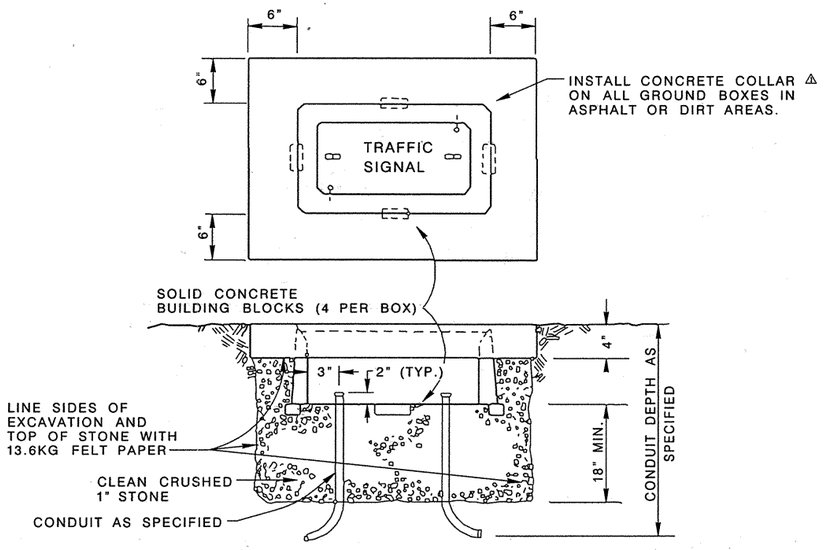


## ⚠ TYPICAL GROUND BOX INSTALLATION DETAIL

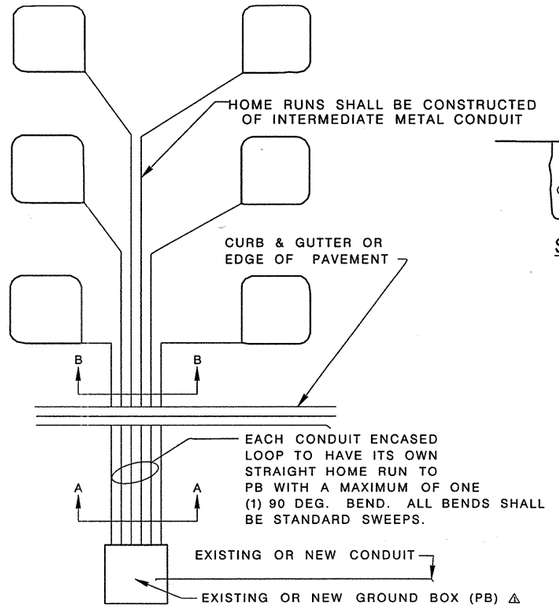


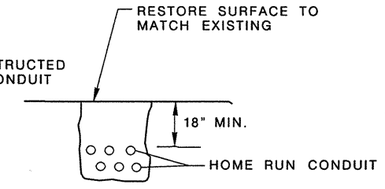


SECTION A–A

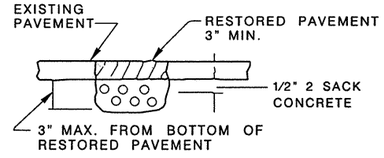


SECTION B–B

## LOOP NOTES

ALL CONNECTIONS BETWEEN THE LOOP WIRE AND SHIELDED LEAD-IN CABLE SHALL BE MADE AS FOLLOWS

A) TIN THE WIRES WITH SOLDER.
B) MAKE A BUTT CONNECTION BETWEEN THE WIRES WITH A TINNED COPPER COMPRESSION FITTING.
C) JOIN THE WIRES AND FITTING WITH SOLDER IN A COMPLETE AND ACCEPTABLE MANNER.
D) TAPE THE CONNECTION WITH AN ACCEPTABLE ELECTRICAL TAPE.
E) SEAL THE CONNECTION IN A RE-ENTERABLE ENCAPSULATING SPLICE KIT.

## CONDUIT ENCASED LOOP DETAILS

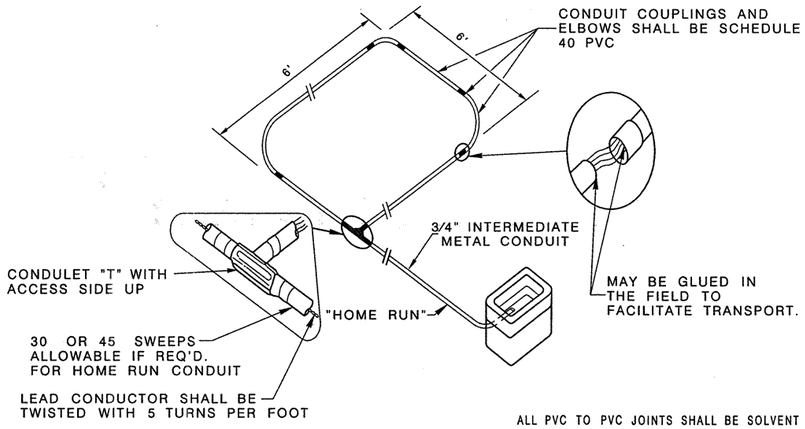


ALL PVC TO PVC JOINTS SHALL BE SOLVENT WELD CONNECTED AND WATERPROOF.

1.) CONTRACTOR SHALL INSTALL CONDUIT ENCASED LOOPS AT THE LOCATIONS SHOWN ON THE PLANS USING 3/4" DIAMETER PVC SCHEDULE 40 CONDUIT OR AT NO ADDITIONAL COST 1" DIAMETER PVC SCHEDULE 80 CONDUIT.
2.) LOOP LOCATIONS MAY BE STAGGERED SLIGHTLY (+/-6") TO ACCOMODATE HOME RUN PLACEMENT.
⚠ 3.) INDIVIDUAL HOME RUN CONDUITS SHALL BE EXTENDED TO THE GROUND BOX SHOWN ON THE PLANS FOR EACH LOOP INSTALLED.
4.) ALL LOOP AND HOME RUN CONDUIT SHALL BE PLACED IN COMPACTED SUBGRADE MATERIAL AT 4" TO 6" DEEP AND ALL ROCKS, PROTUSIONS OR IRREGULARITIES WHICH MAY DAMAGE. THE CONDUIT SHALL BE REMOVED.
5.) THE CONTRACTOR SHALL BE RESPONSIBLE TO DEVISE HIS OWN METHOD FOR EXCAVATING FOR LOOPS. ALL AREAS DISTURBED BY THE CONTRACTOR'S OPERATION SHALL BE RESTORED TO THEIR ORIGINAL CONDITION.
6.) ALL LOOPS SHALL BE WOUND FOUR TIMES IN A COUNTER CLOCKWISE DIRECTION.

## CONDUIT– ENCASED LOOP

New Sheet
CHANGE ORDER #59

555 EAST RAMSEY SAN ANTONIO TEXAS 78216
PHONE (210)375-9000
FAX (210)375-9010
PAPE-DAWSON ENGINEERS
CIVIL & ENVIRONMENTAL

STATE OF TEXAS
GILMER D. GASTON
80472
REGISTERED
PROFESSIONAL ENGINEER

GILMER D. GASTON, P.E. — DATE 2/14/03

| NO. | REVISION | BY | DATE |
|---|---|---|---|
| ⚠ | CHANGE PULLBOX TO GROUND BOX | GG | 4-30-01 |
| | | | |
| | | | |

CITY OF SAN ANTONIO

DEPARTMENT OF PUBLIC WORKS

CITY OF SAN ANTONIO
TRAFFIC SIGNAL DETAILS

GROUND BOXES & ENCASED LOOPS (MOD)

5293

| | | | | | | | |
|---|---|---|---|---|---|---|---|
| DESIGNED: | FED. RD. DIV. NO. | STATE | FEDERAL AID PROJECT NO. | | | SHT. NO. | |
| CHECKED: | | TEXAS | NH 2000 (704), etc. | | | ~~399~~ | |
| DRAWN: OPT | STATE DIST. NO. | COUNTY | CONTROL NO. | SECT. NO. | JOB NO. | HIGHWAY NO. | |
| CHECKED: | SAT | BEXAR | 2452 | 01 | 035, etc. | LOOP 1604 | |

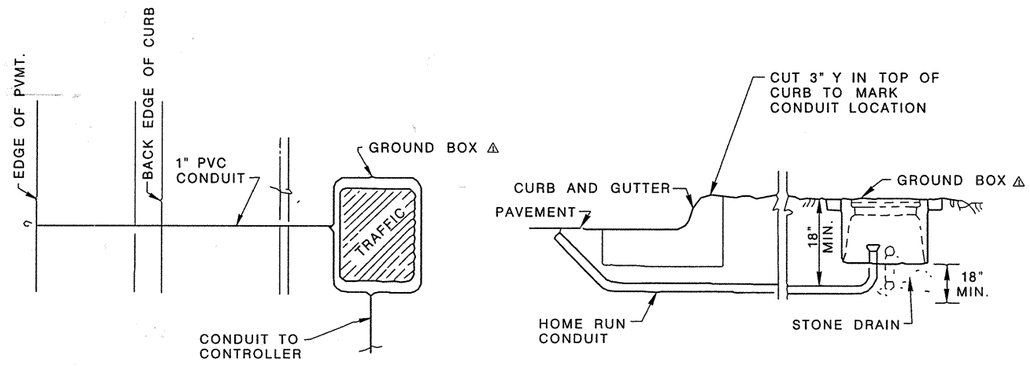


## CONDUIT LEAD-IN CURB SECTION

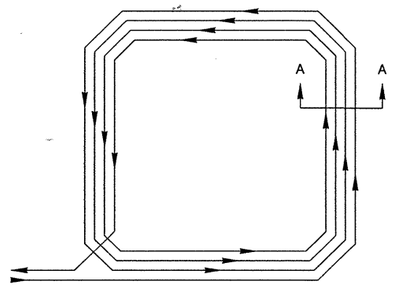


## WIRE LAYOUT

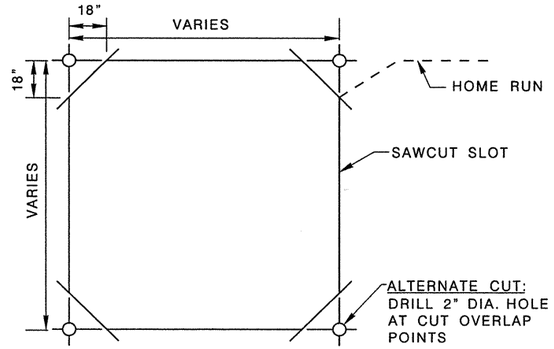


## SAWCUT LAYOUT

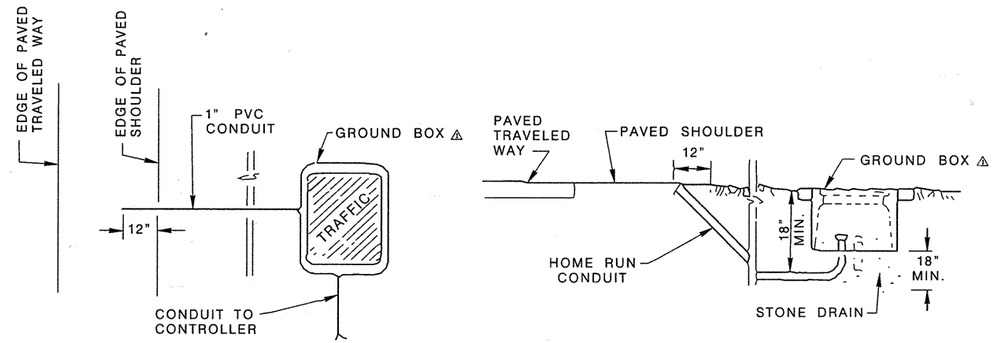


## CONDUIT LEAD-IN PAVED SHOULDER SECTION

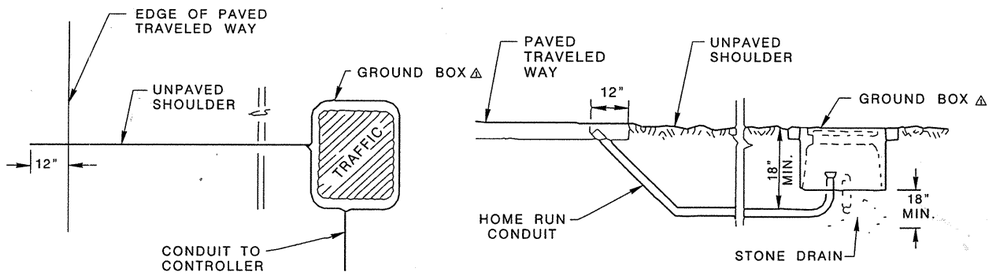


## CONDUIT LEAD-IN UNPAVED SHOULDER SECTION

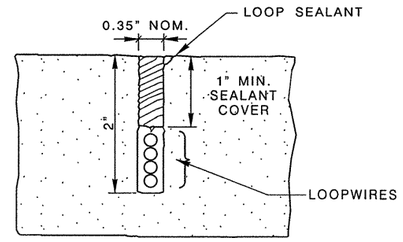


LOOP CROSS SECTION A - A

# SAWCUT LOOP DETECTOR STUB-OUT DETAILS

# SAWCUT LOOP DETAILS

NOTES:

⚠ 1.) LOOP WIRE TO BE A CONTINUOUS RUN WITH NO SPLICES TO GROUND BOX OR POLE MOUNT SPLICE BOX.

2.) EACH LOOP TO BE A SEPARATE RUN.

3.) UNLESS OTHERWISE SPECIFIED ALL LOOPS TO TAKE 4 TURNS.

4.) THE PAVEMENT CUT IS TO BE MADE WITH A CONCRETE SAW TO NEAT LINES AND LOOSE MATERIAL REMOVED. THE CUT SHALL BE CLEAN AND DRY WHEN THE WIRE AND SEALING COMPOUND IS PLACED.

⚠ 5.) WIRE FROM THE LOOP TO THE GROUND BOX SHALL BE TWISTED A MINIMUM OF FIVE TURNS PER FOOT, NO SPLICES SHALL BE PERMITTED IN THE LOOP OR IN THE RUN TO THE GROUND BOX.

⚠ 6.) THE HOME RUN CABLE FROM THE GROUND BOX TO THE CONTROLLER SHALL BE SOLDERED TO THE LOOP WIRE, THE SOLDER JOINTS SHALL BE SEALED WITH AN ENCAPSULATOR RESIN. ENDS OF WIRE TUBE TO BE SEALED.

555 EAST RAMSEY SAN ANTONIO TEXAS 78216 PHONE (210)375-9000 FAX (210)375-9010
PAPE-DAWSON ENGINEERS
CIVIL & ENVIRONMENTAL

STATE OF TEXAS · GILMER D. GASTON · 80472 · REGISTERED PROFESSIONAL ENGINEER

GILMER D. GASTON, P.E. 2/19/03 DATE

| NO. | REVISION | BY | DATE |
|---|---|---|---|
| ⚠ | CHANGE PULLBOX TO GROUND BOX | GG | 4-30-01 |
| | | | |
| | | | |

CITY OF SAN ANTONIO

DEPARTMENT OF PUBLIC WORKS

CITY OF SAN ANTONIO
TRAFFIC SIGNAL DETAILS
LOOP DETECTORS-1 (MOD)
5aac

| DESIGNED: | FED.RD. DIV.NO. | STATE | FEDERAL AID PROJECT NO. | | | SHT.NO. |
|---|---|---|---|---|---|---|
| CHECKED: | | TEXAS | NH 2000 (704), etc. | | | -xxx- |
| DRAWN: OPT | STATE DIST.NO. | COUNTY | CONTROL NO. | SECT. NO. | JOB NO. | HIGHWAY NO. |
| CHECKED: | SAT | BEXAR | 2452 | 01 | 036, etc. | LOOP 1604 |

New Sheet
CHANGE ORDER #59

| # OF LOOPS IN SET----> | CONNECTION CONFIGURATION (# OF TURNS PER LOOP) | | | |
|---|---|---|---|---|
| | 1 | 2 | 3 | 4 |
| 6' x 6' | (4) | (4) SERIES | (4) SERIES | (4) S/P |
| 6' x 35' OR SMALLER | (3) | (3) SERIES | (3) SERIES | (3) S/P |
| LARGER THAN 6' x 35' | (2) | (2) SERIES | (2) SERIES | (2) S/P |

S/P = SERIES/PARALLEL LOOP CONNECTIONS

EACH SPLICE MADE THE SAME AS BELOW

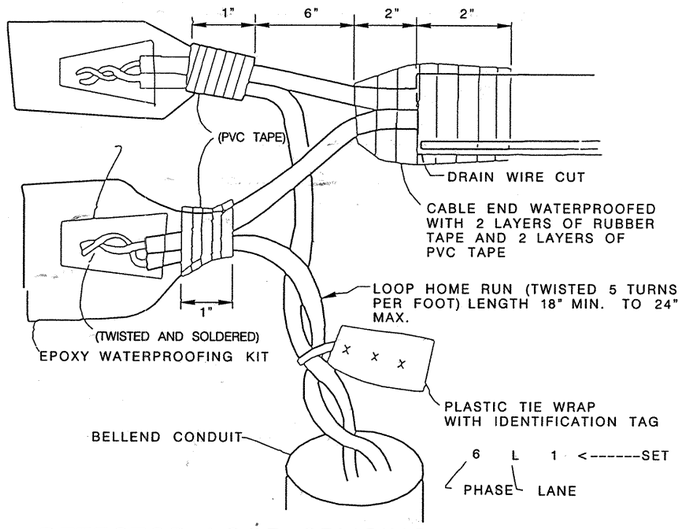


## DETECTOR LOOP SPLICING
(TYPICAL SINGLE PAIR)

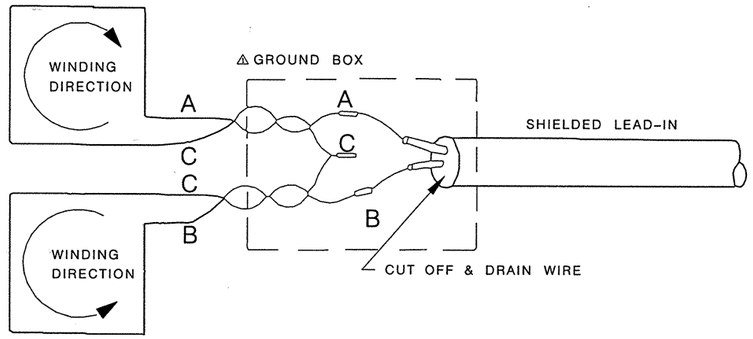


## SERIES LOOP CONNECTIONS

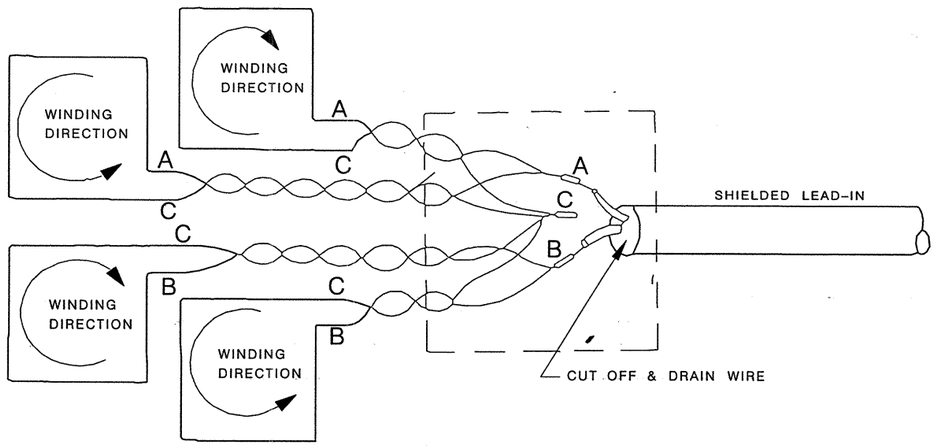


## SERIES/PARALLEL LOOP CONNECTIONS

## DETECTOR LOOP SPLICING
(TYPICAL SINGLE PAIR)

New Sheet
CHANGE ORDER #59

555 EAST RAMSEY SAN ANTONIO TEXAS 78216 PHONE (210)375-9000 FAX (210)375-9010
PAPE-DAWSON ENGINEERS
CIVIL & ENVIRONMENTAL

STATE OF TEXAS GILMER D. GASTON 80472 REGISTERED PROFESSIONAL CIVIL ENGINEER

GILMER D. GASTON, P.E. 2/22/02 DATE

| NO. | REVISION | BY | DATE |
|---|---|---|---|
| | | | |

CITY OF SAN ANTONIO

DEPARTMENT OF PUBLIC WORKS

CITY OF SAN ANTONIO
TRAFFIC SIGNAL DETAILS
LOOP DETECTORS-2
799D

| DESIGNED: | FED. RD. DIV. NO. | STATE | FEDERAL AID PROJECT NO. | SHT. NO. |
|---|---|---|---|---|
| CHECKED: | | TEXAS | NH 2000 (704), etc. | |
| DRAWN: OPT | STATE DIST. NO. | COUNTY | CONTROL NO. / SECT. NO. / JOB NO. | HIGHWAY NO. |
| CHECKED: | SAT | BEXAR | 2452 / 01 / 036, etc. | LOOP 1604 |

Plotted on: 02/14/2003

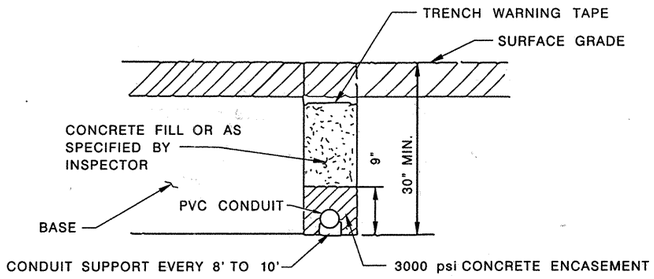


## CONDUIT TRENCHED IN STREET

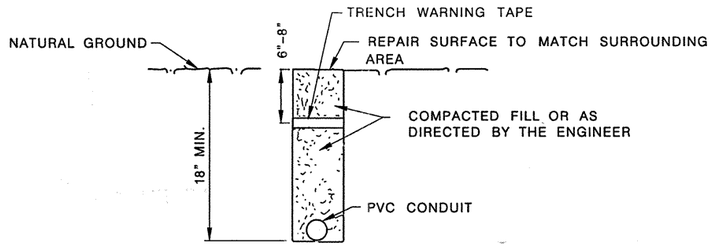


## CONDUIT OUTSIDE STREET

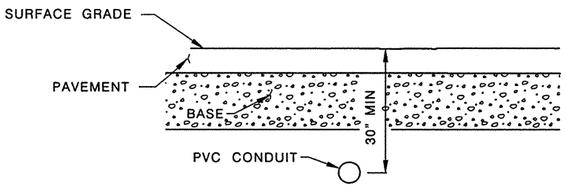


## CONDUIT BORED UNDER PAVEMENT

# CONDUIT DETAILS

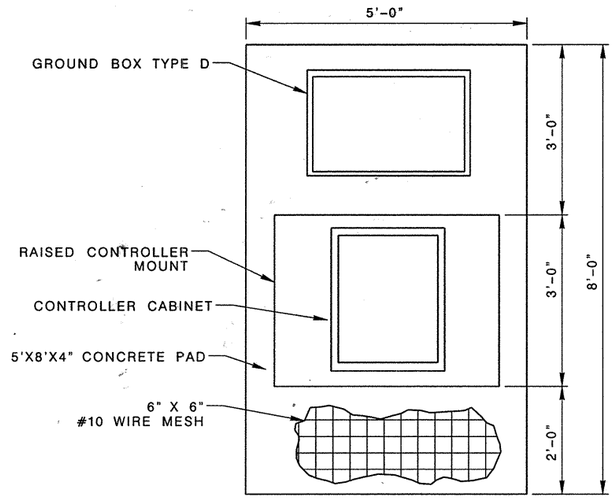


## TOP VIEW

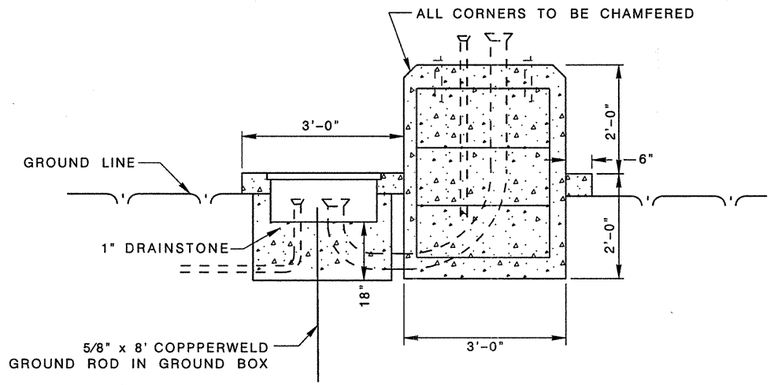


NOTE:

CONTRACTOR TO INSTALL GROUND BOX, CONDUIT, CONTROLLER FOUNDATION, CONCRETE SLAB AND CONDUIT FROM PULLBOX TO CABINET

## SIDE VIEW

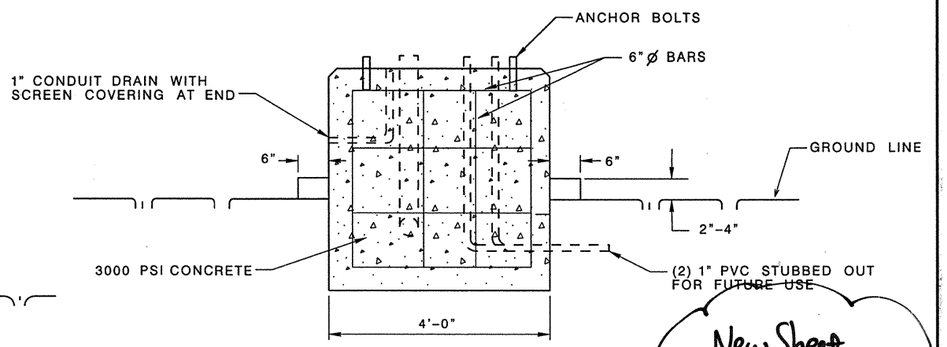


## FRONT VIEW

| CONVERSION FACTOR |
|---|
| TO CONVERT INCHES TO MILLIMETERS, MULTIPLY BY 25.4 |

# CONTROLLER FOUNDATION (TY332)

| CONCRETE QUANTITIES | | | |
|---|---|---|---|
| MODEL 332: | 60 FT3 = 2.2 CY | = | 1.7 M3 |
| MODEL 336: | 21.7 FT3 = 0.8 CY | = | 0.62 M3 |

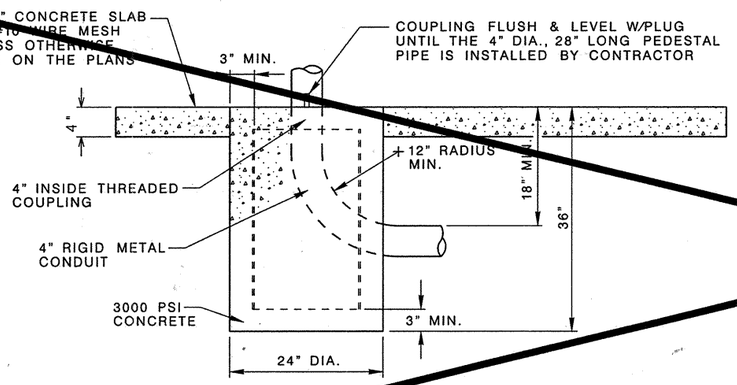


## ELEVATION

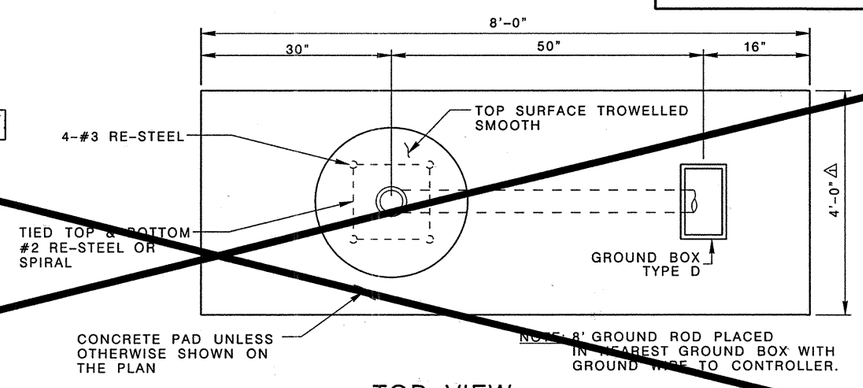


## TOP VIEW

# 4" PIPE PEDESTAL CONTROLLER FOUNDATION (TY336)

New Sheet
CHANGE ORDER #59

555 EAST RAMSEY SAN ANTONIO TEXAS 78216 PHONE (210)375-9000 FAX (210)375-9010
PAPE-DAWSON ENGINEERS
CIVIL & ENVIRONMENTAL

STATE OF TEXAS
GILMER D. GASTON
80472
LICENSED
PROFESSIONAL ENGINEER

GILMER D. GASTON, P.E. DATE 2/19/03

| NO. | REVISION | BY | DATE |
|---|---|---|---|
| 1 | WIDTH CHANGE FROM 5' TO 4' | GAB | 3-13-01 |
| | | | |
| | | | |

CITY OF SAN ANTONIO

DEPARTMENT OF PUBLIC WORKS

CITY OF SAN ANTONIO
TRAFFIC SIGNAL DETAILS
CONDUIT & FOUNDATIONS (MOD)
SAGE

| DESIGNED: | FED. RD. DIV. NO. | STATE | FEDERAL AID PROJECT NO. | | | SHT. NO. |
|---|---|---|---|---|---|---|
| CHECKED: | | TEXAS | NH 2000 (706), etc. | | | --- |
| DRAWN: OPT | STATE DIST. NO. | COUNTY | CONTROL NO. | SECT. NO. | JOB NO. | HIGHWAY NO. |
| CHECKED: | SAT | BEXAR | 2452 | 01 | 036,etc | LOOP 1604 |

Design Filename: p:\52\20\11\design\civil\plansheets\standards\signal\detail-emod.dgn

Plotted on: 02/27/2003

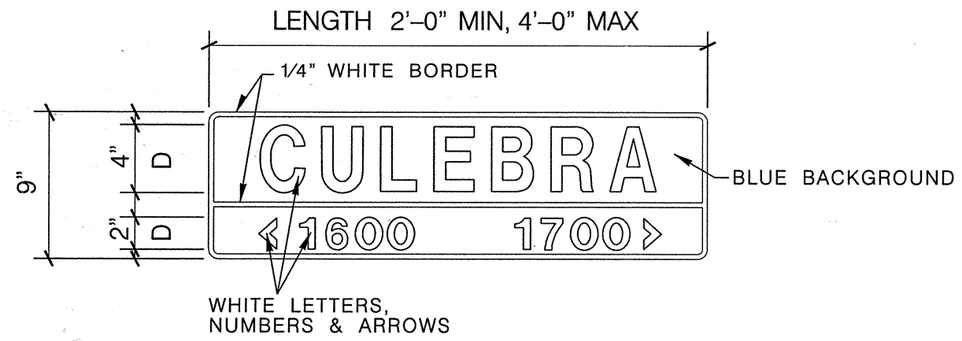


9" GROUND MOUNT STREET NAME SIGNS

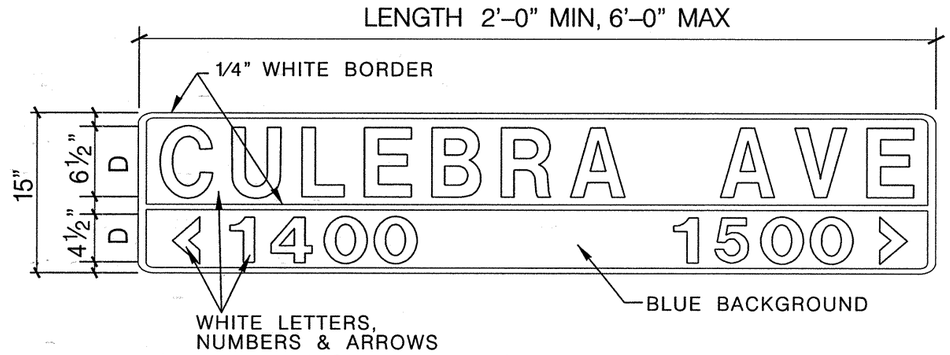


15" OVERHEAD STREET NAME SIGNS

# STREET NAME SIGNING

| | 15" OVERHEAD SIGN | 9" GROUND MOUNT SIGNS |
|---|---|---|
| HEIGHT | 15" (381 mm) | 9" (228 mm) |
| LENGTH | 48" (1200 mm) MIN.<br>72" (1800 mm) MAX.<br>1' (300mm) INCREMENTS OF LENGTH | 24" (600mm) MIN.<br>48" (1200mm) MAX.<br>6" (150mm) INCREMENTS OF LENGTH |
| THICKNESS | 0.125" (3mm) | |
| SUBSTRATE | ALUMINUM ALLOY, 5052–H38 (ASTM B–209)<br>GOLD CHROMATE FINISH | |
| SIGN FACE MATERIALS | BLUE FILM OVER<br>TY III (HIGH INTENSITY)<br>FP–85, SECTION 718<br>AND L–S–300C | BLUE FILM OVER<br>TYII (ENGR. GRADE)<br>FP–85, SECTION 718<br>AND L–S–300C |
| LEGENDS AND SYMBOLS | SERIES D (USUAL)<br>SERIES C OR B FOR MAXIMUM LENGTH SIGN BLANK, IF NECESSARY | |
| COLOR | WHITE LEGEND ON BLUE BACKGROUND | |
| LETTER TRACKING | 17% (USUAL)<br>10% (MIN.) | 10% |

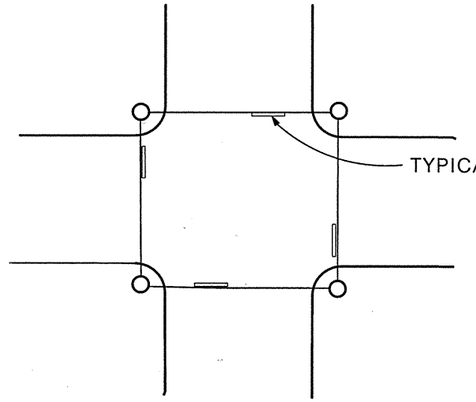


SPAN WIRE INSTALLATION

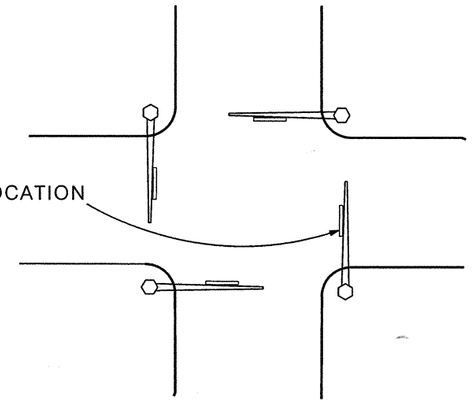

MAST ARM INSTALLATION

New Sheet
CHANGE ORDER #59

THE ORIGINAL OF THIS DRAWING WAS SIGNED AND SEALED BY JAMES M. CLEMENTS, #80510 ON 10-15-99 AND IS ON FILE WITH THE ENGINEERING AND TRAFFIC DIVISION OF THE PUBLIC WORKS DEPARTMENT, CITY OF SAN ANTONIO.

555 EAST RAMSEY SAN ANTONIO TEXAS 78216 PHONE (210)375-9000 FAX (210)375-9010
PAPE-DAWSON ENGINEERS
CIVIL & ENVIRONMENTAL

STATE OF TEXAS
GILMER D. GASTON
80472
LICENSED
PROFESSIONAL ENGINEER

GILMER D. GASTON, P.E. 2/22/00
DATE

| NO. | REVISION | BY | DATE |
|---|---|---|---|
| 1 | DETAIL D-3 SIGNS | JDF | 9/28/99 |
| 2 | CHANGE SIGNAL SIGN SIZE | JDF | 10/15/99 |

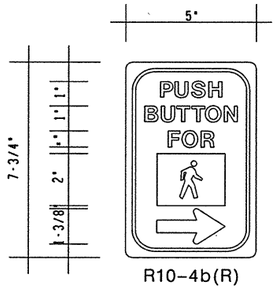


R10–4b(R) R10–4b(L)

PEDESTRIAN PUSHBUTTON SIGNS

* TY III HIGH INTENSITY SHEETING 5052–H38 ALUMINUM SUBSTRATE

R10–10 *(24" X 30") R3–5L *(30" X 36") SR10–9 *(36" X 24") R10–12 *(30" X 36")

LEFT TURN SIGNS

CITY OF SAN ANTONIO

DEPARTMENT OF PUBLIC WORKS

CITY OF SAN ANTONIO
TRAFFIC SIGNAL DETAILS
SIGNING (MOD)
594F

| DESIGNED: | FED. RD. DIV. NO. | STATE | FEDERAL AID PROJECT NO. | | SHT. NO. |
|---|---|---|---|---|---|
| CHECKED: | | TEXAS | NH 2000 (704), etc. | | xxx |
| DRAWN: OPT | STATE DIST. NO. | COUNTY | CONTROL NO. | SECT. NO. | JOB NO. | HIGHWAY NO. |
| CHECKED: SAT | | BEXAR | 2452 | 01 | 036,etc | LOOP 1604 |

Design Filename: p:\52\20\11\design\civil\plansheets\standards\signal_detail-Emod.dgn

⑧ Oversized Drilled Shafts may be used to accommodate existing equipment.

## FOUNDATION DESIGN TABLE

| FDN TYPE | ⑧ DRILLED SHAFT DIA | REINFORCING STEEL | | DRILL SHAFT LENGTH-m ④, ⑤, ⑥ TX CONE PENETROMETER N blows/300 mm | | | ANCHOR BOLT DESIGN ① | | | | FOUNDATION DESIGN LOAD ② | | TYPICAL APPLICATION |
|---|---|---|---|---|---|---|---|---|---|---|---|---|---|
| | | VERT BARS | SPIRAL & PITCH | 10 | 15 | 40 | ANCHOR BOLT DIA | Fy (MPa) | BOLT CIR DIA | ANCHOR TYPE | MOMENT kN·m | SHEAR kN | |
| 600-A | 600 | 4- #5 | #2 at 300 | 1.7 | 1.6 | 1.4 | ¾" | 250 | 324 | 1 | 14 | 4 | Pedestal pole, pedestal mounted controller. |
| 750-A | 750 | 8- #9 | #3 at 150 | 3.4 | 3.1 | 2.4 | 1 ½" | 380 | 432 | 2 | 118 | 13 | Mast arm assembly. (see Selection Table) |
| 900-A | 900 | 10- #9 | #3 at 150 | 4.0 | 3.7 | 2.9 | 1 ¾" | 380 | 483 | 2 | 178 | 22 | Mast arm assembly. (see Selection Table) 9150 mm strain pole with or w/out luminaire. |
| 900-B | 900 | 12- #9 | #3 at 150 | 4.6 | 4.1 | 3.2 | 2" | 380 | 533 | 2 | 258 | 31 | Mast arm assembly. (see Selection Table) Strain pole taller than 9150 mm & strain pole with mast arm |
| 1050-A | 1050 | 14- #9 | #3 at 150 | 5.3 | 4.8 | 3.6 | 2 ¼" | 380 | 584 | 2 | 367 | 40 | Mast arm assembly. (see Selection Table) |

## FOUNDATION SELECTION TABLE FOR STANDARD MAST ARM PLUS ILSN SUPPORT ASSEMBLIES (mm)

| | | FDN 750-A | FDN 900-A | FDN 900-B | FDN 1050-A |
|---|---|---|---|---|---|
| 130 km/h DESIGN WIND SPEED | MAX SINGLE ARM LENGTH | 9,750 ⚠1 | 14,600 | | |
| | MAXIMUM DOUBLE ARM LENGTH COMBINATIONS | 7,300 X 7,300 | | | |
| | | 8,500 X 8,500 | | | |
| | | 9,800 X 8,500 | 9,800 X 9,800 | | |
| | | | 11,000 X 11,000 | | |
| | | | 12,200 X 11,000 | | |
| | | | 13,400 X 8,500 | 13,400 X 11,000 | |
| 160 km/h DESIGN WIND SPEED | MAX SINGLE ARM LENGTH | ⚠1 | 11,000 | 13,400 | |
| | MAXIMUM DOUBLE ARM LENGTH COMBINATIONS | | 7,300 X 7,300 | | |
| | | | 8,500 X 8,500 | | |
| | | | 9,800 X 7,300 | 9,800 X 9,800 | |
| | | | | 11,000 X 11,000 | |
| | | | | 12,200 x 7,300 | 12,200 X 11,000 |
| | | | | | 13,400 x 11,000 |

EXAMPLE:

For 130 km/h design wind speed, foundation 750-A can support up to a 9750 mm arm with another arm up to 8530 mm .

For 160 km/h design wind speed, foundation 900-A can support a single 10,970 mm mast arm.

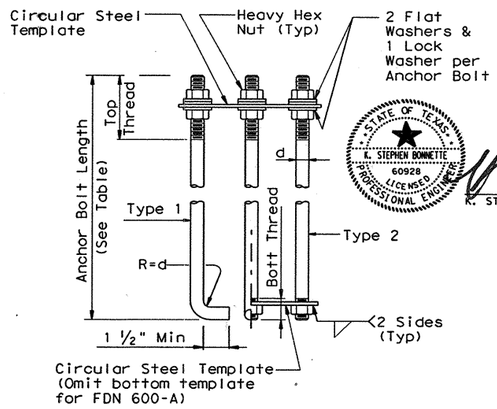


HOOKED ANCHOR (TYPE 1) NUT ANCHOR (TYPE 2)

## ANCHOR BOLT ASSEMBLY

### INSTALLATION PROCEDURE:

Threads of anchor bolts shall be coated with pipe joint compound prior to installation of upper nuts when erecting pole. After pole is plumbed and in permanent alignment, the exposed threads of painted bolts shall be cleaned and an additional coating of zinc-rich paint applied to seal the bolt thread-nut joint.

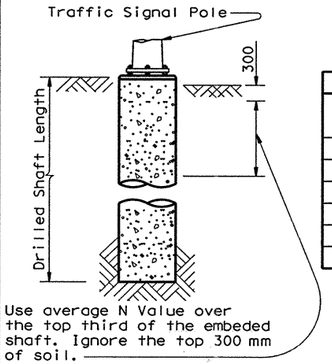


Use average N Value over the top third of the embeded shaft. Ignore the top 300 mm of soil.

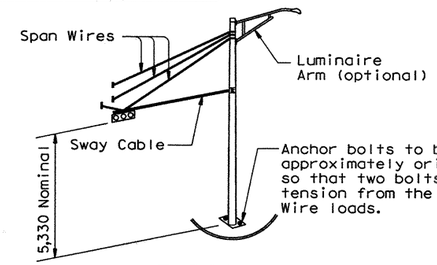


## TYPICAL STRAIN POLE ASSEMBLY




K. STEPHEN BONNETTE P.E. 03/12/2003 DATE

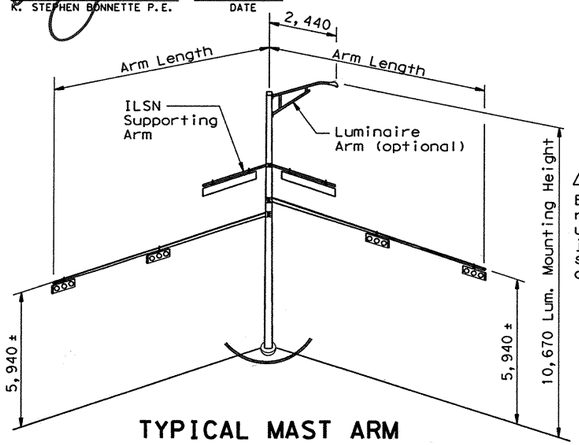


## TYPICAL MAST ARM ASSEMBLY

### NOTES:

① Anchor bolt design develops the foundation capacity given under Foundation Design Loads.

② Foundation Design Loads are the allowable moments and shears at the base of the structure.

③ Foundations may be listed seperately or grouped according to similarity of location and type. Quantities are for the Contractor's information only.

④ Field Penetrometer readings at a depth of approximately 900 to 1500 mm may be used to adjust shaft lengths.

⑤ If rock is encountered, the Drilled Shaft shall extend a minimum of two diameters into solid rock.

⑥ Decimal lengths in Design Table are to allow interpolation for other penetrometer values. Round to nearest 0.1 m for entry into Summary Table.

### ANCHOR BOLT & TEMPLATE SIZES

| BOLT DIA | ⑦ BOLT LENGTH | TOP THREAD | BOTT THREAD | BOLT CIRCLE | R2 | R1 |
|---|---|---|---|---|---|---|
| ¾" | 1'-6" | 3" | — | 324 | 181 | 143 |
| 1 ½" | 3'-4" | 6" | 2" | 432 | 254 | 178 |
| 1 ¾" | 3'-10" | 7" | 2 ¼" | 483 | 286 | 197 |
| 2" | 4'-3" | 8" | 2 ½" | 533 | 318 | 216 |
| 2 ¼" | 4'-9" | 9" | 3" | 584 | 349 | 235 |

⑦ Min dimensions given, longer bolts are acceptable.

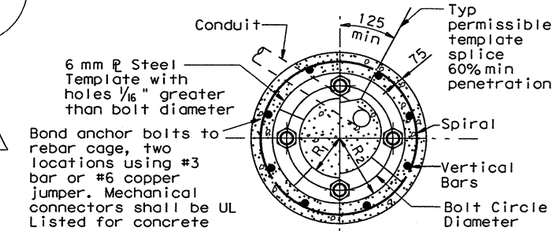


TOP VIEW

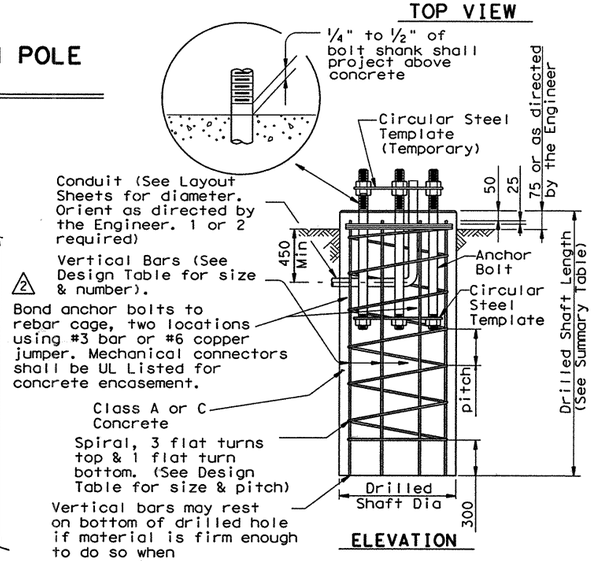


ELEVATION

## FOUNDATION DETAILS

## FOUNDATION SUMMARY TABLE ③

| LOCATION IDENTIFICATION | AVG. N BLOW (per 300 mm) | FDN TYPE | NO. EA | DRILLED SHAFT LENGTH ⑥ (m) 600-A | 750-A | 900-A | 900-B | 1050-A |
|---|---|---|---|---|---|---|---|---|
| LOOP 1604/ | | | | | | | | |
| WISEMAN ROAD | | | | | | | | |
| A(11.0) | | 900-A | 1 | | | 4.0 | | |
| B(14.6) | | 900-A | 1 | | | 4.0 | | |
| C | | 600-A | 1 | 1.7 | | | | |
| D(13.4) | | 900-A | 1 | | | 4.0 | | |
| E(11.0) | | 900-A | 1 | | | 4.0 | | |
| F(12.2) | | 900-A | 1 | | | 4.0 | | |
| G | | 600-A | 1 | 1.7 | | | | |
| H(12.2) | | 900-A | 1 | | | 4.0 | | |
| SUB-TOTAL | | | | 3.4 | | 24.0 | | |
| | | | | | | | | |
| LOOP 1604/ | | | | | | | | |
| MILITARY DR | | | | | | | | |
| A | | 600-A | 1 | 1.7 | | | | |
| B(13.4) | | 900-A | 1 | | | 4.0 | | |
| C(11.0) | | 900-A | 1 | | | 4.0 | | |
| D(13.4) | | 900-A | 1 | | | 4.0 | | |
| E(13.4) | | 900-A | 1 | | | 4.0 | | |
| F(11.0) | | 900-A | 1 | | | 4.0 | | |
| G(13.4) | | 900-A | 1 | | | 4.0 | | |
| H | | 600-A | 1 | 1.7 | | | | |
| SUB-TOTAL | | | | 3.4 | | 24.0 | | |
| | | | | | | | | |
| SHAENFIELD | | | | | | | | |
| C | | 900-B | 1 | | | | 4.6 | |
| D | | 600-A | 1 | 1.7 | | | | |
| E | | 900-B | 1 | | | | 4.6 | |
| F | | 900-B | 1 | | | | 4.6 | |
| G | | 900-B | 1 | | | | 4.6 | |
| SUB-TOTAL | | | | 1.7 | | | 18.4 | |
| SHEET 1 TOTALS | | | | 8.5 | | 48.0 | 18.4 | |
| TOTAL DRILLED SHAFT LENGTHS | | | | | | | | |

### GENERAL NOTES:

Design conforms to 1994 AASHTO Standard Spec. for Structural Supports for Highway Signs, Luminaires and Traffic Signals and interim revisions thereto.

Reinforcing steel shall conform to Item 440.

Concrete shall be Class A or C.

Threads for anchor bolts and nuts shall be rolled or cut threads of unified national coarse thread series except for A193M B7 bolts which shall have 8 pitch thread series. Bolts and nuts shall have Class 2A and 2B fit tolerances. Galvanized nuts shall be tapped after galvanizing.

Anchor bolts that are 1" in diameter or less shall conform to ASTM A36M. Anchor bolts larger than 1" in diameter shall conform to A36M Mod380 in accordance with the Item, "Anchor Bolts" or ASTM A193M B7 or A687. Galvanize or coat with zinc-rich paint a minimum of the upper 14 inches of all anchor bolts unless otherwise noted. Exposed nuts shall be galvanized or coated with zinc-rich paint. Washers shall be galvanized. Templates and embeded nuts need not be galvanized.

CHANGE ORDER NO. 78 ⚠ -REPLACE SHEET

SHEET 1 OF 2

Note: "All dimensions are in millimeters (mm) except as noted"

11/99 Revision

⚠1 Changed to Facilitate new terminal strip enclosure

⚠2 Changed from ground rod to UFER ground

**STANDARD PLANS**
*Texas Department of Transportation*
*Traffic Operations Division*

# TRAFFIC SIGNAL POLE FOUNDATION

# TS-FD-99(M)

| ©TxDOT August 1995 | DN:- MS | CK:- JSY | DW:- MAO/MMF | CK:- JSY/TEB |
|---|---|---|---|---|
| REVISIONS 5-96 11-99 | STATE DISTRICT | FEDERAL REGION | FEDERAL AID PROJECT | SHEET |
| | SAT | 6 | NH 2000 (704), etc. | 599G |
| COUNTY | | CONTROL | SECTION | JOB | HIGHWAY |
| BEXAR | | 2452 | 01 | 036, etc. | LP 1604 |


DISCLAIMER:
The use of this standard is governed by the "Texas Engineering Practice Act". No warranty of any kind is made by TxDOT for any purpose whatsoever. TxDOT assumes no responsibility for the conversion of this standard to other formats or for incorrect results or damages resulting from its use.


LEVELS D. ED ACC: d48npla:/usr/d482517 LV=1,2 for English 1,3 for Metric

⑧ Oversized Drilled Shafts may be used to accommodate existing equipment.

## FOUNDATION DESIGN TABLE

| FDN TYPE | ⑧ DRILLED SHAFT DIA | REINFORCING STEEL | | DRILL SHAFT LENGTH-m ④, ⑤, ⑥ TX CONE PENETROMETER N blows/300 mm | | | ANCHOR BOLT DESIGN ① | | | | FOUNDATION DESIGN LOAD ② | | TYPICAL APPLICATION |
|---|---|---|---|---|---|---|---|---|---|---|---|---|---|
| | | VERT BARS | SPIRAL & PITCH | 10 | 15 | 40 | ANCHOR BOLT DIA | Fy (MPa) | BOLT CIR DIA | ANCHOR TYPE | MOMENT kN·m | SHEAR kN | |
| 600-A | 600 | 4- #5 | #2 at 300 | 1.7 | 1.6 | 1.4 | ¾" | 250 | 324 | 1 | 14 | 4 | Pedestal pole, pedestal mounted controller. |
| 750-A | 750 | 8- #9 | #3 at 150 | 3.4 | 3.1 | 2.4 | 1 ½" | 380 | 432 | 2 | 118 | 13 | Mast arm assembly. (see Selection Table) |
| 900-A | 900 | 10- #9 | #3 at 150 | 4.0 | 3.7 | 2.9 | 1 ¾" | 380 | 483 | 2 | 178 | 22 | Mast arm assembly. (see Selection Table) 9150 mm strain pole with or w/out luminaire. |
| 900-B | 900 | 12- #9 | #3 at 150 | 4.6 | 4.1 | 3.2 | 2" | 380 | 533 | 2 | 258 | 31 | Mast arm assembly. (see Selection Table) Strain pole taller than 9150 mm & strain pole with mast arm |
| 1050-A | 1050 | 14- #9 | #3 at 150 | 5.3 | 4.8 | 3.6 | 2 ¼" | 380 | 584 | 2 | 367 | 40 | Mast arm assembly. (see Selection Table) |

## FOUNDATION SELECTION TABLE FOR STANDARD MAST ARM PLUS ILSN SUPPORT ASSEMBLIES (mm)

| | | FDN 750-A | FDN 900-A | FDN 900-B | FDN 1050-A |
|---|---|---|---|---|---|
| 130 km/h DESIGN WIND SPEED | MAX SINGLE ARM LENGTH | 9,750 ① | 14,600 | | |
| | MAXIMUM DOUBLE ARM LENGTH COMBINATIONS | 7,300 X 7,300 | | | |
| | | 8,500 X 8,500 | | | |
| | | 9,800 X 8,500 | 9,800 X 9,800 | | |
| | | | 11,000 X 11,000 | | |
| | | | 12,200 X 11,000 | | |
| | | | 13,400 X 8,500 | 13,400 X 11,000 | |
| 160 km/h DESIGN WIND SPEED | MAX SINGLE ARM LENGTH | ① | 11,000 | 13,400 | |
| | MAXIMUM DOUBLE ARM LENGTH COMBINATIONS | | 7,300 X 7,300 | | |
| | | | 8,500 X 8,500 | | |
| | | | 9,800 X 7,300 | 9,800 X 9,800 | |
| | | | | 11,000 X 11,000 | |
| | | | | 12,200 x 7,300 | 12,200 X 11,000 |
| | | | | | 13,400 x 11,000 |

EXAMPLE:

For 130 km/h design wind speed, foundation 750-A can support up to a 9750 mm arm with another arm up to 8530 mm .

For 160 km/h design wind speed, foundation 900-A can support a single 10,970 mm mast arm.

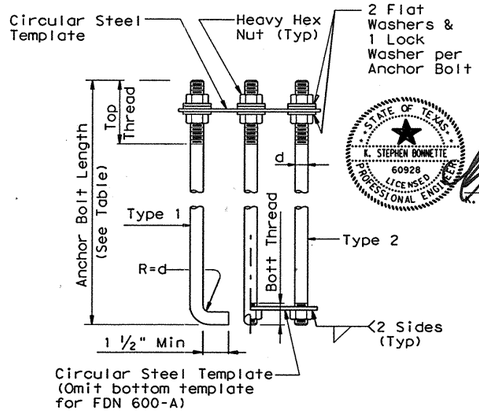


HOOKED ANCHOR (TYPE 1) NUT ANCHOR (TYPE 2)

## ANCHOR BOLT ASSEMBLY

**INSTALLATION PROCEDURE:**

Threads of anchor bolts shall be coated with pipe joint compound prior to installation of upper nuts when erecting pole. After pole is plumbed and in permanent alignment, the exposed threads of painted bolts shall be cleaned and an additional coating of zinc-rich paint applied to seal the bolt thread-nut joint.

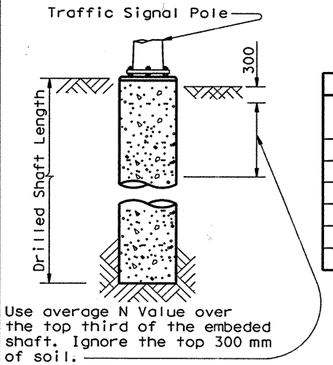


Use average N Value over the top third of the embeded shaft. Ignore the top 300 mm of soil.

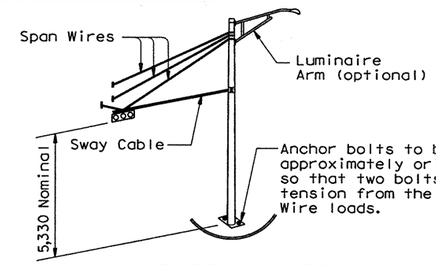


## TYPICAL STRAIN POLE ASSEMBLY

STATE OF TEXAS — K. STEPHEN BONNETTE — 60928 — LICENSED PROFESSIONAL ENGINEER

K. STEPHEN BONNETTE P.E. — 03/12/2003 DATE

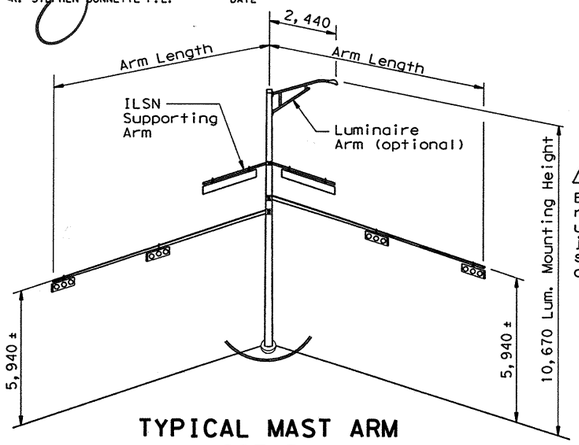


## TYPICAL MAST ARM ASSEMBLY

### NOTES:

① Anchor bolt design develops the foundation capacity given under Foundation Design Loads.

② Foundation Design Loads are the allowable moments and shears at the base of the structure.

③ Foundations may be listed seperately or grouped according to similarity of location and type. Quantities are for the Contractor's information only.

④ Field Penetrometer readings at a depth of approximately 900 to 1500 mm may be used to adjust shaft lengths.

⑤ If rock is encountered, the Drilled Shaft shall extend a minimum of two diameters into solid rock.

⑥ Decimal lengths in Design Table are to allow interpolation for other penetrometer values. Round to nearest 0.1 m for entry into Summary Table.

### ANCHOR BOLT & TEMPLATE SIZES

| BOLT DIA | ⑦ BOLT LENGTH | TOP THREAD | BOTT THREAD | BOLT CIRCLE | R2 | R1 |
|---|---|---|---|---|---|---|
| ¾" | 1'-6" | 3" | — | 324 | 181 | 143 |
| 1 ½" | 3'-4" | 6" | 2" | 432 | 254 | 178 |
| 1 ¾" | 3'-10" | 7" | 2 ¼" | 483 | 286 | 197 |
| 2" | 4'-3" | 8" | 2 ½" | 533 | 318 | 216 |
| 2 ¼" | 4'-9" | 9" | 3" | 584 | 349 | 235 |

⑦ Min dimensions given, longer bolts are acceptable.

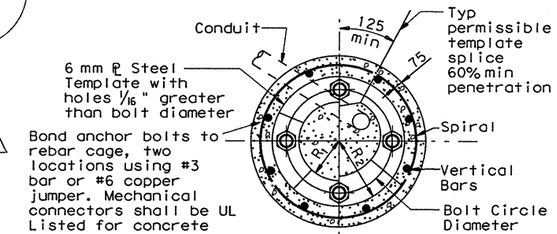


TOP VIEW

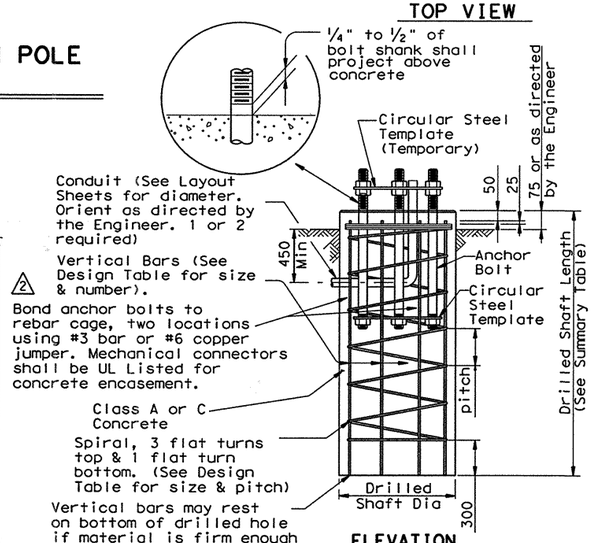


ELEVATION

## FOUNDATION DETAILS

## FOUNDATION SUMMARY TABLE ③

| LOCATION IDENTIFICATION | AVG. N BLOW (per 300 mm) | FDN TYPE | NO. EA | DRILLED SHAFT LENGTH ⑥ (m) 600-A | 750-A | 900-A | 900-B | 1050-A |
|---|---|---|---|---|---|---|---|---|
| LOOP 1604/ | | | | | | | | |
| POTRANCO ROAD | | | | | | | | |
| A | | 600-A | 1 | 1.7 | | | | |
| B(14.6) | | 900-A | 1 | | | 4.0 | | |
| C(11.0) | | 900-A | 1 | | | 4.0 | | |
| D(13.4) | | 900-A | 1 | | | 4.0 | | |
| E(13.4) | | 900-A | 1 | | | 4.0 | | |
| F(11.0) | | 900-A | 1 | | | 4.0 | | |
| G(13.4) | | 900-A | 1 | | | 4.0 | | |
| H | | 600-A | 1 | 1.7 | | | | |
| SUB-TOTAL | | | | 3.4 | | 24.0 | | |
| LOOP 1604/ | | | | | | | | |
| MARBACH ROAD | | | | | | | | |
| A | | 600-A | 1 | 1.7 | | | | |
| B(13.4) | | 900-A | 1 | | | 4.0 | | |
| C(9.8) | | 750-A | 1 | | 3.4 | | | |
| D(12.2) | | 900-A | 1 | | | 4.0 | | |
| E(13.4) | | 900-A | 1 | | | 4.0 | | |
| F | | 600-A | 1 | 1.7 | | | | |
| G(12.2) | | 900-A | 1 | | | 4.0 | | |
| H | | 600-A | 1 | 1.7 | | | | |
| SUB-TOTAL | | | | 5.1 | 3.4 | 16.0 | | |
| SHEET 1 TOTALS | | | | 8.5 | | 48.0 | 18.4 | |
| SHEET 2 TOTALS | | | | 8.5 | 3.4 | 40.0 | | |
| TOTAL DRILLED SHAFT LENGTHS | | | | 17.0 | 3.4 | 88.0 | 18.4 | |

### GENERAL NOTES:

Design conforms to 1994 AASHTO Standard Spec. for Structural Supports for Highway Signs, Luminaires and Traffic Signals and interim revisions thereto.

Reinforcing steel shall conform to Item 440.

Concrete shall be Class A or C.

Threads for anchor bolts and nuts shall be rolled or cut threads of unified national coarse thread series except for A193M B7 bolts which shall have 8 pitch thread series. Bolts and nuts shall have Class 2A and 2B fit tolerances. Galvanized nuts shall be tapped after galvanizing.

Anchor bolts that are 1" in diameter or less shall conform to ASTM A36M. Anchor bolts larger than 1" in diameter shall conform to A36M Mod380 in accordance with the Item, "Anchor Bolts" or ASTM A193M B7 or A687. Galvanize or coat with zinc-rich paint a minimum of the upper 14 inches of all anchor bolts unless otherwise noted. Exposed nuts shall be galvanized or coated with zinc-rich paint. Washers shall be galvanized. Templates and embeded nuts need not be galvanized.

CHANGE ORDER NO. 78 -NEW SHEET

Note: "All dimensions are in millimeters (mm) except as noted"

11/99 Revision

① Changed to Facilitate new terminal strip enclosure

② Changed from ground rod to UFER ground



STANDARD PLANS
Texas Department of Transportation
Traffic Operations Division

# TRAFFIC SIGNAL POLE FOUNDATION

# TS-FD-99(M)

© TxDOT August 1995

| DN: MS | CK: JSY | DW: MAO/MMF | CK: JSY/TEB |
|---|---|---|---|

| REVISIONS | STATE DISTRICT | FEDERAL REGION | FEDERAL AID PROJECT | SHEET |
|---|---|---|---|---|
| 5-96 | SAT | 6 | NH 2000 (704), etc. | 599H |
| 11-99 | | | | |

| COUNTY | CONTROL | SECTION | JOB | HIGHWAY |
|---|---|---|---|---|
| BEXAR | 2452 | 01 | 036, etc. | LP 1604 |

DISCLAIMER:
The use of this standard is governed by the "Texas Engineering Practice Act". No warranty of any kind is made by TxDOT for any purpose whatsoever. TxDOT assumes no responsibility for the conversion of this standard to other formats or for incorrect results or damages resulting from its use.

LEVELS DGN ACC: d48hpla:/usr/d482517 LV=1,2 for English 1,3 for Metric

DISCLAIMER
The use of this standard is governed by the "Texas Engineering Practice Act". No warranty of any kind is made by TxDOT for any purpose whatsoever. TxDOT assumes no responsibility for the conversion of this standard to other formats or for incorrect results or damages resulting from its use.

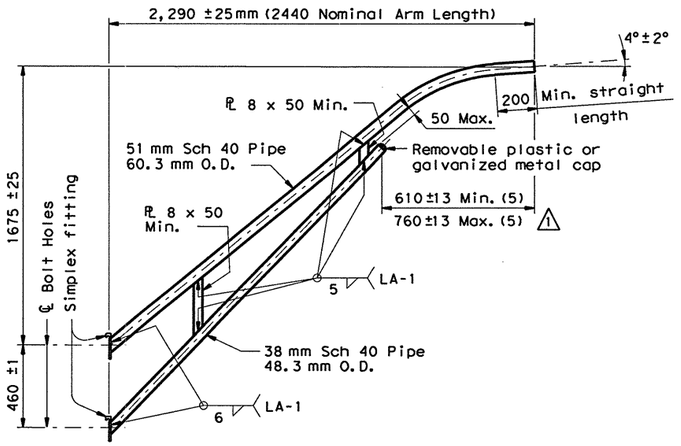


## 2.50 METER LUMINAIRE ARM

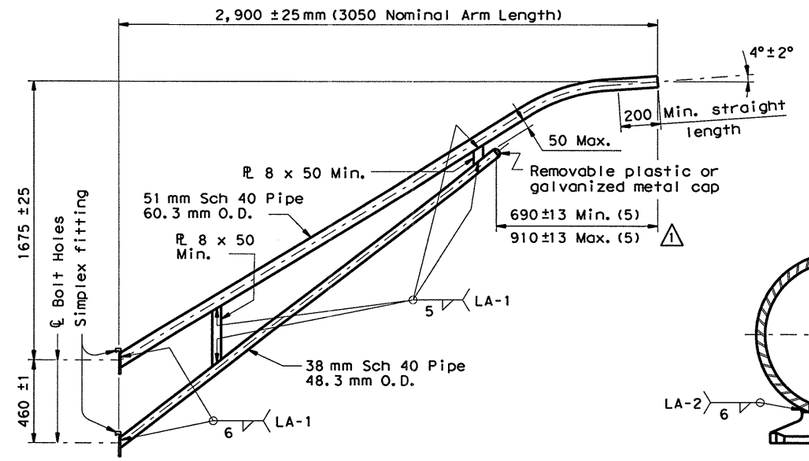


## 3.00 METER LUMINAIRE ARM

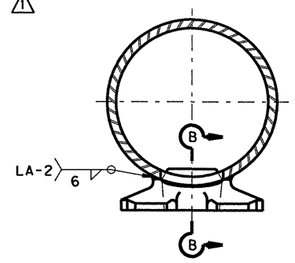


## DIRECT ATTACHMENT DETAIL

| MATERIALS | |
|---|---|
| Pole or Arm Simplex | ASTM A27M GR 450-240 or A148M GR 550-345 or A576 GR 1021 (4) or A36M (Arm only) |
| Arm Pipes | ASTM A53 GR A or B or A500 GR B or A501 or A595 (2) or A715 GR 345 |
| Arm Plates (3) | ASTM A36M or A572M GR 345 (1) or A595 GR A or A588M |
| Misc. | ASTM designations as noted |

(1) ASTM A36MOD345 steel as described in Item 442 "Metal for Structures" may be used in lieu of A572M GR 345.

(2) If A595 GR A material is used, arm need not be cold worked to A595 requiremants, but material must have 275 MPa minimum yield prior to fabrication.

(3) Either of the materials listed for plates may be used where the drawings do not specify a particular ASTM designation.

(4) A576 must be suitable for forging and also meet minimum tensile strength of 450 MPa, minimum yield of 240 MPa, and elongation in 50 milimeters of 22 percent.

(5) Dimensional limits are given to show acceptable variation in design. All of a Fabricator's production of a particular arm length shall have the same dimensions within specified tolerances.

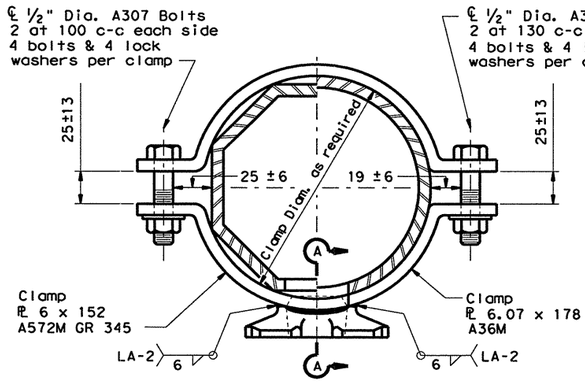


## CLAMP ATTACHMENT DETAIL NO. 1 (HALF SECTION)

## CLAMP ATTACHMENT DETAIL NO. 2 (HALF SECTION)

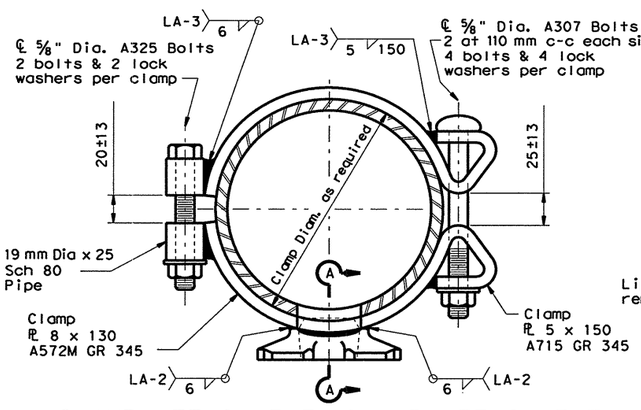


## CLAMP ATTACHMENT DETAIL NO. 3 (HALF SECTION)

## CLAMP ATTACHMENT DETAIL NO. 4 (HALF SECTION)

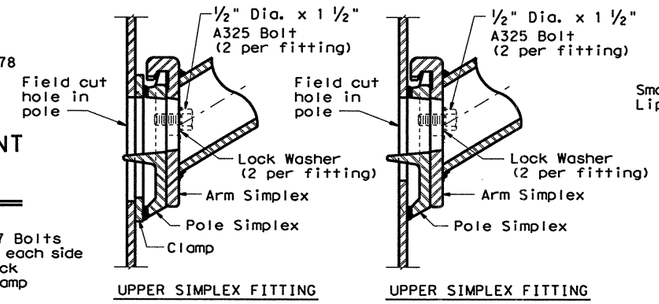


UPPER SIMPLEX FITTING




UPPER SIMPLEX FITTING

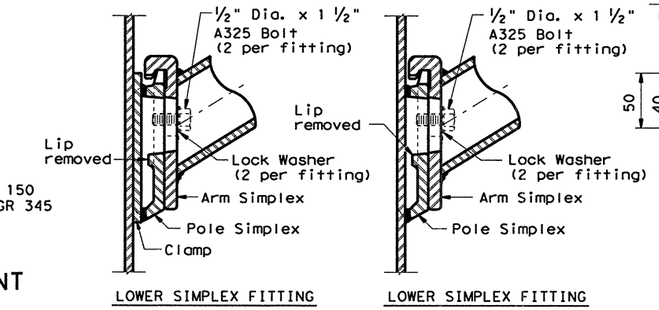


LOWER SIMPLEX FITTING

## SECTON A-A




LOWER SIMPLEX FITTING

## SECTON B-B

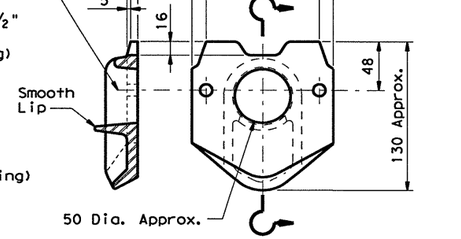


## POLE SIMPLEX DETAIL

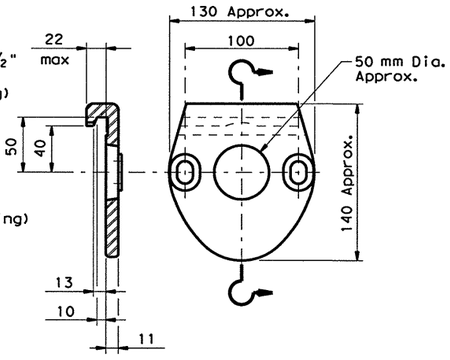


## ARM SIMPLEX DETAIL

GENERAL NOTES:

Design conforms to 1994 AASHTO Standard Specifications for Structural Supports for Highway Signs, Luminaires, and Traffic Signals and Interim Revisions thereto. Design Wind Speed equals 145 kmph plus a 1.3 gust factor. Arms are designed to support a 334 N luminaire having an effective projected area (actual area times drag coefficient) of 0.14 sq meter.

Materials and fabrication shall be in accordance with the Specificatons and with the details, dimensions, and weld procedures shown herein. Weld references call for preapproved weld procedures which the Fabricator must obtain prior to fabrication. In the absense of specified fabrication tolerances, dimensions shall be within the tolerances generally obtainable in normal fabrication practice.

Unless otherwise noted, all parts shall be galvanized after fabrication in accordance with the Specifications.

Special designs require submission of shop drawings in accordance with the item "Steel Structures".

Each pole simplex fitting shall be supplied with 2 A325 bolts and 2 lock washers of the size specified. The bolts and lock washers shall be secured to the pole with the other hardware items called for in the plans. When clamp attachment is specified, the Fabricator shall ship the clamp assembly securely attached to the pole at the location shown on the plans.

If clamp assemblies are ordered without poles, the Fabricator shall ship one upper and one lower clamp assembly together in a single package, including all nuts and washers required for the clamps and simplex fittings.

Note: All dimensions are in millimeters (mm) except as noted.

⚠1 1-99 - minor typo correction

Texas Department of Transportation
Traffic Operations Division

# STANDARD ASSEMBLY DRAWINGS FOR LUMINAIRE SUPPORT STRUCTURES

## ARM DETAILS

## LUM-A-99(M)

| FILE: lum-a.dgn | DN: LEH | CK: JSY | DW: LTT | CK: TEB | STD: |
|---|---|---|---|---|---|
| ©TxDOT August 1995 | DIST | FED REG | FEDERAL AID PROJECT • | | SHEET |
| REVISIONS 5-96 1-99 | SAT | 6 | NH 2000 (704), etc. | | 600 |
| | COUNTY | | CONTROL | SECT | JOB | HIGHWAY |
| | BEXAR | | 2452 | 01 | 056, etc. | LP1604 |

LEVELS
1 2 3 4 5 6 7 8 9 10 11 12 13 14 15 16 17 18 19 20 21 22 23 24 25 26 27 28 29 30 31 32 33 34 35 36 37 38 39 40 41 42 43 44 45 46 47 48 49 50 51 52 53 54 55 56 57 58 59 60 61 62 63 64 65 66 67 68 69 70 71 72 73 74 75 76 77 78 79 80 81 82 83 84 85 86 87 88 89 90 91 92 93 94 95 96

DN:
CK:
DW:
CK:

DATE:
ACC:
FILE:

DISCLAIMER
The use of this standard is governed by the "Texas Engineering Practice Act". No warranty of any kind is made by TxDOT for any purpose whatsoever. TxDOT assumes no responsibility for the conversion of this standard to other formats or for incorrect results or damages resulting from its use.

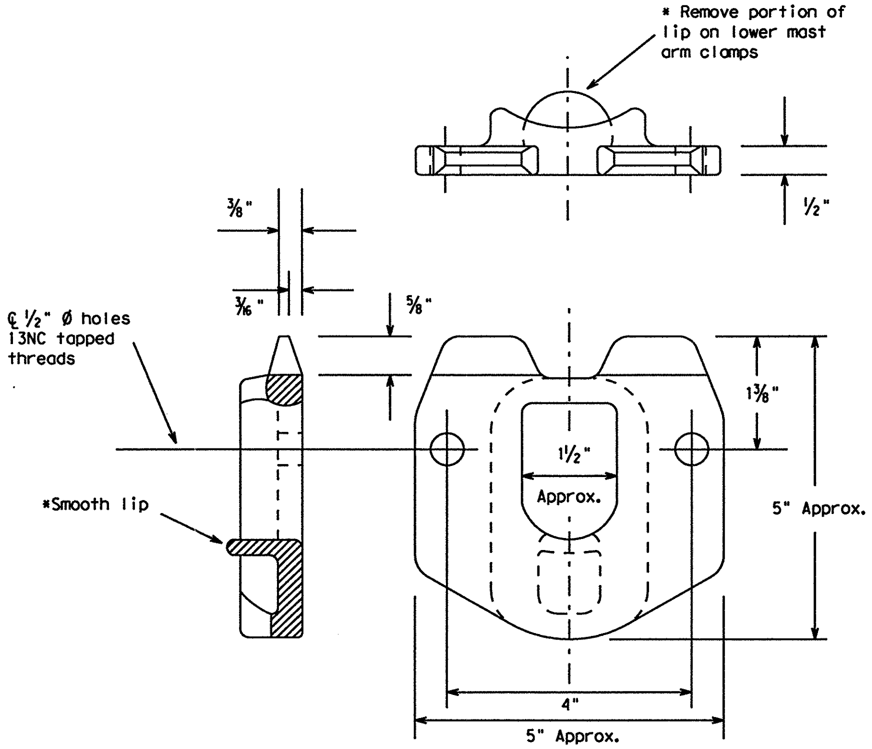


POLE SIMPLEX DETAILS

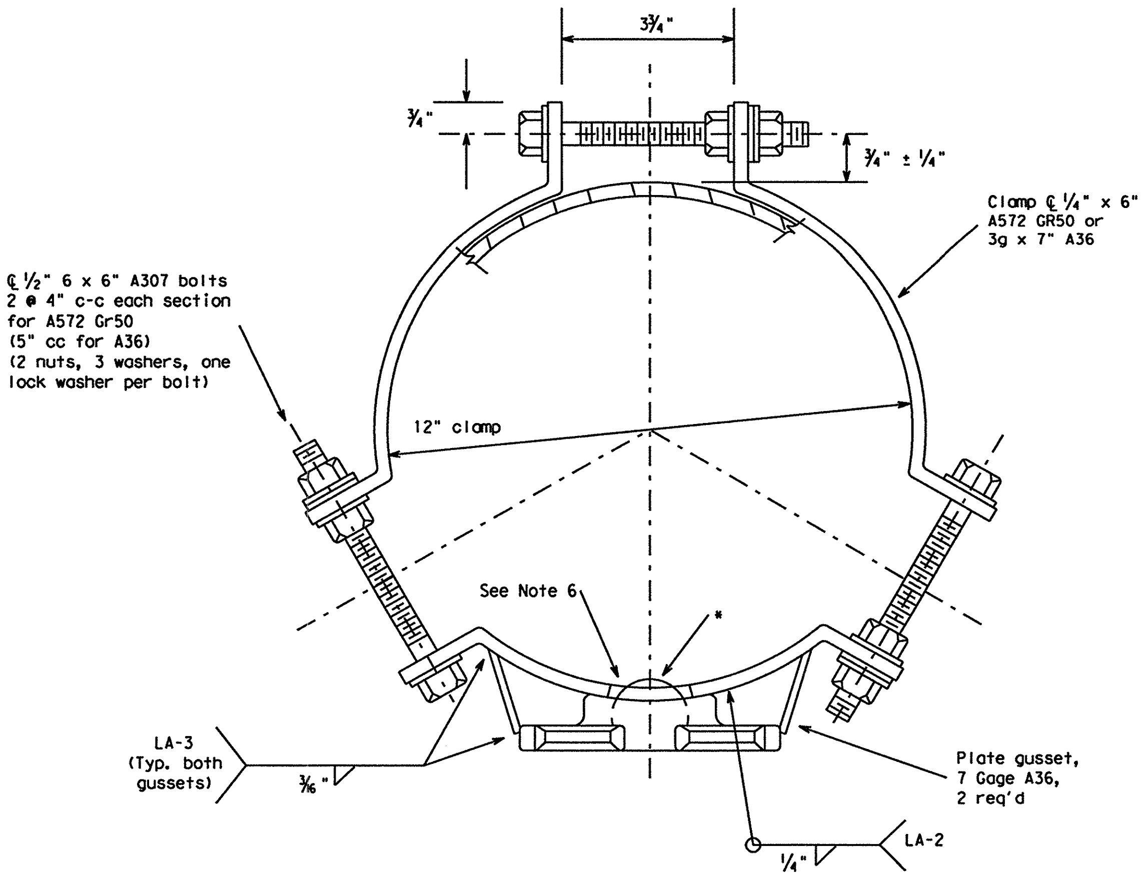


CLAMP DETAIL

OTHER MATERIALS:

1. Pole simplex shall be ASTM A27 GR65-35 or A148 GR80-50 or A576 GR1021. ASTM A576 must be suitable for forging and also meet minimum tensile of 65ksi, minimum yield of 35ksi, and elongation in 2 inches of 22 percent.
2. A36M50 steel may be used in lieu of ASTM A572 GR50.
3. Welded tabs and backplates shall be ASTM A-36 steel or better.
4. Nylon insert locknuts shall conform to ASTM A563.

GENERAL NOTES:

1. Materials and fabrication shall be in accordance with the Specifications and with the details, dimensions, and weld procedures shown herein. Weld references call for preapproved weld procedures which the Fabricator must obtain prior to fabrication. In the absense of specified fabrication tolerances, dimensions shall be within the tolerances generally obtainable in normal fabrication practice.
2. All parts shall be galvanized after fabrication in accordance with ASTM 153 or 123. The throat of the Simplex shall be made free of all rough or sharp edges resulting from the galvanizing process.
3. Each simplex fitting shall be supplied with 2 ASTM A325 bolts, ½in. X 1½in. and 2 lock washers. The bolts and lock washers shall be secured to the clamp with the other hardware items. The Fabricator shall ship clamp assembly together in a single package, including all bolts, nuts, and washers required for the clamp and simplex fitting.
4. Design conforms to 1985 AASHTO "Standard Specifications for Structural Supports for Highway Signs, Luminaires, and Traffic Signals" and interim revisions thereto. Design Wind Speed equals 80 mph plus a 1.3 gust factor. Clamps are designed to support a 75 lb. luminaire having an effective projected area (actual area times drag coefficient) of 1.4 sq.ft., 12 ft. maximum arm length.
5. Each assembly shall consist of one upper piece simplex fitting having a smooth lip and one lower piece simplex fitting with the lip removed.
6. Approximately 2 in. diameter hole in upper mast arm clamp.

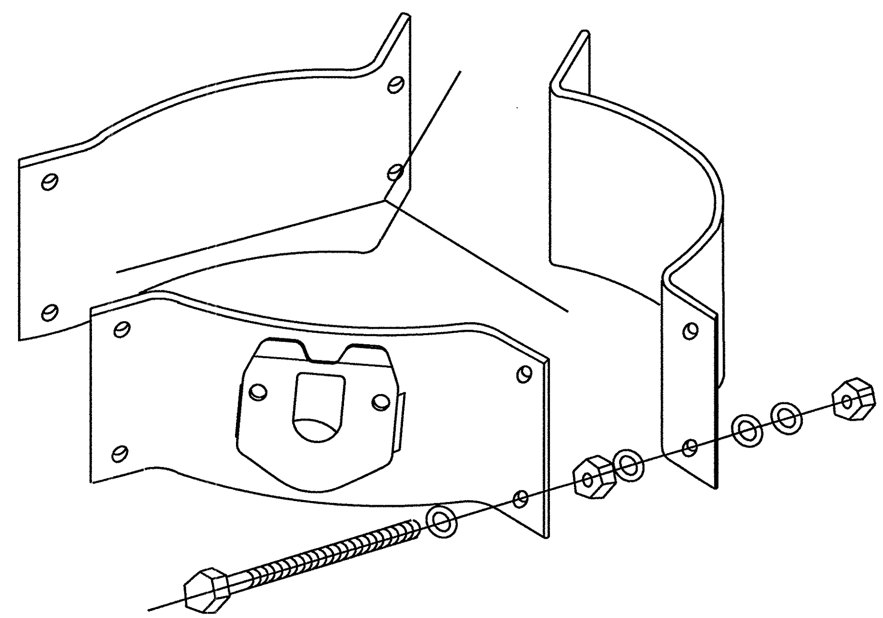

PROJECTION

For 8.9 - 12 inch diameter Signal Poles
(Two req'd for each mast arm)

STANDARD PLANS
*Texas Department of Transportation*
*Traffic Operations Division*

# CLAMP ON FITTING ASSEMBLY FOR LUMINAIRE MAST ARM

## CFA-99

| © TxDOT | | DN:- KAB | CK:- RES | DW:- FDN | CK:- CAL |
|---|---|---|---|---|---|
| REVISIONS | STATE DISTRICT | FEDERAL REGION | FEDERAL AID PROJECT | | SHEET |
| 11-99 | SAT | 6 | NH 2000 (704), etc. | | 601 |
| | COUNTY | CONTROL | SECTION | JOB | HIGHWAY |
| | BEXAR | 2452 | 01 | 036, etc. | LP 1604 |

D-18-6100.001
November 99

## LEGEND

| | |
|---|---|
| ●—■—● | RDWY ILLUM ASSEM (TY SA 15T-3-3)(.4 KW)S |
| ●—■ | RDWY ILLUM ASSEM (TY SA 15T-3)(.4 KW)S |
| ○—□ | RDWY ILLUM ASSEM (TY SA 12T-3)(.25 KW)S |
| ▲ | RDWY ILLUM ASSEM U/P (TY SPL-CO)(.15 KW)S(TY-1) |
| ■ | GROUND BOX |
| ⊠ | JUNCTION BOX (SUBSIDIARY) TO (ITEM 618) |
| — — — — | PVC & CONDUCTOR (TRENCHED) |
| = = = = = | CONDUIT RMC & CONDUCTOR (PUSH-BORE) |
| ⬡ | ELECTRIC SERVICE (TY S) |
| □/ | FUSED DISCONNECT SWITCH [SEE RID (4)-98 (M)] |
| ① | CONDUIT RUN NUMBER |
| 1/400 | LIGHT NUMBER / CIRCUIT NUMBER |

## RDWY ILLUMINATION ASSEMBLY SUMMARY

| POLE | ℄ STATION | TYPE | REMARKS |
|---|---|---|---|
| 1 | 14+900 LP 1604 | (TY SA 12T-3)(.25KW) S | 26 M RT |

QUANTITIES THIS SHEET
CSJ 2452-01-037

SCALE: 1:1000

## ESTIMATED QUANTITIES

| ITEM # | ITEM | UNIT | QTY. |
|---|---|---|---|
| 0610-5003 | RDWY ILLUM ASSEM ( TY SA 12 T-3)(.25 KW) S | EA | 1 |
| 0618-5009 | CONDUIT (PVC)(SCHD 40)(32 MM) | M | 30 |
| 0620-5003 | ELECT CONDR (NO 8) BARE | M | 30 |
| 0620-5009 | ELECT CONDR (NO 8) INSULATED | M | 60 |
| 0624-5001 | GROUND BOX TY A (122311) W/APRON | EA | 1 |
| 0628-5056 | ELECT SERV TY S (240/480) 060(NS)GS(T)TP(O) | EA | 1 |
| 0656-5010 | FND FOR RDWY ILL ASM (TY A)(750 MM DR SH) | M | 2 |

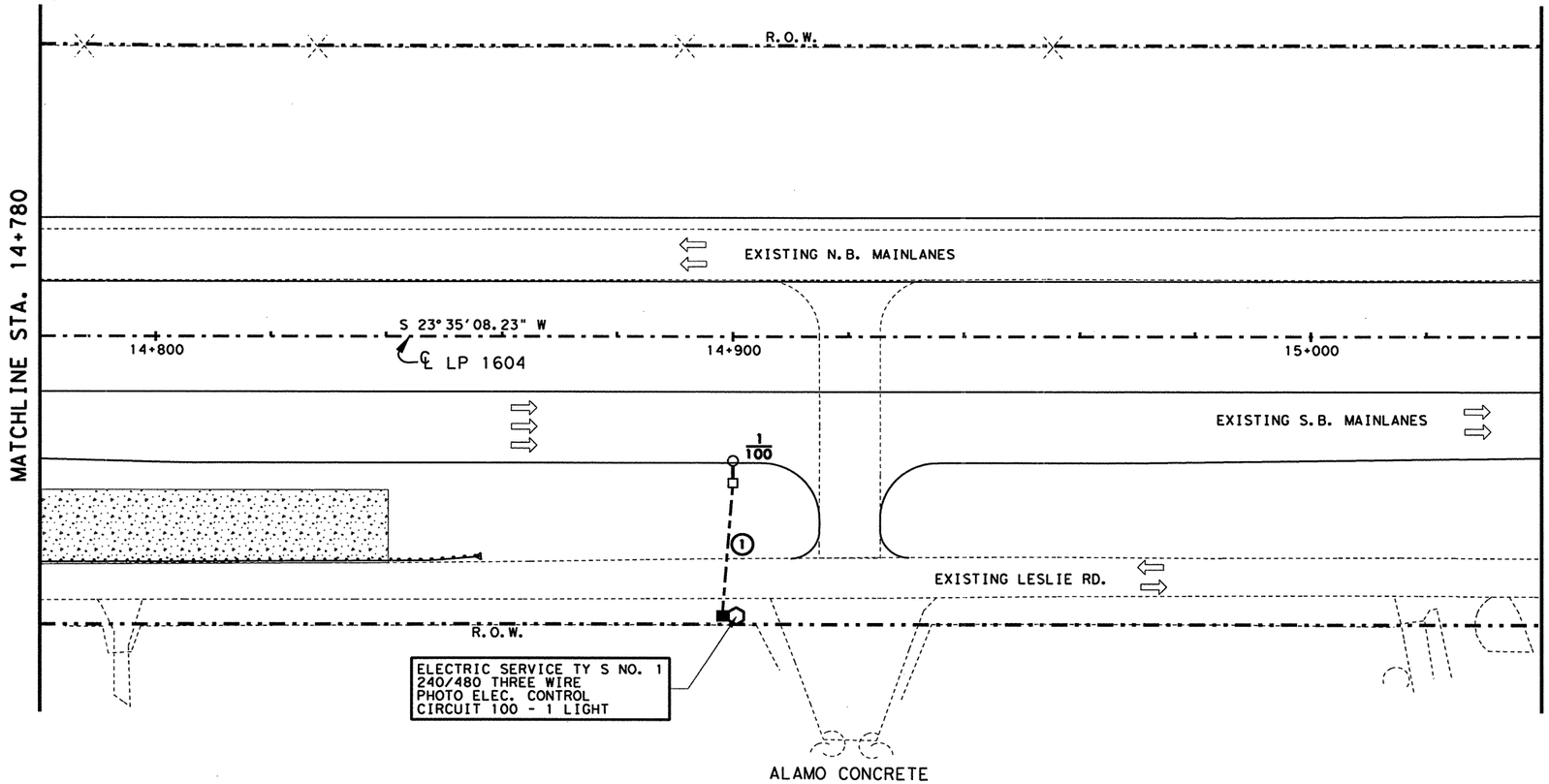


FILE T:\AO\Design\lp1604fm471-90\Illumination\illum01.dgn 14 SEP 2000
LEVEL DISPLAYED

STATE OF TEXAS
JOEL K. DAVENPORT, JR.
79276
REGISTERED
PROFESSIONAL ENGINEER

Joel K Davenport Jr 9/18/00
Joel K. Davenport, Jr. P.E. 79276 Date

© 2000 Texas Department of Transportation

# ILLUMINATION LAYOUT

SHEET 1 OF 24

| FED. RD. DIV. NO. | FEDERAL AID PROJECT NO. | | SHEET NO. |
|---|---|---|---|
| 6 | NH 2000(704), etc. | | 602 |
| STATE | DIST. | COUNTY | |
| TEXAS | SAT | BEXAR | |
| CONT. | SECT. | JOB | HIGHWAY NO. |
| 2452 | 01 | 036, etc. | LP 1604 |

## LEGEND

| | |
|---|---|
| ●—■—● | RDWY ILLUM ASSEM (TY SA 15T-3-3)(.4 KW)S |
| ●—■ | RDWY ILLUM ASSEM (TY SA 15T-3)(.4 KW)S |
| ○—□ | RDWY ILLUM ASSEM (TY SA 12T-3)(.25 KW)S |
| ▲ | RDWY ILLUM ASSEM U/P (TY SPL-CO)(.15 KW)S(TY-1) |
| ■ | GROUND BOX |
| ⊠ | JUNCTION BOX (SUBSIDIARY) TO (ITEM 618) |
| — — — — | PVC & CONDUCTOR (TRENCHED) |
| = = = = = | CONDUIT RMC & CONDUCTOR (PUSH-BORE) |
| ⬡ | ELECTRIC SERVICE (TY S) |
| □/ | FUSED DISCONNECT SWITCH [SEE RID (4)-98 (M)] |
| ① | CONDUIT RUN NUMBER |
| 1/100 | LIGHT NUMBER / CIRCUIT NUMBER |

## RDWY ILLUMINATION ASSEMBLY SUMMARY

| POLE | ℄ STATION | TYPE | REMARKS |
|---|---|---|---|
| ~~1~~ | ~~14+900 LP 1604~~ | ~~(TY SA 12T-3)(.25KW) S~~ | ~~26 M RT~~ |

QUANTITIES THIS SHEET
CSJ 2452-01-037

## ESTIMATED QUANTITIES

| ITEM # | ITEM | UNIT | QTY |
|---|---|---|---|
| 0610-5003 | RDWY ILLUM ASSEM ( TY SA 12 T-3)(.25 KW) S | EA | ~~1~~ 0 |
| 0618-5009 | CONDUIT (PVC)(SCHD 40)(32 MM) | M | ~~30~~ 0 |
| 0620-5003 | ELECT CONDR (NO 8) BARE | M | ~~30~~ 0 |
| 0620-5009 | ELECT CONDR (NO 8) INSULATED | M | ~~60~~ 0 |
| 0624-5001 | GROUND BOX TY A (122311) W/APRON | EA | ~~1~~ 0 |
| 0628-5056 | ELECT SERV TY S (240/480) 060(NS)GS(T)TP(O) | EA | ~~1~~ 0 |
| 0656-5010 | FND FOR RDWY ILL ASM (TY A)(750 MM DR SH) | M | ~~2~~ 0 |

SCALE: 1:1000

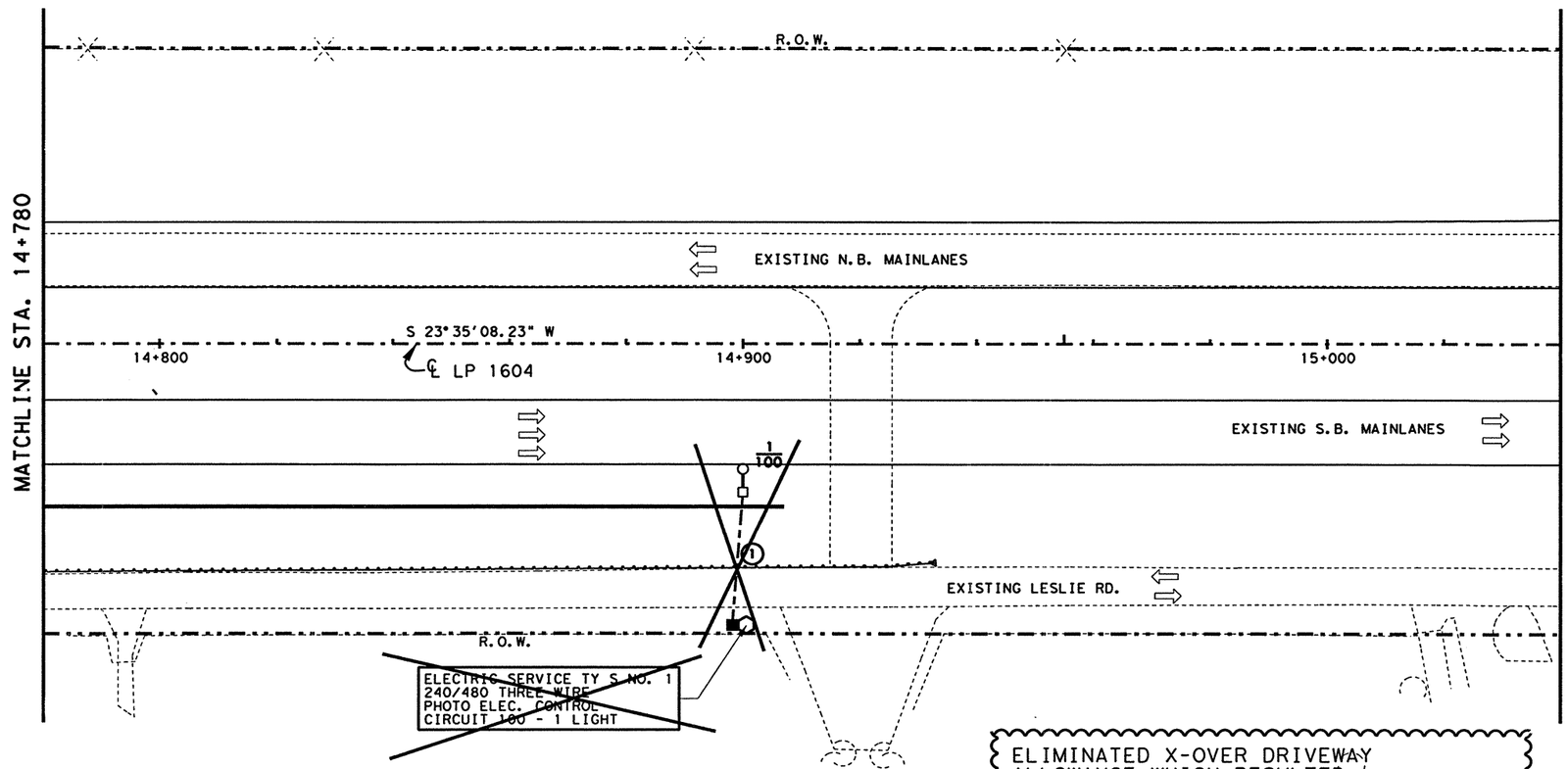


ELIMINATED X-OVER DRIVEWAY ALLOWANCE WHICH RESULTED IN THE ELIMINATION OF LIGHT SERVICE AS PART OF CHANGE ORDER NO. 12

CHANGE ORDER NO. 12
-EXTENDED MBGF & RELATED SGT FOR SLOPE PROTECTION.
-ELIMINATED RIPRAP SIDE SLOPE
-ELIMINATED LIGHT SERVICE
-REVISED QUANTITIES
-ADD CONC BLOCK WALL

CHANGE ORDER 12

STATE OF TEXAS
TERRY G. McCOY
75016
REGISTERED PROFESSIONAL ENGINEER

Terry G. McCoy, P.E. 3.8.02
Date

©2000 Texas Department of Transportation

# ILLUMINATION LAYOUT

SHEET 1 OF 24

| FED.RD. DIV.NO. | FEDERAL AID PROJECT NO. | | SHEET NO. |
|---|---|---|---|
| 6 | NH 2000(704),etc. | | 602A |
| STATE | DIST. | COUNTY | |
| TEXAS | SAT | BEXAR | |
| CONT. | SECT. | JOB | HIGHWAY NO. |
| 2452 | 01 | 036,etc. | LP 1604 |

FILE: $FILE$ | LEVEL | DISPLAYED | $DATE$

## LEGEND

| | |
|---|---|
| ●—■—● | RDWY ILLUM ASSEM (TY SA 15T-3-3)(.4 KW)S |
| ●—■ | RDWY ILLUM ASSEM (TY SA 15T-3)(.4 KW)S |
| ○—□ | RDWY ILLUM ASSEM (TY SA 12T-3)(.25 KW)S |
| ▲ | RDWY ILLUM ASSEM U/P (TY SPL-CO)(.15 KW)S(TY-1) |
| ■ | GROUND BOX |
| ⊠ | JUNCTION BOX (SUBSIDIARY) TO (ITEM 618) |
| — — — — | PVC & CONDUCTOR (TRENCHED) |
| = = = = = | CONDUIT RMC & CONDUCTOR (PUSH-BORE) |
| ⬡ | ELECTRIC SERVICE (TY S) |
| □/ | FUSED DISCONNECT SWITCH [SEE RID (4)-98 (M)] |
| ① | CONDUIT RUN NUMBER |
| 400 | LIGHT NUMBER / CIRCUIT NUMBER |

## RDWY ILLUMINATION ASSEMBLY SUMMARY

| POLE | ℄ STATION | TYPE | REMARKS |
|---|---|---|---|
| 2/79 | 15+250 LP 1604 | (TY SA 15T-3-3)(.4KW) S | |

QUANTITIES THIS SHEET
CSJ 2452-01-037

## ESTIMATED QUANTITIES

| ITEM # | ITEM | UNIT | QTY. |
|---|---|---|---|
| 0610-5002 | RDWY ILLUM ASSEM ( TY SA 15T-3-3)(.4 KW) S | EA | 1 |
| 0618-5009 | CONDUIT (PVC)(SCHD 40)(32 MM) | M | 51 |
| 0620-5003 | ELECT CONDR (NO 8) BARE | M | 51 |
| 0620-5009 | ELECT CONDR (NO 8) INSULATED | M | 102 |
| 0656-5010 | FND FOR RDWY ILL ASM (TY A)(750 MM DR SH) | M | 2 |

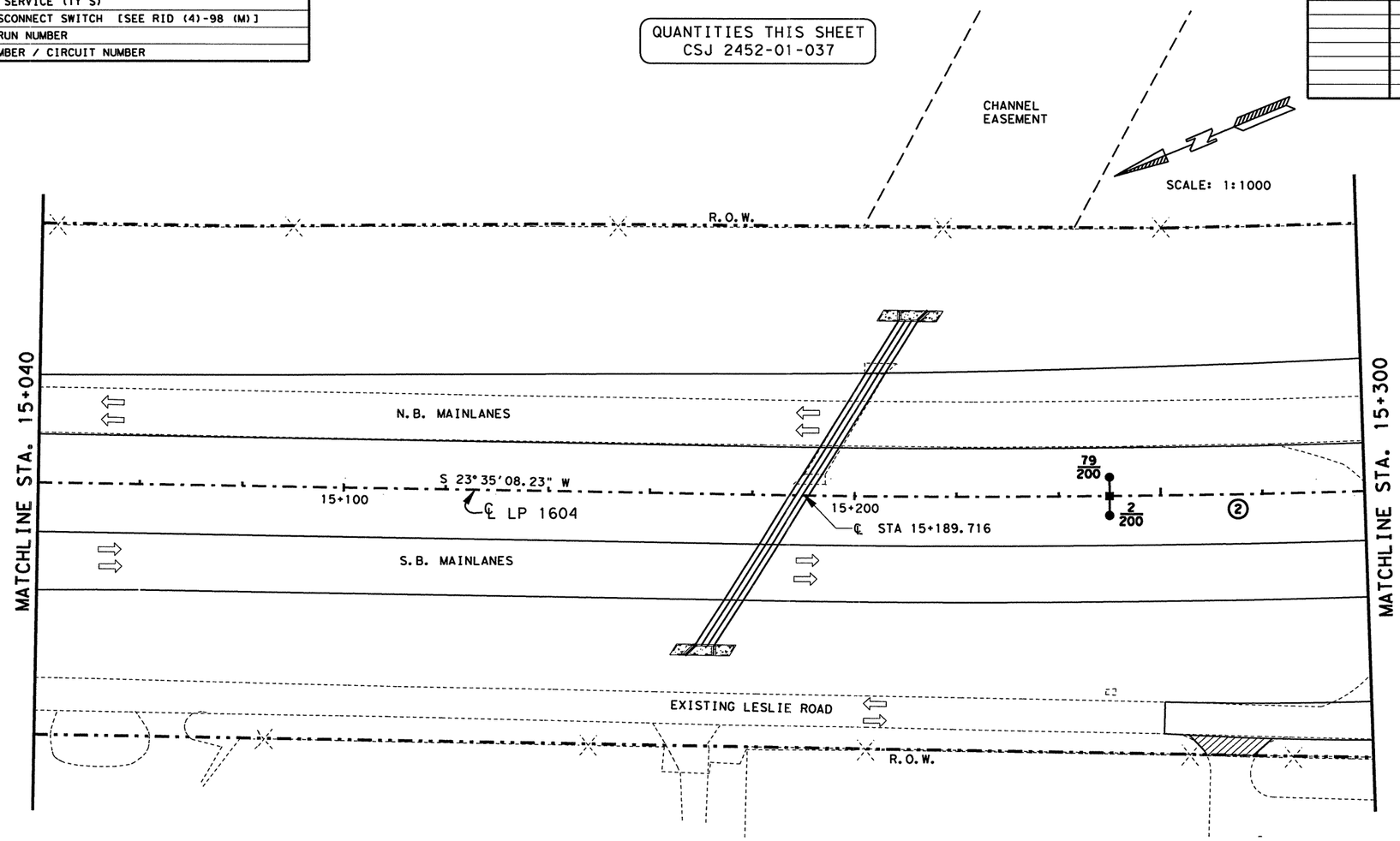


STATE OF TEXAS
JOEL K. DAVENPORT, JR.
79276
REGISTERED
PROFESSIONAL ENGINEER

Joel K Davenport Jr 9/18/00
Joel K. Davenport, Jr. P.E. 79276 Date

Texas Department of Transportation

# ILLUMINATION LAYOUT

SHEET 2 OF 24

| FED. RD. DIV. NO. | FEDERAL AID PROJECT NO. | | SHEET NO. |
|---|---|---|---|
| 6 | NH 2000(704), etc. | | 603 |
| STATE | DIST. | COUNTY | |
| TEXAS | SAT | BEXAR | |
| CONT. | SECT. | JOB | HIGHWAY NO. |
| 2452 | 01 | 036, etc. | LP 1604 |

FILE: t:\ao\design\lp1604fm471-90\illumination\illum02.dgn 14 SEP 2000
LEVEL DISPLAYED
1 2 3 4 5 6 7 8 9 10 11 12 13 14 15 16 17 18 19 20 21 22 23 24 25 26 27 28 29 30 31 32
33 34 35 55 56 57 58 59 39 40 41 42 43 44 45 46 47 48 49 50 51 52 53 54 55 56 57 58 59 60 61 62 63

## LEGEND

| | |
|---|---|
| ●—■—● | RDWY ILLUM ASSEM (TY SA 15T-3-3)(.4 KW)S |
| ●—■ | RDWY ILLUM ASSEM (TY SA 15T-3)(.4 KW)S |
| ○—□ | RDWY ILLUM ASSEM (TY SA 12T-3)(.25 KW)S |
| ▲ | RDWY ILLUM ASSEM U/P (TY SPL-CO)(.15 KW)S(TY-1) |
| ■ | GROUND BOX |
| ⊠ | JUNCTION BOX (SUBSIDIARY) TO (ITEM 618) |
| — — — — | PVC & CONDUCTOR (TRENCHED) |
| = = = = = | CONDUIT RMC & CONDUCTOR (PUSH-BORE) |
| ⬡ | ELECTRIC SERVICE (TY S) |
| □/ | FUSED DISCONNECT SWITCH [SEE RID (4)-98 (M)] |
| ① | CONDUIT RUN NUMBER |
| 400 | LIGHT NUMBER / CIRCUIT NUMBER |

## RDWY ILLUMINATION ASSEMBLY SUMMARY

| POLE | ℄ STATION | TYPE | REMARKS |
|---|---|---|---|
| 3/78 | 15+340 LP 1604 | (TY SA 15T-3-3)(.4KW) S | CSJ 2452-01-037 |
| 4/77 | 15+430 LP 1604 | (TY SA 15T-3-3)(.4KW) S | CSJ 2452-01-037 |

## ESTIMATED QUANTITIES

| ITEM # | ITEM | UNIT | CSJ 2452-01-037 QTY. | CSJ 2452-01-038 QTY. |
|---|---|---|---|---|
| 0610-5002 | RDWY ILLUM ASSEM ( TY SA 15T-3-3)(.4 KW) S | EA | 2 | |
| 0618-5009 | CONDUIT (PVC)(SCHD 40)(32 MM) | M | 140 | 62 |
| 0620-5003 | ELECT CONDR (NO 8) BARE | M | 140 | 62 |
| 0620-5009 | ELECT CONDR (NO 8) INSULATED | M | 280 | 124 |
| 0624-5001 | GROUND BOX TY A (122311) W/APRON | EA | | 1 |
| 0656-5010 | FND FOR RDWY ILL ASM (TY A)(750 MM DR SH) | M | 4 | |

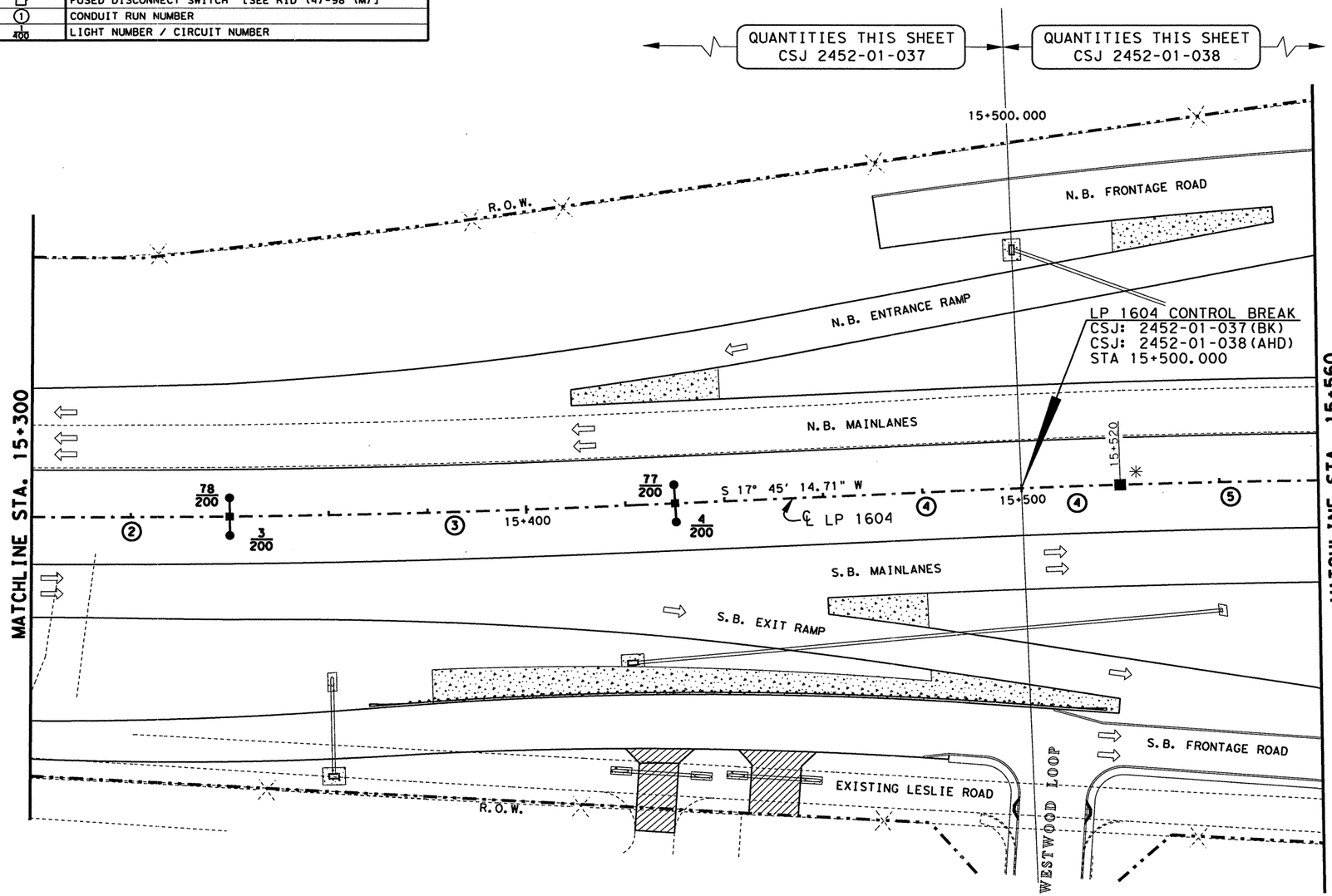


SCALE: 1:1000

✳ NOTE:
THE GROUND BOX SHOWN AT THE ℄ STA 15+520 SHALL BE LOCATED AT THE STA SHOWN FOR FUTURE ULTIMATE LIGHT SPACING. AMPLE CONDR. SHALL BE PROVIDED IN THE GROUND BOX FOR FUTURE L.P.

## CONDUIT & CONDUCTOR SUMMARY

| RUN NO. | GROUND LENGTH (M) #8 BARE | CONDUCTOR NUMBER & LENGTH (M) #8 INSULATED | CONDUIT LENGTH (M) 32 MM PVC (SCH 40) | REMARKS |
|---|---|---|---|---|
| 2 | 1-41 | 2-41 | 41 | |
| 3 | 1-92 | 2-92 | 92 | |
| 4 | 1-71 | 2-71 | 71 | |
| TOTAL | 140 | 280 | 140 | CSJ 2452-01-037 |
| 4 | 1-21 | 2-21 | 21 | |
| 5 | 1-41 | 2-41 | 41 | |
| TOTAL | 62 | 124 | 62 | CSJ 2452-01-038 |
| SHT. TOTAL | 202 | 404 | 202 | |

STATE OF TEXAS
JOEL K. DAVENPORT, JR.
79276
REGISTERED PROFESSIONAL ENGINEER

Joel K. Davenport, Jr. 9/18/00
Joel K. Davenport, Jr. P.E. 79276 Date

©2000
Texas Department of Transportation

# ILLUMINATION LAYOUT

SHEET 3 OF 24

| FED.RD. DIV.NO. | FEDERAL AID PROJECT NO. | SHEET NO. |
|---|---|---|
| 6 | NH 2000(704), etc. | 604 |
| STATE | DIST. | COUNTY |
| TEXAS | SAT | BEXAR |
| CONT. | SECT. | JOB / HIGHWAY NO. |
| 2452 | 01 | 036, etc. / LP 1604 |

FILE: t:\gov\design\lp1604fm471-90\illumination\illum03.dgn 14 SEP 2000
LEVEL DISPLAYED
1 2 3 4 5 6 7 8 9 10 11 12 13 14 15 16 17 18 19 20 21 22 23 24 25 26 27 28 29 30 31 32
33 34 35 36 37 38 39 40 41 42 43 44 45 46 47 48 49 50 51 52 53 54 55 56 57 58 59 60 61 62 63

## LEGEND

| | |
|---|---|
| ●—■—● | RDWY ILLUM ASSEM (TY SA 15T-3-3)(.4 KW)S |
| ●—■ | RDWY ILLUM ASSEM (TY SA 15T-3)(.4 KW)S |
| ○—□ | RDWY ILLUM ASSEM (TY SA 12T-3)(.25 KW)S |
| ▲ | RDWY ILLUM ASSEM U/P (TY SPL-CO)(.15 KW)S(TY-1) |
| ■ | GROUND BOX |
| ⊠ | JUNCTION BOX (SUBSIDIARY) TO (ITEM 618) |
| — — — — | PVC & CONDUCTOR (TRENCHED) |
| = = = = = | CONDUIT RMC & CONDUCTOR (PUSH-BORE) |
| ⬡ | ELECTRIC SERVICE (TY S) |
| □/ | FUSED DISCONNECT SWITCH [SEE RID (4)-98 (M)] |
| ① | CONDUIT RUN NUMBER |
| 400 | LIGHT NUMBER / CIRCUIT NUMBER |

## RDWY ILLUMINATION ASSEMBLY SUMMARY

| POLE | ℄ STATION | TYPE | REMARKS |
|---|---|---|---|
| 5 | 15+640 LP 1604 | (TY SA 12T-3)(.25KW) S | 71 M RT |
| 76 | 15+640 LP 1604 | (TY SA 12T-3)(.25KW) S | 74 M LT |

## ESTIMATED QUANTITIES

| ITEM # | ITEM | UNIT | QTY. |
|---|---|---|---|
| 0610-5003 | RDWY ILLUM ASSEM (TY SA 12T-3)(.25 KW) S | EA | 2 |
| 0618-5009 | CONDUIT (PVC)(SCHD 40)(32 MM) | M | 221 |
| 0620-5003 | ELECT CONDR (NO 8) BARE | M | 221 |
| 0620-5009 | ELECT CONDR (NO 8) INSULATED | M | 442 |
| 0624-5001 | GROUND BOX TY A (122311) W/APRON | EA | 1 |
| 0628-5056 | ELEC SERV TYS(240/480)060(NS)GS(T)TP(O) | EA | 1 |
| 0656-5010 | FND FOR RDWY ILL ASM (TY A)(750 MM DR SH) | M | 4 |

QUANTITIES THIS SHEET
CSJ 2452-01-038

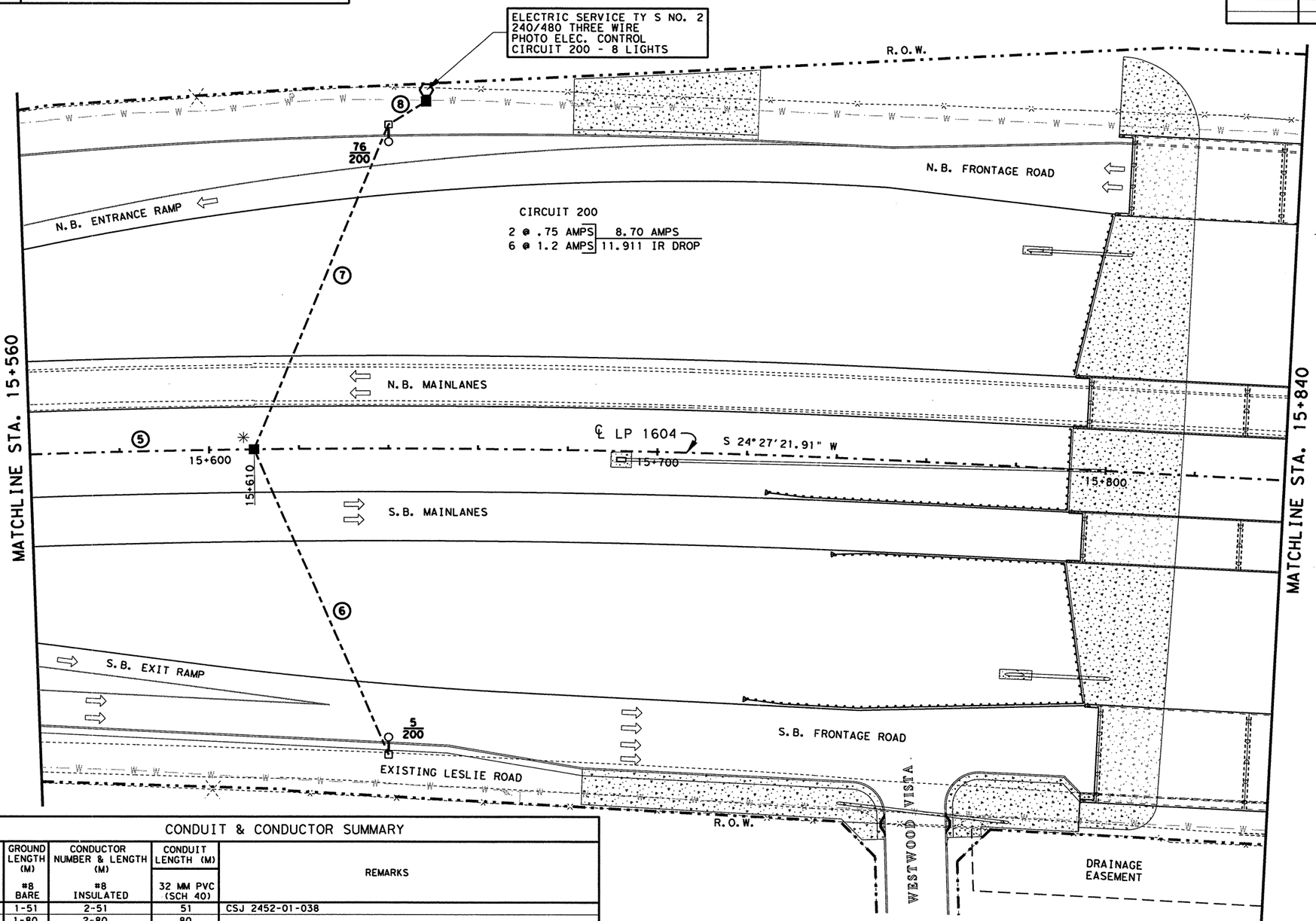


SCALE: 1:1000

✳ NOTE:
THE GROUND BOX SHOWN AT THE ℄ STA 15+610 SHALL BE LOCATED AT THE STA SHOWN FOR FUTURE ULTIMATE LIGHT SPACING. AMPLE CONDR. SHALL BE PROVIDED IN THE GROUND BOX FOR FUTURE L.P.

## CONDUIT & CONDUCTOR SUMMARY

| RUN NO. | GROUND LENGTH (M) #8 BARE | CONDUCTOR NUMBER & LENGTH (M) #8 INSULATED | CONDUIT LENGTH (M) 32 MM PVC (SCH 40) | REMARKS |
|---|---|---|---|---|
| 5 | 1-51 | 2-51 | 51 | CSJ 2452-01-038 |
| 6 | 1-80 | 2-80 | 80 | |
| 7 | 1-80 | 2-80 | 80 | |
| 8 | 1-10 | 2-10 | 10 | |
| TOTAL | 221 | 442 | 221 | CSJ 2452-01-038 |

STATE OF TEXAS
JOEL K. DAVENPORT, JR.
79276
REGISTERED
PROFESSIONAL ENGINEER

Joel K. Davenport, Jr. 9/18/00
Joel K. Davenport, Jr. P.E. 79276 Date

©2000
Texas Department of Transportation

# ILLUMINATION LAYOUT

SHEET 4 OF 24

| FED.RD. DIV.NO. | FEDERAL AID PROJECT NO. | SHEET NO. |
|---|---|---|
| 6 | NH 2000(704), etc. | 605 |
| STATE | DIST. | COUNTY |
| TEXAS | SAT | BEXAR |
| CONT. | SECT. | JOB / HIGHWAY NO. |
| 2452 | 01 | 036, etc. / LP 1604 |

FILE: t:\roadesign\lp1604fm471-90\illumination\illum04.dgn 14 SEP 2000
LEVEL DISPLAYED
1 2 3 4 5 6 7 8 9 10 11 12 21 31 41 51 61 71 81 91 202 212 222 232 242 252 262 272 282 293 031
33 34 35 36 37 38 39 40 41 42 43 44 45 46 47 48 49 50 51 52 53 54 55 56 57 58 59 60 61 62 63

## LEGEND

| | |
|---|---|
| ●—■—● | RDWY ILLUM ASSEM (TY SA 15T-3-3)(.4 KW)S |
| ●—■ | RDWY ILLUM ASSEM (TY SA 15T-3)(.4 KW)S |
| ○—□ | RDWY ILLUM ASSEM (TY SA 12T-3)(.25 KW)S |
| ▲ | RDWY ILLUM ASSEM U/P (TY SPL-CO)(.15 KW)S(TY-1) |
| ■ | GROUND BOX |
| ⊠ | JUNCTION BOX (SUBSIDIARY) TO (ITEM 618) |
| — — — | PVC & CONDUCTOR (TRENCHED) |
| = = = = = | CONDUIT RMC & CONDUCTOR (PUSH-BORE) |
| ⬡ | ELECTRIC SERVICE (TY S) |
| □ | FUSED DISCONNECT SWITCH [SEE RID (4)-98 (M)] |
| ① | CONDUIT RUN NUMBER |
| 71/400 | LIGHT NUMBER / CIRCUIT NUMBER |

QUANTITIES THIS SHEET
CSJ 2452-01-038

ELECTRIC SERVICE TY S NO. 3
240/480 THREE WIRE
PHOTO ELEC. CONTROL
CIRCUIT 300 - 12 LIGHTS

CIRCUIT 300
8 @ .45 AMPS | 8.40 AMPS
4 @ 1.2 AMPS | 5.563 IR DROP

SCALE: 1:1000

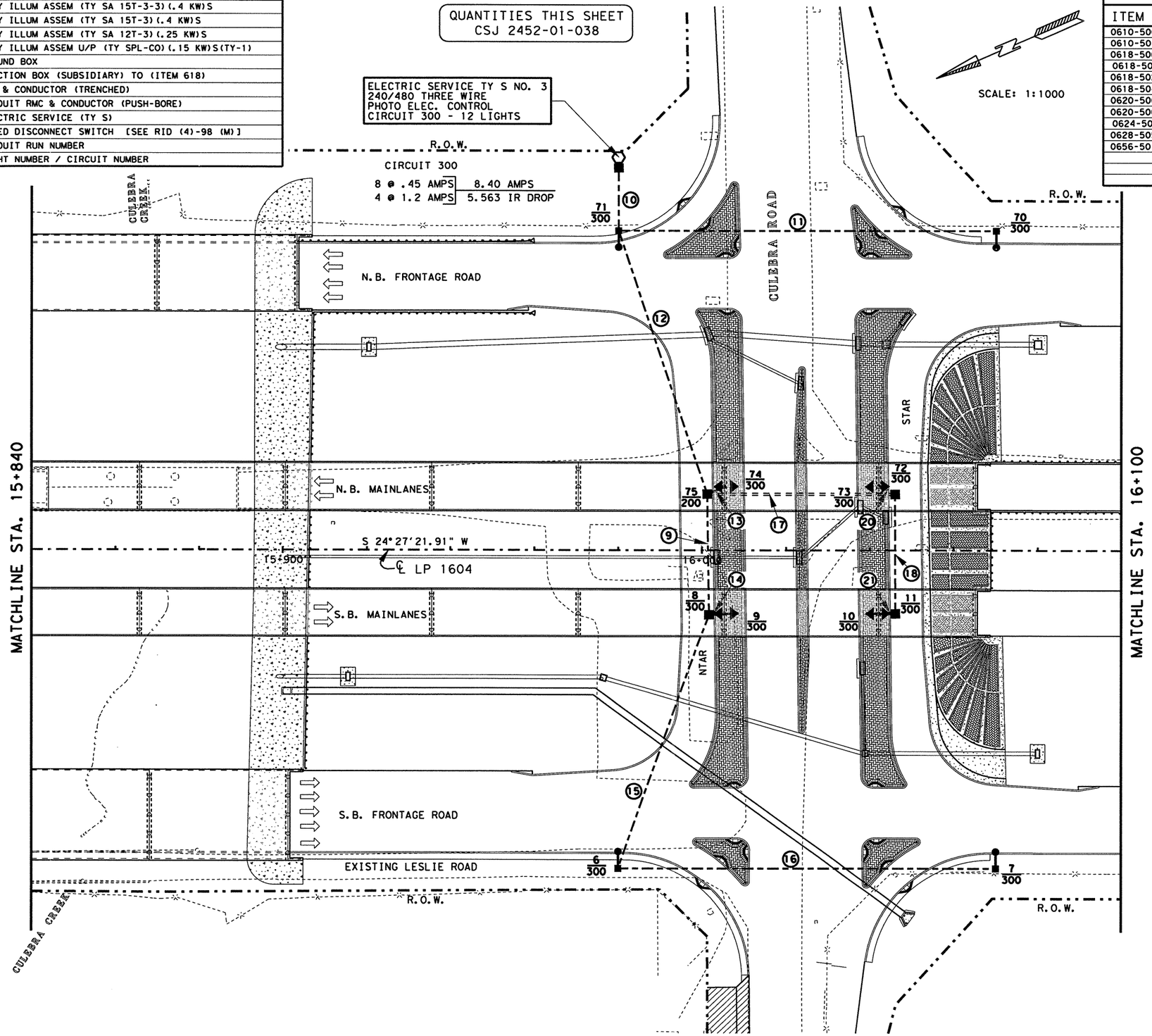


## ESTIMATED QUANTITIES

| ITEM # | ITEM | UNIT | QTY. |
|---|---|---|---|
| 0610-5003 | RDWY ILLUM ASSEM (TY SA 15T-3)(.4 KW) S | EA | 4 |
| 0610-5017 | RWDY ILLUM ASSEM U/P(TY SPL-CO)(.15 KWS)S(TY-1) | EA | 8 |
| 0618-5009 | CONDUIT (PVC)(SCHD 40)(32 MM) | M | 264 |
| 0618-5011 | CONDUIT (PVC)(SCHD 40)(50 MM) | M | 140 |
| 0618-5026 | CONDUIT (RM)(PUSH-BORE)(50 MM) | M | 40 |
| 0618-5045 | CONDUIT (PVC)(SCHD 40)(25 MM) | M | 40 |
| 0620-5003 | ELECT CONDR (NO. 8) BARE | M | 490 |
| 0620-5009 | ELECT CONDR (NO. 8) INSULATED | M | 980 |
| 0624-5001 | GROUND BOX TY A (122311) W/APRON | EA | 5 |
| 0628-5056 | ELEC SERV TYS(240/480)060(NS)GS(T)TP(O) | EA | 1 |
| 0656-5010 | FND FOR RDWY ILL ASM (TY A)(750 MM DR SH) | M | 8 |

NOTE:
SEE SHEET (5A OF 24) FOR QUANTITY SUMMARY AND SHEET 627 FOR ILLUMINATION DETAILS.

STATE OF TEXAS
JOEL K. DAVENPORT, JR.
79276
REGISTERED
PROFESSIONAL ENGINEER

Joel K. Davenport, Jr. 9/18/00
Joel K. Davenport, Jr. P.E. 79276 Date

© 2000 Texas Department of Transportation

# ILLUMINATION LAYOUT

SHEET 5 OF 24

| FED. RD. DIV. NO. | FEDERAL AID PROJECT NO. | | SHEET NO. |
|---|---|---|---|
| 6 | NH 2000(704), etc. | | 606 |
| STATE | DIST. | COUNTY | |
| TEXAS | SAT | BEXAR | |
| CONT. | SECT. | JOB | HIGHWAY NO. |
| 2452 | 01 | 036, etc. | LP 1604 |

FILE t:\oa\design\lp1604fm471-90\illumination\illum05.dgn 14 SEP 2000
LEVEL 1 2 3 4 5 6 7 8 9 10 11 12 13 14 15 16 17 18 19 20 21 22 23 24 25 26 27 28 29 30 31 32
DISPLAYED 33 34 35 36 37 38 39 40 41 42 43 44 45 46 47 48 49 50 51 52 53 54 55 56 57 58 59 60 61 62 63

## RDWY ILLUMINATION ASSEMBLY SUMMARY

| POLE | ℄ STATION | TYPE | REMARKS |
|---|---|---|---|
| 6 | 15+980 LP 1604 | (TY SA 15T-3) (.4 KW) S | 78 M RT |
| 7 | 16+070 LP 1604 | (TY SA 15T-3) (.4 KW) S | 78 M RT |
| 8 | 16+007 LP 1604 | U/P (TY SPL-CO) (.15 KW) S (TY-1) | 15 M RT |
| 9 | 16+007 LP 1604 | U/P (TY SPL-CO) (.15 KW) S (TY-1) | 15 M RT |
| 10 | 16+040 LP 1604 | U/P (TY SPL-CO) (.15 KW) S (TY-1) | 15 M RT |
| 11 | 16+040 LP 1604 | U/P (TY SPL-CO) (.15 KW) S (TY-1) | 15 M RT |
| 70 | 16+070 LP 1604 | (TY SA 15T-3 (.4 KW) S | 78 M LT |
| 71 | 15+980 LP 1604 | (TY SA 15T-3 (.4 KW) S | 78 M LT |
| 72 | 16+040 LP 1604 | U/P (TY SPL-CO) (.15 KW) S (TY-I) | 15 M LT |
| 73 | 16+040 LP 1604 | U/P (TY SPL-CO) (.15 KW) S (TY-I) | 15 M LT |
| 74 | 16+007 LP 1604 | U/P (TY SPL-CO) (.15 KW) S (TY-I) | 15 M LT |
| 75 | 16+007 LP 1604 | U/P (TY SPL-CO) (.15 KW) S (TY-I) | 15 M LT |
| | | | |

## CONDUIT & CONDUCTOR SUMMARY

| RUN NO. | GROUND LENGTH (M) #8 BARE | CONDUCTOR NUMBER & LENGTH (M) #8 INSULATED | CONDUIT LENGTH (M) 32 MM PVC (SCH 40) | 50 MM PVC (SCH 40) | 50 MM RMC (PUSH-BORE) | 25 MM PVC (SCH 40) | REMARKS |
|---|---|---|---|---|---|---|---|
| 9 | 1-33 | 2-33 | 30 | | | | FROM GROUND BOX @ BENT # 7 S.B.M.L. TO GROUND BOX @ BENT # 7 N.B.M.L. |
| 10 | 1-20 | 2-20 | 20 | | | | FROM LIGHT 71 TO SERV. POLE |
| 11 | 1-92 | 2-92 | 92 | | | | FROM LIGHT 70 TO LIGHT 71 |
| 12 | 1-70 | 2-70 | | 70 | | | FROM GROUND BOX @ BENT # 7 N.B.M.L. TO LIGHT 71 |
| 13 | 1-10 | 2-10 | | | | 10 | IN COLUMN BENT # 7 N.B.M.L. FROM GROUND BOX TO LIGHTS 74 / 75 |
| 14 | 1-10 | 2-10 | | | | 10 | IN COLUMN BENT # 7 S.B.M.L. FROM GROUND BOX TO LIGHTS 8 / 9 |
| 15 | 1-70 | 2-70 | | 70 | | | FROM GROUND BOX @ BENT # 7 S.B.M.L. TO LIGHT 6 |
| 16 | 1-92 | 2-92 | 92 | | | | FROM LIGHT 7 TO LIGHT 6 |
| 17 | 1-40 | 2-40 | | | 40 | | UNDER CULEBRA FROM GROUND BOX @ BENT # 7 N.B.M.L. TO GROUND BOX BENT # 8 N.B.M.L. |
| 18 | 1-33 | 2-33 | 30 | | | | FROM GROUND BOX @ BENT # 8 S.B.M.L. TO GROUND BOX @ BENT # 8 N.B.M.L. |
| ✳ 19 | | | | | | | |
| 20 | 1-10 | 2-10 | | | | 10 | IN COLUMN BENT # 8 N.B.M.L. FROM GROUND BOX TO LIGHTS 72 / 73 |
| 21 | 1-10 | 2-10 | | | | 10 | IN COLUMN BENT # 8 S.B.M.L. FROM GROUND BOX TO LIGHTS 10 / 11 |
| | | | | | | | |
| TOTAL | 490 | 980 | 264 | 140 | 40 | 40 | |

NOTE:

✳ THIS RUN WAS DELETED

FILE: t:\roo\design\lp1604fm471-90\illumination\illum05.dgn
LEVEL DISPLAYED: 1 2 3 4 5 6 7 8 9 10 11 12 13 14 15 16 17 18 19 20 21 22 23 24 25 26 27 28 29 30 31 32 33 34 35 36 37 38 39 40 41 42 43 44 45 46 47 48 49 50 51 52 53 54 55 56 57 58 59 60 61 62 63
14 SEP 2000

©2000

Texas Department of Transportation

# ILLUMINATION LAYOUT

SHEET 5A OF 24

| FED.RD. DIV.NO. | FEDERAL AID PROJECT NO. | | SHEET NO. |
|---|---|---|---|
| 6 | NH 2000(704), etc. | | 607 |
| STATE | DIST. | COUNTY | |
| TEXAS | SAT | BEXAR | |
| CONT. | SECT. | JOB | HIGHWAY NO. |
| 2452 | 01 | 036, etc. | LP 1604 |

## LEGEND

| | |
|---|---|
| ●—■—● | RDWY ILLUM ASSEM (TY SA 15T-3-3)(.4 KW)S |
| ●—■ | RDWY ILLUM ASSEM (TY SA 15T-3)(.4 KW)S |
| ○—□ | RDWY ILLUM ASSEM (TY SA 12T-3)(.25 KW)S |
| ▲ | RDWY ILLUM ASSEM U/P (TY SPL-CO)(.15 KW)S(TY-1) |
| ■ | GROUND BOX |
| ⊠ | JUNCTION BOX (SUBSIDIARY) TO (ITEM 618) |
| — — — — — | PVC & CONDUCTOR (TRENCHED) |
| = = = = = | CONDUIT RMC & CONDUCTOR (PUSH-BORE) |
| ⬡ | ELECTRIC SERVICE (TY S) |
| □/ | FUSED DISCONNECT SWITCH [SEE RID (4)-98 (M)] |
| ① | CONDUIT RUN NUMBER |
| 400 | LIGHT NUMBER / CIRCUIT NUMBER |

## RDWY ILLUMINATION ASSEMBLY SUMMARY

| POLE | ℄ STATION | TYPE | REMARKS |
|---|---|---|---|
| 67 | 16+580 LP 1604 | (TY SA 12T-3)(.25 KW) S | 57 M LT |
| 68 | 16+514 LP 1604 | (TY SA 12T-3)(.25 KW) S | 57 M LT |
| 69 | 16+448 LP 1604 | (TY SA 12T-3)(.25 KW) S | 64 M LT |
| 12 | 16+550 LP 1604 | (TY SA 12T-3)(.25 KW) S | 52 M RT |

QUANTITIES THIS SHEET
CSJ 2452-01-038

SCALE: 1:1000

## ESTIMATED QUANTITIES

| ITEM # | ITEM | UNIT | QTY. |
|---|---|---|---|
| 0610-5003 | RDWY ILLUM ASSEM (TY SA 12T-3)(.25 KW) S | EA | 4 |
| 0618-5009 | CONDUIT (PVC)(SCHD 40)(32 MM) | M | 291 |
| 0620-5003 | ELECT CONDR (NO. 8) BARE | M | 291 |
| 0620-5009 | ELECT CONDR (NO. 8) INSULATED | M | 582 |
| 0624-5001 | GROUND BOX TY A (122311) W/APRON | EA | 1 |
| 0656-5010 | FND FOR RDWY ILL ASM (TY A)(750 MM DR SH) | EA | 8 |

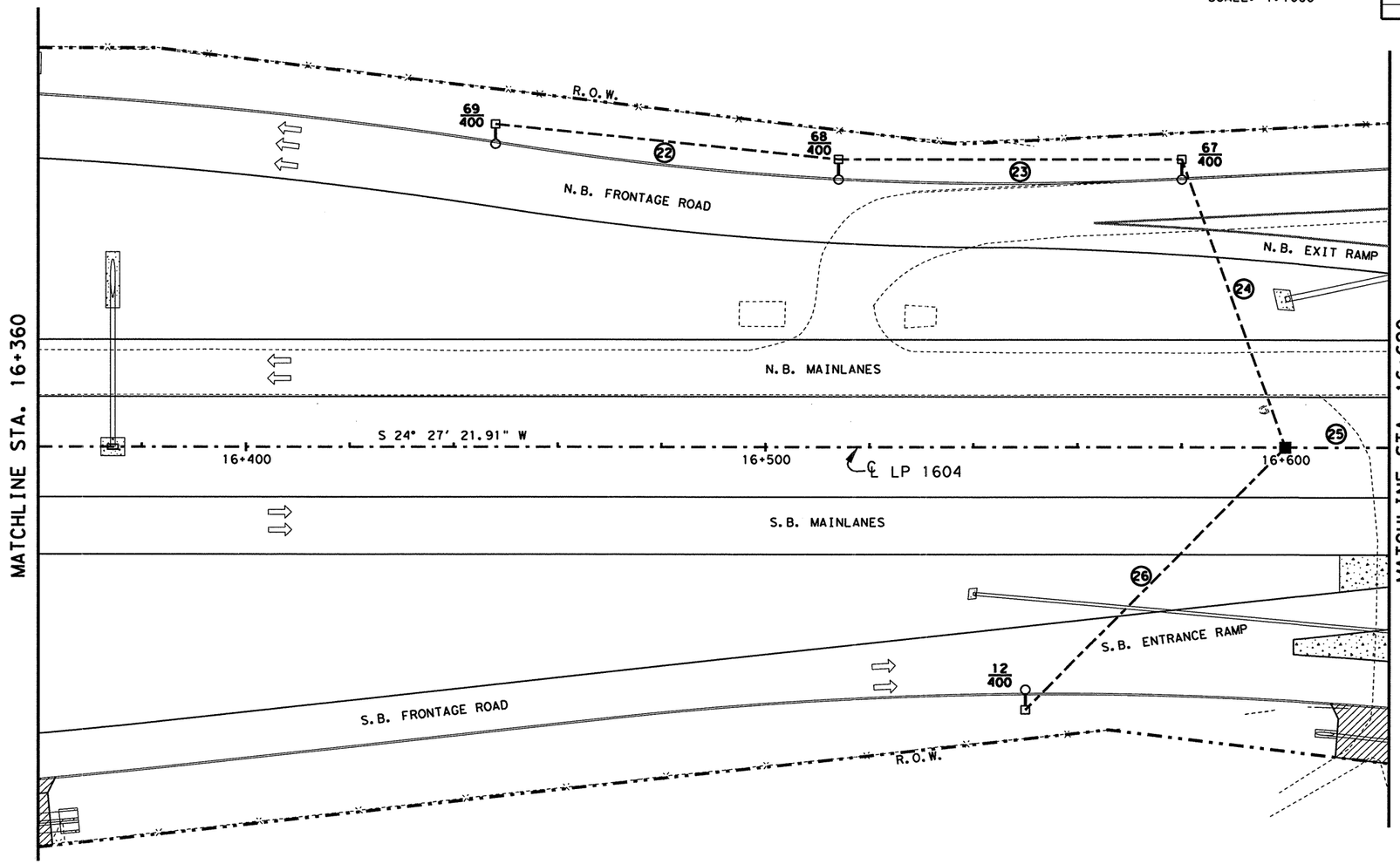


NOTE:
THE GROUND BOX SHOWN AT THE ℄ STA. SHALL BE LOCATED AT THE STA. SHOWN FOR FUTURE ULTIMATE LIGHT SPACING. AMPLE CONDR. SHALL BE PROVIDED IN THE GROUND BOX FOR THE FUTURE L.P.

## CONDUIT & CONDUCTOR SUMMARY

| RUN NO. | GROUND LENGTH (M) #8 BARE | CONDUCTOR NUMBER & LENGTH (M) #8 INSULATED | CONDUIT LENGTH (M) 32 MM PVC (SCH 40) | REMARKS |
|---|---|---|---|---|
| 22 | 1-68 | 2-68 | 68 | |
| 23 | 1-68 | 2-68 | 68 | |
| 24 | 1-64 | 2-64 | 64 | |
| 25 | 1-21 | 2-21 | 21 | |
| 26 | 1-70 | 2-70 | 70 | |
| TOTAL | 291 | 582 | 291 | |

FILE: I:\ao\design\lp1604fm471-90\illumination\illum06.dgn 14 SEP 2000
LEVEL DISPLAYED 1 2 3 4 5 6 7 8 9 10 11 12 13 14 15 16 17 18 19 20 21 22 23 24 25 26 27 28 29 30 31 32 33 34 35 36 37 38 39 40 41 42 43 44 45 46 47 48 49 50 51 52 53 54 55 56 57 58 59 60 61 62 63

STATE OF TEXAS
JOEL K. DAVENPORT, JR.
79276
REGISTERED PROFESSIONAL ENGINEER

Joel K. Davenport, Jr. 9/18/00
Joel K. Davenport, Jr. P.E. 79276 Date

Texas Department of Transportation

# ILLUMINATION LAYOUT

SHEET 6 OF 24

| FED.RD. DIV.NO. | FEDERAL AID PROJECT NO. | | SHEET NO. |
|---|---|---|---|
| 6 | NH 2000(704),etc. | | 608 |
| STATE | DIST. | COUNTY | |
| TEXAS | SAT | BEXAR | |
| CONT. | SECT. | JOB | HIGHWAY NO. |
| 2452 | 01 | 036,etc. | LP 1604 |

## LEGEND

| | |
|---|---|
| ●—■—● | RDWY ILLUM ASSEM (TY SA 15T-3-3)(.4 KW)S |
| ●—■ | RDWY ILLUM ASSEM (TY SA 15T-3)(.4 KW)S |
| ○—□ | RDWY ILLUM ASSEM (TY SA 12T-3)(.25 KW)S |
| ▲ | RDWY ILLUM ASSEM U/P (TY SPL-CO)(.15 KW)S(TY-1) |
| ■ | GROUND BOX |
| ⊠ | JUNCTION BOX (SUBSIDIARY) TO (ITEM 618) |
| — — — — — | PVC & CONDUCTOR (TRENCHED) |
| = = = = = | CONDUIT RMC & CONDUCTOR (PUSH-BORE) |
| ⬡ | ELECTRIC SERVICE (TY S) |
| □/ | FUSED DISCONNECT SWITCH [SEE RID (4)-98 (M)] |
| ① | CONDUIT RUN NUMBER |
| 400 | LIGHT NUMBER / CIRCUIT NUMBER |

## RDWY ILLUMINATION ASSEMBLY SUMMARY

| POLE | ℄ STATION | TYPE | REMARKS |
|---|---|---|---|
| 13/66 | 16+690 LP 1604 | (TY SA 15T-3-3)(.4 KW)S | |
| 14/65 | 16+780 LP 1604 | (TY SA 15T-3-3)(.4 KW)S | |
| 15/64 | 16+870 LP 1604 | (TY SA 15T-3-3)(.4 KW)S | |

QUANTITIES THIS SHEET
CSJ 2452-01-038

## ESTIMATED QUANTITIES

| ITEM # | ITEM | UNIT | QTY. |
|---|---|---|---|
| 0610-5002 | RDWY ILLUM ASSEM (TY SA 15T-3-3)(.4 KW) S | EA | 3 |
| 0618-5009 | CONDUIT (PVC)(SCHD 40)(32 MM). | M | 372 |
| 0620-5003 | ELECT CONDR (NO. 8) BARE | M | 372 |
| 0620-5009 | ELECT CONDR (NO. 8) INSULATED | M | 722 |
| 0620-5010 | ELECT CONDR (NO. 6) INSULATED | M | 210 |
| 0624-5001 | GROUND BOX TY A (122311) W/APRON | EA | 2 |
| 0628-5056 | ELEC SERV TYS(240/480)060(NS)GS(T)TP(O) | EA | 1 |
| 0656-5010 | FND FOR RDWY ILL ASM (TY A)(750 MM DR SH) | M | 6 |

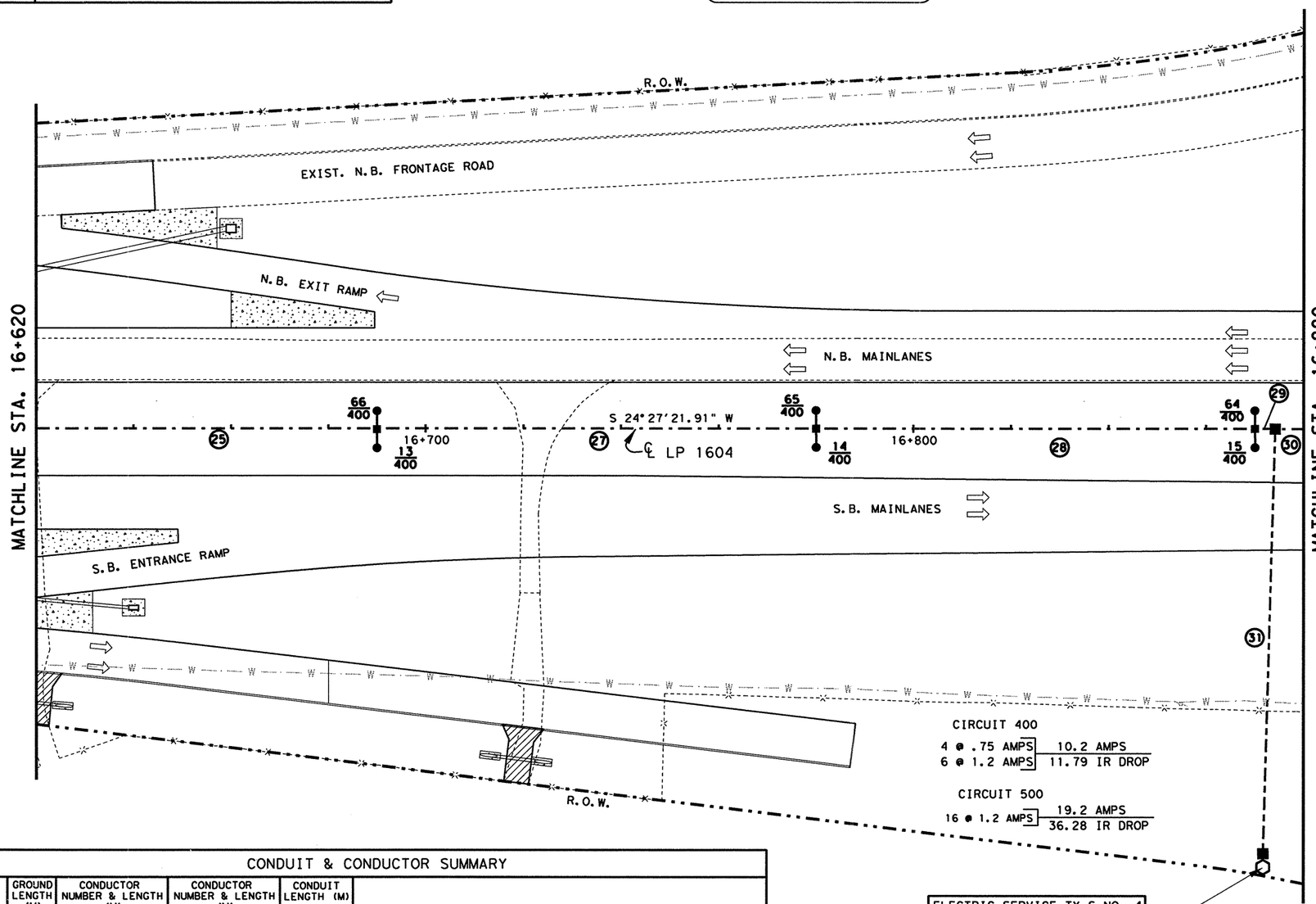


SCALE: 1:1000

## CONDUIT & CONDUCTOR SUMMARY

| RUN NO. | GROUND LENGTH (M) #8 BARE | CONDUCTOR NUMBER & LENGTH (M) #8 INSULATED | CONDUCTOR NUMBER & LENGTH (M) #6 INSULATED | CONDUIT LENGTH (M) 32 MM PVC (SCH 40) | REMARKS |
|---|---|---|---|---|---|
| 25 | 1-71 | 2-71 | - | 71 | |
| 27 | 1-92 | 2-92 | - | 92 | |
| 28 | 1-92 | 2-92 | - | 92 | |
| 29 | 1-12 | 2-12 | - | 12 | |
| 30 | 1-11 | - | 2-11 | 11 | # 6 CONDR ROUTE THRU GROUND BOX FOR CIRCUIT 500 |
| 31 | 1-94 | 2-94 | 2-94 | 94 | # 6 CONDR ROUTE THRU GROUND BOX FOR CIRCUIT 500 |
| | | | | | |
| TOTAL | 372 | 722 | 210 | 372 | |


STATE OF TEXAS
JOEL K. DAVENPORT, JR.
79276
REGISTERED PROFESSIONAL ENGINEER


Joel K Davenport Jr. 9/18/00
Joel K. Davenport, Jr. P.E. 79276 Date

Texas Department of Transportation

# ILLUMINATION LAYOUT

SHEET 7 OF 24

| FED.RD. DIV.NO. | FEDERAL AID PROJECT NO. | SHEET NO. |
|---|---|---|
| 6 | NH 2000(704), etc. | 609 |
| STATE | DIST. | COUNTY |
| TEXAS | SAT | BEXAR |
| CONT. | SECT. | JOB / HIGHWAY NO. |
| 2452 | 01 | 036, etc. / LP 1604 |


FILE: H:\ao\design\lp1604fm471-90\illumination\illum07.dgn 14 SEP 2000
LEVEL DISPLAYED 1 2 3 4 5 6 7 8 9 10 11 12 13 14 15 16 17 18 19 20 21 22 23 24 25 26 27 28 29 30 31 32 33 34 35 36 37 38 39 40 41 42 43 44 45 46 47 48 49 50 51 52 53 54 55 56 57 58 59 60 61 62 63

## LEGEND

| | |
|---|---|
| ●—■—● | RDWY ILLUM ASSEM (TY SA 15T-3-3)(.4 KW)S |
| ●—■ | RDWY ILLUM ASSEM (TY SA 15T-3)(.4 KW)S |
| ○—□ | RDWY ILLUM ASSEM (TY SA 12T-3)(.25 KW)S |
| ▲ | RDWY ILLUM ASSEM U/P (TY SPL-CO)(.15 KW)S(TY-1) |
| ■ | GROUND BOX |
| ⊠ | JUNCTION BOX (SUBSIDIARY) TO (ITEM 618) |
| – – – – – | PVC & CONDUCTOR (TRENCHED) |
| = = = = = | CONDUIT RMC & CONDUCTOR (PUSH-BORE) |
| ⬡ | ELECTRIC SERVICE (TY S) |
| □/ | FUSED DISCONNECT SWITCH [SEE RID (4)-98 (M)] |
| ① | CONDUIT RUN NUMBER |
| 1/400 | LIGHT NUMBER / CIRCUIT NUMBER |

## RDWY ILLUMINATION ASSEMBLY SUMMARY

| POLE | ℄ STATION | TYPE | REMARKS |
|---|---|---|---|
| 16/63 | 16+960 LP 1604 | (TY SA 15T-3-3)(.4 KW)S | CSJ 2452-01-038 |
| 17/62 | 17+050 LP 1604 | (TY SA 15T-3-3)(.4 KW)S | CSJ 2452-01-037 |
| 18/61 | 17+140 LP 1604 | (TY SA 15T-3-3)(.4 KW)S | CSJ 2452-01-037 |

## ESTIMATED QUANTITIES

| ITEM # | ITEM | UNIT | CSJ 2452-01-038 QTY. | CSJ 2452-01-037 QTY. |
|---|---|---|---|---|
| 0610-5002 | RDWY ILLUM ASSEM (TY SA 15T-3-3)(.4 KW) S | EA | 1 | 2 |
| 0618-5009 | CONDUIT (PVC)(SCHD 40)(32 MM) | M | 122 | 153 |
| 0620-5003 | ELECT CONDR (NO. 8) BARE | M | 122 | 153 |
| 0620-5009 | ELECT CONDR (NO. 8) INSULATED | M | 82 | 306 |
| 0620-5010 | ELECT CONDR (NO. 6) INSULATED | M | 162 | |
| 0656-5010 | FND FOR RDWY ILL ASM (TY A)(750 MM DR SH) | EA | 2 | 4 |

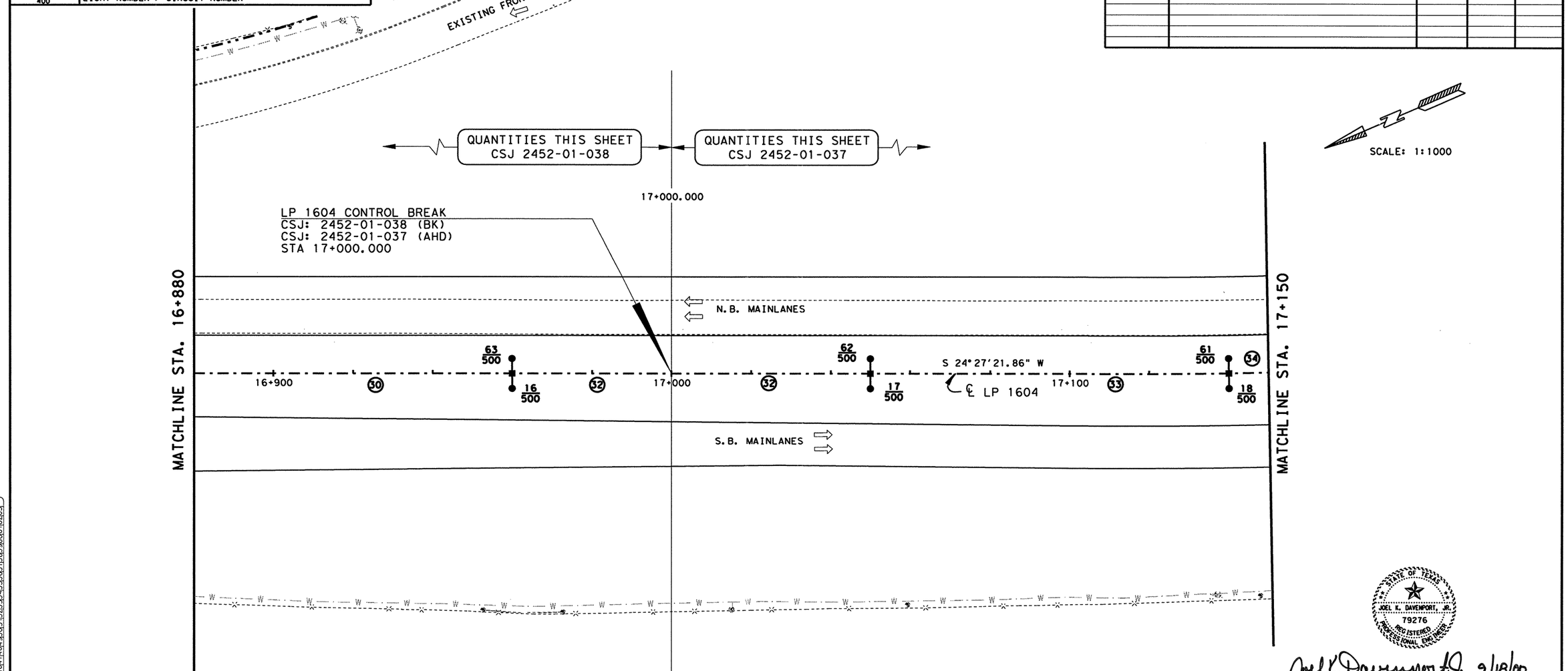


SCALE: 1:1000

## CONDUIT & CONDUCTOR SUMMARY

| RUN NO. | GROUND LENGTH (M) #8 BARE | CONDUCTOR NUMBER & LENGTH (M) #8 INSULATED | CONDUCTOR NUMBER & LENGTH (M) #6 INSULATED | CONDUIT LENGTH (M) 32 MM PVC (SCH 40) | REMARKS |
|---|---|---|---|---|---|
| 30 | 1-81 | - | 2-81 | 81 | |
| 32 | 1-41 | 2-41 | - | 41 | |
| TOTAL | 122 | 82 | 162 | 122 | CSJ 2452-01-038 |
| 32 | 1-51 | 2-51 | - | 51 | |
| 33 | 1-92 | 2-92 | - | 92 | |
| 34 | 1-10 | 2-10 | - | 10 | |
| TOTAL | 153 | 306 | - | 153 | CSJ 2452-01-037 |
| SHT. TOTAL | 275 | 388 | 162 | 275 | |

STATE OF TEXAS
JOEL K. DAVENPORT, JR.
79276
REGISTERED PROFESSIONAL ENGINEER

Joel K Davenport Jr 9/18/00
Joel K. Davenport, Jr. P.E. 79276 Date

Texas Department of Transportation

# ILLUMINATION LAYOUT

SHEET 8 OF 24

| FED. RD. DIV. NO. | FEDERAL AID PROJECT NO. | | SHEET NO. |
|---|---|---|---|
| 6 | NH 2000(704), etc. | | 610 |
| STATE | DIST. | COUNTY | |
| TEXAS | SAT | BEXAR | |
| CONT. | SECT. | JOB | HIGHWAY NO. |
| 2452 | 01 | 036, etc. | LP 1604 |

FILE: t:\gov\design\lp1604fm471-90\illumination\illum08.dgn 14 SEP 2000
LEVEL DISPLAYED 1 2 3 4 5 6 7 8 9 10 11 12 13 14 15 16 17 18 19 20 21 22 23 24 25 26 27 28 29 30 31 32 33 34 35 36 37 38 39 40 41 42 43 44 45 46 47 48 49 50 51 52 53 54 55 56 57 58 59 60 61 62 63

## LEGEND

| | |
|---|---|
| ●—■—● | RDWY ILLUM ASSEM (TY SA 15T-3-3)(.4 KW)S |
| ●—■ | RDWY ILLUM ASSEM (TY SA 15T-3)(.4 KW)S |
| ○—□ | RDWY ILLUM ASSEM (TY SA 12T-3)(.25 KW)S |
| ▲ | RDWY ILLUM ASSEM U/P (TY SPL-CO)(.15 KW)S(TY-1) |
| ■ | GROUND BOX |
| ⊠ | JUNCTION BOX (SUBSIDIARY) TO (ITEM 618) |
| — — — — — | PVC & CONDUCTOR (TRENCHED) |
| = = = = = | CONDUIT RMC & CONDUCTOR (PUSH-BORE) |
| ⬡ | ELECTRIC SERVICE (TY S) |
| □/ | FUSED DISCONNECT SWITCH [SEE RID (4)-98 (M)] |
| ① | CONDUIT RUN NUMBER |
| 400 | LIGHT NUMBER / CIRCUIT NUMBER |

## RDWY ILLUMINATION ASSEMBLY SUMMARY

| POLE | ℄ STATION | TYPE | REMARKS |
|---|---|---|---|
| 19/60 | 17+230 LP 1604 | (TY SA 15T-3-3)(.4 KW)S | |
| 20/59 | 17+320 LP 1604 | (TY SA 15T-3-3)(.4 KW)S | |

QUANTITIES THIS SHEET
CSJ 2452-01-037

SCALE: 1:1000

## ESTIMATED QUANTITIES

| ITEM # | ITEM | UNIT | QTY. |
|---|---|---|---|
| 0610-5002 | RDWY ILLUM ASSEM ( TY SA 15T-3-3)(.4 KW) S | EA | 2 |
| 0618-5009 | CONDUIT (PVC)(SCHD 40)(32 MM) | M | 255 |
| 0620-5003 | ELECT CONDR (NO 8) BARE | M | 255 |
| 0620-5009 | ELECT CONDR (NO 8) INSULATED | M | 510 |
| 0656-5010 | FND FOR RDWY ILL ASM (TY A)(750 MM DR SH) | M | 4 |

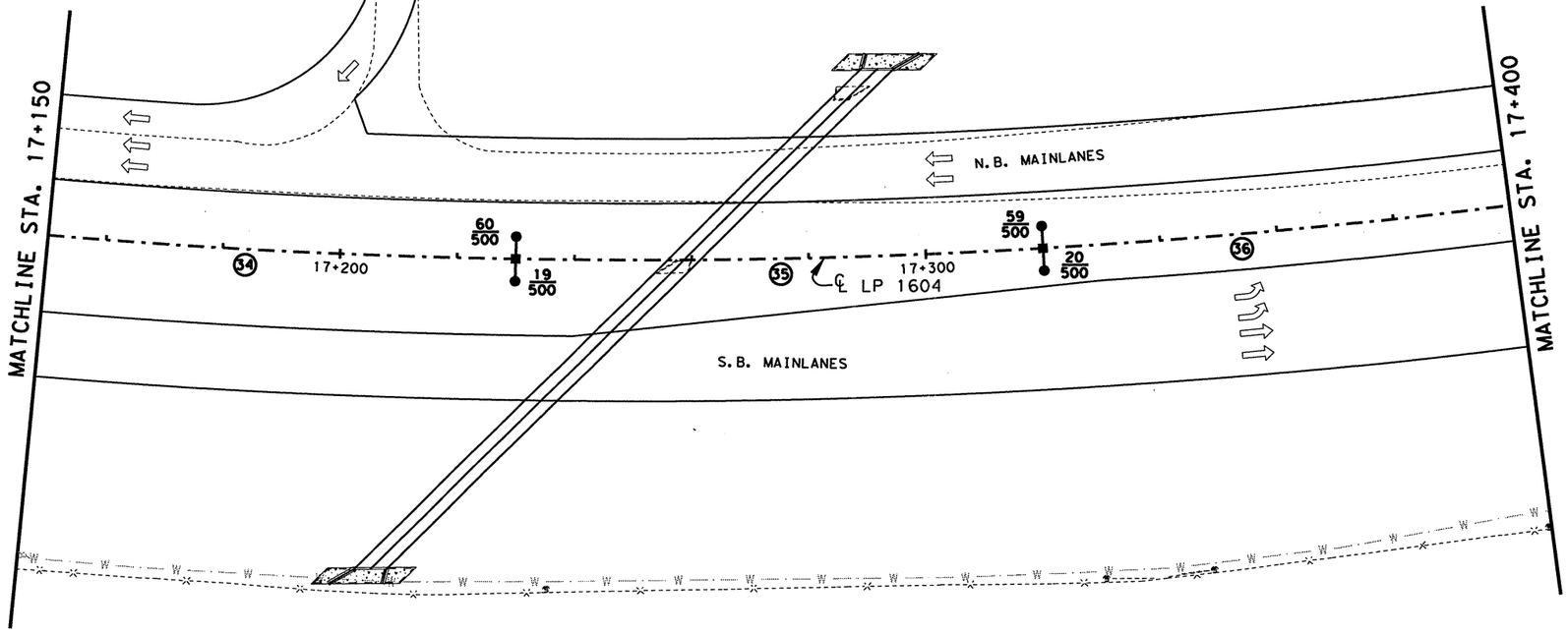


## CONDUIT & CONDUCTOR SUMMARY

| RUN NO. | GROUND LENGTH (M) #8 BARE | CONDUCTOR NUMBER & LENGTH (M) #8 INSULATED | CONDUIT LENGTH (M) 32 MM PVC (SCH 40) | REMARKS |
|---|---|---|---|---|
| 34 | 1-82 | 2-82 | 82 | |
| 35 | 1-92 | 2-92 | 92 | |
| 36 | 1-81 | 2-81 | 81 | |
| | | | | |
| TOTAL | 255 | 510 | 255 | |

STATE OF TEXAS
JOEL K. DAVENPORT, JR.
79276
REGISTERED PROFESSIONAL ENGINEER

Joel K Davenport Jr 9/18/00
Joel K. Davenport, Jr. P.E. 79276 Date

Texas Department of Transportation

# ILLUMINATION LAYOUT

SHEET 9 OF 24

| FED.RD. DIV.NO. | FEDERAL AID PROJECT NO. | | SHEET NO. |
|---|---|---|---|
| 6 | NH 2000(704),etc. | | 611 |
| STATE | DIST. | COUNTY | |
| TEXAS | SAT | BEXAR | |
| CONT. | SECT. | JOB | HIGHWAY NO. |
| 2452 | 01 | 036,etc. | LP 1604 |

FILE: n:\ao\design\lp1604fm471-90\illumination\illum09.dgn 14 SEP 2000
LEVEL DISPLAYED 1 2 3 4 5 6 7 8 9 10 11 12 13 14 15 16 17 18 19 20 21 22 23 24 25 26 27 28 29 30 31 32 33 34 35 36 37 38 39 40 41 42 43 44 45 46 47 48 49 50 51 52 53 54 55 56 57 58 59 60 61 62 63

## LEGEND

| | |
|---|---|
| ●—■—● | RDWY ILLUM ASSEM (TY SA 15T-3-3)(.4 KW)S |
| ●—■ | RDWY ILLUM ASSEM (TY SA 15T-3)(.4 KW)S |
| ○—□ | RDWY ILLUM ASSEM (TY SA 12T-3)(.25 KW)S |
| ▲ | RDWY ILLUM ASSEM U/P (TY SPL-CO)(.15 KW)S(TY-1) |
| ■ | GROUND BOX |
| ⊠ | JUNCTION BOX (SUBSIDIARY) TO (ITEM 618) |
| — — — — — | PVC & CONDUCTOR (TRENCHED) |
| = = = = = | CONDUIT RMC & CONDUCTOR (PUSH-BORE) |
| ⬡ | ELECTRIC SERVICE (TY S) |
| □/ | FUSED DISCONNECT SWITCH [SEE RID (4)-98 (M)] |
| ① | CONDUIT RUN NUMBER |
| 1/400 | LIGHT NUMBER / CIRCUIT NUMBER |

## RDWY ILLUMINATION ASSEMBLY SUMMARY

| POLE | ℄ STATION | TYPE | REMARKS |
|---|---|---|---|
| 21/58 | 17+410 LP 1604 | (TY SA 15T-3-3)(.4 KW)S | |
| 22/57 | 17+500 LP 1604 | (TY SA 15T-3-3)(.4 KW)S | |
| 23/56 | 17+590 LP 1604 | (TY SA 15T-3-3)(.4 KW)S | |

## ESTIMATED QUANTITIES

| ITEM # | ITEM | UNIT | QTY. |
|---|---|---|---|
| 0610-5002 | RDWY ILLUM ASSEM ( TY SA 15T-3-3)(.4 KW)S | EA | 3 |
| 0618-5009 | CONDUIT (PVC)(SCHD 40)(32 MM) | M | 195 |
| 0620-5003 | ELECT CONDR (NO 8) BARE | M | 195 |
| 0620-5009 | ELECT CONDR (NO 8) INSULATED | M | 390 |
| 0656-5010 | FND FOR RDWY ILL ASM (TY A)(750 MM DR SH) | M | 6 |

QUANTITIES THIS SHEET
CSJ 2452-01-037

SCALE: 1:1000

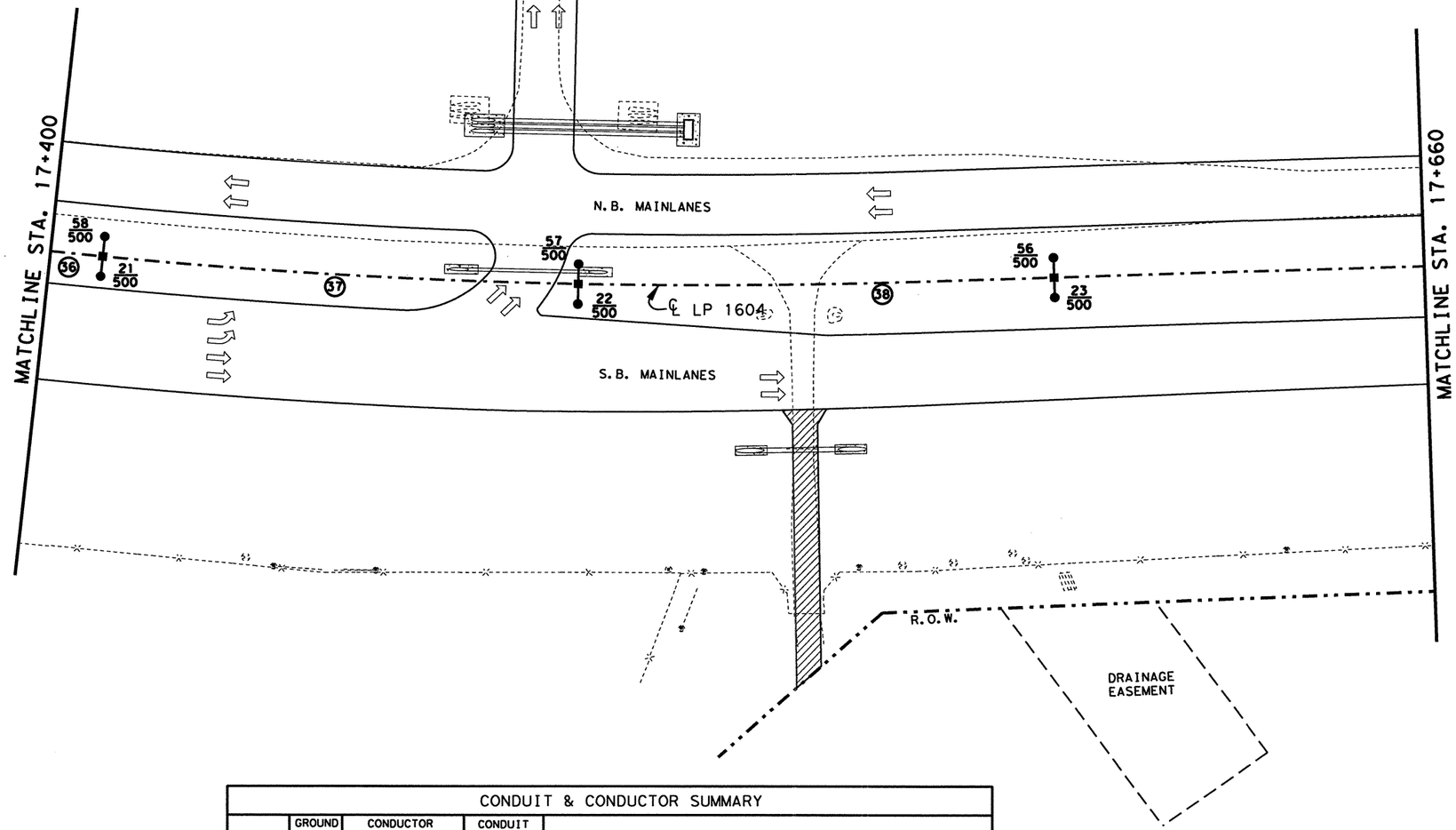


## CONDUIT & CONDUCTOR SUMMARY

| RUN NO. | GROUND LENGTH (M) #8 BARE | CONDUCTOR NUMBER & LENGTH (M) #8 INSULATED | CONDUIT LENGTH (M) 32 MM PVC (SCH 40) | REMARKS |
|---|---|---|---|---|
| 36 | 1-11 | 2-11 | 11 | |
| 37 | 1-92 | 2-92 | 92 | |
| 38 | 1-92 | 2-92 | 92 | |
| | | | | |
| TOTAL | 195 | 390 | 195 | |

STATE OF TEXAS
JOEL K. DAVENPORT, JR.
79276
REGISTERED
PROFESSIONAL ENGINEER

Joel K Davenport Jr. 9/18/00
Joel K. Davenport, Jr. P.E. 79276 Date

Texas Department of Transportation

# ILLUMINATION LAYOUT

SHEET 10 OF 24

| FED.RD. DIV.NO. | FEDERAL AID PROJECT NO. | | SHEET NO. |
|---|---|---|---|
| 6 | NH 2000(704),etc. | | 612 |
| STATE | DIST. | COUNTY | |
| TEXAS | SAT | BEXAR | |
| CONT. | SECT. | JOB | HIGHWAY NO. |
| 2452 | 01 | 036,etc. | LP 1604 |

FILE: t:\ool\design\lp1604fm471-90\illumination\illum10.dgn
LEVEL DISPLAYED: 1 2 3 4 5 6 7 8 9 10 11 21 31 41 51 61 71 81 91 02 12 22 32 42 52 62 72 82 92 03 13 23 33 43 53 63 73 83 93 04 14 24 34 44 54 64 74 84 94 05 15 25 35 45 55 65 75 85 95 06 16 26 36
14 SEP 2000

## LEGEND

| | |
|---|---|
| ●—■—● | RDWY ILLUM ASSEM (TY SA 15T-3-3)(.4 KW)S |
| ●—■ | RDWY ILLUM ASSEM (TY SA 15T-3)(.4 KW)S |
| ○—□ | RDWY ILLUM ASSEM (TY SA 12T-3)(.25 KW)S |
| ▲ | RDWY ILLUM ASSEM U/P (TY SPL-CO)(.15 KW)S(TY-1) |
| ■ | GROUND BOX |
| ⊠ | JUNCTION BOX (SUBSIDIARY) TO (ITEM 618) |
| — — — — — | PVC & CONDUCTOR (TRENCHED) |
| = = = = = | CONDUIT RMC & CONDUCTOR (PUSH-BORE) |
| ⬡ | ELECTRIC SERVICE (TY S) |
| □/ | FUSED DISCONNECT SWITCH [SEE RID (4)-98 (M)] |
| ① | CONDUIT RUN NUMBER |
| 400 | LIGHT NUMBER / CIRCUIT NUMBER |

## RDWY ILLUMINATION ASSEMBLY SUMMARY

| POLE | ℄ STATION | TYPE | REMARKS |
|---|---|---|---|
| 24 | 18+110 LP 1604 | (TY SA 12T-3)(.25 KW) S | 24 M RT |
| 55 | 18+140 LP 1604 | (TY SA 12T-3)(.25 KW) S | 47 M LT |
| | | | |
| | | | |
| | | | |
| | | | |

## ESTIMATED QUANTITIES

| ITEM # | ITEM | UNIT | QTY. |
|---|---|---|---|
| 0610-5003 | RDWY ILLUM ASSEM ( TY SA 12 T-3)(.25 KW) S | EA | 2 |
| 0618-5009 | CONDUIT (PVC)(SCHD 40)(32 MM) | M | 110 |
| 0620-5003 | ELECT CONDR (NO 8) BARE | M | 110 |
| 0620-5009 | ELECT CONDR (NO 8) INSULATED | M | 220 |
| 0624-5001 | GROUND BOX TY A (122311) W/APRON | EA | 1 |
| 0628-5056 | ELECT SERV TY S (240/480) 060(NS)GS(T)TP(O) | EA | 1 |
| 0656-5010 | FND FOR RDWY ILL ASM (TY A)(750 MM DR SH) | M | 4 |
| | | | |
| | | | |
| | | | |
| | | | |
| | | | |
| | | | |
| | | | |
| | | | |

QUANTITIES THIS SHEET
CSJ 2452-01-037

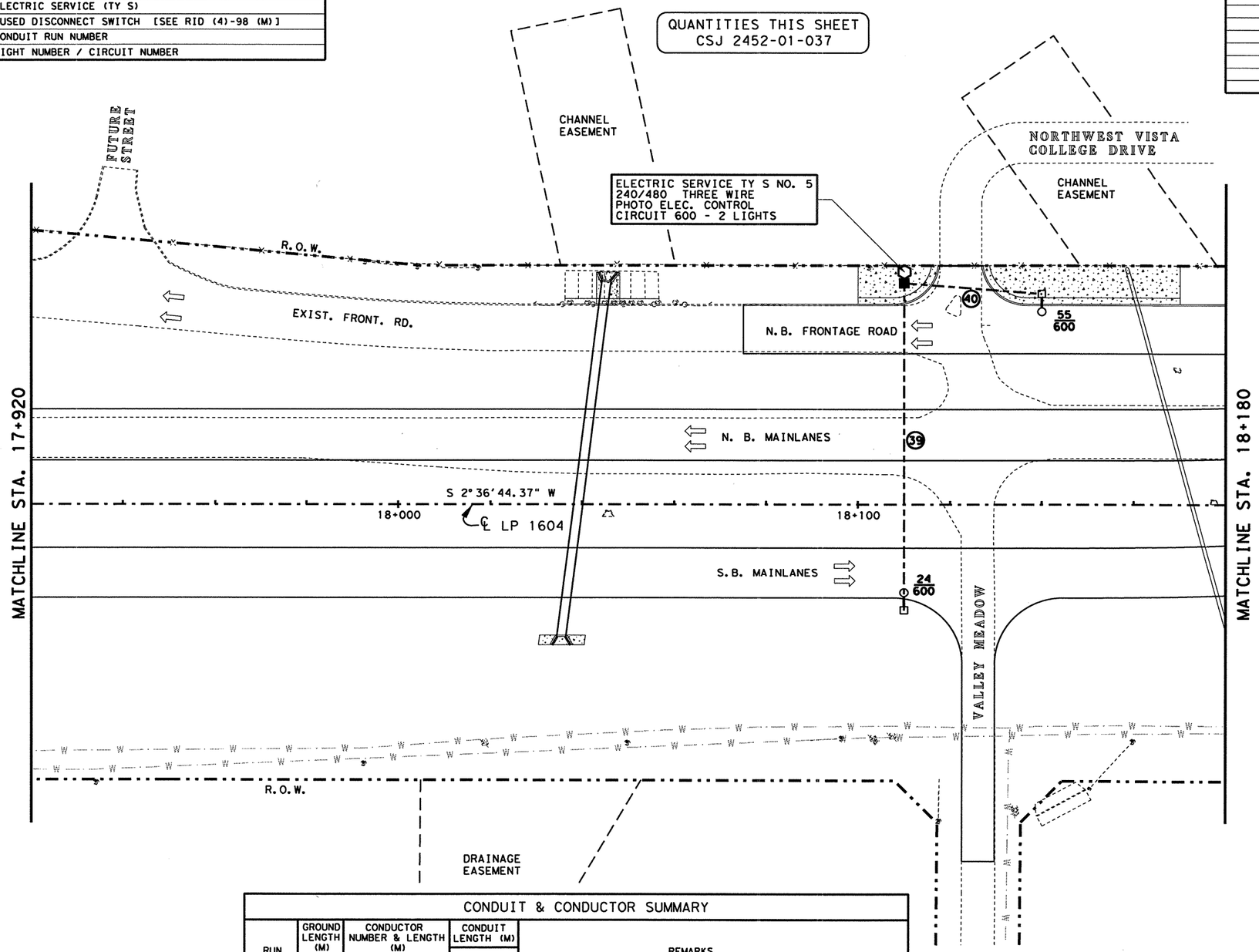


SCALE: 1:1000

## CONDUIT & CONDUCTOR SUMMARY

| RUN NO. | GROUND LENGTH (M) #8 BARE | CONDUCTOR NUMBER & LENGTH (M) #8 INSULATED | CONDUIT LENGTH (M) 32 MM PVC (SCH 40) | REMARKS |
|---|---|---|---|---|
| 39 | 1-75 | 2-75 | 75 | |
| 40 | 1-35 | 2-35 | 35 | |
| | | | | |
| | | | | |
| TOTAL | 110 | 220 | 110 | |

STATE OF TEXAS
JOEL K. DAVENPORT, JR.
79276
REGISTERED PROFESSIONAL ENGINEER

Joel K Davenport Jr 9/18/00
Joel K. Davenport, Jr. P.E. 79276 Date

Texas Department of Transportation

# ILLUMINATION LAYOUT

SHEET 11 OF 24

| FED. RD. DIV. NO. | FEDERAL AID PROJECT NO. | | SHEET NO. |
|---|---|---|---|
| 6 | NH 2000(704), etc. | | 613 |
| STATE | DIST. | COUNTY | |
| TEXAS | SAT | BEXAR | |
| CONT. | SECT. | JOB | HIGHWAY NO. |
| 2452 | 01 | 036, etc. | LP 1604 |

FILE: P:\ao\design\lp1604fm471-90\illumination\illum11.dgn 14 SEP 2000
LEVEL DISPLAYED 1 2 3 4 5 6 7 8 9 10 11 12 13 14 15 16 17 18 19 20 21 22 23 24 25 26 27 28 29 30 31 32 33 34 35 36 37 38 39 40 41 42 43 44 45 46 47 48 49 50 51 52 53 55 56 57 58 59 60 61 62 63

## LEGEND

| | |
|---|---|
| ●—■—● | RDWY ILLUM ASSEM (TY SA 15T-3-3)(.4 KW)S |
| ●—■ | RDWY ILLUM ASSEM (TY SA 15T-3)(.4 KW)S |
| ○—□ | RDWY ILLUM ASSEM (TY SA 12T-3)(.25 KW)S |
| ▲ | RDWY ILLUM ASSEM U/P (TY SPL-CO)(.15 KW)S(TY-1) |
| ■ | GROUND BOX |
| ⊠ | JUNCTION BOX (SUBSIDIARY) TO (ITEM 618) |
| — — — — — | PVC & CONDUCTOR (TRENCHED) |
| = = = = = | CONDUIT RMC & CONDUCTOR (PUSH-BORE) |
| ⬡ | ELECTRIC SERVICE (TY S) |
| □/ | FUSED DISCONNECT SWITCH [SEE RID (4)-98 (M)] |
| ① | CONDUIT RUN NUMBER |
| 400 | LIGHT NUMBER / CIRCUIT NUMBER |

## RDWY ILLUMINATION ASSEMBLY SUMMARY

| POLE | ℄ STATION | TYPE | REMARKS |
|---|---|---|---|
| 53 | 18+440 LP 1604 | (TY SA 12T-3)(.25 KW) S | 48 M LT |
| 54 | 18+374 LP 1604 | (TY SA 12T-3)(.25 KW) S | 48 M LT |

QUANTITIES THIS SHEET
CSJ 2452-01-037

## ESTIMATED QUANTITIES

| ITEM # | ITEM | UNIT | QTY. |
|---|---|---|---|
| 0610-5003 | RDWY ILLUM ASSEM ( TY SA 12 T-3)(.25 KW) S | EA | 2 |
| 0618-5009 | CONDUIT (PVC)(SCHD 40)(32 MM) | M | 78 |
| 0620-5003 | ELECT CONDR (NO 8) BARE | M | 78 |
| 0620-5009 | ELECT CONDR (NO 8) INSULATED | M | 156 |
| 0656-5010 | FND FOR RDWY ILL ASM (TY A)(750 MM DR SH) | M | 4 |

SCALE: 1:1000

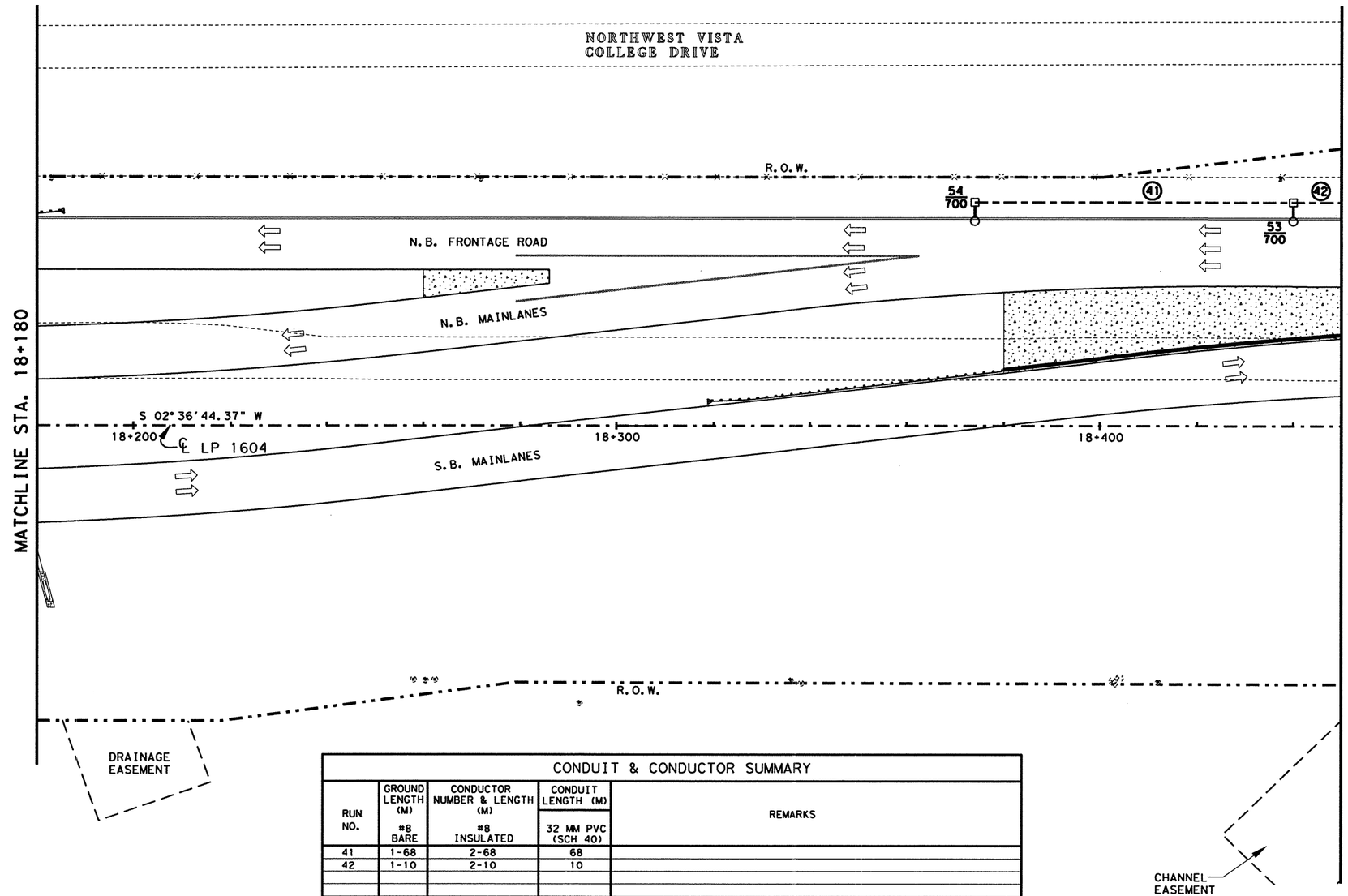


## CONDUIT & CONDUCTOR SUMMARY

| RUN NO. | GROUND LENGTH (M) #8 BARE | CONDUCTOR NUMBER & LENGTH (M) #8 INSULATED | CONDUIT LENGTH (M) 32 MM PVC (SCH 40) | REMARKS |
|---|---|---|---|---|
| 41 | 1-68 | 2-68 | 68 | |
| 42 | 1-10 | 2-10 | 10 | |
| TOTAL | 78 | 156 | 78 | |

FILE: t:\ao\design\ip1604fm471-90\illumination\illum12.dgn 14 SEP 2000
LEVEL DISPLAYED 1 2 3 4 5 6 7 8 9 10 11 12 13 14 15 16 17 18 19 20 21 22 23 24 25 26 27 28 29 30 31 32 33 34 35 36 37 38 39 40 41 42 43 44 45 46 47 48 49 50 51 52 53 54 55 56 57 58 59 60 61 62 63

STATE OF TEXAS
JOEL K. DAVENPORT, JR.
79276
REGISTERED
PROFESSIONAL ENGINEER

Joel K Davenport Jr 9/18/00
Joel K. Davenport, Jr. P.E. 79276 Date

©2000
Texas Department of Transportation

# ILLUMINATION LAYOUT

SHEET 12 OF 24

| FED.RD. DIV.NO. | FEDERAL AID PROJECT NO. | | SHEET NO. |
|---|---|---|---|
| 6 | NH 2000(704), etc. | | 614 |
| STATE | DIST. | COUNTY | |
| TEXAS | SAT | BEXAR | |
| CONT. | SECT. | JOB | HIGHWAY NO. |
| 2452 | 01 | 036, etc. | LP 1604 |

## LEGEND

| | |
|---|---|
| ●—■—● | RDWY ILLUM ASSEM (TY SA 15T-3-3)(.4 KW)S |
| ●—■ | RDWY ILLUM ASSEM (TY SA 15T-3)(.4 KW)S |
| ○—□ | RDWY ILLUM ASSEM (TY SA 12T-3)(.25 KW)S |
| ▲ | RDWY ILLUM ASSEM U/P (TY SPL-CO)(.15 KW)S(TY-1) |
| ■ | GROUND BOX |
| ⊠ | JUNCTION BOX (SUBSIDIARY) TO (ITEM 618) |
| — — — — | PVC & CONDUCTOR (TRENCHED) |
| = = = = = | CONDUIT RMC & CONDUCTOR (PUSH-BORE) |
| ⬡ | ELECTRIC SERVICE (TY S) |
| □/ | FUSED DISCONNECT SWITCH [SEE RID (4)-98 (M)] |
| ① | CONDUIT RUN NUMBER |
| 400 | LIGHT NUMBER / CIRCUIT NUMBER |

## RDWY ILLUMINATION ASSEMBLY SUMMARY

| POLE | ℄ STATION | TYPE | REMARKS |
|---|---|---|---|
| 25 | 18+685 LP 1604 | (TY SA 12T-3)(.25 KW) S | 6 M LT |
| 52 | 18+506 LP 1604 | (TY SA 12T-3)(.25 KW) S | 48 M LT |

QUANTITIES THIS SHEET
CSJ 2452-01-037

SCALE: 1:1000

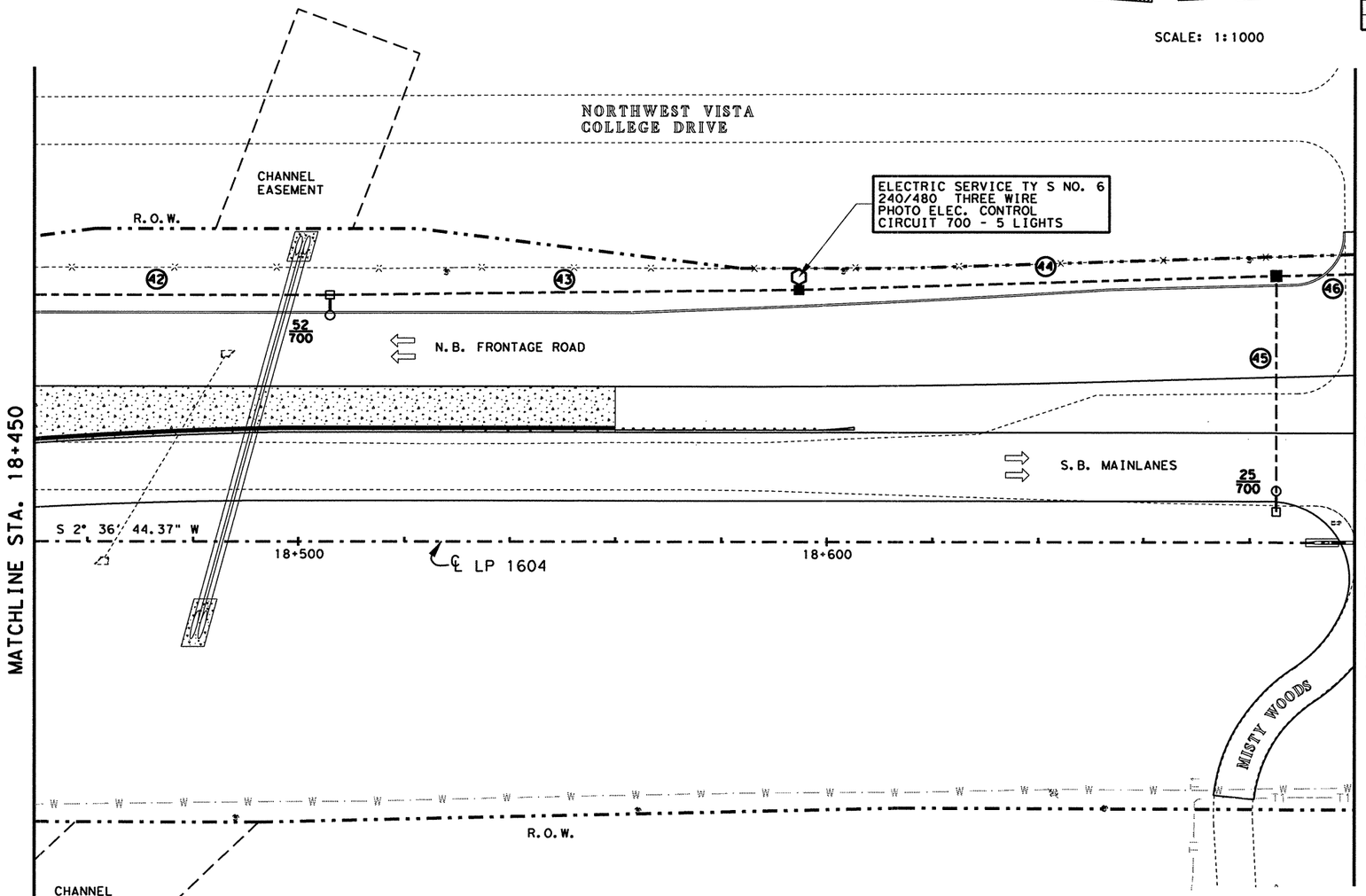


## CONDUIT & CONDUCTOR SUMMARY

| RUN NO. | GROUND LENGTH (M) #8 BARE | CONDUCTOR NUMBER & LENGTH (M) #8 INSULATED | CONDUIT LENGTH (M) 32 MM PVC (SCH 40) | REMARKS |
|---|---|---|---|---|
| 42 | 1-58 | 2-58 | 58 | |
| 43 | 1-96 | 2-96 | 96 | |
| 44 | 1-87 | 2-87 | 87 | |
| 45 | 1-46 | 2-46 | 46 | |
| 46 | 1-16 | 2-16 | 16 | |
| | | | | |
| TOTAL | 303 | 606 | 303 | |

## ESTIMATED QUANTITIES

| ITEM # | ITEM | UNIT | QTY. |
|---|---|---|---|
| 0610-5003 | RDWY ILLUM ASSEM ( TY SA 12 T-3)(.25 KW) S | EA | 2 |
| 0618-5009 | CONDUIT (PVC)(SCHD 40)(32 MM) | M | 303 |
| 0620-5003 | ELECT CONDR (NO 8) BARE | M | 303 |
| 0620-5009 | ELECT CONDR (NO 8) INSULATED | M | 606 |
| 0624-5001 | GROUND BOX TY A (122311) W/APRON | EA | 2 |
| 0628-5056 | ELECT SERV TY S (240/480) 060(NS)GS(T)TP(O) | EA | 1 |
| 0656-5010 | FND FOR RDWY ILL ASM (TY A)(750 MM DR SH) | M | 4 |

STATE OF TEXAS
JOEL K. DAVENPORT, JR.
79276
REGISTERED
PROFESSIONAL ENGINEER

Joel K Davenport Jr 9/18/00
Joel K. Davenport, Jr. P.E. 79276 Date

© 2000 Texas Department of Transportation

# ILLUMINATION LAYOUT

SHEET 13 OF 24

| FED. RD. DIV. NO. | FEDERAL AID PROJECT NO. | | SHEET NO. |
|---|---|---|---|
| 6 | NH 2000(704),etc. | | 615 |
| STATE | DIST. | COUNTY | |
| TEXAS | SAT | BEXAR | |
| CONT. | SECT. | JOB | HIGHWAY NO. |
| 2452 | 01 | 036,etc. | LP 1604 |

FILE: H:\ao\design\lp1604fm471-90\illumination\illum13.dgn 14 SEP 2000
LEVEL DISPLAYED 1 2 3 4 5 6 7 8 9 10 11 12 13 14 15 16 17 18 19 20 21 22 23 24 25 26 27 28 29 30 31 32 33 34 35 36 37 38 39 40 41 42 43 44 45 46 47 48 49 50 51 52 53 54 55 56 57 58 59 60 61 62 63

## LEGEND

| | |
|---|---|
| ●—■—● | RDWY ILLUM ASSEM (TY SA 15T-3-3)(.4 KW)S |
| ●—■ | RDWY ILLUM ASSEM (TY SA 15T-3)(.4 KW)S |
| ○—□ | RDWY ILLUM ASSEM (TY SA 12T-3)(.25 KW)S |
| ▲ | RDWY ILLUM ASSEM U/P (TY SPL-CO)(.15 KW)S(TY-1) |
| ■ | GROUND BOX |
| ⊠ | JUNCTION BOX (SUBSIDIARY) TO (ITEM 618) |
| – – – – – | PVC & CONDUCTOR (TRENCHED) |
| = = = = = | CONDUIT RMC & CONDUCTOR (PUSH-BORE) |
| ⬡ | ELECTRIC SERVICE (TY S) |
| □/ | FUSED DISCONNECT SWITCH [SEE RID (4)-98 (M)] |
| ① | CONDUIT RUN NUMBER |
| 400 | LIGHT NUMBER / CIRCUIT NUMBER |

## RDWY ILLUMINATION ASSEMBLY SUMMARY

| POLE | ℄ STATION | TYPE | REMARKS |
|---|---|---|---|
| 25 | 18+660 LP 1604 | (TY SA 12T-3)(.25 KW) S | 6 M LT |
| 52 | 18+506 LP 1604 | (TY SA 12T-3)(.25 KW) S | 48 M LT |

QUANTITIES THIS SHEET
CSJ 2452-01-037

SCALE: 1:1000

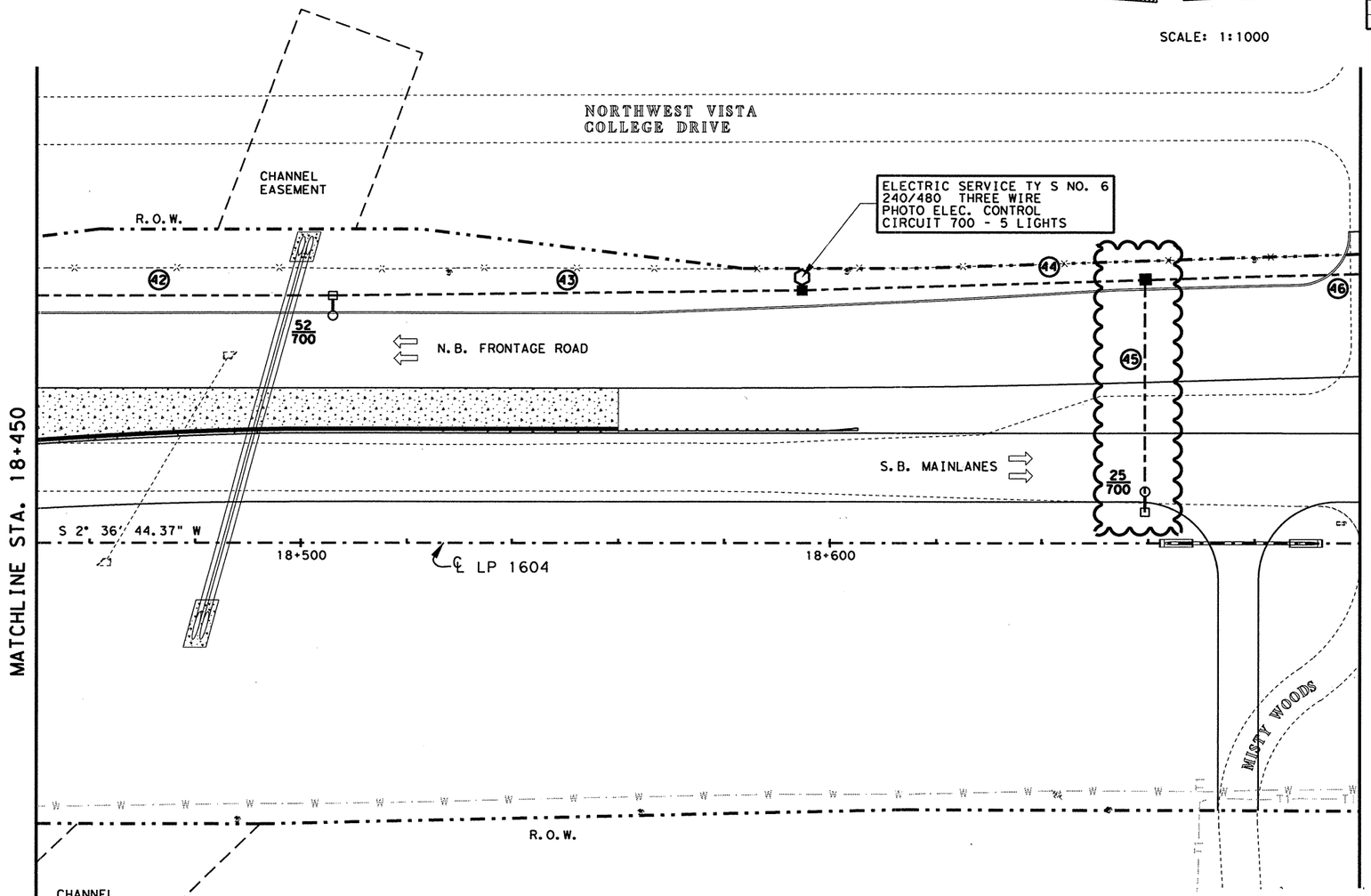


## ESTIMATED QUANTITIES

| ITEM # | ITEM | UNIT | QTY. |
|---|---|---|---|
| 0610-5003 | RDWY ILLUM ASSEM ( TY SA 12 T-3)(.25 KW) S | EA | 2 |
| 0618-5009 | CONDUIT (PVC)(SCHD 40)(32 MM) | M | 303 |
| 0620-5003 | ELECT CONDR (NO 8) BARE | M | 303 |
| 0620-5009 | ELECT CONDR (NO 8) INSULATED | M | 606 |
| 0624-5001 | GROUND BOX TY A (122311) W/APRON | EA | 2 |
| 0628-5056 | ELECT SERV TY S (240/480) 060(NS)GS(T)TP(O) | EA | 1 |
| 0656-5010 | FND FOR RDWY ILL ASM (TY A)(750 MM DR SH) | M | 4 |

## CONDUIT & CONDUCTOR SUMMARY

| RUN NO. | GROUND LENGTH (M) #8 BARE | CONDUCTOR NUMBER & LENGTH (M) #8 INSULATED | CONDUIT LENGTH (M) 32 MM PVC (SCH 40) | REMARKS |
|---|---|---|---|---|
| 42 | 1-58 | 2-58 | 58 | |
| 43 | 1-96 | 2-96 | 96 | |
| 44 | 1-62 | 2-62 | 62 | |
| 45 | 1-46 | 2-46 | 46 | |
| 46 | 1-41 | 2-41 | 41 | |
| TOTAL | 303 | 606 | 303 | |

CHANGE ORDER 82

REVISED SHEET

STATE OF TEXAS
JEROME D. PAVLISKA
76075
REGISTERED PROFESSIONAL ENGINEER

Jerome D. Pavliska P.E. 4-23-04
Jerome D. Pavliska, P.E. — Date

CHANGE ORDER NO. 82

-RELOCATED ILLUMINATION @ MISTY WOODS DUE TO RE-ALIGNMENT.
-REVISED CONDUIT/CONDUCTOR SUMMARY

© 2000 Texas Department of Transportation

# ILLUMINATION LAYOUT

SHEET 13 OF 24

| FED. RD. DIV. NO. | FEDERAL AID PROJECT NO. | | SHEET NO. |
|---|---|---|---|
| 6 | NH 2000(704), etc. | | 615A |
| STATE | DIST. | COUNTY | |
| TEXAS | SAT | BEXAR | |
| CONT. | SECT. | JOB | HIGHWAY NO. |
| 2452 | 01 | 036, etc. | LP 1604 |

FILE: T:\AO\DESIGN\LP1604-FM471-90\ILLUMINATION\ILLUM13.DGN $DATE$
LEVEL DISPLAYED

## LEGEND

| | |
|---|---|
| ●—■—● | RDWY ILLUM ASSEM (TY SA 15T-3-3)(.4 KW)S |
| ●—■ | RDWY ILLUM ASSEM (TY SA 15T-3)(.4 KW)S |
| ○—□ | RDWY ILLUM ASSEM (TY SA 12T-3)(.25 KW)S |
| ▲ | RDWY ILLUM ASSEM U/P (TY SPL-CO)(.15 KW)S(TY-1) |
| ■ | GROUND BOX |
| ⊠ | JUNCTION BOX (SUBSIDIARY) TO (ITEM 618) |
| — — — — — | PVC & CONDUCTOR (TRENCHED) |
| = = = = = | CONDUIT RMC & CONDUCTOR (PUSH-BORE) |
| ⬡ | ELECTRIC SERVICE (TY S) |
| □/ | FUSED DISCONNECT SWITCH [SEE RID (4)-98 (M)] |
| ① | CONDUIT RUN NUMBER |
| 400 | LIGHT NUMBER / CIRCUIT NUMBER |

## RDWY ILLUMINATION ASSEMBLY SUMMARY

| POLE | ℄ STATION | TYPE | REMARKS |
|---|---|---|---|
| 50 | 18+900 LP 1604 | (TY SA 12T-3)(.25 KW) S | 59 M LT |
| 51 | 18+720 LP 1604 | (TY SA 12T-3)(.25 KW) S | 54 M LT |

## ESTIMATED QUANTITIES

| ITEM # | ITEM | UNIT | QTY. |
|---|---|---|---|
| 0610-5003 | RDWY ILLUM ASSEM ( TY SA 12 T-3)(.25 KW) S | EA | 2 |
| 0618-5009 | CONDUIT (PVC)(SCHD 40)(32 MM) | M | 31 |
| 0620-5003 | ELECT CONDR (NO 8) BARE | M | 31 |
| 0620-5009 | ELECT CONDR (NO 8) INSULATED | M | 62 |
| 0624-5001 | GROUND BOX TY A (122311) W/APRON | EA | 1 |
| 0628-5056 | ELECT SERV TY S (240/480) 060(NS)GS(T)TP(O) | EA | 1 |
| 0656-5010 | FND FOR RDWY ILL ASM (TY A)(750 MM DR SH) | M | 4 |

QUANTITIES THIS SHEET
CSJ 2452-01-037

SCALE: 1:1000

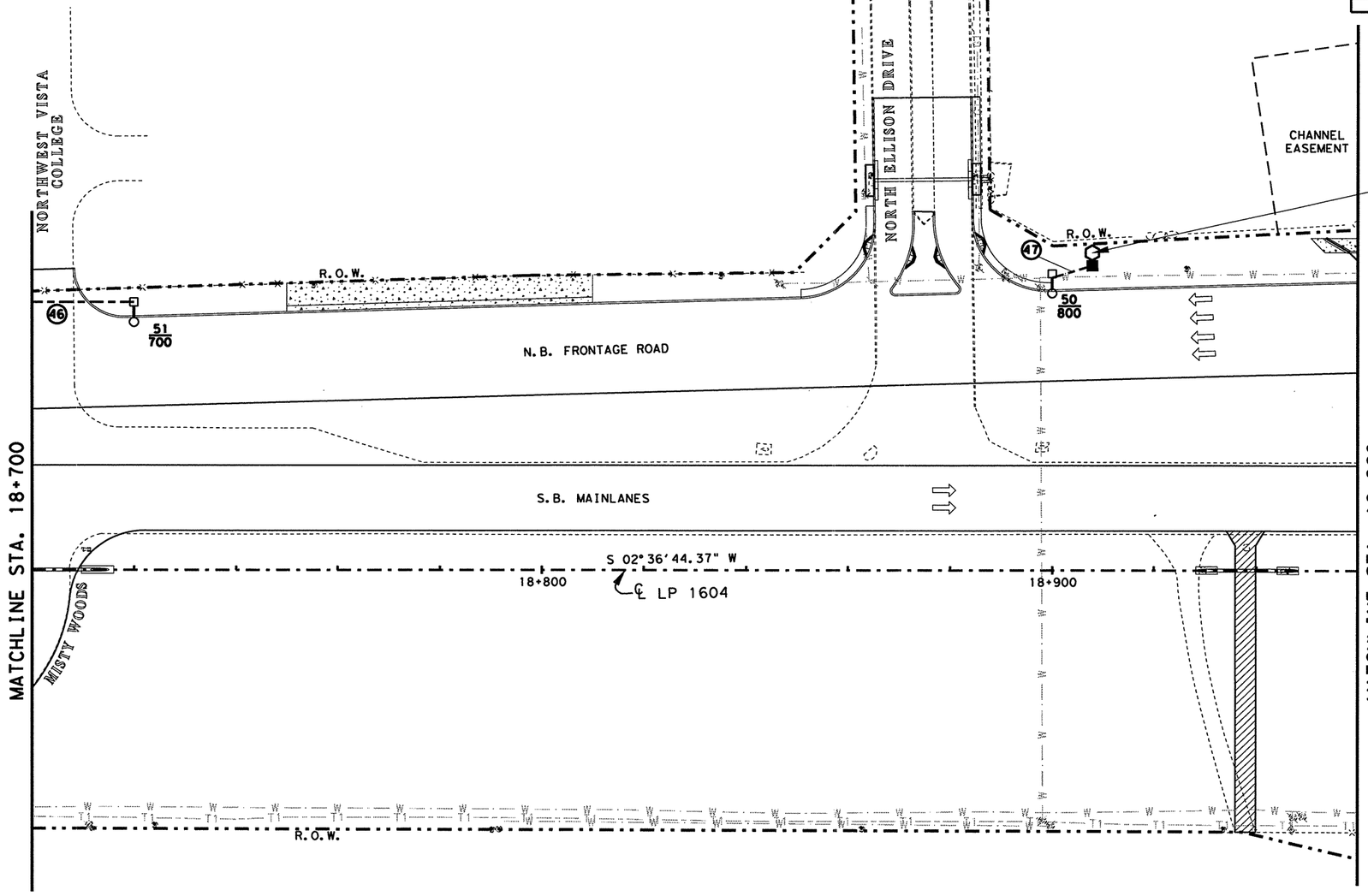


ELECTRIC SERVICE TY S NO. 7
240/480 THREE WIRE
PHOTO ELEC. CONTROL
CIRCUIT 800 - 1 LIGHT

## CONDUIT & CONDUCTOR SUMMARY

| RUN NO. | GROUND LENGTH (M) #8 BARE | CONDUCTOR NUMBER & LENGTH (M) #8 INSULATED | CONDUIT LENGTH (M) 32 MM PVC (SCH 40) | REMARKS |
|---|---|---|---|---|
| 46 | 1-21 | 2-21 | 21 | |
| 47 | 1-10 | 2-10 | 10 | |
| | | | | |
| | | | | |
| TOTAL | 31 | 62 | 31 | |

STATE OF TEXAS
JOEL K. DAVENPORT, JR.
79276
REGISTERED PROFESSIONAL ENGINEER

Joel K. Davenport, Jr. 9/18/00
Joel K. Davenport, Jr. P.E. 79276 Date

©2000
Texas Department of Transportation

# ILLUMINATION LAYOUT

SHEET 14 OF 24

| FED. RD. DIV. NO. | FEDERAL AID PROJECT NO. | | SHEET NO. |
|---|---|---|---|
| 6 | NH 2000(704), etc. | | 616 |
| STATE | DIST. | COUNTY | |
| TEXAS | SAT | BEXAR | |
| CONT. | SECT. | JOB | HIGHWAY NO. |
| 2452 | 01 | 036, etc. | LP 1604 |

FILE: h:\os\design\lp1604fm471-90\illumination\illum14.dgn 14 SEP 2000
LEVEL DISPLAYED 1 2 3 4 5 6 7 8 9 10 11 12 31 41 51 61 71 81 92 102 122 132 252 262 272 282 303 313 2
3 35 45 55 63 73 83 93 104 114 124 134 144 154 164 174 184 195 205 215 225 235 245 255 265 275 285 295 306 316 326 3

## LEGEND

| | |
|---|---|
| ●—■—● | RDWY ILLUM ASSEM (TY SA 15T-3-3)(.4 KW)S |
| ●—■ | RDWY ILLUM ASSEM (TY SA 15T-3)(.4 KW)S |
| ○—□ | RDWY ILLUM ASSEM (TY SA 12T-3)(.25 KW)S |
| ▲ | RDWY ILLUM ASSEM U/P (TY SPL-CO)(.15 KW)S(TY-1) |
| ■ | GROUND BOX |
| ⊠ | JUNCTION BOX (SUBSIDIARY) TO (ITEM 618) |
| — — — — — | PVC & CONDUCTOR (TRENCHED) |
| = = = = = | CONDUIT RMC & CONDUCTOR (PUSH-BORE) |
| ⬡ | ELECTRIC SERVICE (TY S) |
| □/ | FUSED DISCONNECT SWITCH [SEE RID (4)-98 (M)] |
| ① | CONDUIT RUN NUMBER |
| 400 | LIGHT NUMBER / CIRCUIT NUMBER |

## RDWY ILLUMINATION ASSEMBLY SUMMARY

| POLE | ℄ STATION | TYPE | REMARKS |
|---|---|---|---|
| 26 | 19+265 LP 1604 | (TY SA 15T-3)(.4 KW) S | 6 M LT |
| 27 | 19+355 LP 1604 | (TY SA 15T-3)(.4 KW) S | 6 M LT |
| 48 | 19+355 LP 1604 | (TY SA 15T-3 (.4 KW) S | 72 M LT |
| 49 | 19+265 LP 1604 | (TY SA 15T-3 (.4 KW) S | 70 M LT |

## ESTIMATED QUANTITIES

| ITEM # | ITEM | UNIT | QTY. |
|---|---|---|---|
| 0610-5003 | RDWY ILLUM ASSEM (TY SA 15T-3)(.4 KW) S | EA | 4 |
| 0618-5009 | CONDUIT (PVC)(SCHD 40)(32 MM) | M | 261 |
| 0620-5003 | ELECT CONDR (NO. 8) BARE | M | 261 |
| 0620-5009 | ELECT CONDR (NO. 8) INSULATED | M | 522 |
| 0624-5001 | GROUND BOX TY A (122311) W/APRON | EA | 1 |
| 0628-5056 | ELEC SERV TYS(240/480)060(NS)GS(T)TP(O) | EA | 1 |
| 0656-5010 | FND FOR RDWY ILL ASM (TY A)(750 MM DR SH) | M | 8 |

QUANTITIES THIS SHEET
CSJ 2452-01-037

SCALE: 1:1000

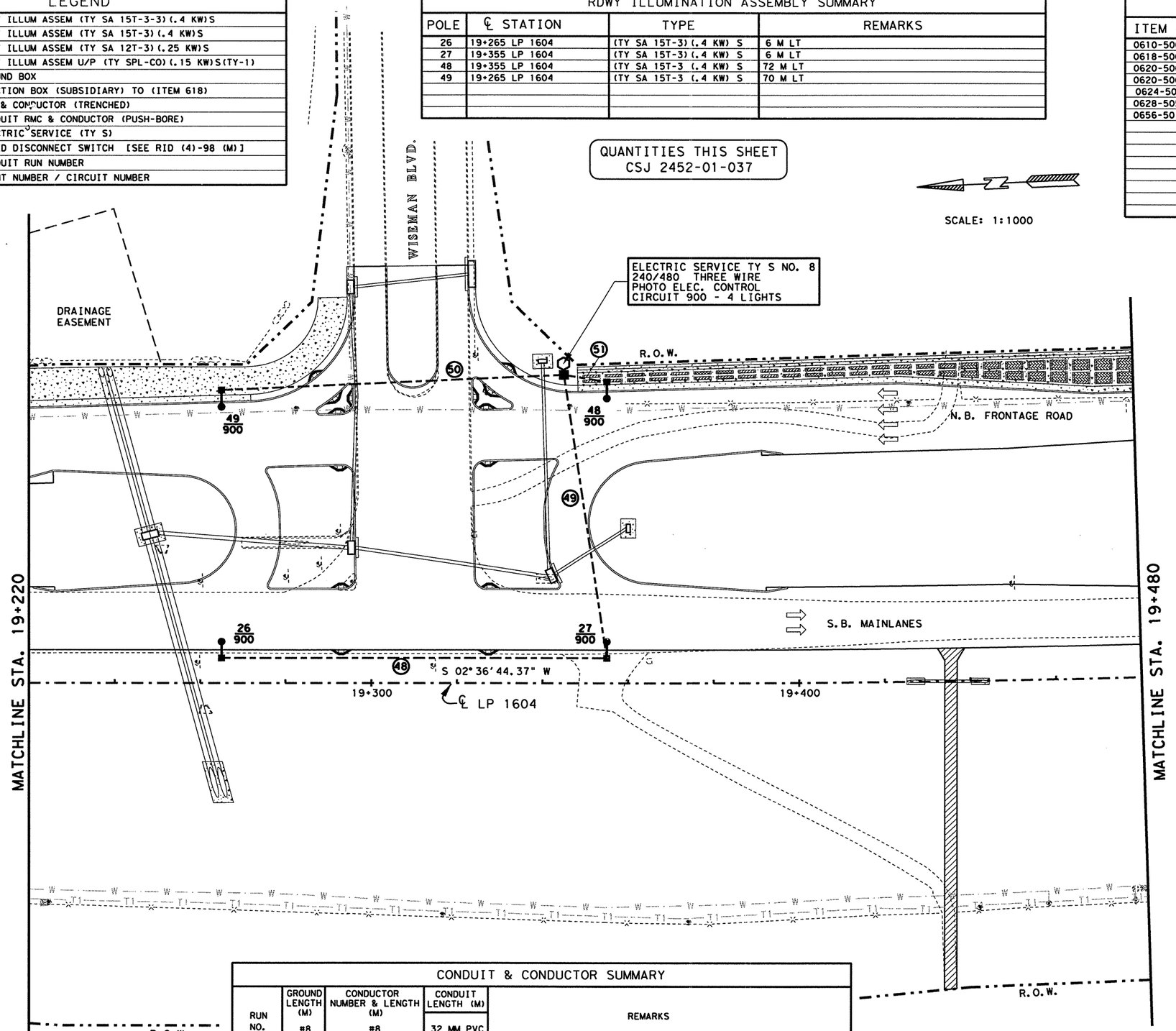


## CONDUIT & CONDUCTOR SUMMARY

| RUN NO. | GROUND LENGTH (M) #8 BARE | CONDUCTOR NUMBER & LENGTH (M) #8 INSULATED | CONDUIT LENGTH (M) 32 MM PVC (SCH 40) | REMARKS |
|---|---|---|---|---|
| 48 | 1-92 | 2-92 | 92 | |
| 49 | 1-75 | 2-75 | 75 | |
| 50 | 1-82 | 2-82 | 82 | |
| 51 | 1-12 | 2-12 | 12 | |
| TOTAL | 261 | 522 | 261 | |

FILE: t:\roo\design\lp1604fm471-90\illumination\illum15.dgn 14 SEP 2000
LEVEL DISPLAYED 1 2 3 4 5 6 7 8 9 10 11 12 13 14 15 16 17 18 19 20 21 22 23 24 25 26 27 28 29 30 31 32 33 34 35 36 37 38 39 40 41 42 43 44 45 46 47 48 49 50 51 52 53 63

STATE OF TEXAS
JOEL K. DAVENPORT, JR.
79276
REGISTERED PROFESSIONAL ENGINEER

Joel K Davenport Jr 9/18/00
Joel K. Davenport, Jr. P.E. 79276 Date

Texas Department of Transportation

# ILLUMINATION LAYOUT

SHEET 15 OF 24

| FED. RD. DIV. NO. | FEDERAL AID PROJECT NO. | SHEET NO. |
|---|---|---|
| 6 | NH 2000(704), etc. | 617 |
| STATE | DIST. | COUNTY |
| TEXAS | SAT | BEXAR |
| CONT. | SECT. | JOB / HIGHWAY NO. |
| 2452 | 01 | 036, etc. / LP 1604 |

## LEGEND

| | |
|---|---|
| ●—■—● | RDWY ILLUM ASSEM (TY SA 15T-3-3)(.4 KW)S |
| ●—■ | RDWY ILLUM ASSEM (TY SA 15T-3)(.4 KW)S |
| ○—□ | RDWY ILLUM ASSEM (TY SA 12T-3)(.25 KW)S |
| ▲ | RDWY ILLUM ASSEM U/P (TY SPL-CO)(.15 KW)S(TY-1) |
| ■ | GROUND BOX |
| ⊠ | JUNCTION BOX (SUBSIDIARY) TO (ITEM 618) |
| — — — | PVC & CONDUCTOR (TRENCHED) |
| = = = = = | CONDUIT RMC & CONDUCTOR (PUSH-BORE) |
| ⬡ | ELECTRIC SERVICE (TY S) |
| □/ | FUSED DISCONNECT SWITCH [SEE RID (4)-98 (M)] |
| ① | CONDUIT RUN NUMBER |
| 700 | LIGHT NUMBER / CIRCUIT NUMBER |

## RDWY ILLUMINATION ASSEMBLY SUMMARY

| POLE | ℄ STATION | TYPE | REMARKS |
|---|---|---|---|
| 26 | 19+265 LP 1604 | (TY SA 15T-3)(.4 KW) S | ON ℄ REVISED FROM ORIGINAL PLANS DUE TO ROAD WIDENING |
| 27 | 19+355 LP 1604 | (TY SA 15T-3)(.4 KW) S | 6 M LT |
| 48 | 19+355 LP 1604 | (TY SA 15T-3 (.4 KW) S | 72 M LT |
| 49 | 19+265 LP 1604 | (TY SA 15T-3 (.4 KW) S | 70 M LT |

## ESTIMATED QUANTITIES

| ITEM # | ITEM | UNIT | QTY. |
|---|---|---|---|
| 0610-5003 | RDWY ILLUM ASSEM (TY SA 15T-3)(.4 KW) S | EA | 4 |
| 0618-5009 | CONDUIT (PVC)(SCHD 40)(32 MM) | M | 271 |
| 0620-5003 | ELECT CONDR (NO. 8) BARE | M | 271 |
| 0620-5009 | ELECT CONDR (NO. 8) INSULATED | M | 542 |
| 0624-5001 | GROUND BOX TY A (1223)(1) W/APRON | EA | 1 |
| 0628-5056 | ELEC SERV TYS(240/480)060(NS)GS(T)TP(O) | EA | 1 |
| 0656-5010 | FND FOR RDWY ILL ASM (TY A)(750 MM DR SH) | M | 8 |

QUANTITIES THIS SHEET
CSJ 2452-01-037

SCALE: 1:1000

## CONDUIT & CONDUCTOR SUMMARY

| RUN NO. | GROUND LENGTH (M) #8 BARE | CONDUCTOR NUMBER & LENGTH (M) #8 INSULATED | CONDUIT LENGTH (M) 32 MM PVC (SCH 40) | REMARKS |
|---|---|---|---|---|
| 48 | 1-92 | 2-92 | 92 | |
| 49 | 1-85 | 2-85 | 85 | REVISED LENGTH OF RUN DUE TO ROAD WIDENING |
| 50 | 1-82 | 2-82 | 82 | |
| 51 | 1-12 | 2-12 | 12 | |
| TOTAL | 271 | 542 | 271 | |

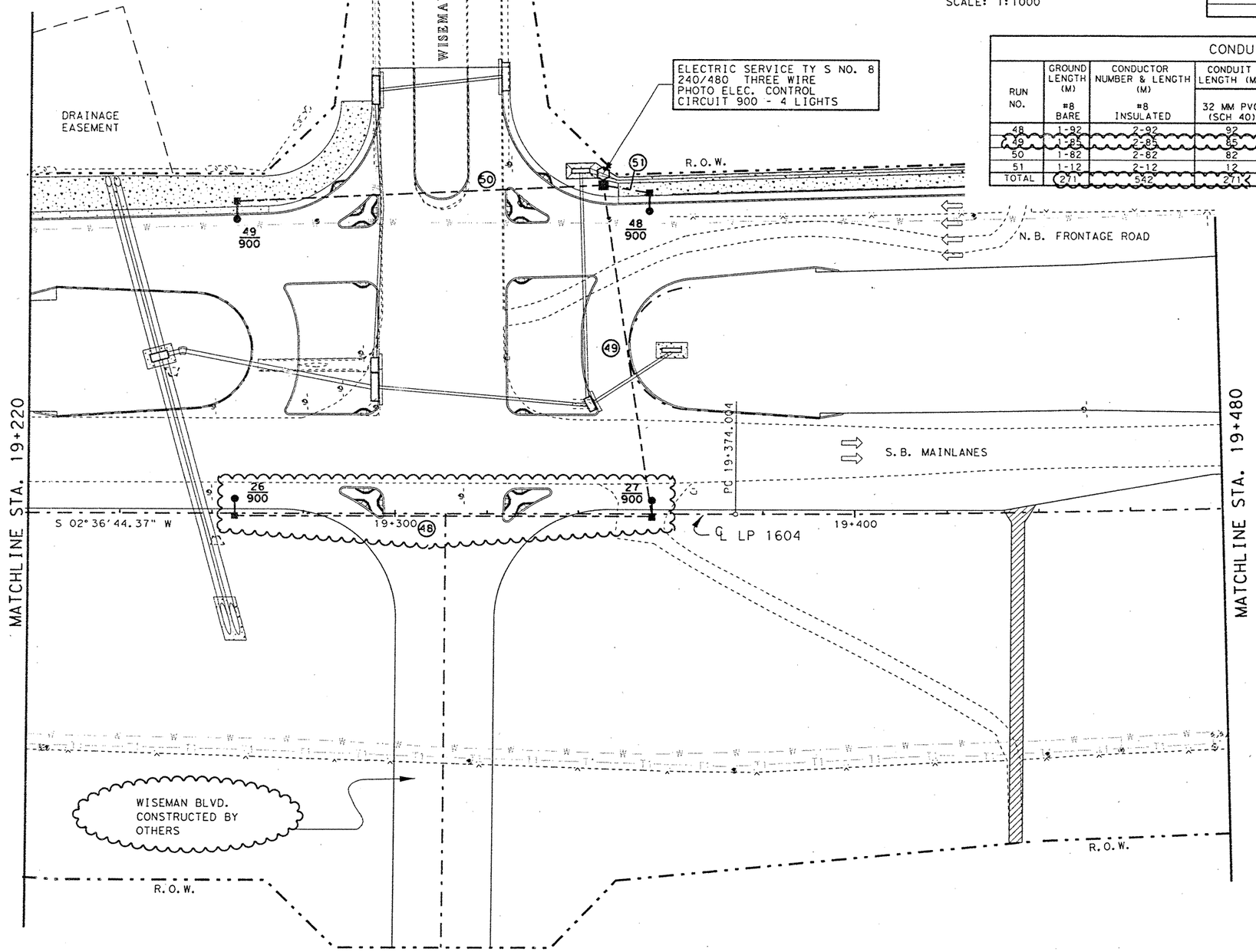


## CHANGE ORDER NO. 122

-UPDATED INTERSECTION WITH WORK CONSTRUCTED BY OTHERS
-REVISED ILLUMINATION
-REVISED QUANTITIES

CHANGE ORDER 122

REVISED SHEET

STATE OF TEXAS
FITZGERALDO G. SANCHEZ
76084
LICENSED
PROFESSIONAL ENGINEER

Fitzgeraldo G. Sanchez 04-03-06
Fitzgeraldo G. Sanchez, P.E. Date

©2000
Texas Department of Transportation

## ILLUMINATION LAYOUT

SHEET 15 OF 24

| FED. RD. DIV. NO. | FEDERAL AID PROJECT NO. | SHEET NO. |
|---|---|---|
| 6 | NH 2000(704), etc. | 617A |
| STATE | DIST. | COUNTY |
| TEXAS | SAT | BEXAR |
| CONT. | SECT. | JOB / HIGHWAY NO. |
| 2452 | 01 | 036, etc. / LP 1604 |

FILE $FILE$ | LEVEL DISPLAYED | $DATE$

## LEGEND

| | |
|---|---|
| ●—■—● | RDWY ILLUM ASSEM (TY SA 15T-3-3)(.4 KW)S |
| ●—■ | RDWY ILLUM ASSEM (TY SA 15T-3)(.4 KW)S |
| ○—□ | RDWY ILLUM ASSEM (TY SA 12T-3)(.25 KW)S |
| ▲ | RDWY ILLUM ASSEM U/P (TY SPL-CO)(.15 KW)S(TY-1) |
| ■ | GROUND BOX |
| ⊠ | JUNCTION BOX (SUBSIDIARY) TO (ITEM 618) |
| - - - - - - | PVC & CONDUCTOR (TRENCHED) |
| = = = = = | CONDUIT RMC & CONDUCTOR (PUSH-BORE) |
| ⬡ | ELECTRIC SERVICE (TY S) |
| □/ | FUSED DISCONNECT SWITCH [SEE RID (4)-98 (M)] |
| ① | CONDUIT RUN NUMBER |
| 400 | LIGHT NUMBER / CIRCUIT NUMBER |

## RDWY ILLUMINATION ASSEMBLY SUMMARY

| POLE | ℄ STATION | TYPE | REMARKS |
|---|---|---|---|
| 47 | 20+145 LP 1604 | (TY SA 12T-3)(.25 KW) S | 50 M LT |

## ESTIMATED QUANTITIES

| ITEM # | ITEM | UNIT | QTY. |
|---|---|---|---|
| 0610-5003 | RDWY ILLUM ASSEM ( TY SA 12 T-3)(.25 KW) S | EA | 1 |
| 0618-5009 | CONDUIT (PVC)(SCHD 40)(32 MM) | M | 10 |
| 0620-5003 | ELECT CONDR (NO 8) BARE | M | 10 |
| 0620-5009 | ELECT CONDR (NO 8) INSULATED | M | 20 |
| 0624-5001 | GROUND BOX TY A (122311) W/APRON | EA | 1 |
| 0628-5056 | ELECT SERV TY S (240/480) 060(NS)GS(T)TP(O) | EA | 1 |
| 0656-5010 | FND FOR RDWY ILL ASM (TY A)(750 MM DR SH) | M | 2 |

QUANTITIES THIS SHEET
CSJ 2452-01-037

SCALE: 1:1000

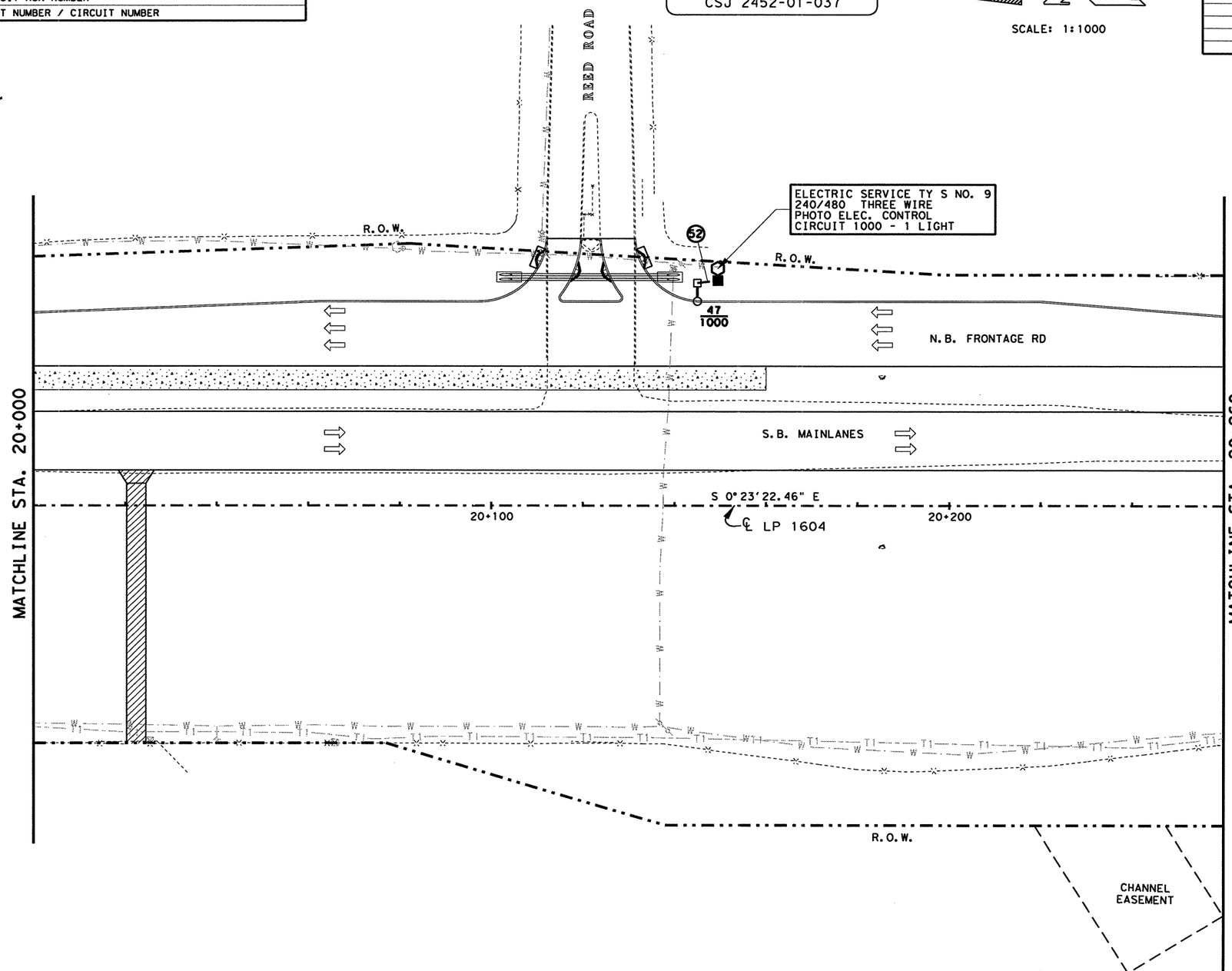


FILE: t:\ao\design\lp1604fm471-90\illumination\illum16.dgn 14 SEP 2000
LEVEL DISPLAYED
1 2 3 4 5 16 17 18 9 10 11 21 31 41 51 61 71 81 92 02 12 22 32 42 52 62 72 82 92 03 13 23
33 43 53 63 73 83 94 04 14 24 34 44 54 64 74 84 95 05 15 25 35 45 55 65 75 85 96 06 16 26 36

STATE OF TEXAS
JOEL K. DAVENPORT, JR.
79276
REGISTERED
PROFESSIONAL ENGINEER

Joel K Davenport Jr 9/18/00
Joel K. Davenport, Jr. P.E. 79276 Date

©2000
Texas Department of Transportation

# ILLUMINATION LAYOUT

SHEET 16 OF 24

| FED. RD. DIV. NO. | FEDERAL AID PROJECT NO. | | SHEET NO. |
|---|---|---|---|
| 6 | NH 2000(704), etc. | | 618 |
| STATE | DIST. | COUNTY | |
| TEXAS | SAT | BEXAR | |
| CONT. | SECT. | JOB | HIGHWAY NO. |
| 2452 | 01 | 036, etc. | LP 1604 |

## LEGEND

| | |
|---|---|
| ●—■—● | RDWY ILLUM ASSEM (TY SA 15T-3-3)(.4 KW)S |
| ●—■ | RDWY ILLUM ASSEM (TY SA 15T-3)(.4 KW)S |
| ○—□ | RDWY ILLUM ASSEM (TY SA 12T-3)(.25 KW)S |
| ▲ | RDWY ILLUM ASSEM U/P (TY SPL-CO)(.15 KW)S(TY-1) |
| ■ | GROUND BOX |
| ⊠ | JUNCTION BOX (SUBSIDIARY) TO (ITEM 618) |
| — — — — — | PVC & CONDUCTOR (TRENCHED) |
| = = = = = | CONDUIT RMC & CONDUCTOR (PUSH-BORE) |
| ⬡ | ELECTRIC SERVICE (TY S) |
| □/ | FUSED DISCONNECT SWITCH [SEE RID (4)-98 (M)] |
| ① | CONDUIT RUN NUMBER |
| 1/400 | LIGHT NUMBER / CIRCUIT NUMBER |

## RDWY ILLUMINATION ASSEMBLY SUMMARY

| POLE | ℄ STATION | TYPE | REMARKS |
|---|---|---|---|
| 46 | 20+740 LP 1604 | (TY SA 12T-3)(.25 KW) S | 49 M LT |

## ESTIMATED QUANTITIES

| ITEM # | ITEM | UNIT | QTY. |
|---|---|---|---|
| 0610-5003 | RDWY ILLUM ASSEM ( TY SA 12 T-3)(.25 KW) S | EA | 1 |
| 0618-5009 | CONDUIT (PVC)(SCHD 40)(32 MM) | M | 10 |
| 0620-5003 | ELECT CONDR (NO 8) BARE | M | 10 |
| 0620-5009 | ELECT CONDR (NO 8) INSULATED | M | 20 |
| 0624-5001 | GROUND BOX TY A (122311) W/APRON | EA | 1 |
| 0628-5056 | ELECT SERV TY S (240/480) 060(NS)GS(T)TP(O) | EA | 1 |
| 0656-5010 | FND FOR RDWY ILL ASM (TY A)(750 MM DR SH) | M | 2 |

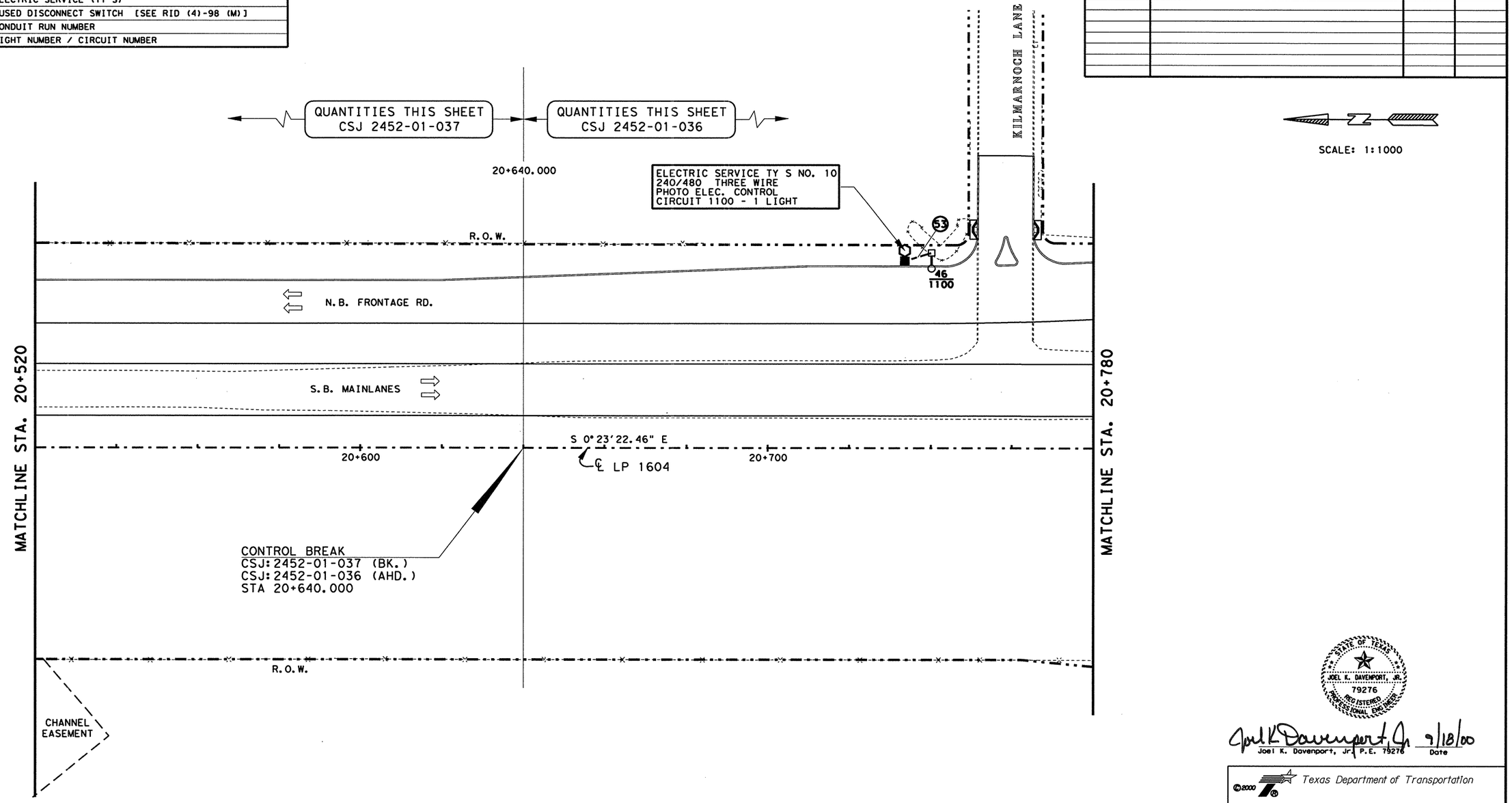


SCALE: 1:1000

STATE OF TEXAS
JOEL K. DAVENPORT, JR.
79276
REGISTERED
PROFESSIONAL ENGINEER

Joel K. Davenport, Jr. 9/18/00
Joel K. Davenport, Jr. P.E. 75276 Date

Texas Department of Transportation

# ILLUMINATION LAYOUT

SHEET 17 OF 24

| FED.RD. DIV.NO. | FEDERAL AID PROJECT NO. | | SHEET NO. |
|---|---|---|---|
| 6 | NH 2000(704),etc. | | 619 |
| STATE | DIST. | COUNTY | |
| TEXAS | SAT | BEXAR | |
| CONT. | SECT. | JOB | HIGHWAY NO. |
| 2452 | 01 | 036,etc. | LP 1604 |

FILE: t:\oo\design\lp1604fm471-90\illumination\illum17.dgn 14 SEP 2000
LEVEL 1 2 3 4 5 6 7 8 9 10 11 12 13 14 15 16 17 18 19 20 21 22 23 24 25 26 27 28 29 30 31 32
DISPLAYED 33 34 35 36 37 38 39 40 41 42 43 44 45 46 47 48 49 50 51 52 53 54 55 56 57 58 59 60 61 62 63

## LEGEND

| | |
|---|---|
| ●—■—● | RDWY ILLUM ASSEM (TY SA 15T-3-3)(.4 KW)S |
| ●—■ | RDWY ILLUM ASSEM (TY SA 15T-3)(.4 KW)S |
| ○—□ | RDWY ILLUM ASSEM (TY SA 12T-3)(.25 KW)S |
| ▲ | RDWY ILLUM ASSEM U/P (TY SPL-CO)(.15 KW)S(TY-1) |
| ■ | GROUND BOX |
| ⊠ | JUNCTION BOX (SUBSIDIARY) TO (ITEM 618) |
| - - - - - | PVC & CONDUCTOR (TRENCHED) |
| = = = = = | CONDUIT RMC & CONDUCTOR (PUSH-BORE) |
| ⬡ | ELECTRIC SERVICE (TY S) |
| □/ | FUSED DISCONNECT SWITCH [SEE RID (4)-98 (M)] |
| ① | CONDUIT RUN NUMBER |
| 1/400 | LIGHT NUMBER / CIRCUIT NUMBER |

## RDWY ILLUMINATION ASSEMBLY SUMMARY

| POLE | ℄ STATION | TYPE | REMARKS |
|---|---|---|---|
| 28 | 21+197 LP 1604 | (TY SA 15T-3)(.4 KW) S | 4 M LT |
| 29 | 21+287 LP 1604 | (TY SA 15T-3)(.4 KW) S | 4 M LT |
| 44 | 21+287 LP 1604 | (TY SA 15T-3 (.4 KW) S | 70 M LT |
| 45 | 21+197 LP 1604 | (TY SA 15T-3 (.4 KW) S | 70 M LT |

## ESTIMATED QUANTITIES

| ITEM # | ITEM | UNIT | QTY. |
|---|---|---|---|
| 0610-5003 | RDWY ILLUM ASSEM (TY SA 15T-3)(.4 KW) S | EA | 4 |
| 0618-5009 | CONDUIT (PVC)(SCHD 40)(32 MM) | M | 261 |
| 0620-5003 | ELECT CONDR (NO. 8) BARE | M | 261 |
| 0620-5009 | ELECT CONDR (NO. 8) INSULATED | M | 522 |
| 0624-5001 | GROUND BOX TY A (122311) W/APRON | EA | 1 |
| 0628-5056 | ELEC SERV TYS(240/480)060(NS)GS(T)TP(O) | EA | 1 |
| 0656-5010 | FND FOR RDWY ILL ASM (TY A)(750 MM DR SH) | M | 8 |

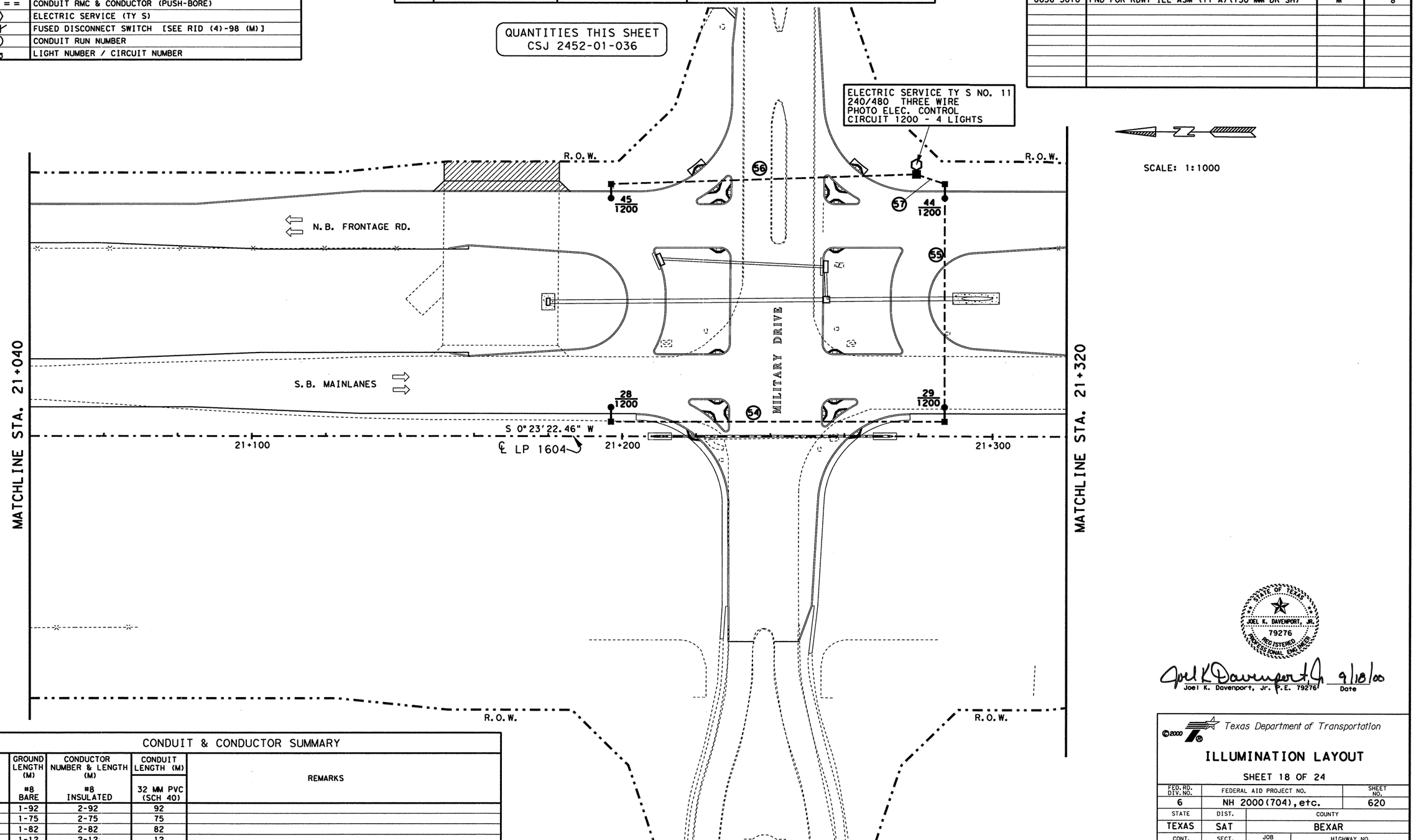


SCALE: 1:1000

## CONDUIT & CONDUCTOR SUMMARY

| RUN NO. | GROUND LENGTH (M) #8 BARE | CONDUCTOR NUMBER & LENGTH (M) #8 INSULATED | CONDUIT LENGTH (M) 32 MM PVC (SCH 40) | REMARKS |
|---|---|---|---|---|
| 54 | 1-92 | 2-92 | 92 | |
| 55 | 1-75 | 2-75 | 75 | |
| 56 | 1-82 | 2-82 | 82 | |
| 57 | 1-12 | 2-12 | 12 | |
| TOTAL | 261 | 522 | 261 | |

STATE OF TEXAS
JOEL K. DAVENPORT, JR.
79276
REGISTERED
PROFESSIONAL ENGINEER

Joel K Davenport Jr. 9/18/00
Joel K. Davenport, Jr. P.E. 79276 Date

Texas Department of Transportation

# ILLUMINATION LAYOUT

SHEET 18 OF 24

| FED.RD. DIV.NO. | FEDERAL AID PROJECT NO. | SHEET NO. |
|---|---|---|
| 6 | NH 2000(704), etc. | 620 |
| STATE | DIST. | COUNTY |
| TEXAS | SAT | BEXAR |
| CONT. | SECT. | JOB / HIGHWAY NO. |
| 2452 | 01 | 036, etc. / LP 1604 |

FILE: t:\co\design\lp1604fm471-90\illumination\illum18.dgn 14 SEP 2000
LEVEL DISPLAYED 1 2 3 4 5 6 7 8 9 10 11 12 13 14 15 16 17 18 19 20 21 22 23 24 25 26 27 28 29 30 31 32 33 34 35 36 37 38 39 40 41 42 43 44 45 46 47 48 49 50 51 52 53 54 55 56 57 58 59 60 61 62 63

## LEGEND

| | |
|---|---|
| ●—■—● | RDWY ILLUM ASSEM (TY SA 15T-3-3)(.4 KW)S |
| ●—■ | RDWY ILLUM ASSEM (TY SA 15T-3)(.4 KW)S |
| ○—□ | RDWY ILLUM ASSEM (TY SA 12T-3)(.25 KW)S |
| ▲ | RDWY ILLUM ASSEM U/P (TY SPL-CO)(.15 KW)S(TY-1) |
| ■ | GROUND BOX |
| ⊠ | JUNCTION BOX (SUBSIDIARY) TO (ITEM 618) |
| - - - - - | PVC & CONDUCTOR (TRENCHED) |
| = = = = = | CONDUIT RMC & CONDUCTOR (PUSH-BORE) |
| ⬡ | ELECTRIC SERVICE (TY S) |
| □/ | FUSED DISCONNECT SWITCH [SEE RID (4)-98 (M)] |
| ① | CONDUIT RUN NUMBER |
| 1/400 | LIGHT NUMBER / CIRCUIT NUMBER |

## RDWY ILLUMINATION ASSEMBLY SUMMARY

| POLE | ℄ STATION | TYPE | REMARKS |
|---|---|---|---|
| 30 | 21+820 LP 1604 | (TY SA 12T-3)(.25 KW) S | 5 M LT |

QUANTITIES THIS SHEET
CSJ 2452-01-036

## ESTIMATED QUANTITIES

| ITEM # | ITEM | UNIT | QTY. |
|---|---|---|---|
| 0610-5003 | RDWY ILLUM ASSEM ( TY SA 12 T-3)(.25 KW) S | EA | 1 |
| 0618-5009 | CONDUIT (PVC)(SCHD 40)(32 MM) | M | 50 |
| 0620-5003 | ELECT CONDR (NO 8) BARE | M | 50 |
| 0620-5009 | ELECT CONDR (NO 8) INSULATED | M | 100 |
| 0624-5001 | GROUND BOX TY A (122311) W/APRON | EA | 1 |
| 0628-5056 | ELECT SERV TY S (240/480) 060(NS)GS(T)TP(O) | EA | 1 |
| 0656-5010 | FND FOR RDWY ILL ASM (TY A)(750 MM DR SH) | M | 2 |

SCALE: 1:1000

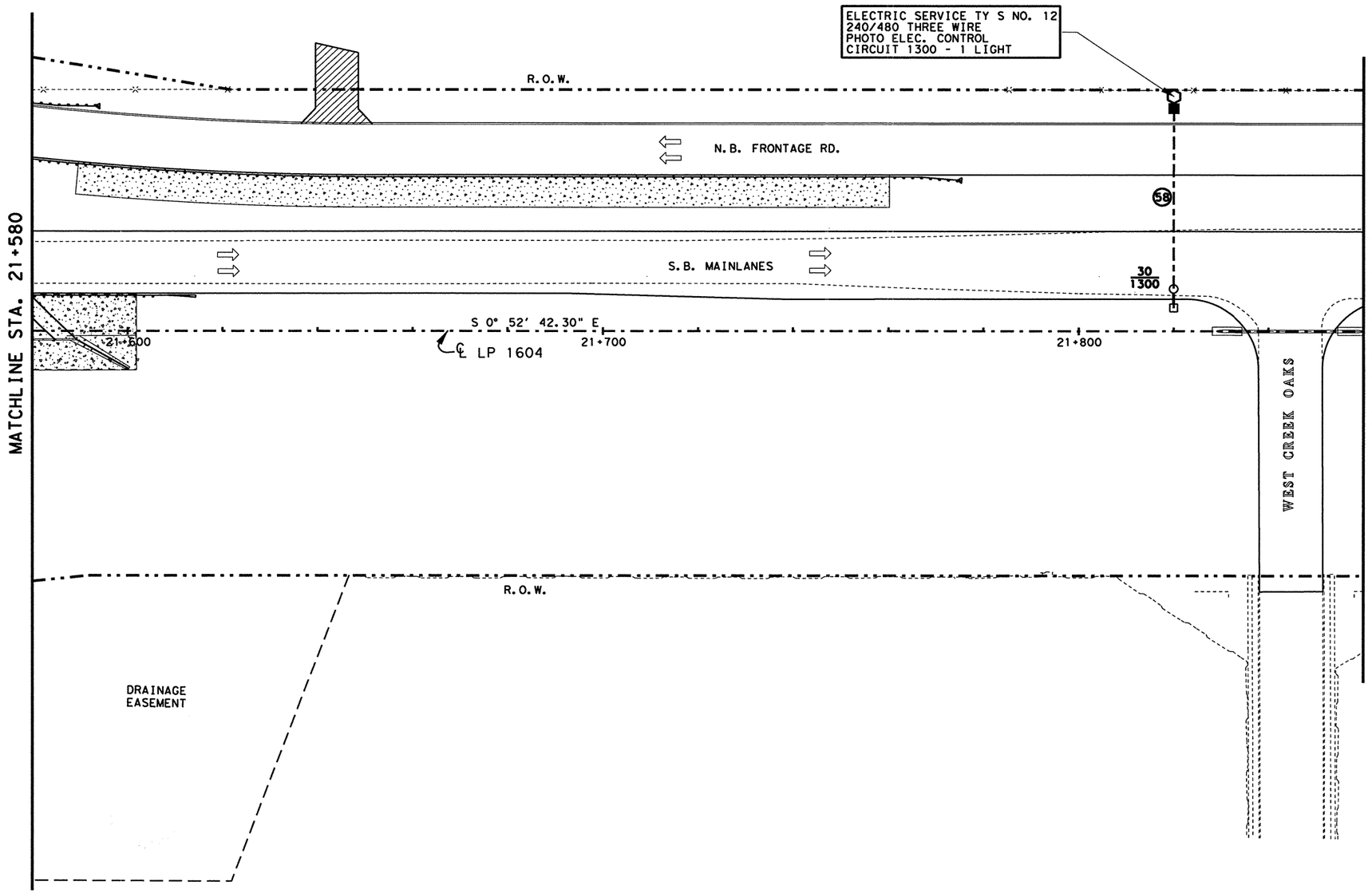


STATE OF TEXAS
JOEL K. DAVENPORT, JR.
79276
REGISTERED
PROFESSIONAL ENGINEER

Joel K Davenport, Jr. 9/18/00
Joel K. Davenport, Jr. P.E. 79276 Date

Texas Department of Transportation

# ILLUMINATION LAYOUT

SHEET 19 OF 24

| FED. RD. DIV. NO. | FEDERAL AID PROJECT NO. | | SHEET NO. |
|---|---|---|---|
| 6 | NH 2000(704), etc. | | 621 |
| STATE | DIST. | COUNTY | |
| TEXAS | SAT | BEXAR | |
| CONT. | SECT. | JOB | HIGHWAY NO. |
| 2452 | 01 | 036, etc. | LP 1604 |

FILE: t:\gov\design\lp1604fm471-90\illumination\illum19.dgn 14 SEP 2000
LEVEL DISPLAYED
1 2 3 4 5 6 7 8 9 10 11 12 13 14 15 16 17 18 19 20 21 22 23 24 25 26 27 28 29 30 31 32
33 34 35 36 37 38 39 40 41 42 43 44 45 46 47 48 49 50 51 52 53 54 55 56 57 58 59 60 61 62 63

## LEGEND

| | |
|---|---|
| ●—■—● | RDWY ILLUM ASSEM (TY SA 15T-3-3)(.4 KW)S |
| ●—■ | RDWY ILLUM ASSEM (TY SA 15T-3)(.4 KW)S |
| ○—□ | RDWY ILLUM ASSEM (TY SA 12T-3)(.25 KW)S |
| ▲ | RDWY ILLUM ASSEM U/P (TY SPL-CO)(.15 KW)S(TY-1) |
| ■ | GROUND BOX |
| ⊠ | JUNCTION BOX (SUBSIDIARY) TO (ITEM 618) |
| — — — — | PVC & C'NDUCTOR (TRENCHED) |
| = = = = = | CONDUIT RMC & CONDUCTOR (PUSH-BORE) |
| ⬡ | ELECTRIC SERVICE (TY S) |
| □/ | FUSED DISCONNECT SWITCH [SEE RID (4)-98 (M)] |
| ① | CONDUIT RUN NUMBER |
| 400 | LIGHT NUMBER / CIRCUIT NUMBER |

## RDWY ILLUMINATION ASSEMBLY SUMMARY

| POLE | ℄ STATION | TYPE | REMARKS |
|---|---|---|---|
| 31 | 22+570 LP 1604 | (TY SA 15T-3)(.4 KW) S | 4 M LT |
| 32 | 22+660 LP 1604 | (TY SA 15T-3)(.4 KW) S | 4 M LT |
| 42 | 22+660 LP 1604 | (TY SA 15T-3 (.4 KW) S | 79 M LT |
| 43 | 22+570 LP 1604 | (TY SA 15T-3 (.4 KW) S | 79 M LT |
| | | | |
| | | | |
| | | | |

## ESTIMATED QUANTITIES

| ITEM # | ITEM | UNIT | QTY. |
|---|---|---|---|
| 0610-5003 | RDWY ILLUM ASSEM (TY SA 15T-3)(.4 KW) S | EA | 4 |
| 0618-5009 | CONDUIT (PVC)(SCHD 40)(32 MM) | M | 261 |
| 0620-5003 | ELECT CONDR (NO. 8) BARE | M | 261 |
| 0620-5009 | ELECT CONDR (NO. 8) INSULATED | M | 522 |
| 0624-5001 | GROUND BOX TY A (122311) W/APRON | EA | 1 |
| 0628-5056 | ELEC SERV TYS(240/480)060(NS)GS(T)TP(O) | EA | 1 |
| 0656-5010 | FND FOR RDWY ILL ASM (TY A)(750 MM DR SH) | M | 8 |

QUANTITIES THIS SHEET
CSJ 2452-01-036

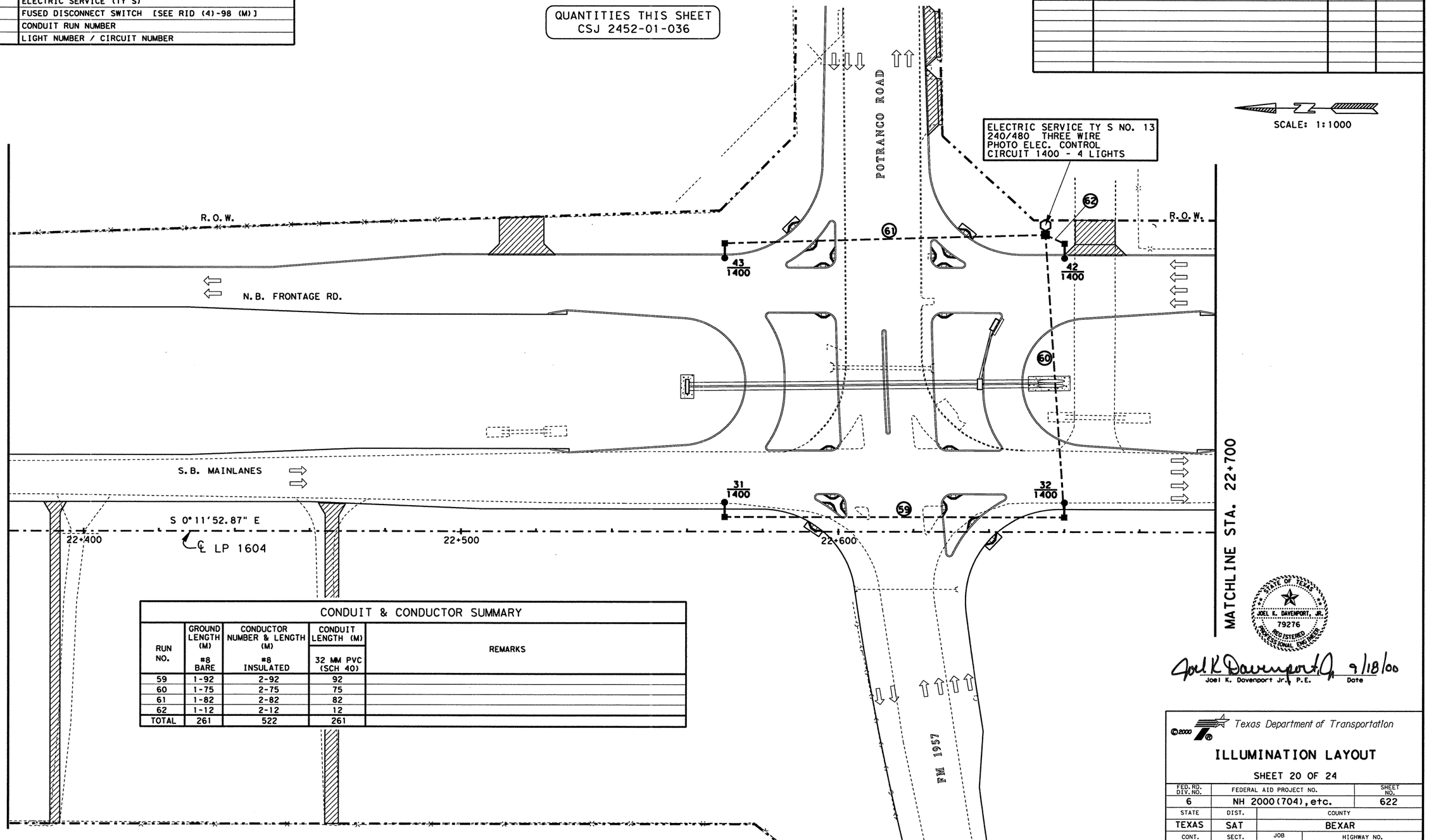


SCALE: 1:1000

## CONDUIT & CONDUCTOR SUMMARY

| RUN NO. | GROUND LENGTH (M) #8 BARE | CONDUCTOR NUMBER & LENGTH (M) #8 INSULATED | CONDUIT LENGTH (M) 32 MM PVC (SCH 40) | REMARKS |
|---|---|---|---|---|
| 59 | 1-92 | 2-92 | 92 | |
| 60 | 1-75 | 2-75 | 75 | |
| 61 | 1-82 | 2-82 | 82 | |
| 62 | 1-12 | 2-12 | 12 | |
| TOTAL | 261 | 522 | 261 | |

STATE OF TEXAS
JOEL K. DAVENPORT, JR.
79276
REGISTERED
PROFESSIONAL ENGINEER

Joel K Davenport Jr. 9/18/00
Joel K. Davenport Jr., P.E. Date

FILE: t:\go\design\lp1604fm471-90\illumination\illum20.dgn 14 SEP 2000
LEVEL 1 2 3 4 5 6 7 8 9 10 11 12 13 14 15 16 17 18 19 20 21 22 23 24 25 26 27 28 29 30 31 32
DISPLAYED 33 34 35 36 37 38 39 40 41 42 43 44 45 46 47 48 49 50 51 52 53 54 55 56 57 58 59 60 61 62 63 64

© 2000 Texas Department of Transportation

# ILLUMINATION LAYOUT

SHEET 20 OF 24

| FED. RD. DIV. NO. | FEDERAL AID PROJECT NO. | | SHEET NO. |
|---|---|---|---|
| 6 | NH 2000(704), etc. | | 622 |
| STATE | DIST. | COUNTY | |
| TEXAS | SAT | BEXAR | |
| CONT. | SECT. | JOB | HIGHWAY NO. |
| 2452 | 01 | 036, etc. | LP 1604 |

Plotted on: 01/26/2004

Design Filename: p:\52\20\11\design\civil\plansheets\illumination\illum20a.dgn

ACC: t:ao\design\lp1604fm471-90\

FILE: plan42.dgn

LEVELS DISPLAYED

| | | | | | | | | | | | | | | | |
|---|---|---|---|---|---|---|---|---|---|---|---|---|---|---|---|
| 1 | 2 | 3 | 4 | 5 | 6 | 7 | 8 | 9 | 10 | 11 | 12 | 13 | 14 | 15 | 16 |
| 17 | 18 | 19 | 20 | 21 | 22 | 23 | 24 | 25 | 26 | 27 | 28 | 29 | 30 | 31 | 32 |
| 33 | 34 | 35 | 36 | 37 | 38 | 39 | 40 | 41 | 42 | 43 | 44 | 45 | 46 | 47 | 48 |
| 49 | 50 | 51 | 52 | 53 | 54 | 55 | 56 | 57 | 58 | 59 | 60 | 61 | 62 | 63 | |

## LEGEND

| | |
|---|---|
| ●—■—● | RDWY ILLUM ASSEM (TY SA 15T-3-3)(.4 KW)S |
| ●—■ | RDWY ILLUM ASSEM (TY SA 15T-3)(.4 KW)S |
| ○—□ | RDWY ILLUM ASSEM (TY SA 12T-3)(.25 KW)S |
| ▲ | RDWY ILLUM ASSEM U/P (TY SPL-CO)(.15 KW)S(TY-1) |
| ■ | GROUND BOX |
| ⊠ | JUNCTION BOX (SUBSIDIARY) TO (ITEM 618) |
| — — — — | PVC & CONDUCTOR (TRENCHED) |
| = = = = = | CONDUIT RMC & CONDUCTOR (PUSH-BORE) |
| ⬡ | ELECTRIC SERVICE (TY S) |
| □/ | FUSED DISCONNECT SWITCH [SEE RID (4)-98 (M)] |
| (1) | CONDUIT RUN NUMBER |
| 1/400 | LIGHT NUMBER / CIRCUIT NUMBER |

## RDWY ILLUMINATION ASSEMBLY SUMMARY

| POLE | ℄ STATION | TYPE | REMARKS |
|---|---|---|---|
| 80 | 24+685 LP 1604 | (TY SA 12T-3)(.25 KW) S | 3 M RT |
| | | | |
| | | | |
| | | | |
| | | | |
| | | | |
| | | | |

QUANTITIES THIS SHEET
CSJ 2452-01-036

## ESTIMATED QUANTITIES

| ITEM # | ITEM | UNIT | QTY. |
|---|---|---|---|
| 0610-5003 | RDWY ILLUM ASSEM (TY SA 12T-3)(.25W) S | EA | 1 |
| 0618-5009 | CONDUIT (PVC)(SCHD 40)(32 MM) | M | 50 |
| 0620-5003 | ELECT CONDR (NO. 8) BARE | M | 52 |
| 0620-5009 | ELECT CONDR (NO. 8) INSULATED | M | 104 |
| 0624-5001 | GROUND BOX TY A (122311) W/APRON | EA | 1 |
| 0628-5056 | ELEC SERV TYS(240/480)060(NS)GS(T)TP(O) | EA | 1 |
| 0656-5010 | FND FOR RDWY ILL ASM (TY A)(750 MM DR SH) | M | 2 |
| | | | |
| | | | |
| | | | |
| | | | |
| | | | |
| | | | |
| | | | |
| | | | |

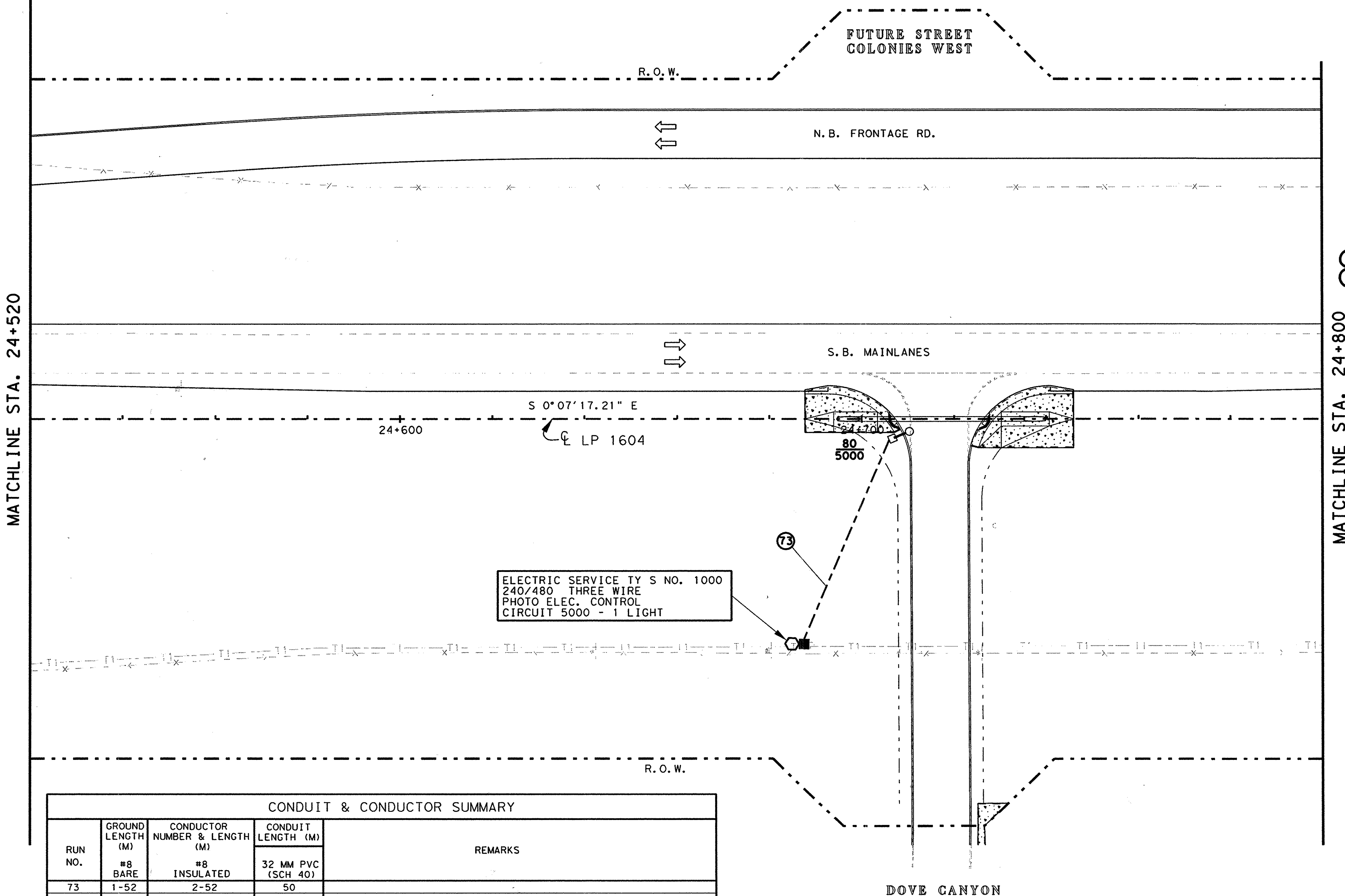


SCALE: 1:1000

**CHANGE ORDER NO. 82**

-NEW ILLUMINATION AT DOVE CANYON
-NEW QUANTITIES

## CONDUIT & CONDUCTOR SUMMARY

| RUN NO. | GROUND LENGTH (M) #8 BARE | CONDUCTOR NUMBER & LENGTH (M) #8 INSULATED | CONDUIT LENGTH (M) 32 MM PVC (SCH 40) | REMARKS |
|---|---|---|---|---|
| 73 | 1-52 | 2-52 | 50 | |
| | | | | |
| | | | | |
| | | | | |
| TOTAL | 52 | 104 | 50 | |

CHANGE ORDER NO. 82 | NEW SHEET


555 EAST RAMSEY SAN ANTONIO TEXAS 78216 PHONE (210)375-9000 FAX (210)375-9010

PAPE-DAWSON ENGINEERS
CIVIL & ENVIRONMENTAL

STATE OF TEXAS
J. KENT O'BRIEN
64398
LICENSED
PROFESSIONAL ENGINEER

J. KENT O'BRIEN P.E. 1/27/2004
DATE


©2000 Texas Department of Transportation

# ILLUMINATION LAYOUT

SHEET 20A OF 24

| FED. RD. DIV. NO. | FEDERAL AID PROJECT NO. | | SHEET NO. |
|---|---|---|---|
| 6 | NH 2000(704),etc. | | 622 A |
| STATE | DIST. | COUNTY | |
| TEXAS | SAT | BEXAR | |
| CONT. | SECT. | JOB | HIGHWAY NO. |
| 2452 | 01 | 036,etc. | LP 1604 |

## LEGEND

| | |
|---|---|
| ●—■—● | RDWY ILLUM ASSEM (TY SA 15T-3-3)(.4 KW)S |
| ●—■ | RDWY ILLUM ASSEM (TY SA 15T-3)(.4 KW)S |
| ○—□ | RDWY ILLUM ASSEM (TY SA 12T-3)(.25 KW)S |
| ▲ | RDWY ILLUM ASSEM U/P (TY SPL-CO)(.15 KW)S(TY-1) |
| ■ | GROUND BOX |
| ⊠ | JUNCTION BOX (SUBSIDIARY) TO (ITEM 618) |
| — — — — | PVC & CONDUCTOR (TRENCHED) |
| = = = = = | CONDUIT RMC & CONDUCTOR (PUSH-BORE) |
| ⬡ | ELECTRIC SERVICE (TY S) |
| □/ | FUSED DISCONNECT SWITCH [SEE RID (4)-98 (M)] |
| ① | CONDUIT RUN NUMBER |
| 1/400 | LIGHT NUMBER / CIRCUIT NUMBER |

## RDWY ILLUMINATION ASSEMBLY SUMMARY

| POLE | ℄ STATION | TYPE | REMARKS |
|---|---|---|---|
| **80** | 24+705 LP 1604 | (TY SA 12T-3)(.25 KW) S | 5 M RT |
| 81 | 24+732 LP 1604 | (TY SA 12T-3)(.25 KW) S | 75 M LT |

## ESTIMATED QUANTITIES

| ITEM # | ITEM | UNIT | QTY. |
|---|---|---|---|
| 0610-5003 | RDWY ILLUM ASSEM (TY SA 15T-3)(.4 KW) S | EA | 2 |
| 0618-5009 | CONDUIT (PVC)(SCHD 40)(32 MM) | M | 80 ~~117~~ |
| 0618-5026 | CONDUIT (RM)(PUSH-BORE)(50 MM) | M | 0 ~~18~~ |
| 0620-5003 | ELECT CONDR (NO. 8) BARE | M | 82 ~~137~~ |
| 0620-5009 | ELECT CONDR (NO. 8) INSULATED | M | 164 ~~274~~ |
| 0624-5001 | GROUND BOX TY A (122311) W/APRON | EA | 2 ~~1~~ |
| 0628-5056 | ELEC SERV TYS(240/480)060(NS)CS(T)TP(O) | EA | 2 ~~1~~ |
| 0656-5010 | FND FOR RDWY ILL ASM (TY A)(750 MM DR SH) | M | 4 |

QUANTITIES THIS SHEET
CSJ 2452-01-036

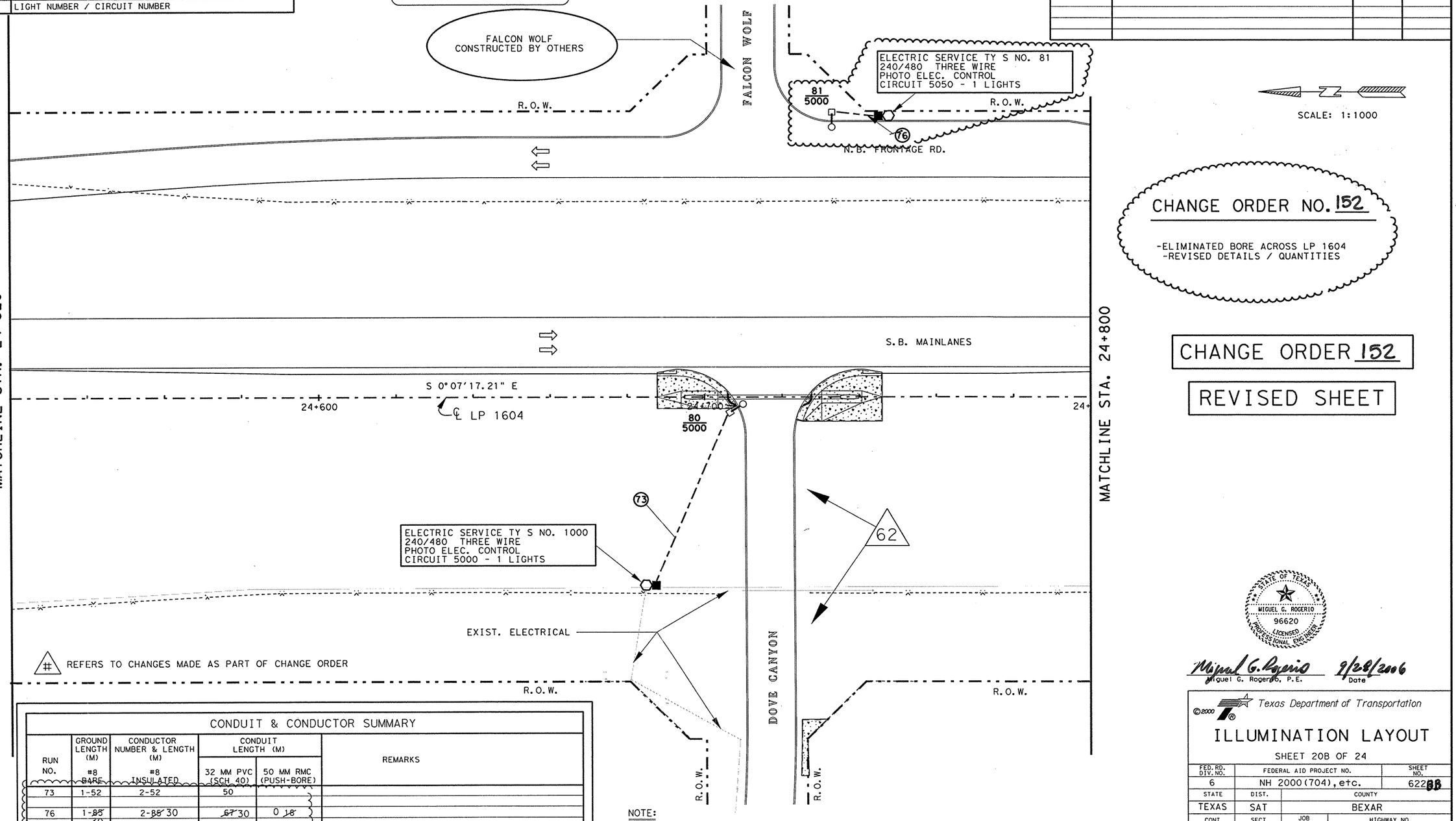


SCALE: 1:1000

CHANGE ORDER NO. 152

-ELIMINATED BORE ACROSS LP 1604
-REVISED DETAILS / QUANTITIES

CHANGE ORDER 152

REVISED SHEET

# CONDUIT & CONDUCTOR SUMMARY

| RUN NO. | GROUND LENGTH (M) #8 BARE | CONDUCTOR NUMBER & LENGTH (M) #8 INSULATED | CONDUIT LENGTH (M) 32 MM PVC (SCH 40) | CONDUIT LENGTH (M) 50 MM RMC (PUSH-BORE) | REMARKS |
|---|---|---|---|---|---|
| 73 | 1-52 | 2-52 | 50 | | |
| 76 | 1-~~85~~ 30 | 2-~~85~~ 30 | ~~67~~ 30 | 0 ~~18~~ | |
| TOTAL | 82~~137~~ | ~~274~~ 164 | ~~117~~ 80 | 0 ~~18~~ | |

#  REFERS TO CHANGES MADE AS PART OF CHANGE ORDER

NOTE:
DOVE CANYON ILLUMINATION ORIGINALLY ADDED AS PART OF C.O. #62

STATE OF TEXAS
MIGUEL G. ROGERIO
96620
LICENSED
PROFESSIONAL ENGINEER

Miguel G. Rogerio 9/28/2006
Miguel G. Rogerio, P.E. Date

©2000
Texas Department of Transportation

# ILLUMINATION LAYOUT

SHEET 20B OF 24

| FED. RD. DIV. NO. | FEDERAL AID PROJECT NO. | | SHEET NO. |
|---|---|---|---|
| 6 | NH 2000(704), etc. | | 622~~88~~ |
| STATE | DIST. | COUNTY | |
| TEXAS | SAT | BEXAR | |
| CONT. | SECT. | JOB | HIGHWAY NO. |
| 2452 | 01 | 036, etc. | LP 1604 |

LEVELS DISPLAYED
1 2 3 4 5 6 7 8 9 10 11 12 21 31 41 51 61 52
7 18 19 20 21 22 23 24 25 26 27 28 29 30 31 32
33 34 35 36 37 38 39 40 41 42 43 44 45 46 47 48
49 50 51 52 53 54 55 56 57 58 59 60 61 62 63

ACC: t:\oo\design\lp1604fm471-90\
FILE: ILLUM20B.DGN

## LEGEND

| | |
|---|---|
| ●—■—● | RDWY ILLUM ASSEM (TY SA 15T-3-3)(.4 KW)S |
| ●—■ | RDWY ILLUM ASSEM (TY SA 15T-3)(.4 KW)S |
| ○—□ | RDWY ILLUM ASSEM (TY SA 12T-3)(.25 KW)S |
| ▲ | RDWY ILLUM ASSEM U/P (TY SPL-CO)(.15 KW)S(TY-1) |
| ■ | GROUND BOX |
| ⊠ | JUNCTION BOX (SUBSIDIARY) TO (ITEM 618) |
| — — — — | PVC & CONDUCTOR (TRENCHED) |
| = = = = = | CONDUIT RMC & CONDUCTOR (PUSH-BORE) |
| ⬡ | ELECTRIC SERVICE (TY S) |
| □/ | FUSED DISCONNECT SWITCH [SEE RID (4)-98 (M)] |
| ① | CONDUIT RUN NUMBER |
| 1/400 | LIGHT NUMBER / CIRCUIT NUMBER |

## RDWY ILLUMINATION ASSEMBLY SUMMARY

| POLE | ℄ STATION | TYPE | REMARKS |
|---|---|---|---|
| 82 | 25+340 LP 1604 | (TY SA 12T-3)(.25 KW)S | 5M LT |

SCALE: 1:1000

QUANTITIES THIS SHEET
CSJ 2452-01-036

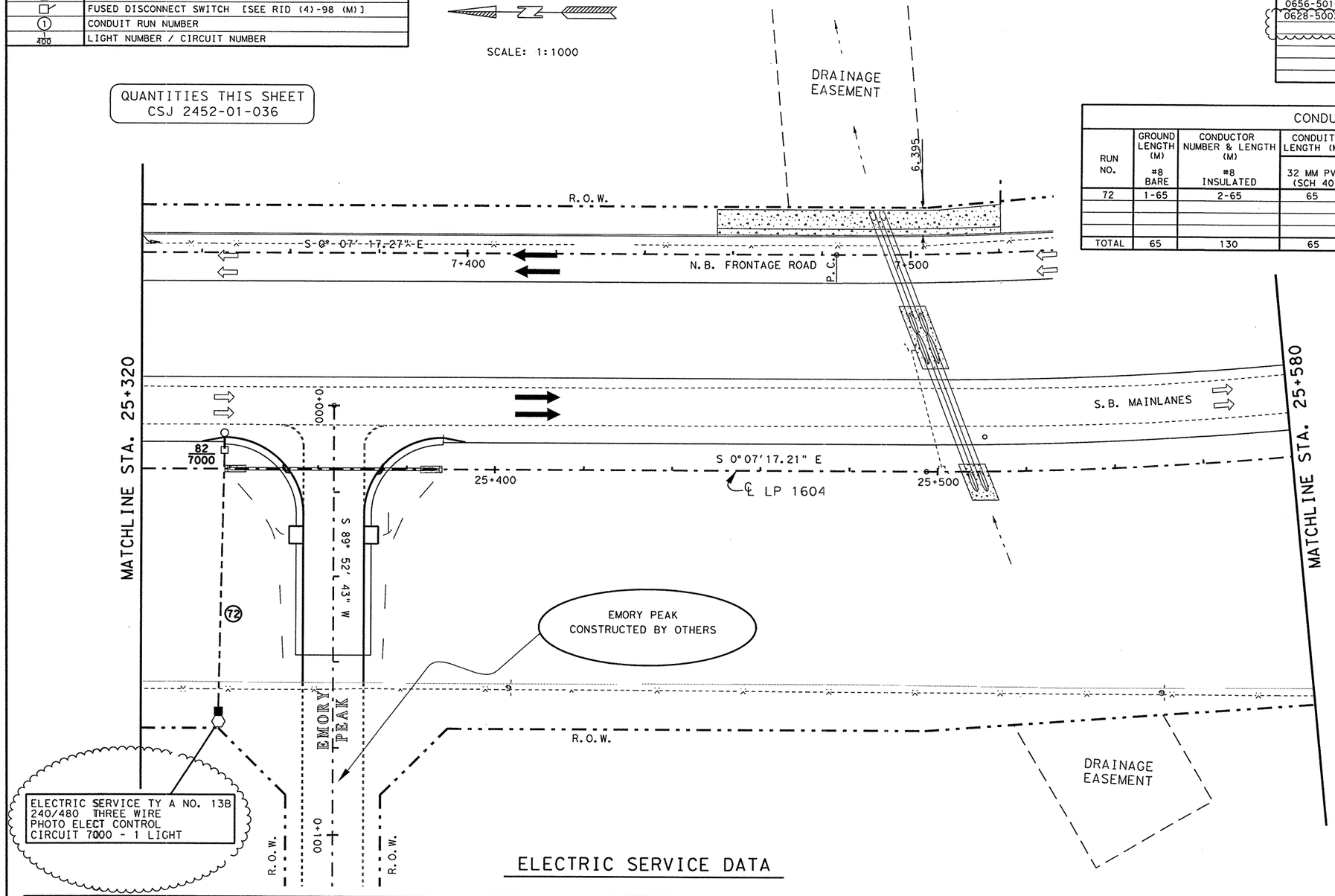


## ESTIMATED QUANTITIES

| ITEM # | ITEM | UNIT | QTY. |
|---|---|---|---|
| 0610-5003 | RDWY ILLUM ASSEM TY SA 12T-3)(.25 KW)S | EA | 1 |
| 0618-5009 | CONDUIT (PVC)(SCHD 40)(32 mm) | M | 65 |
| 0620-5003 | ELECT CONDR (NO. 8) BARE | M | 65 |
| 0620-5009 | ELECT CONDR (NO. 8) INSULATED | M | 130 |
| 0624-5001 | GROUND BOX (TY A)(122311) W/APRON | EA | 1 |
| ~~0628-5056~~ | ~~ELECT SERV TY S (240/480) 060 (NS) GS (E)~~ | | |
| | TP (O) | EA | ~~0~~ 1 |
| 0656-5010 | FND FOR RDWY ILL ASM (TY A)(750 mm DR SH) | M | 2 |
| 0628-5003 | ELECT SERV TY A (240/480) 060 (NS) GS (E) | EA | 1 |
| | SP (U) | | |

## CONDUIT & CONDUCTOR SUMMARY

| RUN NO. | GROUND LENGTH (M) #8 BARE | CONDUCTOR NUMBER & LENGTH (M) #8 INSULATED | CONDUIT LENGTH (M) 32 MM PVC (SCH 40) | REMARKS |
|---|---|---|---|---|
| 72 | 1-65 | 2-65 | 65 | |
| TOTAL | 65 | 130 | 65 | |

## ELECTRIC SERVICE DATA

| SERVICE POLE NO. | SHEET NO. | ELECTRIC SERVICE DESCRIPTION (SEE ED (3)-98 (M)) | ELECTRIC SERVICE CONDUIT SIZE | SERVICE CONDUCTORS NO/SIZE | SAFETY SWITCH AMPS | MAIN DISCONNECT | | TWO-POLE CONTACTOR AMPS | PANEL BD/ LOADCENTER AMP RATING (min) | CURCUIT NO. | BRANCH CKT. BKR. POLE/AMPS | BRANCH CIRCUIT AMPS | KVA LOAD |
|---|---|---|---|---|---|---|---|---|---|---|---|---|---|
| | | | | | | MAIN BKR. | CKT. BKR. POLE/AMP | | | | | | |
| 13B | 622DD | ELEC SERV TYA (240/480)060(NS)GS(E)SP(U) | 38 MM | 3/#6 | N/A | 2P/60 | 2P/60 | 2P-60 | 70 AMP | 7000 | 2P/20 | 0.75 | 0.360 |

CHANGE ORDER NO. 152

-REVISED SERVICE FROM OVERHEAD TO UNDERGROUND

CHANGE ORDER 152

NEW SHEET

STATE OF TEXAS
MIGUEL G. ROGERIO
96620
LICENSED PROFESSIONAL ENGINEER

Miguel G. Rogerio 9/20/2006
Miguel G. Rogerio, P.E. Date

Texas Department of Transportation

# ILLUMINATION LAYOUT

SHEET 20D OF 24

| FED. RD. DIV. NO. | FEDERAL AID PROJECT NO. | | SHEET NO. |
|---|---|---|---|
| 6 | NH 2000(704), etc. | | 622DD |
| STATE | DIST. | COUNTY | |
| TEXAS | SAT | BEXAR | |
| CONT. | SECT. | JOB | HIGHWAY NO. |
| 2452 | 01 | 036, etc. | LP 1604 |

9-20-06

LEVELS DISPLAYED
1 2 3 4 5 6 7 8 9 10 11 12 13 14 15 16
17 18 19 20 21 22 23 24 25 26 27 28 29 30 31 32
33 34 35 36 37 38 39 40 41 42 43 44 45 46 47 48
49 50 51 52 53 54 55 56 57 58 59 60 61 62 63

ACC: t:\oo\design\lp1604fm471-90\
FILE: ILLUM45A.dgn

## LEGEND

| | |
|---|---|
| ●—■—● | RDWY ILLUM ASSEM (TY SA 15T-3-3)(.4 KW)S |
| ●—■ | RDWY ILLUM ASSEM (TY SA 15T-3)(.4 KW)S |
| ○—□ | RDWY ILLUM ASSEM (TY SA 12T-3)(.25 KW)S |
| ▲ | RDWY ILLUM ASSEM U/P (TY SPL-CO)(.15 KW)S(TY-1) |
| ■ | GROUND BOX |
| ⊠ | JUNCTION BOX (SUBSIDIARY) TO (ITEM 618) |
| — — — — | PVC & CONDUCTOR (TRENCHED) |
| = = = = = | CONDUIT RMC & CONDUCTOR (PUSH-BORE) |
| ⬡ | ELECTRIC SERVICE (TY S) |
| □/ | FUSED DISCONNECT SWITCH [SEE RID (4)-98 (M)] |
| (1) | CONDUIT RUN NUMBER |
| 1/400 | LIGHT NUMBER / CIRCUIT NUMBER |

## RDWY ILLUMINATION ASSEMBLY SUMMARY

| POLE | ℄ STATION | TYPE | REMARKS |
|---|---|---|---|
| 81 | 24+732 LP 1604 | (TY SA 12T-3)(.25 KW) S | 75 M LT |

## ESTIMATED QUANTITIES

| ITEM # | ITEM | UNIT | QTY. |
|---|---|---|---|
| 0610-5003 | RDWY ILLUM ASSEM (TY SA 15T-3)(.4 KW) S | EA | 2 |
| 0618-5009 | CONDUIT (PVC) (SCHD 40) (32 MM) | M | 117 |
| 0618-5026 | CONDUIT (RM) (PUSH-BORE) (50 MM) | M | 18 |
| 0620-5003 | ELECT CONDR (NO. 8) BARE | M | 137 |
| 0620-5009 | ELECT CONDR (NO. 8) INSULATED | M | 274 |
| 0624-5001 | GROUND BOX TY A (123111) W/APRON | EA | 1 |
| 0628-5056 | ELEC SERV TYS(240/480)060(NS)CS(1)IP(O) | EA | 1 |
| 0656-5010 | FND FOR RDWY ILL ASM (TY A) (750 MM DR SH) | M | 2 |

QUANTITIES THIS SHEET
CSJ 2452-01-036

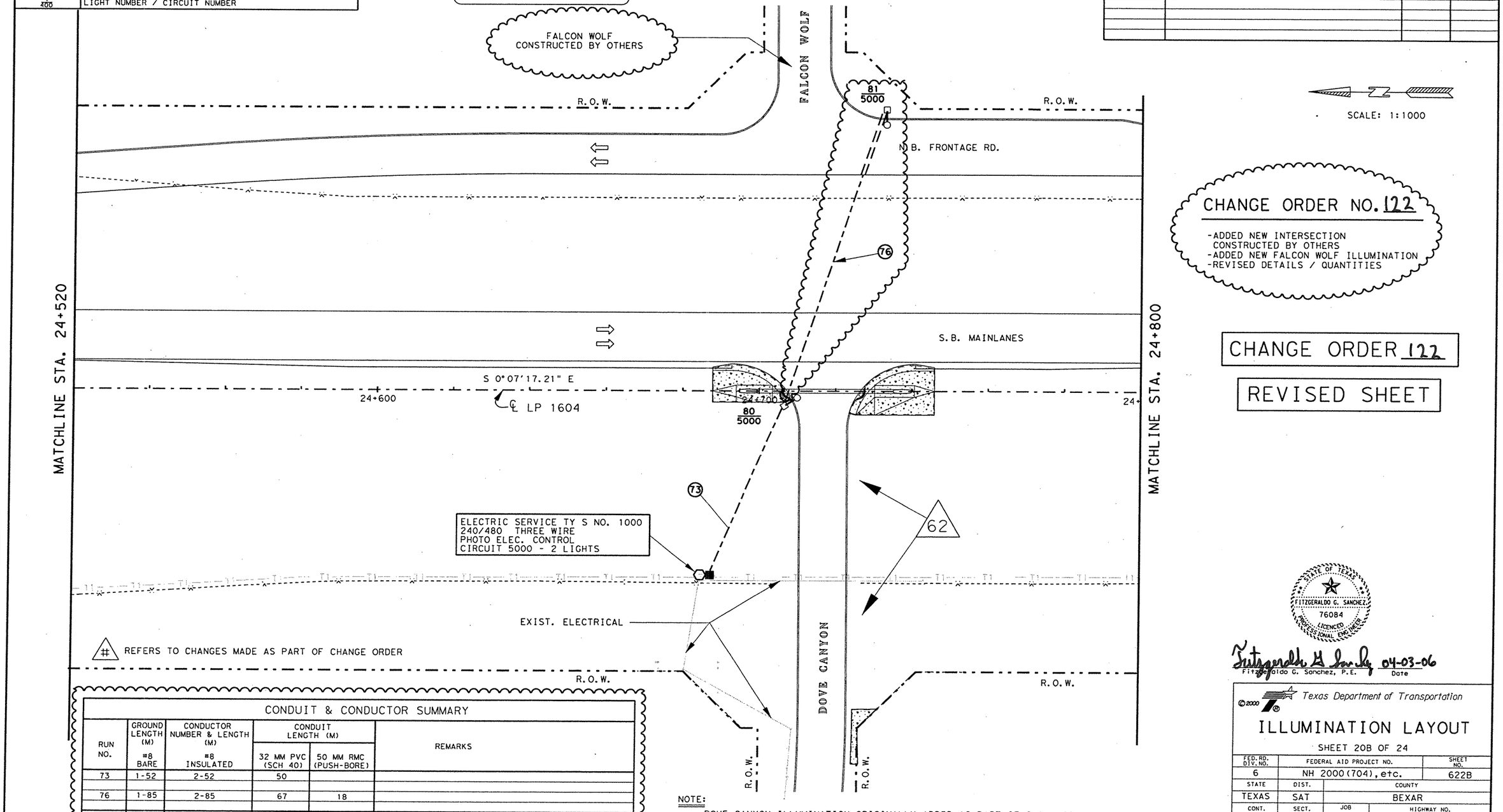


SCALE: 1:1000

# CHANGE ORDER NO. 122

- -ADDED NEW INTERSECTION CONSTRUCTED BY OTHERS
- -ADDED NEW FALCON WOLF ILLUMINATION
- -REVISED DETAILS / QUANTITIES

CHANGE ORDER 122

REVISED SHEET

(#) REFERS TO CHANGES MADE AS PART OF CHANGE ORDER

## CONDUIT & CONDUCTOR SUMMARY

| RUN NO. | GROUND LENGTH (M) #8 BARE | CONDUCTOR NUMBER & LENGTH (M) #8 INSULATED | CONDUIT LENGTH (M) 32 MM PVC (SCH 40) | CONDUIT LENGTH (M) 50 MM RMC (PUSH-BORE) | REMARKS |
|---|---|---|---|---|---|
| 73 | 1-52 | 2-52 | 50 | | |
| | | | | | |
| 76 | 1-85 | 2-85 | 67 | 18 | |
| | | | | | |
| TOTAL | 137 | 274 | 117 | 18 | |

NOTE:
DOVE CANYON ILLUMINATION ORIGINALLY ADDED AS PART OF C.O. #62

STATE OF TEXAS
FITZGERALDO G. SANCHEZ
76084
LICENCED
PROFESSIONAL ENGINEER

Fitzgeraldo G. Sanchez, P.E. 04-03-06
Date

©2000
Texas Department of Transportation

# ILLUMINATION LAYOUT

SHEET 20B OF 24

| FED.RD. DIV.NO. | FEDERAL AID PROJECT NO. | SHEET NO. |
|---|---|---|
| 6 | NH 2000(704), etc. | 622B |
| STATE | DIST. | COUNTY |
| TEXAS | SAT | BEXAR |
| CONT. | SECT. | JOB / HIGHWAY NO. |
| 2452 | 01 | 036, etc. / LP 1604 |

LEVELS DISPLAYED
1 2 3 4 5 6 7 8 9 10 11 12 13 14 15 16 17 18 19 20 21 22 23 24 25 26 27 28 29 30 31 32 33 34 35 36 37 38 39 40 41 42 43 44 45 46 47 48 49 50 51 52 53 54 55 56 57 58 59 60 61 62 63 64

ACC: t:\go\design\lp1604fm471-90\
FILE: ILLUM20B.DGN

## LEGEND

| | |
|---|---|
| ●—■—● | RDWY ILLUM ASSEM (TY SA 15T-3-3)(.4 KW)S |
| ●—■ | RDWY ILLUM ASSEM (TY SA 15T-3)(.4 KW)S |
| ○—□ | RDWY ILLUM ASSEM (TY SA 12T-3)(.25 KW)S |
| ▲ | RDWY ILLUM ASSEM U/P (TY SPL-CO)(.15 KW)S(TY-1) |
| ■ | GROUND BOX |
| ⊠ | JUNCTION BOX (SUBSIDIARY) TO (ITEM 618) |
| — — — | PVC & CONDUCTOR (TRENCHED) |
| = = = = = | CONDUIT RMC & CONDUCTOR (PUSH-BORE) |
| ⬡ | ELECTRIC SERVICE (TY S) |
| □/ | FUSED DISCONNECT SWITCH [SEE RID (4)-98 (M)] |
| ① | CONDUIT RUN NUMBER |
| 1/400 | LIGHT NUMBER / CIRCUIT NUMBER |

## RDWY ILLUMINATION ASSEMBLY SUMMARY

| POLE | ℄ STATION | TYPE | REMARKS |
|---|---|---|---|
| 82 | 25+055 LP 1604 | (TY SA 12T-3)(.25 KW) S | 64 M LT |

SCALE: 1:1000

## ESTIMATED QUANTITIES

| ITEM # | ITEM | UNIT | QTY |
|---|---|---|---|
| 0610-5003 | RDWY ILLUM ASSEM (TY SA 12T-3)(.25 KW) S | EA | 1 |
| 0618-5009 | CONDUIT (PVC)(SCHD 40)(32 MM) | M | 10 |
| 0620-5003 | ELECT CONDR (NO. 8) BARE | M | 10 |
| 0620-5009 | ELECT CONDR (NO. 8) INSULATED | M | 20 |
| 0624-5001 | GROUND BOX TY A (12231I) W/APRON | EA | 1 |
| 0628-5056 | ELECT SERV TY S (240/480) 060 (NS) GS(T)TP(O) | EA | 1 |
| 0656-5010 | FND FOR RDWY ILL ASM (TY A)(750 MM DR SH) | M | 2 |

QUANTITIES THIS SHEET
CSJ 2452-01-036

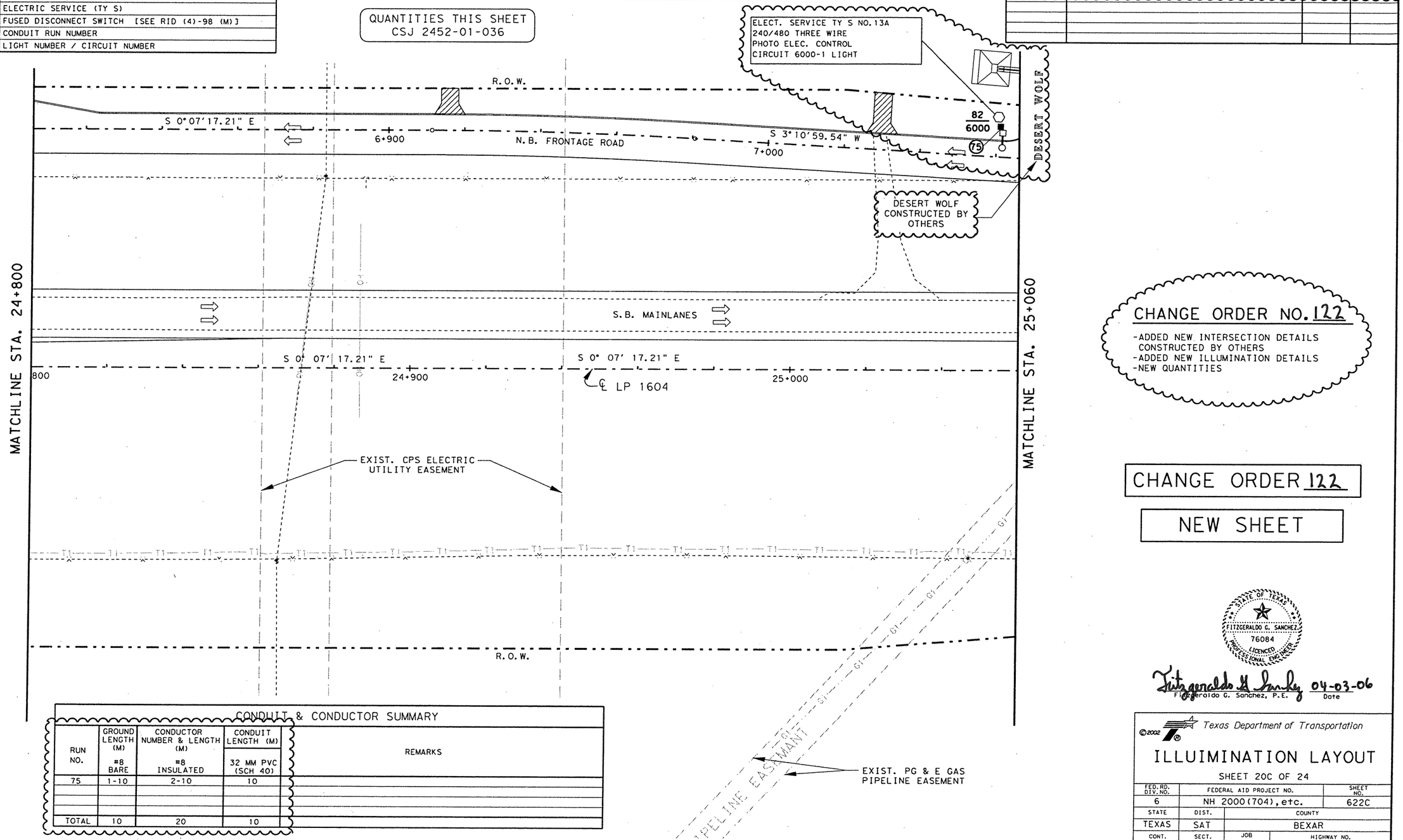


## CONDUIT & CONDUCTOR SUMMARY

| RUN NO. | GROUND LENGTH (M) #8 BARE | CONDUCTOR NUMBER & LENGTH (M) #8 INSULATED | CONDUIT LENGTH (M) 32 MM PVC (SCH 40) | REMARKS |
|---|---|---|---|---|
| 75 | 1-10 | 2-10 | 10 | |
| TOTAL | 10 | 20 | 10 | |

CHANGE ORDER NO. 122

-ADDED NEW INTERSECTION DETAILS CONSTRUCTED BY OTHERS
-ADDED NEW ILLUMINATION DETAILS
-NEW QUANTITIES

CHANGE ORDER 122

NEW SHEET

STATE OF TEXAS
FITZGERALDO G. SANCHEZ
76084
LICENCED PROFESSIONAL ENGINEER

Fitzgeraldo G. Sanchez 04-03-06
Fitzgeraldo G. Sanchez, P.E. Date

©2002
Texas Department of Transportation

# ILLUIMINATION LAYOUT

SHEET 20C OF 24

| FED.RD. DIV.NO. | FEDERAL AID PROJECT NO. | SHEET NO. |
|---|---|---|
| 6 | NH 2000(704),etc. | 622C |
| STATE | DIST. | COUNTY |
| TEXAS | SAT | BEXAR |
| CONT. | SECT. | JOB / HIGHWAY NO. |
| 2452 | 01 | 036,etc. / LP 1604 |

$FILE$
$DATE$

LEVELS DISPLAYED
1 2 3 4 5 6 7 8 9 10 11 12 13 14 15 16
17 18 19 20 21 22 23 24 25 26 27 28 29 30 31 32
33 34 35 36 37 38 39 40 41 42 43 44 45 46 47 48
49 50 51 52 53 54 55 56 57 58 59 60 61 62 63

ACC: t:\oo\design\lp1604fm471-90\
FILE: illu43A

## LEGEND

| | |
|---|---|
| ●—■—● | RDWY ILLUM ASSEM (TY SA 15T-3-3)(.4 KW)S |
| ●—■ | RDWY ILLUM ASSEM (TY SA 15T-3)(.4 KW)S |
| ○—□ | RDWY ILLUM ASSEM (TY SA 12T-3)(.25 KW)S |
| ▲ | RDWY ILLUM ASSEM U/P (TY SPL-CO)(.15 KW)S(TY-1) |
| ■ | GROUND BOX |
| ⊠ | JUNCTION BOX (SUBSIDIARY) TO (ITEM 618) |
| — — — — | PVC & CONDUCTOR (TRENCHED) |
| = = = = = | CONDUIT RMC & CONDUCTOR (PUSH-BORE) |
| ⬡ | ELECTRIC SERVICE (TY S) |
| □/ | FUSED DISCONNECT SWITCH [SEE RID (4)-98 (M)] |
| ① | CONDUIT RUN NUMBER |
| 1/400 | LIGHT NUMBER / CIRCUIT NUMBER |

## RDWY ILLUMINATION ASSEMBLY SUMMARY

| POLE | ℄ STATION | TYPE | REMARKS |
|---|---|---|---|
| 82 | 25+340 LP 1604 | (TY SA 12T-3)(.25 KW)S | 5M LT |

## ESTIMATED QUANTITIES

| ITEM # | ITEM | UNIT | QTY. |
|---|---|---|---|
| 0610-5003 | RDWY ILLUM ASSEM TY SA 12T-3)(.25 KW)S | EA | 1 |
| 0618-5009 | CONDUIT (PVC)(SCHD 40)(32 mm) | M | 65 |
| 0620-5003 | ELECT CONDR (NO. 8) BARE | M | 65 |
| 0620-5009 | ELECT CONDR (NO. 8) INSULATED | M | 130 |
| 0624-5001 | GROUND BOX (TY A)(122311) W/APRON | EA | 1 |
| 0628-5056 | ELECT SERV TY S (240/480) 060 (NS) GS (T) TP (O) | EA | 1 |
| 0656-5010 | FND FOR RDWY ILL ASM (TY A)(750 mm DR SH) | M | 2 |

SCALE: 1:1000

QUANTITIES THIS SHEET
CSJ 2452-01-036

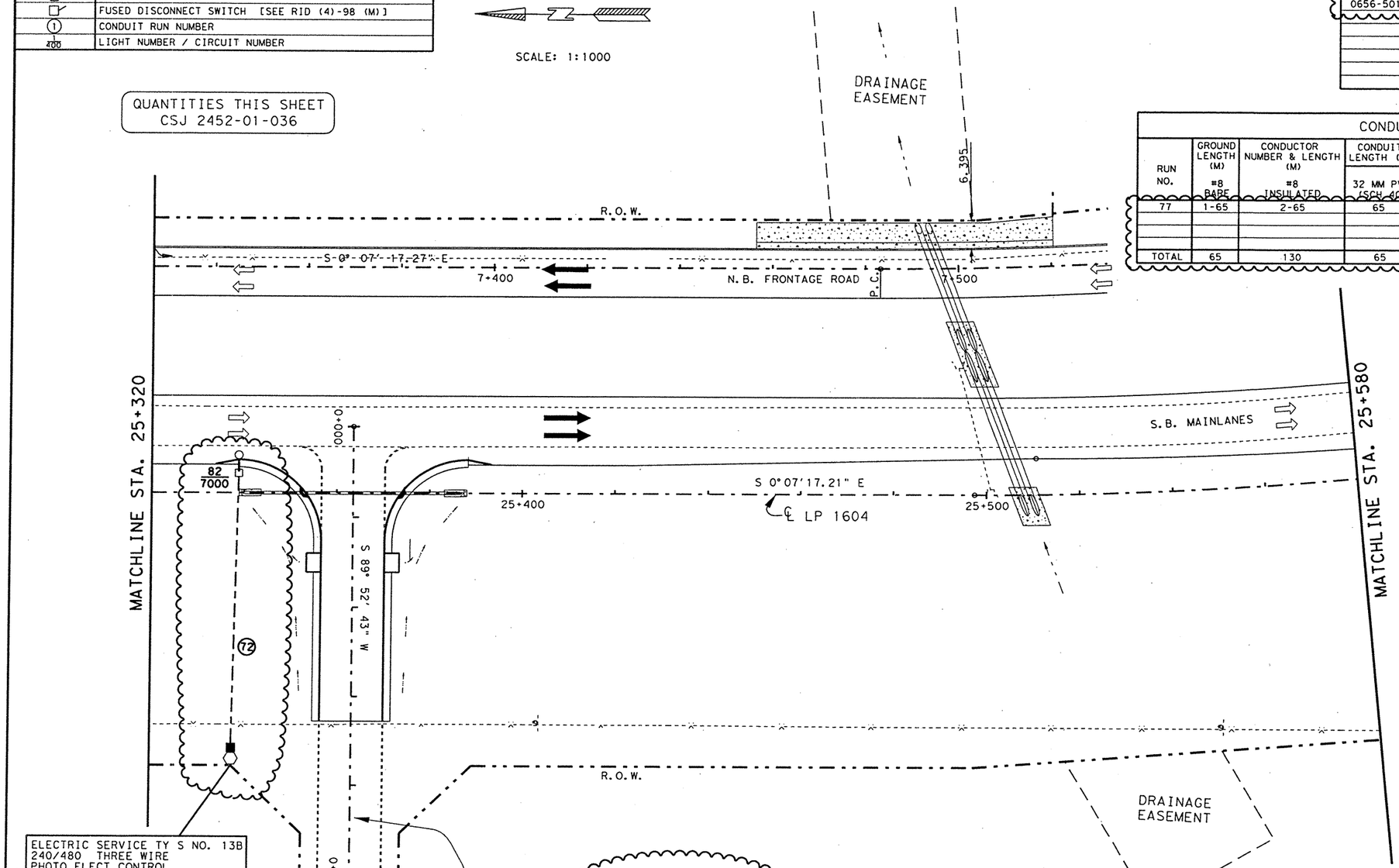


## CONDUIT & CONDUCTOR SUMMARY

| RUN NO. | GROUND LENGTH (M) #8 BARE | CONDUCTOR NUMBER & LENGTH (M) #8 INSULATED | CONDUIT LENGTH (M) 32 MM PVC (SCH 40) | REMARKS |
|---|---|---|---|---|
| 77 | 1-65 | 2-65 | 65 | |
| TOTAL | 65 | 130 | 65 | |

CHANGE ORDER NO. 122

- -ADDED NEW INTERSECTION CONSTRUCTED BY OTHERS
- -ADDED NEW ILLUMINATION DETAILS
- -NEW QUANTITIES

CHANGE ORDER 122

NEW SHEET

STATE OF TEXAS
FITZGERALDO G. SANCHEZ
76084
LICENCED
PROFESSIONAL ENGINEER

Fitzgeraldo G. Sanchez 04-03-06
Fitzgeraldo G. Sanchez, P.E. Date

LEVELS DISPLAYED
1 2 3 4 5 6 7 8 9 10 11 12 13 14 15 16
17 18 19 20 21 22 23 24 25 26 27 28 29 30 31 32
33 34 35 36 37 38 39 40 41 42 43 44 45 46 47 48
49 50 51 52 53 54 55 56 57 58 59 60 61 62 63 64

ACC: *:\ao\design\lp1604fm471-90\
FILE: ILLUM45A.dgn

© 2000 Texas Department of Transportation

# ILLUMINATION LAYOUT

SHEET 20D OF 24

| FED. RD. DIV. NO. | FEDERAL AID PROJECT NO. | SHEET NO. |
|---|---|---|
| 6 | NH 2000(704), etc. | 622D |
| STATE | DIST. | COUNTY |
| TEXAS | SAT | BEXAR |
| CONT. | SECT. | JOB / HIGHWAY NO. |
| 2452 | 01 | 036 etc / LP 1604 |

## LEGEND

| | |
|---|---|
| ●—■—● | RDWY ILLUM ASSEM (TY SA 15T-3-3)(.4 KW)S |
| ●—■ | RDWY ILLUM ASSEM (TY SA 15T-3)(.4 KW)S |
| ○—□ | RDWY ILLUM ASSEM (TY SA 12T-3)(.25 KW)S |
| ▲ | RDWY ILLUM ASSEM U/P (TY SPL-CO)(.15 KW)S(TY-1) |
| ■ | GROUND BOX |
| ⊠ | JUNCTION BOX (SUBSIDIARY) TO (ITEM 618) |
| — — — — | PVC & CONDUCTOR (TRENCHED) |
| = = = = = | CONDUIT RMC & CONDUCTOR (PUSH-BORE) |
| ⬡ | ELECTRIC SERVICE (TY S) |
| □/ | FUSED DISCONNECT SWITCH [SEE RID (4)-98 (M)] |
| ① | CONDUIT RUN NUMBER |
| 400 | LIGHT NUMBER / CIRCUIT NUMBER |

## RDWY ILLUMINATION ASSEMBLY SUMMARY

| POLE | ℄ STATION | TYPE | REMARKS |
|---|---|---|---|
| 83 | 25+690 LP 1604 | (TY SA 12T-3)(.25 KW)S | 5M LT |

## CONDUIT & CONDUCTOR SUMMARY

| RUN NO. | GROUND LENGTH (M) #8 BARE | CONDUCTOR NUMBER & LENGTH (M) #8 INSULATED | CONDUIT LENGTH (M) 32 MM PVC (SCH 40) | REMARKS |
|---|---|---|---|---|
| 79 | 1-80 | 2-80 | 80 | |
| TOTAL | 80 | 160 | 80 | |

SCALE: 1:1000

## ESTIMATED QUANTITIES

| | ITEM | UNIT | QTY. |
|---|---|---|---|
| 0610-5003 | RDWY ILLUM ASSEM (TY SA 12T-3)(.25 KW)S | EA | 1 |
| 0618-5009 | CONDUIT (PVC) (SCHD 40) (32 mm) | M | 80 |
| 0620-5003 | ELECT CONDR (NO. 8) BARE | M | 80 |
| 0620-5009 | ELECT CONDR (NO. 8) INSULATED | M | 160 |
| 0624-5001 | GROUND BOX TY A (122311) W/APRON | EA | 1 |
| 0628-5056 | ELECT SERV TY S (240/480) 060 (NS) GS (T) TP (O) | EA | 1 |
| 0656-5010 | FND FOR RDWY ILL ASM (TY A)(750 mm DR SH) | M | 2 |

QUANTITIES THIS SHEET
CSJ 2452-01-036

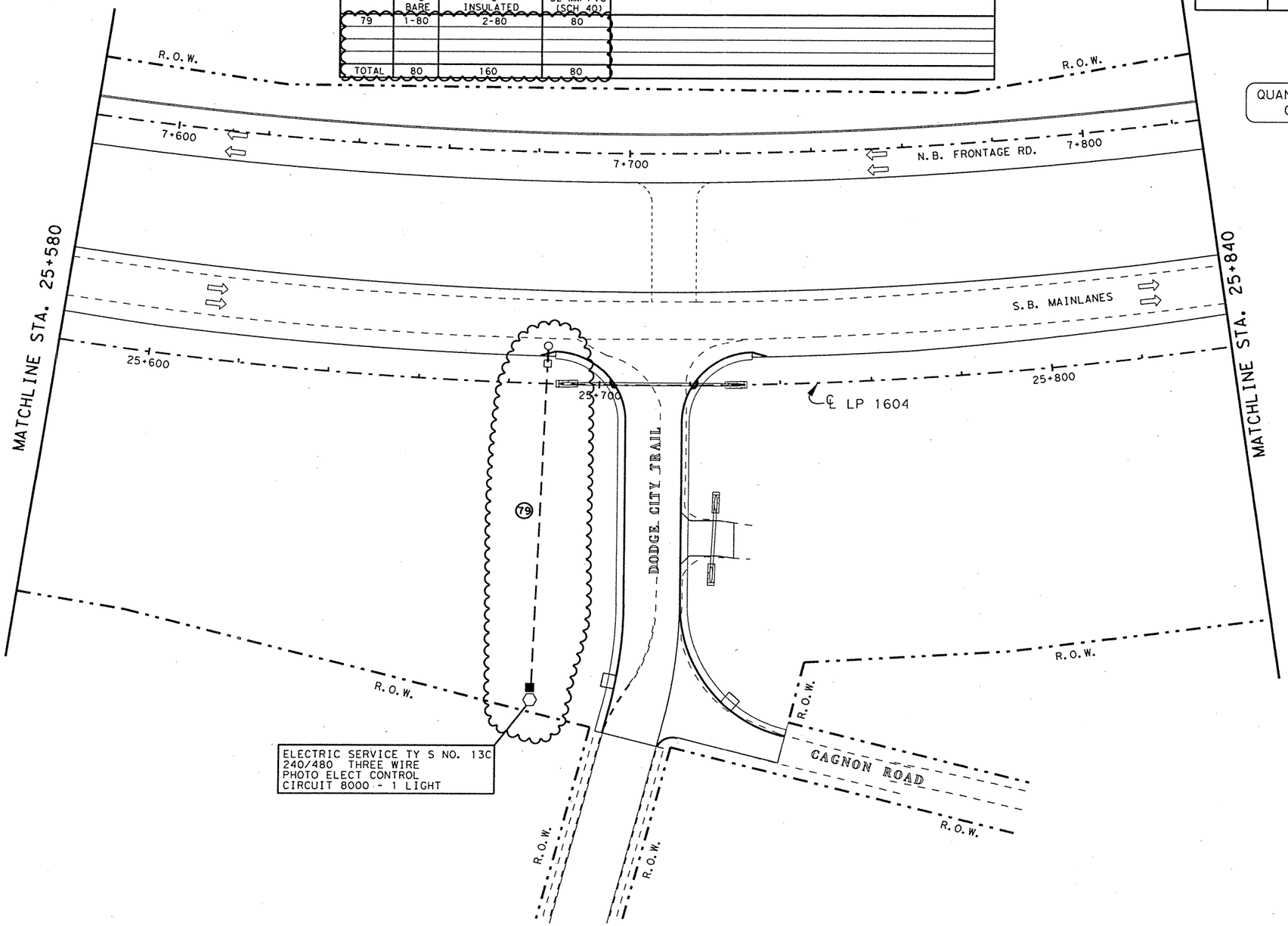


CHANGE ORDER NO. 122

- -ADDED NEW INTERSECTION
- -ADDED NEW ILLUMINATION DETAILS
- -NEW QUANTITIES

CHANGE ORDER 122

NEW SHEET

STATE OF TEXAS
FITZGERALDO G. SANCHEZ
76084
LICENSED
PROFESSIONAL ENGINEER

Fitzgeraldo G. Sanchez 04-03-02
Fitzgeraldo G. Sanchez, P.E. Date

©2000
Texas Department of Transportation

# ILLUMINATION LAYOUT

SHEET 20E OF 24

| FED. RD. DIV. NO. | FEDERAL AID PROJECT NO. | | SHEET NO. |
|---|---|---|---|
| 6 | NH 2000(704), etc. | | 622E |
| STATE | DIST. | COUNTY | |
| TEXAS | SAT | BEXAR | |
| CONT. | SECT. | JOB | HIGHWAY NO. |
| 2452 | 01 | 036, etc. | LP 1604 |

LEVELS DISPLAYED
1 2 3 4 5 6 7 8 9 10 11 12 13 14 15 16
17 18 19 20 21 22 23 24 25 26 27 28 29 30 31 32
33 34 35 36 37 38 39 40 41 42 43 44 45 46 47 48
49 50 51 52 53 54 55 56 57 58 59 60 61 62 63

ACC: t:\oo\design\lp1604fm471-90\
FILE: ILLUM46A.DGN

## LEGEND

| | |
|---|---|
| ●—■—● | RDWY ILLUM ASSEM (TY SA 15T-3-3)(.4 KW)S |
| ●—■ | RDWY ILLUM ASSEM (TY SA 15T-3)(.4 KW)S |
| ○—□ | RDWY ILLUM ASSEM (TY SA 12T-3)(.25 KW)S |
| ▲ | RDWY ILLUM ASSEM U/P (TY SPL-CO)(.15 KW)S(TY-1) |
| ■ | GROUND BOX |
| ⊠ | JUNCTION BOX (SUBSIDIARY) TO (ITEM 618) |
| — — — — — | PVC & CONDUCTOR (TRENCHED) |
| = = = = = | CONDUIT RMC & CONDUCTOR (PUSH-BORE) |
| ⬡ | ELECTRIC SERVICE (TY S) |
| □/ | FUSED DISCONNECT SWITCH [SEE RID (4)-98 (M)] |
| ① | CONDUIT RUN NUMBER |
| 400 | LIGHT NUMBER / CIRCUIT NUMBER |

## RDWY ILLUMINATION ASSEMBLY SUMMARY

| POLE | ℄ STATION | TYPE | REMARKS |
|---|---|---|---|
| 33 | 26+255 LP 1604 | (TY SA 15T-3)(.4 KW) S | 5 M LT |
| 34 | 26+345 LP 1604 | (TY SA 15T-3)(.4 KW) S | 5 M LT |
| 40 | 26+345 LP 1604 | (TY SA 15T-3 (.4 KW) S | 60 M LT |
| 41 | 26+255 LP 1604 | (TY SA 15T-3 (.4 KW) S | 60 M LT |
| | | | |
| | | | |
| | | | |

## ESTIMATED QUANTITIES

| ITEM # | ITEM | UNIT | QTY. |
|---|---|---|---|
| 0610-5003 | RDWY ILLUM ASSEM (TY SA 15T-3)(.4 KW) S | EA | 4 |
| 0618-5009 | CONDUIT (PVC)(SCHD 40)(32 MM) | M | 256 |
| 0620-5003 | ELECT CONDR (NO. 8) BARE | M | 256 |
| 0620-5009 | ELECT CONDR (NO. 8) INSULATED | M | 512 |
| 0624-5001 | GROUND BOX TY A (122311) W/APRON | EA | 1 |
| 0628-5056 | ELEC SERV TYS(240/480)060(NS)GS(T)TP(O) | EA | 1 |
| 0656-5010 | FND FOR RDWY ILL ASM (TY A)(750 MM DR SH) | M | 8 |

QUANTITIES THIS SHEET
CSJ 2452-01-036

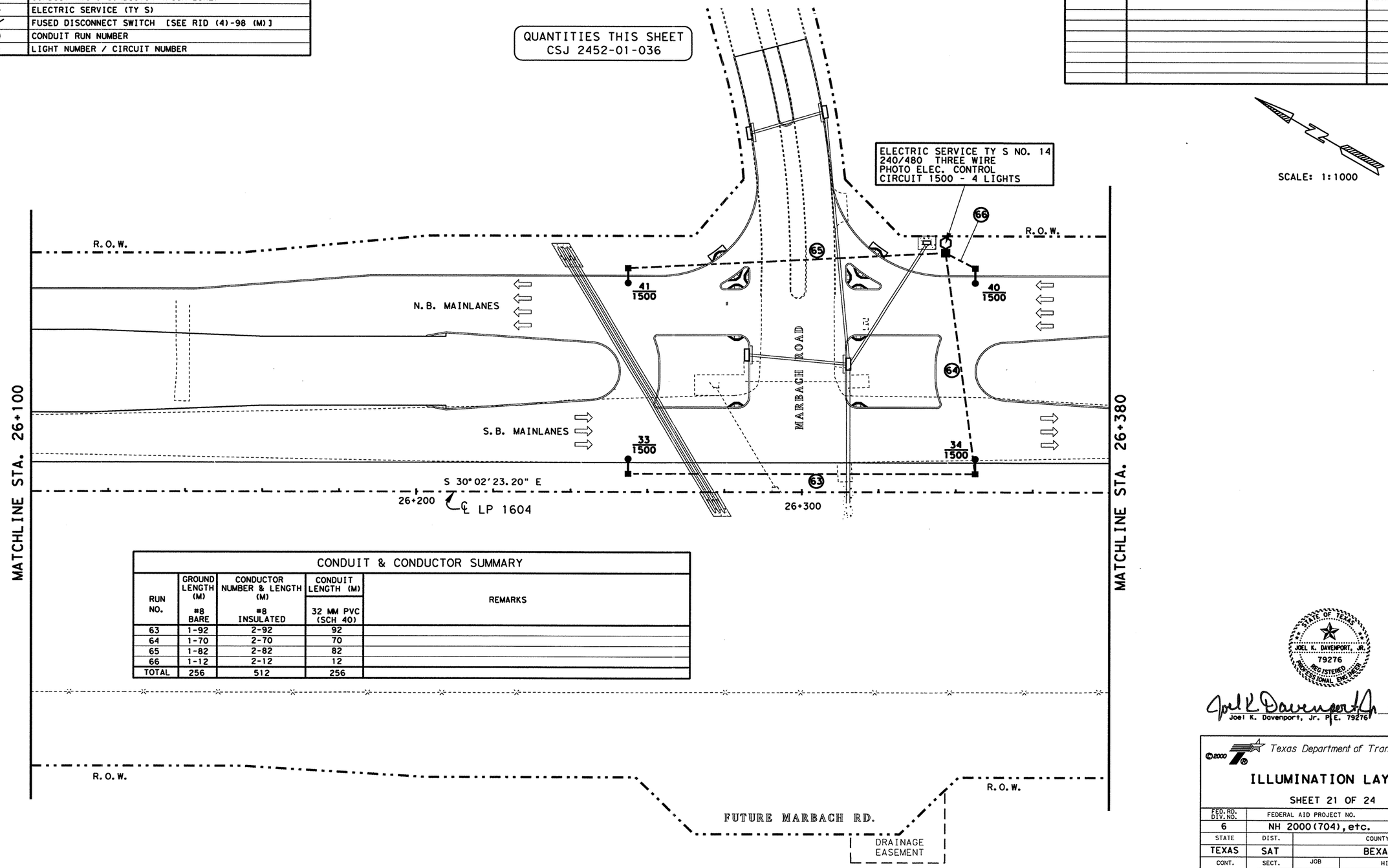


SCALE: 1:1000

## CONDUIT & CONDUCTOR SUMMARY

| RUN NO. | GROUND LENGTH (M) #8 BARE | CONDUCTOR NUMBER & LENGTH (M) #8 INSULATED | CONDUIT LENGTH (M) 32 MM PVC (SCH 40) | REMARKS |
|---|---|---|---|---|
| 63 | 1-92 | 2-92 | 92 | |
| 64 | 1-70 | 2-70 | 70 | |
| 65 | 1-82 | 2-82 | 82 | |
| 66 | 1-12 | 2-12 | 12 | |
| TOTAL | 256 | 512 | 256 | |

STATE OF TEXAS
JOEL K. DAVENPORT, JR.
79276
REGISTERED
PROFESSIONAL ENGINEER

Joel K. Davenport Jr. 9/18/00
Joel K. Davenport, Jr. P.E. 79276 Date

Texas Department of Transportation

# ILLUMINATION LAYOUT

SHEET 21 OF 24

| FED. RD. DIV. NO. | FEDERAL AID PROJECT NO. | | SHEET NO. |
|---|---|---|---|
| 6 | NH 2000(704), etc. | | 623 |
| STATE | DIST. | COUNTY | |
| TEXAS | SAT | BEXAR | |
| CONT. | SECT. | JOB | HIGHWAY NO. |
| 2452 | 01 | 036, etc. | LP 1604 |

FILE: t:\ao\design\lp1604fm471-90\illumination\illum21.dgn 14 SEP 2000
LEVEL DISPLAYED 1 2 3 4 5 6 7 8 9 10 11 12 13 14 15 16 17 18 19 20 21 22 23 24 25 26 27 28 29 30 31 32
33 34 35 55 63 76 83 94 104 142 243 344 445 546 647 748 849 950 1051 1526 2535 4555 6575 8596 9606 1163 63

## LEGEND

| | |
|---|---|
| ●—■—● | RDWY ILLUM ASSEM (TY SA 15T-3-3)(.4 KW)S |
| ●—■ | RDWY ILLUM ASSEM (TY SA 15T-3)(.4 KW)S |
| ○—□ | RDWY ILLUM ASSEM (TY SA 12T-3)(.25 KW)S |
| ▲ | RDWY ILLUM ASSEM U/P (TY SPL-CO)(.15 KW)S(TY-1) |
| ■ | GROUND BOX |
| ⊠ | JUNCTION BOX (SUBSIDIARY) TO (ITEM 618) |
| — — — — | PVC & CONDUCTOR (TRENCHED) |
| = = = = = | CONDUIT RMC & CONDUCTOR (PUSH-BORE) |
| ⬡ | ELECTRIC SERVICE (TY S) |
| □/ | FUSED DISCONNECT SWITCH [SEE RID (4)-98 (M)] |
| (1) | CONDUIT RUN NUMBER |
| 1/400 | LIGHT NUMBER / CIRCUIT NUMBER |

## RDWY ILLUMINATION ASSEMBLY SUMMARY

| POLE | ℄ STATION | TYPE | REMARKS |
|---|---|---|---|
| 33 | 26+255 LP 1604 | (TY SA 15T-3)(.4 KW) S | 3 M LT REVISED FROM ORIGINAL PLANS DUE TO ROAD WIDENING |
| 34 | 26+345 LP 1604 | (TY SA 15T-3)(.4 KW) S | 3 M LT REVISED FROM ORIGINAL PLANS DUE TO ROAD WIDENING |
| 40 | 26+345 LP 1604 | (TY SA 15T-3 (.4 KW) S | 60 M LT |
| 41 | 26+255 LP 1604 | (TY SA 15T-3 (.4 KW) S | 60 M LT |

## ESTIMATED QUANTITIES

| ITEM # | ITEM | UNIT | QTY. |
|---|---|---|---|
| 0610-5003 | RDWY ILLUM ASSEM (TY SA 15T-3)(.4 KW) S | EA | 4 |
| 0618-5009 | CONDUIT (PVC) (SCHD 40) (32 MM) | M | 260 |
| 0620-5003 | ELECT CONDR (NO. 8) BARE | M | 260 |
| 0620-5009 | ELECT CONDR (NO. 8) INSULATED | M | 520 |
| 0624-5001 | GROUND BOX TY A (122311) W/APRON | EA | 1 |
| 0628-5056 | ELEC SERV TYS(240/480)060(NS)GS(T)TP(O) | EA | 1 |
| 0656-5010 | FND FOR RDWY ILL ASM (TY A)(750 MM DR SH) | M | 8 |

QUANTITIES THIS SHEET
CSJ 2452-01-036

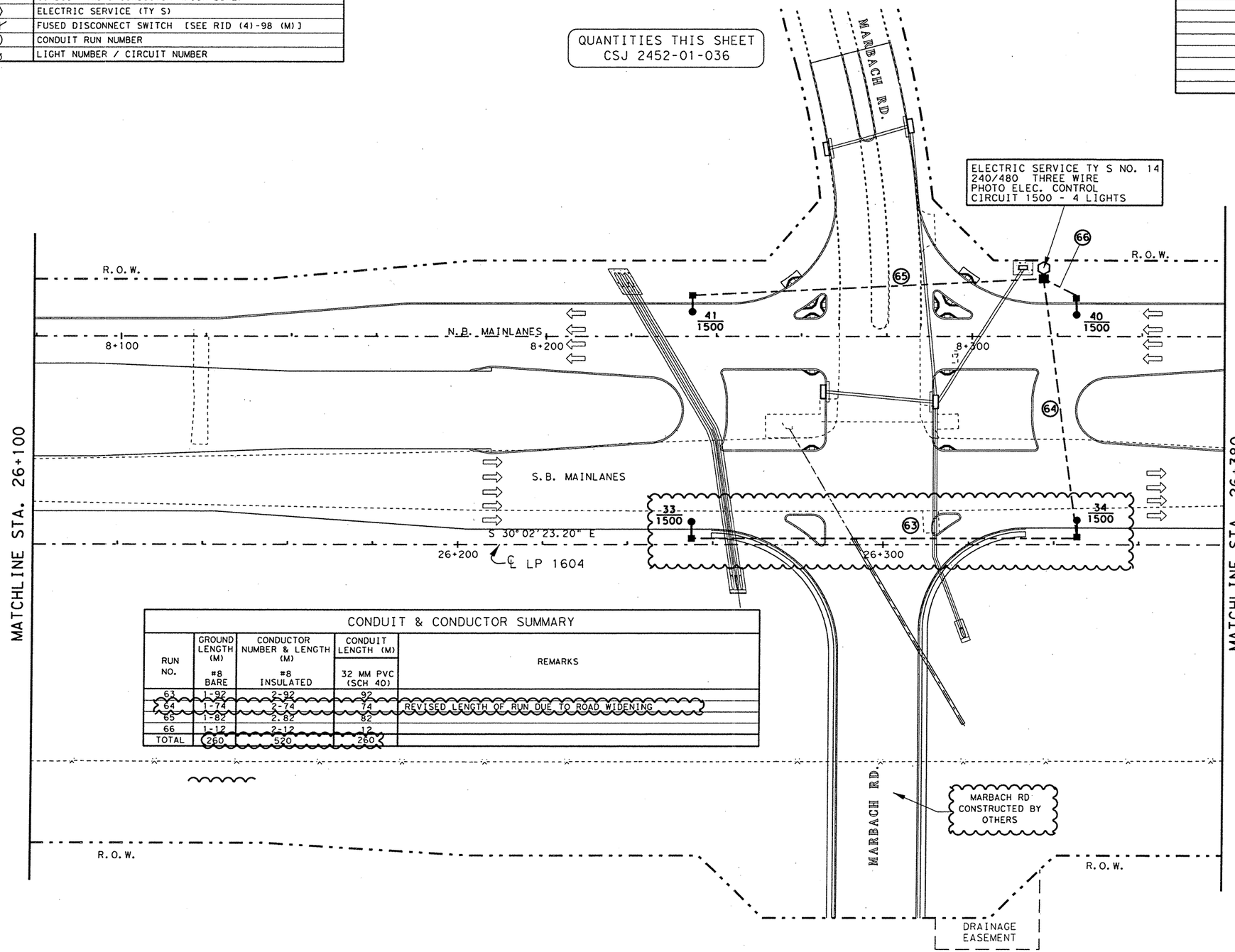


SCALE: 1:1000

## CONDUIT & CONDUCTOR SUMMARY

| RUN NO. | GROUND LENGTH (M) #8 BARE | CONDUCTOR NUMBER & LENGTH (M) #8 INSULATED | CONDUIT LENGTH (M) 32 MM PVC (SCH 40) | REMARKS |
|---|---|---|---|---|
| 63 | 1-92 | 2-92 | 92 | |
| 64 | 1-74 | 2-74 | 74 | REVISED LENGTH OF RUN DUE TO ROAD WIDENING |
| 65 | 1-82 | 2-82 | 82 | |
| 66 | 1-12 | 2-12 | 12 | |
| TOTAL | 260 | 520 | 260 | |

CHANGE ORDER NO. 122

- -UPDATED INTERSECTION WITH WORK CONSTRUCTED BY OTHERS
- -REVISED ILLUMINATION DETAILS
- -REVISED QUANTITIES

CHANGE ORDER 122

REVISED SHEET

STATE OF TEXAS
FITZGERALDO G. SANCHEZ
76084
LICENSED
PROFESSIONAL ENGINEER

Fitzgeraldo G. Sanchez 04-03-06
Fitzgeraldo G. Sanchez, P.E. Date

©2000
Texas Department of Transportation

ILLUMINATION LAYOUT

SHEET 21A OF 24

| FED.RD. DIV.NO. | FEDERAL AID PROJECT NO. | | SHEET NO. |
|---|---|---|---|
| 6 | NH 2000(704), etc. | | 623A |
| STATE | DIST. | COUNTY | |
| TEXAS | SAT | BEXAR | |
| CONT. | SECT. | JOB | HIGHWAY NO. |
| 2452 | 01 | 036, etc. | LP 1604 |

3-17-06

FILE $FILE$ $DATE$
LEVEL DISPLAYED
1 2 3 4 5 6 7 8 9 10 11 12 13 14 15 16 17 18 19 20 21 22 23 24 25 26 27 28 29 30 31 32
33 34 35 36 37 38 39 40 41 42 43 44 45 46 47 48 49 50 51 52 53 54 55 56 57 58 59 60 61 62 63

## LEGEND

| | |
|---|---|
| ●—■—● | RDWY ILLUM ASSEM (TY SA 15T-3-3)(.4 KW)S |
| ●—■ | RDWY ILLUM ASSEM (TY SA 15T-3)(.4 KW)S |
| ○—□ | RDWY ILLUM ASSEM (TY SA 12T-3)(.25 KW)S |
| ▲ | RDWY ILLUM ASSEM U/P (TY SPL-CO)(.15 KW)S(TY-1) |
| ■ | GROUND BOX |
| ⊠ | JUNCTION BOX (SUBSIDIARY) TO (ITEM 618) |
| — — — — | PVC & CONDUCTOR (TRENCHED) |
| = = = = = | CONDUIT RMC & CONDUCTOR (PUSH-BORE) |
| ⬡ | ELECTRIC SERVICE (TY S) |
| □/ | FUSED DISCONNECT SWITCH [SEE RID (4)-98 (M)] |
| ① | CONDUIT RUN NUMBER |
| 400 | LIGHT NUMBER / CIRCUIT NUMBER |

## RDWY ILLUMINATION ASSEMBLY SUMMARY

| POLE | ℄ STATION | TYPE | REMARKS |
|---|---|---|---|
| 39 | 27+280 LP 1604 | (TY SA 12T-3)(.25 KW) S | 50 M LT |

## ESTIMATED QUANTITIES

| ITEM # | ITEM | UNIT | QTY. |
|---|---|---|---|
| 0610-5003 | RDWY ILLUM ASSEM ( TY SA 12 T-3)(.25 KW) S | EA | 1 |
| 0618-5009 | CONDUIT (PVC)(SCHD 40)(32 MM) | M | 10 |
| 0620-5003 | ELECT CONDR (NO 8) BARE | M | 10 |
| 0620-5009 | ELECT CONDR (NO 8) INSULATED | M | 20 |
| 0624-5001 | GROUND BOX TY A (122311) W/APRON | EA | 1 |
| 0628-5056 | ELECT SERV TY S (240/480) 060(NS)GS(T)TP(O) | EA | 1 |
| 0656-5010 | FND FOR RDWY ILL ASM (TY A)(750 MM DR SH) | M | 2 |

QUANTITIES THIS SHEET
CSJ 2452-01-036

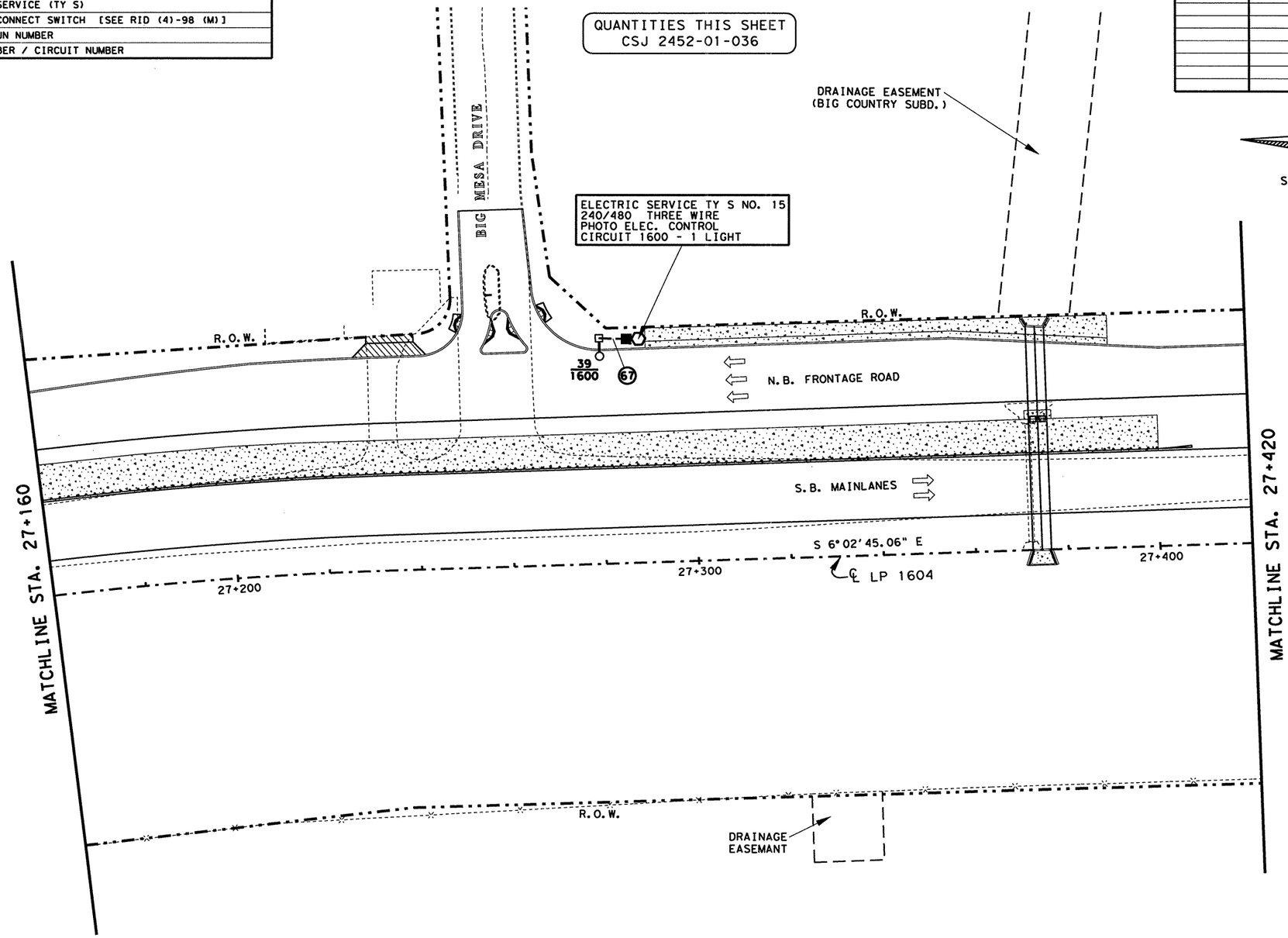


SCALE: 1:1000

STATE OF TEXAS
JOEL K. DAVENPORT, JR.
79276
REGISTERED
PROFESSIONAL ENGINEER

Joel K Davenport Jr 9/18/00
Joel K. Davenport, Jr. P.E. 79276 Date

©2000
Texas Department of Transportation

# ILLUMINATION LAYOUT

SHEET 22 OF 24

| FED. RD. DIV. NO. | FEDERAL AID PROJECT NO. | | SHEET NO. |
|---|---|---|---|
| 6 | NH 2000(704), etc. | | 624 |
| STATE | DIST. | COUNTY | |
| TEXAS | SAT | BEXAR | |
| CONT. | SECT. | JOB | HIGHWAY NO. |
| 2452 | 01 | 036, etc. | LP 1604 |

FILE t:\oa\design\lp1604fm471-90\illumination\illum22.dgn 14 SEP 2000
LEVEL DISPLAYED
1 2 3 4 5 6 7 8 9 10 11 12 13 14 15 16 17 18 19 20 21 22 23 24 25 26 27 28 29 30 31 32
33 34 35 55 63 73 83 93 94 01 41 42 43 44 45 46 47 48 49 50 51 52 53 54 55 56 57 58 59 60 61 62 63

## LEGEND

| | |
|---|---|
| ●—■—● | RDWY ILLUM ASSEM (TY SA 15T-3-3)(.4 KW)S |
| ●—■ | RDWY ILLUM ASSEM (TY SA 15T-3)(.4 KW)S |
| ○—□ | RDWY ILLUM ASSEM (TY SA 12T-3)(.25 KW)S |
| ▲ | RDWY ILLUM ASSEM U/P (TY SPL-CO)(.15 KW)S(TY-1) |
| ■ | GROUND BOX |
| ⊠ | JUNCTION BOX (SUBSIDIARY) TO (ITEM 618) |
| — — — | PVC & CONDUCTOR (TRENCHED) |
| = = = = = | CONDUIT RMC & CONDUCTOR (PUSH-BORE) |
| ⬡ | ELECTRIC SERVICE (TY S) |
| □/ | FUSED DISCONNECT SWITCH [SEE RID (4)-98 (M)] |
| ① | CONDUIT RUN NUMBER |
| 400 | LIGHT NUMBER / CIRCUIT NUMBER |

## RDWY ILLUMINATION ASSEMBLY SUMMARY

| POLE | ℄ STATION | TYPE | REMARKS |
|---|---|---|---|
| 39 | 27+280 LP 1604 | (TY SA 12T-3)(.25 KW) S | 50 M LT |
| 84 | 27+240 LP 1604 | (TY SA 12T-3)(.25 KW) S | 4 M LT |

## ESTIMATED QUANTITIES

| ITEM # | ITEM | UNIT | QTY. |
|---|---|---|---|
| 0610-5003 | RDWY ILLUM ASSEM (TY SA 12T-3)(.25 KW) S | EA | 2 |
| 0618-5009 | CONDUIT (PVC) (SCHD 40) (32 MM) | M | 40 |
| 0618-5026 | CONDUIT (RM) (PUSH-BORE) (50 MM) | M | 40 |
| 0620-5003 | ELECT CONDR (NO 8) BARE | M | 80 |
| 0620-5009 | ELECT CONDR (NO 8) INSULATED | M | 160 |
| 0624-5001 | GROUND BOX TY A (1223)(1) W/APRON | EA | 1 |
| 0628-5056 | ELECT SERV TY S (240/480) 060(NS)GS(T)TP(O) | EA | 1 |
| 0656-5010 | FND FOR RDWY ILL ASM (TY A)(750 MM DR SH) | M | 4 |

QUANTITIES THIS SHEET
CSJ 2452-01-036

SCALE: 1:1000

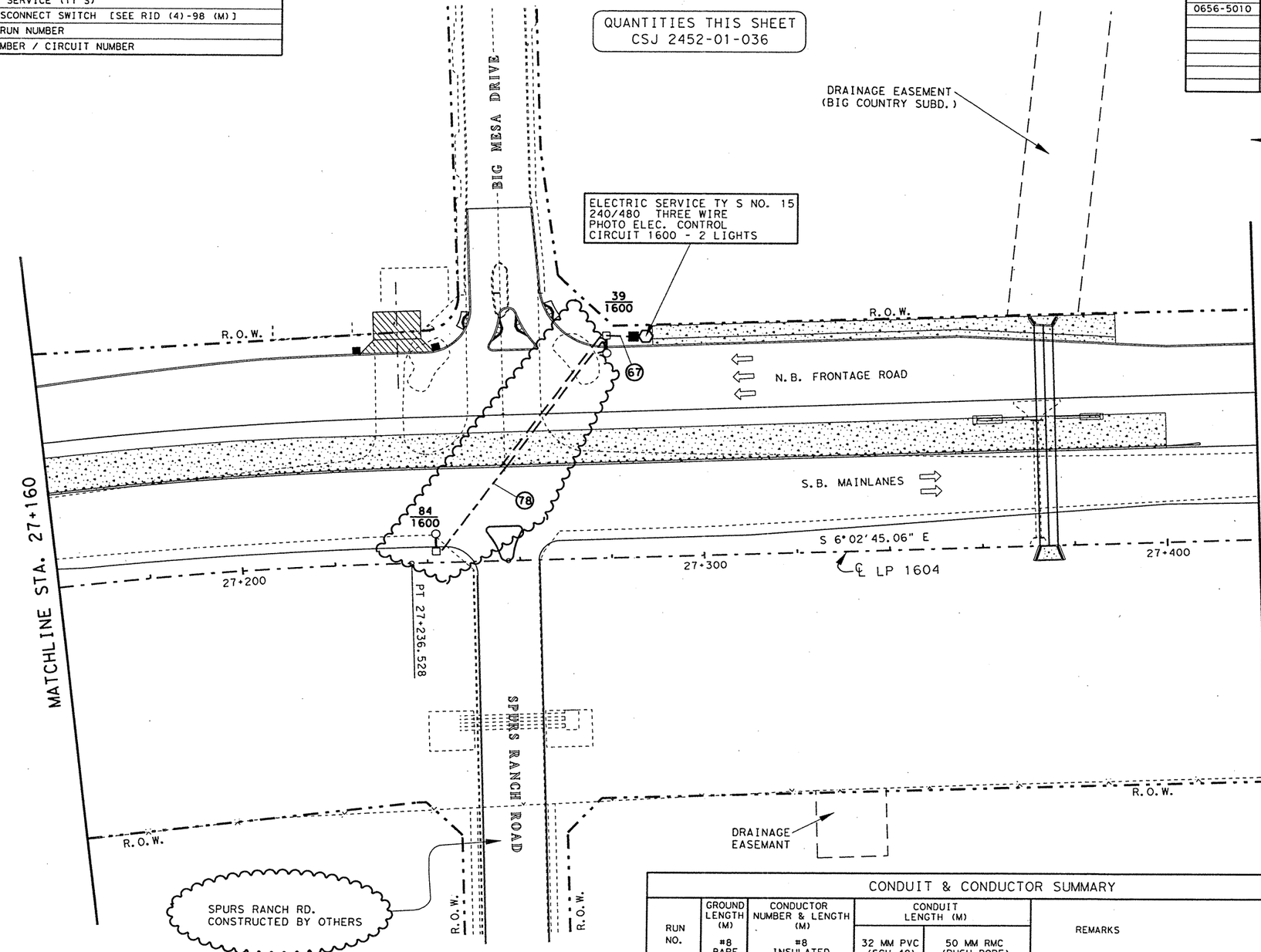


## CONDUIT & CONDUCTOR SUMMARY

| RUN NO. | GROUND LENGTH (M) #8 BARE | CONDUCTOR NUMBER & LENGTH (M) #8 INSULATED | CONDUIT LENGTH (M) 32 MM PVC (SCH 40) | CONDUIT LENGTH (M) 50 MM RMC (PUSH-BORE) | REMARKS |
|---|---|---|---|---|---|
| 78 | 1-70 | 2-70 | 30 | 40 | |
| 67 | 1-10 | 2-10 | 10 | | |
| TOTAL | 80 | 160 | 40 | 40 | |

## CHANGE ORDER NO. 122

-ADDED NEW INTERSECTION CONSTRUCTED BY OTHERS
-ADDED/REVISED NEW ILLUMINATION DETAILS
-REVISED QUANTITIES

CHANGE ORDER 122

REVISED SHEET

STATE OF TEXAS
FITZGERALDO G. SANCHEZ
76084
LICENCED
PROFESSIONAL ENGINEER

Fitzgeraldo G. Sanchez 04-03-06
Fitzgeraldo G. Sanchez, P.E. Date

©2000

Texas Department of Transportation

## ILLUMINATION LAYOUT

SHEET 22A OF 24

| FED.RD. DIV.NO. | FEDERAL AID PROJECT NO. | SHEET NO. |
|---|---|---|
| 6 | NH 2000(704), etc. | 624A |
| STATE | DIST. | COUNTY |
| TEXAS | SAT | BEXAR |
| CONT. | SECT. | JOB / HIGHWAY NO. |
| 2452 | 01 | 036, etc. / LP 1604 |

FILE $FILE$ $DATE$
LEVEL DISPLAYED
1 2 3 4 5 6 7 8 9 10 11 12 13 14 15 16 17 18 19 20 21 22 23 24 25 26 27 28 29 30 31 32
33 34 35 36 37 38 39 40 41 42 43 44 45 46 47 48 49 50 51 52 53 54 55 56 57 58 59 60 61 62 63

## LEGEND

| | |
|---|---|
| ●—■—● | RDWY ILLUM ASSEM (TY SA 15T-3-3)(.4 KW)S |
| ●—■ | RDWY ILLUM ASSEM (TY SA 15T-3)(.4 KW)S |
| ○—□ | RDWY ILLUM ASSEM (TY SA 12T-3)(.25 KW)S |
| ▲ | RDWY ILLUM ASSEM U/P (TY SPL-CO)(.15 KW)S(TY-1) |
| ■ | GROUND BOX |
| ⊠ | JUNCTION BOX (SUBSIDIARY) TO (ITEM 618) |
| - - - - - | PVC & CONDUCTOR (TRENCHED) |
| = = = = = | CONDUIT RMC & CONDUCTOR (PUSH-BORE) |
| ⬡ | ELECTRIC SERVICE (TY S) |
| □/ | FUSED DISCONNECT SWITCH [SEE RID (4)-98 (M)] |
| ① | CONDUIT RUN NUMBER |
| 400 | LIGHT NUMBER / CIRCUIT NUMBER |

## RDWY ILLUMINATION ASSEMBLY SUMMARY

| POLE | ℄ STATION | TYPE | REMARKS |
|---|---|---|---|
| 39 | 27+280 LP 1604 | (TY SA 12T-3)(.25 KW) S | 50 M LT |
| 84 | 27+240 LP 1604 | (TY SA 12T-3)(.25 KW) S | 4 M LT |

## ESTIMATED QUANTITIES

| ITEM # | ITEM | UNIT | QTY. |
|---|---|---|---|
| 0610-5003 | RDWY ILLUM ASSEM (TY SA 12T-3)(.25 KW) S | EA | 2 |
| 0618-5009 | CONDUIT (PVC)(SCHD 40)(32 MM) | M | 70 ~~40~~ |
| 0618-5026 | CONDUIT (RM)(PUSH-BORE)(50 MM) | M | 0 ~~40~~ |
| 0620-5003 | ELECT CONDR (NO 8) BARE | M | 70 ~~80~~ |
| 0620-5009 | ELECT CONDR (NO 8) INSULATED | M | 140 ~~160~~ |
| 0624-5001 | GROUND BOX TY A (122311) W/APRON | EA | 2 ~~1~~ |
| 0628-5056 | ELECT SERV TY S (240/480) 060(NS)GS(T)TP(O) | EA | 2 ~~1~~ |
| ~~0650-5010~~ | ~~FND FOR RDWY ILL ASM TY A (150 MM DR SH)~~ | ~~M~~ | ~~4~~ |

QUANTITIES THIS SHEET
CSJ 2452-01-036

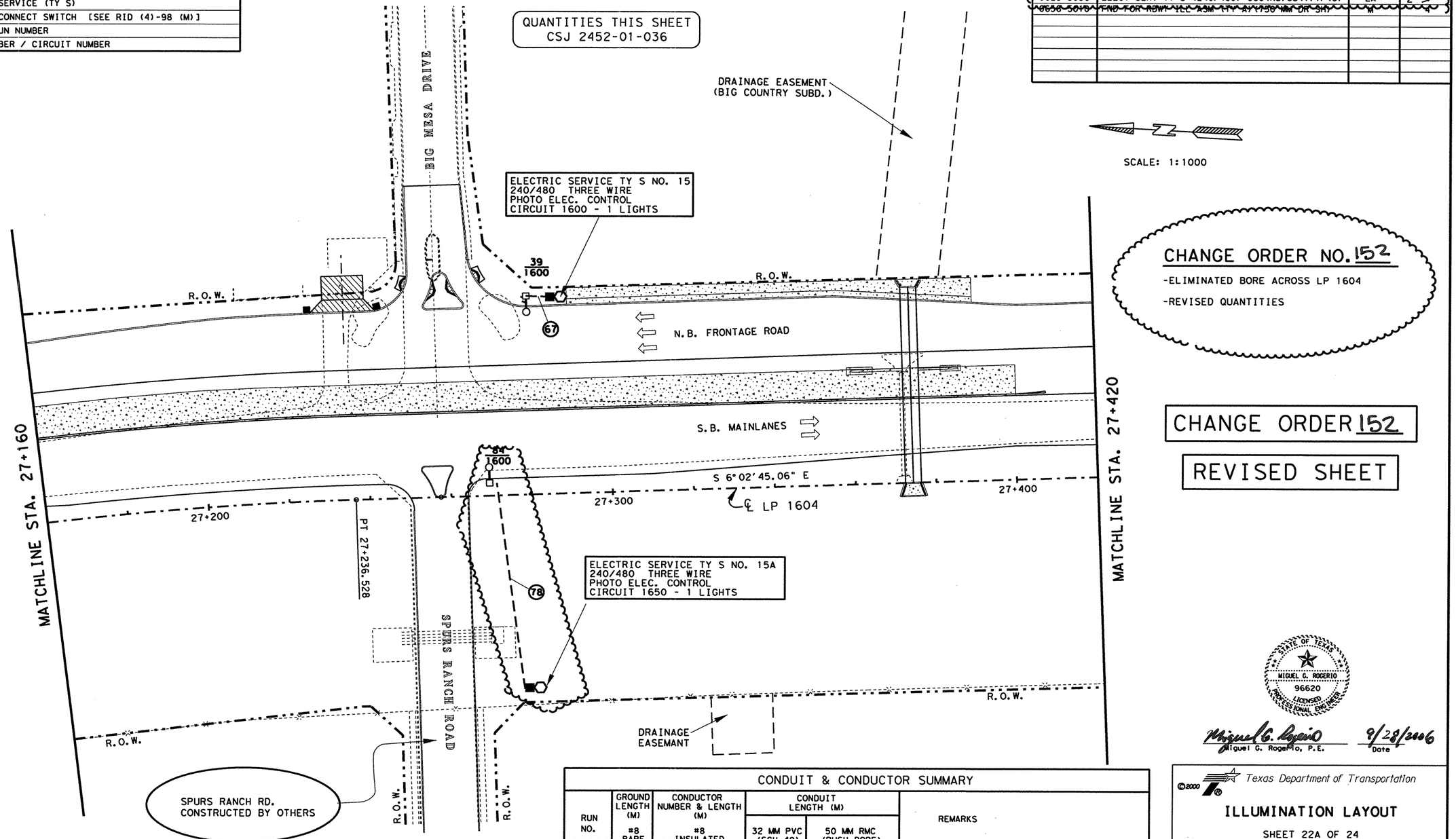


SCALE: 1:1000

## CONDUIT & CONDUCTOR SUMMARY

| RUN NO. | GROUND LENGTH (M) #8 BARE | CONDUCTOR NUMBER & LENGTH (M) #8 INSULATED | CONDUIT LENGTH (M) 32 MM PVC (SCH 40) | CONDUIT LENGTH (M) 50 MM RMC (PUSH-BORE) | REMARKS |
|---|---|---|---|---|---|
| 78 | 1-~~70~~ 60 | 2-~~70~~ 60 | ~~30~~ 60 | ~~40~~ 0 | |
| 67 | 1-10 | 2-10 | 10 | | |
| TOTAL | ~~80~~ 70 | ~~160~~ 140 | ~~40~~ 70 | ~~40~~ 0 | |

CHANGE ORDER NO. 152

-ELIMINATED BORE ACROSS LP 1604

-REVISED QUANTITIES

CHANGE ORDER 152

REVISED SHEET

STATE OF TEXAS
MIGUEL G. ROGERIO
96620
LICENSED
PROFESSIONAL ENGINEER

Miguel G. Rogerio 9/28/2006
Miguel G. Rogerio, P.E. Date

Texas Department of Transportation

# ILLUMINATION LAYOUT

SHEET 22A OF 24

| FED.RD. DIV.NO. | FEDERAL AID PROJECT NO. | | SHEET NO. |
|---|---|---|---|
| 6 | NH 2000(704), etc. | | 624~~0~~ 4A |
| STATE | DIST. | COUNTY | |
| TEXAS | SAT | BEXAR | |
| CONT. | SECT. | JOB | HIGHWAY NO. |
| 2452 | 01 | 036, etc. | LP 1604 |

3/17/06

FILE: T:\AO\Design\dp1204fm471-90\illumination\illum228.dgn 9/20/2006

LEVEL DISPLAYED: 1 2 3 4 5 6 7 8 9 10 11 12 13 14 15 16 17 18 19 20 21 22 23 24 25 26 27 28 29 30 31 32 33 34 35 36 37 38 39 40 41 42 43 44 45 46 47 48 49 50 51 52 53 54 55 56 57 58 59 60 61 62 63

## LEGEND

| | |
|---|---|
| ●—■—● | RDWY ILLUM ASSEM (TY SA 15T-3-3)(.4 KW)S |
| ●—■ | RDWY ILLUM ASSEM (TY SA 15T-3)(.4 KW)S |
| ○—□ | RDWY ILLUM ASSEM (TY SA 12T-3)(.25 KW)S |
| ▲ | RDWY ILLUM ASSEM U/P (TY SPL-CO)(.15 KW)S(TY-1) |
| ■ | GROUND BOX |
| ⊠ | JUNCTION BOX (SUBSIDIARY) TO (ITEM 618) |
| — — — — | PVC & CONDUCTOR (TRENCHED) |
| = = = = = | CONDUIT RMC & CONDUCTOR (PUSH-BORE) |
| ⬡ | ELECTRIC SERVICE (TY S) |
| □/ | FUSED DISCONNECT SWITCH [SEE RID (4)-98 (M)] |
| ① | CONDUIT RUN NUMBER |
| 400 | LIGHT NUMBER / CIRCUIT NUMBER |

## RDWY ILLUMINATION ASSEMBLY SUMMARY

| POLE | ℄ STATION | TYPE | REMARKS |
|---|---|---|---|
| 38 | 27+720 LP 1604 | (TY SA 12T-3)(.25 KW) S | 64 M LT |

## ESTIMATED QUANTITIES

| ITEM # | ITEM | UNIT | QTY. |
|---|---|---|---|
| 0610-5003 | RDWY ILLUM ASSEM ( TY SA 12 T-3)(.25 KW) S | EA | 1 |
| 0618-5009 | CONDUIT (PVC)(SCHD 40)(32 MM) | M | 230 |
| 0620-5003 | ELECT CONDR (NO 8) BARE | M | 230 |
| 0620-5009 | ELECT CONDR (NO 8) INSULATED | M | 460 |
| 0624-5001 | GROUND BOX TY A (122311) W/APRON | EA | 2 |
| 0628-5056 | ELECT SERV TY S (240/480) 060(NS)GS(T)TP(O) | EA | 1 |
| 0656-5010 | FND FOR RDWY ILL ASM (TY A)(750 MM DR SH) | M | 2 |

QUANTITIES THIS SHEET
CSJ 2452-01-036

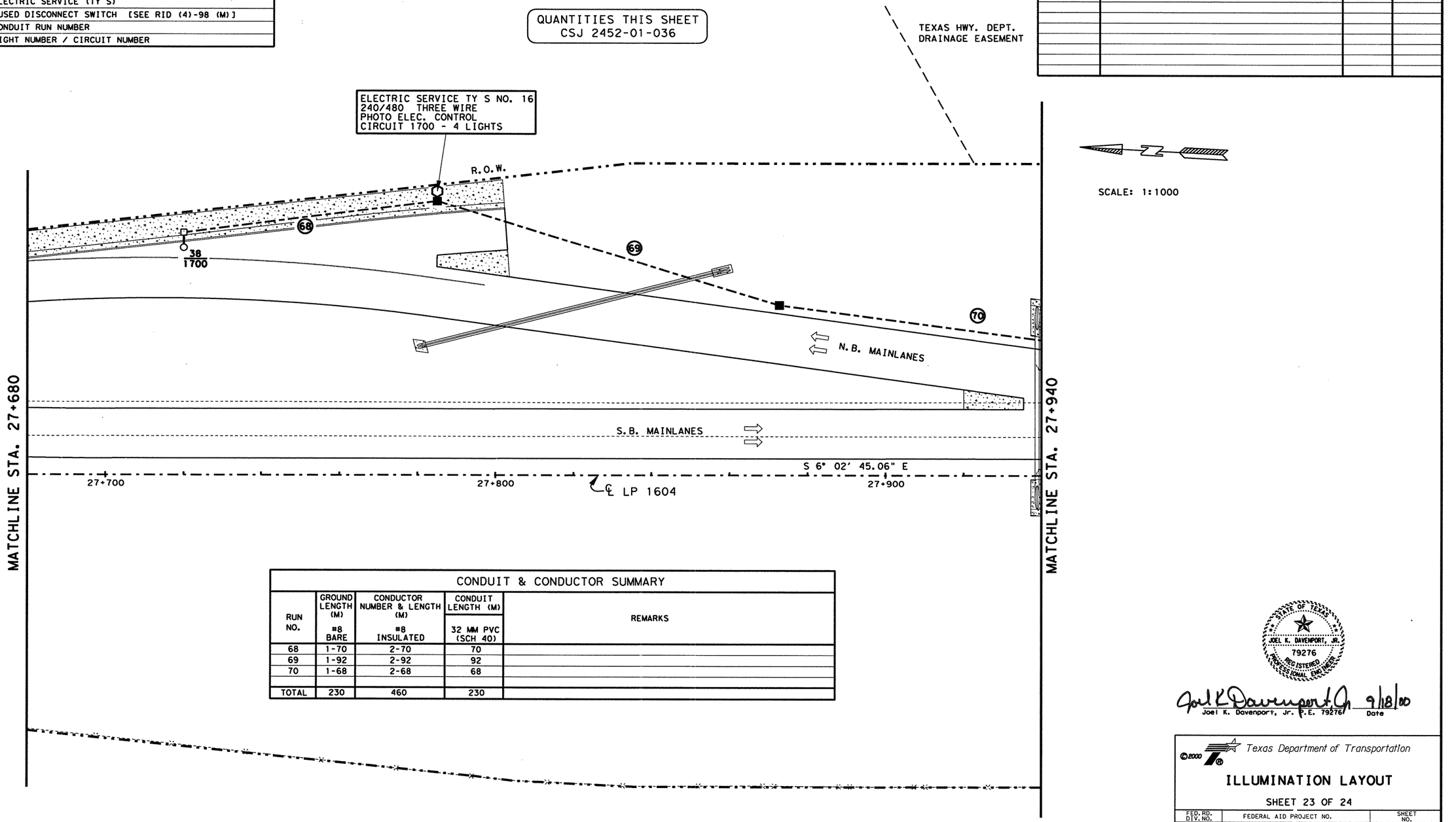


SCALE: 1:1000

## CONDUIT & CONDUCTOR SUMMARY

| RUN NO. | GROUND LENGTH (M) #8 BARE | CONDUCTOR NUMBER & LENGTH (M) #8 INSULATED | CONDUIT LENGTH (M) 32 MM PVC (SCH 40) | REMARKS |
|---|---|---|---|---|
| 68 | 1-70 | 2-70 | 70 | |
| 69 | 1-92 | 2-92 | 92 | |
| 70 | 1-68 | 2-68 | 68 | |
| | | | | |
| TOTAL | 230 | 460 | 230 | |

STATE OF TEXAS
JOEL K. DAVENPORT, JR.
79276
REGISTERED
PROFESSIONAL ENGINEER

Joel K Davenport Jr 9/18/00
Joel K. Davenport, Jr. P.E. 79276 Date

©2000
Texas Department of Transportation

# ILLUMINATION LAYOUT

SHEET 23 OF 24

| FED.RD. DIV.NO. | FEDERAL AID PROJECT NO. | | SHEET NO. |
|---|---|---|---|
| 6 | NH 2000(104),etc. | | 625 |
| STATE | DIST. | COUNTY | |
| TEXAS | SAT | BEXAR | |
| CONT. | SECT. | JOB | HIGHWAY NO. |
| 2452 | 01 | 036,etc. | LP 1604 |

FILE: t:\ao\design\lp1604fm471-90\illumination\illum23.dgn 14 SEP 2000
LEVEL DISPLAYED
1 2 3 4 5 6 7 8 9 10 11 12 13 14 15 16 17 18 19 20 21 22 23 24 25 26 27 28 29 30 31 32
33 34 35 36 37 38 39 40 41 42 43 44 45 46 47 48 49 50 51 52 53 54 55 56 57 58 59 60 61 62 63

| LEGEND | |
|---|---|
| ●—■—● | RDWY ILLUM ASSEM (TY SA 15T-3-3)(.4 KW)S |
| ●—■ | RDWY ILLUM ASSEM (TY SA 15T-3)(.4 KW)S |
| ○—□ | RDWY ILLUM ASSEM (TY SA 12T-3)(.25 KW)S |
| ▲ | RDWY ILLUM ASSEM U/P (TY SPL-CO)(.15 KW)S(TY-1) |
| ■ | GROUND BOX |
| ⊠ | JUNCTION BOX (SUBSIDIARY) TO (ITEM 618) |
| — — — — | PVC & CONDUCTOR (TRENCHED) |
| = = = = = = | CONDUIT RMC & CONDUCTOR (PUSH-BORE) |
| ⬡ | ELECTRIC SERVICE (TY S) |
| □/ | FUSED DISCONNECT SWITCH [SEE RID (4)-98 (M)] |
| ① | CONDUIT RUN NUMBER |
| 400 | LIGHT NUMBER / CIRCUIT NUMBER |

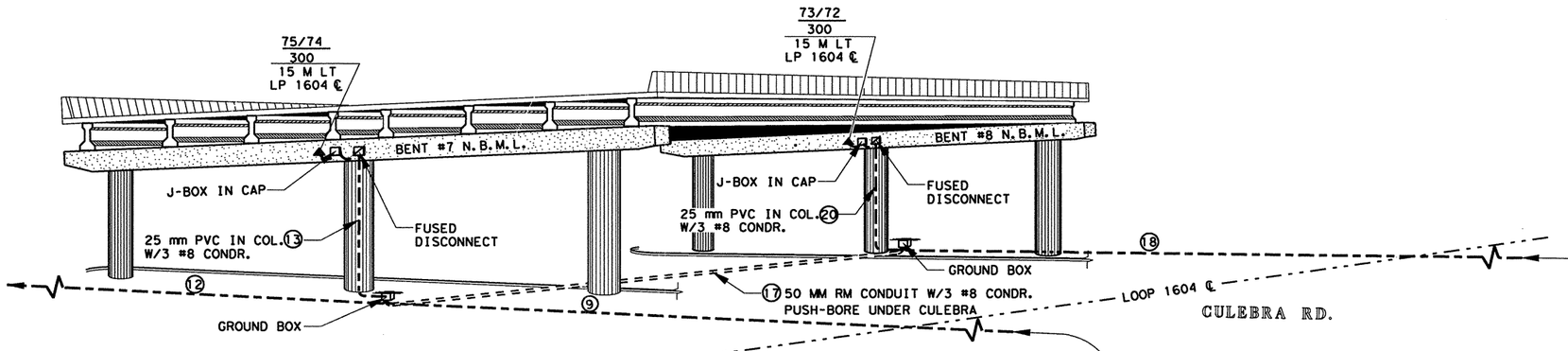


NORTH BOUND MAINLANES
SERVICE LEAD FOR ILLUM ASSEM
U/P (TY SPL-CO)(.15 KW)S(TY-1)

N.B. BRIDGE OVER CULEBRA RD
BENT 7 & 8 CIRCUIT 300
FOR BRIDGE LAYOUT, SEE SHEETS 483 THRU 485.

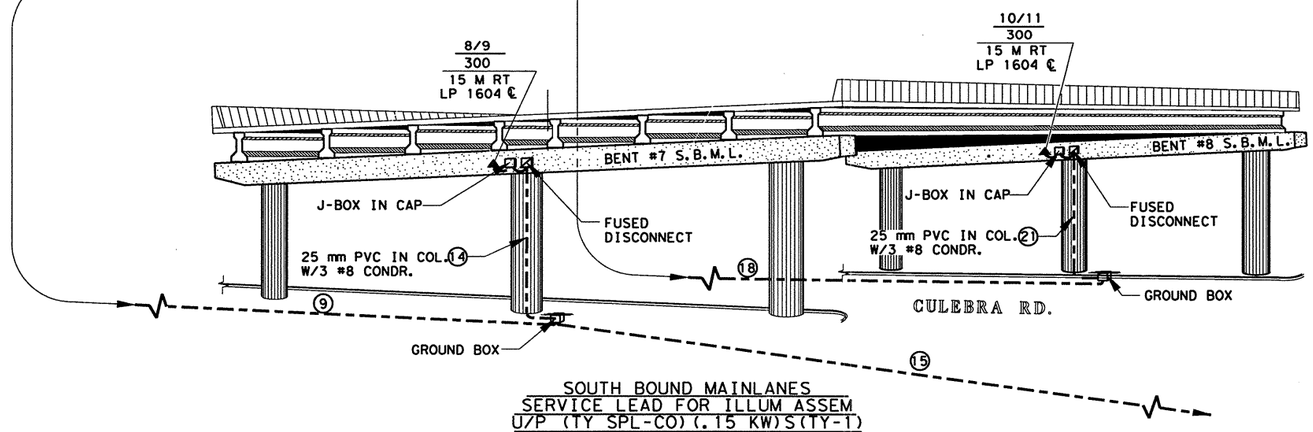


SOUTH BOUND MAINLANES
SERVICE LEAD FOR ILLUM ASSEM
U/P (TY SPL-CO)(.15 KW)S(TY-1)

S.B. BRIDGE OVER CULEBRA RD
BENT 7 & 8 CIRCUIT 300
FOR BRIDGE LAYOUT, SEE SHEETS 495 THRU 497.

STATE OF TEXAS
JOEL K. DAVENPORT, JR.
79276
REGISTERED
PROFESSIONAL ENGINEER

Joel K. Davenport, Jr. 9/18/00
Joel K. Davenport, Jr. P.E. 79276 Date

©2000 Texas Department of Transportation

# LOOP 1604 / CULEBRA ILLUMINATION DETAILS

| FED. RD. DIV. NO. | FEDERAL AID PROJECT NO. | | SHEET NO. |
|---|---|---|---|
| 6 | NH 2000(704), etc. | | 627 |
| STATE | DIST. | COUNTY | |
| TEXAS | SAT | BEXAR | |
| CONT. | SECT. | JOB | HIGHWAY NO. |
| 2452 | 01 | 036, etc. | |

FILE: t:\ao\design\lp1604fm471-90\illumination\illumisc.dgn 14 SEP 2000
LEVEL DISPLAYED 1 2 3 4 5 6 7 8 9 10 11 12 13 14 15 16 17 18 19 20 21 22 23 24 25 26 27 28 29 30 31 32 33 34 35 36 37 38 39 40 41 42 43 44 45 46 47 48 49 50 51 52 53 54 55 56 57 58 59 60 61 62 63

GENERAL:

I. SCOPE

Details herein apply to roadway lighting installations bid under the following Specification Items: Roadway Illumination Assemblies, Relocate Roadway Illumination Assemblies, Foundations for Signs, Traffic Signals and Roadway Illumination Assemblies, and Special Specifications relating to roadway lighting. All work, materials and services not shown on the plans which may be necessary for complete and proper construction shall be performed, furnished and installed by the Contractor. Faulty fabrication or poor workmanship in any material, equipment or installation will be considered justification for rejection. Material and installation shall comply with the applicable provisions of the National Electrical Code, National Electrical Manufacturers Association and, when required, Underwriters Laboratories standards. (2) Where manufacturer's provide warranties or guarantees as a customary trade practice, Contractor shall furnish to the State such warranties or guarantees.

The location of poles and fixtures are diagrammatic only and may be shifted by the Engineer to accommodate local conditions. Erection and/or removal of poles and luminaires located near overhead electrical lines shall be accomplished using established industry and utility safety practices and in accordance with laws governing such work. The Contractor shall consult with the appropriate utility company prior to beginning such work.

II. ROADWAY ILLUMINATION ASSEMBLIES

A. General

1. Structural Support Design for Luminaires. Lighting standards shall be designed in accordance with the latest issue of the AASHTO "Standard Specifications for Structural Supports for Highway Signs, Luminaires and Traffic Signals." All poles shall be designed for 129 km/h wind loads. An additional 1.3 gust factor shall be applied to the wind loads. For transformer base poles, fabricator shall include transformer base and connecting hardware in design calculations and shop drawing submittals. Manufacturer's shop drawings shall include the ASTM designations for all material to be used. See paragraph II. B. for additional requirements for the transformer base.

2. Slip Joint Poles. Poles may be fabricated in two sections and field-assembled by the lap-joint method. The two sections shall telescope together with a lap length of not less than 1-1/2 times the shaft diameter at the lap joint. The longitudinal seam weld on the outer shaft at the slip joint end shall be a full penetration weld for a minimum of the slip joint length plus 152 mm.

3. (1) Mast Arm Attachments. All poles and attachments shall be structurally designed to support two 3.5 meter mast arms and luminaires. Poles shall be supplied with mast arm combinations as shown in the plans. All mast arms shall be designed for a 245 N luminaire having an effective projected area of 0.130 square meters.

4. Minor Damage Repair. The finished pole shall have a smooth, uniform finish free of pits, blisters, or other defects. Scratched, chipped, or damaged areas on galvanized poles and mast arms shall be thoroughly cleaned by wire brushing. The cleaned area shall be painted with two coats of zinc rich paint containing a minimum of 84% metallic zinc.

5. Pole Bonding Means. All shoe base poles, including poles on concrete traffic barriers, shall have a grounding lug with 1/2-13 NC female threads inside the pole near the hand hole, minimum of 3 full threads.

6. Hand Holes. All shoe base poles shall have hand holes with reinforcing frames and covers. The openings on all poles shall be approximately 102 mm x 254 mm located approximately 254 mm from the bottom of the pole and, except for poles mounted on concrete traffic barrier, shall be placed 90 degrees to mast arm unless otherwise noted on the plans. For poles mounted on concrete median barrier, all hand holes shall be on the same side of the median.

7. CTB Poles. Poles installed on concrete traffic barrier shall also meet the requirements of CTB details.

8. J-Hooks. All poles shall be equipped with a J-hook inside the pole, near the top for supporting vertical conductors.

9. Base Plate Bolt Circle. Bolt circles for poles mounted on CTB, see CTBI (4) or SSCB (4). Poles placed on existing bridge brackets or existing foundations, bolt circle shall be coordinated with anchor bolts in place. For other bolt circles, See RID (3).

10. Steel Poles.

a. Steel poles shall be fabricated in accordance with the Item "Steel Structures." Longitudinal seam welds for pole sections shall have 60% minimum penetration, except that weld shall be full penetration within 152 mm of circumferential base plate welds. All welding shall be in accordance with the ANSI/AWS Structural Code D1.1. Two-section poles joined by circumferential welds will not be permitted, unless otherwise shown on the plans. Unless otherwise shown on the plans, poles and hardware shall be galvanized in accordance with Item 445, "Galvanizing".

b. Pole components shall be constructed using the following materials:

Shaft: ASTM A-572 Grade 50 or ASTM A-595 Grade A (345 MPa min. yield) or ASTM A36M50.

Base Plate: ASTM A-27 Grade 65-35 or ASTM A-36.

Mast Arm Connector: ASTM A-27 Grade 65-35.

Mast Arms: Steel pipe ASTM A-53 Grade A or B or ASTM A-501 with 20% elongation in 51 mm or A-513 TY I with minimum 205 MPa yield and 15% elongation in 51 mm.

Pole Cap: Pole cap shall be zinc die-cast, aluminum, or galvanized metal, secured by three stainless steel or galvanized screws.

Pole Hardware: All bolts except mast arm connection bolts shall be stainless steel or standard steel galvanized ASTM A-153 Class C or D, or B-695 Class 50. Mast arm connection bolts shall be ASTM A-325, ASTM A-321 or ASTM A-193 Grade B-7, galvanized as above. Nuts and washers shall be compatible with the bolts and shall be stainless steel or steel, galvanized as above. Lock washers shall be provided on all bolted connections.

11. Aluminum Poles.

a. Aluminum poles shall be fabricated in accordance with "Structural Welding, Aluminum" ANSI/AWS D1.2.

b. Pole components shall be constructed using the following material:

Shaft: ASTM B-221 or B-241 Alloy 6063-T6. ASTM B-209 Alloy 5086-H34. ASTM B-221 Alloy 6005-T5.

Base Flange: ASTM B-26 Alloy 356.0-T6 or ASTM B-108 Alloy A356.0-T6 (Structural strength test required).

Mast Arm Fitting: ASTM B-209 Alloy 6061-T6 or ASTM B-221 Alloy 6005-T5.

Mast Arms: ASTM B-241 Alloy 6061-T6 or Alloy 6063-T6.

Pole Cap: ASTM B-209 Alloy 5086-H32 or ASTM B-108 or B-26 Alloy 356.0-T6.

Bolts: Stainless Steel AISI 300. Bolts threading into aluminum threads shall be treated with anti-seize compound, Never-Seez Compound, Permatex 133K or equal.

12. Alternate material equal to or better than material specified may be substituted with the approval of the Engineer.

13. Installation of high Strength Bolts. The tightening of nuts on high strength bolts shall be in accordance with the Item "Structural Bolting."

14. (2) Roadway Illumination Assembly poles shall be erected plumb and true. Top of foundation shall be struck level so the pole will be plumb. Shoe base poles may use leveling nuts to plumb pole. Shims and leveling nuts shall not be used under transformer bases. Grout shall not be placed between base plate or flange and the foundation.

15. In each pole, continuous color-coded stranded No. 12 AWG copper Type XHHW or other approved XLP conductors shall be connected to the line side of each ballast.

16. Acorn nuts will not be allowed for attaching pole to transformer base or foundation. Nut covers will not be allowed.

17. Fabrication tolerances shall be as shown on Fabrication Tolerances Table.

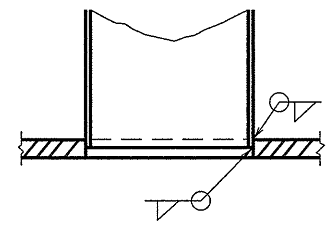

## SECTION
## POLE SHAFT TO BASE PLATE

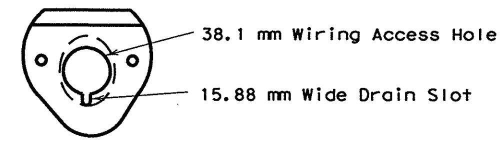


## MAST ARM CONNECTOR

Steel Poles Only
Aluminum Pole Connector
Shall Be Clamp-on Type

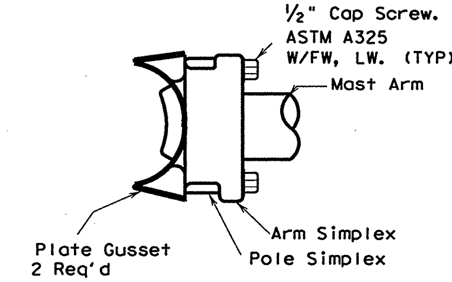


## MAST ARM TO POLE SHAFT CONNECTION

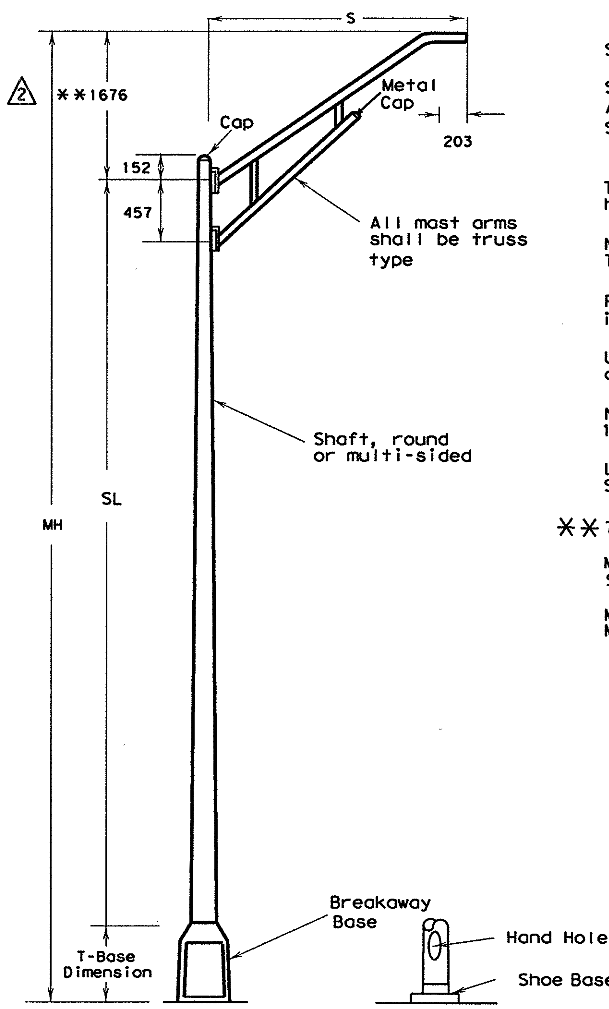


## ROADWAY ILLUMINATION ASSEMBLY

(1) 8-98, corrected dimensions

(2) 10-98: change mast arm rise, rearrange notes; shims not allowed under T-base

## EXPLANATION OF ROADWAY ILLUMINAION ASSEMBLY DESIGNATIONS

(TYPE SA 15 T - 3 - 3) (.4KW) S

SA: Pole and mast arm may be steel or aluminum.
ST: Pole and mast arm must be steel.
AL: Pole and mast arm must be aluminum.
SP: Special (ovalized) steel pole for installing on CTB. See standard sheet CTBI (4).

Two numerical digits denote mounting height in meters.

Next letter denotes type of base, (S- Shoe Base, T-Transformer Base or X-Base, B-Shoe Base Bridge Mount)

First number denotes length of mast arm in meters.

Use of second mast arm is indicated by second dashed number which denotes length in meters.

Next three figures indicate luminaire rating (1 KW= 1000 watts, .4 KW= 400 watts, etc.)

Last letter indicates the type of lamp (M- Mercury, S- High Pressure Sodium, L- Low Pressure Sodium).

✱✱762 mm for poles with 1 m mast arms.

MH = Mounting Height
SL = Shaft Length
S = Spread (Mast arm length)
MH = SL + 1524 + (T-Base dimension)
MH = SL + 1524 (Shoe Base)

All dimensions are in millimeters unless otherwise noted.

STANDARD PLANS
TEXAS DEPARTMENT OF TRANSPORTATION
*Traffic Operations Division*

# ROADWAY ILLUMINATION DETAILS

# RID(1)-98(M)

©TxDOT January 1992 DN:-RS CK:-KB DW:-FDN CK:-RS NEG NO.:

| REVISIONS | STATE DISTRICT | FEDERAL REGION | FEDERAL AID PROJECT | | SHEET |
|---|---|---|---|---|---|
| 5-93 10-98<br>10-93<br>1-96<br>8-98 | SAT | 6 | NH 2000(704), etc. | | 628 |
| | COUNTY | CONTROL | SECTION | JOB | HIGHWAY |
| | BEXAR | 2452 | 01 | 036, etc. | LP 1604 |

Metric 72A

DISCLAIMER
The use of this standard is governed by the "Texas Engineering Practice Act". No warranty of any kind is made by TxDOT for any purpose whatsoever. TxDOT assumes no responsibility for the conversion of this standard to other formats or for incorrect results or damages resulting from its use.

DATE:
ACC: d58hp1c/usr/d580504
FILE:
DN: LR CK: CW DW: DN CK: MT

DISCLAIMER
The use of this standard is governed by the "Texas Engineering Practice Act". No warranty of any kind is made by TxDOT for any purpose whatsoever. TxDOT assumes no responsibility for the conversion of this standard to other formats or for incorrect results or damages resulting from its use.

II. ROADWAY ILLUMINATION ASSEMBLIES (cont.)

B. Transformer Base

1. Transformer base shall be cast from aluminum, ASTM B-108 or B-26 Alloy 356.0-T6, or other material approved by the Engineer, and shall be furnished with eight 1/2 inch flat washers as recommended by the manufacturer. Transformer base bolt circles (Top and Bottom) shall match bolt circles for poles and foundations shown on RID (3).

2. Transformer base shall be approximately 375-500 mm high and shall have a door approximately 330 mm x 203 mm x 235 mm or as otherwise approved by the Engineer. Screw or bolts for attachment of door to base shall be stainless steel. Four machine bolts with four nuts, eight 1/2 inch flat washers and four lock washer, galvanized ASTM A-153 Class C or D, or B-695 Class 50, shall be provided with each transformer base for connecting the pole. Bolts shall be ASTM A325 or approved equal. Nuts shall be ASTM A-563 grade DH galvanized. A 1/2-13 NC female threaded grounding lug shall be provided inside the transformer base near the bottom.

3. The X-base shall be made from extruded aluminum channel and aluminum plate. The base breakaway features shall rely on bolt shear and not on bolt torque. Bolt shall have torque controlled break-off hex-head. Bolt shall be Aluminum Association type 2024-T4 aluminum. X-base channel shall be connected with aluminum bolts. Bolt shall be left hand thread and shall not be interchangeable with any other bolt not designed specifically for use with the X-base.

4. All breakaway bases shall meet the breakaway requirements of the AASTHO "Standard Specifications for Structural Supports for Highway Signs, Luminaires and Traffic Signals," latest edition, and shall have been tested by FHWA-approved methods. All bases shall have been structurally tested to meet or exceed the full designed plastic moment capacity of the pole. Certification of the plastic moment load test and FHWA breakaway requirement test of the model of base being furnished shall be submitted with shop drawings. Shop drawings shall show breakaway base model number and manufacturer's name or logo.

5. Bases shall be stamped, incised or by other approved permanent means, marked to show fabricators name or logo, and model number. Such information shall be placed in a readily seen location, inside or outside the base, but shall not be placed on the door.

6. Doors for transformer bases shall be made of plastic, fiberglass or other non-aluminum material approved by the Engineer. Transformer bases shall be cleaned by grit blast cleaning after heat treatment. Certification by the manufacturer of heat treatment shall be furnished with transformer bases. The certification shall show the metal alloy and temper and that the base meets those requirements, chemical and physical. The certification shall also show the material ASTM specification. Transformer bases shall be cast with a removable tab bar for material testing. Some bars may have been removed by the manufacturer for testing.

C. All Luminaires.

1. The luminaire housing shall be cast or drawn from a non-ferrous alloy and shall be free of cracks and excessive porosity. All nuts, screws, clips, washers and attaching hardware shall be made of stainless steel; steel electro-zinc-plated, minimum thickness 0.005 mm with olive green drab or yellow chromate conversion coating; steel coated with an acidic chromate-phosphate-binder system primer, top coated with a polytetrafluoroethylene modified silicon primer, bright metallic in color, meeting the requirements of General Motors automotive specification GM 164M; or other approved conversion coatings except that brackets may be made from pre-galvanized steel. All threaded surfaces used in the housing shall be lubricated with a silicone grease.

2. The slipfitter shall securely clamp the luminaire to the mast arm. A positive means of vertical adjustments shall be provided. The refractor or lens shall be clear glass. The optic assembly shall be provided with resilient gaskets and so constructed that a positive seal against weather and other contaminants will be maintained. The latch shall provide a positive means of maintaining closure of the luminaire. The socket shell shall be nickel plated and shall be rigidly attached to a high grade porcelain mogul base which shall extend and enclose the metal shell. A locking means shall be incorporated in the shell of the socket to positively resist the removal of the lamp. Reflectors shall be polished aluminum with Alzak or equal coating and shall not be painted.

3. Mast-arm mounted luminaires shall be provided with a leveling indicator which is clearly visible from the ground. Leveling indicator shall be sensitive to one (1) degree (maximum) changes in position at any point within five (5) degrees (minimum) level position. Unless otherwise directed by the Engineer, mast-arm mounted luminaires will be installed in the level position.

4. Underpass luminaires shall be fused internally. Fuses shall be 10 amp time-delay type.

⚠1 5. The Contractor may be responsible for fixture testing costs. See Materials and Tests Section test method TEX-1110-T.

6. The Contractor shall furnish six (6) sets of submittals of the luminaire fuxture to the Engineer at the project address. These submittals shall be approved by the Engineer before the Contractor begins work.

⚠1 D. High Pressure Sodium Vapor Luminaires

1. Photometrics

a. The U/P (SPL-CO) (.15KW)S (TY 1) and (TY 2) underpass luminaires shall be 150 watt high pressure sodium, IES TYPE M-C with flat tempered glass lens. The fixtures shall provide a minimum measured intensity of 2.16 lux in a rectangular area measuring 36.58 meters x 9.15 meters, when mounted 6.1 meters above the midpoint of either long side of the surface area.

The maximum to minimum horizontal illuminance uniformity ratio shall not exceed 25:1 within the above mentioned rectangular area.

b. The 250-watt mast arm mounted luminaire shall be IES Type full cutoff and, when mounted 12.2 meters above the midpoint of either long side of a rectangular area 57.93 meters by 13.72 meters, shall provide a measured minimum intensity of 2.16 lux at any point on the surface of this area. Light intensities measured in lux along a line parallel to and 6.1 meters in from the long side of the previously defined rectangular area above which the luminaire is mounted shall decrease at a rate not to exceed 5.38 lux in any 3.1 meter interval along the aforementioned line from 3.1 to 27.4 meters on both sides of the luminaire and shall not be less than 3.23 lux at any point along such line.

The maximum to minimum horizontal illuminance uniformity ratio shall not exceed 15:1 within the above mentioned rectangular area.

c. The 400-watt mast arm mounted luminaire shall be IES Type full cutoff and, when mounted 15.2 meters above the midpoint of either long side of a rectangular area 67.1 meters by 18.3 meters, shall provide a measured minimum intensity of 2.16 lux at any point on the surface of this area. Light intensities measured in lux along a line parallel to and 9.2 meters in from the long side of the previously defined rectangular area above which the luminaire is mounted shall decrease at a rate not to exceed 5.38 lux in any 3.1 meter interval along the aforementioned line from 3.1 to 27.4 meters on both sides of the luminaire and shall not be less than 3.23 lux at any point along such line.

The maximum to minimum horizontal illuminance uniformity ratio shall not exceed 15:1 within the above mentioned rectangular area.

d. The luminaires shall meet the photometric requirements shown above, when energized at 100 percent of rated line voltage. Test will be run with the fixture in the level position as indicated on leveling indicator.

| Fabrication Tolerances Table | | |
|---|---|---|
| **Part** | **Dimension** | **Tolerance** |
| Pole Asssembly | Shaft length | ± 25 |
| | I.D. of outside piece of slip fitting pieces | + 3.125 - 1.563 |
| | O.D. of inside piece of slip fitting pieces | + 0.781 - 3.125 |
| | Shaft diameter: other | + 4.688 |
| | Out of "round" | 6.25 |
| | Straightness of shaft | ± 6.25 in 3.05 m |
| | Twist in shaft | 4° in 15.24 m |
| | Perpendicular to baseplate | 3.125 in 600 |
| | Pole centered on baseplate | ± 6.25 |
| | Location of Attachments | ± 6.25 |
| Arm Assembly | Arm Length | ± 75 |
| | Arm Rise | ± 43.75 in 3.05 m |
| | Arm Diameter | ± 4.688 |
| | Overall length or width | ± 6.25 |
| | Thickness | + 6.25 - 1.563 |
| | Deviation from flat | 3.125 in 300 |
| | Spacing between holes | ± 2.344 |
| | Anchor bolt hole size | ± 1.563 |
| Anchor Bolt | Length | + 25 - 6.25 |
| | Threaded length | + 37.5 - 3.125 |
| | Galvanized length (if required) | + 200 - 6.25 |
| Miscellaneous | Bolt hole spacing | ± 1.563 |
| | Strut location in truss arms | ± 37.5 |

⚠1

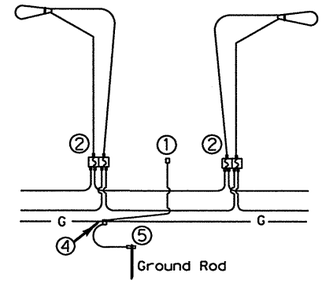


**FOR THREE-WIRE CIRCUIT-CENTER GROUNDED**
LUMINAIRES SERVED AT 480V ON 240/480 VOLT SERVICE OR LUMINAIRES SERVED AT 240V FOR FOR 120/240 VOLT SERVICE.

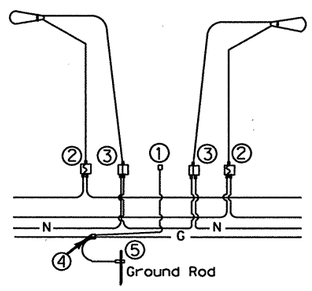


**FOUR-WIRE CIRCUIT-CENTER GROUNDED**
LUMINAIRES SERVED AT 240V (240/480 VOLT SERVICE)

NOTES:

(1) Pole Bonding Connector Blackburn TTC3 or Weaver TGC3 or equal.

(2) Fused Connector-All electrical connectors for breakaway poles shall be watertight and shall be designed as breakaway (Buchannan 65U, Bussmann HEBW, Littelfuse LEB or equal). All fuses shall be time-delay types. 10 Amp (Littelfuse FLQ, Bussman RNQ or equal).

(3) Un-fused Connector-All electrical connections for neutrals shall be watertight. For breakaway poles, connections shall be designed as breakaway, shall have a white color marking, and shall have a permanently installed solid neutral (Buchannan 20U, Bussmann HET, Littelfuse LET or equal). Dummy/Neutral fuse shall be Bussman NTS-R-3 or equal.

(4) Split Bolt or other connector.

(5) Ground Rod Clamp - Blackburn GG58H, Burndy GKP635, or equal.

*For Transformer Base Poles. On Shoe Poles omit un-fused connector for neutral conductor.

All dimensions are in millimeters unless otherwise noted.

STANDARD PLANS
TEXAS DEPARTMENT OF TRANSPORTATION
*Traffic Operations Division*

# ROADWAY ILLUMINATION DETAILS

RID(2)-98(M)

©TxDOT January 1992

| DN: RS | CK: KB | DW: FDN | CK: RS | REQ NO.: |
|---|---|---|---|---|

| REVISIONS | STATE DISTRICT | FEDERAL REGION | FEDERAL AID PROJECT | SHEET |
|---|---|---|---|---|
| 5-93 | SAT | 6 | NH 2000(704),etc. | 629 |
| 10-93 | COUNTY | | CONTROL / SECTION / JOB | HIGHWAY |
| 1-96 | BEXAR | | 2452 / 01 / 036,etc. | LP 1604 |
| 10-98 | | | | |

⚠1 10-98: clarified T-base washers; mod. fixture requirements; removed two wire diagram; revised breakaway connectors requirements

| LEVELS | DATE: | DN: LR |
|---|---|---|
| 1 2 3 4 5 6 7 8 9 10 11 12 13 14 15 16 17 18 19 20 21 22 23 24 25 26 27 28 29 30 31 32 33 34 35 36 37 38 39 40 41 42 43 44 45 46 47 48 49 50 51 52 53 54 55 56 57 58 59 60 61 62 63 | ACC: d58hp1c/usr/d580504 | CK: CW DW: DN CK: MT |
| ET | FILE: | |

II. ROADWAY ILLUMINATION ASSEMBLIES (cont.)

D. High pressure Sodium Vapor Luminaires (cont.)

2. Ballasts

a. All ballasts shall be isolated-winding lag-type magnetic regulators designed to operate high pressure sodium lamps unless otherwise shown on the plans.

b. When the circuit voltage indicated on the plans is applied, the ballast input wattage during fluctuations of the test voltage of +10 and -10 percent shall not exceed the following;

| Nominal Lamp Rating, Watts | Maximum Wattage Input |
|---|---|
| 150 | 220 |
| 250 | 440 |
| 400 | 552 |

c. During fluctuation of the test voltage of +10 and -10 percent, the lamp wattage fluctuation shall not exceed a total of 20 percent and ballast shall maintain lamp wattage within the following limits:

| Nominal Lamp Watts | Minimum Lamp Watts | Maximum Lamp Watts |
|---|---|---|
| 150 | 110 | 180 |
| 250 | 175 | 370 |
| 400 | 280 | 475 |

d. The power factor of any ballast when tested at the circuit voltage indicated in the plans shall be not less than 90 percent.

e. The electronic starting aid shall provide a starting pulse with an amplitude of 2500 volts minimum, 4000 volts maximum. The pulse width shall be a minimum of 0.8 microseconds at 2250 volts. The pulse shall occur when the open-circuit voltage is equal to or greater than 90 percent of peak open-circuit voltage. Pulse repetition rate shall be a minimum of one per cycle and pulse current shall be a minimum of 0.18 amperes. Electronic starting aids for mast-arm mounted poles shall be replaceable without the use of tools. The starting aid shall discontinue to pulse when the lamp starts.

f. Luminaires will be tested for satisfactory operation of the starter board under open-circuit (lamp-out) condition for a minimum of 72 hours. Any failures of starter boards will be considered grounds for rejection of the model starter board being supplied.

g. Ballasts shall permanently and clearly indicate the following: lamp type, catalog number, voltage rating, connection diagram, and manufacturer. Capacitors in all luminaires shall be non-PCB type.

3. Lamps

a. All lamps shall be new and shall be of recent manufacture.

b. 150 watt lamps shall be rated for 55 volts.

c. High pressure sodium lamps shall meet ANSI C78 requirements and shall be the type that extinguishes at the end of usable lamp life and remains extinguished without cycling. 400 watt lamps shall contain less than 4.0 mg of mercury, 250 watt lamps shall contain less than 3.0 mg of mercury. Lamps shall be lead free and shall pass the Federal Toxic Characteristic Leachate Procedure (TCLP).

4. Testing

a. Ballasts and luminaires will be tested using a lamp furnished for the same project.

b. Luminaires, ballasts, and lamps will be sampled and tested in accordance with the TXDOT Materials and Test Section's Manual of Testing Procedures.

III. ROADWAY ILLUMINATION ASSEMBLY FOUNDATIONS

A. Foundations will be paid for under the Item "Foundations for Signs, Traffic Signals and Roadway Illumination Assemblies", unless otherwise shown on the plans. Top 152 mm of foundation shall be formed and struck level.

B. Anchor bolts for all poles, except CTB-mounted poles, shall be A-36M55 Anchor Bolts. Anchor bolts for CTB mounted poles shall be steel, ASTM A-325 or A-321 threaded rod. Nuts for CTB anchor bolts shall be ASTM A-563 Grade D heavy hex, galvanized. The top 203 mm of all anchor bolts shall be galvanized per ASTM A-153. Anchor bolts in foundations shall be 1 1/4 inches x 30 inches for mounting heights 12 meters and greater, 1 inch x 30 inches for mounting heights less than 12 meters.* Anchor bolts shall have top end threaded not less than 127 mm and furnished with galvanized hex nuts, 1/2 inch flat washers (T-base), lock washers (shoebase) and template. The lower end of the bolt shall be threaded and furnished with nut and template. When bolts with rolled threads are furnished, bolt body need not be full size. See CTB and SSCB details for anchor bolts in concrete traffic barriers. Anchor bolts and nuts shall have Class 2A and 2B fit. Nuts shall be tapped and chased after galvanizing.

C. Concrete shall be Class A or C.

D. A minimum of two conduits shall be installed in each foundation. See lighting layout sheets for locations of foundations with more than two conduits. Any unused conduits in foundations shall be capped on both ends.

E. Unless otherwise dimensioned on the plans, breakaway roadway illumination assemblies should be located as shown in the placement table. Non-breakaway illumination assemblies should be protected from vehicular impact (i.e. 610 mm behind guard rail or mounted atop traffic barrier) or located outside the clear zone, except that 762 mm from curb face is minimum desired for light poles on city streets, 45 mph or less, see design guidelines for further information.

F. Anchor bolt template shall not be supplied with flat washers. Transformer base shall be held with 1/2 inch thick washers and nuts supplied with base. No washers or shims shall be used under transformer base.

G. Riprap shall be placed around the foundation when called for elsewhere in the plans.

H. Conduit location in foundation is critical for new style breakaway devices. Conduits shall be placed 50 mm apart on centerline as shown in foundation details.

* Except that anchor bolts shall be 1 inch x 30 inches for all X-base poles.

| Breakaway Pole Placement, see Para. III. E. | |
|---|---|
| Roadway Functional Classification | ** Pole Offset (distance to transformer base, tolerance + 150mm-0mm) |
| Freeway mainlanes (roadways with full control of access) | 4.5 m (minimum and typical) from lane edge |
| All curbed, 45 mph or less design speed | 750 mm minimum (4.5 m desirable) from curb face |
| All others | 3 m minimum* (4.5 m desirable) from lane edge |

*or as close to ROW line as is practicable

**all breakaway poles should have 2/5 of the luminaire mounting height behind the pole for "falling area" to prevent encroachment on other travel lanes. See design guidelines.

| PAY QUANTITY OF RIPRAP PER FOUNDATION | | |
|---|---|---|
| FOUNDATION DIAMETER | RIPRAP DIAMETER | RIPRAP (CONC)(CL A) |
| 750 mm | 1950 mm | 0.255m3 |

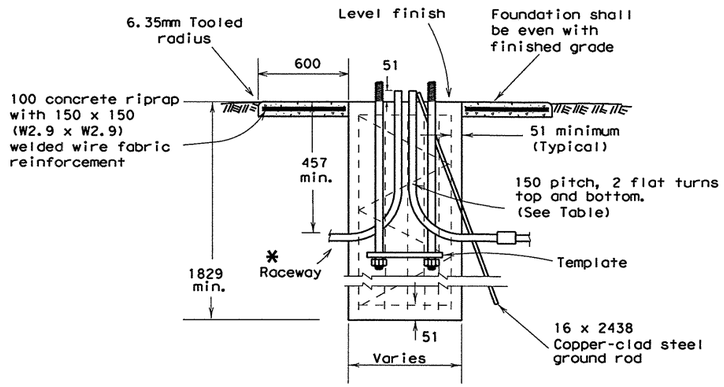


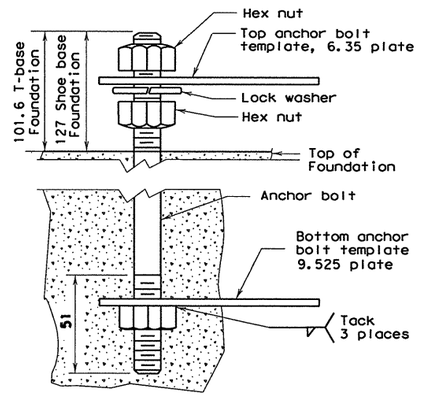


ANCHOR BOLT DETAIL

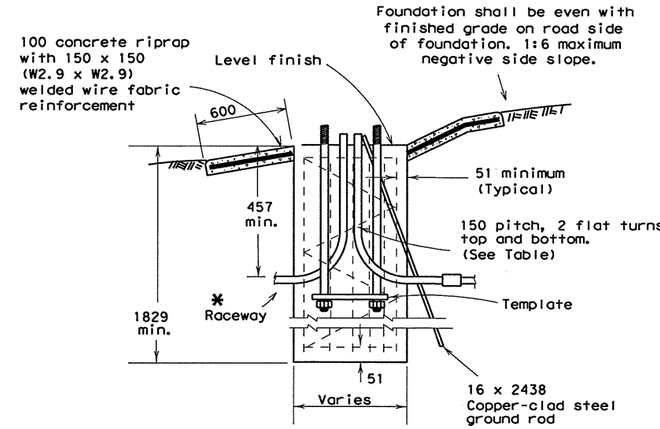


SECTION A-A

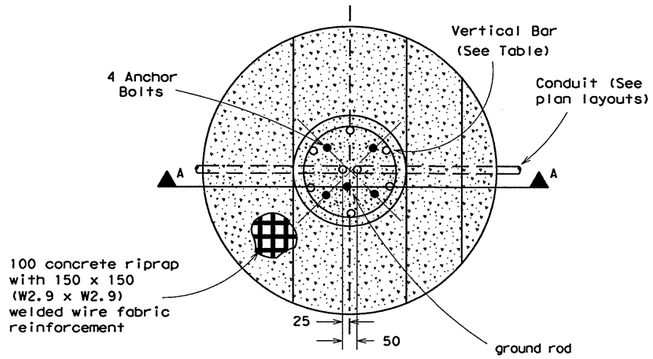


FOUNDATION DETAIL

* For duct cable, match duct size, see ED(10). For conductor in conduit system, same size as system conduit with standard radius bends.

| FOUNDATIONS | | | | |
|---|---|---|---|---|
| FND. TYPE | DRILL SHAFT DIA. | DRILL SHAFT LENGTH | REINFORCING BAR | REINFORCING SPIRAL |
| A | 750 | 1829 | 6-#4 | #2 |
| B | 750 | 2438 | 6-#5 | #2 |
| C | 750 | 3048 | 6-#6 | #3 |

| BOLT CIRCLES AND ANCHOR BOLTS | | | | |
|---|---|---|---|---|
| MOUNTING HEIGHT | POLE BASE PLATE | BOLT CIRCLE SHOE BASE | BOLT CIRCLE *T-BASE | BOLT SIZE |
| LESS THAN 12 m | 330 mm | 330 mm | 356 mm | 1 IN. X 30 IN. |
| 12 m OR GREATER | 381 mm | 381 mm | 438 mm | **1¼ IN. X 30 IN. |

* AND X-BASE
** 1" FOR X-BASE

All dimensions are in millimeters unless otherwise noted.

STANDARD PLANS
TEXAS DEPARTMENT OF TRANSPORTATION
*Traffic Operations Division*

# ROADWAY ILLUMINATION DETAILS

RID(3)-98(M)

| © TxDOT January 1992 | DN: RS | CK: KB | DW: FDN | CK: RS | REQ NO.: |
|---|---|---|---|---|---|
| REVISIONS 5-93 4-96 10-93 10-98 2-94 1-96 | STATE DISTRICT | FEDERAL REGION | FEDERAL AID PROJECT | | SHEET |
| | SAT | 6 | NH 2000(704),etc. | | 630 |
| | COUNTY | | CONTROL | SECTION | JOB | HIGHWAY |
| | BEXAR | | 2452 | 01 | 036,etc. | LP 1604 |

DISCLAIMER
The use of this standard is governed by the "Texas Engineering Practice Act". No warranty of any kind is made by TxDOT for any purpose whatsoever. TxDOT assumes no responsibility for the conversion of this standard to other formats or for incorrect results or damages resulting from its use.

LEVELS
1 2 3 4 5 6 7 8 9 10 11 12 13 14 15 16
17 18 19 20 21 22 23 24 25 26 27 28 29 30 31 32
33 34 35 36 37 38 39 40 41 42 43 44 45 46 47 48
49 50 51 52 53 54 55 56 57 58 59 60 61 62 63

DATE:
ACC: d58hp1c/usr/d580504
FILE:
DN: LR
CK: CW
DW: DN
CK: MT

DISCLAIMER
The use of this standard is governed by the "Texas Engineering Practice Act". No warranty of any kind is made by TxDOT for any purpose whatsoever. TxDOT assumes no responsibility for the conversion of this standard to other formats or for incorrect results or damages resulting from its use.

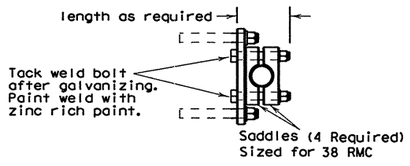


SECTION A-A

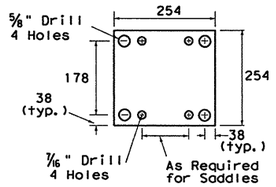


MOUNTING PLATE

Make from 9.5 Plate Galv. after fabrication

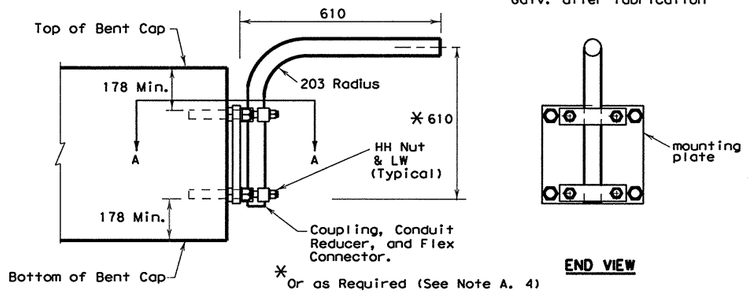


PROFILE VIEW




END VIEW

## UNDERPASS LIGHTING ARM TYPE 1

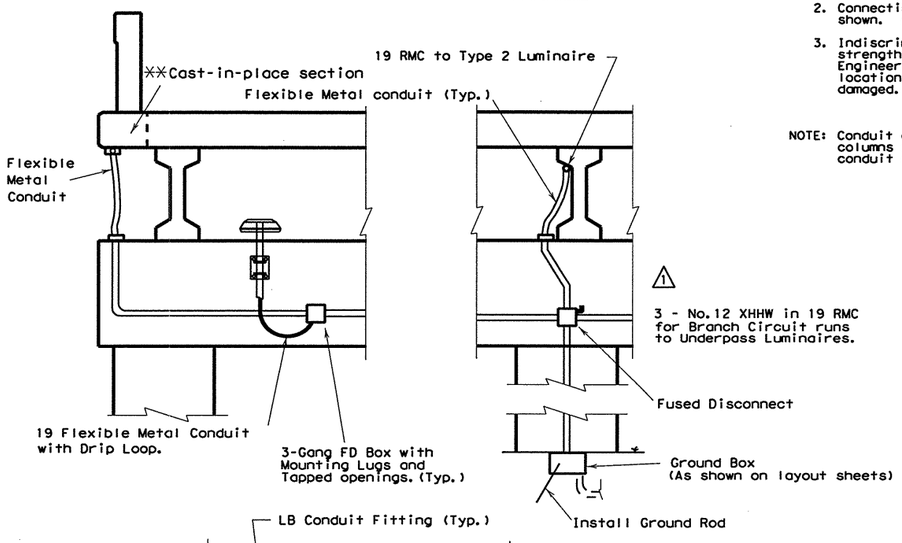


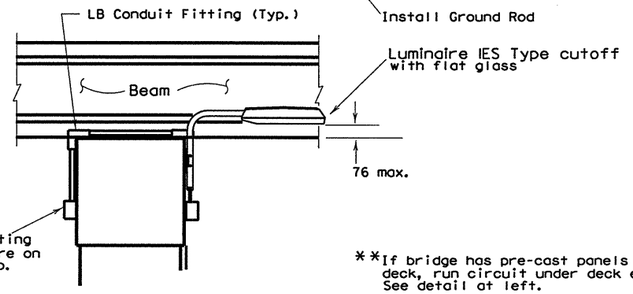


**If bridge has pre-cast panels under deck, run circuit under deck edge. See detail at left.

U/P (SPL-CO)(.15 KW)S(TYPE 1)

NOTES:

A. ALL LUMINAIRES

1. Luminaire locations, conduit and conductor sizes and routing are typical and diagrammatic only. See project layout sheets for specific details.
2. All conductors and conduit will be paid for under the items "Conduit" and "Electrical Conductor", unless otherwise shown on the plans. See lighting layout sheets.
3. A ground rod shall be installed and attached to the equipment grounding conductor in all ground boxes containing conduit that extends above grade six inches or more. All RMC in these boxes shall have grounding bushings and shall be properly bonded.
4. Adjust conduit in saddles to place fixture height and orientation as required. See fixture orientation detail and layout sheet. Where practicable place luminaires so that bottom of luminaire is above bottom of beam, maximum of 75 mm. (See detail.)
5. All bolts, nuts and washers shall be galvanized, ASTM A-153.
6. Fabrication of brackets and support arms will not be paid for directly but shall be subsidiary to Item 610, "Roadway Illumination Assemblies."
7. ⚠1 A Heavy Duty, 480 volt or 600 volt, 30 amp fused disconnect switch in NEMA 3R enclosure shall be installed in circuits to switch underpass luminaires. Switch shall be mounted 10 feet (minimum) above grade on columns or bent caps as approved by the Engineer. Contractor shall modify switch to allow padlocking in the "ON" and in the "OFF" positions. 20 amp fuses shall be installed. Furnishing and installing disconnect switches for underpass lighting fixtures shall not be paid for separately but shall be subsidiary to the various bid items of the contract.

B. TYPE 1

1. Type 1 arm shaft shall be 38 mm rigid metal conduit (48.26 mm O.D., 3.683 mm wall).
2. Anchor bolts for Type 1 luminaire shall be 3/8 inch bolt or stud expansion anchors with minimum pull out of 13.35 kN each, with 102 mm minimum embedment, and lock washers.
3. Attach conduit to plate with 4 saddles, four 3/8" (min.) bolts, HHN & LW.

C. TYPE 2

1. Type 2 arm shaft shall be 50 mm rigid metal conduit (60.325 mm O.D., 3.912 mm wall). Reduce conduit length for Type C concrete beams. Field cutting and threading will be permitted. Paint cut and threaded areas with zinc rich paint after conduit is connected to adjacent fitting.
2. Connecting conduit may be strapped to tapered section only of precast beams as shown. Anchor as approved by the Engineer. Maximum anchor depth is 25 mm.
3. Indiscriminate drilling into precast concrete beams may result in reduced beam strength. Drilling location and method shall be only as directed by the Engineer. See location of underpass lighting mounting bracket detail. The locations given in the table are such that reinforcing strands will not be damaged.

NOTE: Conduit on Columns, Caps, and Slab is shown surface mounted. For all new columns and caps, Contractor shall embed conduit in concrete. Embedded conduit shall be PVC. Metal junction boxes and conduit shall be grounded.

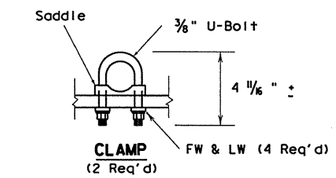


CLAMP
(2 Req'd)

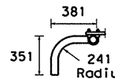


PLAN VIEW

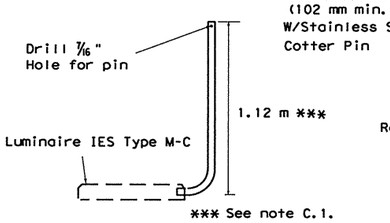


SIDE

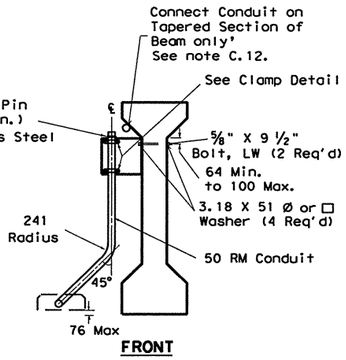


FRONT

## UNDERPASS LIGHTING ARM TYPE 2

| Bridge Span Length | Minimum Distance From Bent Cap to Fixture Mounting Arm |
|---|---|
| ≤ 15.2 m | 3 m |
| 15.2 m-21.3 m | 4.6 m |
| 21.3 m-27.4 m | 6 m |
| >27.4 m | 7.6 m |

See detail below.

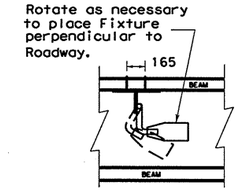


FIXTURE ORIENTATION
PLAN VIEW

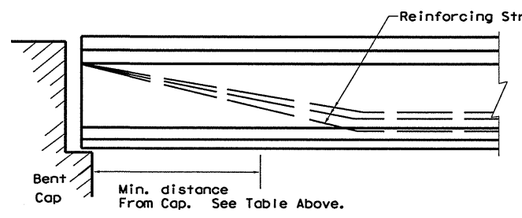


LOCATION OF UNDERPASS LIGHT MOUNTING BRACKET

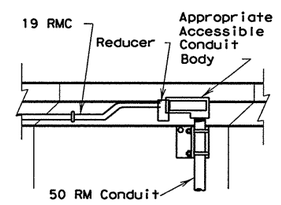


CONDUIT CONNECTION PROFILE
(TYPICAL)

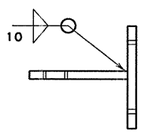


PLAN VIEW

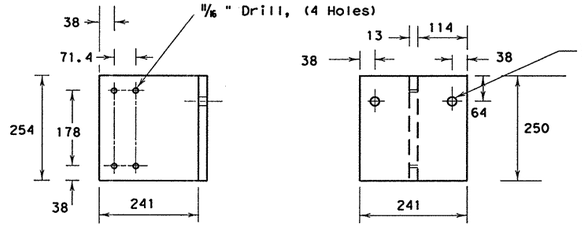


BRACKET DETAIL

Make From 12 mm Plate (ASTM A-36)
Galvanize after fabrication, ASTM A-123

U/P (SPL-CO)(.15 KW)S(TYPE 2)

⚠1 10-98: modified conduit arrangement

All dimensions are in millimeters unless otherwise noted.

STANDARD PLANS
TEXAS DEPARTMENT OF TRANSPORTATION
*Traffic Operations Division*

# ROADWAY ILLUMINATION DETAILS

RID(4)-98(M)

| ©TxDOT January 1992 | DN: RS | CK: KB | DW: FDN | CK: RS | MSG NO.: |
|---|---|---|---|---|---|
| REVISIONS: 5-93, 10-93, 1-96, 10-98 | STATE DISTRICT | FEDERAL REGION | FEDERAL AID PROJECT | | SHEET |
| | SAT | 6 | NH 2000(704),etc. | | 631 |
| | COUNTY | | CONTROL | SECTION | JOB | HIGHWAY |
| | BEXAR | | 2452 | 01 | 036,etc. | LP 1604 |

LEVELS: 1 2 3 4 5 6 7 8 | 1 2 3 4 5 6 7 8 9 10 11 12 13 14 15 16 17 18 19 20 21 22 23 24 25 26 27 28 29 30 31 32 33 34 35 36 37 38 39 40 41 42 43 44 45 46 47 48 49 50 51 52 53 54 55 56 57 58 59 60 61 62 63

FILE: DATE: ACC: d58hp1c/usr/d580504

DN:LR CK:CW DW:DN CK:MT

DISCLAIMER
The use of this standard is governed by the "Texas Engineering Practice Act". No warranty of any kind is made by TxDOT for any purpose whatsoever. TxDOT assumes no responsibility for the conversion of this standard to other formats or for incorrect results or damages resulting from its use.

## I. GENERAL REQUIREMENTS FOR ALL ELECTRICAL WORK

The location of all conductors, conduits, junction boxes, ground boxes, electrical services and transformer stations is diagrammatic only and may be shifted by the Engineer to accommodate local conditions.

Materials shall be new and unused, and materials and installation shall comply with the applicable provisions of the National Electrical Code (NEC) and National Electrical Manufacturers Association (NEMA) standards and be Underwriters Laboratories (UL) Listed. Faulty fabrication or poor workmanship in any material, equipment or installation shall be justification for rejection.

**SUBMITTALS:**

The contractor shall submit for approval no less than five (5) copies of catalog cut sheets on electrical services, ground boxes, including loading capicity certification, breakaway disconnects, heat shrink tubing and heat shrink filler tape, photocells, and, when required, verification of available fault current. Submittals shall be legible and shall be marked to indicate which product on a cut-sheet is to be supplied. Where manufacturers provide warranties and guarantees as a customary trade practice, Contractor shall furnish to the State such warranties or guarantees.

Grounding shall be as shown on the plans and in accordance with the NEC. Metallic conduit, lighting poles and luminaires on bridge structures shall be bonded to the system grounding conductor and to a ground rod in each ground box or junction box at the bridge ends, and in each ground box installed for underpass lighting. The grounding conductor shall be bare or, if insulated, shall be green. Ground rods, connectors, and bonding jumpers will not be paid for separately, but will be subsidiary to the various bid items.

## II. CONDUIT

### A. MATERIALS

1. Conduit and fittings shall be UL Listed for the intended use shown on plan sheets.
2. Neither aluminum conduit, electrical metallic tubing (EMT), nor intermediate metal conduit (IMC) shall be permitted as a substitute for rigid metal conduit (RMC).
3. All exposed conduits shall be (RMC), unless otherwise specifically shown on the plans.
4. Fittings for RMC shall be steel or malleable iron, threaded, or threadless compression type, rain-tight, and shall be UL Listed for the intended use.
5. Expansion joints for metallic conduit shall be Appleton UNYL 50 Series, OZ/Gedney AX Series, or equal.
6. Junction box minimum sizes shall be in accordance with the following table which applies to the greatest number of conductors entering the box through one conduit with no more than four conduits per box. When a mixture of conductor sizes is present, the conductors shall be counted as if all are of the larger size. Situations not applicable to the table shall be sized in accordance with NEC 370-28.

| AWG | 3 CONDUCTORS | 5 CONDUCTORS | 7 CONDUCTORS |
|---|---|---|---|
| #1 | 254 x 254 x 102 | 305 x 305 x 102 | 407 x 407 x 102 |
| #2 | 203 x 203 x 102 | 254 x 254 x 102 | 305 x 305 x 102 |
| #4 | 203 x 203 x 102 | 254 x 254 x 102 | 254 x 254 x 102 |
| #6 | 203 x 203 x 102 | 203 x 203 x 102 | 254 x 254 x 102 |
| #8 | 203 x 203 x 102 | 203 x 203 x 102 | 203 x 203 x 102 |

7. RMC system junction boxes surface mounted and containing conductors #8 or larger, shall be hot dipped galvanized cast iron, or aluminum, minimum wall thickness shall be 4.76 mm, and shall have mounting lugs, (Crouse Type WAB, OZ/Gedney Type YS, Adalet Type 3R, or approved equal).
8. Junction boxes containing only #10 and #12 AWG conductors shall be Crouse Hinds Type GRFX, Appleton Type JBOX, two-gang FD, or similar approved cast iron. Boxes shall be sized according to NEC Table 370-16(a).
9. Junction boxes in EMT conduit systems shall be made from galvanized sheeting and shall be UL Listed as approved for outdoor use, unless otherwise noted on the plans. Sheet metal junction boxes shall be sized in accordance with the NEC.
10. Junction boxes in PVC conduit systems shall be PVC, UL Listed for outdoor use, unless otherwise noted on the plans.
11. Elbows in PVC conduit systems one inch and larger shall be rigid metal. Rigid metal elbows buried less than 18 inches underground shall be grounded. Elbows installed at ground boxes and foundations shall be extended with rigid metal conduit to the inside of the ground box or the top of the foundation. At that point a grounding bushing shall be installed.

### B. CONSTRUCTION METHODS

1. Conduit in structures shall have expansion fittings at structure expansion joints.
2. Conduit supports shall be spaced at maximum intervals of 1524 mm. Conduit spacers shall be used with metal conduit placed on surfaces of concrete structures (See conduit mounting options).
3. Conduit supports shall not be attached directly to prestressed concrete beams except as shown specifically in the plans and approved by the Engineer.
4. Unless otherwise shown on the plans, conduit placed beneath existing roadways, driveways, or sidewalks, or after the base or surfacing operation has begun, shall be accomplished by jacking or boring. The Contractor shall back fill and compact the bore pits to the bottom of the conduit prior to installing connecting conduit or duct cable to prevent bending of the connection.
5. Conduit trenched in the subgrade of new roadways shall be back filled with excavated material, unless otherwise noted on the plans. Conduit trenched in the sub-base of new roadways shall be back filled with cement-stabilized base.
6. Open ends of all conduit and raceways shall be fitted with temporary caps or plugs to prevent entry of dirt, debris and rodents during construction. The temporary cap may be constructed of duct tape, but in all cases shall be tightly fixed to the conduit and shall be durable. The contractor shall clean out the conduit and prove it clear in accordance with Standard Specifications Item 618.3 prior to installing any conductors.
7. Conduit entry into the top of junction boxes and enclosures shall be made weathertight using threaded hubs.
8. A bonding jumper shall be installed from each grounding bushing to the nearest grounding rod, grounding lug, and/or system grounding conductor. At electrical services, grounding electrode conductor shall be #6 AWG. All other jumpers shall be the same size as supply conductors. Conduit used as casing under roadways for duct cable need not be grounded if duct extends full length through the casing.
9. Metal junction boxes shall be bonded to the grounding conductor in accordance with the NEC.
10. Conduits entering ground boxes shall be placed so that the conduit ends shall be not less that 125 mm nor more than 225 mm from the box cover (See ground box detail on sheet ED(2)).
11. Conduit ends shall be sealed with heat shrink boots with sealant, silicone caulking, urethane foam, or by other methods approved by the Engineer. Sealing shall be done after completion of any required pull tests. Duct tape shall not be used as a permanent conduit sealant.

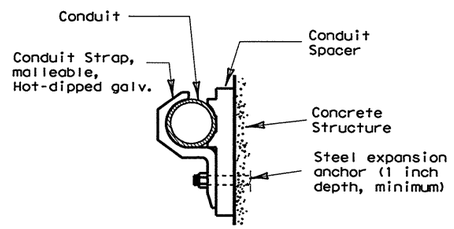


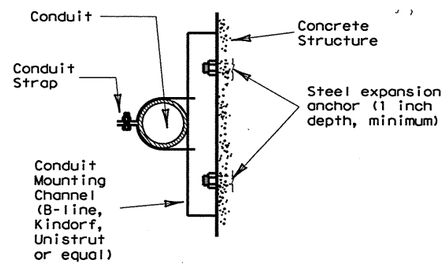


## CONDUIT MOUNTING OPTIONS

(Attachment to concrete surfaces)
(See para. II.B.2)

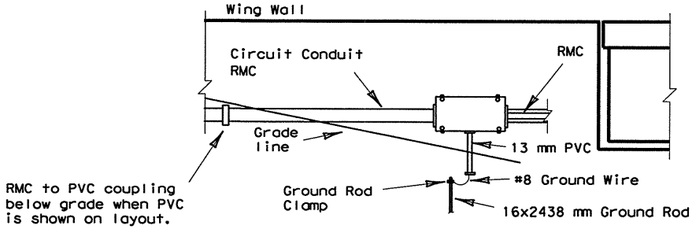


**NOTES**

1. Conduit shall be 50 mm RMC for duct cable entry to junction box.
2. Ground rod clamp to be Blackburn GG 5/8H, Weaver W5/8 or equal.
3. Surface mounting shown, for conduit to be placed in structure use flush-mounted box.
4. Bond junction box to grounding conductor.

## TYPICAL CONDUIT ENTRY TO BRIDGE STRUCTURE DETAIL

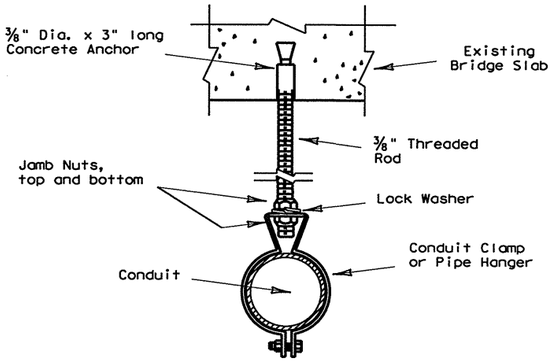


## CONDUIT HANGER DETAIL

(Attachment to horizontal surfaces)
(See para. II.B.2)

All dimensions are in millimeters unless otherwise noted.

STANDARD PLANS
TEXAS DEPARTMENT OF TRANSPORTATION
*Traffic Operations Division*

# ELECTRICAL DETAILS-CONDUIT

**ED(1)-98(M)**

| ©TxDOT January 1992 | DN: KB | CK: JM | DW: DN | CK: KB | MSG NO.: |
|---|---|---|---|---|---|
| REVISIONS 5-93, 10-93, 1-96, 4-98 | STATE DISTRICT: SAT | FEDERAL REGION: 6 | FEDERAL AID PROJECT: NH 2000(704),etc. | | SHEET: 632 |
| | COUNTY: BEXAR | CONTROL: 2452 | SECTION: 01 | JOB: 036,etc. | HIGHWAY: LP 1604 |

LEVELS 1 2 3 4 5 6 7 8 9 10 11 12 13 14 15 16 17 18 19 20 21 22 23 24 25 26 27 28 29 30 31 32 33 34 35 36 37 38 39 40 41 42 43 44 45 46 47 48 49 50 51 52 53 54 55 56 57 58 59 60 61 62 63
ED 1T
DATE:
ACC:
FILE:
DN:
CK:
DW:
CK:

DISCLAIMER
The use of this standard is governed by the "Texas Engineering Practice Act". No warranty of any kind is made by TxDOT for any purpose whatsoever. TxDOT assumes no responsibility for the conversion of this standard to other formats or for incorrect results or damages resulting from its use.

## I. ELECTRICAL CONDUCTORS

### A. MATERIALS

1. Insulated conductors shall be NEC Type XHHW. Conductors shall be color coded in accordance with the NEC, articles 200, 250, and 310; i.e. Grounded conductors (neutrals) shall be white, Grounding conductors (ground wires) shall be bare or green, Ungrounded conductors (hots) shall be any color except green, white, or grey. Identification of conductors #10 AWG and smaller shall be by continuous jacket color. Color coding of electrical conductors #8 AWG and larger shall be either by continuous color jacket or by colored tape. Colored tape marker shall consist of a half-lap of tape covering a 6 inch length of conductor.

2. Where two or more circuits are present in one conduit or enclosure, the conductors of each circuit shall be identified by a permanent non-metallic tag at each accessible location. The tag shall be fastened to the conductors by plastic straps.

3. Grounding electrode conductors #6 AWG or smaller, for bonding to ground rods at electrical services, shall be solid. Connection of conductors to ground rods shall be made using UL Listed connectors designed for such purposes.

4. Heat Shrink Tape filler shall be used to seal the ends of heat shrink tubing around two or more conductors that are insulated with heat shrink tubing. Tape material shall have a minimum dielectric strength of 225 volts per 0.0254 mm and may be either cross-linked butyl rubber or silicone gel strip. Tape shall be supplied in rolls and shall have a backing (release paper) to prevent the tape from sticking to itself.

### B. CONSTRUCTION METHODS

1. After conductors have been installed in conduit, a pull test will be made on conductors. When any length of conductor cannot be freely pulled, the Contractor shall make any needed alterations or repairs at no expense to the State.

2. Conductors in illumination poles shall be supported by a J-hook in the top of the pole.

3. A sufficient length of conductor for making up connections shall be left in ground boxes (610 mm minimum to point of splice, 914 mm minimum when conductor is pulled through with no splice), enclosures, and pole bases (305 mm minimum and typical).

4. Splices shall be made only in junction boxes, ground boxes, pole bases, or electrical enclosures and shall be made with approved compression sleeves or split bolt connectors. Splices shall be insulated with heavy wall heat shrink tubing containing factory applied sealant and shall be watertight. Heat shrink sleeve shall overlap conductor insulation a minimum of 50 mm on both sides of the splice. Heat shrink tape filler is required where two or more conductors enter one heat shrink tube to ensure watertight splice. Heat shrink tape shall be either butyl rubber or silicone gel strip.

5. Wire nuts may be used for #8 AWG and smaller conductors in above-ground junction boxes, but not in pole bases or ground boxes. Wire nuts shall be positioned upright to prevent the accumulation of water.

## II. GROUND BOX

### A. MATERIALS

1. Ground boxes shall be concrete or polymer concrete, as required by the descriptive code shown elsewhere.

2. All precast ground boxes and covers shall be permanently marked either by impress or by permanent ink, with manufacturer's model number, name or logo.

3. Covers shall be bolted down, and bolt holes in the box shall be arranged to drain dirt.

4. Ground box Types A, B, C, D & E shall be Polymer Concrete and shall meet the following requirements:

   a. Boxes shall be manufactured from Reinforced Polymer Concrete (RPM) composed of borosilicate glass fiber, a catalyzed polyester resin and an aggregate. Side walls may be fiber reinforced polymer.

   b. Minimum inside dimensions shall be as follows (width x length x depth):

      Type A shall be 292 mm x 533 mm x 254 mm, (122311)
      Type B shall be 292 mm x 533 mm x 508 mm, (122322)
      Type C shall be 387 mm x 718 mm x 254 mm, (162911)
      Type D shall be 387 mm x 718 mm x 508 mm, (162922)
      Type E shall be 292 mm x 533 mm x 406 mm, (122317)

   c. Bottom edge of box or extension shall be footed with a minimum 32 mm flange.

   d. Ground boxes shall withstand a test loading of 9072 kg over a 254 by 254 mm area centered on the lid and 0.029 MPa applied over the entire side wall. The model of ground box proposed shall have been tested by a laboratory independent of the manufacturer to meet loading requirements. Certification of such tests shall be submitted to the Engineer for approval.

   e. Covers shall be 51 mm (nominal) thick polymer concrete. Cover shall be secured with two 1/2 inch stainless steel bolts. Bolts shall be captive and shall withstand a minimum of 95 Nm torque and shall have a minimum 3.336 kN straight pull out strength. Nuts shall be floating. Covers shall be skid resistant, minimum 0.5 coefficient of friction. Covers shall be interchangeable between manufacturers and shall conform to the dimensions shown below. Cover shall be legibly imprinted with the words "Danger High Voltage" in minimum 25 mm letters. When required, other cover lettering shall be as shown elsewhere on the plans.

5. Cast in place and precast concrete boxes shall be as shown elsewhere in the plans.

### B. CONSTRUCTION METHODS

1. Ground boxes shall be set on a 230 mm (minimum) bed of course No. 1 aggregate as defined by item 421. Gravel shall be in place prior to setting box and conduits shall be capped. Any gravel or dirt in conduit shall be removed.

2. When required by Item descriptive code, construction of an apron encasing a ground box including concrete and reinforcing steel shall not be paid for directly but shall be subsidiary to the ground box. Reinforcing steel may be field bent. Concrete for aprons shall be considered miscellaneous concrete for testing purposes.

3. Conduit holes may be cut into the walls of deep boxes at least 450 mm beneath the cover.

4. Steel covers shall be bonded to grounding conductor with a 900 mm long flexible jumper.

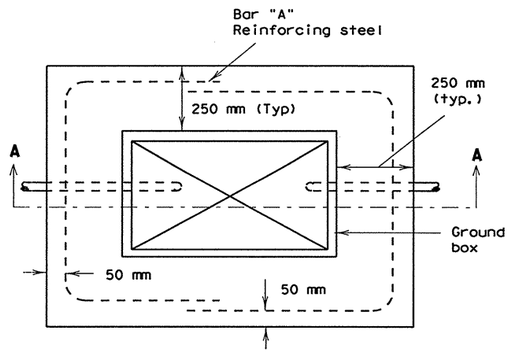


PLAN VIEW

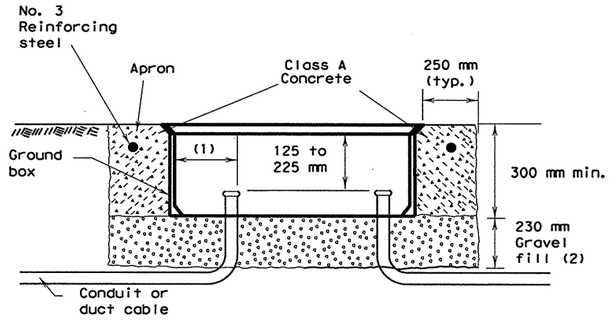


SECTION A - A

(1) Final position of end of conduit shall not exceed one-half of the distance to the side of the box opposite of the conduit entry.

(2) Place gravel "under" the box, not "in" the box. Gravel should not encroach on the interior volume of the box.

## APRON FOR GROUND BOXES

(Where required)

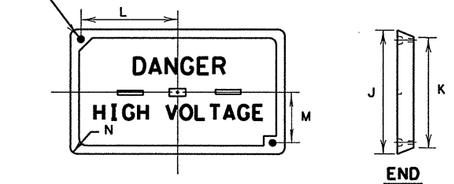


PLAN VIEW




END

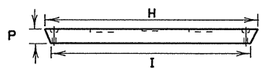


SIDE

## GROUND BOX COVER

| GROUND BOX COVER DIMENSIONS | | | | | | | | |
|---|---|---|---|---|---|---|---|---|
| BOX | DIMENSIONS (INCHES) | | | | | | | |
| SIZE (WXL) | H | I | J | K | L | M | N | P |
| 292 x 533 | 603.25 | 584.2 | 349.25 | 342.9 | 250.825 | 130.175 | 85.725 | 50.8 |
| 387 x 718 | 774.7 | 768.35 | 444.5 | 438.15 | 336.55 | 171.45 | 34.925 | 50.8 |

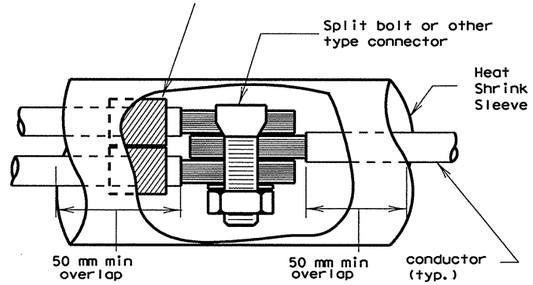


SPLICE DETAIL

All dimensions are in millimeters unless otherwise noted.

STANDARD PLANS
TEXAS DEPARTMENT OF TRANSPORTATION
*Traffic Operations Division*

# ELECTRICAL DETAILS- CONDUCTORS, GROUND BOXES

ED(2)-98(M)

| ©TxDOT January 1992 | DN:- JM | CK:- KB | DW:- DN | CK:- JM | MEG NO.: |
|---|---|---|---|---|---|

| REVISIONS | STATE DISTRICT | FEDERAL REGION | FEDERAL AID PROJECT | SHEET |
|---|---|---|---|---|
| 5-93 | SAT | 6 | NH 2000(704),etc. | 633 |
| 10-93 | | | | |
| 1-96 | COUNTY | | CONTROL / SECTION / JOB | HIGHWAY |
| 4-98 | BEXAR | | 2452 / 01 / 036,etc. | LP 1604 |

LEVELS 1 2 3 4 5 6 7 8 9 10 11 12 13 14 15 16 17 18 19 20 21 22 23 24 25 26 27 28 29 30 31 32 33 34 35 36 37 38 39 40 41 42 43 44 45 46 47 48 49 50 51 52 53 54 55 56 57 58 59 60 61 62 63 64 65 66 67 68 69 70 71 72 73 74 75 76 77 78 79 80 81 82 83 84 85 86 87 88 89 90 91 92 93 94 95 96 97 98 99 100 101 102 103 104 105 106 107 108 109 110 111 112 113 114 115 116 117 118 119 120 121 122 123 124 125 126 127 128 129 130 131 132 133 134 135 136 137 138 139 140 141 142 143 144 145 146 147 148 149 150 151 152 153 154 155 156 157 158 159 160 161 162 163 164 165 166 167 168 169 170 171 172 173 174 175 176 177 178 179 180 181 182 183 184 185 186 187 188 189 190 191 192 193 194 195 196 197 198 199 200 201 202 203 204 205 206 207 208 209 210 211 212 213 214 215 216 217 218 219 220 221 222 223 224 225 226 227 228 229 230 231 232 233 234 235 236 237 238 239 240 241 242 243 244 245 246 247 248 249 250 251 252 253 254 255 256 257 258 259 260 261 262 263 264 265 266 267 268 269 270 271 272 273 274 275 276 277 278 279 280 281 282 283 284 285 286 287 288 289 290 291 292 293 294 295 296 297 298 299 300 301 302 303 304 305 306 307 308 309 310 311 312 313 314 315 316 317 318 319 320 321 322 323 324 325 326 327 328 329 330 331 332 333 334 335 336 337 338 339 340 341 342 343 344 345 346 347 348 349 350 351 352 353 354 355 356 357 358 359 360 361 362 363 364 365 366 367 368 369 370 371 372 373 374 375 376 377 378 379 380 381 382 383 384 385 386 387 388 389 390 391 392 393 394 395 396 397 398 399 400 401 402 403 404 405 406 407 408 409 410 411 412 413 414 415 416 417 418 419 420 421 422 423 424 425 426 427 428 429 430 431 432 433 434 435 436 437 438 439 440 441 442 443 444 445 446 447 448 449 450 451 452 453 454 455 456 457 458 459 460 461 462 463 464 465 466 467 468 469 470 471 472 473 474 475 476 477 478 479 480 481 482 483 484 485 486 487 488 489 490 491 492 493 494 495 496 497 498 499 500 501 502 503 504 505 506 507 508 509 510 511 512 513 514 515 516 517 518 519 520 521 522 523 524 525 526 527 528 529 530 531 532 533 534 535 536 537 538 539 540 541 542 543 544 545 546 547 548 549 550 551 552 553 554 555 556 557 558 559 560 561 562 563 564 565 566 567 568 569 570 571 572 573 574 575 576 577 578 579 580 581 582 583 584 585 586 587 588 589 590 591 592 593 594 595 596 597 598 599 600 601 602 603 604 605 606 607 608 609 610 611 612 613 614 615 616 617 618 619 620 621 622 623 624 625 626 627 628 629 630 631 632 633 634 635 636 637 638 639 640 641 642 643 644 645 646 647 648 649 650 651 652 653 654 655 656 657 658 659 660 661 662 663 664 665 666 667 668 669 670 671 672 673 674 675 676 677 678 679 680 681 682 683 684 685 686 687 688 689 690 691 692 693 694 695 696 697 698 699 700 701 702 703 704 705 706 707 708 709 710 711 712 713 714 715 716 717 718 719 720 721 722 723 724 725 726 727 728 729 730 731 732 733 734 735 736 737 738 739 740 741 742 743 744 745 746 747 748 749 750 751 752 753 754 755 756 757 758 759 760 761 762 763 764 765 766 767 768 769 770 771 772 773 774 775 776 777 778 779 780 781 782 783 784 785 786 787 788 789 790 791 792 793 794 795 796 797 798 799 800 801 802 803 804 805 806 807 808 809 810 811 812 813 814 815 816 817 818 819 820 821 822 823 824 825 826 827 828 829 830 831 832 833 834 835 836 837 838 839 840 841 842 843 844 845 846 847 848 849 850 851 852 853 854 855 856 857 858 859 860 861 862 863 864 865 866 867 868 869 870 871 872 873 874 875 876 877 878 879 880 881 882 883 884 885 886 887 888 889 890 891 892 893 894 895 896 897 898 899 900 901 902 903 904 905 906 907 908 909 910 911 912 913 914 915 916 917 918 919 920 921 922 923 924 925 926 927 928 929 930 931 932 933 934 935 936 937 938 939 940 941 942 943 944 945 946 947 948 949 950 951 952 953 954 955 956 957 958 959 960 961 962 963 964 965 966 967 968 969 970 971 972 973 974 975 976 977 978 979 980 981 982 983 984 985 986 987 988 989 990 991 992 993 994 995 996 997 998 999 1000

DN:
CK:
DW:
CK:

DATE:
ACC:
FILE:

DISCLAIMER
The use of this standard is governed by the "Texas Engineering Practice Act". No warranty of any kind is made by TxDOT for any purpose whatsoever. TxDOT assumes no responsibility for the conversion of this standard to other formats or for incorrect results or damages resulting from its use.

## ELECTRICAL SERVICES NOTES

All work, materials, services, and incidentals, whether or not specifically shown on the plans, which may be necessary for a complete and proper electrical service installation as specified in the plans to obtain electrical power (except extending primary lines to electrical service) shall be paid for, performed, furnished and installed by the Contractor. The Contractor shall contact the Utility for metering and shall comply with all Utility requirements.

Primary line extensions, when required, shall be paid for under Force Account work. The Contractor shall consult with the appropriate Utility to determine costs and requirements, and shall coordinate the Utility's work as approved by the Engineer. The contractor shall be reimbursed only the amount billed by the Utility. No additional amount for supervision of the Utility's work will be paid.

Materials shall be new and unused, and materials and installation shall comply with the applicable provisions of the National Electrical Code (NEC) and National Electrical Manufacturers Association (NEMA) standards and shall be Underwriters Laboratories (UL) Listed. Electrical Service conduits, conductors, disconnects, contactors, circuit breaker panel sizes, and branch circuit breakers, shall be as shown in the Electrical Service Data elsewhere in the plans. Faulty fabrication or poor workmanship in any material, equipment, or installation shall be justification for rejection.

The Contractor shall submit for approval no less than five (5) copies of catalog cut sheets on electrical service materials. Submittals shall be legible and shall be marked to incicate which product on a cut-sheet is to be supplied. Where manufacturers provide warranties and guarantees as a customary trade practice, Contractor shall furnish to the State such warranties or guarantees.

I. Safety Switch. A safety switch, placed ahead of the meter, shall only be used when specified by the Utility and is shown on the Electrical Service Data. The switch shall be UL Listed, heavy duty type, 600 volt, unfused, with a UL type 3R enclosure and equipped with a solid neutral (s/n) assembly. The switch shall be padlockable in the "on" position.

II. Service Type. Electrical service types A, C, D, and T shall be as schematically detailed on ED(4). Other service types shall be as detailed elsewhere on the plans.

III. Branch Circuit Breakers. Circuit breakers shall be thermal magnetic and have a minimum interrupting capacity of 10,000 amps and a voltage rating compatible with their use. Circuit breakers shall be sized as shown on electrical service data table. Circuit breakers in panelboards and load centers shall be full size and designed exclusively for the panelboard or load center in use. Tandem and half-width breakers shall not be used. All circuit breakers shall be permanently and clearly marked identifying the circuit or device attached. Circuit breakers shall be UL Listed to UL489. Circuit breakers shall beswitch duty.

IV. Circuit Breaker Panelboard. Panelboards shall be UL Listed and shall meet Federal Specification W-P-115b, Type 1, Class 1 requirements. Panelboards shall have copper busses, a minimum of 12 one-pole spaces, and shall be rated for service equipment. Enclosure shall meet UL type 3R classification. Panelboards shall have a threaded hub conduit entry for conduit entering the top of the enclosure. Circuit breakers shall be bolt-in type only.

V. Circuit Breaker Load Center. Load centers shall be UL Listed, and shall meet Federal Specification W-P-115c, Type 1, Class 2 requirements. Load centers shall have copper busses, a minimum of 4 one-pole spaces, and shall be rated for service equipment. Enclosure shall meet UL type 3R classification. Load centers shall have a threaded hub conduit entry for conduit entering the top of the enclosure. Circuit breakers shall be plug-in type only. Load centers for type T services shall accomodate a maximum of 6 one-pole breakers.

## EXPLANATION OF ELECTRICAL SERVICE DESCRIPTIVE CODE

**ELEC SERV TY X (XXX/XXX) XXX (XX) XX (X) XX (X)**

Schematic Type

Service Voltage (V / V )

Main Disconnect Amp Rating
(000 indicates none)

SS= Safety switch ahead of meter
NS= No switch ahead of meter and/or no meter required

Enclosure Type
GS= Galvanized steel
SS= Stainless steel
PS= Pedestal Service

⚠1

Photocell Location
T= Top of pole
E= Enclosure mounted
L= Luminaire mounted
N= None

Service Support Type
GC= Granite concrete
OC= Other concrete
TP= Timber pole
SP= Steel pole
SF= Steel frame
OT= Pole by others or paid for separately
EX= Existing pole
TS= Switch gear to be placed on traffic signal pole
RT= Rectangular structural tubing
PS= Pedestal Service

O= Overhead service
U= Underground service

Example: ELEC SERV TY D(120/240)070(NS)GS(T)TP(O)

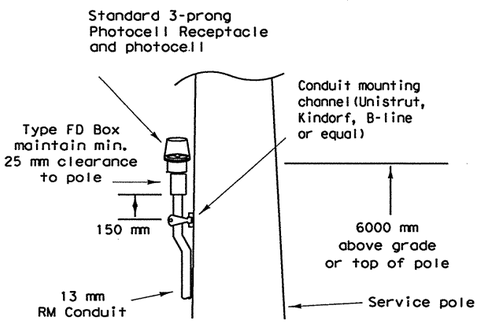


**TOP MOUNTED PHOTOCELL**

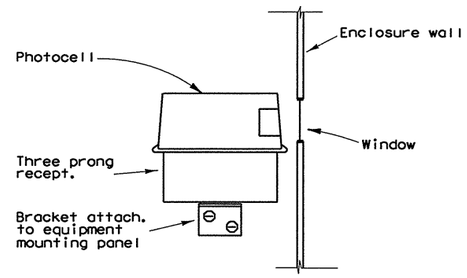


**ENCLOSURE MOUNTED PHOTOCELL**

For photocell specifications see ED(4),XII.

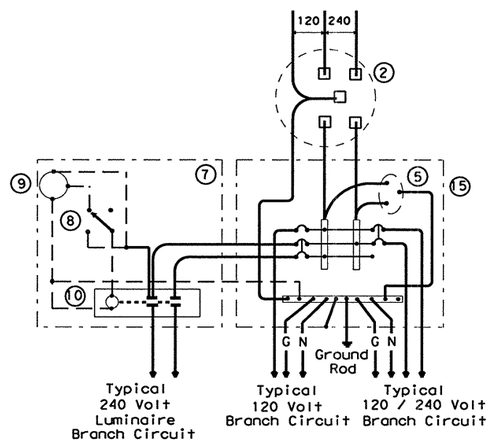


**SCHEMATIC TYPE T**
**120/240 VOLTS - THREE WIRE**

Install photocell and lighting contactor when shown on Electrical Service Data.

## SCHEMATIC LEGEND

1 - Safety Switch (when required)
2 - Meter (when required)
3 - Service Assembly Enclosure
4 - Main Disconnect (Switch or Breaker, See Electrical Service Data)
5 - Lightning Arrestor
6 - Circuit Breaker, 15A
7 - Auxiliary Enclosure
8 - Control Station ("H-O-A" Switch)
9 - Photo Electric Control (enclosure-mounted shown)
10 - Lighting Contactor
11 - Power Distribution Terminal Blocks
12 - Neutral/Ground Bus
13 - Branch Circuit Breaker (See Electrical Service Data)
14 - Circuit Breaker Panelboard (See Electrical Service Data)
15 - Load Center (See Electrical Service Data)

——— Power Wiring
- - - - - Control Wiring
—N— Neutral Conductor (when required)
—G— Grounding Conductor

⚠1 Added pedestal service

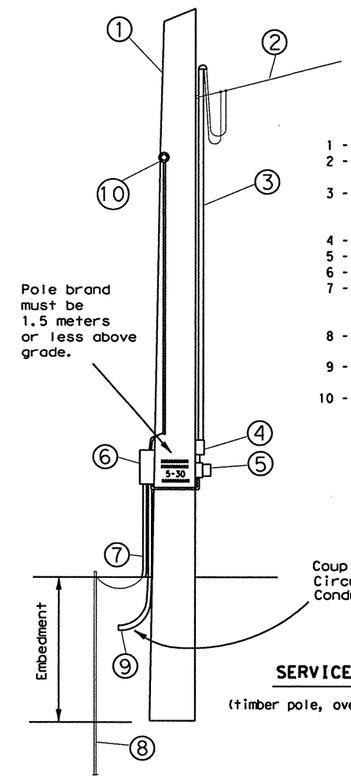


1 - Class 5 pole, height as required
2 - Service drop from utility company (attached below weatherhead)
3 - Service conduit and service entrance conductors (See Electrical Service Data)
4 - Safety switch (when required)
5 - Meter (when required)
6 - Service enclosure
7 - No. 6 bare grounding electrode conductor in 13 mm PVC to ground rod
8 - 16 x 2438 mm Copper clad ground rod
9 - RM conduit - same size as branch circuit conduit
10 - Photocell and conduit - if top mounted (See Electrical Service Data)

**SERVICE SUPPORT TYPE TP (O)**

(timber pole, overhead service, typical arrangement)

## TIMBER POLE NOTES

1. Conduit and conductors attached to service pole and underground within 305 mm of service pole shall not be paid for directly but shall be subsidiary to the service pole.
2. Install photo electric control on north side of pole or in service enclosure as required. See Electrical Service Data.
3. Attach service enclosure with galvanized channel (Unistrut, Kindorf, or equal). Gain pole two places to provide flat surfaces. Paint ends of channel with zinc rich paint.
4. Embedment depth shall be as required in Item 627 Treated Timber Poles.
5. Poles trimmed for excess length shall be trimmed from the top end only.

All dimensions are in millimeters unless otherwise noted.

STANDARD PLANS
TEXAS DEPARTMENT OF TRANSPORTATION
*Traffic Operations Division*

# ELECTRICAL DETAILS- SERVICE SCHEMATICS AND SUPPORT-TYPE TP (OVERHEAD)

## ED(3)-98(M)

| ©TxDOT April 1998 | DN: KB | CK: TB | DW: DN | CK: JM | REQ NO.: |
|---|---|---|---|---|---|
| REVISIONS | STATE DISTRICT | FEDERAL REGION | FEDERAL AID PROJECT | | SHEET |
| | SAT | 6 | NH 2000(704),etc. | | 634 |
| | COUNTY | | CONTROL | SECTION | JOB | HIGHWAY |
| | BEXAR | | 2452 | 01 | 036,etc. | LP 1604 |

LEVELS OF DETAIL
1 2 3 4 5 6 7 8 9 10 11 12 13 14 15 16 17 18 19 20 21 22 23 24 25 26 27 28 29 30 31 32 33 34 35 36 37 38 39 40 41 42 43 44 45 46 47 48 49 50 51 52 53 54 55 56 57 58 59 60 61 62 63

DATE:
ACC:
FILE:
DN:
CK:
DW:
CK:

DISCLAIMER
The use of this standard is governed by the "Texas Engineering Practice Act". No warranty of any kind is made by TxDOT for any purpose whatsoever. TxDOT assumes no responsibility for the conversion of this standard to other formats or for incorrect results or damages resulting from its use.

## SERVICE ENCLOSURE NOTES

VI. Service Assembly Enclosures. All service assemblies and enclosures shall be UL Listed for the intended purpose.

A. Shop built or shop assembled service assemblies (all types except Type T and Type D without lighting contactor) shall be built or assembled by a UL Listed Industrial Control Panel shop and shall have a unique serial numbered UL Label with the words "LISTED ENCLOSED INDUSTRIAL CONTROL PANEL". The same or an additional label shall have the name, location, and phone number of the shop, the UL file number of the shop, the shop order or drawing number, date of manufacture or assembly, and the line voltage. The enclosure shall also be labeled "SUITABLE ONLY FOR USE AS SERVICE EQUIPMENT".

B. Conduit entries into the top of all enclosures shall have threaded hubs.

C. All enclosures shall be permanently labeled on the front door "DANGER HIGH VOLTAGE" and the equipment supplied (i.e. LIGHTING, LANDSCAPING, SIGNALS, TRAFFIC MANAGEMENT). Unless otherwise approved by the Engineer, the labeling shall be minimum 25 mm letters and shall be applied by stenciled paint or stick-on decal.

D. Type GS enclosures for service types D, T, and the circuit breaker panelboard of service type C shall be made from pre-galvanized steel sheeting, hot dipped galvanized steel, or powder coat painted steel. Painted enclosures shall be painted inside and outside; galvanized enclosures may be painted. Unless otherwise approved by the engineer, painted enclosures shall be gray, beige, or white. Panelboard/loadcenter enclosures shall be UL type 3R, shall have a dead front trim, and shall have a door with provisions for padlocking. Auxiliary enclosures, when required for illumination or other control equipment, shall be UL type 12 as described in III.E. below for service types A and C.

E. Type GS enclosures for service types A and C shall meet the requirements of type GS in III.D. above for service types D and T except that the enclosure shall be a UL type 12 enclosure conforming to UL 50 and shall meet additional requirements of this paragraph. The enclosure door shall have a rolled lip around all sides of the enclosure opening, a continuous hinge, and a padlock handle. The door shall have a mechanically attached data pocket constructed of either thermoplastic or metal and measuring at least 300 mm by 300 mm. The main disconnect operator shall be flange-mounted, shall interlock the door when in the "on" position, and shall be pad lockable in both the "on" or the "off" positions. Enclosure shall include an equipment mounting panel installed inside the enclosure on collar studs or tapped bosses, and constructed of either 2.66 mm thick steel or 2.54 mm thick aluminum. Enclosure shall be either hot dip galvanized, pre-galvanized sheeting or prime and painted. Paint shall be powder coat paint as show below. Color shall be white or gray. Condensation drainage shall be provided through 3 mm drain holes drilled in the bottom of the enclosure at two diagonal opposing corners. The contractor shall place in the service enclosure a laminated copy of the "as built" electrical plans showing the equipment supplied by that electrical service and all applicable wiring diagrams, layouts, and ED and RID standard sheets.

F. Type SS Stainless steel enclosure shall be meet all the requirements above for the respective type GS except that the enclosure shall be UL type 4X conforming to UL 50. Type GS circuit breaker panel housed in a stainless steel UL type 4X enclosure conforming to UL 50 shall be considered complying with the Type SS requirements for Service types D & T.

G. Type PS enclosure shall be as detailed and specified on ED(8).

VII. Powder Coat Paint. Powder coating shall be either a polyester thermosetting resin, a zinc rich primer with a TGIC (triglycidyl isocyanurate) powder overcoating, or a zinc-rich epoxy powder, applied by either electrostatic spray or fluidized bed immersion, high temperature oven cured, high density, low gloss, 0.1016 mm thick (minimum), coating. Adhesion shall meet the 5A or 5B classifications of ASTM D3359. Finish shall be uniform in appearance and free of scratches.

VIII. Main Disconnect. Main disconnect device shall be either a fusible switch or a circuit breaker, as specified in the Electrical Service Data, shall be two pole, and rated for the voltage and amperage specified.

A. Switch shall be UL and NEMA Type HD (heavy duty) flange-mounted in the service assembly enclosure. Switch shall have clips for Class R fuses.

B. Circuit breaker shall be a UL Listed thermal-magnetic circuit breaker flange-mounted in the service assembly enclosure. Circuit breakers shall have a minimum interrupting rating of 14,000 Amps. Contractor shall verify that the available fault current is less than the circuit breaker amps interrupting capacity (AIC) rating and shall provide documentation from the Utility to the Engineer. Documentation shall be submitted at the same time as other electrical submittals. Circuit breaker shall be UL Listed to UL489.

IX. Lightning Arrester. Arresters shall be MOV-type secondary surge arresters rated 650 volts for 240/480 volt services or 175 volts for 120/240 volt services and shall meet ANSI, IEEE, UL, and NEMA standards. Mounting brackets shall be provided for mounting the arresters inside the service assembly enclosures, unless otherwise specified by the Engineer. Lightning arrester leads shall be run as straight and short as practical.

X. Control Circuit. Control circuit protection shall be either a 10 or 15 amp circuit breaker.

XI. Control Station ("H-O-A" Switch). Control station shall be a maintained-contact, three position selector switch in a UL type enclosure. Switch shall be rated 600 volts and shall be fitted with "Hand-Off-Auto" legend.

XII. Photo Electric Control. Photo electric control shall consist of a photocell, internal lightning arrester, and relay or bimetallic switch mounted inside a weatherproof enclosure with standard 3-prong twist lock photocell plug and receptacle. The enclosure shall be made of poly-acrylic with clear acrylic window. Enclosure chassis shall be molded phenolic plastic. The photocell shall have a polyethylene gasket, and shall have a hermetically sealed cadmium sulfide cell. The arrester shall have an enclosed type expulsion arrester rated 2.0 kV sparkover with 10,000 amps follow-through. Relay or switch shall be time delay type with normally closed contacts. Photo electric control shall be rated 1800 VA, 105-285 volts.

Enclosure mounted photocells shall be the same as above except that the photocell shall be mounted inside the enclosure. The enclosure shall have two acrylic paned windows, or other material approved by the Engineer, one on each side of the enclosure. Each window shall be rectangular approximately 25 mm by 50 mm, round 50 mm diameter, or as otherwise approved by the Engineer. The photocell shall be mounted in a position to receive light from one window. Top of pole mounted photocells shall be mounted as shown on ED(4).

The Contractor shall be responsible for proper operation of the photo-electric control. The Contractor shall move and/or adjust or shield the photocell from stray or ambient nighttime light or shall make any other adjustments required for proper operation. The photocell shall face North when practicable. Unless otherwise shown on the plans, the photocell shall turn on the illumination system at 10 +(-) 5 Lux and turn off the illumination system at 20 Lux higher than turn on.

XIII. Lighting Contactor. Lighting contactor shall be a UL Listed lighting contactor, two-pole or multipole as required, electrically held type designed to control high pressure sodium lighting loads, with silver alloy double break contacts rated at 480 volts or 600 volts.

XIV. Power Distribution Terminal Blocks. Power distribution terminal blocks shall be rated for 600 volts and shall be used for line side connections to branch circuit breakers where more than one circuit breaker is required. Lugs on blocks shall be properly sized for conductors being used. Only one conductor shall be placed under each lug.

XV. Neutral/Ground Bus. Neutral/ground bus shall be a factory made bus permanently bonded to the enclosure with properly sized lugs for grounding and neutral conductors.

SCHEMATIC LEGEND

1 - Safety Switch (when required)
2 - Meter (when required)
3 - Service Assembly Enclosure
4 - Main Disconnect (Switch or Breaker, (See Electrical Service Data)
5 - Lightning Arrestor
6 - Circuit Breaker, 15A
7 - Auxiliary Enclosure
8 - Control Station ("H-O-A" Switch)
9 - Photo Electric Control (enclosure-mounted shown)
10 - Lighting Contactor
11 - Power Distribution Terminal Blocks
12 - Neutral/Ground Bus
13 - Branch Circuit Breaker (See Electrical Service Data)
14 - Circuit Breaker Panelboard (See Electrical Service Data)
15 - Load Center

——— Power Wiring
- - - - - Control Wiring
——N—— Neutral Conductor (when required)
——G—— Grounding Conductor

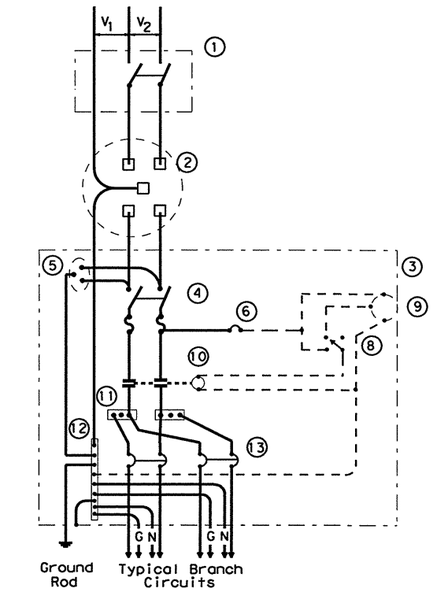


**SCHEMATIC TYPE A**

**THREE WIRE**

Maximum feeder circuit size (High Mast Poles): 100 amps for two pole 480V, 125 amps for one or two pole 120V or 240V. Maximum branch circuit size: 50 amps.

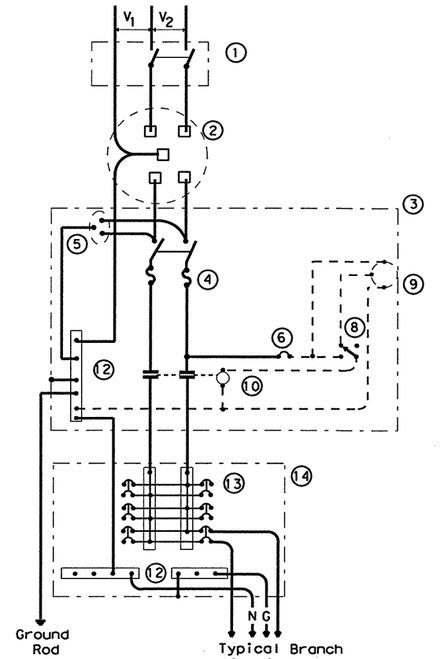


**SCHEMATIC TYPE C**

**THREE WIRE**

Maximum feeder circuit size (High Mast Poles): 100 amps for two pole 480V, 125 amps for one or two pole 120V or 240V. Maximum branch circuit size: 50 amps.

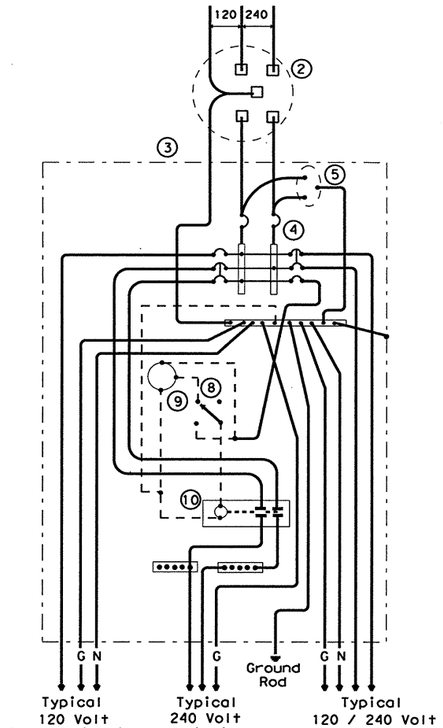


**SCHEMATIC TYPE D**

**120/240 VOLTS - THREE WIRE**

Install photocell and lighting contactor when shown on Electrical Service Data. See Type D service notes.

**TYPE D SERVICE NOTE**

Photocell and lighting contactor shall be located in the same UL type 3R enclosure. Photocells shall have a window on each side of enclosure to allow operation. Photocell/contactor and breaker area shall have separate dead front trim. Enclosure, except for RT and PS supports, shall not exceed 915 mm in height or 385 mm in width unless approved by the engineer.

All dimensions are in millimeters unless otherwise noted.

STANDARD PLANS
TEXAS DEPARTMENT OF TRANSPORTATION
*Traffic Operations Division*

# ELECTRICAL DETAILS- SERVICE ENCLOSURE & NOTES

ED(4)-98(M)

| ©TxDOT April 1998 | | | DN: KB | CK: TB | DW: DN | CK: JM | MSG NO.: |
|---|---|---|---|---|---|---|---|
| REVISIONS | STATE DISTRICT | FEDERAL REGION | FEDERAL AID PROJECT | | | | SHEET |
| | SAT | 6 | NH 2000(704),etc. | | | | 635 |
| | COUNTY | | CONTROL | SECTION | JOB | | HIGHWAY |
| | BEXAR | | 2452 | 01 | 036,etc. | | LP 1604 |

LEVELS DI
1 2 3 4 5 6 7 8 9
17 18 19 20 21 22 23 24 25 26 27 28 29 30 31 32
33 34 35 36 37 38 39 40 41 42 43 44 45 46 47 48
49 50 51 52 53 54 55 56 57 58 59 60 61 62 63

DATE:
ACC:
FILE:
DN:
CK:
DW:
CK:

DISCLAIMER
The use of this standard is governed by the "Texas Engineering Practice Act". No warranty of any kind is made by TxDOT for any purpose whatsoever. TxDOT assumes no responsibility for the conversion of this standard to other formats or for incorrect results or damages resulting from its use.

## SERVICE ENCLOSURE NOTES

VI. Service Assembly Enclosures. All service assemblies and enclosures shall be UL Listed for the intended purpose.

A. Shop built or shop assembled service assemblies (all types except Type T and Type D without lighting contactor) shall be built or assembled by a UL Listed Industrial Control Panel shop and shall have a unique serial numbered UL Label with the words "LISTED ENCLOSED INDUSTRIAL CONTROL PANEL". The same or an additional label shall have the name, location, and phone number of the shop, the UL file number of the shop, the shop order or drawing number, date of manufacture or assembly, and the line voltage. The enclosure shall also be labeled "SUITABLE ONLY FOR USE AS SERVICE EQUIPMENT".

B. Conduit entries into the top of all enclosures shall have threaded hubs.

C. All enclosures shall be permanently labeled on the front door "DANGER HIGH VOLTAGE" and the equipment supplied (i.e. LIGHTING, LANDSCAPING, SIGNALS, TRAFFIC MANAGEMENT). Unless otherwise approved by the Engineer, the labeling shall be minimum 25 mm letters and shall be applied by stenciled paint or stick-on decal.

D. Type GS enclosures for service types D, T, and the circuit breaker panelboard of service type C shall be made from pre-galvanized steel sheeting, hot dipped galvanized steel, or powder coat painted steel. Painted enclosures shall be painted inside and outside; galvanized enclosures may be painted. Unless otherwise approved by the engineer, painted enclosures shall be gray, beige, or white. Panelboard/loadcenter enclosures shall be UL type 3R, shall have a dead front trim, and shall have a door with provisions for padlocking. Auxiliary enclosures, when required for illumination or other control equipment, shall be UL type 12 as described in III.E. below for service types A and C.

E. Type GS enclosures for service types A and C shall meet the requirements of type GS in III.D. above for service types D and T except that the enclosure shall be a UL type 12 enclosure conforming to UL 50 and shall meet additional requirements of this paragraph. The enclosure door shall have a rolled lip around all sides of the enclosure opening, a continuous hinge, and a padlock handle. The door shall have a mechanically attached data pocket constructed of either thermoplastic or metal and measuring at least 300 mm by 300 mm. The main disconnect operator shall be flange-mounted, shall interlock the door when in the "on" position, and shall be pad lockable in both the "on" or the "off" positions. Enclosure shall include an equipment mounting panel installed inside the enclosure on collar studs or tapped bosses, and constructed of either 2.66 mm thick steel or 2.54 mm thick aluminum. Enclosure shall be either hot dip galvanized, pre-galvanized sheeting or prime and painted. Paint shall be powder coat paint as show below. Color shall be white or gray. Condensation drainage shall be provided through 3 mm drain holes drilled in the bottom of the enclosure at two diagonal opposing corners. The contractor shall place in the service enclosure a laminated copy of the "as built" electrical plans showing the equipment supplied by that electrical service and all applicable wiring diagrams, layouts, and ED and RID standard sheets.

F. Type SS Stainless steel enclosure shall be meet all the requirements above for the respective type GS except that the enclosure shall be UL type 4X conforming to UL 50. Type GS circuit breaker panel housed in a stainless steel UL type 4X enclosure conforming to UL 50 shall be considered complying with the Type SS requirements for Service types D & T.

G. Type PS enclosure shall be as detailed and specified on ED(8).

VII. Powder Coat Paint. Powder coating shall be either a polyester thermosetting resin, a zinc rich primer with a TGIC (triglycidyl isocyanurate) powder overcoating, or a zinc-rich epoxy powder, applied by either electrostatic spray or fluidized bed immersion, high temperature oven cured, high density, low gloss, 0.1016 mm thick (minimum), coating. Adhesion shall meet the 5A or 5B classifications of ASTM D3359. Finish shall be uniform in appearance and free of scratches.

VIII. Main Disconnect. Main disconnect device shall be either a fusible switch or a circuit breaker, as specified in the Electrical Service Data, shall be two pole, and rated for the voltage and amperage specified.

A. Switch shall be UL and NEMA Type HD (heavy duty) flange-mounted in the service assembly enclosure. Switch shall have clips for Class R fuses.

B. Circuit breaker shall be a UL Listed thermal-magnetic circuit breaker flange-mounted in the service assembly enclosure. Circuit breakers shall have a minimum interrupting rating of 14,000 Amps. Contractor shall verify that the available fault current is less than the circuit breaker amps interrupting capacity (AIC) rating and shall provide documentation from the Utility to the Engineer. Documentation shall be submitted at the same time as other electrical submittals. Circuit breaker shall be UL Listed to UL489.

IX. Lightning Arrester. Arresters shall be MOV-type secondary surge arresters rated 650 volts for 240/480 volt services or 175 volts for 120/240 volt services and shall meet ANSI, IEEE, UL, and NEMA standards. Mounting brackets shall be provided for mounting the arresters inside the service assembly enclosures, unless otherwise specified by the Engineer. Lightning arrester leads shall be run as straight and short as practical.

X. Control Circuit. Control circuit protection shall be either a 10 or 15 amp circuit breaker.

XI. Control Station ("H-O-A" Switch). Control station shall be a maintained-contact, three position selector switch in a UL type enclosure. Switch shall be rated 600 volts and shall be fitted with "Hand-Off-Auto" legend.

XII. Photo Electric Control. Photo electric control shall consist of a photocell, internal lightning arrester, and relay or bimetallic switch mounted inside a weatherproof enclosure with standard 3-prong twist lock photocell plug and receptacle. The enclosure shall be made of poly-acrylic with clear acrylic window. Enclosure chassis shall be molded phenolic plastic. The photocell shall have a polyethylene gasket, and shall have a hermetically sealed cadmium sulfide cell. The arrester shall have an enclosed type expulsion arrester rated 2.0 kV sparkover with 10,000 amps follow-through. Relay or switch shall be time delay type with normally closed contacts. Photo electric control shall be rated 1800 VA, 105-285 volts.

Enclosure mounted photocells shall be the same as above except that the photocell shall be mounted inside the enclosure. The enclosure shall have two acrylic paned windows, or other material approved by the Engineer, one on each side of the enclosure. Each window shall be rectangular approximately 25 mm by 50 mm, round 50 mm diameter, or as otherwise approved by the Engineer. The photocell shall be mounted in a position to receive light from one window. Top of pole mounted photocells shall be mounted as shown on ED(4).

The Contractor shall be responsible for proper operation of the photo-electric control. The Contractor shall move and/or adjust or shield the photocell from stray or ambient nighttime light or shall make any other adjustments required for proper operation. The photocell shall face North when practicable. Unless otherwise shown on the plans, the photocell shall turn on the illumination system at 10 +(-) 5 Lux and turn off the illumination system at 20 Lux higher than turn on.

XIII. Lighting Contactor. Lighting contactor shall be a UL Listed lighting contactor, two-pole or multipole as required, electrically held type designed to control high pressure sodium lighting loads, with silver alloy double break contacts rated at 480 volts or 600 volts.

XIV. Power Distribution Terminal Blocks. Power distribution terminal blocks shall be rated for 600 volts and shall be used for line side connections to branch circuit breakers where more than one circuit breaker is required. Lugs on blocks shall be properly sized for conductors being used. Only one conductor shall be placed under each lug.

XV. Neutral/Ground Bus. Neutral/ground bus shall be a factory made bus permanently bonded to the enclosure with properly sized lugs for grounding and neutral conductors.

SCHEMATIC LEGEND

1 - Safety Switch (when required)
2 - Meter (when required)
3 - Service Assembly Enclosure
4 - Main Disconnect (Switch or Breaker, (See Electrical Service Data)
5 - Lightning Arrestor
6 - Circuit Breaker, 15A
7 - Auxiliary Enclosure
8 - Control Station ("H-O-A" Switch)
9 - Photo Electric Control
10 - Lighting Contactor
11 - Power Distribution Terminal Blocks
12 - Neutral/Ground Bus
13 - Branch Circuit Breaker (See Electrical Service Data)
14 - Circuit Breaker Panelboard (See Electrical Service Data)
15 - Load Center
16 - Surge Capacitor Westinghouse No 1N02180A05
General Electric No 9L18BAB301 Or Equal
17 - See Detail 1

——— Power Wiring
- - - - - Control Wiring
——N—— Neutral Conductor (when required)
——G—— Grounding Conductor

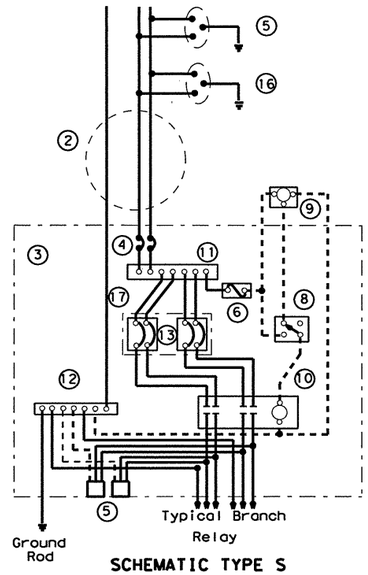


SCHEMATIC TYPE S

240/480 VOLTS - THREE WIRE

See ED(3)-98 for Service Pole Information

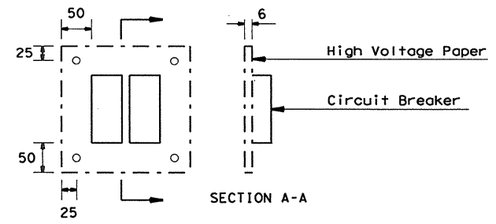


DETAIL 1

The attachment of the masonite to the enclosure shall be as approved by the Engineer.

©1998 Texas Department of Transportation

All dimensions are in millimeters unless otherwise noted.

STANDARD PLANS
TEXAS DEPARTMENT OF TRANSPORTATION
*Traffic Operations Division*

# ELECTRICAL DETAILS- SERVICE ENCLOSURE & NOTES

## ED(4)-98(M)

## SAN ANTONIO DISTRICT STANDARD

| ed498d15.dgn | DN: - LR | CK: - | DW: - DN | CK: - | REG NO.: |
|---|---|---|---|---|---|
| REVISIONS 12/99 | STATE DISTRICT | FEDERAL REGION | FEDERAL AID PROJECT | | SHEET |
| | SAT. | 6 | NH 2000(704), etc. | | 636 |
| | COUNTY | | CONTROL | SECTION | JOB | HIGHWAY |
| | BEXAR | | 2452 | 01 | 036, etc. | LP 1604 |

LEVELS: 1 2 3 4 5 6 7 8 9 10 11 12 13 14 15 16 17 18 19 20 21 22 23 24 25 26 27 28 29 30 31 32 33 34 35 36 37 38 39 40 41 42 43 44 45 46 47 48 49 50 51 52 53 54 55 56 57 58 59 60 61 62 63

DATE: ACC: FILE:

DN: CK: DW: CK:

QUANTITIES THIS SHEET
CSJ 2452-01-037

SCALE 1:1000

| RIPRAP APRONS QUANTITIES | | | |
|---|---|---|---|
| TYPE OF MOUNT | EA. | MULTIPLIED BY M3 | TOTAL M3 |
| SINGLE POST | | 1.0 | |
| MULTI - POST | | 1.5 | |
| OVHD. SIGN BRIDGE | | | |
| CLASS "B" CONC. GRAND TOTAL | | | 0.0 |

SEE SHEET NO. 753 FOR RIPRAP APRON DETAILS.
SEE SHEET NO. 58 FOR RIPRAP SUMMARIZATION.

NOTE(S):

PAVEMENT MARKINGS SHOWN FOR REFERENCE ONLY. SEE PAVEMENT MARKINGS/DELINEATION LAYOUTS FOR DETAILS AND QUANTITIES.

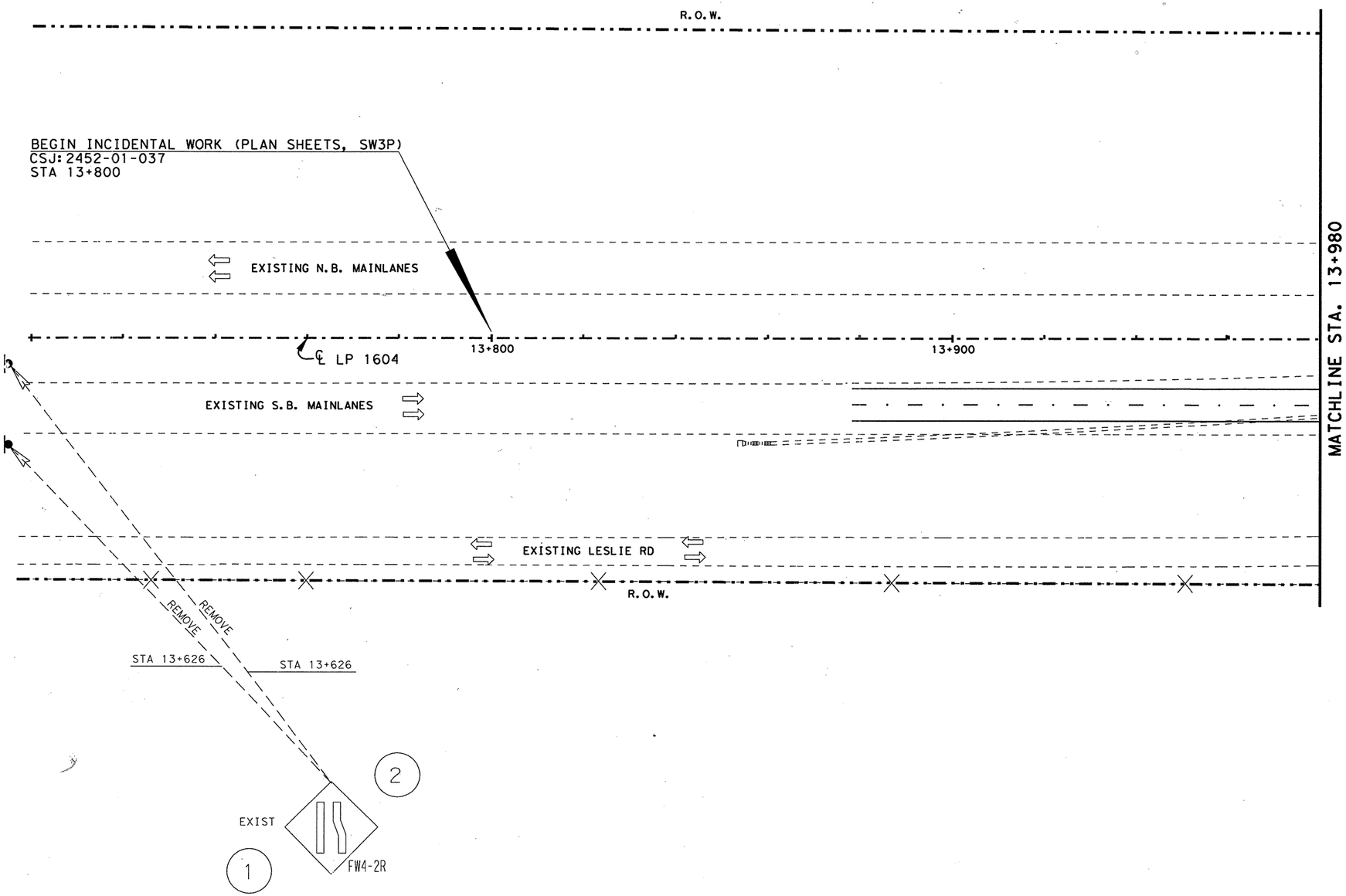



ACC: *:\ao\design\
lp1604fm471-90\pave-sign\
FILE: pavmrkplan01.dgn


STATE OF TEXAS
JOEL K. DAVENPORT, JR.
79276
REGISTERED
PROFESSIONAL ENGINEER

Joel K. Davenport, Jr. 9/19/00
Joel K. Davenport, Jr. P.E. 79276 — Date

©2000C

Texas Department of Transportation

# SIGNING LAYOUT

**SHEET 1 OF 57**

| FED. RD. DIV. NO. | FEDERAL AID PROJECT NO. | | SHEET NO. |
|---|---|---|---|
| 6 | NH 2000(704), etc. | | 637 |
| STATE | DIST. | COUNTY | |
| TEXAS | SAT | BEXAR | |
| CONT. | SECT. | JOB | HIGHWAY NO. |
| 2452 | 01 | 036, etc. | LP 1604 |

QUANTITIES THIS SHEET
CSJ 2452-01-037

SCALE 1:1000

| RIPRAP APRONS QUANTITIES | | | |
|---|---|---|---|
| TYPE OF MOUNT | EA. | MULTIPLIED BY M3 | TOTAL M3 |
| SINGLE POST | | 1.0 | |
| MULTI - POST | | 1.5 | |
| OVHD. SIGN BRIDGE | | | |
| CLASS "B" CONC. GRAND TOTAL | | | 0.0 |

SEE SHEET NO. 753 FOR RIPRAP APRON DETAILS.
SEE SHEET NO. 58 FOR RIPRAP SUMMARIZATION.

NOTE(S):

PAVEMENT MARKINGS SHOWN FOR REFERNCE ONLY. SEE PAVEMENT MARKING/DELINEATION LAOUTS FOR DETAILS AND QUANTITIES.

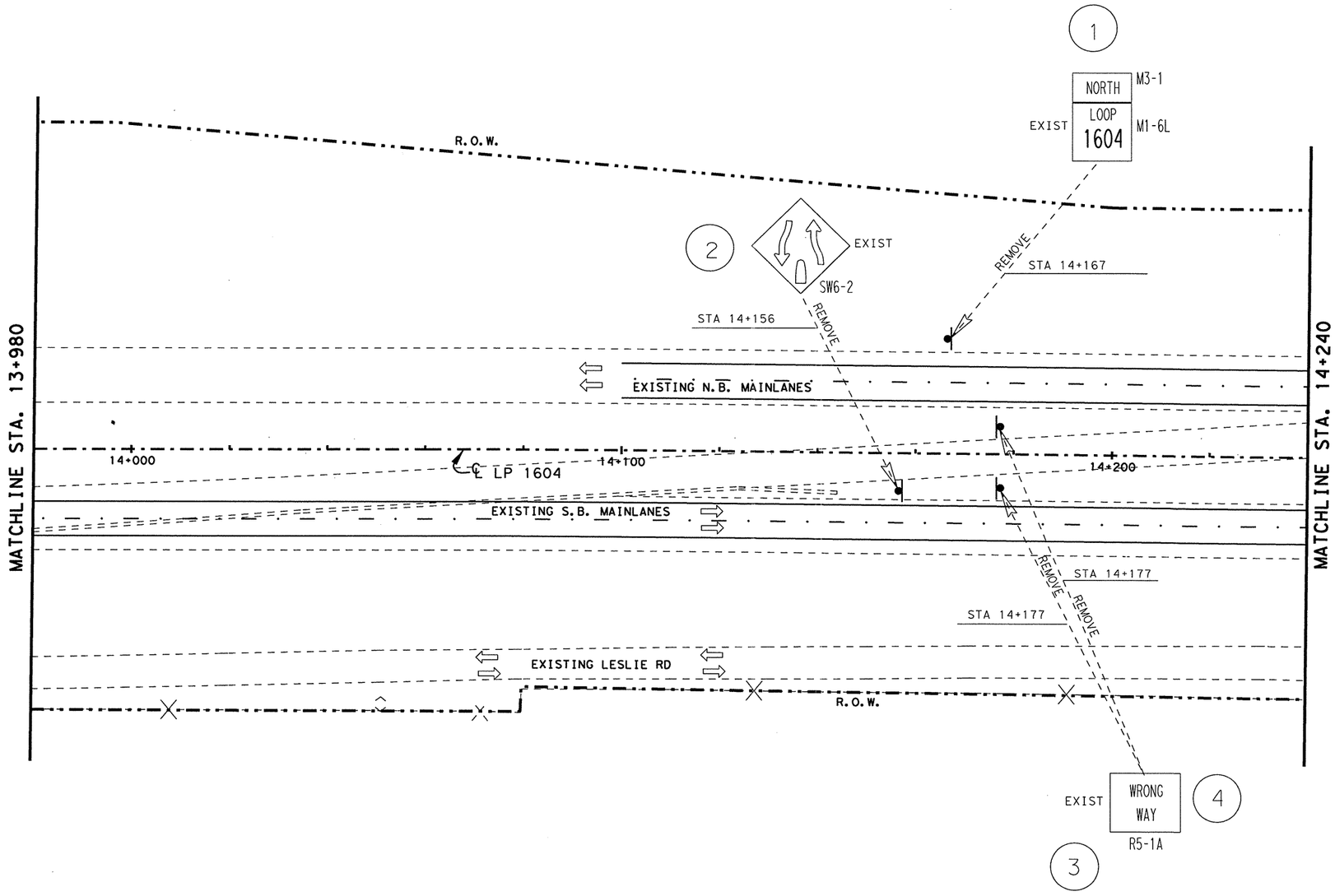

Joel K. Davenport Jr. 9/19/00
Joel K. Davenport, Jr. P.E. 79276 Date

©2000
Texas Department of Transportation

# SIGNING LAYOUT

**SHEET 2 OF 57**

| FED. RD. DIV. NO. | FEDERAL AID PROJECT NO. | | SHEET NO. |
|---|---|---|---|
| 6 | NH 2000(704), etc. | | 638 |
| STATE | DIST. | COUNTY | |
| TEXAS | SAT | BEXAR | |
| CONT. | SECT. | JOB | HIGHWAY NO. |
| 2452 | 01 | 036, etc. | LP 1604 |

LEVELS DISPLAYED
ACC: t:\ao\design\
lp1604fm471-90\pave-sign\
FILE: pavmrkplan02.dgn

QUANTITIES THIS SHEET
CSJ 2452-01-037

SCALE 1:1000

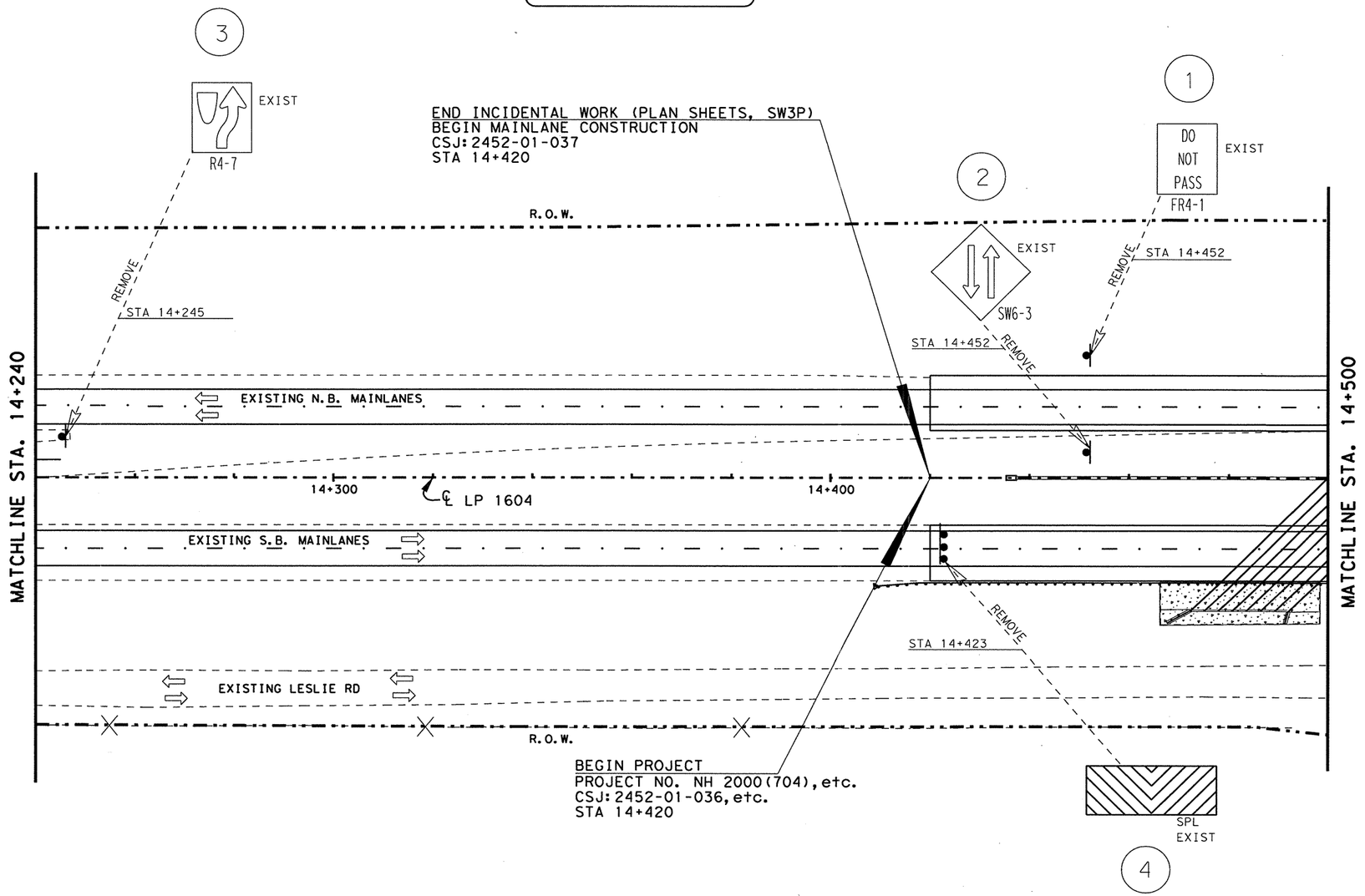


| RIPRAP APRONS QUANTITIES | | | |
|---|---|---|---|
| TYPE OF MOUNT | EA. | MULTIPLIED BY M3 | TOTAL M3 |
| SINGLE POST | | 1.0 | |
| MULTI - POST | | 1.5 | |
| OVHD. SIGN BRIDGE | | | |
| CLASS "B" CONC. GRAND TOTAL | | | 0.0 |

SEE SHEET NO. 753 FOR RIPRAP APRON DETAILS.
SEE SHEET NO. 58 FOR RIPRAP SUMMARIZATION.

NOTE(S):

PAVEMENT MARKINGS SHOWN FOR REFERENCE ONLY. SEE PAVEMENT MARKINGS/DELINEATION LAYOUTS FOR DETAILS AND QUANTITIES.

LEVELS DISPLAYED
1 2 3 4 5 6 7 8 9 10 11 12 13 14 15 16
17 18 19 20 21 22 23 24 25 26 27 28 29 30 31 32
33 34 35 36 37 38 39 40 41 42 43 44 45 46 47 48
49 50 51 52 53 54 55 56 57 58 59 60 61 62 63 64

ACC: t:\a\design\
lp1604fm471-90\pave-sign
FILE: pavmrkplan03.dgn

STATE OF TEXAS
JOEL K. DAVENPORT, JR.
79276
REGISTERED PROFESSIONAL ENGINEER

Joel K Davenport Jr 9/19/00
Joel K. Davenport, Jr. P.E. 79276 Date

©2000 Texas Department of Transportation

# SIGNING LAYOUT

**SHEET 3 OF 57**

| FED. RD. DIV. NO. | FEDERAL AID PROJECT NO. | | SHEET NO. |
|---|---|---|---|
| 6 | NH 2000(704), etc. | | 639 |
| STATE | DIST. | COUNTY | |
| TEXAS | SAT | BEXAR | |
| CONT. | SECT. | JOB | HIGHWAY NO. |
| 2452 | 01 | 036, etc. | LP 1604 |

QUANTITIES THIS SHEET
CSJ 2452-01-037

SCALE 1:1000

| RIPRAP APRONS QUANTITIES | | | |
|---|---|---|---|
| TYPE OF MOUNT | EA. | MULTIPLIED BY M3 | TOTAL M3 |
| SINGLE POST | 1 | 1.0 | 1.0 |
| MULTI - POST | 2 | 1.5 | 3.0 |
| OVHD. SIGN BRIDGE | | | |
| CLASS "B" CONC. GRAND TOTAL | | | 4.0 |

SEE SHEET NO. 753 FOR RIPRAP APRON DETAILS.
SEE SHEET NO. 58 FOR RIPRAP SUMMARIZATION.

NOTE(S):

PAVEMENT MARKINGS SHOWN FOR REFERENCE ONLY. SEE PAVEMENT MARKINGS/DELINEATION LAYOUTS FOR DETAILS AND QUANTITIES.

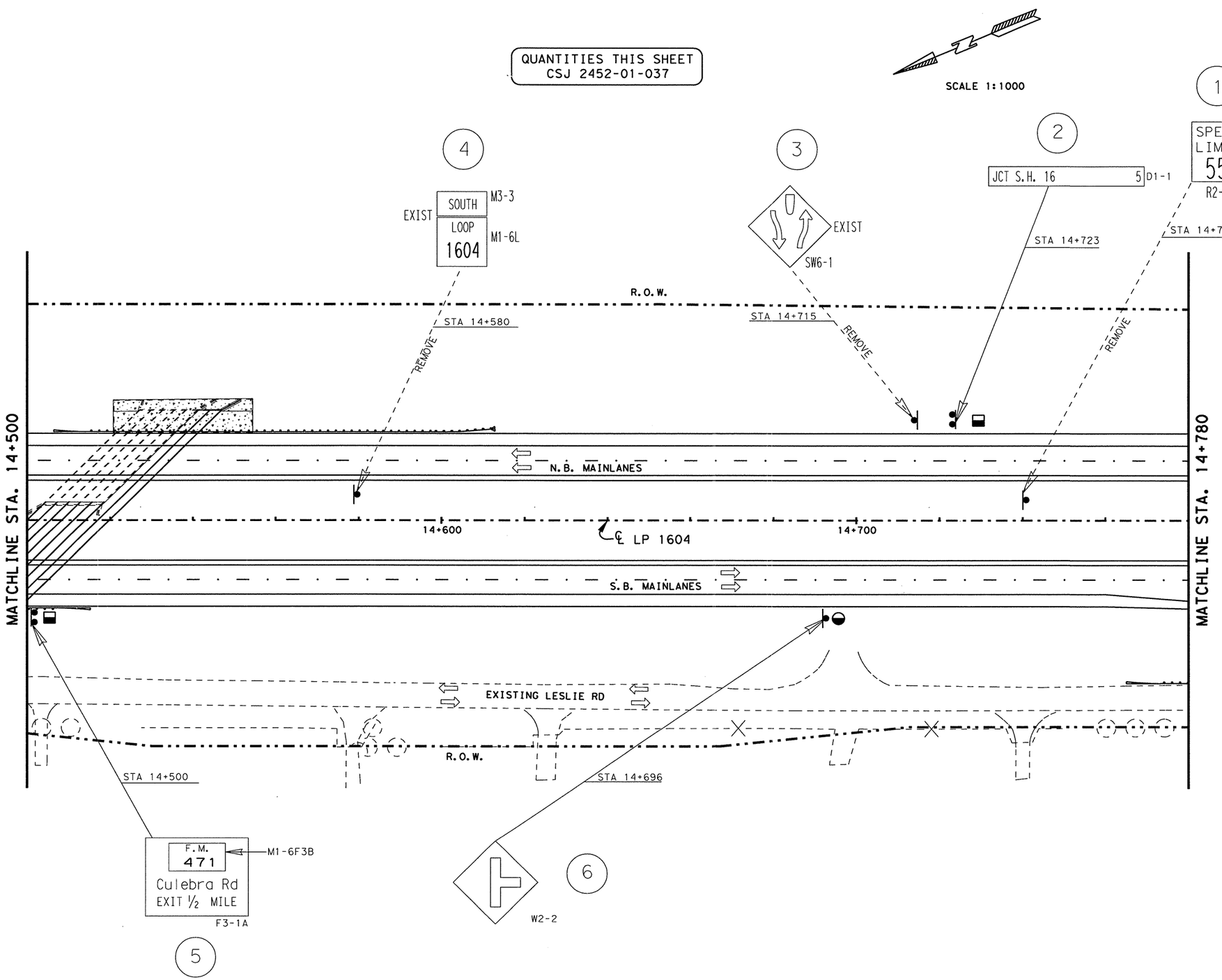


STATE OF TEXAS
JOEL K. DAVENPORT, JR.
79276
REGISTERED
PROFESSIONAL ENGINEER

Joel K. Davenport, Jr. 9/19/00
Joel K. Davenport, Jr. P.E. 79276 Date

©2000 Texas Department of Transportation

# SIGNING LAYOUT

**SHEET 4 OF 57**

| FED.RD. DIV.NO. | FEDERAL AID PROJECT NO. | | SHEET NO. |
|---|---|---|---|
| 6 | NH 2000(704), etc. | | 640 |
| STATE | DIST. | COUNTY | |
| TEXAS | SAT | BEXAR | |
| CONT. | SECT. | JOB | HIGHWAY NO. |
| 2452 | 01 | 036, etc. | LP 1604 |

4 5 6 7 8 9 10 11 12 13 14 15 16
17 18 19 20 21 22 23 24 25 26 27 28 29 30 31 32
33 34 35 36 37 38 39 40 41 42 43 44 45 46 47 48
49 50 51 52 53 54 55 65 75 85 96 06 16 26 36

QUANTITIES THIS SHEET
CSJ 2452-01-037

SCALE 1:1000

| RIPRAP APRONS QUANTITIES | | | |
|---|---|---|---|
| TYPE OF MOUNT | EA. | MULTIPLIED BY M3 | TOTAL M3 |
| SINGLE POST ◒ | 7 | 1.0 | 7.0 |
| MULTI - POST ⬓ | | 1.5 | |
| OVHD. SIGN BRIDGE ◆ | | | |
| CLASS "B" CONC. GRAND TOTAL | | | 7.0 |

SEE SHEET NO. 753 FOR RIPRAP APRON DETAILS.
SEE SHEET NO. 58 FOR RIPRAP SUMMARIZATION.

NOTE(S):

PAVEMENT MARKINGS SHOWN FOR REFERENCE ONLY. SEE PAVEMENT MARKINGS/DELINEATION LAYOUTS FOR DETAILS AND QUANTITIES.

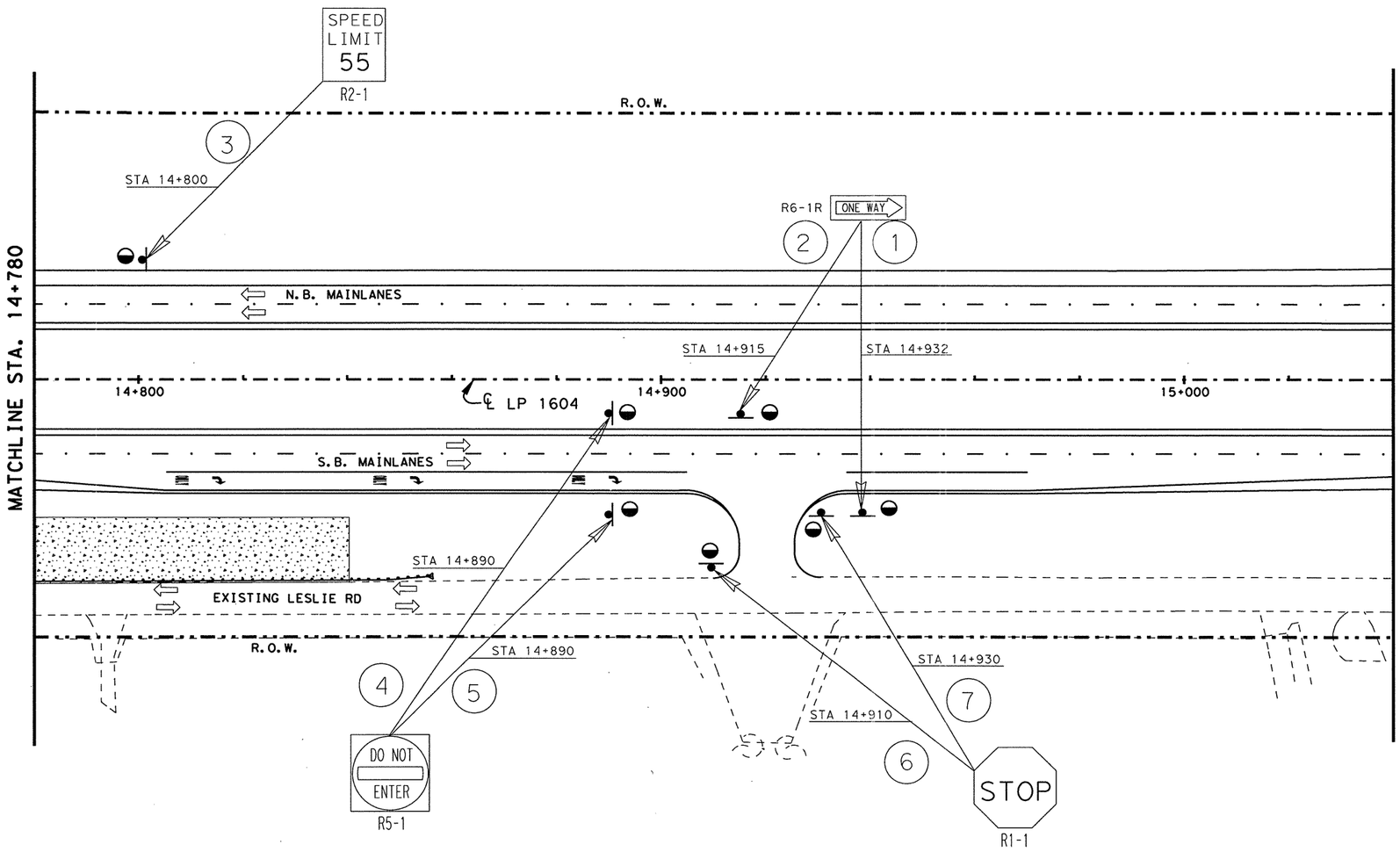


STATE OF TEXAS
JOEL K. DAVENPORT, JR.
79276
REGISTERED PROFESSIONAL ENGINEER

Joel K. Davenport, Jr. 9/19/00
Joel K. Davenport, Jr. P.E. 79276 Date


LEVELS DISPLAYED
1 2 3 4 5 6 7 8 9 10 11 12 13 14 15 16 17 18 19 20 21 22 23 24 25 26 27 28 29 30 31 32 33 34 35 36 37 38 39 40 41 42 43 44 45 46 47 48 49 50 51 52 53 54 55 56 57 58 59 60 61 62 63 64

ACC: t:\ao\design\lp1604fm471-90/pave\sign\
FILE: pavmrkplan05.dgn


©2000 Texas Department of Transportation

# SIGNING LAYOUT

**SHEET 5 OF 57**

| FED.RD. DIV.NO. | FEDERAL AID PROJECT NO. | SHEET NO. |
|---|---|---|
| 6 | NH 2000(704), etc. | 641 |
| STATE | DIST. | COUNTY |
| TEXAS | SAT | BEXAR |
| CONT. | SECT. | JOB / HIGHWAY NO. |
| 2452 | 01 | 036, etc. / LP 1604 |

QUANTITIES THIS SHEET
CSJ 2452-01-037

SCALE 1:1000

| RIPRAP APRONS QUANTITIES | | | |
|---|---|---|---|
| TYPE OF MOUNT | EA. | MULTIPLIED BY M3 | TOTAL M3 |
| SINGLE POST | 1 | 1.0 | 1.0 |
| MULTI - POST | | 1.5 | |
| OVHD. SIGN BRIDGE | | | |
| CLASS "B" CONC. GRAND TOTAL | | | 1.0 |

SEE SHEET NO. 153 FOR RIPRAP APRON DETAILS.
SEE SHEET NO. 58 FOR RIPRAP SUMMARIZATION.

NOTE(S):

PAVEMENT MARKINGS SHOWN FOR REFERENCE ONLY. SEE PAVEMENT MARKINGS/DELINEATION LAYOUTS FOR DETAILS AND QUANTITIES.

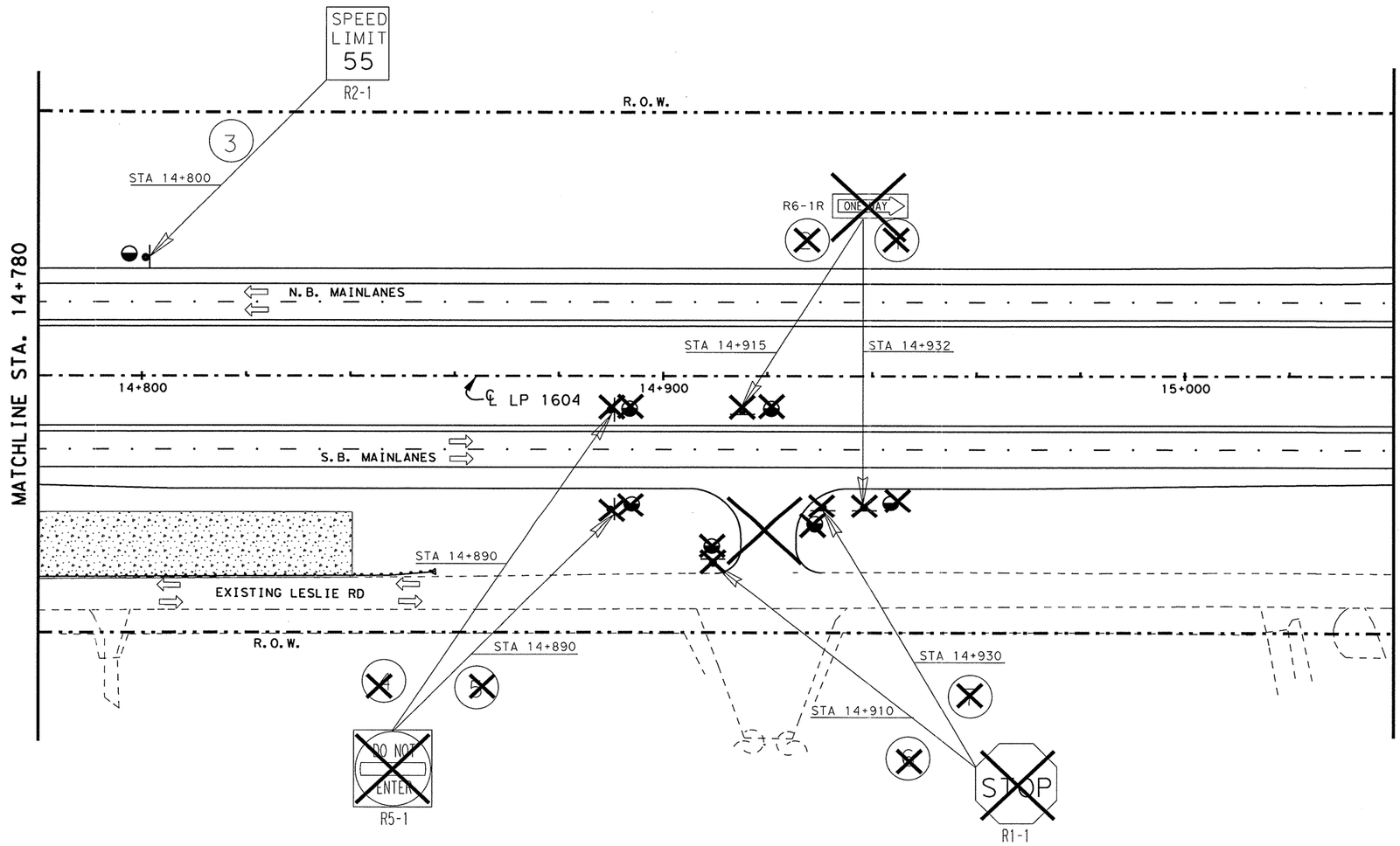


CHANGE ORDER NO. 12
-ELIMINATED SIGNS ASSOCIATED WITH ALAMO CONCRETE X-OVER...
-REVISED RIPRAP APRON QUANTITIES.

CHANGE ORDER 12

STATE OF TEXAS
TERRY G. McCOY
75016
REGISTERED PROFESSIONAL ENGINEER

Terry G. McCoy, P.E. 10-17-01 Date

FOR MODIFICATIONS ASSOCIATED WITH CHANGE ORDER 12 ONLY

©2000 Texas Department of Transportation

SIGNING LAYOUT

SHEET 5 OF 57

| FED.RD. DIV.NO. | FEDERAL AID PROJECT NO. | | SHEET NO. |
|---|---|---|---|
| 6 | NH 2000(704), etc. | | 641A |
| STATE | DIST. | COUNTY | |
| TEXAS | SAT | BEXAR | |
| CONT. | SECT. | JOB | HIGHWAY NO. |
| 2452 | 01 | 036, etc. | LP 1604 |

10-15-01

LEVELS DISPLAYED
1 2 3 4 5 6 7 8 | 1 2 3 4 5 6 7 8 2 3 4 5 6 1 2 3 4 5 6
1 1 1 1 1 1 1 1 | 1 1 1 1 1 1 1 1 2 2 2 2 2 2 2 2 3 3 3 3
1 2 3 4 5 6 7 8 9 0 1 2 2 2 2 3 3 3 3 3 4 4 4 4 4 4 5 5 5 5
3 3 3 4 4 5 5 6 6 3 7 8 8 9 4 0 4 1 4 2 4 3 4 4 4 5 4 6 4 7 4 8
4 9 5 0 5 1 5 2 5 3 5 4 5 5 5 6 5 7 5 8 5 9 6 0 6 1 6 2 6 3

ACC: t:\ao\design\lp1604fm471-90/pave\sign\
FILE: pavmrkplan05.dgn

QUANTITIES THIS SHEET
CSJ 2452-01-037

SCALE 1:1000

| RIPRAP APRONS QUANTITIES | | | |
|---|---|---|---|
| TYPE OF MOUNT | EA. | MULTIPLIED BY M3 | TOTAL M3 |
| SINGLE POST | 2 | 2.0 | 2.0 |
| MULTI - POST | | 1.5 | |
| OVHD. SIGN BRIDGE | | | |
| CLASS "B" CONC. GRAND TOTAL | | | 2.0 |

SEE SHEET NO. 753 FOR RIPRAP APRON DETAILS.
SEE SHEET NO. 58 FOR RIPRAP SUMMARIZATION.

NOTE(S):

PAVEMENT MARKINGS SHOWN FOR REFERENCE ONLY. SEE PAVEMENT MARKINGS/DELINEATION LAYOUTS FOR DETAILS AND QUANTITIES.

△# REFERS TO CHANGES MADE AS PART OF CHANGE ORDER.

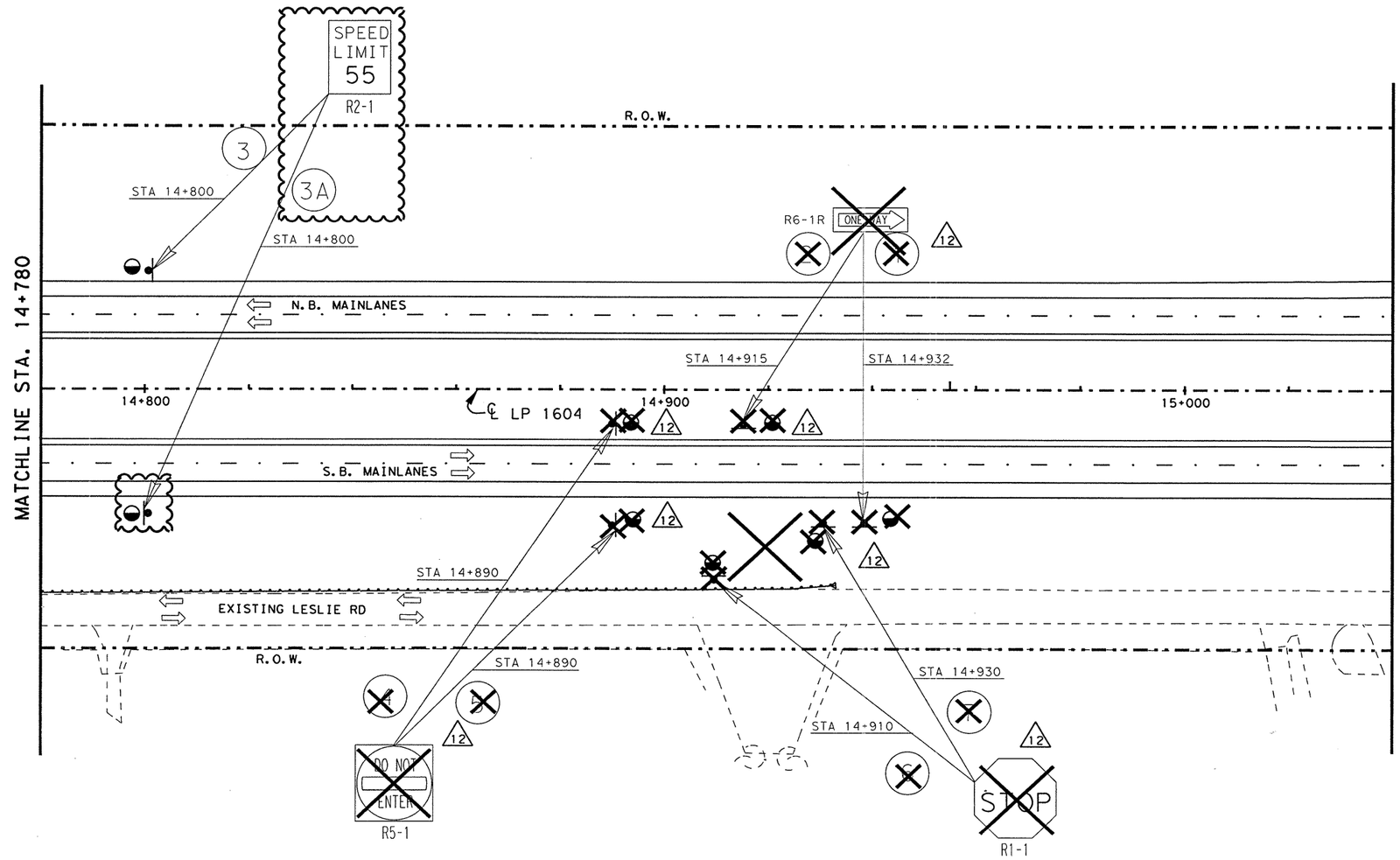


CHANGE ORDER NO. 65
-ADDED SPEED LIMIT SIGN.
-REVISED RIPRAP APRON QUANTITIES.

CHANGE ORDER 65

REVISED SHEET

STATE OF TEXAS
JEROME D. PAVLISKA
76075
REGISTERED PROFESSIONAL ENGINEER

Jerome D. Pavliska P.E. 4-13-04
Jerome D. Pavliska, P.E. Date

LEVELS DISPLAYED
1 2 3 4 5 6 7 8 | 1 2 3 4 5 6
9 10 11 12 13 14 15 16 | 7 8 9 10 11 12 13 14
17 18 19 20 21 22 23 24 | 15 16 17 18 19 20 21 22
25 26 27 28 29 30 31 32 | 23 24 25 26 27 28 29 30
33 34 35 36 37 38 39 40 | 31 32 33 34 35 36 37 38
41 42 43 44 45 46 47 48 | 39 40 41 42 43 44 45 46
49 50 51 52 53 54 55 56 | 47 48 49 50 51 52 53 54
57 58 59 60 61 62 63 | 55 56 57 58 59 60 61 62 63

ACC: t:\ao\design\
lp1604fm471-90/pave\sign\
FILE: pavmrkplan05.dgn

© 2000 Texas Department of Transportation

SIGNING LAYOUT

SHEET 5 OF 57

| FED. RD. DIV. NO. | FEDERAL AID PROJECT NO. | SHEET NO. |
|---|---|---|
| 6 | NH 2000(704), etc. | 641B |
| STATE | DIST. | COUNTY |
| TEXAS | SAT | BEXAR |
| CONT. | SECT. | JOB / HIGHWAY NO. |
| 2452 | 01 | 036, etc. / LP 1604 |

QUANTITIES THIS SHEET
CSJ 2452-01-037

SCALE 1:1000

| RIPRAP APRONS QUANTITIES | | | |
|---|---|---|---|
| TYPE OF MOUNT | EA. | MULTIPLIED BY M3 | TOTAL M3 |
| SINGLE POST | 2 | 1.0 | 2.0 |
| MULTI - POST | 1 | 1.5 | 1.5 |
| OVHD. SIGN BRIDGE | | | |
| CLASS "B" CONC. GRAND TOTAL | | | 3.5 |

SEE SHEET NO. 753 FOR RIPRAP APRON DETAILS.
SEE SHEET NO. 58 FOR RIPRAP SUMMARIZATION.

NOTE(S):

PAVEMENT MARKINGS SHOWN FOR REFERENCE ONLY. SEE PAVEMENT MARKINGS/DELINEATION LAYOUTS FOR DETAILS AND QUANTITIES.

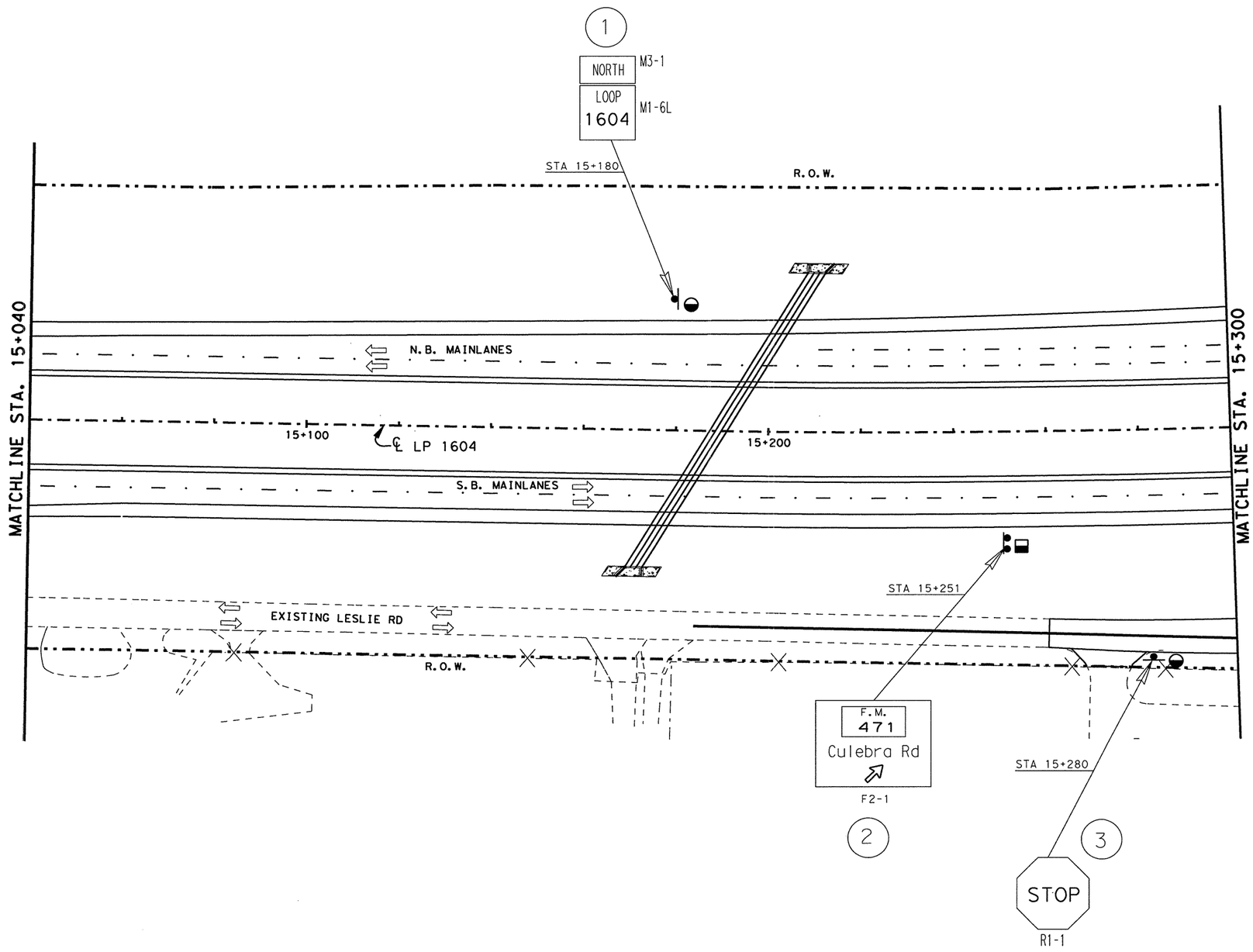


LEVELS DISPLAYED
1 2 3 4 5 6 7 8 9 10 11 12 13 14 15 16
17 18 19 20 21 22 23 24 25 26 27 28 29 30 31 32
33 34 35 36 37 38 39 40 41 42 43 44 45 46 47 48
49 50 51 52 53 54 55 56 57 58 59 60 61 62 63

ACC: f:\ao\design\lp1604fm471-90\pave-sign\
FILE: pavmrkplan06.dgn

STATE OF TEXAS
JOEL K. DAVENPORT, JR.
79276
REGISTERED PROFESSIONAL ENGINEER

Joel K. Davenport Jr. 9/19/00
Joel K. Davenport, Jr. P.E. 79276 Date

Texas Department of Transportation

# SIGNING LAYOUT

**SHEET 6 OF 57**

| FED. RD. DIV. NO. | FEDERAL AID PROJECT NO. | | SHEET NO. |
|---|---|---|---|
| 6 | NH 2000(704), etc. | | 642 |
| STATE | DIST. | COUNTY | |
| TEXAS | SAT | BEXAR | |
| CONT. | SECT. | JOB | HIGHWAY NO. |
| 2452 | 01 | 036, etc. | LP 1604 |

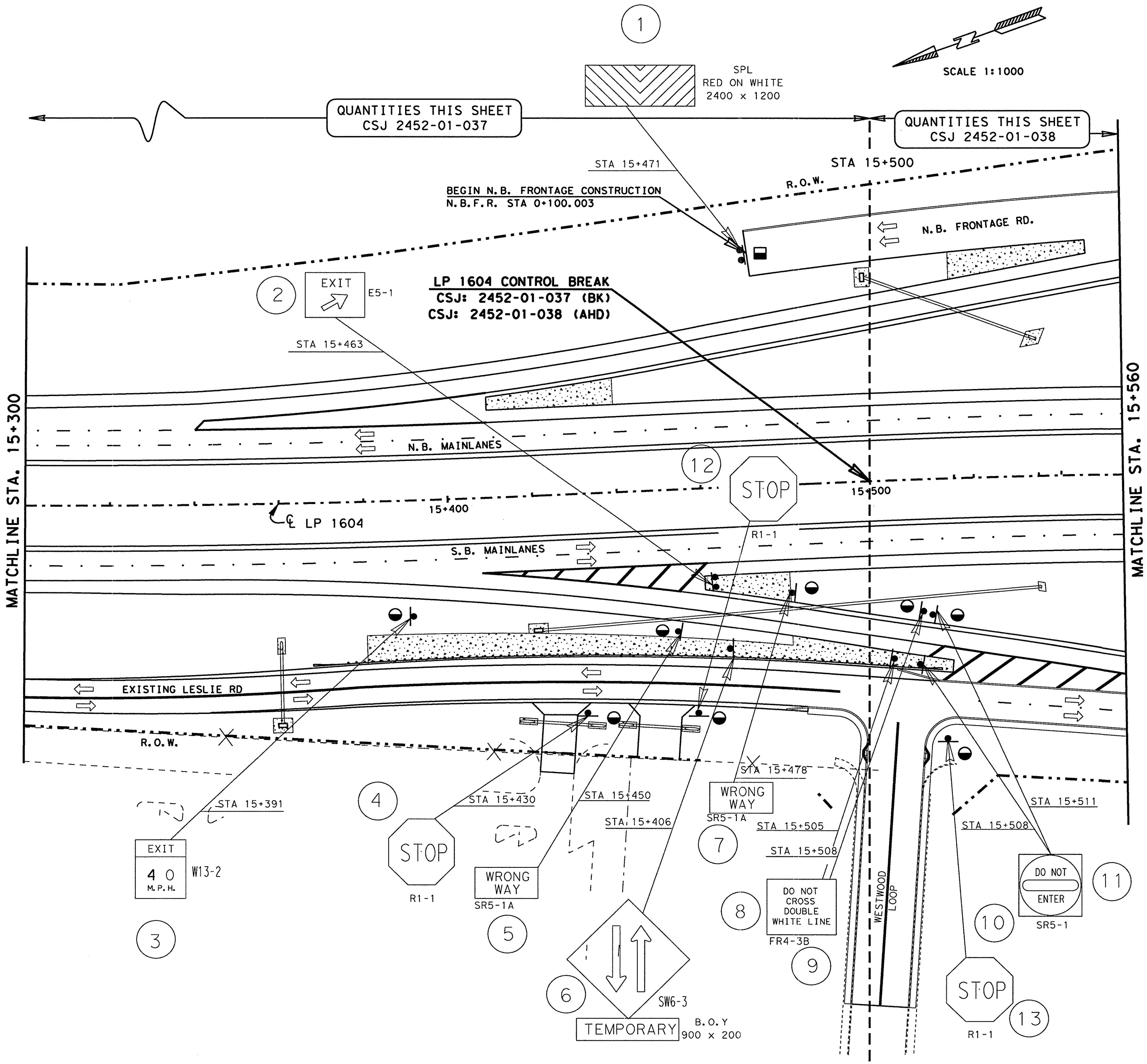


| RIPRAP APRONS | | | CONTROL | |
|---|---|---|---|---|
| QUANTITIES | | | -037 | -038 |
| TYPE OF MOUNT | EA. | MULTIPLIED BY M3 | TOTAL M3 | |
| SINGLE POST ◒ | 8 | 1.0 | 5.0 | 3.0 |
| MULTI - POST ⊟ | 1 | 1.5 | 1.5 | - |
| OVHD. SIGN BRIDGE ◆ | | | | |
| CLASS "B" CONC. GRAND TOTAL | | | 6.5 | 3.0 |

SEE SHEET NO. 753 FOR RIPRAP APRON DETAILS.
SEE SHEET NO. 58 FOR RIPRAP SUMMARIZATION.

NOTE(S):

PAVEMENT MARKINGS SHOWN FOR REFERENCE ONLY. SEE PAVEMENT MARKINGS/DELINEATION LAYOUTS FOR DETAILS AND QUANTITIES.

STATE OF TEXAS
JOEL K. DAVENPORT, JR.
79276
REGISTERED
PROFESSIONAL ENGINEER

Joel K. Davenport, Jr. P.E. 79276 — 9/19/00
Date

©2000 Texas Department of Transportation

# SIGNING LAYOUT

**SHEET 7 OF 57**

| FED. RD. DIV. NO. | FEDERAL AID PROJECT NO. | | SHEET NO. |
|---|---|---|---|
| 6 | NH 2000(704), etc. | | 643 |
| STATE | DIST. | COUNTY | |
| TEXAS | SAT | BEXAR | |
| CONT. | SECT. | JOB | HIGHWAY NO. |
| 2452 | 01 | 036, etc. | LP 1604 |

ACC: t:\ao\design\
lp1604fm471-90\pave-sign\
FILE: pavmrkplan07.dgn
LEVELS DISPLAYED

QUANTITIES THIS SHEET
CSJ 2452-01-038

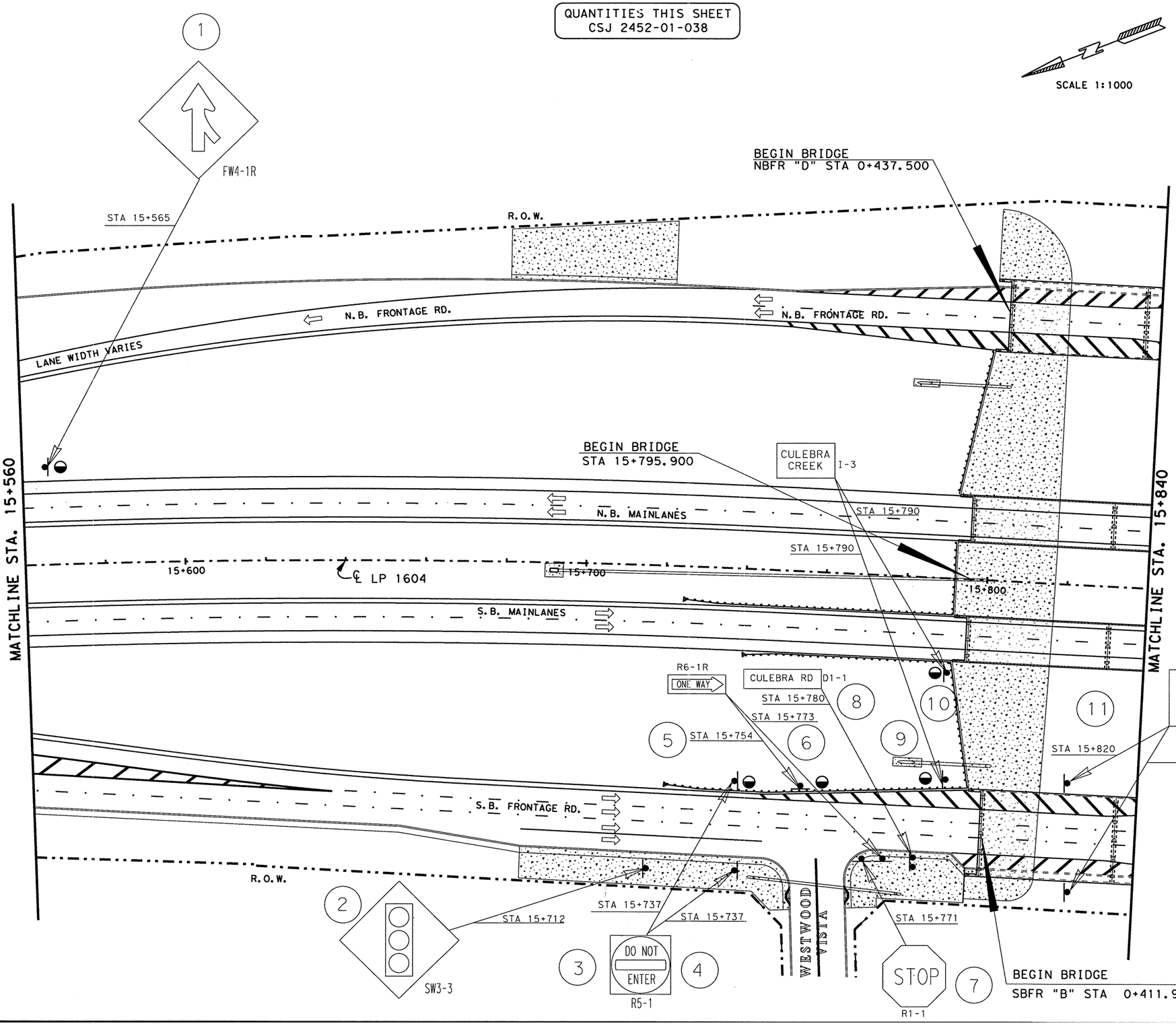


SCALE 1:1000

| RIPRAP APRONS QUANTITIES | | | |
|---|---|---|---|
| TYPE OF MOUNT | EA. | MULTIPLIED BY M3 | TOTAL M3 |
| SINGLE POST | 5 | 1.0 | 5.0 |
| MULTI - POST | | 1.5 | |
| OVHD. SIGN BRIDGE | | | |
| CLASS "B" CONC. GRAND TOTAL | | | 5.0 |

SEE SHEET NO. 753 FOR RIPRAP APRON DETAILS.
SEE SHEET NO. 58 FOR RIPRAP SUMMARIZATION.

NOTE(S):

PAVEMENT MARKINGS SHOWN FOR REFERENCE ONLY. SEE PAVEMENT MARKINGS/DELINEATION LAYOUTS FOR DETAILS AND QUANTITIES.

STATE OF TEXAS
JOEL K. DAVENPORT, JR.
79276
REGISTERED PROFESSIONAL ENGINEER

Joel K. Davenport, Jr. 9/19/00
Joel K. Davenport, Jr. P.E. 79276 Date

Texas Department of Transportation

# SIGNING LAYOUT

**SHEET 8 OF 57**

| FED. RD. DIV. NO. | FEDERAL AID PROJECT NO. | | SHEET NO. |
|---|---|---|---|
| 6 | NH 2000(704), etc. | | 644 |
| STATE | DIST. | COUNTY | |
| TEXAS | SAT | BEXAR | |
| CONT. | SECT. | JOB | HIGHWAY NO. |
| 2452 | 01 | 036, etc. | LP 1604 |

LEVELS DISPLAYED
1 2 3 4 5 6 7 8 | | 21 31 41 51 61
11 21 31 41 51 61 71 81 91 02 12 22 32 42 52 62 72 82 92 03 13 32
33 43 53 63 73 83 94 04 14 24 34 44 54 64 74 84 94 05 15 25 35 45 55 65 75 85 96 06 16 26 36
49 50 51 52 53 54 55 56 57 58 59 60 61 62 63

ACC: t:\ao\design\
lp1604fm471-90\pave-sign\
FILE: pavmrkplan08.dgn

QUANTITIES THIS SHEET
CSJ 2452-01-038

SCALE 1:1000

| RIPRAP APRONS QUANTITIES | | | |
|---|---|---|---|
| TYPE OF MOUNT | EA. | MULTIPLIED BY M3 | TOTAL M3 |
| SINGLE POST | 5 | 1.0 | 5.0 |
| MULTI - POST | | 1.5 | |
| OVHD. SIGN BRIDGE | | | |
| CLASS "B" CONC. GRAND TOTAL | | | 5.0 |

SEE SHEET NO. 753 FOR RIPRAP APRON DETAILS.
SEE SHEET NO. 58 FOR RIPRAP SUMMARIZATION.

NOTE(S):

PAVEMENT MARKINGS SHOWN FOR REFERENCE ONLY. SEE PAVEMENT MARKINGS/DELINEATION LAYOUTS FOR DETAILS AND QUANTITIES.

**CHANGE ORDER NO. 76**
-NEW SIGN
-UPDATED VIEW

1
FW4-1R

STA 15+565

R.O.W.

BEGIN BRIDGE
NBFR "D" STA 0+437.500

N.B. FRONTAGE RD.

LANE WIDTH VARIES

STA 15+730

N.B. FRONTAGE RD.

LANE ENDS MERGE LEFT
SW9-2L
13

MATCHLINE STA. 15+560

BEGIN BRIDGE
STA 15+795.900

CULEBRA CREEK I-3

N.B. MAINLANES

STA 15+790

STA 15+790

15+600

℄ LP 1604

15+700

15+800

S.B. MAINLANES

MATCHLINE STA. 15+840

R6-1R
ONE WAY

CULEBRA RD D1-1

STA 15+780

STA 15+773

8

10

1.1

ONLY | ONLY

R3-8L (SPL)
RAILMOUNT

5

STA 15+754

6

9

STA 15+820

STA 15+820

12

S.B. FRONTAGE RD.

2

STA 15+712

STA 15+737

STA 15+

WESTWOOD

N 67° 59' 23" W 67.14'

STA 15+771

3

DO NOT ENTER
R5-1

4

STOP
R1-1

7

BEGIN BRIDGE
SBFR "B" STA 0+411.900

SW3-3

STATE OF TEXAS
JEROME D. PAVLISKA
76075
REGISTERED PROFESSIONAL ENGINEER

Jerome D. Pavliska P.E. 01/08/04
Jerome D. Pavliska, P.E. Date

CHANGE ORDER 76

REVISED SHEET

Texas Department of Transportation

SIGNING LAYOUT

SHEET 8 OF 57

| FED.RD. DIV.NO. | FEDERAL AID PROJECT NO. | | SHEET NO. |
|---|---|---|---|
| 6 | NH 2000(704), etc. | | 64X |
| STATE | DIST. | COUNTY | |
| TEXAS | SAT | BEXAR | |
| CONT. | SECT. | JOB | HIGHWAY NO. |
| 2452 | 01 | 036, etc. | LP 1604 |

LEVELS DISPLAYED
1 2 3 4 5 6 7 8 | 1 2 3 11 41 51 61
1 7 8 11 19 20 21 22 23 24 25 26 27 28 29 30 31 32
33 34 55 56 63 68 39 40 41 42 43 44 45 46 47 48
49 50 51 52 53 54 55 56 57 58 59 60 61 62 63

ACC: t:\oo\design\
lp1604fm471-90\pave-sign\
FILE: pavmrkplan08.dgn

QUANTITIES THIS SHEET
CSJ 2452-01-038

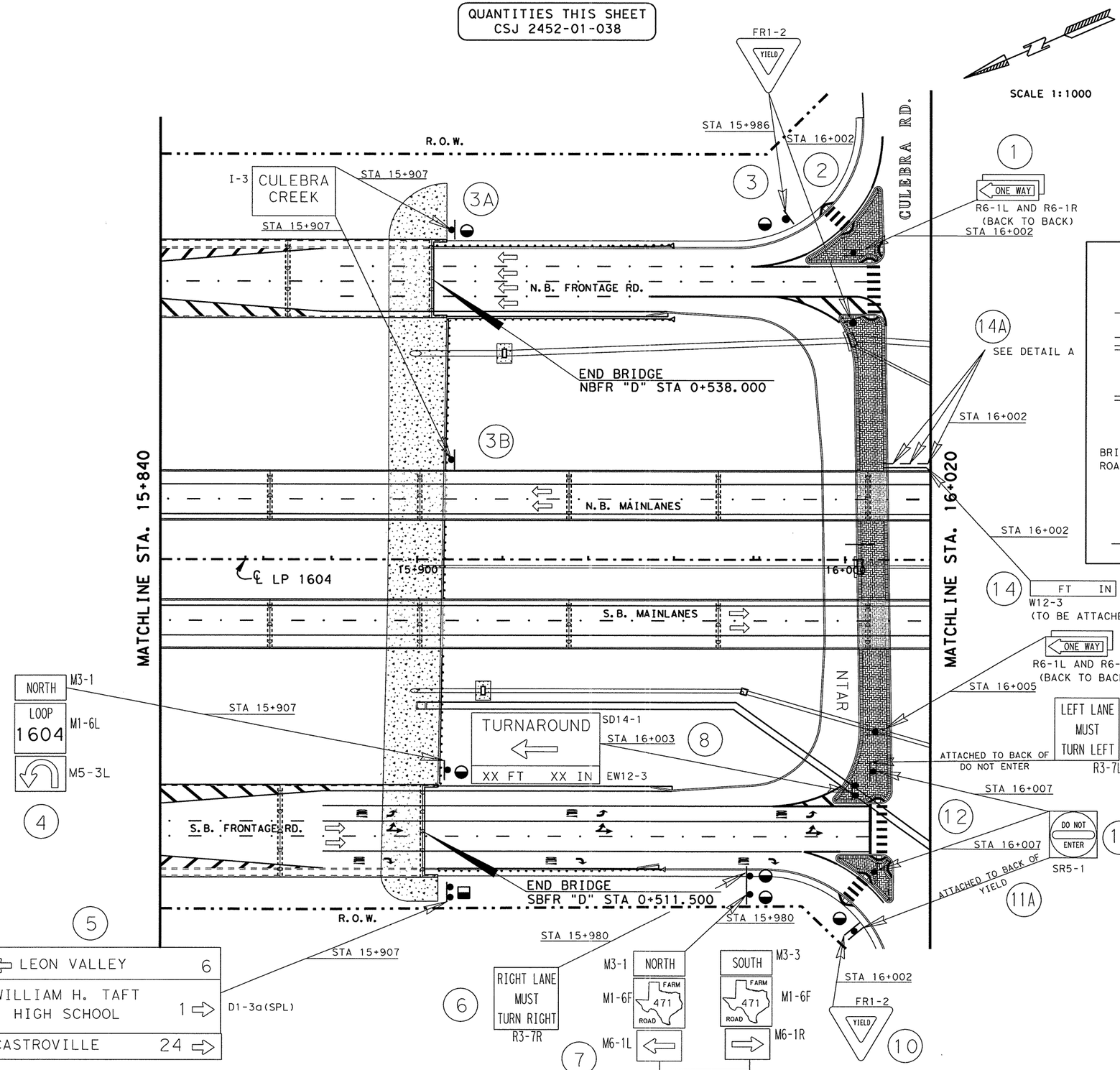


SCALE 1:1000

| RIPRAP APRONS QUANTITIES | | | |
|---|---|---|---|
| TYPE OF MOUNT | EA. | MULTIPLIED BY M3 | TOTAL M3 |
| SINGLE POST | 6 | 1.0 | 6.0 |
| MULTI - POST | 1 | 1.5 | 1.5 |
| OVHD. SIGN BRIDGE | | | |
| CLASS "B" CONC. GRAND TOTAL | | | 7.5 |

SEE SHEET NO. 753 FOR RIPRAP APRON DETAILS.
SEE SHEET NO. 58 FOR RIPRAP SUMMARIZATION.

NOTE(S):

PAVEMENT MARKINGS SHOWN FOR REFERENCE ONLY. SEE PAVEMENT MARKINGS/DELINEATION LAYOUTS FOR DETAILS AND QUANTITIES.

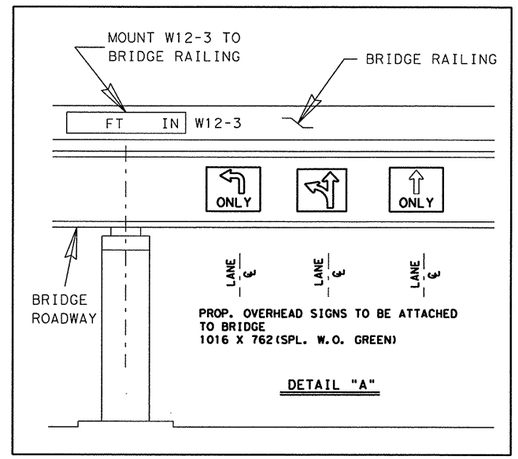


STATE OF TEXAS
JOEL K. DAVENPORT, JR.
79276
REGISTERED PROFESSIONAL ENGINEER

Joel K Davenport Jr 9/19/00
Joel K. Davenport, Jr. P.E. 79276 Date

LEVELS DISPLAYED
1|2|4|5|6|7|8|1|2|31|34|51|61
17|18|19|20|21|22|23|24|25|26|27|28|29|30|31|32
33|34|35|36|37|38|39|40|41|42|43|44|45|46|47|48
49|50|51|52|53|54|55|65|75|85|96|01|62|63
ACC: t:\ao\design\ip1604fm471-90\pave-sign\
FILE: pavmrkplan09a.dgn

Texas Department of Transportation

# SIGNING LAYOUT

**SHEET 9a OF 57**

| FED. RD. DIV. NO. | FEDERAL AID PROJECT NO. | | SHEET NO. |
|---|---|---|---|
| 6 | NH 2000(704), etc. | | 645 |
| STATE | DIST. | COUNTY | |
| TEXAS | SAT | BEXAR | |
| CONT. | SECT. | JOB | HIGHWAY NO. |
| 2452 | 01 | 036, etc. | LP 1604 |

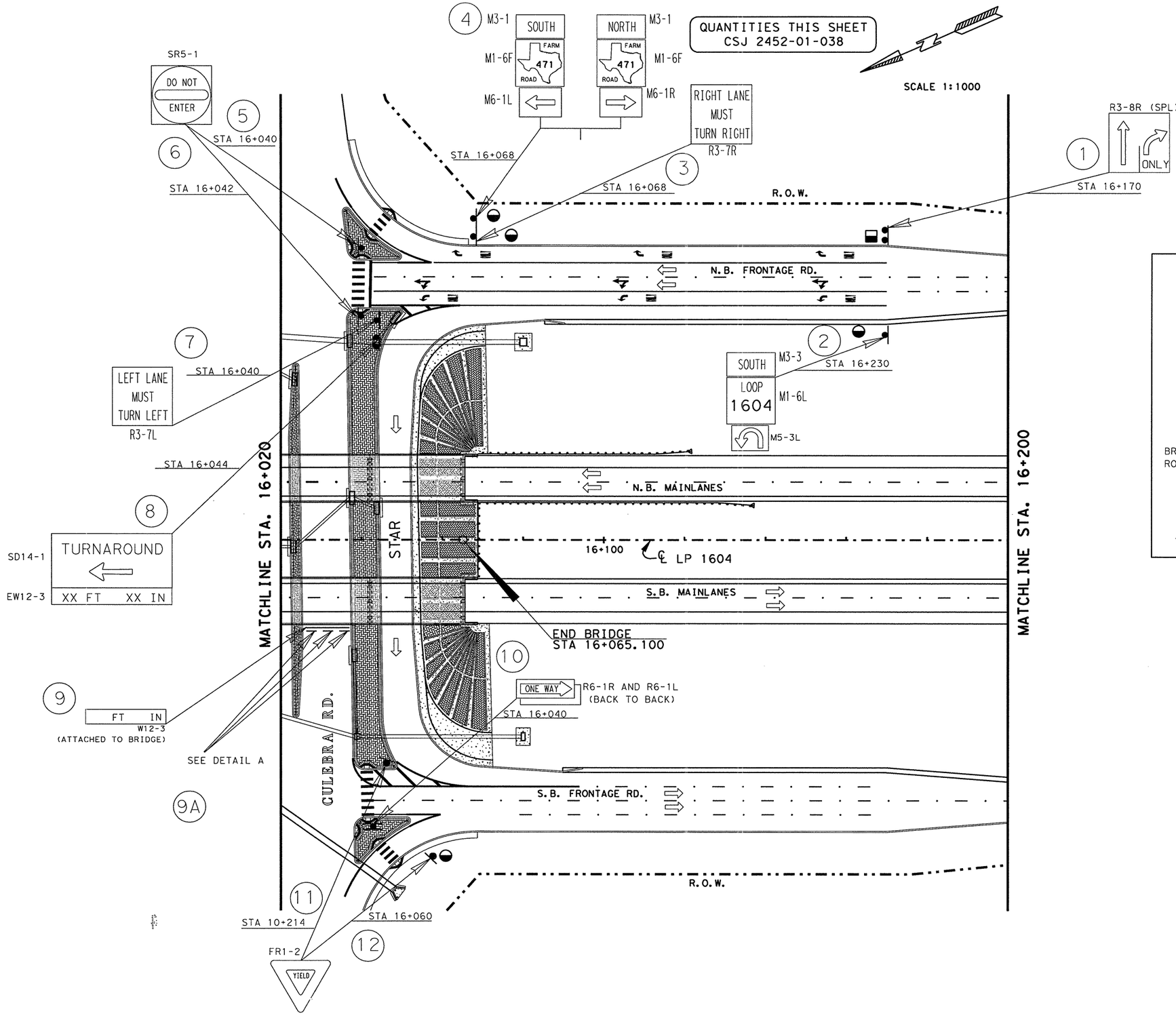


| RIPRAP APRONS QUANTITIES | | | |
|---|---|---|---|
| TYPE OF MOUNT | EA. | MULTIPLIED BY M3 | TOTAL M3 |
| SINGLE POST | 4 | 1.0 | 4.0 |
| MULTI - POST | 1 | 1.5 | 1.5 |
| OVHD. SIGN BRIDGE | | | |
| CLASS "B" CONC. GRAND TOTAL | | | 5.5 |

SEE SHEET NO. 753 FOR RIPRAP APRON DETAILS.
SEE SHEET NO. 58 FOR RIPRAP SUMMARIZATION.

NOTE(S):

PAVEMENT MARKINGS SHOWN FOR REFERENCE ONLY. SEE PAVEMENT MARKINGS/DELINEATION LAYOUTS FOR DETAILS AND QUANTITIES.

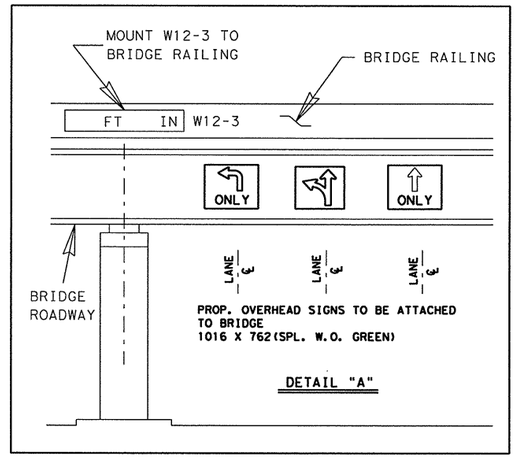


LEVELS DISPLAYED
1 2 3 4 5 6 7 8 | 1 | 1 2 3 | 1 4 1 5 1 6
1 7 1 8 1 9 2 0 2 1 2 2 2 3 2 4 2 5 2 6 2 7 2 8 2 9 3 0 3 1 3 2
3 3 3 4 3 5 5 6 5 7 5 8 5 9 4 0 4 1 4 2 4 3 4 4 4 5 4 6 4 7 4 8
4 9 5 0 5 1 5 2 5 3 5 4 5 5 5 6 5 7 5 8 5 9 6 0 6 1 6 2 6 3

ACC: h:\ao\design\
lp1604fm471-90\pave-sign\
FILE: pavmrkplan09b.dgn

STATE OF TEXAS
JOEL K. DAVENPORT, JR.
79276
REGISTERED
PROFESSIONAL ENGINEER

Joel K Davenport, Jr. 9/19/00
Joel K. Davenport, Jr. P.E. 79276 Date

Texas Department of Transportation

# SIGNING LAYOUT

**SHEET 9D OF 57**

| FED. RD. DIV. NO. | FEDERAL AID PROJECT NO. | | SHEET NO. |
|---|---|---|---|
| 6 | NH 2000(704), etc. | | 646 |
| STATE | DIST. | COUNTY | |
| TEXAS | SAT | BEXAR | |
| CONT. | SECT. | JOB | HIGHWAY NO. |
| 2452 | 01 | 036, etc. | LP 1604 |

QUANTITIES THIS SHEET
CSJ 2452-01-038

SCALE 1:1000

| RIPRAP APRONS QUANTITIES | | | |
|---|---|---|---|
| TYPE OF MOUNT | EA. | MULTIPLIED BY M3 | TOTAL M3 |
| SINGLE POST | 10 | 1.0 | 10.0 |
| MULTI - POST | 2 | 1.5 | 3.0 |
| OVHD. SIGN BRIDGE | | | |
| CLASS "B" CONC. GRAND TOTAL | | | 13.0 |

SEE SHEET NO. 753 FOR RIPRAP APRON DETAILS.
SEE SHEET NO. 58 FOR RIPRAP SUMMARIZATION.

NOTE(S):

PAVEMENT MARKINGS SHOWN FOR REFERENCE ONLY. SEE PAVEMENT MARKINGS/DELINEATION LAYOUTS FOR DETAILS AND QUANTITIES.

1
CASTROVILLE 24 D1-2a
JCT F.M. 1957 4
STA 10+272

2
FW4-2R
STA 10+164

3
SOUTH M3-3
FARM 471 ROAD M1-6F
STA 10+105

4
SPEED LIMIT 55
R2-1
STA 10+046

5
WILLIAM H. TAFT HIGH SCHOOL 1
CASTROVILLE 24
D2-2(SPL)
STA 9+986

6
HIGHWAY INTERSECTION 1000 FT
W2-6B
STA 9+902

7
JCT M2-1
LOOP 1604 M1-6L
STA 9+957

8
SW3-3

9
FW12-2T
FT IN
STA 10+049

10
EXIST
SW3-3
REMOVE
STA 10+078

11
LEON VALLEY 6
JCT S.H. 16 5
JCT F.M. 1957 4
D1-3a
STA 10+097

12
JCT M2-1
LOOP 1604 M1-6L
EXIST
REMOVE
STA 10+106

13
STA 10+140
ONLY
R3-8R (SPL)

14
STA 10+172
RIGHT LANE MUST TURN RIGHT
R3-7R

15
NORTH M3-1
FARM 471 ROAD M1-6F
M6-3
NORTH M3-1
LOOP 1604 M1-6L
M6-3
SOUTH M3-3
LOOP 1604 M1-6L
M6-1R

16
STA 10+230
R4-7

17
STA 10+230
ONLY
R3-8L
ATTACHED TO BACK OF SIGN 16

18
STA 10+272
TWO BACK TO BACK
ONLY
R3-8L

19
STA 10+266
LEON VALLEY 6
JCT S.H. 16 5
D1-2a

SB FRONTAGE RD
SB MAINLANES
℄ LP 1604
NTAR
STAR
MATCHLINE "A"
R.O.W.
FM 471
CULEBRA RD.

JOEL K. DAVENPORT, JR. 79276 REGISTERED PROFESSIONAL ENGINEER
STATE OF TEXAS
Joel K Davenport Jr 9/19/00
Joel K. Davenport, Jr., P.E. 79276 Date

LEVELS DISPLAYED
1 2 3 4 5 6 7 8 9 10 11 12 13 14 15 16 17 18 19 20 21 22 23 24 25 26 27 28 29 30 31 32 33 34 35 36 37 38 39 40 41 42 43 44 45 46 47 48 49 50 51 52 53 54 55 56 57 58 59 60 61 62
ACC: t:/ao/design/lp1604fm471-90/pave-sign/
FILE: pavmrkplan09c.dgn

© 2000 Texas Department of Transportation

# SIGNING LAYOUT

SHEET 9c OF 57

| FED. RD. DIV. NO. | FEDERAL AID PROJECT NO. | SHEET NO. |
|---|---|---|
| 6 | NH 2000(704), etc. | 647 |
| STATE | DIST. | COUNTY |
| TEXAS | SAT | BEXAR |
| CONT. | SECT. | JOB | HIGHWAY NO. |
| 2452 | 01 | 036, etc. | LP 1604 |

SCALE 1:1000

QUANTITIES THIS SHEET
CSJ 2452-01-038

| RIPRAP APRONS QUANTITIES | | | |
|---|---|---|---|
| TYPE OF MOUNT | EA. | MULTIPLIED BY M3 | TOTAL M3 |
| SINGLE POST | 11 | 1.0 | 11.0 |
| MULTI - POST | 1 | 1.5 | 1.5 |
| OVHD. SIGN BRIDGE | | | |
| CLASS "B" CONC. GRAND TOTAL | | | 12.5 |

SEE SHEET NO. 753 FOR RIPRAP APRON DETAILS.
SEE SHEET NO. 58 FOR RIPRAP SUMMARIZATION.

NOTE(S):

PAVEMENT MARKINGS SHOWN FOR REFERENCE ONLY. SEE PAVEMENT MARKINGS/DELINEATION LAYOUTS FOR DETAILS AND QUANTITIES.

℄ LP 1604

16+000

MATCHLINE "A"

N.B. FRONTAGE RD

FM 471

CULEBRA RD.

R.O.W.

NTAR

STAR

STA 10+322

STA 10+312

STA 10+375

STA 10+389

STA 10+417

STA 10+445

STA 10+447

STA 10+432

STA 10+373

STA 10+360

STA 10+477

STA 10+522

STA 10+613

STA 10+622

STA 10+675

STA 10+501

STA 10+561

STA 10+681

STA 10+548

STA 10+487

REMOVE

EXIST

ATTACHED TO BACK OF SIGN 11

ATTACHED TO BACK OF DO NOT ENTER

(10) SOUTH M3-3 / LOOP 1604 M1-6L / M6-1L — NORTH M3-1 / FARM 471 ROAD M1-6F / M6-3

(9) R3-7R RIGHT LANE MUST TURN RIGHT

(8) SOUTH M3-3 / FARM 471 ROAD M1-6F / M6-3 — SOUTH M3-3 / LOOP 1604 M1-6L / M6-3 — NORTH M3-1 / LOOP 1604 M1-6L / M6-1R

(7) JCT F.M. 1957 4 ⇦ / JCT S.H. 16 5 ⇨ D1-2

(6) END M4-6 / CENTER LANE ONLY R3-9B

(5) R3-8R (SPL) ONLY

(4) R3-8R (SPL) ONLY

(3) FW12-2T FT IN

(2) JCT M2-1 / LOOP 1604 M1-6L

(1A) HIGHWAY INTERSECTION 1000 FT W2-6B (1)

(11) R4-7

(12) ONLY R3-8L

(13) ONE WAY R6-1L AND R6-1R (BACK TO BACK)

(14) FR1-2 YIELD

(14A) DO NOT ENTER SR5-1

(15) SPEED LIMIT 45 R2-1 EXIST

(16) BEGIN M4-11 / CENTER LANE ONLY R3-9B

(17) BEGIN M4-11 / CENTER LANE ONLY R3-9B

(18) NORTH M3-1 / FARM 471 ROAD M1-6F

(19) BEGIN M4-11 / CENTER LANE ONLY R3-9B

(20) JCT FM 1957 4 ⇧ / CASTROVILLE 24 ⇧ / JCT SH 16 5 ⇨ D1-3a

(21) SPEED LIMIT 45 R2-1

(22) LEON VALLEY 6 / SAN ANTONIO 17

(23) JCT M2-1 / LOOP 1604 M1-6L

(24) W2-1

(25) SW3-3

(26)

LEVELS DISPLAYED
1 2 3 4 5 6 7 8 | 11 12 13 14 15 16 17 18 | 21 22 23 24 25 26 27 28 | 31 32 33 34 35 36 37 38 | 41 42 43 44 45 46 47 48 | 51 52 53 54 55 56 57 58 | 61 62 63 64 65 66 67 68 | 71 72 73 74 75 76 77 78 | 81 82 83 84 85 86 87 88 | 91 92 93 94 95 96 97 98 | 101 102 103 104 105 106 107 108 | 111 112 113 114 115 116 117 118 | 121 122 123 124 125 126 127 128 | 131 132 133 134 135 136 137 138 | 141 142 143 144 145 146 147 148 | 151 152 153 154 155 156 157 158 | 161 162 163 164 165 166 167 168 | 171 172 173 174 175 176 177 178 | 181 182 183 184 185 186 187 188 | 191 192 193 194 195 196 197 198 | 201 202 203 204 205 206 207 208 | 211 212 213 214 215 216 217 218 | 221 222 223 224 225 226 227 228 | 231 232 233 234 235 236 237 238 | 241 242 243 244 245 246 247 248 | 251 252 253 254 255 256

ACC: t:\ao\design\lp1604fm471-90\pave-sign\
FILE: pavmrkplan09d.dgn

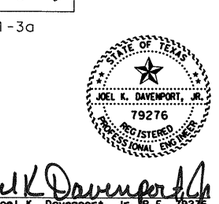


Joel K. Davenport, Jr. P.E. 79276 — 9/19/00 Date

Texas Department of Transportation

# SIGNING LAYOUT

SHEET 9d OF 57

| FED. RD. DIV. NO. | FEDERAL AID PROJECT NO. | SHEET NO. |
|---|---|---|
| 6 | NH 2000(704), etc. | 648 |
| STATE | DIST. | COUNTY |
| TEXAS | SAT | BEXAR |
| CONT. | SECT. | JOB / HIGHWAY NO. |
| 2452 | 01 | 036, etc. / LP 1604 |

QUANTITIES THIS SHEET
CSJ 2452-01-038

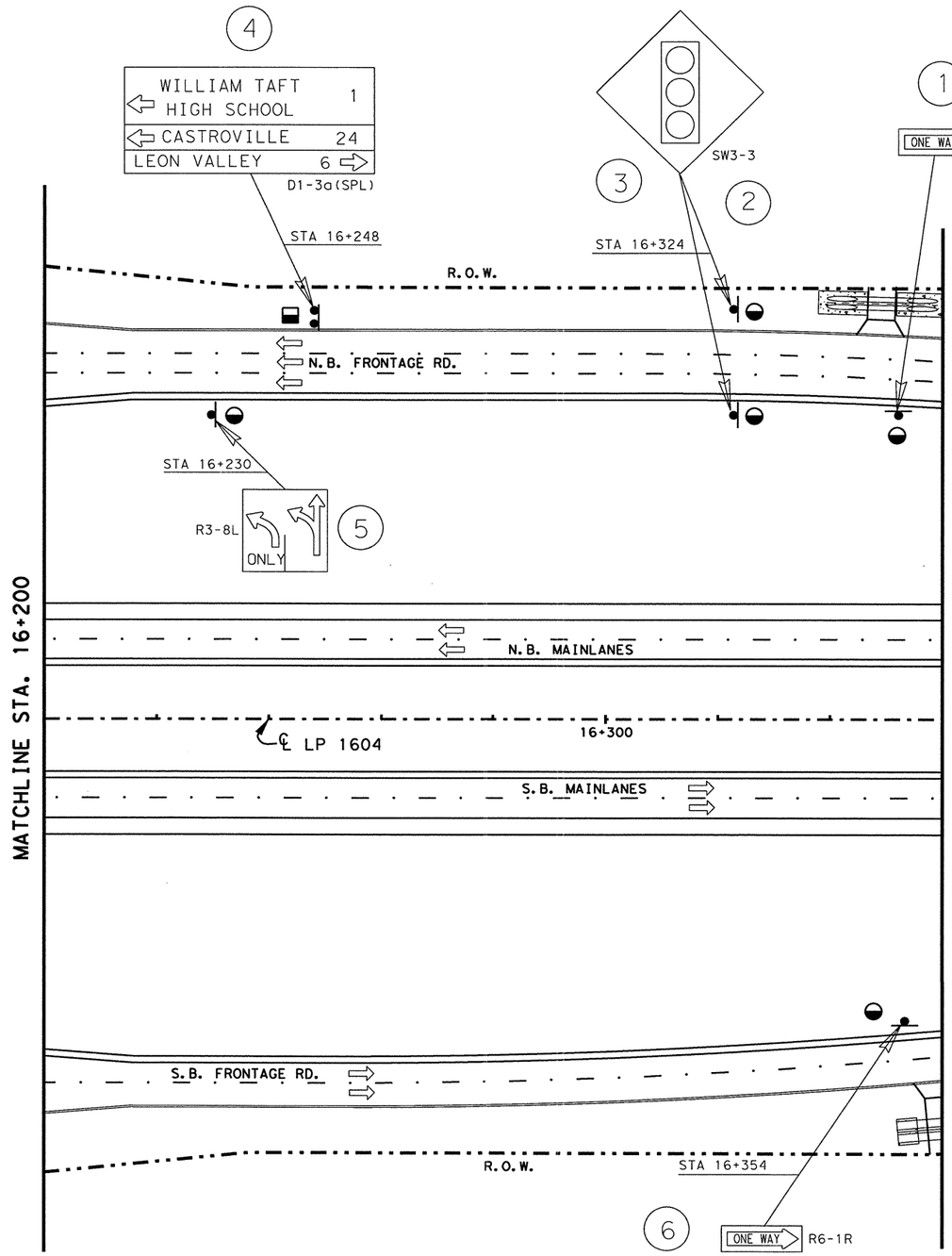


SCALE 1:1000

| RIPRAP APRONS QUANTITIES | | | |
|---|---|---|---|
| TYPE OF MOUNT | EA. | MULTIPLIED BY M3 | TOTAL M3 |
| SINGLE POST | 5 | 1.0 | 5.0 |
| MULTI - POST | 1 | 1.5 | 1.5 |
| OVHD. SIGN BRIDGE | | | |
| CLASS "B" CONC. GRAND TOTAL | | | 6.5 |

SEE SHEET NO. 753 FOR RIPRAP APRON DETAILS.
SEE SHEET NO. 58 FOR RIPRAP SUMMARIZATION.

NOTE(S):

PAVEMENT MARKINGS SHOWN FOR REFERENCE ONLY. SEE PAVEMENT MARKINGS/DELINEATION LAYOUTS FOR DETAILS AND QUANTITIES.

LEVELS DISPLAYED
1 2 3 4 5 6 7 8 9 10 11 12 13 14 15 16 17 18 19 20 21 22 23 24 25 26 27 28 29 30 31 32 33 34 35 36 37 38 39 40 41 42 43 44 45 46 47 48 49 50 51 52 53 54 55 56 57 58 59 60 61 62 63

ACC: t:\ao\design\lp1604fm471-90\pave-sign\
FILE: pavmrkplan10.dgn

STATE OF TEXAS
JOEL K. DAVENPORT, JR.
79276
REGISTERED PROFESSIONAL ENGINEER

Joel K. Davenport, Jr. 9/19/00
Joel K. Davenport, Jr. P.E. 79276 Date

Texas Department of Transportation

# SIGNING LAYOUT

SHEET 10 OF 57

| FED. RD. DIV. NO. | FEDERAL AID PROJECT NO. | | SHEET NO. |
|---|---|---|---|
| 6 | NH 2000(704), etc. | | 649 |
| STATE | DIST. | COUNTY | |
| TEXAS | SAT | BEXAR | |
| CONT. | SECT. | JOB | HIGHWAY NO. |
| 2452 | 01 | 036, etc. | LP 1604 |

QUANTITIES THIS SHEET
CSJ 2452-01-038

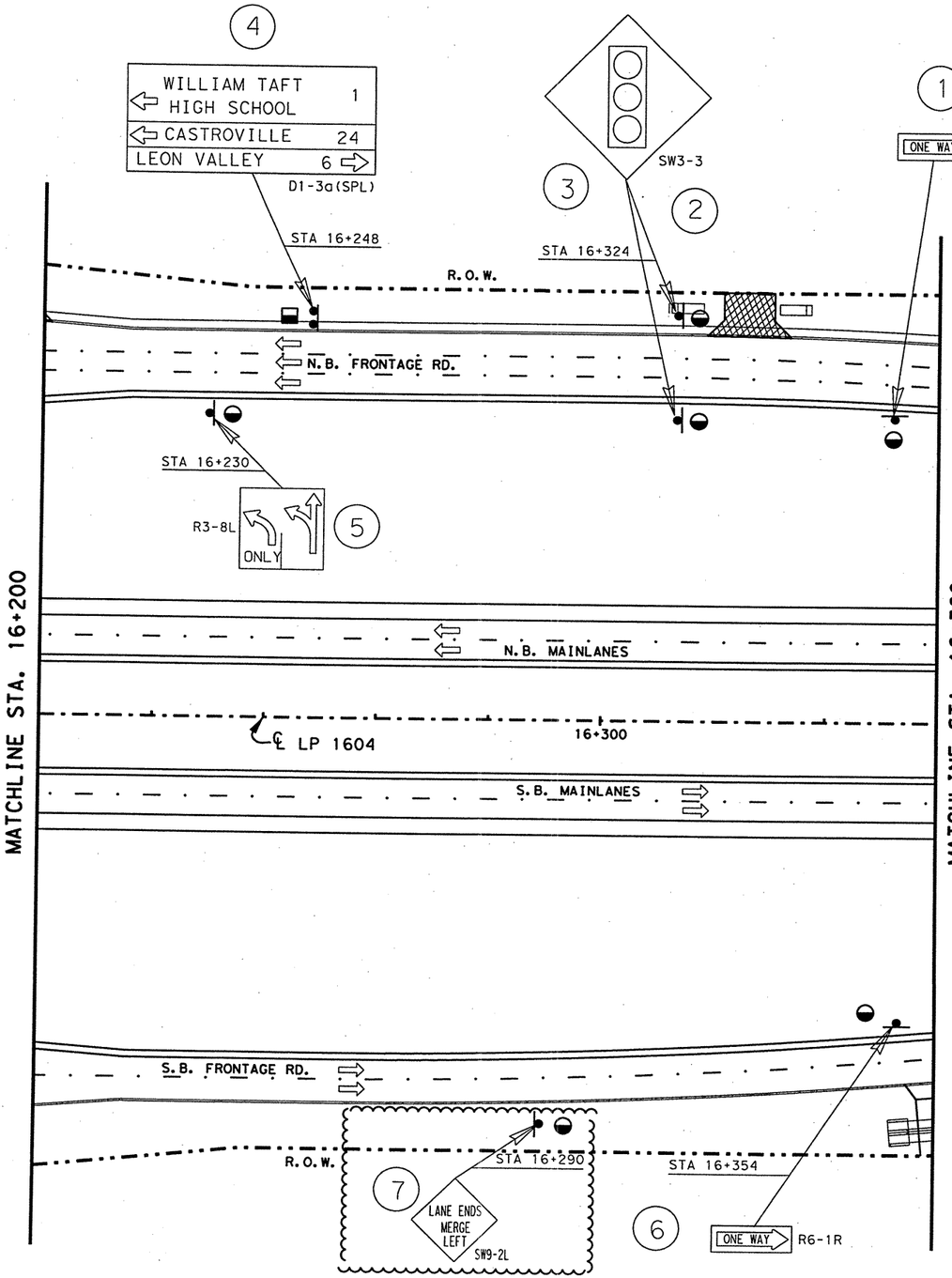


SCALE 1:1000

| RIPRAP APRONS QUANTITIES | | | |
|---|---|---|---|
| TYPE OF MOUNT | EA. | MULTIPLIED BY M3 | TOTAL M3 |
| SINGLE POST | 6 | 1.0 | 6.0 |
| MULTI - POST | 1 | 1.5 | 1.5 |
| OVHD. SIGN BRIDGE | | | |
| CLASS "B" CONC. GRAND TOTAL | | | 7.5 |

SEE SHEET NO. 753 FOR RIPRAP APRON DETAILS.
SEE SHEET NO. 58 FOR RIPRAP SUMMARIZATION.

NOTE(S):

PAVEMENT MARKINGS SHOWN FOR REFERENCE ONLY. SEE PAVEMENT MARKINGS/DELINEATION LAYOUTS FOR DETAILS AND QUANTITIES.

CHANGE ORDER NO. 76
-NEW SIGN
-UPDATED VIEW
-REVISED QUANTITIES

CHANGE ORDER 76

REVISED SHEET

STATE OF TEXAS
JEROME D. PAVLISKA
76075
REGISTERED PROFESSIONAL ENGINEER

Jerome D. Pavliska, P.E. 01/08/04
Jerome D. Pavliska, P.E. Date

©2000
Texas Department of Transportation

SIGNING LAYOUT

SHEET 10 OF 57

| FED. RD. DIV. NO. | FEDERAL AID PROJECT NO. | | SHEET NO. |
|---|---|---|---|
| 6 | NH 2000(704), etc. | | 649A |
| STATE | DIST. | COUNTY | |
| TEXAS | SAT | BEXAR | |
| CONT. | SECT. | JOB | HIGHWAY NO. |
| 2452 | 01 | 036, etc. | LP 1604 |

LEVELS DISPLAYED
1 2 3 4 5 6 7 8 9 10 11 12 13 14 15 16 17 18 19 20 21 22 23 24 25 26 27 28 29 30 31 32 33 34 35 36 37 38 39 40 41 42 43 44 45 46 47 48 49 50 51 52 53 54 55 56 57 58 59 60 61 62 63

ACC: t:\oo\design\lp1604fm471-90\pave-sign\
FILE: pavmrkplan10*c076.dgn

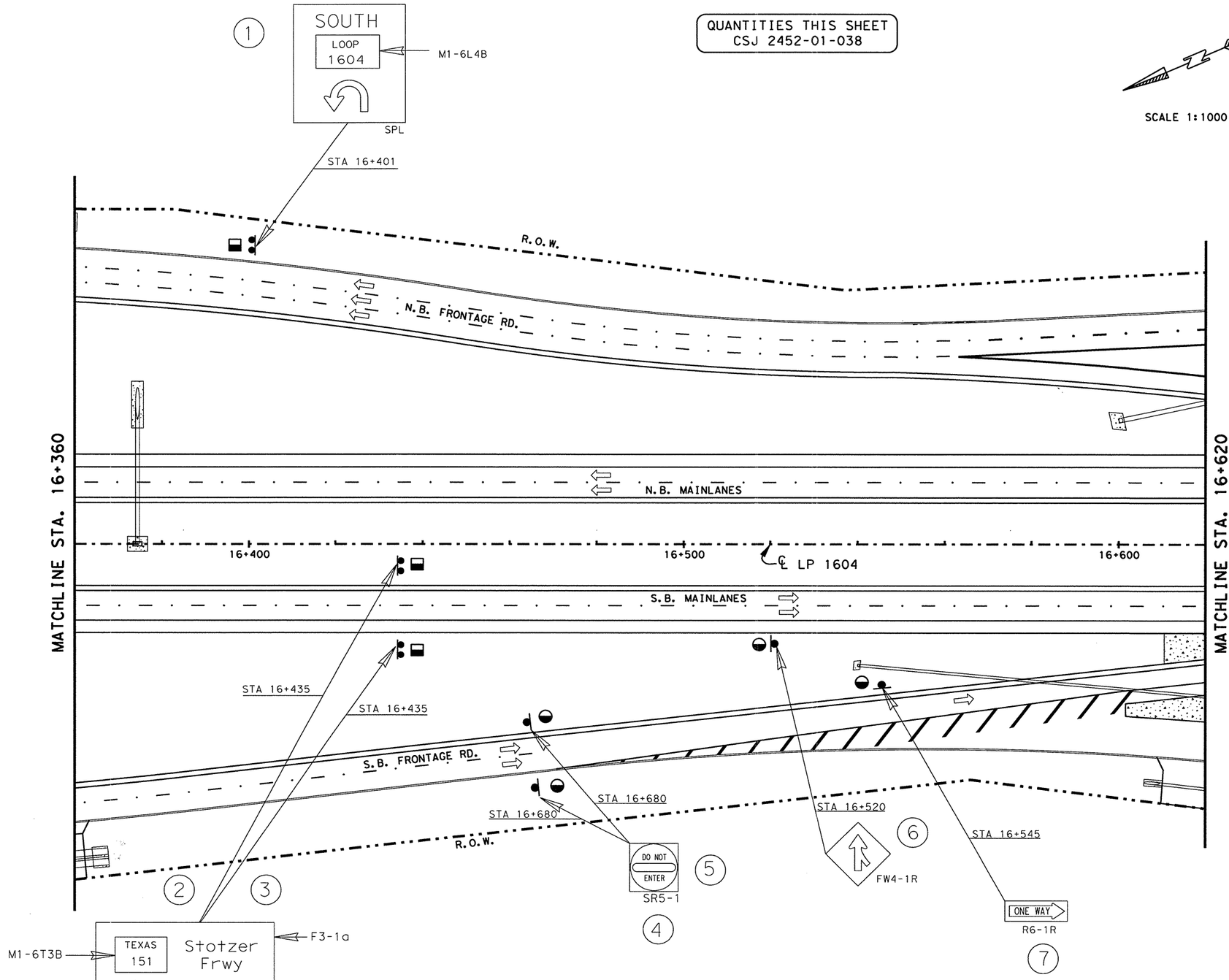


QUANTITIES THIS SHEET
CSJ 2452-01-038

SCALE 1:1000

| RIPRAP APRONS QUANTITIES | | | |
|---|---|---|---|
| TYPE OF MOUNT | EA. | MULTIPLIED BY M3 | TOTAL M3 |
| SINGLE POST | 4 | 1.0 | 4.0 |
| MULTI - POST | 3 | 1.5 | 4.5 |
| OVHD. SIGN BRIDGE | | | |
| CLASS "B" CONC. GRAND TOTAL | | | 8.5 |

SEE SHEET NO. 753 FOR RIPRAP APRON DETAILS.
SEE SHEET NO. 58 FOR RIPRAP SUMMARIZATION.

NOTE(S):

PAVEMENT MARKINGS SHOWN FOR REFERENCE ONLY. SEE PAVEMENT MARKINGS/DELINEATION LAYOUTS FOR DETAILS AND QUANTITIES.

LEVELS DISPLAYED
1 2 3 4 5 6 7 8 9 10 11 12 13 14 15 16
17 18 19 20 21 22 23 24 25 26 27 28 29 30 31 32
33 34 35 36 37 38 39 40 41 42 43 44 45 46 47 48
49 50 51 52 53 54 55 56 57 58 59 60 61 62 63

ACC: t:/ao/design/lp1604fm471-90/pave-sign/
FILE: pavmrkplan11.dgn

STATE OF TEXAS
JOEL K. DAVENPORT, JR.
79276
REGISTERED PROFESSIONAL ENGINEER

Joel K Davenport Jr. 9/19/00
Joel K. Davenport, Jr. P.E. 79276 Date

©2000 Texas Department of Transportation

# SIGNING LAYOUT

**SHEET 11 OF 57**

| FED.RD. DIV.NO. | FEDERAL AID PROJECT NO. | SHEET NO. |
|---|---|---|
| 6 | NH 2000(704), etc. | 650 |
| STATE | DIST. | COUNTY |
| TEXAS | SAT | BEXAR |
| CONT. | SECT. | JOB | HIGHWAY NO. |
| 2452 | 01 | 036, etc. | LP 1604 |

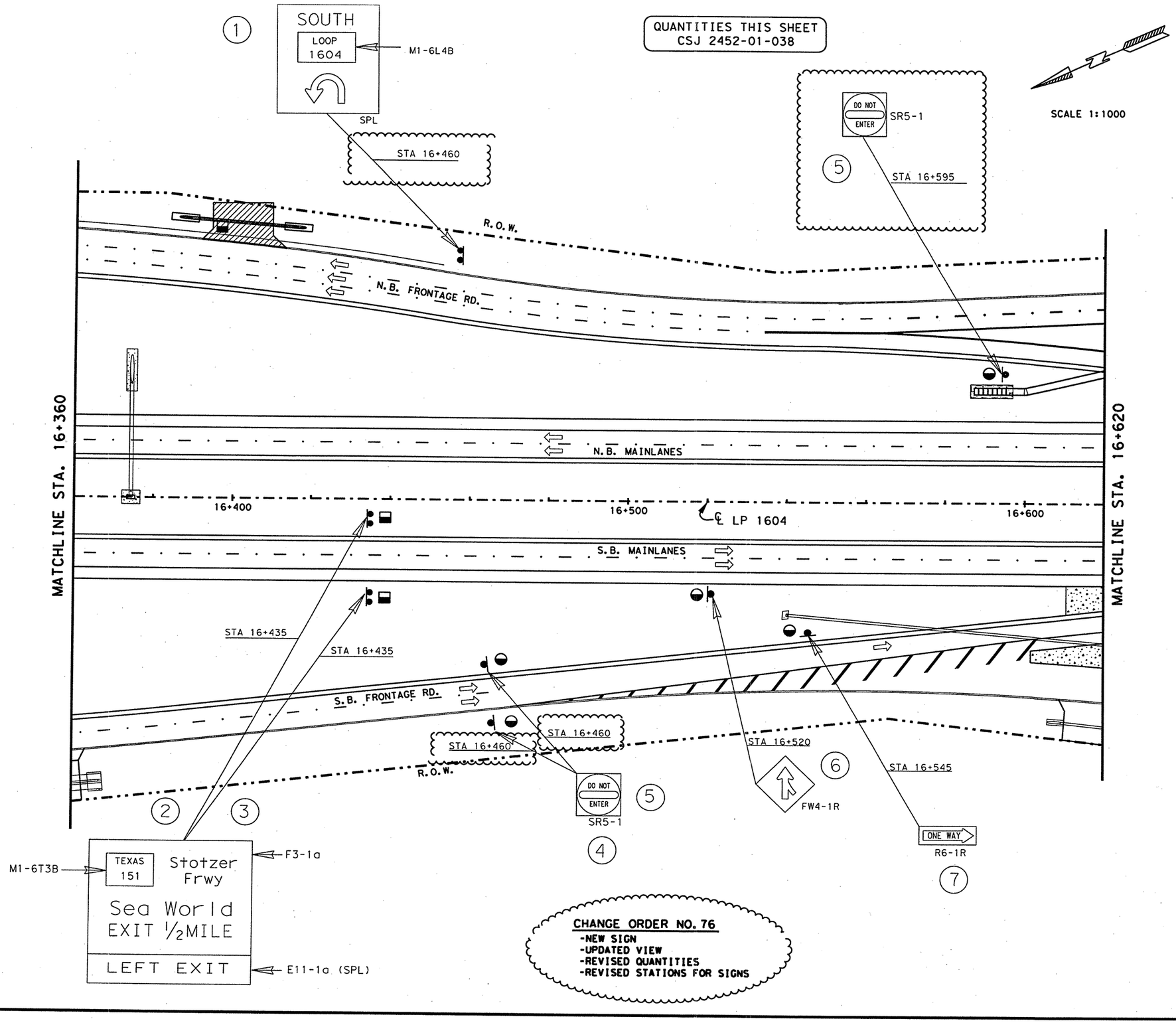


| RIPRAP APRONS QUANTITIES | | | |
|---|---|---|---|
| TYPE OF MOUNT | EA. | MULTIPLIED BY M3 | TOTAL M3 |
| SINGLE POST | 5 | 1.0 | 5.0 |
| MULTI - POST | 3 | 1.5 | 4.5 |
| OVHD. SIGN BRIDGE | | | |
| CLASS "B" CONC. GRAND TOTAL | | | 9.5 |

SEE SHEET NO. 753 FOR RIPRAP APRON DETAILS.
SEE SHEET NO. 58 FOR RIPRAP SUMMARIZATION.

NOTE(S):

PAVEMENT MARKINGS SHOWN FOR REFERENCE ONLY. SEE PAVEMENT MARKINGS/DELINEATION LAYOUTS FOR DETAILS AND QUANTITIES.

**CHANGE ORDER NO. 76**
- -NEW SIGN
- -UPDATED VIEW
- -REVISED QUANTITIES
- -REVISED STATIONS FOR SIGNS

CHANGE ORDER 76

REVISED SHEET

STATE OF TEXAS
JEROME D. PAVLISKA
76075
REGISTERED PROFESSIONAL ENGINEER

Jerome D. Pavliska, P.E. 01/08/04
Jerome D. Pavliska, P.E. — Date

Texas Department of Transportation

# SIGNING LAYOUT

SHEET 11 OF 57

| FED. RD. DIV. NO. | FEDERAL AID PROJECT NO. | | SHEET NO. |
|---|---|---|---|
| 6 | NH 2000(704), etc. | | 1090A |
| STATE | DIST. | COUNTY | |
| TEXAS | SAT | BEXAR | |
| CONT. | SECT. | JOB | HIGHWAY NO. |
| 2452 | 01 | 036, etc. | LP 1604 |

12/10/03

LEVELS DISPLAYED
1 2 3 4 5 6 7 8 9 10 11 12 13 14 15 16
17 18 19 20 21 22 23 24 25 26 27 28 29 30 31 32
33 34 35 36 37 38 39 40 41 42 43 44 45 46 47 48
49 50 51 52 53 54 55 56 57 58 59 60 61 62 63

ACC: t:/ao/design/lp1604fm471-90/pave-sign/
FILE: pavmrkplan11.dgn

QUANTITIES THIS SHEET
CSJ 2452-01-038

SCALE 1:1000

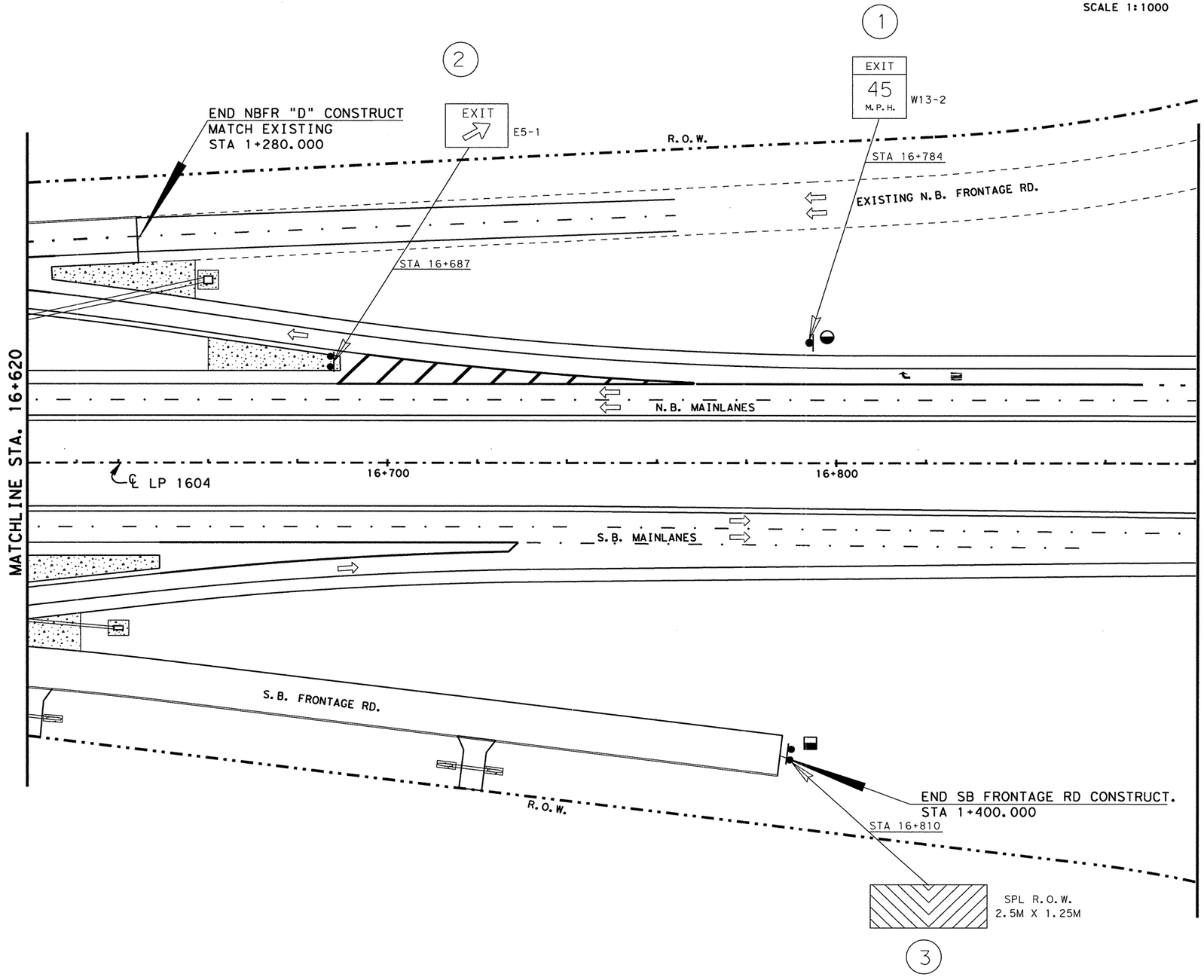


| RIPRAP APRONS QUANTITIES | | | |
|---|---|---|---|
| TYPE OF MOUNT | EA. | MULTIPLIED BY M3 | TOTAL M3 |
| SINGLE POST | 1 | 1.0 | 1.0 |
| MULTI - POST | 1 | 1.5 | 1.5 |
| OVHD. SIGN BRIDGE | | | |
| CLASS "B" CONC. GRAND TOTAL | | | 2.5 |

SEE SHEET NO. 753 FOR RIPRAP APRON DETAILS.
SEE SHEET NO. 58 FOR RIPRAP SUMMARIZATION.

NOTE(S):

PAVEMENT MARKINGS SHOWN FOR REFERENCE ONLY. SEE PAVEMENT MARKINGS/DELINEATION LAYOUTS FOR DETAILS AND QUANTITIES.

LEVELS DISPLAYED
1 2 3 4 5 6 7 8 | 1 2 3 1 4 1 5 1 6
1 7 8 1 9 2 0 2 1 2 2 3 2 4 2 5 2 6 2 7 2 8 2 9 3 0 3 1 3 2
3 3 4 5 5 6 3 7 3 8 9 4 0 4 1 4 2 4 3 4 4 5 4 6 4 7 4 8
4 9 6 0 5 1 6 2 5 3 5 4 5 5 5 6 5 7 5 8 5 9 6 0 6 1 6 2 6 3

ACC: t:\ao\design\
ip1604fm471-90\pave-sign\
FILE: pavmrkplan12.dgn

STATE OF TEXAS
JOEL K. DAVENPORT, JR.
79276
REGISTERED PROFESSIONAL ENGINEER

Joel K. Davenport 9/19/00
Joel K. Davenport, Jr. P.E. 79276 Date

©2000 Texas Department of Transportation

# SIGNING LAYOUT

**SHEET 12 OF 57**

| FED. RD. DIV. NO. | FEDERAL AID PROJECT NO. | | SHEET NO. |
|---|---|---|---|
| 6 | NH 2000(704), etc. | | 651 |
| STATE | DIST. | COUNTY | |
| TEXAS | SAT | BEXAR | |
| CONT. | SECT. | JOB | HIGHWAY NO. |
| 2452 | 01 | 036, etc. | LP 1604 |

QUANTITIES THIS SHEET
CSJ 2452-01-038

SCALE 1:1000

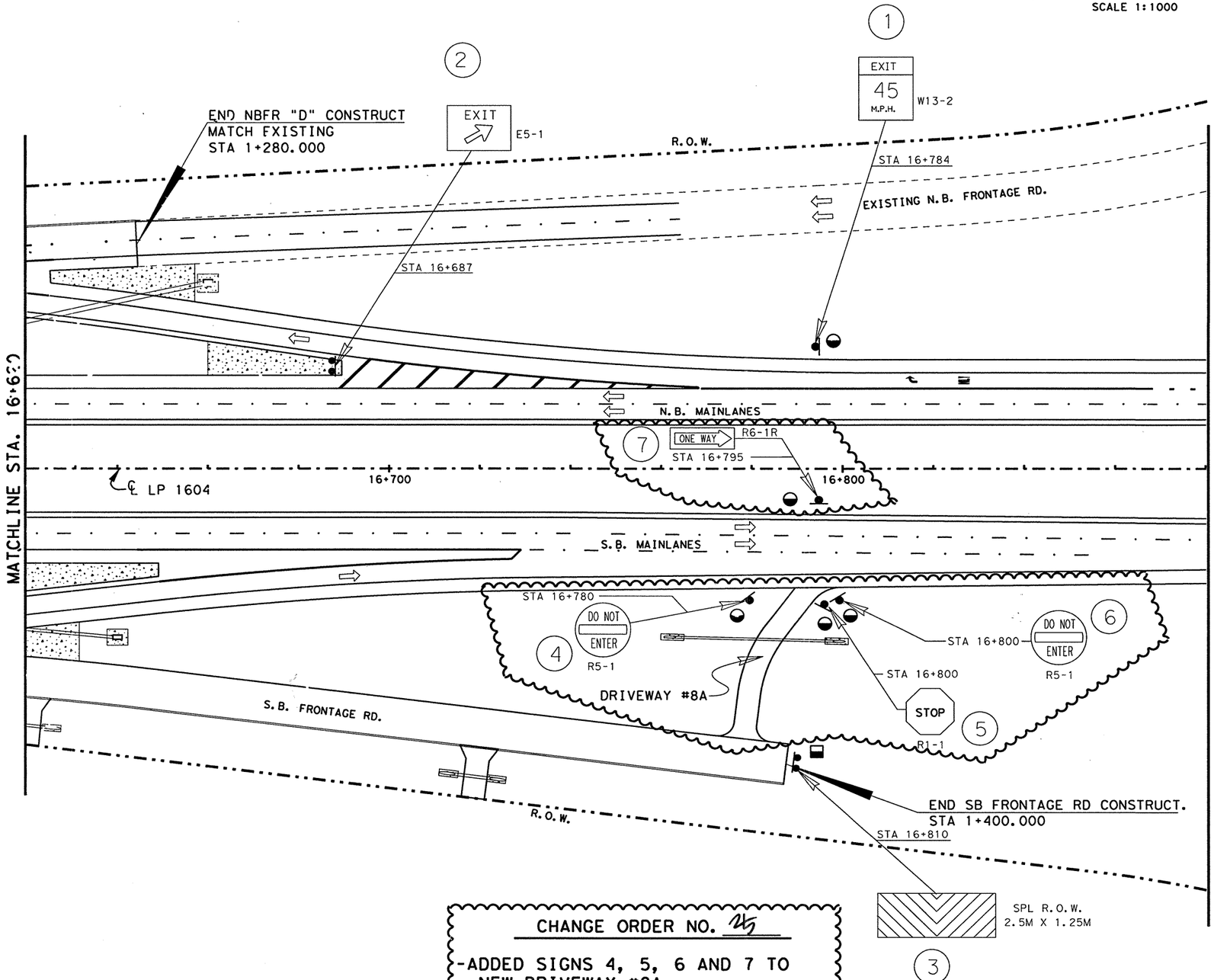


CHANGE ORDER NO. 25

-ADDED SIGNS 4, 5, 6 AND 7 TO NEW DRIVEWAY #8A.
-REVISED RIPRAP APRON QUANTITIES.

| RIPRAP APRONS QUANTITIES | | | |
|---|---|---|---|
| TYPE OF MOUNT | EA. | MULTIPLIED BY M3 | TOTAL M3 |
| SINGLE POST | 5 | 1.0 | 5.0 |
| MULTI - POST | 1 | 1.5 | 1.5 |
| OVHD. SIGN BRIDGE | | | |
| CLASS "B" CONC. GRAND TOTAL | | | 6.5 |

SEE SHEET NO. 753 FOR RIPRAP APRON DETAILS.
SEE SHEET NO. 58 FOR RIPRAP SUMMARIZATION.

NOTE(S):

PAVEMENT MARKINGS SHOWN FOR REFERENCE ONLY. SEE PAVEMENT MARKINGS/DELINEATION LAYOUTS FOR DETAILS AND QUANTITIES.

CHANGE ORDER 25

STATE OF TEXAS
TERRY G. McCOY
75016
REGISTERED PROFESSIONAL ENGINEER

Terry G. McCoy, P.E. 3.21.02
Date

FOR HOD'S ASSOC. WITH CO #25 ONLY

©2000 Texas Department of Transportation

SIGNING LAYOUT

SHEET 12 OF 57

| FED. RD. DIV. NO. | FEDERAL AID PROJECT NO. | | SHEET NO. |
|---|---|---|---|
| 6 | NH 2000(704), etc. | | 651A |
| STATE | DIST. | COUNTY | |
| TEXAS | SAT | BEXAR | |
| CONT. | SECT. | JOB | HIGHWAY NO. |
| 2452 | 01 | 036, etc. | LP 1604 |

03-21-02

LEVELS DISPLAYED
1 2 3 4 5 6 7 8 | 1 2 3 11 41 51 61
17 18 19 20 21 22 23 24 25 26 27 28 29 30 31 32
33 34 35 36 37 38 39 40 41 42 43 44 45 46 47 48
49 50 51 52 53 54 55 56 57 58 59 60 61 62 63

ACC: t:\ao\design\
lp1604fm471-90\pave-sign\
FILE: signing12.dgn

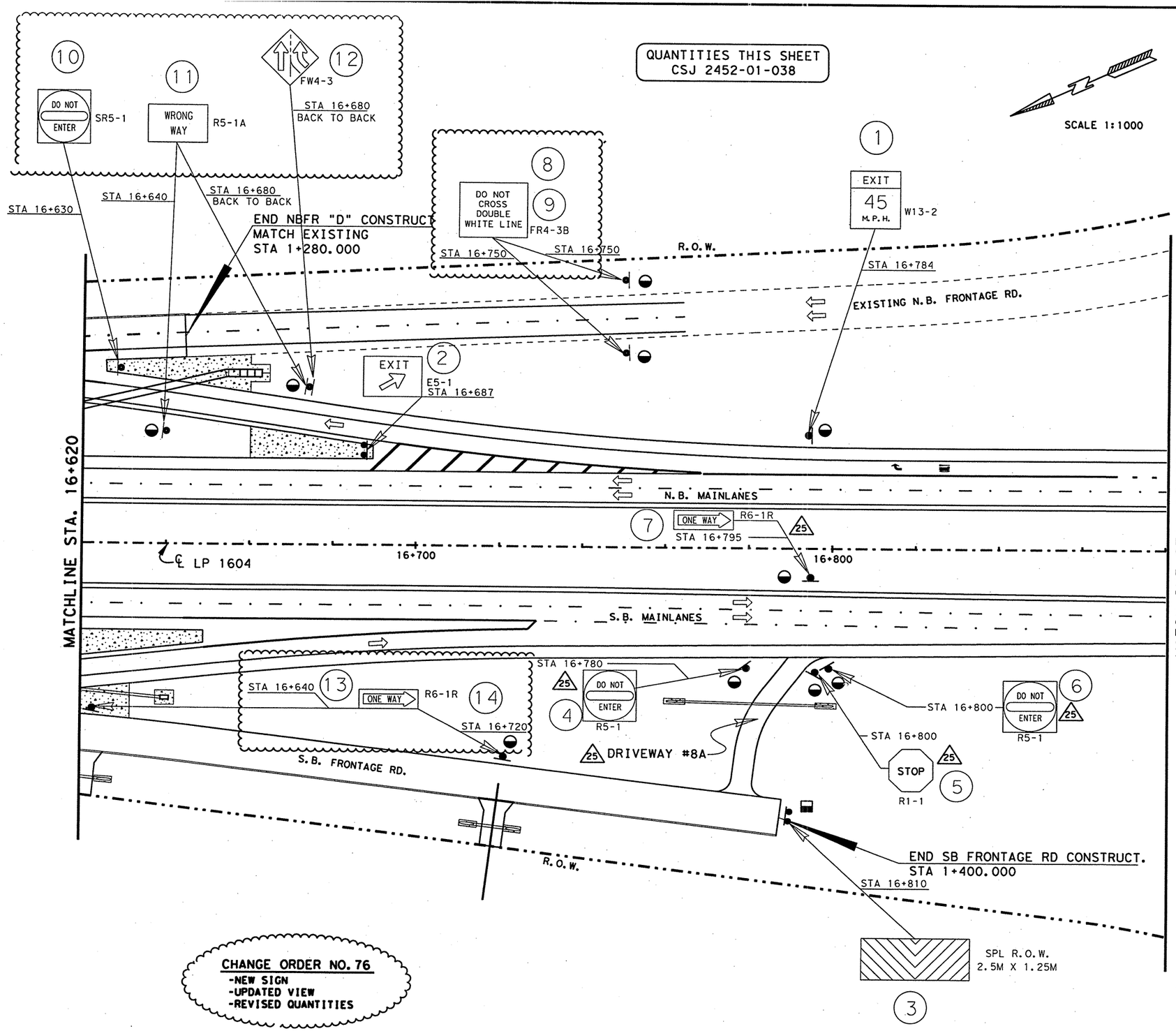


| RIPRAP APRONS QUANTITIES | | | |
|---|---|---|---|
| TYPE OF MOUNT | EA. | MULTIPLIED BY M3 | TOTAL M3 |
| SINGLE POST | 11 | 1.0 | 11.0 |
| MULTI - POST | 1 | 1.5 | 1.5 |
| OVHD. SIGN BRIDGE | | | |
| CLASS "B" CONC. GRAND TOTAL | | | 12.5 |

SEE SHEET NO. 753 FOR RIPRAP APRON DETAILS.
SEE SHEET NO. 58 FOR RIPRAP SUMMARIZATION.

NOTE(S):

PAVEMENT MARKINGS SHOWN FOR REFERENCE ONLY. SEE PAVEMENT MARKINGS/DELINEATION LAYOUTS FOR DETAILS AND QUANTITIES.

(#) REFERS TO CHANGES MADE AS PART OF A CHANGE ORDER.

CHANGE ORDER 76

REVISED SHEET

STATE OF TEXAS
JEROME D. PAVLISKA
76075
REGISTERED PROFESSIONAL ENGINEER

Jerome D. Pavliska, P.E. 01/08/04
Jerome D. Pavliska, P.E. Date

LEVELS DISPLAYED
1 2 3 4 5 6 7 8 | 11 12 13 14 15 16 | 17 18 19 20 21 22 23 24 25 26 27 28 29 30 31 32 33 34 35 36 37 38 39 40 41 42 43 44 45 46 47 48 49 50 51 52 53 54 55 56 57 58 59 60 61 62 63

ACC: t:\ao\design\ip1604fm471-90\pave-sign\
FILE: signing12*C076.dgn

©2000 Texas Department of Transportation

SIGNING LAYOUT

SHEET 12 OF 57

| FED. RD. DIV. NO. | FEDERAL AID PROJECT NO. | | SHEET NO. |
|---|---|---|---|
| 6 | NH 2000(704), etc. | | GMB |
| STATE | DIST. | COUNTY | |
| TEXAS | SAT | BEXAR | |
| CONT. | SECT. | JOB | HIGHWAY NO. |
| 2452 | 01 | 036, etc. | LP 1604 |

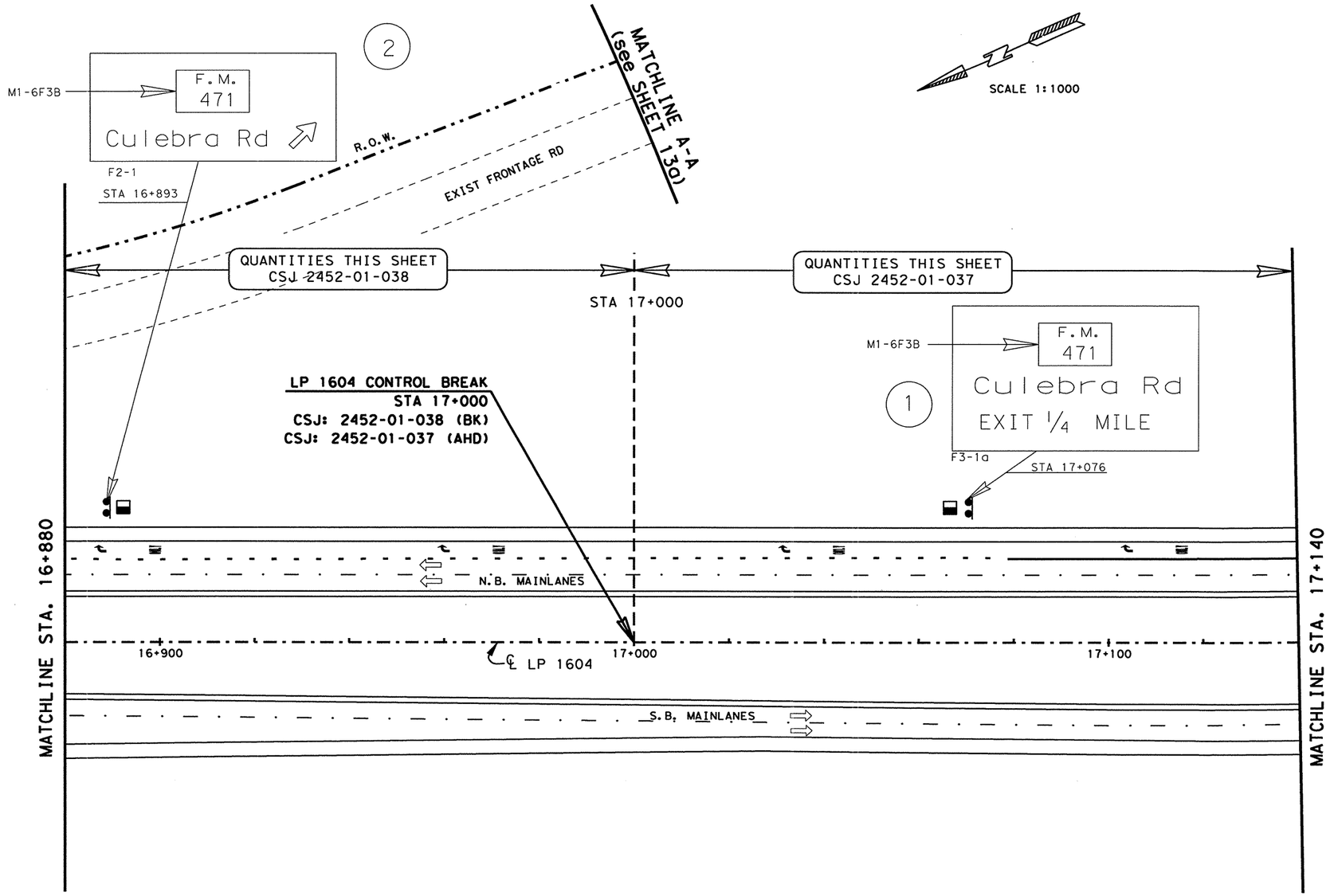


| RIPRAP APRONS | | | CONTROL | |
|---|---|---|---|---|
| QUANTITIES | | | -038 | -037 |
| TYPE OF MOUNT | EA. | MULTIPLIED BY M3 | TOTAL M3 | |
| SINGLE POST | | 1.0 | | |
| MULTI - POST | 2 | 1.5 | 1.5 | 1.5 |
| OVHD. SIGN BRIDGE | | | | |
| CLASS "B" CONC. GRAND TOTAL | | | 1.5 | 1.5 |

SEE SHEET NO. 753 FOR RIPRAP APRON DETAILS.
SEE SHEET NO. 58 FOR RIPRAP SUMMARIZATION.

NOTE(S):

PAVEMENT MARKINGS SHOWN FOR REFERENCE ONLY. SEE PAVEMENT MARKINGS/DELINEATION LAYOUTS FOR DETAILS AND QUANTITIES.

LEVELS DISPLAYED
1 2 3 4 5 6 7 8 9 10 11 12 13 14 15 16 17 18 19 20 21 22 23 24 25 26 27 28 29 30 31 32 33 34 35 36 37 38 39 40 41 42 43 44 45 46 47 48 49 50 51 52 53 54 55 56 57 58 59 60 61 62 63 64

ACC: t:\ao\design\lp1604fm471-90\pave-sign\
FILE: pavmrkplan13.dgn

STATE OF TEXAS
JOEL K. DAVENPORT, JR.
79276
REGISTERED PROFESSIONAL ENGINEER

Joel K Davenport Jr 9/19/00
Joel K. Davenport, Jr. P.E. 79276 Date

©2000 Texas Department of Transportation

# SIGNING LAYOUT

SHEET 13 OF 57

| FED. RD. DIV. NO. | FEDERAL AID PROJECT NO. | | SHEET NO. |
|---|---|---|---|
| 6 | NH 2000(704), etc. | | 652 |
| STATE | DIST. | COUNTY | |
| TEXAS | SAT | BEXAR | |
| CONT. | SECT. | JOB | HIGHWAY NO. |
| 2452 | 01 | 036, etc. | LP 1604 |

| RIPRAP APRONS QUANTITIES | | | |
|---|---|---|---|
| TYPE OF MOUNT | EA. | MULTIPLIED BY M3 | TOTAL M3 |
| SINGLE POST | | 1.0 | |
| MULTI - POST | 1 | 1.5 | 1.5 |
| OVHD. SIGN BRIDGE | | | |
| CLASS "B" CONC. GRAND TOTAL | | | 1.5 |

SEE SHEET NO. 753 FOR RIPRAP APRON DETAILS.
SEE SHEET NO. 58 FOR RIPRAP SUMMARIZATION.

NOTE(S):

PAVEMENT MARKINGS SHOWN FOR REFERENCE ONLY. SEE PAVEMENT MARKINGS/DELINEATION LAYOUTS FOR DETAILS AND QUANTITIES.

QUANTITIES THIS SHEET
CSJ 2452-01-037

SCALE 1:1000

MATCHLINE A-A
(see SHEET 13)

EXIST FRONTAGE RD

EXIST W.B. CONNECTOR
(SH 151)

1

NORTH LOOP 1604

SOUTH LOOP 1604

F2-1

REMOVE

REMOVE

3

SOUTH LOOP 1604

M3-3G

M1-6L

M6-2BL

2

LEVELS DISPLAYED
1 2 3 4 5 6 7 8 9 10 11 12 13 14 15 16 17 18 19 20 21 22 23 24 25 26 27 28 29 30 31 32 33 34 35 36 37 38 39 40 41 42 43 44 45 46 47 48 49 50 51 52 53 54 55 56 57 58 59 60 61 62 63

ACC: t:\ao\design\lp1604fm471-90\pave-sign\
FILE: pavmrkplan13.dgn

STATE OF TEXAS
JOEL K. DAVENPORT, JR.
79276
REGISTERED PROFESSIONAL ENGINEER

Joel K. Davenport, Jr. 9/19/00
Joel K. Davenport, Jr., P.E. 79276 Date

Texas Department of Transportation

# SIGNING LAYOUT

SHEET 13a OF 57

| FED. RD. DIV. NO. | FEDERAL AID PROJECT NO. | | SHEET NO. |
|---|---|---|---|
| 6 | NH 2000(704), etc. | | 653 |
| STATE | DIST. | COUNTY | |
| TEXAS | SAT | BEXAR | |
| CONT. | SECT. | JOB | HIGHWAY NO. |
| 2452 | 01 | 036, etc. | LP 1604 |

QUANTITIES THIS SHEET
CSJ 2452-01-037

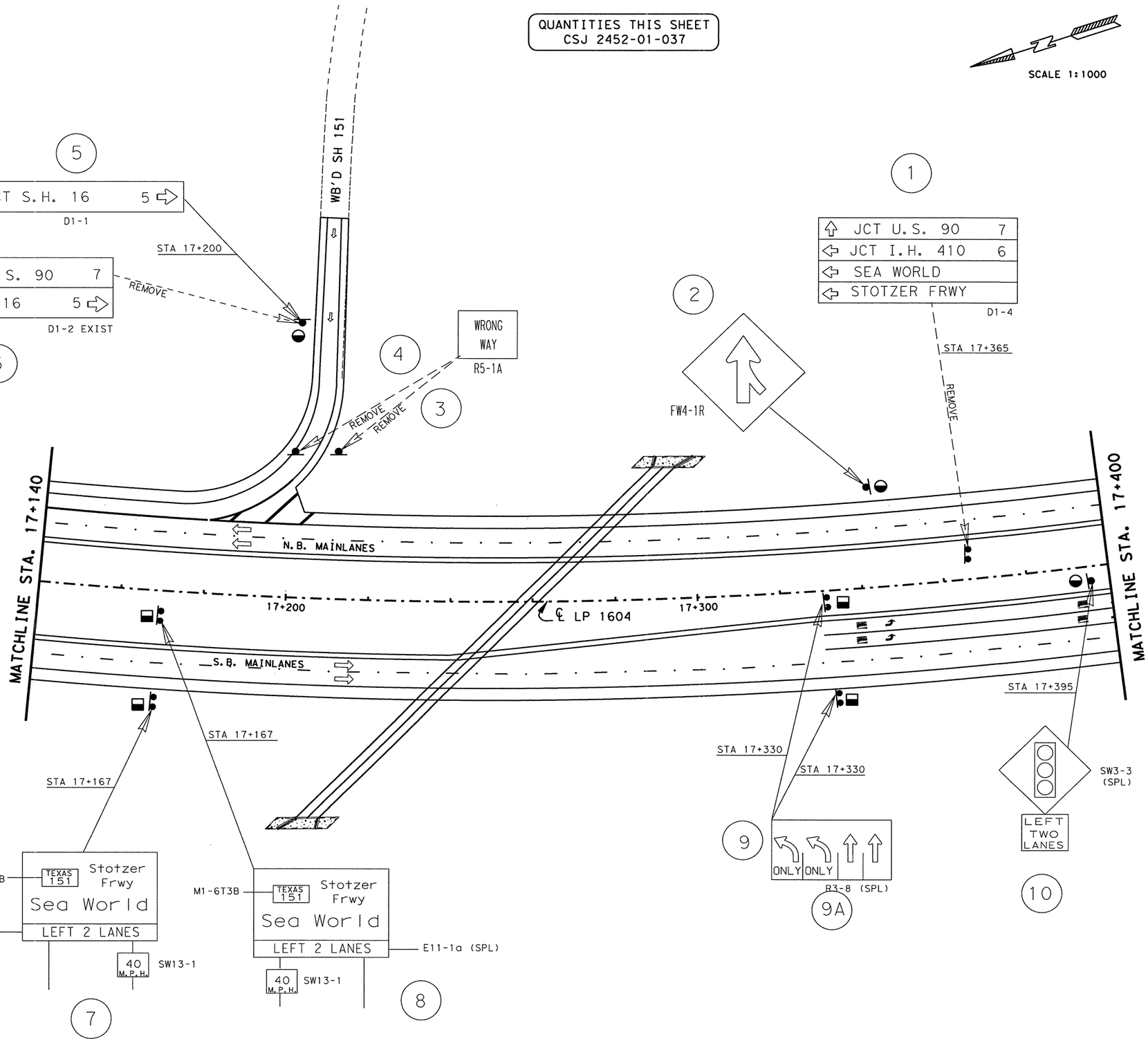


| RIPRAP APRONS QUANTITIES | | | |
|---|---|---|---|
| TYPE OF MOUNT | EA. | MULTIPLIED BY M3 | TOTAL M3 |
| SINGLE POST | 3 | 1.0 | 3.0 |
| MULTI - POST | 4 | 1.5 | 6.0 |
| OVHD. SIGN BRIDGE | | | |
| CLASS "B" CONC. GRAND TOTAL | | | 9.0 |

SEE SHEET NO. 753 FOR RIPRAP APRON DETAILS.
SEE SHEET NO. 58 FOR RIPRAP SUMMARIZATION.

NOTE(S):

PAVEMENT MARKINGS SHOWN FOR REFERENCE ONLY. SEE PAVEMENT MARKINGS/DELINEATION LAYOUTS FOR DETAILS AND QUANTITIES.

LEVELS DISPLAYED
1 2 3 4 5 6 7 8 | 12 13 14 15 16
17 18 19 20 21 22 23 24 25 26 27 28 29 30 31 32 | lp1604fm471-90\pave-sign
33 34 35 36 37 58 59 40 41 42 43 44 45 46 47 48
49 50 51 52 53 54 55 56 57 58 59 60 61 62 63 | FILE: pavmrkplan14.dgn
ACC: t:\ao\design\

STATE OF TEXAS
JOEL K. DAVENPORT, JR.
79276
REGISTERED PROFESSIONAL ENGINEER

Joel K. Davenport, Jr. 9/19/00
Joel K. Davenport, Jr. P.E. 79276 Date

©2000 Texas Department of Transportation

# SIGNING LAYOUT

**SHEET 14 OF 57**

| FED. RD. DIV. NO. | FEDERAL AID PROJECT NO. | SHEET NO. |
|---|---|---|
| 6 | NH 2000(704), etc. | 654 |
| STATE | DIST. | COUNTY |
| TEXAS | SAT | BEXAR |
| CONT. | SECT. | JOB / HIGHWAY NO. |
| 2452 | 01 | 036, etc. / LP 1604 |

QUANTITIES THIS SHEET
CSJ 2452-01-037

SCALE 1:1000

| RIPRAP APRONS QUANTITIES | | | |
|---|---|---|---|
| TYPE OF MOUNT | EA. | MULTIPLIED BY M³ | TOTAL M³ |
| SINGLE POST | 6 | 1.0 | 6.0 |
| MULTI - POST | 5 | 1.5 | 7.5 |
| OVHD. SIGN BRIDGE | | | |
| CLASS "B" CONC. GRAND TOTAL | | | 13.5 |

SEE SHEET NO. 753 FOR RIPRAP APRON DETAILS.
SEE SHEET NO. 58 FOR RIPRAP SUMMARIZATION.

NOTE(S):

PAVEMENT MARKINGS SHOWN FOR REFERENCE ONLY. SEE PAVEMENT MARKINGS/DELINEATION LAYOUTS FOR DETAILS AND QUANTITIES.

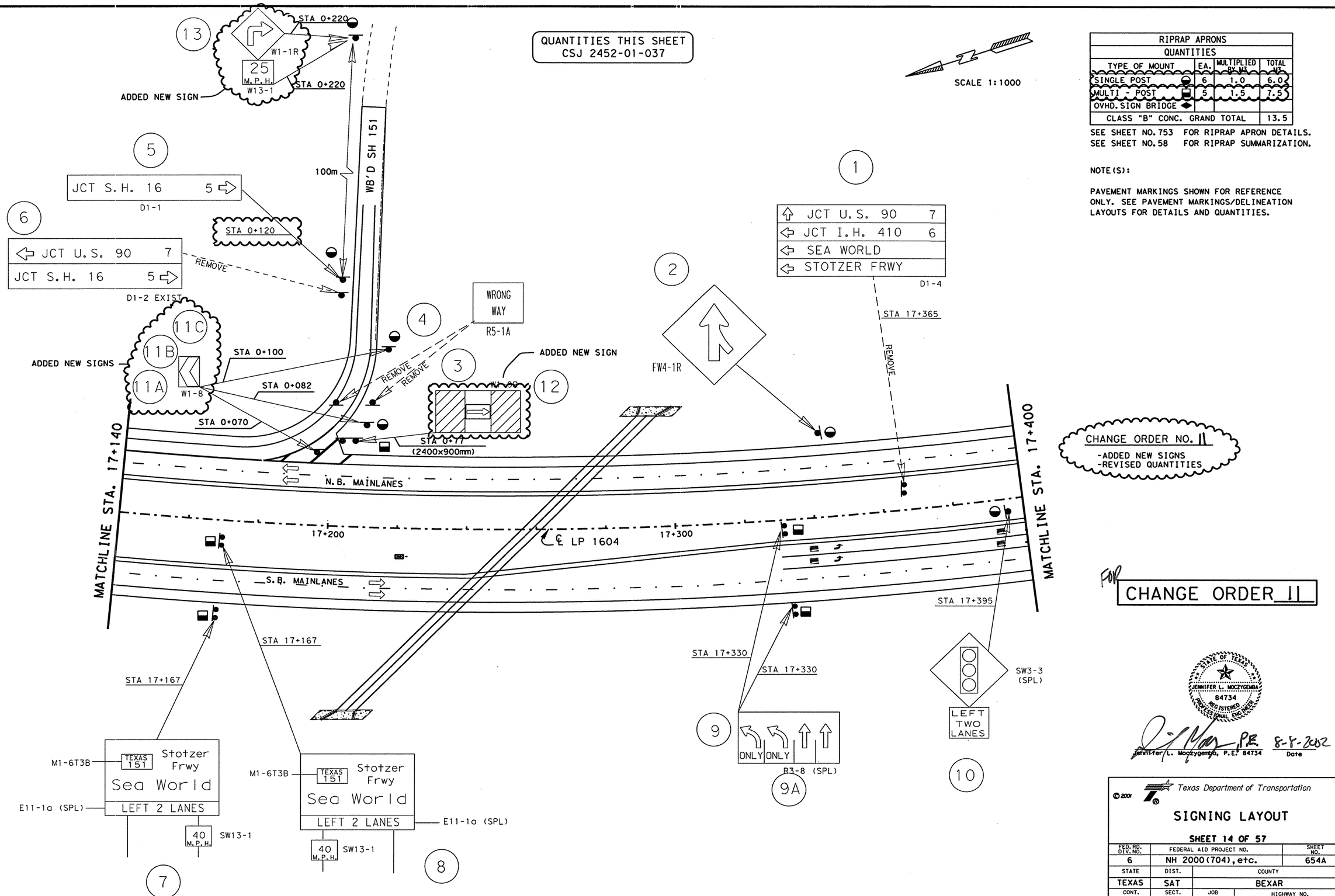


CHANGE ORDER NO. 11
-ADDED NEW SIGNS
-REVISED QUANTITIES

FOR CHANGE ORDER 11

STATE OF TEXAS
JENNIFER L. MOCZYGEMBA
84734
REGISTERED PROFESSIONAL ENGINEER

Jennifer L. Moczygemba, P.E. 84734 — 8-8-2002 Date

© 2001

Texas Department of Transportation

# SIGNING LAYOUT

SHEET 14 OF 57

| FED.RD. DIV.NO. | FEDERAL AID PROJECT NO. | | SHEET NO. |
|---|---|---|---|
| 6 | NH 2000(704), etc. | | 654A |
| STATE | DIST. | COUNTY | |
| TEXAS | SAT | BEXAR | |
| CONT. | SECT. | JOB | HIGHWAY NO. |
| 2452 | 01 | 036, etc. | LP 1604 |

LEVELS DISPLAYED
1 2 3 4 5 6 7 16 17 18 19 20 21 22 23 24 25 26 27 28 29 30 31 32 33 34 35 36 37 38 39 40 41 42 43 44 45 46 47 48 49 50 51 52 53 54 55 56 57 58 59 60 61 62 63

ACC: t:\ao\design\ip1604fm471-90\pave-sign
FILE: signing14.dgn

QUANTITIES THIS SHEET
CSJ 2452-01-037

SCALE 1:1000

| RIPRAP APRONS QUANTITIES | | | |
|---|---|---|---|
| TYPE OF MOUNT | EA. | MULTIPLIED BY M3 | TOTAL M3 |
| SINGLE POST | 8 | 1.0 | 8.0 |
| MULTI - POST | 1 | 1.5 | 1.5 |
| OVHD. SIGN BRIDGE | | | |
| CLASS "B" CONC. GRAND TOTAL | | | 9.5 |

SEE SHEET NO. 753 FOR RIPRAP APRON DETAILS.
SEE SHEET NO. 58 FOR RIPRAP SUMMARIZATION.

NOTE(S):

PAVEMENT MARKINGS SHOWN FOR REFERENCE ONLY. SEE PAVEMENT MARKINGS/DELINEATION LAYOUTS FOR DETAILS AND QUANTITIES.

✳ SIGNALIZED INTERSECTION

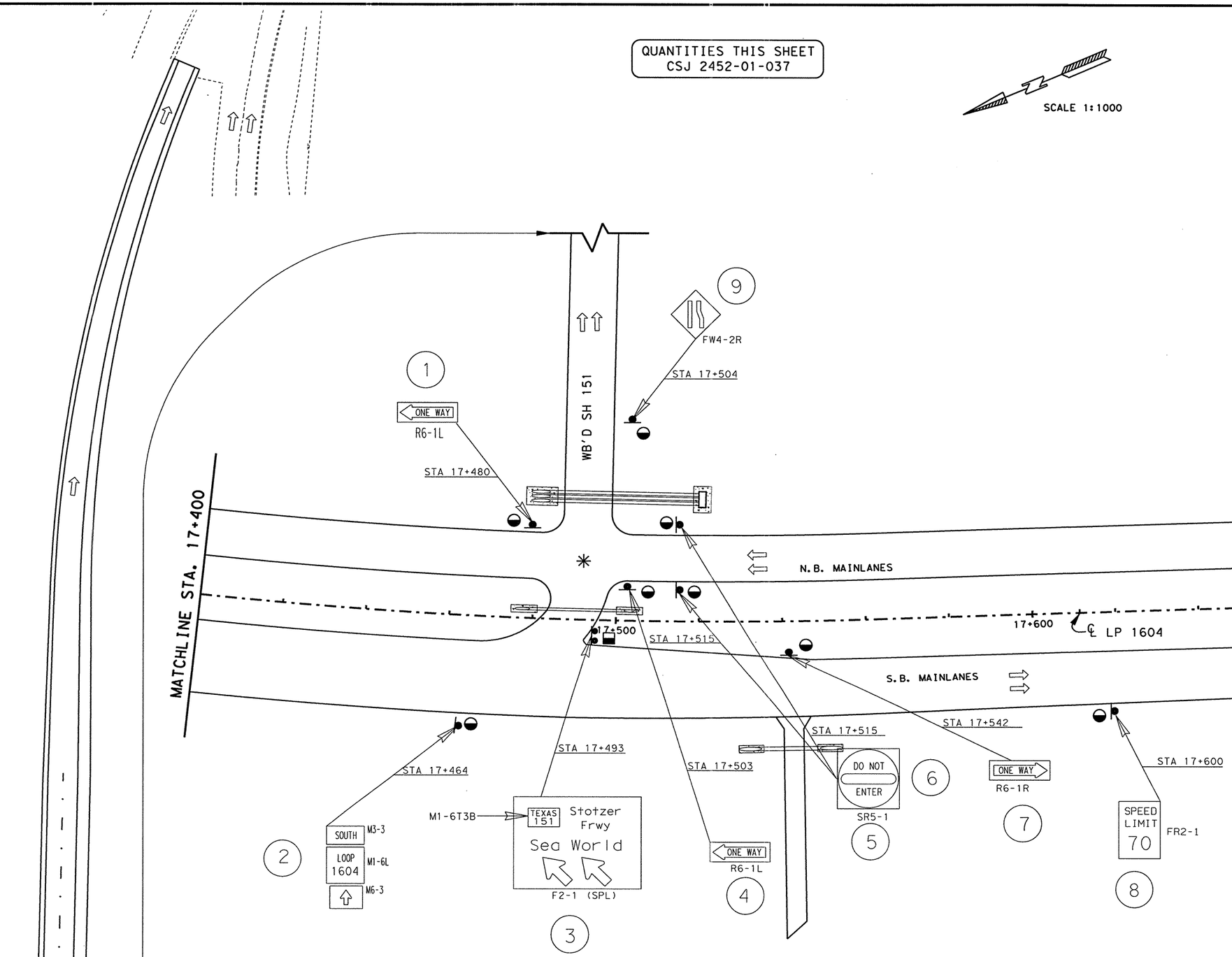


LEVELS DISPLAYED
1 2 3 4 5 6 7 8 | | | 21 31 41 51 61
11 21 31 41 51 61 71 81 | 91 101 111 121 131 141 151 161
21 31 41 51 61 71 81 91 | 101 111 121 131 141 151 161 171
31 41 51 61 71 81 91 101 | 111 121 131 141 151 161 171 181
41 51 61 71 81 91 101 111 | 121 131 141 151 161 171 181 191

ACC: t:\ao\design\lp1604fm471-90\pave-sign\
FILE: pavmrkplan15.dgn

STATE OF TEXAS
JOEL K. DAVENPORT, JR.
79276
REGISTERED
PROFESSIONAL ENGINEER

Joel K. Davenport, Jr. 10/19/00
Joel K. Davenport, Jr. P.E. 79276 Date

©2000 Texas Department of Transportation

# SIGNING LAYOUT

SHEET 15 OF 57

| FED. RD. DIV. NO. | FEDERAL AID PROJECT NO. | | SHEET NO. |
|---|---|---|---|
| 6 | NH 2000(704), etc. | | 655 |
| STATE | DIST. | COUNTY | |
| TEXAS | SAT | BEXAR | |
| CONT. | SECT. | JOB | HIGHWAY NO. |
| 2452 | 01 | 036, etc. | LP 1604 |

QUANTITIES THIS SHEET
CSJ 2452-01-037

SCALE 1:1000

| RIPRAP APRONS QUANTITIES | | | |
|---|---|---|---|
| TYPE OF MOUNT | EA. | MULTIPLIED BY M3 | TOTAL M3 |
| SINGLE POST | 11 | 1.0 | 11.0 |
| MULTI - POST | 1 | 1.5 | 1.5 |
| OVHD SIGN BRIDGE | | | |
| CLASS "B" CONC. GRAND TOTAL | | | 12.5 |

SEE SHEET NO. 753 FOR RIPRAP APRON DETAILS.
SEE SHEET NO. 58 FOR RIPRAP SUMMARIZATION.

NOTE(S):

PAVEMENT MARKINGS SHOWN FOR REFERENCE ONLY. SEE PAVEMENT MARKINGS/DELINEATION LAYOUTS FOR DETAILS AND QUANTITIES.

✳ SIGNALIZED INTERSECTION

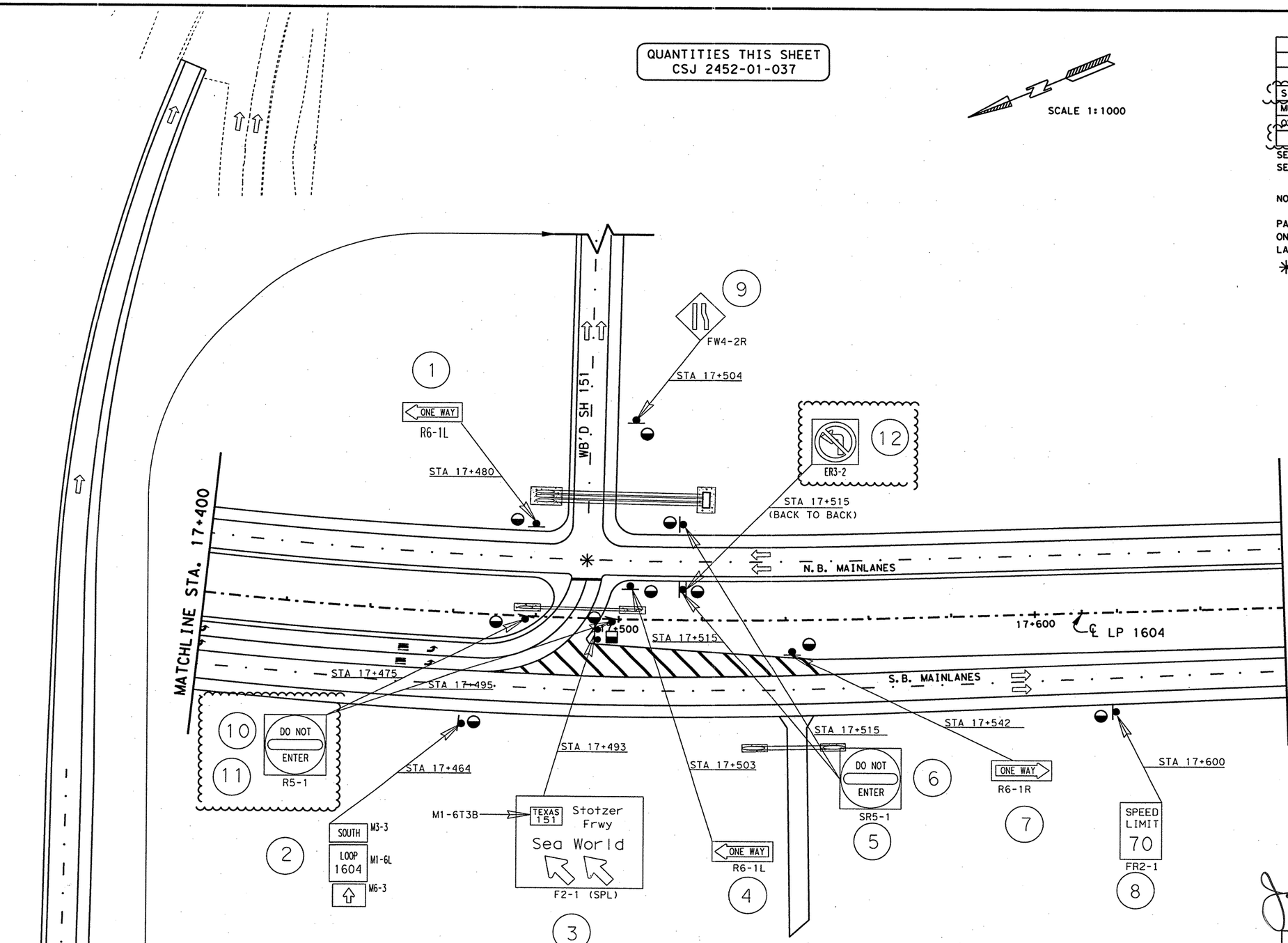


CHANGE ORDER NO. 76
-NEW SIGN
-UPDATED VIEW

CHANGE ORDER 76

REVISED SHEET

STATE OF TEXAS
JEROME D. PAVLISKA
76075
REGISTERED PROFESSIONAL ENGINEER

Jerome D. Pavliska, P.E. 01/08/04
Jerome D. Pavliska, P.E. Date

©2000

Texas Department of Transportation

# SIGNING LAYOUT

SHEET 15 OF 57

| FED. RD. DIV. NO. | FEDERAL AID PROJECT NO. | | SHEET NO. |
|---|---|---|---|
| 6 | NH 2000(704), etc. | | 0654 |
| STATE | DIST. | COUNTY | |
| TEXAS | SAT | BEXAR | |
| CONT. | SECT. | JOB | HIGHWAY NO. |
| 2452 | 01 | 036, etc. | LP 1604 |

LEVELS DISPLAYED
1 2 3 4 5 6 7 8 | 1 2 3 4 5 6 7 8 9 10 11 12 13 14 15 16
17 18 19 20 21 22 23 24 25 26 27 28 29 30 31 32
33 34 35 36 37 38 39 40 41 42 43 44 45 46 47 48
49 | 51 52 53 54 55 56 57 58 59 60 61 62 63

ACC: t:\oo\design\lp1604fm471-90\pave-sign\
FILE: pavmrkplan15.dgn

QUANTITIES THIS SHEET
CSJ 2452-01-037

SCALE 1:1000

| RIPRAP APRONS QUANTITIES | | | | |
|---|---|---|---|---|
| TYPE OF MOUNT | EA. | MULTIPLIED BY M3 | TOTAL M3 | |
| SINGLE POST | 10 | 1.0 | 10.0 | 76 |
| MULTI - POST | 1 | 1.5 | 1.5 | |
| OVHD. SIGN BRIDGE | | | | |
| CLASS "B" CONC. GRAND TOTAL | | | 11.5 | 76 |

SEE SHEET NO. 753 FOR RIPRAP APRON DETAILS.
SEE SHEET NO. 58 FOR RIPRAP SUMMARIZATION.

NOTE(S):

PAVEMENT MARKINGS SHOWN FOR REFERENCE ONLY. SEE PAVEMENT MARKINGS/DELINEATION LAYOUTS FOR DETAILS AND QUANTITIES.

✳ SIGNALIZED INTERSECTION

△# REFERS TO CHANGES MADE AS PART OF CHANGE ORDER.

CHANGE ORDER 65

REVISED SHEET

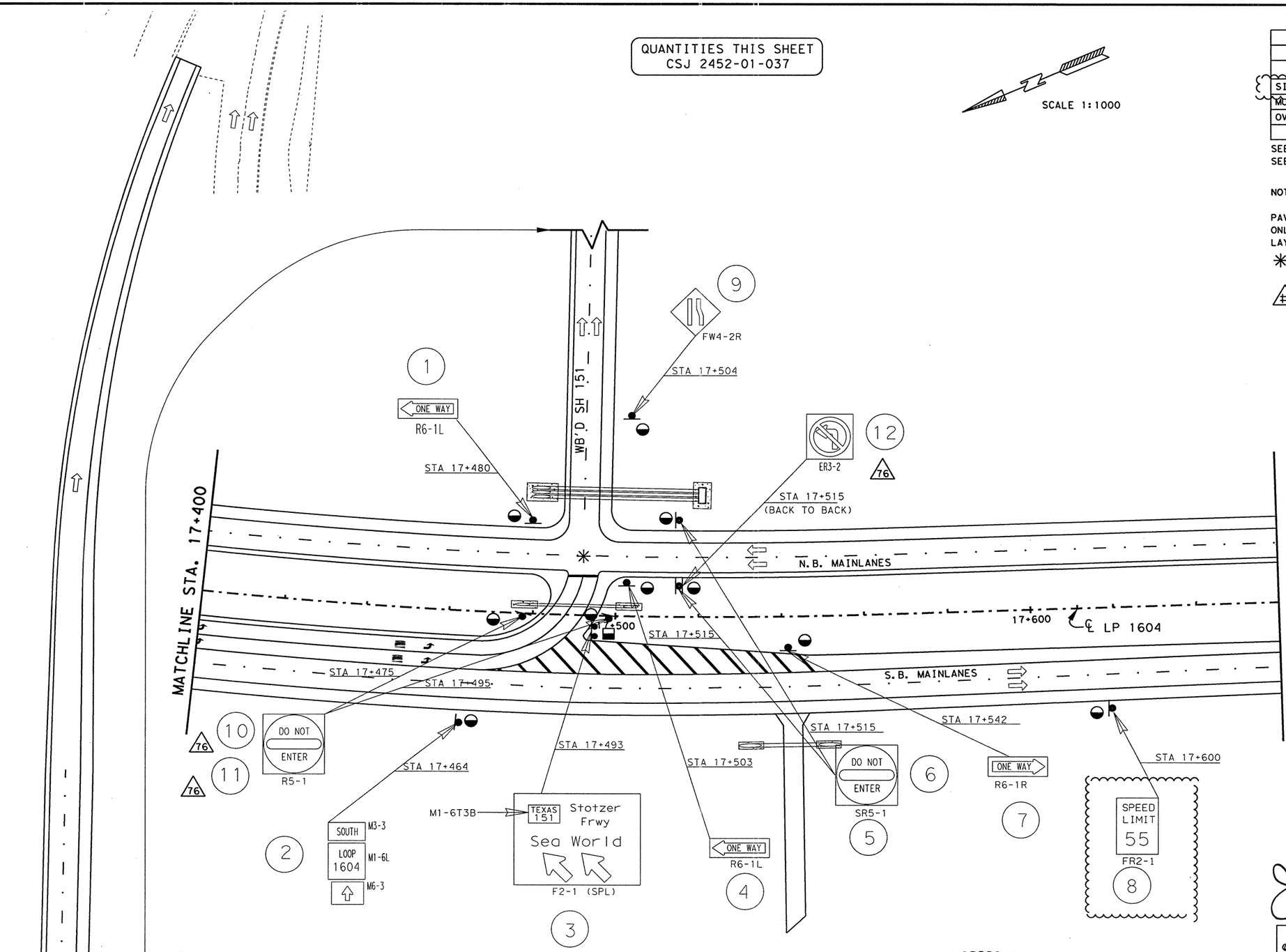


CHANGE ORDER NO. 65
-REPLACED SPEED LIMIT SIGN
-REVISED RIPRAP QUANTITIES

STATE OF TEXAS
JEROME D. PAVLISKA
76075
REGISTERED PROFESSIONAL ENGINEER

Jerome D. Pavliska, P.E. 4-13-04
Jerome D. Pavliska, P.E. Date

LEVELS DISPLAYED
1 2 3 4 5 6 7 8 | 1 | 2 | 3 4 5 6
1 7 8 19 20 21 22 23 24 25 26 27 28 29 30 31 32
33 34 35 36 37 38 39 40 41 42 43 44 45 46 47 48
49 | 51 52 53 54 55 56 57 58 59 60 61 62 63

ACC: t:\ao\design\
lp1604fm471-90\pave-sign\
FILE: SIGNING\signing15xC064.dgn

©2000
Texas Department of Transportation

# SIGNING LAYOUT

SHEET 15 OF 57

| FED. RD. DIV. NO. | FEDERAL AID PROJECT NO. | SHEET NO. |
|---|---|---|
| 6 | NH 2000(704), etc. | 655B |
| STATE | DIST. | COUNTY |
| TEXAS | SAT | BEXAR |
| CONT. | SECT. | JOB / HIGHWAY NO. |
| 2452 | 01 | 036, etc. / LP 1604 |

QUANTITIES THIS SHEET
CSJ 2452-01-037

SCALE 1:1000

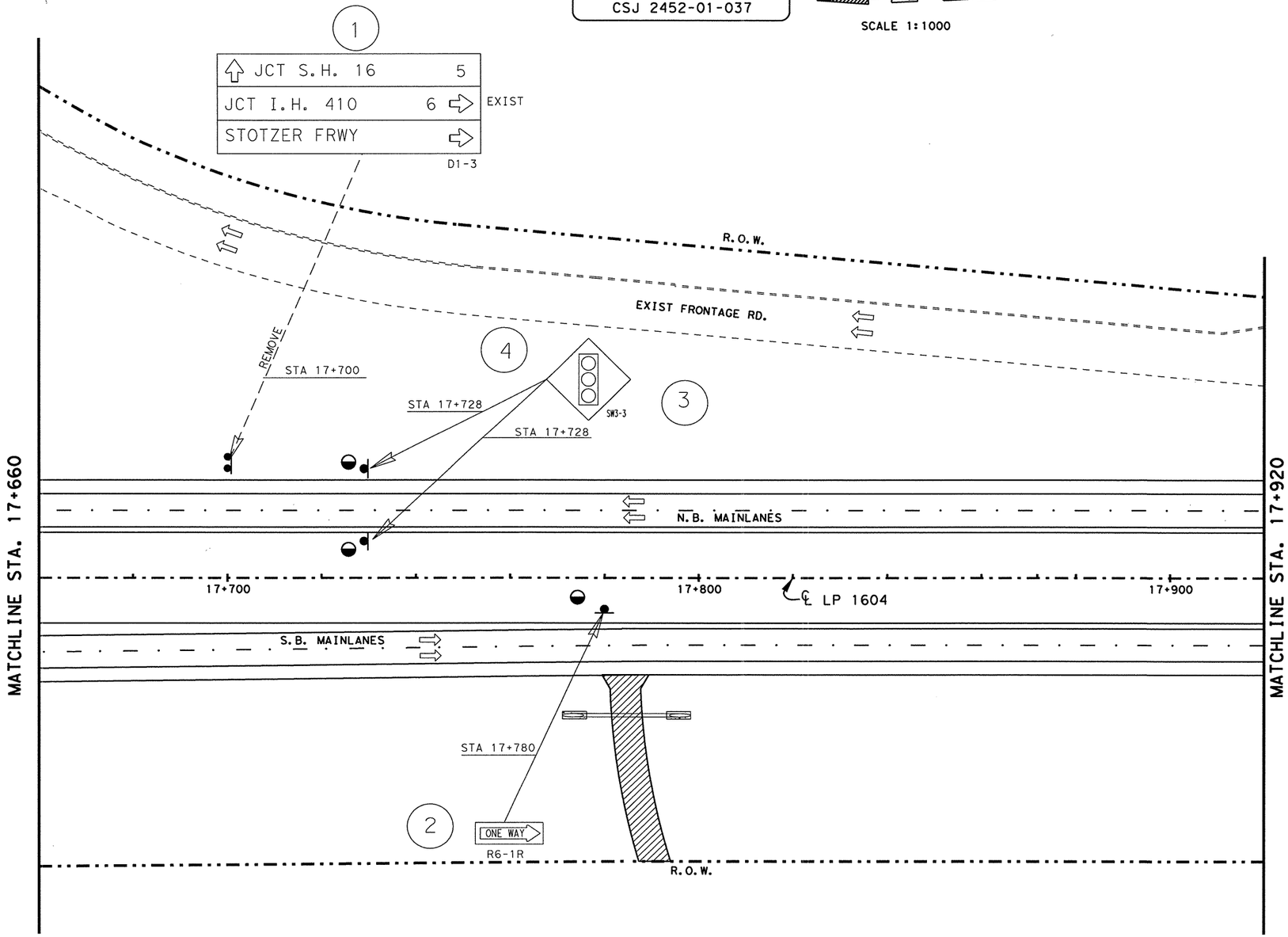


| RIPRAP APRONS QUANTITIES | | | |
|---|---|---|---|
| TYPE OF MOUNT | EA. | MULTIPLIED BY M3 | TOTAL M3 |
| SINGLE POST | 3 | 1.0 | 3.0 |
| MULTI - POST | | 1.5 | |
| OVHD. SIGN BRIDGE | | | |
| CLASS "B" CONC. GRAND TOTAL | | | 3.0 |

SEE SHEET NO. 753 FOR RIPRAP APRON DETAILS.
SEE SHEET NO. 58 FOR RIPRAP SUMMARIZATION.

NOTE(S):

PAVEMENT MARKINGS SHOWN FOR REFERENCE ONLY. SEE PAVEMENT MARKINGS/DELINEATION LAYOUTS FOR DETAILS AND QUANTITIES.

STATE OF TEXAS
JOEL K. DAVENPORT, JR.
79276
REGISTERED PROFESSIONAL ENGINEER

Joel K. Davenport Jr. 9/19/00
Joel K. Davenport, Jr. P.E. 79276 Date

LEVELS DISPLAYED
1 2 3 4 5 6 7 8 | 1 2 | 21 31 41 51 61
7 18 19 20 21 22 23 24 25 26 27 28 29 30 31 32
33 34 35 36 37 38 39 40 41 42 43 44 45 46 47 48
49 50 51 52 53 54 55 56 57 58 59 60 61 62 63

ACC: t:\oo\design\lp1604fm471-90\pave-sign\
FILE: pBUNRkplan16.dgn

©2000
Texas Department of Transportation

# SIGNING LAYOUT

SHEET 16 OF 57

| FED.RD. DIV.NO. | FEDERAL AID PROJECT NO. | | SHEET NO. |
|---|---|---|---|
| 6 | NH 2000(704), etc. | | 656 |
| STATE | DIST. | COUNTY | |
| TEXAS | SAT | BEXAR | |
| CONT. | SECT. | JOB | HIGHWAY NO. |
| 2452 | 01 | 036, etc. | LP 1604 |

QUANTITIES THIS SHEET
CSJ 2452-01-037

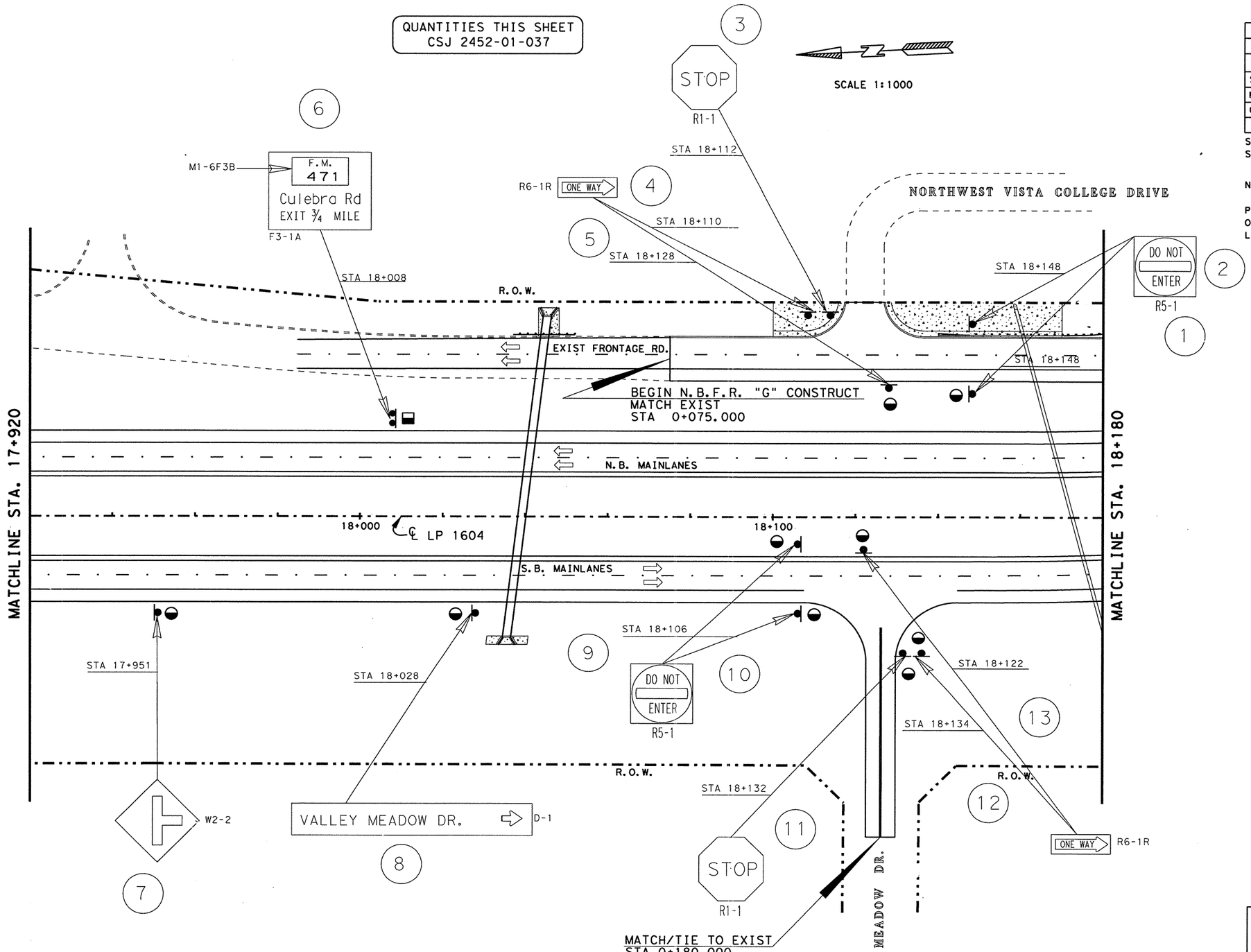


| RIPRAP APRONS QUANTITIES | | | |
|---|---|---|---|
| TYPE OF MOUNT | EA. | MULTIPLIED BY M3 | TOTAL M3 |
| SINGLE POST | 9 | 1.0 | 9.0 |
| MULTI - POST | 1 | 1.5 | 1.5 |
| OVHD. SIGN BRIDGE | | | |
| CLASS "B" CONC. GRAND TOTAL | | | 10.5 |

SEE SHEET NO. 753 FOR RIPRAP APRON DETAILS.
SEE SHEET NO. 58 FOR RIPRAP SUMMARIZATION.

NOTE(S):

PAVEMENT MARKINGS SHOWN FOR REFERENCE ONLY. SEE PAVEMENT MARKINGS/DELINEATION LAYOUTS FOR DETAILS AND QUANTITIES.

LEVELS DISPLAYED
1 2 3 4 5 6 7 8
17 18 19 20 21 22 23 24 25 26 27 28 29 30 31 32
33 34 35 36 37 38 39 40 41 42 43 44 45 46 47 48
49 50 51 52 53 54 55 66 57 58 59 60 61 62 63

ACC: *:\ao\design\
lp1604fm471-90\pave-sign\
FILE: pavmrkplan17.dgn

STATE OF TEXAS
JOEL K. DAVENPORT, JR.
79276
REGISTERED
PROFESSIONAL ENGINEER

Joel K. Davenport, Jr. 9/19/00
Joel K. Davenport, Jr. P.E. 79276 Date

©2000

Texas Department of Transportation

# SIGNING LAYOUT

SHEET 17 OF 57

| FED. RD. DIV. NO. | FEDERAL AID PROJECT NO. | | SHEET NO. |
|---|---|---|---|
| 6 | NH 2000(704), etc. | | 657 |
| STATE | DIST. | COUNT. | |
| TEXAS | SAT | BEXAR | |
| CONT. | SECT. | JOB | HIGHWAY NO. |
| 2452 | 01 | 036, etc. | LP 1604 |

QUANTITIES THIS SHEET
CSJ 2452-01-037

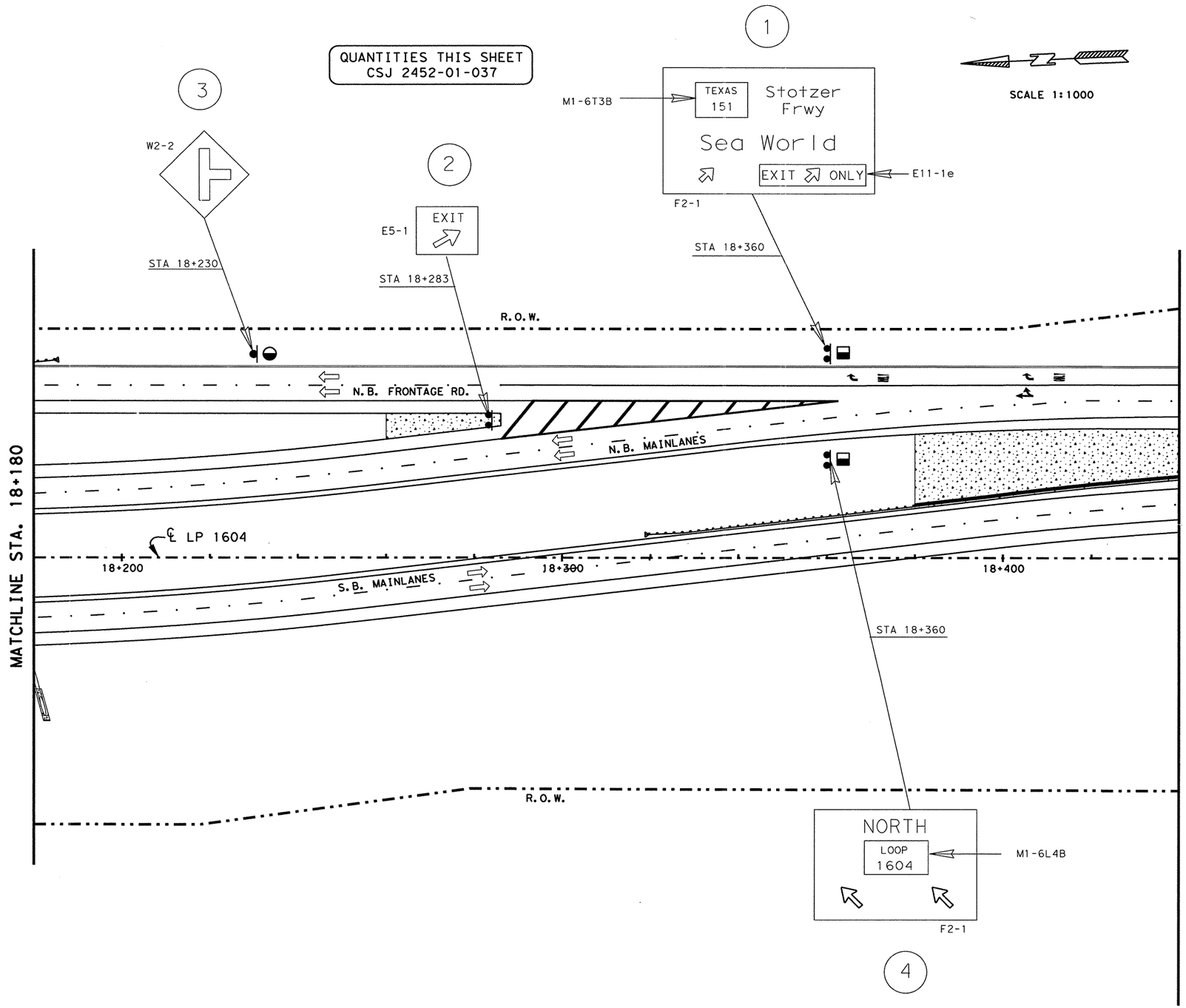


SCALE 1:1000

| RIPRAP APRONS QUANTITIES | | | |
|---|---|---|---|
| TYPE OF MOUNT | EA. | MULTIPLIED BY M3 | TOTAL M3 |
| SINGLE POST | 1 | 1.0 | 1.0 |
| MULTI - POST | 2 | 1.5 | 3.0 |
| OVHD. SIGN BRIDGE | | | |
| CLASS "B" CONC. GRAND TOTAL | | | 4.0 |

SEE SHEET NO. 753 FOR RIPRAP APRON DETAILS.
SEE SHEET NO. 58 FOR RIPRAP SUMMARIZATION.

NOTE(S):

PAVEMENT MARKINGS SHOWN FOR REFERENCE ONLY. SEE PAVEMENT MARKINGS/DELINEATION LAYOUTS FOR DETAILS AND QUANTITIES.

LEVELS DISPLAYED
1 2 3 4 5 6 7 8 9 10 11 12 13 14 15 16 17 18 19 20 21 22 23 24 25 26 27 28 29 30 31 32 33 34 35 36 37 38 39 40 41 42 43 44 45 46 47 48 49 50 51 52 53 54 55 56 57 58 59 60 61 62 63

ACC: t:\ao\design\lp1604fm471-90\pave-sign\
FILE: pavmrkplan18.dgn

JOEL K. DAVENPORT, JR. 79276 REGISTERED PROFESSIONAL ENGINEER

Joel K Davenport Jr 9/19/00
Joel K. Davenport, Jr. P.E. 79276 Date

©2000
Texas Department of Transportation

# SIGNING LAYOUT

**SHEET 18 OF 57**

| FED. RD. DIV. NO. | FEDERAL AID PROJECT NO. | | SHEET NO. |
|---|---|---|---|
| 6 | NH 2000(704), etc. | | 658 |
| STATE | DIST. | COUNTY | |
| TEXAS | SAT | BEXAR | |
| CONT. | SECT. | JOB | HIGHWAY NO. |
| 2452 | 01 | 036, etc. | LP 1604 |

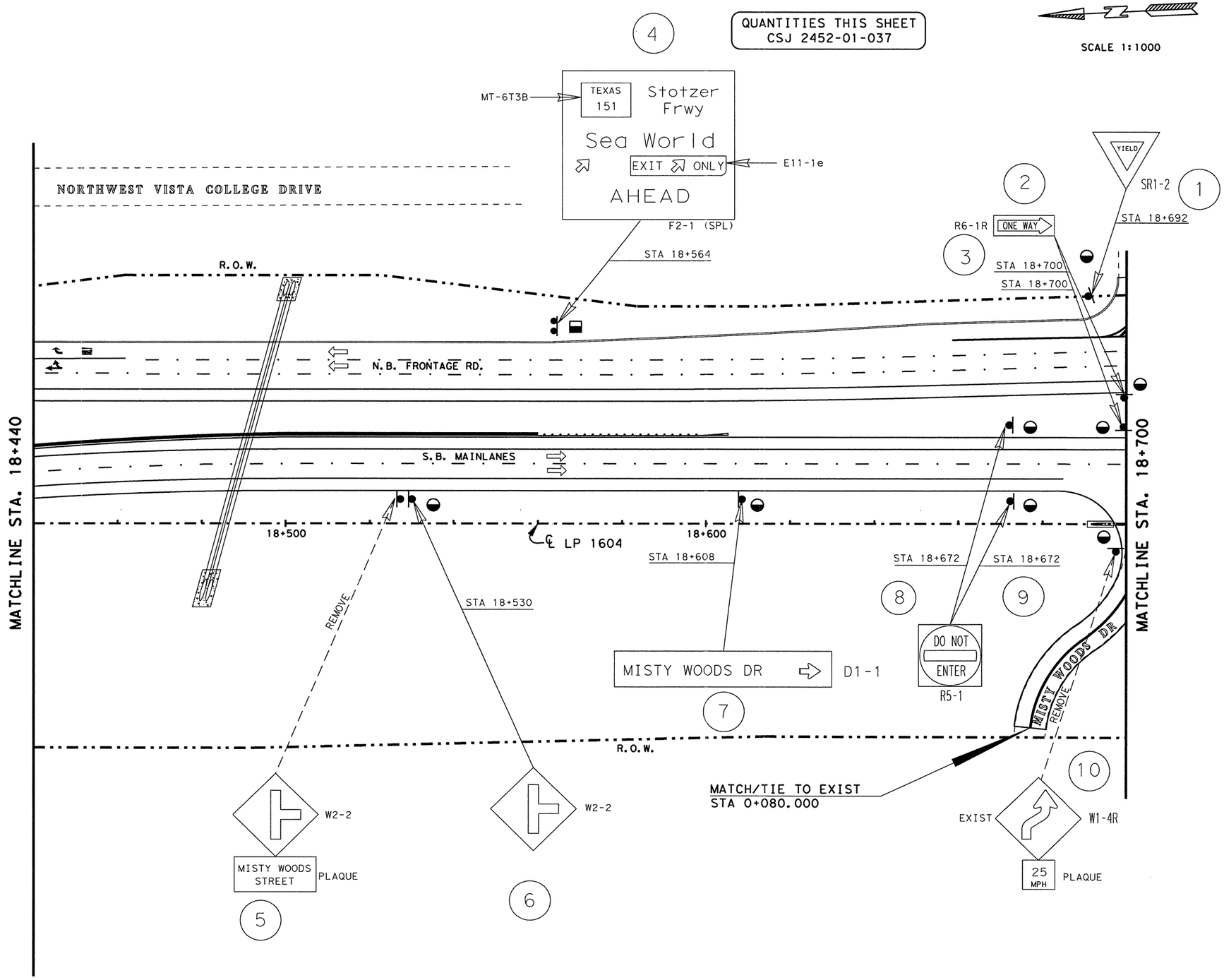


| RIPRAP APRONS QUANTITIES | | | |
|---|---|---|---|
| TYPE OF MOUNT | EA. | MULTIPLIED BY M3 | TOTAL M3 |
| SINGLE POST | 8 | 1.0 | 8.0 |
| MULTI - POST | 1 | 1.5 | 1.5 |
| OVHD. SIGN BRIDGE | | | |
| CLASS "B" CONC. GRAND TOTAL | | | 9.5 |

SEE SHEET NO. 753 FOR RIPRAP APRON DETAILS.
SEE SHEET NO. 58 FOR RIPRAP SUMMARIZATION.

NOTE(S):

PAVEMENT MARKINGS SHOWN FOR REFERENCE ONLY. SEE PAVEMENT MARKINGS/DELINEATION LAYOUTS FOR DETAILS AND QUANTITIES.

LEVELS DISPLAYED
1 2 3 4 5 6 7 8 | 1 2 | 31 41 51 61
71 81 92 02 12 22 32 42 52 62 72 82 93 03 13 2
33 43 53 63 73 83 94 04 14 24 34 44 54 64 74 8
49 50 51 52 53 54 55 56 57 58 59 60 61 62 63

ACC: t:\ao\design\lp1604fm471-90\pave-sign\
FILE: pavmrkplan19.dgn

STATE OF TEXAS
JOEL K. DAVENPORT, JR.
79276
REGISTERED PROFESSIONAL ENGINEER

Joel K. Davenport Jr. 9/19/00
Joel K. Davenport, Jr. P.E. 79276 Date

Texas Department of Transportation

# SIGNING LAYOUT

**SHEET 19 OF 57**

| FED. RD. DIV. NO. | FEDERAL AID PROJECT NO. | | SHEET NO. |
|---|---|---|---|
| 6 | NH 2000(704), etc. | | 659 |
| STATE | DIST. | COUNTY | |
| TEXAS | SAT | BEXAR | |
| CONT. | SECT. | JOB | HIGHWAY NO. |
| 2452 | 01 | 036, etc. | LP 1604 |

QUANTITIES THIS SHEET
CSJ 2452-01-037

SCALE 1:1000

| RIPRAP APRONS QUANTITIES | | | |
|---|---|---|---|
| TYPE OF MOUNT | EA. | MULTIPLIED BY M3 | TOTAL M3 |
| SINGLE POST | 8 | 1.0 | 8.0 |
| MULTI - POST | 1 | 1.5 | 1.5 |
| OVHD. SIGN BRIDGE | | | |
| CLASS "B" CONC. GRAND TOTAL | | | 9.5 |

SEE SHEET NO. 753 FOR RIPRAP APRON DETAILS.
SEE SHEET NO. 58 FOR RIPRAP SUMMARIZATION.

NOTE(S):

PAVEMENT MARKINGS SHOWN FOR REFERENCE ONLY. SEE PAVEMENT MARKINGS/DELINEATION LAYOUTS FOR DETAILS AND QUANTITIES.

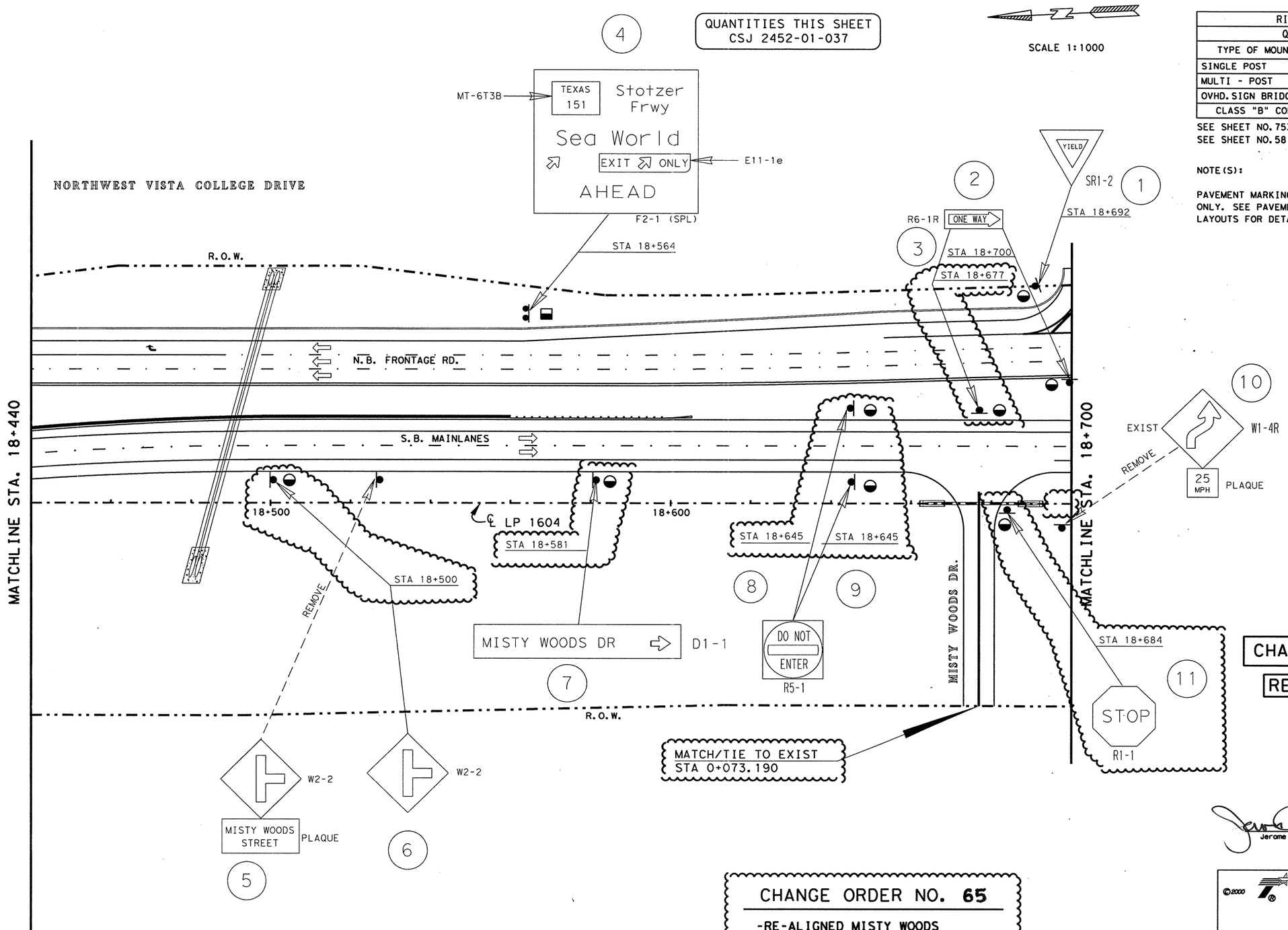


CHANGE ORDER NO. 65

-RE-ALIGNED MISTY WOODS
-RELOCATED SIGNS
-ADDED STOP SIGN W/RIPRAP APRON

CHANGE ORDER 65

REVISED SHEET

STATE OF TEXAS
JEROME D. PAVLISKA
76075
REGISTERED PROFESSIONAL ENGINEER

Jerome D. Pavliska P.E. 2/06/04
Jerome D. Pavliska, P.E. Date

©2000
Texas Department of Transportation

SIGNING LAYOUT

SHEET 19 OF 57

| FED.RD. DIV.NO. | FEDERAL AID PROJECT NO. | | SHEET NO. |
|---|---|---|---|
| 6 | NH 2000(704), etc. | | 659A |
| STATE | DIST. | COUNTY | |
| TEXAS | SAT | BEXAR | |
| CONT. | SECT. | JOB | HIGHWAY NO. |
| 2452 | 01 | 036, etc. | LP 1604 |

LEVELS DISPLAYED
1 2 3 4 5 6 7 8 | 20 31 41 51 6
11 18 19 20 21 22 23 24 25 26 27 28 29 30 31 32
33 34 35 45 56 57 58 59 64 01 42 43 44 45 46 47 48
49 50 51 52 53 54 55 56 57 58 59 60 61 62 63

ACC: f:\ao\design\
lp1604fm471-90\signing\
FILE: signing19*CO.dgn

02-05-04

QUANTITIES THIS SHEET
CSJ 2452-01-037

SCALE 1:1000

| RIPRAP APRONS QUANTITIES | | | |
|---|---|---|---|
| TYPE OF MOUNT | EA. | MULTIPLIED BY M3 | TOTAL M3 |
| SINGLE POST | 8 | 1.0 | 8.0 |
| MULTI - POST | | 1.5 | |
| OVHD. SIGN BRIDGE | | | |
| CLASS "B" CONC. GRAND TOTAL | | | 8.0 |

SEE SHEET NO. 753 FOR RIPRAP APRON DETAILS.
SEE SHEET NO. 58 FOR RIPRAP SUMMARIZATION.

NOTE(S):

PAVEMENT MARKINGS SHOWN FOR REFERENCE ONLY. SEE PAVEMENT MARKINGS/DELINEATION LAYOUTS FOR DETAILS AND QUANTITIES.

NORTHWEST VISTA COLLEGE DR.
NORTH ELLISON DR.
MATCH/TIE TO EXIST
STA 0+155.000
NORTH LOOP 1604 M3-1 M1-6L M6-1L
SOUTH LOOP 1604 M3-3 M1-6L M6-1R EXIST
YIELD SR1-2
STA 18+853
RIGHT LANE MUST TURN RIGHT R3-7R
DO NOT ENTER R5-1
STA 18+880
STA 18+862
STA 18+898
NORTHWEST VISTA COLLEGE
SEA WORLD
CAMPING
D1-3
DRAINA EASEME
M4-6 R3-9B END CENTER LANE ONLY EXIST
STA 18+718
DO NOT ENTER R5-1
STA 18+730
W2-2
STA 18+810
W2-2 EXIST
MISTY WOODS STREET
STA 18+835
REMOVE
STA 18+862
REMOVE
STA 18+941
R.O.W.
N.B. FRONTAGE RD
S.B. MAINLANES
MATCHLINE STA. 18+700
MATCHLINE STA. 18+960
℄ LP 1604
18+800
18+900
REMOVE STA 18+714
REMOVE STA 18+18+744
STA 18+18+698
STOP EXIST FR1-1
W2-2 ELLISON DRIVE EXIST
NORTHWEST VISTA COLLEGE
CAMPING
EXIST D1-2
STA 18+862
ONE WAY R6-1R
STA 18+935
ONE WAY R6-1R
STA 18+941
STA 18+950
W2-2
M4-6 R3-9B BEGIN CENTER LANE ONLY EXIST
M4-6 R3-9B BEGIN CENTER LANE ONLY EXIST
R3-9B

1 2 3 4 5 6 7 8 | 9 10 11 12 13 14 15 16 | 17 18 19 20 21 22 23 24 | 25 26 27 28 29 30 31 32 | 33 34 35 36 37 38 39 40 | 41 42 43 44 45 46 47 48 | 49 50 51 52 53 54 55 56 | 57 58 59 60 61 62 63

ACC: t:\oo\design\
lp1604fm471-90\pave-sign\
FILE: pavmrkplan20.dgn

STATE OF TEXAS
JOEL K. DAVENPORT, JR.
79276
REGISTERED PROFESSIONAL ENGINEER

Joel K. Davenport, Jr. P.E. 79276 — 9/19/00
Date

©2000 Texas Department of Transportation

# SIGNING LAYOUT

SHEET 20 OF 57

| FED. RD. DIV. NO. | FEDERAL AID PROJECT NO. | SHEET NO. |
|---|---|---|
| 6 | NH 2000(704), etc. | 660 |
| STATE | DIST. | COUNTY |
| TEXAS | SAT | BEXAR |
| CONT. | SECT. | JOB / HIGHWAY NO. |
| 2452 | 01 | 036, etc. / LP 1604 |

QUANTITIES THIS SHEET
CSJ 2452-01-037

SCALE 1:1000

NORTHWEST VISTA COLLEGE DR.

NORTH ELLISON DR.

MATCH/TIE TO EXIST
STA 0+155.000

7
NORTH M3-1
LOOP 1604 M1-6L
M6-1L
SOUTH M3-3
LOOP 1604 M1-6L
M6-1R
EXIST

8
W2-2
EXIST
MISTY WOODS STREET

9
W2-2

10
DO NOT ENTER
R5-1

12
M4-6
R3-9B
END CENTER LANE ONLY
EXIST

11

6
YIELD
SR1-2
STA 18+853

DO NOT ENTER
R5-1
STA 18+880

5

4
STA 18+898

RIGHT LANE MUST TURN RIGHT
R3-7R
STA 18+862

3

2
NORTHWEST VISTA COLLEGE
SEA WORLD
CAMPING
D1-3

REMOVE
STA 18+941

1
END CENTER LANE ONLY
M4-6
R3-9B
EXIST

STA 18+718
STA 18+730
STA 18+810
STA 18+835
STA 18+862

R.O.W.

N.B. FRONTAGE RD

S.B. MAINLANES

MATCHLINE STA. 18+700

MATCHLINE STA. 18+960

℄ LP 1604

18+800

18+900

REMOVE
STA 18+714
STA 18+18+698
STA 18+18+744
STA 18+835
STA 18+862
STA 18+935
STA 18+941
STA 18+950

13
STOP
EXIST
FR1-1

15
W2-2
ELLISON DRIVE
EXIST

16
NORTHWEST VISTA COLLEGE
CAMPING
EXIST
D1-2

17
ONE WAY
R6-1R

18
ONE WAY
R6-1R

14
BEGIN CENTER LANE ONLY
EXIST
R3-9B

19
M4-6
R3-9B
BEGIN CENTER LANE ONLY
EXIST

20
W2-1

ORIGINAL SIGN NO. 20 WAS ELIMINATED AND REPLACED WITH THAT SHOWN.

CHANGE ORDER 139

REVISED SHEET

| RIPRAP APRONS QUANTITIES | | | |
|---|---|---|---|
| TYPE OF MOUNT | EA. | MULTIPLIED BY M3 | TOTAL M3 |
| SINGLE POST | 8 | 1.0 | 8.0 |
| MULTI - POST | | 1.5 | |
| OVHD. SIGN BRIDGE | | | |
| CLASS "B" CONC. GRAND TOTAL | | | 8.0 |

SEE SHEET NO. 753 FOR RIPRAP APRON DETAILS.
SEE SHEET NO. 58 FOR RIPRAP SUMMARIZATION.

NOTE(S):

PAVEMENT MARKINGS SHOWN FOR REFERENCE ONLY. SEE PAVEMENT MARKINGS/DELINEATION LAYOUTS FOR DETAILS AND QUANTITIES.

CHANGE ORDER NO. 139

-ALLOWED FOR WISEMAN BLVD. EXTENSION BY OTHERS.

-REVISED SIGN

STATE OF TEXAS
FITZGERALDO G. SANCHEZ
76084
LICENCED PROFESSIONAL ENGINEER

CO #139

Fitzgeraldo G. Sanchez 08-16-06
Fitzgeraldo G. Sanchez, P.E. Date

©2000
Texas Department of Transportation

SIGNING LAYOUT

SHEET 20 OF 57

| FED. RD. DIV. NO. | FEDERAL AID PROJECT NO. | | SHEET NO. |
|---|---|---|---|
| 6 | NH 2000(704), etc. | | 660A |
| STATE | DIST. | COUNTY | |
| TEXAS | SAT | BEXAR | |
| CONT. | SECT. | JOB | HIGHWAY NO. |
| 2452 | 01 | 036, etc. | LP 1604 |

7-31-06

LEVELS DISPLAYED
1 2 3 4 5 6 7 8 9 10 11 12 13 14 15 16 17 18 19 20 21 22 23 24 25 26 27 28 29 30 31 32 33 34 35 36 37 38 39 40 41 42 43 44 45 46 47 48 49 50 51 52 53 54 55 56 57 58 59 60 61 62 63

ACC: t:\ao\design\lp1604fm471-90\pave-sign\
FILE: signing20*CO*.dgn

QUANTITIES THIS SHEET
CSJ 2452-01-037

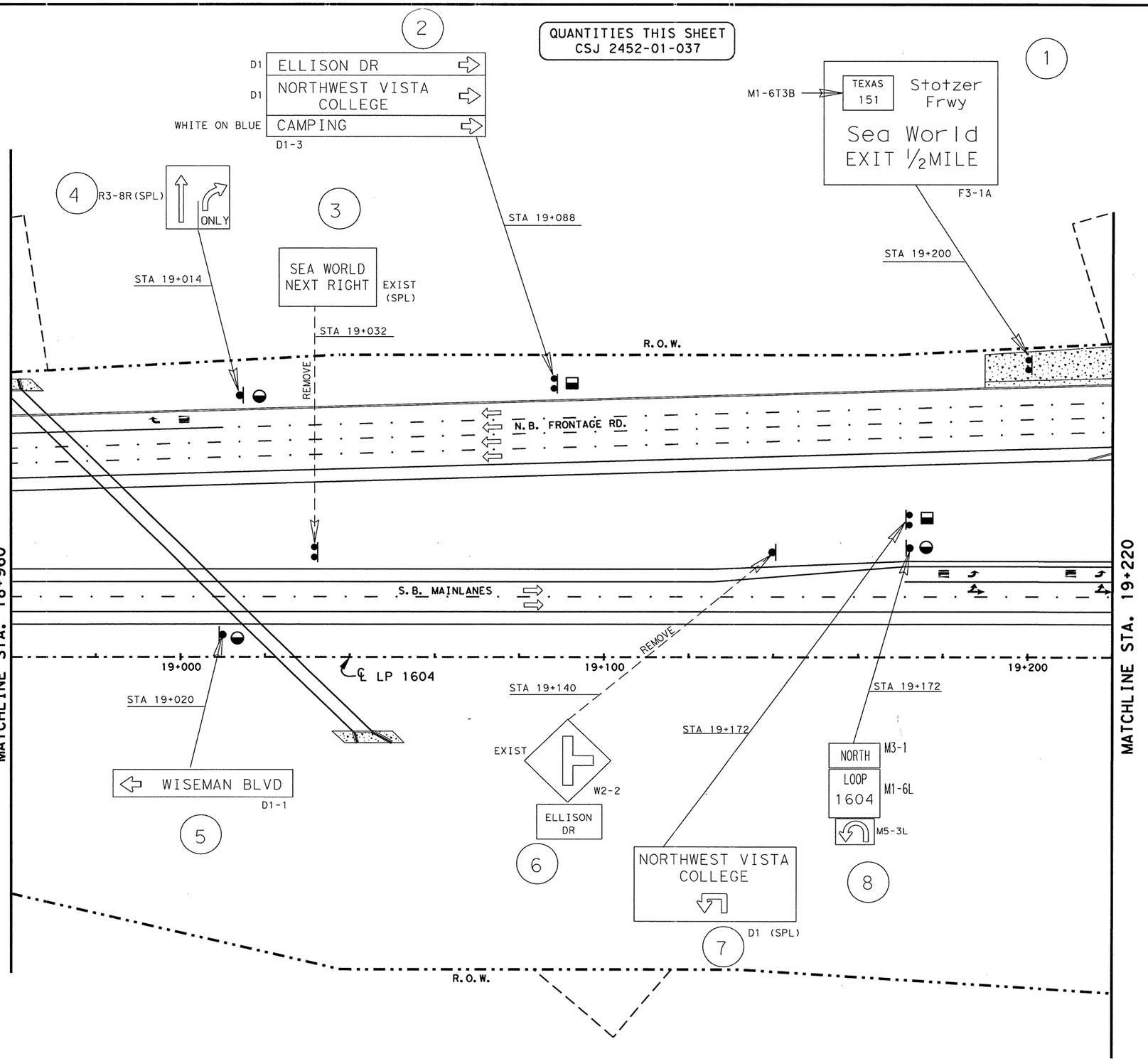


| RIPRAP APRONS QUANTITIES | | | |
|---|---|---|---|
| TYPE OF MOUNT | EA. | MULTIPLIED BY M3 | TOTAL M3 |
| SINGLE POST | 3 | 1.0 | 3.0 |
| MULTI - POST | 2 | 1.5 | 3.0 |
| OVHD. SIGN BRIDGE | | | |
| CLASS "B" CONC. GRAND TOTAL | | | 6.0 |

SEE SHEET NO. 753 FOR RIPRAP APRON DETAILS.
SEE SHEET NO. 58 FOR RIPRAP SUMMARIZATION.

NOTE(S):

PAVEMENT MARKINGS SHOWN FOR REFERENCE ONLY. SEE PAVEMENT MARKINGS/DELINEATION LAYOUTS FOR DETAILS AND QUANTITIES.

SCALE 1:1000

STATE OF TEXAS
JOEL K. DAVENPORT, JR.
79276
REGISTERED
PROFESSIONAL ENGINEER

Joel K. Davenport, Jr. 9/19/00
Joel K. Davenport, Jr. P.E. 79276 Date

©2000
Texas Department of Transportation

# SIGNING LAYOUT

**SHEET 21 OF 57**

| FED. RD. DIV. NO. | FEDERAL AID PROJECT NO. | | SHEET NO. |
|---|---|---|---|
| 6 | NH 2000(704), etc. | | 661 |
| STATE | DIST. | COUNTY | |
| TEXAS | SAT | BEXAR | |
| CONT. | SECT. | JOB | HIGHWAY NO. |
| 2452 | 01 | 036, etc. | LP 1604 |

LEVELS DISPLAYED
1 2 3 4 5 6 7 8 | | 12 13 14 15 16
17 18 19 20 21 22 23 24 25 26 27 28 29 30 31 32
33 34 35 36 37 38 39 40 41 42 43 44 45 46 47 48
49 50 51 52 53 54 55 56 57 58 59 60 61 62 63

ACC: t:\oo\design\
lp1604fm471-90\pave-sign\
FILE: pavmrkplan21.dgn

QUANTITIES THIS SHEET
CSJ 2452-01-037

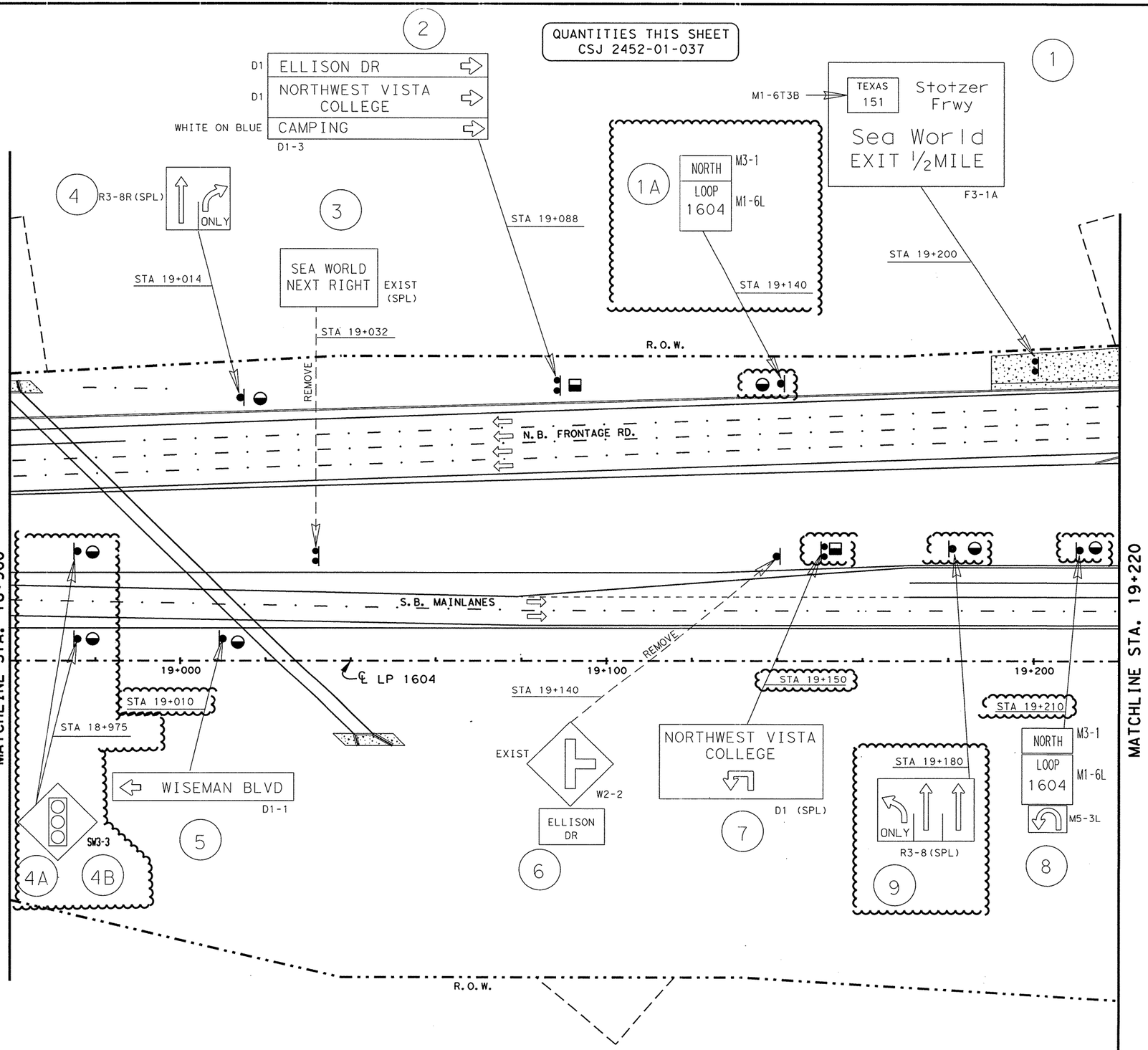


| RIPRAP APRONS QUANTITIES | | | |
|---|---|---|---|
| TYPE OF MOUNT | EA. | MULTIPLIED BY M3 | TOTAL M3 |
| SINGLE POST ◒ | 7 | 1.0 | 7.0 |
| MULTI - POST ⬓ | 2 | 1.5 | 3.0 |
| OVHD. SIGN BRIDGE ◆ | | | |
| CLASS "B" CONC. GRAND TOTAL | | | 10.0 |

SEE SHEET NO. 753 FOR RIPRAP APRON DETAILS.
SEE SHEET NO. 58 FOR RIPRAP SUMMARIZATION.

NOTE(S):

PAVEMENT MARKINGS SHOWN FOR REFERENCE ONLY. SEE PAVEMENT MARKINGS/DELINEATION LAYOUTS FOR DETAILS AND QUANTITIES.

**CHANGE ORDER 65**

**REVISED SHEET**

SCALE 1:1000

**CHANGE ORDER NO. 65**

-REVISED SIGNS AND SIGN LOCATIONS
-REVISED RIPRAP APRON QUANTITIES

STATE OF TEXAS
JEROME D. PAVLISKA
76075
REGISTERED PROFESSIONAL ENGINEER

Jerome D. Pavliska, P.E. 2/12/04
Jerome D. Pavliska, P.E. Date

©2000
Texas Department of Transportation

# SIGNING LAYOUT

SHEET 21 OF 57

| FED. RD. DIV. NO. | FEDERAL AID PROJECT NO. | | SHEET NO. |
|---|---|---|---|
| 6 | NH 2000(704), etc. | | 661A |
| STATE | DIST. | COUNTY | |
| TEXAS | SAT | BEXAR | |
| CONT. | SECT. | JOB | HIGHWAY NO. |
| 2452 | 01 | 036, etc. | LP 1604 |

02-11-04

LEVELS DISPLAYED
1 2 3 4 5 6 7 8 | 1 2 3 | 1 2 3 4 5 6
1 7 8 9 20 21 22 23 24 25 26 27 28 29 30 31 32 | 1 2 3 | 1 2 3 4 5 6 7 8
33 34 35 45 63 75 83 94 0 41 42 43 44 45 46 47 48 | 1 2 3 | 1 2 3 4 5 6 7 8
49 50 51 52 53 54 55 56 57 58 59 60 61 62 63

ACC: t:\oo\design\
lp1604fm471-90\pave-sign\
FILE: pavmrkplan21-C064.dgn

QUANTITIES THIS SHEET
CSJ 2452-01-037

| RIPRAP APRONS QUANTITIES | | | | |
|---|---|---|---|---|
| TYPE OF MOUNT | | EA. | MULTIPLIED BY M3 | TOTAL M3 |
| SINGLE POST | ◒ | 8 | 1.0 | 8.0 |
| MULTI - POST | ⬓ | 2 | 1.5 | 3.0 |
| OVHD. SIGN BRIDGE | ◆ | | | |
| CLASS "B" CONC. GRAND TOTAL | | | | 11.0 |

SEE SHEET NO. 753 FOR RIPRAP APRON DETAILS.
SEE SHEET NO. 58 FOR RIPRAP SUMMARIZATION.

NOTE(S):

PAVEMENT MARKINGS SHOWN FOR REFERENCE ONLY. SEE PAVEMENT MARKINGS/DELINEATION LAYOUTS FOR DETAILS AND QUANTITIES.

CHANGE ORDER 13.9

REVISED SHEET

SCALE 1:1000

CHANGE ORDER NO. 139

-ALLOWED FOR WISEMAN BLVD. EXTENSION BY OTHERS.
-ADDED SIGN
-REVISED QUANTITIES

CO # 139

STATE OF TEXAS
FITZGERALDO G. SANCHEZ
76084
LICENCED PROFESSIONAL ENGINEER

Fitzgeraldo G. Sanchez 08-16-06
Fitzgeraldo G. Sanchez, P.E. Date

©2000

Texas Department of Transportation

SIGNING LAYOUT

SHEET 21 OF 57

| FED. RD. DIV. NO. | FEDERAL AID PROJECT NO. | SHEET NO. |
|---|---|---|
| 6 | NH 2000(704), etc. | 661AA |
| STATE | DIST. COUNTY | |
| TEXAS | SAT BEXAR | |
| CONT. | SECT. JOB | HIGHWAY NO. |
| 2452 | 01 036, etc. | LP 1604 |

7-31-06

#REFERS TO CHANGE'S MADE AS PART OF CHANGE ORDER.

LEVELS DISPLAYED
1 2 3 4 5 6 7 8 9 10 11 12 13 14 15 16 17 18 19 20 21 22 23 24 25 26 27 28 29 30 31 32 33 34 35 36 37 38 39 40 41 42 43 44 45 46 47 48 49 50 51 52 53 55 56 57 58 59 60 61 62 63

t:\ao\design\lp1604fm471-90\file#request*vickrey\2004*03*23\signing21*co64.dgn

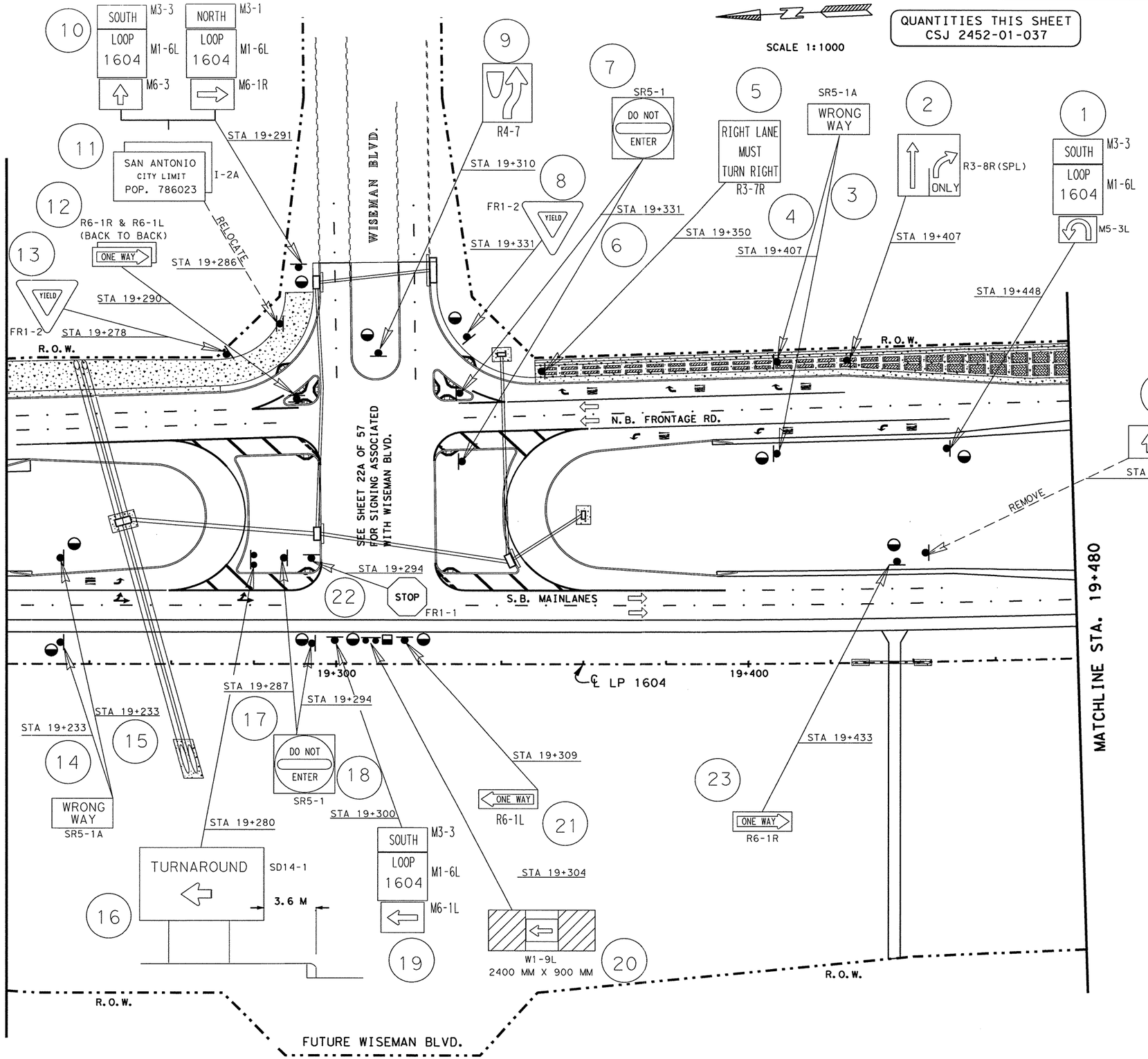


| RIPRAP APRONS QUANTITIES | | | |
|---|---|---|---|
| TYPE OF MOUNT | EA. | MULTIPLIED BY M3 | TOTAL M3 |
| SINGLE POST | 12 | 1.0 | 12.0 |
| MULTI - POST | 1 | 1.5 | 1.5 |
| OVHD. SIGN BRIDGE | | | |
| CLASS "B" CONC. GRAND TOTAL | | | 13.5 |

SEE SHEET NO. 753 FOR RIPRAP APRON DETAILS.
SEE SHEET NO. 58 FOR RIPRAP SUMMARIZATION.

NOTE(S):

PAVEMENT MARKINGS SHOWN FOR REFERENCE ONLY. SEE PAVEMENT MARKINGS/DELINEATION LAYOUTS FOR DETAILS AND QUANTITIES.

LEVELS DISPLAYED
1 2 3 4 5 6 7 8 | 11 12 13 14 15 16
17 18 19 20 21 22 23 24 25 26 27 28 29 30 31 32
33 34 35 36 37 38 39 40 41 42 43 44 45 46 47 48
49 50 51 52 53 54 55 56 57 58 59 60 61 62 63

ACC: t:\oo\design\
lp1604fm471-90\pave-sign\
FILE: pavmrkplan22.dgn

STATE OF TEXAS
JOEL K. DAVENPORT, JR.
79276
REGISTERED PROFESSIONAL ENGINEER

Joel K. Davenport, Jr. P.E. 79276 — Date 9/19/00

Texas Department of Transportation

# SIGNING LAYOUT

**SHEET 22 OF 57**

| FED. RD. DIV. NO. | FEDERAL AID PROJECT NO. | | SHEET NO. |
|---|---|---|---|
| 6 | NH 2000(704), etc. | | 662 |
| STATE | DIST. | COUNTY | |
| TEXAS | SAT | BEXAR | |
| CONT. | SECT. | JOB | HIGHWAY NO. |
| 2452 | 01 | 036, etc. | LP 1604 |

Plotted on: 01/26/2004

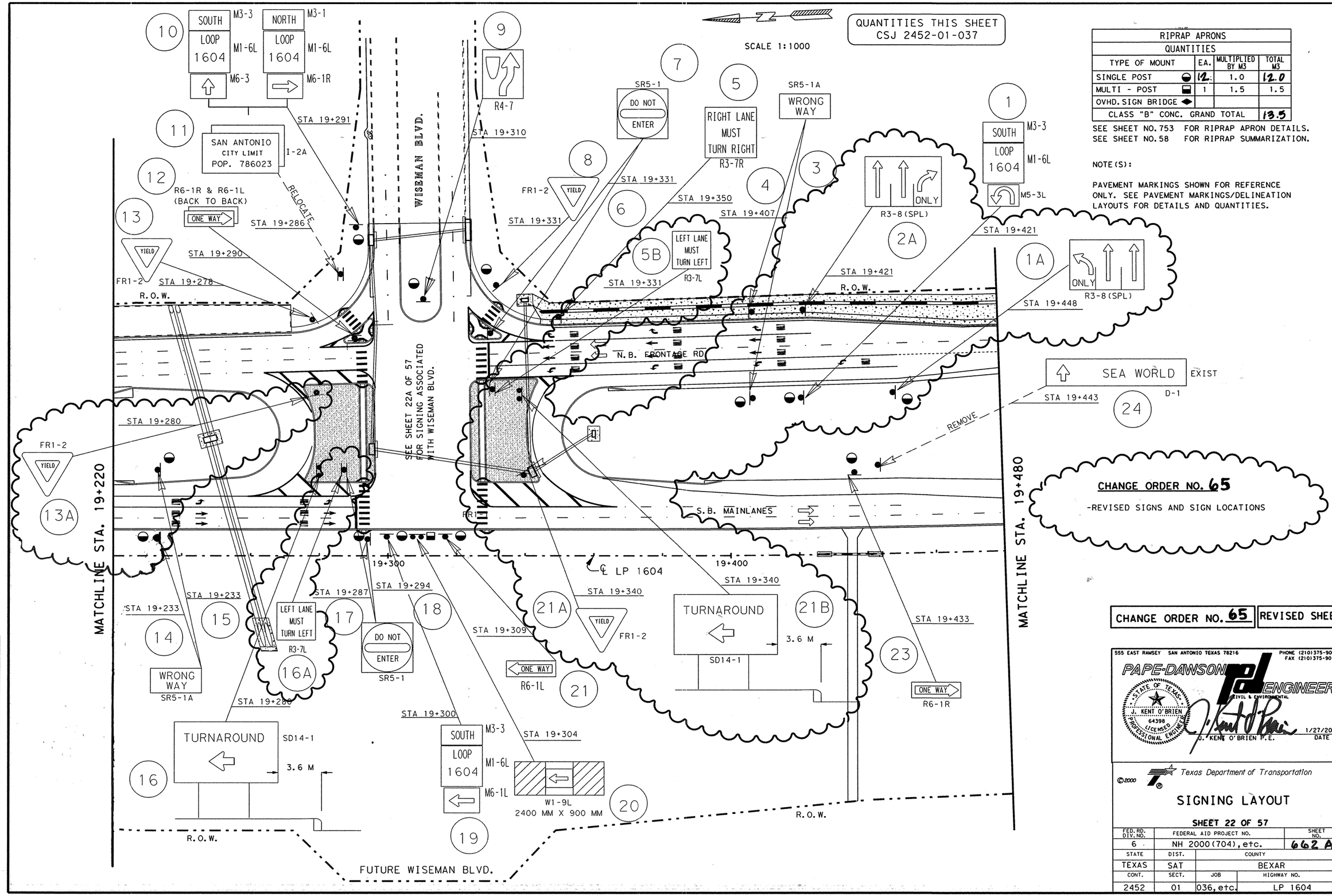


| RIPRAP APRONS QUANTITIES | | | |
|---|---|---|---|
| TYPE OF MOUNT | EA. | MULTIPLIED BY M3 | TOTAL M3 |
| SINGLE POST | 12 | 1.0 | 12.0 |
| MULTI - POST | 1 | 1.5 | 1.5 |
| OVHD. SIGN BRIDGE | | | |
| CLASS "B" CONC. GRAND TOTAL | | | 13.5 |

SEE SHEET NO. 753 FOR RIPRAP APRON DETAILS.
SEE SHEET NO. 58 FOR RIPRAP SUMMARIZATION.

NOTE(S):

PAVEMENT MARKINGS SHOWN FOR REFERENCE ONLY. SEE PAVEMENT MARKINGS/DELINEATION LAYOUTS FOR DETAILS AND QUANTITIES.

CHANGE ORDER NO. 65

-REVISED SIGNS AND SIGN LOCATIONS

CHANGE ORDER NO. 65 | REVISED SHEET

555 EAST RAMSEY SAN ANTONIO TEXAS 78216
PHONE (210)375-9000
FAX (210)375-9010
PAPE-DAWSON ENGINEERS
CIVIL & ENVIRONMENTAL
STATE OF TEXAS J. KENT O'BRIEN 64398 LICENSED PROFESSIONAL ENGINEER
J. KENT O'BRIEN P.E. 1/27/2004 DATE

©2000

Texas Department of Transportation

# SIGNING LAYOUT

SHEET 22 OF 57

| FED.RD. DIV.NO. | FEDERAL AID PROJECT NO. | | SHEET NO. |
|---|---|---|---|
| 6 | NH 2000(704), etc. | | 662A |
| STATE | DIST. | COUNTY | |
| TEXAS | SAT | BEXAR | |
| CONT. | SECT. | JOB | HIGHWAY NO. |
| 2452 | 01 | 036, etc. | LP 1604 |

Design Filename: p:\52\2011\design\civil\plansheets\traffic\signing\signing22.dgn
ACC: t:\go\design\lp1604fm471-90\pave-sign\
FILE: pavmrkplan22.dgn
LEVELS DISPLAYED
1 2 3 4 5 6 7 8 9 10 11 12 13 14 15 16 17 18 19 20 21 22 23 24 25 26 27 28 29 30 31 32 33 34 35 36 37 38 39 40 41 42 43 44 45 46 47 48 49 50 51 52 53 54 55 56 57 58 59 60 61 62 63

Plotted on: 8/4/2006

Design Filename: t:\ao\design\lp1604fm471-90\file*request*vickrey\2004*03*23\signing22.dgn

LEVELS DISPLAYED
1 2 3 4 5 6 7 8 9 10 11 12 13 14 15 16 17 18 19 20 21 22 23 24 25 26 27 28 29 30 31 32 33 34 35 36 37 38 39 40 41 42 43 44 45 46 47 48 49 50 51 52 53 54 55 56 57 58 59 60 61 62 63 64 65 66 67 68 69

ACC: $FILE$

FILE: pavmrkplan22.dgn

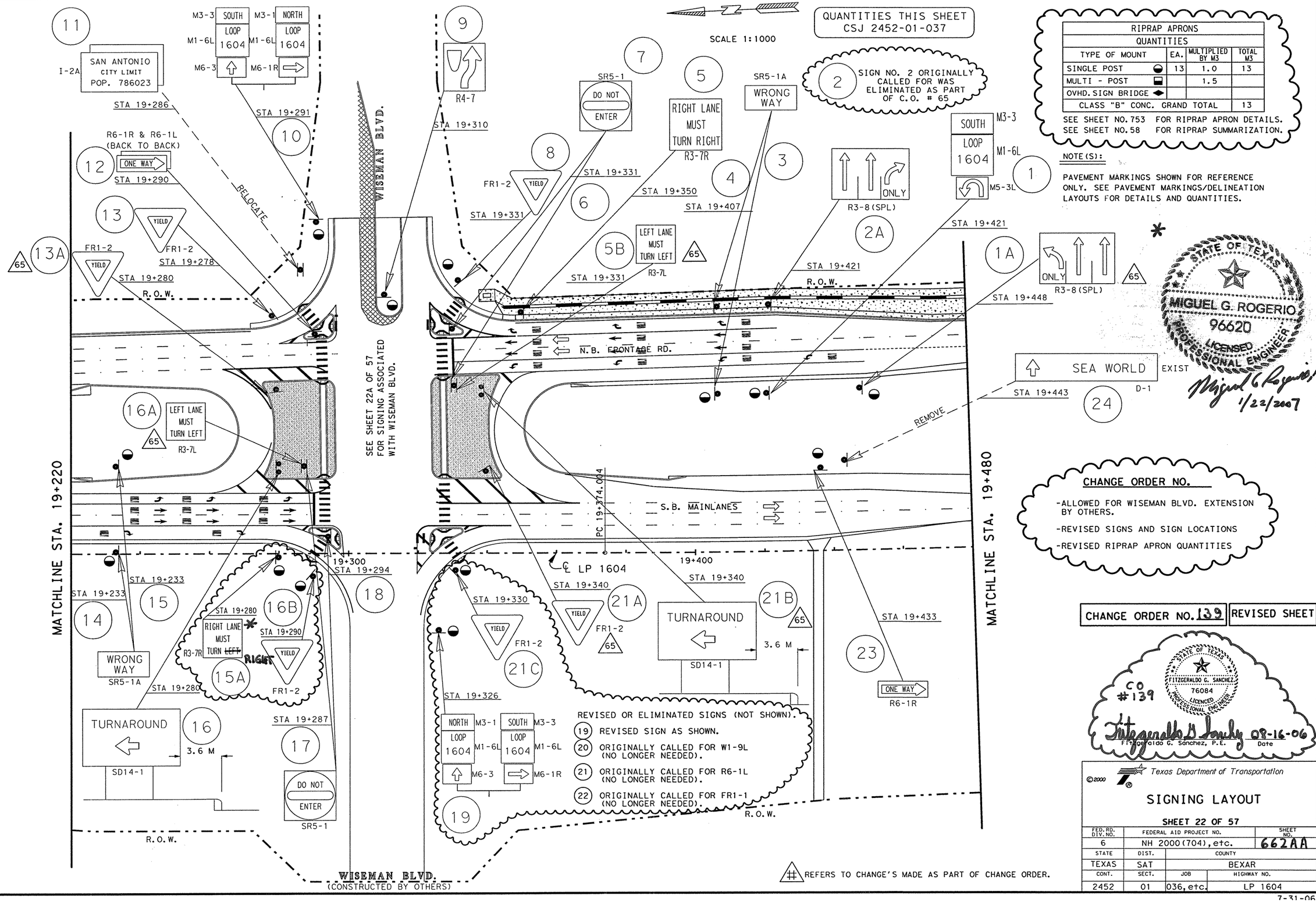


QUANTITIES THIS SHEET
CSJ 2452-01-037

SIGN NO. 2 ORIGINALLY CALLED FOR WAS ELIMINATED AS PART OF C.O. # 65

| RIPRAP APRONS QUANTITIES | | | |
|---|---|---|---|
| TYPE OF MOUNT | EA. | MULTIPLIED BY M3 | TOTAL M3 |
| SINGLE POST | 13 | 1.0 | 13 |
| MULTI - POST | | 1.5 | |
| OVHD. SIGN BRIDGE | | | |
| CLASS "B" CONC. GRAND TOTAL | | | 13 |

SEE SHEET NO. 753 FOR RIPRAP APRON DETAILS.
SEE SHEET NO. 58 FOR RIPRAP SUMMARIZATION.

NOTE(S):

PAVEMENT MARKINGS SHOWN FOR REFERENCE ONLY. SEE PAVEMENT MARKINGS/DELINEATION LAYOUTS FOR DETAILS AND QUANTITIES.

REVISED OR ELIMINATED SIGNS (NOT SHOWN).

19 REVISED SIGN AS SHOWN.

20 ORIGINALLY CALLED FOR W1-9L (NO LONGER NEEDED).

21 ORIGINALLY CALLED FOR R6-1L (NO LONGER NEEDED).

22 ORIGINALLY CALLED FOR FR1-1 (NO LONGER NEEDED).

CHANGE ORDER NO.

-ALLOWED FOR WISEMAN BLVD. EXTENSION BY OTHERS.

-REVISED SIGNS AND SIGN LOCATIONS

-REVISED RIPRAP APRON QUANTITIES

CHANGE ORDER NO. 139 | REVISED SHEET

STATE OF TEXAS
MIGUEL G. ROGERIO
96620
LICENSED
PROFESSIONAL ENGINEER
Miguel G Rogerio, P.E.
1/22/2007

CO #139
STATE OF TEXAS
FITZGERALDO G. SANCHEZ
76084
LICENCED
PROFESSIONAL ENGINEER
Fitzgeraldo G. Sanchez, P.E. 08-16-06 Date

# REFERS TO CHANGE'S MADE AS PART OF CHANGE ORDER.

©2000

Texas Department of Transportation

## SIGNING LAYOUT

SHEET 22 OF 57

| FED. RD. DIV. NO. | FEDERAL AID PROJECT NO. | | SHEET NO. |
|---|---|---|---|
| 6 | NH 2000(704), etc. | | 662AA |
| STATE | DIST. | COUNTY | |
| TEXAS | SAT | BEXAR | |
| CONT. | SECT. | JOB | HIGHWAY NO. |
| 2452 | 01 | 036, etc. | LP 1604 |

7-31-06

QUANTITIES THIS SHEET
CSJ 2452-01-037

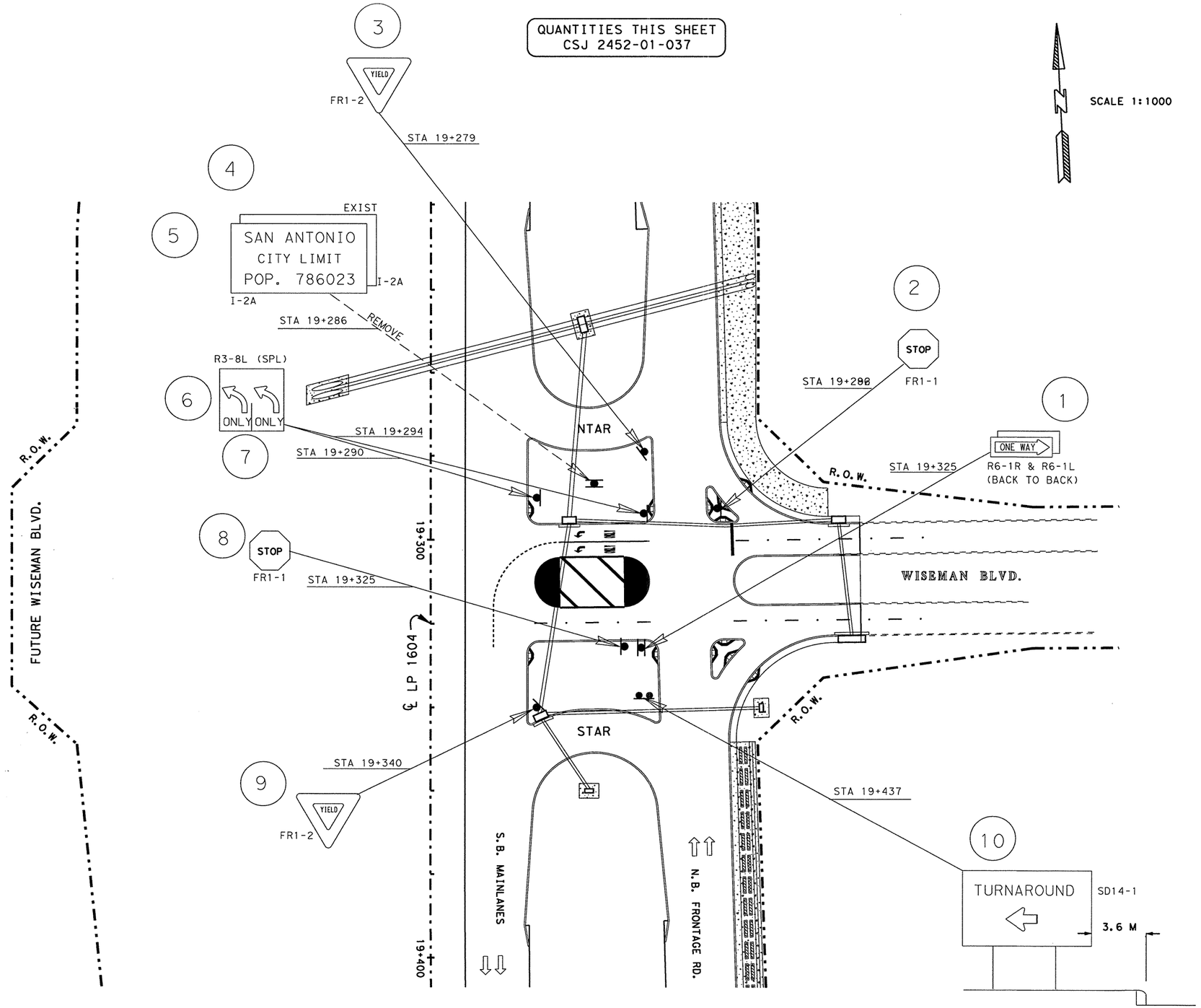


SCALE 1:1000

| RIPRAP APRONS QUANTITIES | | | |
|---|---|---|---|
| TYPE OF MOUNT | EA. | MULTIPLIED BY M3 | TOTAL M3 |
| SINGLE POST | | 1.0 | |
| MULTI - POST | | 1.5 | |
| OVHD. SIGN BRIDGE | | | |
| CLASS "B" CONC. GRAND TOTAL | | | |

SEE SHEET NO. 753 FOR RIPRAP APRON DETAILS.
SEE SHEET NO. 58 FOR RIPRAP SUMMARIZATION.

NOTE(S):

PAVEMENT MARKINGS SHOWN FOR REFERENCE ONLY. SEE PAVEMENT MARKINGS/DELINEATION LAYOUTS FOR DETAILS AND QUANTITIES.

LEVELS DISPLAYED
1 2 3 4 5 6 7 8 | 1 2 3 11 41 51 61
17 18 19 20 21 22 23 24 25 26 27 28 29 30 31 32 | 1 3 2
33 34 35 36 37 38 39 40 41 42 43 44 45 46 47 48 | 1 4 8
49 50 51 52 53 54 55 56 57 58 59 60 61 62 63 | 2 6 3

ACC: t:/ao/design/
lp1604fm471-90/pave-sign/
FILE: pavmrkplan22a.dgn

STATE OF TEXAS
JOEL K. DAVENPORT, JR.
79276
REGISTERED PROFESSIONAL ENGINEER

Joel K. Davenport, Jr. 9/19/00
Joel K. Davenport, Jr. P.E. 79276 Date

©2000 Texas Department of Transportation

# SIGNING LAYOUT

**SHEET 22a OF 57**

| FED. RD. DIV. NO. | FEDERAL AID PROJECT NO. | | SHEET NO. |
|---|---|---|---|
| 6 | NH 2000(704), etc. | | 663 |
| STATE | DIST. | COUNTY | |
| TEXAS | SAT | BEXAR | |
| CONT. | SECT. | JOB | HIGHWAY NO. |
| 2452 | 01 | 036, etc. | LP 1604 |

QUANTITIES THIS SHEET
CSJ 2452-01-037

SCALE 1:1000

| RIPRAP APRONS QUANTITIES | | | |
|---|---|---|---|
| TYPE OF MOUNT | EA. | MULTIPLIED BY M3 | TOTAL M3 |
| SINGLE POST | | 1.0 | |
| MULTI - POST | | 1.5 | |
| OVHD. SIGN BRIDGE | | | |
| CLASS "B" CONC. GRAND TOTAL | | | |

SEE SHEET NO. 753 FOR RIPRAP APRON DETAILS.
SEE SHEET NO. 58 FOR RIPRAP SUMMARIZATION.

NOTE(S):

PAVEMENT MARKINGS SHOWN FOR REFERENCE ONLY. SEE PAVEMENT MARKINGS/DELINEATION LAYOUTS FOR DETAILS AND QUANTITIES.

CHANGE ORDER **65**

REVISED SHEET

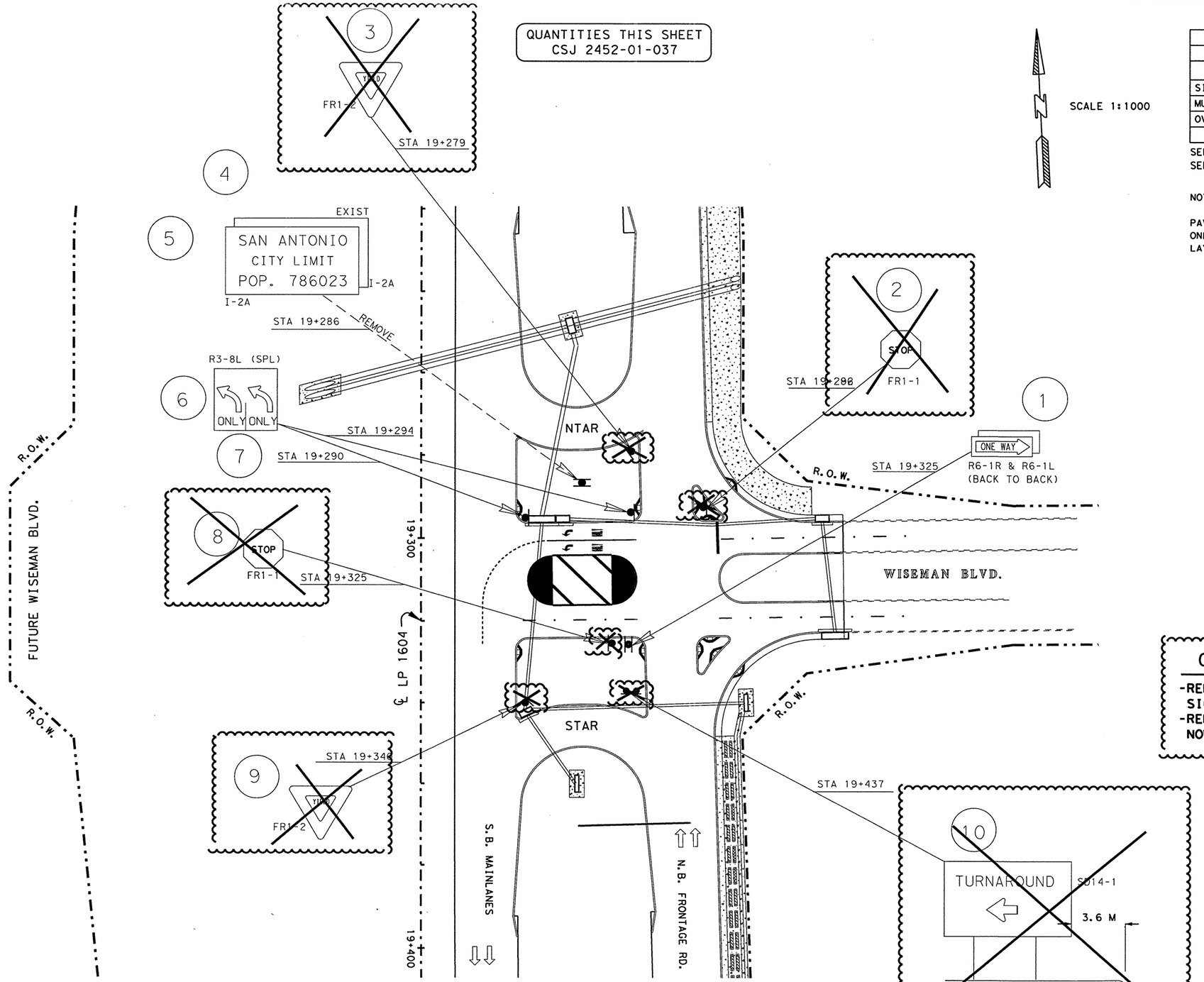


CHANGE ORDER NO. **65**

-REMOVED 2 SIGNS DUE TO PROPOSED SIGNAL
-REMOVED 3 SIGNS BECAUSE THEY ARE NOW SHOWN ON SHEET 22 OF 57

STATE OF TEXAS
JEROME D. PAVLISKA
76075
REGISTERED PROFESSIONAL ENGINEER

Jerome D. Pavliska, P.E 2/06/04
Jerome D. Pavliska, P.E. Date

©2000
Texas Department of Transportation

SIGNING LAYOUT

SHEET 22a OF 57

| FED. RD. DIV. NO. | FEDERAL AID PROJECT NO. | | SHEET NO. |
|---|---|---|---|
| 6 | NH 2000(704), etc. | | 663A |
| STATE | DIST. | COUNTY | |
| TEXAS | SAT | BEXAR | |
| CONT. | SECT. | JOB | HIGHWAY NO. |
| 2452 | 01 | 036, etc. | LP 1604 |

LEVELS DISPLAYED
1 2 3 4 1 5 1 6 1 7 1 8 1 _ 1 _ 1 2 1 3 1 4 1 5 1 6
1 7 1 8 1 9 2 0 2 1 2 2 2 3 2 4 2 5 2 6 2 7 2 8 2 9 3 0 3 1 3 2
3 3 3 4 3 5 3 6 3 7 3 8 3 9 4 0 4 1 4 2 4 3 4 4 4 5 4 6 4 7 4 8
4 9 5 0 5 1 5 2 5 3 5 4 5 5 5 6 5 7 5 8 5 9 6 0 6 1 6 2 6 3

ACC: t:/ao/design/
lp1604fm471-90/pave-sign/
FILE: pavmrkplan22a.dgn

02-05-04

QUANTITIES THIS SHEET
CSJ 2452-01-037

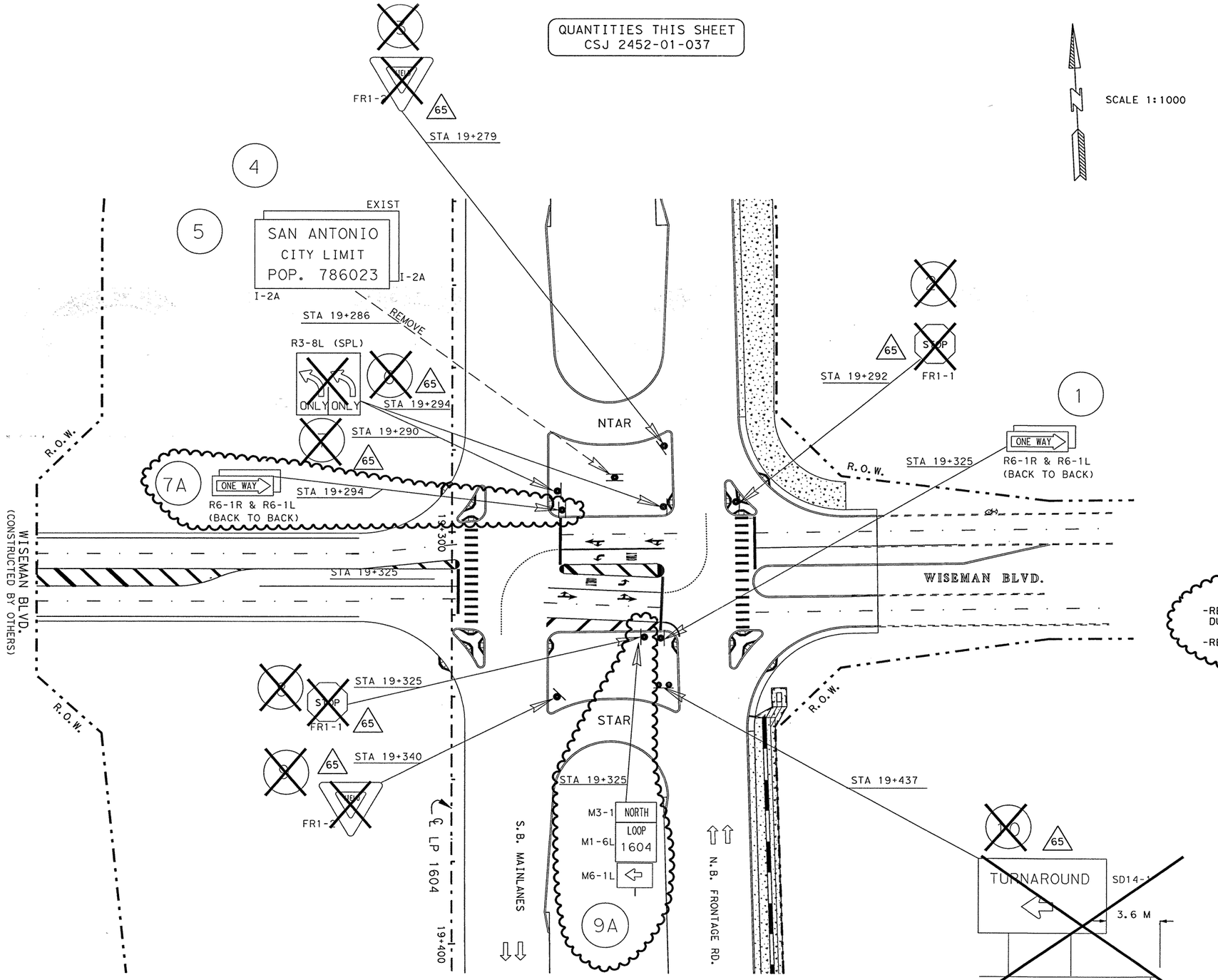


SCALE 1:1000

| RIPRAP APRONS QUANTITIES | | | |
|---|---|---|---|
| TYPE OF MOUNT | EA. | MULTIPLIED BY M3 | TOTAL M3 |
| SINGLE POST | | 1.0 | |
| MULTI - POST | | 1.5 | |
| OVHD. SIGN BRIDGE | | | |
| CLASS "B" CONC. GRAND TOTAL | | | |

SEE SHEET NO. 753 FOR RIPRAP APRON DETAILS.
SEE SHEET NO. 58 FOR RIPRAP SUMMARIZATION.

NOTE(S):

PAVEMENT MARKINGS SHOWN FOR REFERENCE ONLY. SEE PAVEMENT MARKINGS/DELINEATION LAYOUTS FOR DETAILS AND QUANTITIES.

CHANGE ORDER NO. 139

-REVISED SIGNING AT WISEMAN DUE TO WORK BY OTHERS.

-REVISED SIGNS AND SIGN LOCATIONS

CHANGE ORDER NO. 139 | REVISED SHEET

CO # 139
FITZGERALDO G. SANCHEZ 76084 LICENSED PROFESSIONAL ENGINEER
Fitzgeraldo G. Sanchez 08-16-06
Fitzgeraldo G. Sanchez, P.E. Date

#REFERS TO CHANGE'S MADE AS PART OF CHANGE ORDER.

LEVELS DISPLAYED
1 2 3 4 5 6 7 17 18 19 21 22 23 24 25 26 27 28 29 30 31 41 51 61
33 34 35 36 37 38 39 40 42 43 44 45 46 47 48 49 50 51 52 53 54 55 56 57 58 59 60 62 63

ACC: t:/oo/design/lp1604fm471-90/pave-sign/
FILE: signing22a.dgn

© 2000 Texas Department of Transportation

# SIGNING LAYOUT

SHEET 22a OF 57

| FED. RD. DIV. NO. | FEDERAL AID PROJECT NO. | SHEET NO. |
|---|---|---|
| 6 | NH 2000(704), etc. | 663AA |
| STATE | DIST. | COUNTY |
| TEXAS | SAT | BEXAR |
| CONT. | SECT. | JOB / HIGHWAY NO. |
| 2452 | 01 | 036, etc. / LP 1604 |

7-31-06

QUANTITIES THIS SHEET
CSJ 2452-01-037

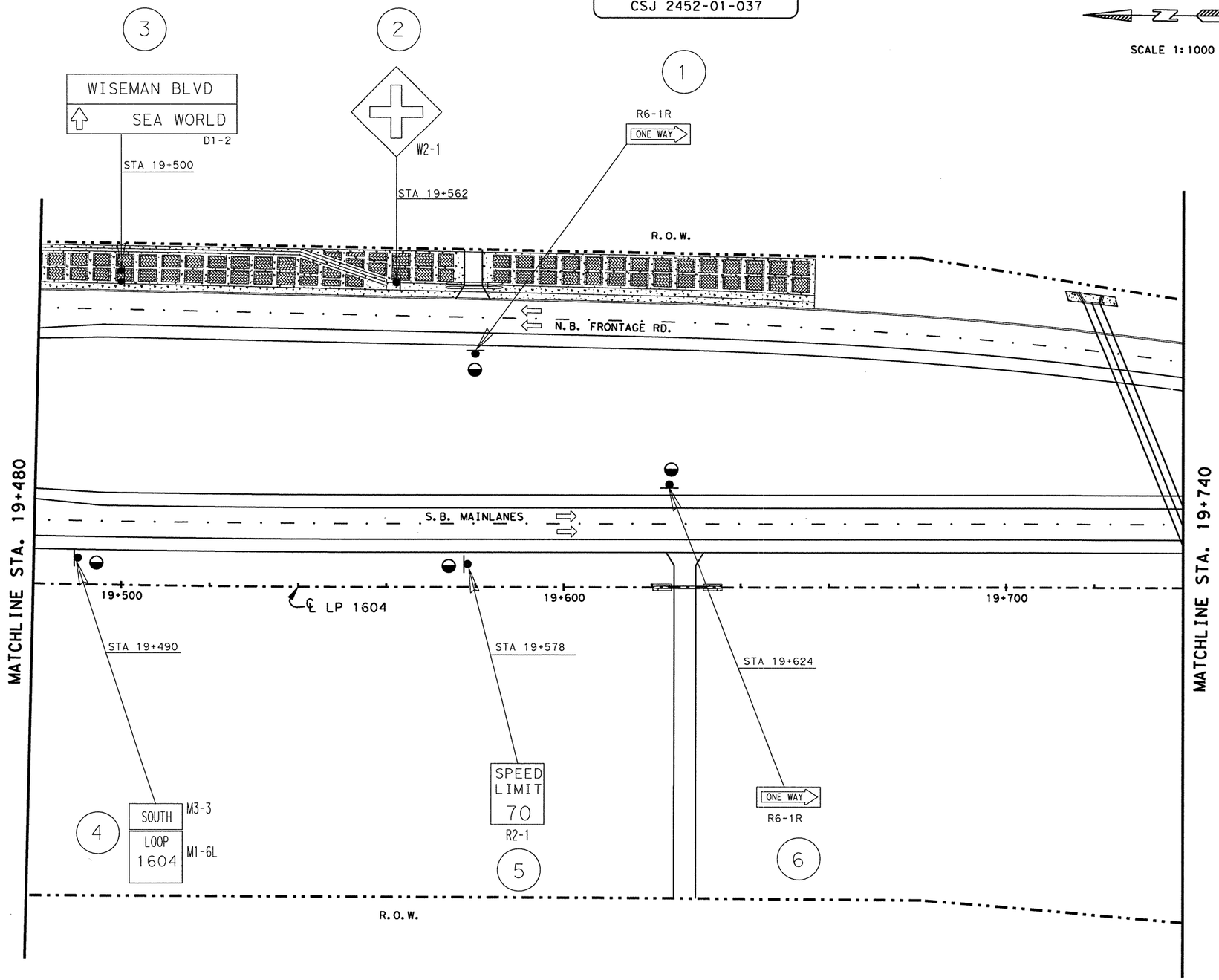


SCALE 1:1000

| RIPRAP APRONS QUANTITIES | | | |
|---|---|---|---|
| TYPE OF MOUNT | EA. | MULTIPLIED BY M3 | TOTAL M3 |
| SINGLE POST | 4 | 1.0 | 4.0 |
| MULTI - POST | | 1.5 | |
| OVHD. SIGN BRIDGE | | | |
| CLASS "B" CONC. GRAND TOTAL | | | 4.0 |

SEE SHEET NO. 753 FOR RIPRAP APRON DETAILS.
SEE SHEET NO. 58 FOR RIPRAP SUMMARIZATION.

NOTE(S):

PAVEMENT MARKINGS SHOWN FOR REFERENCE ONLY. SEE PAVEMENT MARKINGS/DELINEATION LAYOUTS FOR DETAILS AND QUANTITIES.

LEVELS DISPLAYED
1 2 3 4 5 6 7 8 | 1 2 3 4 5 6 7 8 9 10 11 12 13 14 15 16 | 17 18 19 20 21 22 23 24 25 26 27 28 29 30 31 32 | 33 34 35 36 37 38 39 40 41 42 43 44 45 46 47 48 | 49 50 51 52 53 54 55 56 57 58 59 60 61 62 63 64

ACC: t:\ao\design\lp1604fm471-90\pave-sign\
FILE: pavmrkplan23.dgn

STATE OF TEXAS
JOEL K. DAVENPORT, JR.
79276
REGISTERED
PROFESSIONAL ENGINEER

Joel K. Davenport, Jr. 9/19/00
Joel K. Davenport, Jr. P.E. 79276 Date

©2000
Texas Department of Transportation

# SIGNING LAYOUT

**SHEET 23 OF 57**

| FED. RD. DIV. NO. | FEDERAL AID PROJECT NO. | | SHEET NO. |
|---|---|---|---|
| 6 | NH 2000(704), etc. | | 664 |
| STATE | DIST. | COUNTY | |
| TEXAS | SAT | BEXAR | |
| CONT. | SECT. | JOB | HIGHWAY NO. |
| 2452 | 01 | 036, etc. | LP 1604 |

Plotted on: 01/26/2004

QUANTITIES THIS SHEET
CSJ 2452-01-037

SCALE 1:1000

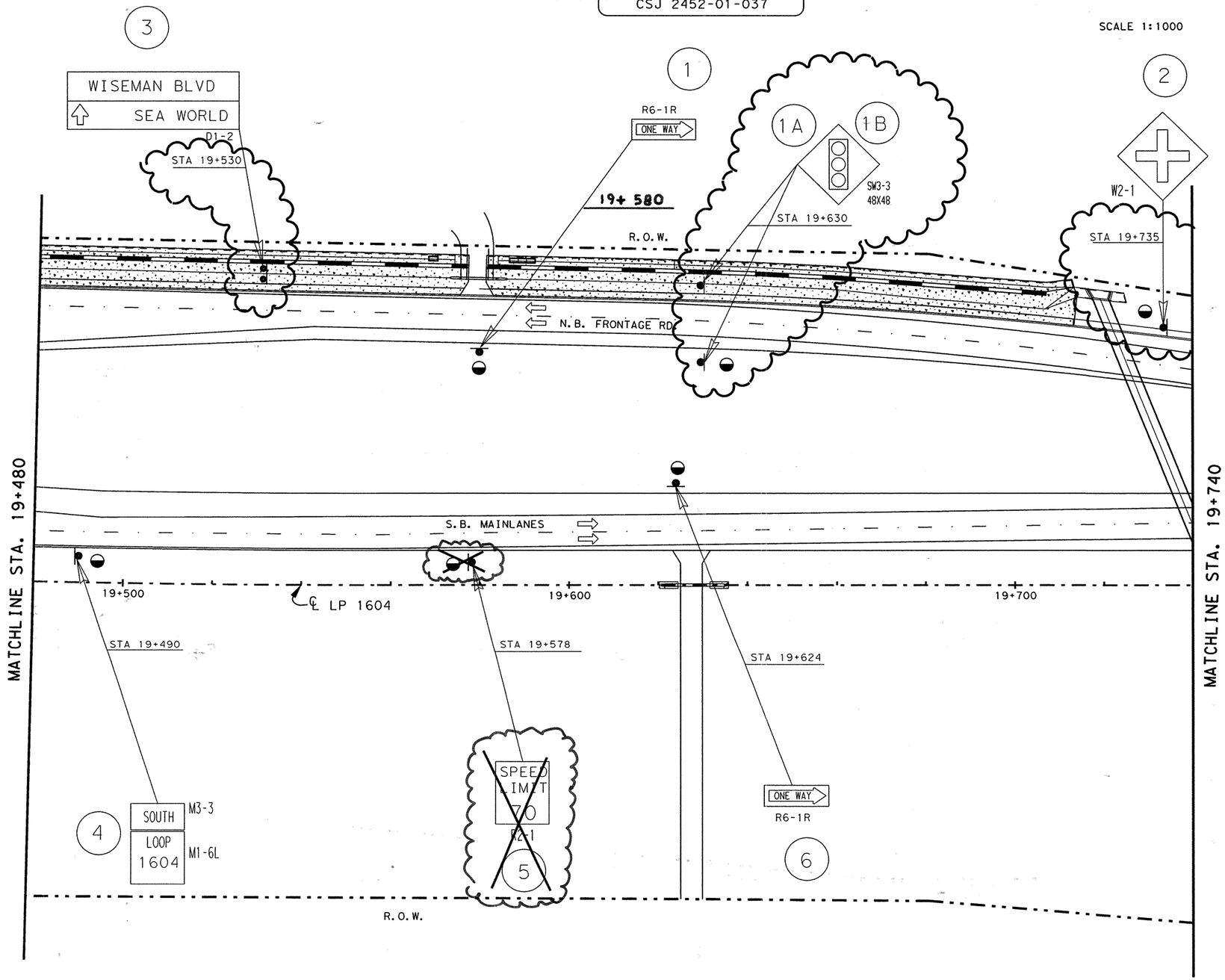


| RIPRAP APRONS QUANTITIES | | | |
|---|---|---|---|
| TYPE OF MOUNT | EA. | MULTIPLIED BY M3 | TOTAL M3 |
| SINGLE POST | 5 | 1.0 | 5.0 |
| MULTI - POST | | 1.5 | |
| OVHD. SIGN BRIDGE | | | |
| CLASS "B" CONC. GRAND TOTAL | | | 5.0 |

SEE SHEET NO. 753 FOR RIPRAP APRON DETAILS.
SEE SHEET NO. 58 FOR RIPRAP SUMMARIZATION.

NOTE(S):

PAVEMENT MARKINGS SHOWN FOR REFERENCE ONLY. SEE PAVEMENT MARKINGS/DELINEATION LAYOUTS FOR DETAILS AND QUANTITIES.

CHANGE ORDER NO. 65

-REVISED SIGNS AND SIGN LOCATIONS
-REVISED RIPRAP APRON QUANTITIES

CHANGE ORDER NO. 65 | REVISED SHEET

555 EAST RAMSEY SAN ANTONIO TEXAS 78216
PHONE (210)375-9000
FAX (210)375-9010
PAPE-DAWSON ENGINEERS
CIVIL & ENVIRONMENTAL
STATE OF TEXAS
J. KENT O'BRIEN
64398
LICENSED
PROFESSIONAL ENGINEER
J. KENT O'BRIEN P.E.
1/27/2004
DATE

©2000
Texas Department of Transportation

SIGNING LAYOUT

SHEET 23 OF 57

| FED.RD. DIV.NO. | FEDERAL AID PROJECT NO. | | SHEET NO. |
|---|---|---|---|
| 6 | NH 2000(704), etc. | | 664 A |
| STATE | DIST. | COUNTY | |
| TEXAS | SAT | BEXAR | |
| CONT. | SECT. | JOB | HIGHWAY NO. |
| 2452 | 01 | 036, etc. | LP 1604 |

Design Filename: p:\52\20\11\design\civil\plansheets\traffic\signing\signing23.dgn

LEVELS DISPLAYED
1 2 3 4 5 6 7 8 9 10 11 12 13 14 15 16
17 18 19 20 21 22 23 24 25 26 27 28 29 30 31 32
33 34 35 36 37 38 39 40 41 42 43 44 45 46 47 48
49 50 51 52 53 54 55 56 57 58 59 60 61 62 63

ACC: t:\ao\design\
lp1604fm471-90\pave-sign\
FILE: pavmrkplan23.dgn

QUANTITIES THIS SHEET
CSJ 2452-01-037

SCALE 1:1000

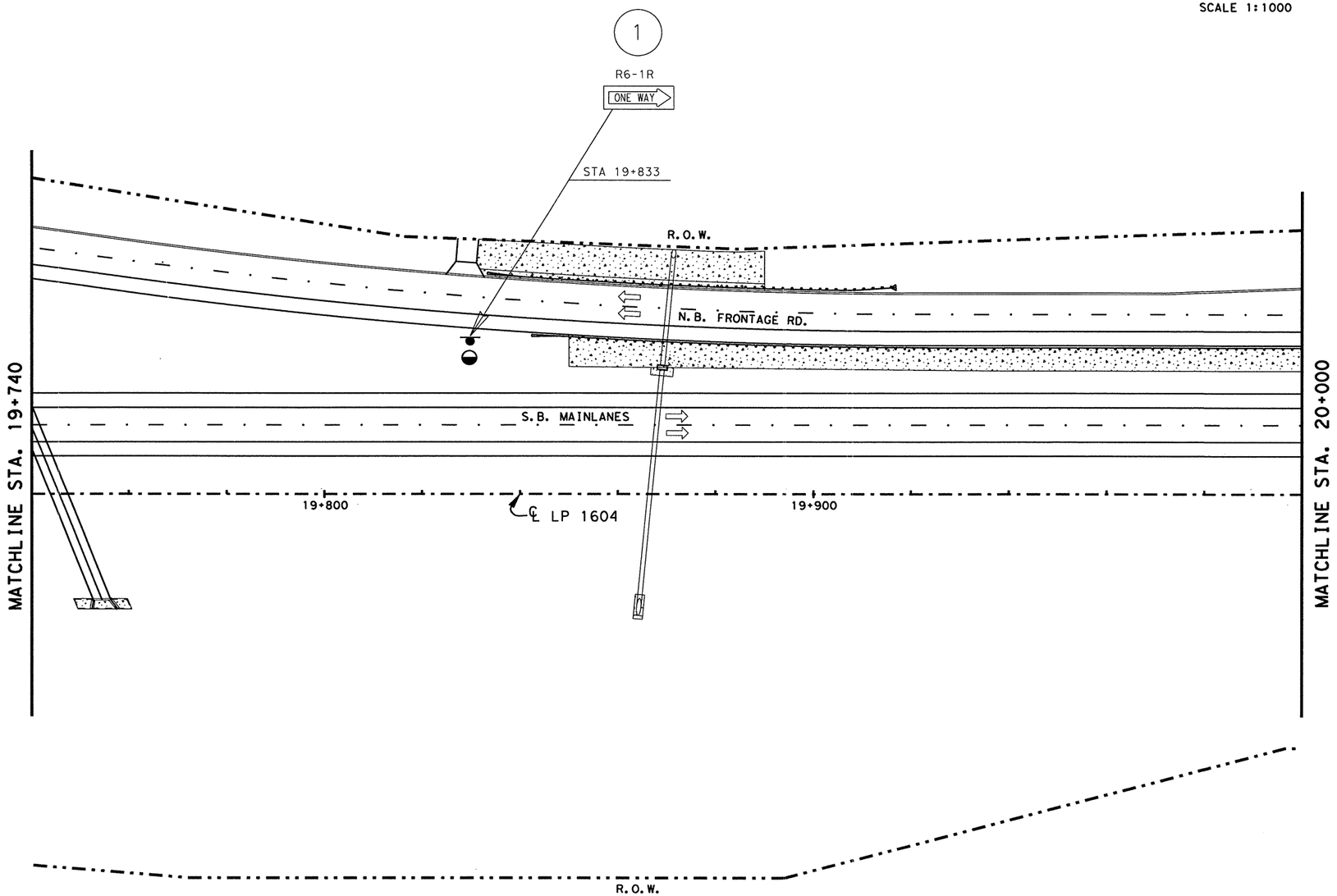


| RIPRAP APRONS | | | |
|---|---|---|---|
| QUANTITIES | | | |
| TYPE OF MOUNT | EA. | MULTIPLIED BY M3 | TOTAL M3 |
| SINGLE POST | 1 | 1.0 | 1.0 |
| MULTI - POST | | 1.5 | |
| OVHD. SIGN BRIDGE | | | |
| CLASS "B" CONC. GRAND TOTAL | | | 1.0 |

SEE SHEET NO. 753 FOR RIPRAP APRON DETAILS.
SEE SHEET NO. 58 FOR RIPRAP SUMMARIZATION.

NOTE(S):

PAVEMENT MARKINGS SHOWN FOR REFERENCE ONLY. SEE PAVEMENT MARKINGS/DELINEATION LAYOUTS FOR DETAILS AND QUANTITIES.

LEVELS DISPLAYED
1 2 3 4 5 6 7 8 | 1 2 3 4 5 6 7 8 9 10 11 12 13 14 15 16
17 18 19 20 21 22 23 24 25 26 27 28 29 30 31 32
33 34 35 36 37 38 39 40 41 42 43 44 45 46 47 48
49 50 51 52 53 54 55 56 57 58 59 60 61 62 63

ACC: t:\oo\design\lp1604fm471-90\pave-sign\
FILE: pavmrkplan24.dgn

STATE OF TEXAS
JOEL K. DAVENPORT, JR.
79276
REGISTERED PROFESSIONAL ENGINEER

Joel K Davenport Jr. 9/19/00
Joel K. Davenport, Jr. P.E. 79276 Date

©2000 Texas Department of Transportation

# SIGNING LAYOUT

**SHEET 24 OF 57**

| FED. RD. DIV. NO. | FEDERAL AID PROJECT NO. | | SHEET NO. |
|---|---|---|---|
| 6 | NH 2000(704), etc. | | 665 |
| STATE | DIST. | COUNTY | |
| TEXAS | SAT | BEXAR | |
| CONT. | SECT. | JOB | HIGHWAY NO. |
| 2452 | 01 | 036, etc. | LP 1604 |

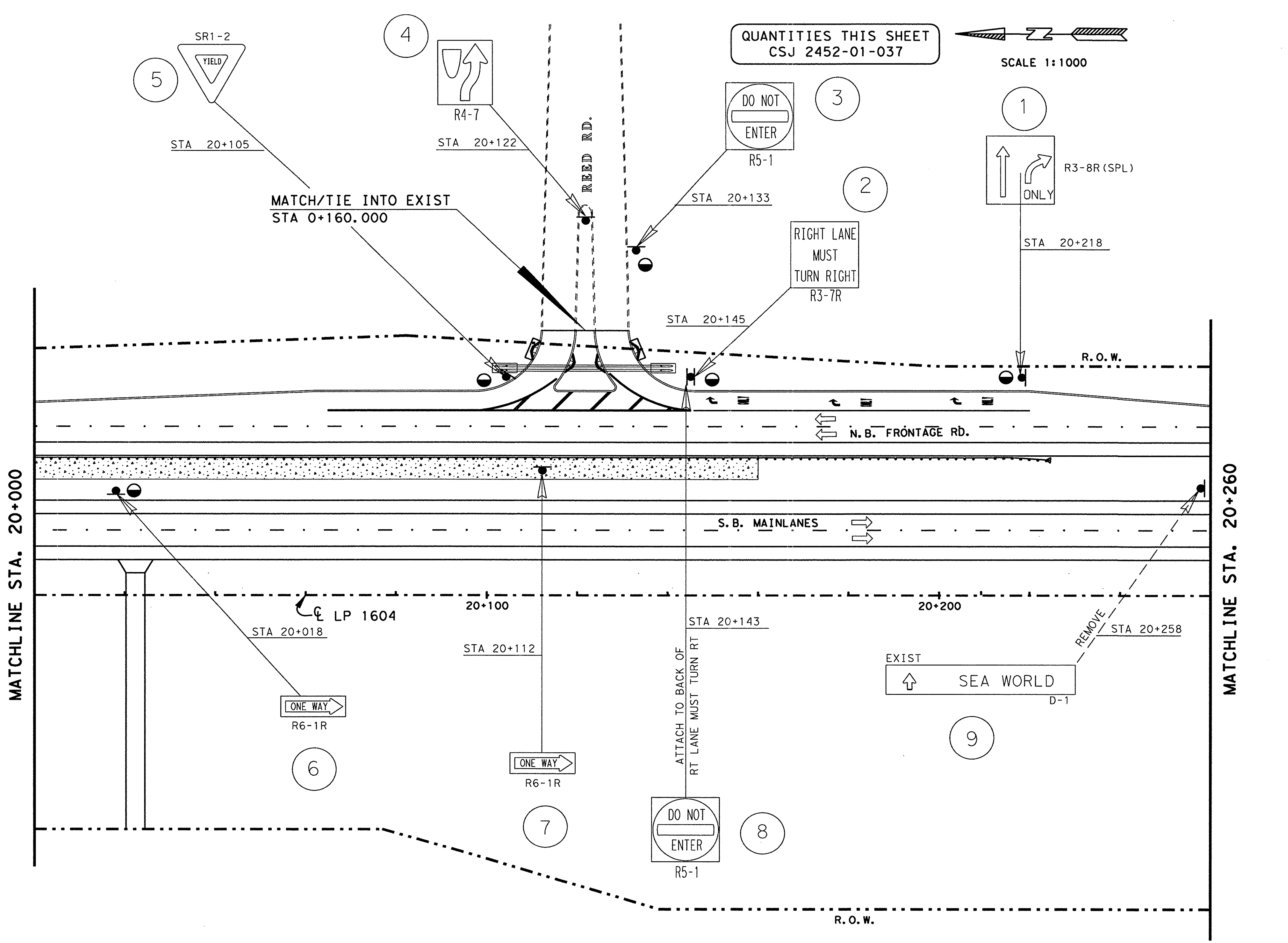


| RIPRAP APRONS | | | |
|---|---|---|---|
| QUANTITIES | | | |
| TYPE OF MOUNT | EA. | MULTIPLIED BY M3 | TOTAL M3 |
| SINGLE POST | 5 | 1.0 | 5.0 |
| MULTI - POST | | 1.5 | |
| OVHD. SIGN BRIDGE | | | |
| CLASS "B" CONC. GRAND TOTAL | | | 5.0 |

SEE SHEET NO. 753 FOR RIPRAP APRON DETAILS.
SEE SHEET NO. 58 FOR RIPRAP SUMMARIZATION.

NOTE(S):

PAVEMENT MARKINGS SHOWN FOR REFERENCE ONLY. SEE PAVEMENT MARKINGS/DELINEATION LAYOUTS FOR DETAILS AND QUANTITIES.

STATE OF TEXAS
JOEL K. DAVENPORT, JR.
79276
REGISTERED PROFESSIONAL ENGINEER

Joel K. Davenport, Jr. 9/19/00
Joel K. Davenport, Jr. P.E. 79276 Date

©2000 Texas Department of Transportation

# SIGNING LAYOUT

**SHEET 25 OF 57**

| FED. RD. DIV. NO. | FEDERAL AID PROJECT NO. | | SHEET NO. |
|---|---|---|---|
| 6 | NH 2000(704), etc. | | 666 |
| STATE | DIST. | COUNTY | |
| TEXAS | SAT | BEXAR | |
| CONT. | SECT. | JOB | HIGHWAY NO. |
| 2452 | 01 | 036, etc. | LP 1604 |

LEVELS DISPLAYED
ACC: t:\ao\design\ lp1604fm471-90\pave-sign\
FILE: pavmrkplan25.dgn

QUANTITIES THIS SHEET
CSJ 2452-01-037

SCALE 1:1000

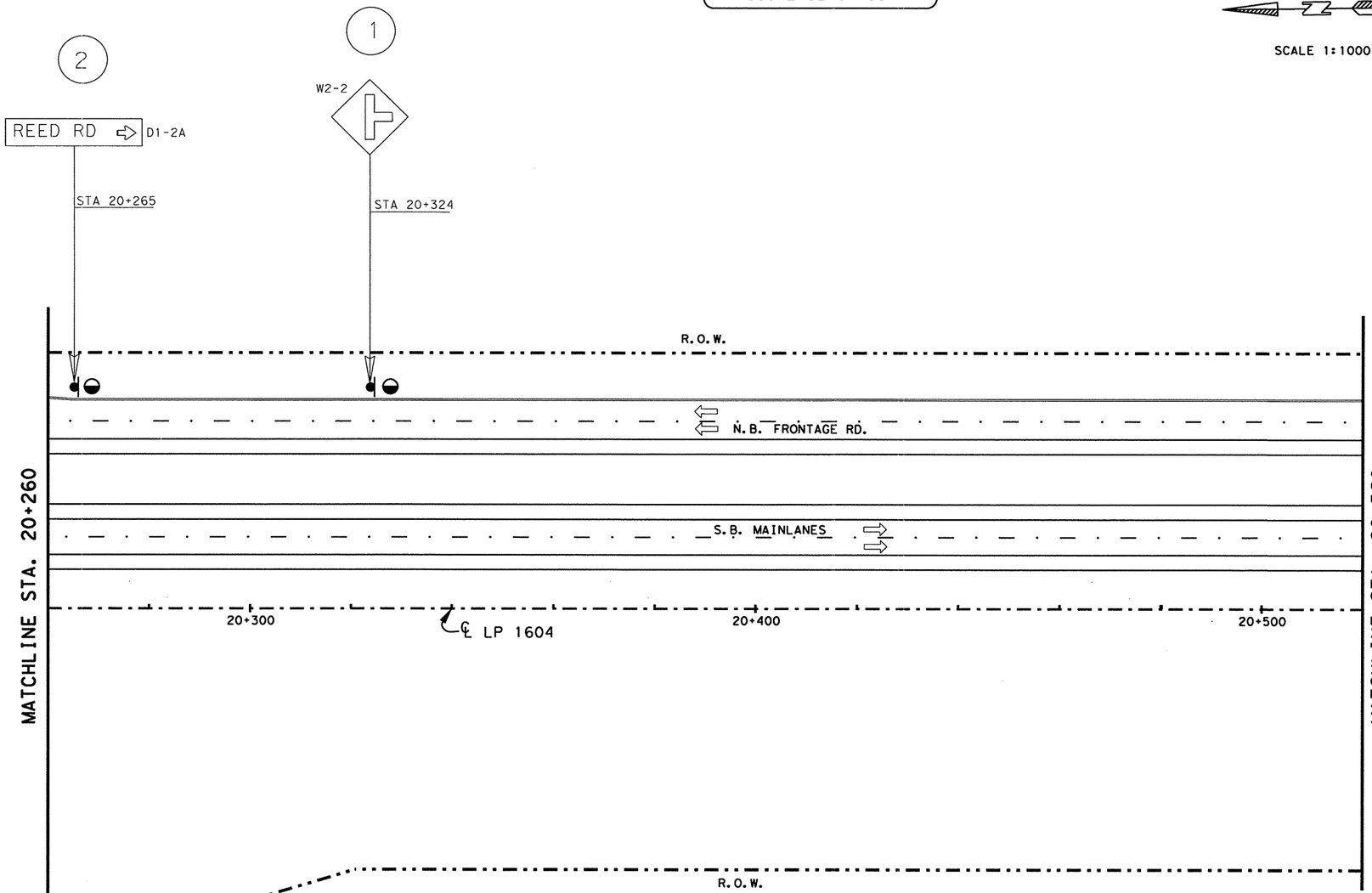


| RIPRAP APRONS | | | |
|---|---|---|---|
| QUANTITIES | | | |
| TYPE OF MOUNT | EA. | MULTIPLIED BY M3 | TOTAL M3 |
| SINGLE POST | 2 | 1.0 | 2.0 |
| MULTI - POST | | 1.5 | |
| OVHD. SIGN BRIDGE | | | |
| CLASS "B" CONC. GRAND TOTAL | | | 2.0 |

SEE SHEET NO. 753 FOR RIPRAP APRON DETAILS.
SEE SHEET NO. 58 FOR RIPRAP SUMMARIZATION.

NOTE(S):

PAVEMENT MARKINGS SHOWN FOR REFERENCE ONLY. SEE PAVEMENT MARKINGS/DELINEATION LAYOUTS FOR DETAILS AND QUANTITIES.

STATE OF TEXAS
JOEL K. DAVENPORT, JR.
79276
REGISTERED
PROFESSIONAL ENGINEER

Joel K. Davenport, Jr. 9/19/00
Joel K. Davenport, Jr. P.E. 79276 Date

©2000
Texas Department of Transportation

# SIGNING LAYOUT

SHEET 26 OF 57

| FED.RD. DIV.NO. | FEDERAL AID PROJECT NO. | | SHEET NO. |
|---|---|---|---|
| 6 | NH 2000(704), etc. | | 667 |
| STATE | DIST. | COUNTY | |
| TEXAS | SAT | BEXAR | |
| CONT. | SECT. | JOB | HIGHWAY NO. |
| 2452 | 01 | 036, etc. | LP 1604 |

LEVELS DISPLAYED
1 2 3 4 5 6 7 8 | 1 2 3 4 5 6
1 7 18 19 20 21 22 23 24 25 26 27 28 29 30 31 32
33 34 35 36 37 38 39 40 41 42 43 44 45 46 47 48
49 50 51 52 53 54 55 56 57 58 59 60 61 62 63

ACC: t:\ao\design\lp1604fm471-90\pave-sign\
FILE: pavmrkplan26.dgn

SCALE 1:1000

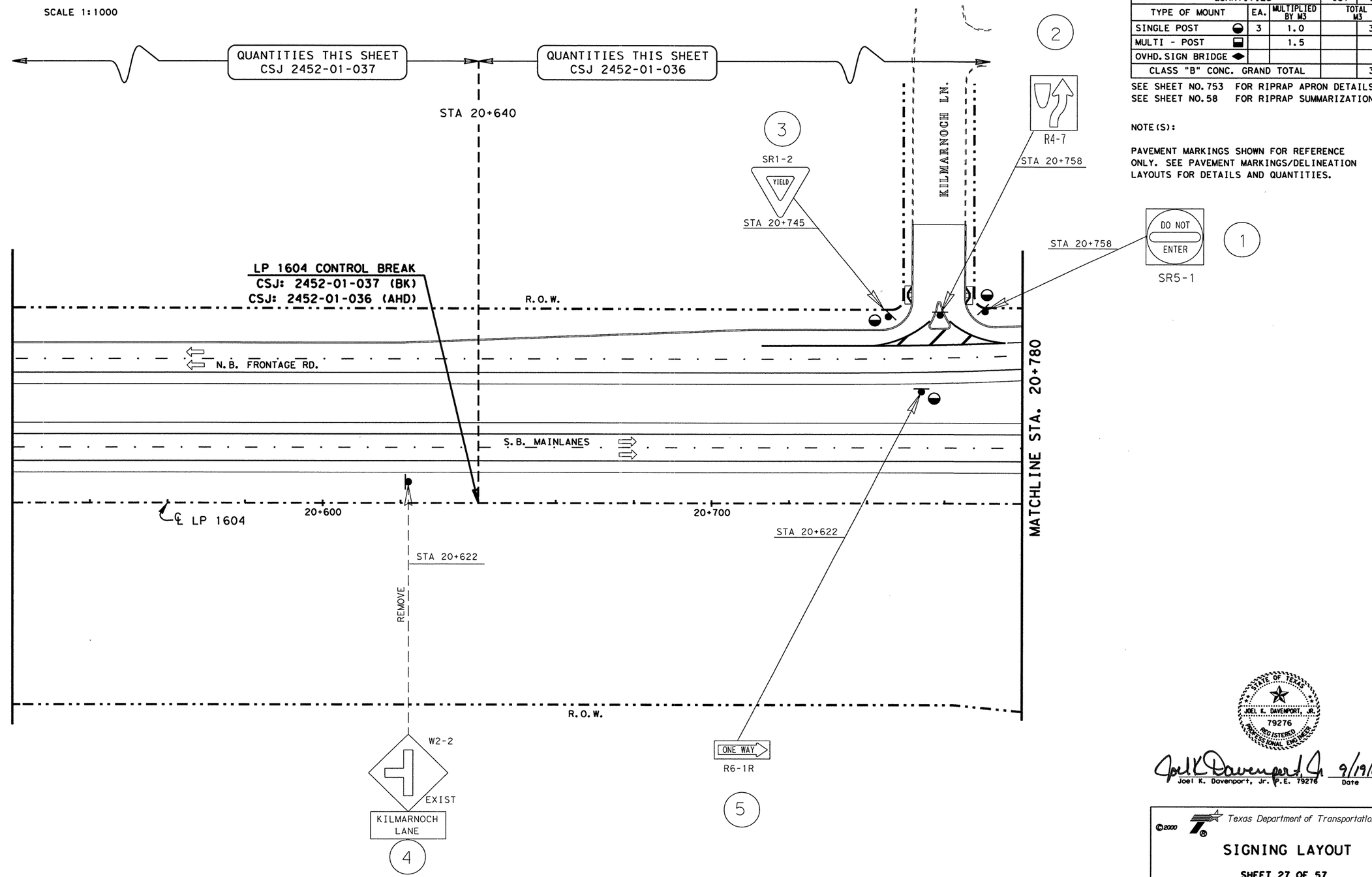


| RIPRAP APRONS | | | |
|---|---|---|---|
| QUANTITIES | | -037 | -036 |
| TYPE OF MOUNT | EA. | MULTIPLIED BY M3 | TOTAL M3 |
| SINGLE POST | 3 | 1.0 | 3.0 |
| MULTI - POST | | 1.5 | |
| OVHD. SIGN BRIDGE | | | |
| CLASS "B" CONC. GRAND TOTAL | | | 3.0 |

SEE SHEET NO. 753 FOR RIPRAP APRON DETAILS.
SEE SHEET NO. 58 FOR RIPRAP SUMMARIZATION.

NOTE(S):

PAVEMENT MARKINGS SHOWN FOR REFERENCE ONLY. SEE PAVEMENT MARKINGS/DELINEATION LAYOUTS FOR DETAILS AND QUANTITIES.

LEVELS DISPLAYED
1 2 3 4 5 6 7 8 | 1 2 | 1 2 3 4 5 6
7 8 9 20 21 22 32 42 52 62 72 82 93 03 13 2
33 43 53 63 73 83 94 04 14 24 34 44 54 64 74 84
95 05 15 25 35 45 55 65 75 85 96 06 16 26 3

ACC: t:\ao\design\lp1604fm471-90\pave-sign\
FILE: pavmrkplan27.dgn

STATE OF TEXAS
JOEL K. DAVENPORT, JR.
79276
REGISTERED
PROFESSIONAL ENGINEER

Joel K. Davenport, Jr. 9/19/00
Joel K. Davenport, Jr. P.E. 79276 Date

©2000 Texas Department of Transportation

# SIGNING LAYOUT

**SHEET 27 OF 57**

| FED.RD. DIV.NO. | FEDERAL AID PROJECT NO. | | SHEET NO. |
|---|---|---|---|
| 6 | NH 2000(704), etc. | | 668 |
| STATE | DIST. | COUNTY | |
| TEXAS | SAT | BEXAR | |
| CONT. | SECT. | JOB | HIGHWAY NO. |
| 2452 | 01 | 036, etc. | LP 1604 |

QUANTITIES THIS SHEET
CSJ 2452-01-036

SCALE 1:1000

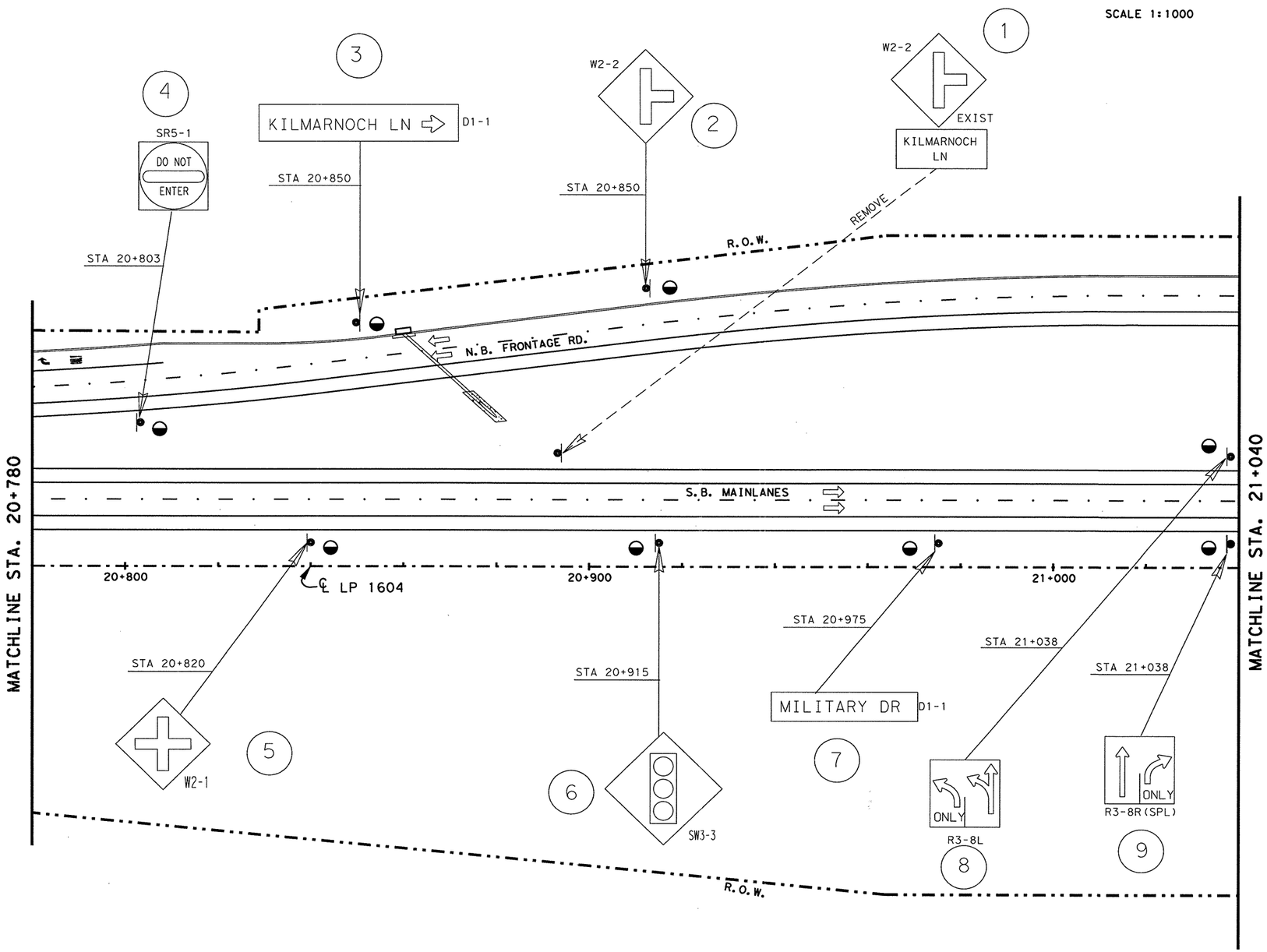


| RIPRAP APRONS QUANTITIES | | | |
|---|---|---|---|
| TYPE OF MOUNT | EA. | MULTIPLIED BY M3 | TOTAL M3 |
| SINGLE POST | 8 | 1.0 | 8.0 |
| MULTI - POST | | 1.5 | |
| OVHD. SIGN BRIDGE | | | |
| CLASS "B" CONC. GRAND TOTAL | | | 8.0 |

SEE SHEET NO. 753 FOR RIPRAP APRON DETAILS.
SEE SHEET NO. 58 FOR RIPRAP SUMMARIZATION.

NOTE(S):

PAVEMENT MARKINGS SHOWN FOR REFERENCE ONLY. SEE PAVEMENT MARKINGS/DELINEATION LAYOUTS FOR DETAILS AND QUANTITIES.

LEVELS DISPLAYED
1 2 3 4 5 6 7 8 9 10 11 12 13 14 15 16 17 18 19 20 21 22 23 24 25 26 27 28 29 30 31 32 33 34 35 36 37 38 39 40 41 42 43 44 45 46 47 48 49 50 51 52 53 54 55 56 57 58 59 60 61 62 63

ACC: t:\ao\design\
lp1604fm471-90\pave-sign\
FILE: pavmrkplan28.dgn

JOEL K. DAVENPORT, JR. 79276 REGISTERED PROFESSIONAL ENGINEER STATE OF TEXAS

Joel K. Davenport, Jr. 9/19/00
Joel K. Davenport, Jr. P.E. 79276 Date

©2000
Texas Department of Transportation

# SIGNING LAYOUT

**SHEET 28 OF 57**

| FED. RD. DIV. NO. | FEDERAL AID PROJECT NO. | | SHEET NO. |
|---|---|---|---|
| 6 | NH 2000(704), etc. | | 669 |
| STATE | DIST. | COUNTY | |
| TEXAS | SAT | BEXAR | |
| CONT. | SECT. | JOB | HIGHWAY NO. |
| 2452 | 01 | 036, etc. | LP 1604 |

QUANTITIES THIS SHEET
CSJ 2452-01-036

SCALE 1:1000

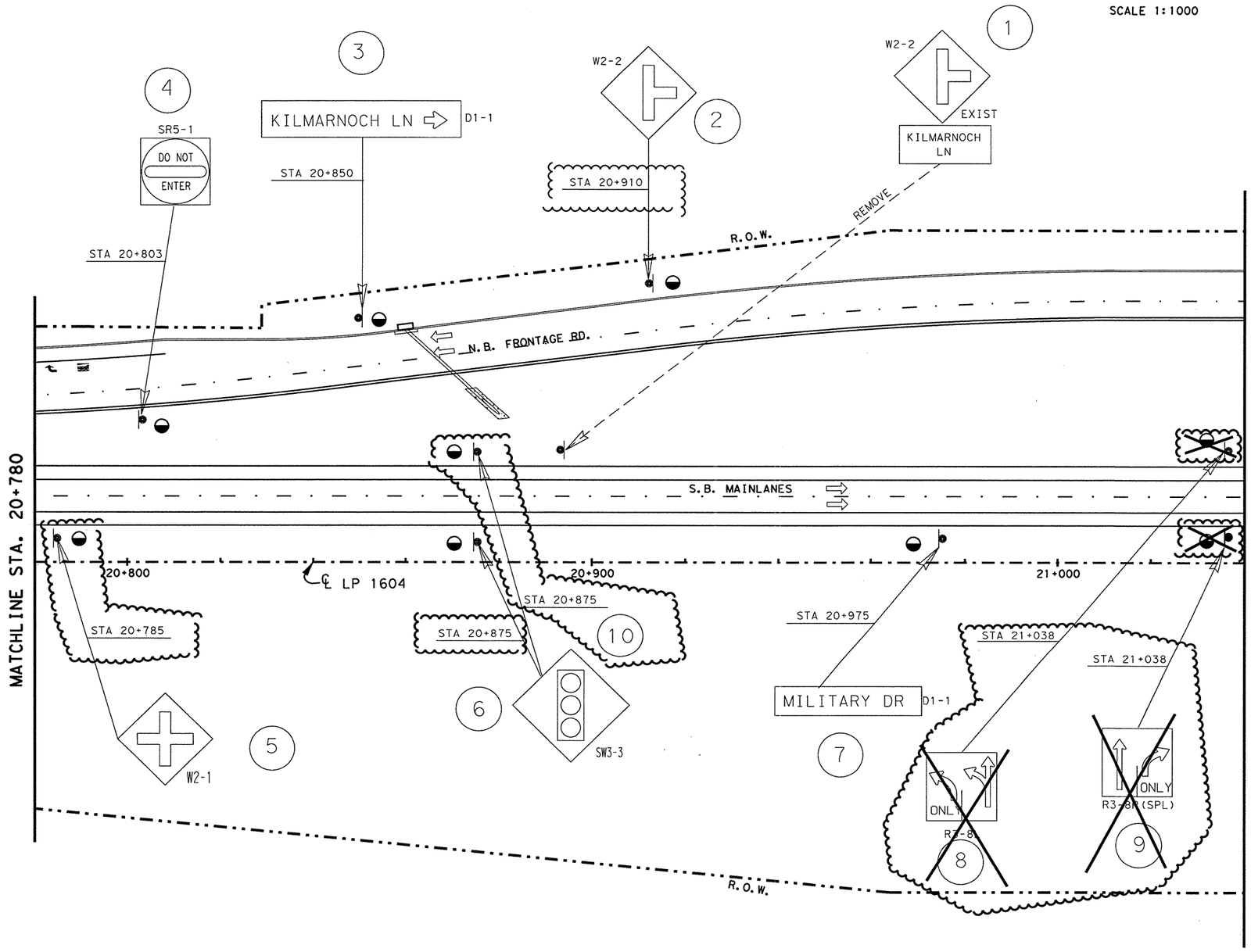


| RIPRAP APRONS QUANTITIES | | | |
|---|---|---|---|
| TYPE OF MOUNT | EA. | MULTIPLIED BY M3 | TOTAL M3 |
| SINGLE POST | 7 | 1.0 | 7.0 |
| MULTI - POST | | 1.5 | |
| OVHD. SIGN BRIDGE | | | |
| CLASS "B" CONC. GRAND TOTAL | | | 7.0 |

SEE SHEET NO. 753 FOR RIPRAP APRON DETAILS.
SEE SHEET NO. 58 FOR RIPRAP SUMMARIZATION.

NOTE(S):

PAVEMENT MARKINGS SHOWN FOR REFERENCE ONLY. SEE PAVEMENT MARKINGS/DELINEATION LAYOUTS FOR DETAILS AND QUANTITIES.

CHANGE ORDER 65

REVISED SHEET

CHANGE ORDER NO. 65

- -REMOVED SIGNS
- -REVISED SIGNS AND SIGN LOCATIONS
- -REVISED RIPRAP APRON QUANTITIES

STATE OF TEXAS
JEROME D. PAVLISKA
76075
REGISTERED PROFESSIONAL ENGINEER

Jerome D. Pavliska P.E. 2/06/04
Jerome D. Pavliska, P.E. — Date

©2000
Texas Department of Transportation

SIGNING LAYOUT

SHEET 28 OF 57

| FED. RD. DIV. NO. | FEDERAL AID PROJECT NO. | | SHEET NO. |
|---|---|---|---|
| 6 | NH 2000(704), etc. | | 669A |
| STATE | DIST. | COUNTY | |
| TEXAS | SAT | BEXAR | |
| CONT. | SECT. | JOB | HIGHWAY NO. |
| 2452 | 01 | 036, etc. | LP 1604 |

02-05-04

LEVELS DISPLAYED
1 2 3 4 5 6 7 8 | 1 2 3 1 4 1 5 1 6
1 7 1 8 1 9 2 0 2 1 2 2 2 3 2 4 2 5 2 6 2 7 2 8 2 9 3 0 3 1 3 2
3 3 0 4 3 5 5 6 3 7 5 8 3 9 4 0 4 1 4 2 4 3 4 4 4 5 4 6 4 7 4 8
4 9 5 0 5 1 5 2 6 3 5 4 5 5 5 6 5 7 5 8 5 9 6 0 6 1 6 2 6 3

ACC: t:\oa\design\
lp1604fm471-90\pave-sign\
FILE: pavmrkplan28.dgn

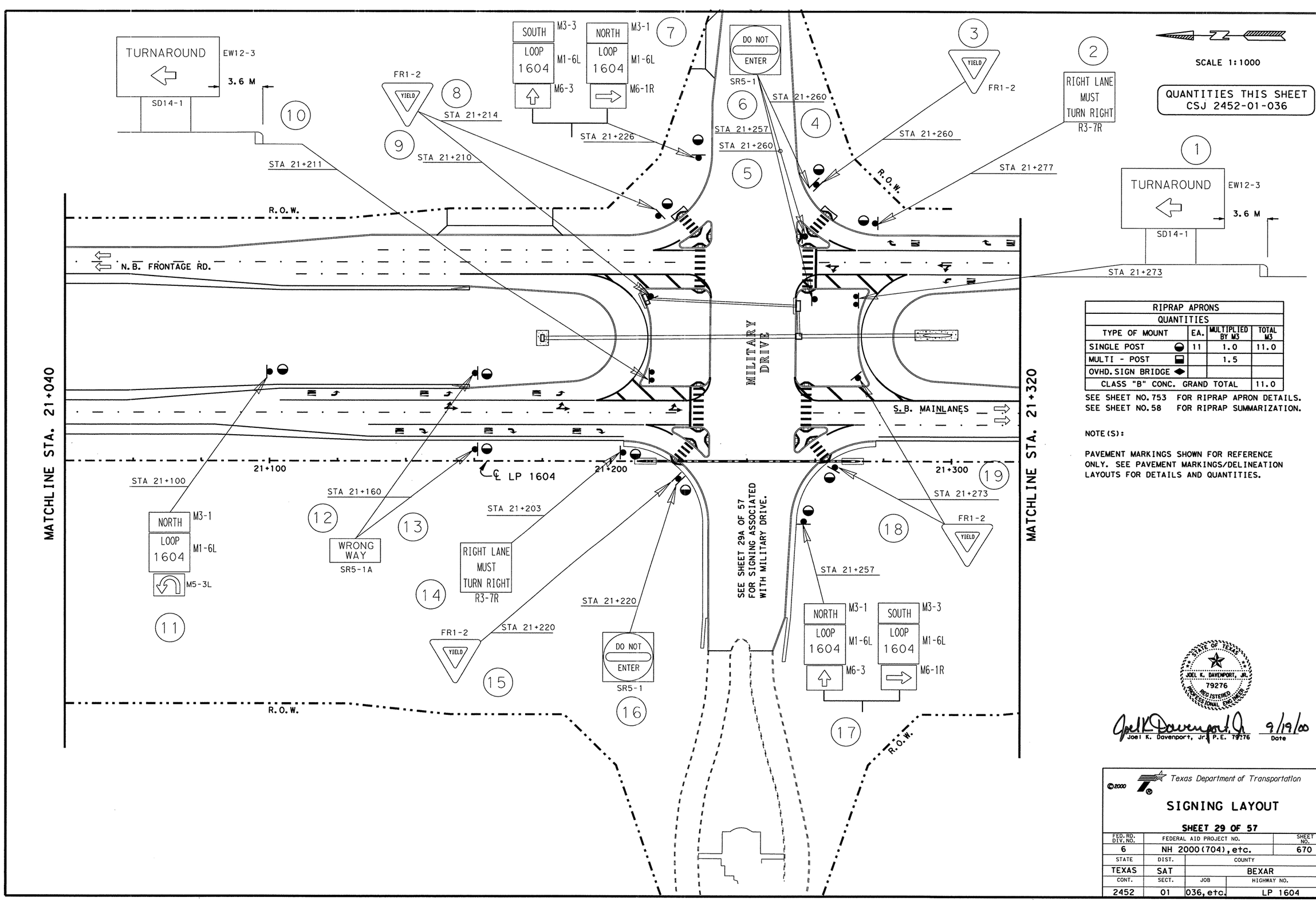


SCALE 1:1000

QUANTITIES THIS SHEET
CSJ 2452-01-036

| RIPRAP APRONS QUANTITIES | | | |
|---|---|---|---|
| TYPE OF MOUNT | EA. | MULTIPLIED BY M3 | TOTAL M3 |
| SINGLE POST ◒ | 11 | 1.0 | 11.0 |
| MULTI - POST ◨ | | 1.5 | |
| OVHD. SIGN BRIDGE ◆ | | | |
| CLASS "B" CONC. GRAND TOTAL | | | 11.0 |

SEE SHEET NO. 753 FOR RIPRAP APRON DETAILS.
SEE SHEET NO. 58 FOR RIPRAP SUMMARIZATION.

NOTE(S):

PAVEMENT MARKINGS SHOWN FOR REFERENCE ONLY. SEE PAVEMENT MARKINGS/DELINEATION LAYOUTS FOR DETAILS AND QUANTITIES.

STATE OF TEXAS
JOEL K. DAVENPORT, JR.
79276
REGISTERED PROFESSIONAL ENGINEER

Joel K. Davenport, Jr. P.E. 79276 — 9/19/00
Date

LEVELS DISPLAYED
1 2 3 4 5 6 7 8 | 1 2 3 4 5 6
17 18 19 20 21 22 23 24 25 26 27 28 29 30 31 32
33 34 35 36 37 38 39 40 41 42 43 44 45 46 47 48
49 50 51 52 53 54 55 56 57 58 59 60 61 62 63

ACC: t:\ao\design\lp1604fm471-90\pave-sign\
FILE: pavmrkplan29.dgn

©2000
Texas Department of Transportation

# SIGNING LAYOUT

SHEET 29 OF 57

| FED. RD. DIV. NO. | FEDERAL AID PROJECT NO. | | SHEET NO. |
|---|---|---|---|
| 6 | NH 2000(704), etc. | | 670 |
| STATE | DIST. | COUNTY | |
| TEXAS | SAT | BEXAR | |
| CONT. | SECT. | JOB | HIGHWAY NO. |
| 2452 | 01 | 036, etc. | LP 1604 |

Plotted on: 01/26/2004

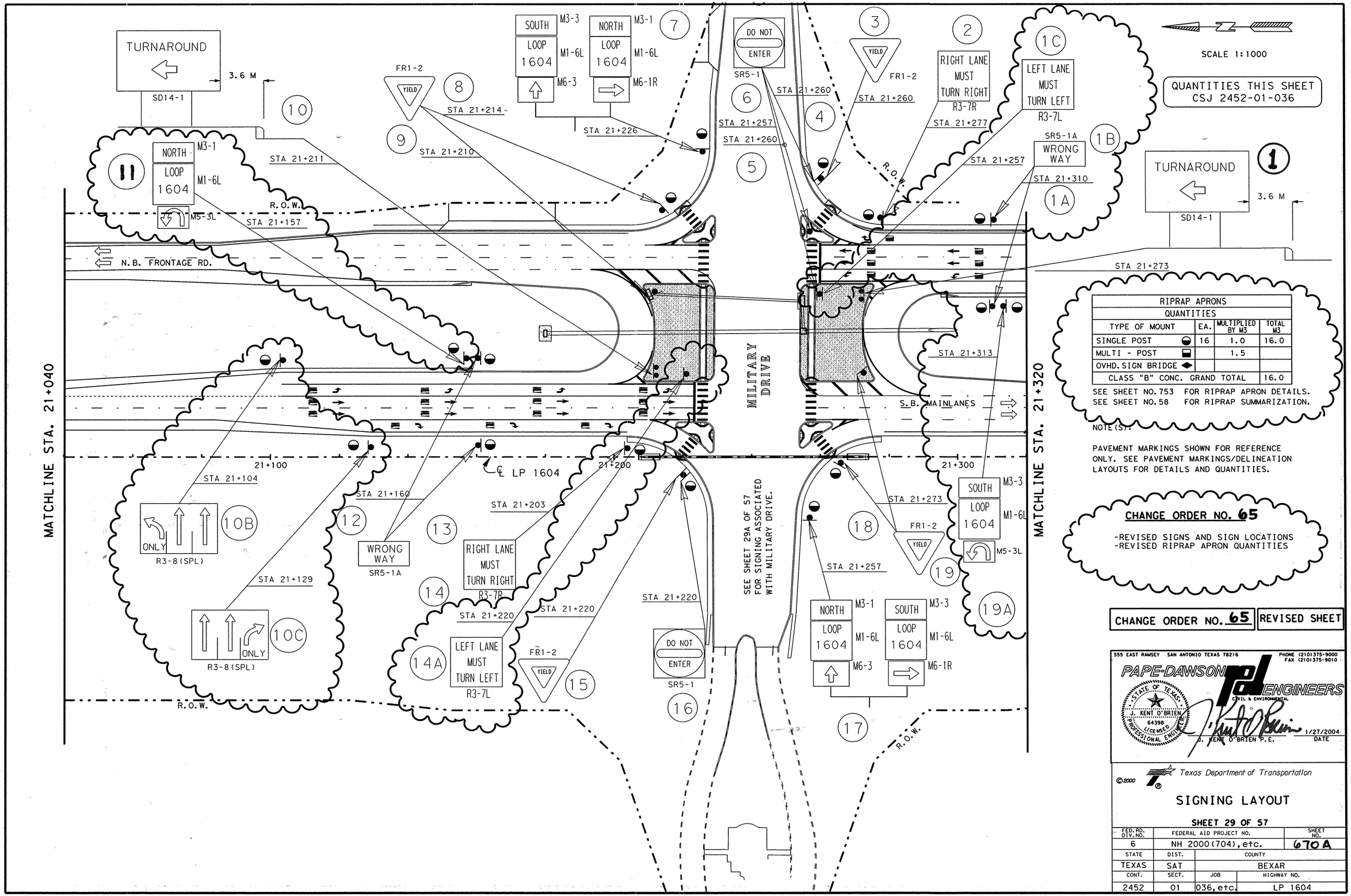


| RIPRAP APRONS QUANTITIES | | | |
|---|---|---|---|
| TYPE OF MOUNT | EA. | MULTIPLIED BY M3 | TOTAL M3 |
| SINGLE POST ◒ | 16 | 1.0 | 16.0 |
| MULTI - POST ◨ | | 1.5 | |
| OVHD. SIGN BRIDGE ◆ | | | |
| CLASS "B" CONC. GRAND TOTAL | | | 16.0 |

SEE SHEET NO. 753 FOR RIPRAP APRON DETAILS.
SEE SHEET NO. 58 FOR RIPRAP SUMMARIZATION.

NOTE(S):

PAVEMENT MARKINGS SHOWN FOR REFERENCE ONLY. SEE PAVEMENT MARKINGS/DELINEATION LAYOUTS FOR DETAILS AND QUANTITIES.

**CHANGE ORDER NO. 65**

-REVISED SIGNS AND SIGN LOCATIONS
-REVISED RIPRAP APRON QUANTITIES

**CHANGE ORDER NO. 65** | **REVISED SHEET**

555 EAST RAMSEY SAN ANTONIO TEXAS 78216 PHONE (210)375-9000 FAX (210)375-9010
PAPE-DAWSON ENGINEERS CIVIL & ENVIRONMENTAL
STATE OF TEXAS J. KENT O'BRIEN 64398 LICENSED PROFESSIONAL ENGINEER
J. KENT O'BRIEN P.E. 1/27/2004 DATE

©2000
Texas Department of Transportation

# SIGNING LAYOUT

**SHEET 29 OF 57**

| FED.RD. DIV.NO. | FEDERAL AID PROJECT NO. | | SHEET NO. |
|---|---|---|---|
| 6 | NH 2000(704),etc. | | 670A |
| STATE | DIST. | COUNTY | |
| TEXAS | SAT | BEXAR | |
| CONT. | SECT. | JOB | HIGHWAY NO. |
| 2452 | 01 | 036,etc. | LP 1604 |

Design Filename: p:\52\20\11\design\civil\plansheets\traffic\signing\signing29.dgn

LEVELS DISPLAYED
1 2 3 4 5 6 7 8 9 10 11 12 13 14 15 16
17 18 19 20 21 22 23 24 25 26 27 28 29 30 31 32
33 34 35 36 37 38 39 40 41 42 43 44 45 46 47 48
49 50 51 52 53 54 55 56 57 58 59 60 61 62 63

ACC: t:\oo\design\
lp1604fm471-90\pave-sign\
FILE: pavmrkplan29.dgn

QUANTITIES THIS SHEET
CSJ 2452-01-036

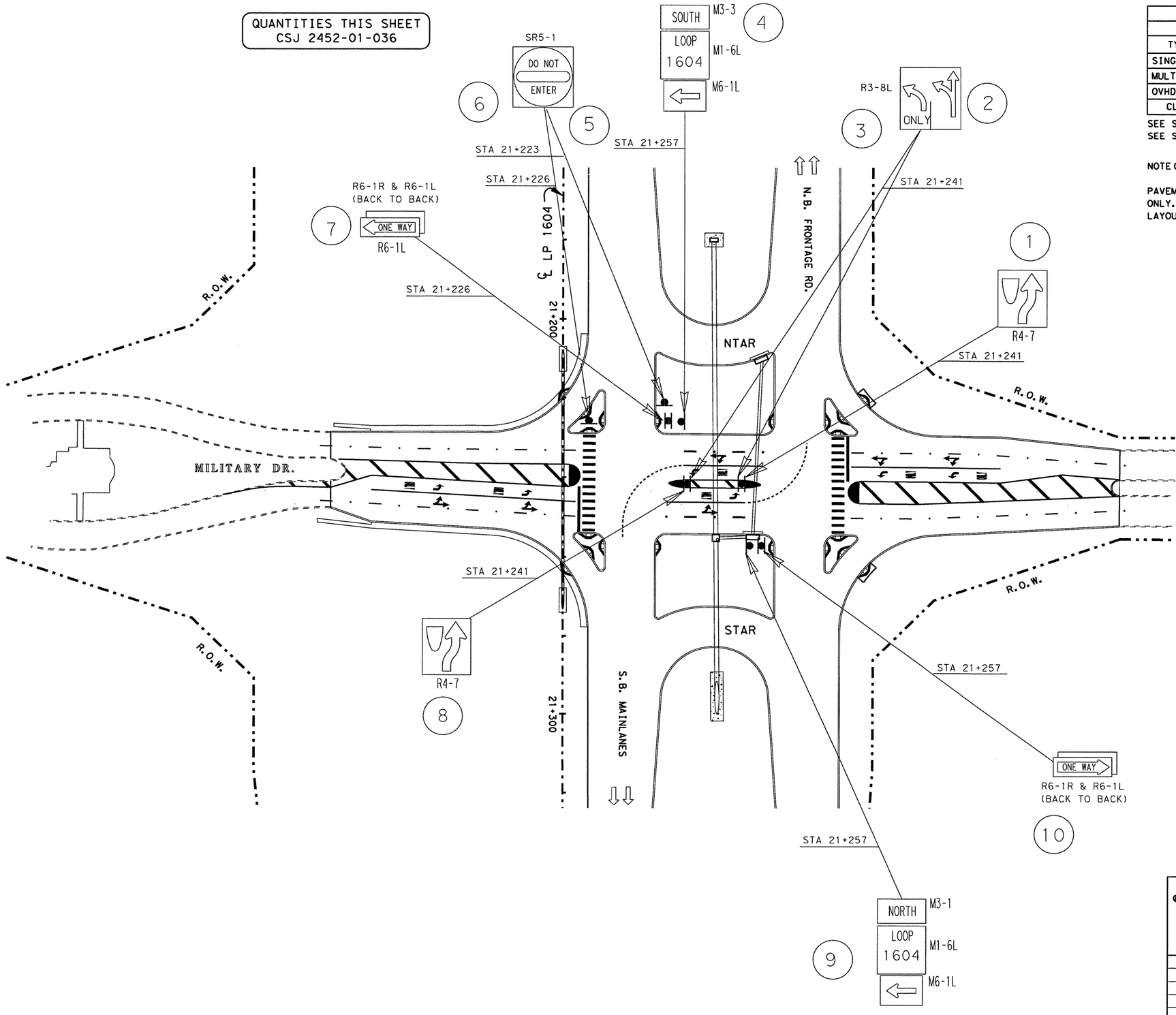


| RIPRAP APRONS QUANTITIES | | | |
|---|---|---|---|
| TYPE OF MOUNT | EA. | MULTIPLIED BY M3 | TOTAL M3 |
| SINGLE POST | | 1.0 | |
| MULTI - POST | | 1.5 | |
| OVHD. SIGN BRIDGE | | | |
| CLASS "B" CONC. GRAND TOTAL | | | |

SEE SHEET NO. 753 FOR RIPRAP APRON DETAILS.
SEE SHEET NO. 58 FOR RIPRAP SUMMARIZATION.

NOTE(S):

PAVEMENT MARKINGS SHOWN FOR REFERENCE ONLY. SEE PAVEMENT MARKINGS/DELINEATION LAYOUTS FOR DETAILS AND QUANTITIES.

N

SCALE 1:1000

LEVELS DISPLAYED
1 2 3 4 5 6 1 7 1 8 1 | 2 1 3 1 4 1 5 1 6
1 7 1 8 1 9 2 0 2 1 2 2 2 3 2 4 2 5 2 6 2 7 2 8 2 9 3 0 3 1 3 2
3 3 3 4 3 5 3 6 3 7 3 8 3 9 4 0 4 1 4 2 4 3 4 4 4 5 4 6 4 7 4 8
4 9 5 0 5 1 5 2 5 3 5 4 5 5 5 6 5 7 5 8 5 9 6 0 6 1 6 2 6 3

ACC: t:/oo/design/lp1604fm471-90/pave-sign/
FILE: pavmrkplan29a.dgn

JOEL K. DAVENPORT, JR. 79276 REGISTERED PROFESSIONAL ENGINEER STATE OF TEXAS

Joel K. Davenport, Jr. P.E. 79276 — 9/19/00
Joel K. Davenport, Jr. P.E. 79276 — Date

©2000 Texas Department of Transportation

# SIGNING LAYOUT

**SHEET 29a OF 57**

| FED. RD. DIV. NO. | FEDERAL AID PROJECT NO. | | SHEET NO. |
|---|---|---|---|
| 6 | NH 2000(704), etc. | | 671 |
| STATE | DIST. | COUNTY | |
| TEXAS | SAT | BEXAR | |
| CONT. | SECT. | JOB | HIGHWAY NO. |
| 2452 | 01 | 036, etc. | LP 1604 |

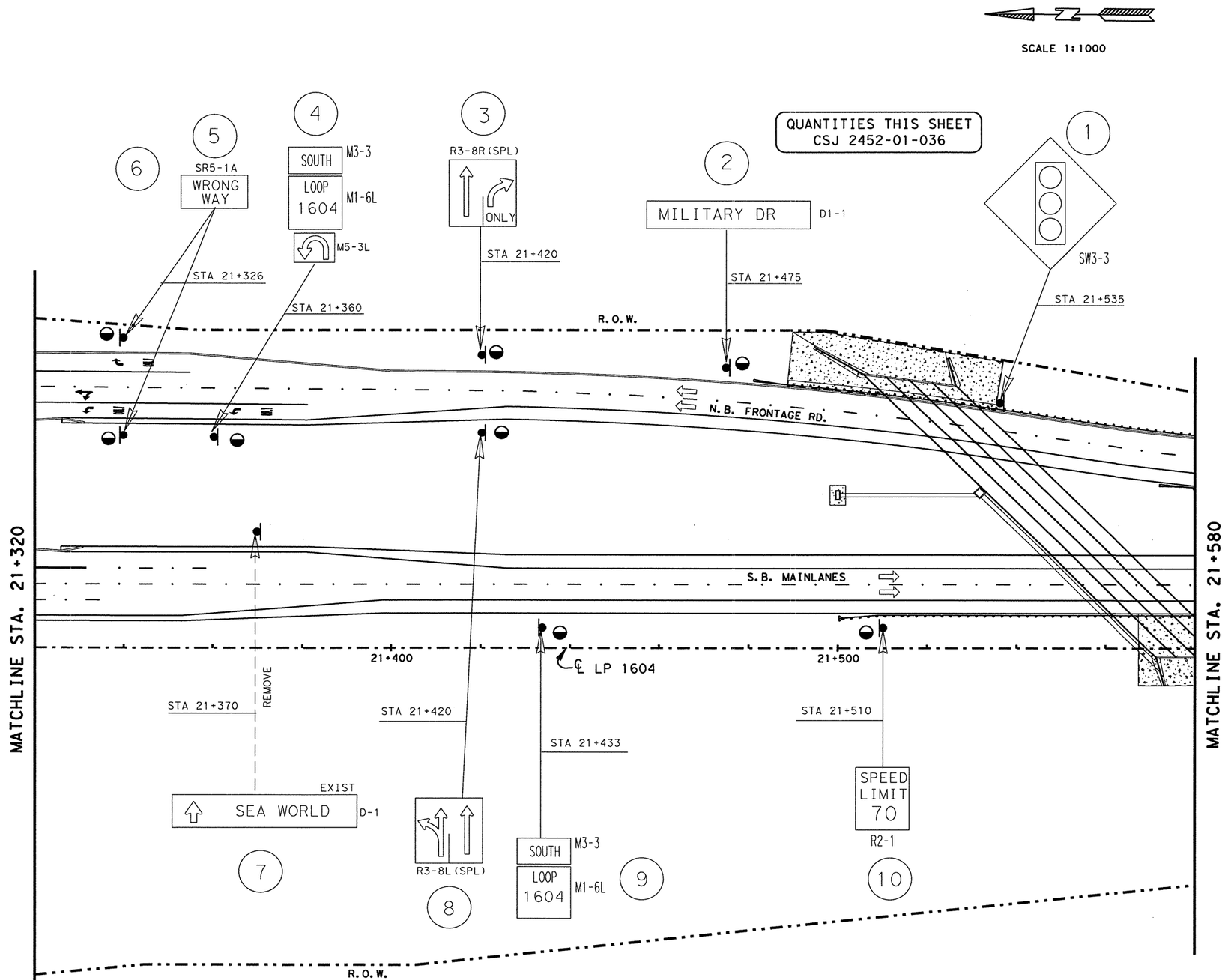


| RIPRAP APRONS QUANTITIES | | | |
|---|---|---|---|
| TYPE OF MOUNT | EA. | MULTIPLIED BY M3 | TOTAL M3 |
| SINGLE POST | 8 | 1.0 | 8.0 |
| MULTI - POST | | 1.5 | |
| OVHD. SIGN BRIDGE | | | |
| CLASS "B" CONC. GRAND TOTAL | | | 8.0 |

SEE SHEET NO. 753 FOR RIPRAP APRON DETAILS.
SEE SHEET NO. 58 FOR RIPRAP SUMMARIZATION.

NOTE(S):

PAVEMENT MARKINGS SHOWN FOR REFERENCE ONLY. SEE PAVEMENT MARKINGS/DELINEATION LAYOUTS FOR DETAILS AND QUANTITIES.

LEVELS DISPLAYED
1 2 3 4 5 6 7 8 | 1 2 3 4 5 6 7 8 9 10 11 12 13 14 15 16 17 18 19 20 21 22 23 24 25 26 27 28 29 30 31 32 33 34 35 36 37 38 39 40 41 42 43 44 45 46 47 48 49 50 51 52 53 54 55 56 57 58 59 60 61 62 63

ACC: t:\oo\design\lp1604fm471-90\pave-sign\
FILE: pavmrkplan30.dgn

©2000

Texas Department of Transportation

# SIGNING LAYOUT

**SHEET 30 OF 57**

| FED. RD. DIV. NO. | FEDERAL AID PROJECT NO. | | SHEET NO. |
|---|---|---|---|
| 6 | NH 2000(704), etc. | | 672 |
| STATE | DIST. | COUNTY | |
| TEXAS | SAT | BEXAR | |
| CONT. | SECT. | JOB | HIGHWAY NO. |
| 2452 | 01 | 036, etc. | LP 1604 |

STATE OF TEXAS
JOEL K. DAVENPORT, JR.
79276
REGISTERED
PROFESSIONAL ENGINEER

Joel K. Davenport, Jr. 9/19/00
Joel K. Davenport, Jr. P.E. 79276 Date

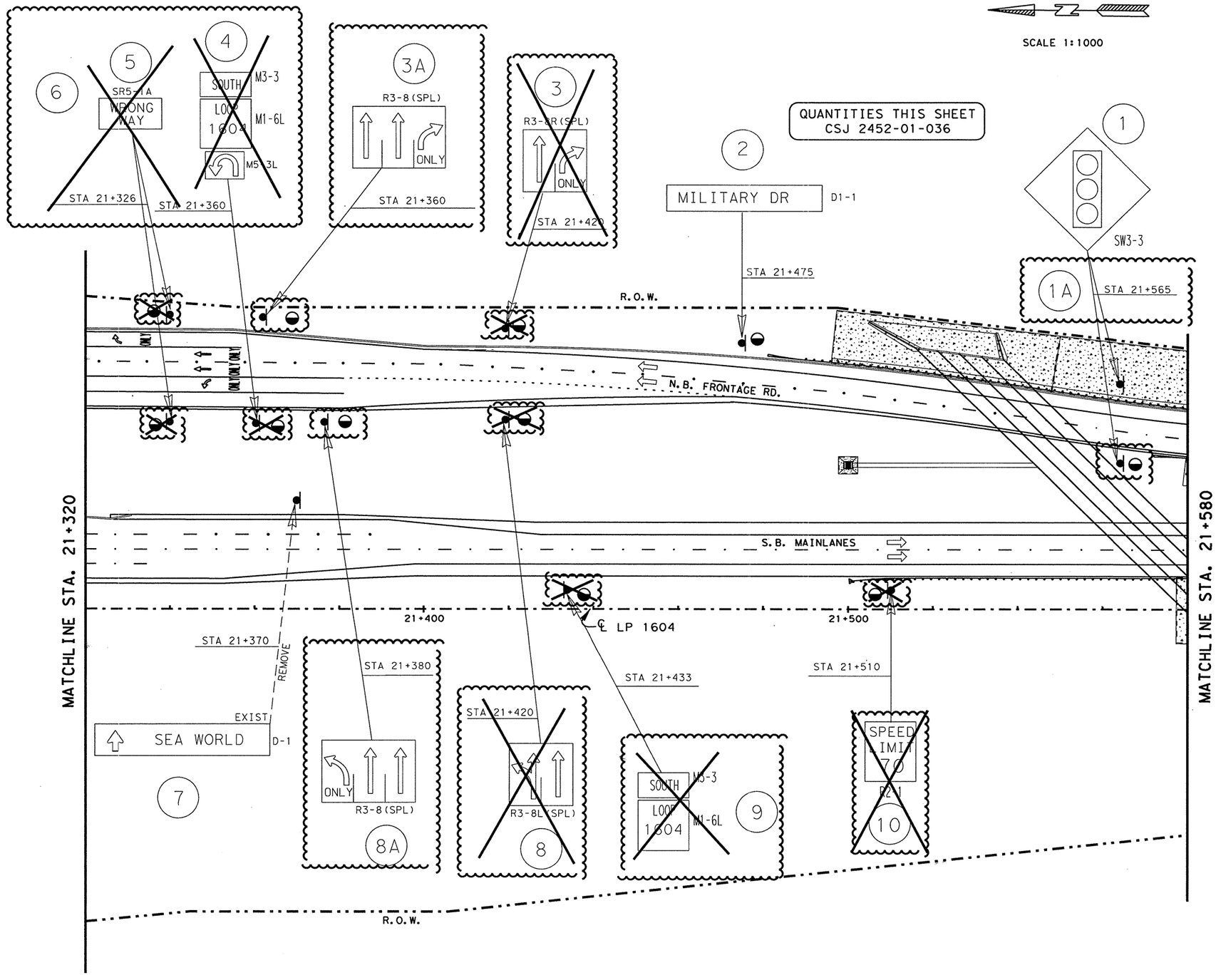


| RIPRAP APRONS QUANTITIES | | | |
|---|---|---|---|
| TYPE OF MOUNT | EA. | MULTIPLIED BY M3 | TOTAL M3 |
| SINGLE POST | 4 | 1.0 | 4.0 |
| MULTI - POST | | 1.5 | |
| OVHD. SIGN BRIDGE | | | |
| CLASS "B" CONC. GRAND TOTAL | | | 4.0 |

SEE SHEET NO. 153 FOR RIPRAP APRON DETAILS.
SEE SHEET NO. 58 FOR RIPRAP SUMMARIZATION.

NOTE(S):

PAVEMENT MARKINGS SHOWN FOR REFERENCE ONLY. SEE PAVEMENT MARKINGS/DELINEATION LAYOUTS FOR DETAILS AND QUANTITIES.

⚠ REFERS TO CHANGES MADE AS PART OF CHANGE ORDER.

CHANGE ORDER NO. 65
-ELIMINATED SIGNS
-REVISED SIGN LOCATIONS
-REVISED RIPRAP APRON QUANTITIES

CHANGE ORDER 65

REVISED SHEET

STATE OF TEXAS
JEROME D. PAVLISKA
76075
REGISTERED PROFESSIONAL ENGINEER

Jerome D. Pavliska, P.E. 2/06/04
Jerome D. Pavliska, P.E. Date

LEVELS DISPLAYED
1 2 3 4 5 6 7 8 | 1 2 | 3 1 4 1 5 1 6 | ACC: t:\ao\design\lp1604fm471-90\pave-sign\
2 0 2 1 2 2 2 3 2 4 2 5 2 6 2 7 2 8 2 9 3 0 3 1 3 2
3 3 3 4 3 5 3 6 3 7 3 8 3 9 4 0 4 1 4 2 4 3 4 4 4 5 4 6 4 7 4 8 | FILE: pavmrkplan30.dgn
4 9 5 0 5 1 5 2 5 3 5 4 5 5 5 6 5 7 5 8 5 9 6 0 6 1 6 2 6 3

©2000 Texas Department of Transportation

# SIGNING LAYOUT

SHEET 30 OF 57

| FED. RD. DIV. NO. | FEDERAL AID PROJECT NO. | | SHEET NO. |
|---|---|---|---|
| 6 | NH 2000(704), etc. | | 672A |
| STATE | DIST. | COUNTY | |
| TEXAS | SAT | BEXAR | |
| CONT. | SECT. | JOB | HIGHWAY NO. |
| 2452 | 01 | 036, etc. | LP 1604 |

02-05-04

QUANTITIES THIS SHEET
CSJ 2452-01-036

SCALE 1:1000

| RIPRAP APRONS QUANTITIES | | | |
|---|---|---|---|
| TYPE OF MOUNT | EA. | MULTIPLIED BY M3 | TOTAL M3 |
| SINGLE POST | 8 | 1.0 | 8.0 |
| MULTI - POST | | 1.5 | |
| OVHD. SIGN BRIDGE | | | |
| CLASS "B" CONC. GRAND TOTAL | | | 8.0 |

SEE SHEET NO. 753 FOR RIPRAP APRON DETAILS.
SEE SHEET NO. 58 FOR RIPRAP SUMMARIZATION.

NOTE(S):

PAVEMENT MARKINGS SHOWN FOR REFERENCE ONLY. SEE PAVEMENT MARKINGS/DELINEATION LAYOUTS FOR DETAILS AND QUANTITIES.

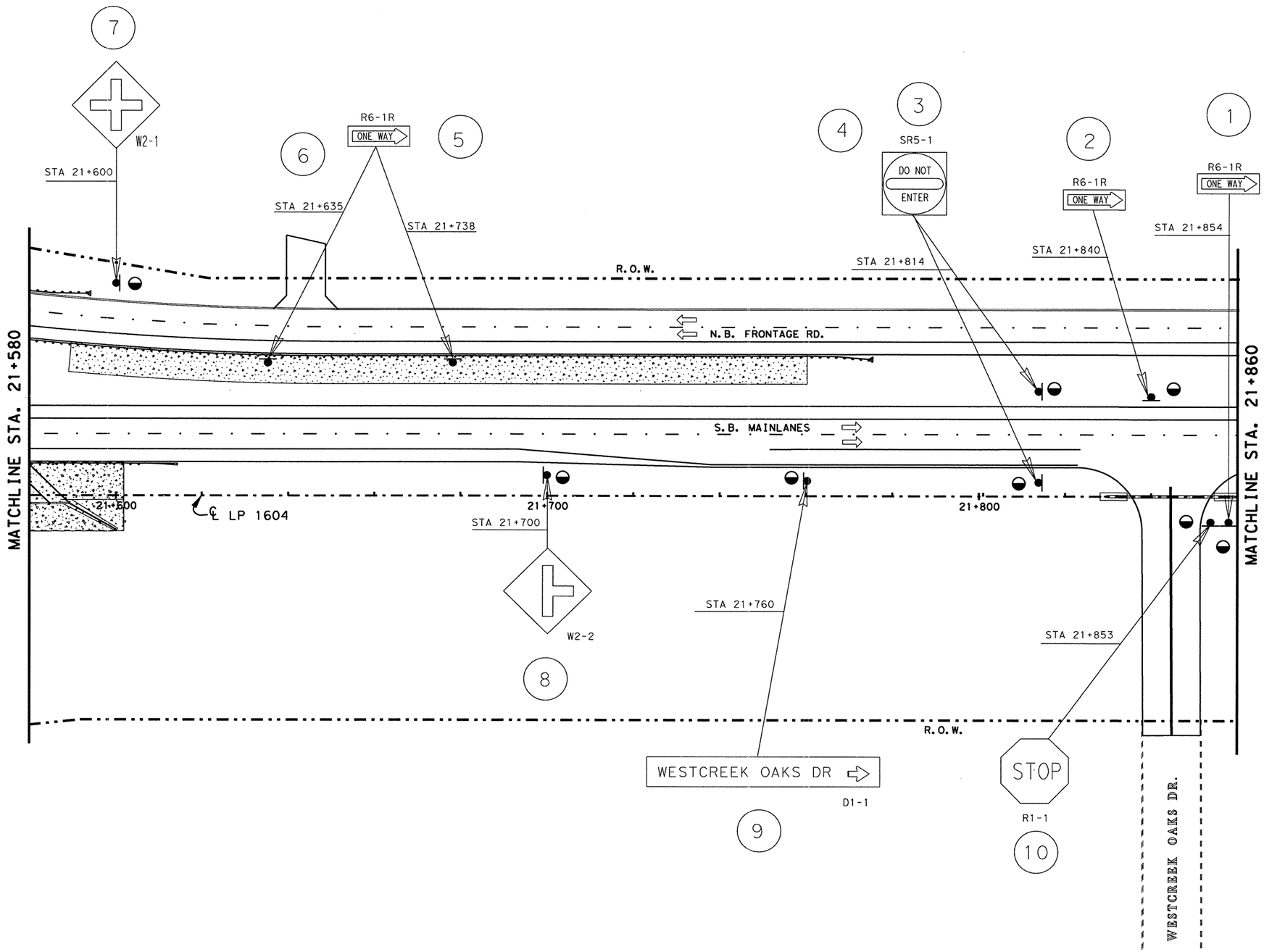


LEVELS DISPLAYED
1 2 3 4 5 6 7 8 | 1 2 3 4 5 6
17 18 19 20 21 22 23 24 25 26 27 28 29 30 31 33
333 435 535 635 735 835 935 1041 1142 1243 1344 1445 1546 1647 1748
4950 5051 5152 5253 5354 5455 5556 5657 5758 5859 5960 6061 6162 63

ACC: t:\oo\design\
lp1604fm471-90\pave-sign\
FILE: pavmrkplan31.dgn

STATE OF TEXAS
JOEL K. DAVENPORT, JR.
79276
REGISTERED
PROFESSIONAL ENGINEER

Joel K Davenport Jr 9/19/00
Joel K. Davenport, Jr. P.E. 79276 Date

©2000 Texas Department of Transportation

# SIGNING LAYOUT

SHEET 31 OF 57

| FED. RD. DIV. NO. | FEDERAL AID PROJECT NO. | | SHEET NO. |
|---|---|---|---|
| 6 | NH 2000(704), etc. | | 673 |
| STATE | DIST. | COUNTY | |
| TEXAS | SAT | BEXAR | |
| CONT. | SECT. | JOB | HIGHWAY NO. |
| 2452 | 01 | 036, etc. | LP 1604 |

QUANTITIES THIS SHEET
CSJ 2452-01-036

SCALE 1:1000

| RIPRAP APRONS QUANTITIES | | | |
|---|---|---|---|
| TYPE OF MOUNT | EA. | MULTIPLIED BY M3 | TOTAL M3 |
| SINGLE POST | 7 | 1.0 | 7.0 |
| MULTI - POST | | 1.5 | |
| OVHD. SIGN BRIDGE | | | |
| CLASS "B" CONC. GRAND TOTAL | | | 7.0 |

SEE SHEET NO. 753 FOR RIPRAP APRON DETAILS.
SEE SHEET NO. 58 FOR RIPRAP SUMMARIZATION.

NOTE(S):

PAVEMENT MARKINGS SHOWN FOR REFERENCE ONLY. SEE PAVEMENT MARKINGS/DELINEATION LAYOUTS FOR DETAILS AND QUANTITIES.

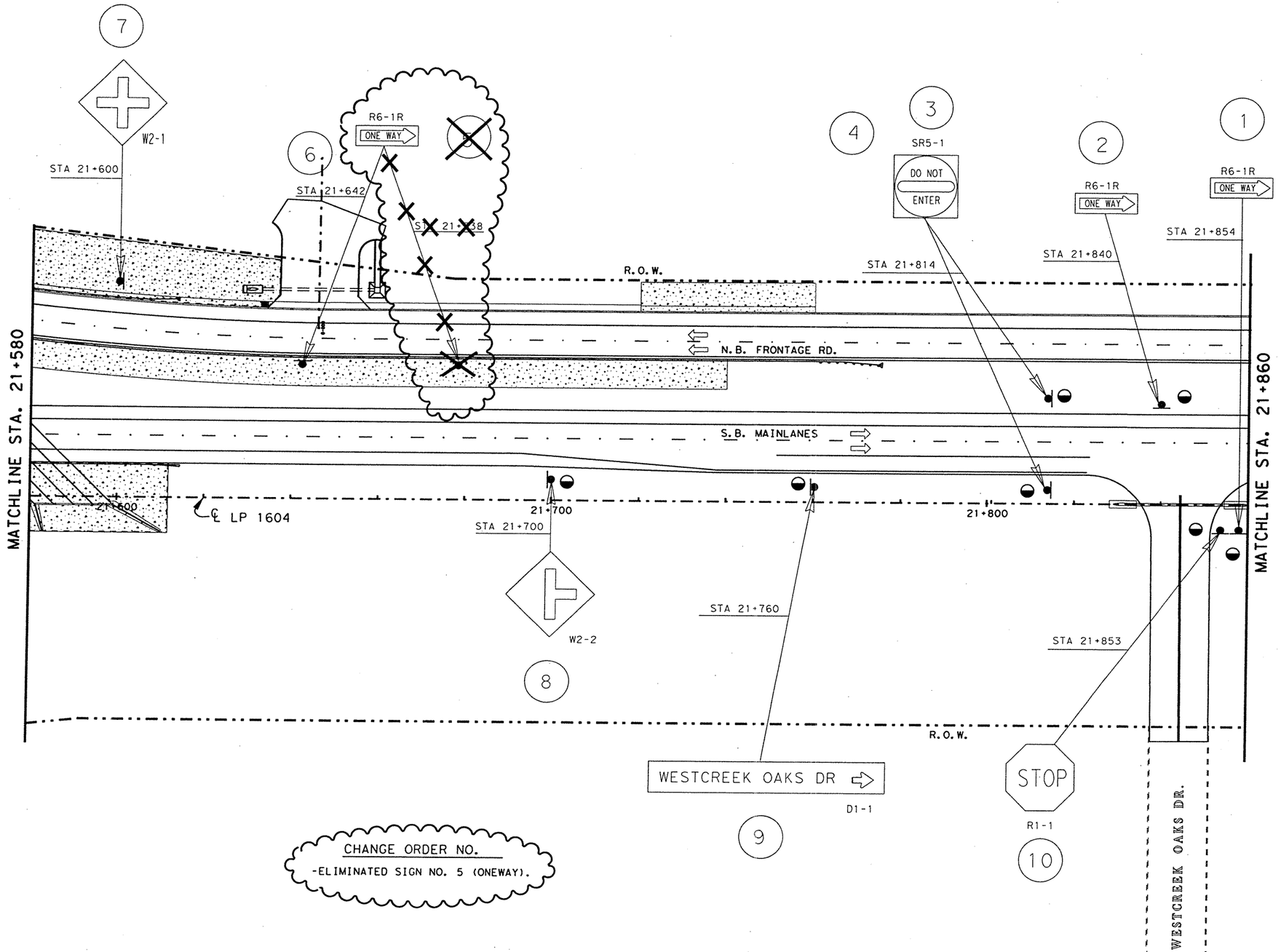


CHANGE ORDER NO.
-ELIMINATED SIGN NO. 5 (ONEWAY).

CHANGE ORDER 139

REVISED SHEET

STATE OF TEXAS
MIGUEL G. ROGERIO
96620
LICENSED PROFESSIONAL ENGINEER

Miguel G. Rogerio, P.E. 1/22/2007
Miguel G. Rogerio, P.E. Date

©2000
Texas Department of Transportation

SIGNING LAYOUT

SHEET 31 OF 57

| FED. RD. DIV. NO. | FEDERAL AID PROJECT NO. | SHEET NO. |
|---|---|---|
| 6 | NH 2000(704), etc. | 673A |
| STATE | DIST. COUNTY | |
| TEXAS | SAT BEXAR | |
| CONT. | SECT. JOB | HIGHWAY NO. |

LEVELS DISPLAYED
1 2 3 4 5 6 7 8 | 1 2 3 4 5 6 7 8 9 10 11 12 13 14 15 16 17 18 19 20 21 22 23 24 25 26 27 28 29 30 31 32 33 34 35 36 37 38 39 40 41 42 43 44 45 46 47 48 49 50 51 52 53 54 55 56 57 58 59 60 61 62 63
ACC: t:\ao\design\
lp1604fm471-90\pave-sign\
FILE: signing31.dgn

QUANTITIES THIS SHEET
CSJ 2452-01-036

SCALE 1:1000

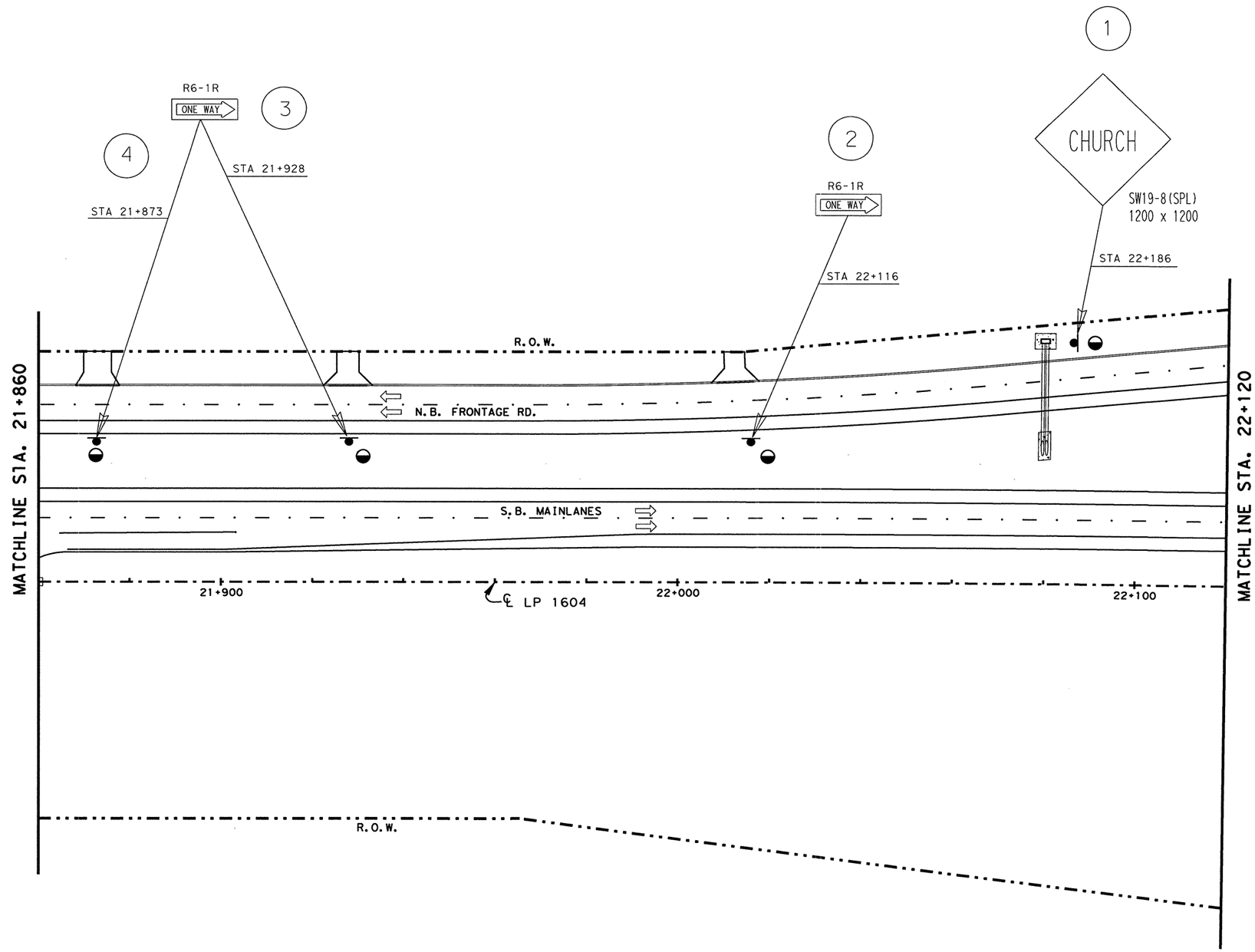


| RIPRAP APRONS QUANTITIES | | | | |
|---|---|---|---|---|
| TYPE OF MOUNT | | EA. | MULTIPLIED BY M3 | TOTAL M3 |
| SINGLE POST | ◒ | 4 | 1.0 | 4.0 |
| MULTI - POST | ⬓ | | 1.5 | |
| OVHD. SIGN BRIDGE | ◆ | | | |
| CLASS "B" CONC. GRAND TOTAL | | | | 4.0 |

SEE SHEET NO. 753 FOR RIPRAP APRON DETAILS.
SEE SHEET NO. 58 FOR RIPRAP SUMMARIZATION.

NOTE(S):

PAVEMENT MARKINGS SHOWN FOR REFERENCE ONLY. SEE PAVEMENT MARKINGS/DELINEATION LAYOUTS FOR DETAILS AND QUANTITIES.

LEVELS DISPLAYED
1 2 3 4 5 6 7 8 | 21 31 41 51 6
1 7 8 1 9 20 21 22 23 24 25 26 27 28 29 30 31 32 33 34 35 36
37 38 41 55 56 57 58 59 60 61 62 63 64 65 66 67 68
39 40 42 43 44 45 46 47 48
49 50 51 52 53 54 55 56 57 58 59 60 61 62 63

ACC: t:\oo\design\
lp1604fm471-90\pave-sign\
FILE: pavmrkplan32.dgn

STATE OF TEXAS
JOEL K. DAVENPORT, JR.
79276
REGISTERED
PROFESSIONAL ENGINEER

Joel K. Davenport Jr. 9/19/00
Joel K. Davenport, Jr., P.E. 79276 Date

Texas Department of Transportation

# SIGNING LAYOUT

**SHEET 32 OF 57**

| FED. RD. DIV. NO. | FEDERAL AID PROJECT NO. | | SHEET NO. |
|---|---|---|---|
| 6 | NH 2000(704), etc. | | 674 |
| STATE | DIST. | COUNTY | |
| TEXAS | SAT | BEXAR | |
| CONT. | SECT. | JOB | HIGHWAY NO. |
| 2452 | 01 | 036, etc. | LP 1604 |

QUANTITIES THIS SHEET
CSJ 2452-01-036

SCALE 1:1000

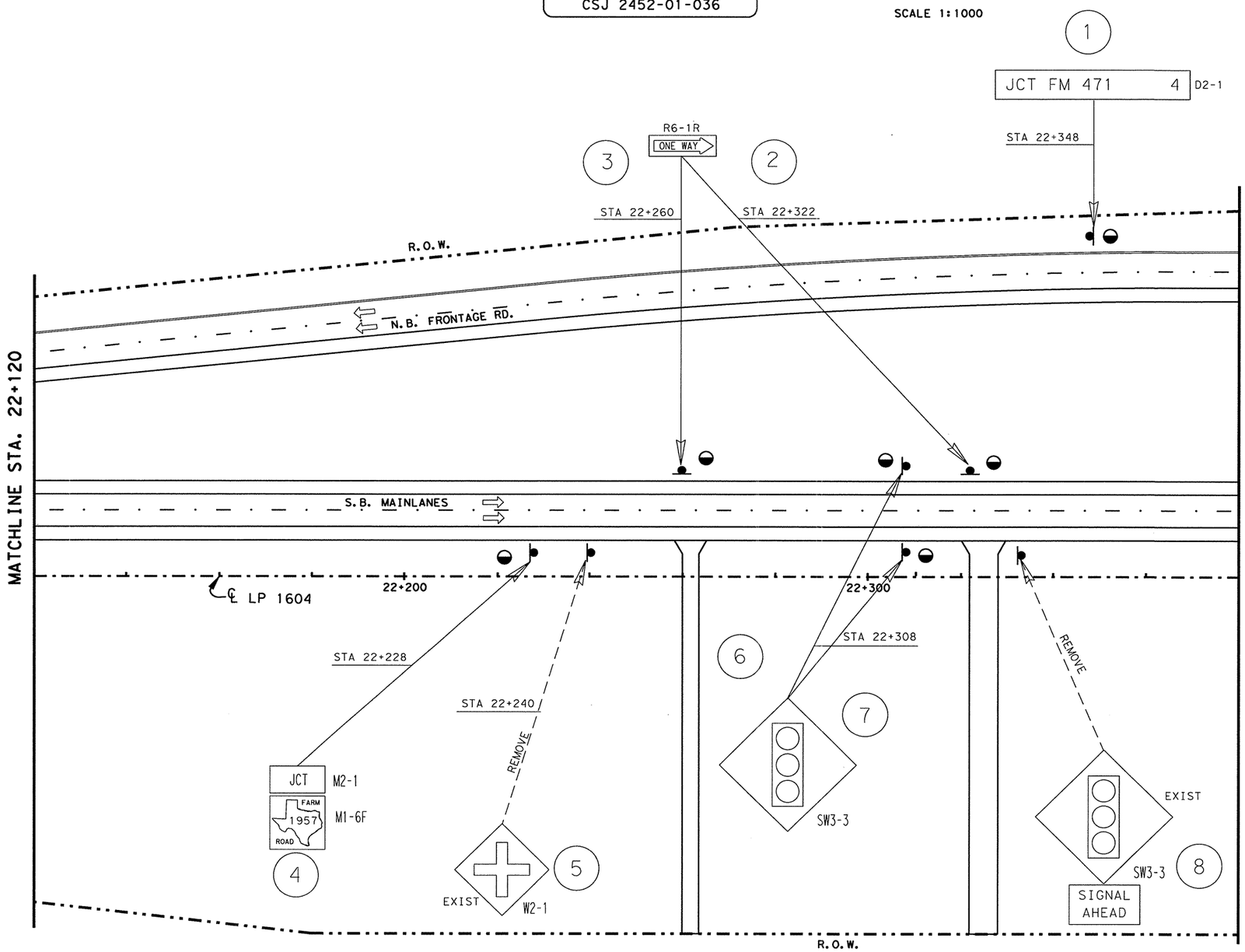


| RIPRAP APRONS QUANTITIES | | | |
|---|---|---|---|
| TYPE OF MOUNT | EA. | MULTIPLIED BY M3 | TOTAL M3 |
| SINGLE POST | 6 | 1.0 | 6.0 |
| MULTI - POST | | 1.5 | |
| OVHD. SIGN BRIDGE | | | |
| CLASS "B" CONC. GRAND TOTAL | | | 6.0 |

SEE SHEET NO. 753 FOR RIPRAP APRON DETAILS.
SEE SHEET NO. 58 FOR RIPRAP SUMMARIZATION.

NOTE(S):

PAVEMENT MARKINGS SHOWN FOR REFERENCE ONLY. SEE PAVEMENT MARKINGS/DELINEATION LAYOUTS FOR DETAILS AND QUANTITIES.

LEVELS DISPLAYED
1 2 3 4 5 6 7 8 | | | 12 13 14 15 16
17 18 19 20 21 22 23 24 25 26 27 28 29 30 31 32
33 34 35 36 37 38 39 40 41 42 43 44 45 46 47 48
49 50 51 52 53 54 55 65 75 85 96 06 16 26 63

ACC: t:\oa\design\
lp1604fm471-90\pave-sign\
FILE: pavmrkplan33.dgn

STATE OF TEXAS
JOEL K. DAVENPORT, JR.
79276
REGISTERED PROFESSIONAL ENGINEER

Joel K. Davenport, Jr. 9/19/00
Joel K. Davenport, Jr. P.E. 79276 Date

©2000
Texas Department of Transportation

# SIGNING LAYOUT

**SHEET 33 OF 57**

| FED. RD. DIV. NO. | FEDERAL AID PROJECT NO. | SHEET NO. |
|---|---|---|
| 6 | NH 2000(704), etc. | 675 |
| STATE | DIST. | COUNTY |
| TEXAS | SAT | BEXAR |
| CONT. | SECT. | JOB / HIGHWAY NO. |
| 2452 | 01 | 036, etc. / LP 1604 |

SCALE 1:1000

QUANTITIES THIS SHEET
CSJ 2452-01-036

| RIPRAP APRONS QUANTITIES | | | |
|---|---|---|---|
| TYPE OF MOUNT | EA. | MULTIPLIED BY M3 | TOTAL M3 |
| SINGLE POST | 21 | 1.0 | 21.0 |
| MULTI - POST | 1 | 1.5 | 1.0 |
| OVHD. SIGN B"IDGE | | | |
| CLASS "B" CONC. GRAND TOTAL | | | 22.0 |

SEE SHEET NO. 753 FOR RIPRAP APRON DETAILS.
SEE SHEET NO. 58 FOR RIPRAP SUMMARIZATION.

NOTE(S):

PAVEMENT MARKINGS SHOWN FOR REFERENCE ONLY. SEE PAVEMENT MARKINGS/DELINEATION LAYOUTS FOR DETAILS AND QUANTITIES.

MATCHLINE STA. 22+380

MATCHLINE STA. 22+700

N.B. FRONTAGE RD.

S.B. MAINLANES

R.O.W.

POTRANCO RD

STAR

NTAR

SEE SHEET 34A & B OF 57 FOR SIGNING ASSOCIATED WITH POTRANCO RD.

22+400 ℄ LP 1604 22+500 22+600

1 SOUTH LOOP 1604 M3-3 M1-6L M5-3L STA 22+696

2 STA 22+694

3 SR5-1A WRONG WAY STA 22+694

4 R3-7R RIGHT LANE MUST TURN RIGHT STA 22+631

5 WEST M3-4 FARM 1957 ROAD M1-6F M6-1L
EAST M3-2 FARM 1957 ROAD M1-6F M6-1R
STA 22+631

6 SR5-1 DO NOT ENTER

7 STA 22+631 STA 22+627

8 STA 22+580

8A FR1-2 YIELD STA 22+631 ATTACH TO BACK OF DO NOT ENTER

9 STA 22+582

10 NORTH LOOP 1604 M3-1 M1-6L STA 22+500

11 STA 22+516

12 R6-1R ONE WAY STA 22+464

13 R2-1 SPEED LIMIT 60 STA 22+426

14 R6-1R ONE WAY STA 22+392

15 D9-3A D9-3a M6-1BL M6-1BR STA 22+380

16 POTRANCO RD
SAN ANTONIO 14
RIO MEDINA 12
D1-3a

17 R3-8R(SPL) ONLY STA 22+500

18 EXIST
SAN ANTONIO 14
RIO MEDINA 12
CAMPING
D1-3
REMOVE

19 NORTH LOOP 1604 M3-1 M1-6L M5-3L STA 22+526

20 STA 22+530

21 WRONG WAY SR5-1A STA 22+530

22 RIGHT LANE MUST TURN RIGHT R3-7R STA 22+580

23 EAST M3-2 FARM 1957 ROAD M1-6F M6-1L
WEST M3-4 FARM 1957 ROAD M1-6F M6-1R
STA 22+580

24 DO NOT ENTER SR5-1 STA 22+600

25 FR1-2 YIELD STA 22+600 ATTACH TO BACK OF YIELD

26 STA 22+641 STA 22+650

27

STATE OF TEXAS
JOEL K. DAVENPORT, JR.
79276
REGISTERED PROFESSIONAL ENGINEER

Joel K. Davenport Jr. 9/19/00
Joel K. Davenport Jr., P.E. Date

LEVELS DISPLAYED
1 2 3 4 5 6 7 8 | 12 13 14 15 16
17 18 19 20 21 22 23 24 25 26 27 28 29 30 31 32
33 34 35 36 37 38 39 40 41 42 43 44 45 46 47 48
49 50 51 52 53 54 55 65 75 85 96 06 16 26 36

ACC: t:\ao\design\
lp1604fm471-90\pave-sign\
FILE: pavmrkplan34.dgn

©2000 Texas Department of Transportation

# SIGNING LAYOUT

SHEET 34 OF 57

| FED.RD. DIV.NO. | FEDERAL AID PROJECT NO. | SHEET NO. |
|---|---|---|
| 6 | NH 2000(704),etc. | 676 |
| STATE | DIST. | COUNTY |
| TEXAS | SAT | BEXAR |
| CONT. | SECT. | JOB / HIGHWAY NO. |
| 2452 | 01 | 036,etc. / LP 1604 |

Plotted on: 01/27/2004

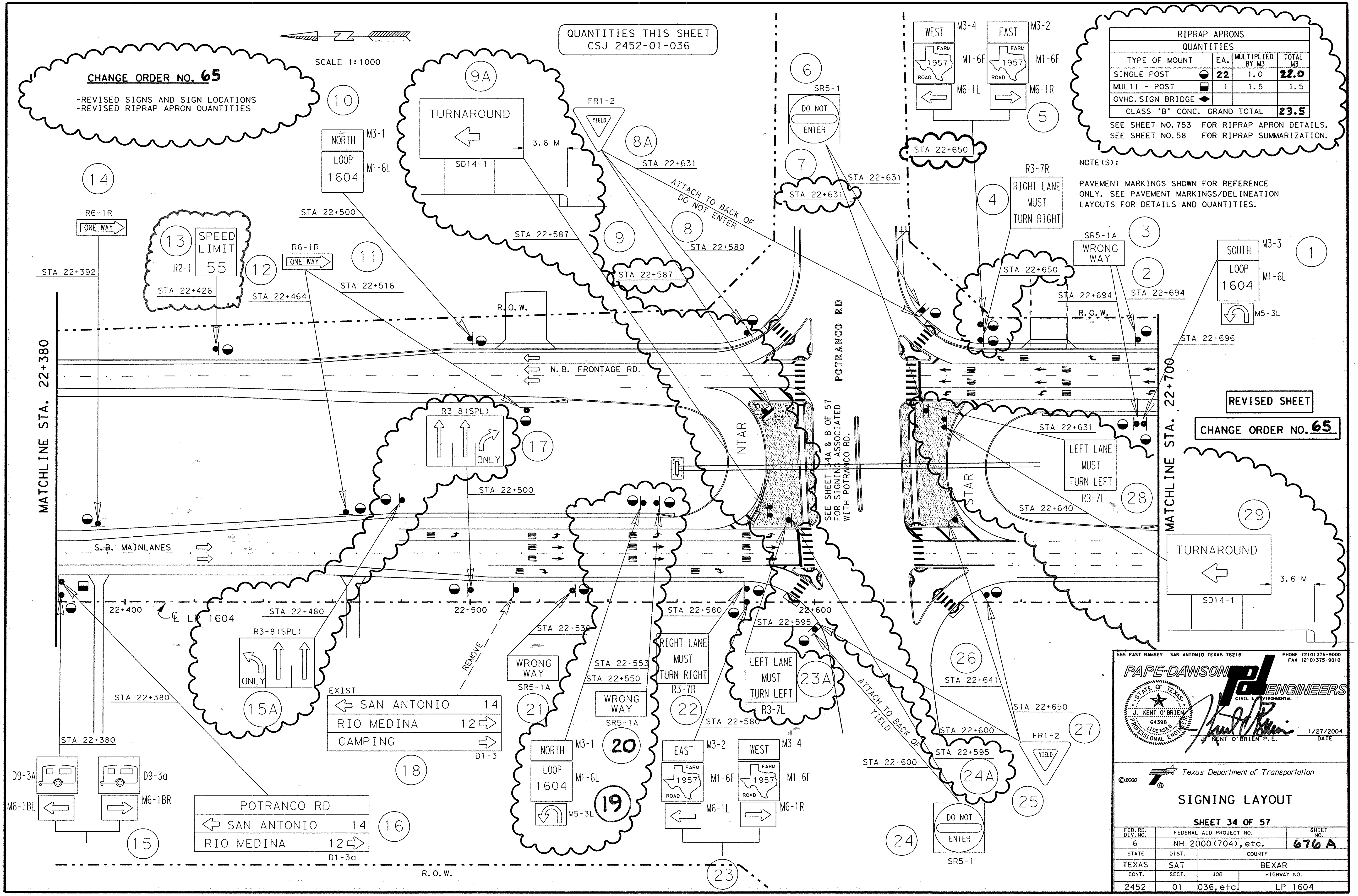


RIPRAP APRONS QUANTITIES

| TYPE OF MOUNT | EA. | MULTIPLIED BY M3 | TOTAL M3 |
|---|---|---|---|
| SINGLE POST | 22 | 1.0 | 22.0 |
| MULTI - POST | 1 | 1.5 | 1.5 |
| OVHD. SIGN BRIDGE | | | |
| CLASS "B" CONC. GRAND TOTAL | | | 23.5 |

SEE SHEET NO. 753 FOR RIPRAP APRON DETAILS.
SEE SHEET NO. 58 FOR RIPRAP SUMMARIZATION.

NOTE(S):

PAVEMENT MARKINGS SHOWN FOR REFERENCE ONLY. SEE PAVEMENT MARKINGS/DELINEATION LAYOUTS FOR DETAILS AND QUANTITIES.

555 EAST RAMSEY SAN ANTONIO TEXAS 78216 PHONE (210)375-9000 FAX (210)375-9010
PAPE-DAWSON ENGINEERS CIVIL & ENVIRONMENTAL
STATE OF TEXAS J. KENT O'BRIEN 64398 LICENSED PROFESSIONAL ENGINEER
J. KENT O'BRIEN P.E. 1/27/2004 DATE

©2000 Texas Department of Transportation

# SIGNING LAYOUT

SHEET 34 OF 57

| FED. RD. DIV. NO. | FEDERAL AID PROJECT NO. | | SHEET NO. |
|---|---|---|---|
| 6 | NH 2000(704), etc. | | 676 A |
| STATE | DIST. | COUNTY | |
| TEXAS | SAT | BEXAR | |
| CONT. | SECT. | JOB | HIGHWAY NO. |
| 2452 | 01 | 036, etc. | LP 1604 |

LEVELS DISPLAYED 1 2 3 4 5 6 7 8 12 13 14 15 16 17 18 19 20 21 22 23 24 25 26 27 28 29 30 31 32 33 34 35 36 37 38 39 40 41 42 43 44 45 46 47 48 49 50 51 52 53 54 55 56 57 58 59 60 61 62 63
ACC: t:\ao\design\ lp1604fm471-90\pave-sign\
FILE: pavmrkplan34.dgn
Design Filename: p:\52\20\11\design\civil\plansheets\traffic\signing\signing34.dgn

QUANTITIES THIS SHEET
CSJ 2452-01-036

SCALE 1:1000

| RIPRAP APRONS QUANTITIES | | | |
|---|---|---|---|
| TYPE OF MOUNT | EA. | MULTIPLIED BY M3 | TOTAL M3 |
| SINGLE POST | 15 | 1.0 | 15.0 |
| MULTI - POST | 1 | 1.5 | 1.5 |
| OVHD. SIGN BRIDGE | | | |
| CLASS "B" CONC. GRAND TOTAL | | | 16.5 |

SEE SHEET NO. 753 FOR RIPRAP APRON DETAILS.
SEE SHEET NO. 58 FOR RIPRAP SUMMARIZATION.

NOTE(S):

PAVEMENT MARKINGS SHOWN FOR REFERENCE ONLY. SEE PAVEMENT MARKINGS/DELINEATION LAYOUTS FOR DETAILS AND QUANTITIES.

8 — WEST M3-4 / FARM 1957 ROAD M1-6F

9 — STA 20+140 — EXIST RIO MEDINA 12 D-1

10 — EXIST WEST M3-4 / FARM 1957 ROAD M1-6F — STA 20+122 — REMOVE

11 — SPEED LIMIT 45 R2-1 — REMOVE

JCT M2-1 / LOOP 1604 M1-6L — STA 20+100

11A — STA 20+080 — R.O.W. — STA 20+035 — FM 1957

11B — HIGHWAY INTERSECTION 1000 FT W2-6B

12 — EXIST JCT M2-1 / LOOP 1604 M1-6L — REMOVE — STA 20+060 — STA 20+065

13 — EXIST SW3-3 — R.O.W. — REMOVE — STA 20+095 — 13A

14 — EXIST JCT FM 471 4 / JCT US 90 4 D1-2a — STA 20+118

6 — TURNAROUND SD14-1 — 3.6 M

7 — SR5-1 DO NOT ENTER — STA 22+585 — STA 22+593

EXIST NORTH M3-1 / LOOP 1604 M1-6L / M6-1L — SOUTH M3-3 / LOOP 1604 M1-6L / M6-1R

15A — R3-8R ONLY — REMOVE — STA 20+160 — STA 20+175

15B — ℄ LP 1604 — 22+600

15 — STA 20+138 — JCT FM 471 4 / JCT US 90 4 D1-2a — STA 20+192

15C — WEST M3-4 / FARM 1957 ROAD M1-6F / M6-3 — SOUTH M3-3 / LOOP 1604 M1-6L / M6-3 — NORTH M3-1 / LOOP 1604 M1-6L / M6-1R — 22+700

15D — RIGHT LANE MUST TURN RIGHT R3-7R — STA 20+192

5 — RIGHT LANE MUST TURN RIGHT R3-7R — NTAR — STAR

S.B. MAINLANES ⇩⇩

N.B. FRONTAGE RD. ⇧⇧

4 — WEST M3-4 / FARM 1957 ROAD M1-6F / M6-3 — SOUTH M3-3 / LOOP 1604 M1-6L / M6-3 — NORTH M3-1 / LOOP 1604 M1-6L / M6-1R

R.O.W. — STA 20+311

3 — EXIST JCT US 90 4 / JCT FM 471 4 D1-2 — STA 20+344 — REMOVE — STA 20+366 — REMOVE

2 — JCT M2-1 / LOOP 1604 M1-6L — EXIST

1 — ONLY R3-8R (SPL) — STA 20+382

20 — SAN ANTONIO 14 EXIST D1 — POTRANCO RD.

R.O.W. — STA 20+367 — REMOVE — STA 20+392

18A — LOW WATER CROSSING W8-13 EXIST

STA 20+500 — SPEED LIMIT 45 R2-1

21 — STA 20+400 — BEGIN M4-11

19 — R3-9A

STA 20+340 — STA 20+360 — REMOVE — EXIST SPEED LIMIT 45 R2-1

16 — EAST M3-2 / FARM 1957 ROAD M1-6F

17 — WATCH FOR WATER ON ROAD W8-15

18 — W8-15

LEVELS DISPLAYED
1 2 3 4 5 6 7 8 9 10 11 12 13 14 15 16
17 18 19 20 21 22 23 24 25 26 27 28 29 30 31 33
33 34 35 36 37 38 39 40 41 42 43 44 45 46 47 48
49 50 51 52 53 54 55 56 57 58 59 60 61 62 63

ACC: t:/ao/design/lp1604fm471-90/pave-sign/
FILE: pavmrkplan34a.dgn

©2000

Texas Department of Transportation

# SIGNING LAYOUT

SHEET 34a OF 57

| FED. RD. DIV. NO. | FEDERAL AID PROJECT NO. | SHEET NO. |
|---|---|---|
| 6 | NH 2000(704), etc. | 677 |
| STATE | DIST. | COUNTY |
| TEXAS | SAT | BEXAR |
| CONT. | SECT. | JOB / HIGHWAY NO. |
| 2452 | 01 | 036, etc. / LP 1604 |

STATE OF TEXAS — JOEL K. DAVENPORT, JR. — 79276 — REGISTERED PROFESSIONAL ENGINEER

Joel K. Davenport Jr. 9/19/00
Joel K. Davenport Jr., P.E. Date

QUANTITIES THIS SHEET
CSJ 2452-01-036

SCALE 1:1000

| RIPRAP APRONS QUANTITIES | | | |
|---|---|---|---|
| TYPE OF MOUNT | EA. | MULTIPLIED BY M3 | TOTAL M3 |
| SINGLE POST | 15 | 1.0 | 15.0 |
| MULTI - POST | 1 | 1.5 | 1.5 |
| OVHD. SIGN BRIDGE | | | |
| CLASS "B" CONC. GRAND TOTAL | | | 16.5 |

SEE SHEET NO. 753 FOR RIPRAP APRON DETAILS.
SEE SHEET NO. 58 FOR RIPRAP SUMMARIZATION.

NOTE(S):

PAVEMENT MARKINGS SHOWN FOR REFERENCE ONLY. SEE PAVEMENT MARKINGS/DELINEATION LAYOUTS FOR DETAILS AND QUANTITIES.

6
TURNAROUND
SD14-1
3.6 M
STA 22+586

8
WEST M3-4
FARM 1957 ROAD M1-6F

9
STA 20+140
EXIST
RIO MEDINA 12
D-1

10
EXIST
WEST M3-4
FARM 1957 ROAD M1-6F
STA 20+122
REMOVE

11
SPEED LIMIT 45
R2-1
REMOVE
JCT M2-1
LOOP 1604 M1-6L
STA 20+100
STA 20+080

11A
R.O.W.
STA 20+035
FM 1957

11B
HIGHWAY INTERSECTION 1000 FT
W2-6B

12
EXIST
JCT M2-1
LOOP 1604 M1-6L
REMOVE
STA 20+060
STA 20+065

13
EXIST
SW3-3

13A
R.O.W.
REMOVE
STA 20+095

14
EXIST
JCT FM 471 4
JCT US 90 4
D1-2a

15
STA 20+138
STA 20+192

15A
R3-8R
ONLY
REMOVE
STA 20+175
STA 20+160

15B
EXIST
NORTH M3-1
LOOP 1604 M1-6L
M6-1L
SOUTH M3-3
LOOP 1604 M1-6L
M6-1R
STA 22+593

15C
WEST M3-4
FARM 1957 ROAD M1-6F
M6-3
SOUTH M3-3
LOOP 1604 M1-6L
M6-3
NORTH M3-1
LOOP 1604 M1-6L
M6-1R
22+700 ℄ LP 1604

15D
RIGHT LANE MUST TURN RIGHT
R3-7R
STA 20+192
RIGHT LANE MUST TURN RIGHT
R3-7R

SR5-1
DO NOT ENTER
7
STA 22+593

5
RIGHT LANE MUST TURN RIGHT
R3-7R
NTAR
STAR
STA 20+311

S.B. MAINLANES
N.B. FRONTAGE RD.

4
WEST M3-4
FARM 1957 ROAD M1-6F
M6-3
SOUTH M3-3
LOOP 1604 M1-6L
M6-3
NORTH M3-1
LOOP 1604 M1-6L
M6-1R
R.O.W.
STA 20+311

3
EXIST
JCT US 90 4
JCT FM 471 4
D1-2
STA 20+344
REMOVE
STA 20+366
REMOVE

2
JCT M2-1
LOOP 1604 M1-6L
EXIST

1
ONLY
R3-8R (SPL)
STA 20+382

20
SAN ANTONIO 14
EXIST D1
POTRANCO RD.

21
SPEED LIMIT 45
R2-1
STA 20+500
STA 20+400

19
BEGIN M4-11
R3-9A

18
WATCH FOR WATER ON ROAD
W8-15

18A
LOW WATER CROSSING
W8-13
EXIST
REMOVE
STA 20+392
STA 20+367

17
EXIST
SPEED LIMIT 45
R2-1
REMOVE
STA 20+360
STA 20+340

16
EAST M3-2
FARM 1957 ROAD M1-6F

R.O.W.

CHANGE ORDER NO. 65

-REMOVED 1 SIGN BECAUSE IT IS NOW SHOWN ON SHEET 34 OF 57

CHANGE ORDER 65
REVISED SHEET

STATE OF TEXAS
JEROME D. PAVLISKA
76075
REGISTERED PROFESSIONAL ENGINEER

Jerome D. Pavliska, P.E. 2/12/04
Date

©2000 Texas Department of Transportation

SIGNING LAYOUT

SHEET 34a OF 57

| FED. RD. DIV. NO. | FEDERAL AID PROJECT NO. | SHEET NO. |
|---|---|---|
| 6 | NH 2000(704), etc. | 677A |
| STATE | DIST. | COUNTY |
| TEXAS | SAT | BEXAR |
| CONT. | SECT. | JOB | HIGHWAY NO. |
| 2452 | 01 | 036, etc. | LP 1604 |

LEVELS DISPLAYED
1 2 3 4 5 6 7 8 | 1 2 3 | 4 5 6
1 7 1 8 1 9 2 0 2 1 2 2 2 3 2 4 2 5 2 6 2 7 2 8 2 9 3 0 3 3 3 1 3 2
3 3 3 4 3 5 3 6 3 7 3 8 3 9 4 0 4 1 4 2 4 3 4 4 4 5 4 6 4 7 4 8
4 9 5 0 5 1 5 2 5 3 5 4 5 5 5 6 5 7 5 8 5 9 6 0 6 1 6 2 6 3

ACC: t:/ao/design/lp1604fm471-90/pave-sign/
FILE: pavmrkplan34a.dgn

QUANTITIES THIS SHEET
CSJ 2452-01-036

| RIPRAP APRONS QUANTITIES | | | |
|---|---|---|---|
| TYPE OF MOUNT | EA. | MULTIPLIED BY M3 | TOTAL M3 |
| SINGLE POST | 3 | 1.0 | 3.0 |
| MULTI - POST | 1 | 1.5 | 1.5 |
| OVHD. SIGN BRIDGE | | | |
| CLASS "B" CONC. GRAND TOTAL | | | 4.5 |

SEE SHEET NO. 753 FOR RIPRAP APRON DETAILS.
SEE SHEET NO. 58 FOR RIPRAP SUMMARIZATION.

NOTE(S):

PAVEMENT MARKINGS SHOWN FOR REFERENCE ONLY. SEE PAVEMENT MARKINGS/DELINEATION LAYOUTS FOR DETAILS AND QUANTITIES.

N

SCALE 1:1000

℄ LP 1604

22+60

22+70

S 0° 11' 52.87" E

FM 1937

R.O.W.

R.O.W.

R.O.W.

R.O.W.

POTRANCO RD.

REMOVE

REMOVE

REMOVE

S.B. MAINLANES

N.B. FRONTAGE RD.

NTAR

STAR

4
D1-2a
RIO MEDINA 12
JCT US 90 4
STA 20+253

5
SOUTH M3-3
LOOP 1604 M1-6L
M6-1L

6
SR5-1
DO NOT ENTER

7
ONE WAY
R6-1R & R6-1L (BACK TO BACK)
STA 22+593

8
R4-7
STA 20+240
ATTACH TO BACK OF LT TURN ONLY/LT TURN OR ST

9
SAN ANTONIO 14
JCT FM 471 4
D1-2a
STA 20+253

10
SOUTH M3-3
LOOP 1604 M1-6L
M6-1L
STA 20+266

11
TURNAROUND
SD14-1
3.6 M
STA 22+638

2
R3-8L
ONLY
STA 20+240

3
STA 20+266

1
R4-7
STA 20+266
ATTACH TO BACK OF LT TURN ONLY/LT TURN OR ST

20
D1-2a
JCT US 90 4
JCT F.M. 471 4
STA 22+630

18
W2-1 EXIST
RIGHT LANE MUST TURN RIGHT 500 FT
(SPL)
STA 20+508

19
STA 20+426
STA 22+475

12
ONE WAY
R6-1R & R6-1L (BACK TO BACK)
STA 20+268

13
STA 22+630
SR5-1
DO NOT ENTER

14
SW3-3 EXIST

15
STA 20+595
STA 20+536

16
JCT M2-1
LOOP 1604 M1-6L

17
HIGHWAY INTERSECTION 1000 FT
W2-6B

LEVELS DISPLAYED
1 2 3 4 5 6 7 8 9 10 11 12 13 14 15 16 17 18 19 20 21 22 23 24 25 26 27 28 29 30 31 32 33 34 35 36 37 38 39 40 41 42 43 44 45 46 47 48 49 50 51 52 53 54 55 56 57 58 59 60 61 62 63 64

ACC: t:/oo/design/lp1604fm471-90/pave-sign/
FILE: pavmrkplan34b.dgn

©2000

Texas Department of Transportation

# SIGNING LAYOUT

SHEET 34b OF 57

| FED. RD. DIV. NO. | FEDERAL AID PROJECT NO. | | SHEET NO. |
|---|---|---|---|
| 6 | NH 2000(704), etc. | | 678 |
| STATE | DIST. | COUNTY | |
| TEXAS | SAT | BEXAR | |
| CONT. | SECT. | JOB | HIGHWAY NO. |
| 2452 | 01 | 036, etc. | LP 1604 |

STATE OF TEXAS
JOEL K. DAVENPORT, JR.
79276
REGISTERED
PROFESSIONAL ENGINEER

Joel K. Davenport Jr. 9/19/00
Joel K. Davenport Jr., P.E. Date

QUANTITIES THIS SHEET
CSJ 2452-01-036

| RIPRAP APRONS QUANTITIES | | | |
|---|---|---|---|
| TYPE OF MOUNT | EA. | MULTIPLIED BY M3 | TOTAL M3 |
| SINGLE POST | 3 | 1.0 | 3.0 |
| MULTI - POST | 1 | 1.5 | 1.5 |
| OVHD. SIGN BRIDGE | | | |
| CLASS "B" CONC. GRAND TOTAL | | | 4.5 |

SEE SHEET NO. 753 FOR RIPRAP APRON DETAILS.
SEE SHEET NO. 58 FOR RIPRAP SUMMARIZATION.

NOTE(S):

PAVEMENT MARKINGS SHOWN FOR REFERENCE ONLY. SEE PAVEMENT MARKINGS/DELINEATION LAYOUTS FOR DETAILS AND QUANTITIES.

SCALE 1:1000

℄ LP 1604

22+600

22+70

S.O. 11° 52.87" E

FM 1937

R.O.W.

R.O.W.

R.O.W.

R.O.W.

STA 20+240
ATTACH TO BACK OF LT TURN ONLY/LT TURN OR ST
R4-7
8

STA 20+236

7
ONE WAY
R6-1R & R6-1L
(BACK TO BACK)

6
SR5-1
DO NOT ENTER
STA 22+593

STA 20+253
SAN ANTONIO 14
JCT FM 471 4
D1-2a
9

STA 20+266
SOUTH M3-3
LOOP 1604 M1-6L
M6-1L
10

5
SOUTH M3-3
LOOP 1604 M1-6L
M6-1L

STA 20+240
NTAR

STAR

S.B. MAINLANES

N.B. FRONTAGE RD.

STA 22+638
TURNAROUND
SD14-1
3.6 M
11

4
D1-2a
RIO MEDINA 12
JCT US 90 4
STA 20+253

R3-8L
ONLY
3
STA 20+240

STA 20+266
1
R4-7
ATTACH TO BACK OF LT TURN ONLY/LT TURN OR ST

20
D1-2a
JCT US 90 4
JCT F.M. 471 4
STA 22+630

18
RIGHT LANE MUST TURN RIGHT 500 FT
(SPL)
STA 20+508
REMOVE

W2-1
EXIST
REMOVE
19

REMOVE
POTRANCO RD.

R.O.W.
STA 20+426
STA 22+475

STA 22+630
13
SR5-1
DO NOT ENTER
STA 20+268
12
ONE WAY
R6-1R & R6-1L
(BACK TO BACK)

STA 20+595
STA 20+536
15
14
SW3-3
EXIST
JCT M2-1
LOOP 1604 M1-6L
16
HIGHWAY INTERSECTION 1000 FT
W2-6B
17

CHANGE ORDER NO. 65

-REMOVED 2 SIGNS BECAUSE THEY ARE NOW SHOWN ON SHEET 34 OF 57

CHANGE ORDER 65

REVISED SHEET

STATE OF TEXAS
JEROME D. PAVLISKA
76075
REGISTERED
PROFESSIONAL ENGINEER

Jerome D. Pavliska, P.E. 2/12/04
Jerome D. Pavliska, P.E. Date

©2000

Texas Department of Transportation

SIGNING LAYOUT

SHEET 34b OF 57

| FED. RD. DIV. NO. | FEDERAL AID PROJECT NO. | | SHEET NO. |
|---|---|---|---|
| 6 | NH 2000(704), etc. | | 678 A |
| STATE | DIST. | COUNTY | |
| TEXAS | SAT | BEXAR | |
| CONT. | SECT. | JOB | HIGHWAY NO. |
| 2452 | 01 | 036, etc. | LP 1604 |

LEVELS DISPLAYED
1 2 3 4 5 6 7 8 | 1 2 | 3 1 4 1 5 1 6
1 7 1 8 1 9 2 0 2 1 2 2 2 3 2 4 2 5 2 6 2 7 2 8 2 9 3 0 3 1 3 2
3 3 3 4 3 5 3 6 3 7 3 8 3 9 4 0 4 1 4 2 4 3 4 4 4 5 4 6 4 7 4 8
4 9 5 0 5 1 5 2 5 3 5 4 5 5 5 6 5 7 5 8 5 9 6 0 6 1 6 2 6 3

ACC: t:/oo/design/lp1604fm471-90/pove-sign/
FILE: povmrkplan34b.dgn

QUANTITIES THIS SHEET
CSJ 2452-01-036

SCALE 1:1000

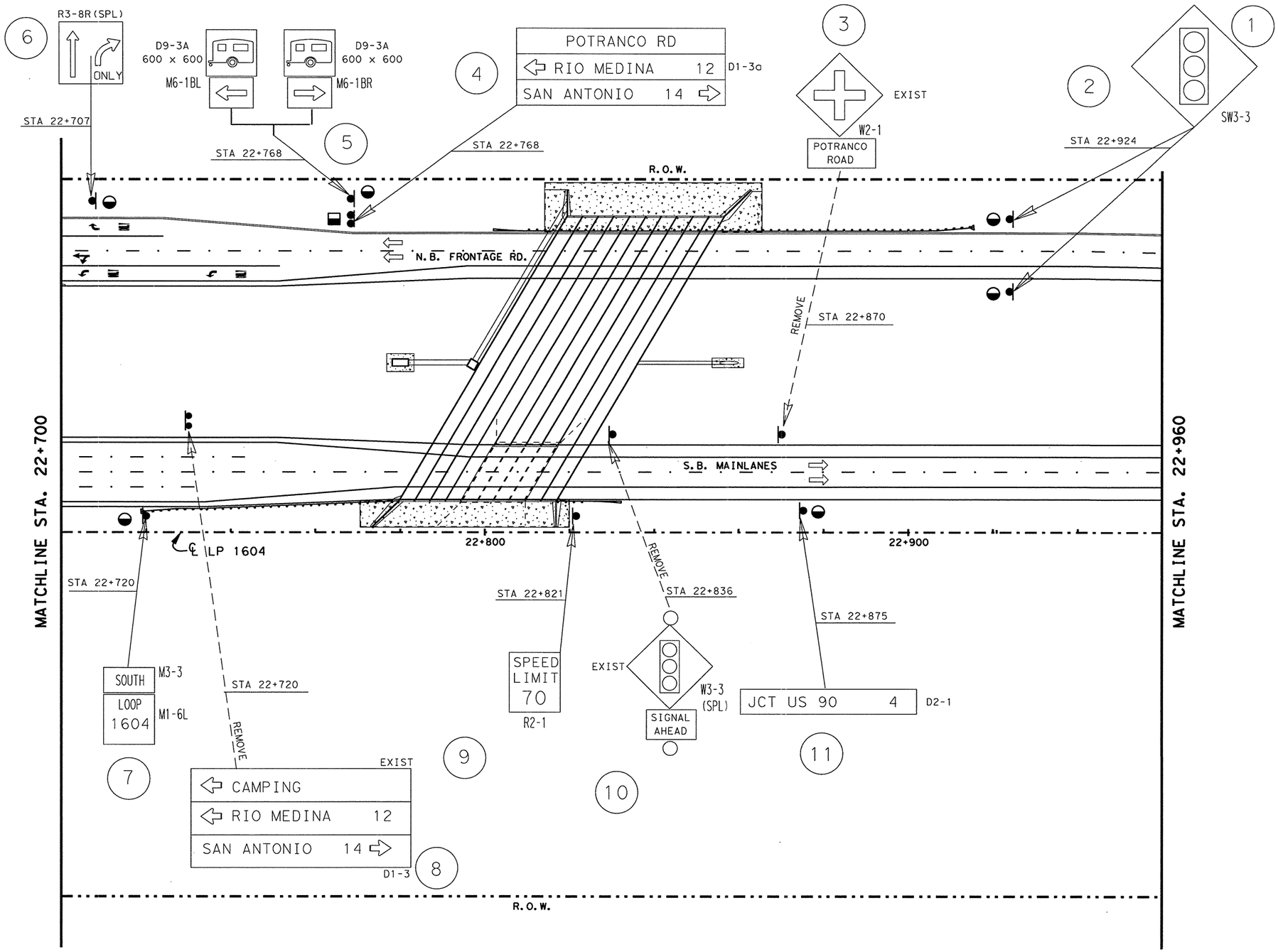


| RIPRAP APRONS QUANTITIES | | | |
|---|---|---|---|
| TYPE OF MOUNT | EA. | MULTIPLIED BY M3 | TOTAL M3 |
| SINGLE POST | 6 | 1.0 | 6.0 |
| MULTI - POST | 1 | 1.5 | 1.5 |
| OVHD. SIGN BRIDGE | | | |
| CLASS "B" CONC. GRAND TOTAL | | | 7.5 |

SEE SHEET NO. 753 FOR RIPRAP APRON DETAILS.
SEE SHEET NO. 58 FOR RIPRAP SUMMARIZATION.

NOTE(S):

PAVEMENT MARKINGS SHOWN FOR REFERENCE ONLY. SEE PAVEMENT MARKINGS/DELINEATION LAYOUTS FOR DETAILS AND QUANTITIES.

LEVELS DISPLAYED
1 2 3 4 5 6 7 8 | 12 13 14 15 16
7 18 19 20 21 22 23 24 25 26 27 28 29 30 31 32
33 34 35 56 57 58 59 40 41 42 43 44 45 46 47 48
49 50 51 52 53 54 55 65 75 85 96 06 16 26 63

ACC: t:\ao\design\ip1604fm471-90\pave-sign\
FILE: pavmrkplan35.dgn

STATE OF TEXAS
JOEL K. DAVENPORT, JR.
79276
REGISTERED PROFESSIONAL ENGINEER

Joel K Davenport Jr 9/19/00
Joel K. Davenport Jr., P.E. Date

©2000 Texas Department of Transportation

# SIGNING LAYOUT

SHEET 35 OF 57

| FED. RD. DIV. NO. | FEDERAL AID PROJECT NO. | | SHEET NO. |
|---|---|---|---|
| 6 | NH 2000(704), etc. | | 679 |
| STATE | DIST. | COUNTY | |
| TEXAS | SAT | BEXAR | |
| CONT. | SECT. | JOB | HIGHWAY NO. |
| 2452 | 01 | 036, etc. | LP 1604 |

Plotted on: 01/26/2004

QUANTITIES THIS SHEET
CSJ 2452-01-036

SCALE 1:1000

| RIPRAP APRONS QUANTITIES | | | |
|---|---|---|---|
| TYPE OF MOUNT | EA. | MULTIPLIED BY M3 | TOTAL M3 |
| SINGLE POST | 8 | 1.0 | 8.0 |
| MULTI - POST | 1 | 1.5 | 1.5 |
| OVHD. SIGN BRIDGE | | | |
| CLASS "B" CONC. GRAND TOTAL | | | 9.5 |

SEE SHEET NO. 753 FOR RIPRAP APRON DETAILS.
SEE SHEET NO. 58 FOR RIPRAP SUMMARIZATION.

NOTE(S):

PAVEMENT MARKINGS SHOWN FOR REFERENCE ONLY. SEE PAVEMENT MARKINGS/DELINEATION LAYOUTS FOR DETAILS AND QUANTITIES.

**CHANGE ORDER NO. 65**

-REVISED SIGNS AND SIGN LOCATIONS
-REVISED RIPRAP APRON QUANTITIES

MATCHLINE STA. 22+700

MATCHLINE STA. 22+960

6A
R3-8 (SPL)
ONLY
STA 22+725

D9-3A
600 x 600
M6-1BL

D9-3A
600 x 600
M6-1BR

5
STA 22+768

4
POTRANCO RD
RIO MEDINA 12
SAN ANTONIO 14
D1-3a
STA 22+768

3
EXIST
W2-1
POTRANCO ROAD

2
STA 22+924

1
SW3-3

R.O.W.

6B
R3-8 (SPL)
ONLY
STA 22+744

REMOVE
STA 22+870

22+800

22+900

STA 22+720

STA 22+821

REMOVE
STA 22+836

STA 22+875

SOUTH
LOOP 1604
M3-3
M1-6L
7

STA 22+720
REMOVE
EXIST
CAMPING
RIO MEDINA 12
SAN ANTONIO 14
D1-3
8

9
SPEED LIMIT 55
R2-1

EXIST
W3-3 (SPL)
SIGNAL AHEAD
10

JCT US 90 4
D2-1
11

R.O.W.

CHANGE ORDER NO. 65 | REVISED SHEET

555 EAST RAMSEY SAN ANTONIO TEXAS 78216
PHONE (210)375-9000
FAX (210)375-9010
PAPE-DAWSON ENGINEERS
CIVIL & ENVIRONMENTAL
STATE OF TEXAS
J. KENT O'BRIEN
64398
LICENSED
PROFESSIONAL ENGINEER
J. KENT O'BRIEN P.E.
1/27/2004
DATE

©2000
Texas Department of Transportation

SIGNING LAYOUT

SHEET 35 OF 57

| FED. RD. DIV. NO. | FEDERAL AID PROJECT NO. | | SHEET NO. |
|---|---|---|---|
| 6 | NH 2000(704), etc. | | 679 A |
| STATE | DIST. | COUNTY | |
| TEXAS | SAT | BEXAR | |
| CONT. | SECT. | JOB | HIGHWAY NO. |
| 2452 | 01 | 036, etc. | LP 1604 |

Design Filename: p:\52\20\11\design\civil\plansheets\traffic\signing\signing35.dgn
LEVELS DISPLAYED
ACC: t:\ao\design\
lp1604fm471-90\pave-sign\
FILE: pavmrkplan35.dgn

QUANTITIES THIS SHEET
CSJ 2452-01-036

SCALE 1:1000

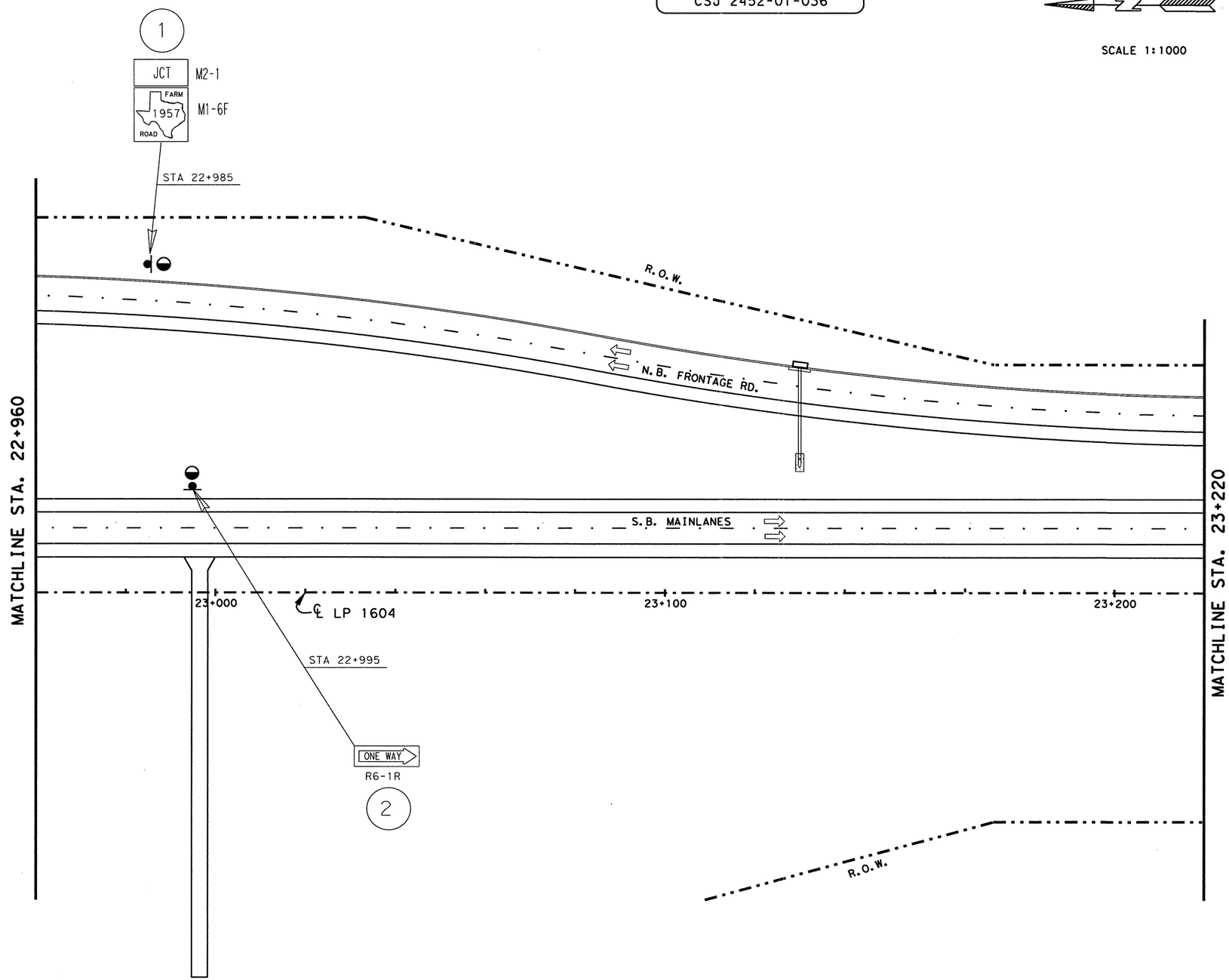


| RIPRAP APRONS QUANTITIES | | | |
|---|---|---|---|
| TYPE OF MOUNT | EA. | MULTIPLIED BY M3 | TOTAL M3 |
| SINGLE POST | 2 | 1.0 | 2.0 |
| MULTI - POST | | 1.5 | |
| OVHD. SIGN BRIDGE | | | |
| CLASS "B" CONC. GRAND TOTAL | | | 2.0 |

SEE SHEET NO. 753 FOR RIPRAP APRON DETAILS.
SEE SHEET NO. 58 FOR RIPRAP SUMMARIZATION.

NOTE(S):

PAVEMENT MARKINGS SHOWN FOR REFERENCE ONLY. SEE PAVEMENT MARKINGS/DELINEATION LAYOUTS FOR DETAILS AND QUANTITIES.

LEVELS DISPLAYED
1 2 3 4 5 6 7 8 | 1 2 3 4 5 6
1 2 3 4 5 6 7 8 9 0 1 2 2 2 3 2 4 2 5 2 6 2 7 2 8 2 9 3 0 3 1 3 2
3 3 3 4 3 5 3 6 3 7 3 8 3 9 4 0 4 1 4 2 4 3 4 4 4 5 4 6 4 7 4 8
4 9 5 0 5 1 5 2 5 3 5 4 5 5 5 6 5 7 5 8 5 9 6 0 6 1 6 2 6 3

ACC: t:\ao\design\
ip1604fm471-90\pave-sign\
FILE: pavmrkplan36.dgn

STATE OF TEXAS
JOEL K. DAVENPORT, JR.
79276
REGISTERED
PROFESSIONAL ENGINEER

Joel K. Davenport Jr. 9/19/00
Joel K. Davenport Jr., P.E. Date

©2000 Texas Department of Transportation

# SIGNING LAYOUT

**SHEET 36 OF 57**

| FED. RD. DIV. NO. | FEDERAL AID PROJECT NO. | | SHEET NO. |
|---|---|---|---|
| 6 | NH 2000(704), etc. | | 680 |
| STATE | DIST. | COUNTY | |
| TEXAS | SAT | BEXAR | |
| CONT. | SECT. | JOB | HIGHWAY NO. |
| 2452 | 01 | 036, etc. | LP 1604 |

QUANTITIES THIS SHEET
CSJ 2452-01-036

SCALE 1:1000

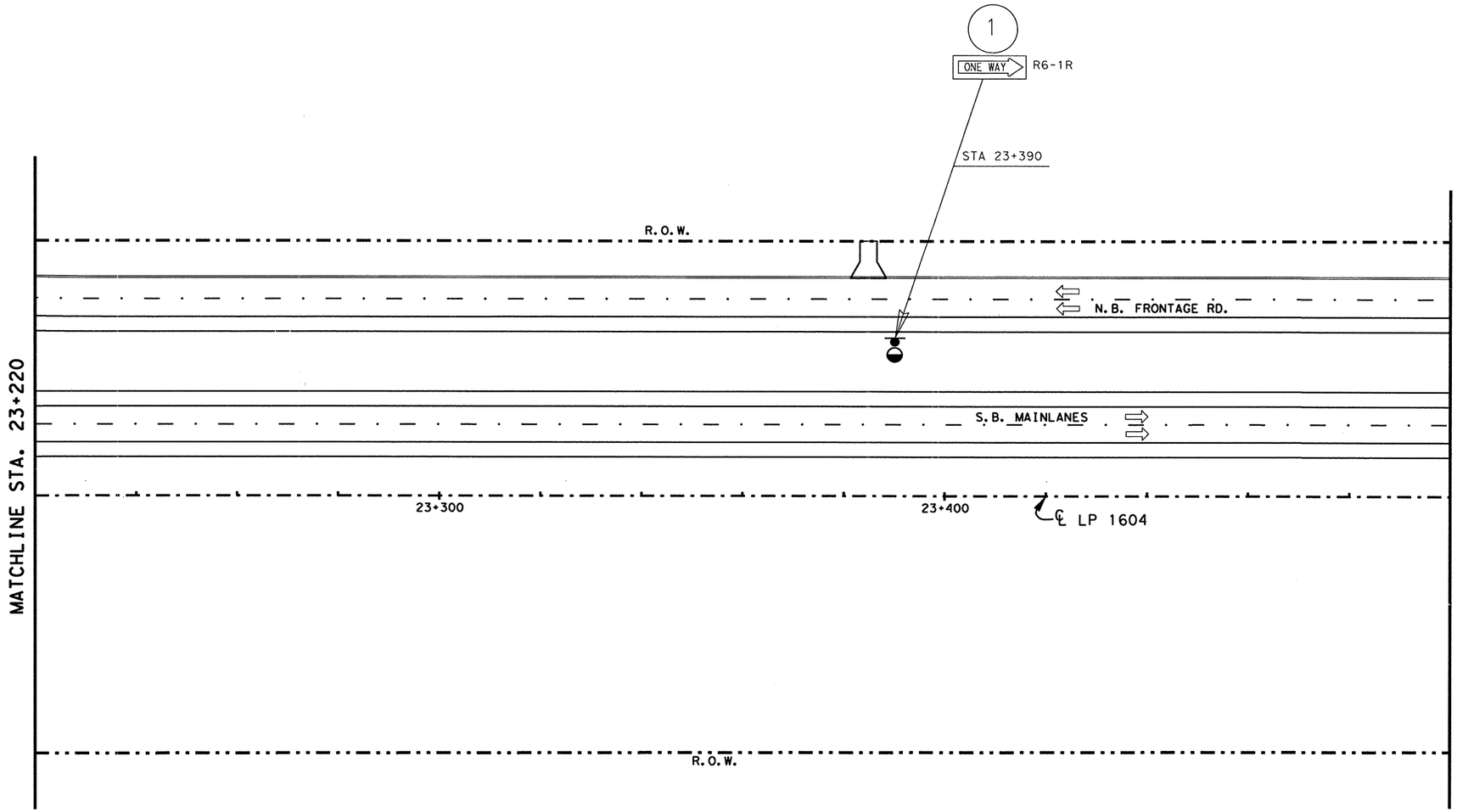


| RIPRAP APRONS QUANTITIES | | | |
|---|---|---|---|
| TYPE OF MOUNT | EA. | MULTIPLIED BY M3 | TOTAL M3 |
| SINGLE POST | 1 | 1.0 | 1.0 |
| MULTI - POST | | 1.5 | |
| OVHD. SIGN BRIDGE | | | |
| CLASS "B" CONC. GRAND TOTAL | | | 1.0 |

SEE SHEET NO. 753 FOR RIPRAP APRON DETAILS.
SEE SHEET NO. 58 FOR RIPRAP SUMMARIZATION.

NOTE(S):

PAVEMENT MARKINGS SHOWN FOR REFERENCE ONLY. SEE PAVEMENT MARKINGS/DELINEATION LAYOUTS FOR DETAILS AND QUANTITIES.

LEVELS DISPLAYED
1 2 3 4 5 6 7 8 | 1 2 3 4 5 6 7 8
1 7 8 1 9 2 0 2 1 2 2 2 3 2 4 2 5 2 6 2 7 2 8 2 9 3 0 3 1 3 2
5 3 3 4 5 5 3 6 3 7 3 8 3 9 4 0 4 1 4 2 4 3 4 4 4 5 4 6 4 7 4 8
4 9 5 0 5 1 5 2 5 3 5 4 5 5 5 6 5 7 5 8 5 9 6 0 6 1 6 2 6 3

ACC: t:\ao\design\
lp1604fm471-90\pave-sign\
FILE: pavmrkplan37.dgn

STATE OF TEXAS
JOEL K. DAVENPORT, JR.
79276
REGISTERED PROFESSIONAL ENGINEER

Joel K. Davenport Jr. 9/19/00
Joel K. Davenport Jr., P.E. Date

©2000 Texas Department of Transportation

# SIGNING LAYOUT

SHEET 37 OF 57

| FED.RD. DIV.NO. | FEDERAL AID PROJECT NO. | | SHEET NO. |
|---|---|---|---|
| 6 | NH 2000(704), etc. | | 681 |
| STATE | DIST. | COUNTY | |
| TEXAS | SAT | BEXAR | |
| CONT. | SECT. | JOB | HIGHWAY NO. |
| 2452 | 01 | 036, etc. | LP 1604 |

QUANTITIES THIS SHEET
CSJ 2452-01-036

SCALE 1:1000

| RIPRAP APRONS QUANTITIES | | | |
|---|---|---|---|
| TYPE OF MOUNT | EA. | MULTIPLIED BY M3 | TOTAL M3 |
| SINGLE POST | | 1.0 | |
| MULTI - POST | | 1.5 | |
| OVHD. SIGN BRIDGE | | | |
| CLASS "B" CONC. GRAND TOTAL | | | 0.0 |

SEE SHEET NO. 753 FOR RIPRAP APRON DETAILS.
SEE SHEET NO. 58 FOR RIPRAP SUMMARIZATION.

NOTE(S):

PAVEMENT MARKINGS SHOWN FOR REFERENCE ONLY. SEE PAVEMENT MARKINGS/DELINEATION LAYOUTS FOR DETAILS AND QUANTITIES.

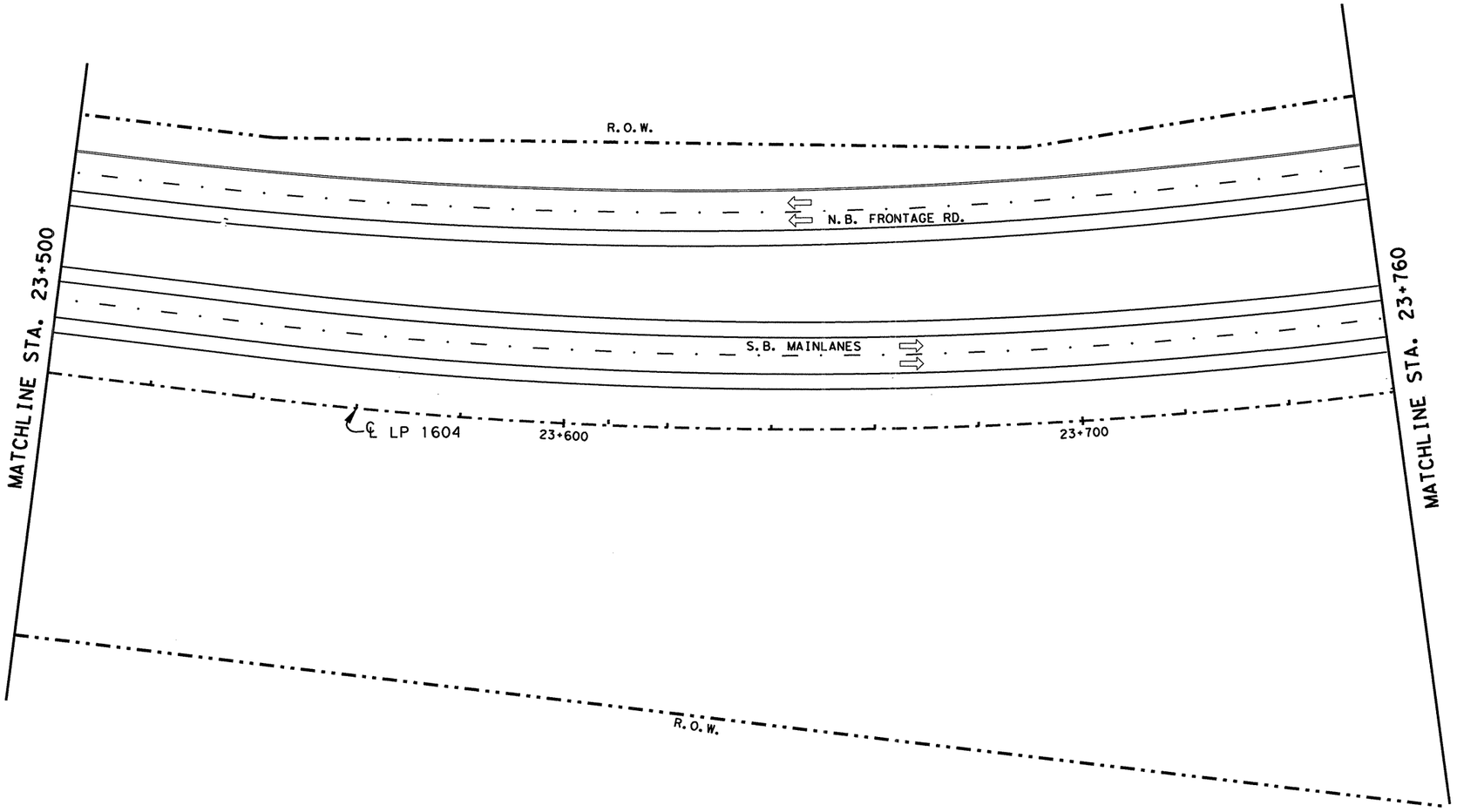


LEVELS DISPLAYED
1 2 3 4 5 6 7 8 | 1 2 3 4 5 6
7 8 19 20 21 22 23 24 25 26 27 28 29 30 31 32
33 34 55 36 37 38 39 40 41 42 43 44 45 46 47 48
49 50 51 52 53 54 55 56 57 58 59 60 61 62 63

ACC: t:\ao\design\lp1604fm471-90\pave-sign\
FILE: pavmrkplan38.dgn

STATE OF TEXAS
JOEL K. DAVENPORT, JR.
79276
REGISTERED
PROFESSIONAL ENGINEER

Joel K. Davenport Jr. 9/19/00
Joel K. Davenport Jr., P.E. Date

©2000 Texas Department of Transportation

# SIGNING LAYOUT

SHEET 38 OF 57

| FED.RD. DIV.NO. | FEDERAL AID PROJECT NO. | | SHEET NO. |
|---|---|---|---|
| 6 | NH 2000(704), etc. | | 682 |
| STATE | DIST. | COUNTY | |
| TEXAS | SAT | BEXAR | |
| CONT. | SECT. | JOB | HIGHWAY NO. |
| 2452 | 01 | 036, etc. | LP 1604 |

QUANTITIES THIS SHEET
CSJ 2452-01-036

SCALE 1:1000

| RIPRAP APRONS | | | |
|---|---|---|---|
| QUANTITIES | | | |
| TYPE OF MOUNT | EA. | MULTIPLIED BY M3 | TOTAL M3 |
| SINGLE POST | 1 | 1.0 | 1.0 |
| MULTI - POST | | 1.5 | |
| OVHD. SIGN BRIDGE | | | |
| CLASS "B" CONC. GRAND TOTAL | | | 1.0 |

SEE SHEET NO. 753 FOR RIPRAP APRON DETAILS.
SEE SHEET NO. 58 FOR RIPRAP SUMMARIZATION.

NOTE(S):

PAVEMENT MARKINGS SHOWN FOR REFERENCE ONLY. SEE PAVEMENT MARKINGS/DELINEATION LAYOUTS FOR DETAILS AND QUANTITIES.

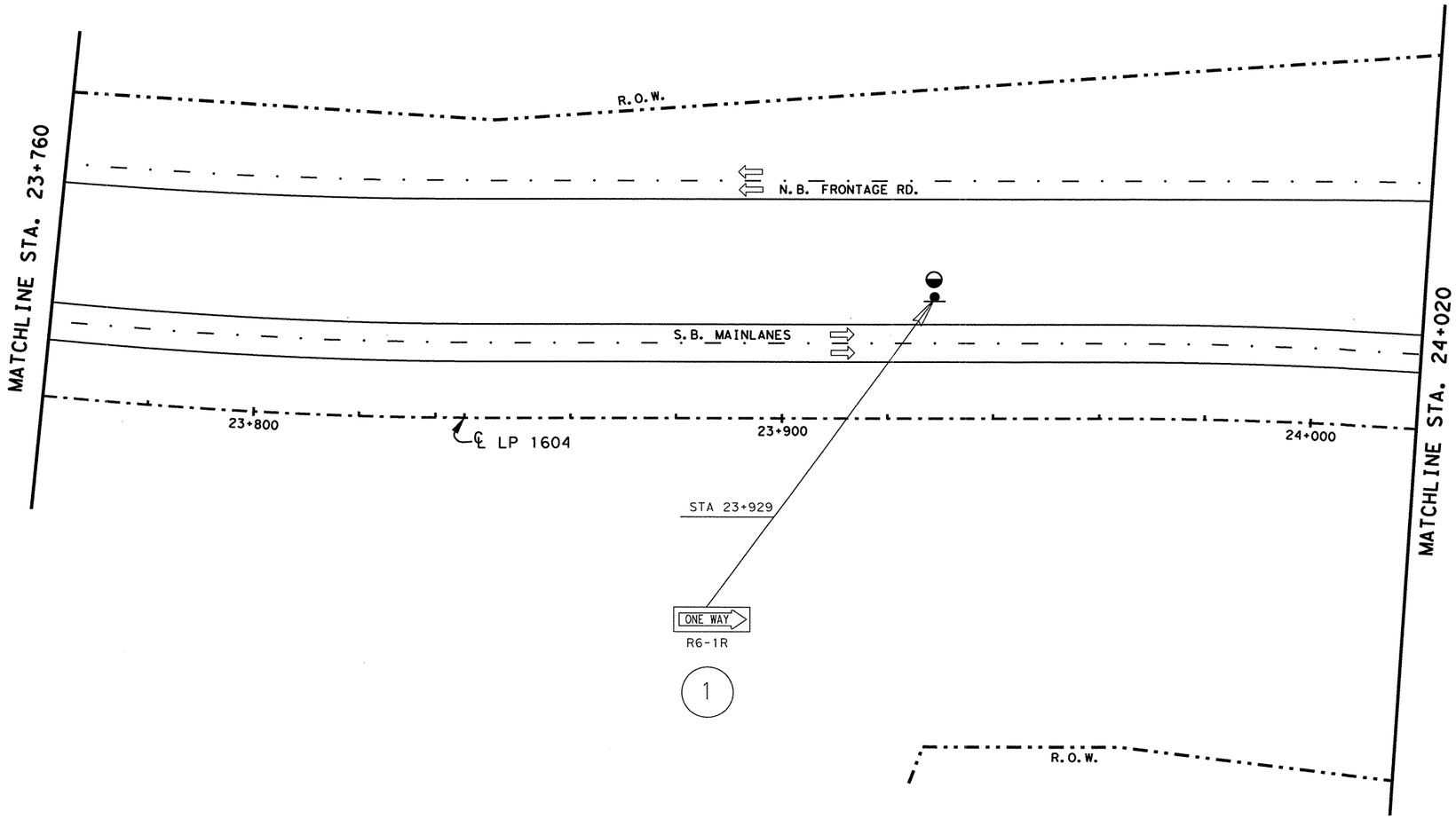


LEVELS DISPLAYED
1 2 3 4 5 6 7 8 | 12 13 14 15 16
17 18 19 20 21 22 23 24 25 26 27 28 29 30 31 32
33 34 35 36 37 38 39 40 41 42 43 44 45 46 47 48
49 50 51 52 53 54 55 56 57 58 59 60 61 62 63

ACC: t:\ao\design\lp1604fm471-90\pave-sign\
FILE: pavmrkplan39.dgn

STATE OF TEXAS
JOEL K. DAVENPORT, JR.
79276
REGISTERED PROFESSIONAL ENGINEER

Joel K. Davenport, Jr. P.E. 79276 — 9/19/00
Date

©2000 Texas Department of Transportation

# SIGNING LAYOUT

**SHEET 39 OF 57**

| FED. RD. DIV. NO. | FEDERAL AID PROJECT NO. | | SHEET NO. |
|---|---|---|---|
| 6 | NH 2000(704), etc. | | 683 |
| STATE | DIST. | COUNTY | |
| TEXAS | SAT | BEXAR | |
| CONT. | SECT. | JOB | HIGHWAY NO. |
| 2452 | 01 | 036, etc. | LP 1604 |

QUANTITIES THIS SHEET
CSJ 2452-01-036

SCALE 1:1000

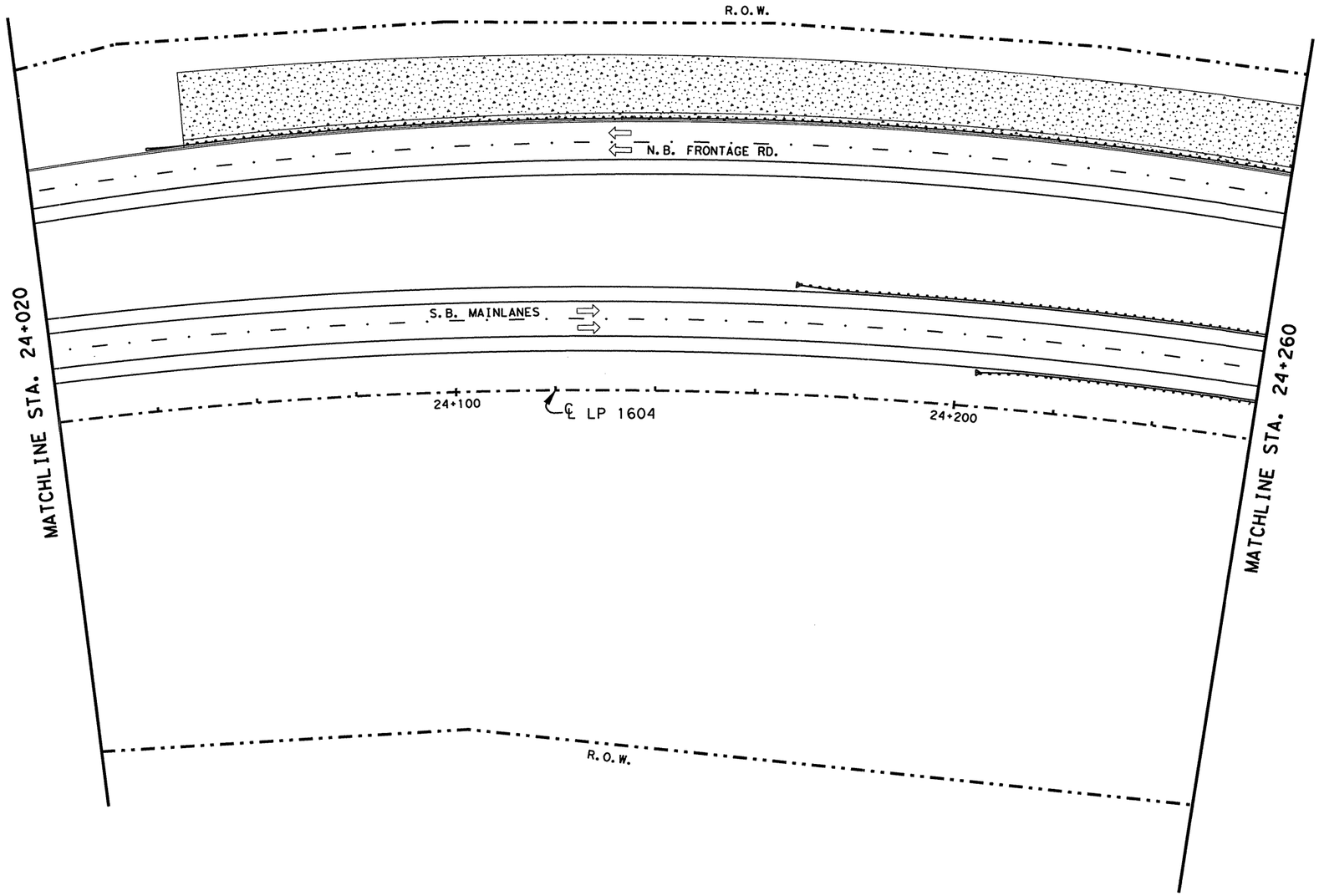


| RIPRAP APRONS QUANTITIES | | | |
|---|---|---|---|
| TYPE OF MOUNT | EA. | MULTIPLIED BY M3 | TOTAL M3 |
| SINGLE POST | | 1.0 | |
| MULTI - POST | | 1.5 | |
| OVHD. SIGN BRIDGE | | | |
| CLASS "B" CONC. GRAND TOTAL | | | 0.0 |

SEE SHEET NO. 753 FOR RIPRAP APRON DETAILS.
SEE SHEET NO. 58 FOR RIPRAP SUMMARIZATION.

NOTE(S):

PAVEMENT MARKINGS SHOWN FOR REFERENCE ONLY. SEE PAVEMENT MARKINGS/DELINEATION LAYOUTS FOR DETAILS AND QUANTITIES.

LEVELS DISPLAYED
1 2 3 4 5 6 7 8 | 21 31 41 51 61
11 21 31 41 51 61 71 81 91 101 111 121 131 141 151 161 171 181 191 201 211 221 231 241 251 261 271 281 291 301 311 321
33 34 35 36 37 38 39 40 41 42 43 44 45 46 47 48 49 50 51 52 53 54 55 56 57 58 59 60 61 62 63
ACC: t:\oo\design\
lp1604fm471-90\pave-sign\
FILE: pavmrkplan40.dgn

STATE OF TEXAS
JOEL K. DAVENPORT, JR.
79276
REGISTERED PROFESSIONAL ENGINEER

Joel K. Davenport, Jr. 9/19/00
Joel K. Davenport, Jr. P.E. 79276 Date

©2000 Texas Department of Transportation

# SIGNING LAYOUT

**SHEET 40 OF 57**

| FED. RD. DIV. NO. | FEDERAL AID PROJECT NO. | | SHEET NO. |
|---|---|---|---|
| 6 | NH 2000(704), etc. | | 684 |
| STATE | DIST. | COUNTY | |
| TEXAS | SAT | BEXAR | |
| CONT. | SECT. | JOB | HIGHWAY NO. |
| 2452 | 01 | 036, etc. | LP 1604 |

QUANTITIES THIS SHEET
CSJ 2452-01-036

SCALE 1:1000

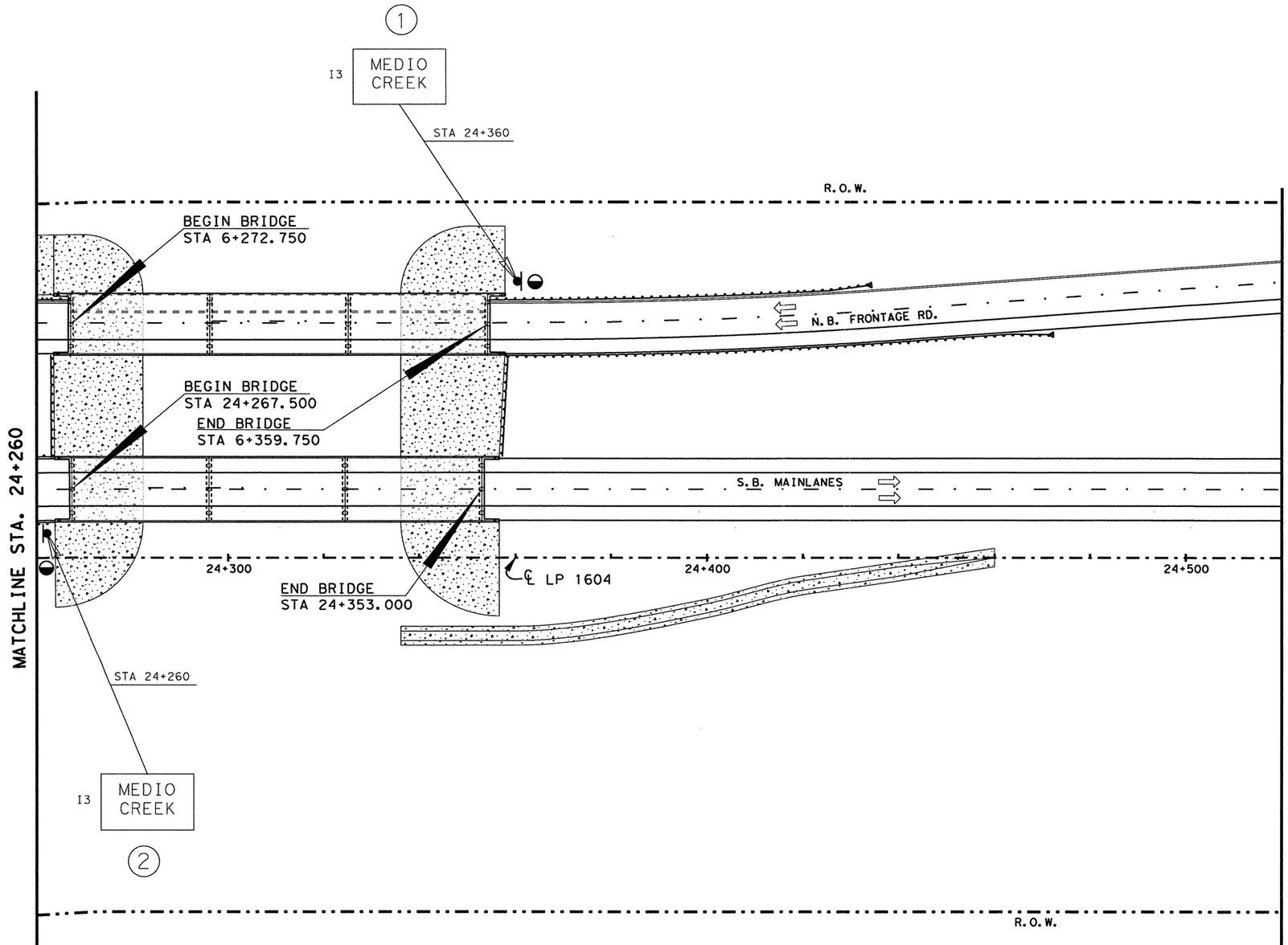


| RIPRAP APRONS QUANTITIES | | | |
|---|---|---|---|
| TYPE OF MOUNT | EA. | MULTIPLIED BY M3 | TOTAL M3 |
| SINGLE POST | 2 | 1.0 | 2.0 |
| MULTI - POST | | 1.5 | |
| OVHD. SIGN BRIDGE | | | |
| CLASS "B" CONC. GRAND TOTAL | | | 2.0 |

SEE SHEET NO. 753 FOR RIPRAP APRON DETAILS.
SEE SHEET NO. 58 FOR RIPRAP SUMMARIZATION.

NOTE(S):

PAVEMENT MARKINGS SHOWN FOR REFERENCE ONLY. SEE PAVEMENT MARKINGS/DELINEATION LAYOUTS FOR DETAILS AND QUANTITIES.

LEVELS DISPLAYED
1 2 3 4 5 6 7 8 | 1 2 3 4 5 6
9 10 11 12 13 14 15 16 17 18 | 1 2 3 4 5 6 7 8 9 10 11 12
19 20 21 22 23 24 25 26 27 28 29 30 31 32 | 1 2 3 4 5 6 7 8 9 10 11 12
33 34 35 45 56 57 58 59 60 41 42 43 44 45 46 47 48 | 1 2 3 4 5 6 7 8 9 10 11 12
49 50 51 52 53 54 55 56 57 58 59 60 61 62 63 | 1 2 3 4 5 6 7 8 9 10 11 12

ACC: t:\ao\design\
lp1604fm471-90\pave-sign\
FILE: pavmrkplan41.dgn

STATE OF TEXAS
JOEL K. DAVENPORT, JR.
79276
REGISTERED PROFESSIONAL ENGINEER

Joel K Davenport Jr 9/19/00
Joel K. Davenport, Jr. P.E. 79276 Date

©2000 Texas Department of Transportation

# SIGNING LAYOUT

SHEET 41 OF 57

| FED.RD. DIV.NO. | FEDERAL AID PROJECT NO. | | SHEET NO. |
|---|---|---|---|
| 6 | NH 2000(704),etc. | | 685 |
| STATE | DIST. | COUNTY | |
| TEXAS | SAT | BEXAR | |
| CONT. | SECT. | JOB | HIGHWAY NO. |
| 2452 | 01 | 036,etc. | LP 1604 |

QUANTITIES THIS SHEET
CSJ 2452-01-036

SCALE 1:1000

| RIPRAP APRONS QUANTITIES | | | |
|---|---|---|---|
| TYPE OF MOUNT | EA. | MULTIPLIED BY M3 | TOTAL M3 |
| SINGLE POST | 2 | 1.0 | 2.0 |
| MULTI - POST | | 1.5 | |
| OVHD. SIGN BRIDGE | | | |
| CLASS "B" CONC. GRAND TOTAL | | | 2.0 |

SEE SHEET NO. 753 FOR RIPRAP APRON DETAILS.
SEE SHEET NO. 58 FOR RIPRAP SUMMARIZATION.

NOTE(S):

PAVEMENT MARKINGS SHOWN FOR REFERENCE ONLY. SEE PAVEMENT MARKINGS/DELINEATION LAYOUTS FOR DETAILS AND QUANTITIES.

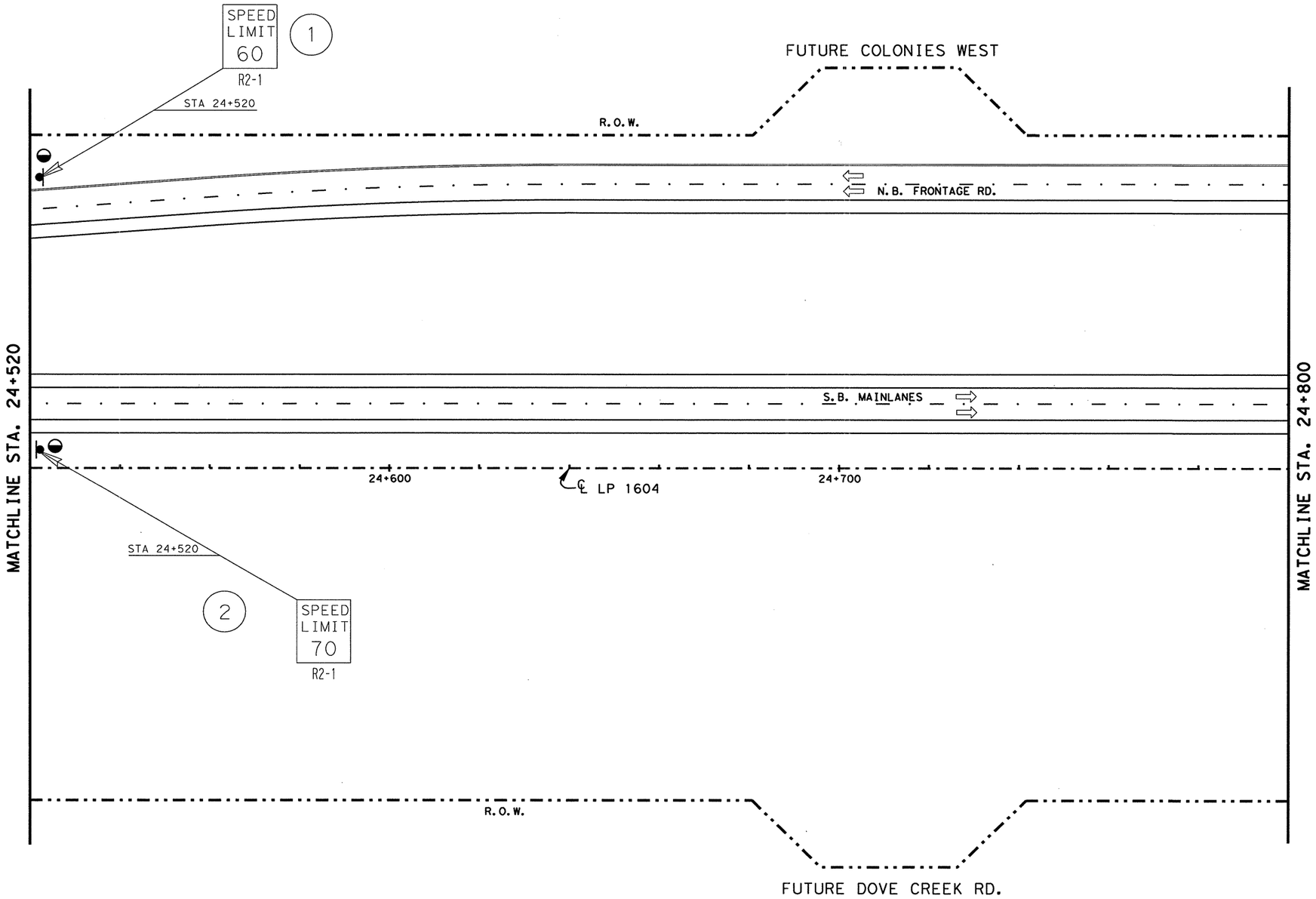


LEVELS DISPLAYED
1 2 3 4 5 6 7 8 | 1 2 3 11 41 51 61
1 7 11 81 91 201 211 221 231 241 251 261 271 281 291 301 311 321
331 341 351 361 371 381 391 401 411 421 431 441 451 461 471 481
491 501 511 521 531 541 551 561 571 581 591 601 611 621 631

ACC: t:\ao\design\ip1604fm471-90\pave-sign\
FILE: pavmrkplan42.dgn

STATE OF TEXAS
JOEL K. DAVENPORT, JR.
79276
REGISTERED PROFESSIONAL ENGINEER

Joel K. Davenport, Jr. 9/19/00
Joel K. Davenport, Jr. P.E. 79276 Date

©2000 Texas Department of Transportation

# SIGNING LAYOUT

**SHEET 42 OF 57**

| FED. RD. DIV. NO. | FEDERAL AID PROJECT NO. | | SHEET NO. |
|---|---|---|---|
| 6 | NH 2000(704), etc. | | 686 |
| STATE | DIST. | COUNTY | |
| TEXAS | SAT | BEXAR | |
| CONT. | SECT. | JOB | HIGHWAY NO. |
| 2452 | 01 | 036, etc. | LP 1604 |

QUANTITIES THIS SHEET
CSJ 2452-01-036

SCALE 1:1000

| RIPRAP APRONS QUANTITIES | | | |
|---|---|---|---|
| TYPE OF MOUNT | EA. | MULTIPLIED BY M3 | TOTAL M3 |
| SINGLE POST | 5 | 1.0 | 5.0 |
| MULTI - POST | | 1.5 | |
| OVHD. SIGN BRIDGE | | | |
| CLASS "B" CONC. GRAND TOTAL | | | 5.0 |

SEE SHEET NO. 753 FOR RIPRAP APRON DETAILS.
SEE SHEET NO. 58 FOR RIPRAP SUMMARIZATION.

NOTE(S):

PAVEMENT MARKINGS SHOWN FOR REFERENCE ONLY. SEE PAVEMENT MARKINGS/DELINEATION LAYOUTS FOR DETAILS AND QUANTITIES.

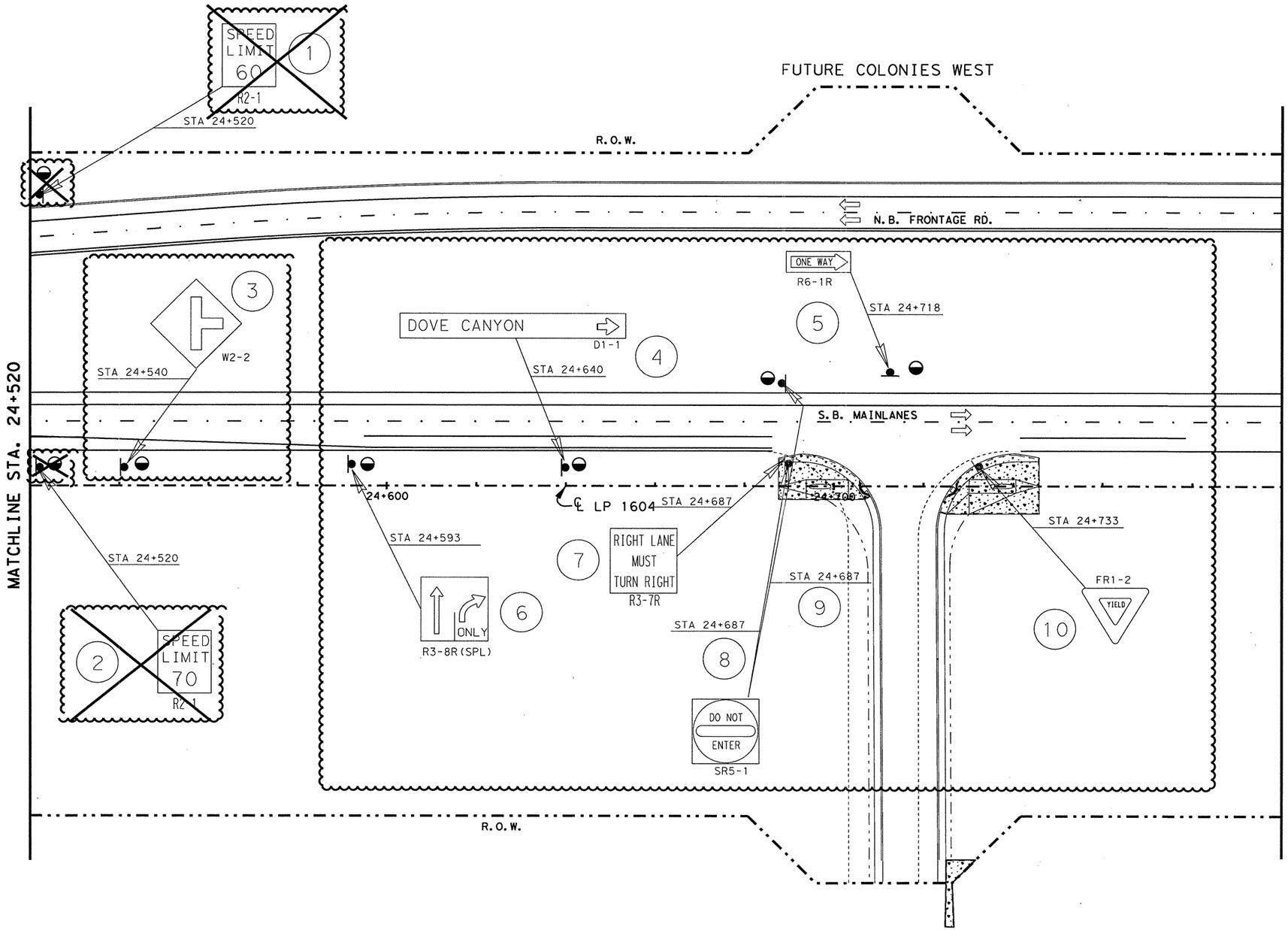


CHANGE ORDER NO. 65

-ELIMINATED SIGNS
-REVISED SIGNS AND SIGN LOCATIONS
-REVISED RIPRAP APRON QUANTITIES

CHANGE ORDER 65

REVISED SHEET

STATE OF TEXAS
JEROME D. PAVLISKA
76075
REGISTERED PROFESSIONAL ENGINEER

Jerome D. Pavliska, P.E. 4-22-04
Jerome D. Pavliska, P.E. Date

LEVELS DISPLAYED
1 2 3 4 5 6 7 8 9 10 11 12 13 14 15 16
17 18 19 20 21 22 23 24 25 26 27 28 29 30 31 32
33 34 35 36 37 38 39 40 41 42 43 44 45 46 47 48
49 50 51 52 53 54 55 56 57 58 59 60 61 62 63

ACC: t:\ao\design\1p1604fm471-90\pave-sign\
FILE: pavmrkplan42.dgn

©2000
Texas Department of Transportation

SIGNING LAYOUT

SHEET 42 OF 57

| FED. RD. DIV. NO. | FEDERAL AID PROJECT NO. | | SHEET NO. |
|---|---|---|---|
| 6 | NH 2000(704), etc. | | 686A |
| STATE | DIST. | COUNTY | |
| TEXAS | SAT | BEXAR | |
| CONT. | SECT. | JOB | HIGHWAY NO. |
| 2452 | 01 | 036, etc. | LP 1604 |

02-05-04

QUANTITIES THIS SHEET
CSJ 2452-01-036

SCALE 1:1000

| RIPRAP APRONS QUANTITIES | | | |
|---|---|---|---|
| TYPE OF MOUNT | EA. | MULTIPLIED BY M3 | TOTAL M3 |
| SINGLE POST | 9 | 1.0 | 9.0 |
| MULTI - POST | | 1.5 | |
| OVHD. SIGN BRIDGE | | | |
| CLASS "B" CONC. GRAND TOTAL | | | 9.0 |

SEE SHEET NO. 58 FOR RIPRAP APRON DETAILS.
SEE SHEET NO. 58 FOR RIPRAP SUMMARIZATION.

NOTE(S):

PAVEMENT MARKINGS SHOWN FOR REFERENCE ONLY. SEE PAVEMENT MARKINGS/DELINEATION LAYOUTS FOR DETAILS AND QUANTITIES.

CHANGE ORDER NO. 139
-ADDED NEW INTERSECTION FALCON WOLF
-ADDED/ELIMINATED SIGNS
-REVISED RIPRAP APRON QUANTITIES

CHANGE ORDER 139

REVISED SHEET

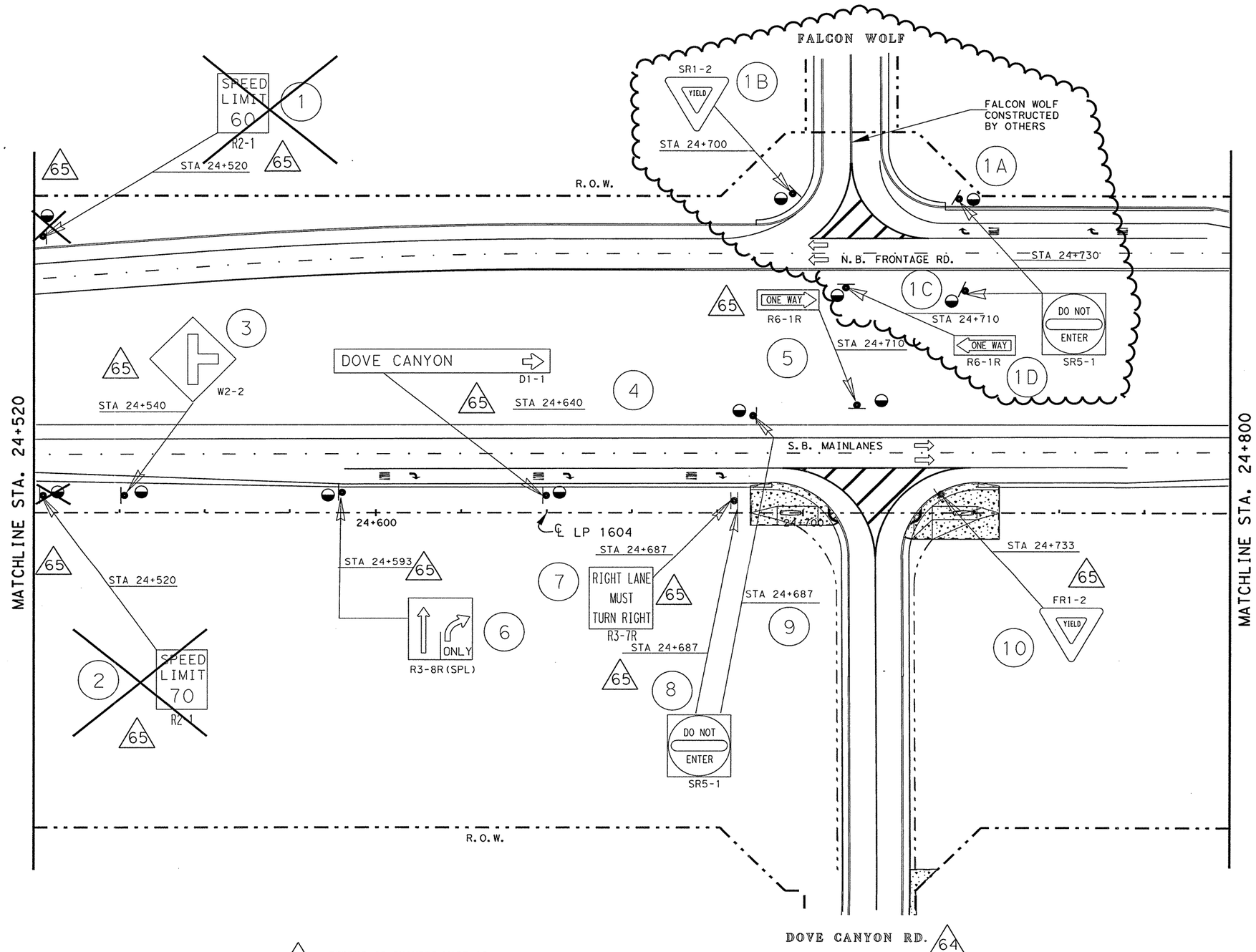


# REFERS TO CHANGES MADE AS PART OF CHANGE ORDER.

CO #139

Fitzgeraldo G. Sanchez 08-16-06
Fitzgeraldo G. Sanchez, P.E. Date

©2000 Texas Department of Transportation

SIGNING LAYOUT

SHEET 42 OF 57

| FED.RD. DIV.NO. | FEDERAL AID PROJECT NO. | | SHEET NO. |
|---|---|---|---|
| 6 | NH 2000(704),etc. | | 686 AA |
| STATE | DIST. | COUNTY | |
| TEXAS | SAT | BEXAR | |
| CONT. | SECT. | JOB | HIGHWAY NO. |
| 2452 | 01 | 036,etc. | LP 1604 |

7-31-06

LEVELS DISPLAYED
1 2 3 4 5 6 7 8 1 2 3 1 4 5 1 6
1 7 8 9 0 2 1 2 2 3 2 4 5 2 6 2 7 2 8 2 9 3 0 3 1 3 2
3 3 4 5 5 6 5 7 8 9 4 0 4 1 4 2 4 3 4 4 5 4 6 4 7 4 8
4 9 5 0 5 1 5 2 5 3 5 4 5 5 5 6 5 7 5 8 5 9 6 0 6 1 6 2 6 3

t:\ao\design\lp1604fm471-90\pd*phase2*changeorder*mylars\submittal\plansheets\traffic\signing\signing42*co64.dgn

QUANTITIES THIS SHEET
CSJ 2452-01-036

SCALE 1:1000

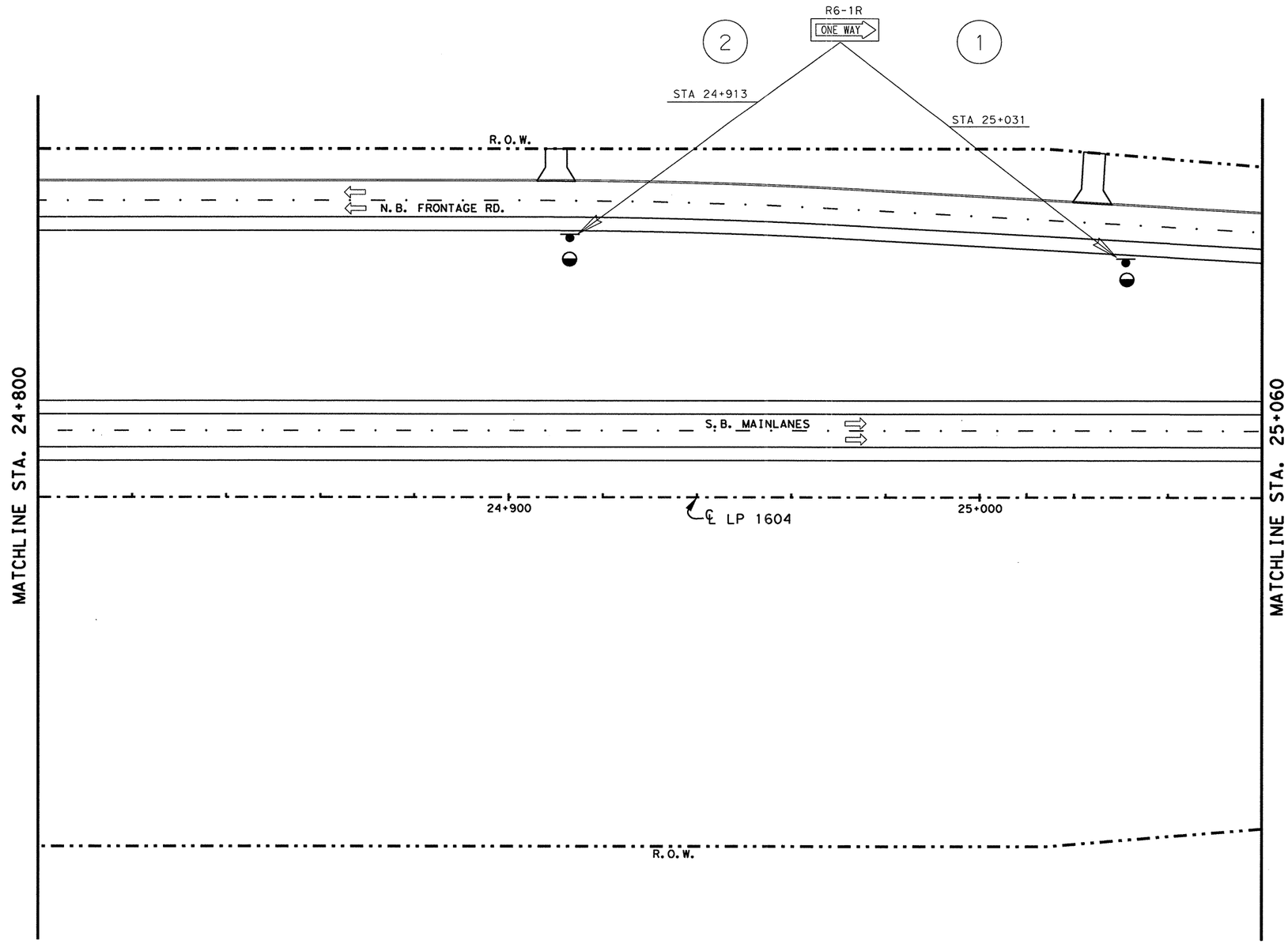


| RIPRAP APRONS QUANTITIES | | | |
|---|---|---|---|
| TYPE OF MOUNT | EA. | MULTIPLIED BY M3 | TOTAL M3 |
| SINGLE POST | 2 | 1.0 | 2.0 |
| MULTI - POST | | 1.5 | |
| OVHD. SIGN BRIDGE | | | |
| CLASS "B" CONC. GRAND TOTAL | | | 2.0 |

SEE SHEET NO. 753 FOR RIPRAP APRON DETAILS.
SEE SHEET NO. 58 FOR RIPRAP SUMMARIZATION.

NOTE(S):

PAVEMENT MARKINGS SHOWN FOR REFERENCE ONLY. SEE PAVEMENT MARKINGS/DELINEATION LAYOUTS FOR DETAILS AND QUANTITIES.

LEVELS DISPLAYED
1 2 3 4 5 6 7 8 | 1 2 3 4 5 6
11 12 13 14 15 16 17 18 19 20 21 22 23 24 25 26 27 28 29 30 31 32 | ACC: t:\ao\design\
33 34 35 36 37 38 39 40 41 42 43 44 45 46 47 48 49 50 51 52 53 54 55 56 57 58 59 60 61 62 63 | FILE: pavmrkplan43.dgn

STATE OF TEXAS
JOEL K. DAVENPORT, JR.
79276
REGISTERED
PROFESSIONAL ENGINEER

Joel K Davenport Jr 9/19/00
Joel K. Davenport, Jr. P.E. 79276 Date

©2000 Texas Department of Transportation

# SIGNING LAYOUT

SHEET 43 OF 57

| FED. RD. DIV. NO. | FEDERAL AID PROJECT NO. | | SHEET NO. |
|---|---|---|---|
| 6 | NH 2000(704), etc. | | 687 |
| STATE | DIST. | COUNTY | |
| TEXAS | SAT | BEXAR | |
| CONT. | SECT. | JOB | HIGHWAY NO. |
| 2452 | 01 | 036, etc. | LP 1604 |

QUANTITIES THIS SHEET
CSJ 2452-01-036

SCALE 1:1000

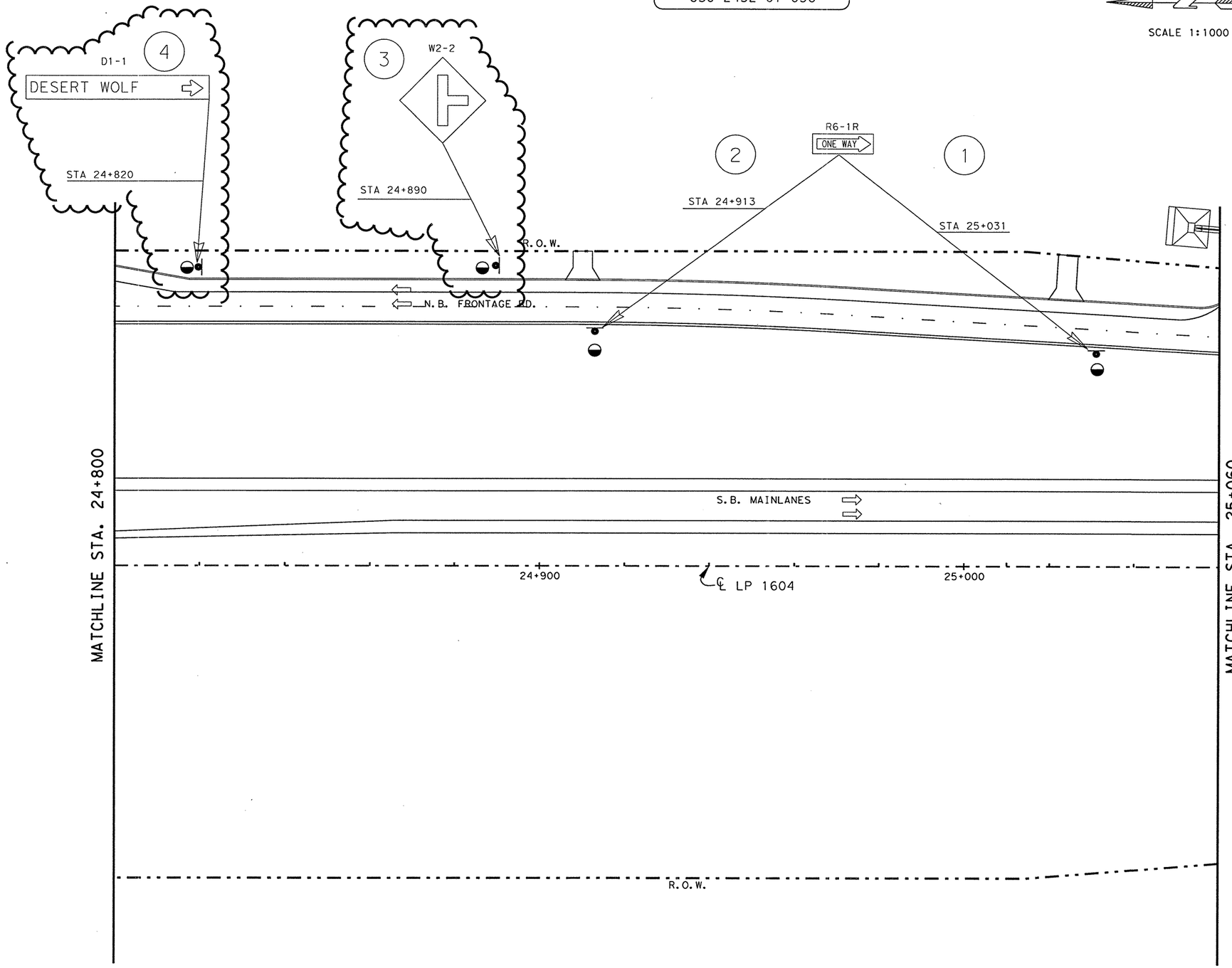


| RIPRAP APRONS QUANTITIES | | | |
|---|---|---|---|
| TYPE OF MOUNT | EA. | MULTIPLIED BY M3 | TOTAL M3 |
| SINGLE POST | 4 | 1.0 | 4.0 |
| MULTI - POST | | 1.5 | |
| OVHD. SIGN BRIDGE | | | |
| CLASS "B" CONC. GRAND TOTAL | | | 4.0 |

SEE SHEET NO. 753 FOR RIPRAP APRON DETAILS.
SEE SHEET NO. 58 FOR RIPRAP SUMMARIZATION.

NOTE(S):

PAVEMENT MARKINGS SHOWN FOR REFERENCE ONLY. SEE PAVEMENT MARKINGS/DELINEATION LAYOUTS FOR DETAILS AND QUANTITIES.

CHANGE ORDER NO. 139

-ADDED NEW INTERSECTION APPROACH DESERT WOLF

-ADDED SIGNS / REVISED QUANTITES

CHANGE ORDER 139

REVISED SHEET

STATE OF TEXAS
FITZGERALDO G. SANCHEZ
76084
LICENCED PROFESSIONAL ENGINEER

CO#139

Fitzgeraldo G. Sanchez 08-16-06
Fitzgeraldo G. Sanchez, P.E. Date

©2000
Texas Department of Transportation

SIGNING LAYOUT

SHEET 43 OF 57

| FED. RD. DIV. NO. | FEDERAL AID PROJECT NO. | | SHEET NO. |
|---|---|---|---|
| 6 | NH 2000(704), etc. | | 687 AA |
| STATE | DIST. | COUNTY | |
| TEXAS | SAT | BEXAR | |
| CONT. | SECT. | JOB | HIGHWAY NO. |
| 2452 | 01 | 036, etc. | LP 1604 |

7-31-06

LEVELS DISPLAYED
1 2 3 4 5 6 7 8 9 10 11 12 13 14 15 16 17 18 19 20 21 22 23 24 25 26 27 28 29 30 31 32 33 34 35 36 37 38 39 40 41 42 43 44 45 46 47 48 49 50 51 52 53 54 55 56 57 58 59 60 61 62 63

f:\ao\design\lp1604fm471-90\pd*phase2*change*order*mylars\submittal\plansheets\traffic\signing\signing43*co.dgn

QUANTITIES THIS SHEET
CSJ 2452-01-036

SCALE 1:1000

| RIPRAP APRONS QUANTITIES | | | |
|---|---|---|---|
| TYPE OF MOUNT | EA. | MULTIPLIED BY M3 | TOTAL M3 |
| SINGLE POST | | 1.0 | |
| MULTI - POST | | 1.5 | |
| OVHD. SIGN BRIDGE | | | |
| CLASS "B" CONC. GRAND TOTAL | | | 0.0 |

SEE SHEET NO. 753 FOR RIPRAP APRON DETAILS.
SEE SHEET NO. 58 FOR RIPRAP SUMMARIZATION.

NOTE(S):

PAVEMENT MARKINGS SHOWN FOR REFERENCE ONLY. SEE PAVEMENT MARKINGS/DELINEATION LAYOUTS FOR DETAILS AND QUANTITIES.

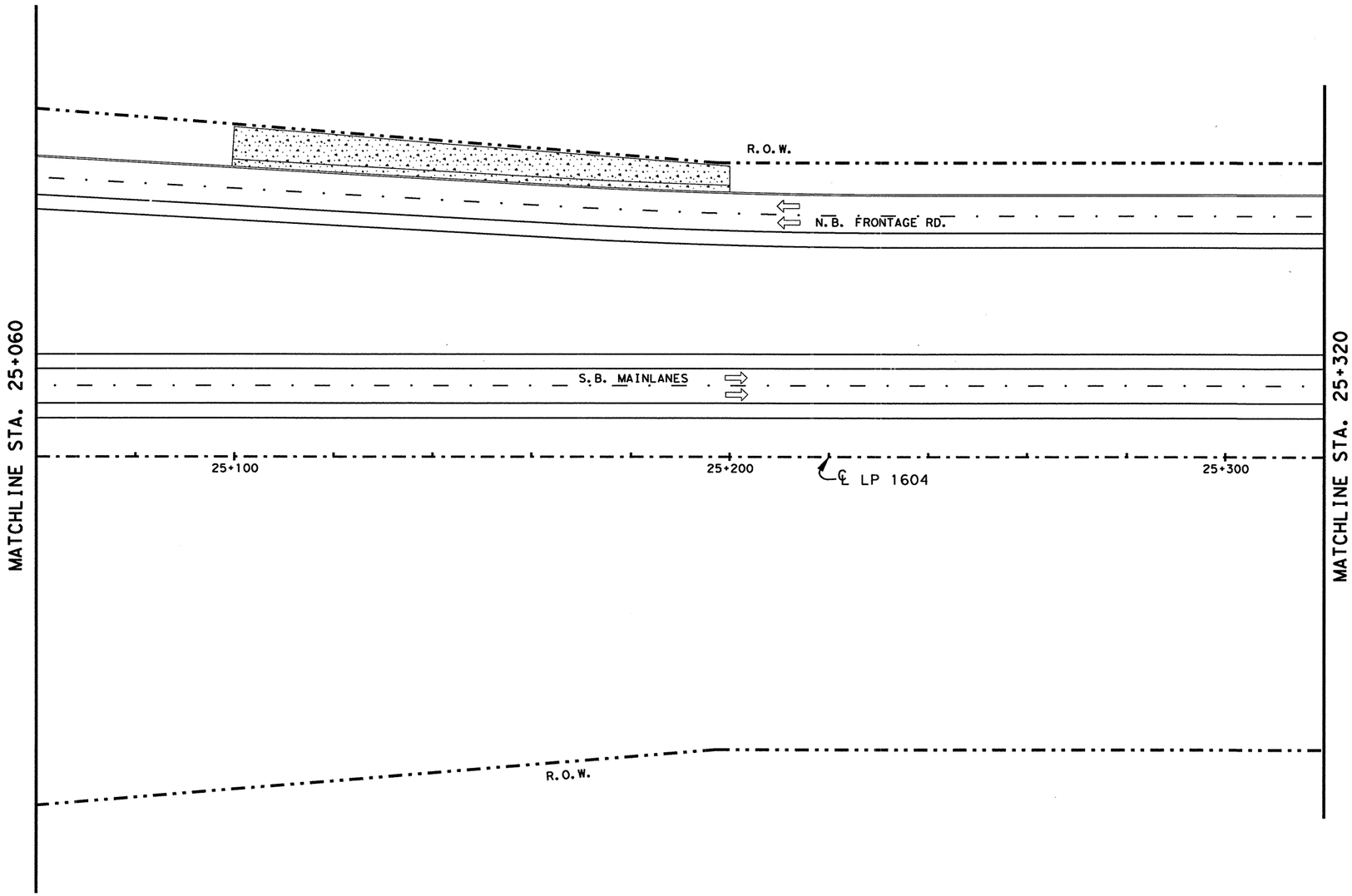


LEVELS DISPLAYED
1 2 3 4 1 5 1 6 1 7 1 8 1 _ 1 _ 1 21 31 41 51
1 11 81 92 02 12 22 32 42 52 62 72 82 93 03 13
33 43 53 63 73 83 94 04 14 24 34 44 54 64 74 84
49 59 15 25 35 45 55 65 75 85 96 06 16 26 36

ACC: t:\oo\design\
lp1604fm471-90\pavesign\
FILE: pavmrkplan44.dgn

STATE OF TEXAS
JOEL K. DAVENPORT, JR.
79276
REGISTERED
PROFESSIONAL ENGINEER

Joel K. Davenport, Jr. 9/19/00
Joel K. Davenport, Jr., P.E. 79276 Date

©2000 Texas Department of Transportation

# SIGNING LAYOUT

SHEET 44 OF 57

| FED. RD. DIV. NO. | FEDERAL AID PROJECT NO. | | SHEET NO. |
|---|---|---|---|
| 6 | NH 2000(704), etc. | | 688 |
| STATE | DIST. | COUNTY | |
| TEXAS | SAT | BEXAR | |
| CONT. | SECT. | JOB | HIGHWAY NO. |
| 2452 | 01 | 036, etc. | LP 1604 |

QUANTITIES THIS SHEET
CSJ 2452-01-036

SCALE 1:1000

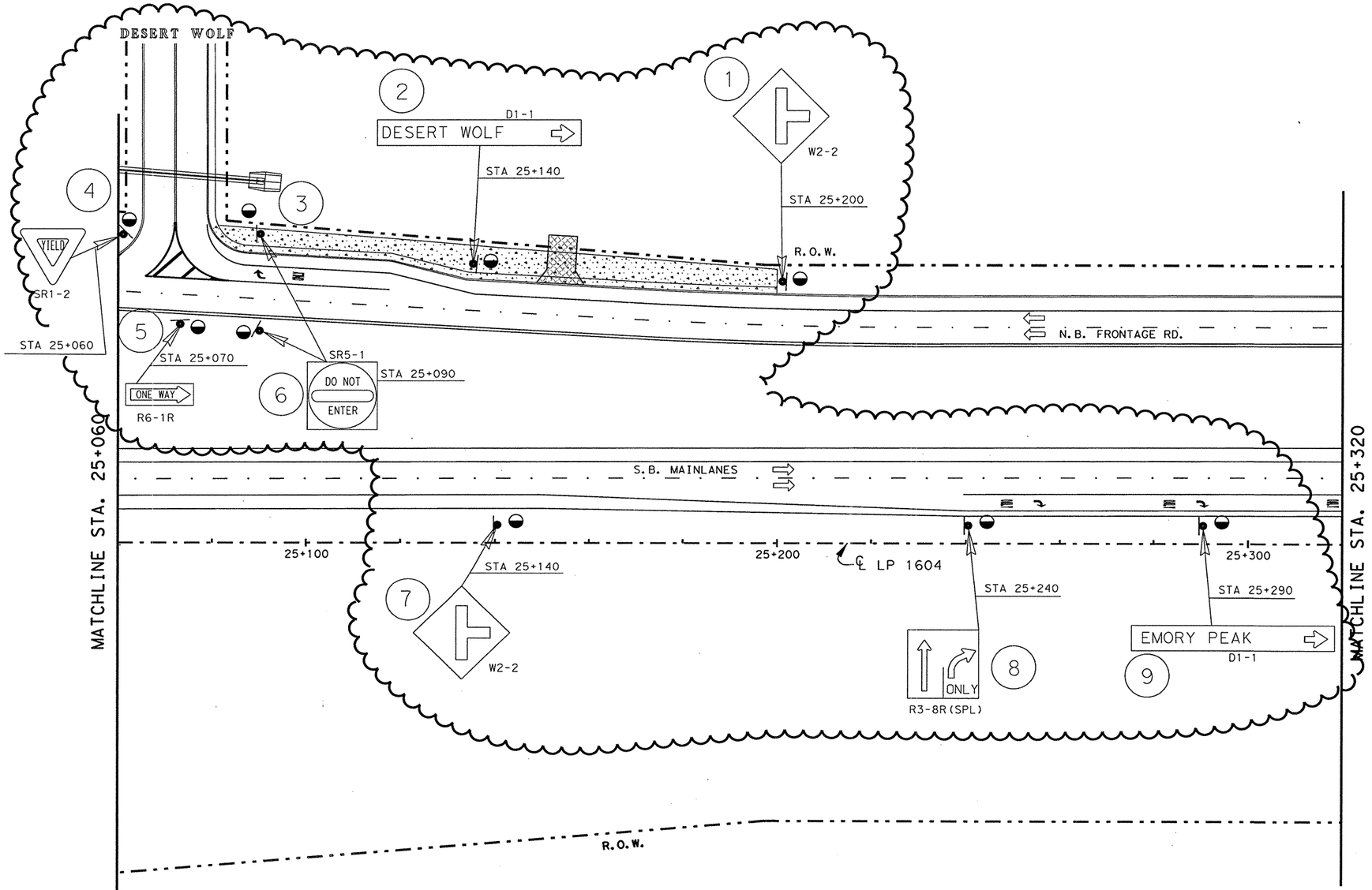


| RIPRAP APRONS QUANTITIES | | | |
|---|---|---|---|
| TYPE OF MOUNT | EA. | MULTIPLIED BY M3 | TOTAL M3 |
| SINGLE POST | 9 | 1.0 | 9.0 |
| MULTI - POST | | 1.5 | |
| OVHD. SIGN BRIDGE | | | |
| CLASS "B" CONC. GRAND TOTAL | | | 9.0 |

SEE SHEET NO. 753 FOR RIPRAP APRON DETAILS.
SEE SHEET NO. 58 FOR RIPRAP SUMMARIZATION.

NOTE(S):

PAVEMENT MARKINGS SHOWN FOR REFERENCE ONLY. SEE PAVEMENT MARKINGS/DELINEATION LAYOUTS FOR DETAILS AND QUANTITIES.

CHANGE ORDER NO. 139
- -ADDED NEW INTERSECTION APPROACH EMORY PEAK
- -ADDED NEW INTERSECTION DESERT WOLF
- -ADDED SIGNS / RIPRAP
- -ADDED / REVISED QUANTITIES

CHANGE ORDER 139

REVISED SHEET

CO #139

STATE OF TEXAS
FITZGERALDO G. SANCHEZ
76084
LICENCED
PROFESSIONAL ENGINEER

Fitzgeraldo G. Sanchez 08-16-06
Fitzgeraldo G. Sanchez, P.E. Date

©2000
Texas Department of Transportation

SIGNING LAYOUT

SHEET 44 OF 57

| FED. RD. DIV. NO. | FEDERAL AID PROJECT NO. | | SHEET NO. |
|---|---|---|---|
| 6 | NH 2000(704), etc. | | 688 AA |
| STATE | DIST. | COUNTY | |
| TEXAS | SAT | BEXAR | |
| CONT. | SECT. | JOB | HIGHWAY NO. |
| 2452 | 01 | 036, etc. | LP 1604 |

7-31-06

LEVELS DISPLAYED
1 2 | 4 5 6 7 8 | 11 12 13 14 15 16 | 17 18 19 20 21 22 23 24 25 26 27 28 29 30 31 32 | 33 34 35 36 37 38 39 40 41 42 43 44 45 46 47 48 | 49 50 51 52 53 54 55 56 57 58 59 60 61 62 63

t:\oo\design\lp1604fm471-90\pave*sign\signing\signing44*co.dgn

QUANTITIES THIS SHEET
CSJ 2452-01-036

SCALE 1:1000

| RIPRAP APRONS QUANTITIES | | | |
|---|---|---|---|
| TYPE OF MOUNT | EA. | MULTIPLIED BY M3 | TOTAL M3 |
| SINGLE POST | 1 | 1.0 | 1.0 |
| MULTI - POST | | 1.5 | |
| OVHD. SIGN BRIDGE | | | |
| CLASS "B" CONC. GRAND TOTAL | | | 1.0 |

SEE SHEET NO. 753 FOR RIPRAP APRON DETAILS.
SEE SHEET NO. 58 FOR RIPRAP SUMMARIZATION.

NOTE(S):

PAVEMENT MARKINGS SHOWN FOR REFERENCE ONLY. SEE PAVEMENT MARKINGS/DELINEATION LAYOUTS FOR DETAILS AND QUANTITIES.

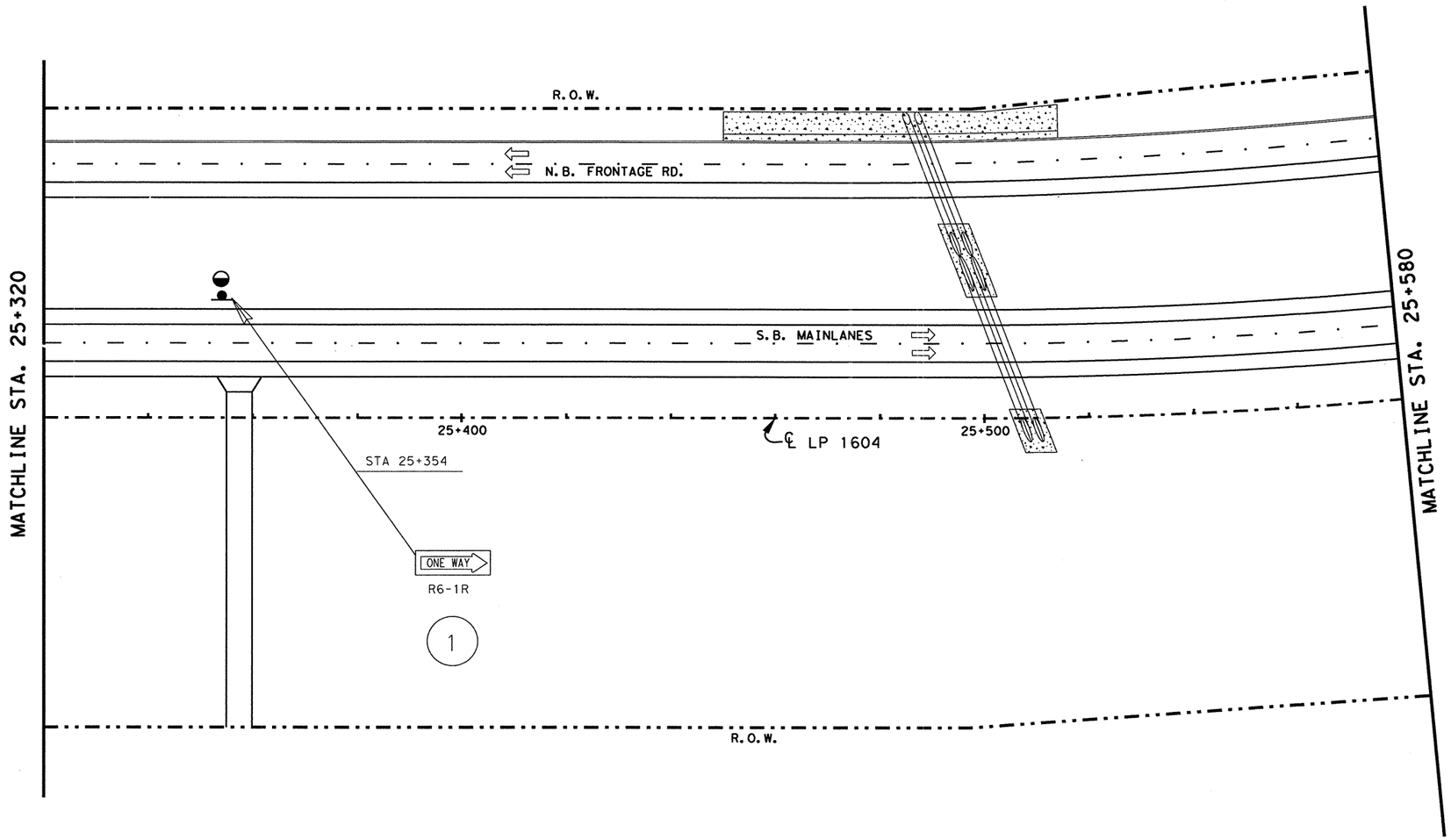


LEVELS DISPLAYED
1 2 3 4 5 6 7 8 | 1 2 3 | 1 2 3 4 5 6
1 7 1 9 1 9 2 0 2 1 2 2 2 3 2 4 2 5 2 6 2 7 2 8 2 9 3 0 3 1 3 2
3 3 3 4 3 5 3 5 3 6 3 7 3 8 3 9 4 0 4 1 4 2 4 3 4 4 4 5 4 6 4 7 4 8
4 9 5 0 5 1 5 2 5 3 5 4 5 5 5 6 5 7 5 8 5 9 6 0 6 1 6 2 6 3

ACC: t:\ao\design\
ip1604fm471-90\pave-sign\
FILE: pavmrkplan45.dgn

JOEL K. DAVENPORT, JR. 79276 REGISTERED PROFESSIONAL ENGINEER
STATE OF TEXAS

Joel K Davenport Jr 9/19/00
Joel K. Davenport, Jr. P.E. 79276 Date

©2000
Texas Department of Transportation

# SIGNING LAYOUT

**SHEET 45 OF 57**

| FED. RD. DIV. NO. | FEDERAL AID PROJECT NO. | | SHEET NO. |
|---|---|---|---|
| 6 | NH 2000(704), etc. | | 689 |
| STATE | DIST. | COUNTY | |
| TEXAS | SAT | BEXAR | |
| CONT. | SECT. | JOB | HIGHWAY NO. |
| 2452 | 01 | 036, etc. | LP 1604 |

QUANTITIES THIS SHEET
CSJ 2452-01-036

SCALE 1:1000

| RIPRAP APRONS QUANTITIES | | | |
|---|---|---|---|
| TYPE OF MOUNT | EA. | MULTIPLIED BY M3 | TOTAL M3 |
| SINGLE POST | 6 | 1.0 | 6.0 |
| MULTI - POST | | 1.5 | |
| OVHD. SIGN BRIDGE | | | |
| CLASS "B" CONC. GRAND TOTAL | | | 6.0 |

SEE SHEET NO. 753 FOR RIPRAP APRON DETAILS.
SEE SHEET NO. 58 FOR RIPRAP SUMMARIZATION.

NOTE(S):

PAVEMENT MARKINGS SHOWN FOR REFERENCE ONLY. SEE PAVEMENT MARKINGS/DELINEATION LAYOUTS FOR DETAILS AND QUANTITIES.

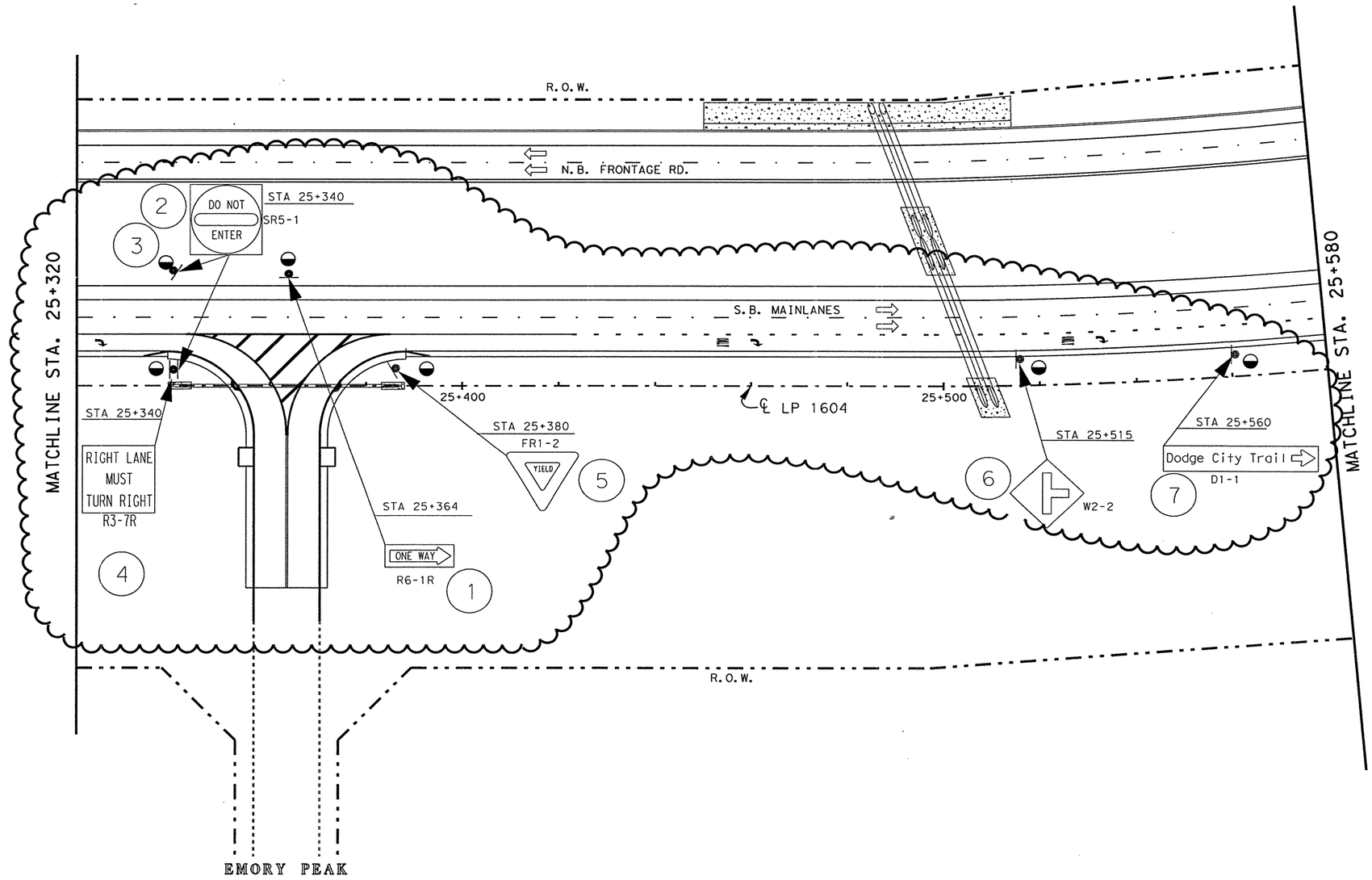


CHANGE ORDER NO. 139
-ADDED NEW INTERSECTION EMORY PEAK
-ADDED NEW APPROACH TO DODGE CITY TRAIL
-ADDED SIGNS / RIPRAP
-ADDED / REVISED QUANTITIES

CHANGE ORDER 139

REVISED SHEET

STATE OF TEXAS
FITZGERALDO G. SANCHEZ
76084
LICENCED PROFESSIONAL ENGINEER

CO# 139

Fitzgeraldo G Sanchez 08-16-06
Fitzgeraldo G. Sanchez, P.E. Date

©2000
Texas Department of Transportation

SIGNING LAYOUT

SHEET 45 OF 57

| FED.RD. DIV.NO. | FEDERAL AID PROJECT NO. | | SHEET NO. |
|---|---|---|---|
| 6 | NH 2000(704), etc. | | 689 AA |
| STATE | DIST. | COUNTY | |
| TEXAS | SAT | BEXAR | |
| CONT. | SECT. | JOB | HIGHWAY NO. |
| 2452 | 01 | 036, etc. | LP 1604 |

7-31-06

LEVELS DISPLAYED
1 2 3 1 4 1 5 1 6 1 7 1 8 1 1 2 1 3 1 4 1 5 1 6
1 7 1 8 1 9 2 0 2 1 2 2 2 3 2 4 2 5 2 6 2 7 2 8 2 9 3 0 3 3 3 5 3 2
3 3 2 3 3 3 3 3 3 4 3 5 3 6 4 1 4 2 4 3 4 4 4 5 4 6 4 7 4 8
4 9 5 0 5 1 5 2 5 3 5 4 5 5 5 6 5 7 5 8 5 9 6 0 6 1 6 2 6 3

t:\ao\design\lp1604fm471-90\paves\sign\signing\signing45*co.dgn

QUANTITIES THIS SHEET
CSJ 2452-01-036

SCALE 1:1000

| RIPRAP APRONS QUANTITIES | | | |
|---|---|---|---|
| TYPE OF MOUNT | EA. | MULTIPLIED BY M3 | TOTAL M3 |
| SINGLE POST | 1 | 1.0 | 1.0 |
| MULTI - POST | | 1.5 | |
| OVHD. SIGN BRIDGE | | | |
| CLASS "B" CONC. GRAND TOTAL | | | 1.0 |

SEE SHEET NO. 753 FOR RIPRAP APRON DETAILS.
SEE SHEET NO. 58 FOR RIPRAP SUMMARIZATION.

NOTE(S):

PAVEMENT MARKINGS SHOWN FOR REFERENCE ONLY. SEE PAVEMENT MARKINGS/DELINEATION LAYOUTS FOR DETAILS AND QUANTITIES.

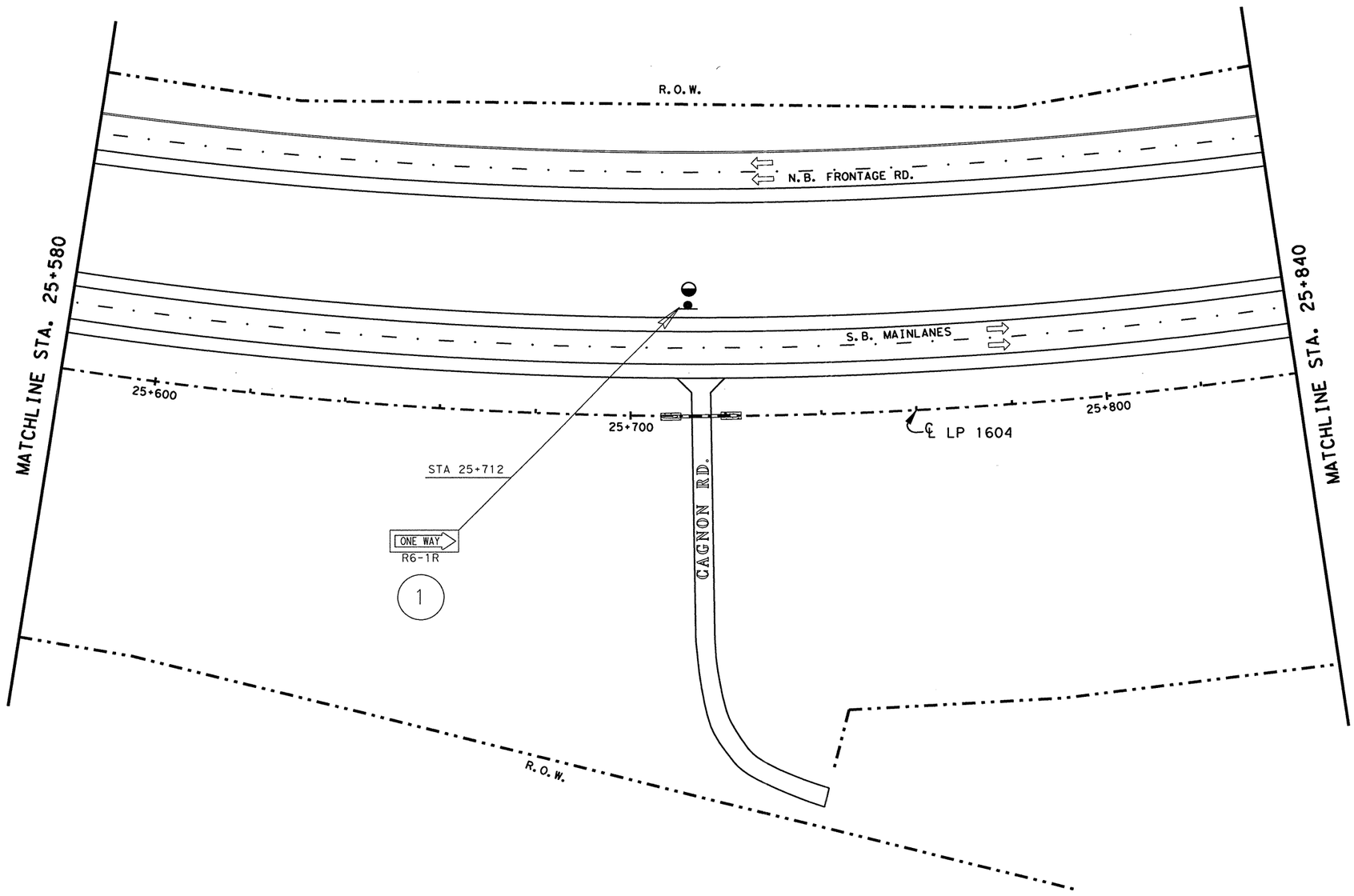


LEVELS DISPLAYED
1 2 3 4 5 6 7 8 | 11 21 31 41 51 61
17 18 19 20 21 22 23 24 25 26 27 28 29 30 31 32
33 34 35 36 37 38 39 40 41 42 43 44 45 46 47 48
49 50 51 52 53 54 55 56 57 58 59 60 61 62 63

ACC: t:\ao\design\lp1604fm471-90\pave-sign\
FILE: pavmrkplan46.dgn

STATE OF TEXAS
JOEL K. DAVENPORT, JR.
79276
REGISTERED PROFESSIONAL ENGINEER

Joel K. Davenport, Jr. 9/19/00
Joel K. Davenport, Jr. P.E. 79276 Date

©2000 Texas Department of Transportation

# SIGNING LAYOUT

**SHEET 46 OF 57**

| FED. RD. DIV. NO. | FEDERAL AID PROJECT NO. | | SHEET NO. |
|---|---|---|---|
| 6 | NH 2000(704), etc. | | 690 |
| STATE | DIST. | COUNTY | |
| TEXAS | SAT | BEXAR | |
| CONT. | SECT. | JOB | HIGHWAY NO. |
| 2452 | 01 | 036, etc. | LP 1604 |

QUANTITIES THIS SHEET
CSJ 2452-01-036

SCALE 1:1000

| RIPRAP APRONS QUANTITIES | | | |
|---|---|---|---|
| TYPE OF MOUNT | EA. | MULTIPLIED BY M3 | TOTAL M3 |
| SINGLE POST | 6 | 1.0 | 6.0 |
| MULTI - POST | | 1.5 | |
| OVHD. SIGN BRIDGE | | | |
| CLASS "B" CONC. GRAND TOTAL | | | 6.0 |

SEE SHEET NO. 753 FOR RIPRAP APRON DETAILS.
SEE SHEET NO. 58 FOR RIPRAP SUMMARIZATION.

NOTE(S):

PAVEMENT MARKINGS SHOWN FOR REFERENCE ONLY. SEE PAVEMENT MARKINGS/DELINEATION LAYOUTS FOR DETAILS AND QUANTITIES.

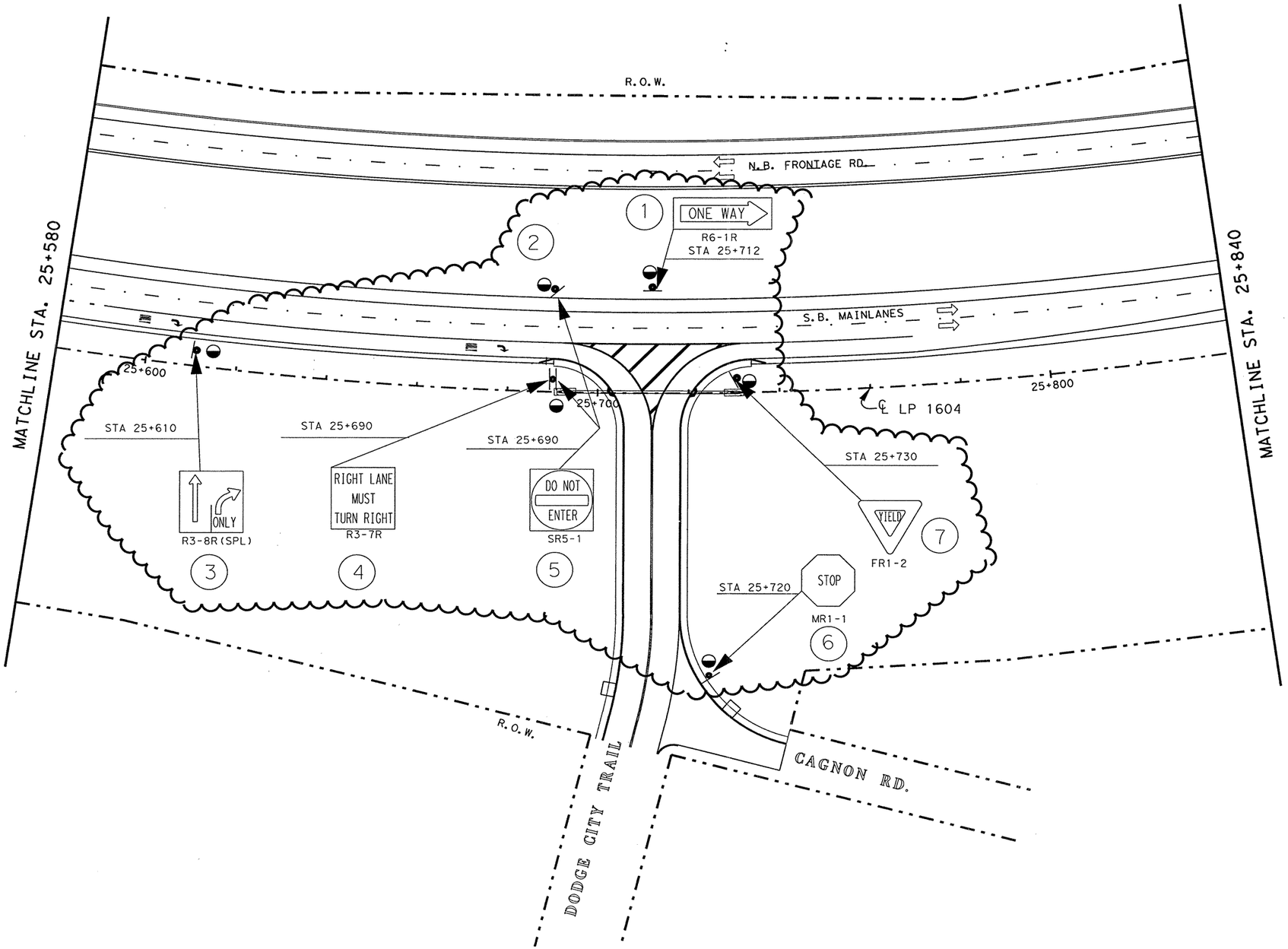


CHANGE ORDER NO. ~~64~~ 139
-ADDED NEW INTERSECTION DODGE CITY TRAIL
-ADDED SIGNS / RIPRAP
-ADDED / REVISED QUANTITIES

CHANGE ORDER 139

REVISED SHEET

STATE OF TEXAS
FITZGERALDO G. SANCHEZ
76084
LICENCED PROFESSIONAL ENGINEER

CO#139

Fitzgeraldo G. Sanchez 08-16-06
Fitzgeraldo G. Sanchez, P.E. Date

©2000
Texas Department of Transportation

SIGNING LAYOUT

SHEET 46 OF 57

| FED.RD. DIV.NO. | FEDERAL AID PROJECT NO. | | SHEET NO. |
|---|---|---|---|
| 6 | NH 2000(704), etc. | | 690 AA |
| STATE | DIST. | COUNTY | |
| TEXAS | SAT | BEXAR | |
| CONT. | SECT. | JOB | HIGHWAY NO. |
| 2452 | 01 | 036, etc. | LP 1604 |

7-31-06

LEVELS DISPLAYED
1 2 3 4 5 6 7 8 11 12 13 31 41 51 61
11 18 19 20 21 22 23 24 25 26 27 28 29 30 33 152
33 34 35 36 37 38 39 40 41 42 43 44 45 46 47 48
49 55 65 125 135 145 155 165 175 185 196 0 16 263

f:\co\design\lp1604fm471-90\pave\sign\signing\signing46*co64.dgn

QUANTITIES THIS SHEET
CSJ 2452-01-036

SCALE 1:1000

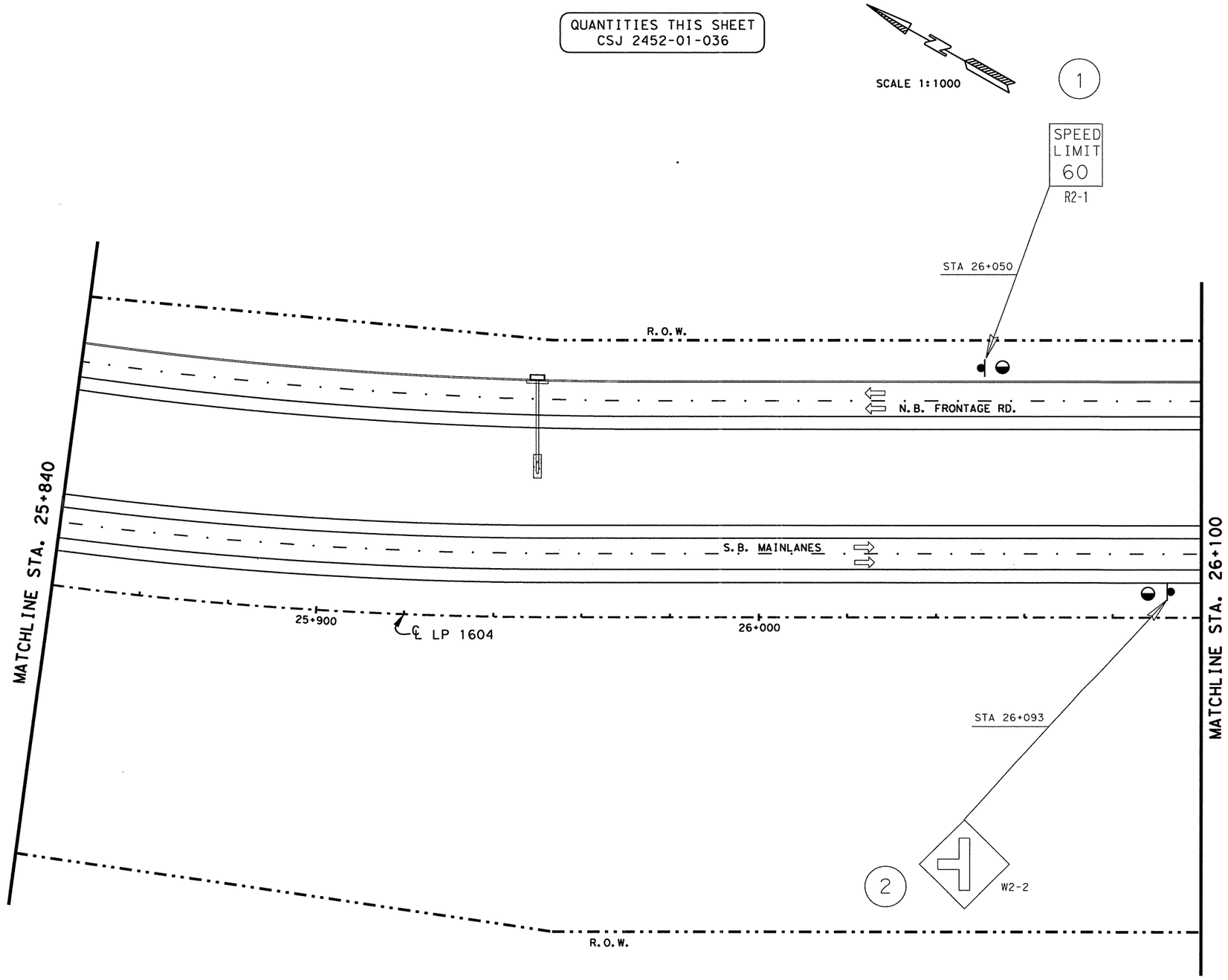


| RIPRAP APRONS | | | |
|---|---|---|---|
| QUANTITIES | | | |
| TYPE OF MOUNT | EA. | MULTIPLIED BY M3 | TOTAL M3 |
| SINGLE POST | 2 | 1.0 | 2.0 |
| MULTI - POST | | 1.5 | |
| OVHD. SIGN BRIDGE | | | |
| CLASS "B" CONC. GRAND TOTAL | | | 2.0 |

SEE SHEET NO. 753 FOR RIPRAP APRON DETAILS.
SEE SHEET NO. 58 FOR RIPRAP SUMMARIZATION.

NOTE(S):

PAVEMENT MARKINGS SHOWN FOR REFERENCE ONLY. SEE PAVEMENT MARKINGS/DELINEATION LAYOUTS FOR DETAILS AND QUANTITIES.

LEVELS DISPLAYED
1 2 3 4 5 6 7 8 11 12 13 14 15 16 17 18 21 22 23 24 25 26 27 28 31 32 33 34 35 36 37 38 41 42 43 44 45 46 47 48 51 52 53 54 55 56 57 58 61 62 63

ACC: t:\oo\design\
\\p1604fm471-90\pave-sign\
FILE: pavmr-kplan47.dgn

STATE OF TEXAS
JOEL K. DAVENPORT, JR.
79276
REGISTERED PROFESSIONAL ENGINEER

Joel K Davenport Jr. 9/19/00
Joel K. Davenport, Jr. P.E. 79276 Date

©2000 Texas Department of Transportation

# SIGNING LAYOUT

SHEET 47 OF 57

| FED. RD. DIV. NO. | FEDERAL AID PROJECT NO. | | SHEET NO. |
|---|---|---|---|
| 6 | NH 2000(704), etc. | | 691 |
| STATE | DIST. | COUNTY | |
| TEXAS | SAT | BEXAR | |
| CONT. | SECT. | JOB | HIGHWAY NO. |
| 2452 | 01 | 036, etc. | LP 1604 |

QUANTITIES THIS SHEET
CSJ 2452-01-036

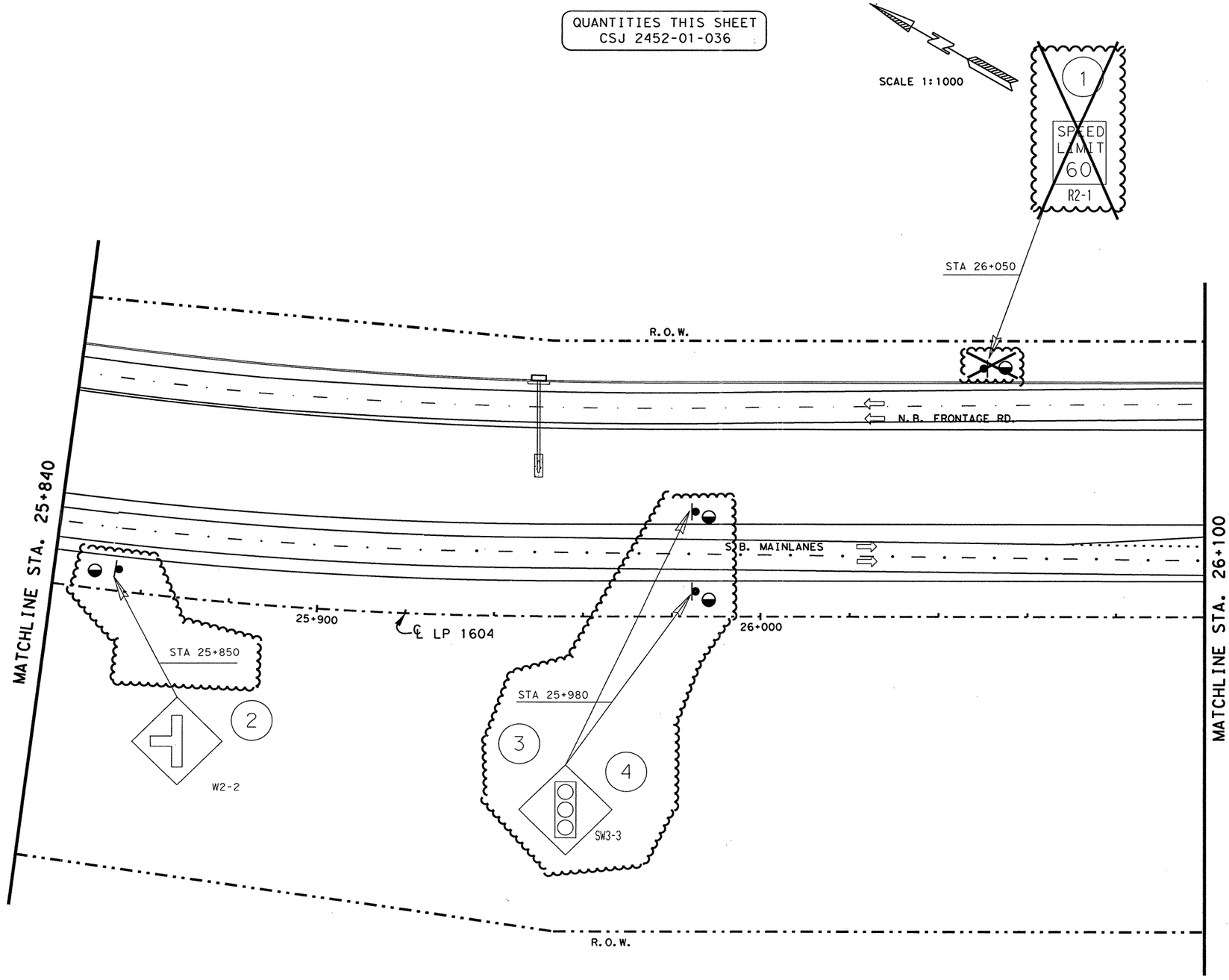


| RIPRAP APRONS QUANTITIES | | | |
|---|---|---|---|
| TYPE OF MOUNT | EA. | MULTIPLIED BY M3 | TOTAL M3 |
| SINGLE POST | 3 | 1.0 | 3.0 |
| MULTI - POST | | 1.5 | |
| OVHD. SIGN BRIDGE | | | |
| CLASS "B" CONC. GRAND TOTAL | | | 3.0 |

SEE SHEET NO. 753 FOR RIPRAP APRON DETAILS.
SEE SHEET NO. 58 FOR RIPRAP SUMMARIZATION.

NOTE(S):

PAVEMENT MARKINGS SHOWN FOR REFERENCE ONLY. SEE PAVEMENT MARKINGS/DELINEATION LAYOUTS FOR DETAILS AND QUANTITIES.

CHANGE ORDER NO. 65
-ELIMINATED SIGN
-REVISED SIGNS AND SIGN LOCATIONS
-REVISED RIPRAP APRON QUANTITIES

CHANGE ORDER 65

REVISED SHEET

STATE OF TEXAS
JEROME D. PAVLISKA
76075
REGISTERED
PROFESSIONAL ENGINEER

Jerome D. Pavliska P.E. 4-15-04
Jerome D. Pavliska, P.E. Date

LEVELS DISPLAYED
1 2 3 4 5 6 7 8 | 12 13 14 15 16 17 18 19 20 21 22 23 24 25 26 27 28 29 30 31 32 | 33 34 35 45 63 73 85 94 101 124 134 144 154 164 174 184 | 195 205 215 225 235 245 255 265 275 285 295 306 316 326 336

ACC: t:\ao\design\
\lp1604fm471-90\pave-sign\
FILE: pavmrkplan47.dgn

©2000
Texas Department of Transportation

SIGNING LAYOUT

SHEET 47 OF 57

| FED. RD. DIV. NO. | FEDERAL AID PROJECT NO. | | SHEET NO. |
|---|---|---|---|
| 6 | NH 2000(704), etc. | | 691A |
| STATE | DIST. | COUNTY | |
| TEXAS | SAT | BEXAR | |
| CONT. | SECT. | JOB | HIGHWAY NO. |
| 2452 | 01 | 036, etc. | LP 1604 |

QUANTITIES THIS SHEET
CSJ 2452-01-036

SCALE 1:1000

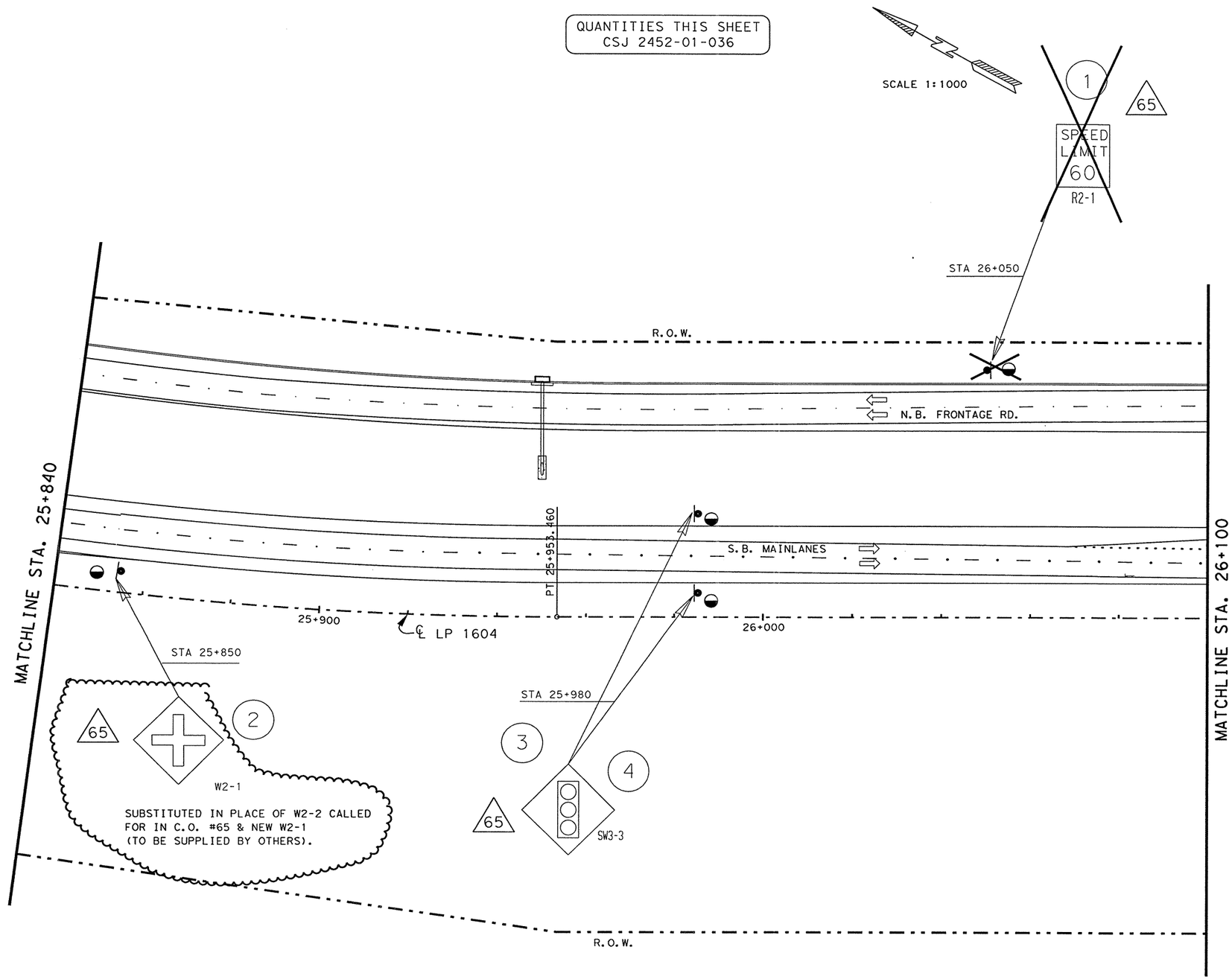


| RIPRAP APRONS QUANTITIES | | | |
|---|---|---|---|
| TYPE OF MOUNT | EA. | MULTIPLIED BY M3 | TOTAL M3 |
| SINGLE POST | 3 | 1.0 | 3.0 |
| MULTI - POST | | 1.5 | |
| OVHD. SIGN BRIDGE | | | |
| CLASS "B" CONC. GRAND TOTAL | | | 3.0 |

65

SEE SHEET NO. 753 FOR RIPRAP APRON DETAILS.
SEE SHEET NO. 58 FOR RIPRAP SUMMARIZATION.

NOTE(S):

PAVEMENT MARKINGS SHOWN FOR REFERENCE ONLY. SEE PAVEMENT MARKINGS/DELINEATION LAYOUTS FOR DETAILS AND QUANTITIES.

CHANGE ORDER NO. 139
-UPDATED DUE TO CONSTRUCTION BY OTHERS @ MARBACH RD.
-ELIMINATED SIGN(S)
-REVISED SIGNS AND SIGN LOCATIONS
-REVISED RIPRAP APRON QUANTITIES

CHANGE ORDER 139

REVISED SHEET

STATE OF TEXAS
FITZGERALDO G. SANCHEZ
76084
LICENCED PROFESSIONAL ENGINEER

CO #139

Fitzgeraldo G. Sanchez 08-16-06
Fitzgeraldo G. Sanchez, P.E. Date

(#) REFERS TO CHANGES MADE AS PART OF CHANGE ORDER

©2000
Texas Department of Transportation

SIGNING LAYOUT

SHEET 47 OF 57

| FED.RD. DIV.NO. | FEDERAL AID PROJECT NO. | | SHEET NO. |
|---|---|---|---|
| 6 | NH 2000(704), etc. | | 691A |
| STATE | DIST. | COUNTY | |
| TEXAS | SAT | BEXAR | |
| CONT. | SECT. | JOB | HIGHWAY NO. |
| 2452 | 01 | 036, etc. | LP 1604 |

7-31-06

t:\ao\design\lp1604fm471-90\pd*phase2*change*order*mylars\submittal\plansheets\traffic\signing\signing47nc065.dgn
8/4/2006

LEVELS DISPLAYED
1 2 3 4 5 6 7 8 | 1 2 3 4 5 6
9 10 11 12 13 14 25 26 27 28 29 30 31 32
17 18 19 20 21 22 33 34 35 36 37 38 39 40 41 42 43 44 45 46 47 48
49 50 51 52 53 54 55 65 66 76 85 96 106 263

ACC: t:\ao\design\
\lp1604fm471-90\pave-sign\
FILE: pavmrkplan47.dgn

QUANTITIES THIS SHEET
CSJ 2452-01-036

SCALE 1:1000

| RIPRAP APRONS QUANTITIES | | | |
|---|---|---|---|
| TYPE OF MOUNT | EA. | MULTIPLIED BY M3 | TOTAL M3 |
| SINGLE POST | 9 | 1.0 | 9.0 |
| MULTI - POST | | 1.5 | |
| OVHD. SIGN BRIDGE | | | |
| CLASS "B" CONC. GRAND TOTAL | | | 9.0 |

SEE SHEET NO. 753 FOR RIPRAP APRON DETAILS.
SEE SHEET NO. 58 FOR RIPRAP SUMMARIZATION.

NOTE(S):

PAVEMENT MARKINGS SHOWN FOR REFERENCE ONLY. SEE PAVEMENT MARKINGS/DELINEATION LAYOUTS FOR DETAILS AND QUANTITIES.

7
NORTH M3-1
LOOP 1604 M1-6L
STA 26+120

6
NORTH M3-1
LOOP 1604 M1-6L
M5-3L
STA 26+162

5
TURNAROUND SD14-1
3.6 M
STA 26+264

4
R1-2 YIELD
STA 26+262

3
DO NOT ENTER SR5-1
STA 26+313

2
RIGHT LANE MUST TURN RIGHT R3-7R
STA 26+337

1
TURNAROUND SD14-1
3.6 M
STA 26+335

R.O.W.

N.B. FRONTAGE RD.

S.B. MAINLANES

SEE SHEET 48A OF 57 FOR SIGNING ASSOCIATED WITH MARBACH RD.

NTAR

MARBACH RD.

STAR

MATCHLINE STA. 26+100

MATCHLINE STA. 26+380

26+200

26+300

℄ LP 1604

STA 26+109
R3-8L (SPL)
8

STA 26+147
REMOVE
EXIST W2-2
MARBACH ROAD
9

STA 26+153
SW3-3
10

STA 26+213
MARBACH RD D1-1
11

12

STA 26+216
13
WRONG WAY SR5-1A

STA 26+279
14
DO NOT ENTER SR5-1
15

STA 26+335
R1-2 YIELD
16

R.O.W.

FUTURE MARBACH RD.

LEVELS DISPLAYED
1 2 3 4 5 6 7 8 | 1 2 3 4 5 6 7 8 9 10 12 22 32 42 52 62 72 82 92 03 03 13 23 33 43 53 63 73 83 93 04 14 24 34 44 54 64 74 84 94 05 15 25 35 45 55 65 76 85 96 06 16 26 3

ACC: t:\ao\design\lp1604fm417-90\pave-sign\
FILE: pavmrkplan48.dgn

STATE OF TEXAS
JOEL K. DAVENPORT, JR.
79276
REGISTERED PROFESSIONAL ENGINEER

Joel K. Davenport Jr. 9/19/00
Joel K. Davenport, Jr. P.E. 79276 Date

© 2000 Texas Department of Transportation

# SIGNING LAYOUT

SHEET 48 OF 57

| FED.RD. DIV.NO. | FEDERAL AID PROJECT NO. | | SHEET NO. |
|---|---|---|---|
| 6 | NH 2000(704), etc. | | 692 |
| STATE | DIST. | COUNTY | |
| TEXAS | SAT | BEXAR | |
| CONT. | SECT. | JOB | HIGHWAY NO. |
| 2452 | 01 | 036, etc. | LP 1604 |

Plotted on: 01/26/2004

Design Filename: p:\52\20\11\design\civil\plansheets\traffic\signing\signing48.dgn

LEVELS DISPLAYED
1 2 3 4 5 6 7 8 11 17 18 21 31 41 51 61
1 7 8 9 20 21 22 23 24 25 26 27 28 29 30 51 52
3 34 35 36 37 38 39 40 41 42 43 44 45 46 47 48
49 50 51 52 53 54 55 56 57 58 59 60 61 62 63
ACC: t:\ao\design\lp1604fm417-90\pave-sign\
FILE: pavmrkplan48.dgn

QUANTITIES THIS SHEET
CSJ 2452-01-036

SCALE 1:1000

| RIPRAP APRONS QUANTITIES | | | |
|---|---|---|---|
| TYPE OF MOUNT | EA. | MULTIPLIED BY M3 | TOTAL M3 |
| SINGLE POST | 11 | 1.0 | 11.0 |
| MULTI - POST | | 1.5 | |
| OVHD. SIGN BRIDGE | | | |
| CLASS "B" CONC. GRAND TOTAL | | | 11.0 |

SEE SHEET NO. 753 FOR RIPRAP APRON DETAILS.
SEE SHEET NO. 58 FOR RIPRAP SUMMARIZATION.

NOTE(S):

PAVEMENT MARKINGS SHOWN FOR REFERENCE ONLY. SEE PAVEMENT MARKINGS/DELINEATION LAYOUTS FOR DETAILS AND QUANTITIES.

**CHANGE ORDER NO. 65**

-REVISED SIGNS AND SIGN LOCATIONS
-REVISED RIPRAP APRON QUANTITIES

MATCHLINE STA. 26+100

MATCHLINE STA. 26+380

N.B. FRONTAGE RD.

S.B. MAINLANES

R.O.W.

FUTURE MARBACH RD.

MARBACH RD.

NTAR

STAR

SEE SHEET 48A OF 57 FOR SIGNING ASSOCIATED WITH MARBACH RD.

26+200

26+300 ℄ LP 1604

7 — NORTH / LOOP 1604 — M3-1 / M1-6L — STA 26+120

6 — NORTH / LOOP 1604 — M3-1 / M1-6L / M5-3L — STA 26+200

5 — TURNAROUND — SD14-1 — 3.6 M — STA 26+264

4 — 4A / 4B — R1-2 YIELD — STA 26+262 — STA 26+279 — STA 26+317

3 — DO NOT ENTER — SR5-1 — STA 26+313

2A — LEFT LANE MUST TURN LEFT — R3-7L — STA 26+313

2 — RIGHT LANE MUST TURN RIGHT — R3-7R — STA 26+337

1 — TURNAROUND — SD14-1 — 3.6 M — STA 26+335

9 — REMOVE EXIST W2-2 MARBACH ROAD — STA 26+147 — STA 26+153

9A / 9B — ONLY R3-8,.(SPL) — STA 26+160

11 — MARBACH RD D1-1 — STA 26+213

12 — STA 26+216

13 — WRONG WAY SR5-1A

13A — LEFT LANE MUST TURN LEFT R3-7L — STA 26+279

14 — DO NOT ENTER SR5-1 — STA 26+335

15 — SR5-1

16 — YIELD R1-2

555 EAST RAMSEY SAN ANTONIO TEXAS 78216 PHONE (210)375-9000 FAX (210)375-9010
PAPE-DAWSON ENGINEERS CIVIL & ENVIRONMENTAL
STATE OF TEXAS J. KENT O'BRIEN 64398 LICENSED PROFESSIONAL ENGINEER
J. KENT O'BRIEN P.E. 1/27/2004 DATE

CHANGE ORDER NO. 65 | REVISED SHEET

©2000 Texas Department of Transportation

# SIGNING LAYOUT

SHEET 48 OF 57

| FED.RD. DIV.NO. | FEDERAL AID PROJECT NO. | SHEET NO. |
|---|---|---|
| 6 | NH 2000(704), etc. | 692 A |
| STATE | DIST. | COUNTY |
| TEXAS | SAT | BEXAR |
| CONT. | SECT. | JOB | HIGHWAY NO. |
| 2452 | 01 | 036, etc. | LP 1604 |

QUANTITIES THIS SHEET
CSJ 2452-01-036

SCALE 1:1000

| RIPRAP APRONS QUANTITIES | | | |
|---|---|---|---|
| TYPE OF MOUNT | EA. | MULTIPLIED BY M3 | TOTAL M3 |
| SINGLE POST | 11 | 1.0 | 11 |
| MULTI - POST | | 1.5 | |
| OVHD. SIGN BRIDGE | | | |
| CLASS "B" CONC. GRAND TOTAL | | | 11 |

SEE SHEET NO. 753 FOR RIPRAP APRON DETAILS.
SEE SHEET NO. 58 FOR RIPRAP SUMMARIZATION.

NOTE(S):

PAVEMENT MARKINGS SHOWN FOR REFERENCE ONLY. SEE PAVEMENT MARKINGS/DELINEATION LAYOUTS FOR DETAILS AND QUANTITIES.

7
NORTH LOOP 1604 M3-1 M1-6L
STA 26+120

6
65
NORTH LOOP 1604 M3-1 M1-6L M5-3L
STA 26+200

5
TURNAROUND SD14-1
3.6 M
STA 26+264

4
R1-2 YIELD
STA 26+262

4A 65
4B 65
26+317
26+279

R.O.W.

3
DO NOT ENTER SR5-1
STA 26+313

2A 65
R3-7L
LEFT LANE MUST TURN LEFT
26+313

2
RIGHT LANE MUST TURN RIGHT R3-7R
STA 26+337

1
TURNAROUND SD14-1
3.6 M
STA 26+335

R.O.W.

N.B. FRONTAGE RD.

9A 65
ONLY
R3-8 (SPL)
26+160

S.B. MAINLANES

NTAR

MARBACH RD.
SEE SHEET 48A OF 57
FOR SIGNING ASSOCIATED
WITH MARBACH RD.

STAR

MATCHLINE STA. 26+100

MATCHLINE STA. 26+380

26+200

STA 26+147
REMOVE
EXIST
W2-2
MARBACH ROAD

STA 26+160

STA 26+213

12

STA 26+216

13
WRONG WAY
SR5-1A

13A
LEFT LANE MUST TURN LEFT
R3-7L
STA 26+279
65

MARBACH RD
D1-1
11

RIGHT LANE MUST TURN RIGHT
R3-7R
STA 26+264
13B
(SUPPLIED BY OTHERS)

9
ONLY
R3-8 (SPL)
9B

26+300

℄ LP 1604

STA 26+335

14
DO NOT ENTER
SR5-1
STA 26+279

15

16
YIELD
R1-2

R.O.W.

MARBACH RD.
(CONSTRUCTED BY OTHERS)

SIGNS REVISED OR ELIMINATED (NOT SHOWN).
(8) ELIMINATED ORIGINALLY CALLED FOR R3-8L (SPL.)(NO LONGER NEEDED).
(10) ORIGINALLY CALLED FOR SW3-3 WAS ELIMINATED (NO LONGER NEEDED).

# REFERS TO CHANGES MADE AS PART OF CHANGE ORDER.

CHANGE ORDER NO. 64139
-UPDATED INTERSECTION DUE TO CONSTRUCTION BY OTHERS.
-REVISED SIGNS
-REVISED QUANTITATES

CHANGE ORDER 139

REVISED SHEET

STATE OF TEXAS
FITZGERALDO G. SANCHEZ
76084
LICENCED PROFESSIONAL ENGINEER
CO #139
Fitzgeraldo G. Sanchez 08-16-06
Fitzgeraldo G. Sanchez, P.E. Date

©2000
Texas Department of Transportation

SIGNING LAYOUT

SHEET 48 OF 57

| FED. RD. DIV. NO. | FEDERAL AID PROJECT NO. | | SHEET NO. |
|---|---|---|---|
| 6 | NH 2000(704),etc. | | 692AA |
| STATE | DIST. | COUNTY | |
| TEXAS | SAT | BEXAR | |
| CONT. | SECT. | JOB | HIGHWAY NO. |
| 2452 | 01 | 036,etc. | LP 1604 |

7-31-06

LEVELS DISPLAYED
1 2 3 4 5 6 7 8 9 10 11 12 13 14 15 16 17 18 19 20 21 22 23 24 25 26 27 28 29 30 31 32 33 34 35 36 37 38 39 40 41 42 43 44 45 46 47 48 49 50 51 52 53 54 55 56 57 58 59 60 61 62 63

ACC: t:\ao\design\lp1604fm417-90\pave-sign\
FILE: SIGNING48.dgn

t:\ao\design\lp1604fm471-90\pave*sign\signing\signing48.dgn

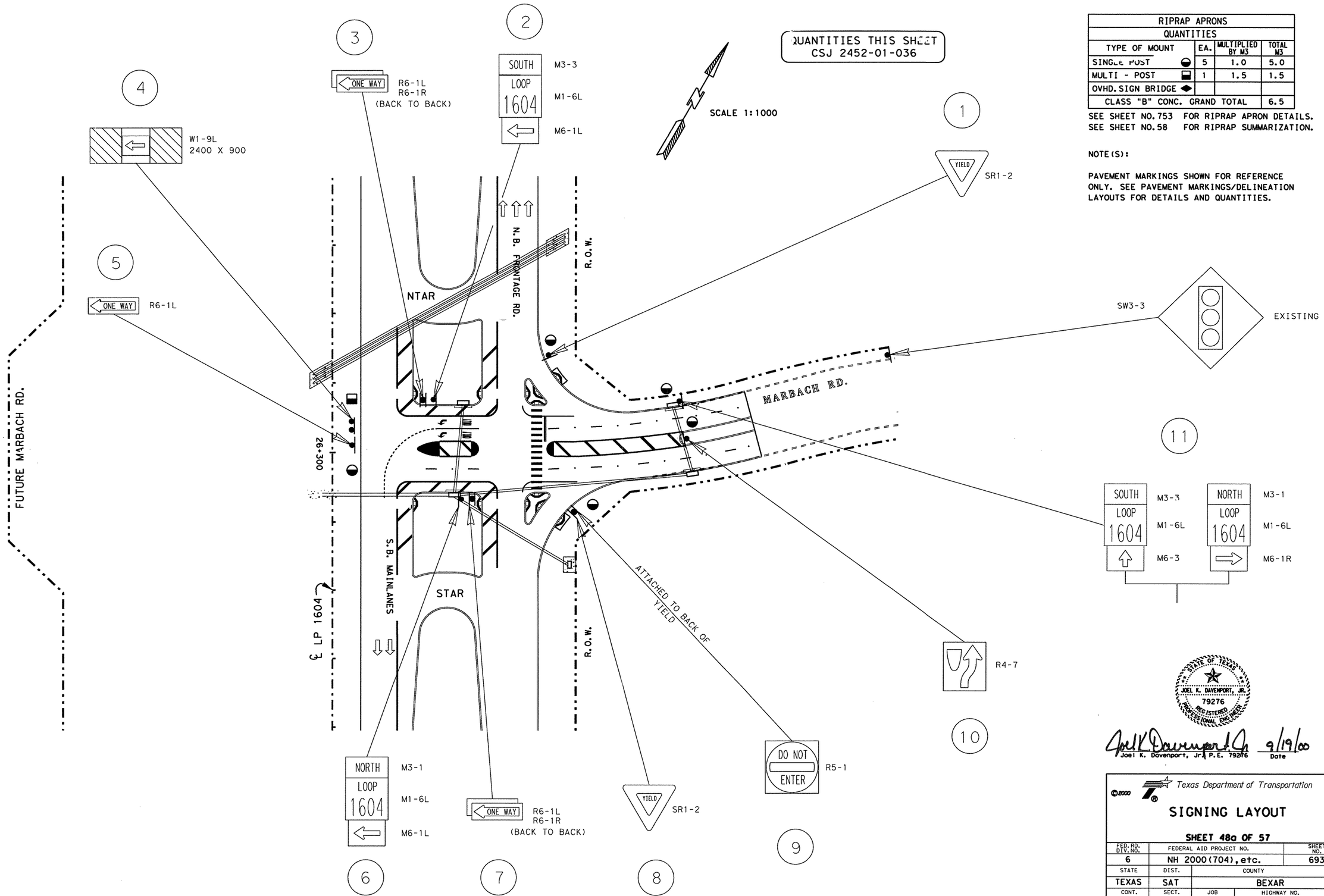


| RIPRAP APRONS QUANTITIES | | | |
|---|---|---|---|
| TYPE OF MOUNT | EA. | MULTIPLIED BY M3 | TOTAL M3 |
| SINGLE POST | 5 | 1.0 | 5.0 |
| MULTI - POST | 1 | 1.5 | 1.5 |
| OVHD. SIGN BRIDGE | | | |
| CLASS "B" CONC. GRAND TOTAL | | | 6.5 |

SEE SHEET NO. 753 FOR RIPRAP APRON DETAILS.
SEE SHEET NO. 58 FOR RIPRAP SUMMARIZATION.

NOTE(S):

PAVEMENT MARKINGS SHOWN FOR REFERENCE ONLY. SEE PAVEMENT MARKINGS/DELINEATION LAYOUTS FOR DETAILS AND QUANTITIES.

LEVELS DISPLAYED
1 2 3 4 5 6 7 8 9 10 11 12 13 14 15 16 17 18 19 20 21 22 23 24 25 26 27 28 29 30 31 32 33 34 35 36 37 38 39 40 41 42 43 44 45 46 47 48 49 50 51 52 53 54 55 56 57 58 59 60 61 62 63

ACC: t:\ao\design\1p1604fm471-90\pave-sign\
FILE: pavmrkplan48a.dgn

STATE OF TEXAS
JOEL K. DAVENPORT, JR.
79276
REGISTERED PROFESSIONAL ENGINEER

Joel K. Davenport, Jr. P.E. 79276 — 9/19/00 Date

Texas Department of Transportation

# SIGNING LAYOUT

**SHEET 48a OF 57**

| FED. RD. DIV. NO. | FEDERAL AID PROJECT NO. | | SHEET NO. |
|---|---|---|---|
| 6 | NH 2000(704), etc. | | 693 |
| STATE | DIST. | COUNTY | |
| TEXAS | SAT | BEXAR | |
| CONT. | SECT. | JOB | HIGHWAY NO. |
| 2452 | 01 | 036, etc. | LP 1604 |

| RIPRAP APRONS QUANTITIES | | | |
|---|---|---|---|
| TYPE OF MOUNT | EA. | MULTIPLIED BY M3 | TOTAL M3 |
| SINGLE POST | 3 | 1.0 | 3.0 |
| MULTI - POST | 1 | 1.5 | 1.5 |
| OVHD. SIGN BRIDGE | | | |
| CLASS "B" CONC. GRAND TOTAL | | | 4.5 |

SEE SHEET NO. 753 FOR RIPRAP APRON DETAILS.
SEE SHEET NO. 58 FOR RIPRAP SUMMARIZATION.

NOTE(S):

PAVEMENT MARKINGS SHOWN FOR REFERENCE ONLY. SEE PAVEMENT MARKINGS/DELINEATION LAYOUTS FOR DETAILS AND QUANTITIES.

QUANTITIES THIS SHEET
CSJ 2452-01-036

SCALE 1:1000

## CHANGE ORDER NO. 65

-REMOVED 2 SIGNS BECAUSE THEY ARE NOW SHOWN ON SHEET 48 OF 57
-REVISED RIPRAP APRON QUANTITIES

CHANGE ORDER 65

REVISED SHEET

STATE OF TEXAS
JEROME D. PAVLISKA
76075
REGISTERED PROFESSIONAL ENGINEER

Jerome D. Pavliska, P.E. 4-15-04
Jerome D. Pavliska, P.E. Date

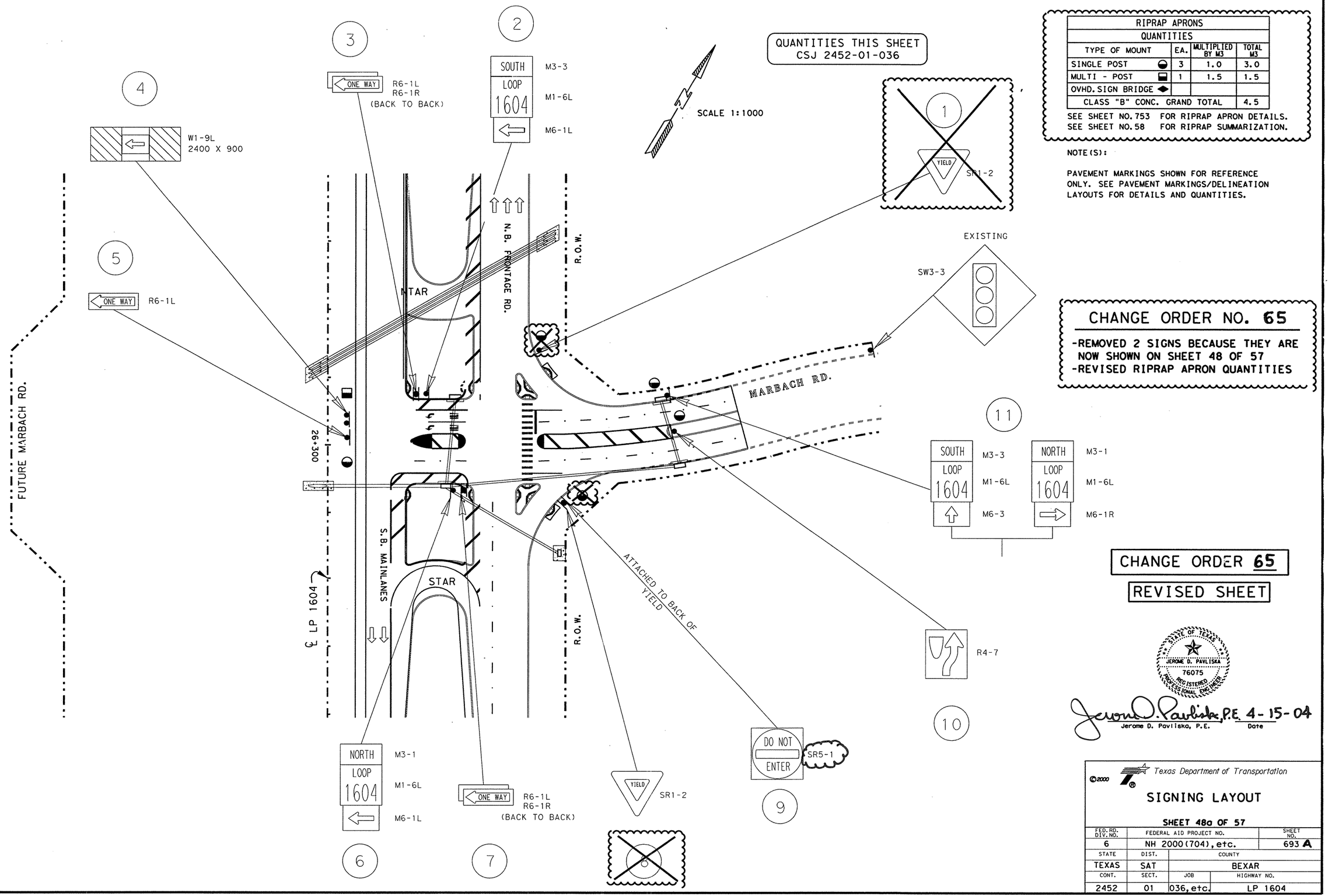


LEVELS DISPLAYED
1 2 3 4 5 6 7 8 | 11 12 13 14 15 16
17 18 19 20 21 22 23 24 25 26 27 28 29 30 31 32 | 33 34 35 36 37 38 39 40 41 42 43 44 45 46 47 48
49 50 51 52 53 54 55 56 57 58 59 60 | 62 63

ACC: t:\oo\design\lp1604fm471-90\pave-sign\
FILE: pavmrkplan48a.dgn

©2000
Texas Department of Transportation

## SIGNING LAYOUT

SHEET 48a OF 57

| FED. RD. DIV. NO. | FEDERAL AID PROJECT NO. | SHEET NO. |
|---|---|---|
| 6 | NH 2000(704), etc. | 693 A |
| STATE | DIST. | COUNTY |
| TEXAS | SAT | BEXAR |
| CONT. | SECT. | JOB / HIGHWAY NO. |
| 2452 | 01 | 036, etc. / LP 1604 |

t:\ao\design\lp1604fm471-90\pave*sign\signing\signing48a*co64.dgn
8/4/2006

| LEVELS DISPLAYED | ACC: t:\ao\design\ lp1604fm471-90\pave-sign\ FILE: pavmrkplan48a.dgn |
|---|---|
| 1 2 3 4 5 6 7 8 12 13 14 15 16 | |
| 17 18 19 20 21 22 23 24 25 26 27 28 29 30 31 32 | |
| 33 34 35 36 37 38 39 40 41 42 43 44 45 46 47 48 | |
| 49 50 51 52 53 54 55 56 57 58 59 60 62 63 | |

QUANTITIES THIS SHEET
CSJ 2452-01-036

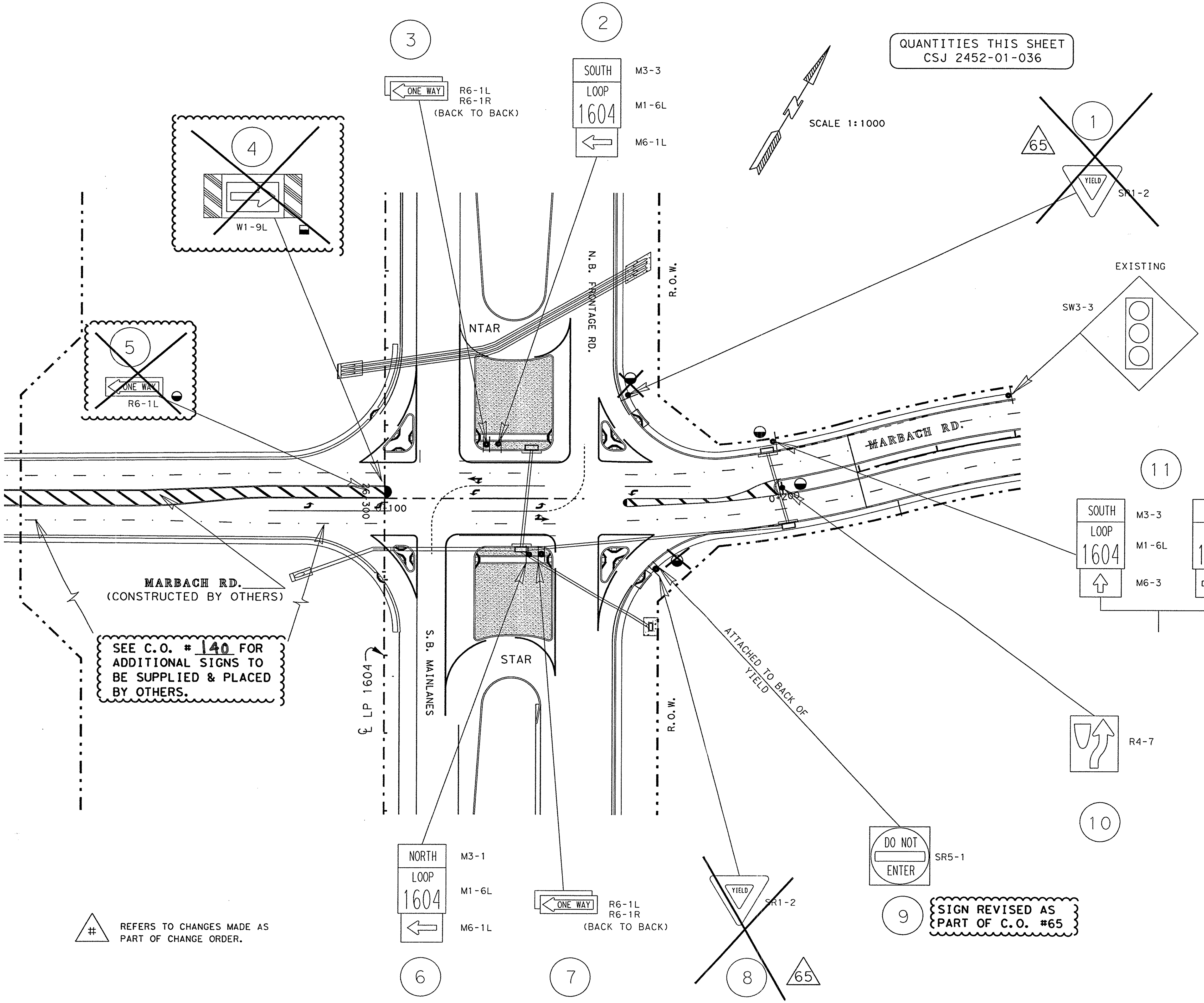


| RIPRAP APRONS | | | |
|---|---|---|---|
| QUANTITIES | | | |
| TYPE OF MOUNT | EA. | MULTIPLIED BY M3 | TOTAL M3 |
| SINGLE POST ◒ | 2 | 1.0 | 2 |
| MULTI - POST ⬓ | | 1.5 | |
| OVHD. SIGN BRIDGE ◆ | | | |
| CLASS "B" CONC. GRAND TOTAL | | | 2 |

SEE SHEET NO. 753 FOR RIPRAP APRON DETAILS.
SEE SHEET NO. 58 FOR RIPRAP SUMMARIZATION.

NOTE(S):

PAVEMENT MARKINGS SHOWN FOR REFERENCE ONLY. SEE PAVEMENT MARKINGS/DELINEATION LAYOUTS FOR DETAILS AND QUANTITIES.

CHANGE ORDER NO. 139
- UPDATED INTERSECTION DUE TO CONSTRUCTION BY OTHERS
- REVISED SIGNS
- REVISED QUANTITIES

CHANGE ORDER 139

REVISED SHEET

STATE OF TEXAS
FITZGERALDO G. SANCHEZ
76084
LICENCED
PROFESSIONAL ENGINEER

CO #139

Fitzgerald G. Sanchez 08-16-06
Fitzgeraldo G. Sanchez, P.E. Date

©2000 Texas Department of Transportation

SIGNING LAYOUT

SHEET 48a OF 57

| FED. RD. DIV. NO. | FEDERAL AID PROJECT NO. | | SHEET NO. |
|---|---|---|---|
| 6 | NH 2000(704), etc. | | 693AA |
| STATE | DIST. | COUNTY | |
| TEXAS | SAT | BEXAR | |
| CONT. | SECT. | JOB | HIGHWAY NO. |
| 2452 | 01 | 036, etc. | LP 1604 |

7-31-06

QUANTITIES THIS SHEET
CSJ 2452-01-036

SCALE 1:1000

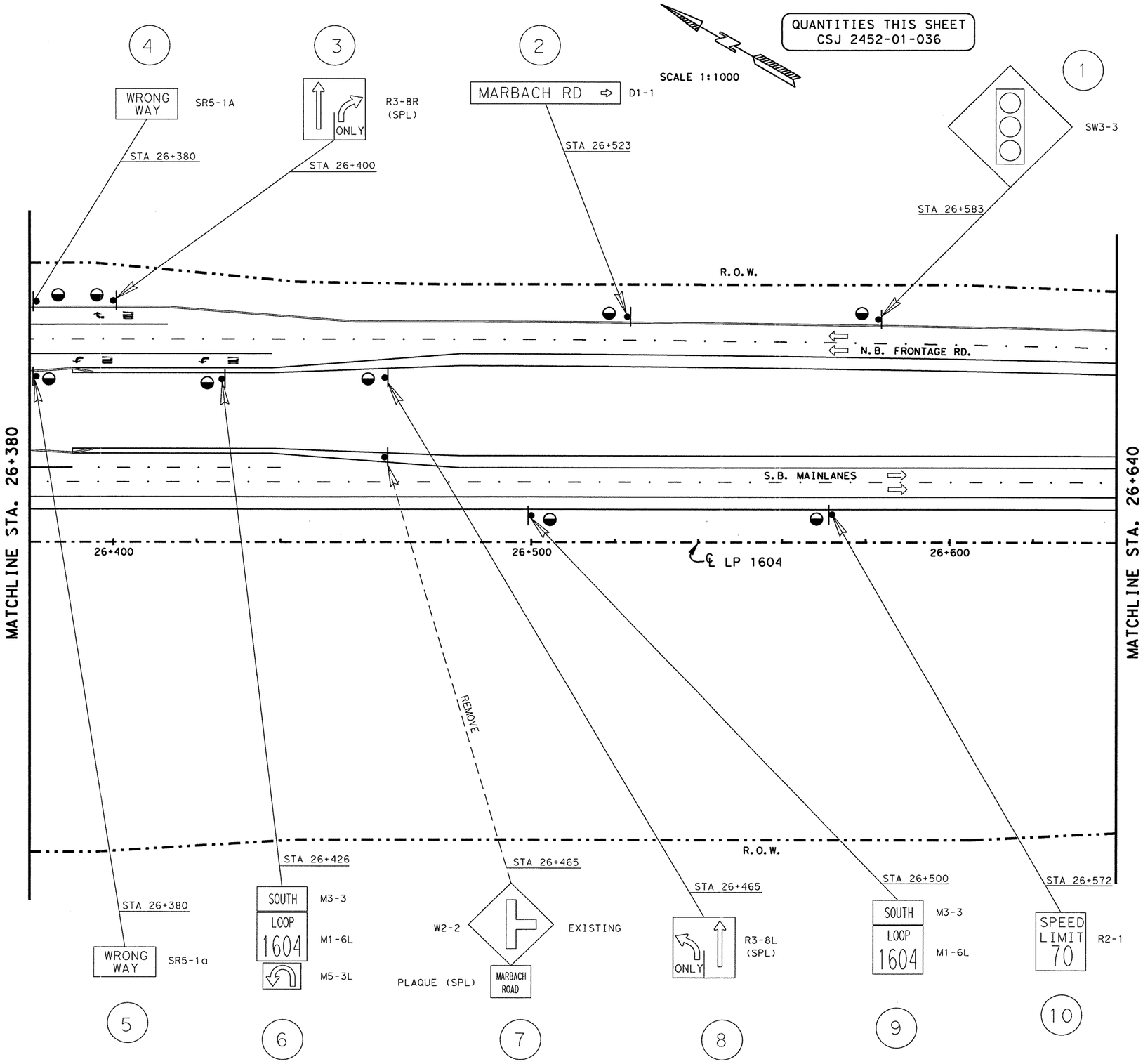


| RIPRAP APRONS QUANTITIES | | | |
|---|---|---|---|
| TYPE OF MOUNT | EA. | MULTIPLIED BY M3 | TOTAL M3 |
| SINGLE POST | 9 | 1.0 | 9.0 |
| MULTI - POST | | 1.5 | |
| OVHD. SIGN BRIDGE | | | |
| CLASS "B" CONC. GRAND TOTAL | | | 9.0 |

SEE SHEET NO. 753 FOR RIPRAP APRON DETAILS.
SEE SHEET NO. 58 FOR RIPRAP SUMMARIZATION.

NOTE(S):

PAVEMENT MARKINGS SHOWN FOR REFERENCE ONLY. SEE PAVEMENT MARKINGS/DELINEATION LAYOUTS FOR DETAILS AND QUANTITIES.

LEVELS DISPLAYED
1 2 3 4 5 6 7 8 9 10 11 12 13 14 15 16
17 18 19 20 21 22 23 24 25 26 27 28 29 30 31 32
33 34 35 36 37 38 39 40 41 42 43 44 45 46 47 48
49 50 51 52 53 54 55 56 57 58 59 60 61 62 63

ACC: t:\ao\design\lp1604fm471-90\pave-sign\
FILE: pavmrkplan49.dgn

STATE OF TEXAS
JOEL K. DAVENPORT, JR.
79276
REGISTERED PROFESSIONAL ENGINEER

Joel K. Davenport, Jr. 9/19/00
Joel K. Davenport, Jr., P.E. 79276 Date

©2000 Texas Department of Transportation

# SIGNING LAYOUT

**SHEET 49 OF 57**

| FED.RD. DIV.NO. | FEDERAL AID PROJECT NO. | | SHEET NO. |
|---|---|---|---|
| 6 | NH 2000(704),etc. | | 694 |
| STATE | DIST. | COUNTY | |
| TEXAS | SAT | BEXAR | |
| CONT. | SECT. | JOB | HIGHWAY NO. |
| 2452 | 01 | 036,etc. | LP 1604 |

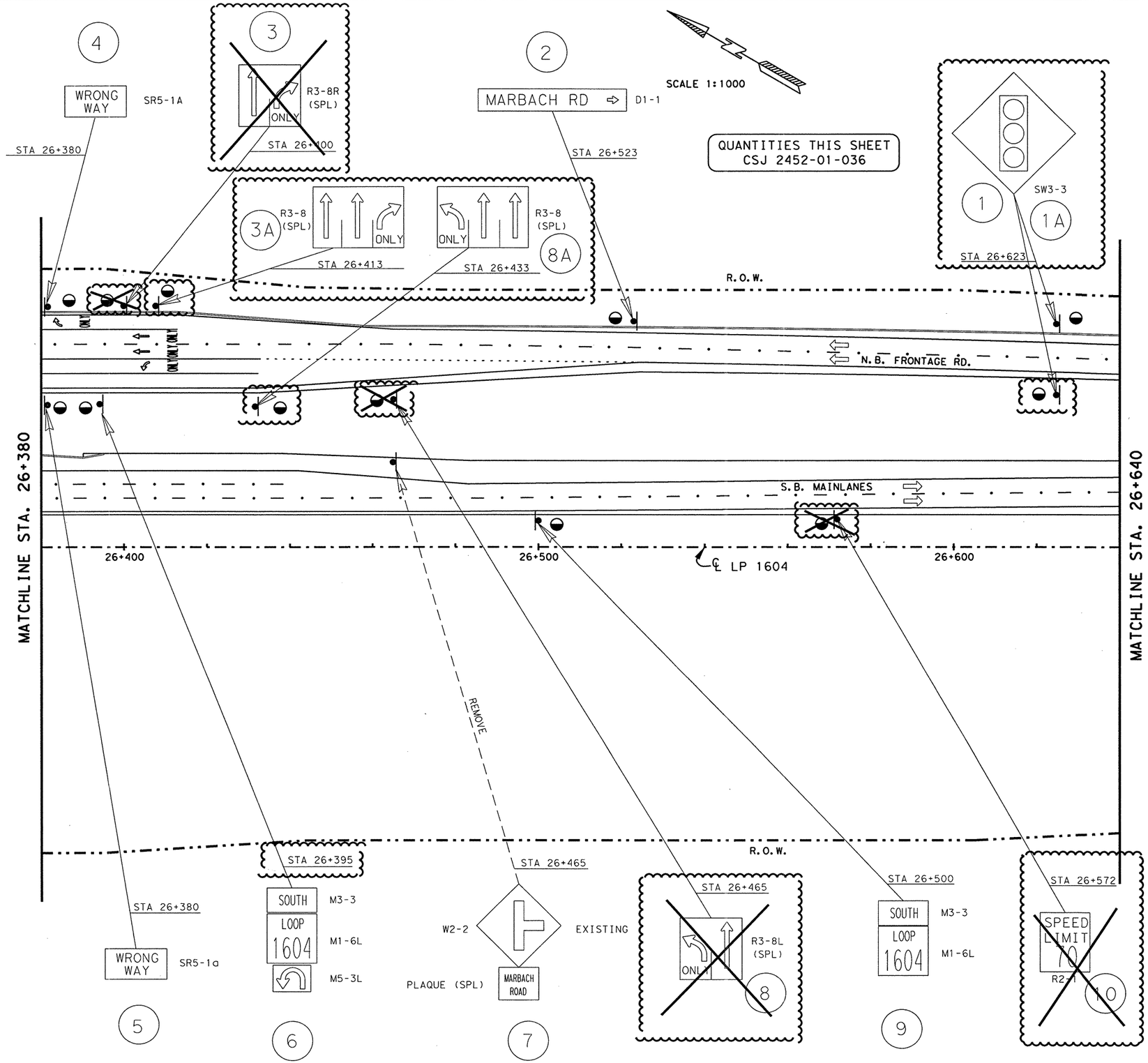


| RIPRAP APRONS QUANTITIES | | | |
|---|---|---|---|
| TYPE OF MOUNT | EA. | MULTIPLIED BY M3 | TOTAL M3 |
| SINGLE POST | 9 | 1.0 | 9.0 |
| MULTI - POST | | 1.5 | |
| OVHD. SIGN BRIDGE | | | |
| CLASS "B" CONC. GRAND TOTAL | | | 9.0 |

SEE SHEET NO. 753 FOR RIPRAP APRON DETAILS.
SEE SHEET NO. 58 FOR RIPRAP SUMMARIZATION.

NOTE(S):

PAVEMENT MARKINGS SHOWN FOR REFERENCE ONLY. SEE PAVEMENT MARKINGS/DELINEATION LAYOUTS FOR DETAILS AND QUANTITIES.

CHANGE ORDER NO. 65
-ELIMINATED SIGN
-REVISED SIGN AND SIGN LOCATIONS

CHANGE ORDER 65

REVISED SHEET

STATE OF TEXAS
JEROME D. PAVLISKA
76075
REGISTERED
PROFESSIONAL ENGINEER

Jerome D. Pavliska, P.E. 4-13-04
Jerome D. Pavliska, P.E. Date

© 2000 Texas Department of Transportation

# SIGNING LAYOUT

SHEET 49 OF 57

| FED. RD. DIV. NO. | FEDERAL AID PROJECT NO. | | SHEET NO. |
|---|---|---|---|
| 6 | NH 2000(704), etc. | | 694A |
| STATE | DIST. | COUNTY | |
| TEXAS | SAT | BEXAR | |
| CONT. | SECT. | JOB | HIGHWAY NO. |
| 2452 | 01 | 036, etc. | LP 1604 |

LEVELS DISPLAYED
1 2 3 4 5 6 7 8 | | | 12 13 14 15 16
17 18 19 20 21 22 23 24 25 26 27 28 29 30 31 32
33 34 35 36 37 38 39 40 41 42 43 44 45 46 47 48
49 50 51 52 53 54 55 56 57 58 59 60 61 62 63

ACC: t:\ao\design\
lp1604fm471-90\pave-sign\
FILE: pavmrkplan49.dgn

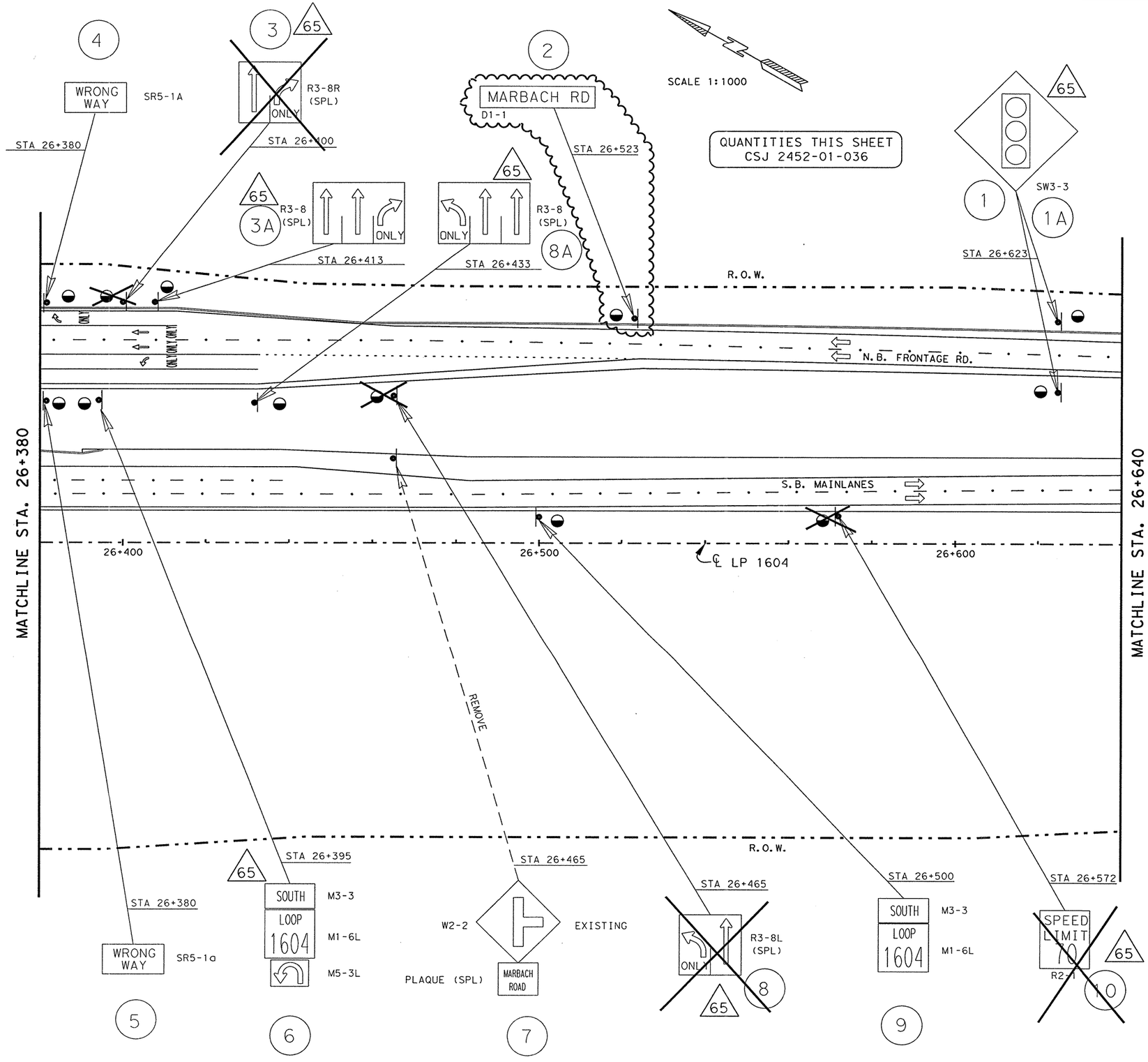


| RIPRAP APRONS QUANTITIES | | | |
|---|---|---|---|
| TYPE OF MOUNT | EA. | MULTIPLIED BY M3 | TOTAL M3 |
| SINGLE POST | 9 | 1.0 | 9.0 |
| MULTI - POST | | 1.5 | |
| OVHD. SIGN BRIDGE | | | |
| CLASS "B" CONC. GRAND TOTAL | | | 9.0 |

SEE SHEET NO. 753 FOR RIPRAP APRON DETAILS.
SEE SHEET NO. 58 FOR RIPRAP SUMMARIZATION.

NOTE(S):

PAVEMENT MARKINGS SHOWN FOR REFERENCE ONLY. SEE PAVEMENT MARKINGS/DELINEATION LAYOUTS FOR DETAILS AND QUANTITIES.

CHANGE ORDER NO. 139

-UPDATED DUE TO CONSTRUCTION BY OTHERS @ MARBACH RD
-ELIMINATED SIGN(S)
-ADDED / REVISED SIGN(S) AND SIGN LOCATIONS

CHANGE ORDER 139

REVISED SHEET

STATE OF TEXAS
FITZGERALDO G. SANCHEZ
76084
LICENCED
PROFESSIONAL ENGINEER
CO #139

Fitzgeraldo G. Sanchez 08-16-06
Fitzgeraldo G. Sanchez, P.E. Date

©2000
Texas Department of Transportation

SIGNING LAYOUT

SHEET 49 OF 57

| FED. RD. DIV. NO. | FEDERAL AID PROJECT NO. | | SHEET NO. |
|---|---|---|---|
| 6 | NH 2000(704), etc. | | 694A A |
| STATE | DIST. | COUNTY | |
| TEXAS | SAT | BEXAR | |
| CONT. | SECT. | JOB | HIGHWAY NO. |
| 2452 | 01 | 036, etc. | LP 1604 |

7-31-06

t:\ao\design\lp1604fm471-90\pave*sign\signing\signing49*co65.dgn
8/4/2006

| LEVELS DISPLAYED | ACC: t:\ao\design\ |
|---|---|
| 1 2 3 4 5 6 7 8 9 10 11 12 13 14 15 16 17 18 19 20 21 22 23 24 25 26 27 28 29 30 31 32 33 34 35 36 37 38 39 40 41 42 43 44 45 46 47 48 49 50 51 52 53 54 55 56 57 58 59 60 61 62 63 | lp1604fm471-90\pave-sign\ |
| | FILE: pavmrkplan49.dgn |

QUANTITIES THIS SHEET
CSJ 2452-01-036

SCALE 1:1000

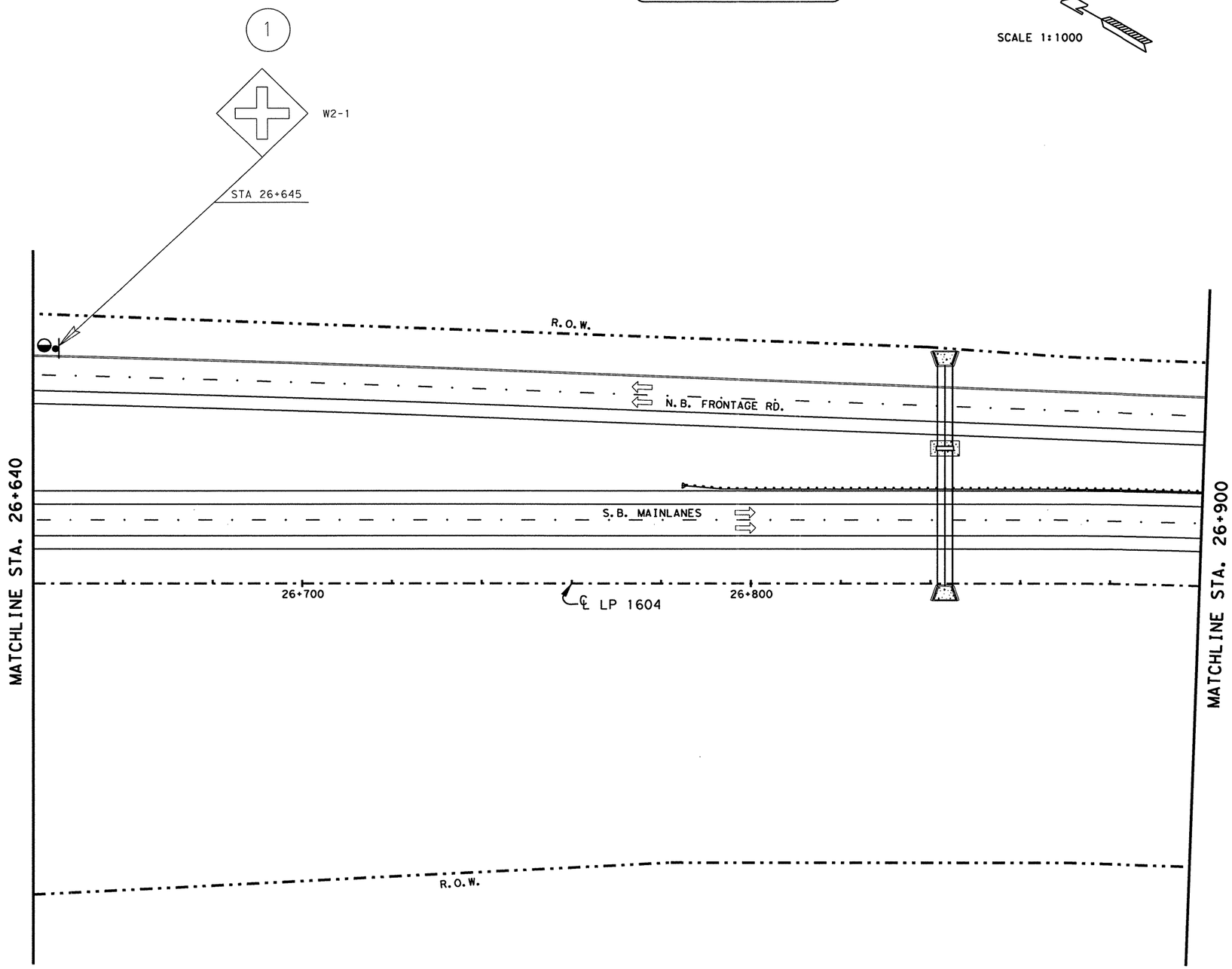


| RIPRAP APRONS QUANTITIES | | | |
|---|---|---|---|
| TYPE OF MOUNT | EA. | MULTIPLIED BY M3 | TOTAL M3 |
| SINGLE POST ◒ | 1 | 1.0 | 1.0 |
| MULTI - POST ⬓ | | 1.5 | |
| OVHD. SIGN BRIDGE ◆ | | | |
| CLASS "B" CONC. GRAND TOTAL | | | 1.0 |

SEE SHEET NO. 753 FOR RIPRAP APRON DETAILS.
SEE SHEET NO. 58 FOR RIPRAP SUMMARIZATION.

NOTE(S):

PAVEMENT MARKINGS SHOWN FOR REFERENCE ONLY. SEE PAVEMENT MARKINGS/DELINEATION LAYOUTS FOR DETAILS AND QUANTITIES.

STATE OF TEXAS
JOEL K. DAVENPORT, JR.
79276
REGISTERED PROFESSIONAL ENGINEER

Joel K. Davenport, Jr. 9/19/00
Joel K. Davenport, Jr. P.E. 79276 Date

©2000
Texas Department of Transportation

# SIGNING LAYOUT

**SHEET 50 OF 57**

| FED. RD. DIV. NO. | FEDERAL AID PROJECT NO. | | SHEET NO. |
|---|---|---|---|
| 6 | NH 2000(704), etc. | | 695 |
| STATE | DIST. | COUNTY | |
| TEXAS | SAT | BEXAR | |
| CONT. | SECT. | JOB | HIGHWAY NO. |
| 2452 | 01 | 036, etc. | LP 1604 |

LEVELS DISPLAYED
1 2 3 4 5 6 7 8 9 10 11 12 13 14 15 16
17 18 19 20 21 22 23 24 25 26 27 28 29 30 31 32
33 34 35 36 37 38 39 40 41 42 43 44 45 46 47 48
49 50 51 52 53 54 55 56 57 58 59 60 61 62 63

ACC: t:\go\design\
lp1604fm471-90\pave-sign\
FILE: pavmrkplan50.dgn

QUANTITIES THIS SHEET
CSJ 2452-01-036

SCALE 1:1000

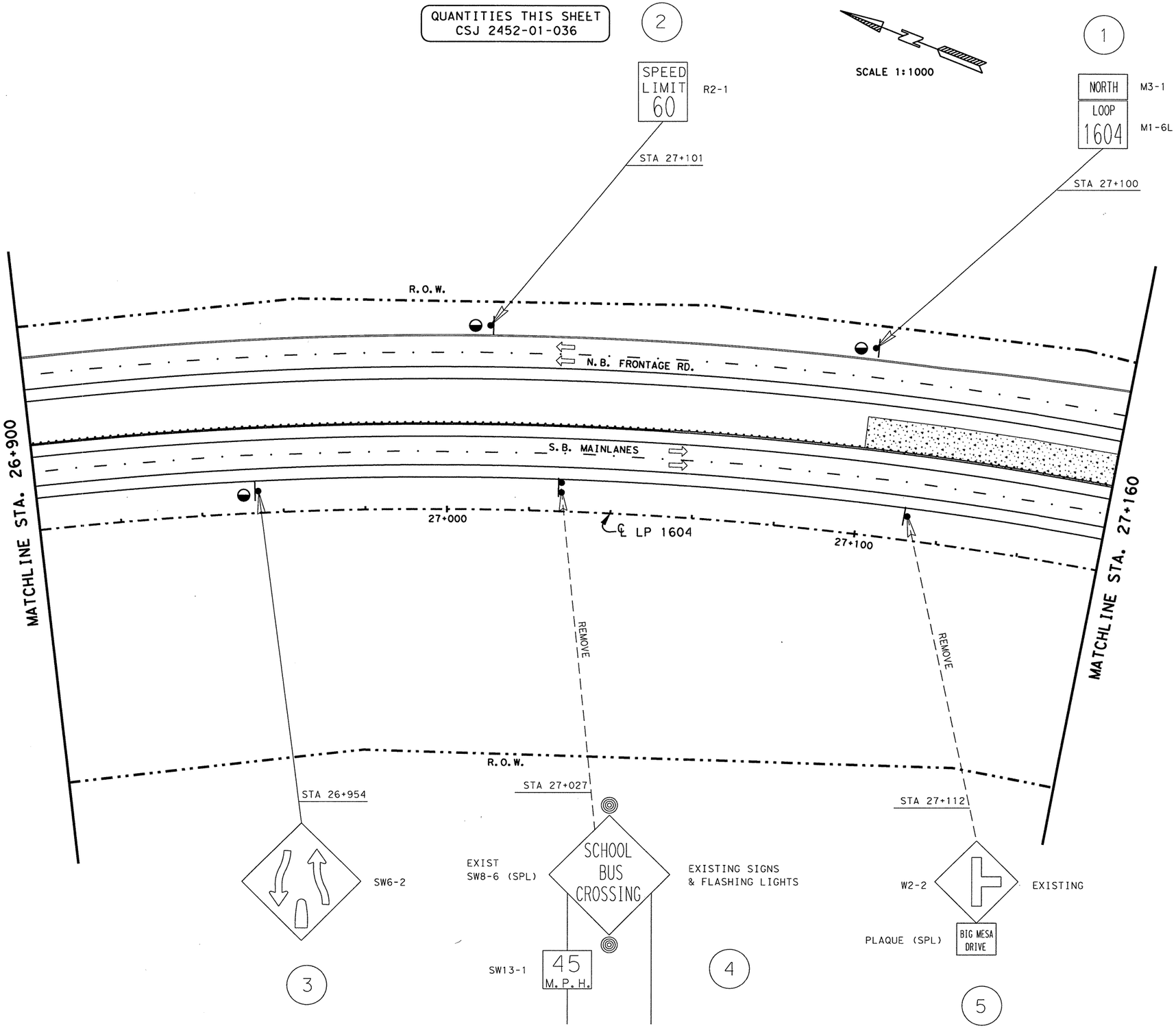


| RIPRAP APRONS QUANTITIES | | | |
|---|---|---|---|
| TYPE OF MOUNT | EA. | MULTIPLIED BY M3 | TOTAL M3 |
| SINGLE POST | 3 | 1.0 | 3.0 |
| MULTI - POST | | 1.5 | |
| OVHD. SIGN BRIDGE | | | |
| CLASS "B" CONC. GRAND TOTAL | | | 3.0 |

SEE SHEET NO. 753 FOR RIPRAP APRON DETAILS.
SEE SHEET NO. 58 FOR RIPRAP SUMMARIZATION.

NOTE(S):

PAVEMENT MARKINGS SHOWN FOR REFERENCE ONLY. SEE PAVEMENT MARKINGS/DELINEATION LAYOUTS FOR DETAILS AND QUANTITIES.

LEVELS DISPLAYED
1 2 3 4 5 6 7 8 | 1 2 31 41 51 61
1 7 9 11 92 102 122 132 42 52 62 72 82 92 103 113 123 133 2
3 33 43 53 63 73 83 93 104 114 24 34 44 54 64 74 84 8
4 95 105 115 25 35 45 55 65 75 85 95 106 116 26 36

ACC: t:\oo\design\
lp1604fm471-90\pave-sign
FILE: pavmrkplan51.dgn

STATE OF TEXAS
JOEL K. DAVENPORT, JR.
79276
REGISTERED PROFESSIONAL ENGINEER

Joel K Davenport, Jr. 9/19/00
Joel K. Davenport, Jr. P.E. 79276 Date

©2000 Texas Department of Transportation

## SIGNING LAYOUT

SHEET 51 OF 57

| FED. RD. DIV. NO. | FEDERAL AID PROJECT NO. | | SHEET NO. |
|---|---|---|---|
| 6 | NH 2000(704), etc. | | 696 |
| STATE | DIST. | COUNTY | |
| TEXAS | SAT | BEXAR | |
| CONT. | SECT. | JOB | HIGHWAY NO. |
| 2452 | 01 | 036, etc. | LP 1604 |

QUANTITIES THIS SHEET
CSJ 2452-01-036

2

R2-1
SPEED LIMIT 60

STA 27+101

SCALE 1:1000

1

NORTH M3-1
LOOP 1604 M1-6L

STA 27+100

R.O.W.

N.B. FRONTAGE RD.

S.B. MAINLANES

MATCHLINE STA. 26+900

27+000

℄ LP 1604

27+100

MATCHLINE STA. 27+160

REMOVE

REMOVE

R.O.W.

STA 26+954

SW6-2

3

STA 27+027

EXIST
SW8-6 (SPL)

SCHOOL BUS CROSSING

EXISTING SIGNS
& FLASHING LIGHTS

SW13-1

45
M.P.H.

4

STA 27+112

W2-2

EXISTING

PLAQUE (SPL)

BIG MESA DRIVE

5

| RIPRAP APRONS QUANTITIES | | | |
|---|---|---|---|
| TYPE OF MOUNT | EA. | MULTIPLIED BY M3 | TOTAL M3 |
| SINGLE POST | 2 | 1.0 | 2.0 |
| MULTI - POST | | 1.5 | |
| OVHD. SIGN BRIDGE | | | |
| CLASS "B" CONC. GRAND TOTAL | | | 2.0 |

SEE SHEET NO. 753 FOR RIPRAP APRON DETAILS.
SEE SHEET NO. 58 FOR RIPRAP SUMMARIZATION.

NOTE(S):

PAVEMENT MARKINGS SHOWN FOR REFERENCE ONLY. SEE PAVEMENT MARKINGS/DELINEATION LAYOUTS FOR DETAILS AND QUANTITIES.

CHANGE ORDER NO. 65
-ELIMINATED SPEED LIMIT SIGN.
-REVISED RIPRAP APRON QUANTITIES.

CHANGE ORDER 65

REVISED SHEET

STATE OF TEXAS
JEROME D. PAVLISKA
76075
REGISTERED PROFESSIONAL ENGINEER

Jerome D. Pavliska, P.E. 2/06/04
Jerome D. Pavliska, P.E. Date

LEVELS DISPLAYED
1 2 3 4 5 6 7 8 | 9 10 11 12 13 14 15 16
17 18 19 20 21 22 23 24 25 26 27 28 29 30 31 32
33 34 35 36 37 38 39 40 41 42 43 44 45 46 47 48
49 50 51 52 53 54 55 56 57 58 59 60 61 62 63

ACC: t:\oo\design\
lp1604fm471-90\pave-sign
FILE: pavmrkplan51.dgn

©2000

Texas Department of Transportation

# SIGNING LAYOUT

SHEET 51 OF 57

| FED.RD. DIV.NO. | FEDERAL AID PROJECT NO. | | SHEET NO. |
|---|---|---|---|
| 6 | NH 2000(704), etc. | | 696A |
| STATE | DIST. | COUNTY | |
| TEXAS | SAT | BEXAR | |
| CONT. | SECT. | JOB | HIGHWAY NO. |
| 2452 | 01 | 036, etc. | LP 1604 |

QUANTITIES THIS SHEET
CSJ 2452-01-036

SCALE 1:1000

| RIPRAP APRONS QUANTITIES | | | |
|---|---|---|---|
| TYPE OF MOUNT | EA. | MULTIPLIED BY M3 | TOTAL M3 |
| SINGLE POST | 3 | 1.0 | 3.0 |
| MULTI - POST | | 1.5 | |
| OVHD. SIGN BRIDGE | | | |
| CLASS "B" CONC. GRAND TOTAL | | | 3.0 |

SEE SHEET NO. 153 FOR RIPRAP APRON DETAILS.
SEE SHEET NO. 58 FOR RIPRAP SUMMARIZATION.

NOTE(S):

PAVEMENT MARKINGS SHOWN FOR REFERENCE ONLY. SEE PAVEMENT MARKINGS/DELINEATION LAYOUTS FOR DETAILS AND QUANTITIES.

CHANGE ORDER NO. 139
-ALLOWED FOR NEW SPURS RANCH RD.
-ADDED / REVISED SIGNS
-ADDED / REVISED QUANTITIES

CHANGE ORDER 139

REVISED SHEET

STATE OF TEXAS
FITZGERALDO G. SANCHEZ
76084
LICENCED PROFESSIONAL ENGINEER
CO #139
Fitzgeraldo G. Sanchez 08-16-06
Fitzgeraldo G. Sanchez, P.E. Date

2 — SPEED LIMIT 60 — 65
1 — NORTH LOOP 1604 — M3-1 — M1-6L
STA 27+101
STA 27+100
R.O.W.
N.B. FRONTAGE RD.
S.B. MAINLANES
MATCHLINE STA. 26+900
MATCHLINE STA. 27+160
27+000
℄ LP 1604
STA 27+060
27+100
4A — W2-2
REMOVE
REMOVE
REMOVE
R.O.W.
STA 26+954
SW6-2
3
STA 27+027
EXISTING SIGNS & FLASHING LIGHTS
EXIST SW8-6 (SPL)
SCHOOL BUS CROSSING
SW13-1 45 M.P.H.
4
STA 27+112
W2-2
EXISTING
PLAQUE (SPL)
5 — BIG MESA DRIVE
STA 27+120
SPURS RANCH RD.
D1-1
5A

# REFERS TO CHANGES MADE AS PART OF CHANGE ORDER.

©2000

Texas Department of Transportation

SIGNING LAYOUT

SHEET 51 OF 57

| FED. RD. DIV. NO. | FEDERAL AID PROJECT NO. | | SHEET NO. |
|---|---|---|---|
| 6 | NH 2000(704), etc. | | 696A A |
| STATE | DIST. | COUNTY | |
| TEXAS | SAT | BEXAR | |
| CONT. | SECT. | JOB | HIGHWAY NO. |
| 2452 | 01 | 036, etc. | LP 1604 |

7-31-06

t:\oa\design\lp1604fm471-90\pave*sign\signing\signing51*co64.dgn

LEVELS DISPLAYED
1 2 3 4 5 6 7 8 — 21 31 41 51 61
7 17 18 19 20 21 22 23 24 25 26 27 28 29 30 31 32
33 43 53 63 73 83 93 04 14 24 34 44 54 64 74 84
95 05 15 25 35 45 55 65 75 85 95 06 16 26 36

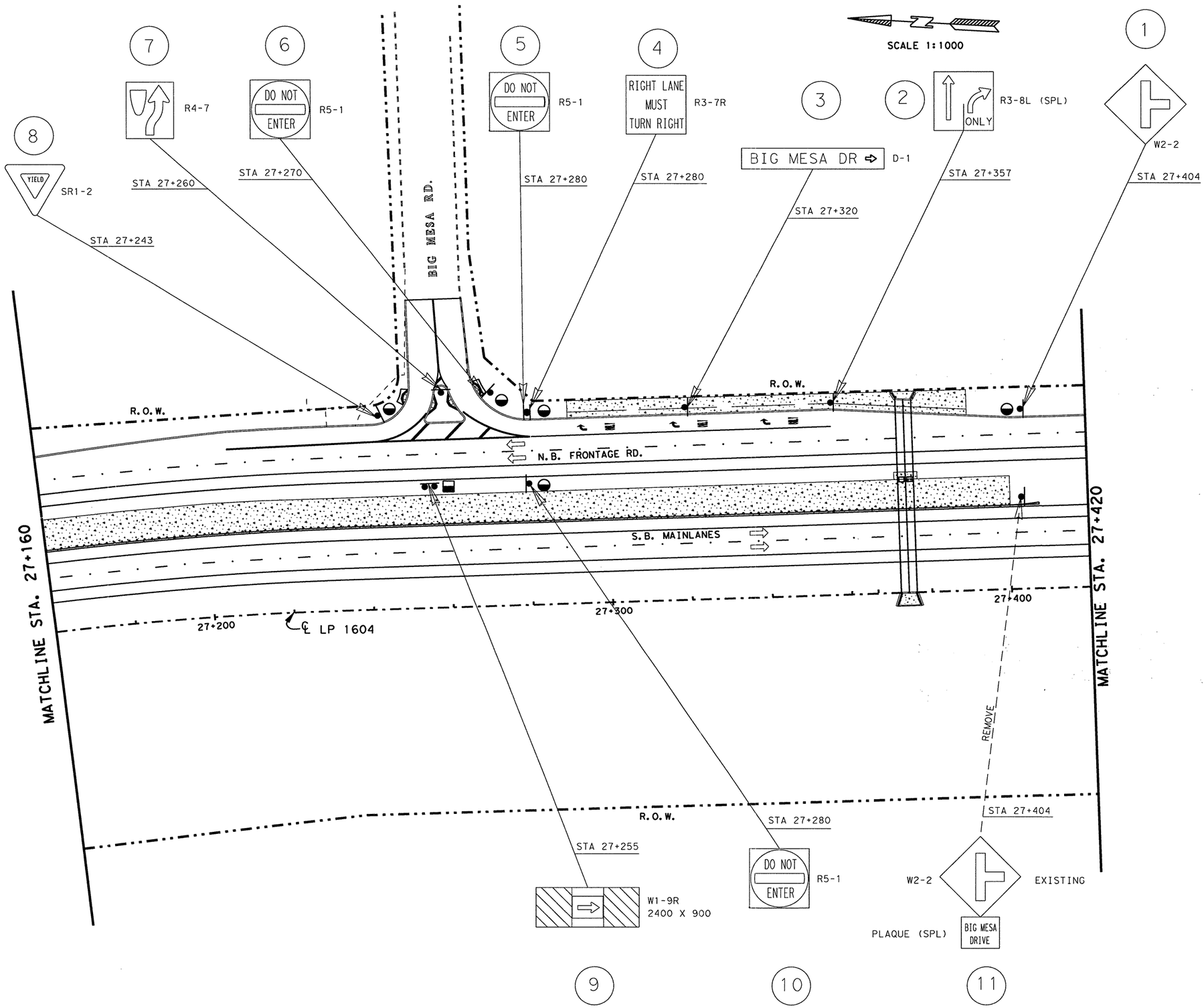


| RIPRAP APRONS QUANTITIES | | | |
|---|---|---|---|
| TYPE OF MOUNT | EA. | MULTIPLIED BY M3 | TOTAL M3 |
| SINGLE POST | 5 | 1.0 | 5.0 |
| MULTI - POST | 1 | 1.5 | 1.5 |
| OVHD. SIGN BRIDGE | | | |
| CLASS "B" CONC. GRAND TOTAL | | | 6.5 |

SEE SHEET NO. 753 FOR RIPRAP APRON DETAILS.
SEE SHEET NO. 58 FOR RIPRAP SUMMARIZATION.

NOTE(S):

PAVEMENT MARKINGS SHOWN FOR REFERENCE ONLY. SEE PAVEMENT MARKINGS/DELINEATION LAYOUTS FOR DETAILS AND QUANTITIES.

QUANTITIES THIS SHEET
CSJ 2452-01-036

STATE OF TEXAS
JOEL K. DAVENPORT, JR.
79276
REGISTERED PROFESSIONAL ENGINEER

Joel K. Davenport, Jr. 9/19/00
Joel K. Davenport, Jr. P.E. 79276 Date

Texas Department of Transportation

# SIGNING LAYOUT

**SHEET 52 OF 57**

| FED. RD. DIV. NO. | FEDERAL AID PROJECT NO. | | SHEET NO. |
|---|---|---|---|
| 6 | NH 2000(704), etc. | | 697 |
| STATE | DIST. | COUNTY | |
| TEXAS | SAT | BEXAR | |
| CONT. | SECT. | JOB | HIGHWAY NO. |
| 2452 | 01 | 036, etc. | LP 1604 |

LEVELS DISPLAYED
1 2 3 4 5 6 7 8 | 11 21 31 41 51 61
17 18 19 20 21 22 23 24 25 26 27 28 29 30 31 32
33 34 35 36 37 38 39 40 41 42 43 44 45 46 47 48
49 50 51 52 53 54 55 56 57 58 59 60 61 62 63

ACC: t:\oo\design\lp1604fm471-90\pave-sign\
FILE: pavmrkplan52.dgn

SCALE 1:1000

| RIPRAP APRONS QUANTITIES | | | |
|---|---|---|---|
| TYPE OF MOUNT | EA. | MULTIPLIED BY M3 | TOTAL M3 |
| SINGLE POST | 7 | 1.0 | 7.0 |
| MULTI - POST | | 1.5 | |
| OVHD. SIGN BRIDGE | | | |
| CLASS "B" CONC. GRAND TOTAL | | | 7.0 |

SEE SHEET NO. 753 FOR RIPRAP APRON DETAILS.
SEE SHEET NO. 58 FOR RIPRAP SUMMARIZATION.

NOTE(S):

PAVEMENT MARKINGS SHOWN FOR REFERENCE ONLY. SEE PAVEMENT MARKINGS/DELINEATION LAYOUTS FOR DETAILS AND QUANTITIES.

QUANTITIES THIS SHEET
CSJ 2452-01-036

CHANGE ORDER NO. 139
-ALLOWED FOR NEW SPURS RANCH RD.
-ADDED/REVISED SIGNS
-ADDED/REVISED QUANTITIES

CHANGE ORDER 139

REVISED SHEET

STATE OF TEXAS
FITZGERALDO G. SANCHEZ
76084
LICENCED PROFESSIONAL ENGINEER
CO#139
Fitzgeraldo G. Sanchez 08-16-06
Fitzgeraldo G. Sanchez, P.E. Date

©2000
Texas Department of Transportation

SIGNING LAYOUT

SHEET 52 OF 57

| FED. RD. DIV. NO. | FEDERAL AID PROJECT NO. | | SHEET NO. |
|---|---|---|---|
| 6 | NH 2000(704), etc. | | 697A |
| STATE | DIST. | COUNTY | |
| TEXAS | SAT | BEXAR | |
| CONT. | SECT. | JOB | HIGHWAY NO. |
| 2452 | 01 | 036, etc. | LP 1604 |

7-31-06

t:\ao\design\lp1604fm471-90\pd*phase2*change*order*mylars\submittal\plansheets\traffic\signing\signing*co52.dgn

LEVELS DISPLAYED
1 2 3 4 5 6 7 8 | 12 13 41 51 61
17 18 19 20 21 22 23 24 25 26 27 28 29 30 31 32
33 34 35 45 56 63 78 89 94 01 42 43 44 54 64 74 84
95 05 15 26 35 45 56 65 75 86 96 06 16 26 36

QUANTITIES THIS SHEET
CSJ 2452-01-036

SCALE 1:1000

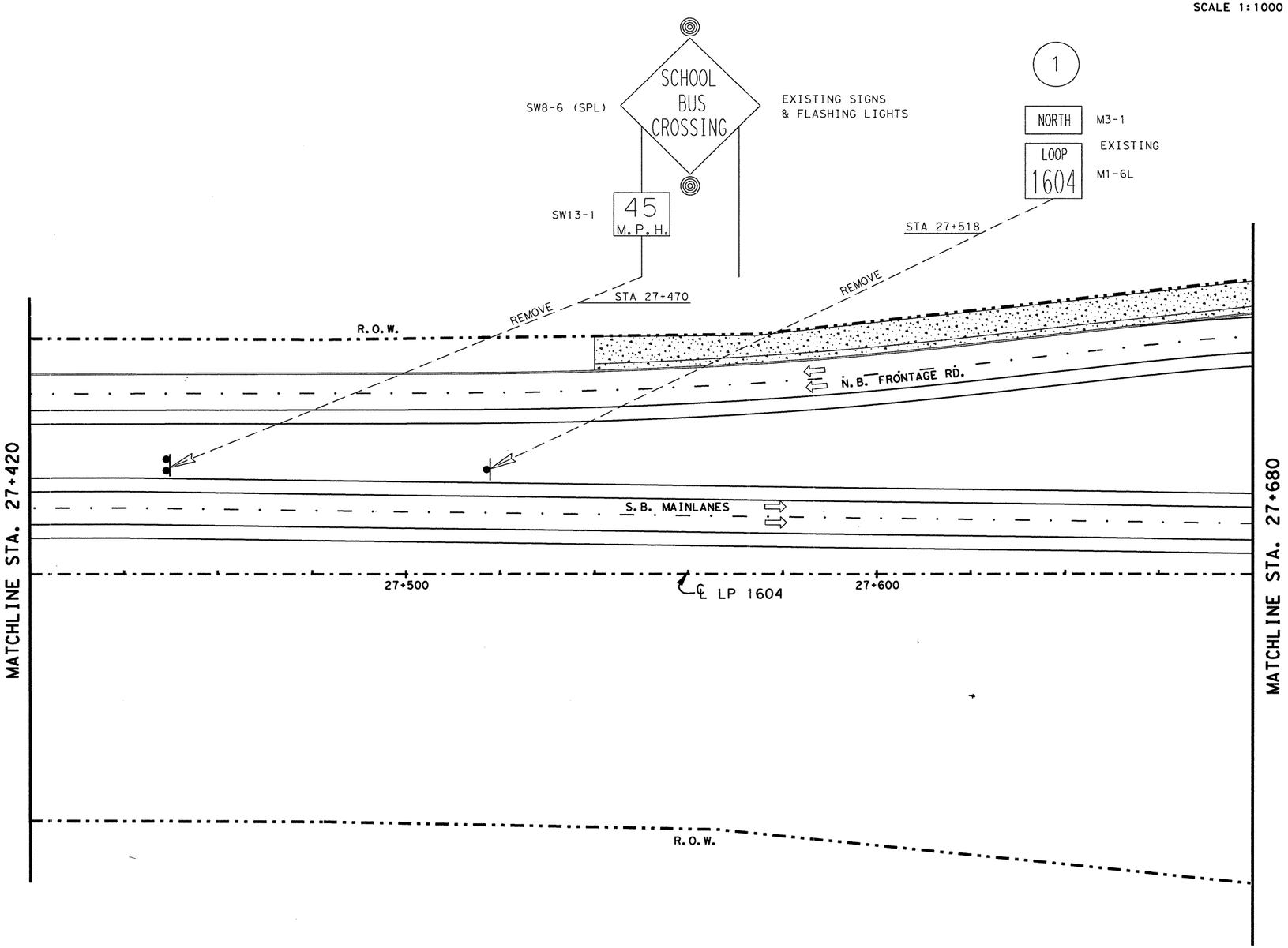


| RIPRAP APRONS QUANTITIES | | | |
|---|---|---|---|
| TYPE OF MOUNT | EA. | MULTIPLIED BY M3 | TOTAL M3 |
| SINGLE POST | | 1.0 | |
| MULTI - POST | | 1.5 | |
| OVHD. SIGN BRIDGE | | | |
| CLASS "B" CONC. GRAND TOTAL | | | 0.0 |

SEE SHEET NO. 753 FOR RIPRAP APRON DETAILS.
SEE SHEET NO. 58 FOR RIPRAP SUMMARIZATION.

NOTE(S):

PAVEMENT MARKINGS SHOWN FOR REFERENCE ONLY. SEE PAVEMENT MARKINGS/DELINEATION LAYOUTS FOR DETAILS AND QUANTITIES.

LEVELS DISPLAYED
1 2 3 4 5 6 7 8 | 1 2 3 4 5 6
7 11 19 20 21 22 23 24 25 26 | 27 28 29 30 31 32
33 34 35 36 37 38 39 40 41 42 43 44 45 46 47 48
49 50 51 52 53 54 55 56 57 58 59 60 61 62 63

ACC: t:\oo\design\lp1604fm471-90\pave-sign
FILE: pavmrkplan53.dgn

STATE OF TEXAS
JOEL K. DAVENPORT, JR.
79276
REGISTERED PROFESSIONAL ENGINEER

Joel K Davenport, Jr. 9/19/00
Joel K. Davenport, Jr. P.E. 79276 Date

©2000
Texas Department of Transportation

# SIGNING LAYOUT

SHEET 53 OF 57

| FED. RD. DIV. NO. | FEDERAL AID PROJECT NO. | | SHEET NO. |
|---|---|---|---|
| 6 | NH 2000(704), etc. | | 698 |
| STATE | DIST. | COUNTY | |
| TEXAS | SAT | BEXAR | |
| CONT. | SECT. | JOB | HIGHWAY NO. |
| 2452 | 01 | 036, etc. | LP 1604 |

QUANTITIES THIS SHEET
CSJ 2452-01-036

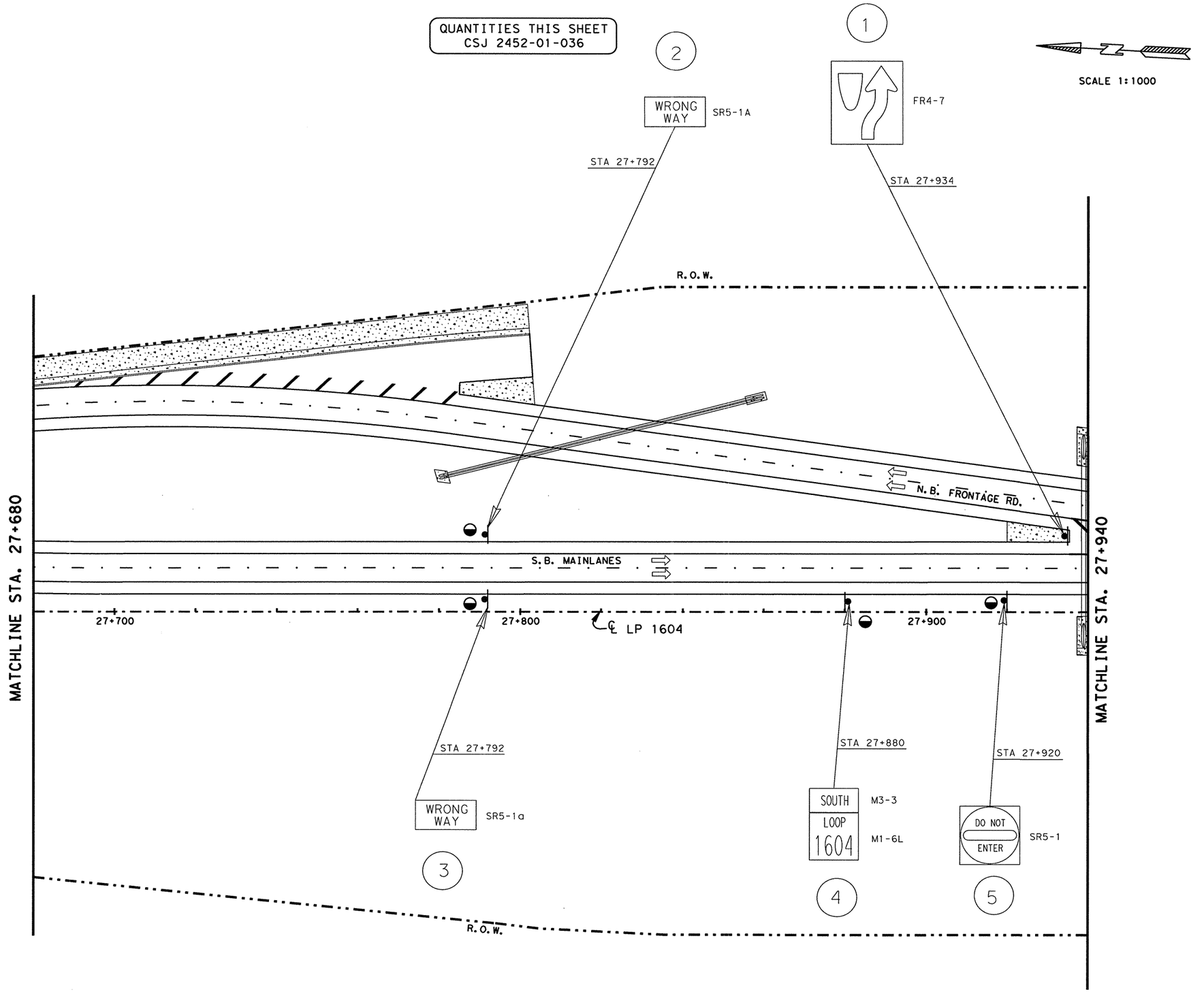


| RIPRAP APRONS QUANTITIES | | | |
|---|---|---|---|
| TYPE OF MOUNT | EA. | MULTIPLIED BY M3 | TOTAL M3 |
| SINGLE POST | 4 | 1.0 | 4.0 |
| MULTI - POST | | 1.5 | |
| OVHD. SIGN BRIDGE | | | |
| CLASS "B" CONC. GRAND TOTAL | | | 4.0 |

SEE SHEET NO. 753 FOR RIPRAP APRON DETAILS.
SEE SHEET NO. 58 FOR RIPRAP SUMMARIZATION.

NOTE(S):

PAVEMENT MARKINGS SHOWN FOR REFERENCE ONLY. SEE PAVEMENT MARKINGS/DELINEATION LAYOUTS FOR DETAILS AND QUANTITIES.

LEVELS DISPLAYED
1 2 3 4 5 6 7 8 | 1 2 3 4 5 6 7 8 9 | 1 2 3 4 5 6 7 8 9 | 1 2 3 4 5 6
1 7 1 8 1 9 2 0 2 1 2 2 2 3 2 4 2 5 2 6 2 7 2 8 2 9 3 0 3 1 3 2
3 3 3 4 3 5 3 6 3 7 3 8 3 9 4 0 4 1 4 2 4 3 4 4 4 5 4 6 4 7 4 8
4 9 5 0 5 1 5 2 5 3 5 4 5 5 5 6 5 7 5 8 5 9 6 0 6 1 6 2 6 3

ACC: t:\oo\design\
ip1604fm471-90\pave-sign\
FILE: pavmrkplan54.dgn

Joel K. Davenport, Jr. P.E. 79276 — 9/19/00 Date

©2000 Texas Department of Transportation

# SIGNING LAYOUT

**SHEET 54 OF 57**

| FED. RD. DIV. NO. | FEDERAL AID PROJECT NO. | | SHEET NO. |
|---|---|---|---|
| 6 | NH 2000(704), etc. | | 699 |
| STATE | DIST. | COUNTY | |
| TEXAS | SAT | BEXAR | |
| CONT. | SECT. | JOB | HIGHWAY NO. |
| 2452 | 01 | 036, etc. | LP 1604 |

QUANTITIES THIS SHEET
CSJ 2452-01-036

SCALE 1:1000

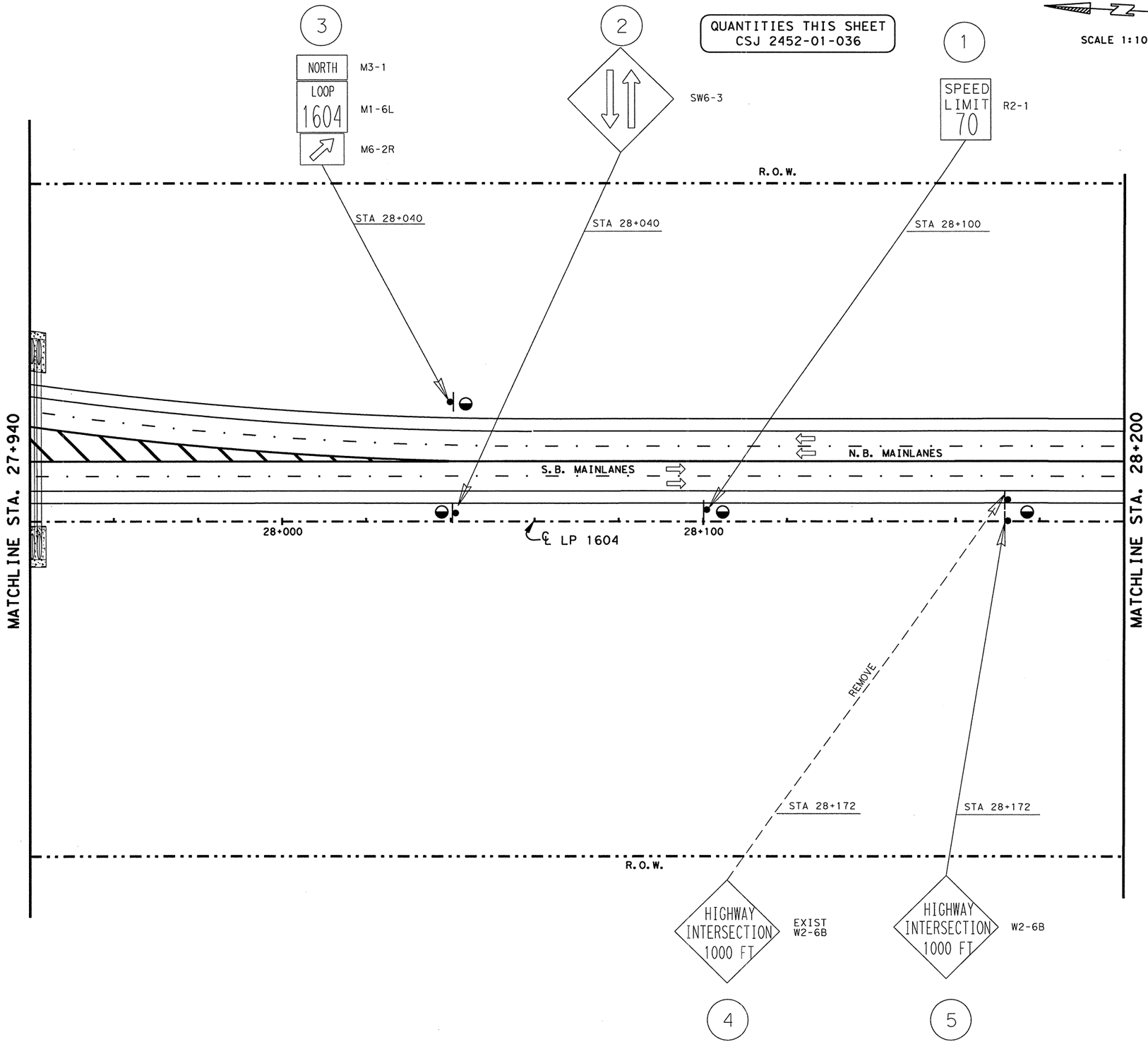


| RIPRAP APRONS QUANTITIES | | | |
|---|---|---|---|
| TYPE OF MOUNT | EA. | MULTIPLIED BY M3 | TOTAL M3 |
| SINGLE POST | 4 | 1.0 | 4.0 |
| MULTI - POST | | 1.5 | |
| OVHD. SIGN BRIDGE | | | |
| CLASS "B" CONC. GRAND TOTAL | | | 4.0 |

SEE SHEET NO. 753 FOR RIPRAP APRON DETAILS.
SEE SHEET NO. 58 FOR RIPRAP SUMMARIZATION.

NOTE(S):

PAVEMENT MARKINGS SHOWN FOR REFERENCE ONLY. SEE PAVEMENT MARKINGS/DELINEATION LAYOUTS FOR DETAILS AND QUANTITIES.

LEVELS DISPLAYED
1 2 3 4 5 6 7 8 | 1 2 3 1 d1 51 6
1 7 8 1 92 02 1 22 23 24 25 26 27 28 29 30 31 32
33 34 35 36 37 38 39 40 41 42 43 44 45 46 47 48
49 50 51 52 53 54 55 56 57 58 59 60 61 62 63

ACC: t:\ao\design\
ip1604fm471-90\pave-sign\
FILE: pavmrkplan55.dgn

STATE OF TEXAS
JOEL K. DAVENPORT, JR.
79276
REGISTERED
PROFESSIONAL ENGINEER

Joel K. Davenport, Jr. 9/19/00
Joel K. Davenport, Jr. P.E. 79276 Date

©2000 Texas Department of Transportation

## SIGNING LAYOUT

**SHEET 55 OF 57**

| FED. RD. DIV. NO. | FEDERAL AID PROJECT NO. | | SHEET NO. |
|---|---|---|---|
| 6 | NH 2000(704), etc. | | 700 |
| STATE | DIST. | COUNTY | |
| TEXAS | SAT | BEXAR | |
| CONT. | SECT. | JOB | HIGHWAY NO. |
| 2452 | 01 | 036, etc. | LP 1604 |

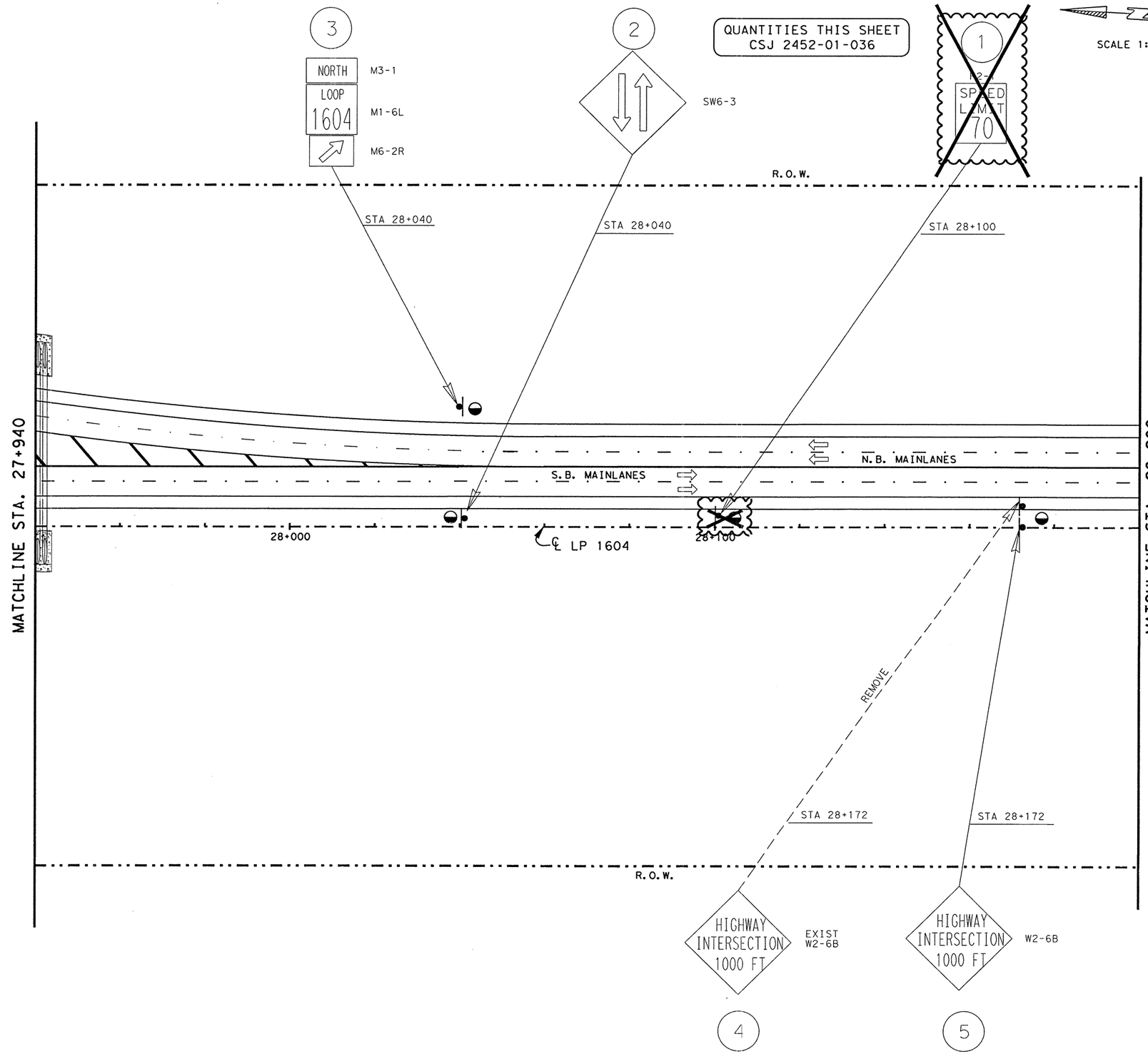


QUANTITIES THIS SHEET
CSJ 2452-01-036

| RIPRAP APRONS QUANTITIES | | | |
|---|---|---|---|
| TYPE OF MOUNT | EA. | MULTIPLIED BY M3 | TOTAL M3 |
| SINGLE POST | 3 | 1.0 | 3.0 |
| MULTI - POST | | 1.5 | |
| OVHD. SIGN BRIDGE | | | |
| CLASS "B" CONC. GRAND TOTAL | | | 3.0 |

SEE SHEET NO. 753 FOR RIPRAP APRON DETAILS.
SEE SHEET NO. 58 FOR RIPRAP SUMMARIZATION.

NOTE(S):

PAVEMENT MARKINGS SHOWN FOR REFERENCE ONLY. SEE PAVEMENT MARKINGS/DELINEATION LAYOUTS FOR DETAILS AND QUANTITIES.

CHANGE ORDER NO. 65
-ELIMINATED SPEED LIMIT SIGN.
-REVISED RIPRAP APRON QUANTITIES.

CHANGE ORDER 65

REVISED SHEET

STATE OF TEXAS
JEROME D. PAVLISKA
76075
REGISTERED
PROFESSIONAL ENGINEER

Jerome D. Pavliska, P.E. 2/06/04
Jerome D. Pavliska, P.E. Date

©2000
Texas Department of Transportation

SIGNING LAYOUT

SHEET 55 OF 57

| FED.RD. DIV.NO. | FEDERAL AID PROJECT NO. | | SHEET NO. |
|---|---|---|---|
| 6 | NH 2000(704), etc. | | 700A |
| STATE | DIST. | COUNTY | |
| TEXAS | SAT | BEXAR | |
| CONT. | SECT. | JOB | HIGHWAY NO. |
| 2452 | 01 | 036, etc. | LP 1604 |

LEVELS DISPLAYED
1 2 3 4 5 6 7 8 | | P 2I 3I 4I 5I 6
17 18 19 20 21 22 23 24 25 26 27 28 29 30 31 32
33 34 35 36 37 38 39 40 41 42 43 44 45 46 47 48
49 50 51 52 53 54 55 56 57 58 59 60 61 62 63

ACC: t:\oo\design\
lp1604fm471-90\pave-sign\
FILE: pavmrkplan55.dgn

QUANTITIES THIS SHEET
CSJ 2452-01-036

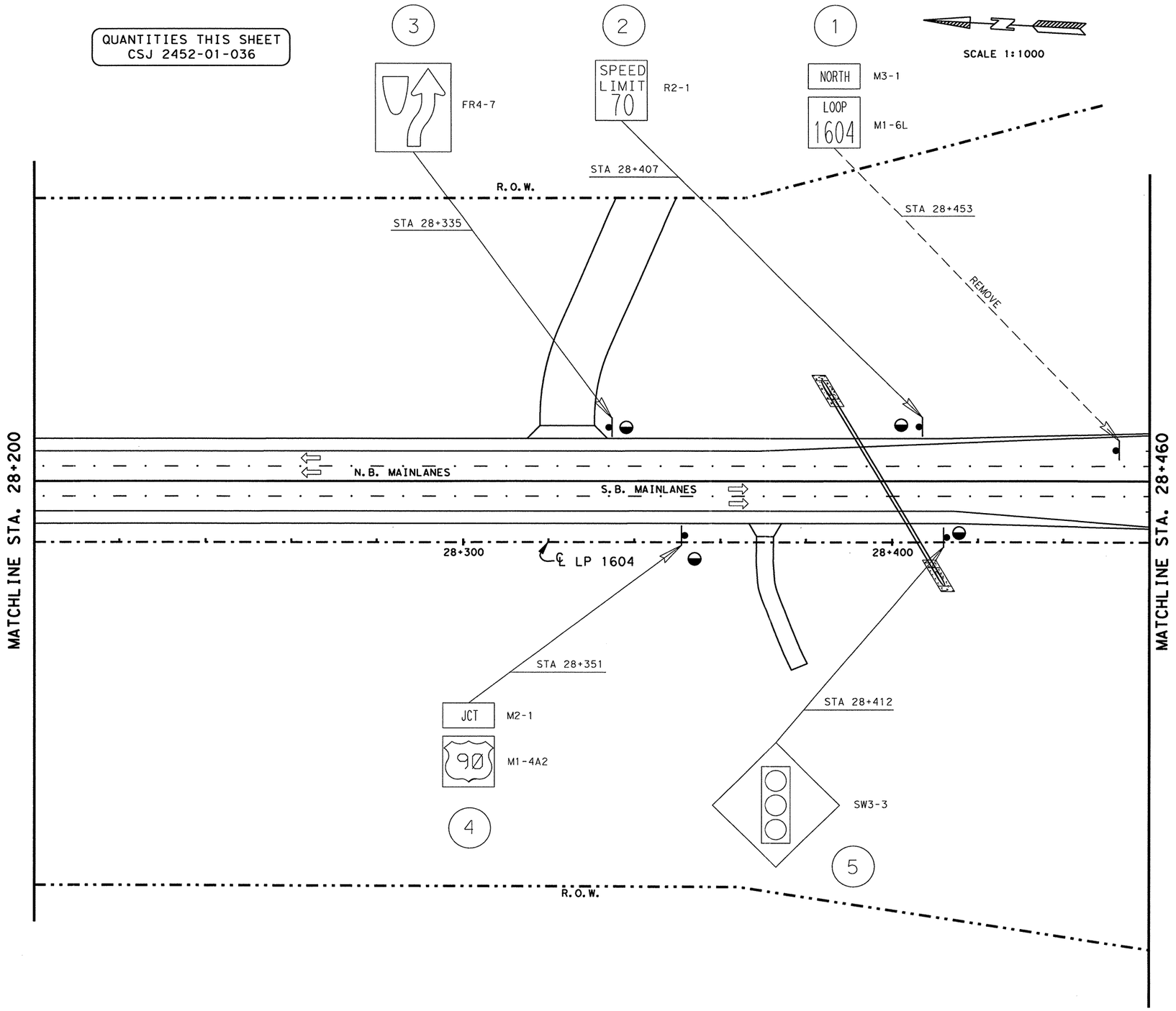


| RIPRAP APRONS QUANTITIES | | | |
|---|---|---|---|
| TYPE OF MOUNT | EA. | MULTIPLIED BY M3 | TOTAL M3 |
| SINGLE POST | 4 | 1.0 | 4.0 |
| MULTI - POST | | 1.5 | |
| OVHD. SIGN BRIDGE | | | |
| CLASS "B" CONC. GRAND TOTAL | | | 4.0 |

SEE SHEET NO. 753 FOR RIPRAP APRON DETAILS.
SEE SHEET NO. 58 FOR RIPRAP SUMMARIZATION.

NOTE(S):

PAVEMENT MARKINGS SHOWN FOR REFERENCE ONLY. SEE PAVEMENT MARKINGS/DELINEATION LAYOUTS FOR DETAILS AND QUANTITIES.

LEVELS DISPLAYED
1 2 3 4 5 6 7 8 9 10 11 12 13 14 15 16
17 18 19 20 21 22 23 24 25 26 27 28 29 30 31 32
33 34 35 36 51 52 53 54 55 56 57 58 59 60 61 62
49 50 51 52 53 54 55 56 57 58 59 60 61 62 63 64

ACC: t:\oo\design\
lp1604fm471-90\pave-sign\
FILE: pavmrkplan56.dgn

STATE OF TEXAS
JOEL K. DAVENPORT, JR.
79276
REGISTERED
PROFESSIONAL ENGINEER

Joel K Davenport Jr. 9/19/00
Joel K. Davenport, Jr. P.E. 79276 Date

©2000 Texas Department of Transportation

# SIGNING LAYOUT

**SHEET 56 OF 57**

| FED. RD. DIV. NO. | FEDERAL AID PROJECT NO. | | SHEET NO. |
|---|---|---|---|
| 6 | NH 2000(704), etc. | | 701 |
| STATE | DIST. | COUNTY | |
| TEXAS | SAT | BEXAR | |
| CONT. | SECT. | JOB | HIGHWAY NO. |
| 2452 | 01 | 036, etc. | LP 1604 |

QUANTITIES THIS SHEET
CSJ 2452-01-036

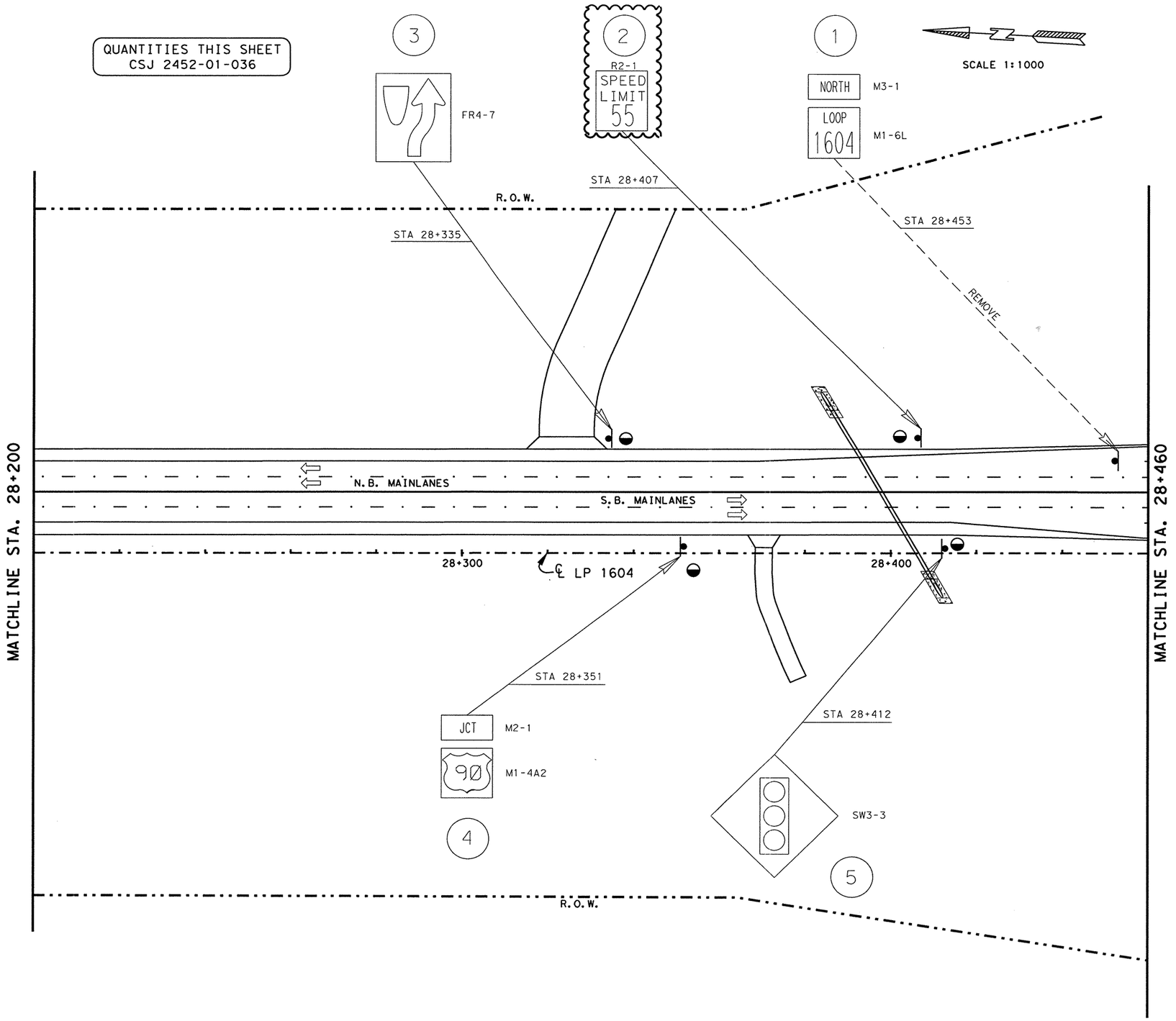


| RIPRAP APRONS QUANTITIES | | | |
|---|---|---|---|
| TYPE OF MOUNT | EA. | MULTIPLIED BY M3 | TOTAL M3 |
| SINGLE POST | 4 | 1.0 | 4.0 |
| MULTI - POST | | 1.5 | |
| OVHD. SIGN BRIDGE | | | |
| CLASS "B" CONC. GRAND TOTAL | | | 4.0 |

SEE SHEET NO. 753 FOR RIPRAP APRON DETAILS.
SEE SHEET NO. 58 FOR RIPRAP SUMMARIZATION.

NOTE(S):

PAVEMENT MARKINGS SHOWN FOR REFERENCE ONLY. SEE PAVEMENT MARKINGS/DELINEATION LAYOUTS FOR DETAILS AND QUANTITIES.

CHANGE ORDER NO. 65
-CHANGED SPEED LIMIT SIGN.

CHANGE ORDER 65

REVISED SHEET

STATE OF TEXAS
JEROME D. PAVLISKA
76075
REGISTERED
PROFESSIONAL ENGINEER

Jerome D. Pavliska, P.E. 2/06/04
Jerome D. Pavliska, P.E. Date

©2000
Texas Department of Transportation

SIGNING LAYOUT

SHEET 56 OF 57

| FED.RD. DIV.NO. | FEDERAL AID PROJECT NO. | | SHEET NO. |
|---|---|---|---|
| 6 | NH 2000(704), etc. | | 701A |
| STATE | DIST. | COUNTY | |
| TEXAS | SAT | BEXAR | |
| CONT. | SECT. | JOB | HIGHWAY NO. |
| 2452 | 01 | 036, etc. | LP 1604 |

02-05-04

LEVELS DISPLAYED
1 2 3 4 5 6 7 8 | 1 2 3 4 5 6 d 5 6
1 7 8 9 2 0 2 2 2 2 3 2 4 2 5 2 6 2 7 2 8 2 9 3 0 3 1 3 2
3 3 3 4 3 5 3 6 3 7 3 8 3 9 4 0 4 1 4 2 4 3 4 4 4 5 4 6 4 7 4 8
4 9 5 0 5 1 5 2 5 3 5 4 5 5 5 6 5 7 5 8 5 9 6 0 6 1 6 2 6 3

ACC: t:\ao\design\
lp1604fm471-90\pave-sign\
FILE: pavmrkplan56.dgn

QUANTITIES THIS SHEET
CSJ 2452-01-036

SCALE 1:1000

| RIPRAP APRONS QUANTITIES | | | |
|---|---|---|---|
| TYPE OF MOUNT | EA. | MULTIPLIED BY M3 | TOTAL M3 |
| SINGLE POST | 6 | 1.0 | 6.0 |
| MULTI - POST | | 1.5 | |
| OVHD. SIGN BRIDGE | | | |
| CLASS "B" CONC. GRAND TOTAL | | | 6.0 |

SEE SHEET NO. 753 FOR RIPRAP APRON DETAILS.
SEE SHEET NO. 58 FOR RIPRAP SUMMARIZATION.

NOTE(S):

PAVEMENT MARKINGS SHOWN FOR REFERENCE ONLY. SEE PAVEMENT MARKINGS/DELINEATION LAYOUTS FOR DETAILS AND QUANTITIES.

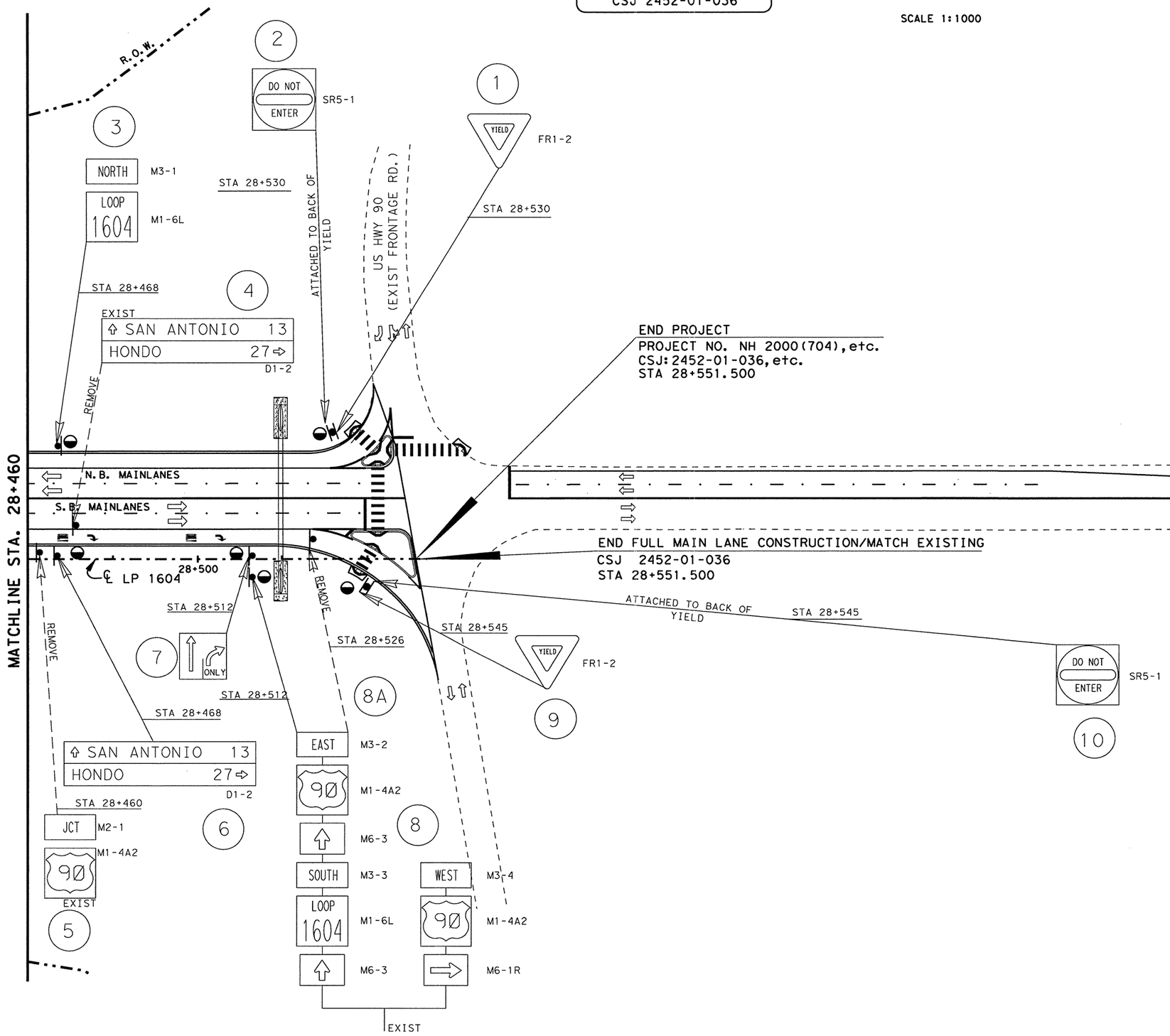


STATE OF TEXAS
JOEL K. DAVENPORT, JR.
79276
REGISTERED PROFESSIONAL ENGINEER

Joel K Davenport Jr 9/19/00
Joel K. Davenport, Jr. P.E. 79276 Date

©2000
Texas Department of Transportation

# SIGNING LAYOUT

SHEET 57 OF 57

| FED. RD. DIV. NO. | FEDERAL AID PROJECT NO. | | SHEET NO. |
|---|---|---|---|
| 6 | NH 2000(704),etc. | | 702 |
| STATE | DIST. | COUNTY | |
| TEXAS | SAT | BEXAR | |
| CONT. | SECT. | JOB | HIGHWAY NO. |
| 2452 | 01 | 036,etc. | LP 1604 |

LEVELS DISPLAYED
1 2 3 4 5 6 7 8 | 1 2 13 14 15 16
2 20 21 22 32 42 52 62 72 82 93 03 13 23
33 43 53 63 73 83 93 04 14 24 34 44 54 64 74 84
49 50 51 52 53 54 55 56 57 58 59 60 61 62 63

ACC: t:\ao\design\
lp1604fm471-90\pave-sign\
FILE: pavmrkplan57.dgn

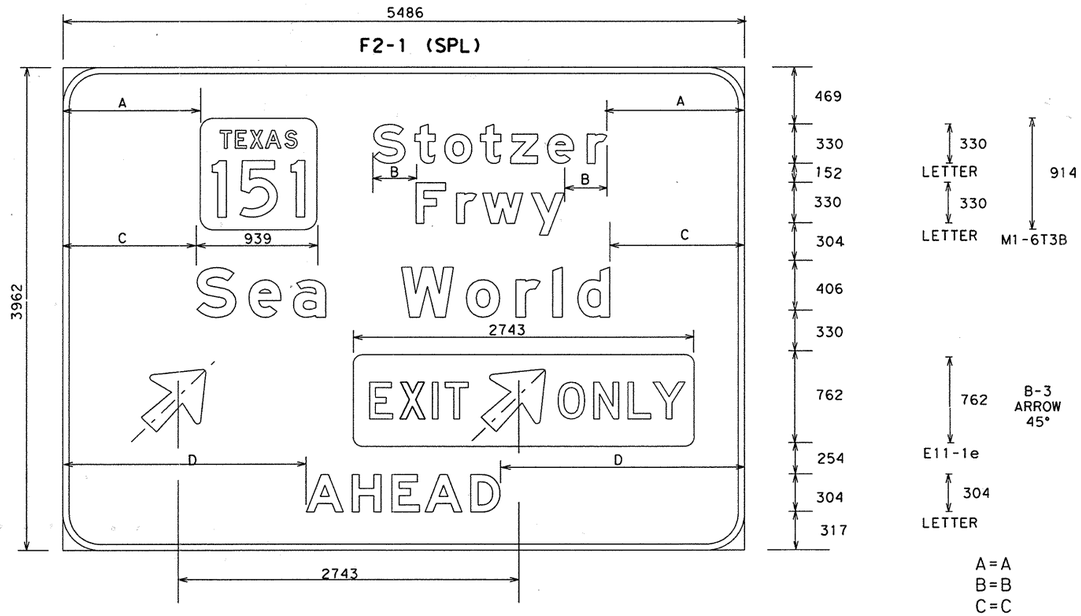


SIGN NO. : 4
STA. NO. : 18+564
C & S : 2452-01
MOUNT : GROUND MOUNTED

BORDER RAD. : 304
SCALE : 0.2500 = 1'-0"
BACKGROUND : GREEN
BORDER : 51

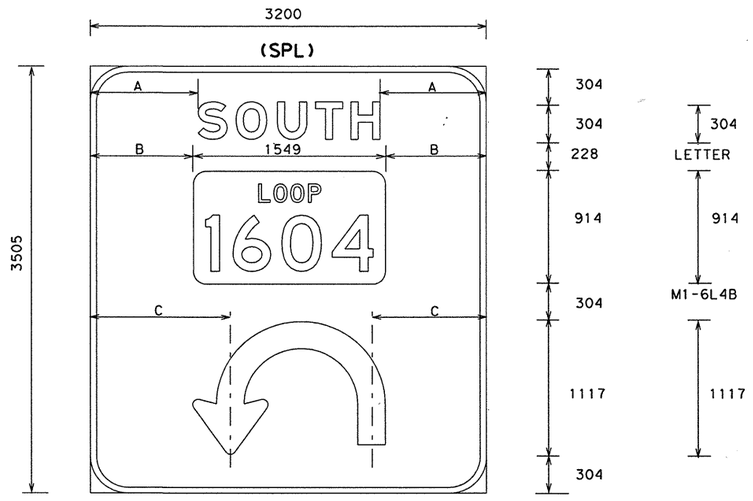


SIGN NO. : 1
STA. NO. : 16+401
C & S : 2452-01
MOUNT : GROUND MOUNTED

BORDER RAD. : 304
SCALE : 0.2500 = 1'-0"
BACKGROUND : GREEN
BORDER : 51

A=A
B=B
C=C

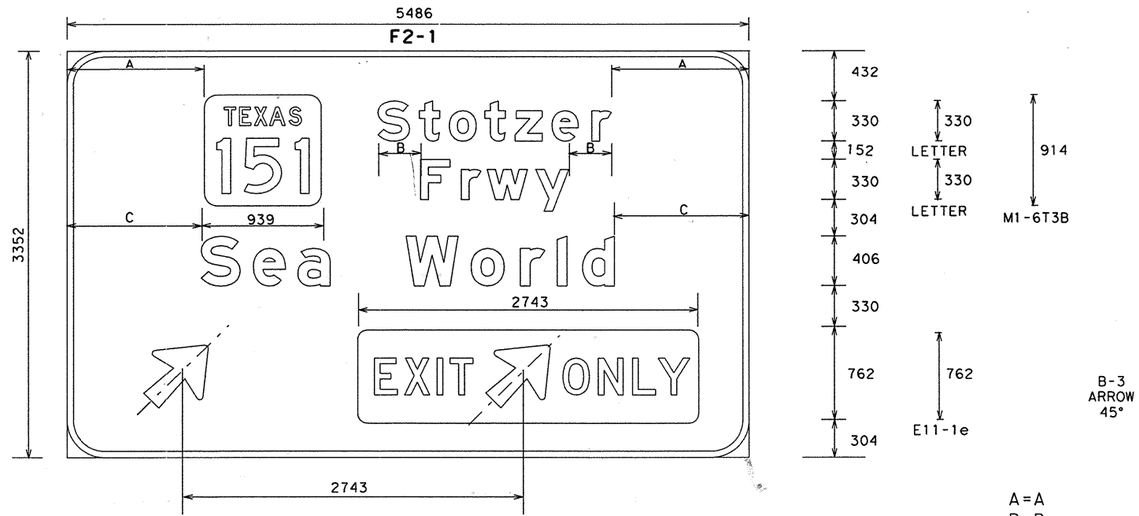


SIGN NO. : 1
STA. NO. : 18+360
C & S : 2452-01
MOUNT : GROUND MOUNTED

BORDER RAD. : 304
SCALE : 0.2500 = 1'-0"
BACKGROUND : GREEN
BORDER : 51

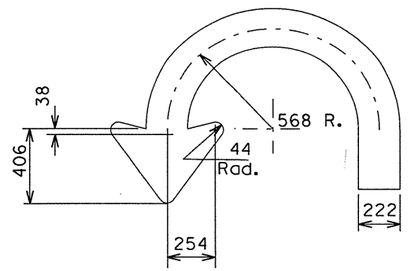


STATE OF TEXAS
ARNULFO RAMIREZ
56890
REGISTERED
PROFESSIONAL ENGINEER

Arnulfo Ramirez 4-15-00
Arnulfo Ramirez, P.E. Date

STANDARD INTERSTATE SIGNS

# NON-REMOVABLE COPY HIGH-INTENSITY REFLECTORIZED SIGNS

FOR OVERHEAD & GROUND MOUNT SIGNS



© 2000 Texas Department of Transportation ®

| FED. RD. DIV. NO. | FEDERAL AID PROJECT NO. | | SHEET NO. |
|---|---|---|---|
| | NH 2000(704), etc. | | 703 |
| STATE | STATE DIST. NO. | COUNTY | |
| TX | SAT | BEXAR | |
| CONT. | SECT. | JOB | HIGHWAY NO. |
| 2452 | 01 | 036, | LP1604 |

ACCNT.:
FILE:
REF.:

LEVELS 0... CAT...

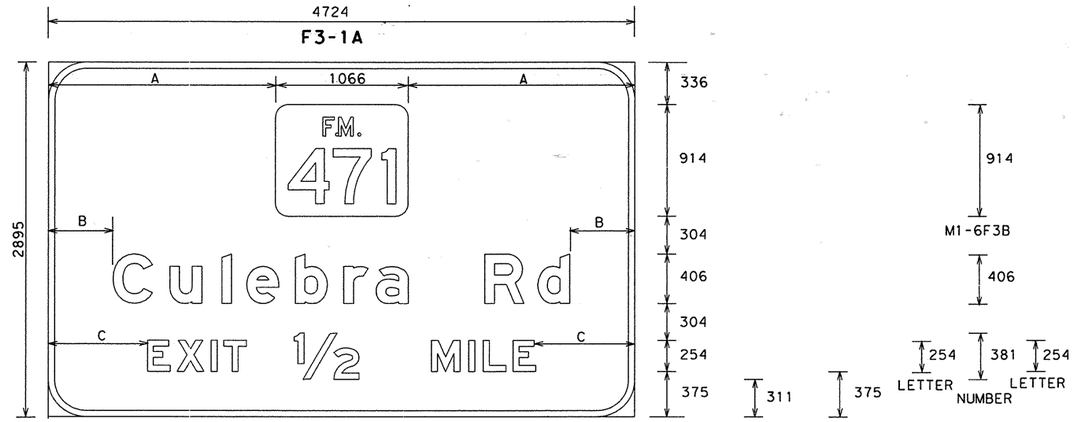


A=A
B=B
C=C

SIGN NO. : 5
STA. NO. : 14+500
C & S : 2452-01
MOUNT : GROUND MOUNTED

BORDER RAD. : 304
SCALE : 0.2500 = 1'-0"
BACKGROUND : GREEN
BORDER : 51

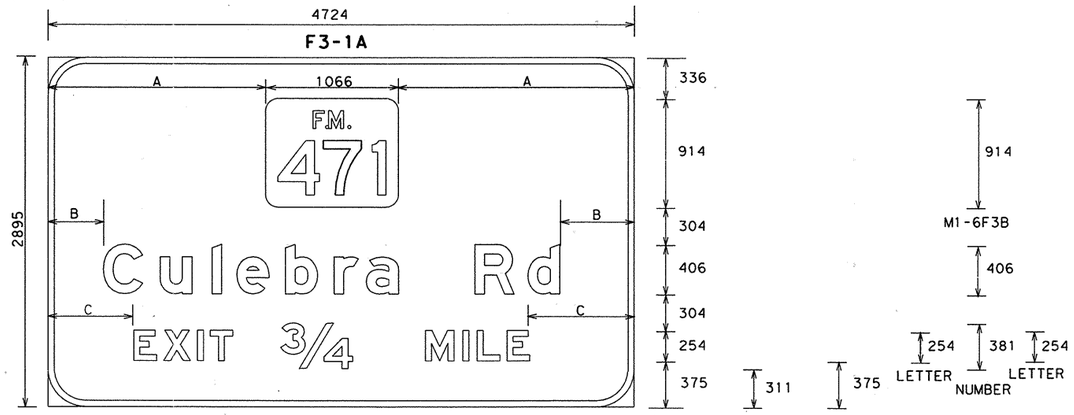


A=A
B=B
C=C

SIGN NO. : 6
STA. NO. : 18+008
C & S : 2452-01
MOUNT : GROUND MOUNTED

BORDER RAD. : 304
SCALE : 0.2500 = 1'-0"
BACKGROUND : GREEN
BORDER : 51

STATE OF TEXAS
ARNULFO RAMIREZ
56890
REGISTERED PROFESSIONAL ENGINEER

Arnulfo Ramirez, P.E. 6-15-00
Date

STANDARD INTERSTATE SIGNS

# NON-REMOVABLE COPY HIGH-INTENSITY REFLECTORIZED SIGNS

FOR OVERHEAD & GROUND MOUNT SIGNS



© 2000 Texas Department of Transportation ®

| FED. RD. DIV. NO. | FEDERAL AID PROJECT NO. | | SHEET NO. |
|---|---|---|---|
| | NH 2000(704), etc. | | 704 |
| STATE | STATE DIST. NO. | COUNTY | |
| TX | SAT | BEXAR | |
| CONT. | SECT. | JOB | HIGHWAY NO. |
| 2452 | 01 | 036, | LP1604 |

ACCNT.:
FILE:
REF.:
LEVELS
LAY
1

PLAN IN SH471 & LP 1604 #2\M GARZA 2-14-00

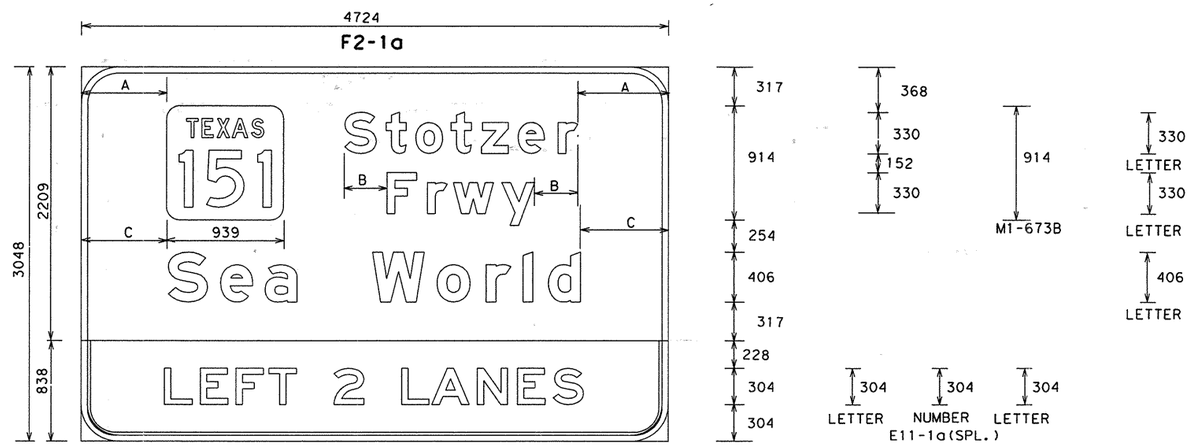


A=A
B=B
C=C

SIGN NO. : 7
STA. NO. : 17+167
C & S : 2452-01
MOUNT : GROUND MOUNTED

BORDER RAD. : 304
SCALE : 0.2500 = 1'-0"
BACKGROUND : GREEN
BORDER : 51

SIGN NO. : 8
STA. NO. : 17+167
C & S : 2452-01
MOUNT : GROUND MOUNTED

BORDER RAD. : 304
SCALE : 0.2500 = 1'-0"
BACKGROUND : GREEN
BORDER : 51

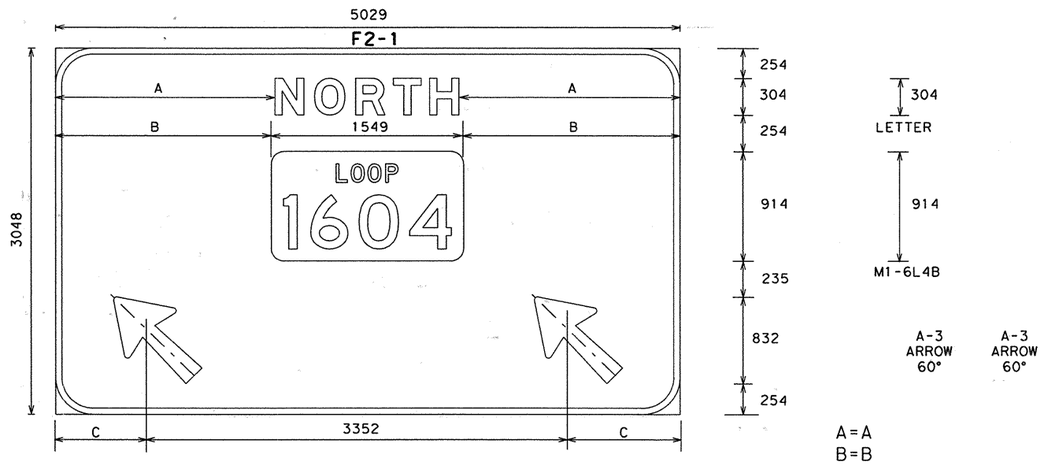


A=A
B=B
C=C

SIGN NO. : 4
STA. NO. : 18+360
C & S : 2452-01
MOUNT : GROUND MOUNTED

BORDER RAD. : 304
SCALE : 0.2500 = 1'-0"
BACKGROUND : GREEN
BORDER : 51

ARNULFO RAMIREZ
56890
REGISTERED
PROFESSIONAL ENGINEER
STATE OF TEXAS

Arnulfo Ramirez 6-15-00
Arnulfo Ramirez, P.E. Date

STANDARD INTERSTATE SIGNS

# NON-REMOVABLE COPY HIGH-INTENSITY REFLECTORIZED SIGNS

FOR OVERHEAD & GROUND MOUNT SIGNS



© 2000 Texas Department of Transportation ®

| FED. RD. DIV. NO. | FEDERAL AID PROJECT NO. | | SHEET NO. |
|---|---|---|---|
| | NH 2000(704), etc. | | 705 |
| STATE | STATE DIST. NO. | COUNTY | |
| TX | SAT | BEXAR | |
| CONT. | SECT. | JOB | HIGHWAY NO. |
| 2452 | 01 | 036, | LP1604 |

ACCNT.:
FILE:
REF.:
LEVELS
PLANES

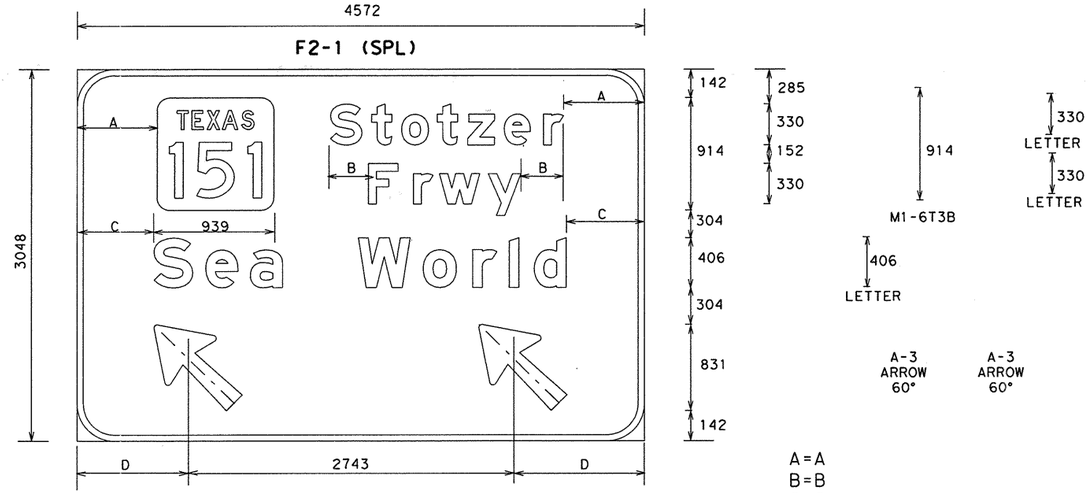


SIGN NO. : 3
STA. NO. : 17+493
C & S : 2452-01
MOUNT : GROUND MOUNTED

BORDER RAD. : 304
SCALE : 0.2500 = 1'-0"
BACKGROUND : GREEN
BORDER : 51

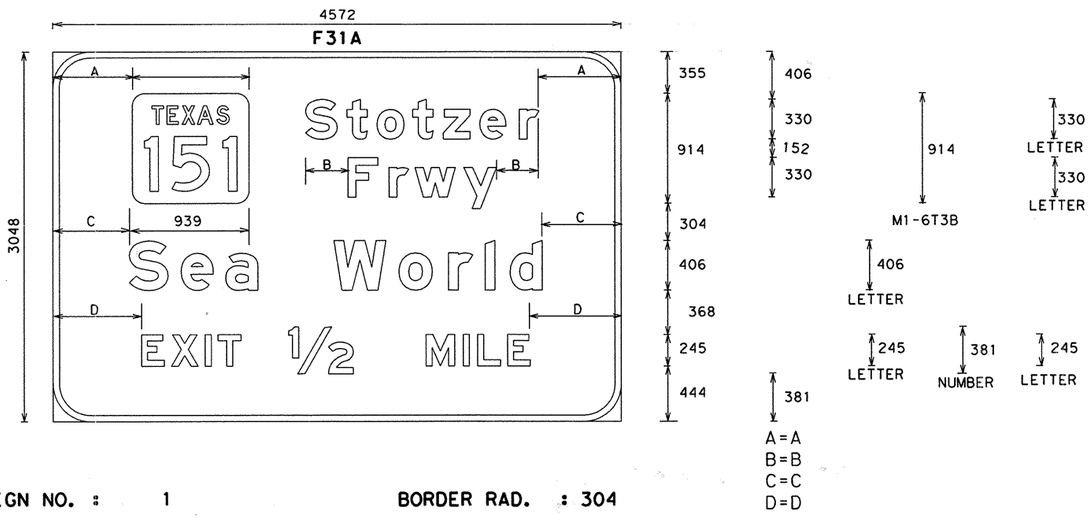


SIGN NO. : 1
STA. NO. : 19+200
C & S : 2452-01
MOUNT : GROUND MOUNTED

BORDER RAD. : 304
SCALE : 0.2500 = 1'-0"
BACKGROUND : GREEN
BORDER : 51

STATE OF TEXAS
ARNULFO RAMIREZ
56890
REGISTERED
PROFESSIONAL ENGINEER

Arnulfo Ramirez, P.E. 6-15-00
Date

STANDARD INTERSTATE SIGNS

# NON-REMOVABLE COPY HIGH-INTENSITY REFLECTORIZED SIGNS

FOR OVERHEAD & GROUND MOUNT SIGNS



© 2000 Texas Department of Transportation ®

| FED. RD. DIV. NO. | FEDERAL AID PROJECT NO. | SHEET NO. |
|---|---|---|
| | NH 2000(704), etc. | 706 |
| STATE | STATE DIST. NO. | COUNTY |
| TX | SAT | BEXAR |
| CONT. | SECT. | JOB | HIGHWAY NO. |
| 2452 | 01 | 036, | LP1604 |

ACCNT.:
FILE:
REF.:
LEVELS D...AY...

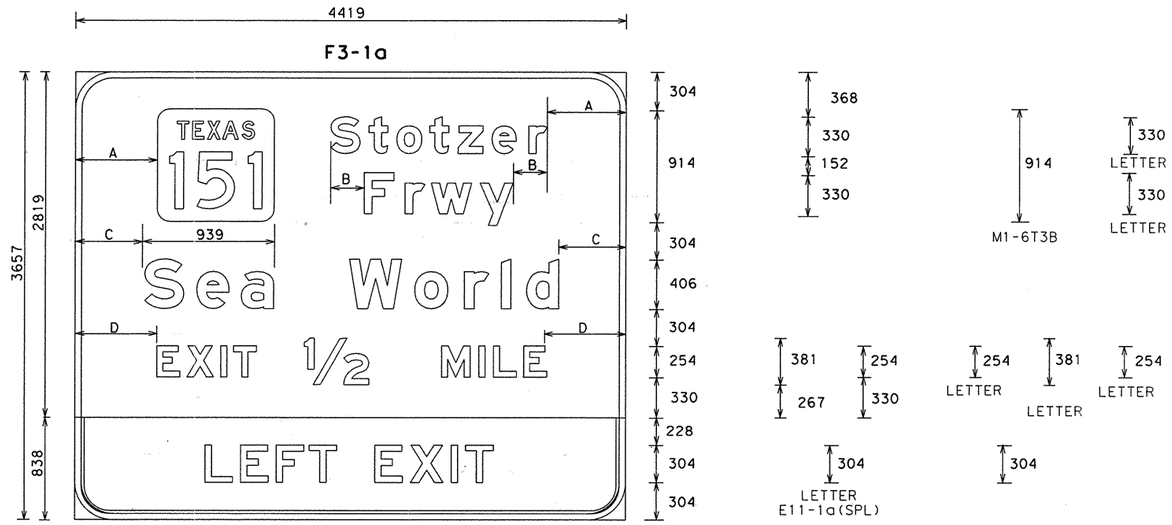





| | | | |
|---|---|---|---|
| SIGN NO. | : 2 & 3 | BORDER RAD. | : 304 |
| STA. NO. | : 16+435 | SCALE | : 0.2500 = 1'-0" |
| C & S | : 2452-01 | BACKGROUND | : GREEN |
| MOUNT | : GROUND MOUNTED | BORDER | : 51 |

A=A
B=B
C=C
D=D

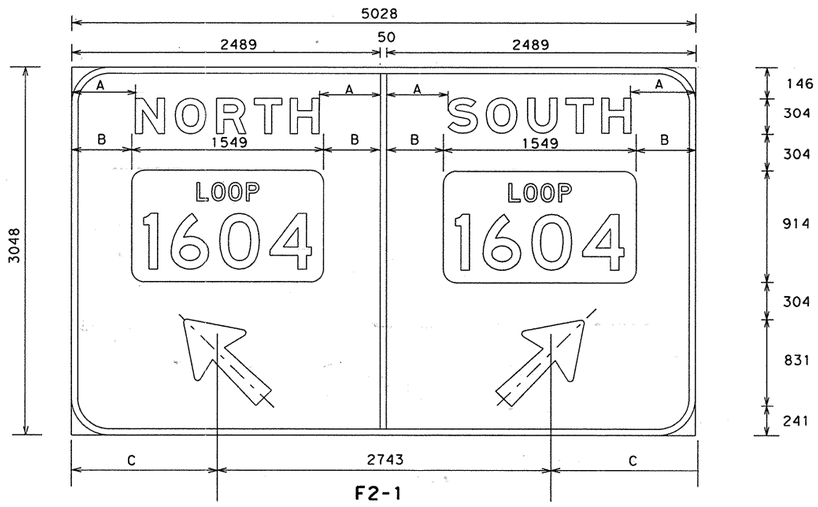


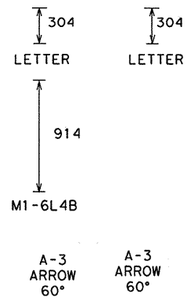


| | | | |
|---|---|---|---|
| SIGN NO. | : 1 | BORDER RAD. | : 304 |
| STA. NO. | : SEE LAYOUT SHEET 13a | SCALE | : 0.2500 = 1'-0" |
| C & S | : 2452-01/SH151 | BACKGROUND | : GREEN |
| MOUNT | : GROUND MOUNTED | BORDER | : 51 |

A=A
B=B
C=C
D=D

Arnulfo Ramirez, P.E. 6-15-00 Date

STANDARD INTERSTATE SIGNS

# NON-REMOVABLE COPY HIGH-INTENSITY REFLECTORIZED SIGNS

FOR OVERHEAD & GROUND MOUNT SIGNS



© 2000 Texas Department of Transportation ®

| FED. RD. DIV. NO. | FEDERAL AID PROJECT NO. | SHEET NO. |
|---|---|---|
| | NH 2000(704), etc. | 707 |
| STATE | STATE DIST. NO. | COUNTY |
| TX | SAT | BEXAR |
| CONT. | SECT. | JOB / HIGHWAY NO. |
| 2452 | 01 | 036, LP1604 |

ACCNT.:
FILE:
REF.:
LEVELS DISPLAYED
1

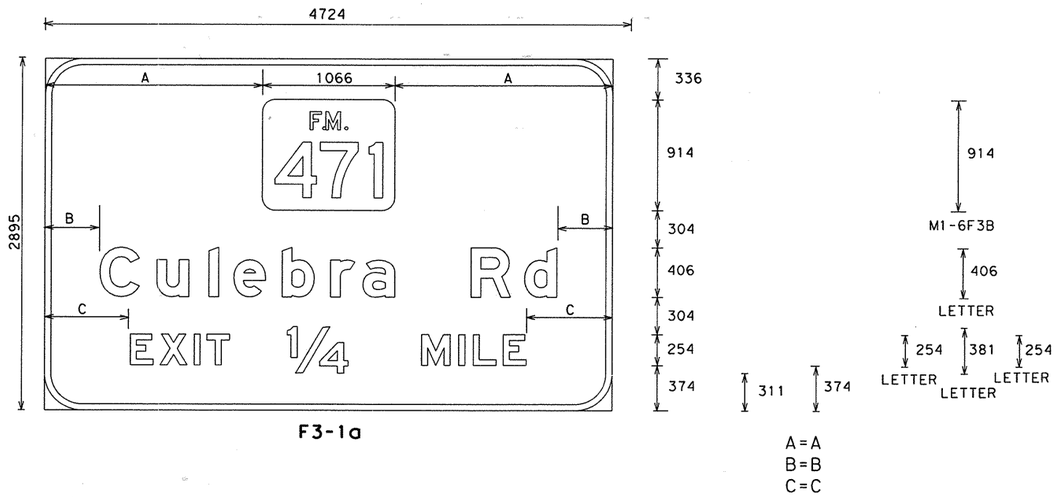


F3-1a

SIGN NO. : 1
STA. NO. : 17+076
C & S : 2452-01
MOUNT : GROUND MOUNTED

BORDER RAD. : 304
SCALE : 0.2500 = 1'-0"
BACKGROUND : GREEN
BORDER : 51

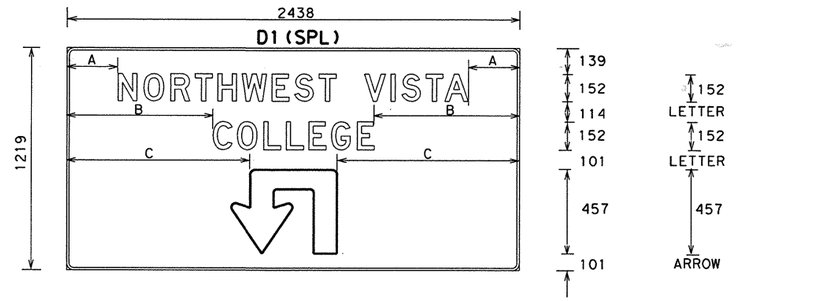


SIGN NO. : 7
STA. NO. : 19+172
C & S : 2452-01
MOUNT : GROUND MOUNTED

BORDER RAD. : 38
SCALE : NONE
BACKGROUND : GREEN
BORDER : 12

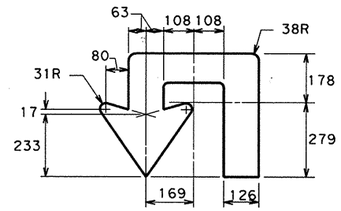


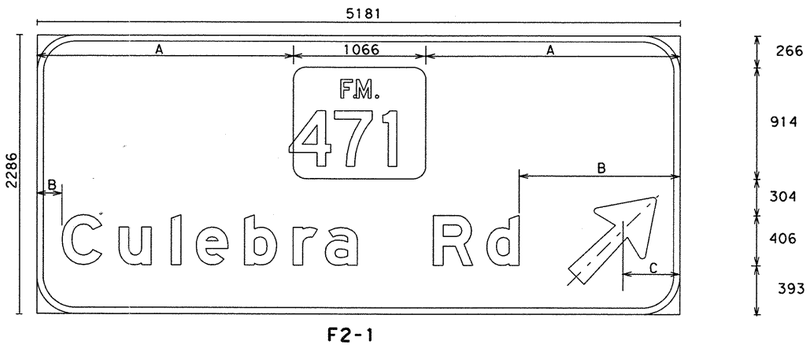


F2-1

SIGN NO. : 2
STA. NO. : 16+893
C & S : 2452-01
MOUNT : GROUND MOUNTED

BORDER RAD. : 304
SCALE : 0.2500 = 1'-0"
BACKGROUND : GREEN
BORDER : 51

Arnulfo Ramirez, P.E. 6-15-00 Date

STANDARD INTERSTATE SIGNS

# NON-REMOVABLE COPY HIGH-INTENSITY REFLECTORIZED SIGNS

FOR OVERHEAD & GROUND MOUNT SIGNS

SHEET 6 OF 21

© 2000 Texas Department of Transportation

| FED. RD. DIV. NO. | FEDERAL AID PROJECT NO. | | SHEET NO. |
|---|---|---|---|
| | NH 2000(704), etc. | | 708 |
| STATE | STATE DIST. NO. | COUNTY | |
| TX | SAT | BEXAR | |
| CONT. | SECT. | JOB | HIGHWAY NO. |
| 2452 | 01 | 036, | LP1604 |

ACCNT.:
FILE:
REF.:
LEVELS UNSPLAYED
PLAN \\ SH471 & LP 1604 #2\M. GARZA 2-14-00

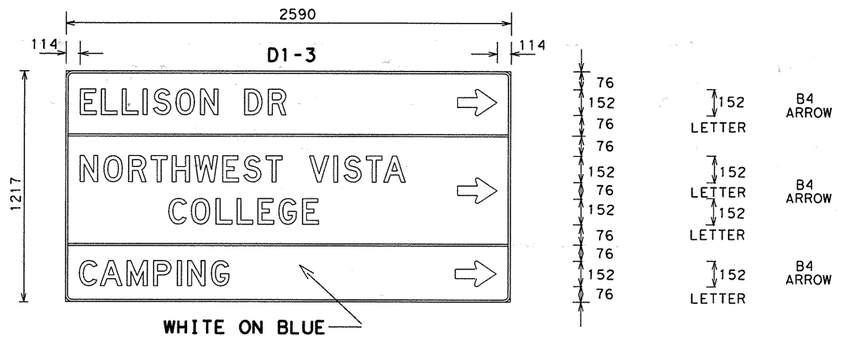


SIGN NO. : 2
STA. NO. : 19+088
C & S : 2452-01
MOUNT : GROUND MOUNTED

BORDER RAD. : 38
SCALE : NONE
BACKGROUND : GREEN
BORDER : 12

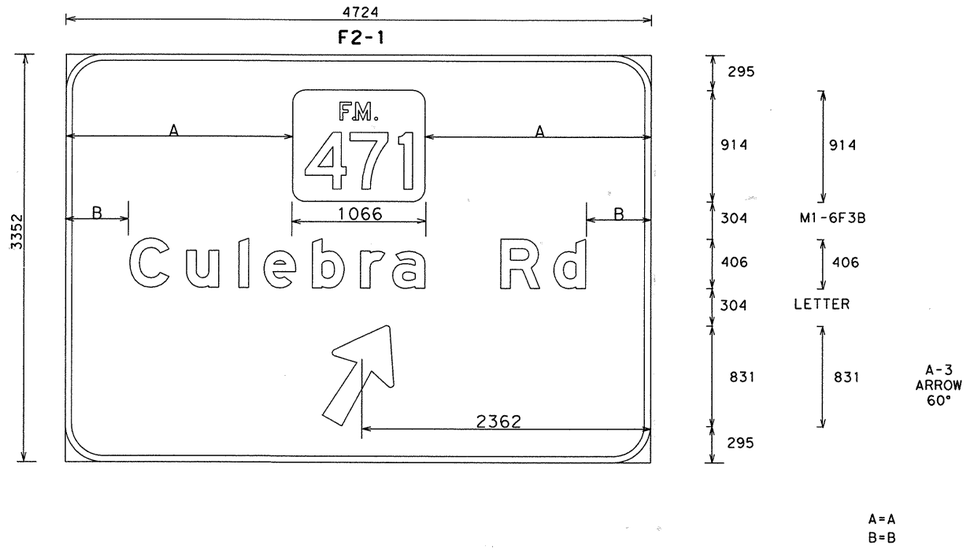


SIGN NO. : 2
STA. NO. : 15+251
C & S : 2452-01
MOUNT : GROUND MOUNTED

BORDER RAD. : 304
SCALE : 0.2500 = 1'-0"
BACKGROUND : GREEN
BORDER : 51

STATE OF TEXAS
ARNULFO RAMIREZ
56890
REGISTERED PROFESSIONAL ENGINEER

Arnulfo Ramirez, P.E. 6-15-00 Date

STANDARD INTERSTATE SIGNS

# NON-REMOVABLE COPY HIGH-INTENSITY REFLECTORIZED SIGNS

FOR OVERHEAD & GROUND MOUNT SIGNS



© 2000 Texas Department of Transportation ®

| FED. RD. DIV. NO. | FEDERAL AID PROJECT NO. | SHEET NO. |
|---|---|---|
| | NH 2000(704), etc. | 709 |

| STATE | STATE DIST. NO. | COUNTY |
|---|---|---|
| TX | SAT | BEXAR |

| CONT. | SECT. | JOB | HIGHWAY NO. |
|---|---|---|---|
| 2452 | 01 | 036, | , LP1604 |

LEVELS Deleted
ACCNT.:
FILE:
REF.:

PLAN IX SH471 & LP 1604 #2\M. GARZA 2-14-00

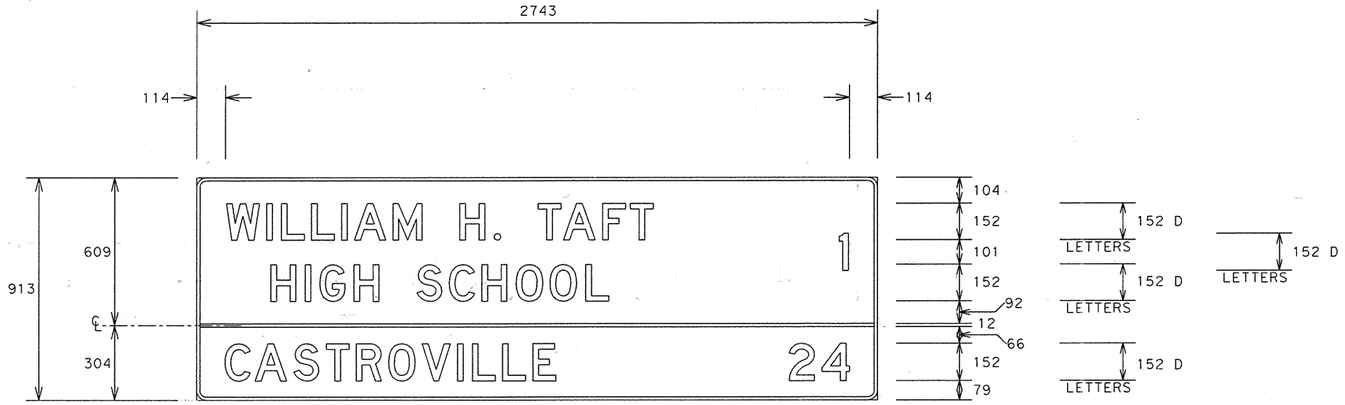


D2-2 (SPL)

| | | | | | |
|---|---|---|---|---|---|
| SIGN NO. | : | 5 | BORDER RAD. | : | 38 |
| STA. NO. | : | 9+986 | SCALE | : | 0.5000 = 1'-0" |
| C & S | : | 2452-01 | BACKGROUND | : | GREEN |
| MOUNT | : | GROUND MOUNTED | BORDER | : | 12 |

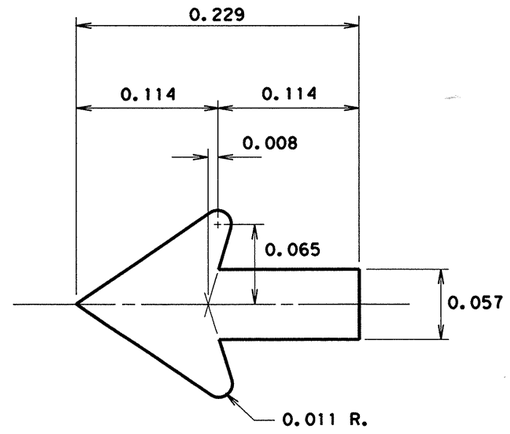


B4 ARROW
METRIC

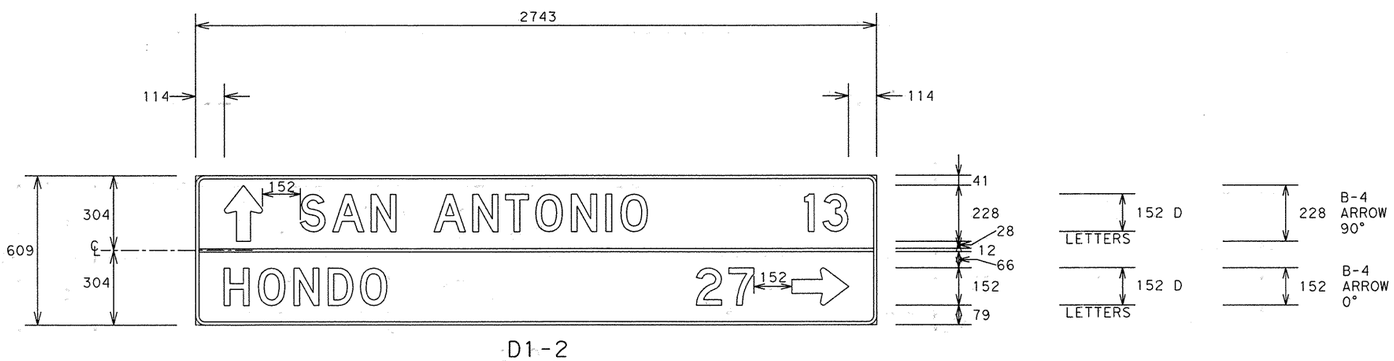


D1-2

| | | | | | |
|---|---|---|---|---|---|
| SIGN NO. | : | 6 | BORDER RAD. | : | 38 |
| STA. NO. | : | 28+468 | SCALE | : | 0.5000 = 1'-0" |
| C & S | : | 2452-01 | BACKGROUND | : | GREEN |
| MOUNT | : | GROUND MOUNTED | BORDER | : | 12 |

STATE OF TEXAS
ARNULFO RAMIREZ
56890
REGISTERED PROFESSIONAL ENGINEER

Arnulfo Ramirez, P.E. 6-15-00 Date

STANDARD INTERSTATE SIGNS

# NON-REMOVABLE COPY HIGH-INTENSITY REFLECTORIZED SIGNS

FOR OVERHEAD & GROUND MOUNT SIGNS



© 2000 Texas Department of Transportation ®

| FED. RD. DIV. NO. | FEDERAL AID PROJECT NO. | | SHEET NO. |
|---|---|---|---|
| 6 | NH 2000 (704), etc. | | 710 |
| STATE | STATE DIST. NO. | COUNTY | |
| TEXAS | SAT | BEXAR | |
| CONT. | SECT. | JOB | HIGHWAY NO. |
| 2452 | 01 | 036, | LOOP 1604 |

ACCNT.:
FILE: U:\SH4718\LP1604#2\M.GARZA\ 2-14-00
REF.:
LEVELS DISPLAYED
1

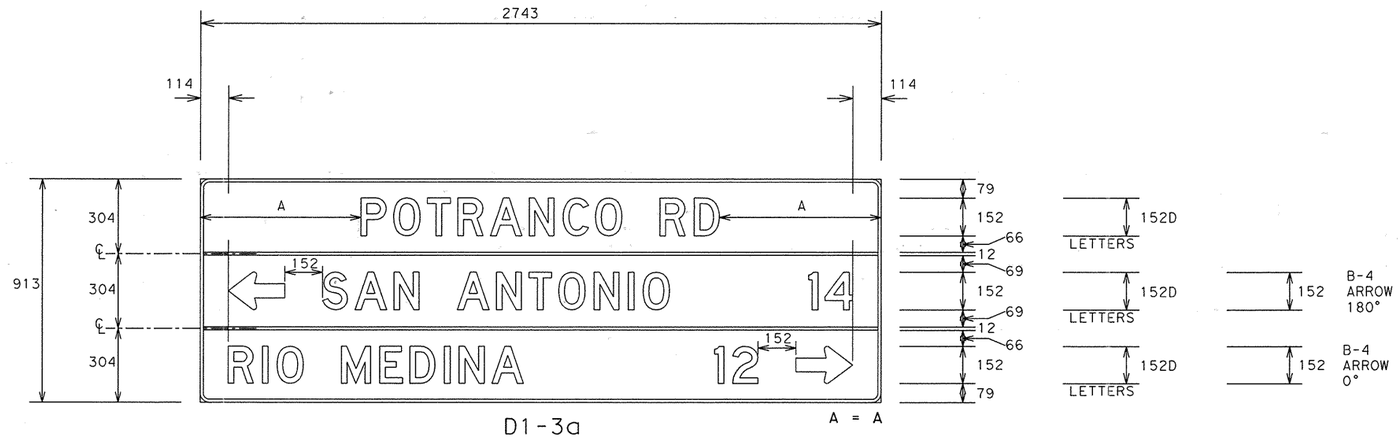


D1-3a

| | | | | | |
|---|---|---|---|---|---|
| SIGN NO. | : | 16 | BORDER RAD. | : | 38 |
| STA. NO. | : | 22+380 | SCALE | : | 0.5000 = 1'-0" |
| C & S | : | 2452-01 | BACKGROUND | : | GREEN |
| MOUNT | : | GROUND MOUNTED | BORDER | : | 12 |

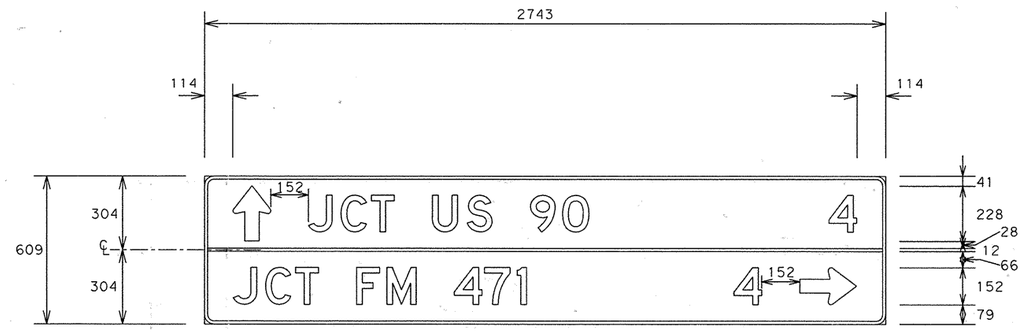


D1-2a

| | | | | | |
|---|---|---|---|---|---|
| SIGN NO. | : | 20 | BORDER RAD. | : | 38 |
| STA. NO. | : | 22+630 | SCALE | : | 0.5000 = 1'-0" |
| C & S | : | POTRANCO RD/FM 1957 | BACKGROUND | : | GREEN |
| MOUNT | : | GROUND MOUNTED | BORDER | : | 12 |

STATE OF TEXAS
ARNULFO RAMIREZ
56890
REGISTERED
PROFESSIONAL ENGINEER

Arnulfo Ramirez, P.E. 6-15-00 Date

STANDARD INTERSTATE SIGNS

# NON-REMOVABLE COPY HIGH-INTENSITY REFLECTORIZED SIGNS

FOR OVERHEAD & GROUND MOUNT SIGNS



© 2000 Texas Department of Transportation ®

| FED. RD. DIV. NO. | FEDERAL AID PROJECT NO. | SHEET NO. |
|---|---|---|
| 6 | NH 2000 (704), etc. | 711 |

| STATE | STATE DIST. NO. | COUNTY |
|---|---|---|
| TEXAS | SAT | BEXAR |

| CONT. | SECT. | JOB | HIGHWAY NO. |
|---|---|---|---|
| 2452 | 01 | 036, | LOOP 1604 |

etc.

LEVELS Us,sPLAYED
ACCNT.:
FILE: U:\SH471&LP1604#2\M. GARZA\ 2-14-00
REF.:
PLAN

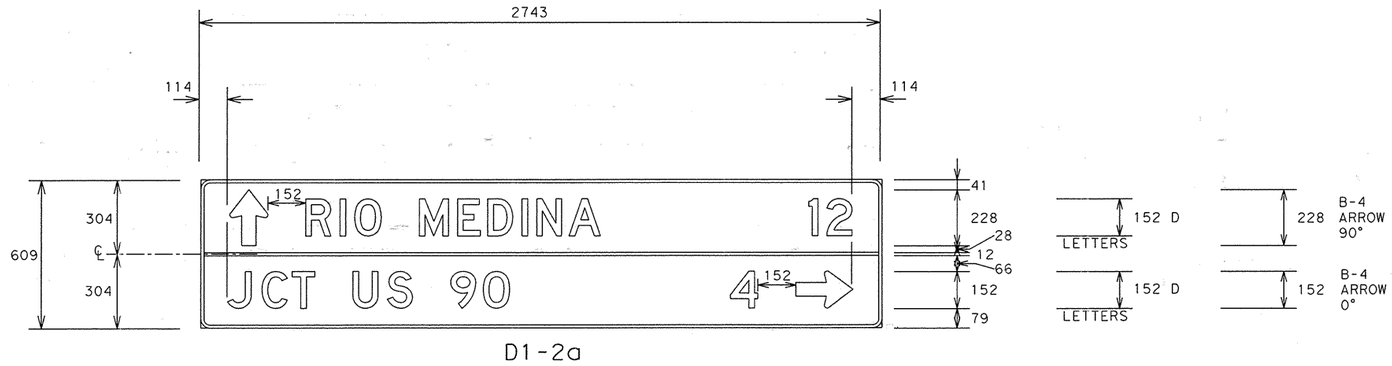


D1-2a

| | | | | | |
|---|---|---|---|---|---|
| SIGN NO. | : | 4 | BORDER RAD. | : | 38 |
| STA. NO. | : | 20+253 | SCALE | : | 0.5000 = 1'-0" |
| C & S | : | POTRANCO RD/FM 1957 | BACKGROUND | : | GREEN |
| MOUNT | : | GROUND MOUNTED | BORDER | : | 12 |

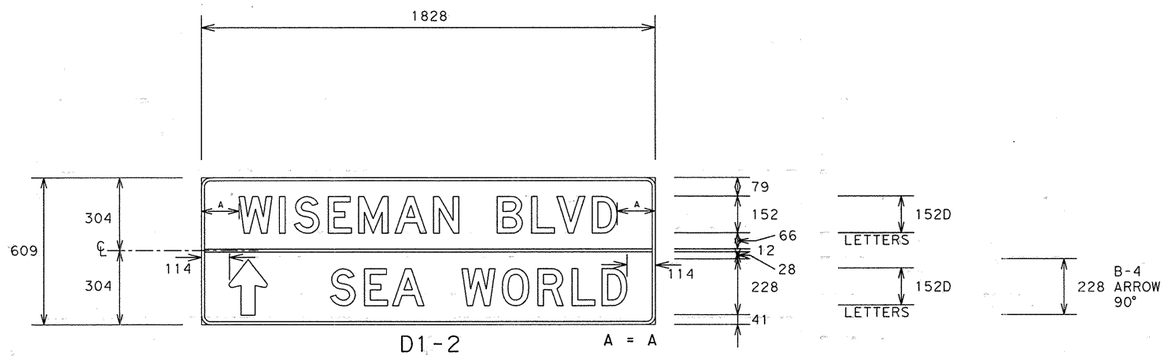


D1-2

| | | | | | |
|---|---|---|---|---|---|
| SIGN NO. | : | 3 | BORDER RAD. | : | 38 |
| STA. NO. | : | 19+500 | SCALE | : | 0.5000 = 1'-0" |
| C & S | : | 2452-01 | BACKGROUND | : | GREEN |
| MOUNT | : | GROUND MOUNTED | BORDER | : | 12 |

STATE OF TEXAS
ARNULFO RAMIREZ
56890
REGISTERED
PROFESSIONAL ENGINEER

Arnulfo Ramirez, P.E. — Date 6-15-00

STANDARD INTERSTATE SIGNS

# NON-REMOVABLE COPY HIGH-INTENSITY REFLECTORIZED SIGNS

FOR OVERHEAD & GROUND MOUNT SIGNS



© 2000 Texas Department of Transportation ®

| FED. RD. DIV. NO. | FEDERAL AID PROJECT NO. | SHEET NO. |
|---|---|---|
| 6 | NH 2000 (704), etc. | 712 |

| STATE | STATE DIST. NO. | COUNTY |
|---|---|---|
| TEXAS | SAT | BEXAR |

| CONT. | SECT. | JOB | HIGHWAY NO. |
|---|---|---|---|
| 2452 | 01 | 036, | LOOP 1604 |

ACCNT.:
FILE: U:\SH4718LP1604#2\M.GARZA\ 2-14-00
REF.:
LEVELS UNLAYED
1

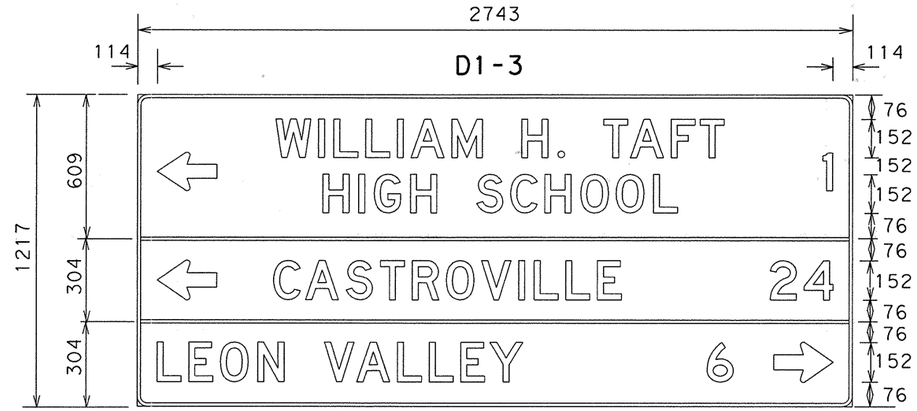


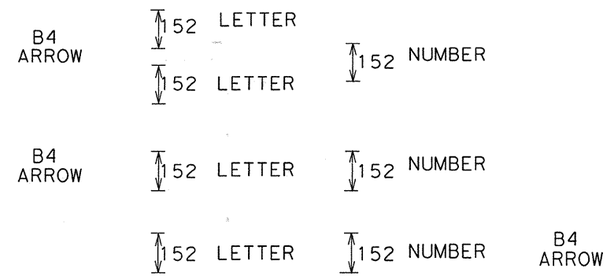


D1-3a (SPL)

| | | | | | |
|---|---|---|---|---|---|
| SIGN NO. | : | 4 | BORDER RAD. | : | 38 |
| STA. NO. | : | 16+248 | SCALE | : | 0.5000 = 1'-0" |
| C & S | : | 2452-01 | BACKGROUND | : | GREEN |
| MOUNT | : | GROUND MOUNTED | BORDER | : | 12 |

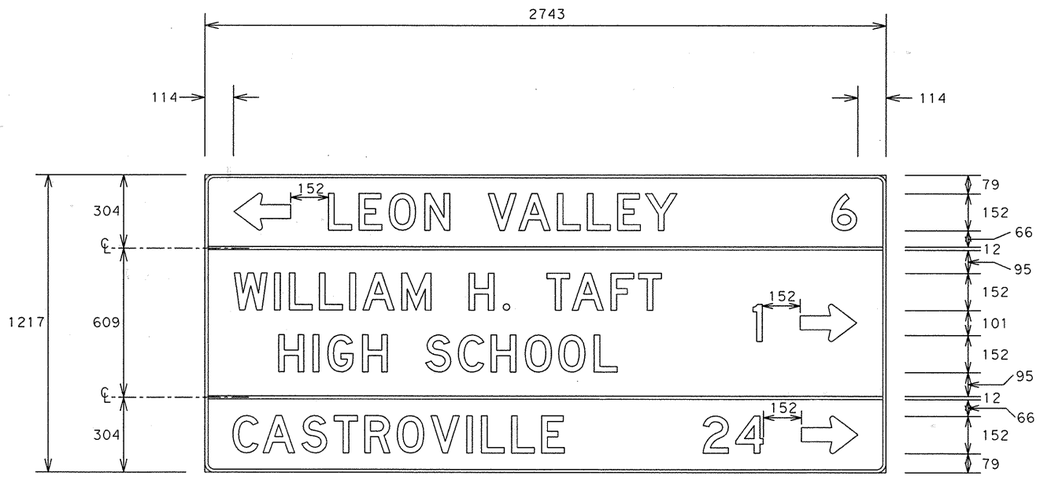


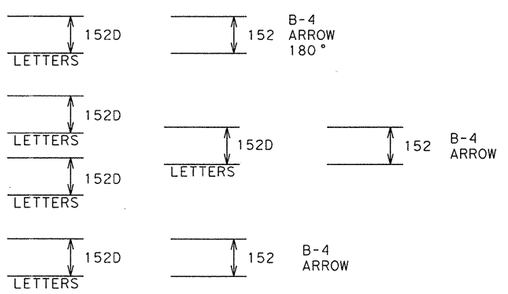


D1-3a (SPL)

| | | | | | |
|---|---|---|---|---|---|
| SIGN NO. | : | 5 | BORDER RAD. | : | 38 |
| STA. NO. | : | 15+907 | SCALE | : | 0.5000 = 1'-0" |
| C & S | : | 2452-01 | BACKGROUND | : | GREEN |
| MOUNT | : | GROUND MOUNTED | BORDER | : | 12 |

STATE OF TEXAS
ARNULFO RAMIREZ
56890
REGISTERED
PROFESSIONAL ENGINEER

Arnulfo Ramirez, P.E. 6-15-00 Date

ACCNT.:
FILE: U:\SH4718LP1604#2\M.GARZA\ 2-14-00
REF.:
LEVELS UNPLAYED

STANDARD INTERSTATE SIGNS

# NON-REMOVABLE COPY HIGH-INTENSITY REFLECTORIZED SIGNS

FOR OVERHEAD & GROUND MOUNT SIGNS



© 2000 Texas Department of Transportation ®

| FED. RD. DIV. NO. | FEDERAL AID PROJECT NO. | SHEET NO. |
|---|---|---|
| 6 | NH 2000 (704), etc. | 713 |
| STATE | STATE DIST. NO. | COUNTY |
| TEXAS | SAT | BEXAR |
| CONT. | SECT. | JOB | HIGHWAY NO. |
| 2452 | 01 | 036, | LOOP 1604 |

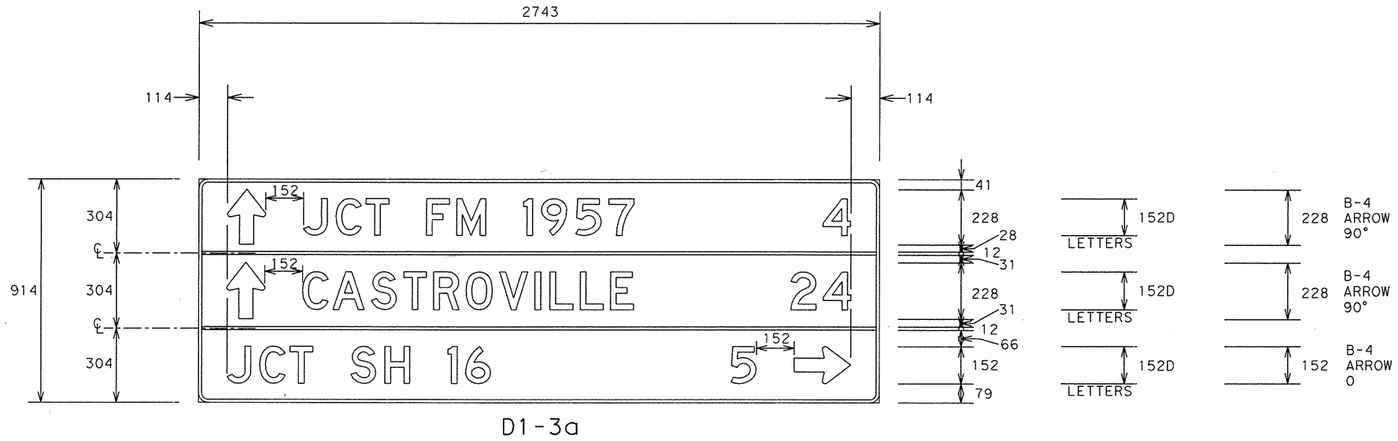


D1-3a

| | | | | | |
|---|---|---|---|---|---|
| SIGN NO. | : | 20 | BORDER RAD. | : | 38 |
| STA. NO. | : | 10+477 | SCALE | : | 0.5000 = 1'-0" |
| C & S | : | CULEBRA RD/FM 471 | BACKGROUND | : | GREEN |
| MOUNT | : | GROUND MOUNTED | BORDER | : | 12 |

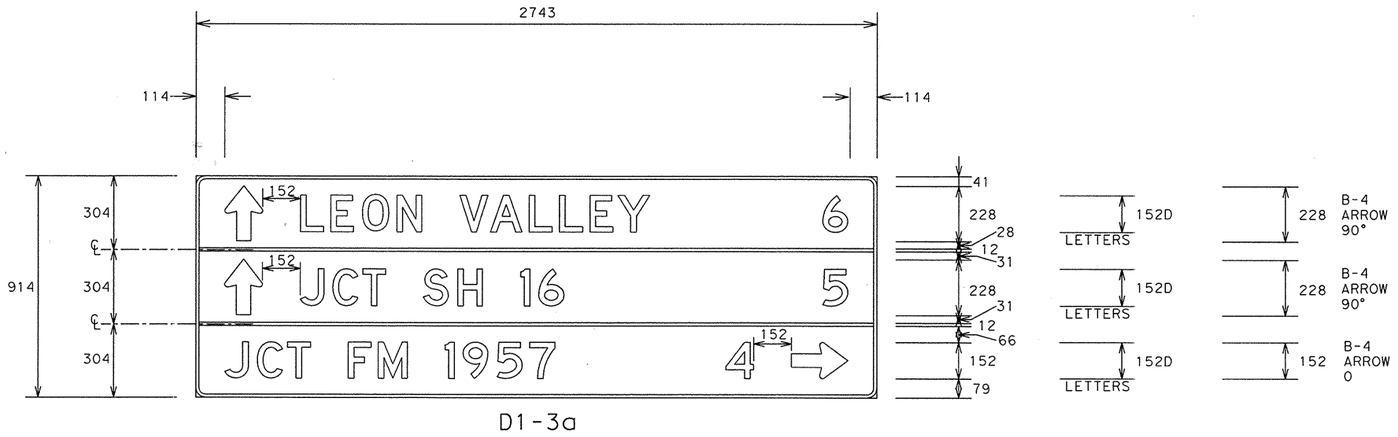


D1-3a

| | | | | | |
|---|---|---|---|---|---|
| SIGN NO. | : | 11 | BORDER RAD. | : | 38 |
| STA. NO. | : | 10+097 | SCALE | : | 0.5000 = 1'-0" |
| C & S | : | CULEBRA RD/FM 471 | BACKGROUND | : | GREEN |
| MOUNT | : | GROUND MOUNTED | BORDER | : | 12 |

STATE OF TEXAS
ARNULFO RAMIREZ
56890
REGISTERED
PROFESSIONAL ENGINEER

Arnulfo Ramirez, P.E. 6-15-00 Date

STANDARD INTERSTATE SIGNS

# NON-REMOVABLE COPY HIGH-INTENSITY REFLECTORIZED SIGNS

FOR OVERHEAD & GROUND MOUNT SIGNS



© 2000 Texas Department of Transportation ®

| FED. RD. DIV. NO. | FEDERAL AID PROJECT NO. | | SHEET NO. |
|---|---|---|---|
| 6 | NH 2000 (704), etc. | | 714 |
| STATE | STATE DIST. NO. | COUNTY | |
| TEXAS | SAT | BEXAR | |
| CONT. | SECT. | JOB | HIGHWAY NO. |
| 2452 | 01 | 036, LOOP 1604 | |

ACCNT.:
FILE: U:\SH471&LP1604#2\M. GARZA\ 2-14-00
REF.:
LEVELS DISPLAYED

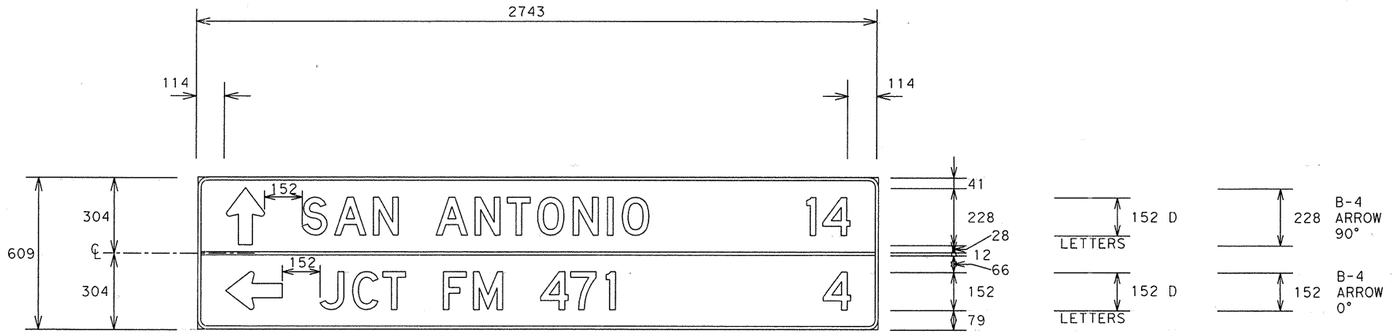


D1-2a

| | | | | | |
|---|---|---|---|---|---|
| SIGN NO. | : | 9 | BORDER RAD. | : | 38 |
| STA. NO. | : | 20+253 | SCALE | : | 0.5000 = 1'-0" |
| C & S | : | POTRANCO RD/FM 1957 | BACKGROUND | : | GREEN |
| MOUNT | : | GROUND MOUNTED | BORDER | : | 12 |

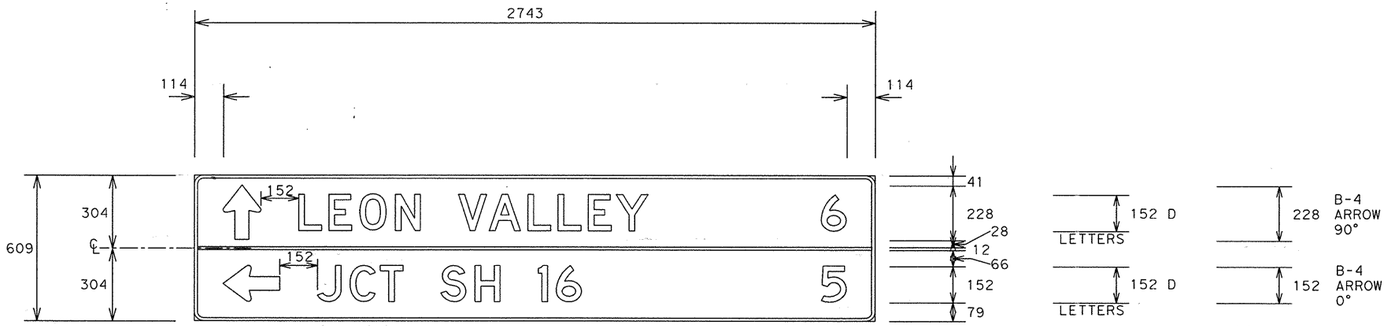


D1-2a

| | | | | | |
|---|---|---|---|---|---|
| SIGN NO. | : | 19 | BORDER RAD. | : | 38 |
| STA. NO. | : | 10+266 | SCALE | : | 0.5000 = 1'-0" |
| C & S | : | CULEBRA RD/FM 471 | BACKGROUND | : | GREEN |
| MOUNT | : | GROUND MOUNTED | BORDER | : | 12 |

STATE OF TEXAS
ARNULFO RAMIREZ
56890
REGISTERED
PROFESSIONAL ENGINEER

Arnulfo Ramirez, P.E. 4-15-00
Date

ACCNT.:
FILE: U:\SH471&LP1604#2\M.GARZA\ 2-14-00
REF.:
LEVELS DISPLAYED

STANDARD INTERSTATE SIGNS

# NON-REMOVABLE COPY HIGH-INTENSITY REFLECTORIZED SIGNS

FOR OVERHEAD & GROUND MOUNT SIGNS



© 2000 Texas Department of Transportation ®

| FED. RD. DIV. NO. | FEDERAL AID PROJECT NO. | SHEET NO. |
|---|---|---|
| 6 | NH 2000 (704), etc. | 715 |

| STATE | STATE DIST. NO. | COUNTY | |
|---|---|---|---|
| TEXAS | SAT | BEXAR | |
| CONT. | SECT. | JOB | HIGHWAY NO. |
| 2452 | 01 | 036 | LOOP 1604 |

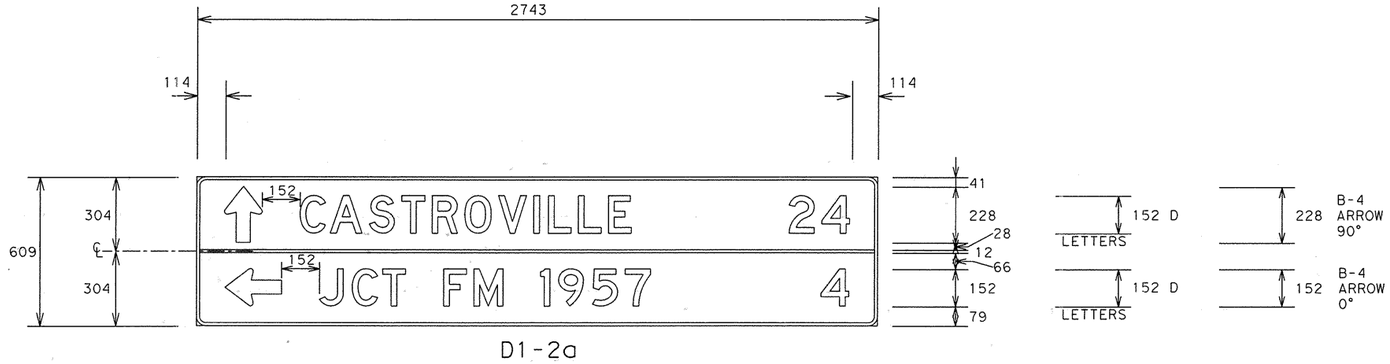


D1-2a

| | | | | | |
|---|---|---|---|---|---|
| SIGN NO. | : | 1 | BORDER RAD. | : | 38 |
| STA. NO. | : | 10+272 | SCALE | : | 0.5000 = 1'-0" |
| C & S | : | CULEBRA RD/FM 471 | BACKGROUND | : | GREEN |
| MOUNT | : | GROUND MOUNTED | BORDER | : | 12 |

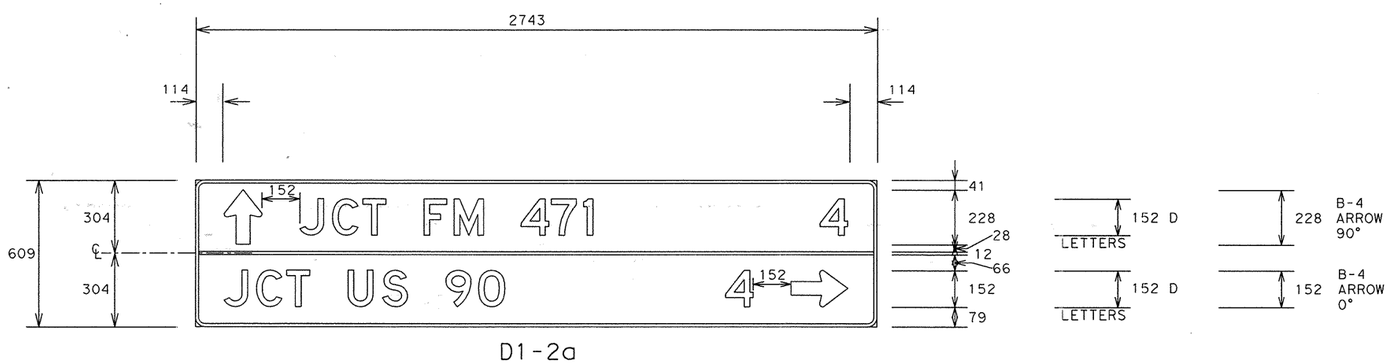


D1-2a

| | | | | | |
|---|---|---|---|---|---|
| SIGN NO. | : | 15 | BORDER RAD. | : | 38 |
| STA. NO. | : | 20+138 | SCALE | : | 0.5000 = 1'-0" |
| C & S | : | POTRANCO RD/FM 1957 | BACKGROUND | : | GREEN |
| MOUNT | : | GROUND MOUNTED | BORDER | : | 12 |

STATE OF TEXAS
ARNULFO RAMIREZ
56890
REGISTERED PROFESSIONAL ENGINEER

Arnulfo Ramirez, P.E. 6-15-00 Date

STANDARD INTERSTATE SIGNS

# NON-REMOVABLE COPY HIGH-INTENSITY REFLECTORIZED SIGNS

FOR OVERHEAD & GROUND MOUNT SIGNS



© 2000 Texas Department of Transportation ®

| FED. RD. DIV. NO. | FEDERAL AID PROJECT NO. | | SHEET NO. |
|---|---|---|---|
| 6 | NH 2000 (704), etc. | | 716 |
| STATE | STATE DIST. NO. | COUNTY | |
| TEXAS | SAT | BEXAR | |
| CONT. | SECT. | JOB | HIGHWAY NO. |
| 2452 | 01 | 036, | LOOP 1604 |

ACCNT.:
FILE: U:\SH471&LP1604#2\M.GARZA\ 2-14-00
REF.:
LEVELS DISPLAYED
1
PLAN

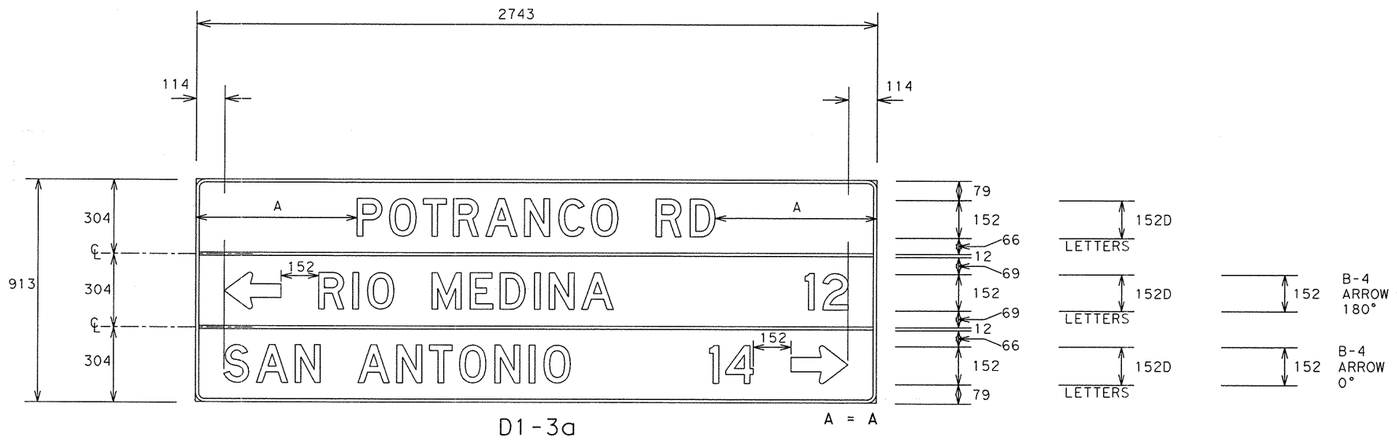


D1-3a

A = A

| | | | | | |
|---|---|---|---|---|---|
| SIGN NO. | : | 4 | BORDER RAD. | : | 38 |
| STA. NO. | : | 22+768 | SCALE | : | 0.5000 = 1'-0" |
| C & S | : | 2452-01 | BACKGROUND | : | GREEN |
| MOUNT | : | GROUND MOUNTED | BORDER | : | 12 |

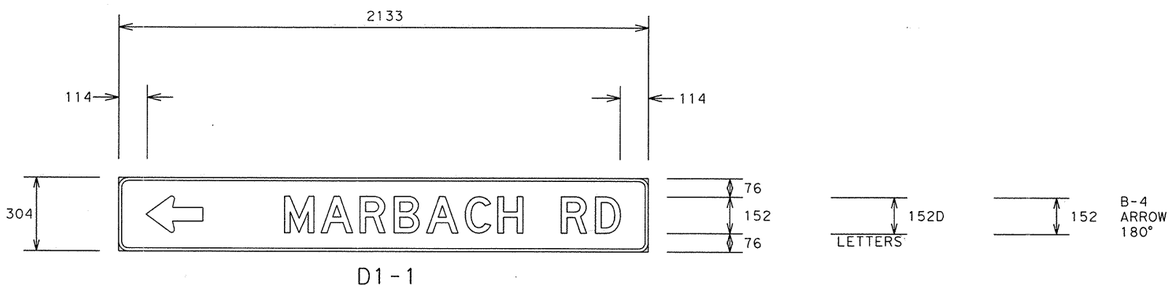


D1-1

| | | | | | |
|---|---|---|---|---|---|
| SIGN NO. | : | 11 | BORDER RAD. | : | 38 |
| STA. NO. | : | 26+213 | SCALE | : | 0.5000 = 1'-0" |
| C & S | : | 2452-01 | BACKGROUND | : | GREEN |
| MOUNT | : | GROUND MOUNTED | BORDER | : | 12 |

STATE OF TEXAS
ARNULFO RAMIREZ
56890
REGISTERED
PROFESSIONAL ENGINEER

Arnulfo Ramirez, P.E. 6-15-00 Date

STANDARD INTERSTATE SIGNS

# NON-REMOVABLE COPY HIGH-INTENSITY REFLECTORIZED SIGNS

FOR OVERHEAD & GROUND MOUNT SIGNS



© 2000 Texas Department of Transportation ®

| FED. RD. DIV. NO. | FEDERAL AID PROJECT NO. | SHEET NO. |
|---|---|---|
| 6 | NH 2000 (704), etc. | 717 |

| STATE | STATE DIST. NO. | COUNTY | |
|---|---|---|---|
| TEXAS | SAT | BEXAR | |
| CONT. | SECT. | JOB | HIGHWAY NO. |
| 2452 | 01 | 036, | LOOP 1604 |

ACCNT.:
FILE: U:\SH471&LP1604#2\M.GARZA\ 2-14-00
REF.:
LEVELS D1>PLATED
PLAN

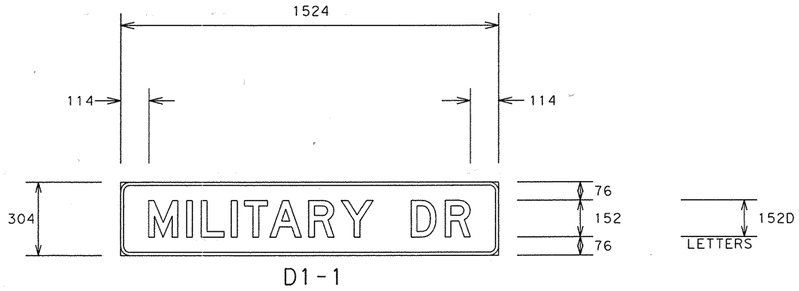


SIGN NO. : 2
STA. NO. : 21+475
C & S : 2452-01
MOUNT : GROUND MOUNTED

BORDER RAD. : 38
SCALE : 0.5000 = 1'-0"
BACKGROUND : GREEN
BORDER : 12

SIGN NO. : 7
STA. NO. : 20+975
C & S : 2452-01
MOUNT : GROUND MOUNTED

BORDER RAD. : 38
SCALE : 0.5000 = 1'-0"
BACKGROUND : GREEN
BORDER : 12

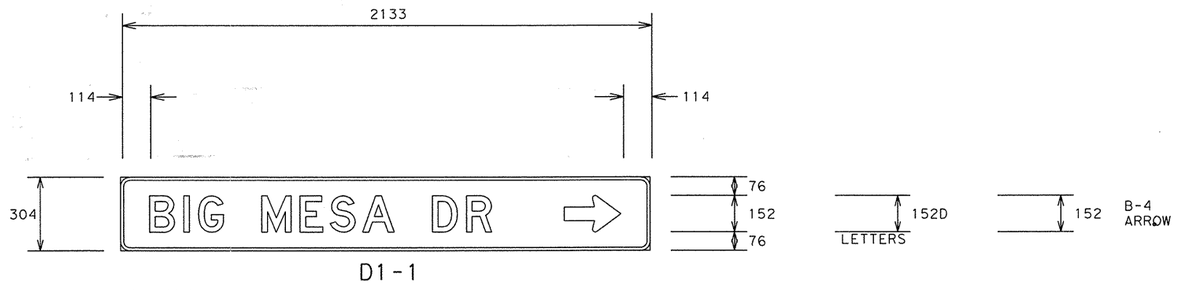


SIGN NO. : 3
STA. NO. : 27+320
C & S : 2452-01
MOUNT : GROUND MOUNTED

BORDER RAD. : 38
SCALE : 0.5000 = 1'-0"
BACKGROUND : GREEN
BORDER : 12

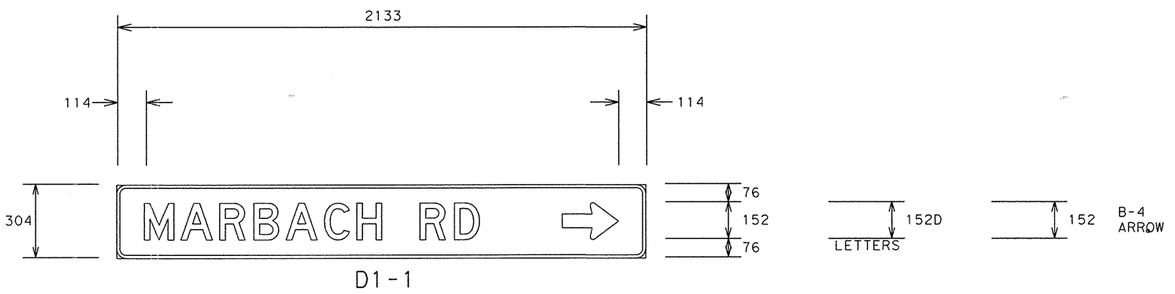


SIGN NO. : 2
STA. NO. : 26+523
C & S : 2452-01
MOUNT : GROUND MOUNTED

BORDER RAD. : 38
SCALE : 0.5000 = 1'-0"
BACKGROUND : GREEN
BORDER : 12

SIGN NO. : 11
STA. NO. : 26+213
C & S : 2452-01
MOUNT : GROUND MOUNTED

BORDER RAD. : 38
SCALE : 0.5000 = 1'-0"
BACKGROUND : GREEN
BORDER : 12

STATE OF TEXAS
ARNULFO RAMIREZ
56890
REGISTERED
PROFESSIONAL ENGINEER

Arnulfo Ramirez, P.E. 6-15-00
Date

STANDARD INTERSTATE SIGNS

# NON-REMOVABLE COPY HIGH-INTENSITY REFLECTORIZED SIGNS

FOR OVERHEAD & GROUND MOUNT SIGNS



© 2000 Texas Department of Transportation ®

| FED. RD. DIV. NO. | FEDERAL AID PROJECT NO. | SHEET NO. |
|---|---|---|
| 6 | NH 2000 (704), etc. | 718 |
| STATE | STATE DIST. NO. | COUNTY |
| TEXAS | SAT | BEXAR |
| CONT. | SECT. | JOB / HIGHWAY NO. |
| 2452 | 01 | 036, LOOP 1604 etc. |

ACCNT.:
FILE: U:\SH471&LP1604#2\ML GARZA\ 2-14-00
REF.:
LEVELS DISPLAYED
1
PLAN

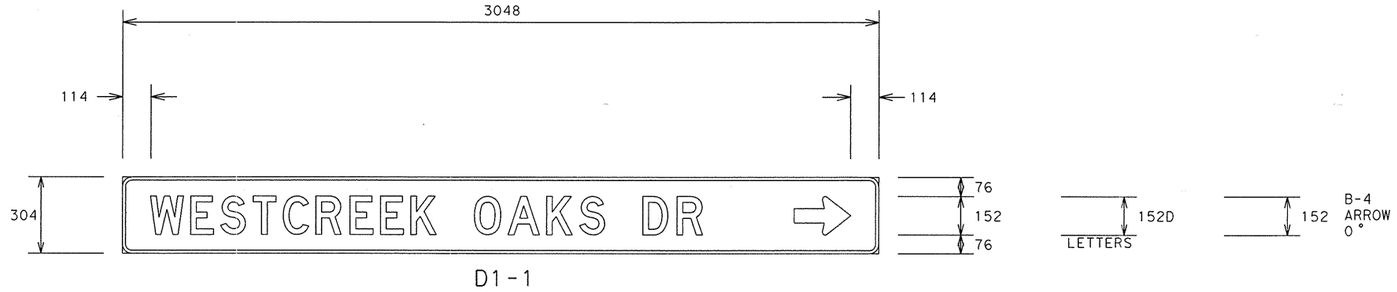


D1-1

| | | | | | |
|---|---|---|---|---|---|
| SIGN NO. | : | 9 | BORDER RAD. | : | 38 |
| STA. NO. | : | 21+760 | SCALE | : | 0.5000 = 1'-0" |
| C & S | : | 2452-01 | BACKGROUND | : | GREEN |
| MOUNT | : | GROUND MOUNTED | BORDER | : | 12 |

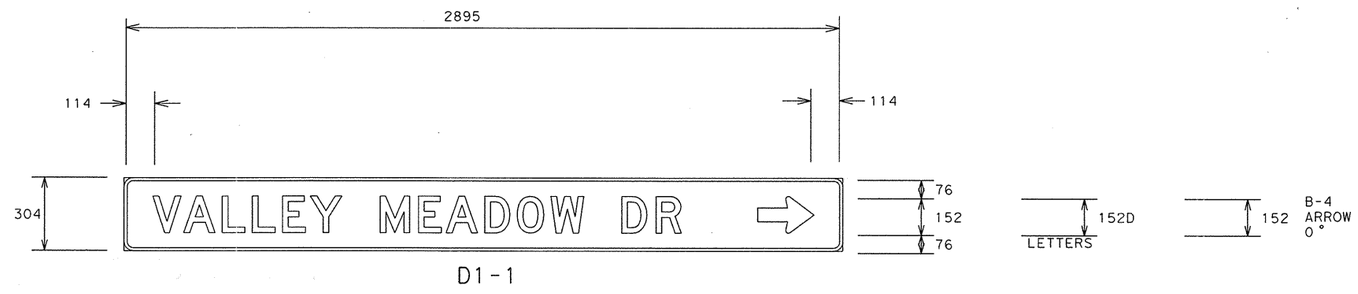


D1-1

| | | | | | |
|---|---|---|---|---|---|
| SIGN NO. | : | 8 | BORDER RAD. | : | 38 |
| STA. NO. | : | 18+028 | SCALE | : | 0.5000 = 1'-0" |
| C & S | : | 2452-01 | BACKGROUND | : | GREEN |
| MOUNT | : | GROUND MOUNTED | BORDER | : | 12 |

STATE OF TEXAS
ARNULFO RAMIREZ
56890
REGISTERED
PROFESSIONAL ENGINEER

Arnulfo Ramirez, P.E. 6-15-00
Date

ACCNT.:
FILE: U:\SH471&LP1604#2\ML GARZA\ 2-14-00
REF.:
LEVELS DISPLAYED
1
PLAN

STANDARD INTERSTATE SIGNS

# NON-REMOVABLE COPY HIGH-INTENSITY REFLECTORIZED SIGNS

FOR OVERHEAD & GROUND MOUNT SIGNS



© 2000 Texas Department of Transportation ®

| FED. RD. DIV. NO. | FEDERAL AID PROJECT NO. | SHEET NO. |
|---|---|---|
| 6 | NH 2000 (704), etc. | 719 |

| STATE | STATE DIST. NO. | COUNTY | |
|---|---|---|---|
| TEXAS | SAT | BEXAR | |
| CONT. | SECT. | JOB | HIGHWAY NO. |
| 2452 | 01 | 036, | LOOP 1604 |

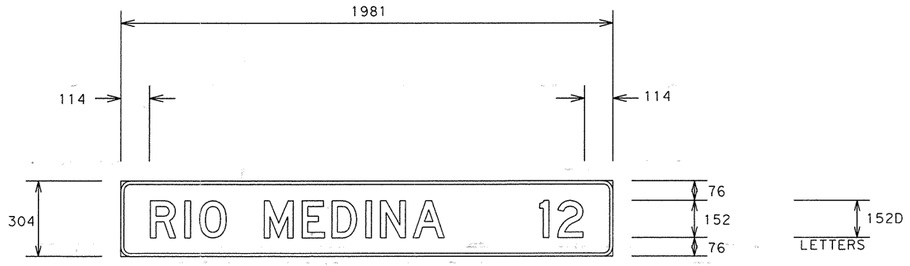


D2-1

| | | | | | |
|---|---|---|---|---|---|
| SIGN NO. | : | 9 | BORDER RAD. | : | 38 |
| STA. NO. | : | 20+122 | SCALE | : | 0.5000 = 1'-0" |
| C & S | : | POTRANCO RD/FM 1957 | BACKGROUND | : | GREEN |
| MOUNT | : | GROUND MOUNTED | BORDER | : | 12 |

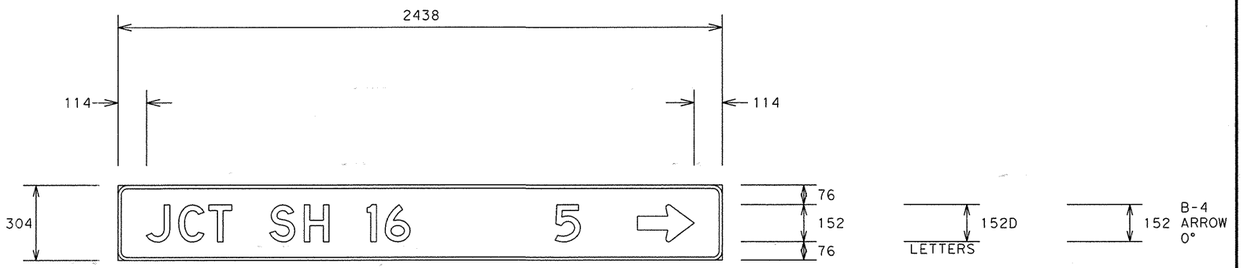


D1-1

| | | | | | |
|---|---|---|---|---|---|
| SIGN NO. | : | 5 | BORDER RAD. | : | 38 |
| STA. NO. | : | 17+200 | SCALE | : | 0.5000 = 1'-0" |
| C & S | : | 2452-01 | BACKGROUND | : | GREEN |
| MOUNT | : | GROUND MOUNTED | BORDER | : | 12 |

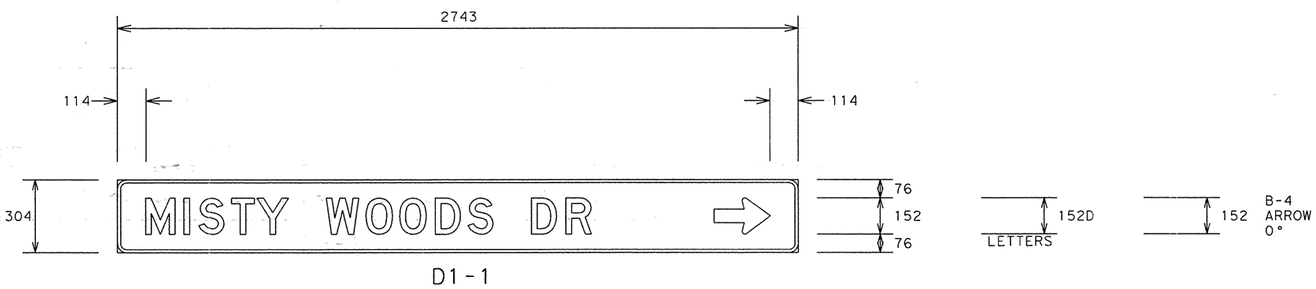


D1-1

| | | | | | |
|---|---|---|---|---|---|
| SIGN NO. | : | 7 | BORDER RAD. | : | 38 |
| STA. NO. | : | 18+608 | SCALE | : | 0.5000 = 1'-0" |
| C & S | : | 2452-01 | BACKGROUND | : | GREEN |
| MOUNT | : | GROUND MOUNTED | BORDER | : | 12 |

ACCNT.:
FILE: U:\SH471&LP1604#2\M.GARZA\ 2-14-00
REF.:
LEVELS DISPLAYED
1

STATE OF TEXAS
ARNULFO RAMIREZ
56890
REGISTERED
PROFESSIONAL ENGINEER

Arnulfo Ramirez, P.E. 6-15-00 Date

STANDARD INTERSTATE SIGNS

# NON-REMOVABLE COPY HIGH-INTENSITY REFLECTORIZED SIGNS

FOR OVERHEAD & GROUND MOUNT SIGNS



© 2000 Texas Department of Transportation ®

| FED.RD. DIV.NO. | FEDERAL AID PROJECT NO. | | SHEET NO. |
|---|---|---|---|
| 6 | NH 2000 (704),etc. | | 720 |
| STATE | STATE DIST.NO. | COUNTY | |
| TEXAS | SAT | BEXAR | |
| CONT. | SECT. | JOB | HIGHWAY NO. |
| 2452 | 01 | 036, | LOOP 1604 |

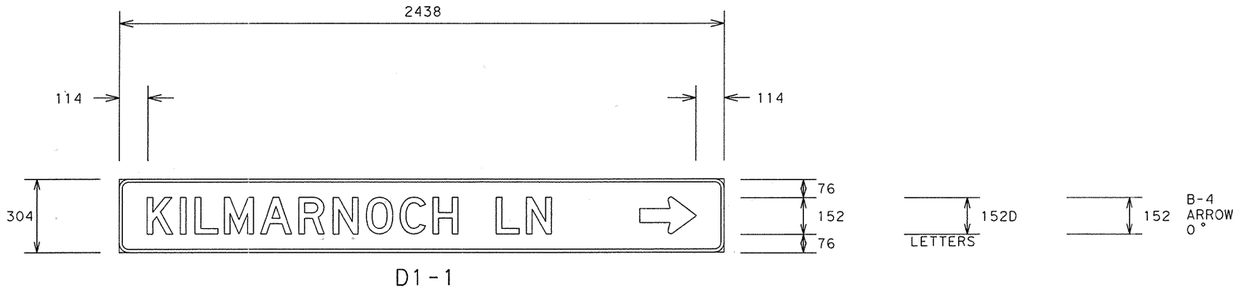


D1-1

| | | | | | |
|---|---|---|---|---|---|
| SIGN NO. | : | 3 | BORDER RAD. | : | 38 |
| STA. NO. | : | 20+850 | SCALE | : | 0.5000 = 1'-0" |
| C & S | : | 2452-01 | BACKGROUND | : | GREEN |
| MOUNT | : | GROUND MOUNTED | BORDER | : | 12 |

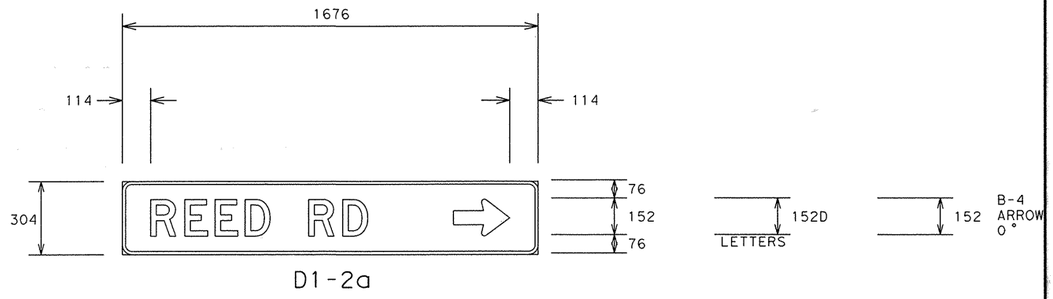


D1-2a

| | | | | | |
|---|---|---|---|---|---|
| SIGN NO. | : | 2 | BORDER RAD. | : | 38 |
| STA. NO. | : | 20+265 | SCALE | : | 0.5000 = 1'-0" |
| C & S | : | 2452-01 | BACKGROUND | : | GREEN |
| MOUNT | : | GROUND MOUNTED | BORDER | : | 12 |

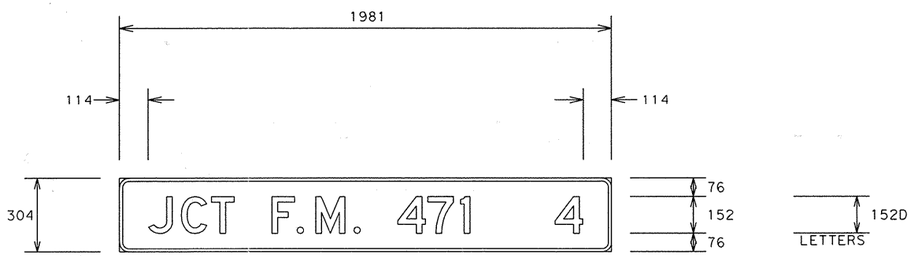


D2-1

| | | | | | |
|---|---|---|---|---|---|
| SIGN NO. | : | 1 | BORDER RAD. | : | 38 |
| STA. NO. | : | 22+348 | SCALE | : | 0.5000 = 1'-0" |
| C & S | : | 2452-01 | BACKGROUND | : | GREEN |
| MOUNT | : | GROUND MOUNTED | BORDER | : | 12 |

ACCNT.:
FILE: U:\SH471&LP1604#2\M.GARZA\ 2-14-00
REF.:
LEVELS DISPLAYED
1

STATE OF TEXAS
ARNULFO RAMIREZ
56890
REGISTERED
PROFESSIONAL ENGINEER

Arnulfo Ramirez, P.E. — 6-15-00 Date

STANDARD INTERSTATE SIGNS

# NON-REMOVABLE COPY HIGH-INTENSITY REFLECTORIZED SIGNS

FOR OVERHEAD & GROUND MOUNT SIGNS



© 2000 Texas Department of Transportation ®

| FED. RD. DIV. NO. | FEDERAL AID PROJECT NO. | | SHEET NO. |
|---|---|---|---|
| 6 | NH 2000 (704), etc. | | 121 |
| STATE | STATE DIST. NO. | COUNTY | |
| TEXAS | SAT | BEXAR | |
| CONT. | SECT. | JOB | HIGHWAY NO. |
| 2452 | 01 | 036, | LOOP 1604 |

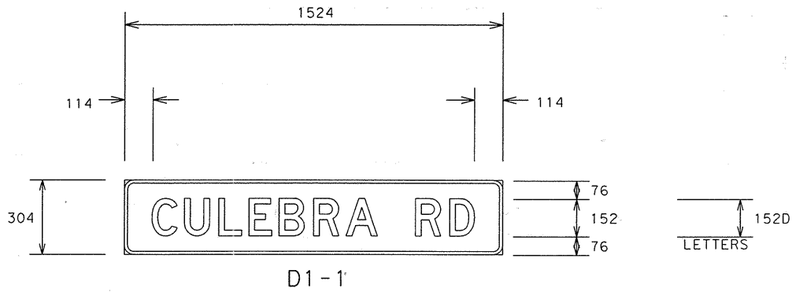


D1-1

| | | | | | |
|---|---|---|---|---|---|
| SIGN NO. | : | 8 | BORDER RAD. | : | 38 |
| STA. NO. | : | 15+780 | SCALE | : | 0.5000 = 1'-0" |
| C & S | : | 2452-01 | BACKGROUND | : | GREEN |
| MOUNT | : | GROUND MOUNTED | BORDER | : | 12 |

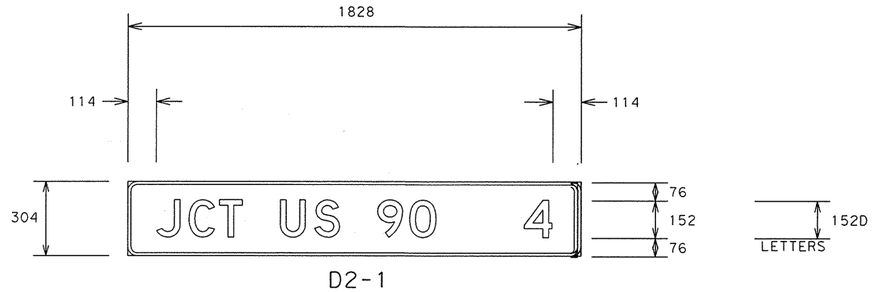


D2-1

| | | | | | |
|---|---|---|---|---|---|
| SIGN NO. | : | 11 | BORDER RAD. | : | 38 |
| STA. NO. | : | 22+875 | SCALE | : | 0.5000 = 1'-0" |
| C & S | : | 2452-01 | BACKGROUND | : | GREEN |
| MOUNT | : | GROUND MOUNTED | BORDER | : | 12 |

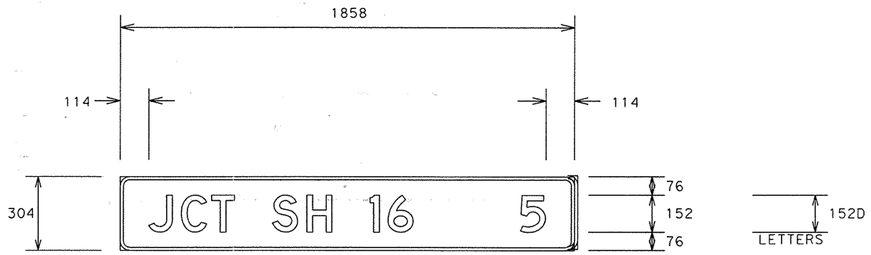


D2-1

| | | | | | |
|---|---|---|---|---|---|
| SIGN NO. | : | 2 | BORDER RAD. | : | 38 |
| STA. NO. | : | 14+723 | SCALE | : | 0.5000 = 1'-0" |
| C & S | : | 2452-01 | BACKGROUND | : | GREEN |
| MOUNT | : | GROUND MOUNTED | BORDER | : | 12 |

STATE OF TEXAS
ARNULFO RAMIREZ
56890
REGISTERED PROFESSIONAL ENGINEER

Arnulfo Ramirez, P.E. 6-15-00 Date

STANDARD INTERSTATE SIGNS

# NON-REMOVABLE COPY HIGH-INTENSITY REFLECTORIZED SIGNS

FOR OVERHEAD & GROUND MOUNT SIGNS



© 2000 Texas Department of Transportation ®

| FED. RD. DIV. NO. | FEDERAL AID PROJECT NO. | | SHEET NO. |
|---|---|---|---|
| 6 | NH 2000 (704), etc. | | 722 |
| STATE | STATE DIST. NO. | COUNTY | |
| TEXAS | SAT | BEXAR | |
| CONT. | SECT. | JOB | HIGHWAY NO. |
| 2452 | 01 | 036, | LOOP 1604 |

ACCNT.:
FILE: U:\SH4718LP1604#2\M.GARZA\ 2-14-00
REF.:
LEVELS DISPLAYED

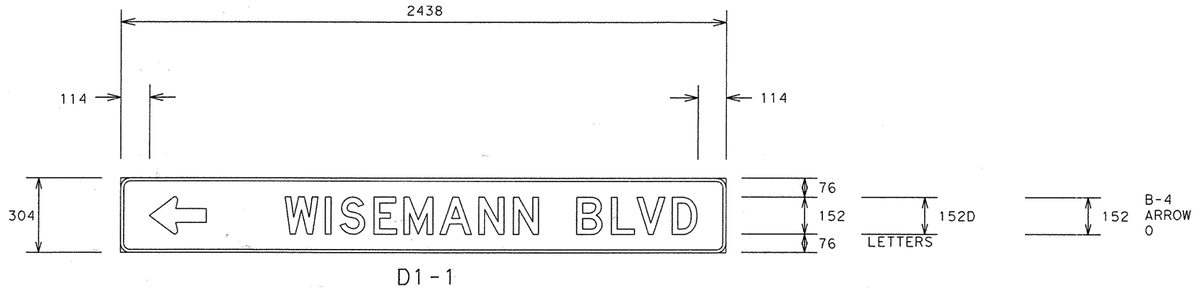


D1-1

SIGN NO. : 5
STA. NO. : 19+020
C & S : 
MOUNT : GROUND MOUNTED

BORDER RAD. : 38
SCALE : 0.5000 = 1'-0"
BACKGROUND : GREEN
BORDER : 12

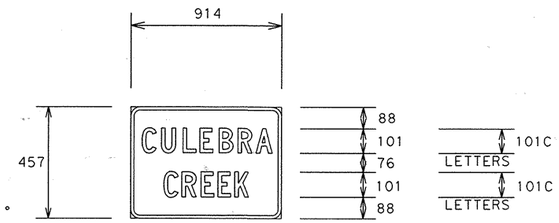


I-3

SIGN NO. : 9
STA. NO. : 15+790
C & S : 2452-01
MOUNT : GROUND MOUNTED

BORDER RAD. : 38
SCALE : 0.5000 = 1'-0"
BACKGROUND : GREEN
BORDER : 12

SIGN NO. : 10
STA. NO. : 15+790
C & S : 2452-01
MOUNT : GROUND MOUNTED

BORDER RAD. : 38
SCALE : 0.5000 = 1'-0"
BACKGROUND : GREEN
BORDER : 12

SIGN NO. : 3A
STA. NO. : 15+907
C & S : 2452-01
MOUNT : GROUND MOUNTED

BORDER RAD. : 38
SCALE : 0.5000 = 1'-0"
BACKGROUND : GREEN
BORDER : 12

SIGN NO. : 3B
STA. NO. : 15+907
C & S : 2452-01
MOUNT : BRIDGE MOUNTED

BORDER RAD. : 38
SCALE : 0.5000 = 1'-0"
BACKGROUND : GREEN
BORDER : 12

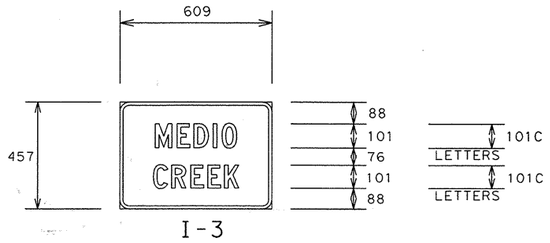


I-3

SIGN NO. : 1
STA. NO. : 24+320
C & S : 2452-01
MOUNT : GROUND MOUNTED

BORDER RAD. : 38
SCALE : 0.5000 = 1'-0"
BACKGROUND : GREEN
BORDER : 12

SIGN NO. : 2
STA. NO. : 24+260
C & S : 2452-01
MOUNT : GROUND MOUNTED

BORDER RAD. : 38
SCALE : 0.5000 = 1'-0"
BACKGROUND : GREEN
BORDER : 12

Arnulfo Ramirez, P.E. 6-15-00
Date

STANDARD INTERSTATE SIGNS

# NON-REMOVABLE COPY HIGH-INTENSITY REFLECTORIZED SIGNS

FOR OVERHEAD & GROUND MOUNT SIGNS



© 2000 Texas Department of Transportation ®

| FED. RD. DIV. NO. | FEDERAL AID PROJECT NO. | | SHEET NO. |
|---|---|---|---|
| 6 | NH 2000 (704), etc. | | 723 |
| STATE | STATE DIST. NO. | COUNTY | |
| TEXAS | SAT | BEXAR | |
| CONT. | SECT. | JOB | HIGHWAY NO. |
| 2452 | 01 | 036, | LOOP 1604 |

ACCNT.:
FILE: U:\SH471&LP1604#2\M.GARZA\ 2-14-00
REF.:
LEVELS DISPLAYED

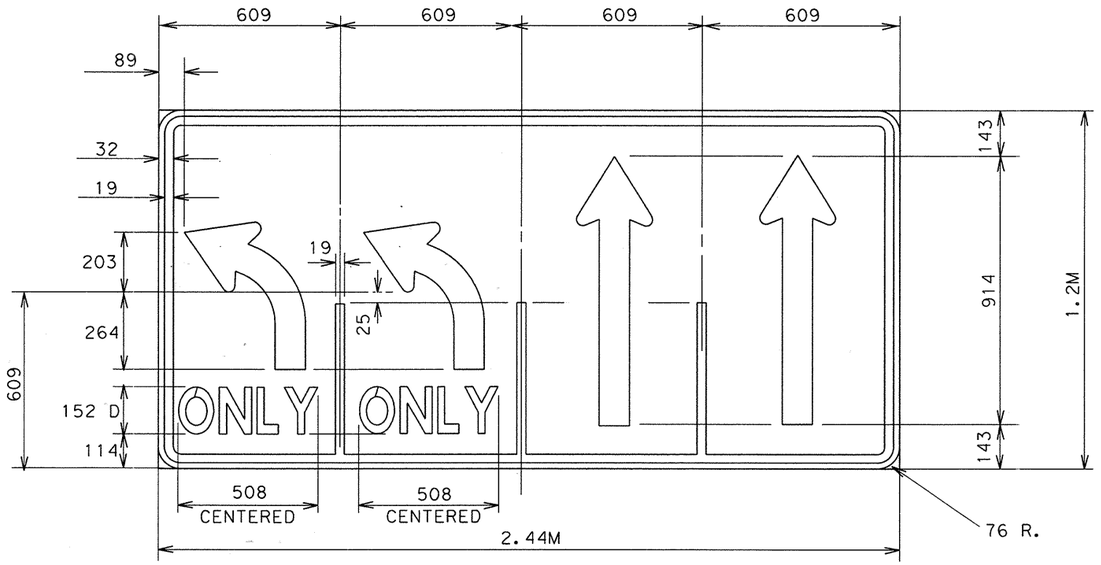


R3-8(SPL)

2.4M X 1.2M

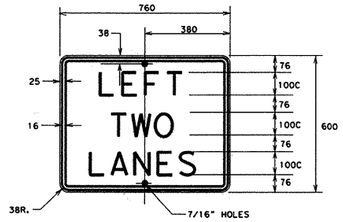


**PLAQUE**

760 X 600
LEGEND - BLACK (NON-REFL)
BACKGROUND - YELLOW (REFL)

SIGN TEXTS FOR 760 X 600 PLAQUE

A.
B.

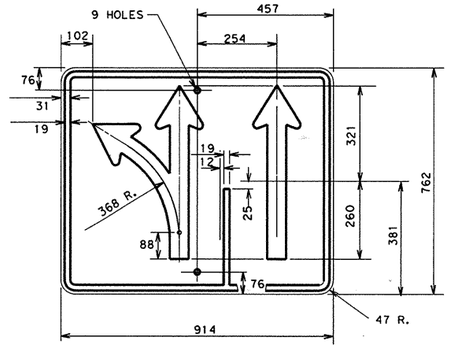


R3-8(SPL)

914 X 762

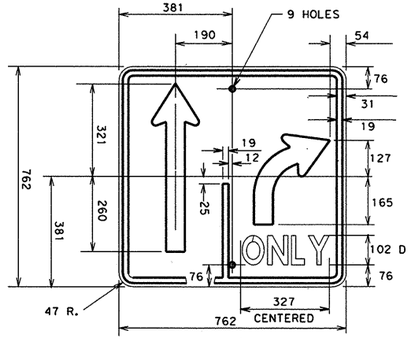


R3-8(SPL)

762 X 762

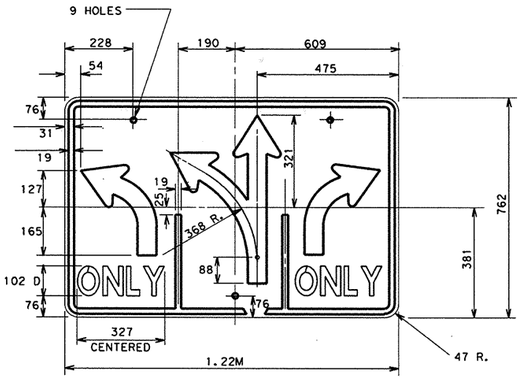


R3-8(SPL)

1.22M X 762

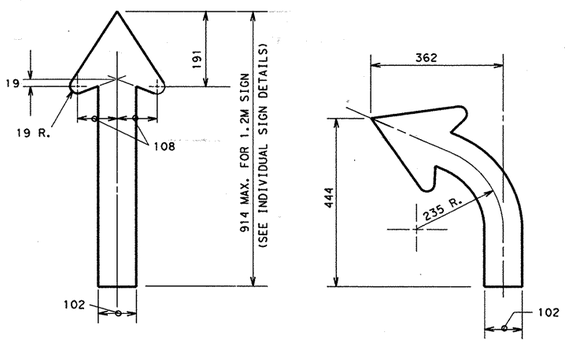


R3-8(SPL)

ARROW AND TEXT DETAIL
(FOR 1.2M HIGH SIGN)
LEGEND - BLACK (NON-REFL.)
BACKGROUND - WHITE (REFL.)

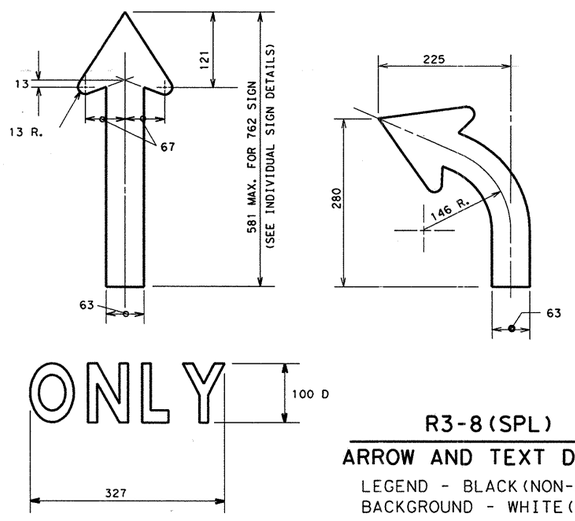


R3-8(SPL)

ARROW AND TEXT DETAIL
LEGEND - BLACK (NON-REFL.)
BACKGROUND - WHITE (REFL.)

Arnulfo Ramirez, P.E. 3-17-00
Date

# SPECIAL SIGN DETAILS

DISTRICT STANDARD
(SAN ANTONIO DISTRICT)

| FED.RD. DIV.NO. | FEDERAL AID PROJECT NO. | | SHEET NO. |
|---|---|---|---|
| 6 | NH 2000(704) | | 724 |
| STATE | STATE DIST.NO. | COUNTY | |
| TEXAS | SA | BEXAR | |
| CONT. | SECT. | JOB | HIGHWAY NO. |
| 2452 | 01 | 036 | LP 1604 |

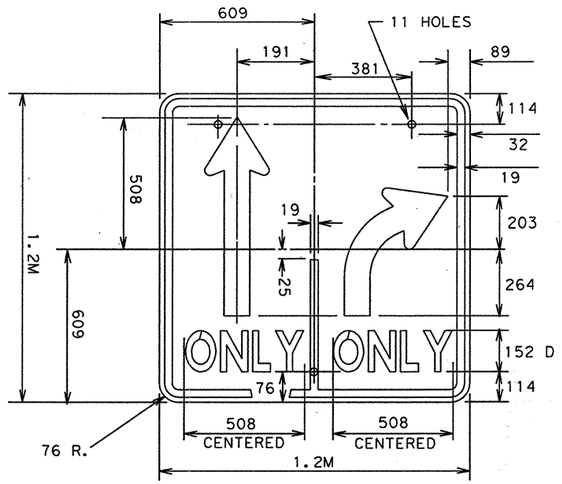


R3-8 (SPL)
1.2M X 1.2M

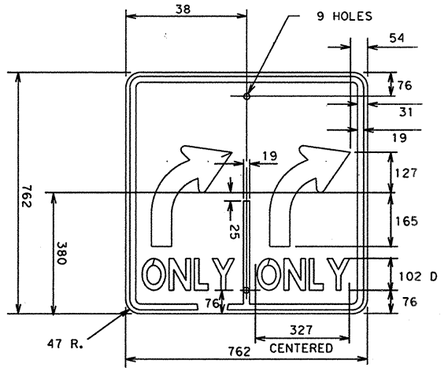


R3-8 (SPL)
762 X 762

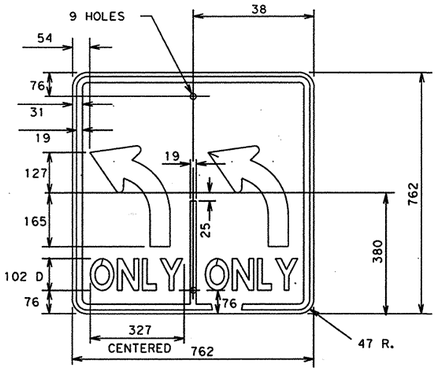


R3-8 (SPL)
762 X 762

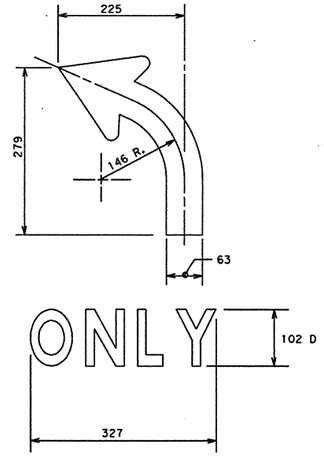


R3-8 (SPL)
ARROW AND TEXT DETAIL
(FOR 762 HIGH SIGN)
LEGEND - BLACK (NON-REFL.)
BACKGROUND - WHITE (REFL.)

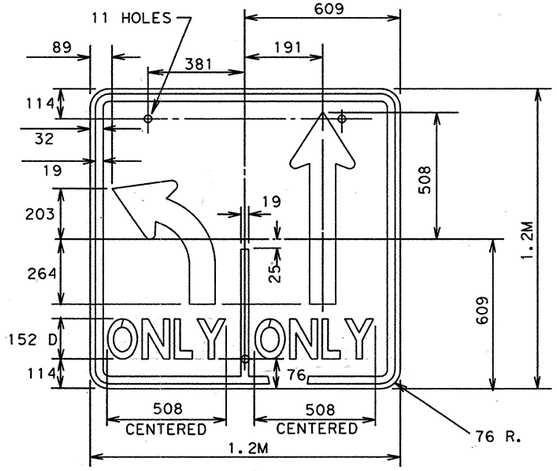


R3-8 (SPL)
1.2M X 1.2M

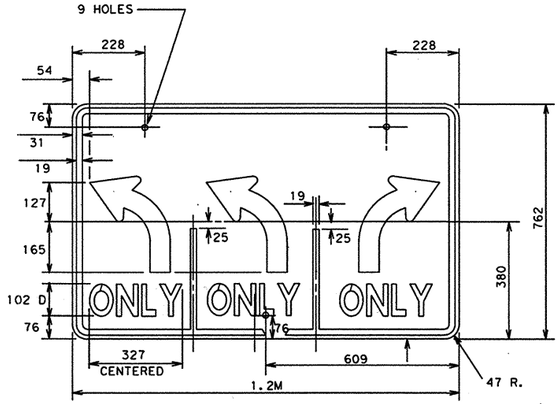


R3-8 (SPL)
1.2M X 762

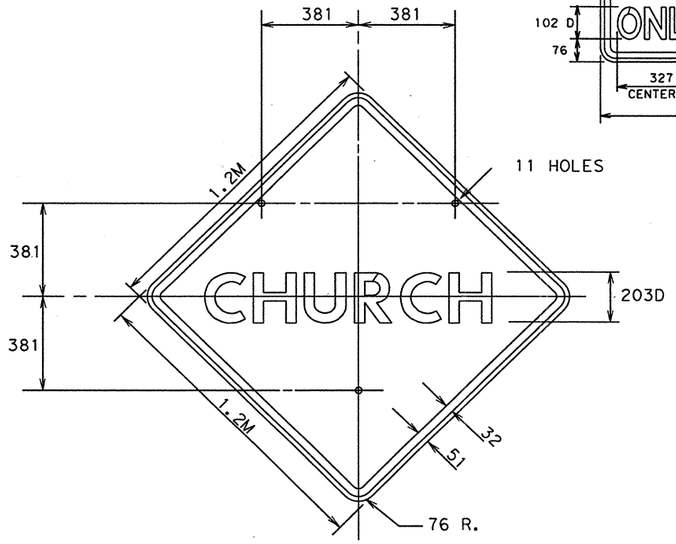


SPECIAL
1.2M X 1.2M
LEGEND - BLACK (NON-REFL)
BACKGROUND - YELLOW (REFL)

ALL DIMENSIONS ARE IN MILIMETERS
UNLESS OTHERWISE AS INDICATED

ALL DIMENSIONS ARE IN MILIMETERS
UNLESS OTHERWISE AS INDICATED

STATE OF TEXAS
ARNULFO RAMIREZ
56890
REGISTERED PROFESSIONAL ENGINEER

Arnulfo Ramirez, P.E. 3-1-00
Date

# SPECIAL SIGN DETAILS

| FED. RD. DIV. NO. | FEDERAL AID PROJECT NO. | | SHEET NO. |
|---|---|---|---|
| 6 | NH 2000(704) | | 725 |
| STATE | STATE DIST. NO. | COUNTY | |
| TEXAS | SAT | BEXAR | |
| CONT. | SECT. | JOB | HIGHWAY NO. |
| 2452 | 01 | 036 | LP 1604 |

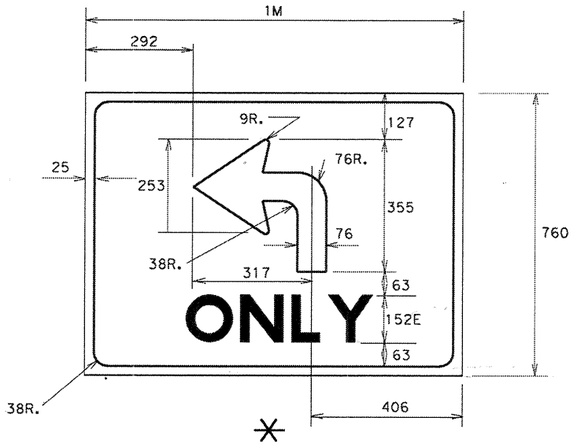


✳ SPECIAL
WHITE ON GREEN
1M X 760

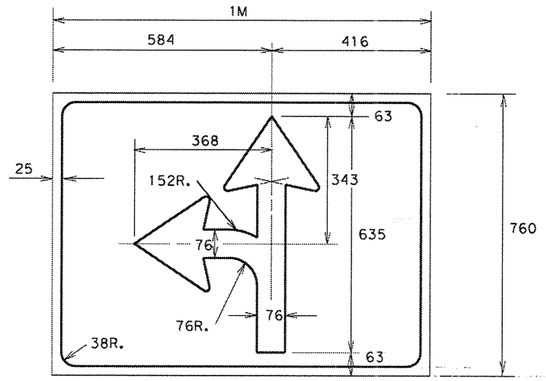


✳ SPECIAL
WHITE ON GREEN
1M X 760

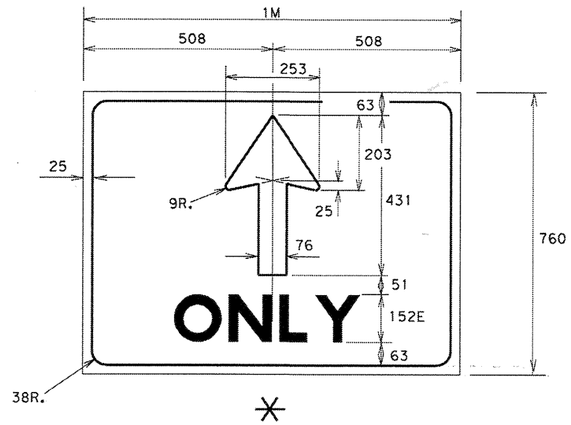


✳ SPECIAL
WHITE ON GREEN
1M X 760

✳ NOTE: WHITE REFL. TEXT
ON GREEN REFL. BACKGROUND (HI-INTENSITY)
HOLES IN SIGN WILL BE FIELD DRILLED.

ALL ARROW HEADS ARE IDENTICAL IN SIZE.

ALL DIMENSIONS IN MILLIMETERS EXCEPT WHERE INDICATED

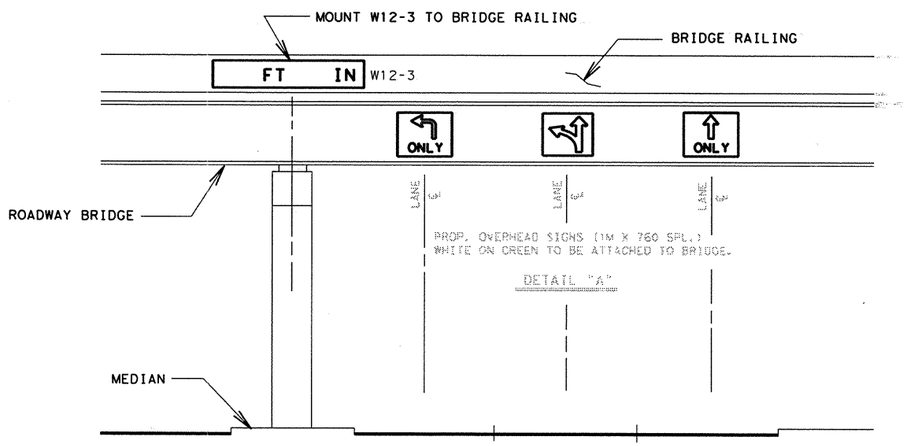


## SPL. SIGN MOUNTING DETAIL

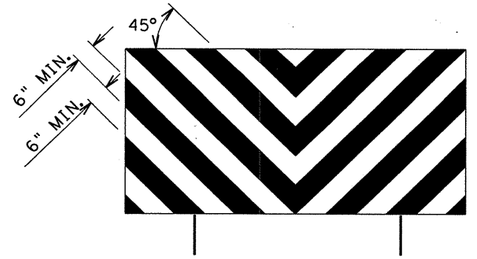


## END OF ROAD SIGN

8'-0" X 4'-0"
STRIPES WHITE AND RED

STATE OF TEXAS
ARNULFO RAMIREZ
56890
REGISTERED
PROFESSIONAL ENGINEER

Arnulfo Ramirez 6-15-00
Arnulfo Ramirez, P.E. Date

# SPECIAL SIGN DETAILS

DISTRICT STANDARD
(SAN ANTONIO DISTRICT)

| FED.RD. DIV.NO. | FEDERAL AID PROJECT NO. | | SHEET NO. |
|---|---|---|---|
| 6 | NH 2000(704) | | 726 |
| STATE | STATE DIST. NO. | COUNTY | |
| TEXAS | SAT | BEXAR | |
| CONT. | SECT. | JOB | HIGHWAY NO. |
| 2452 | 01 | 036 | LP 1604 |

**SPECIAL ANCHOR NOTE:**

1. Anchor rods, bolts, and nuts shall have Class 2A and 2B fit tolerances. The nuts shall be tapped after galvanizing. Slab nuts shall be installed to snug tight plus ½ turn. Burr exposed threads, on underside of existing slab, to prevent back turn of the nut.
2. Anchoring adhesive shall be a two-component solid epoxy based system supplied in manufacturer's standard side-by-side cartridge and dispensed through a static-mixing nozzle supplied by the manufacturer. Epoxy shall develop a minimum 10,400psi compressive yield strength. Adhesive shall be Epoxy-Tie ET from Simpson Strong-Tie, Pleasanton, CA. or other epoxy vendor as approved by the engineer. Anchors shall be installed per manufacture's instructions. Simpson Strong-Tie company may be reached through www.simpsonanchors.com or at 1-800-999-5099)
3. 16mm Dia A36 Hex Rod each with 3 washers. Place washer under each nut. Rods shall be sufficient length to extend 13mm to 19mm beyond nut.
4. The anchor holes shall be drilled with rotary (coring or masonry drill) type drilling equipment. Percussion (star drill) type drilling equipment shall not be used. The holes shall be clean and dry. Compressed air, if used to clean the holes, shall have no oil in suspension.
5. Actual sign hole locations may vary, see Sign Details for hole location. Contractor is responsible for verifing hole locations prior to drilling holes.

CHANGE ORDER NO. 76

-NEW BRIDGE SIGN MOUNT DETAIL
-UPDATED VIEW

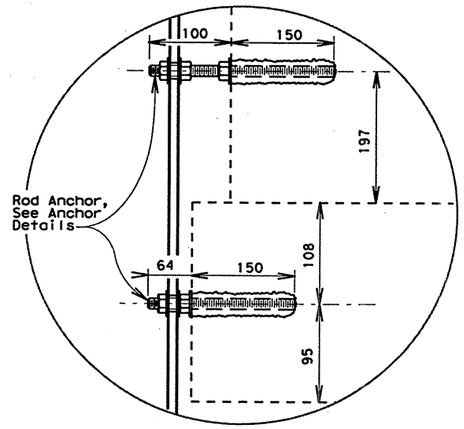


DETAIL "A"
(Showing Arrow Sign mount)

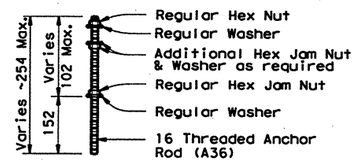


OPTIONAL ROD ANCHORS

Note: Bolts and nuts shall have Class 2A and 2B fit tolerances. The nuts shall be tapped after galvanizing.

ANCHOR DETAILS

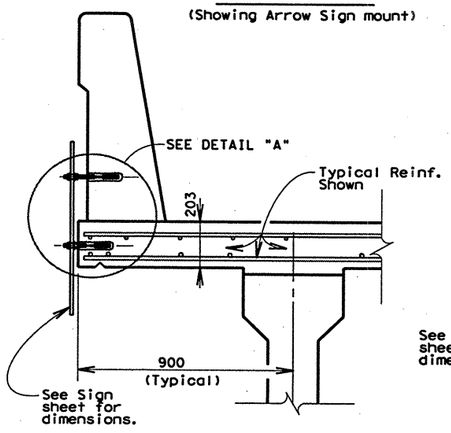


SPECIAL DIRECTIONAL ARROW SIGN

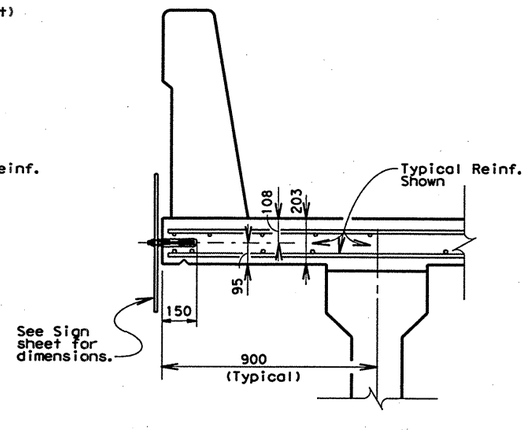


WR-3 SIGN

CHANGE ORDER 76

NEW SHEET

STATE OF TEXAS
JEROME D. PAVLISKA
76075
REGISTERED
PROFESSIONAL ENGINEER

Jerome D. Pavliska P.E. 01/08/04
Jerome D. Pavliska, P.E. Date

© 2001 Texas Department of Transportation

BRIDGE SIGN MOUNT

| FED. RD. DIV. NO. | FEDERAL AID PROJECT NO. | | SHEET NO. |
|---|---|---|---|
| 6 | NH 2000(704), etc. | | 726A |
| STATE | DIST. | COUNTY | |
| TEXAS | SAT | BEXAR | |
| CONT. | SECT. | JOB | HIGHWAY NO. |
| 2452 | 01 | 036, etc. | LP 1604 |

LEVELS DISPLAYED
1 2 3 4 5 6 7 8 | 12 13 14 15 16
17 18 19 20 21 22 23 24 25 26 27 28 29 30 31 32
33 34 35 36 37 38 39 40 41 42 43 44 45 46 47 48
49 50 51 52 53 54 55 56 57 58 59 60 61 62 63

ACC: t:\ao\design\
lp1604fm471-90\pave-sign
FILE: signbridgemntingdetails.dgn

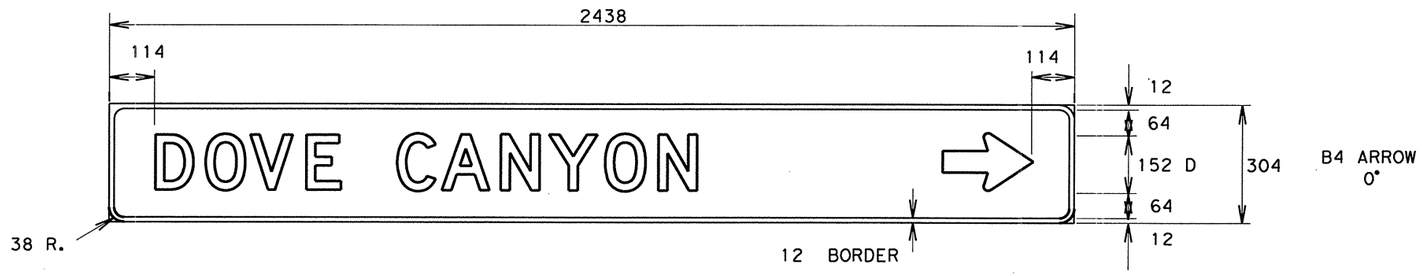


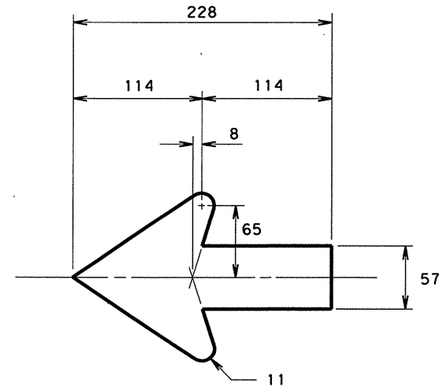


**B4 ARROW**

SIGN NO.: 4
STATION NO.: 24+640
SHEET NO.: 686A
MOUNT: GROUND MOUNTED
BACKGROUND: GREEN

ALL DIMENSIONS ARE IN IN MILLIMETERS
UNLESS OTHERWISE AS INDICATED

CHANGE ORDER NO. 65
-ADDED SIGN DETAILS

CHANGE ORDER 65

NEW SHEET

STATE OF TEXAS
JEROME D. PAVLISKA
76075
REGISTERED
PROFESSIONAL ENGINEER

Jerome D. Pavliska, P.E. 4-26-04
JEROME D. PAVLISKA, P.E. DATE

# STANDARD INTERSTATE SIGNS
# NON-REMOVABLE COPY HIGH-INTENSITY REFLECTORIZED SIGNS
## FOR OVERHEAD & GROUND MOUNT SIGNS

© 2004 Texas Department of Transportation

| FED. RD. DIV. NO. | FEDERAL AID PROJECT NO. | | SHEET NO. |
|---|---|---|---|
| 6 | NH 2000(704), etc. | | 726A |
| STATE | STATE DIST. NO. | COUNTY | |
| TEXAS | SAT | BEXAR | |
| CONT. | SECT. | JOB | HIGHWAY NO. |
| 2452 | 01 | 036, etc. | LP 1604 |

LEVELS DISPLAYED 1-1

t:\AO\Design\lp1604fm471-90\pave-sign\SIGNING\DoveCanyonDetail#C065.dgn

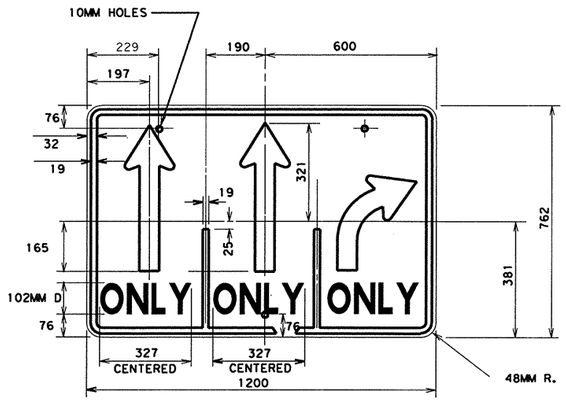


R3-8(SPL)
1200X762

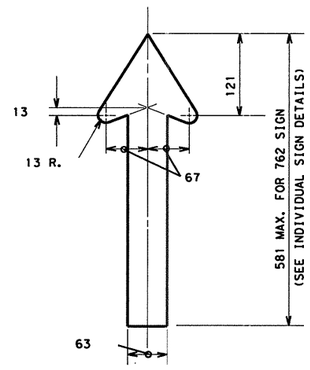


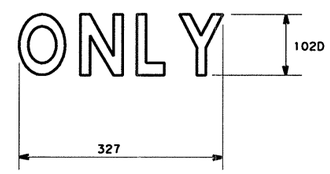


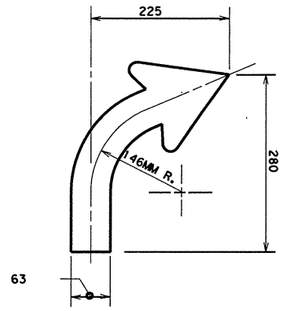


R3-8(SPL)
ARROW AND TEXT DETAIL
LEGEND - BLACK(NON-REFL.)
BACKGROUND - WHITE(REFL.)

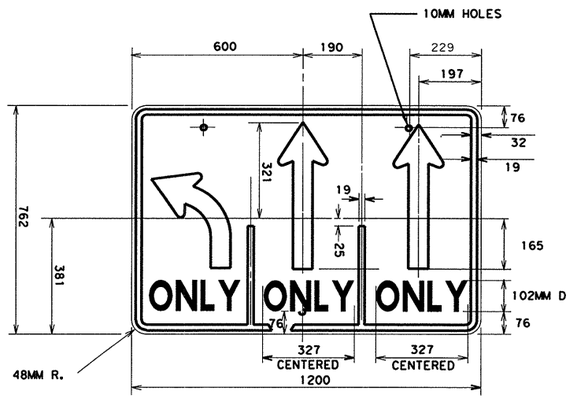


R3-8(SPL)
1200X762

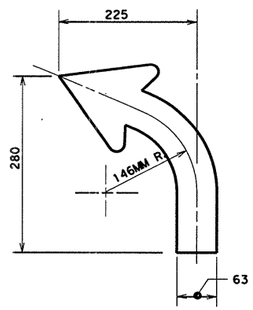


R3-8(SPL)
ARROW AND TEXT DETAIL
LEGEND - BLACK(NON-REFL.)
BACKGROUND - WHITE(REFL.)

CHANGE ORDER NO. 65
-ADDED SIGN DETAILS

CHANGE ORDER 65

NEW SHEET

STATE OF TEXAS
JEROME D. PAVLISKA
76075
REGISTERED
PROFESSIONAL ENGINEER

Jerome D. Pavliska, P.E. 4-26-04
Jerome D. Pavliska, P.E. Date

© 2001
Texas Department of Transportation

SIGNING ADDENDUM / DETAILS

| FED. RD. DIV. NO. | FEDERAL AID PROJECT NO. | | SHEET NO. |
|---|---|---|---|
| 6 | NH 2000(704), etc. | | 726B |
| STATE | DIST. | COUNTY | |
| TEXAS | SAT | BEXAR | |
| CONT. | SECT. | JOB | HIGHWAY NO. |
| 2452 | 01 | 036, etc. | LP 1604 |

02-24-04

LEVELS DISPLAYED
1 2 3 4 15 16 17 18 19 1 1 1 2 31 41 51 6
1 7 8 1 9 2 0 2 1 2 2 3 2 4 2 5 2 6 2 7 2 8 2 9 3 0 3 1 3 2
3 3 3 4 3 5 3 6 3 7 4 0 4 1 4 2 4 3 4 4 4 5 4 6 4 7 4 8
4 9 5 0 5 1 5 2 5 3 5 4 5 5 5 6 5 7 5 8 5 9 6 0 6 1 6 2 6 3

ACC: t:\ao\design\
lp1604fm471-90\pave-sign
FILE: sign details C064.dgn

DISCLAIMER
The use of this standard is governed by the "Texas Engineering Practice Act". No warranty of any kind is made by TxDOT for any purpose whatsoever. TxDOT assumes no responsibility for the conversion of this standard to other formats or for incorrect results or damages resulting from its use.

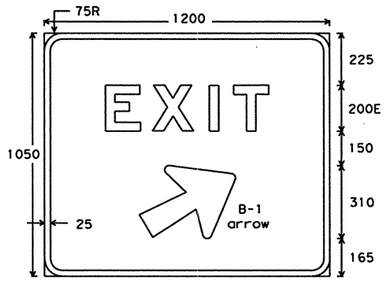


E5-1a
1200x1050

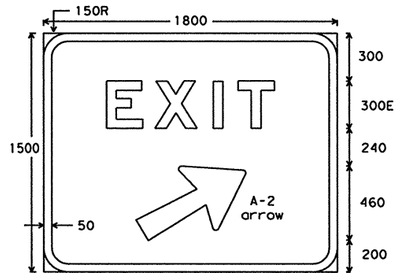


E5-1
1800x1500

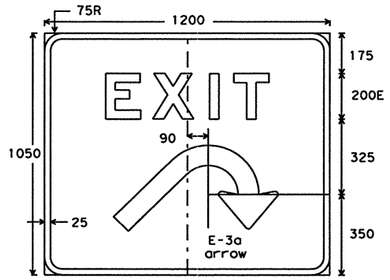


E5-3a
1200x1050

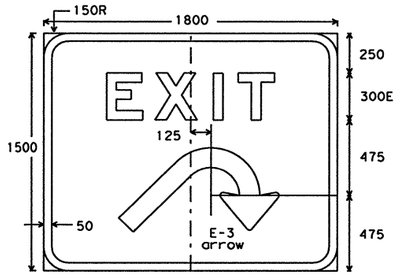


E5-3
1800x1500

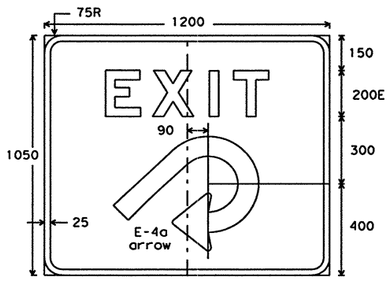


E5-4a
1200x1050

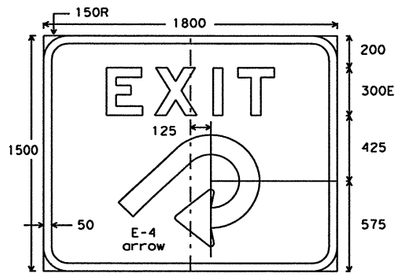


E5-4
1800x1500

Legend - White Reflective
Border - White Reflective
Background - Green Reflective

EXIT GORE SIGNS

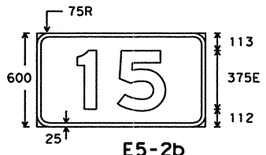


1 & 2 Digit

E5-2b
1050x600

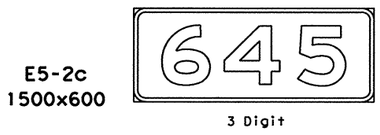


E5-2c
1500x600

3 Digit

E5-2d
1950x600

4 Digit

Legend - White Reflective
Border - White Reflective
Background - Green Reflective

EXIT SIGN NUMBER PANELS

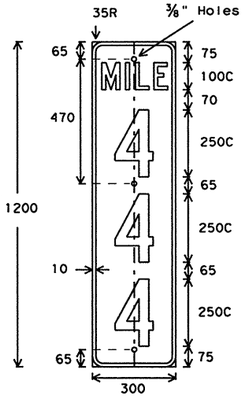


D10-6
300x1200

## MILEPOST MARKER

Legend - White Reflective
Border - White Reflective
Background - Green Reflective

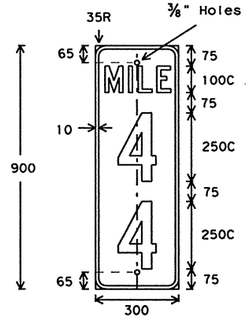


D10-5
300x900

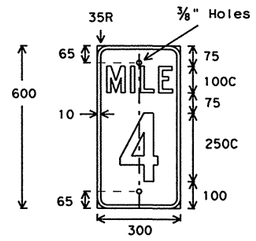


D10-4
300x600

TYPE MW
(WINGED CHANNEL)

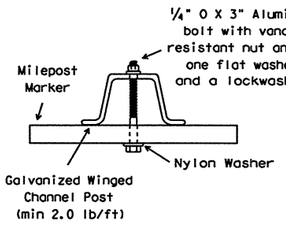


TYPE MP
(POST)

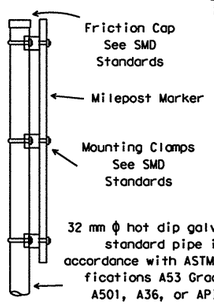


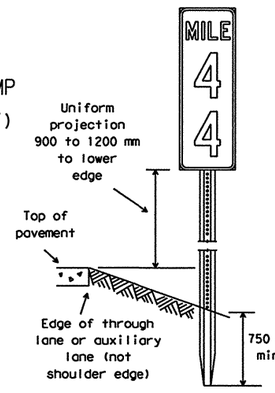


EXIT GORE SIGN
TYPICAL ASSEMBLY

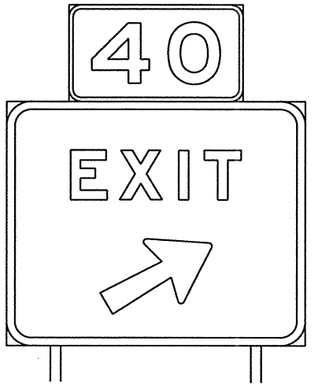


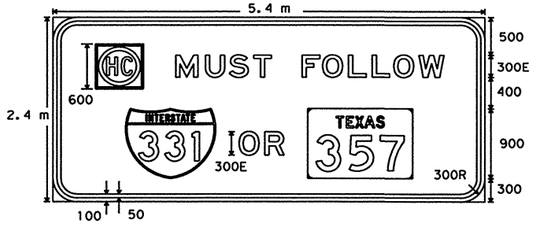


R14-6
5.4 x 2.4 m (min.)

Legend - Black
Border - Black
Background - White Reflective
Shields - See R, IE and IM Standards for details

| SPECIFICATION REFERANCE TABLE | |
|---|---|
| MATERIALS AND TESTS DIVISION SPECIFICATIONS | |
| PLYWOOD SIGN BLANKS | D-9-7100 |
| ALUMINUM SIGN BLANKS | D-9-7110 |
| REFLECTIVE SHEETING, TYPE A (ENGINEER GRADE) | D-9-8300 |
| REFLECTIVE SHEETING, TYPE C (HIGH SPECIFIC ITENSITY) | D-9-8300 |
| VINYL NON-REFLECTIVE DECAL SHEETING | D-9-8320 |

| COLOR | USAGE | REFLECTIVE SHEETING OR OTHER MATERIAL |
|---|---|---|
| BLUE | BACKGROUND | TYPE C (HIGH SPECIFIC INTENSITY) |
| BROWN | BACKGROUND | TYPE C (HIGH SPECIFIC INTENSITY) |
| GREEN | BACKGROUND | TYPE C (HIGH SPECIFIC INTENSITY) |
| ORANGE | BACKGROUND | TYPE C (HIGH SPECIFIC INTENSITY) |
| WHITE | BACKGROUND | TYPE A (ENGINEER GRADE) |
| YELLOW | BACKGROUND | TYPE C (HIGH SPECIFIC INTENSITY) |
| BLACK | LEGEND & BORDERS | VINYL NON-REFLECTIVE DECAL SHEETING |
| WHITE | LEGEND & BORDERS | TYPE C (HIGH SPECIFIC INTENSITY) |

GENERAL NOTES:

The alphabets and lateral spacing between letters and numerals shall conform with the Texas "Manual on Uniform Traffic Control Devices for Streets and Highways", latest edition, and any approved changes thereto. Lateral spacing of text shall provide a balanced appearance. All materials shall conform to Department Specifications.

Legend (except for sign R14-6), shall be applied by reverse screening process with transparent colored ink, cut-out white reflective sheeting applied to colored background or combination thereof. Background shall be reflective sheeting (Type C).

Sign blanks for roadside mounted guide signs shall be 16 mm thick plywood (Type A), unless otherwise noted elsewhere in the plans. Dimensions shown for borders and corner radii are nominal. Borders may vary in width as much as 10 mm. Corner radii above 75 mm may vary in radius plus or minus 25 mm. Borders and corner radii must be of matching widths. The sign area outside the corner radius need not be trimmed or rounded. Panels attached above or below a parent sign shall be made of the same material as the parent sign. D10 Milepost Markers shall be one piece 2.0 mm thick sheet aluminum alloy (Type A).

Mounting details for roadside mounted guide signs are shown on Standard Plan Sheets SMD series, mounting details for over head signs shall be as detailed elsewhere in the plans or the supplier's choice subject to approval by the Engineer.

Individual panel sizes may be adjusted during plan preparation to fit actual parnet sign sizes where necessary. Panel sizes to be furnished should be as detailed elsewhere in the plans and/or as shown on sign tabulation sheet. See Standard Plan Sheet IM series for arrow details.

R14-6 HAZARDOUS CARGO ROUTING SIGN

Legend of parent sign shall be black cut-out vinyl non-reflective decal sheeting. Background shall be white reflective sheeting (Type A). Shield details are shown on Standard Plan Sheets R and IM series.

Parent sign blank shall be 16 mm thick plywood (Type A). Shields shall be one piece 1.6 mm thick sheet aluminum alloy (Type A).

Attachment of shields to parent sign is as detailed on Standard Plan Sheet IM(2).

All dimensions are in millimeters unless otherwise noted.

The metric dimensions shown on this sheet have been rounded, and should be considered equivalent to the English dimensions in the "1980 Standard Highway Sign Designs for Texas" manual.

STANDARD PLANS
TEXAS DEPARTMENT OF TRANSPORTATION
*Traffic Operations Division*

# EXIT GORE AND MILEPOST SIGNS

IE(1)-95(M)

© TxDOT July 1990

| DN: LR | CK: - | DW: DN | CK: - | NEG NO.: |
|---|---|---|---|---|

| REVISIONS | STATE DISTRICT | FEDERAL REGION | FEDERAL AID PROJECT | SHEET |
|---|---|---|---|---|
| 9-93 | SAT | 6 | NH 2000(704),etc. | 727 |
| 8-95 | COUNTY | CONTROL | SECTION | JOB | HIGHWAY |
| | BEXAR | 2452 | 01 | 036,etc. | LP 1604 |

1A

DN:
CK:
DW:
CK:

DATE:
ACC:
FILE:

LEVELS D...
1 2 3 4 5 6 7 8 9 10 11 12 41 51 61
7 11 18 19 20 21 22 23 24 25 26 27 28 29 30 31 32
33 34 35 55 63 73 89 94 01 42 43 44 45 46 47 64 74 99
95 05 15 25 35 45 55 65 75 85 96 06 16 26 36

DISCLAIMER
The use of this standard is governed by the "Texas Engineering Practice Act". No warranty of any kind is made by TxDOT for any purpose whatsoever. TxDOT assumes no responsibility for the conversion of this standard to other formats or for incorrect results or damages resulting from its use.

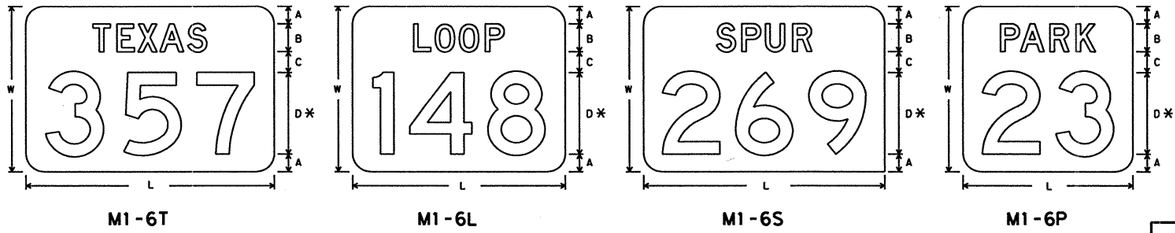


M1-6T | M1-6L | M1-6S | M1-6P

M1-6F | M1-6R | M1-6B

* IN A FEW CASES NUMERALS CANNOT BE ACCOMMODATED WITHIN THE SPACE AVAILABLE. FOR THESE CASES, THE STANDARD SERIES D MAY BE REDUCED TO SERIES C, OR AS A SECOND CHOICE REDUCED TO THE NEXT SMALLER HEIGHT COMMONLY AVAILABLE.

| SIGN TYPES | | NO. OF DIGITS | W | A | B | C | D |
|---|---|---|---|---|---|---|---|
| M1-6 (T L S P F R B) | 4A | 4 | 600 | 65 | 100 | 70 | 300 |
| | 3A | 3 | | | | | |
| | 2A | 2 | | | | | |
| | 1A | 1 | | | | | |
| | 4B | 4 | 900 | 100 | 150 | 100 | 450 |
| | 3B | 3 | | | | | |
| | 2B | 2 | | | | | |
| | 1B | 1 | | | | | |
| | 4C | 4 | 1200 | 125 | 200 | 150 | 600 |
| | 3C | 3 | | | | | |
| | 2C | 2 | | | | | |
| | 1C | 1 | | | | | |

RADIUS FOR CORNERS IS 75 MILLIMETERS TYPICAL
L: VARIABLE WITH THE NUMBER OF DIGITS; HOWEVER, TOTAL MARKER LENGTH SHALL BE ADJUSTED TO NEAREST 25 MILLIMETER MULTIPLE.

# M1-6 STATE ROUTE MARKERS FOR GUIDE SIGN USE

Letters - Black
Numerals - Black
Background - White Reflective

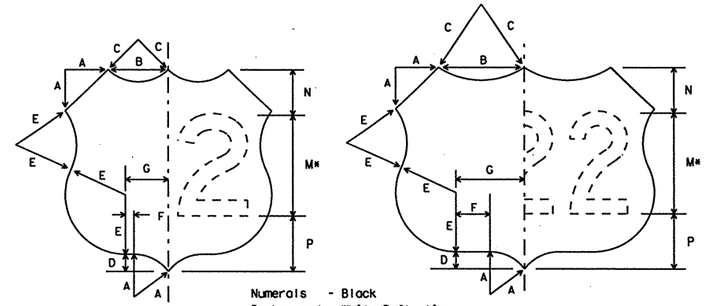


Numerals - Black
Background - White Reflective

| | SIZE | A | B | C | D | E | F | G | M* | N | P | AREA |
|---|---|---|---|---|---|---|---|---|---|---|---|---|
| M1-4D2 (300 NUMERALS 2 DIGIT) | 600x600 | 125 | 175 | 125 | 50 | 175 | 25 | 125 | 300D | 140 | 160 | 0.3 |
| M1-4D3 (300 NUMERALS 3 DIGIT) | 750x600 | 125 | 250 | 225 | 50 | 175 | 100 | 200 | 300D | 140 | 160 | 0.38 |
| M1-4E2 (450 NUMERALS 2 DIGIT) | 900x900 | 190 | 260 | 190 | 75 | 260 | 35 | 190 | 450D | 210 | 240 | 0.66 |
| M1-4E3 (450 NUMERALS 3 DIGIT) | 1125x900 | 190 | 375 | 335 | 75 | 260 | 150 | 300 | 450D | 210 | 240 | 0.85 |
| M1-4F2 (600 NUMERALS 2 DIGIT) | 1200x1200 | 250 | 350 | 250 | 100 | 350 | 50 | 250 | 600D | 275 | 325 | 1.18 |
| M1-4F3 (600 NUMERALS 3 DIGIT) | 1500x1200 | 250 | 500 | 450 | 100 | 350 | 200 | 400 | 600D | 275 | 325 | 1.5 |

ALL LENGTHS SHOWN ARE IN MILLIMETERS, ALL AREAS ARE IN SQUARE METERS.

NOTES:
1. DIMENSIONS FOR THE U.S. ROUTE MARKER OUTLINES ARE SCALE DIMENSIONS AND MAY BE ADJUSTED SLIGHTLY WHERE NECESSARY FOR CLOSURE OF THE OUTLINES.
2. * IN A FEW CASES NUMERALS CANNOT BE ACCOMMODATED WITHIN THE SPACE AVAILABLE. FOR THESE CASES, THE STANDARD SERIES D MAY BE REDUCED TO SERIES C, OR AS A SECOND CHOICE REDUCE TO THE NEXT SMALLER HEIGHT COMMONLY AVAILABLE.

# U.S. ROUTE MARKERS FOR GUIDE SIGN USE

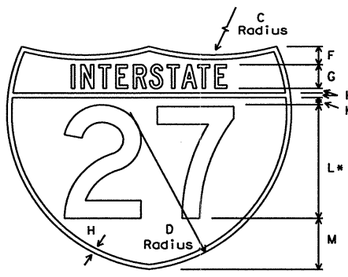


M1-1C2
1125x900

Letters - White Reflective
Numerals - White Reflective
Border - White Reflective
Background (Upper Portion) - Red Reflective
Background (Lower Portion) - Blue Reflective

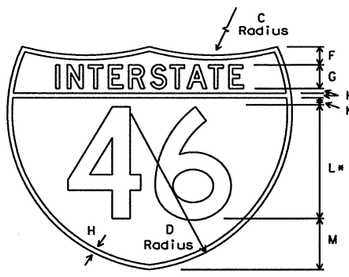


M1-1D2
1500x1200

Letters - White Reflective
Numerals - White Reflective
Border - White Reflective
Background (Upper Portion) - Red Reflective
Background (Lower Portion) - Blue Reflective

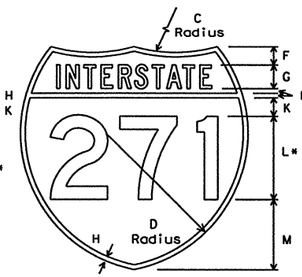


M1-1C3
1200x1200

Letters - White Reflective
Numerals - White Reflective
Border - White Reflective
Background (Upper Portion) - Red Reflective
Background (Lower Portion) - Blue Reflective

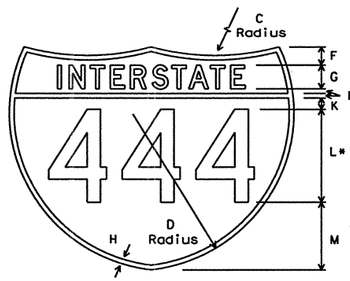


M1-1D3
1500x1200

Letters - White Reflective
Numerals - White Reflective
Border - White Reflective
Background (Upper Portion) - Red Reflective
Background (Lower Portion) - Blue Reflective

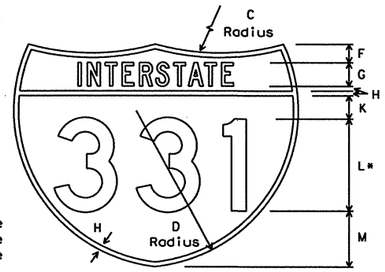


M1-1C3-S
1125x900

Letters - White Reflective
Numerals - White Reflective
Border - White Reflective
Background (Upper Portion) - Red Reflective
Background (Lower Portion) - Blue Reflective

| | | | SIZE | C | D | F | G | H | K | L* | M | N | AREA |
|---|---|---|---|---|---|---|---|---|---|---|---|---|---|
| INTERSTATE | M1-1C2 | 450 NUMERALS 2 DIGIT | 1125x900 | 900 | 640 | 75 | 95C | 20 | 35 | 450D | 205 | - | 0.87 |
| | M1-1D2 | 600 NUMERALS 2 DIGIT | 1500x1200 | 1200 | 850 | 100 | 125D | 25 | 50 | 600D | 275 | - | 1.56 |
| | M1-1C3-S | 375 NUMERALS 3 DIGIT | 1125x900 | 900 | 640 | 75 | 95C | 20 | 95 | 375D | 220 | - | 0.87 |
| | M1-1C3 | 450 NUMERALS 3 DIGIT | 1200x1200 | 750 | 750 | 100 | 125C | 25 | 100 | 450D | 375 | - | 1.18 |
| | M1-1D3 | 500 NUMERALS 3 DIGIT | 1500x1200 | 1200 | 850 | 100 | 125D | 25 | 65 | 500D | 360 | - | 1.56 |
| BUSINESS SPUR LOOP | M1-2C2 | 375 NUMERALS 2 DIGIT | 900x900 | 560 | 560 | 75 | 95C | 20 | 20 | 375D | 220 | 55D | 0.67 |
| | M1-2D2 | 500 NUMERALS 2 DIGIT | 1200x1200 | 750 | 750 | 100 | 125C | 25 | 25 | 500D | 300 | 75D | 1.18 |
| | M1-3C2 | 375 NUMERALS 2 DIGIT | 900x900 | 560 | 560 | 75 | 95C | 20 | 20 | 375D | 220 | 55D | 0.67 |
| | M1-3D2 | 500 NUMERALS 2 DIGIT | 1200x1200 | 750 | 750 | 100 | 125C | 25 | 25 | 500D | 300 | 75D | 1.18 |

ALL LENGTHS SHOWN ARE IN MILLIMETERS, ALL AREAS ARE IN SQUARE METERS.

△ M1-1C3-S IS FOR USE ON SEQUENCE SIGNS ONLY.

* IN A FEW CASES NUMERALS CANNOT BE ACCOMMODATED WITHIN THE SPACE AVAILABLE. FOR THESE CASES, THE STANDARD SERIES D MAY BE REDUCED TO SERIES C, OR AS A SECOND CHOICE REDUCED TO THE NEXT SMALLER HEIGHT COMMONLY AVAILABLE.

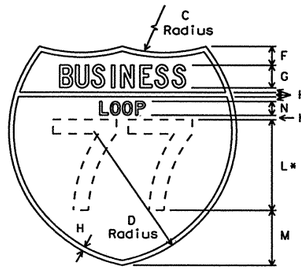


M1-2C2
900x900

Letters - White Reflective
Numerals - White Reflective
Border - White Reflective
Background - Green Reflective

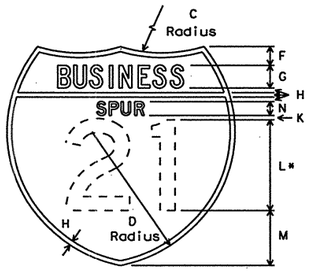


M1-3C2
900x900

Letters - White Reflective
Numerals - White Reflective
Border - White Reflective
Background - Green Reflective

M1-2D2
1200x1200

Letters - White Reflective
Numerals - White Reflective
Border - White Reflective
Background - Green Reflective

M1-3D2
1200x1200

Letters - White Reflective
Numerals - White Reflective
Border - White Reflective
Background - Green Reflective

# INTERSTATE ROUTE MARKERS FOR GUIDE SIGN USE

| SPECIFICATION REFERENCE TABLE | |
|---|---|
| MATERIALS AND TESTS DIVISION SPECIFICATIONS | |
| ALUMINUM SIGN BLANKS | D-9-7110 |
| REFLECTIVE SHEETING, TYPE C | |
| (HIGH SPECIFIC INTENSITY) | D-9-8300 |
| VINYL NON-REFLECTIVE DECAL SHEETING | D-9-8320 |

GENERAL NOTES:

The Alphabets and lateral spacing between letters and numerals shall conform with the Texas "Manual on Uniform Traffic Control Devices for Streets and Highways", latest edition, and any approved changes thereto. Lateral spacing of text shall provide a balanced appearance. All materials shall conform to Department Specifications.

Legend for State route markers shall be black and applied by screening process, cut-out vinyl non-reflective decal sheeting or combination thereof. Legend for U.S. route markers shall be applied by reverse screening process, cut-out black vinyl non-reflective decal sheeting or combination thereof. Legend for Interstate route markers shall be applied by reverse screening process with transparent colored ink, cut-out white reflective sheeting applied to colored background or combination thereof. Background shall be reflective sheeting (Type C).

Sign blanks shall be one piece 1.6 mm thick sheet aluminum alloy (Type A), unless otherwise noted elsewhere in the plans.

Route Markers shall be attached to guide signs as detailed on Standard Plan Sheet 1M(2)(M).

All dimensions are in millimeters unless otherwise noted.

The metric dimensions shown on this sheet have been rounded, and should be considered equivalent to the English dimensions in the "1980 Standard Highway Sign Designs for Texas" manual.

STANDARD PLANS
TEXAS DEPARTMENT OF TRANSPORTATION
*Traffic Operations Division*

# INTERSTATE, U.S. & STATE ROUTE MARKERS FOR ATTACHMENT TO GUIDE SIGNS

IM(1)-95(M)

©TxDOT July 1972

| DN: LR | CK: | DW: DN | CK: | NEG NO.: |
|---|---|---|---|---|

| REVISIONS | STATE DISTRICT | FEDERAL REGION | FEDERAL AID PROJECT | SHEET |
|---|---|---|---|---|
| 1-85 8-95 | SAT | 6 | NH 2000(704),etc. | 728 |
| 7-90 | COUNTY | | CONTROL / SECTION / JOB | HIGHWAY |
| 9-93 | BEXAR | | 2452 / 01 / 036,etc. | LP 1604 |
| 12-94 | | | | |

DN: CK: DW: CK:
DATE: ACC: FILE:
LEVELS D

DISCLAIMER
The use of this standard is governed by the "Texas Engineering Practice Act". No warranty of any kind is made by TxDOT for any purpose whatsoever. TxDOT assumes no responsibility for the conversion of this standard to other formats or for incorrect results or damages resulting from its use.

## TYPICAL ATTACHMENT OF ROUTE MARKERS AND "EXIT ONLY" PANELS TO GUIDE SIGNS

### SCREW ATTACHMENT

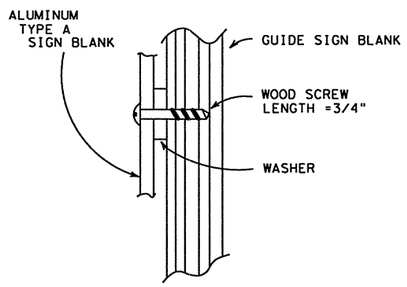


PLYWOOD GUIDE SIGN
(16 mm PLYWOOD)

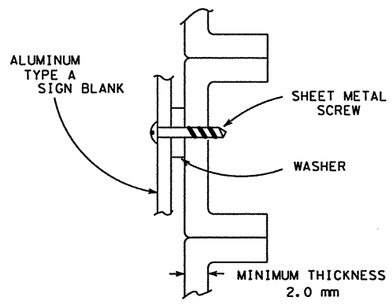


ALUMINUM GUIDE SIGNS
(EXTRUDED ALUMINUM PANELS)

### NUT/BOLT ATTACHMENT

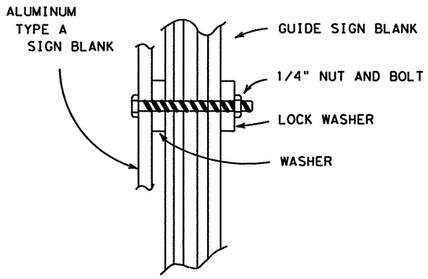


PLYWOOD GUIDE SIGN
(16 mm PLYWOOD)

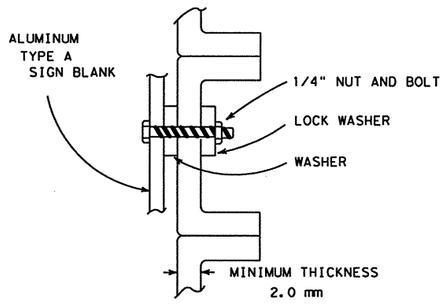


ALUMINUM GUIDE SIGNS
(EXTRUDED ALUMINUM PANELS)

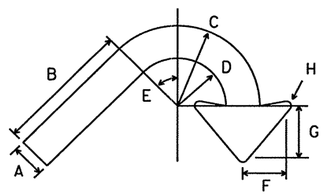


E3 and E3a

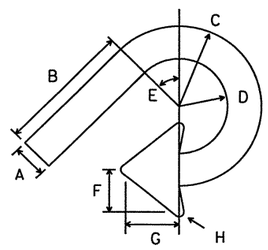


E4 and E4a

| CODE | USED ON SIGN NO. | A | B | C | D | E | F | G | H |
|---|---|---|---|---|---|---|---|---|---|
| E-3 & E-4 | E5-3 and E5-4 | 125 | 510 | 305 | 180 | 45° | 165 | 200 | 20 |
| E-3a & E-4a | E5-3a and E5-4a | 90 | 355 | 215 | 125 | 45° | 115 | 140 | 10 |

All dimensions are in millimeters unless otherwise noted.

The metric dimensions shown on this sheet have been rounded, and should be considered equivalent to the English dimensions in the "1980 Standard Highway Sign Designs for Texas" manual.

## SIGN BLANK PUNCHING DETAILS FOR ROUTE MARKERS WHEN ATTACHED TO GUIDE SIGN

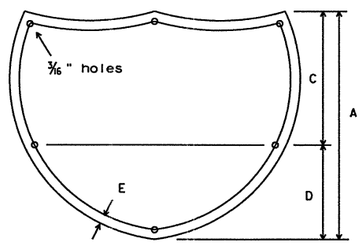


### INTERSTATE ROUTE MARKERS

| A | C | D | E |
|---|---|---|---|
| 900 | 500 | 400 | 40 |
| 1200 | 700 | 500 | 45 |

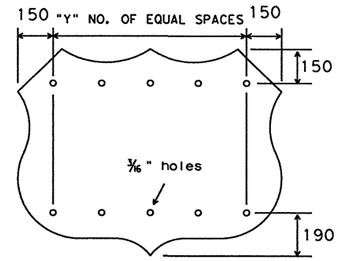


### U.S. ROUTE MARKERS

| Sign Type | "Y" |
|---|---|
| MI-4D2 | 2 |
| MI-4D3 | 3 |
| MI-4E2 | 3 |
| MI-4E3 | 4 |
| MI-4F2 | 4 |
| MI-4F3 | 5 |

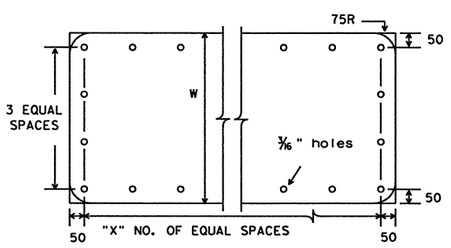


### STATE ROUTE MARKERS

| No. of Digits | W | X |
|---|---|---|
| 4 | 600 | 4 |
| 4 | 900 | 5 |
| 4 | 1200 | 6 |
| 3 | 600 | 3 |
| 3 | 900 | 4 |
| 3 | 1200 | 5 |

## ARROW DIMENSION DETAILS

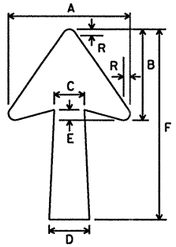


Type A or Type B

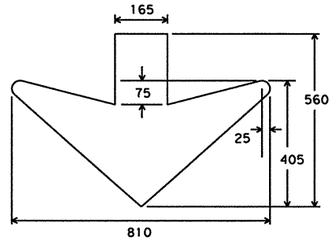


Type C

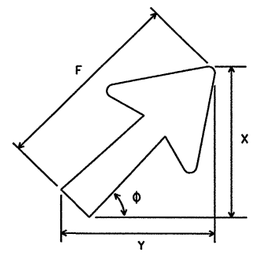


| CODE | LETTER SIZE | ARROW DIMENSIONS IN MILLIMETERS | | | | | | | | | | | |
|---|---|---|---|---|---|---|---|---|---|---|---|---|---|
| | | | | | | | | | ϕ = 30° | | ϕ = 45° | | ϕ = 60° |
| | | A | B | C | D* | E | F* | R | X | Y | X | Y | X | Y |
| A-1 | 200Caps | 380 | 290 | 95 | 125 | 30 | 605 | 20 | 385 | 560 | 480 | 480 | 560 | 385 |
| A-2 | 340 U.C., 250-300 Caps | 455 | 350 | 110 | 150 | 35 | 730 | 20 | 460 | 675 | 575 | 575 | 675 | 460 |
| A-3 | 400 U.C. | 555 | 425 | 135 | 180 | 45 | 890 | 25 | 565 | 820 | 700 | 700 | 820 | 565 |
| B-1 | 200-250 Caps | 355 | 245 | 85 | 110 | 30 | 430 | 20 | 310 | 405 | 350 | 350 | 405 | 310 |
| B-2 | 340 U.C., 300 Caps | 440 | 290 | 110 | 140 | 35 | 505 | 20 | 385 | 475 | 410 | 410 | 475 | 385 |
| B-3 | 400 U.C. | 545 | 355 | 125 | 170 | 45 | 625 | 25 | 480 | 585 | 510 | 510 | 585 | 480 |

WHERE AN ARROW IS REQUIRED ON A GUIDE SIGN WHICH HAS A HEIGHT OF 600 mm AND WHICH IS USUALLY ERECTED ON RAMPS AND CROSSROADS AT INTERCHANGES, THE ARROW SHALL BE TYPE B-1.
* RECOMMENDED DIMENSIONS: TAPER SHOULD BE HELD CONSTANT FOR LONGER OR SHORTER SHAFT LENGTHS.

SPECIFICATION REFERENCE TABLE
MATERIALS AND TEST SPECIFICATIONS (D-9)

| | |
|---|---|
| ALUMINUM SIGN BLANKS | D-9-7110 |
| SIGN HARDWARE | D-9-7120 |
| FLAT SURFACE REFLECTIVE SHEETING, TYPE C (HIGH SPECIFIC INTENSITY) | D-9-8300 |

GENERAL NOTES:

Route markers attached to guide signs shall be one piece sheet aluminum alloy conforming with Department Specification "Aluminum Signs (Type A)." Sketches shown are examples only.

Screws and washers shall be used unless otherwise noted in the plans. Screws or bolts, nuts and washers shall be stainless steel or aluminum.

Screws for plywood signs shall not protrude through the back of the sign. All holes required in the punching detail of blank, shall have screws or nuts and bolts.

Arrows shall be cut-out reflective sheeting (Type C) applied directly to sign background, or reflective sheeting (Type C) applied to one piece 1.6 mm thick sheet aluminum alloy conforming with Department Specification "Aluminum Signs (Type A)." Attachment to of arrows applied to sheet aluminum alloy shall be as illustrated for sign blanks.

STANDARD PLANS
TEXAS DEPARTMENT OF TRANSPORTATION
*Traffic Operations Division*

# ARROW AND ROUTE MARKER ATTACHMENT DETAILS FOR GUIDE SIGNS

IM(2)-93(M)

©TxDOT July 1990

| DN: LR | CK: - | DW: DN | CK: - | MEG NO.: |
|---|---|---|---|---|

REVISIONS
9-93

| STATE DISTRICT | FEDERAL REGION | FEDERAL AID PROJECT | SHEET |
|---|---|---|---|
| SAT | 6 | NH 2000(704), etc. | 729 |

| COUNTY | CONTROL | SECTION | JOB | HIGHWAY |
|---|---|---|---|---|
| BEXAR | 2452 | 01 | 036, etc. | LP 1604 |

LEVELS
1 2 3 4 5 6 7 8 9 10 11 12 13 14 15 16 17 18
33 34 35 45 56 63 7 38 39 40 41 42 43 44 45 59 48 49
49 50 51 52 53 54 55 56 57 58 59 60 61 62 63
DATE:
ACC: d58np1c/usr/d580504
FILE:
DN: LR
CK: CW
DW: DN
CK: MT

DISCLAIMER
The use of this standard is governed by the "Texas Engineering Practice Act". No warranty of any kind is made by TxDOT for any purpose whatsoever. TxDOT assumes no responsibility for the conversion of this standard to other formats or for incorrect results or damages resulting from its use.

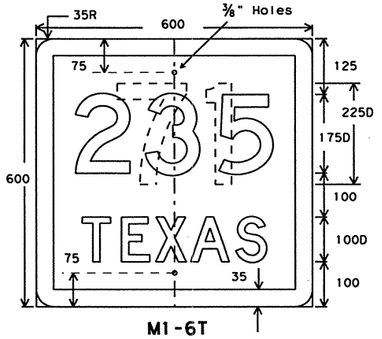


M1-6T
600x600

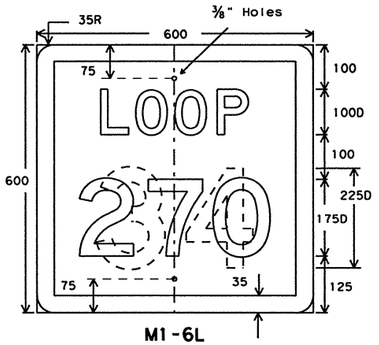


M1-6L
600x600

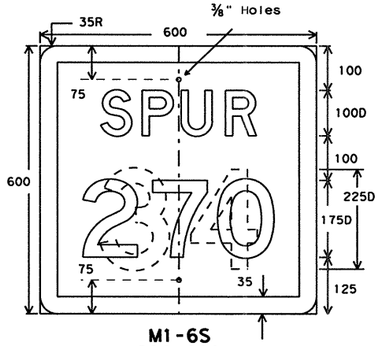


M1-6S
600x600

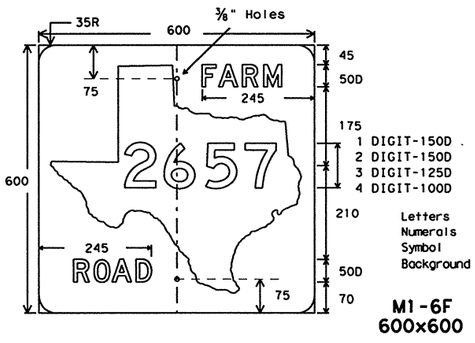


1 DIGIT-150D
2 DIGIT-150D
3 DIGIT-125D
4 DIGIT-100D

Letters - White Reflective
Numerals - Black
Symbol - White Reflective
Background - Black

M1-6F
600x600

M1-6FX
900x900

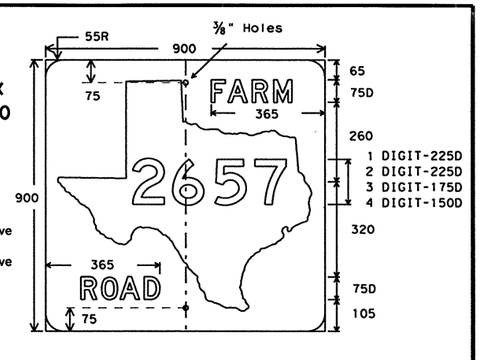


1 DIGIT-225D
2 DIGIT-225D
3 DIGIT-175D
4 DIGIT-150D

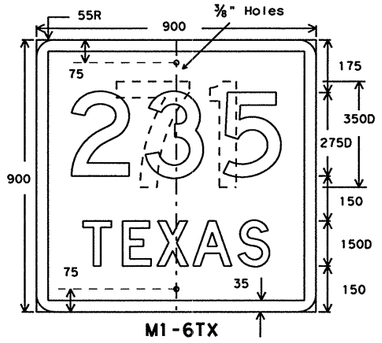


M1-6TX
900x900

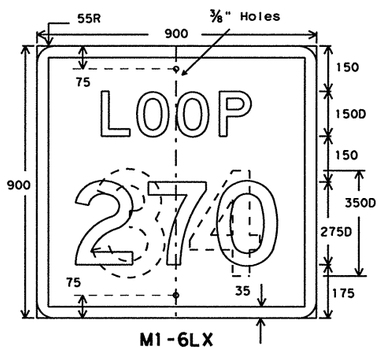


M1-6LX
900x900

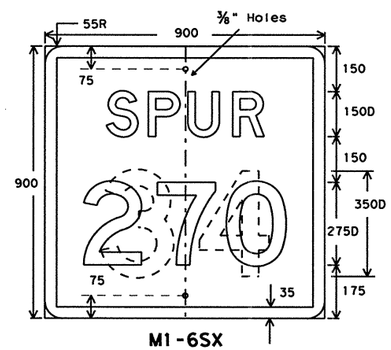


M1-6SX
900x900

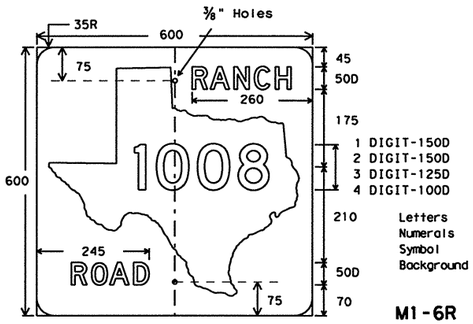


1 DIGIT-150D
2 DIGIT-150D
3 DIGIT-125D
4 DIGIT-100D

Letters - White Reflective
Numerals - Black
Symbol - White Reflective
Background - Black

M1-6R
600x600

M1-6RX
900x900

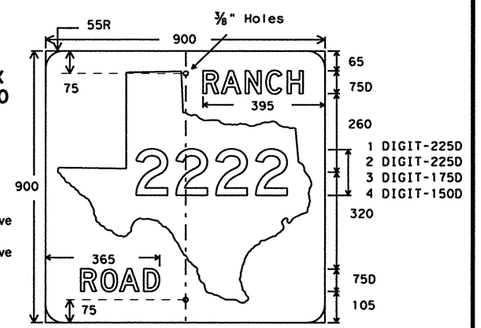


1 DIGIT-225D
2 DIGIT-225D
3 DIGIT-175D
4 DIGIT-150D

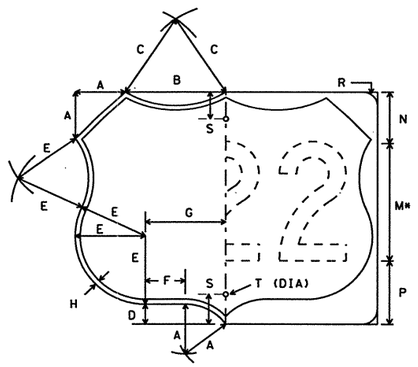


Numerals - Black
Border - Black
Background - White Reflective

| | | SIZE | A | B | C | D | E | F | G | H | M* | N | P |
|---|---|---|---|---|---|---|---|---|---|---|---|---|---|
| MI-4A2 | 300 NUMERALS 2 DIGIT | 600x600 | 125 | 175 | 125 | 50 | 175 | 25 | 125 | 10 | 300D | 140 | 160 |
| MI-4A3 | 300 NUMERALS 3 DIGIT | 750x600 | 125 | 250 | 225 | 50 | 175 | 100 | 200 | 10 | 300D | 140 | 160 |
| MI-4B2 | 450 NUMERALS 2 DIGIT | 900x900 | 190 | 260 | 190 | 75 | 260 | 35 | 190 | 20 | 450D | 210 | 240 |
| MI-4B3 | 450 NUMERALS 3 DIGIT | 1125x900 | 190 | 375 | 335 | 75 | 260 | 150 | 300 | 20 | 450D | 210 | 240 |

ALL LENGTHS SHOWN ARE IN MILLIMETERS, ALL AREAS ARE IN SQUARE METERS.

| R | S | T | AREA |
|---|---|---|---|
| 35 | 75 | ⅜ | 0.3 |
| 35 | 75 | ⅜ | 0.38 |
| 55 | 75 | ⅜ | 0.66 |
| 55 | 75 | ⅜ | 0.85 |

All dimensions are in millimeters unless otherwise noted.

The metric dimensions shown on this sheet have been rounded, and should be considered equivalent to the English dimensions in the "1980 Standard Highway Sign Designs for Texas" manual.

SPECIFICATION REFERENCE TABLE

| MATERIALS AND TESTS DIVISION SPECIFICATION | |
|---|---|
| ALUMINUM SIGN BLANKS | D-9-7110 |
| FLAT SURFACE REFLECTIVE SHEETING, TYPE A (ENGINEER GRADE) | D-9-8300 |
| VINYL NON-REFLECTIVE DECAL SHEETING | D-9-8320 |

GENERAL NOTES:

Route Markers are to be used as confirming and reassurance route markers and as component parts of a Junction, Route Turn, Directional, or Trailblazer assembly.

The alphabets and lateral spacing between letters and numerals shall conform with the Texas "Manual on Uniform Traffic Control Devices for Streets and Highways", latest edition, and any approved changes thereto. Lateral spacing of text shall provide a balanced appearance. All materials shall conform to Department Specifications.

Legend (except where noted), shall be black and applied by screening process, cut-out vinyl non-reflective decal sheeting or combination thereof. Legend on M1-6F, M1-6FX, M1-6R, M1-6RX and U.S. route markers shall be applied by reverse screening process, cut-out black vinyl non-reflective decal sheeting or combination thereof. Background shall be white reflective sheeting (Type A).

A print of the Texas state outline may be obtained from the Department to be used in making a stencil.

Sign blanks shall be one piece sheet aluminum alloy (Type A). 610x610 mm blanks shall be 2.0 mm thick, 914x914 mm and larger blanks shall be 2.5 mm thick, unless otherwise noted elsewhere in the plans.

STANDARD PLANS
TEXAS DEPARTMENT OF TRANSPORTATION
*Traffic Operations Division*

# U.S. & STATE ROUTE MARKERS FOR INDEPENDENT MOUNTING

## M(1)-95(M)

| ©TxDOT July 1972 | DN:-LR | CK:- | DW:-DN | CK:- | MSG NO.: |
|---|---|---|---|---|---|

| REVISIONS | STATE DISTRICT | FEDERAL REGION | FEDERAL AID PROJECT | SHEET |
|---|---|---|---|---|
| 10-73 8-95 | SAT | 6 | NH 2000(704),etc. | 730 |
| 1-82 | COUNTY | CONTROL | SECTION | JOB | HIGHWAY |
| 1-85 | BEXAR | 2452 | 01 | 036,etc. | LP 1604 |
| 7-90 | | | | | |

Metric 5A

DN: CK: DW: CK:
DATE: ACC: FILE:
LEVELS 0

DISCLAIMER
The use of this standard is governed by the "Texas Engineering Practice Act". No warranty of any kind is made by TxDOT for any purpose whatsoever. TxDOT assumes no responsibility for the conversion of this standard to other formats or for incorrect results or damages resulting from its use.

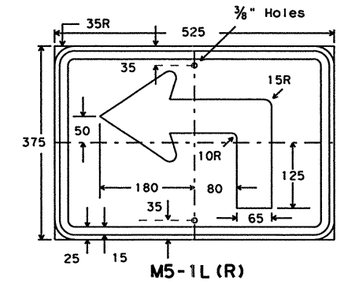


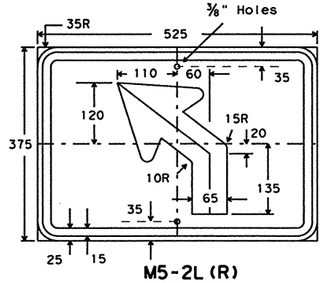


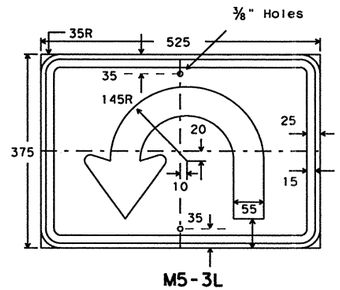


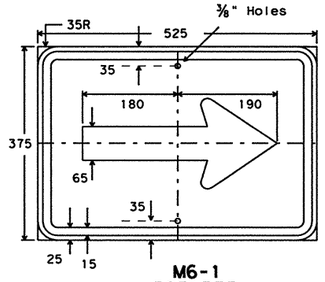


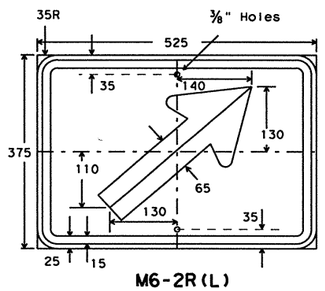


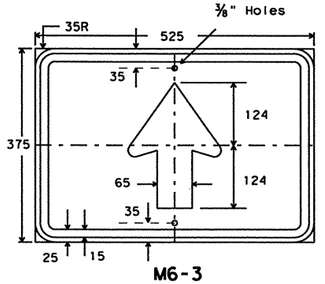


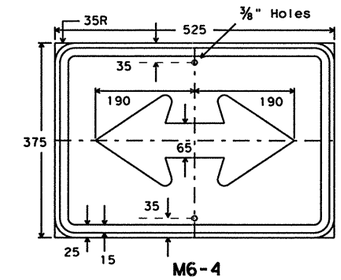


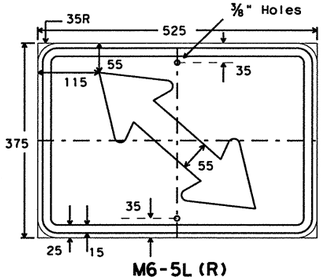


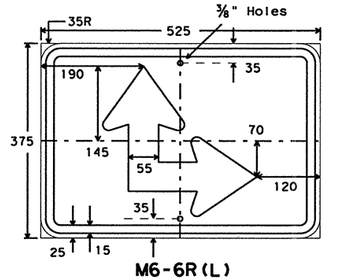


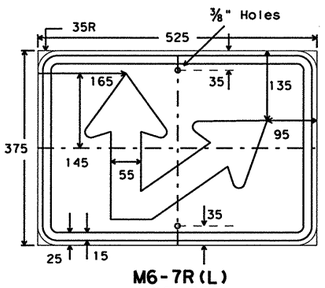


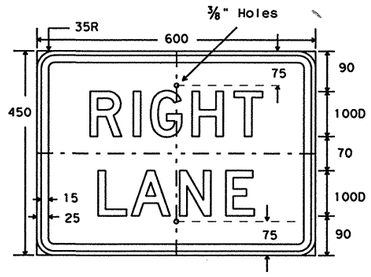


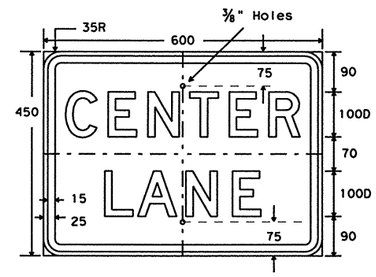


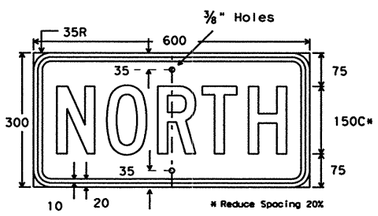


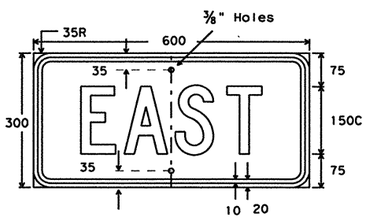


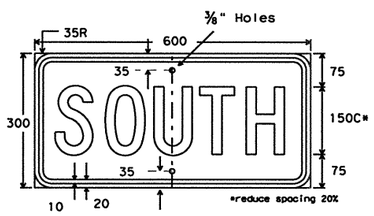


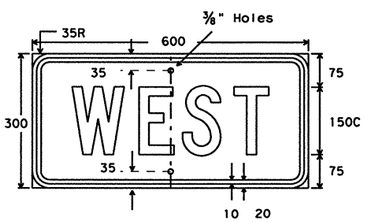


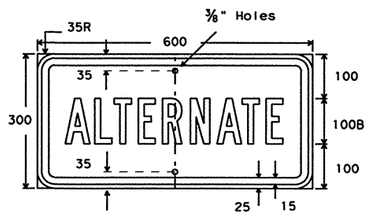


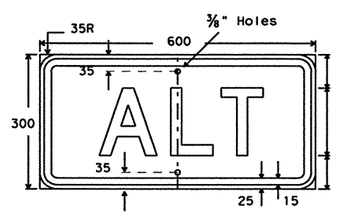


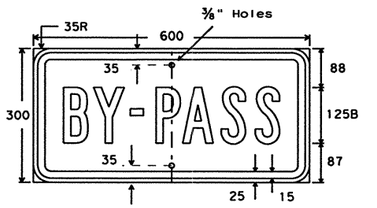


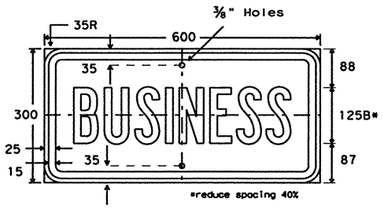


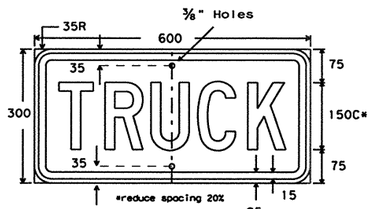


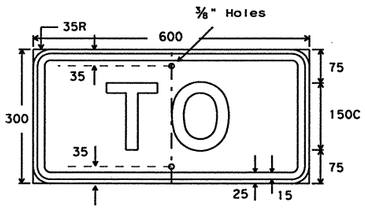


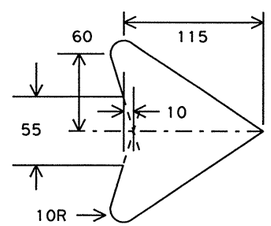


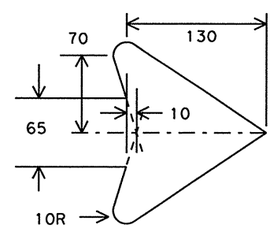


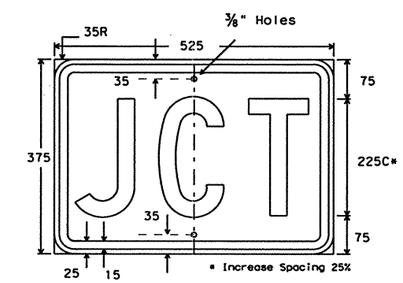


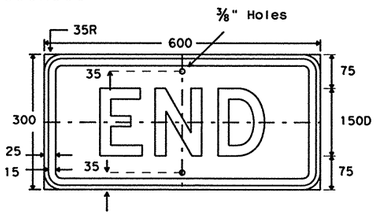


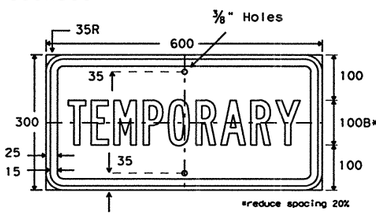


All dimensions are in millimeters unless otherwise noted.

The metric dimensions shown on this sheet have been rounded, and should be considered equivalent to the English dimensions in the "1980 Standard Highway Sign Designs for Texas" manual.

| SPECIFICATION REFERENCE TABLE | |
|---|---|
| MATERIALS AND TESTS DIVISION SPECIFICATIONS | |
| ALUMINUM SIGN BLANKS | D-9-7110 |
| REFLECTIVE SHEETING, TYPE A (ENGINEER GRADE) | D-9-8300 |
| VINYL NON-REFLECTIVE DECAL SHEETING | D-9-8320 |

GENERAL NOTES:

The alphabets and lateral spacing between letters and numerals shall conform with the Texas "Manual on Uniform Traffic Control Devices for Streets and Highways", latest edition, and any approved changes thereto. Lateral spacing of text shall provide a balanced appearance. All materials shall conform to Department Specifications.

Legend (except where noted), shall be black and applied by screening process, cut-out vinyl non-reflective decal sheeting or combination thereof. Background shall be white reflective sheeting (Type A).

Sign blanks shall be one piece 2.0 mm thick sheet aluminum alloy (Type A), unless otherwise noted elsewhere in the plans.

STANDARD PLANS
TEXAS DEPARTMENT OF TRANSPORTATION
*Traffic Operations Division*

# ROUTE MARKER AUXILIARIES

## M(3)-97(M)

©TxDOT July 1990

| DN: LR | CK: - | DW: DN | CK: - | NEG NO.: |
|---|---|---|---|---|

| REVISIONS | STATE DISTRICT | FEDERAL REGION | FEDERAL AID PROJECT | SHEET |
|---|---|---|---|---|
| 8-95 | SAT | 6 | NH 2000(704),etc. | 731 |
| 4-97 | COUNTY | CONTROL | SECTION | JOB | HIGHWAY |
| | BEXAR | 2452 | 01 | 036,etc. | LP 1604 |

Metric 5C

LEVELS 0 1 2 3 4 5 6 7 8 9
1 2 3 4 5 6 7 8 9 10 11 12 13 14 15 16
17 18 19 20 21 22 23 24 25 26 27 28 29 30 31 32
33 34 35 36 37 38 39 40 41 42 43 44 45 46 47 48
49 50 51 52 53 54 55 56 57 58 59 60 61 62 63

DATE:
ACC:
FILE:
DN:
CK:
DW:
CK:

DISCLAIMER
The use of this standard is governed by the "Texas Engineering Practice Act". No warranty of any kind is made by TxDOT for any purpose whatsoever. TxDOT assumes no responsibility for the conversion of this standard to other formats or for incorrect results or damages resulting from its use.

| LEVELS D: | DATE: | DN: |
|---|---|---|
| 1 2 3 4 5 6 7 8 9 10 11 12 13 14 15 16 | | CK: |
| 17 18 19 20 21 22 23 24 25 26 27 28 29 30 31 32 | ACC: | DW: |
| 33 34 35 36 37 38 39 40 41 42 43 44 45 46 47 48 | FILE: | CK: |
| 49 50 51 52 53 54 55 56 57 58 59 60 61 62 63 | | |

## REFERENCE MARKER PLAQUE

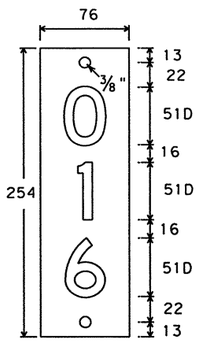


D10-7a
76x254

Letters - White Reflective
Numerals - White Reflective
Background - Green Reflective

Use preceding zero for total of three digits

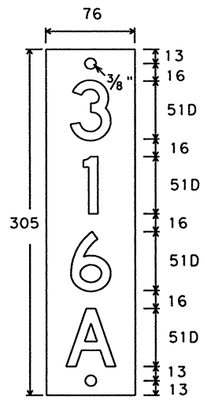


D10-7b
76x305

Letters - White Reflective
Numerals - White Reflective
Background - Green Reflective

## TYPICAL ATTACHMENT MATERIAL

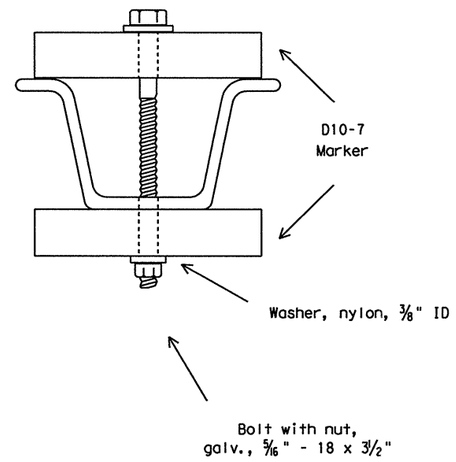


WINGED CHANNEL SUPPORT

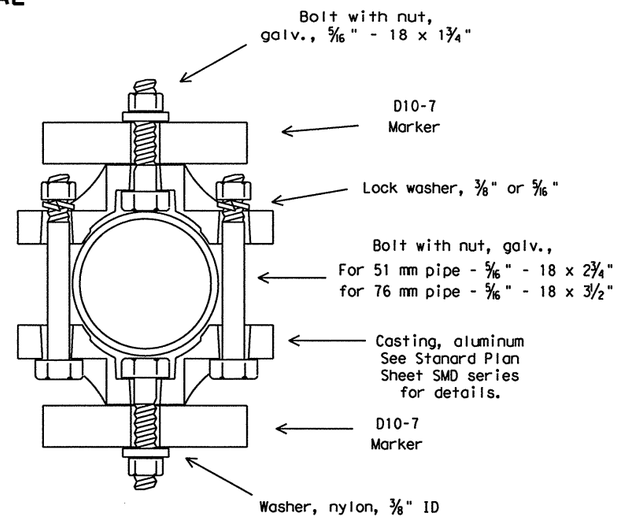


51 mm OR 76 mm ROUND PIPE SUPPORT

## TYPICAL MOUNTING

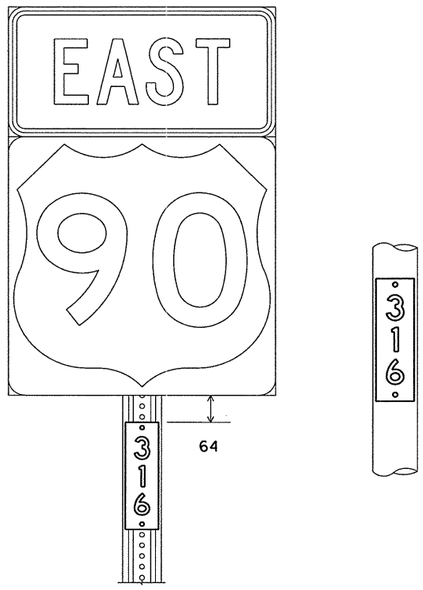


Reference Marker Plaque should cover existing milepost number, or old number should be removed. Plaques to be mounted back to back.

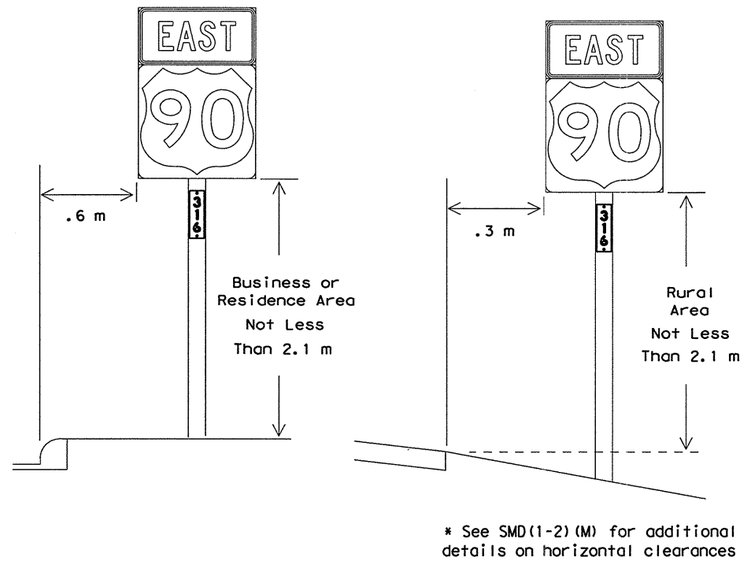


* See SMD(1-2)(M) for additional details on horizontal clearances

TYPE MOUNT
Use breakaway design that will leave a stub in ground, so mount can be accurately reinstalled.

| SPECIFICATION REFERENCE TABLE | |
|---|---|
| MATERIALS AND TESTS DIVISION SPECIFICATIONS | |
| PLYWOOD SIGN BLANKS | D-9-7100 |
| ALUMINUM SIGN BLANKS | D-9-7110 |
| REFLECTIVE SHEETING, TYPE C (HIGH SPECIFIC INTENSITY) | D-9-8300 |

GENERAL NOTES:

The alphabets and lateral spacing between letters and numerals shall conform with the Texas "Manual on Uniform Traffic Control Devices for Streets and Highways", latest edition, and any approved changes thereto. Lateral spacing of text shall provide a balanced appearance. All materials shall conform to Department Specifications.

Legend shall be white cut-out reflective sheeting applied to colored background, or by reverse screening process with transparent colored ink. Background shall be reflective sheeting (Type C).

Reference Marker plaques shall be one piece 2.0 mm thick sheet aluminum alloy (Type A), or 16 mm thick plywood (Type A).

All dimensions are in millimeters unless otherwise noted.

The metric dimensions shown on this sheet have been rounded, and should be considered equivalent to the English dimensions in the "1980 Standard Highway Sign Designs for Texas" manual.

STANDARD PLANS
TEXAS DEPARTMENT OF TRANSPORTATION
*Traffic Operations Division*

# REFERENCE MARKER AND MOUNTING

# M(4)-95(M)

| ©TxDOT July 1990 | DN: - LR | CK: - | DW: - DN | CK: - | NEG NO.: |
|---|---|---|---|---|---|
| REVISIONS | STATE DISTRICT | FEDERAL REGION | FEDERAL AID PROJECT | | SHEET |
| 9-93 | SAT | 6 | NH 2000(704),etc. | | 732 |
| 8-95 | COUNTY | | CONTROL | SECTION | JOB | HIGHWAY |
| | BEXAR | | 2452 | 01 | 036,etc. | LP 1604 |

Metric 5D

DISCLAIMER
The use of this standard is governed by the "Texas Engineering Practice Act". No warranty of any kind is made by TxDOT for any purpose whatsoever. TxDOT assumes no responsibility for the conversion of this standard to other formats or for incorrect results or damages resulting from its use.

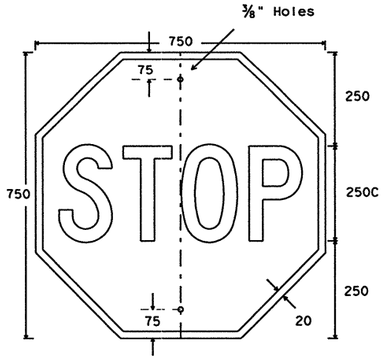


**R1-1**
**750x750**

Letters - White Reflective
Border - White Reflective
Background - Red Reflective

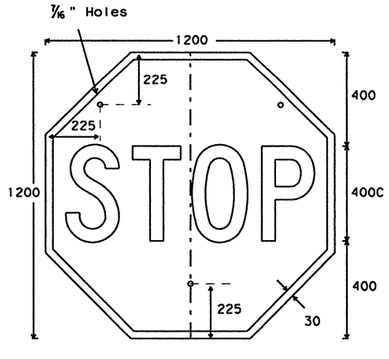


**SR1-1**
**1200x1200**

Letters - White Reflective
Border - White Reflective
Background - Red Reflective

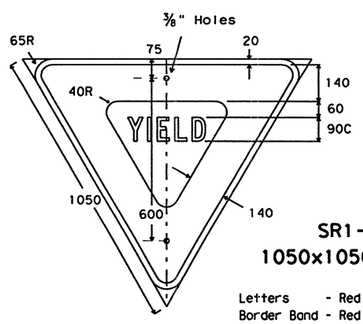


**SR1-2**
**1050x1050x1050**

Letters - Red Reflective
Border Band - Red Reflective
Background - White Reflective

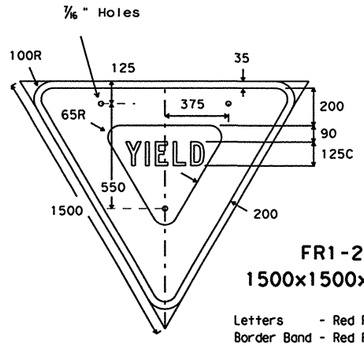


**FR1-2**
**1500x1500x1500**

Letters - Red Reflective
Border Band - Red Reflective
Background - White Reflective

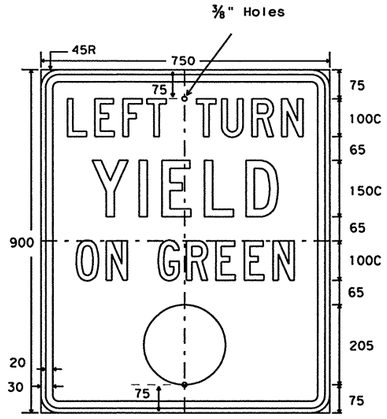


**R10-12**
**750x900**

Letters - Black
Border - Black
Circle - Green Refl.
Background - White Refl.

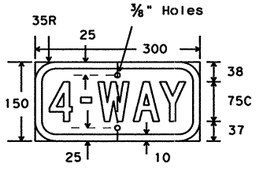


**R1-3**
**300x150**

Letters - White Reflective
Border - White Reflective
Background - Red Reflective

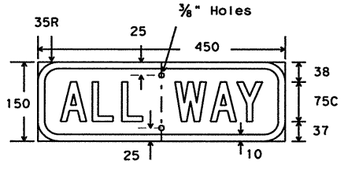


**R1-4**
**450x150**

Letters - White Reflective
Border - White Reflective
Background - Red Reflective

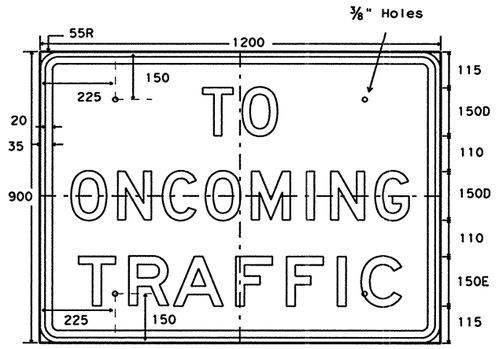


**SR1-2b**
**1200x900**

Legend - Black
Background - White Refl.

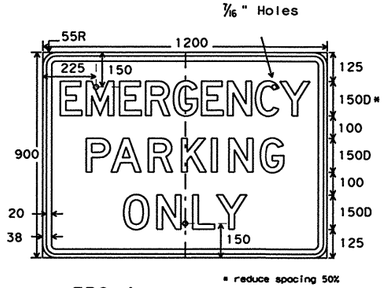


* reduce spacing 50%

**FR8-4**
**1200x900**

Legend - Black
Background - White Refl.

**FR8-7**

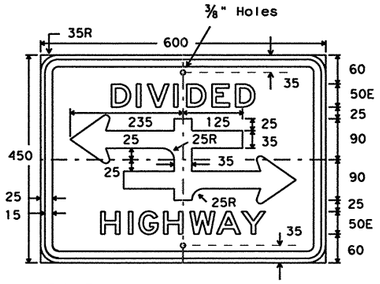


**R6-3**
**600x450**

Legend - Black
Background - White Refl.

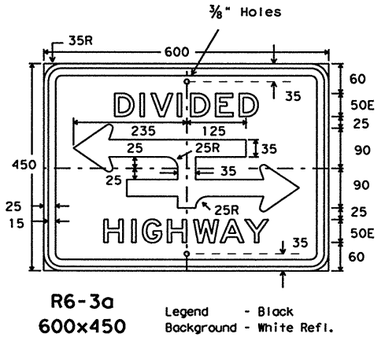


**R6-3a**
**600x450**

Legend - Black
Background - White Refl.

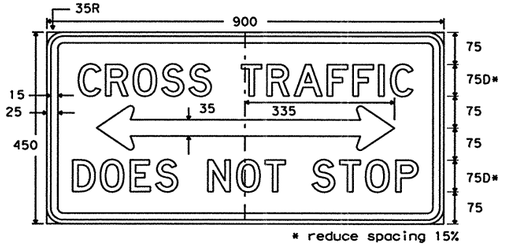


* reduce spacing 15%

**R1-5b**
**900x450**

Legend - Black
Background - White Refl.

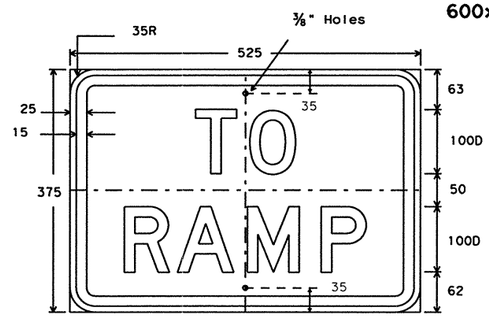


**R1-2a**
**525x375**

Legend - Black
Background - White Refl.

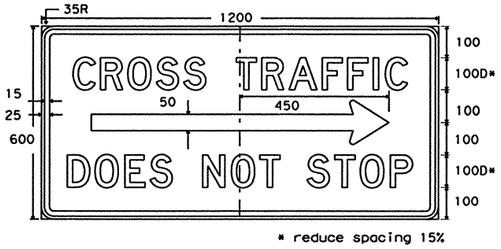


* reduce spacing 15%

**SR1-5R**
**1200x600**

Legend - Black
Background - White Refl.

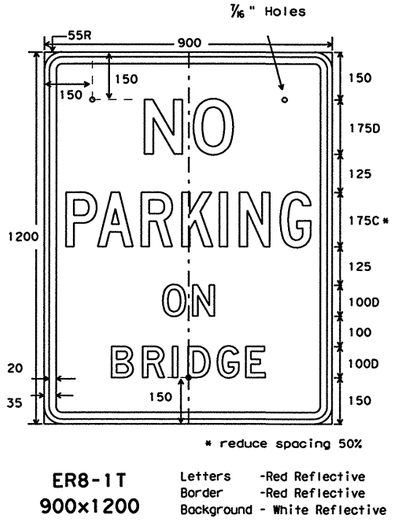


* reduce spacing 50%

**ER8-1T**
**900x1200**

Letters -Red Reflective
Border -Red Reflective
Background - White Reflective

SPECIFICATION REFERENCE TABLE

| | |
|---|---|
| MATERIALS AND TESTS DIVISION SPECIFICATIONS | |
| PLYWOOD SIGN BLANKS | D-9-7100 |
| REFLECTIVE SHEETING, TYPE A (ENGINEER GRADE) (FOR BLACK AND WHITE SIGNS ON THIS SHEET) | D-9-8300 |
| REFLECTIVE SHEETING, TYPE C (HIGH SPECIFIC INTENSITY) (FOR RED SERIES SIGNS ON THIS SHEET) | D9--8300 |
| VINYL NON-REFLECTIVE DECAL SHEETING | D-9-8320 |

GENERAL NOTES:

The alphabets and lateral spacing between letters and numerals shall conform with the Texas "Manual on Uniform Traffic Control Devices for Streets and Highways", latest edition, and any approved changes thereto. Lateral spacing of text shall provide a balanced appearance. All materials shall conform to Department Specifications.

Legend (except where noted), shall be applied by screening process of black and/or transparent colored ink, cut-out black vinyl non-reflective decal sheeting, and/or reflective sheeting or combination thereof. Legend on R1-1, SR1-1, R1-3 and R1-4 shall be applied by reverse screening process with transparent colored ink or cut-out white reflective sheeting applied to colored background or combination thereof. Background shall be reflective sheeting.

Sign blanks shall be one piece 16 mm thick plywood (Type A), unless otherwise noted elsewhere in the plans.

**All dimensions are in millimeters unless otherwise noted.**

**The metric dimensions shown on this sheet have been rounded, and should be considered equivalent to the English dimensions in the "1980 Standard Highway Sign Designs for Texas" manual.**

**STANDARD PLANS**
**TEXAS DEPARTMENT OF TRANSPORTATION**
*Traffic Operations Division*

# REGULATORY SIGNS

**R(1)-98(M)**

©TxDOT February 1976

| DN: LR | CK: - | DW: DN | CK: - | MEG NO.: |
|---|---|---|---|---|

| REVISIONS | STATE DISTRICT | FEDERAL REGION | FEDERAL AID PROJECT | | | SHEET |
|---|---|---|---|---|---|---|
| 1-85 | SAT | 6 | NH 2000(704),etc. | | | 733 |
| 7-90 | COUNTY | | CONTROL | SECTION | JOB | HIGHWAY |
| 8-95 | BEXAR | | 2452 | 01 | 036,etc. | LP 1604 |
| 4-98 | | | | | | |

DN: CK: DW: CK:
DATE:
ACC:
FILE:

LEVELS D.
1 2 3 4 5 6 7 8 9 10 11 12 13 14 15 16
17 18 19 20 21 22 23 24 25 26 27 28 29 30 31 32 33 34 35 36 37 38 39 40 41 42 43 44 45 46 47 48
49 50 51 52 53 54 55 56 57 58 59 60 61 62 63

DISCLAIMER
The use of this standard is governed by the "Texas Engineering Practice Act". No warranty of any kind is made by TxDOT for any purpose whatsoever. TxDOT assumes no responsibility for the conversion of this standard to other formats or for incorrect results or damages resulting from its use.

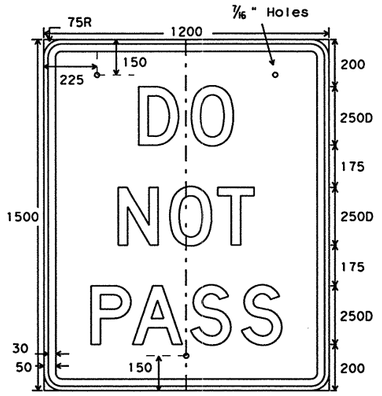


**FR4-1**
**1200x1500**

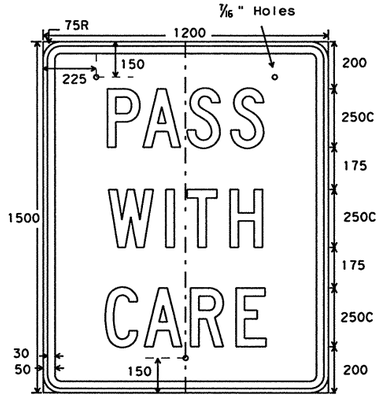


**FR4-2**
**1200x1500**

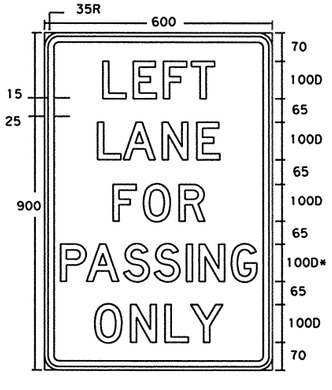


* reduce spacing 25%

**R4-2a**
**600x900**

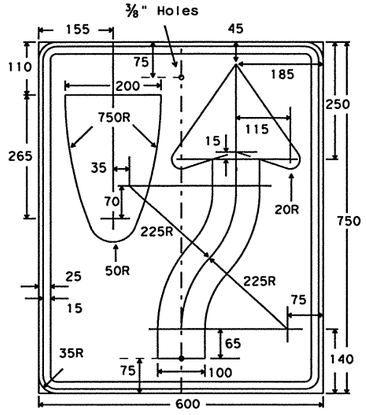


**R4-7**
**600x750**

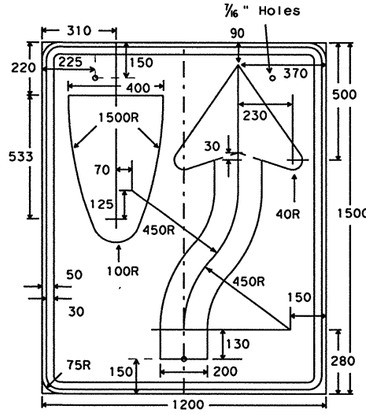


**FR4-7**
**1200x1500**

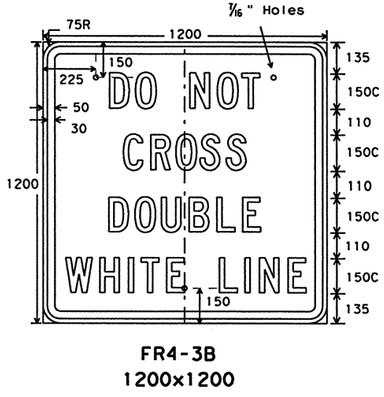


**FR4-3B**
**1200x1200**

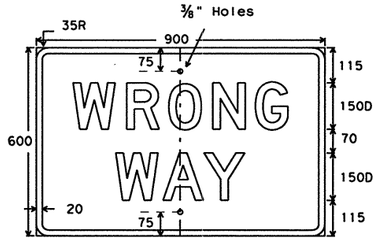


**R5-1a**
**900x600**

Letters - White Reflective
Border - White Reflective
Background - Red Reflective

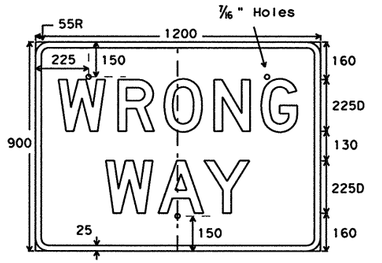


**SR5-1a**
**1200x900**

Letters - White Reflective
Border - White Reflective
Background - Red Reflective

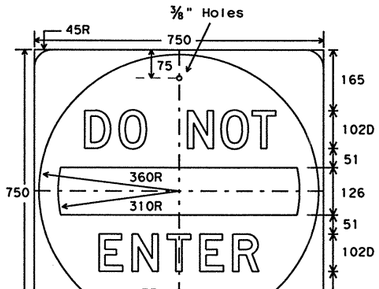


**R5-1**
**750x750**

Letters - White Reflective
Bar - White Reflective
Background - Red Reflective

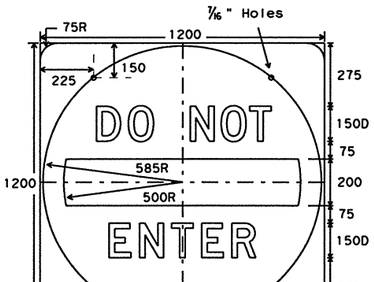


**SR5-1**
**1200x1200**

Letters - White Reflective
Bar - White Reflective
Background - Red Reflective

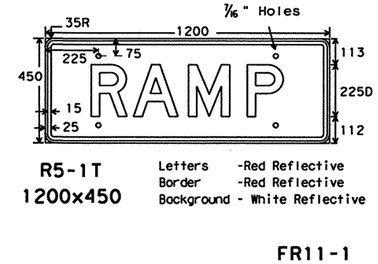


**R5-1T**
**1200x450**

Letters -Red Reflective
Border -Red Reflective
Background - White Reflective

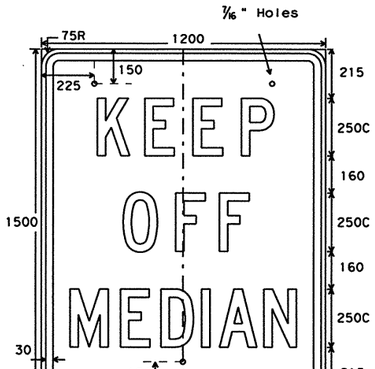


**FR11-1**
**1200x1500**

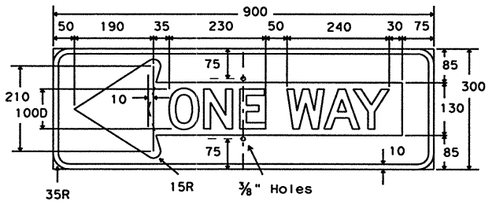


**R6-1L**
**900x300**

Letters - Black
Symbol - White Reflective
Border - White Reflective
Background - Black

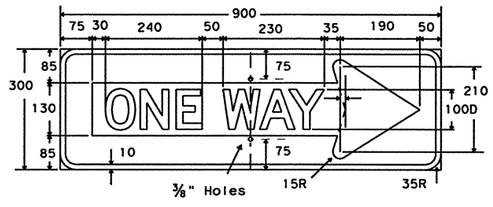


**R6-1R**
**900x300**

Letters - Black
Symbol - White Reflective
Border - White Reflective
Background - Black

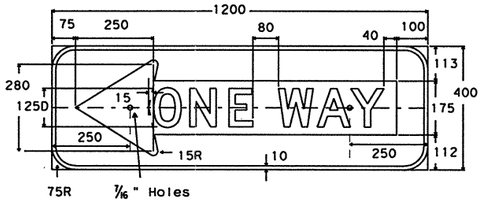


**FR6-1L**
**1200x400**

Letters - Black
Symbol - White Reflective
Border - White Reflective
Background - Black

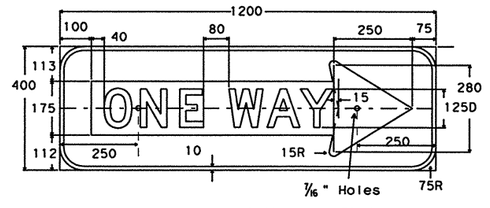


**FR6-1R**
**1200x400**

Letters - Black
Symbol - White Reflective
Border - White Reflective
Background - Black

All dimensions are in millimeters unless otherwise noted.

The metric dimensions shown on this sheet have been rounded, and should be considered equivalent to the English dimensions in the "1980 Standard Highway Sign Designs for Texas" manual.

| SPECIFICATION REFERENCE TABLE | |
|---|---|
| MATERIALS AND TESTS DIVISION SPECIFICATIONS | |
| PLYWOOD SIGN BLANKS | D-9-7100 |
| REFLECTIVE SHEETING, TYPE A (ENGINEER GRADE) (FOR BLACK AND WHITE SIGNS ON THIS SHEET) | D-9-8300 |
| REFLECTIVE SHEETING, TYPE C (HIGH SPECIFIC INTENSITY) (FOR RED SERIES SIGNS ON THIS SHEET) | D-9-8300 |
| VINYL NON-REFLECTIVE DECAL SHEETING | D-9-8320 |

GENERAL NOTES:

The alphabets and lateral spacing between letters and numerals shall conform with the Texas "Manual on Uniform Traffic Control Devices for Streets and Highways", latest edition, and any approved changes thereto. Lateral spacing of text shall provide a balanced appearance. All materials shall conform to Department Specifications.

Legend (except where noted), shall be black and applied by screening process, cut-out vinyl non-reflective decal sheeting, and/or reflective sheeting or combination thereof. Legend on R5-1, ER5-1, SR5-1, R5-1T, R5-1a and SR5-1a shall be applied by reverse screening process with transparent colored ink or cut-out white reflective sheeting applied to colored background or combination thereof. Background shall be reflective sheeting.

Sign blanks shall be one piece 16 mm thick plywood (Type A), unless otherwise noted elsewhere in the plans.

**STANDARD PLANS**
**TEXAS DEPARTMENT OF TRANSPORTATION**
*Traffic Operations Division*

# REGULATORY SIGNS

## R(2)-97(M)

| © TxDOT Feburory 1976 | DN: LR | CK: - | DW: DN | CK: - | REG NO.: | |
|---|---|---|---|---|---|---|
| REVISIONS | STATE DISTRICT | FEDERAL REGION | FEDERAL AID PROJECT | | | SHEET |
| 1-85 | SAT | 6 | NH 2000(704),etc. | | | 734 |
| 7-90 | COUNTY | | CONTROL | SECTION | JOB | HIGHWAY |
| 8-95 | BEXAR | | 2452 | 01 | 036,etc. | LP 1604 |
| 12-97 | | | | | | |

DN:
CK:
DW:
CK:

DATE:
ACC:
FILE:

LEVELS D
1 2 3 4 5 6 7 8 9 10 11 12
7 8 1 9 20 21 22 23 24 25 26 27 28 29 30 31 32
33 34 35 36 37 38 39 40 41 42 43 44 45 46 47 48 49
95 05 15 25 35 45 55 65 75 85 96 06 16 26 36

DISCLAIMER
The use of this standard is governed by the "Texas Engineering Practice Act". No warranty of any kind is made by TxDOT for any purpose whatsoever. TxDOT assumes no responsibility for the conversion of this standard to other formats or for incorrect results or damages resulting from its use.

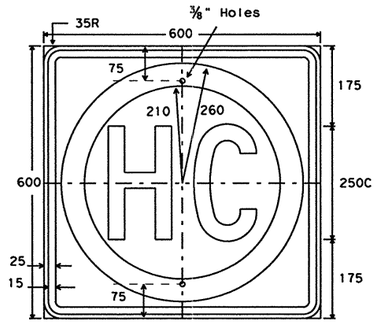


**R14-2**
**600x600**

Letters - Black
Border - Black
Ring - Green Reflective
Background - White Reflective

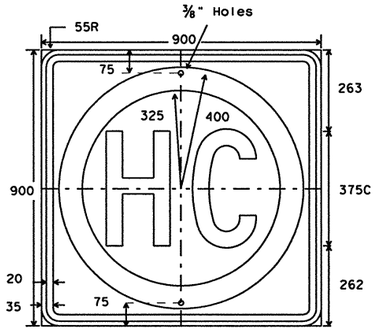


**ER14-2**
**900x900**

Letters - Black
Border - Black
Ring - Green Reflective
Background - White Reflective

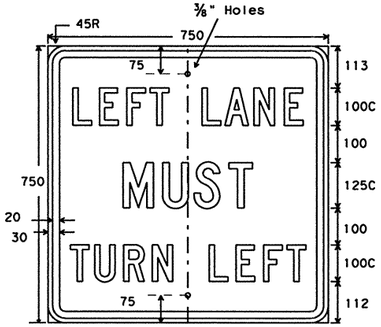


**R3-7L**
**750x750**

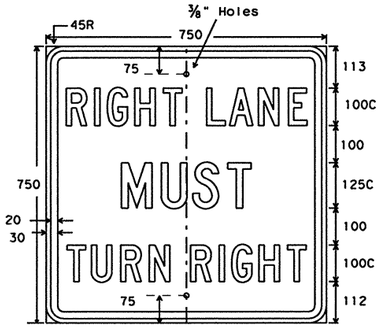


**R3-7R**
**750x750**

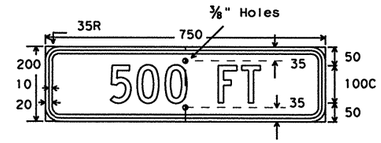


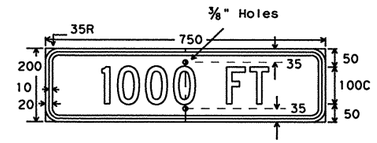


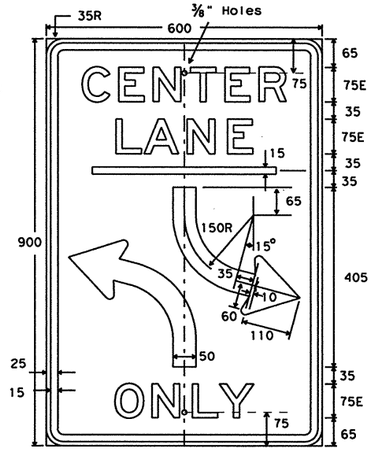


**R3-9b**
**600x900**

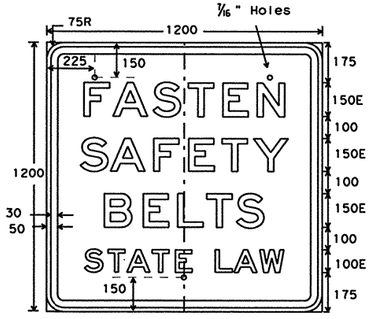


**FR19-8**
**1200x1200**

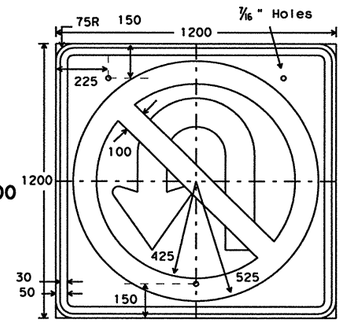


**SR3-4**
**1200x1200**

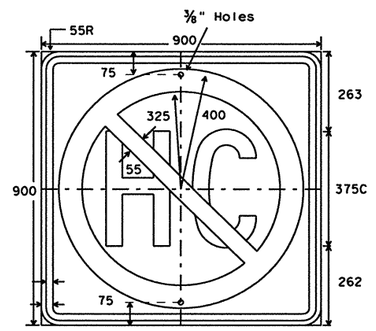


**R14-3**
**600x600**

Letters - Black
Border - Black
Ring/Slash - Red Reflective
Background - White Reflective




**ER14-3**
**900x900**

Letters - Black
Border - Black
Ring/Slash - Red Reflective
Background - White Reflective

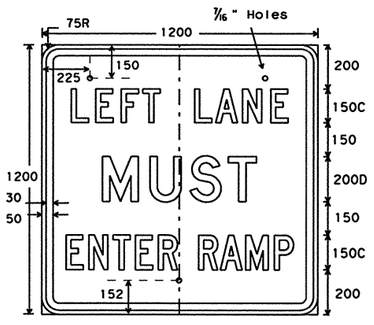


**R3-20**
**1200x1200**

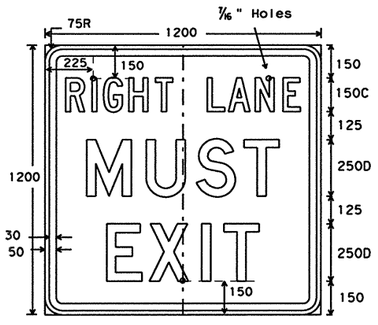


**R3-21R**
**1200x1200**

All dimensions are in millimeters unless otherwise noted.

The metric dimensions shown on this sheet have been rounded, and should be considered equivalent to the English dimensions in the "1980 Standard Highway Sign Designs for Texas" manual.

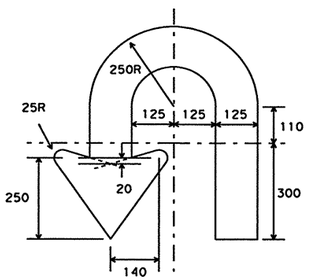


| SPECIFICATION REFERENCE TABLE | |
|---|---|
| MATERIALS AND TESTS DIVISION SPECIFICATIONS | |
| PLYWOOD SIGN BLANKS | D-9-7100 |
| REFLECTIVE SHEETING, | |
| TYPE A (ENGINEER GRADE) | D-9-8300 |
| TYPE C (HIGH SPECIFIC INTENSITY) | D-9-8300 |
| VINYL NON-REFLECTIVE DECAL SHEETING | D-9-8320 |

GENERAL NOTES:

The alphabets and lateral spacing between letters and numerals shall conform with the Texas "Manual on Uniform Traffic Control Devices for Streets and Highways", latest edition, and any approved changes thereto. Lateral spacing of text shall provide a balanced appearance. All materials shall conform to Department Specifications.

Legend (except where noted), shall be applied by screening process of black and/or transparent colored ink, cut-out black vinyl non-reflective decal sheeting and/or reflective sheeting or combination thereof. Background shall be white reflective sheeting (Type A). R14-2, ER14-2, R14-3, ER14-3, R3-1, R3-2 and SR3-4 signs shall use reflective sheeting (Type C).

Sign blanks shall be one piece 16 mm thick plywood (Type A), unless otherwise noted elsewhere in the plans.

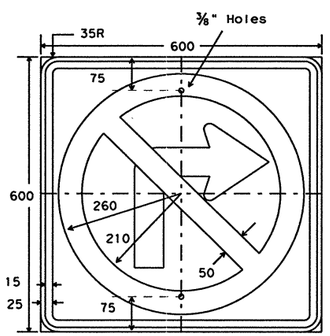


**R3-1**
**600x600**

Letters - Black
Arrow - Black
Border - Black
Circle & Diagonal - Red Reflective
Background - White Reflective

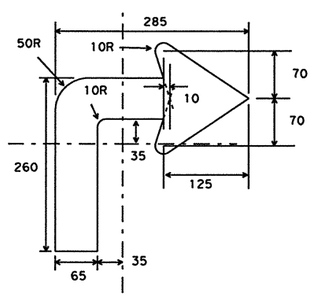


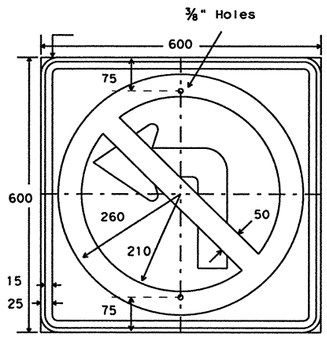


**R3-2**
**600x600**

Letters - Black
Arrow - Black
Border - Black
Circle & Diagonal - Red Reflective
Background - White Reflective

**STANDARD PLANS**
**TEXAS DEPARTMENT OF TRANSPORTATION**
*Traffic Operations Division*

# REGULATORY SIGNS

**R(3)-95(M)**

| © TxDOT July 1990 | DN: LR | CK: | DW: DN | CK: | NEG NO.: |
|---|---|---|---|---|---|
| REVISIONS | STATE DISTRICT | FEDERAL REGION | FEDERAL AID PROJECT | | SHEET |
| 8-95 | SAT | 6 | NH 2000(704), etc. | | 735 |
| | COUNTY | | CONTROL | SECTION | JOB | HIGHWAY |
| | BEXAR | | 2452 | 01 | 036, etc. | LP 1604 |

LEVELS D: 1 2 3 4 5 6 7 8 9 10 11 12 13 14 15 16 17 18 19 20 21 22 23 24 25 26 27 28 29 30 31 32 33 34 35 36 37 38 39 40 41 42 43 44 45 46 47 48 49 50 51 52 53 54 55 56 57 58 59 60 61 62 63

DN: CK: DW: CK:

DATE: ACC: FILE:

DISCLAIMER
The use of this standard is governed by the "Texas Engineering Practice Act". No warranty of any kind is made by TxDOT for any purpose whatsoever. TxDOT assumes no responsibility for the conversion of this standard to other formats or for incorrect results or damages resulting from its use.

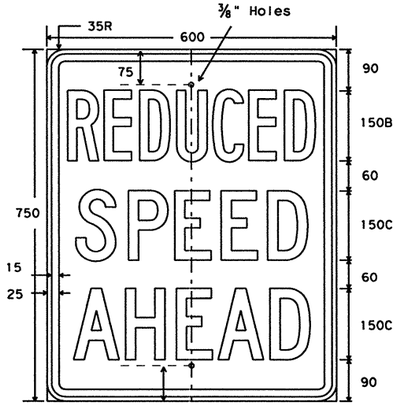


R2-5a
600x750

Legend - Black
Background - White Refl.

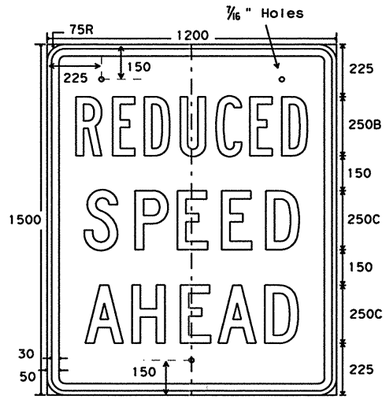


FR2-5a
1200x1500

Legend - Black
Background - White Refl.

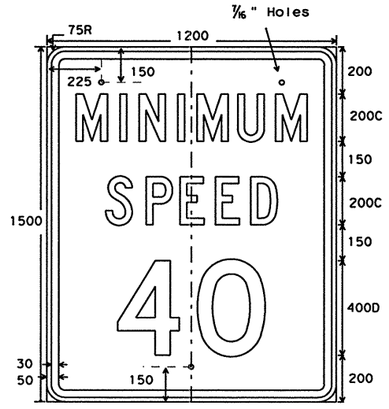


FR2-4
1200x1500

Legend - Black
Background - White Refl.

R2-4T
3500x1050

Legend - Black
Background - White Refl.

(For Non-Interstate Highways)

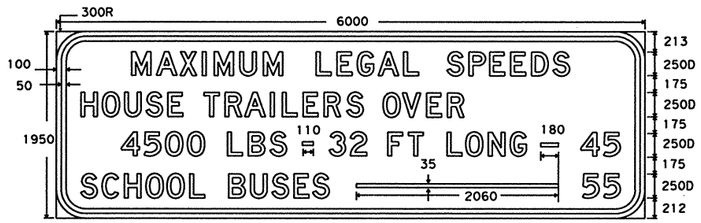


FR2-4T
6000x1950

Legend - Black
Background - White Refl.

(For Interstate Highways Only)

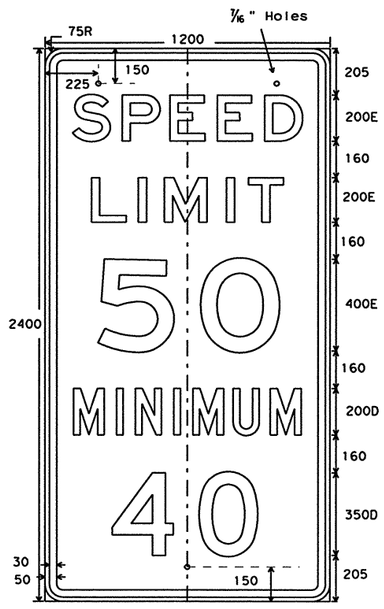


FR2-4a
1200x2400

Legend - Black
Background - White Refl.

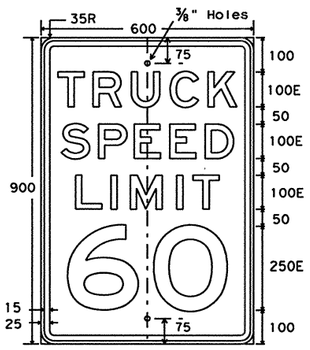


R2-2a
600x900

Legend - Black
Background - White Refl.

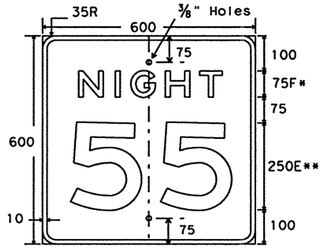


** optically space numerals about vertical centerline
* increase spacing 50%

R2-3
600x600

Legend - White Refl.
Background - Black

All dimensions are in millimeters unless otherwise noted.

The metric dimensions shown on this sheet have been rounded, and should be considered equivalent to the English dimensions in the "1980 Standard Highway Sign Designs for Texas" manual.

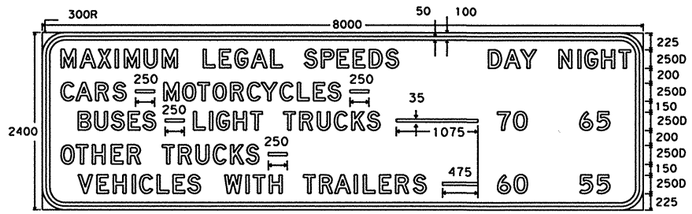


FR2-4Ta
8000x2400

Legend - Black
Background - White Refl.

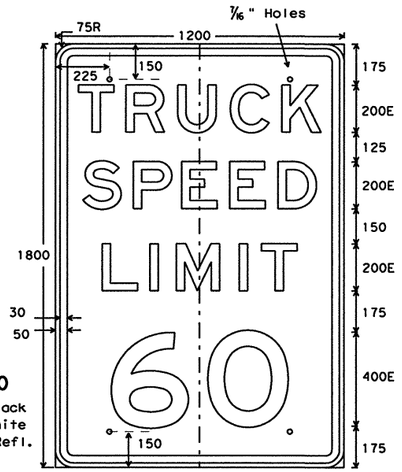


FR2-2a
1200x1800

Legend - Black
Background - White Refl.

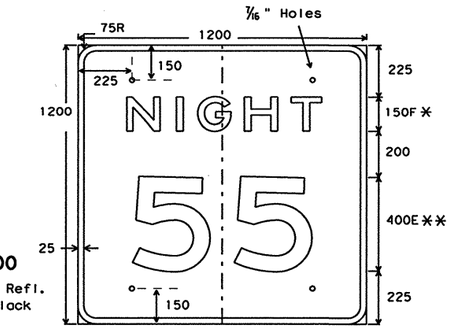


FR2-3
1200x1200

Legend - White Refl.
Background - Black

** optically space numerals about vertical centerline
* increase spacing 50%

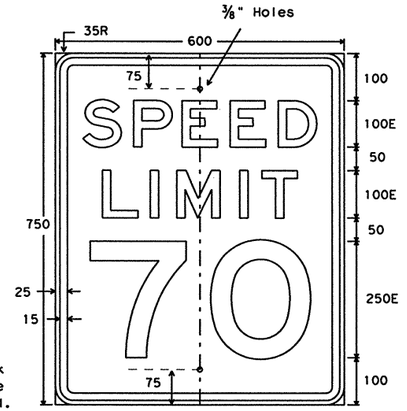


R2-1
600x750

Legend - Black
Background - White Refl.

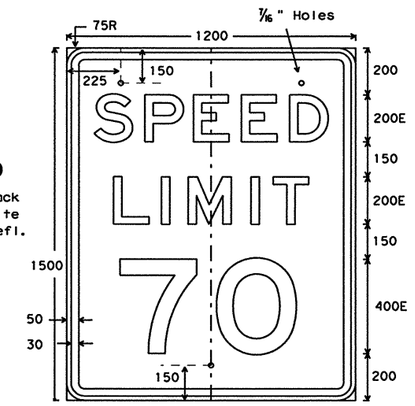


FR2-1
1200x1500

Legend - Black
Background - White Refl.

SPECIFICATION REFERENCE TABLE

| MATERIALS AND TESTS DIVISION SPECIFICATION | |
|---|---|
| PLYWOOD SIGN BLANKS | D-9-7110 |
| REFLECTIVE SHEETING, TYPE A (ENGINEER GRADE) | D-9-8300 |
| VINYL NON-REFLECTIVE DECAL SHEETING | D-9-8320 |

GENERAL NOTES:

The alphabets and lateral spacing between letters and numerals shall conform with the Texas "Manual on Uniform Traffic Control Devices for Streets and Highways", latest edition, and any approved changes thereto. Lateral spacing of text shall provide a balanced appearance. All materials shall conform to Department Specifications.

Legend (except where noted), shall be black and applied by screening process, cut-out vinyl non-reflective decal sheeting or combination thereof. Legend on FR2-3 shall be applied by reverse screening process, cut-out black vinyl non-reflective decal sheeting and/or cut-out white reflective sheeting or combination thereof. Background shall be reflective sheeting (Type A).

Sign blanks shall be one piece 16 mm thick plywood (Type A), unless otherwise noted elsewhere in the plans.

STANDARD PLANS
TEXAS DEPARTMENT OF TRANSPORTATION
*Traffic Operations Division*

# REGULATORY SIGNS

R(4)-98(M)

© TxDOT August 1995

| DN: LR | CK: | DW: DN | CK: | MEG NO.: |
|---|---|---|---|---|

REVISIONS
12-95
4-98

| STATE DISTRICT | FEDERAL REGION | FEDERAL AID PROJECT | SHEET |
|---|---|---|---|
| SAT | 6 | NH 2000(704), etc. | 736 |
| COUNTY | CONTROL | SECTION | JOB | HIGHWAY |
| BEXAR | 2452 | 01 | 036, etc. | LP 1604 |

DN:
CK:
DW:
CK:

DATE:
ACC:
FILE:

LEVELS
FED
1 2 3 4 5 6 7 8 9 10 11 12 13 14 15 16
17 18 19 20 21 22 23 24 25 26 27 28 29 30 31 32
33 34 35 36 37 38 39 40 41 42 43 44 45 46 47 48
49 50 51 52 53 54 55 56 57 58 59 60 61 62 63

DISCLAIMER
The use of this standard is governed by the "Texas Engineering Practice Act". No warranty of any kind is made by TxDOT for any purpose whatsoever. TxDOT assumes no responsibility for the conversion of this standard to other formats or for incorrect results or damages resulting from its use.

CK: CW
DW: DN
CK: MT

ACC: d58hpic/usr/d580504
FILE:

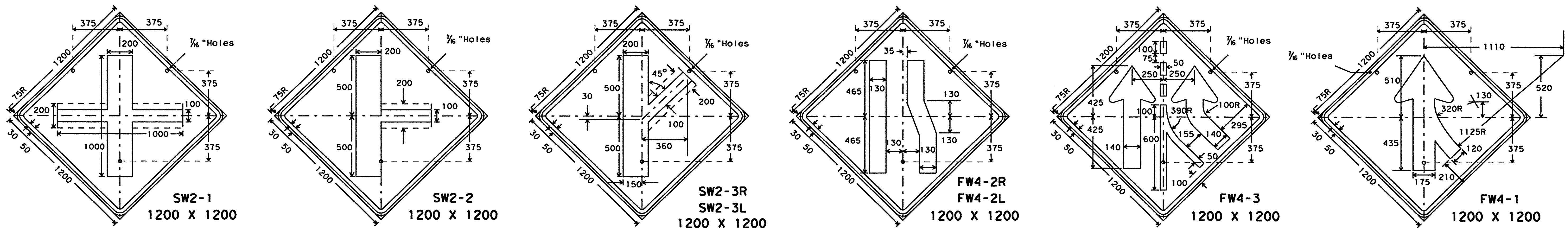


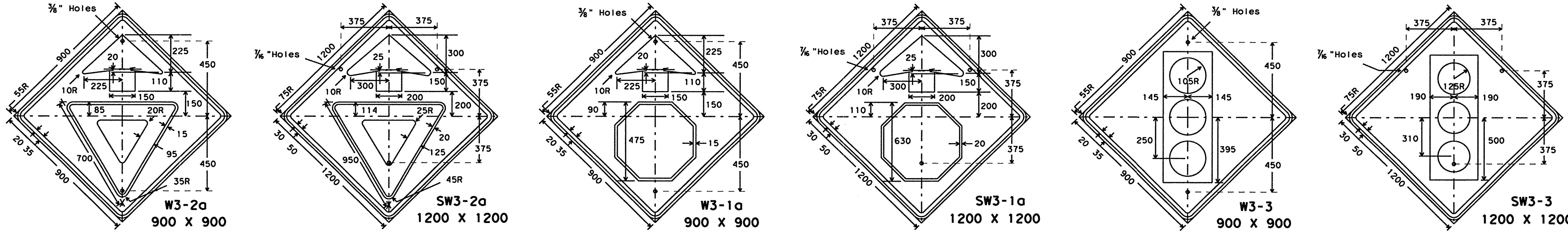


Border and Arrow - Black
Symbol - Red Border Band on White Background (Refl)
Background - Yellow Reflective

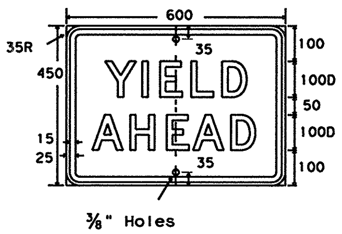


Border and Arrow - Black
Symbol - Red Border Band on White Background (Refl)
Background - Yellow Reflective

Border and Arrow - Black
Symbol - White Border on Red Background (Refl)
Background - Yellow Reflective

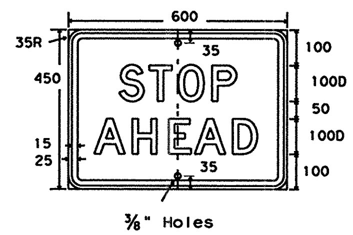


Border and Arrow - Black
Symbol - White Border on Red Background (Refl)
Background - Yellow Reflective

Symbol and Border - Black
Top Circle - Red Reflective
Bottom Circle - Green Reflective
Background - Yellow Reflective

Symbol and Border - Black
Top Circle - Red Reflective
Bottom Circle - Green Reflective
Background - Yellow Reflective

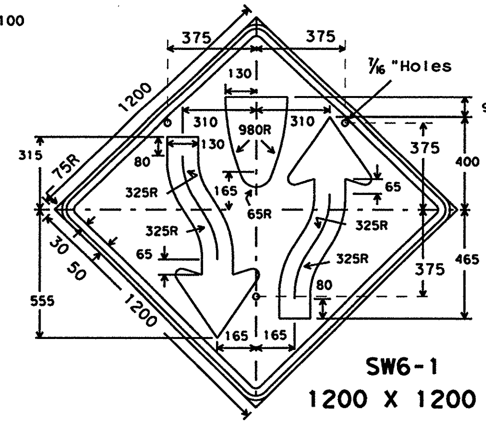


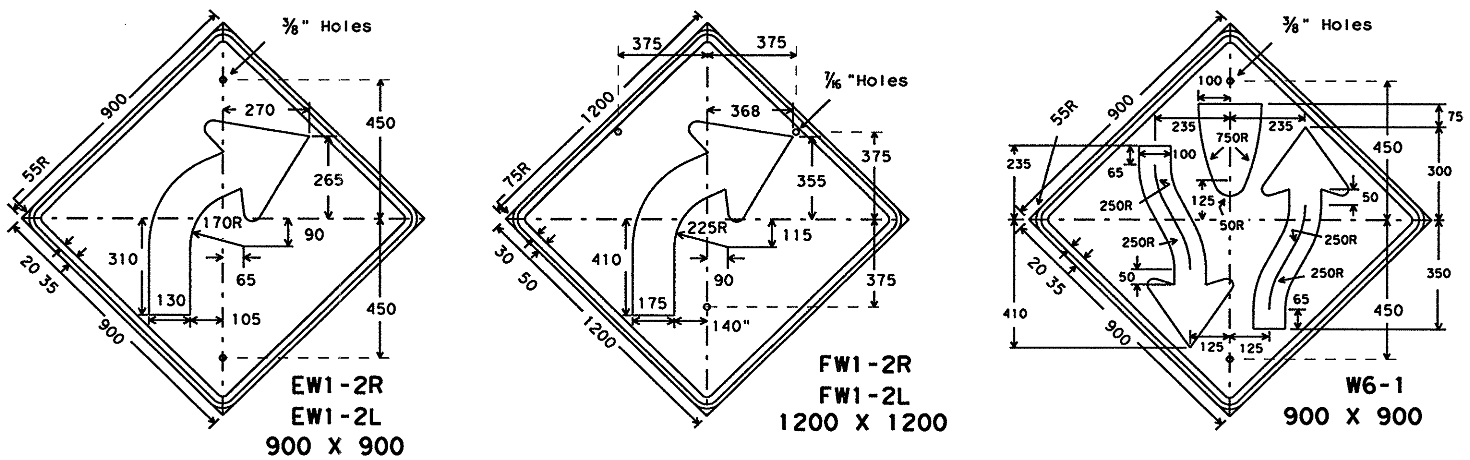


SPECIFICATION REFERENCE TABLE

| | |
|---|---|
| MATERIALS AND TESTS DIVISION SPECIFICATIONS | |
| PLYWOOD SIGN BLANKS | D-9-7100 |
| REFLECTIVE SHEETING, TYPE C (HIGH SPECIFIC INTENSITY) | D-9-8300 |
| VINYL NON-REFLECTIVE DECAL SHEETING | D-9-8320 |

GENERAL NOTES:

The alphabets and lateral spacing between letters and numerals shall conform with the Texas "Manual on Uniform Traffic Control Devices for Streets and Highways", latest edition, and any approved changes thereto. Lateral spacing of text shall provide a balanced appearance. All materials shall conform to Department Specifications.

Legend (except where noted), shall be applied by screening process of black and/or transparent colored ink, cut-out black vinyl non-reflective decal sheeting and/or reflective sheeting or combination thereof. Background shall be yellow reflective sheeting (Type C).

Sign blanks shall be one piece 16 mm thick plywood (Type A), unless otherwise noted elsewhere in the plans.

## ARROWHEAD DETAILS

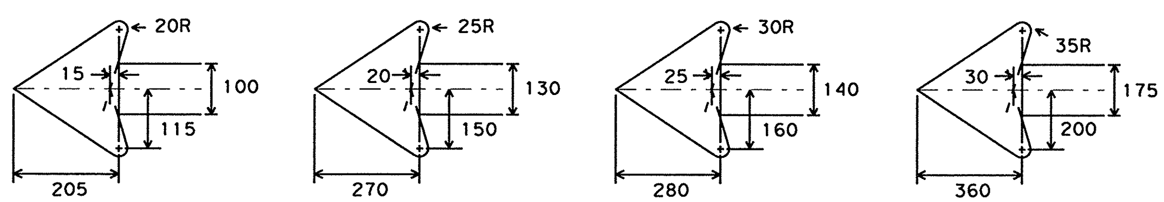


All dimensions are in millimeters unless otherwise noted.

The metric dimensions shown on this sheet have been rounded, and should be considered equivalent to the English dimensions in the "1980 Standard Highway Sign Designs for Texas" manual.

STANDARD PLANS
TEXAS DEPARTMENT OF TRANSPORTATION
*Traffic Operations Division*

# WARNING SIGNS

W(1)-95(M)

| ©TxDOT January 1981 | DN: LR | CK: | DW: DN | CK: | NEG NO.: |
|---|---|---|---|---|---|
| REVISIONS | STATE DISTRICT | FEDERAL REGION | FEDERAL AID PROJECT | | SHEET |
| 1-85 7-90 8-95 | SAT | 6 | NH 2000(704),etc. | | 737 |
| | COUNTY | CONTROL | SECTION | JOB | HIGHWAY |
| | BEXAR | 2452 | 01 | 036,etc. | LP 1604 |

DISCLAIMER
Kind is made by TxDOT for any purpose whatsoever. TxDOT assumes no responsibility for the conversion of this standard to other formats or for incorrect results or damages resulting from its use.

CK: CW
DW: DN
CK: MT
ACC: d58hp1c/usr/d580504
FILE:

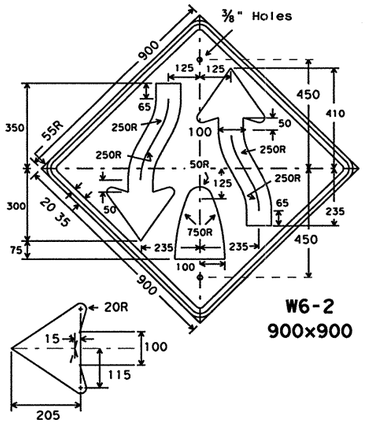


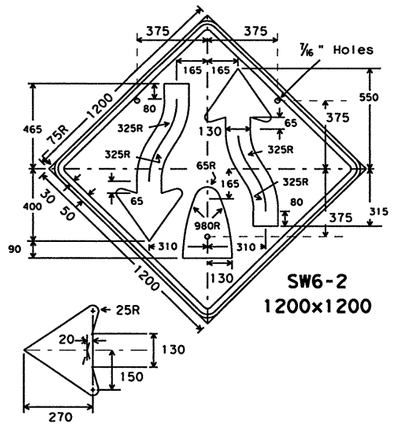


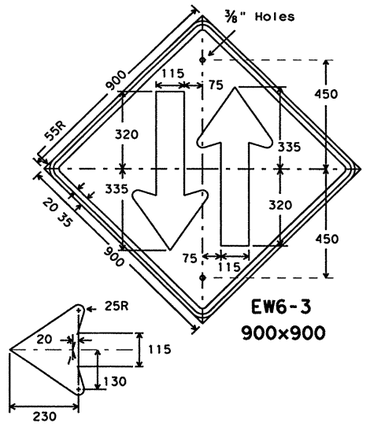


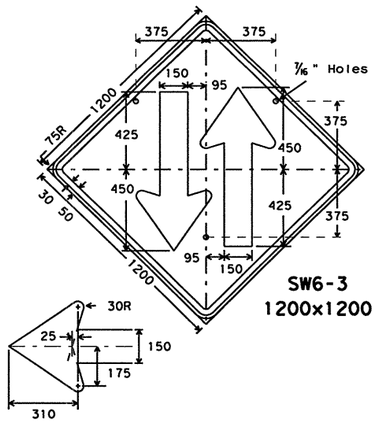


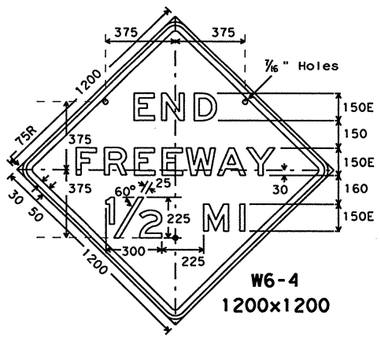


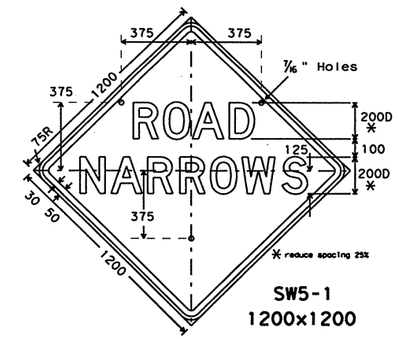


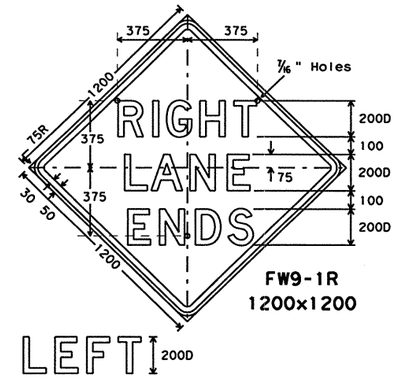


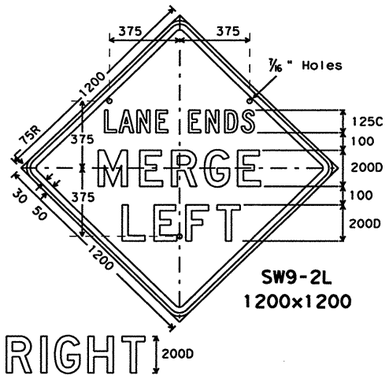


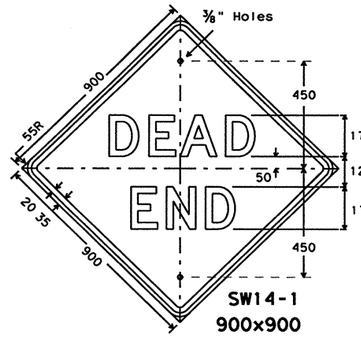


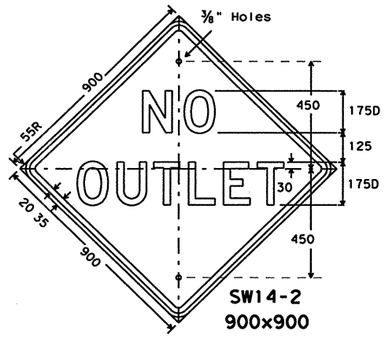


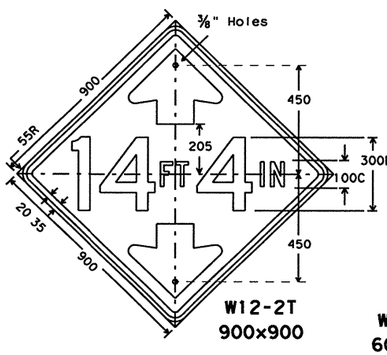


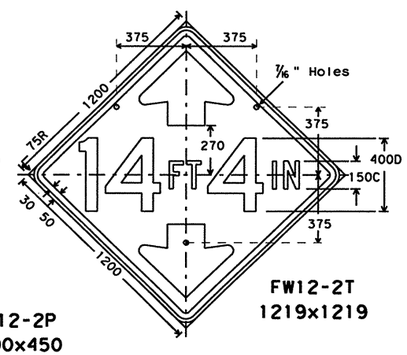


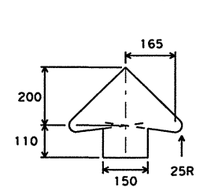


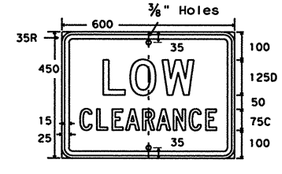


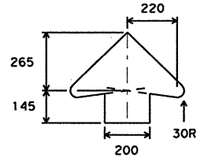

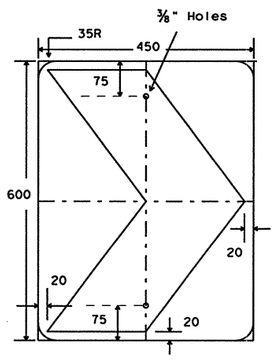


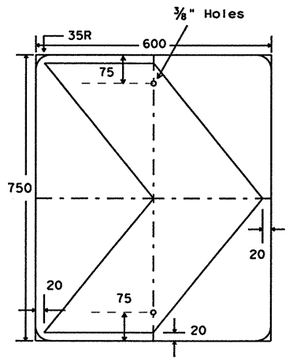


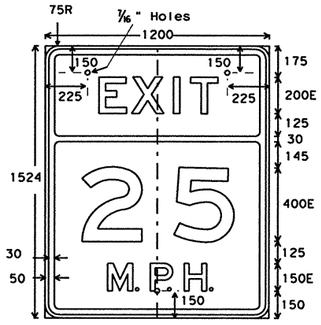


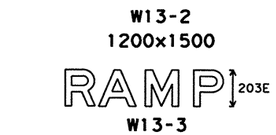


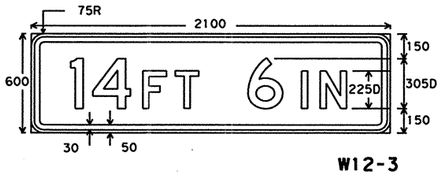


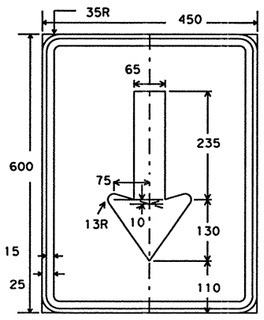


All dimensions are in millimeters unless otherwise noted.

The metric dimensions shown on this sheet have been rounded, and should be considered equivalent to the English dimensions in the "1980 Standard Highway Sign Designs for Texas" manual.

| SPECIFICATION REFERENCE TABLE | |
|---|---|
| MATERIALS AND TESTS DIVISION SPECIFICATIONS | |
| PLYWOOD SIGN BLANKS | D-9-7100 |
| REFLECTIVE SHEETING, TYPE C (HIGH SPECIFIC INTENSITY) | D-9-8300 |
| VINYL NON-REFLECTIVE DECAL SHEETING | D-9-8320 |

GENERAL NOTES:

The alphabets and lateral spacing between letters and numerals shall conform with the Texas "Manual on Uniform Traffic Control Devices for Streets and Highways", latest edition, and any approved changes thereto. Lateral spacing of text shall provide a balanced appearance. All materials shall conform to Department Specifications.

Legend (except where noted), shall be black and applied by screening process, cut-out vinyl non-reflective decal sheeting or combination thereof. Background shall be yellow reflective sheeting (Type C).

Sign blanks shall be one piece 16 mm thick plywood (Type A), unless otherwise noted elsewhere in the plans.

STANDARD PLANS
TEXAS DEPARTMENT OF TRANSPORTATION
*Traffic Operations Division*

# WARNING SIGNS

**W(2)-95(M)**

©TxDOT January 1981

| DW: LR | CK: - | DW: DN | CK: - | MEG NO.: |
|---|---|---|---|---|

REVISIONS
1-82
1-85
7-90
8-95

| STATE DISTRICT | FEDERAL REGION | FEDERAL AID PROJECT | SHEET |
|---|---|---|---|
| SAT | 6 | NH 2000(704), etc. | 738 |

| COUNTY | CONTROL | SECTION | JOB | HIGHWAY |
|---|---|---|---|---|
| BEXAR | 2452 | 01 | 036, etc. | LP 1604 |

Metric 9B

DISCLAIMER
The use of this standard is governed by the "Texas Engineering Practice Act". No warranty of any kind is made by TxDOT for any purpose whatsoever. TxDOT assumes no responsibility for the conversion of this standard to other formats or for incorrect results or damages resulting from its use.

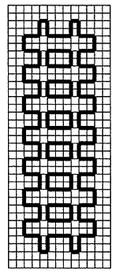

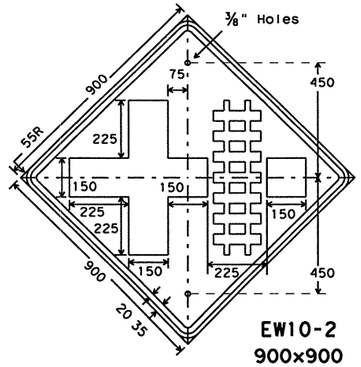


**EW10-2**
**900x900**

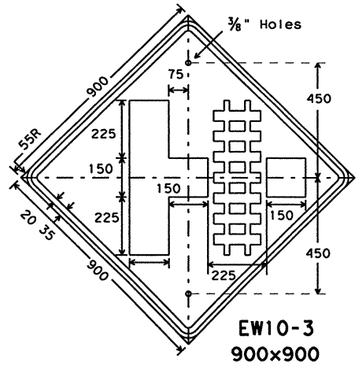


**EW10-3**
**900x900**

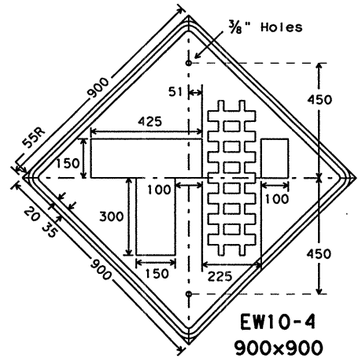


**EW10-4**
**900x900**

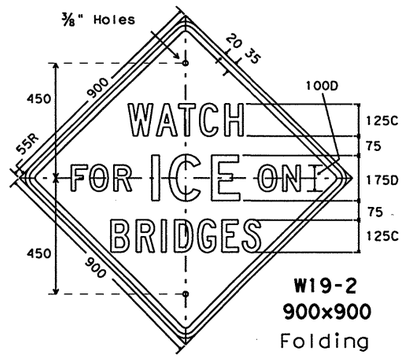


**W19-2**
**900x900**
Folding

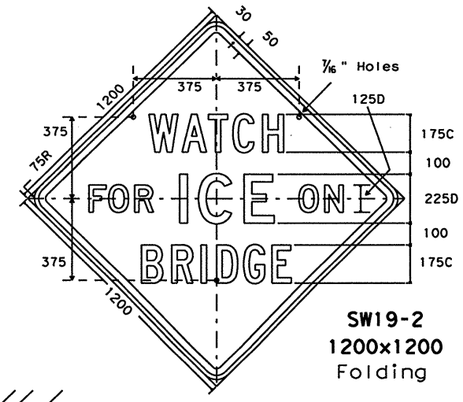


**SW19-2**
**1200x1200**
Folding

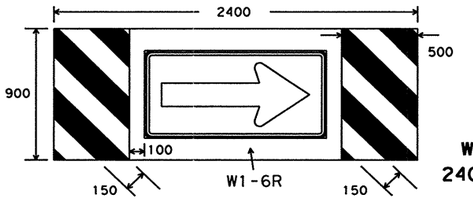


**W1-9R**
**2400x900**

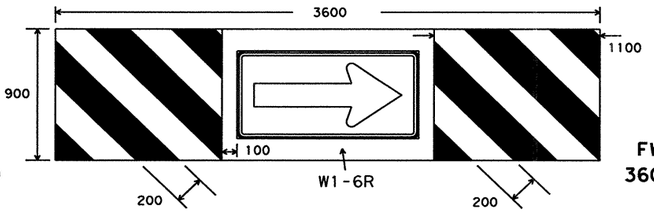


**FW1-9R**
**3600x900**

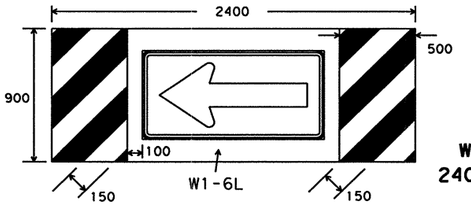


**W1-9L**
**2400x900**

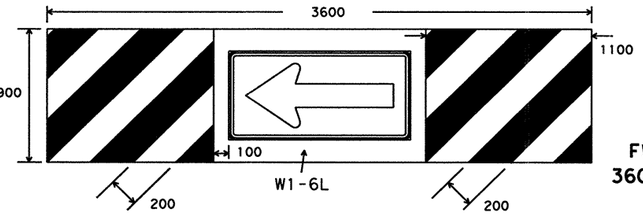


**FW1-9L**
**3600x900**

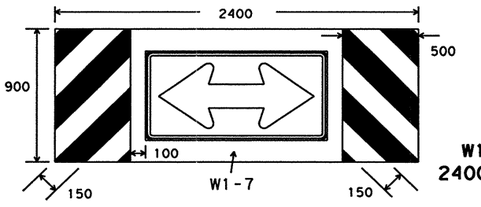


**W1-10**
**2400x900**

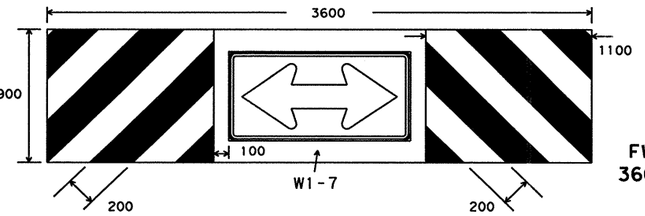


**FW1-10**
**3600x900**

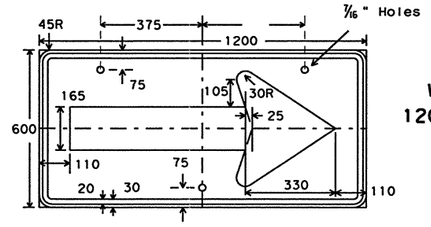


**W1-6**
**1200x600**

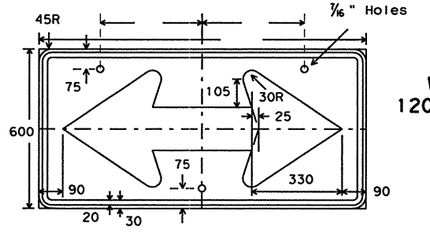


**W1-7**
**1200x600**

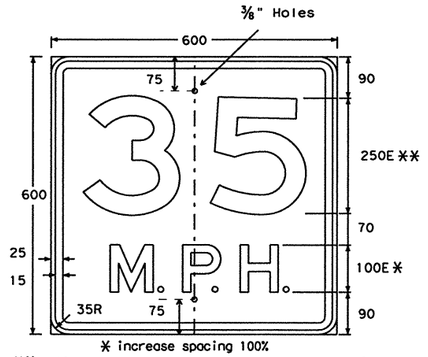


* increase spacing 100%
** optically space numerals about vert. centerline

**SW13-1**
**600x600**

Speed value to be determined at the site by the Engineer.

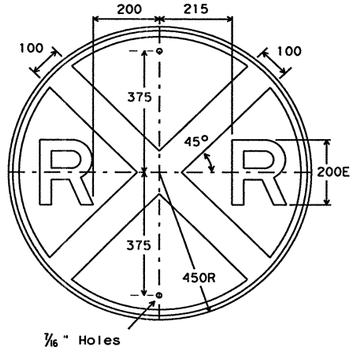


**W10-1**
**900 Diameter**

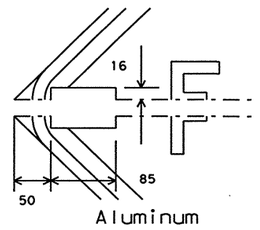


Aluminum

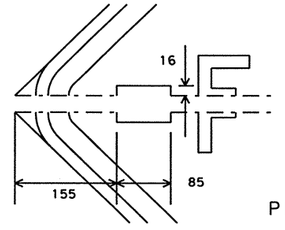


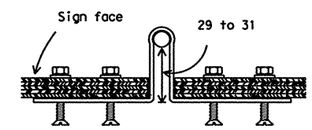


Plywood

## Folding Sign Hinge Details

Aluminum folding signs shall use 3" flat hinges, three per sign. The hinge slot on each half of sign is 16 mm deep by 85 mm wide. The sign halves are seperated by 3 mm when hinges are installed to the back of the sign with four 3/16" pop rivets. Location of hinges on the sign are as shown on above detail.

Plywood folding signs shall use 6" strap hinges, three per sign. The hinge slot on each half of sign is 16 mm deep by 85 mm wide. The hinges are bent with tapered side of holes on the external side, and attached to the back of sign with pivot extending through to front of sign. Attachment of each hinge will be with four each of 10x24x1" flat head screws with a tapered head shank, 5/16"x 3/16" flat washers and 3/16" bolt x 7/16" wrench hex nuts. Hinge bending and location on sign are as shown on above details.

SPECIFICATION REFERENCE TABLE
MATERIALS AND TESTS DIVISION SPECIFICATIONS

| | | |
|---|---|---|
| PLYWOOD SIGN BLANKS | | D-9-7100 |
| ALUMINUM SIGN BLANKS | | D-9-7110 |
| Square Meters | Min. Thickness | |
| Less than 0.7 | 2.0 mm | |
| 0.7 to 1.4 | 2.5 mm | |
| Greater than 1.4 | 3.2 mm | |
| REFLECTIVE SHEETING, TYPE C (HIGH SPECIFIC INTENSITY) | | D-9-8300 |
| VINYL NON-REFLECTIVE DECAL SHEETING | | D-9-8320 |

GENERAL NOTES:

The alphabets and lateral spacing between letters and numerals shall conform with the Texas "Manual on Uniform Traffic Control Devices for Streets and Highways", latest edition, and any approved changes thereto. Lateral spacing of text shall provide a balanced appearance. All materials shall conform to Department Specifications.

Legend (except where noted), shall be black and applied by screening process, cut-out vinyl non-reflective decal sheeting or combination thereof. Background shall be yellow reflective sheeting (Type C).

Sign blanks shall be fabricated as specified in the plans of one piece 16 mm thick plywood (Type A) or one piece aluminum alloy (Type A) of the approved thickness.

Large arrow signs W1-9, W1-10, FW1-9 and FW1-10 shall be composed of a standard W1-6 or W1-7 sign attached directly to the background material.

All dimensions are in millimeters unless otherwise noted. The metric dimensions shown on this sheet have been rounded, and should be considered equivalent to the English dimensions in the "1980 Standard Highway Sign Designs for Texas" manual.

STANDARD PLANS
TEXAS DEPARTMENT OF TRANSPORTATION
*Traffic Operations Division*

# WARNING SIGNS

**W(3)-95(M)**

| | | | | | | | |
|---|---|---|---|---|---|---|---|
| ©TxDOT July 1990 | DN: LR | CK: - | DW: DN | CK: - | | | |
| REVISIONS | STATE DISTRICT | FEDERAL REGION | FEDERAL AID PROJECT | | | | SHEET |
| 8-90 | SAT | 6 | NH 2000(704),etc. | | | | 739 |
| 8-95 | COUNTY | | CONTROL | SECTION | JOB | | HIGHWAY |
| | BEXAR | | 2452 | 01 | 036,etc. | | LP 1604 |

| LEVELS | DN: |
|---|---|
| 1 2 3 4 5 6 7 8 9 10 11 12 13 14 15 16 17 18 19 20 21 22 23 24 25 26 27 28 29 30 31 32 33 34 35 36 37 38 39 40 41 42 43 44 45 46 47 48 49 50 51 52 53 54 55 56 57 58 59 60 61 62 63 | CK: |
| | DW: |
| | CK: |
| | DATE: |
| | ACC: |
| | FILE: |

DISCLAIMER
The use of this standard is governed by the "Texas Engineering Practice Act". No warranty of any kind is made by TxDOT for any purpose whatsoever. TxDOT assumes no responsibility for the conversion of this standard to other formats or for incorrect results or damages resulting from its use.

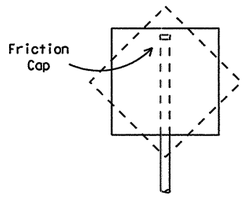


## Type A

This type of mount which uses thin wall tubing or fiberglass reinforced plastic (FRP) pipe may be used to support any sign or combination of signs with a a total area less than the maximum areas given for that support on SMD(1-4) with the exception of the following signs: FR6-1, W1-6 and W1-7. These signs should be mounted on a Type D-1 support.

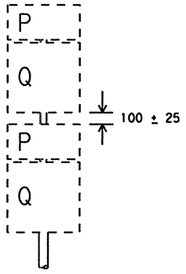


## Type A-1

This type of mount may be used for up to two route markers (along with the appropriate cardinal direction markers). A 900 or 1125mm Interstate route marker may not be used on this support. May be used as a specified optional substriture for Type B. Post shall be DN65 Sch. 10.

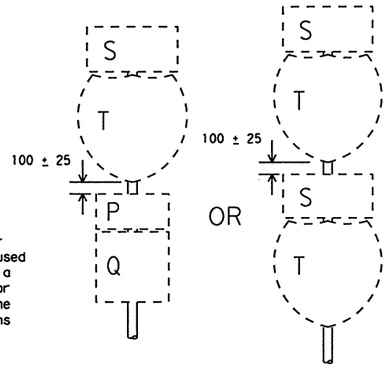


## Type A-2

This type of mount may be used for up to two route markers (along with the appropriate cardinal direction markers). 900 or 1125mm Interstate route markers are allowable on this support. May be used as a specified optional substriture for Type B. Post shall be DN65 Sch. 80.

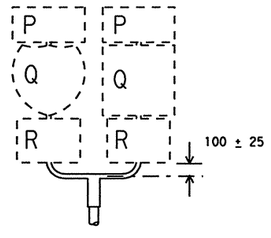


## Type B

This type of mount may be used with two route markers (along with the appropriate cardinal direction markers). A 900 or 1125mm Interstate route marker may not be used on this support. Post shall be DN65 Sch. 10.

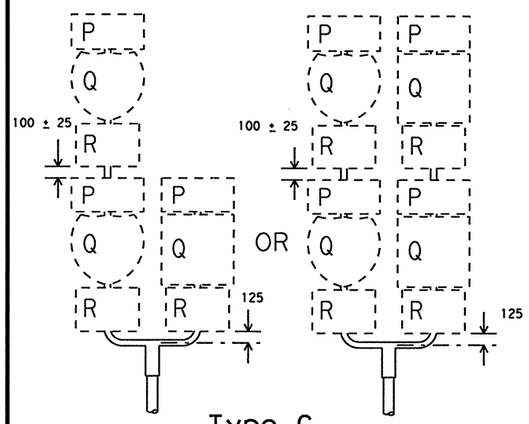


## Type C

This type of mount is to be used when 3 or 4 route markers are required. If a 900 or 1125mm Interstate route marker is required, it shoud be mounted independently using a Type A mount or in conjunction with another 900 or 1125mm Interstate route marker using a Type A-2 mount. Post shall be DN65 Sch. 80.

P = 600x300 Cardinal Direction Marker
$Q_1$ = 600x600 Interstate, US or State Route Marker
$Q_2$ = 750x600 Interstate or US Route Marker
R = 525x375 Direction Arrow
S = 750x375 Cardinal Direction Marker
$T_1$ = 900x900 (2) digit Interstate Route Marker
$T_2$ = 1125x900 (3) digit Interstate Route Marker

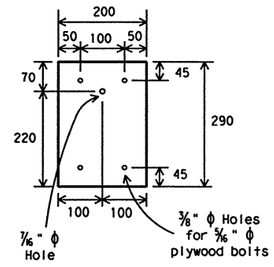


## Splice Plate

Splice plates shall be 3mm steel plate (ASTM A36) or 3mm aluminum plate (ASTM B209 ALLOY 6061-T6 or 5052-H38). Steel shall be galvanized in accordance with ASTM A123.

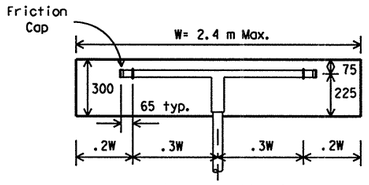


## Type D-1

1. Mounting clamps are spaced 700 mm apart for "ONE WAY" signs (FR6-1, 1200x400). Top of sign is 200mm above centerline of "T" bar.
2. For "LARGE ARROW" signs (W1-6, 1200x600), mounting clamps are spaced 750mm apart.
3. Prefabricated DN50 thin wall "T" mounted on a DN65 Sch. 10 post.

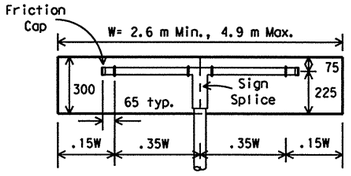


## Type D-3

Prefabricated DN50 thin wall "T" mounted on a DN65 Sch. 10 post.

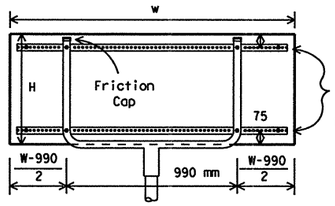


## Type D-2

Prefabricated DN50 thin wall "U" mounted on a DN65 Sch. 10 post.

| MOUNT TYPE | H | W Min | W Max |
|---|---|---|---|
| D-2 | 600 mm | n/a | 2.4 m |
| | 750 mm | n/a | 2.0 m |
| | 900 mm | n/a | 1.7 m |
| D-4 | 600 mm | 2.6 m | 4.1 m |
| | 750 mm | 2.4 m | 3.4 m |
| | 900 mm | 1.8 m | 2.7 m |

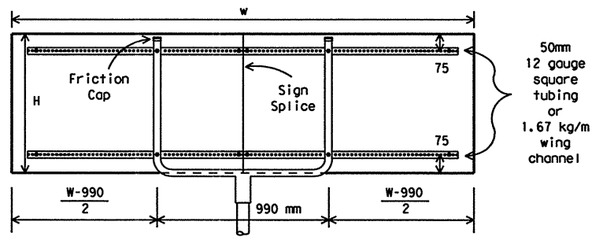


## Type D-4

Prefabricated DN50 thin wall "U" mounted on a DN65 Sch. 80 post.

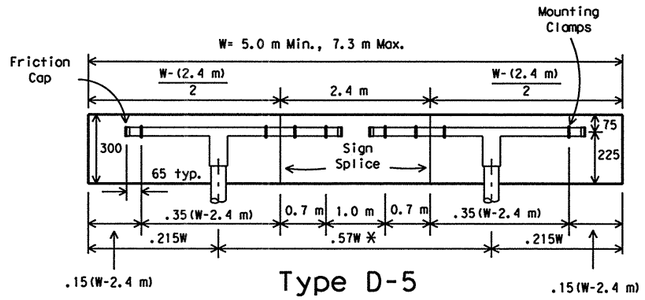


## Type D-5

1. Post spacing may vary ± 5% of total sign width to fit field conditions.
2. Prefabricated DN50 thin wall "T" mounted on a DN65 Sch 10 post.

NOTES: (FOR TYPES D-1 THROUGH D-5)
1. Splice plate required on D-3 and D-5 mounts.
2. Sign blanks shall be 16mm thick plywood conforming with Departmental Material Specification D-9-7100, unless otherwise noted elsewhere in the plans.

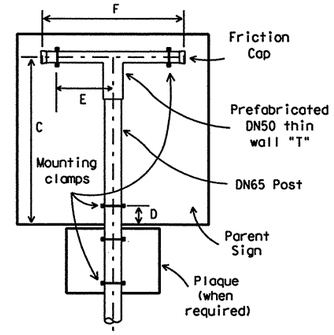


## Type F

| Type of Sign | | DN65 Post | C | D | E | F | |
|---|---|---|---|---|---|---|---|
| Regulatory Signs | SR1-1 | SCH 10 | 975 | 225 | 375 | 875 | |
| | FR1-2 | SCH 10 | 1075 | 525 | 275 | 675 | |
| | 900x1200 | SCH 10 | 1050 | 150 | 225 | 575 | |
| | 1200x900 | SCH 10 | 750 | 150 | 375 | 875 | |
| | 1200x1200 | SCH 10 | 1050 | 150 | 375 | 875 | 1 2 |
| | 1200x1500 | SCH 80 | 1350 | 150 | 300 | 725 | 2 |
| Warning Signs | 1200x1200 | SCH 10 | 1225 | 475 | 375 | 875 | 1 |
| | 1200x1500 | SCH 80 | 1350 | 150 | 300 | 725 | |
| School Signs | SS1-1 | SCH 10 | 750 | 150 | 300 | 725 | 3 |
| | SS2-1 | SCH 10 | 750 | 150 | 300 | 725 | 3 |

1. Includes parent signs of this size which have supplementary plaque. Example: when "DO NOT ENTER" sign (SR5-1, 1200x1200) is mounted in combination with the "RAMP" plaque (R5-1T, 1200x450), the "DO NOT ENTER" sign is mounted as a 1200x1200 regulatory sign and the "RAMP" sign is mounted as a plaque.
2. "SPEED LIMIT" signs FR2-2, FR2-3 AND FR2-4 are mounted only in combination with "SPEED LIMIT" sign FR2-1 on Type G mount. "TRUCK SPEED LIMIT" sign (FR2-2A, 1200x1800) is to be mounted independently on Type G mount, see standard SMD (TY G) for details. When "WRONG WAY" sign (SR5-1A, 1200x900) is mounted in combination with "DO NOT ENTER" sign (SR5-1, 1200x1200), Type G mount is used.
3. "SCHOOL ADVANCE" (SS1-1, 1200x1200) and "SCHOOL CROSSING" (SS2-1, 1200x1200) symbol signs shall be mounted on a Type F mount.

SIGN SUPPORTS SHALL NOT BE SPLICED EXCEPT AS SHOWN ELSEWHERE ON SMD STANDARDS

All dimensions are in millimeters unless otherwise noted.

STANDARD PLANS
TEXAS DEPARTMENT OF TRANSPORTATION
*Traffic Operations Division*

# SIGN MOUNTING DETAILS SMALL ROADSIDE SIGNS

## SMD(1-1)-98M

© TxDOT August 1995

| DN: GRB | CK: JDM | DW: FDN | CK: DTN |
|---|---|---|---|

| REVISIONS | STATE DISTRICT | FEDERAL REGION | FEDERAL AID PROJECT | SHEET |
|---|---|---|---|---|
| 1-97 | SAT | 6 | NH 2000(704),etc. | 740 |
| 12-98 | COUNTY | | CONTROL / SECTION / JOB | HIGHWAY |
| 1-99 | BEXAR | | 2452 / 01 / 036,etc. | LP 1604 |

DN: CK: DW: CK:
LEVELS
FD DATE: ACC: FILE:

DISCLAIMER
The use of this standard is governed by the "Texas Engineering Practice Act". No warranty of any kind is made by TxDOT for any purpose whatsoever. TxDOT assumes no responsibility for the conversion of this standard to other formats or for incorrect results or damages resulting from its use.

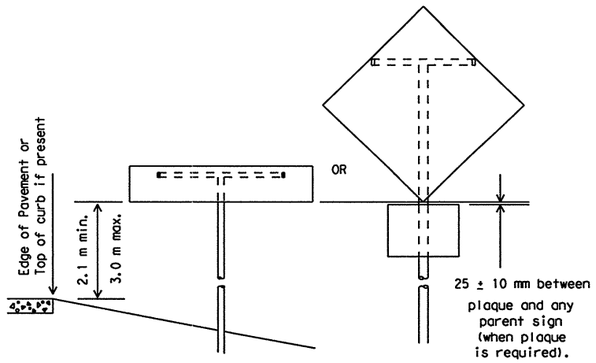


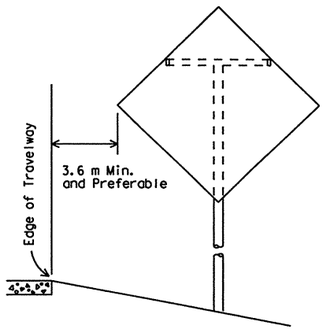


Rural Conventional Highway
without shoulder.

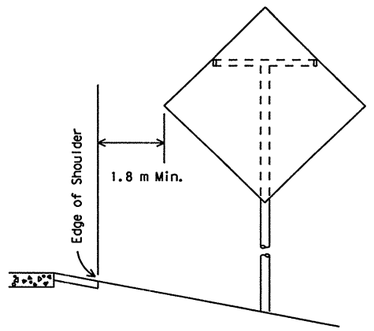


Rural Conventional Highway
with shoulder.

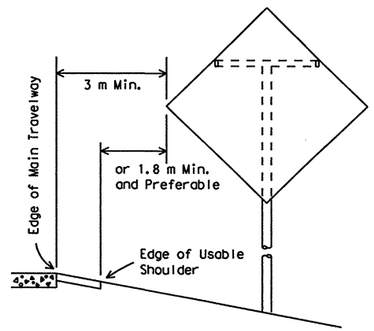


Expressways or Freeways
without curb or with mountable curb.

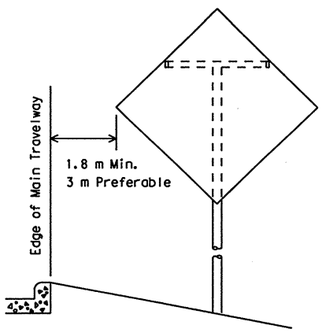


Expressways or Freeways
with unmountable curb.

## LATERAL CLEARANCE OF SMALL SIGNS TO THE RIGHT OR LEFT SIDE OF ROADWAY

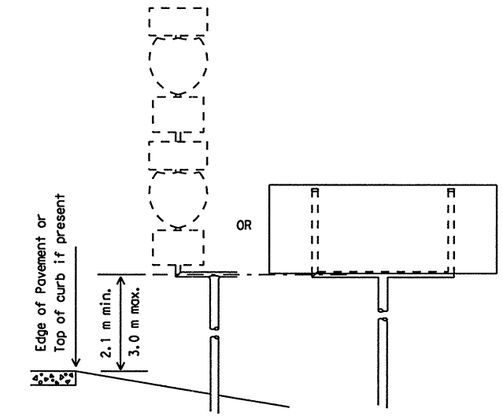


## VERTICAL CLEARANCE OF SMALL SIGNS ALL TYPES OF ROADWAYS

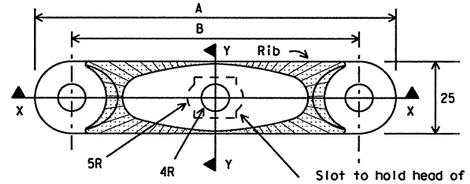


Slot to hold head of 5/16" sq. head bolt. The bolt shall be 1" long for metal signs and 1 3/4" long for plywood signs, with full threads, a medium washer, and galv. steel or aluminum self-locking hex head nut. The bolt head must not turn in slot.

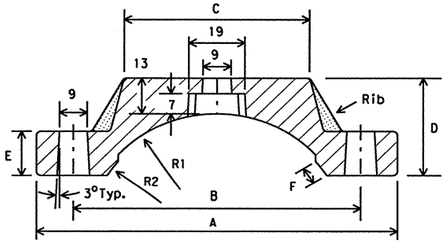


Section X-X

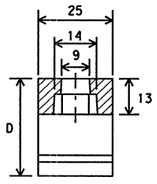


Section Y-Y

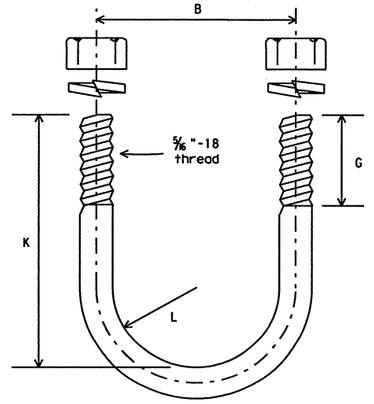


### U-Bolt

U-Bolt to be made in accordance with standard manufacturing procedure. 9/32" dia. stock is permissible. American standard regular semi-finished hex. nuts and spring lockwashers.

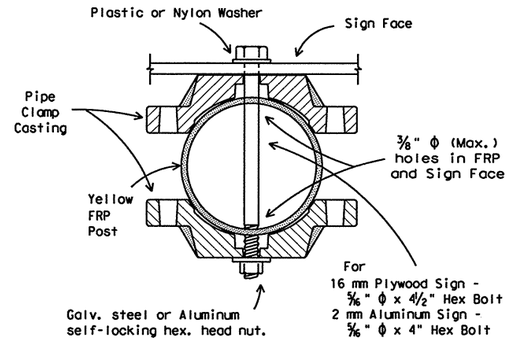


NOTE: Type A support shall be pipe or Yellow FRP. FRP mounts shall meet Departmental Material Specification D-9-4410.

### Typical Detail
### Yellow Fiberglass Reinforced Plastic (FRP) Mounting

GENERAL NOTES:

1. All clearances apply to both rural and urban locations, except as noted.
2. Where physical features of the roadway will permit, maximum lateral clearances are desirable. For frontage roads, ramps and other connecting roadways, lesser clearances may be used, but generally no less than 1.8 meters is recommended between the edge of the traveiway and the edge of the sign. At intersections, signs should be positioned in the optimum location for viewing by traffic.
3. Where necessary, the minimum allowable clearance of .6 meter may be used in urban locations on conventional highways.
4. Where a sign is to be located behind guardrail, the allowable minimum clearance may be used, measured from the face of the guardrail to the near edge of the sign.
5. Lateral clearances of signs mounted on left side of roadway are the same as shown above where space will permit.

All dimensions are in millimeters unless otherwise noted.

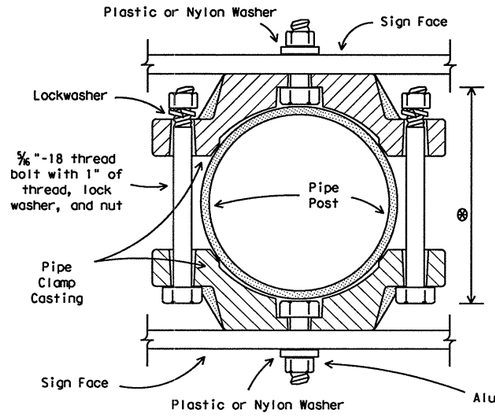


⊗ Approx. Bolt Length ~ Pipe Size

| | |
|---|---|
| 2⅛" | DN32 |
| 2⅝" | DN40 |
| 2⅝" | DN50 |
| 2½" | DN65 |
| 3⅛" | DN80 |

Bolt Length to be adjusted to fit field conditions.

### Typical Detail
### Back to Back Mounting of Signs

### Pipe Clamp Casting

Pipe clamp casting shall be ASTM B26 or B108 aluminum alloy A444.0-T4 or 356.0-F.

All sign mounting clamp parts not made from aluminum shall be galvanized steel in conformance with ASTM A153 Class A or stainless steel.

All dimensions have been rounded. The metric dimensions indicated should be considered equivalent to the English dimensioned clamp.

Dimensions for Mounting Clamp

| Standard Pipe Size | A | B | C | D | E | F | G | K | L | R1 | R2 |
|---|---|---|---|---|---|---|---|---|---|---|---|
| DN32 | 78 | 53 | 19 | 24 | 11 | 5 | 16 | 54 | 21 | 23 | 21 |
| DN40 | 83 | 58 | 25 | 27 | 11 | 5 | 16 | 62 | 25 | 25 | 24 |
| DN50 | 95 | 70 | 38 | 29 | 13 | 5 | 25 | 68 | 31 | 32 | 30 |
| DN65 | 108 | 82 | 51 | 32 | 13 | 6 | 25 | 81 | 37 | 38 | 36 |
| DN80 | 124 | 98 | 64 | 35 | 16 | 6 | 25 | 97 | 45 | 46 | 44 |

All dimensions shown in chart are in millimeters.

## MOUNTING CLAMP DETAILS

All dimensions on this sheet are in millimeters unless otherwise noted.

LEVELS
1 3 4 5 6 7 8 9 10 11 12 13 14 15 16
17 18 19 20 21 22 23 24 25 26 27 28 29 30 31 32 33 34
33 34 35 36 37 38 39 40 41 42 43 44 45 46 47 48
49 50 51 52 53 54 55 56 57 58 59 60 61 62 63

DN:
CK:
DW:
CK:
DATE:
ACC:
FILE:

**STANDARD PLANS**
**TEXAS DEPARTMENT OF TRANSPORTATION**
*Traffic Operations Division*

# SIGN MOUNTING DETAILS SMALL ROADSIDE SIGNS

## SMD(1-2)-98(M)

© TxDOT August 1995

| DN: LR | CK: - | DW: DN | CK: MT | MSG NO.: |
|---|---|---|---|---|

| REVISIONS | STATE DISTRICT | FEDERAL REGION | FEDERAL AID PROJECT | | | SHEET |
|---|---|---|---|---|---|---|
| 1-97 | SAT | 6 | NH 2000(704),etc. | | | 741 |
| 4-98 | COUNTY | | CONTROL | SECTION | JOB | HIGHWAY |
| | BEXAR | | 2452 | 01 | 036,etc. | LP 1604 |

DISCLAIMER
The use of this standard is governed by the "Texas Engineering Practice Act". No warranty of any kind is made by TxDOT for any purpose whatsoever. TxDOT assumes no responsibility for the conversion of this standard to other formats or for incorrect results or damages resulting from its use.

## TEXAS UNIVERSAL TRIANGULAR SLIP BASE

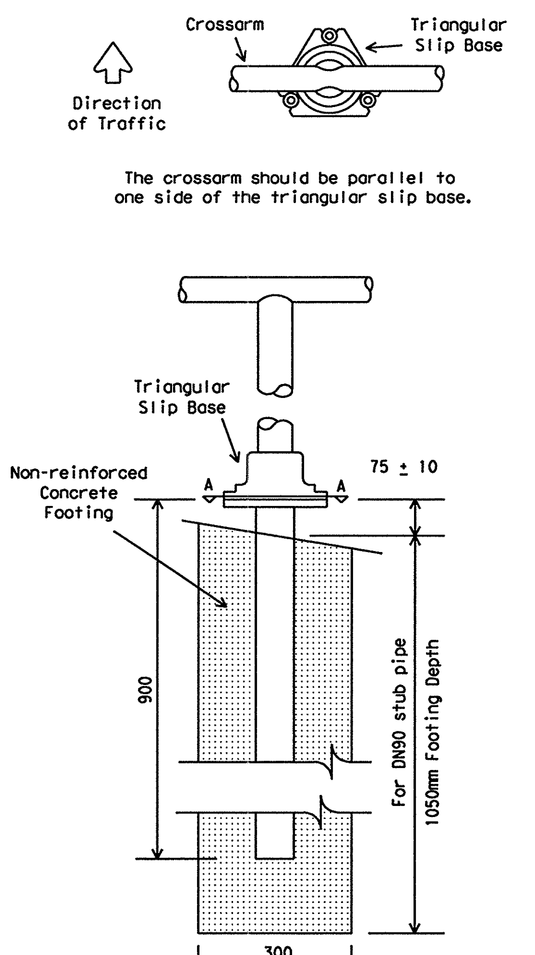


Texas Universal Triangular Slip Base shall be used for signs supported on DN65 pipe posts.

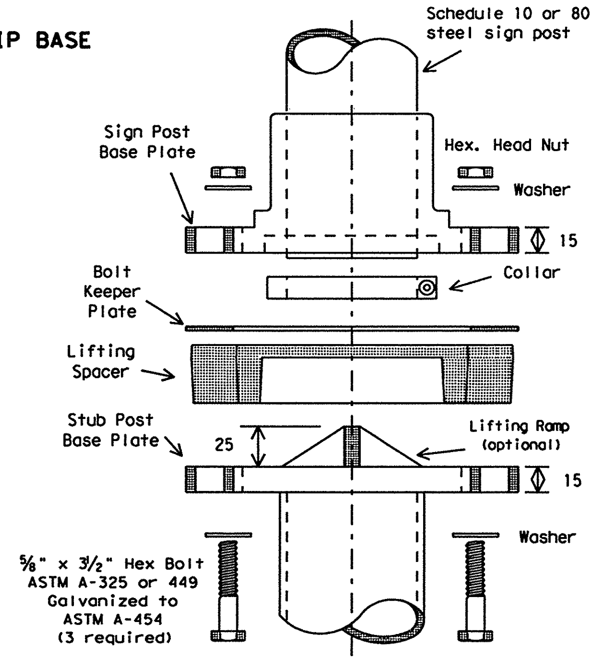


**NOTE: If stub post base plate does not have lifting ramp, lifting spacer should be deleted from assembly, unless plumbing shims are required.**

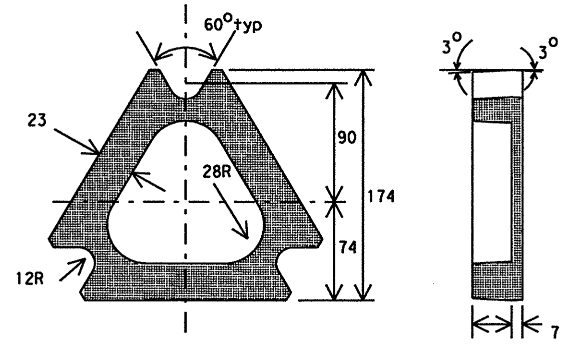


### LIFTING SPACER

100% Recycled ABS or Polycarbonate

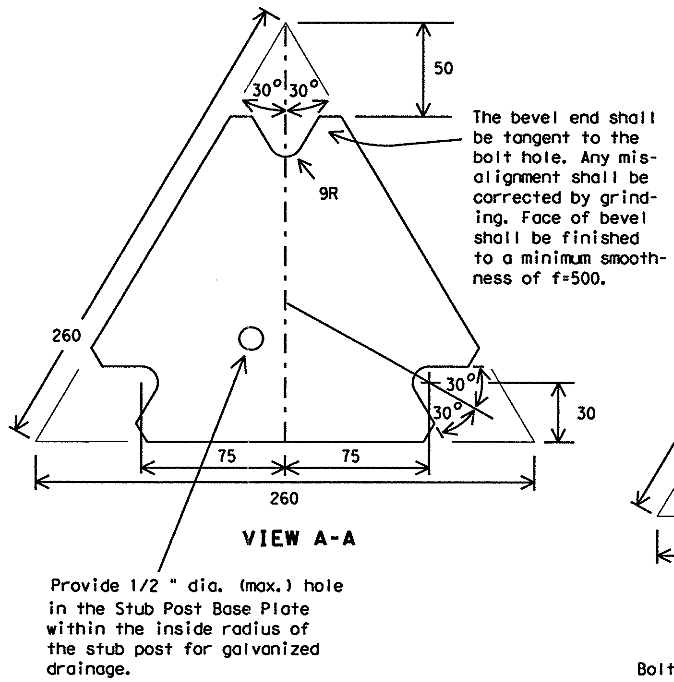


### VIEW A-A

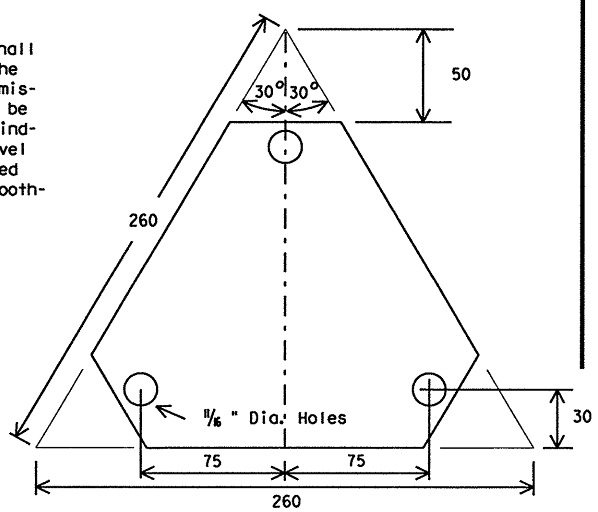


### BOLT KEEPER PLATE

Bolt Keeper Plate shall be 30 gauge galvanized steel.

## PREFABRICATED T'S AND U'S

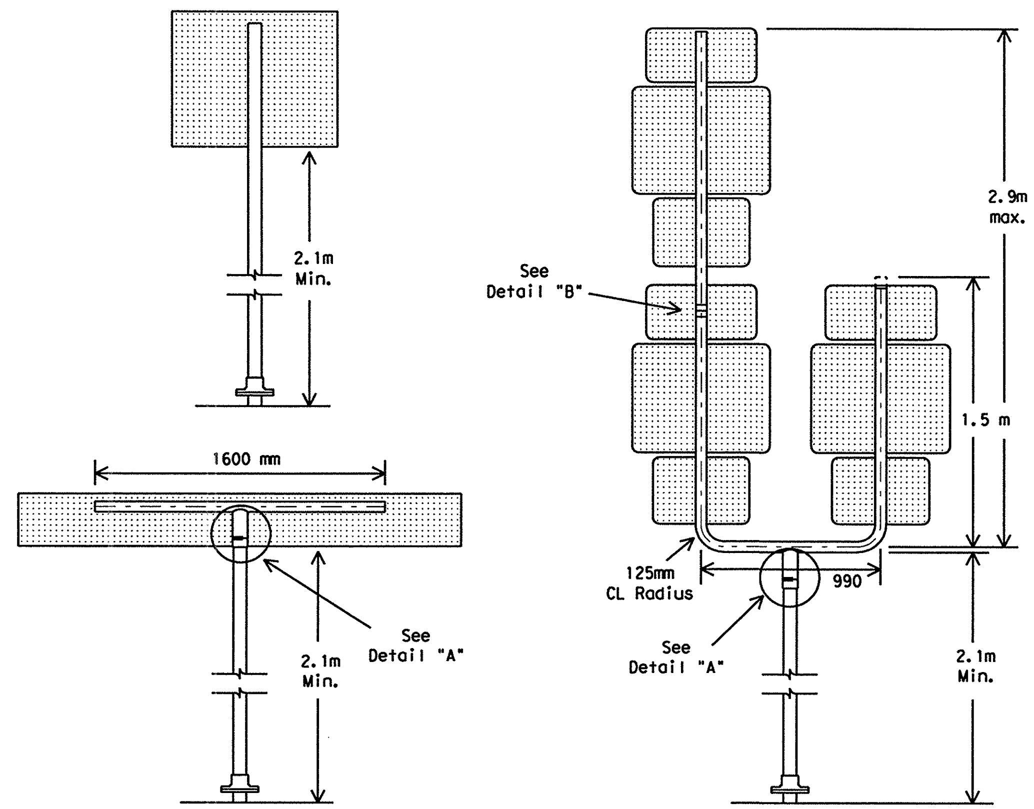


**Refer to SMD(1-1) for "T" and "U" pipe lengths and marker combinations.**

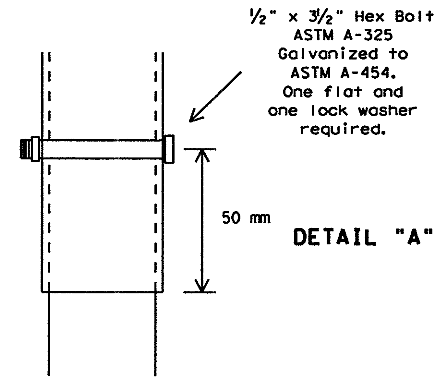


### DETAIL "A"

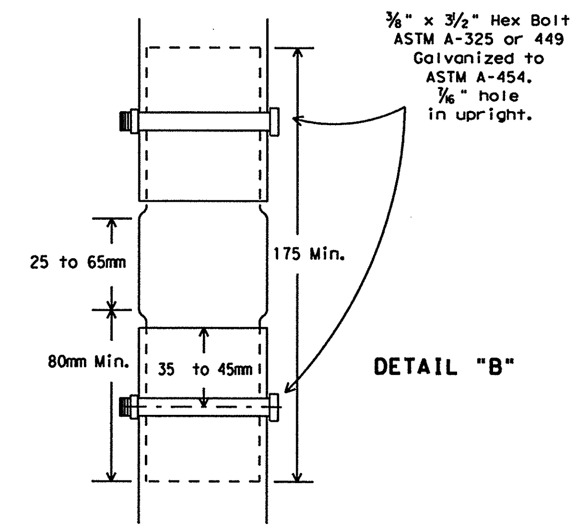


### DETAIL "B"

NOTE:
1. 60 mm OD x 2.4 mm wall tubing swaged to 52 mm OD.
2. Splices will only be allowed behind the sign substrate.

GENERAL NOTES:

Support and design shall conform with AASHTO Standard Specifications for structural supports of Highway signs, luminaires and traffic signals with a design wind speed of 70 mph.

Steel pipe shall be galvanized in accordance to ASTM Designation A123.

Where solid rock is encountered at ground level, the foundation shall be a minimum depth of 450mm. When solid rock is encountered below ground level, the foundation shall extend into the solid rock a minimum depth of 450mm or provide a minimum foundation depth of 750mm. Only concrete foundations shall be used in rock.

TRIANGULAR SLIP BASE NOTES:

1. The Sign Post Base Plate of the Triangular Slip Base shall have the same exterior dimensions as the bottom plate.

2. The Base Plates shall conform with the requirements of ASTM-A36, A441 or A572 Grade 50.

3. All structural steel shall be galvanized in accordance with ASTM A153. The entire support shall be galvanized from the top down to a minimum depth of 6 inches into the foundation. All nuts, bolts and washers shall be galvanized in accordance with the zinc specification of ASTM B454.

4. All high strength bolts shall conform to ASTM-A325 (ASTM A449 may be substituted for ASTM-A325 provided proper bolt head, nut and/or washer clearances are maintained). All high strength nuts shall be of such capacity as to develop the bolt strength.

BOLTING PROCEDURE FOR ASSEMBLY OF BASE CONNECTION:

1 Assemble Sign Post, Bolt Keeper Plate and Stub Post with bolts and flat washers as shown.

2 Shim as required to plumb post. If shims are needed lifting spacer must be used. Shims shall be placed between stub post base plate and lifting spacer.

3 Tighten all bolts the maximum possible with a 300 to 375mm wrench to clean bolt threads and to bed washers and shims.

4 Loosen each bolt in sequence and retighten bolts in a systematic order to the prescribed torque of 54 newton-meters. DO NOT OVERTIGHTEN.

5 To prevent nut loosening, burr threads of bolt at junction with nut using a center punch.

All dimensions are in millimeters unless otherwise noted.

**STANDARD PLANS**
***Texas Department of Transportation***
*Traffic Operations Division*

# SIGN MOUNTING DETAILS SMALL ROADSIDE SIGNS

## SMD(1-3)-98M

| ©TxDOT August 1995 | DN: - GRB | CK: - JDM | DW: - FDN | CK: - DTN |
|---|---|---|---|---|

| REVISIONS | STATE DISTRICT | FEDERAL REGION | FEDERAL AID PROJECT | | | SHEET |
|---|---|---|---|---|---|---|
| 1-96 1-97 | SAT | 6 | NH 2000(704),etc. | | | 742 |
| 12-98 1-99 | COUNTY | | CONTROL | SECTION | JOB | HIGHWAY |
| | BEXAR | | 2452 | 01 | 036,etc. | LP 1604 |

Metric 26C

DISCLAIMER
The use of this standard is governed by the "Texas Engineering Practice Act". No warranty of any kind is made by TxDOT for any purpose whatsoever. TxDOT assumes no responsibility for the conversion of this standard to other formats or for incorrect results or damages resulting from its use.

## UNIVERSAL ANCHOR SYSTEM TYPE A

For FRP or Thin Wall Tubing

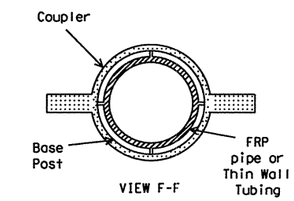


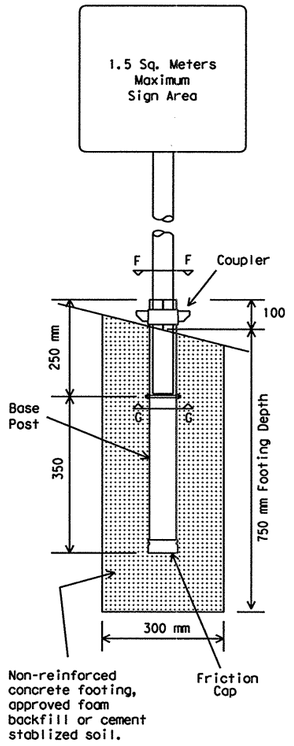


## BOLT DOWN SIGN SUPPORT TYPE A

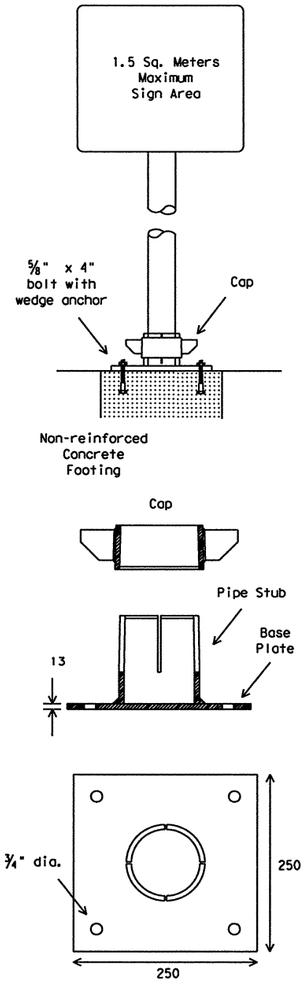


## TEXAS UNIVERSAL TRIANGULAR SLIP BASE

**Types A, A-1, A-2, B, C, D-1, D-2, D-3, D-4, D-5 and F. For additional information on types, refer to SMD(1-1).**

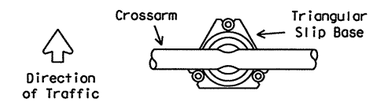


The crossarm should be parallel to one side of the triangular slip base.

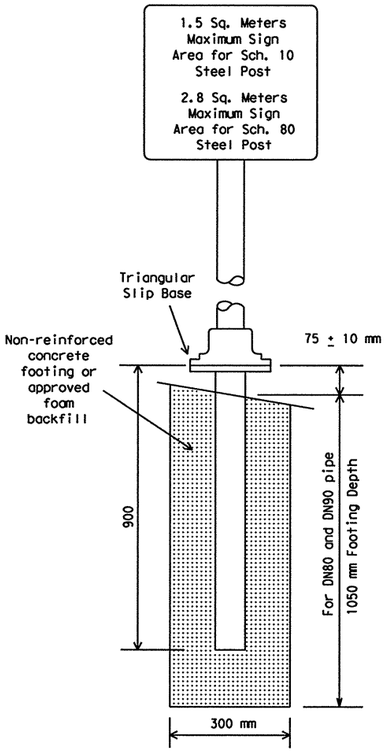


Triangular Slip Base shall be used for signs supported on DN65 pipe posts.

## PERFORATED SQUARE METAL TUBING (DRIVEABLE) TYPE U

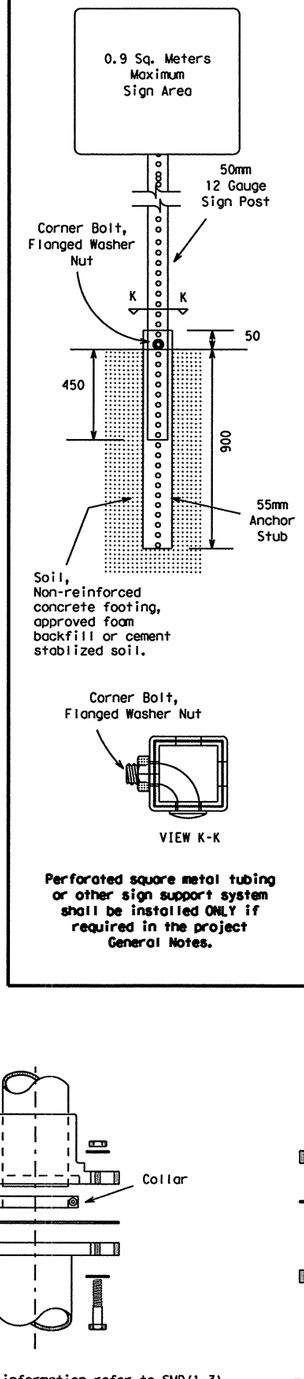


**Perforated square metal tubing or other sign support system shall be installed ONLY if required in the project General Notes.**

## WEDGE ANCHOR THIN WALL (DRIVEABLE) TYPE A

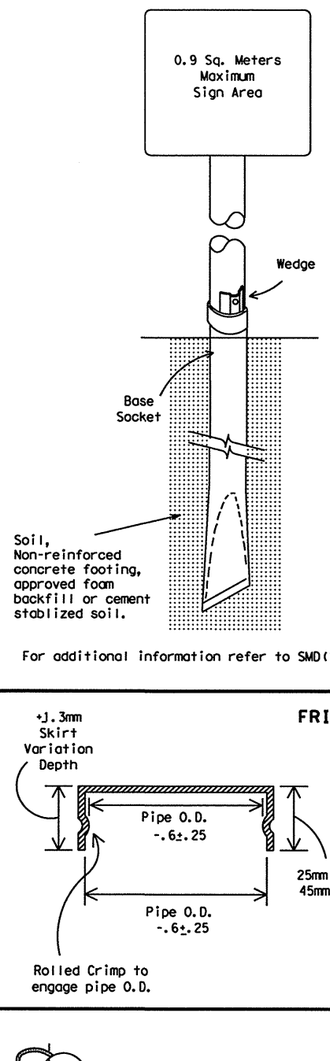


For additional information refer to SMD(1-5)

GENERAL NOTES:

The project General Notes may specify a particular sign support.

Support and design shall conform with AASHTO Standard Specifications for structural supports of Highway signs, luminaires and traffic signals with a design wind speed of 60 mph.

Steel pipe shall be galvanized in accordance to ASTM Designation A123.

Where solid rock is encountered at ground level, the foundation shall be a minimum depth of 450 mm. When solid rock is encountered below ground level, the foundation shall extend into the solid rock a minimum depth of 450 mm or provide a minimum foundation depth of 750 mm. Only concrete foundations shall be used in rock.

FRP SUPPORTS

Materials and fabrication shall conform to the requirements of Department Material Specification D-9-4410 and will be furnished in a yellow or gray color as specified elsewhere in the plans.

Thickness of FRP sign support is 3.2 mm + 0.8 mm, - 0.0 mm.

For FRP sign supports, all bolts, nuts, screws, washers and other miscellaneous hardware, shall be type 304 stainless steel or galvanized in accordance to ASTM Designation: A-153, Class C or D, B-695 Class 50 or B633 Class FE/ZN 8 unless otherwise specified.

FRP sign supports for a single type sign support may be used for signs up to and including 1.5 square meters. Dual post installation may be used for signs up to and including 3.0 square meters.

FRP sign supports are prequalified by the Traffic Operations Division. Prequalification procedures are obtained by writing:

TX DOT
Traffic Operations Division
125 E. 11th Street
Austin, Tx 78701-2483.

## FRICTION CAP DETAIL

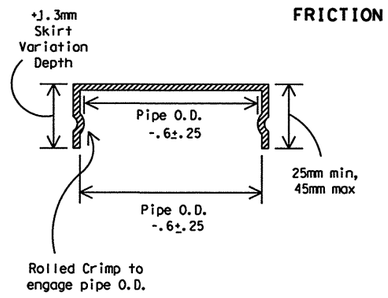


Friction caps may be manufactured from hot rolled or cold rolled steel sheets. The minimum sheet metal thickness shall be 0.61 mm for all cap sizes.

The rim edges shall be reasonably straight and smooth. Caps shall be sized and formed in such a manner as to produce a drive-on friction fit and have no tendency to rock when seated on the pipe. The depth shall be sufficient to give positive protection against entrance of rainwater. They shall be free of sharp creases or indentations and show no evidence of metal fracture.

Caps shall have an electrodeposited coating of zinc in accordance with the requirement of ASTM B633 Class FE/ZN 8.

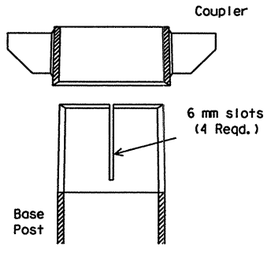


NOTE: When Thin Wall Tubing is used, rubber insert must be placed in base post.

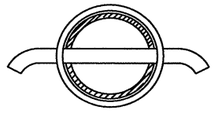


| SIGN POST SELECTION | |
|---|---|
| MOUNT TYPE | DN65 POST |
| A, A-1 | Sch. 10 |
| A-2 | Sch. 80 |
| B | Sch. 10 |
| C | Sch. 80 |
| D-1, D-2, D-3, D-5 | Sch. 10 |
| D-4 | Sch. 80 |

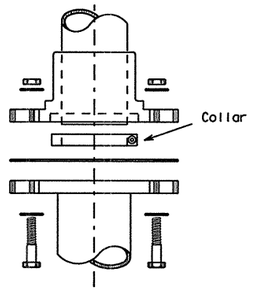


For additional information refer to SMD(1-3)

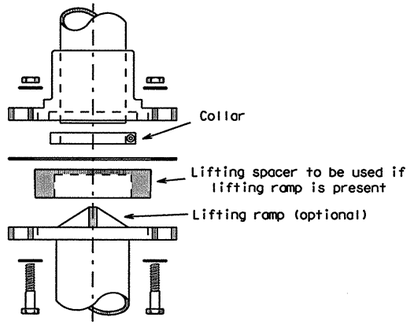


RETROFIT FOR EXISTING STUB BASES

All dimensions are in millimeters unless otherwise noted.

STANDARD PLANS
Texas Department of Transportation
Traffic Operations Division

# SIGN MOUNTING DETAILS SMALL ROADSIDE SIGNS

## SMD(1-4)-98M

| ©TxDOT August 1995 | | | DN: GRB | CK: JDM | DW: FDN | CK: DTN |
|---|---|---|---|---|---|---|
| REVISIONS | STATE DISTRICT | FEDERAL REGION | FEDERAL AID PROJECT | | | SHEET |
| 1-97 | SAT | 6 | NH 2000(704), etc. | | | 743 |
| 12-98 | COUNTY | | CONTROL | SECTION | JOB | HIGHWAY |
| 1-99 | BEXAR | | 2452 | 01 | 036, etc. | LP 1604 |

Metric 26D

DN: CK: DW: CK:
DATE: ACC: FILE:
LEVELS 1 2 3 4 5 6 7 8 9 10 11 12 13 14 15 16 17 18 19 20 21 22 23 24 25 26 27 28 29 30 31 32 33 34 35 36 37 38 39 40 41 42 43 44 45 46 47 48 49 50 51 52 53 54 55 56 57 58 59 60 61 62 63 64 65 66 67 68 69 70 71 72 73 74 75 76 77 78 79 80 81 82 83 84 85 86 87 88 89 90 91 92 93 94 95 96 97 98 99

DISCLAIMER
The use of this standard is governed by the "Texas Engineering Practice Act". No warranty of any kind is made by TxDOT for any purpose whatsoever. TxDOT assumes no responsibility for the conversion of this standard to other formats or for incorrect results or damages resulting from its use.

# SINGLE POST INSTALLATION TYPE 1

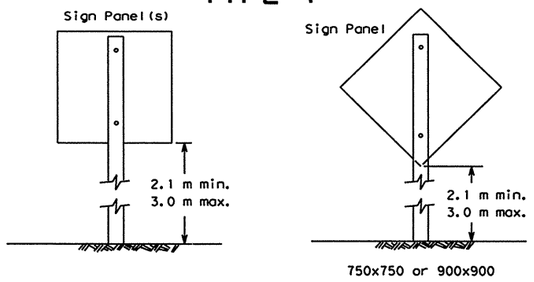


# TYPICAL CLAMP DETAIL

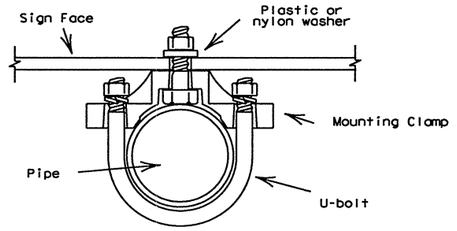


# SIGN ATTACHMENT DETAILS

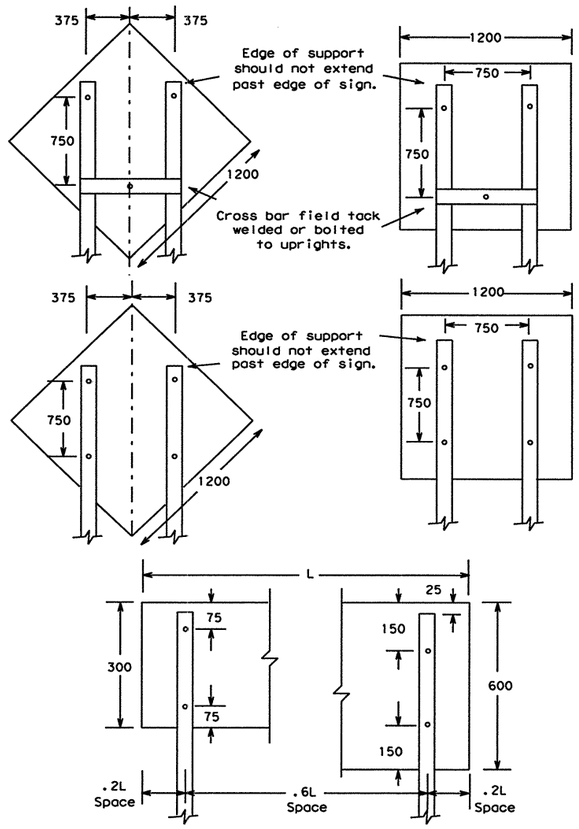


# DOUBLE POST INSTALLATION TYPE II

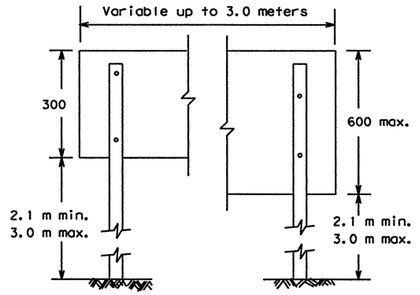


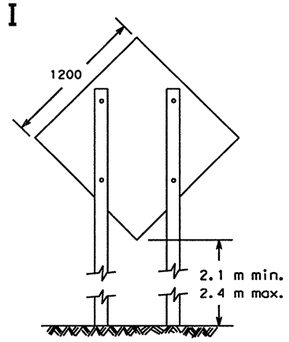


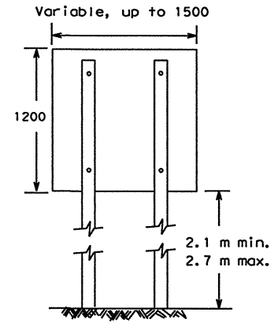


1. This sheet should be used with SMD(1-2)(M) and SMD(1-4)(M).
2. See standard sheet SMD(1-2) and TMUTCD for horizontal and vertical clearances.
3. Type I or Type II supports may be used for various sign combinations and or shapes not to exceed the specified maximum sign area.
4. A cross bar between supports and/or behind sign may be used to prevent supports from leaning in areas of soft soils.
5. Cross bars may be made of winged channel post 1.67 kg/m, 2.98 kg/m, 50 mm perforated square metal tubing (wall 2.7 mm thick) or other similar material.
6. Educational plaques may be installed below parent signs or single supports for sign areas up to 0.84 sq. meter.

# ROUTE MARKER ASSEMBLY FOR TWO POST SUPPORT

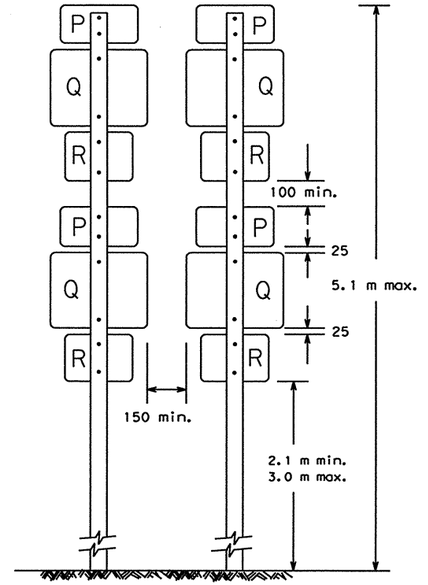


P1 = 600x300 Cardinal Direction Marker
Q1 = 600x600 Interstate, U.S. or State Route Marker
Q2 = 750x600 Interstate or U.S. Route Marker
R = 525x375 Direction Arrow
P2 = 750x375 Cardinal Direction Marker
Q3 = 900x900 (2) digit Interstate Route Marker
Q4 = 1125x900 (3) digit Interstate Route Marker

| EQUIV. SIGN AREA SQ. METERS | | EQUIV. SIGN AREA SQ. METERS | |
|---|---|---|---|
| P1 | .093 | P2 | .279 |
| Q1 | .279 | Q3 | .558 |
| Q2 | .372 | Q4 | .651 |
| R | .093 | | |

| TYPICAL MARKER COMBINATIONS FOR EACH SUPPORT | EQUIV. AREA |
|---|---|
| 2P1 + 2Q1 + 2R | .93 sq. meters |
| P1 + 2Q1 + 2R | .837 sq. meters |
| 2Q1 + 2P1 | .744 sq meters |
| Q1 + R | .372 sq. meters |
| P2 + Q3 | .837 sq. meters |
| P1 + Q1 + R | .465 sq. meters |
| P2 + Q4 | .93 sq. meters |

All dimensions are in millimeters unless otherwise noted.

## SPLICE TECHNEQUES THIN WALL TUBE

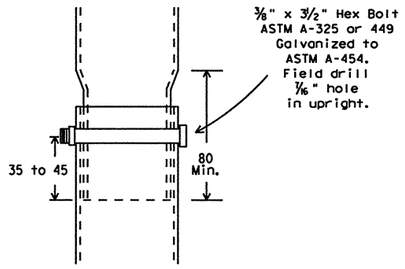


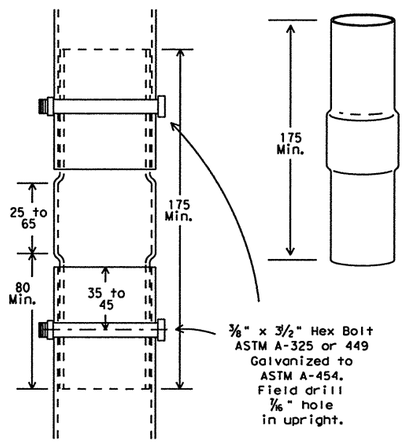


NOTE:
1. 60 mm OD x 2.4 mm wall tubing swaged to 52 mm OD.
2. Splices will only be allowed behind the sign substrate.

## TYPICAL ASSEMBLY

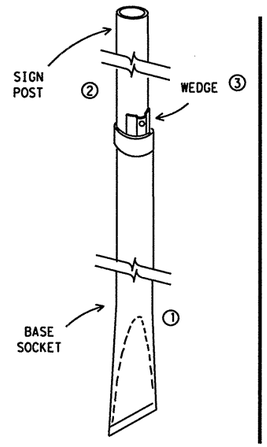


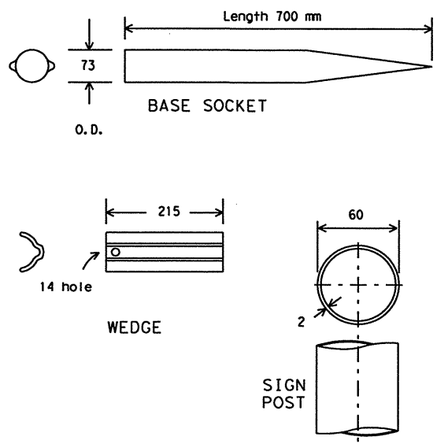


GENERAL NOTES FOR WEDGE ANCHOR THIN WALL TUBE SIGN SUPPORT:

1. The BASE SOCKET is formed from 73 mm O.D. x 12 gauge galvanized pipe.
2. The WEDGE is formed from 3.0 mm thick steel galvanized per ASTM A525.
3. The SIGN POST is 60 mm O.D. x 2 mm thin wall steel tubing.
4. Steel Supports shall be made from new material and shall be corrosion resistant. Steel supports shall be galvanized in accordance with ASTM Designations A123 or A525 (G-90 or better).
5. Supports shall be straight within 4 mm per meter of length and shall have a smooth, uniform finish free from defects affecting strength or appearance. Any bolt holes and sheared ends shall be free from burrs. Bases of multisection supports shall not extend more than 125 mm above ground when installed.
6. Bolts, nuts, screws, washers and other miscellaneous hardware shall be galvanized in accordance to ASTM Designation: A153 Class C or D, or B695 Class 50.

RECOMMENDED ASSEMBLY PROCEDURE

① Drive the BASE SOCKET into the ground until the top of BASE SOCKET is approximately flush with ground level. A flanged tool placed on top of the BASE SOCKET may be helpful. BASE SOCKET MUST be driven plumb.
② Insert SIGN POST into BASE SOCKET and align the sign face with the roadway.
③ Drive the WEDGE between the BASE SOCKET and SIGN POST, thereby locking the SIGN POST inside the BASE SOCKET.

STANDARD PLANS
TEXAS DEPARTMENT OF TRANSPORTATION
*Traffic Operations Division*

# SIGN MOUNTING DETAILS SMALL ROADSIDE SIGNS

## SMD(1-5)-98(M)

| ©TxDOT August 1995 | DN: LR | CK: JDM | DW: FDN | CK: DTN |
|---|---|---|---|---|

| REVISIONS | STATE DISTRICT | FEDERAL REGION | FEDERAL AID PROJECT | SHEET |
|---|---|---|---|---|
| 1-97 | SAT | 6 | NH 2000(704), etc. | 744 |
| 12-98 | COUNTY | | CONTROL / SECTION / JOB | HIGHWAY |
| 1-99 | BEXAR | | 2452 / 01 / 036, etc. | LP 1604 |

DN: CK: DW: CK:
DATE: FILE:
LEVELS
CD
ACC:

DISCLAIMER
The use of this standard is governed by the "Texas Engineering Practice Act". No warranty of any kind is made by TxDOT for any purpose whatsoever. TxDOT assumes no responsibility for the conversion of this standard to other formats or for incorrect results or damages resulting from its use.

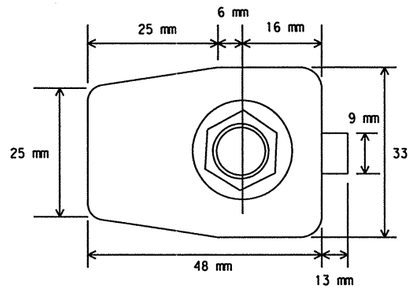


PLAN

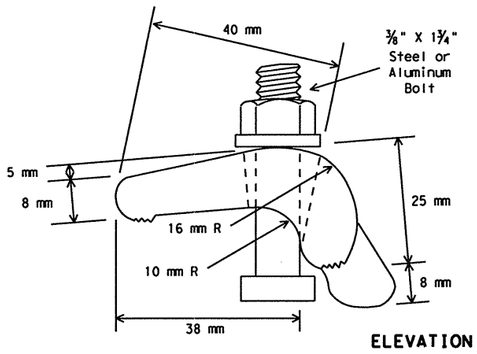


ELEVATION

## ALTERNATE POST CLAMP DETAIL

NOTE: centerline of hole for 3/8" diameter squarehead bolt x 2 1/4" long with a flat washer and self-locking nut, or lock washer and hex. nut. Bolt head dimensions shall be in accordance with ANSI B 18.2.1 as referred to in the AISC Manual of steel construction. Bolt assembly shall be galvanized.

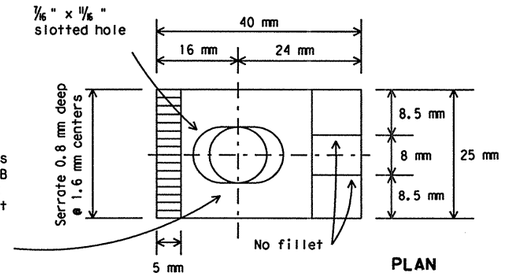


PLAN

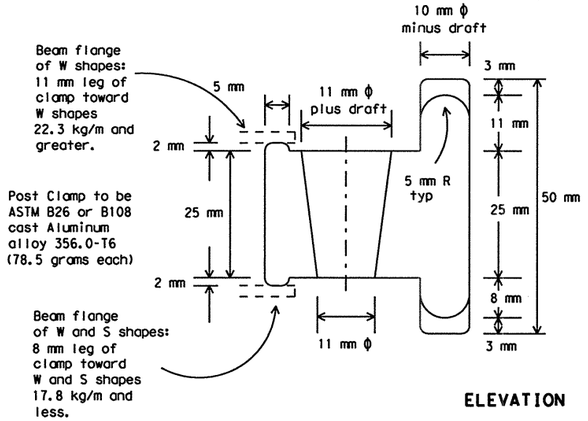


ELEVATION

## POST CLAMP DETAIL

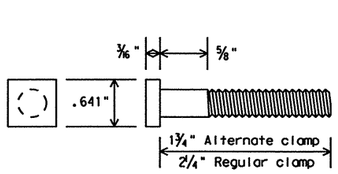


## POST CLAMP BOLT DETAIL

9.1 m or more desirable. May be reduced depending on cross section, viewing conditions and other related factors.

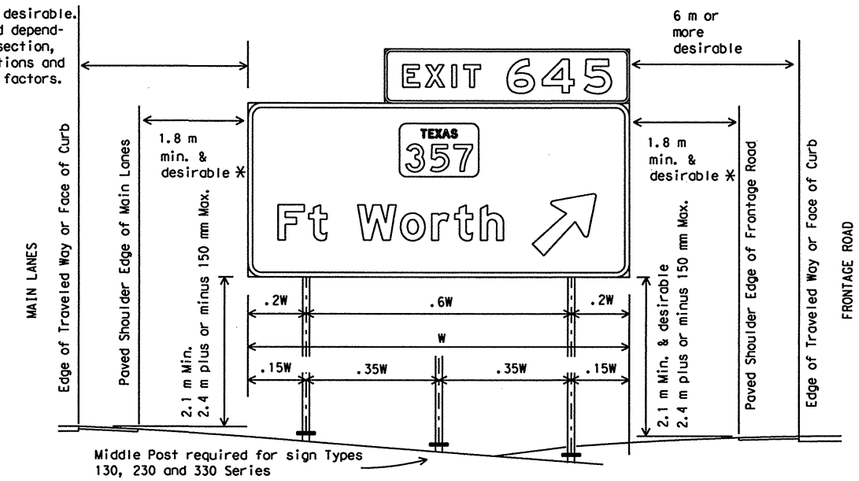


## TYPICAL SIGN INSTALLATION AND LOCATION

LATERAL CLEARANCE NOTES:

Lateral clearances of signs mounted on median side of main lanes are the same as shown above where space will permit.

Where a sign is to be located behind guardrail, an allowable minimum clearance of 0.6 meter may be used, measured from the face of the guardrail to the near edge of sign.

* - 1.8 m minimum and desirable may be used only in areas of limited lateral clearance and when approved by the Engineer.

POST SPACING NOTES:

Post spacing on a two post sign may vary a maximum of plus or minus 10% of total sign width to fit field conditions.

Post spacing on a three post sign may vary a maximum of plus 5% of total sign width to fit field conditions.

SPECIFICATION REFERENCE TABLE
MATERIALS AND TESTS DIVISION SPECIFICATIONS
SIGN HARDWARE D-9-7120

GENERAL NOTES:

1. Design conforms with AASHTO Specifications for the design and construction of structural supports for highway signs.
2. Materials and fabrication shall conform to the requirements of the Department material specifications.
3. Structural steel shall be high strength steel (HS) in accordance with the Item 442, "Metal For Structures."
4. Parts shall be saw cut either before galvanizing and the galvanized cut cleaned of zinc build-up, or saw cut after galvanizing and the cut surface treated with zinc-based solder or zinc-rich paint in accordance with ASTM A780. (Cut surface will not be treated until plate is installed and all bolts fully tightened.)
5. Exit number panel shall be mounted to the right hand side of the parent sign for right exits and to the left for left hand exits. The number panel shall be mounted with two uprights so its right edge is even with the right edge of the parent sign or vice-versa for left hand exits.

All metric dimensions have been rounded and should be considered equivalent to English hardware and specifications. All dimensions are in millimeters unless otherwise noted.

## WIND BEAM TABLES

For sign widths not listed, select next larger sign width from tables for maximum wind beam spacing.

Example: Sign Code = 120, Sign Width = 4.4 m ⟶ select 4.6 m Sign Width
Max. Wind Beam Spacing = 914 mm

## CODE

SIGN TYPE 1 3 0
- 1 — Wind Design Zone
- 3 — Series No. (Zero Denotes Plywood, 1 Denotes Aluminmum)
- 0 — No. of Posts

ZONE 1 (Types 100)

| | Two Posts (120) | | | | | | | Three Posts (130) | | | | | | | | |
|---|---|---|---|---|---|---|---|---|---|---|---|---|---|---|---|---|
| Sign Width (W) (meters) | 1.2 thru 3.6 | 4.0 | 4.3 | 4.6 | 4.9 | 5.2 | 5.5 | 5.8 | 6.1 | 6.4 | 6.7 | 7.0 | 7.3 | 7.6 | 7.9 | 8.2 | 8.5 |
| Max. Wind Beam Spacing | 1219 mm | 1118 | 1016 | 914 | 813 | 711 | 610 | 1219 | 1143 | 1067 | 991 | 914 | 838 | 762 | 686 | 610 | |

ZONE 2 (Types 200)

| | Two Posts (220) | | | Three Posts (230) | | | | |
|---|---|---|---|---|---|---|---|---|
| Sign Width (W) (meters) | 1.2 thru 4.9 | 5.2 | 5.5 | 5.8 thru 7.3 | 7.6 | 7.9 | 8.2 | 8.5 |
| Max. Wind Beam Spacing | 1219 mm | 1143 | 1067 | 1219 mm | 1143 | 1067 | 991 | 914 |

ZONE 3 (Types 300)

| | Two Posts (320) | Three Posts (330) |
|---|---|---|
| Sign Width (W) (meters) | 1.2 thru 5.5 | 5.8 thru 8.5 |
| Max. Wind Beam Spacing | 1219 mm | 1219 mm |

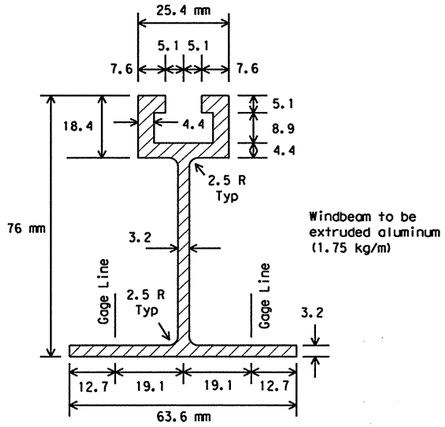


## WINDBEAM CROSS SECTION

SIGN SUPPORTS SHALL NOT BE SPLICED EXCEPT AS SHOWN ELSEWHERE ON SMD STANDARDS

STANDARD PLANS
TEXAS DEPARTMENT OF TRANSPORTATION
*Traffic Operations Division*

# SIGN MOUNTING DETAILS- LARGE ROADSIDE SIGNS STRUCTURE

## SMD(2-1)-98(M)

©TxDOT August 1995

| DW: LR | CK: MT | DW: DN | CK: | NEG NO.: |
|---|---|---|---|---|

| REVISIONS | STATE DISTRICT | FEDERAL REGION | FEDERAL AID PROJECT | SHEET |
|---|---|---|---|---|
| 6-96 | SAT | 6 | NH 2000(704), etc. | 745 |
| 1-97 | COUNTY | | CONTROL / SECTION / JOB | HIGHWAY |
| 4-98 | BEXAR | | 2452 / 01 / 036, etc. | LP 1604 |

| FILE: S_D | KED | ACC: |
|---|---|---|
| 1 2 3 4 5 6 7 8 9 10 11 12 13 14 15 16 | | |
| 17 18 19 20 21 22 23 24 25 26 27 28 29 30 31 32 | | |
| 33 34 35 36 37 38 39 40 41 42 43 44 45 46 47 48 | | |
| 49 50 51 52 53 54 55 56 57 58 59 60 61 62 63 | | |

DISCLAIMER
The use of this standard is governed by the "Texas Engineering Practice Act". No warranty of any kind is made by TxDOT for any purpose whatsoever. TxDOT assumes no responsibility for the conversion of this standard to other formats or for incorrect results or damages resulting from its use.

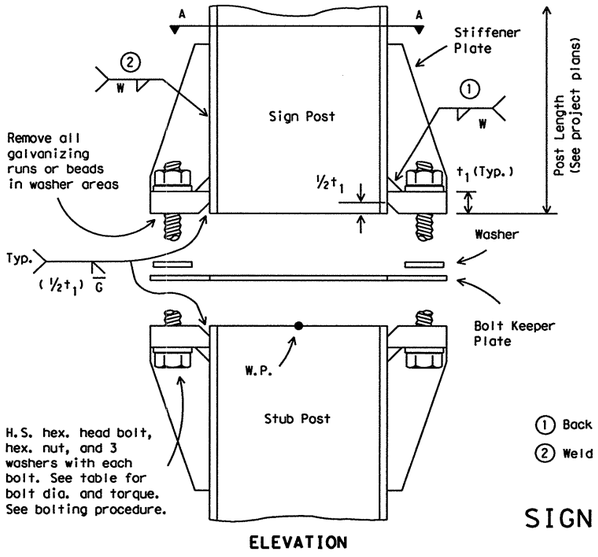


ELEVATION

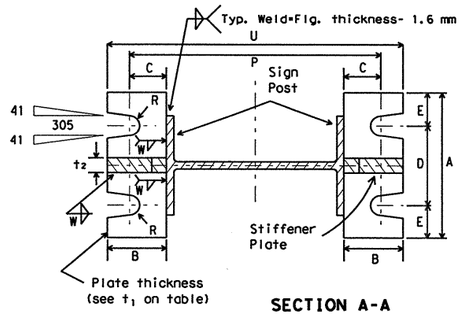


SECTION A-A

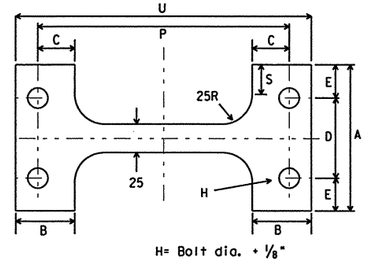


H= Bolt dia. + ⅛"

**BOLT KEEPER PLATE**
30 Ga galv. sheet steel

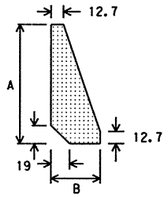


## STIFFENER PLATE DETAIL

Steel Plate (thickness = $t_2$)

(See table for dimensions)

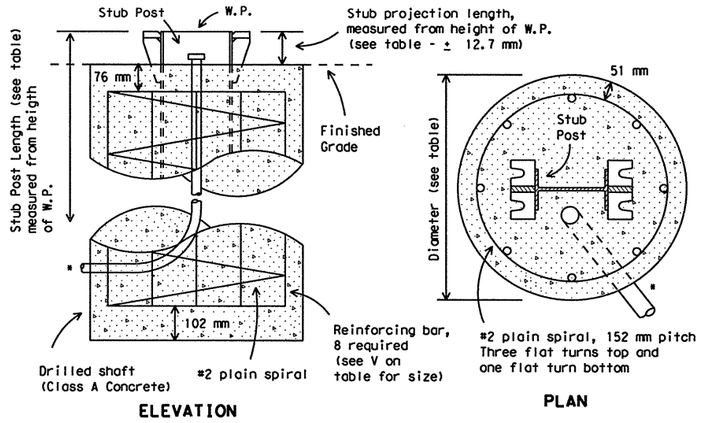


## FOUNDATION DETAIL

*Note: For signs with electrical apparatus, see ED(10) for conduit required in founation.

① Back up weld to be made before installing stiffener plate

② Weld W may be continued across clips to seal joint

## SIGN POST AND STUB POST

(For W Shapes)

BOLTING PROCEDURE FOR ASSEMBLY OF BASE CONNECTION:

1. Assemble sign post, BOLT KEEPER PLATE and stub post with bolts and three flat washers per bolt as shown.
2. Shim as required to plumb post.
3. Tighten all bolts the maximum possible with a 12 to 15 inch wrench to clean bolt threads and to bed washers and shims.
4. Loosen each bolt in sequence and retighten bolts in a systematic order to the prescribed torque. Do not overtighten.
5. To prevent nut loosening, burr threads of bolt at junction with nut using a center punch.

| Dimensions mm x kg/m Post Size | Base Connection Data Table: Bolt Size & Torque | A | B | C | D | E | $t_1$ | $t_2$ | W | R |
|---|---|---|---|---|---|---|---|---|---|---|
| W150x14 | ⅝"ϕ x 2¾" 440-450 inch pounds 36-38 foot pounds | 126 | 51 | 32 | 70 | 28 | 19 | 12.7 | 6 | 8.7 |
| W150x18 | | | | | | | | | | |
| W150x22 | | | | | | | | | | |
| W200x27 | | | | | | | | | | |
| W200x31 | ¾"ϕ x 3½" 740-750 inch pounds 62-63 foot pounds | 153 | 57 | 35 | 89 | 32 | 25.4 | 19 | 8 | 10.3 |
| W250x33 | | | | | | | | | | |
| W250x39 | | | | | | | | | | |
| W310x39 | | | | | | | | | | |
| S75x8 | ½"ϕ x 2½" 440-450 inch pounds 36-38 foot pounds | See Detail Below | | | | | | | | |
| S100x11 | | | | | | | | | | |

| Perforated Fuse Plate Data Table | | | | | | | | | | |
|---|---|---|---|---|---|---|---|---|---|---|
| F | G | J | K | M | $d_1$ | $d_2$ | $t_3$ | Bolt Dia. | Wt. (ea.) (grams) | Bolt length |
| 108 | 51 | 102 | 57 | 25 | 9/16" | ¾" | 6.4 | ½" | 458 | 1½" |
| 127 | 64 | 152 | 89 | 38 | 11/16" | 1¼" | 9.5 | ⅝" | 1138 | 2¼" |
| 127 | 64 | 133 | 70 | 32 | 11/16" | 1 1/16" | 9.5 | ⅝" | 1025 | 2¼" |
| 140 | 64 | 133 | 70 | 32 | 13/16" | 1" | 12.7 | ¾" | 1520 | 2¼" |
| 152 | 76 | 146 | 70 | 35 | 13/16" | 1⅛" | 12.7 | ¾" | 1828 | 2¼" |
| 152 | 76 | 165 | 89 | 41 | 13/16" | 1 5/16" | 12.7 | ¾" | 2028 | 2¼" |
| 95 | 38 | 67 | 38 | 16 | 9/16" | ⅜" | 6.4 | ½" | 272 | 1½" |

| Bolt Keeper Data | | | Foundation Data | | | |
|---|---|---|---|---|---|---|
| P | S | U | Stub length | Stub projection | Dr. Shaft diameter | Bar V Size |
| 213 | 25 | 251 | 610 | 76 | 610 | #5 |
| 216 | | 254 | 610 | 76 | | #5 |
| 216 | | 254 | 762 | 76 | | #6 |
| 270 | | 308 | 762 | 76 | | #7 |
| 279 | 38 | 323 | 914 | 64 | | #8 |
| 327 | | 371 | 914 | 64 | | #9 |
| 333 | | 377 | 914 | 64 | | #10 |
| 381 | | 425 | 914 | 64 | | #11 |
| See Detail Below | | | 1003 | 89 | 305 | Non-reinforced ③ |

③ Foundation design shall be Type G Mount, see SMD(TY G)(M).

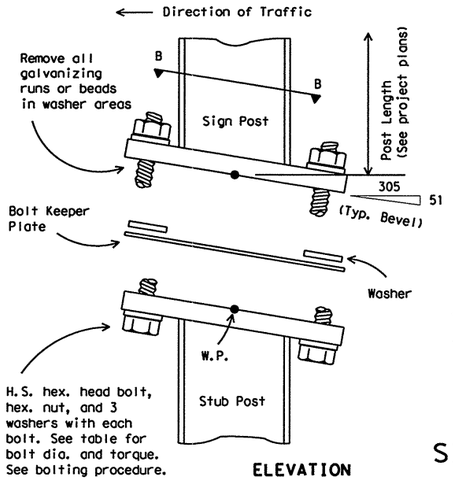


ELEVATION

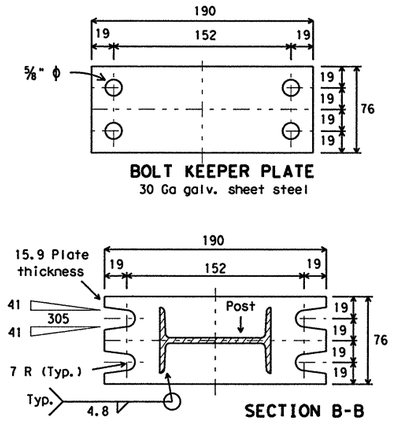


SECTION B-B

## SIGN POST AND STUB POST

(For S100x11 and S75x8)

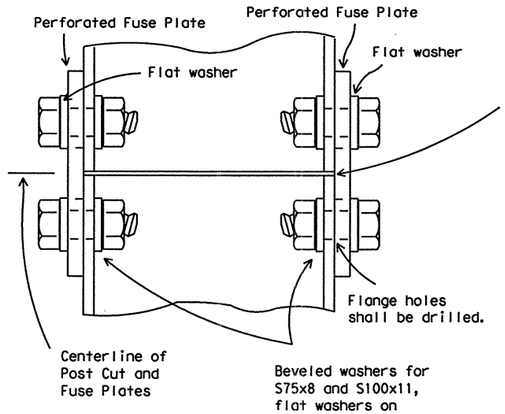


## DETAIL "A"

Parts shall be saw cut either before galvanizing and the galvanized cut cleaned of zinc build-up, or saw cut after galvanizing and the cut surface treated with zinc-based solder or zinc-rich paint in accordance with ASTM A780. (Cut surface will not be treated until plate is installed and all bolts fully tightened.)

All metric dimensions have been rounded and should be considered equivalent to English hardware and specifications. All dimensions are in millimeters unless otherwise noted.

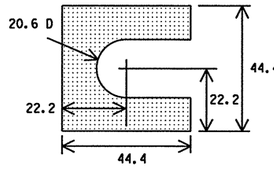


## SHIM DETAIL

Furnish two 0.3 mm + thick and two 0.8 mm + thick shims per post. Shims shall be fabricated from brass shim stock or strip conforming to ASTM B36.

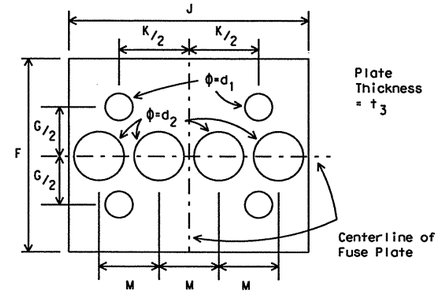


## PERFORATED FUSE PLATE DETAIL

Use H.S. hex head bolts, hex head nut and bevel or flat washer (where req'd) under nut. All holes shall be drilled. All plate cuts shall preferably be saw cuts. However; flame cutting will be permitted provided all edges are ground. Metal projecting beyond the plane of the plate face will not be permitted. Steel fuse plates shall conform to the requirements of ASTM A36. ASTM A572 Grade 50 or ASTM A588 may be substituted for A36 at the option of the fabricator. Mill test reports shall be submitted for Fuse Plates. Steel used shall have an ultimate tensile strength not to exceed 550 MPa.

STANDARD PLANS
TEXAS DEPARTMENT OF TRANSPORTATION
*Traffic Operations Division*

# SIGN MOUNTING DETAILS- LARGE ROADSIDE SIGNS FOUNDATION & STUB

## SMD(2-2)-98(M)

© TxDOT August 1995

| DN: LR | CK: | DW: DN | CK: | NEG NO.: |
|---|---|---|---|---|

| REVISIONS | STATE DISTRICT | FEDERAL REGION | FEDERAL AID PROJECT | SHEET |
|---|---|---|---|---|
| 1-96 | SAT | 6 | NH 2000(704),etc. | 746 |
| 4-98 | COUNTY | CONTROL | SECTION | JOB | HIGHWAY |
| | BEXAR | 2452 | 01 | 036,etc. | LP 1604 |

DN: CK: DW: CK:
DATE: ACC: FILE:
LEVELS

DISCLAIMER
The use of this standard is governed by the "Texas Engineering Practice Act". No warranty of any kind is made by TxDOT for any purpose whatsoever. TxDOT assumes no responsibility for the conversion of this standard to other formats or for incorrect results or damages resulting from its use.

# TYPICAL PLYWOOD SIGN & EXIT PANEL ASSEMBLY DETAILS

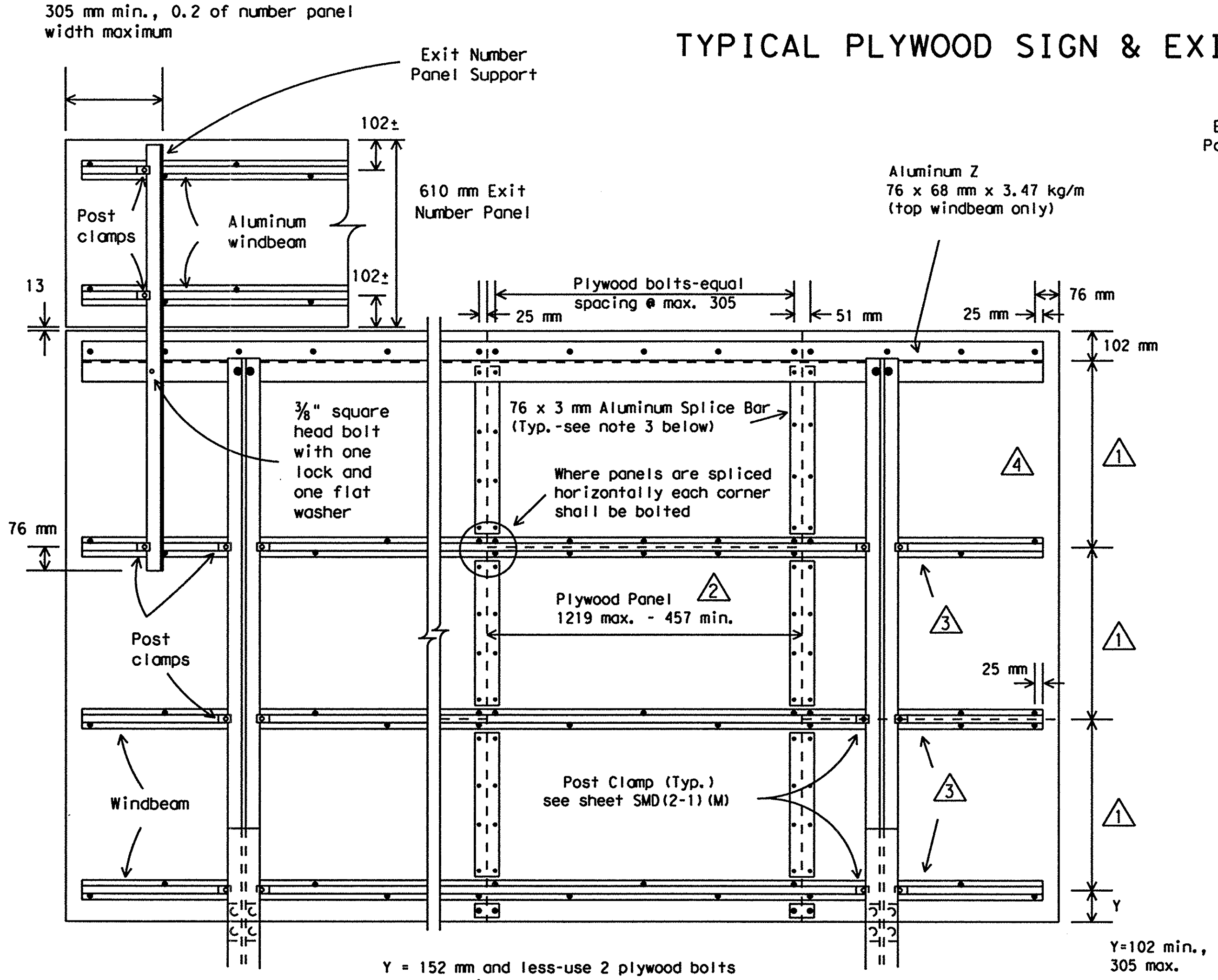


Y = 152 mm and less-use 2 plywood bolts on splice bar
Y = over 152 mm-use 2 plywood bolts at bottom of splice bar and 2 No. 10 5/8" woodscrews at top of bar

**REAR VIEW**

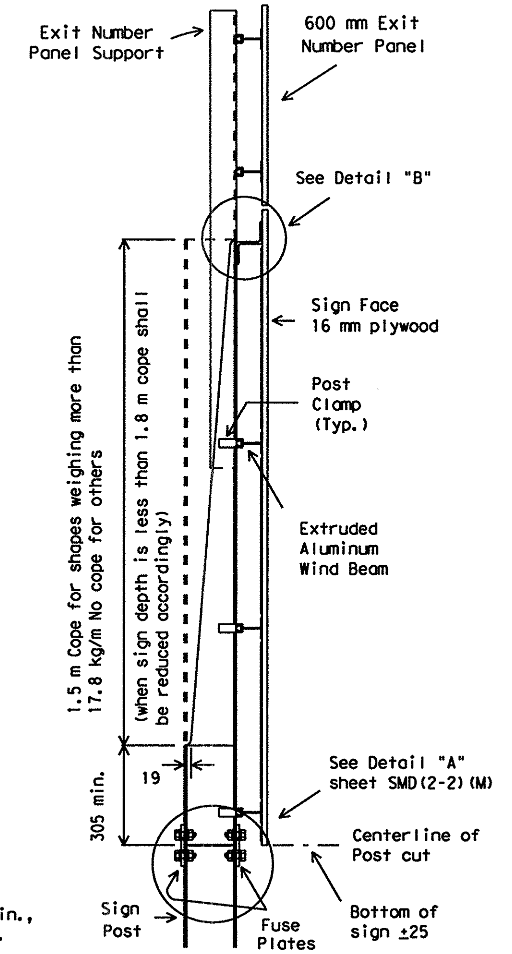


**SIDE VIEW**

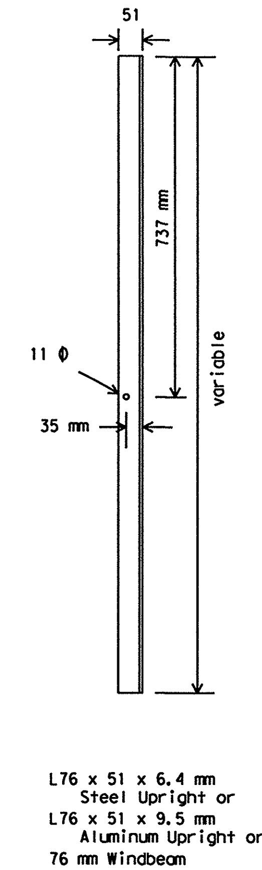


L76 x 51 x 6.4 mm Steel Upright or
L76 x 51 x 9.5 mm Aluminum Upright or
76 mm Windbeam

## EXIT NUMBER PANEL SUPPORT

## SIGN MOUNTING DETAIL

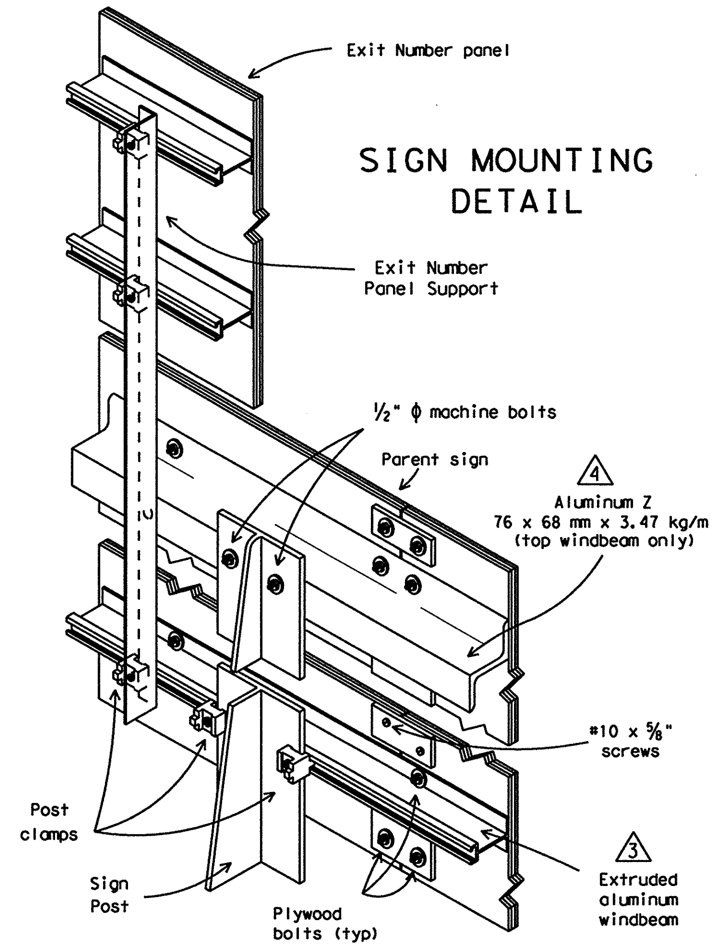


NOTES:

1. Exit number panel shall be mounted to the right hand side of the parent sign for right exits and to the left for left hand exits. The number panel shall be mounted with two uprights so its right edge is even with the right edge of the parent sign or vice-versa for left hand exits.
2. Exit number panel support shall be symmetrical about number panel centerline.
3. Exit number panel support shall be of ASTM A36 structural steel galvanized after fabrication, or ASTM B221 aluminum alloy 6061-T6.
4. All bolts, nuts and washers shall be galvanized per ASTM Designation: B695 Class 50, or A153 Class C or D.
5. When splice bars are required to fabricate the number panel, the splice bar detail as shown for the parent sign is to be used. Splice bars on number panel need not align with those on parent sign.
6. Posts, parent sign panels and exit number panels shall comply with notes on sheets SMD(2-1)(M) and SMD(2-2)(M).
7. Signs (such as exit number panels) attached above a parent sign shall be made of the same type material as the parent sign.
8. Exit number panel support and other connection hardware required to fasten exit number panel to parent sign shall be subsidiary to the sign blank.

NOTES:

1. A tolerance of plus or minus 6 mm will be permitted in the plan dimensions for fabrication of each single increment sign panel when necessary for squaring. A tolerance of plus or minus 6 mm will be permitted for each increment of a multi-increment sign panel where necessary to secure square, tight-fitting joints.
2. Plywood bolts shall be 5/16" x 1 1/2" elevator type steel with flat or slightly hemispherical head and 3/4" minimum thread length. The head shall have a minimum diameter of 11/16 " and a minimum of two fins on the underside. Each bolt shall be provided with one 5/16" steel hex nut, one 5/16" steel flat washer, and one 5/16" steel lock washer. Bolts, nuts and washers shall be galvanized in accordance with ASTM Designation: B695, Class 50, or A153 Class C or D.
3. Splice bars shall be secured with 5/8" long x #10 round head, stainless steel wood screws spaced at 152 mm maximum along double row spacing with the exception at extreme ends of splice bars, along outside edge of sign, where plywood bolts shall be used as shown. A maximum of one horizontal joint per vertical section will be permitted using a 3 mm gap between panels.
4. Splices shall be kept to a minimum. Panels 1.2 x 2.4 m or larger shall be used to the maximum extent possible in the fabrication of any sign. Signs or sign sections which cannot be fabricated from at least a 1.2 x 2.4 m panel shall be of one piece construction.

(1) Approximately equal spacing, fabricator may vary spacing for least interference with message and to utilize wind beam for horizontal splice. Wind beam spacing will not exceed the maximum shown in table on sheet SMD(2-1)(M). Staggered arrangement of horizontal splices as shown is preferred. However, a single horizontal joint across the sign face is permissible.

(2) For signs 1.2 m or less in height the plywood panel may exceed 1.2 m in width.

(3) Extruded aluminum wind beams shall be continuous with no splices. (see sheet SMD(2-1)(M).

(4) Aluminum Z will be provided unless stated otherwise in the plans. If noted elsewhere in the plans, 1.75 kg/m extruded aluminum windbeam may be used.

All metric dimensions have been rounded and should be considered equivalent to English hardware and specifications. All dimensions are in millimeters unless otherwise noted.

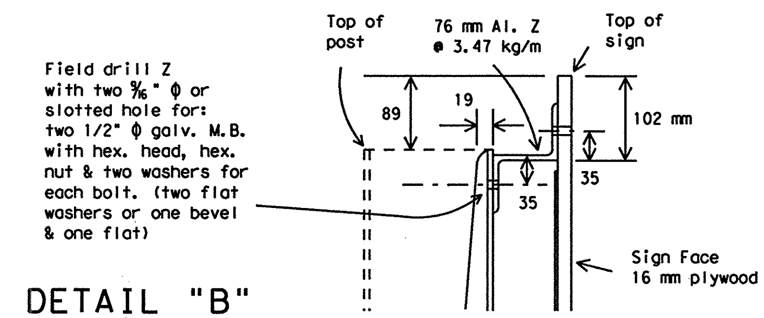


## DETAIL "B"

**STANDARD PLANS**
**TEXAS DEPARTMENT OF TRANSPORTATION**
*Traffic Operations Division*

# SIGN MOUNTING DETAILS-LARGE ROADSIDE SIGNS, PLYWOOD

## SMD(2-3)-95A(M)

| ©TxDOT August 1995 | DN: - LR | CK: - | DW: - DN | CK: - | NEG NO.: |
|---|---|---|---|---|---|
| REVISIONS | STATE DISTRICT | FEDERAL REGION | FEDERAL AID PROJECT | | SHEET |
| 1-96 | SAT | 6 | NH 2000(704), etc. | | 747 |
| | COUNTY | | CONTROL | SECTION / JOB | HIGHWAY |
| | BEXAR | | 2452 | 01 / 036, etc. | LP 1604 |

# WING CHANNEL CLAMP DETAIL FOR TYPE G MOUNT

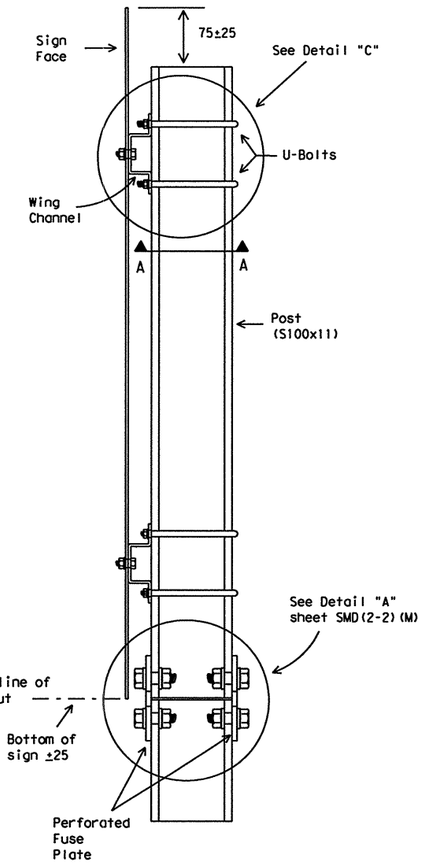


SIDE VIEW

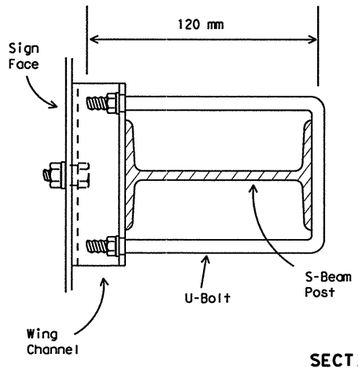


SECTION A-A

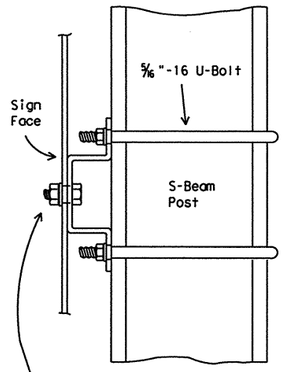


Galvanized steel or aluminum self-locking hex. head nut. 3/8 " - 16 x 3/4 " hex. head bolt for sheet metal. 3/8 " - 16 x 1 1/4 " hex. head bolt for plywood. 3/8 " galvanized medium washer.

**DETAIL "C"**

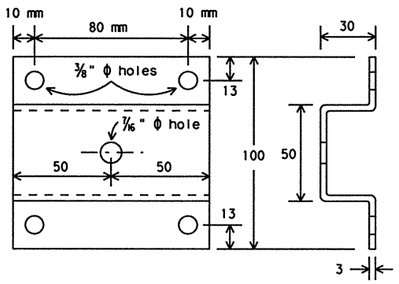


**WING CHANNEL**

Wing channel, 100 mm width x 30 mm depth x 3 mm thickness, shall be aluminum (ASTM B221 6061-T6 or B308 6061-T6), galvanized steel (ASTM A36) or stainless steel (ASTM A167 type 304, No. 2B finish).

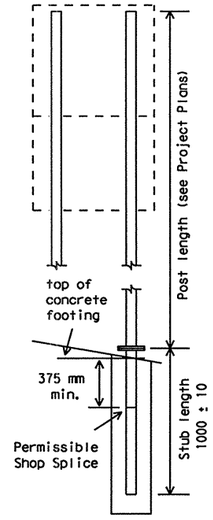


The weight of one S100x11 post is equal to 50.9 kg plus 11.5 kg/m x (post length in meters minus 3 m). The weight of 50.9 kg includes 3 m of post length, post foundation stub, related connection plates, friction fuse plate, and all high strength bolts, nuts and washers.

9 m or more desirable. May be reduced depending on cross section, viewing conditions and other related factors.

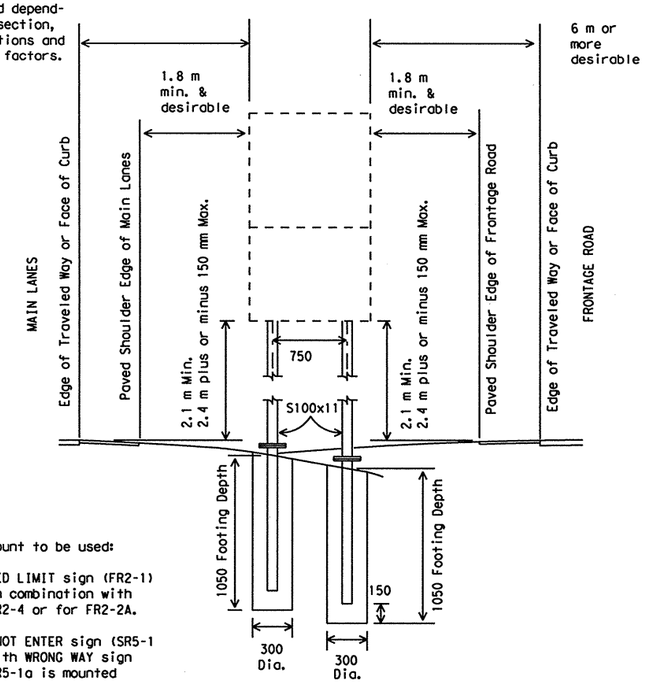


This type mount to be used:

(1) For SPEED LIMIT sign (FR2-1) when used in combination with FR2-2 and FR2-4 or for FR2-2A.

(2) For DO NOT ENTER sign (SR5-1 when used with WRONG WAY sign (SR5-1a). SR5-1a is mounted above SR5-1.

All metric dimensions have been rounded and should be considered equivalent to English hardware and specifications. All dimensions are in millimeters unless otherwise noted.

| SPECIFICATION REFERENCE TABLE<br>MATERIALS AND TESTS DIVISION SPECIFICATIONS<br>SIGN HARDWARE | D-9-7120 |
|---|---|

GENERAL NOTES:

1. Design conforms with AASHTO Specifications for the design and construction of structural supports for highway signs.
2. Materials and fabrication shall conform to the requirements of the Department material specifications.
3. Structural steel shall be high strength steel (HS) in accordance with Item 442, "Metal For Structures."
4. Parts shall be saw cut either before galvanizing and the galvanized cut cleaned of zinc build-up, or saw cut after galvanizing and the cut surface treated with zinc-based solder or zinc-rich paint in accordance with ASTM A780. (Cut surface will not be treated until plate is installed and all bolts fully tightened.)

STANDARD PLANS
TEXAS DEPARTMENT OF TRANSPORTATION
*Traffic Operations Division*

# SIGN MOUNTING DETAILS, TYPE G SUPPORT

## SMD(TY G)-97(M)

© TxDOT August 1995

| DN: LR | CK: - | DW: DN | CK: - | MEG NO.: |
|---|---|---|---|---|

| REVISIONS | STATE DISTRICT | FEDERAL REGION | FEDERAL AID PROJECT | | SHEET |
|---|---|---|---|---|---|
| 1-97 | SAT | 6 | NH 2000(704),etc. | | 748 |
| | COUNTY | | CONTROL | SECTION | JOB | HIGHWAY |
| | BEXAR | | 2452 | 01 | 036,etc. | LP 1604 |

Metric 28

DISCLAIMER
The use of this standard is governed by the "Texas Engineering Practice Act". No warranty of any kind is made by TxDOT for any purpose whatsoever. TxDOT assumes no responsibility for the conversion of this standard to other formats or for incorrect results or damages resulting from its use.

| LEVELS D. | 1 | 3 | 4 | 5 | 6 | 7 | 8 | 9 | 10 | 11 | 12 | 14 | 15 | 16 |
|---|---|---|---|---|---|---|---|---|---|---|---|---|---|---|
| ACC: | 17 | 18 | 19 | 20 | 21 | 22 | 23 | 24 | 25 | 26 | 27 | 28 | 29 | 30 | 31 | 32 |
| FILE: | 33 | 34 | 35 | 36 | 37 | 38 | 39 | 40 | 41 | 42 | 43 | 44 | 45 | 46 | 47 | 48 |
| DATE: | 49 | 50 | 51 | 52 | 53 | 54 | 55 | 56 | 57 | 58 | 59 | 60 | 61 | 62 | 63 | |
| DN: | | | | | | | | | | | | | | | | |
| CK: | | | | | | | | | | | | | | | | |
| DW: | | | | | | | | | | | | | | | | |
| CK: | | | | | | | | | | | | | | | | |

DISCLAIMER
The use of this standard is governed by the "Texas Engineering Practice Act". No warranty of any kind is made by TxDOT for any purpose whatsoever. TxDOT assumes no responsibility for the conversion of this standard to other formats or for incorrect results or damages resulting from its use.

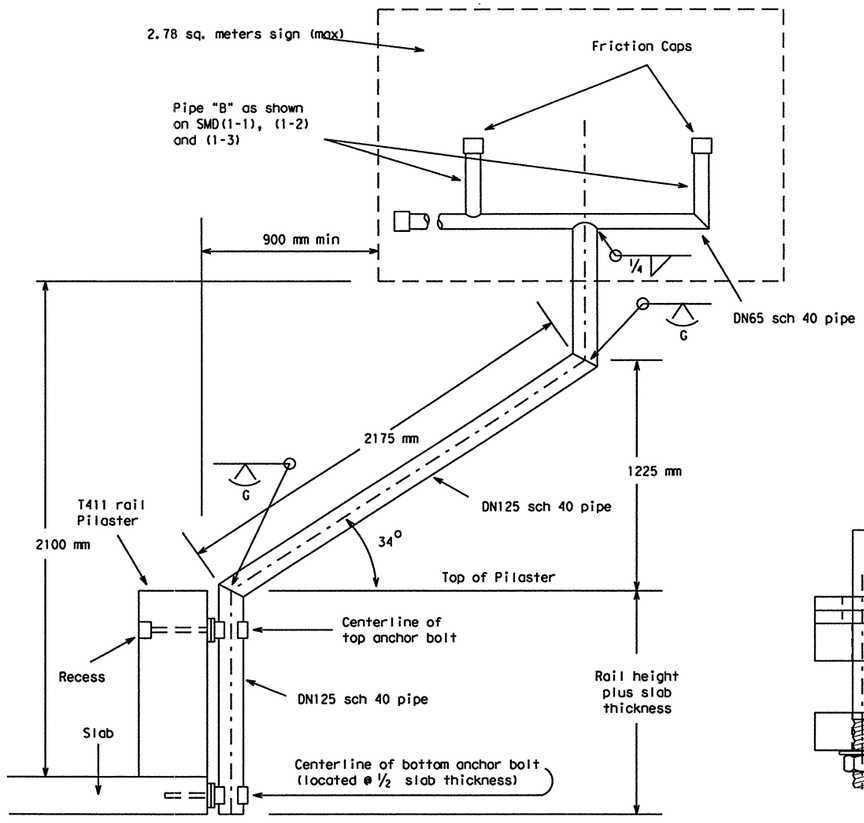


MOUNTING DETAIL

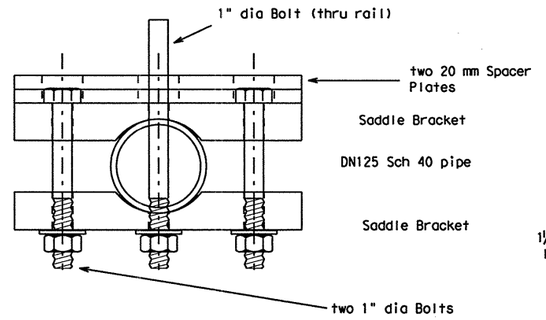


TOP ANCHOR ASSEMBLY

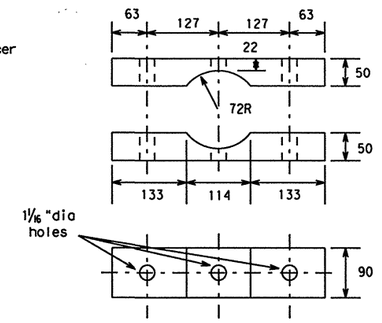


SADDLE CLAMP DETAILS

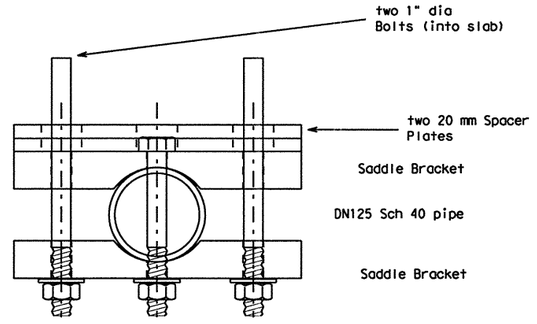


BOTTOM ANCHOR ASSEMBLY

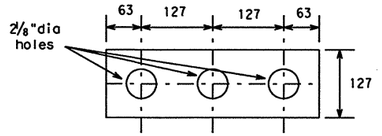


20 mm SPACER PLATE

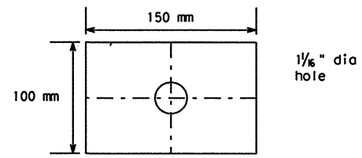


BACKING PLATE DETAIL
(For T2 &T5 Rail)

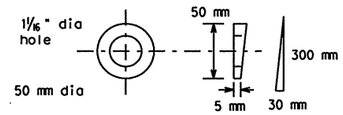


TAPERED SPACER
(For T5 Rail)

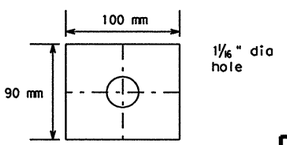


BACKING PLATE DETAIL
(For T411 Rail)

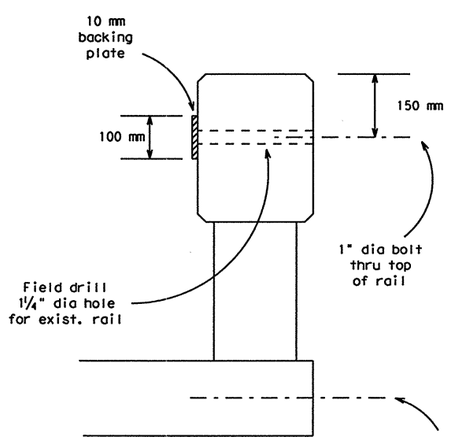


T2 RAIL

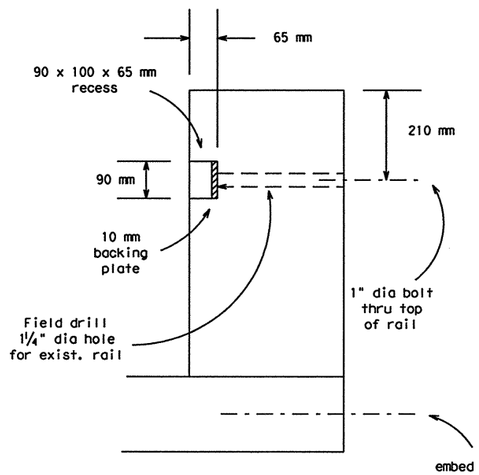


T411 RAIL

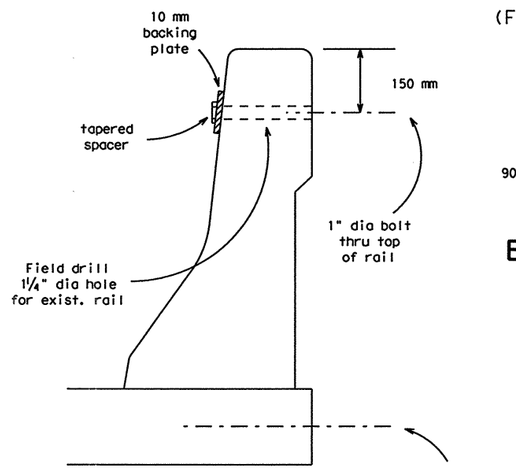


T5 RAIL

GENERAL NOTES:

Design conforms to 1994 AASHTO Standard Specifications for Structural Supports for Highway Signs, Luminaires, and Traffic Signals and Interim Specifications thereto. Design Wind Speed equals 70 mph plus 1.3 gust factor.

Material for pipe shall be ASTM A53 Gr B, or A501. Saddle clamps and base plates shall conform to Special Specification A36M55 or ASTM M193B7 or A687. Nuts for anchor bolt shall comform to ASTM A563 Grade D or better. Bolt, nut and washers shall be galvanized in accordance with specifications.

Bottom anchor bolts for pipe attached to the concrete slab shall be placed using an adhesive doweling system approved by the engineer. Bottom anchor bolts shall have an allowable capacity of 36 kips in tension and 20 kips in shear. Installation of the bottom anchor bolts, including hole depth and diameter, shall be in accordance with the manufacturers' recommendation. If required by the engineer, 3 of the first 10 anchor bolts, and 5% of the remaining anchor bolts shall be tested to 70% of minimum specified yield. The contractor shall provide a suitable ram, pump, pressure gauge and reaction system.

Saddle clamp connection bolts shall comform to ASTM A325 or A449. Bolts, washers and nuts shall be galvanized in accordance with specifications.

Contractor shall verify applicable field dimensions before fabrication.

Core drilling shall be permitted to obtain the hole diameter and recess on existing rails. Percission drilling is not permitted. Patch if spall occors.

For Type 411 Rail, the roadside sign can only be erected by attaching to the pilaster.

NOTE:
Sign panel area is a maximum of 2.78 sq. meters. Pipe mounting supports for the sign panel shall refer to SMD(1-1), (1-2) and (1-3). The diameter of "B" support as shown on these standards shall be DN65.

All dimensions are in millimeters unless otherwise noted.

STANDARD PLANS
TEXAS DEPARTMENT OF TRANSPORTATION
*Traffic Operations Division*

# SIGN MOUNTING DETAILS-RAIL MOUNTINGS

## SMD (RM) -98 (M)

| ©TxDOT April 1998 | DN: GB | CK: DTN | DW: DN | CK: DW | NEG NO.: |
|---|---|---|---|---|---|
| REVISIONS | STATE DISTRICT | FEDERAL REGION | FEDERAL AID PROJECT | | SHEET |
| | SAT | 6 | NH 2000(704), etc. | | 749 |
| | COUNTY | | CONTROL | SECTION | JOB | HIGHWAY |
| | BEXAR | | 2452 | 01 | 036, etc. | LP 1604 |

Metric 365

DN:
CK:
DW:
CK:

DATE:
ACC:
FILE:

LEVELS (L)
1 2 3 4 5 6 7 8 9 10 11 12 13 14 15 16 17 18 19 20 21 22 23 24 25 26 27 28 29 30 31 32 33 34 35 36 37 38 39 40 41 42 43 44 45 46 47 48 49 50 51 52 53 54 55 56 57 58 59 60 61 62 63

DISCLAIMER
The use of this s... is governed by the "Texas Engineering Practice Act". No warr... any kind is made by TxDot for any purpose whatsoever. TxDOT assumes no responsibility for the conversion of this standard to other formats or for incorrect results or damages resulting from its use.

## OBJECT MARKER TYPES 1 and 4

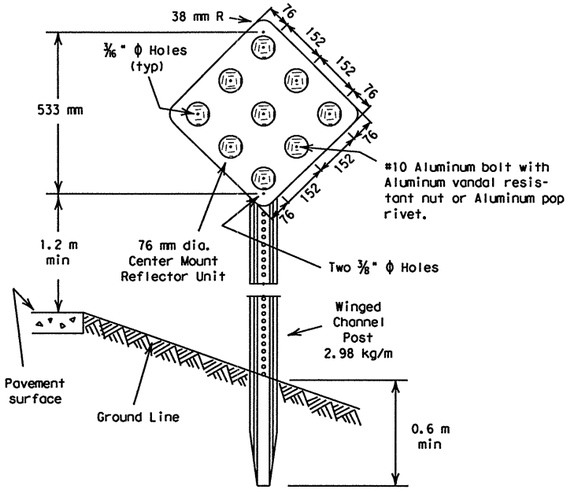


TYPE 1 and 4 Object Markers shall consist of Type (B) Center Mount Reflector Units mounted on 2 mm thick sheet aluminum conforming with ASTM B-209 Alloy 6061-T6.

**TYPE 1 OM-1R**

457x457
Reflector Unit - YELLOW
Background - (YELLOW - Non-Reflective)

**TYPE 4 OM-4R**

457x457
Reflector Unit - RED
Background - (RED - Non-Reflective)

## OBJECT MARKER TYPE 3

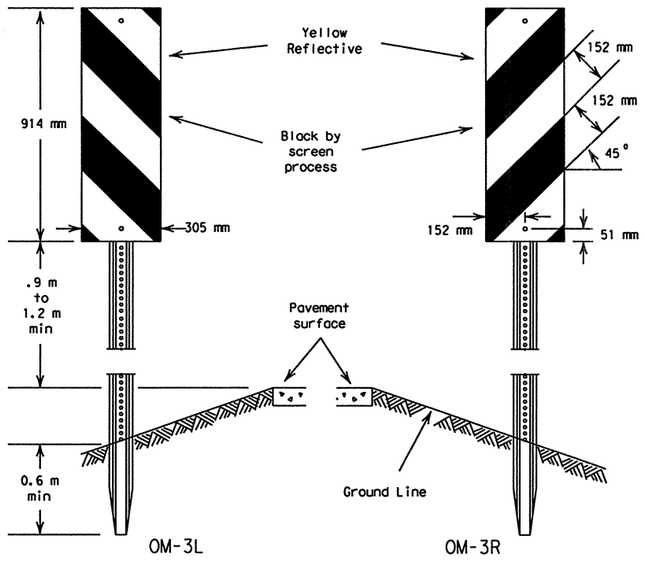


Sign blank to be 2 mm thick sheet aluminum conforming to ASTM B-209 Alloy 6061-T6.

Reflective sheeting shall be in accordance with Departmental Material Specification, D-9-8300, Type C.

## TYPICAL REFLECTOR UNITS

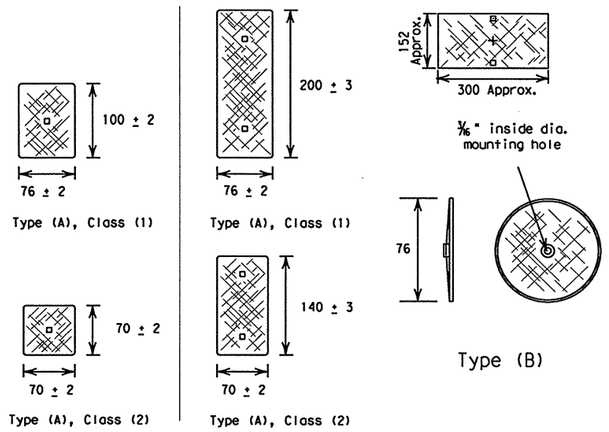


Type (A) - Reflective sheeting with pressure sensitive backing. For certain (non-flexible post) applications, reflective sheeting may be directly applied to approved metal, plastic or fiberglass backplate with 17/64" square mounting hole.

It is the contractor's option to provide Class (1) or Class (2) reflective sheeting in accordance with Departmental Material Specification D-9-8600. All reflector units per delineator or object marker shall be of the same type and class of reflective sheeting.

Type (B) - Centermount acrylic plastic prismatic reflector.

SPECIFICATION REFERENCE TABLE

| | |
|---|---|
| MATERIALS AND TESTS DIVISION SPECIFICATIONS | |
| FLEXIBLE DELINEATOR & OBJECT MARKER POSTS (DRIVEABLE & SURFACE MOUNT TYPES) | D-9-4400 |
| FLAT SURFACE REFLECTIVE SHEETING, TYPE C (HIGH SPECIFIC INTENSITY) | D-9-8300 |
| NON-REFLECTIVE BACKGROUND COATING | D-9-8500 |
| DELINEATOR AND OBJECT MARKER | D-9-8600 |

GENERAL NOTES:

1) Delineators shall be uniformily placed not less than 0.6 m nor more than 2.4 m from the edge of shoulder or the face of unmountable curb. They may be placed in line with guardrail where guardrail is used.
2) Object markers shall be located at points designated on the plan.
   When used for marking objects in the roadway or 2.4 m or less from the shoulder or curb, the mounting height to the bottom of the object marker should normally be 1.2 m above the surface of the nearest traffic lane. When used to mark objects more than 2.4 m from the shoulder or curb, the mounting height to the bottom of the object marker may be 1.2 m above the ground line.
   When object markers or markings are applied to a hazardous object which by its nature required a lower or higher mounting, the vertical mounting height may vary according to need.
3) Hardware shall be galvanized steel, stainless steel, or aluminum, except as noted.
4) Posts for supporting delineators and Type 2 object markers shall be 1.67 kg/m winged channel.
5) Type 1, 3 and 4 object marker posts shall be 2.98 kg/m winged channel.
6) Delineator and object markers shall be in accordance with Department Material Specification D-9-8600.

All dimensions are in millimeters unless otherwise noted.

## OBJECT MARKERS TYPE 2

YELLOW (R-reflector unit, P-panel)

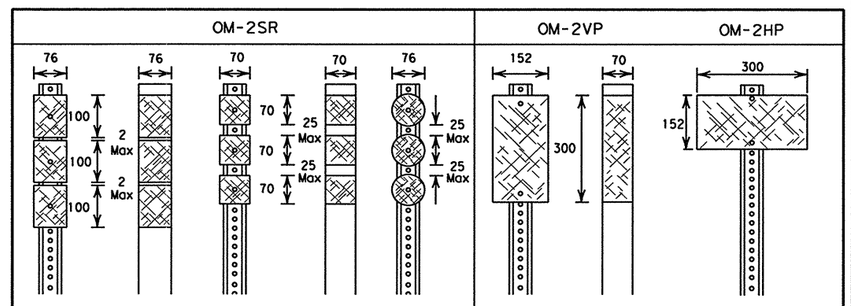


| Type | A | | | | B | A | | A |
|---|---|---|---|---|---|---|---|---|
| Class | 1 | 1 | 2 | 2 | n/a | 1 | 2 | 1 |
| Post | WC | FLEX | WC | FLEX | WC | WC | FLEX | WC |

ALL REFLECTOR UNITS ARE YELLOW
WC-wing channel post (1.67 kg/m)
FLEX-flexible post (driveable and semi-driveable)

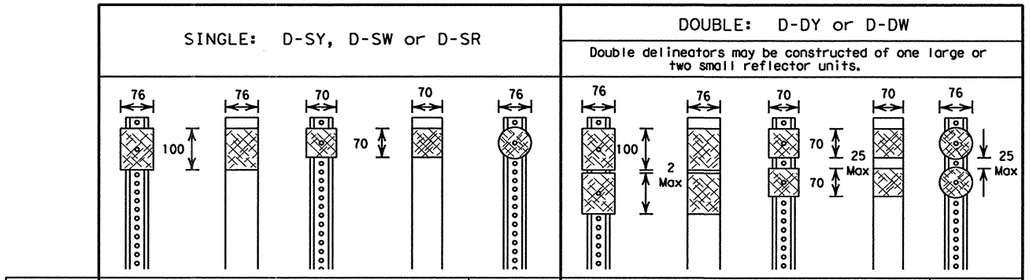


| Type | A | | | | B | A | | | | B |
|---|---|---|---|---|---|---|---|---|---|---|
| Class | 1 | 1 | 2 | 2 | n/a | 1 | 1 | 2 | 2 | n/a |
| Post | FLEX WC | | WC | FLEX | WC | WC | FLEX | WC | FLEX | WC |

Length of post may vary to meet field conditions.

REFLECTOR UNITS: W-white, Y-yellow, R-red
WC-wing channel post (1.67 kg/m)
FLEX-flexible post (driveable and semi-driveable)

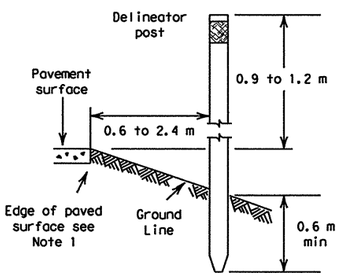


TYPICAL INSTALLATION

REV. 3-97

©1999

**STANDARD PLANS**
*Texas Department of Transportation*
*Traffic Operations Division*

# DELINEATORS & OBJECT MARKERS SAN ANTONIO STANDARD

(1 of 2) D & OM(1)-95(M)

| ORIG DRAW DATE: JAN. 1981 | DN: - LR | CK: - | DW: - DN | CK: - | REG NO.: |
|---|---|---|---|---|---|
| REVISIONS: 1-82, 4-92, 8-95 | STATE DISTRICT: SAT | FEDERAL REGION: 6 | FEDERAL AID PROJECT: NH 2000(704),etc. | | SHEET: 750 |
| | COUNTY: BEXAR | CONTROL: 2452 | SECTION: 01 | JOB: 036,etc. | HIGHWAY: LP 1604 |

CK: CW DW: DN CK: MT
ACC: d58hp1c/usr/d580504
FILE:

DISCLAIMER
The use of this standard is governed by the "Texas Engineering Practice Act". No warranty of any kind is made by TxDOT for any purpose whatsoever. TxDOT assumes no responsibility for the conversion of this standard to other formats or for incorrect results or damages resulting from its use.

## PLAN VIEW OF BIDIRECTIONAL MOUNTING

For Single Delineators Only

Post oriented as directed by Engineer

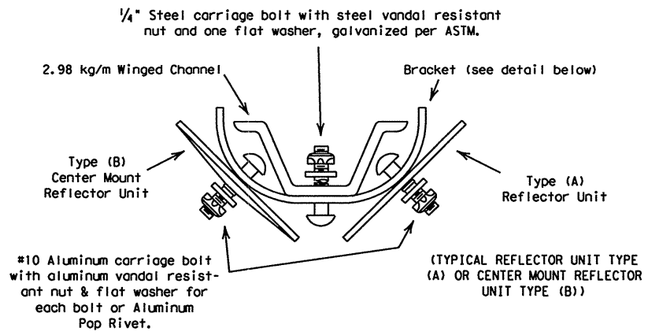


## BIDIRECTIONAL BRACKET

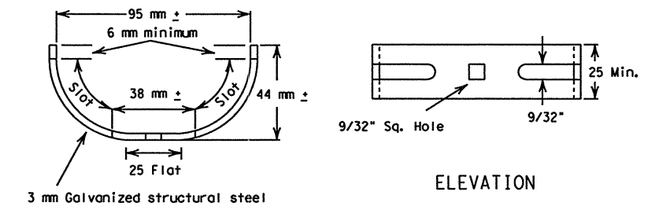


## DELINEATORS FOR CURVES OR TANGENT SECTIONS

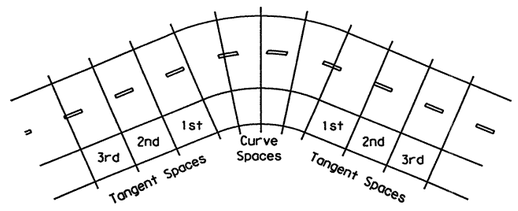


The delineator spacing, S, on the curve is found from the formula $S=1.64\sqrt{R-5}$, where R is the radius of the curve in meters. The first spaces immediately in advance of and beyond the curve are 2.0xS, the second spaces are 3.0xS, and the third spaces are 6.0xS but not to exceed 90 m. Distance for spaces rounded to nearest 1.0 m.

Spacing for Highway Delineators on Horizontal Curve

| Degree of Curve | Radius on Curve | Spacing on Curve | Spacing in Advance of and Beyond Curves | | |
|---|---|---|---|---|---|
| | | | First Space | Second Space | Third Space |
| | Meters | Meters | Meters | Meters | Meters |
| 1 | 1746 | 68 | 90 | 90 | 90 |
| 2 | 873 | 48 | | | |
| 3 | 582 | 39 | 79 | | |
| 4 | 437 | 34 | 68 | | |
| 5 | 349 | 30 | 61 | | |
| 6 | 291 | 28 | 56 | 84 | |
| 7 | 249 | 26 | 52 | 78 | |
| 8 | 218 | 24 | 48 | 72 | |
| 9 | 194 | 23 | 46 | 69 | |
| 10 | 174 | 21 | 42 | 63 | |
| 11 | 159 | 20 | 40 | 60 | |
| 12 | 145 | 19 | 38 | 57 | |

## FLEXIBLE POSTS

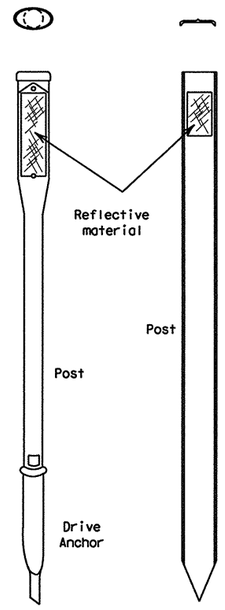


Driveable or Semi-Driveable Delineator Posts

Install to manufacturer's recommendations

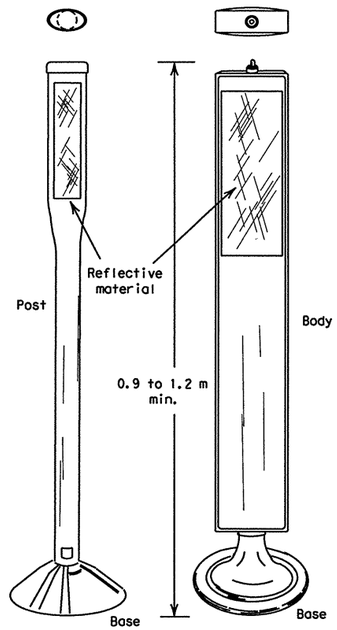


Pavement Surface Mount

Surface mounted delineator posts may use epoxy, or hot bituminous adhesive to mount post to flat surface.

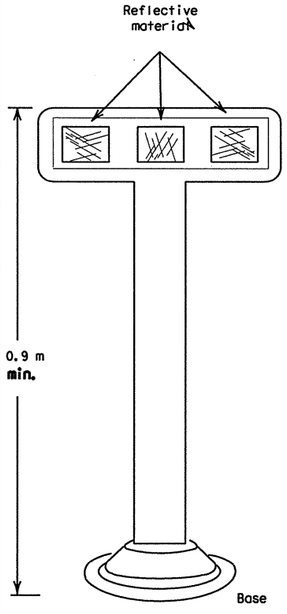


K Marker

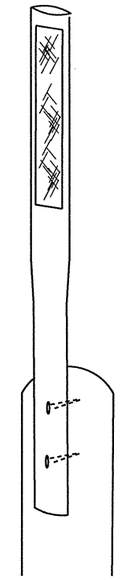

Guardrail Post Surface Mount

## PLAN VIEW OF MONODIRECTIONAL MOUNTINGS

For Single and Double Delineators and Object Marker types OM-2YP(a) & OM-2SR

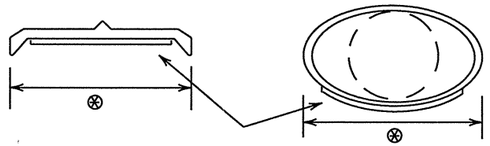


⊗ Not less than 82 mm.

Various Cross Sections may be furnished if projected width of reflective unit appears to be 76 ± 10 mm.

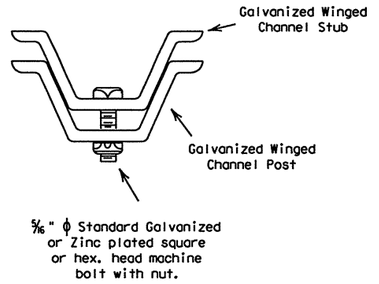


## BREAK AWAY CHANNEL POST

For Object Marker Types 1,3 and 4

(where specified in the plans)

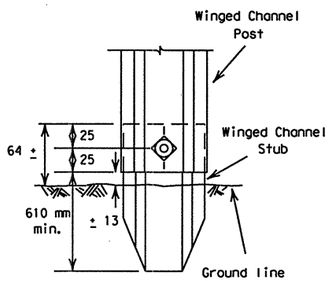


PARTIAL ELEVATION

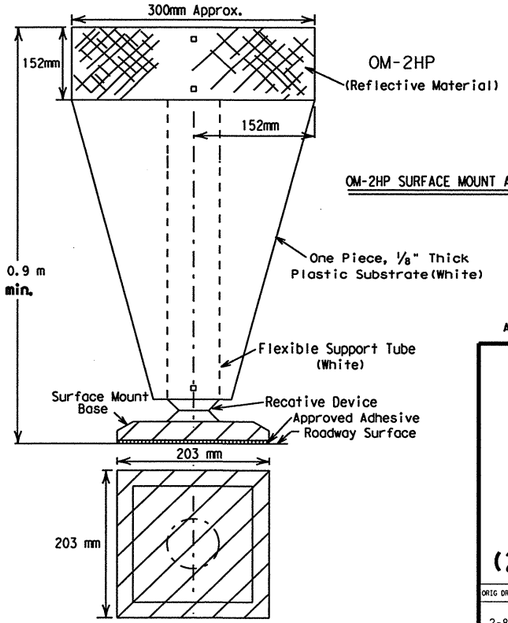


SURFACE MOUNT BASE

Flexed Base Support For OM-2HP

REV. 5-97

All dimensions are in millimeters unless otherwise noted.

**STANDARD PLANS**

©1999 *Texas Department of Transportation*

*Traffic Operations Division*

# DELINEATORS & OBJECT MARKERS SAN ANTONIO STANDARD (2 of 2) D & OM(2)-95(M)

| ORIG DRAW DATE: JAN. 1981 | DN:- LR/MT | CK:- | DW:- DN | CK:- | MSG NO.: |
|---|---|---|---|---|---|
| REVISIONS: 2-82, 4-92, 8-95 | STATE DISTRICT: SAT | FEDERAL REGION: 6 | FEDERAL AID PROJECT: NH 2000(704),etc. | | SHEET: 751 |
| | COUNTY: BEXAR | CONTROL: 2452 | SECTION: 01 | JOB: 036,etc. | HIGHWAY: LP 1604 |

CK: CW DW: DN CK: MT

ACC: d58hp1c/usr/d580504 FILE:

DISCLAIMER
The use of this standard is governed by the "Texas Engineering Practice Act". No warranty of any kind is made by TxDOT for any purpose whatsoever. TxDOT assumes no responsibility for the conversion of this standard to other formats or for incorrect results or damages resulting from its use.

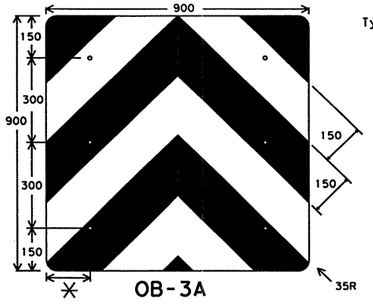


OB-3A

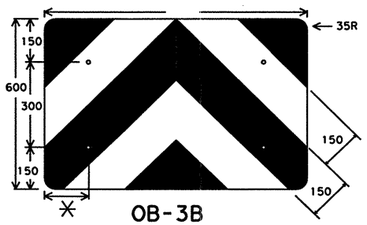


OB-3B

✳adjust to fit attenuator per manufacturer's recommendation, or as directed by the Engineer.

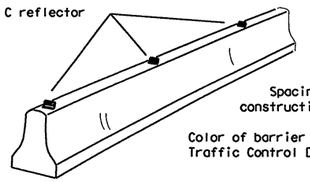


Barrier Reflectors will be installed only on barriers designated for reflectorization as required elsewhere in the plans.

Spacing of reflectors is 12 meters. Mount reflectors to barrier by construction adhesive or butyl rubber adhesive.

Color of barrier reflectors will conform to the Texas "Manual on Uniform Traffic Control Devices", (TMUTCD).

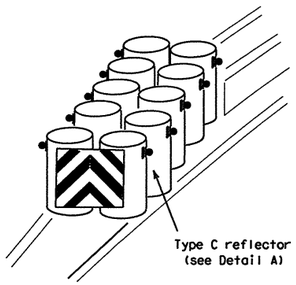


Object Marker blank to be 16 mm Plywood (Type A) in accordance with Item "PLYWOOD SIGNS (TYPE A)" or 2.0 mm thick Aluminum as per Specification D-9-7110.

Mounting should be flush with top of VIA.
Minimum size 900x600 mm.

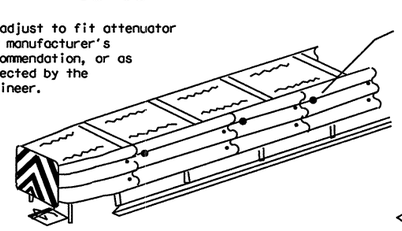


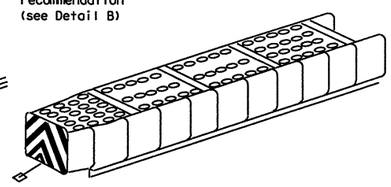

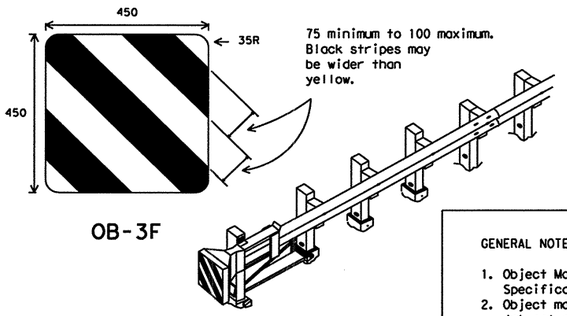


OB-3F

TYPICAL GUARDRAIL END TREATMENT

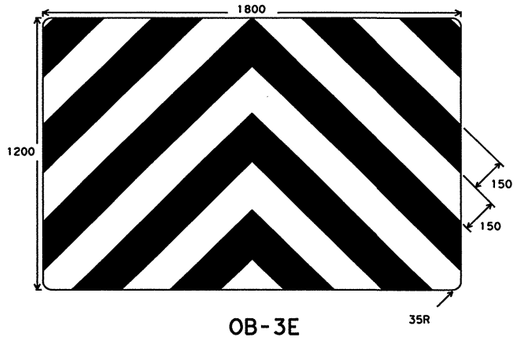


OB-3E

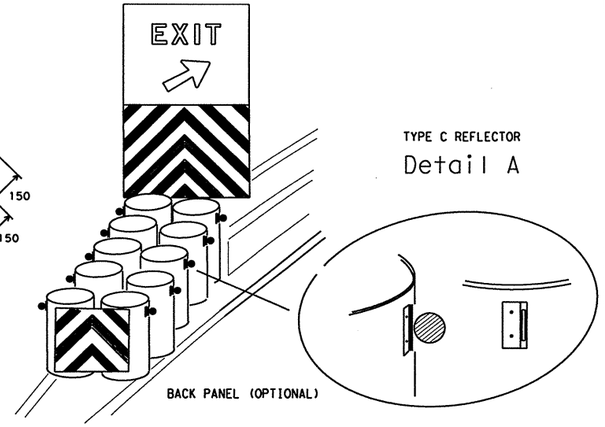


GENERAL NOTES:

1. Back Panel (OB-3E) shall be made of 16 mm plywood (Type A) panels unless otherwise noted in the plans.
2. Back panel will be mounted independent of the attenuator. The minimum mounting height is flush with the top of the attenuator.
3. Alternating flashing yellow lights may be added. Lights should be mounted minimum 1.8 m above pavement.
4. Attenuator may have additional yellow reflective and black striping, and/or reflectors placed on sides. CHEVRONS (W1-8) may be erected to delineate roadway curvature beyond the attenuator. These additional devices will be installed if required elsewhere in the plans.
5. Mount Back Panel per details on SMD Standards, or as detailed elsewhere in the plans.

GENERAL NOTES: OBJECT MARKERS

1. Object Markers shall conform to the Texas MUTCD and meet the color and reflectivity requirement of Department Material Specification D-9-8300, Type C. Background shall be yellow reflective and Chevron shall be black.
2. Object markers OB-3C, OB-3D and OB-3F may be fabricated from reflective sheeting applied to:
   (a) galvanized sheet metal gage 0.7 to 0.8 mm per ASTM A366.025 nominal, aluminum sheet of 6061-T6 or 5052-H38 alloy approximately 1.6 mm thickness,
   (b) low or medium density polyethelene approximately 2.0 mm thickness, or
   (c) other material as specified in the plans or approved by the Engineer.
3. OB-3F is intended for use only with guardrail end treatments (i.e. GET, CAT, BEST, BRAKEMASTER, SENTRE, etc.). OM-BF may be fabricated from adhesive backed reflective sheeting applied directly to guardrail end treatment, or applied directly to an "end cap" as per the manufacturer's recommendation. Direct applied sheeting shall provide a smooth surface and have no wrinkles, air bubbles, cuts or tears.
4. Size may be reduced to fit smaller devices, however, the minimum size shall be:
   (a) 600x600 mm for attenuators, and
   (b) 450x450 mm for guardrail end treatments.
5. Pop rivets, screws, or nuts and bolts may be used to attach object markers and reflectors. Holes, slots or other openings may be cut or drilled through object markers to allow cable or other attachments.
6. When traffic passes only on one side of attenuator, only the OM-3 marker should be installed. OM-3 should be installed per the requirements of D & OM Standards with a minimum mounting height of 450 mm.

TYPE C REFLECTORS

1. Type C reflectors shall consist of a reflector unit attached to a bracket to facilitate delineator mounting on attenuators, guardrails and concrete traffic barriers.
2. Type C reflectors may also be used to delineate side of attenuator, guardrail and concrete traffic barrier.
3. Type C reflectors shall meet the requirements of D-9-8600.

| TRAFFIC FLOW | BOTH SIDES | | | | | | ONE SIDE |
|---|---|---|---|---|---|---|---|
| ATTENUATOR TYPE | OB-3A | OB-3B | OB-3C | OB-3D | L | OM-1 | |
| GREAT | NR | ✓ | NR | ✓ | 2400 | ✓ | |
| Steel Drum | ✓ | ✓ | ✓ | ✓ | 2850 | ✓ | |
| Hydraulic | ✓ | ✓ | NR | NR | NR | ✓ | |
| Hex Foam | ✓ | ✓ | NR | NR | NR | ✓ | OM-3 |
| Low Maintenance | NR | ✓ | NR | ✓ | 2400 | ✓ | |
| Sand Filled Plastic Modules | NR | NR | NR | NR | NR | ✓ | |
| Sand Tire | NR | NR | NR | NR | NR | ✓ | |

NR - Not Recommended

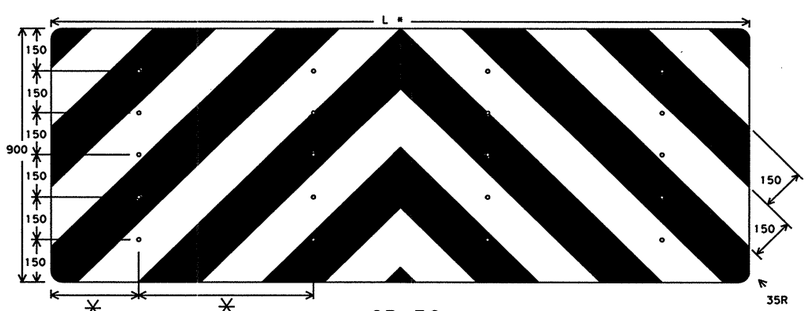


OB-3C

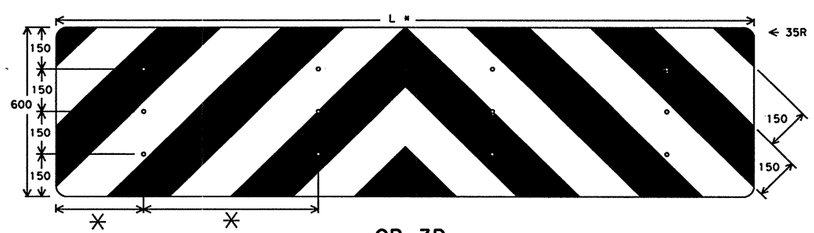


OB-3D

✳spacing adjusted to attach through centerline of drum, per attenuator manufacturers recommendation, or as directed by the Engineer.

Mounting should be flush with top of attenuator.
Minimum size 2400x600 mm.

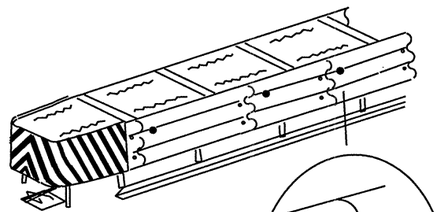

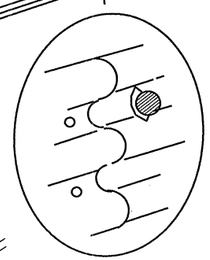

TYPE C REFLECTOR
Detail B

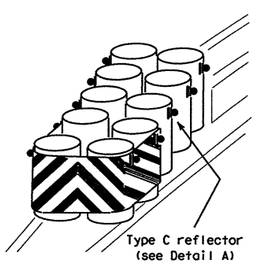


All dimensions are in millimeters unless otherwise noted.

STANDARD PLANS
TEXAS DEPARTMENT OF TRANSPORTATION
*Traffic Operations Division*

# DELINEATORS & OBJECT MARKERS FOR VEHICLE IMPACT ATTENUATORS

# D & OM(VIA)-98(M)

| ©TxDOT December 1989 | DN: LR | CK: | DW: DN | CK: | REQ. NO.: |
|---|---|---|---|---|---|

| REVISIONS | STATE DISTRICT | FEDERAL REGION | FEDERAL AID PROJECT | SHEET |
|---|---|---|---|---|
| 4-90 | SAT | 6 | NH 2000(704),etc. | 752 |
| 4-92 | COUNTY | | CONTROL / SECTION / JOB | HIGHWAY |
| 8-95 | BEXAR | | 2452 / 01 / 036,etc. | LP 1604 |
| 4-98 | | | | |

| LET | DATE | ACC: |
|---|---|---|
| 1 2 3 4 5 6 7 8 9 10 11 12 13 14 15 16 | | |
| 17 18 19 20 21 22 23 24 25 26 27 28 29 30 31 32 | | |
| 33 34 35 36 37 38 39 40 41 42 43 44 45 46 47 48 | | |
| 49 50 51 52 53 54 55 56 57 58 59 60 61 62 63 | | |

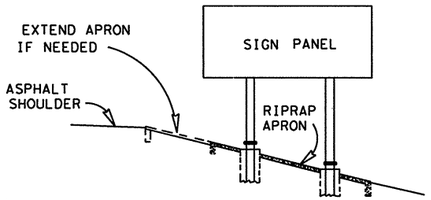


TYPICAL ELEVATION
MULTIPLE POST

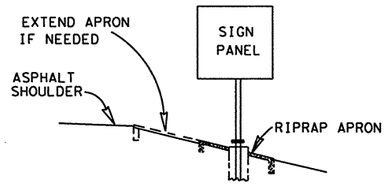


TYPICAL ELEVATION
SINGLE POST

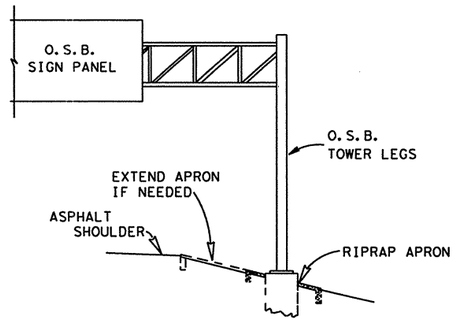


TYPICAL ELEVATION
OVERHEAD SIGN BRIDGE

NOTE: CLASS "B" CONCRETE RIPRAP TO BE PLACED AS SHOWN IN DETAILS AND APPROVED BY THE ENGINEER. THIS WORK SHALL BE DONE IN ACCORDANCE WITH ITEM 432.

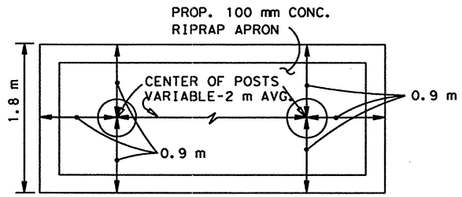


TOP VIEW

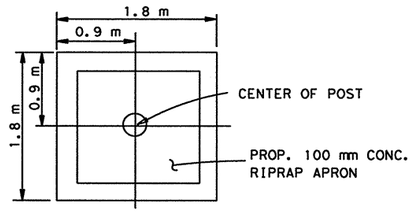


TOP VIEW

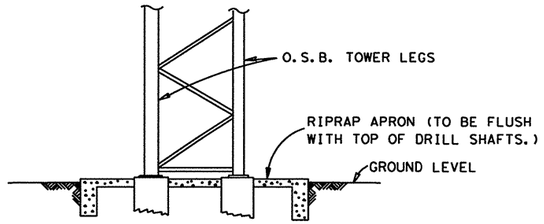


SIDE VIEW ELEVATION

OVERHEAD SIGN BRIDGE
ESTIMATED AT 1.2 M3 PER SITE

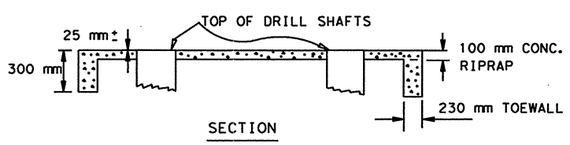


SECTION

MULTIPLE POST GROUND MOUNT
ESTIMATED AT 1.2 M3 PER SITE

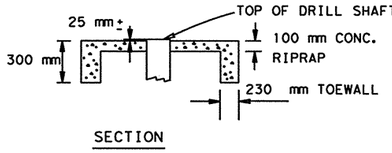


SECTION

SINGLE POST GROUND MOUNT
ESTIMATED AT 0.615 M3 PER SITE

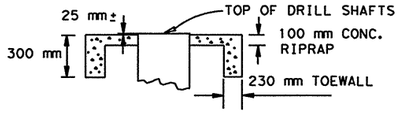


SECTION

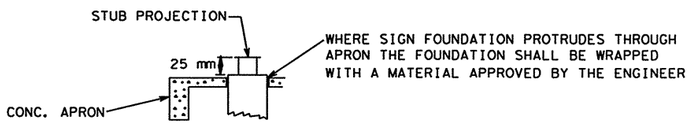


SECTION DETAIL

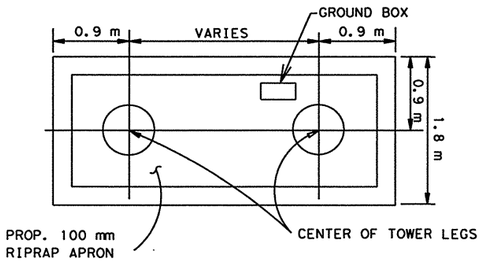


TOP VIEW

# RIPRAP APRON DETAILS FOR SIGN FOUNDATIONS

# RAD
# (SAN ANTONIO DISTRICT STANDARD)
# METRIC

© 1999 Texas Department of Transportation

| FED. RD. DIV. NO. | FEDERAL AID PROJECT NO. | | SHEET NO. |
|---|---|---|---|
| 6 | NH 2000(704), etc. | | 753 |
| STATE | STATE DIST. NO. | COUNTY | |
| TEXAS | SAT | BEXAR | |
| CONT. | SECT. | JOB | HIGHWAY NO. |
| 2452 | 01 | 036, etc. | LP 1604 |

REVISED 9-99

QUANTITIES THIS SHEET
CSJ 2452-01-037

SCALE 1:1000

| ESTIMATED QUANTITIES | | |
|---|---|---|
| ITEM | UNIT | QUANTITY 2452-01-037 |
| REFL PAV MRK TY I (W)(SLD)(100MM) | M | 102 |
| REFL PAV MRK TY I (W)(BRK)(100MM) | M | 27 |
| REFL PAV MRK TY I (Y)(SLD)(100MM) | M | 102 |
| RAIS PAV MRKR CL B (REFL) TY II C-R | EA | 8 |
| ELIM EXT PAV MRK & MRKR (100MM) | M | 231 |
| ELIM EXT PAV MRK & MRKR (RAIS PAV MRKR) | EA | 44 |
| | | |

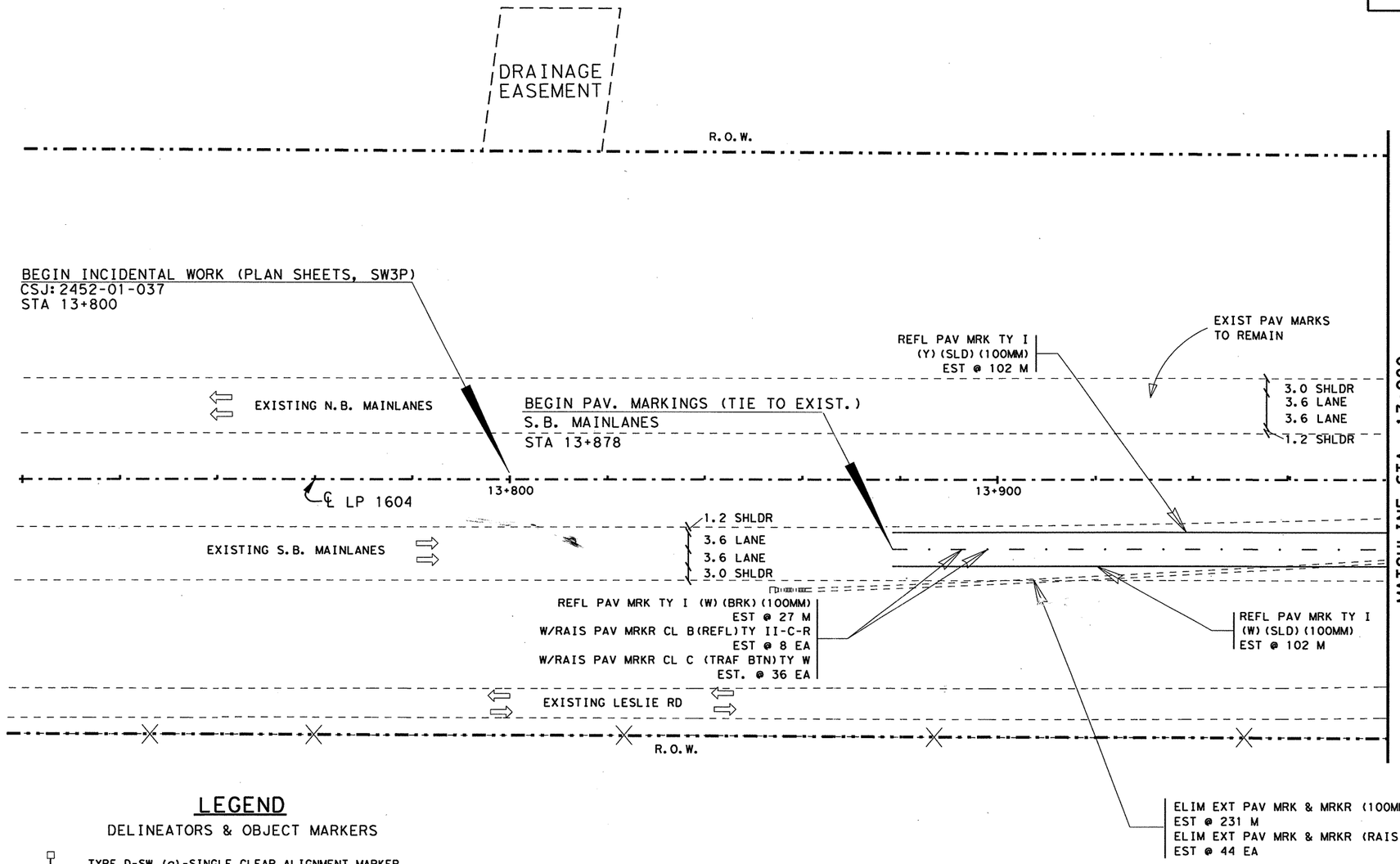


NOTE(S):

ALL DIMENSIONS ARE IN METERS UNLESS OTHERWISE NOTED.

QUANTITIES AND PLACEMENT OF TY II REFLECTIVE PAVEMENT MARKINGS ARE EXACTLY THE SAME AS TY I REFLECTIVE PAVEMENT MARKINGS. TY II QUANTITIES ACCOUNTED FOR ON THE PAVEMENT MARKING /DELINEATION SUMMARY.

ANY PAVEMENT MARKING IN CONFLICT WITH PROPOSED PAVEMENT MARKINGS SHALL BE REMOVED BY THE CONTRACTOR OR AS DIRECTED BY THE ENGINEER.

## LEGEND

DELINEATORS & OBJECT MARKERS

- TYPE D-SW (a)-SINGLE CLEAR ALIGNMENT MARKER
- TYPE D-SY (a)-SINGLE AMBER ALIGNMENT MARKER
- TYPE D-DW (a)-DOUBLE CLEAR ALIGNMENT MARKER
- TYPE D-DY (a)-DOUBLE AMBER ALIGNMENT MARKER
- TYPE OM2-SR (a)-TRIPLE AMBER CLEARANCE MARKER
- OM-2HP (SPL) 1m HGT
- OM-3L
- OM-3R

| DELINEATION QUANTITIES | | | | |
|---|---|---|---|---|
| TYPE | EA. | ASM. | SPL. MNT. | SURF. MNT. |
| D-SW(a) | | | | |
| D-DW(a) | | | | |
| D-SY(a) | | | | |
| D-DY(a) | | | | |
| OM-2SR(a) | | | | |
| | | | | |
| | | | | |
| | | | | |
| | | | | |

STATE OF TEXAS
JOEL K. DAVENPORT, JR.
79276
REGISTERED PROFESSIONAL ENGINEER

Joel K. Davenport, Jr. P.E. 79276 — 9/19/00 Date

©2000 Texas Department of Transportation

# PAVEMENT MARKING AND DELINEATION LAYOUT

SHEET 1 OF 57

| FED.RD. DIV.NO. | FEDERAL AID PROJECT NO. | | SHEET NO. |
|---|---|---|---|
| 6 | NH 2000(704), etc. | | 754 |
| STATE | DIST. | COUNTY | |
| TEXAS | SAT | BEXAR | |
| CONT. | SECT. | JOB | HIGHWAY NO. |
| 2452 | 01 | 036, etc. | LP 1604 |

LEVELS DISPLAYED
1 2 3 4 5 6 7 8 9 10 11 12 13 14 15 16
17 18 19 20 21 22 23 24 25 26 27 28 29 30 31 32
33 45 56 57 58 59 40 41 42 43 44 45 46 47 48
49 50 51 62 53 54 55 65 76 85 96 06 16 26 3

ACC: *:\a01\design\
lp1604fm471-90\pave-sign\
FILE: pavmrkplan01.dgn

QUANTITIES THIS SHEET
CSJ 2452-01-037

SCALE 1:1000

| ESTIMATED QUANTITIES | | |
|---|---|---|
| ITEM | UNIT | QUANTITY |
| | | 2452-01-037 |
| REFL PAV MRK TY I (W)(SLD)(100MM) | M | 400 |
| REFL PAV MRK TY I (W)(BRK)(100MM) | M | 96 |
| REFL PAV MRK TY I (Y)(SLD)(100MM) | M | 400 |
| RAIS PAV MRKR CL B (REFL) TY II C-R | EA | 34 |
| ELIM EXT PAV MRK & MRKR (100MM) | M | 583 |
| ELIM EXT PAV MRK & MRKR (RAIS PAV MRKR) | EA | 106 |
| | | |
| | | |
| | | |

NOTE(S):

ALL DIMENSIONS ARE IN METERS UNLESS OTHERWISE NOTED.

QUANTITIES AND PLACEMENT OF TY II REFLECTIVE PAVEMENT MARKINGS ARE EXACTLY THE SAME AS TY I REFLECTIVE PAVEMENT MARKINGS. TY II QUANTITIES ACCOUNTED FOR ON THE PAVEMENT MARKING /DELINEATION SUMMARY.

ANY PAVEMENT MARKING IN CONFLICT WITH PROPOSED PAVEMENT MARKINGS SHALL BE REMOVED BY THE CONTRACTOR OR AS DIRECTED BY THE ENGINEER.

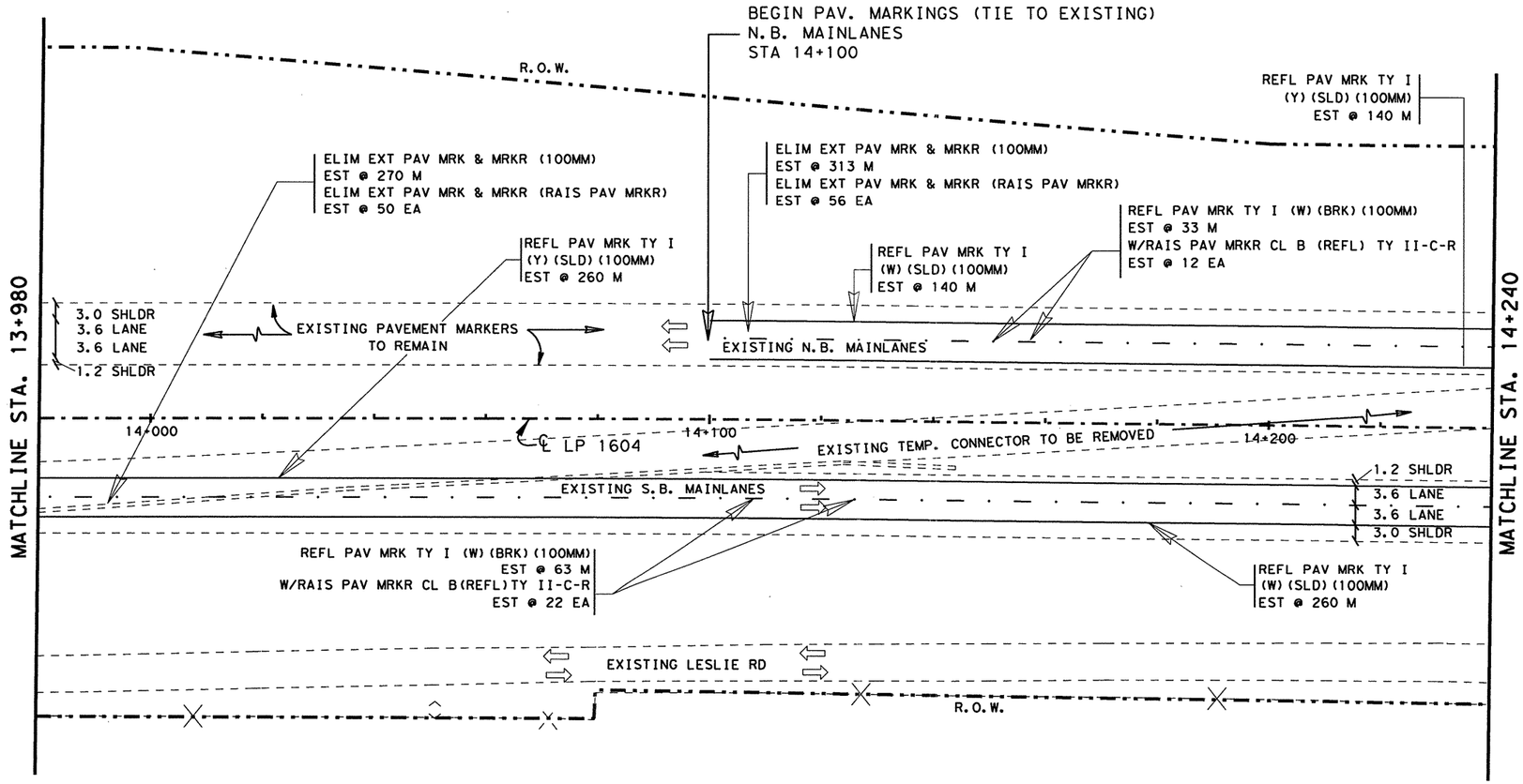


| DELINEATION QUANTITIES | | | | |
|---|---|---|---|---|
| TYPE | EA. | ASM. | SPL. MNT. | SURF. MNT. |
| D-SW(a) | | | | |
| D-DW(a) | | | | |
| D-SY(a) | | | | |
| D-DY(a) | | | | |
| OM-2SR(a) | | | | |
| | | | | |
| | | | | |
| | | | | |
| | | | | |

LEVELS DISPLAYED
1 2 3 4 5 6 7 8 9 10 11 12 13 14 15 16
17 18 19 20 21 22 23 24 25 26 27 28 29 30 31 32
33 34 35 36 37 38 39 40 41 42 43 44 45 46 47 48
49 51 52 53 54 55 56 57 58 59 60 61 62

ACC: t:\oo\design\
lp1604fm471-90\pave-sign\
FILE: pavmrkplan02.dgn

STATE OF TEXAS
JOEL K. DAVENPORT, JR.
79276
REGISTERED
PROFESSIONAL ENGINEER

Joel K. Davenport, Jr. 9/8/00
Joel K. Davenport, Jr. P.E. 79276 Date

©2000 Texas Department of Transportation

# PAVEMENT MARKING AND DELINEATION LAYOUT

SHEET 2 OF 57

| FED.RD. DIV.NO. | FEDERAL AID PROJECT NO. | | SHEET NO. |
|---|---|---|---|
| 6 | NH 2000(704), etc. | | 755 |
| STATE | DIST. | COUNTY | |
| TEXAS | SAT | BEXAR | |
| CONT. | SECT. | JOB | HIGHWAY NO. |
| 2452 | 01 | 036, etc. | LP 1604 |

7718700

QUANTITIES THIS SHEET
CSJ 2452-01-037

SCALE 1:1000

| ESTIMATED QUANTITIES | | |
|---|---|---|
| ITEM | UNIT | QUANTITY |
| | | 2452-01-037 |
| REFL PAV MRK TY I (W)(SLD)(100MM) | M | 520 |
| REFL PAV MRK TY I (W)(BRK)(100MM) | M | 132 |
| REFL PAV MRK TY I (Y)(SLD)(100MM) | M | 520 |
| RAIS PAV MRKR CL B (REFL) TY II C-R | EA | 44 |
| ELIM EXT PAV MRK & MRKR (100MM) | M | 405 |
| ELIM EXT PAV MRK & MRKR (RAIS PAV MRKR) | EA | 110 |
| | | |
| | | |
| | | |

NOTE(S):

ALL DIMENSIONS ARE IN METERS UNLESS OTHERWISE NOTED.

QUANTITIES AND PLACEMENT OF TY II REFLECTIVE PAVEMENT MARKINGS ARE EXACTLY THE SAME AS TY I REFLECTIVE PAVEMENT MARKINGS. TY II QUANTITIES ACCOUNTED FOR ON THE PAVEMENT MARKING /DELINEATION SUMMARY.

ANY PAVEMENT MARKING IN CONFLICT WITH PROPOSED PAVEMENT MARKINGS SHALL 9E REMOVED BY THE CONTRACTOR OR AS DIRECTED BY THE ENGINEER.

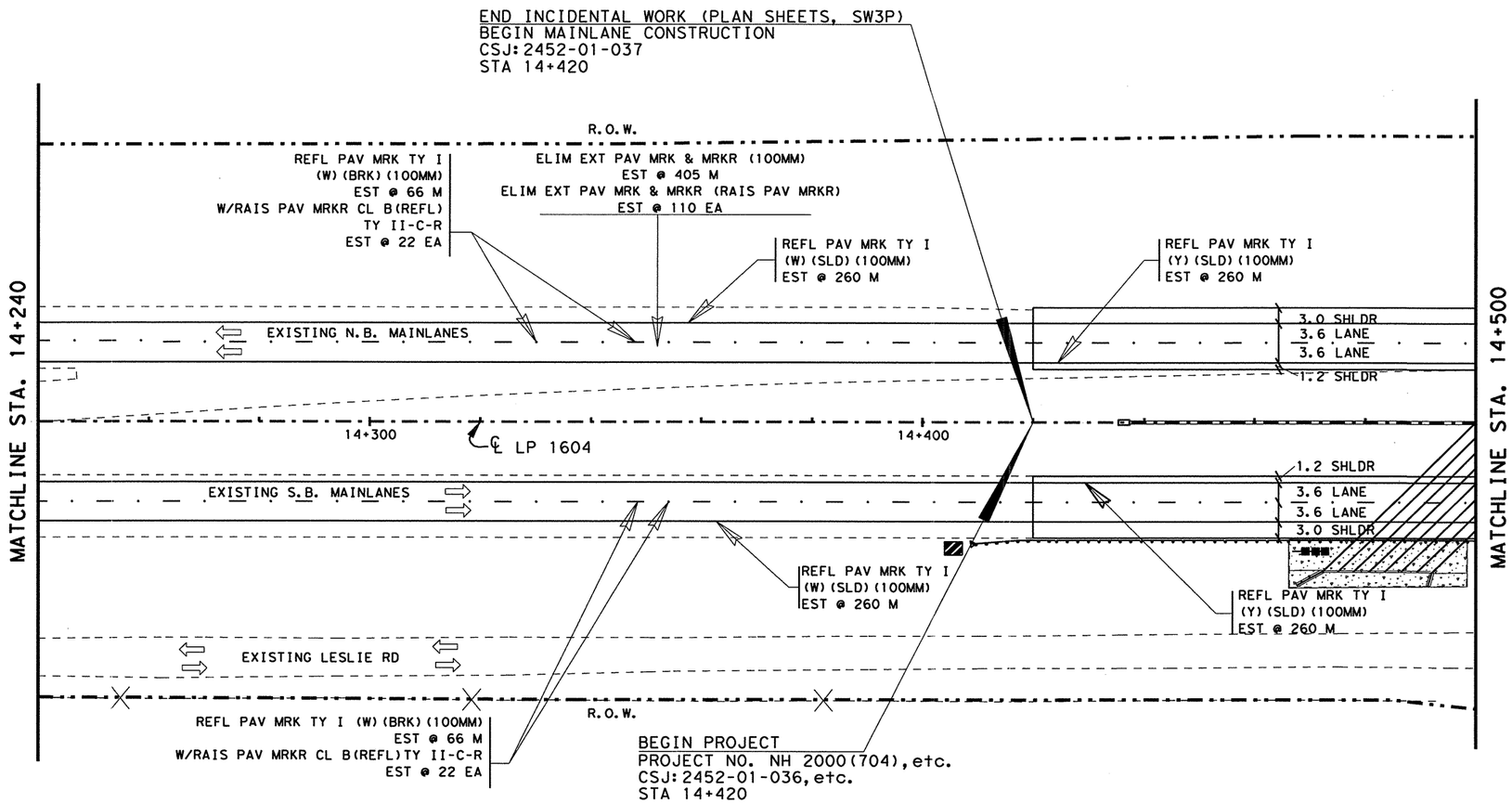


| DELINEATION QUANTITIES | | | | |
|---|---|---|---|---|
| TYPE | EA. | ASM. | SPL. MNT. | SURF. MNT. |
| D-SW(a) | | | | |
| D-DW(a) | | | | |
| D-SY(a) | | | | |
| D-DY(a) | | | | |
| OM-2SR | | 1 | | |
| OM-3R | 1 | | | |
| | | | | |
| | | | | |
| | | | | |

LEVELS DISPLAYED
1 2 3 4 5 6 7 8 9 10 11 12 13 14 15 16
17 18 23 24 25 26 27 28 29 30 31 32
33 34 35 36 37 38 39 40 41 42 43 44 45 46 47 48
49 50 51 52 53 54 55 56 57 58 59 60 61 62

ACC: *:\a\design\
lp1604fm471-90\pave-sign
FILE: pavmrkplan03.dgn

STATE OF TEXAS
JOEL K. DAVENPORT, JR.
79276
REGISTERED PROFESSIONAL ENGINEER

Joel K Davenport Jr 9/19/00
Joel K. Davenport, Jr. P.E. 79276 Date

©2000 Texas Department of Transportation

# PAVEMENT MARKING AND DELINEATION LAYOUT

**SHEET 3 OF 57**

| FED.RD. DIV. NO. | FEDERAL AID PROJECT NO. | | SHEET NO. |
|---|---|---|---|
| 6 | NH 2000(704), etc. | | 756 |
| STATE | DIST. | COUNTY | |
| TEXAS | SAT | BEXAR | |
| CONT. | SECT. | JOB | HIGHWAY NO. |
| 2452 | 01 | 036, etc. | LP 1604 |

QUANTITIES THIS SHEET
CSJ 2452-01-037

SCALE 1:1000

## ESTIMATED QUANTITIES

| ITEM | UNIT | QUANTITY |
|---|---|---|
| | | 2452-01-037 |
| REFL PAV MRK TY I (W)(SLD)(100MM) | M | 560 |
| REFL PAV MRK TY I (W)(BRK)(100MM) | M | 138 |
| REFL PAV MRK TY I (Y)(SLD)(100MM) | M | 560 |
| RAIS PAV MRKR CL B (REFL) TY II C-R | EA | 46 |
| | | |
| | | |
| | | |
| | | |
| | | |

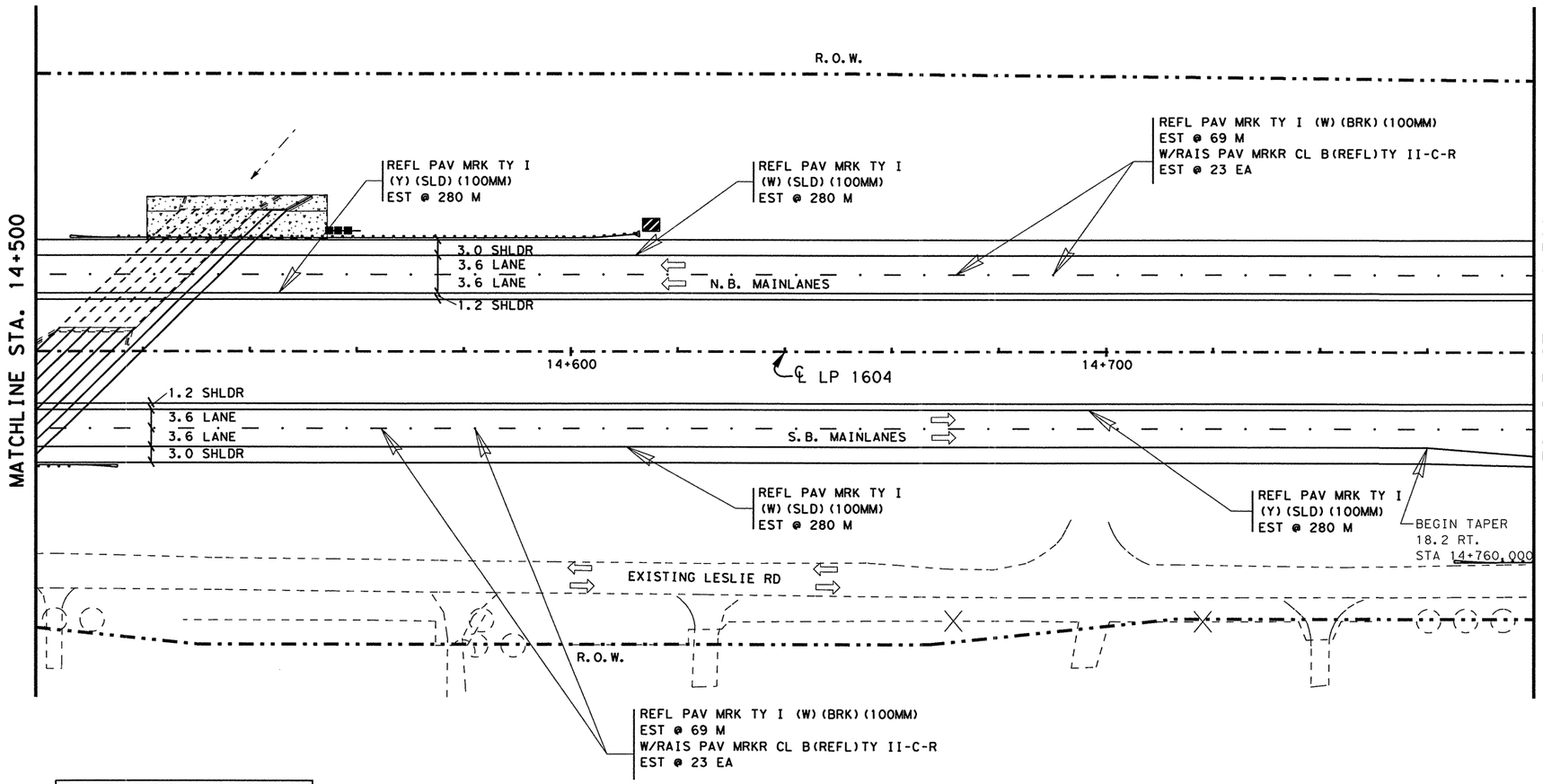


| DELINEATION QUANTITIES | | | | |
|---|---|---|---|---|
| TYPE | EA. | ASM. | SPL. MNT. | SURF. MNT. |
| D-SW(a) | | | | |
| D-DW(a) | | | | |
| D-SY(a) | | | | |
| D-DY(a) | | | | |
| OM-2SR(a) | | 1 | | |
| OM-3R | 1 | | | |
| | | | | |
| | | | | |
| | | | | |

NOTE(S):

ALL DIMENSIONS ARE IN METERS UNLESS OTHERWISE NOTED.

QUANTITIES AND PLACEMENT OF TY II REFLECTIVE PAVEMENT MARKINGS ARE EXACTLY THE SAME AS TY I REFLECTIVE PAVEMENT MARKINGS. TY II QUANTITIES ACCOUNTED FOR ON THE PAVEMENT MARKING /DELINEATION SUMMARY.

ANY PAVEMENT MARKING IN CONFLICT WITH PROPOSED PAVEMENT MARKINGS SHALL BE REMOVED BY THE CONTRACTOR OR AS DIRECTED BY THE ENGINEER.

STATE OF TEXAS
JOEL K. DAVENPORT, JR.
79276
REGISTERED PROFESSIONAL ENGINEER

Joel K Davenport, Jr. 9/19/00
Joel K. Davenport, Jr. P.E. 79276 Date

©2000
Texas Department of Transportation

# PAVEMENT MARKING AND DELINEATION LAYOUT

**SHEET 4 OF 57**

| FED. RD. DIV. NO. | FEDERAL AID PROJECT NO. | | SHEET NO. |
|---|---|---|---|
| 6 | NH 2000(704),etc. | | 757 |
| STATE | DIST. | COUNTY | |
| TEXAS | SAT | BEXAR | |
| CONT. | SECT. | JOB | HIGHWAY NO. |
| 2452 | 01 | 036,etc. | LP 1604 |

7/18/00

LEVELS DISPLAYED
1 2 3 4 5 6 7 8 | | 13 14 15 16
17 18 19 20 21 22 23 24 25 26 27 28 29 30 31 32
33 34 35 36 37 38 39 40 41 42 43 44 45 46 47 48
49 50 51 52 53 54 55 56 57 58 59 60 61 62 63

ACC: t:\ao\design\lp1604fm471-90\pave-sign\
FILE: pavmrkplan04.dgn

QUANTITIES THIS SHEET
CSJ 2452-01-037

SCALE 1:1000

| ESTIMATED QUANTITIES | | |
|---|---|---|
| ITEM | UNIT | QUANTITY 2452-01-037 |
| REFL PAV MRK TY I (W)(SLD)(100MM) | M | 560 |
| REFL PAV MRK TY I (W)(BRK)(100MM) | M | 138 |
| REFL PAV MRK TY I (Y)(SLD)(100MM) | M | 560 |
| RAIS PAV MRKR CL B (REFL) TY II C-R | EA | 46 |
| | | |
| | | |
| | | |
| | | |
| | | |

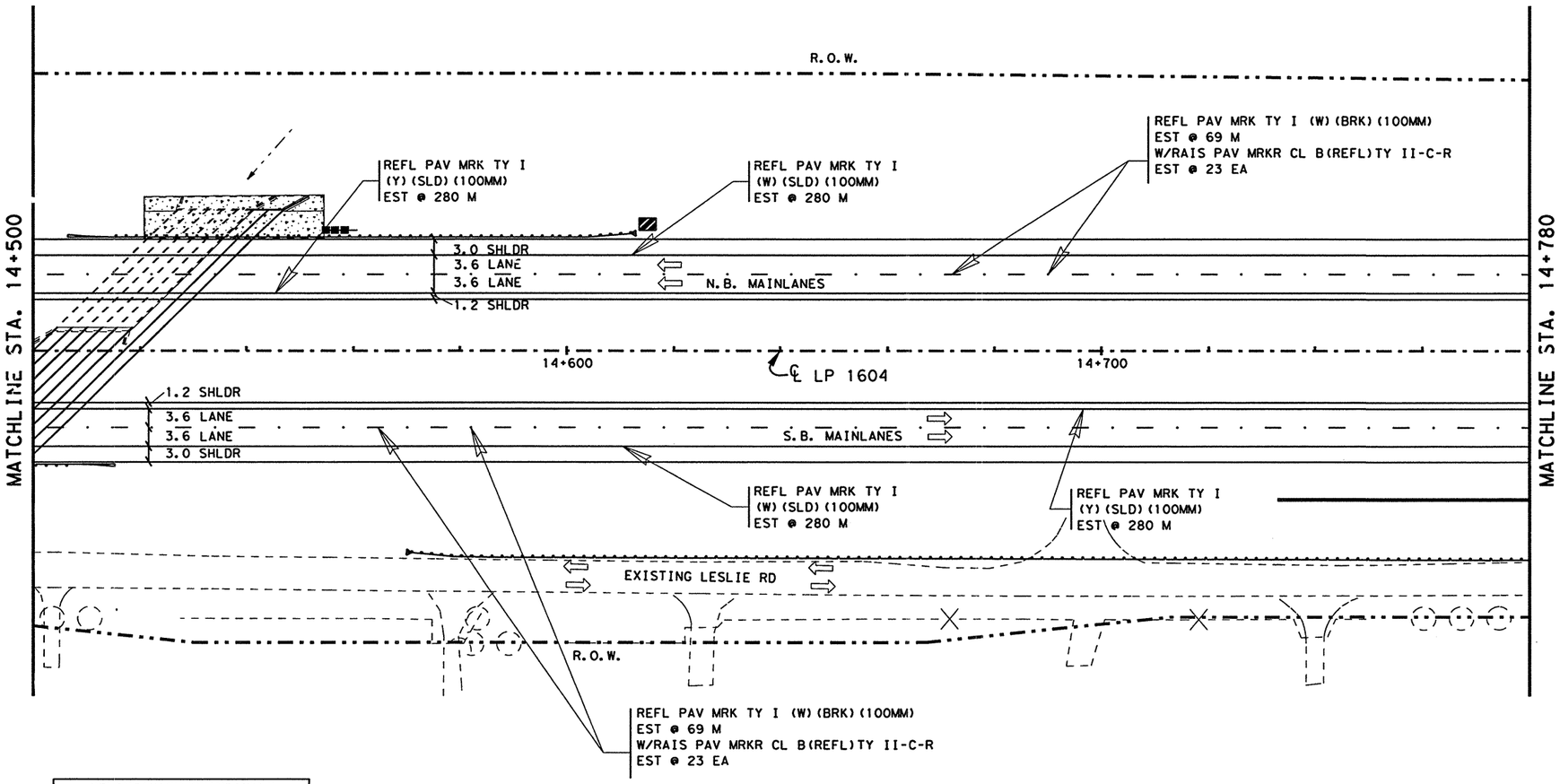


NOTE(S):

ALL DIMENSIONS ARE IN METERS UNLESS OTHERWISE NOTED.

QUANTITIES AND PLACEMENT OF TY II REFLECTIVE PAVEMENT MARKINGS ARE EXACTLY THE SAME AS TY I REFLECTIVE PAVEMENT MARKINGS. TY II QUANTITIES ACCOUNTED FOR ON THE PAVEMENT MARKING /DELINEATION SUMMARY.

ANY PAVEMENT MARKING IN CONFLICT WITH PROPOSED PAVEMENT MARKINGS SHALL BE REMOVED BY THE CONTRACTOR OR AS DIRECTED BY THE ENGINEER.

CHANGE ORDER 12

| DELINEATION QUANTITIES | | | | |
|---|---|---|---|---|
| TYPE | E.. | ASM. | SPL. MNT. | SURF. MNT. |
| D-SW(a) | | | | |
| D-DW(a) | | | | |
| D-SY(a) | | | | |
| D-DY(a) | | | | |
| OM-2SR(a) | | 1 | | |
| OM-3R | 1 | | | |
| | | | | |
| | | | | |
| | | | | |

CHANGE ORDER NO. 12
-ELIMINATED X-OVER AT ALAMO CONCRETE.
-NO REVISED PAV MARK QUANTITIES ASSOCIATED WITH THIS REVISION.

CHANGE ORDER NO. 12
-EXTENDED MBGF & RELATED SGT FOR SLOPE PROTECTION.
-ELIMINATED RIPRAP SIDE SLOPE
-ELIMINATED LIGHT SERVICE
-REVISED QUANTITIES
-ADD CONC BLOCK WALL

STATE OF TEXAS
TERRY G. McCOY
75016
REGISTERED PROFESSIONAL ENGINEER

Terry G. McCoy, P.E. — Date 3-8-02

FOR HOD's ASSOCIATED WITH CO 12 ONLY

©2000 Texas Department of Transportation

PAVEMENT MARKING AND DELINEATION LAYOUT

SHEET 4 OF 57

| FED.RD. DIV.NO. | FEDERAL AID PROJECT NO. | | SHEET NO. |
|---|---|---|---|
| 6 | NH 2000(704), etc. | | 757A |
| STATE | DIST. | COUNTY | |
| TEXAS | SAT | BEXAR | |
| CONT. | SECT. | JOB | HIGHWAY NO. |
| 2452 | 01 | 036, etc. | LP 1604 |

03-07-02

LEVELS DISPLAYED
1 2 3 4 5 6 7 8 | 13 14 15 16
17 18 19 20 21 22 23 24 25 26 27 28 29 30 31 32
33 34 35 36 37 38 39 40 41 42 43 44 45 46 47 48
49 50 51 52 53 54 55 56 57 58 59 60 61 62 63

ACC: t:\ao\design\
FILE: pavmrkplan04.dgn
lp1604fm471-90\pave-sign\

QUANTITIES THIS SHEET
CSJ 2452-01-037

SCALE 1:1000

| ESTIMATED QUANTITIES | | |
|---|---|---|
| ITEM | UNIT | QUANTITY |
| | | 2452-01-037 |
| REFL PAV MRK TY I (W)(SLD)(100MM) | M | 648 |
| REFL PAV MRK TY I (W)(BRK)(100MM) | M | 132 |
| REFL PAV MRK TY I (W)(ARROW) | EA | 3 |
| REFL PAV MRK TY I (W)(WORD) | EA | 3 |
| REFL PAV MRK TY I (Y)(SLD)(100MM) | M | 520 |
| RAIS PAV MRKR CL B (REFL) TY II C-R | EA | 84 |
| | | |
| | | |
| | | |
| | | |

NOTE(S):

ALL DIMENSIONS ARE IN METERS UNLESS OTHERWISE NOTED.

QUANTITIES AND PLACEMENT OF TY II REFLECTIVE PAVEMENT MARKINGS ARE EXACTLY THE SAME AS TY I REFLECTIVE PAVEMENT MARKINGS. TY II QUANTITIES ACCOUNTED FOR ON THE PAVEMENT MARKING /DELINEATION SUMMARY.

ANY PAVEMENT MARKING IN CONFLICT WITH PROPOSED PAVEMENT MARKINGS SHALL BE REMOVED BY THE CONTRACTOR OR AS DIRECTED BY THE ENGINEER.

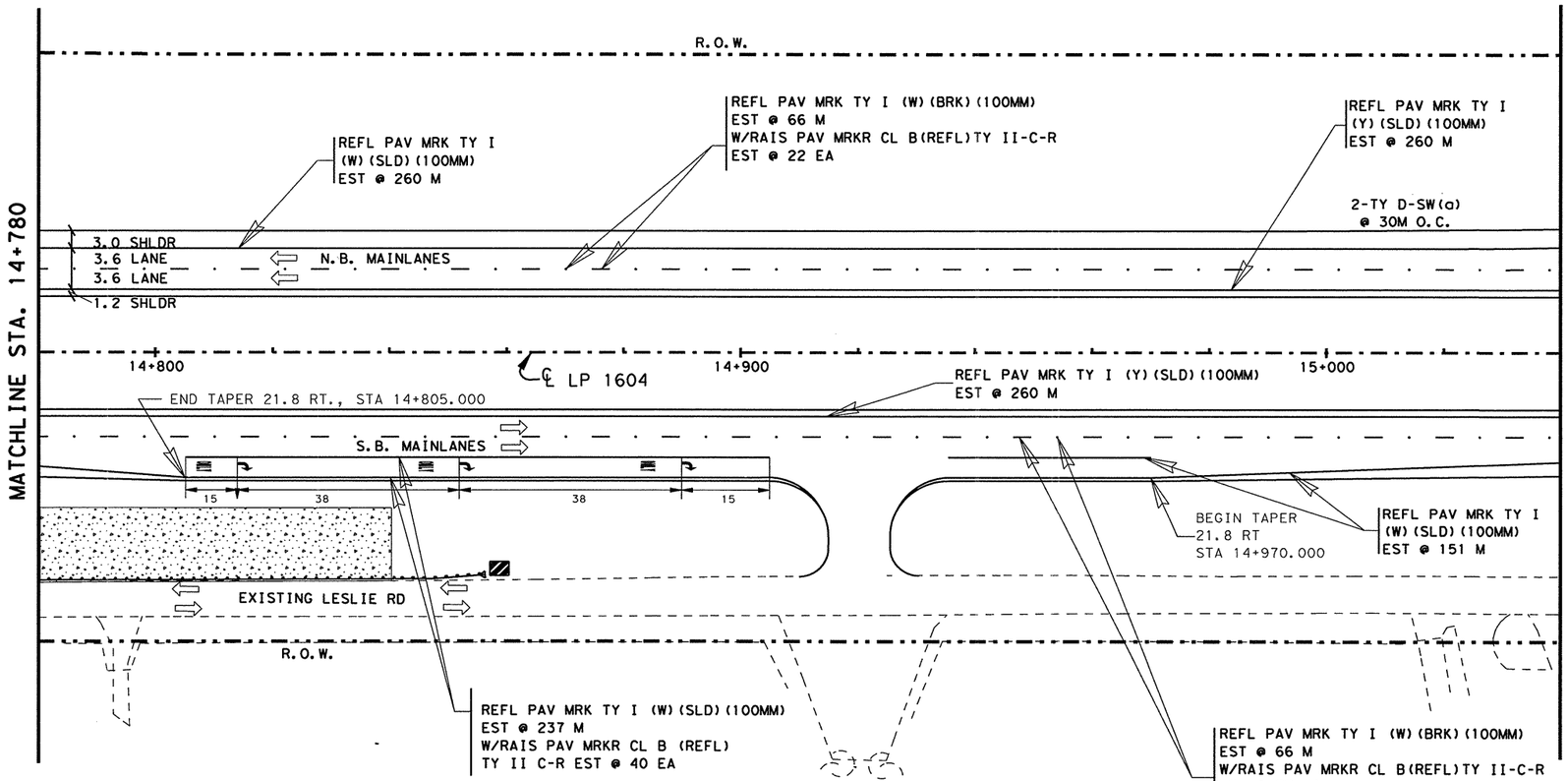


ALAMO CONCRETE

| DELINEATION QUANTITIES | | | | |
|---|---|---|---|---|
| TYPE | EA. | ASM. | SPL. MNT. | SURF. MNT. |
| D-SW(a) | | 2 | | |
| D-DW(a) | | | | |
| D-SY(a) | | | | |
| D-DY(a) | | | | |
| OM-2SR(a) | | | | |
| OM-3R | 1 | | | |
| | | | | |
| | | | | |
| | | | | |

LEVELS DISPLAYED
1 2 3 4 5 6 7 8 9 10 11 12 13 14 15 16
1 2 12 23 24 25 26 27 28 29 30 31 32
33 34 35 36 37 38 39 40 41 42 43 44 45 46 47 48
49 50 51 52 53 54 55 56 57 58 59 60 61 62 63

ACC: t:\ao\design\
ip1604fm471-90/pave\sign\
FILE: pavmrkplan05.dgn

STATE OF TEXAS
JOEL K. DAVENPORT, JR.
79276
REGISTERED PROFESSIONAL ENGINEER

Joel K. Davenport, Jr. 9/19/00
Joel K. Davenport, Jr. P.E. 79276 Date

Texas Department of Transportation

# PAVEMENT MARKING AND DELINEATION LAYOUT

SHEET 5 OF 57

| FED.RD. DIV.NO. | FEDERAL AID PROJECT NO. | | SHEET NO. |
|---|---|---|---|
| 6 | NH 2000(704), etc. | | 758 |
| STATE | DIST. | COUNTY | |
| TEXAS | SAT | BEXAR | |
| CONT. | SECT. | JOB | HIGHWAY NO. |
| 2452 | 01 | 036, etc. | LP 1604 |

QUANTITIES THIS SHEET
CSJ 2452-01-037

SCALE 1:1000

## ESTIMATED QUANTITIES

| ITEM | UNIT | QUANTITY |
|---|---|---|
| | | 2452-01-037 |
| REFL PAV MRK TY I (W)(SLD)(100MM) | M | ~~648~~ 520 |
| REFL PAV MRK TY I (W)(BRK)(100MM) | M | ~~52~~ |
| REFL PAV MRK TY I (W)(ARROW) | M | ~~3~~ 0 |
| REFL PAV MRK TY I (W)(WORD) | EA | ~~3~~ 0 |
| REFL PAV MRK TY I (Y)(SLD)(100MM) | | ~~520~~ |
| RAIS PAV MRKR CL B (REFL) TY II C-R | | ~~84~~ 44 |

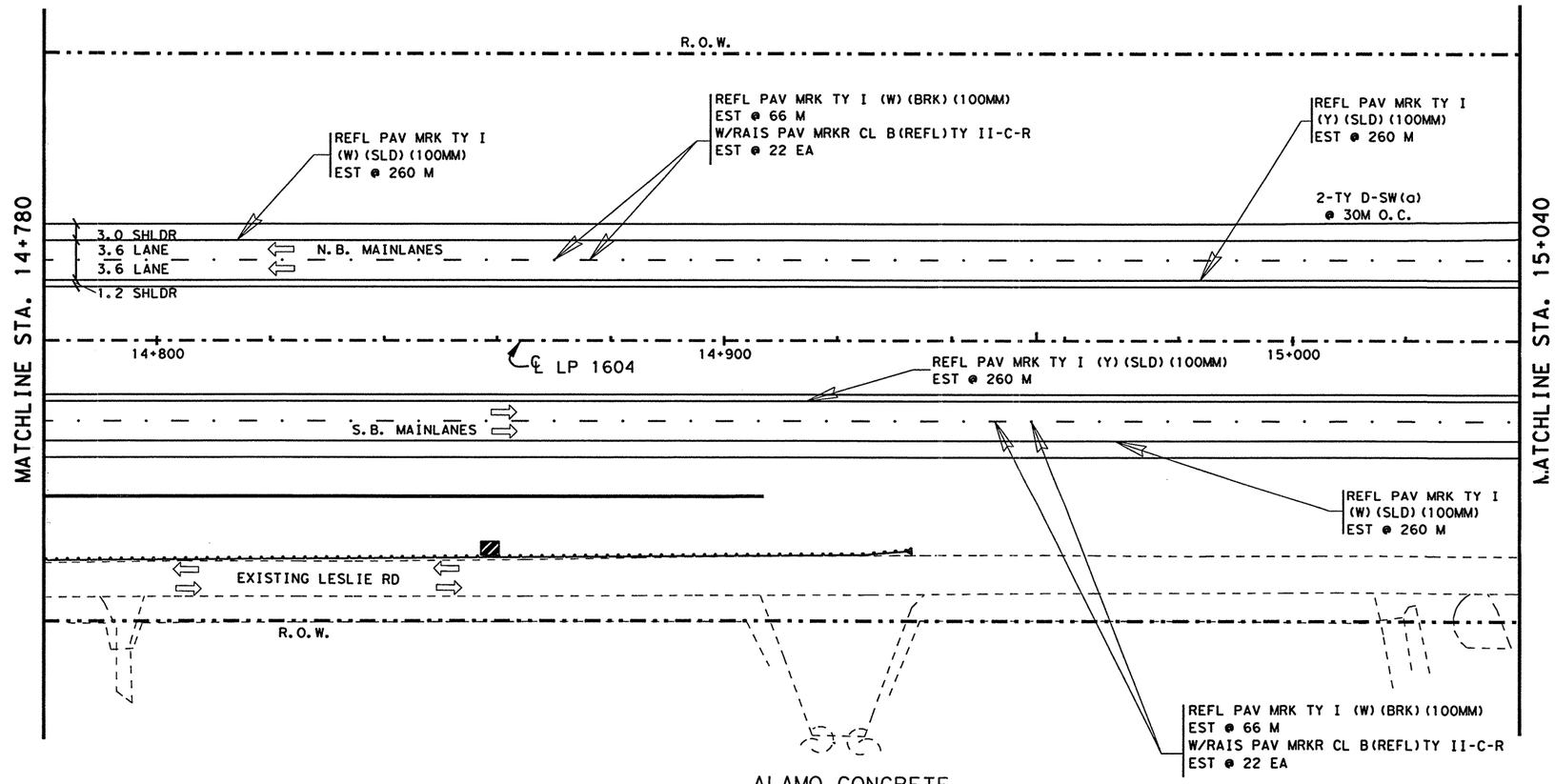


NOTE(S):

ALL DIMENSIONS ARE IN METERS UNLESS OTHERWISE NOTED.

QUANTITIES AND PLACEMENT OF TY II REFLECTIVE PAVEMENT MARKINGS ARE EXACTLY THE SAME AS TY I REFLECTIVE PAVEMENT MARKINGS. TY II QUANTITIES ACCOUNTED FOR ON THE PAVEMENT MARKING /DELINEATION SUMMARY.

ANY PAVEMENT MARKING IN CONFLICT WITH PROPOSED PAVEMENT MARKINGS SHALL BE REMOVED BY THE CONTRACTOR OR AS DIRECTED BY THE ENGINEER.

CHANGE ORDER 12

| DELINEATION QUANTITIES | | | | |
|---|---|---|---|---|
| TYPE | EA. | ASM. | SPL. MNT. | SURF. MNT. |
| D-SW(a) | | 2 | | |
| D-DW(a) | | | | |
| D-SY(a) | | | | |
| D-DY(a) | | | | |
| OM-2SR(a) | | | | |
| OM-3R | 1 | | | |
| | | | | |
| | | | | |
| | | | | |

CHANGE ORDER NO. 12
-ELIMINATED X-OVER AT ALAMO CONCRETE.
-REVISED PAV MARK QUANTITIES ASSOCIATED WITH THIS REVISION.

CHANGE ORDER NO. 12
-EXTENDED MBGF & RELATED SGT FOR SLOPE PROTECTION.
-ELIMINATED RIPRAP SIDE SLOPE
-ELIMINATED LIGHT SERVICE
-REVISED QUANTITIES
-ADD CONC BLOCK WALL

STATE OF TEXAS
TERRY G. McCOY
75016
REGISTERED
PROFESSIONAL ENGINEER

Terry G. McCoy, P.E. — Date 3-8-02

FOR MODIFICATIONS ASSOCIATED WITH CO 12 ONLY

©2000
Texas Department of Transportation

# PAVEMENT MARKING AND DELINEATION LAY UT

SHEET 5 OF 57

| FED. RD. DIV. NO. | FEDERAL AID PROJECT NO. | | SHEET NO. |
|---|---|---|---|
| 6 | NH 2000(704),etc. | | 758A |
| STATE | DIST. | COUNTY | |
| TEXAS | SAT | BE AR | |
| CONT. | SECT. | JOB | HIGHWAY NO. |
| 2452 | 01 | 036,etc. | LP 1604 |

03-07-02

LEVELS DISPLAYED
1 2 3 4 5 6 7 8 9 10 11 12 13 14 15 16
21 22 23 24 25 26 27 28 29 30 31 32
33 43 53 63 73 83 93 04 14 24 34 44 54 64 74 84
49 50 51 52 53 54 55 56 57 58 59 60 61 62 63

ACC: t:\ao\design\lp1604fm471-90\pave\sign\
FILE: pavmrkplan05.dgn

QUANTITIES THIS SHEET
CSJ 2452-01-037

SCALE 1:1000

| ESTIMATED QUANTITIES | | |
|---|---|---|
| ITEM | UNIT | QUANTITY |
| | | 2452-01-037 |
| REFL PAV MRK TY I (W)(SLD)(100MM) | M | 520 |
| REFL PAV MRK TY I (W)(BRK)(100MM) | M | 156 |
| REFL PAV MRK TY I (Y)(SLD)(100MM) | M | 724 |
| RAIS PAV MRKR CL B (REFL) TY II A-A | EA | 35 |
| RAIS PAV MRKR CL B (REFL) TY II C-R | EA | 49 |
| ELIM EXT PAV MRK & MRKR (100MM) | M | 130 |

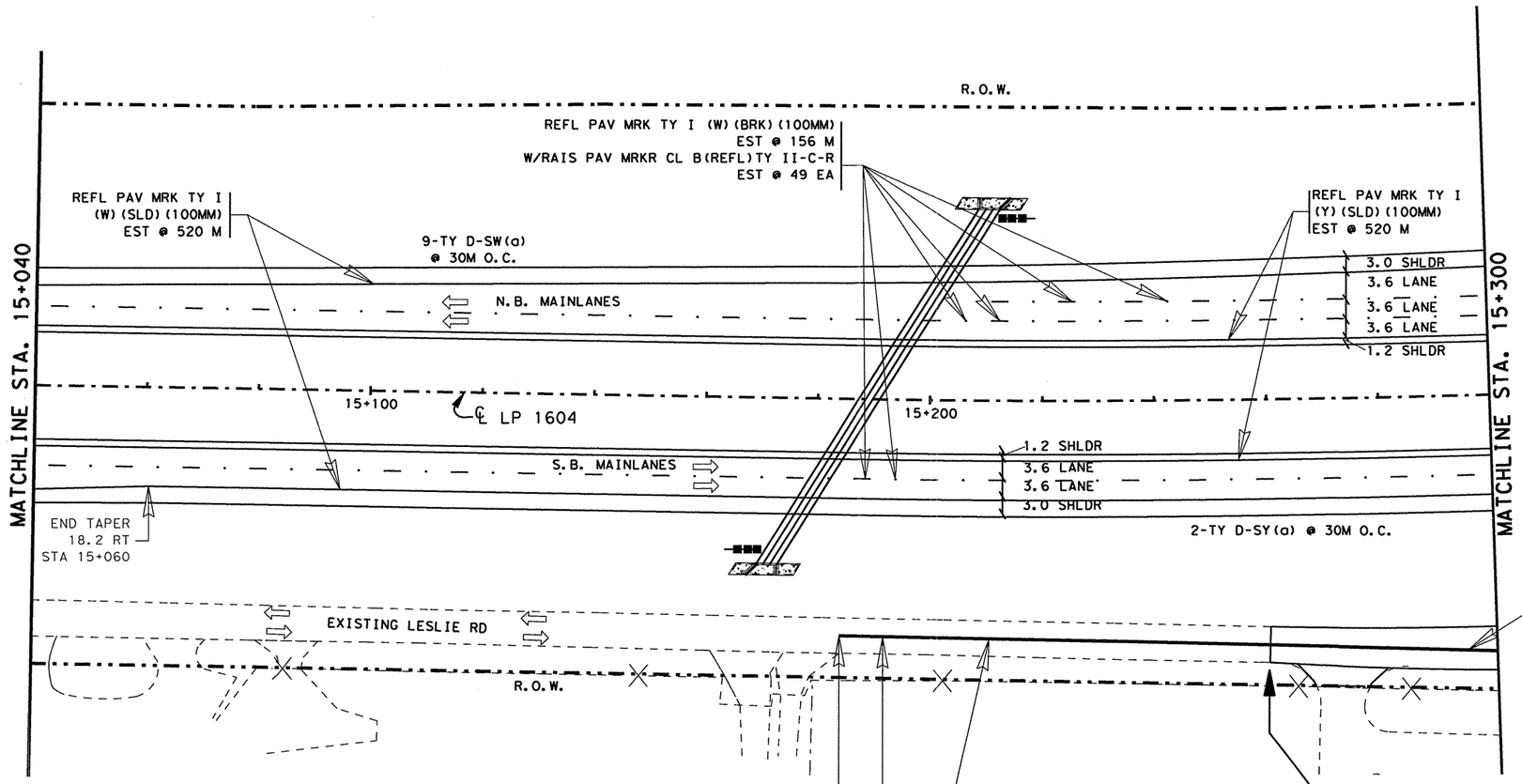


| DELINEATION QUANTITIES | | | | |
|---|---|---|---|---|
| TYPE | EA. | ASM. | SPL. MNT. | SURF. MNT. |
| D-SW(a) | | 9 | | |
| D-DW(a) | | | | |
| D-SY(a) | | 2 | | |
| D-DY(a) | | | | |
| OM-2SR(a) | | 2 | | |
| | | | | |
| | | | | |
| | | | | |
| | | | | |

NOTE(S):

ALL DIMENSIONS ARE IN METERS UNLESS OTHERWISE NOTED.

QUANTITIES AND PLACEMENT OF TY II REFLECTIVE PAVEMENT MARKINGS ARE EXACTLY THE SAME AS TY I REFLECTIVE PAVEMENT MARKINGS. TY II QUANTITIES ACCOUNTED FOR ON THE PAVEMENT MARKING /DELINEATION SUMMARY.

ANY PAVEMENT MARKING IN CONFLICT WITH PROPOSED PAVEMENT MARKINGS SHALL BE REMOVED BY THE CONTRACTOR OR AS DIRECTED BY THE ENGINEER.

STATE OF TEXAS
JOEL K. DAVENPORT, JR.
79276
REGISTERED
PROFESSIONAL ENGINEER

Joel K. Davenport Jr. 9/19/00
Joel K. Davenport, Jr., P.E. 79276 — Date

LEVELS DISPLAYED
1 2 3 4 5 6 7 8 9 10 11 12 31 41 51 61
- - 21 22 23 24 25 26 27 28 29 30 31 32
33 34 35 36 37 38 39 40 41 42 43 44 45 46 47 48
49 50 51 52 53 54 55 56 57 58 59 60 61 62 63

ACC: t:\ao\design\
lp1604fm471-90\pave-sign\
FILE: pavmrkplan06.dgn

©2000 Texas Department of Transportation

# PAVEMENT MARKING AND DELINEATION LAYOUT

SHEET 6 OF 57

| FED.RD. DIV.NO. | FEDERAL AID PROJECT NO. | | SHEET NO. |
|---|---|---|---|
| 6 | NH 2000(704),etc. | | 759 |
| STATE | DIST. | COUNTY | |
| TEXAS | SAT | BEXAR | |
| CONT. | SECT. | JOB | HIGHWAY NO. |
| 2452 | 01 | 036,etc. | LP 1604 |

SCALE 1:1000

| ESTIMATED QUANTITIES | | | |
|---|---|---|---|
| ITEM | UNIT | QUANTITY | |
| | | 2452-01-037 | 2452-01-038 |
| REFL PAV MRK TY I (W)(SLD)(100MM) | M | 834 | 213 |
| REFL PAV MRK TY I (W)(BRK)(100MM) | M | 108 | 39 |
| REFL PAV MRK TY I (W)(SLD)(200MM) | M | 238 | 44 |
| REFL PAV MRK TY I (W)(SLD)(600MM) | M | 32 | 51 |
| REFL PAV MRK TY I (Y)(SLD)(100MM) | M | 923 | 376 |
| RAIS PAV MRKR CL B (REFL) TY II -A-A | EA | 97 | 34 |
| RAIS PAV MRKR CL B (REFL) TY II C-R | EA | 75 | 13 |

NOTE(S):

ALL DIMENSIONS ARE IN METERS UNLESS OTHERWISE NOTED.

QUANTITIES AND PLACEMENT OF TY II REFLECTIVE PAVEMENT MARKINGS ARE EXACTLY THE SAME AS TY I REFLECTIVE PAVEMENT MARKINGS. TY II QUANTITIES ACCOUNTED FOR ON THE PAVEMENT MARKING /DELINEATION SUMMARY.

ANY PAVEMENT MARKING IN CONFLICT WITH PROPOSED PAVEMENT MARKINGS SHALL BE REMOVED BY THE CONTRACTOR OR AS DIRECTED BY THE ENGINEER.

QUANTITIES THIS SHEET CSJ 2452-01-037

QUANTITIES THIS SHEET CSJ 2452-01-038

BEGIN N.B. FRONTAGE CONSTRUCTION
N.B.F.R. STA 0+100.003

STA 15+500

R.O.W.

N.B. FRONTAGE RD.

ENTRANCE GORE
REFL PAV MRK TY I (W)(SLD)(200MM) EST @ 139 M
W/RAIS PAV MRKR CL B(REFL)TY II-C-R EST @ 24 EA

REFL PAV MRK TY I (W)(SLD)(100MM) EST @ 290 M

REFL PAV MRK TY I (W)(BRK)(100MM) EST @ 108 M
W/RAIS PAV MRKR CL B(REFL)TY II-C-R EST @ 37 EA

LP 1604 CONTROL BREAK
CSJ: 2452-01-037 (BK)
CSJ: 2452-01-038 (AHD)

6 TY D-SY(a) @ 30 M O.C.

REFL PAV MRK TY I (Y)(SLD)(100MM) EST @ 120 M

REFL PAV MRK TY I (W)(SLD)(100MM) EST @ 120 M

8 TY D-SW(a) @ 30 M O.C.

3.0 SHLDR
3.6 LANE
3.6 LANE
1.2 SHLDR

N.B. MAINLANES

MATCHLINE STA. 15+300

MATCHLINE STA. 15+560

REFL PAV MRK TY I (Y)(SLD)(100MM) EST @ 292 M

REFL PAV MRK TY I (Y)(SLD)(100MM) EST @ 245 M

15+500

15+400

℄ LP 1604

REFL PAV MRK TY I (W)(SLD)(100MM) EST @ 239 M

1.2 SHLDR
3.6 LANE
3.6 LANE
3.0 SHLDR

S.B. MAINLANES

REFL PAV MRK TY I (Y)(SLD)(100MM) EST @ 120 M

REFL PAV MRK TY I (W)(BRK)(100MM) EST @ 39 M
W/RAIS PAV MRKR CL B(REFL)TY II-C-R EST @ 13 EA

REFL PAV MRK TY I (W)(SLD)(100MM) EST @ 164 M

REFL PAV MRK TY I (W)(SLD)(600MM) EST @ 32 M

8-TY D-SW(a) @ 30M O.C.

3-TY D-SY(a) @ 30M O.C.

EXISTING LESLIE RD

R.O.W.

REFL PAV MRK TY I (W)(SLD)(100MM) EST @ 93 M

REFL PAV MRK TY I (Y)(SLD)(100MM) EST @ 386 M
W/RAIS PAV MRKR CL B (REFL) TY II-A-A EST @ 97 EA

REFL PAV MRK TY I (W)(SLD)(200MM) EST @ 99 M
W/RAIS PAV MRKR CL B (REFL)TY II-C-R EST @ 14 EA

REFL PAV MRK TY I (W)(SLD)(600MM) EST @ 51 M

WESTWOOD LOOP

REFL PAV MRK TY I (W)(SLD)(200MM) EST @ 44 M
W/RAIS PAV MRKR CL B (REFL)TY II-C-R EST @ 8 EA

REFL PAV MRK TY I (W)(SLD)(100MM) EST @ 141 M

REFL PAV MRK TY I (Y)(SLD)(100MM) EST @ 136 M
W/RAIS PAV MRKR CL B (REFL) TY II-A-A EST @ 34 EA

CSJ 2452-01-037

| DELINEATION QUANTITIES | | | | |
|---|---|---|---|---|
| TYPE | EA. | ASM. | SPL. MNT. | SURF. MNT. |
| D-SW(a) | | 13 | | |
| D-DW(a) | | | | |
| D-SY(a) | | | | |
| D-DY(a) | | | | |
| OM-2SR(a) | | | | |
| OM-2HP(Sp1) | | 1 | | |
| | | | | |

CSJ 2452-01-038

| DELINEATION QUANTITIES | | | | |
|---|---|---|---|---|
| TYPE | EA. | ASM. | SPL. MNT. | SURF. MNT. |
| D-SW(a) | | 3 | | |
| D-DW(a) | | | | |
| D-SY(a) | | 9 | | |
| D-DY(a) | | | | |
| OM-2SR(a) | | | | |
| OM-2HP(Sp1) | | 1 | | |
| | | | | |

STATE OF TEXAS
JOEL K. DAVENPORT, JR.
79276
REGISTERED
PROFESSIONAL ENGINEER

Joel K. Davenport, Jr. P.E. 79276 — Date 9/19/00

Texas Department of Transportation

# PAVEMENT MARKING AND DELINEATION LAYOUT

SHEET 7 OF 57

| FED.RD. DIV.NO. | FEDERAL AID PROJECT NO. | SHEET NO. |
|---|---|---|
| 6 | NH 2000(704), etc. | 760 |
| STATE | DIST. | COUNTY |
| TEXAS | SAT | BEXAR |
| CONT. | SECT. | JOB / HIGHWAY NO. |
| 2452 | 01 | 036, etc. / LP 1604 |

LEVELS DISPLAYED
1 2 3 4 5 6 7 8 9 10 11 12 13 14 15 16
33 34 35 36 37 38 39 40 41 42 43 44 45 46 47 48
49 50 51 52 53 54 55 56 57 58 59 60 61 62 63

ACC: t:\ao\design\lp1604fm471-90\pave-sign\
FILE: pavmrkplan07.dgn

SCALE 1:1000

QUANTITIES THIS SHEET
CSJ 2452-01-037

QUANTITIES THIS SHEET
CSJ 2452-01-038

BEGIN N.B. FRONTAGE CONSTRUCTION
N.B.F.R. STA 0+100.003

STA 15+500

R.O.W.

N.B. FRONTAGE RD.

ENTRANCE GORE
REFL PAV MRK TY I (W)(SLD)(200MM) EST @ 139 M
W/RAIS PAV MRKR CL B(REFL)TY II-C-R EST @ 24 EA

REFL PAV MRK TY I
(W)(SLD)(100MM)
EST @ 290 M

REFL PAV MRK TY I (W)(BRK)(100MM)
EST @ 108 M
W/RAIS PAV MRKR CL B(REFL)TY II-C-R
EST @ 37 EA

LP 1604 CONTROL BREAK
CSJ: 2452-01-037 (BK)
CSJ: 2452-01-038 (AHD)

6 TY D-SY(a)
@ 30 M O.C.

REFL PAV MRK TY I
(Y)(SLD)(100MM)
EST @ 120 M

REFL PAV MRK TY I
(W)(SLD)(100MM)
EST @ 120 M

8 TY D-SW(a) @ 30 M O.C.

3.0 SHLDR
3.6 LANE
3.6 LANE
1.2 SHLDR

N.B. MAINLANES

REFL PAV MRK TY I (Y)(SLD)(100MM)
EST @ 292 M

REFL PAV MRK TY I (Y)(SLD)(100MM)
EST @ 245 M

15+500

15+400

℄ LP 1604

REFL PAV MRK TY I (W)(SLD)(100MM)
EST @ 239 M

1.2 SHLDR
3.6 LANE
3.6 LANE
3.0 SHLDR

S.B. MAINLANES

REFL PAV MRK TY I
(Y)(SLD)(100MM)
EST @ 120 M

REFL PAV MRK TY I (W)(BRK)(100MM)
EST @ 39 M
W/RAIS PAV MRKR CL B(REFL)TY II-C-R
EST @ 13 EA

REFL PAV MRK TY I
(W)(SLD)(100MM)
EST @ 164 M

REFL PAV MRK TY I (W)(SLD)(600MM)
EST @ 32 M

8-TY D-SW(a) @ 30M O.C.

3-TY D-SY(a) @ 30M O.C.

EXISTING LESLIE RD

R.O.W.

REFL PAV MRK TY I
(W)(SLD)(100MM)
EST @ 93 M

REFL PAV MRK TY I (Y)(SLD)(100MM)
EST @ 386 M
W/RAIS PAV MRKR CL B (REFL) TY II-A-A
EST @ 97 EA

REFL PAV MRK TY I
(W)(SLD)(200MM)
EST @ 99 M
W/RAIS PAV MRKR CL B
(REFL)TY II-C-R
EST @ 14 EA

WRONG WAY ARROW
RAIS PAV MRKR CL B
(REFL)TY I-R
EST @ 28 EA

REFL PAV MRK TY I
(W)(SLD)(600MM)
EST @ 51 M

REFL PAV MRK TY I
(W)(SLD)(200MM)
EST @ 44 M
W/RAIS PAV MRKR CL B
(REFL)TY II-C-R
EST @ 8 EA

REFL PAV MRK TY I
(W)(SLD)(100MM)
EST @ 141 M

WESTWOOD LOOP

REFL PAV MRK TY I (Y)(SLD)(100MM)
EST @ 136 M
W/RAIS PAV MRKR CL B (REFL) TY II-A-A
EST @ 34 EA

MATCHLINE STA. 15+300

MATCHLINE STA. 15+560

CHANGE ORDER NO. 76
-ADDED WRONG WAY ARROW DETAIL
-NEW QUANTITIES

CSJ 2452-01-037

DELINEATION QUANTITIES

| TYPE | EA. | ASM. | SPL. MNT. | SURF. MNT. |
|---|---|---|---|---|
| D-SW(a) | | 13 | | |
| D-DW(a) | | | | |
| D-SY(a) | | | | |
| D-DY(a) | | | | |
| OM-2SR(a) | | | | |
| OM-2HP(Spl) | | 1 | | |
| | | | | |

CSJ 2452-01-038

DELINEATION QUANTITIES

| TYPE | EA. | ASM. | SPL. MNT. | SURF. MNT. |
|---|---|---|---|---|
| D-SW(a) | | 3 | | |
| D-DW(a) | | | | |
| D-SY(a) | | 9 | | |
| D-DY(a) | | | | |
| OM-2SR(a) | | | | |
| OM-2HP(Spl) | | 1 | | |
| | | | | |

## ESTIMATED QUANTITIES

| ITEM | UNIT | QUANTITY 2452-01-037 | QUANTITY 2452-01-038 |
|---|---|---|---|
| REFL PAV MRK TY I (W)(SLD)(100MM) | M | 834 | 213 |
| REFL PAV MRK TY I (W)(BRK)(100MM) | M | 108 | 39 |
| REFL PAV MRK TY I (W)(SLD)(200MM) | M | 238 | 44 |
| REFL PAV MRK TY I (W)(SLD)(600MM) | M | 32 | 51 |
| REFL PAV MRK TY I (Y)(SLD)(100MM) | M | 923 | 376 |
| RAIS PAV MRKR CL B (REFL) TY II -A-A | EA | 97 | 34 |
| RAIS PAV MRKR CL B (REFL) TY II C-R | EA | 75 | 13 |
| RAIS PAV MRKR CL B (REFL) TY I-R | EA | 14 | 14 |

NOTE(S):

ALL DIMENSIONS ARE IN METERS UNLESS OTHERWISE NOTED.

QUANTITIES AND PLACEMENT OF TY II REFLECTIVE PAVEMENT MARKINGS ARE EXACTLY THE SAME AS TY I REFLECTIVE PAVEMENT MARKINGS. TY II QUANTITIES ACCOUNTED FOR ON THE PAVEMENT MARKING /DELINEATION SUMMARY.

ANY PAVEMENT MARKING IN CONFLICT WITH PROPOSED PAVEMENT MARKINGS SHALL BE REMOVED BY THE CONTRACTOR OR AS DIRECTED BY THE ENGINEER.

CHANGE ORDER 76

REVISED SHEET

STATE OF TEXAS
JEROME D. PAVLISKA
76075
REGISTERED PROFESSIONAL ENGINEER

Jerome D. Pavliska, P.E. 01/08/04
Jerome D. Pavliska, P.E. Date

©2000
Texas Department of Transportation

# PAVEMENT MARKING AND DELINEATION LAYOUT

SHEET 7 OF 57

| FED.RD. DIV.NO. | FEDERAL AID PROJECT NO. | SHEET NO. |
|---|---|---|
| 6 | NH 2000(704), etc. | 7004 |
| STATE | DIST. | COUNTY |
| TEXAS | SAT | BEXAR |
| CONT. | SECT. | JOB / HIGHWAY NO. |
| 2452 | 01 | 036, etc. / LP 1604 |

LEVELS DISPLAYED
1 2 3 4 5 6 7 8 9 10 11 12 13 14 15 16
17 18 19 20 21 22 23 24 25 26 27 28 29 30 31 32
33 34 35 36 37 38 39 40 41 42 43 44 45 46 47 48
49 50 51 52 53 54 55 56 57 58 59 60 61 62 63

ACC: t:\ao\design\lp1604fm471-90\pave-sign\
FILE: pavmrkplan07.dgn

| DELINEATION QUANTITIES | | | | |
|---|---|---|---|---|
| TYPE | EA. | ASM. | SPL. MNT. | SURF. MNT. |
| D-SW(a) | | | | |
| D-DW(a) | | | | |
| D-SY(a) | | 11 | | |
| D-DY(a) | | | | |
| OM-2SR(a) | | 4 | | |
| OM-3L | 2 | | | |
| OM-3R | 1 | | | |
| | | | | |
| | | | | |

QUANTITIES THIS SHEET
CSJ 2452-01-038

| ESTIMATED QUANTITIES | | |
|---|---|---|
| ITEM | UNIT | QUANTITY 2452-01-038 |
| REFL PAV MRK TY I (W)(SLD)(100MM) | M | 940 |
| REFL PAV MRK TY I (W)(BRK)(100MM) | M | 300 |
| REFL PAV MRK TY I (W)(SLD)(200MM) | M | 149 |
| REFL PAV MRK TY I (W)(SLD)(600MM) | M | 115 |
| REFL PAV MRK TY I (Y)(SLD)(100MM) | M | 1186 |
| REFL PAV MRK TY I (Y)(SLD)(600MM) | M | 166 |
| RAIS PAV MRKR CL B (REFL) TY II-A-A | EA | 8 |
| RAIS PAV MRKR CL B (REFL) TY II C-R | EA | 132 |
| | | |

SCALE 1:1000

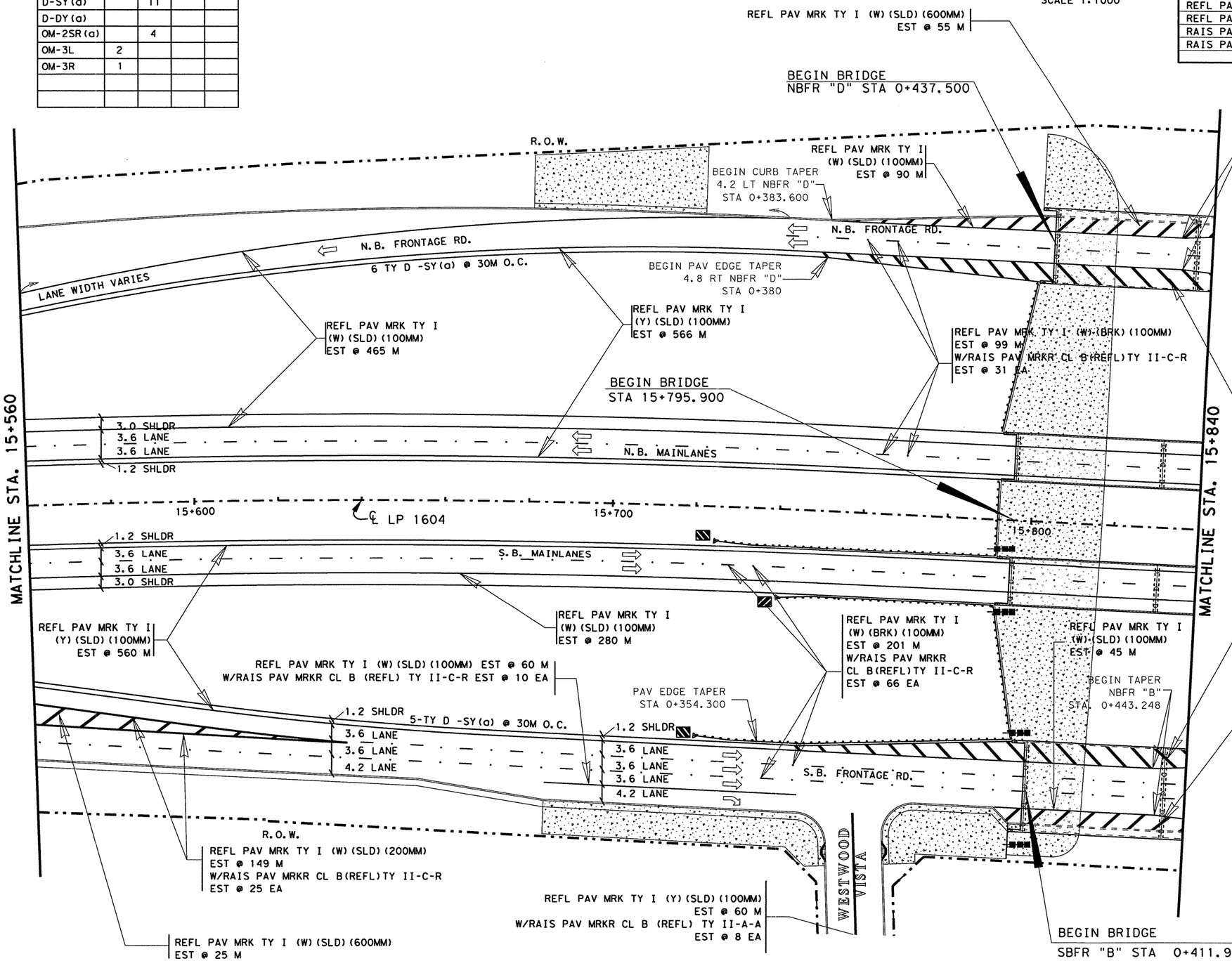


NOTE(S):

ALL DIMENSIONS ARE IN METERS UNLESS OTHERWISE NOTED.

QUANTITIES AND PLACEMENT OF TY II REFLECTIVE PAVEMENT MARKINGS ARE EXACTLY THE SAME AS TY I REFLECTIVE PAVEMENT MARKINGS. TY II QUANTITIES ACCOUNTED FOR ON THE PAVEMENT MARKING /DELINEATION SUMMARY.

ANY PAVEMENT MARKING IN CONFLICT WITH PROPOSED PAVEMENT MARKINGS SHALL BE REMOVED BY THE CONTRACTOR OR AS DIRECTED BY THE ENGINEER.

STATE OF TEXAS
JOEL K. DAVENPORT, JR.
79276
REGISTERED
PROFESSIONAL ENGINEER

Joel K. Davenport, Jr. 9/19/00
Joel K. Davenport, Jr., P.E. 79276 Date

©2000

Texas Department of Transportation

# PAVEMENT MARKING AND DELINEATION LAYOUT

SHEET 8 OF 57

| FED.RD. DIV.NO. | FEDERAL AID PROJECT NO. | SHEET NO. |
|---|---|---|
| 6 | NH 2000(704),etc. | 761 |
| STATE | DIST. | COUNTY |
| TEXAS | SAT | BEXAR |
| CONT. | SECT. | JOB / HIGHWAY NO. |
| 2452 | 01 | 036,etc. / LP 1604 |

LEVELS DISPLAYED
1 2 3 4 5 6 7 8 9 10 11 12 13 14 15 16
17 18 19 20 21 22 23 24 25 26 27 28 29 30 31 32
33 34 35 36 37 38 39 40 41 42 43 44 45 46 47 48
49 50 51 52 53 54 55 56 57 58 59 60 61 62 63

ACC: t:\ao\design\lp1604fm471-90\pave-sign\
FILE: pavmrkplan08.dgn

| DELINEATION QUANTITIES | | | | |
|---|---|---|---|---|
| TYPE | EA. | ASM. | SPL. MNT. | SURF. MNT. |
| D-SW(a) | | | | |
| D-DW(a) | | | | |
| D-SY(a) | | 11 | | |
| D-DY(a) | | | | |
| OM-2SR(a) | | 4 | | |
| OM-3L | 2 | | | |
| OM-3R | 1 | | | |
| | | | | |
| | | | | |

QUANTITIES THIS SHEET
CSJ 2452-01-038

SCALE 1:1000

| ESTIMATED QUANTITIES | | |
|---|---|---|
| ITEM | UNIT | QUANTITY |
| | | 2452-01-038 |
| REFL PAV MRK TY I (W) (SLD) (100mm) | M | 972 |
| REFL PAV MRK TY I (W) (BRK) (100mm) | M | 300 |
| REFL PAV MRK TY I (W) (SLD) (200mm) | M | 149 |
| REFL PAV MRK TY I (W) (SLD) (600mm) | M | 140 |
| REFL PAV MRK TY I (Y) (SLD) (100mm) | M | 1186 |
| REFL PAV MRK TY I (Y) (SLD) (600mm) | M | 166 |
| RAIS PAV MRKR CL B (REFL) TY II-A-A | EA | 8 |
| RAIS PAV MRKR CL B (REFL) TY II C-R | EA | 132 |
| | | |

REFL PAV MRK TY I (W) (SLD) (600mm)
EST @ 55 M

BEGIN BRIDGE
NBFR "D" STA 0+437.500

BEGIN TAPER
NBFR "D"
STA 0+467.745

REFL PAV MRK TY I
(W) (SLD) (100mm)
EST @ 90 M

BEGIN CURB TAPER
4.2 LT NBFR "D"
STA 0+383.600

N.B. FRONTAGE RD.

LANE WIDTH VARIES

6 TY D -SY(a) @ 30M O.C.

BEGIN PAV EDGE TAPER
4.8 RT NBFR "D"
STA 0+380

REFL PAV MRK TY I
(W) (SLD) (100mm)
EST @ 465 M

REFL PAV MRK TY I
(Y) (SLD) (100mm)
EST @ 566 M

REFL PAV MRK TY I (W) (BRK) (100mm)
EST @ 99 M
W/RAIS PAV MRKR CL B(REFL)TY II-C-R
EST @ 31 EA

BEGIN BRIDGE
STA 15+795.900

MATCHLINE STA. 15+560

MATCHLINE STA. 15+840

3.0 SHLDR
3.6 LANE
3.6 LANE
1.2 SHLDR

N.B. MAINLANES

15+600

℄ LP 1604

15+700

15+800

1.2 SHLDR
3.6 LANE
3.6 LANE
3.0 SHLDR

S.B. MAINLANES

REFL PAV MRK TY I (Y) (SLD) (600mm)
EST @ 80 M

REFL PAV MRK TY I (Y) (SLD) (600mm)
EST @ 86 M

REFL PAV MRK TY I (W) (SLD) (600mm)
EST @ 60 M

REFL PAV MRK TY I
(Y) (SLD) (100mm)
EST @ 560 M

REFL PAV MRK TY I
(W) (SLD) (100mm)
EST @ 280 M

REFL PAV MRK TY I
(W) (BRK) (100mm)
EST @ 201 M
W/RAIS PAV MRKR
CL B(REFL)TY II-C-R
EST @ 66 EA

REFL PAV MRK TY I
(W) (SLD) (100mm)
EST @ 77 M

REFL PAV MRK TY I (W) (SLD) (100mm) EST @ 60 M
W/RAIS PAV MRKR CL B (REFL) TY II-C-R EST @ 10 EA

PAV EDGE TAPER
STA 0+354.300

BEGIN TAPER
NBFR "B"
STA 0+443.248

1.2 SHLDR
3.6 LANE
3.6 LANE
4.2 LANE

5-TY D -SY(a) @ 30M O.C.

1.2 SHLDR
3.6 LANE
3.6 LANE
3.6 LANE
4.2 LANE

S.B. FRONTAGE RD.

REFL PAV MRK TY I (W) (SLD) (200mm)
EST @ 149 M
W/RAIS PAV MRKR CL B(REFL)TY II-C-R
EST @ 25 EA

REFL PAV MRK TY I (Y) (SLD) (100mm)
EST @ 60 M
W/RAIS PAV MRKR CL B (REFL) TY II-A-A
EST @ 8 EA

WESTWOOD VISTA

REFL PAV MRK TY I (W) (SLD) (600mm)
EST @ 25 M

CHANGE ORDER NO. 28
-UPDATED VIEW
-REVISED QUANTITIES

BEGIN BRIDGE
SBFR "B" STA 0+411.900

NOTE(S):

ALL DIMENSIONS ARE IN METERS UNLESS OTHERWISE NOTED.

QUANTITIES AND PLACEMENT OF TY II REFLECTIVE PAVEMENT MARKINGS ARE EXACTLY THE SAME AS TY I REFLECTIVE PAVEMENT MARKINGS. TY II QUANTITIES ACCOUNTED FOR ON THE PAVEMENT MARKING /DELINEATION SUMMARY.

ANY PAVEMENT MARKING IN CONFLICT WITH PROPOSED PAVEMENT MARKINGS SHALL BE REMOVED BY THE CONTRACTOR OR AS DIRECTED BY THE ENGINEER.

CHANGE ORDER 28

REVISED SHEET

STATE OF TEXAS
JEROME D. PAVLISKA
76075
REGISTERED PROFESSIONAL ENGINEER

Jerome D. Pavliska, P.E. 2-7-03
Jerome D. Pavliska, P.E. Date

LEVELS DISPLAYED
1 2 3 4 5 6 7 8 9 10 11 12 13 14 15 16
17 18 19 20 21 22 23 24 25 26 27 28 29 30 31 32
33 34 35 36 37 38 39 40 41 42 43 44 45 46 47 48
49 50 51 52 53 54 55 65 75 85 96 06 16 26 3

ACC: t:\roy\design\
lp1604fm471-90\pave-sign\
FILE: pavmrkplan08.dgn

© 2001

Texas Department of Transportation

# PAVEMENT MARKING AND DELINEATION LAYOUT

SHEET 8 OF 57

| FED.RD. DIV.NO. | FEDERAL AID PROJECT NO. | | SHEET NO. |
|---|---|---|---|
| 6 | NH 2000(704), etc. | | 761A |
| STATE | DIST. | COUNTY | |
| TEXAS | SAT | BEXAR | |
| CONT. | SECT. | JOB | HIGHWAY NO. |
| 2452 | 01 | 036, etc. | LP 1604 |

| DELINEATION QUANTITIES | | | | |
|---|---|---|---|---|
| TYPE | EA. | ASM. | SPL. MNT. | SURF. MNT. |
| D-SW(a) | | | | |
| D-DW(a) | | | | |
| D-SY(a) | | 11 | | |
| D-DY(a) | | | | |
| OM-2SR(a) | | 4 | | |
| OM-3L | 2 | | | |
| OM-3R | 1 | | | |
| | | | | |
| | | | | |

QUANTITIES THIS SHEET
CSJ 2452-01-038

| ESTIMATED QUANTITIES | | |
|---|---|---|
| ITEM | UNIT | QUANTITY |
| ~~2452-01-038~~ | | |
| REFL PAV MRK TY I (W)(SLD)(100mm) | M | 1022 |
| ~~REFL PAV MRK TY I (W)(BRK)(100mm)~~ | ~~M~~ | ~~300~~ |
| REFL PAV MRK TY I (W)(SLD)(200mm) | M | 149 |
| REFL PAV MRK TY I (W)(SLD)(600mm) | M | 140 |
| REFL PAV MRK TY I (Y)(SLD)(100mm) | M | 1186 |
| REFL PAV MRK TY I (Y)(SLD)(600mm) | M | 166 |
| ~~RAIS PAV MRKR CL B (REFL) TY II-A-A~~ | ~~EA~~ | ~~8~~ |
| RAIS PAV MRKR CL B (REFL) TY II C-R | EA | 140 |

SCALE 1:1000

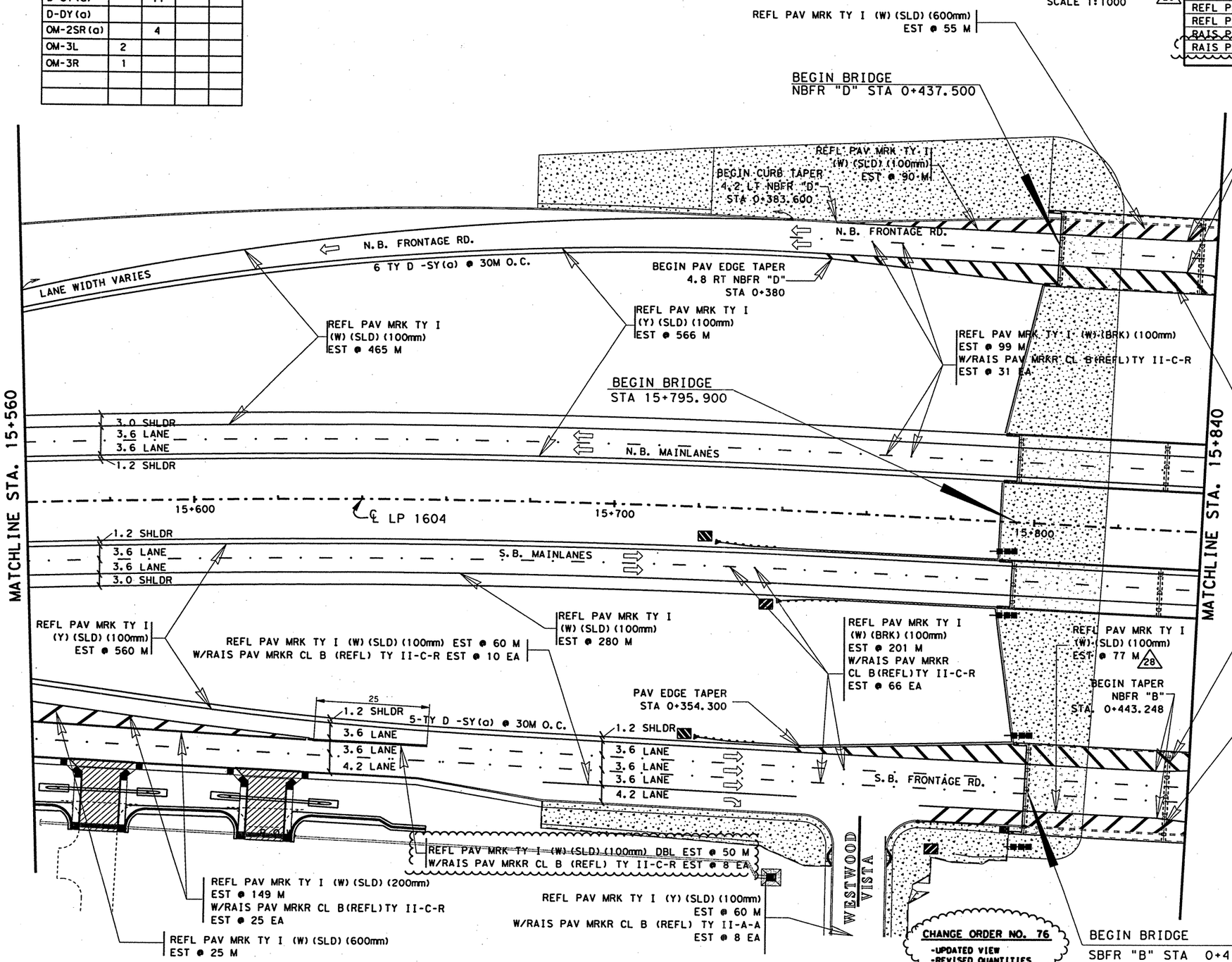


BEGIN TAPER
NBFR "D"
STA 0+467.745

NOTE(S):

ALL DIMENSIONS ARE IN METERS UNLESS OTHERWISE NOTED.

QUANTITIES AND PLACEMENT OF TY II REFLECTIVE PAVEMENT MARKINGS ARE EXACTLY THE SAME AS TY I REFLECTIVE PAVEMENT MARKINGS. TY II QUANTITIES ACCOUNTED FOR ON THE PAVEMENT MARKING /DELINEATION SUMMARY.

ANY PAVEMENT MARKING IN CONFLICT WITH PROPOSED PAVEMENT MARKINGS SHALL BE REMOVED BY THE CONTRACTOR OR AS DIRECTED BY THE ENGINEER.

# REFERS TO CHANGES MADE AS PART OF A CHANGE ORDER.

REFL PAV MRK TY I (Y)(SLD)(600mm) EST @ 80 M

CHANGE ORDER 76

REVISED SHEET

REFL PAV MRK TY I (Y)(SLD)(600mm) EST @ 86 M

REFL PAV MRK TY I (W)(SLD)(600mm) EST @ 60 M

STATE OF TEXAS
JEROME D. PAVLISKA
76075
REGISTERED PROFESSIONAL ENGINEER

Jerome D. Pavliska, P.E. 01/08/04
Jerome D. Pavliska, P.E. — Date


LEVELS DISPLAYED
1 2 3 4 5 6 7 8 9 10 11 12 13 14 15 16
17 18 19 20 21 22 23 24 25 26 27 28 29 30 31 32
33 34 35 36 37 38 39 40 41 42 43 44 45 46 47 48
49 50 51 52 53 54 55 56 57 58 59 60 61 62 63

ACC: t:\ao\design\lp1604fm471-90\pave-sign\
FILE: pavmrkplan08 C076.dgn


© 2001

Texas Department of Transportation

# PAVEMENT MARKING AND DELINEATION LAYOUT

SHEET 8 OF 57

| FED.RD. DIV. NO. | FEDERAL AID PROJECT NO. | | SHEET NO. |
|---|---|---|---|
| 6 | NH 2000(704),etc. | | 108 |
| STATE | DIST. | COUNTY | |
| TEXAS | SAT | BEXAR | |
| CONT. | SECT. | JOB | HIGHWAY NO. |
| 2452 | 01 | 036,etc. | LP 1604 |

| DELINEATION QUANTITIES | | | | |
|---|---|---|---|---|
| TYPE | EA. | ASM. | SPL. MNT. | SURF. MNT. |
| D-SW(a) | | | | |
| D-DW(a) | | | | |
| D-SY(a) | | | | |
| D-DY(a) | | | | |
| OM-2SR(a) | | 7 | | |
| OM-2HP(Spl) | | 3 | | |
| OM-3L | 1 | | | |
| OM-3R | 1 | | | |
| | | | | |

QUANTITIES THIS SHEET
CSJ 2452-01-038

SCALE 1:1000

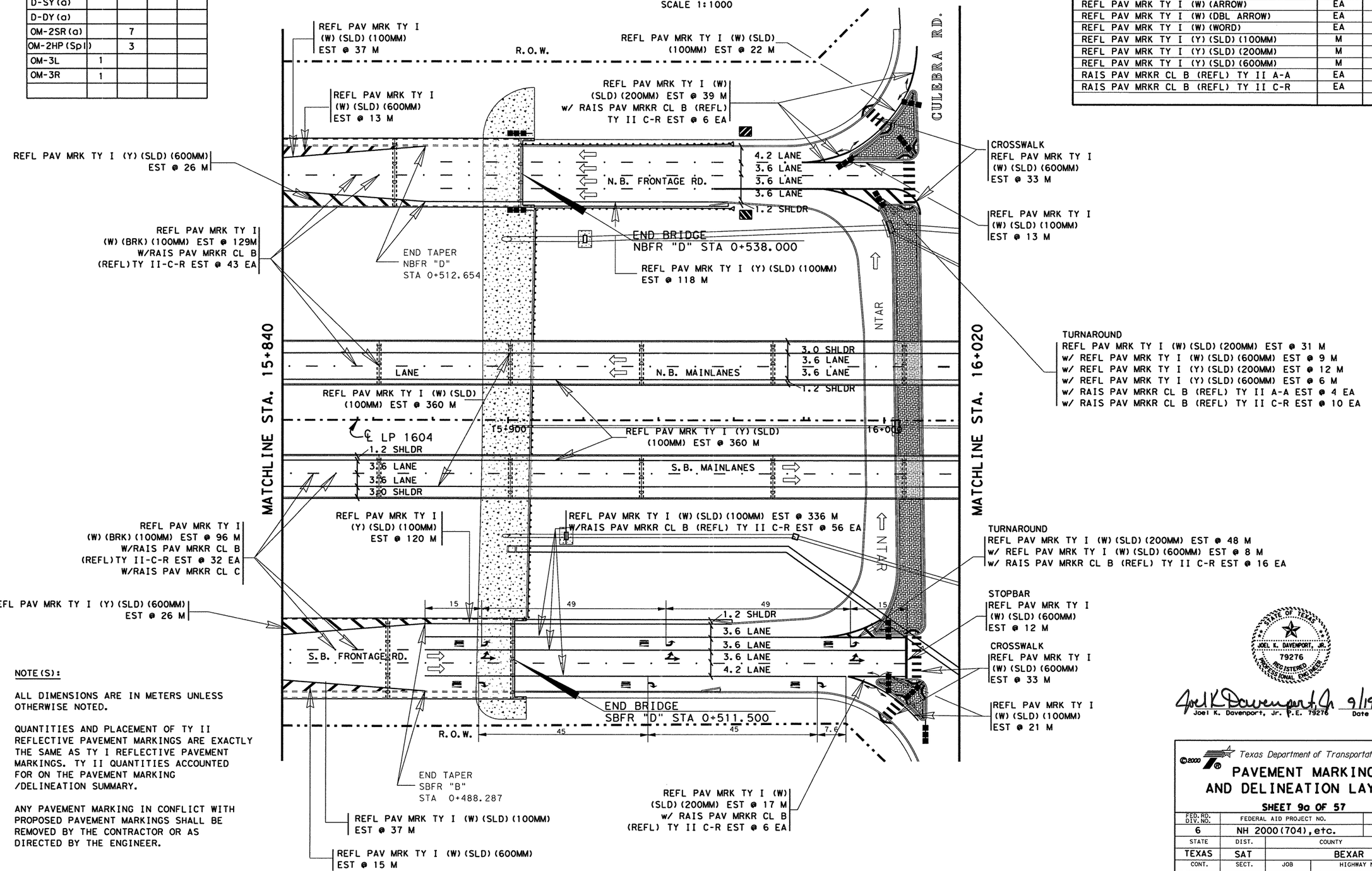


| ESTIMATED QUANTITIES | | |
|---|---|---|
| ITEM | UNIT | QUANTITY |
| | | 2452-01-038 |
| REFL PAV MRK TY I (W)(SLD)(100MM) | M | 826 |
| REFL PAV MRK TY I (W)(BRK)(100MM) | M | 225 |
| REFL PAV MRK TY I (W)(SLD)(200MM) | M | 135 |
| REFL PAV MRK TY I (W)(SLD)(600MM) | M | 123 |
| REFL PAV MRK TY I (W)(ARROW) | EA | 6 |
| REFL PAV MRK TY I (W)(DBL ARROW) | EA | 3 |
| REFL PAV MRK TY I (W)(WORD) | EA | 6 |
| REFL PAV MRK TY I (Y)(SLD)(100MM) | M | 598 |
| REFL PAV MRK TY I (Y)(SLD)(200MM) | M | 12 |
| REFL PAV MRK TY I (Y)(SLD)(600MM) | M | 58 |
| RAIS PAV MRKR CL B (REFL) TY II A-A | EA | 4 |
| RAIS PAV MRKR CL B (REFL) TY II C-R | EA | 169 |
| | | |

NOTE(S):

ALL DIMENSIONS ARE IN METERS UNLESS OTHERWISE NOTED.

QUANTITIES AND PLACEMENT OF TY II REFLECTIVE PAVEMENT MARKINGS ARE EXACTLY THE SAME AS TY I REFLECTIVE PAVEMENT MARKINGS. TY II QUANTITIES ACCOUNTED FOR ON THE PAVEMENT MARKING /DELINEATION SUMMARY.

ANY PAVEMENT MARKING IN CONFLICT WITH PROPOSED PAVEMENT MARKINGS SHALL BE REMOVED BY THE CONTRACTOR OR AS DIRECTED BY THE ENGINEER.

LEVELS DISPLAYED
1 2 | 14 15 16 17 18 19 101 11 21 31 41 51 61
| 20 21 22 32 42 52 62 72 82 93 103 132
33 34 35 53 63 73 83 94 104 114 124 134 144 154 164 174 184
49 50 51 62 63 35 45 55 65 75 85 96 106 116 263

ACC: t:\oo\design\
ip1604fm471-90\pave-sign\
FILE: pavmrkplan09a.dgn

STATE OF TEXAS
JOEL K. DAVENPORT, JR.
79276
REGISTERED
PROFESSIONAL ENGINEER

Joel K Davenport Jr 9/19/00
Joel K. Davenport, Jr. P.E. 79276 Date

Texas Department of Transportation

# PAVEMENT MARKING AND DELINEATION LAYOUT

SHEET 9a OF 57

| FED.RD. DIV.NO. | FEDERAL AID PROJECT NO. | | SHEET NO. |
|---|---|---|---|
| 6 | NH 2000(704), etc. | | 762 |
| STATE | DIST. | COUNTY | |
| TEXAS | SAT | BEXAR | |
| CONT. | SECT. | JOB | HIGHWAY NO. |
| 2452 | 01 | 036, etc. | LP 1604 |

QUANTITIES THIS SHEET
CSJ 2452-01-038

SCALE 1:1000

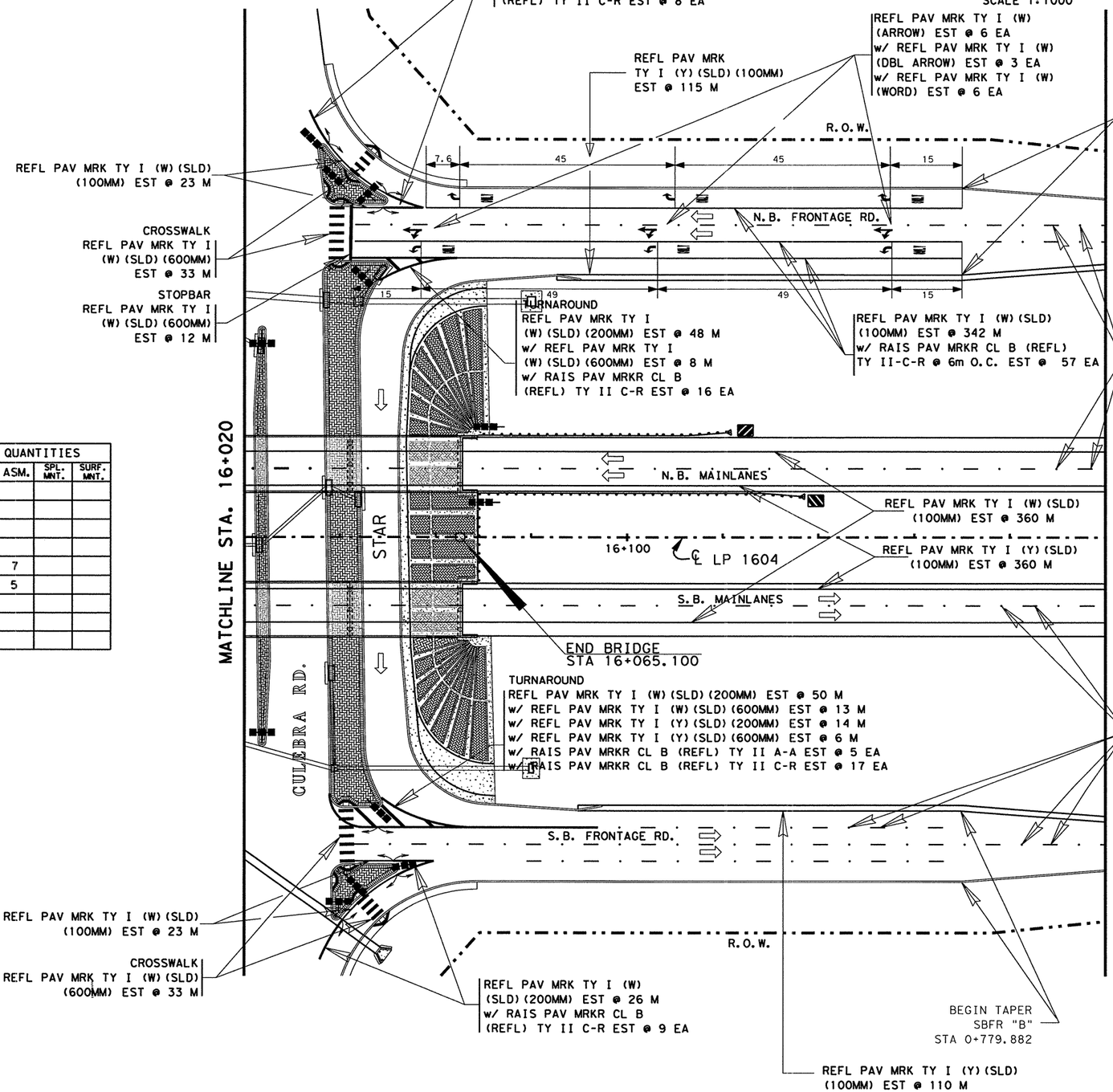


## ESTIMATED QUANTITIES

| ITEM | UNIT | QUANTITY 2452-01-038 |
|---|---|---|
| REFL PAV MRK TY I (W) (SLD) (100MM) | M | 748 |
| REFL PAV MRK TY I (W) (BRK) (100MM) | M | 222 |
| REFL PAV MRK TY I (W) (SLD) (200MM) | M | 149 |
| REFL PAV MRK TY I (W) (SLD) (600MM) | M | 99 |
| REFL PAV MRK TY I (W) (ARROW) | EA | 6 |
| REFL PAV MRK TY I (W) (DBL ARROW) | EA | 3 |
| REFL PAV MRK TY I (W) (WORD) | EA | 6 |
| REFL PAV MRK TY I (Y) (SLD) (100MM) | M | 585 |
| REFL PAV MRK TY I (Y) (SLD) (200MM) | M | 14 |
| REFL PAV MRK TY I (Y) (SLD) (600MM) | M | 6 |
| RAIS PAV MRKR CL B (REFL) TY II A-A | EA | 5 |
| RAIS PAV MRKR CL B (REFL) TY II C-R | EA | 180 |

## DELINEATION QUANTITIES

| TYPE | EA. | ASM. | SPL. MNT. | SURF. MNT. |
|---|---|---|---|---|
| D-SW(a) | | | | |
| D-DW(a) | | | | |
| D-SY(a) | | | | |
| D-DY(a) | | | | |
| OM-2SR(a) | | 7 | | |
| OM-2HP(Spl) | | 5 | | |
| OM-3L | 1 | | | |
| OM-3R | 1 | | | |
| | | | | |

NOTE(S):

ALL DIMENSIONS ARE IN METERS UNLESS OTHERWISE NOTED.

QUANTITIES AND PLACEMENT OF TY II REFLECTIVE PAVEMENT MARKINGS ARE EXACTLY THE SAME AS TY I REFLECTIVE PAVEMENT MARKINGS. TY II QUANTITIES ACCOUNTED FOR ON THE PAVEMENT MARKING /DELINEATION SUMMARY.

ANY PAVEMENT MARKING IN CONFLICT WITH PROPOSED PAVEMENT MARKINGS SHALL BE REMOVED BY THE CONTRACTOR OR AS DIRECTED BY THE ENGINEER.

STATE OF TEXAS
JOEL K. DAVENPORT, JR.
79276
REGISTERED PROFESSIONAL ENGINEER

Joel K Davenport, Jr. 9/19/00
Joel K. Davenport, Jr. P.E. 79276 Date

©2000
Texas Department of Transportation

# PAVEMENT MARKING AND DELINEATION LAYOUT

SHEET 9b OF 57

| FED. RD. DIV. NO. | FEDERAL AID PROJECT NO. | | SHEET NO. |
|---|---|---|---|
| 6 | NH 2000(704), etc. | | 763 |
| STATE | DIST. | COUNTY | |
| TEXAS | SAT | BEXAR | |
| CONT. | SECT. | JOB | HIGHWAY NO. |
| 2452 | 01 | 036, etc. | LP 1604 |

LEVELS DISPLAYED
1 2 3 4 5 6 7 8 9 10 11 12 13 14 15 16
21 22 32 42 52 62 72 82 93 03 13 23
33 43 53 63 73 83 94 04 14 24 34 44 54 64 74 84
49 50 51 62 63 54 55 65 75 85 96 06 16 26 36 3

ACC: t:\ao\design\
lp1604fm471-90\pave-sign\
FILE: pavmrkplan09b.dgn

QUANTITIES THIS SHEET
CSJ 2452-01-038

SCALE 1:1000

| ESTIMATED QUANTITIES | | |
|---|---|---|
| ITEM | UNIT | QUANTITY |
| | | 2452-01-038 |
| REFL PAV MRK TY I (W)(SLD)(100MM) | M | 331 |
| REFL PAV MRK TY I (W)(BRK)(100MM) | M | 84 |
| REFL PAV MRK TY I (W)(DOT)(100MM) | M | 34 |
| REFL PAV MRK TY I (W)(SLD)(200MM) | M | 14 |
| REFL PAV MRK TY I (W)(SLD)(600MM) | M | 68 |
| REFL PAV MRK TY I (W)(ARROW) | EA | 6 |
| REFL PAV MRK TY I (W)(DBL ARROW) | EA | 4 |
| REFL PAV MRK TY I (W)(WORD) | EA | 6 |
| REFL PAV MRK TY I (Y)(SLD)(100MM) | M | 510 |
| REFL PAV MRK TY I (Y)(SLD)(600MM) | M | 69 |
| REFL PAV MRK TY I (Y)(MED NOSE) | EA | 1 |
| RAIS PAV MRKR CL B (REFL) TY II A-A | EA | 72 |
| RAIS PAV MRKR CL B (REFL) TY II C-R | EA | 61 |
| | | |

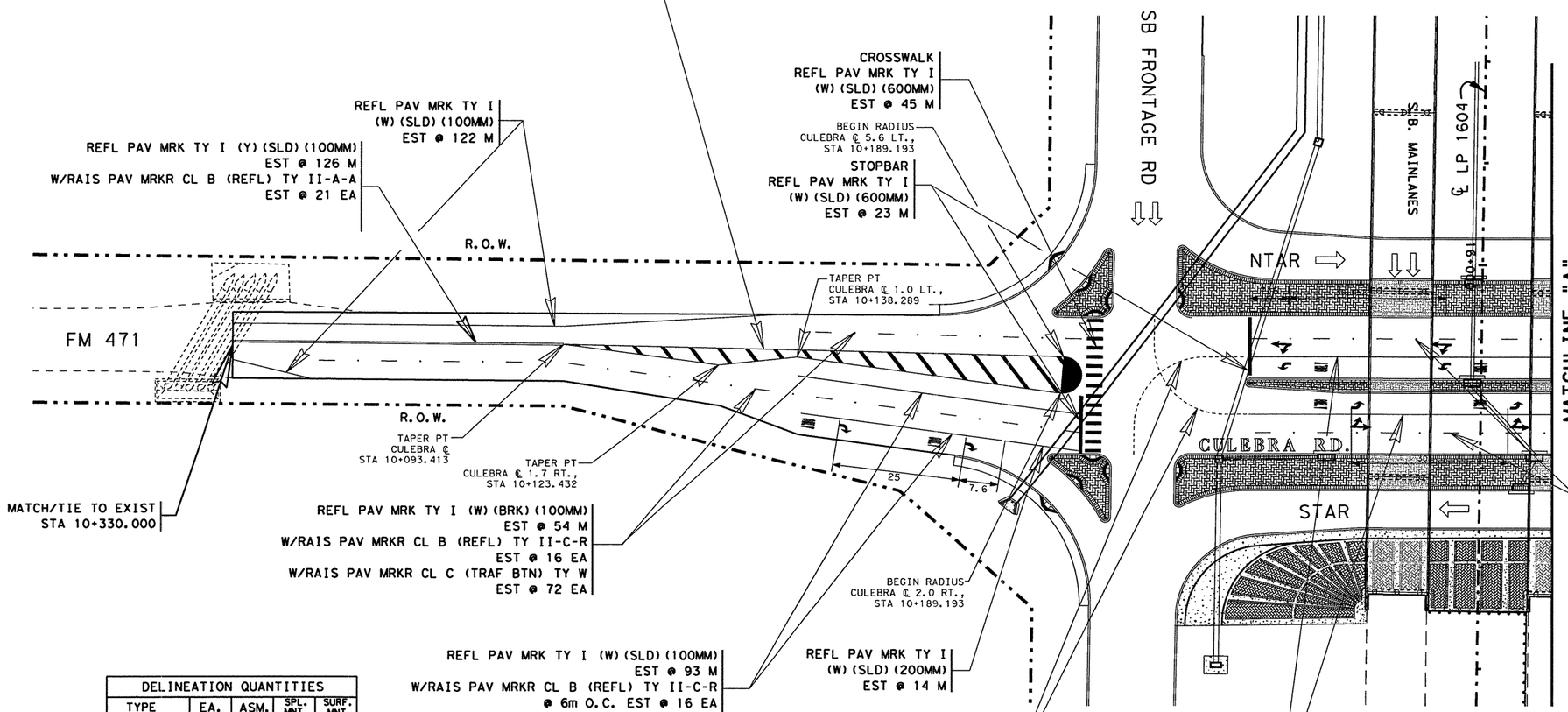


| DELINEATION QUANTITIES | | | | |
|---|---|---|---|---|
| TYPE | EA. | ASM. | SPL. MNT. | SURF. MNT. |
| D-SW(a) | | | | |
| D-DW(a) | | | | |
| D-SY(a) | FOR QUANTITIES | | | |
| D-DY(a) | SEE PRIOR SHEET | | | |
| OM-2SR(a) | | 9b OF 57 | | |
| | | | | |
| | | | | |
| | | | | |
| TOTAL | | | | |

NOTE(S):

ALL DIMENSIONS ARE IN METERS UNLESS OTHERWISE NOTED.

QUANTITIES AND PLACEMENT OF TY II REFLECTIVE PAVEMENT MARKINGS ARE EXACTLY THE SAME AS TY I REFLECTIVE PAVEMENT MARKINGS. TY II QUANTITIES ACCOUNTED FOR ON THE PAVEMENT MARKING /DELINEATION SUMMARY.

ANY PAVEMENT MARKING IN CONFLICT WITH PROPOSED PAVEMENT MARKINGS SHALL BE REMOVED BY THE CONTRACTOR OR AS DIRECTED BY THE ENGINEER.

FOR ADDITIONAL DATA/DIMENSIONS, SEE INTERSECTION LAYOUT SHEET(S) 317-320 .

STATE OF TEXAS
JOEL K. DAVENPORT, JR.
79276
REGISTERED PROFESSIONAL ENGINEER

Joel K. Davenport, Jr. 9/19/00
Joel K. Davenport, Jr. P.E. 79276 Date

©2000
Texas Department of Transportation

# PAVEMENT MARKING AND DELINEATION LAYOUT

SHEET 9c OF 57

| FED.RD. DIV.NO. | FEDERAL AID PROJECT NO. | | SHEET NO. |
|---|---|---|---|
| 6 | NH 2000(704),etc. | | 764 |
| STATE | DIST. | COUNTY | |
| TEXAS | SAT | BEXAR | |
| CONT. | SECT. | JOB | HIGHWAY NO. |
| 2452 | 01 | 036,etc. | LP 1604 |

LEVELS DISPLAYED
1 2 3 4 5 6 7 8 9 10 11 12 13 14 15 16
17 18 21 22 23 24 25 26 27 28 29 30 31 32
33 34 35 36 37 38 39 40 41 42 43 44 45 46 47 48
49 50 51 52 53 54 55 56 57 58 59 60 61 62

ACC: t:/ao/design/
lp1604fm471-90/pave-sign/
FILE: pavmrkplan09c.dgn

QUANTITIES THIS SHEET
CSJ 2452-01-038

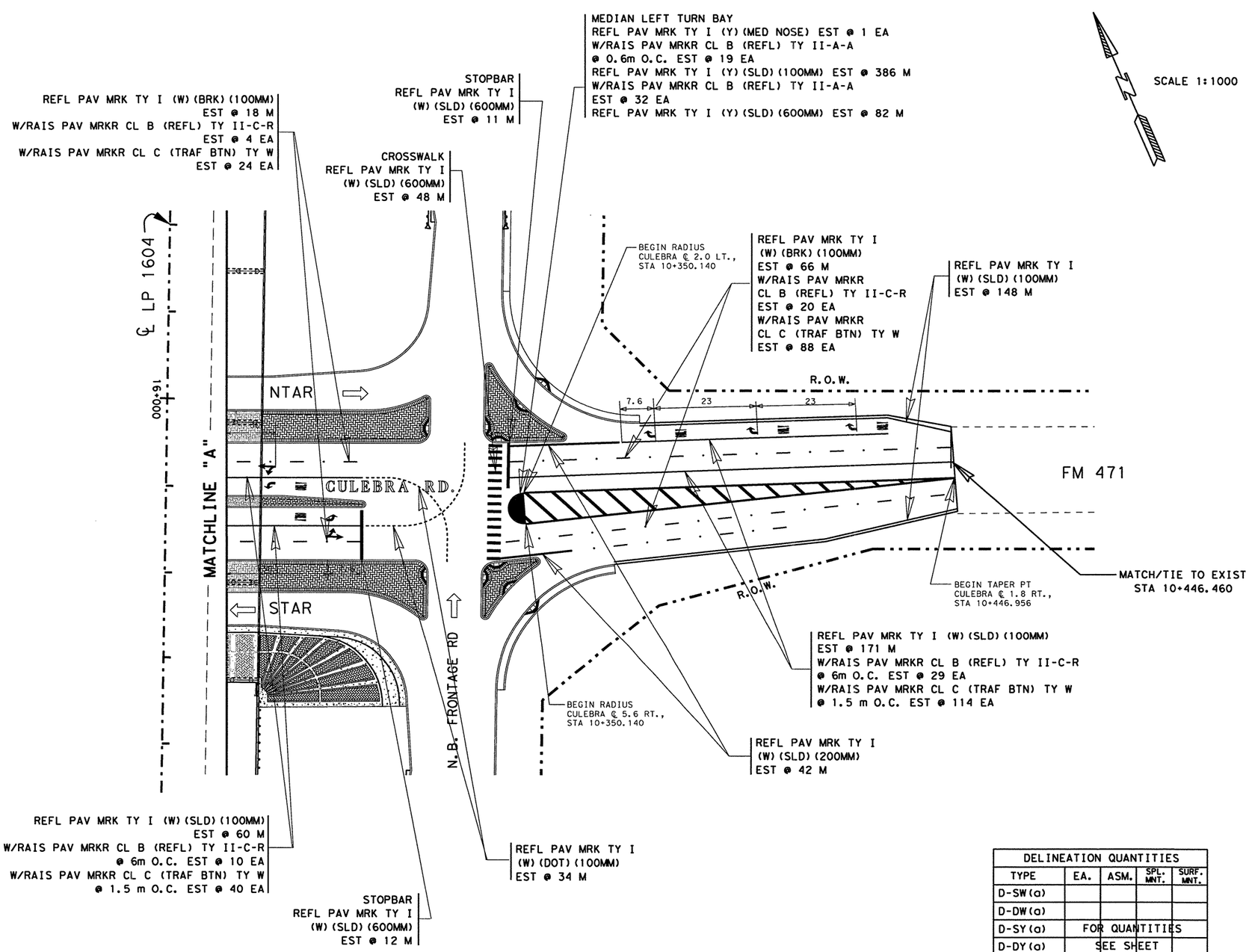


## ESTIMATED QUANTITIES

| ITEM | UNIT | QUANTITY 2452-01-038 |
|---|---|---|
| REFL PAV MRK TY I (W)(SLD)(100MM) | M | 379 |
| REFL PAV MRK TY I (W)(BRK)(100MM) | M | 84 |
| REFL PAV MRK TY I (W)(DOT)(100MM) | M | 34 |
| REFL PAV MRK TY I (W)(SLD)(200MM) | M | 42 |
| REFL PAV MRK TY I (W)(SLD)(600MM) | M | 71 |
| REFL PAV MRK TY I (W)(ARROW) | EA | 5 |
| REFL PAV MRK TY I (W)(DBL ARROW) | EA | 2 |
| REFL PAV MRK TY I (W)(WORD) | EA | 5 |
| REFL PAV MRK TY I (Y)(SLD)(100MM) | M | 386 |
| REFL PAV MRK TY I (Y)(SLD)(600MM) | M | 82 |
| REFL PAV MRK TY I (Y)(MED NOSE) | EA | 1 |
| RAIS PAV MRKR CL B (REFL) TY II A-A | EA | 51 |
| RAIS PAV MRKR CL B (REFL) TY II C-R | EA | 63 |

NOTE(S):

ALL DIMENSIONS ARE IN METERS UNLESS OTHERWISE NOTED.

QUANTITIES AND PLACEMENT OF TY II REFLECTIVE PAVEMENT MARKINGS ARE EXACTLY THE SAME AS TY I REFLECTIVE PAVEMENT MARKINGS. TY II QUANTITIES ACCOUNTED FOR ON THE PAVEMENT MARKING /DELINEATION SUMMARY.

ANY PAVEMENT MARKING IN CONFLICT WITH PROPOSED PAVEMENT MARKINGS SHALL BE REMOVED BY THE CONTRACTOR OR AS DIRECTED BY THE ENGINEER.

FOR ADDITIONAL DATA/DIMENSIONS SEE INTERSECTION LAYOUT SHEET(S) 317-320

## DELINEATION QUANTITIES

| TYPE | EA. | ASM. | SPL. MNT. | SURF. MNT. |
|---|---|---|---|---|
| D-SW(a) | | | | |
| D-DW(a) | | | | |
| D-SY(a) | FOR QUANTITIES | | | |
| D-DY(a) | SEE SHEET | | | |
| OM-2SR(a) | 9b OF 57 | | | |
| | | | | |
| | | | | |
| | | | | |
| | | | | |

LEVELS DISPLAYED
1 2 3 4 5 6 7 8 9 10 11 12 13 14 15 16
21 22 23 24 25 26 27 28 29 30 31 32
33 34 35 36 37 38 39 40 41 42 43 44 45 46 47 48
49 50 51 52 53 54 55 56 57 58 59 60 61 62

ACC: t:\ao\design\lp1604fm471-90\pave-sign\
FILE: pavmrkplan09d.dgn

STATE OF TEXAS
JOEL K. DAVENPORT, JR.
79276
REGISTERED
PROFESSIONAL ENGINEER

Joel K Davenport Jr 9/19/00
Joel K. Dovenport, Jr. P.E. 79276 Date

©2000
Texas Department of Transportation

# PAVEMENT MARKING AND DELINEATION LAYOUT

SHEET 9d OF 57

| FED.RD. DIV.NO. | FEDERAL AID PROJECT NO. | | SHEET NO. |
|---|---|---|---|
| 6 | NH 2000(704), etc. | | 765 |
| STATE | DIST. | COUNTY | |
| TEXAS | SAT | BEXAR | |
| CONT. | SECT. | JOB | HIGHWAY NO. |
| 2452 | 01 | 036, etc. | LP 1604 |

QUANTITIES THIS SHEET
CSJ 2452-01-038

SCALE 1:1000

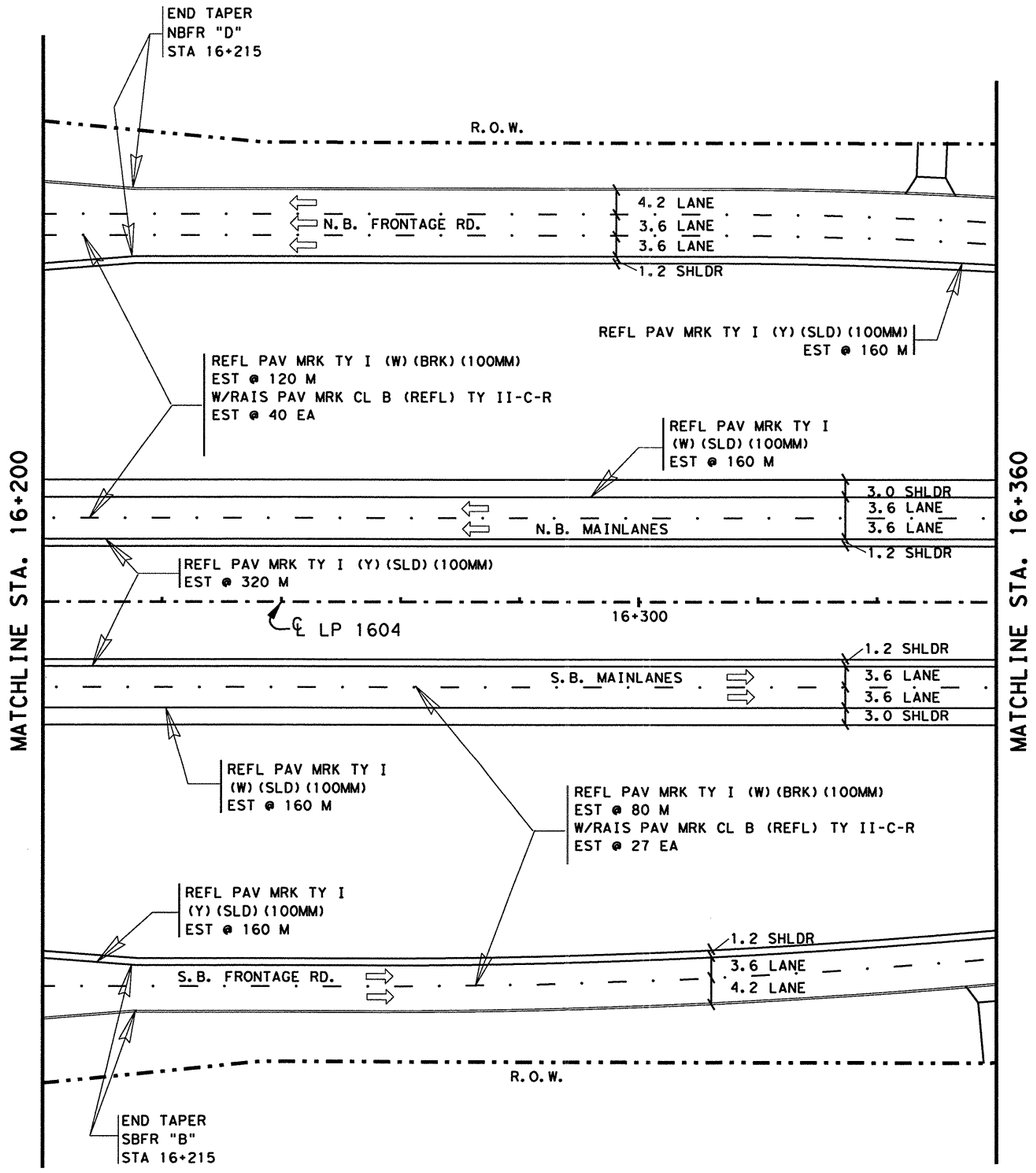


| ESTIMATED QUANTITIES | | |
|---|---|---|
| ITEM | UNIT | QUANTITY |
| | | 2452-01-038 |
| REFL PAV MRK TY I (W) (SLD) (100MM) | M | 320 |
| REFL PAV MRK TY I (W) (BRK) (100MM) | M | 200 |
| REFL PAV MRK TY I (Y) (SLD) (100MM) | M | 640 |
| RAIS PAV MRKR CL B (REFL) TY II C-R | EA | 67 |
| | | |
| | | |
| | | |
| | | |
| | | |

NOTE(S):

ALL DIMENSIONS ARE IN METERS UNLESS OTHERWISE NOTED.

QUANTITIES AND PLACEMENT OF TY II REFLECTIVE PAVEMENT MARKINGS ARE EXACTLY THE SAME AS TY I, REFLECTIVE PAVEMENT MARKINGS. TY II QUANTITIES ACCOUNTED FOR ON THE PAVEMENT MARKING /DELINEATION SUMMARY.

ANY PAVEMENT MARKING IN CONFLICT WITH PROPOSED PAVEMENT MARKINGS SHALL BE REMOVED BY THE CONTRACTOR OR AS DIRECTED BY THE ENGINEER.

| DELINEATION QUANTITIES | | | | |
|---|---|---|---|---|
| TYPE | EA. | ASM. | SPL. MNT. | SURF. MNT. |
| D-SW(a) | | | | |
| D-DW(a) | | | | |
| D-SY(a) | | | | |
| D-DY(a) | | | | |
| OM-2SR(a) | | | | |
| | | | | |
| | | | | |
| | | | | |
| | | | | |

LEVELS DISPLAYED
1 2 3 4 5 6 7 8 9 10 11 12 13 14 15 16
17 18 19 20 21 22 23 24 25 26 27 28 29 30 31 32
33 34 35 36 37 38 39 40 41 42 43 44 45 46 47 48
49 50 51 52 53 54 55 56 57 58 59 60 61 62 63

ACC: *:\ao\design\
lp1604fm471-90\pave-sign\
FILE: pavmrkplan10.dgn

STATE OF TEXAS
JOEL K. DAVENPORT, JR.
79276
REGISTERED PROFESSIONAL ENGINEER

Joel K Davenport Jr 9/19/00
Joel K. Davenport, Jr. P.E. 79276 Date

Texas Department of Transportation

# PAVEMENT MARKING AND DELINEATION LAYOUT

SHEET 10 OF 57

| FED.RD. DIV.NO. | FEDERAL AID PROJECT NO. | | SHEET NO. |
|---|---|---|---|
| 6 | NH 2000(704), etc. | | 766 |
| STATE | DIST. | COUNTY | |
| TEXAS | SAT | BEXAR | |
| CONT. | SECT. | JOB | HIGHWAY NO. |
| 2452 | 01 | 036, etc. | LP 1604 |

QUANTITIES THIS SHEET
CSJ 2452-01-038

SCALE 1:1000

| ESTIMATED QUANTITIES | | |
|---|---|---|
| ITEM | UNIT | QUANTITY |
| | | 2452-01-038 |
| REFL PAV MRK TY I (W)(SLD)(100MM) | M | 520 |
| REFL PAV MRK TY I (W)(BRK)(100MM) | M | 276 |
| REFL PAV MRK TY I (W)(SLD)(200MM) | M | 275 |
| REFL PAV MRK TY I (W)(SLD)(600MM) | M | 30 |
| REFL PAV MRK TY I (Y)(SLD)(100MM) | M | 1038 |
| RAIS PAV MRKR CL B (REFL) TY II C-R | EA | 136 |
| | | |
| | | |
| | | |

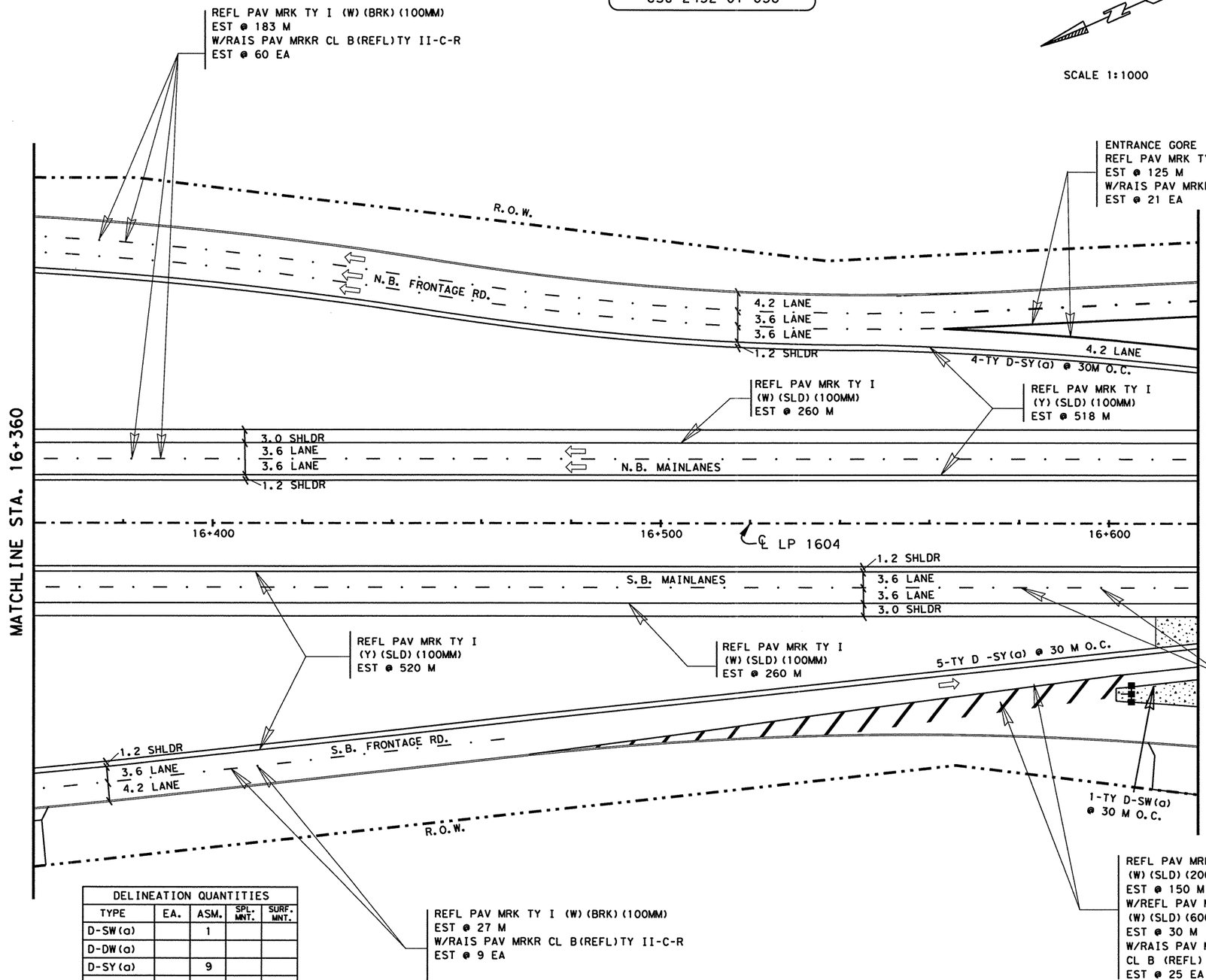


NOTE(S):

ALL DIMENSIONS ARE IN METERS UNLESS OTHERWISE NOTED.

QUANTITIES AND PLACEMENT OF TY II REFLECTIVE PAVEMENT MARKINGS ARE EXACTLY THE SAME AS TY I REFLECTIVE PAVEMENT MARKINGS. TY II QUANTITIES ACCOUNTED FOR ON THE PAVEMENT MARKING /DELINEATION SUMMARY.

ANY PAVEMENT MARKING IN CONFLICT WITH PROPOSED PAVEMENT MARKINGS SHALL BE REMOVED BY THE CONTRACTOR OR AS DIRECTED BY THE ENGINEER.

| DELINEATION QUANTITIES | | | | |
|---|---|---|---|---|
| TYPE | EA. | ASM. | SPL. MNT. | SURF. MNT. |
| D-SW(a) | | 1 | | |
| D-DW(a) | | | | |
| D-SY(a) | | 9 | | |
| D-DY(a) | | | | |
| OM-2HP(Spl) | | 1 | | |
| OM-2SR(a) | | | | |
| | | | | |
| | | | | |
| | | | | |

LEVELS DISPLAYED
1 2 3 4 5 6 7 | 12 13 14 15 16
17 18 19 20 21 22 23 | 24 25 26 27 28 29 30 31 32
33 34 35 36 37 38 39 40 41 42 43 | 44 45 46 47 48
49 50 51 52 53 54 55 56 57 58 59 60 61 62 63

ACC: t:/ao/design/lp1604fm471-90/pave-sign/
FILE: pavmrkplan11.dgn

STATE OF TEXAS
JOEL K. DAVENPORT, JR.
79276
REGISTERED PROFESSIONAL ENGINEER

Joel K. Davenport, Jr. 9/8/00
Joel K. Davenport, Jr. P.E. 79276 Date

©2000
Texas Department of Transportation

# PAVEMENT MARKING AND DELINEATION LAYOUT

SHEET 11 OF 57

| FED.RD. DIV.NO. | FEDERAL AID PROJECT NO. | | SHEET NO. |
|---|---|---|---|
| 6 | NH 2000(704),etc. | | 767 |
| STATE | DIST. | COUNTY | |
| TEXAS | SAT | BEXAR | |
| CONT. | SECT. | JOB | HIGHWAY NO. |
| 2452 | 01 | 036,etc. | LP 1604 |

QUANTITIES THIS SHEET
CSJ 2452-01-038

SCALE 1:1000

## ESTIMATED QUANTITIES

| ITEM | UNIT | QUANTITY |
|---|---|---|
| | | 2452-01-038 |
| REFL PAV MRK TY I (W)(SLD)(100MM) | M | 570 |
| REFL PAV MRK TY I (W)(BRK)(100MM) | M | 276 |
| REFL PAV MRK TY I (W)(SLD)(200MM) | M | 275 |
| REFL PAV MRK TY I (W)(SLD)(600MM) | M | 30 |
| REFL PAV MRK TY I (Y)(SLD)(100MM) | M | 1038 |
| RAIS PAV MRKR CL B (REFL) TY II C-R | EA | 144 |

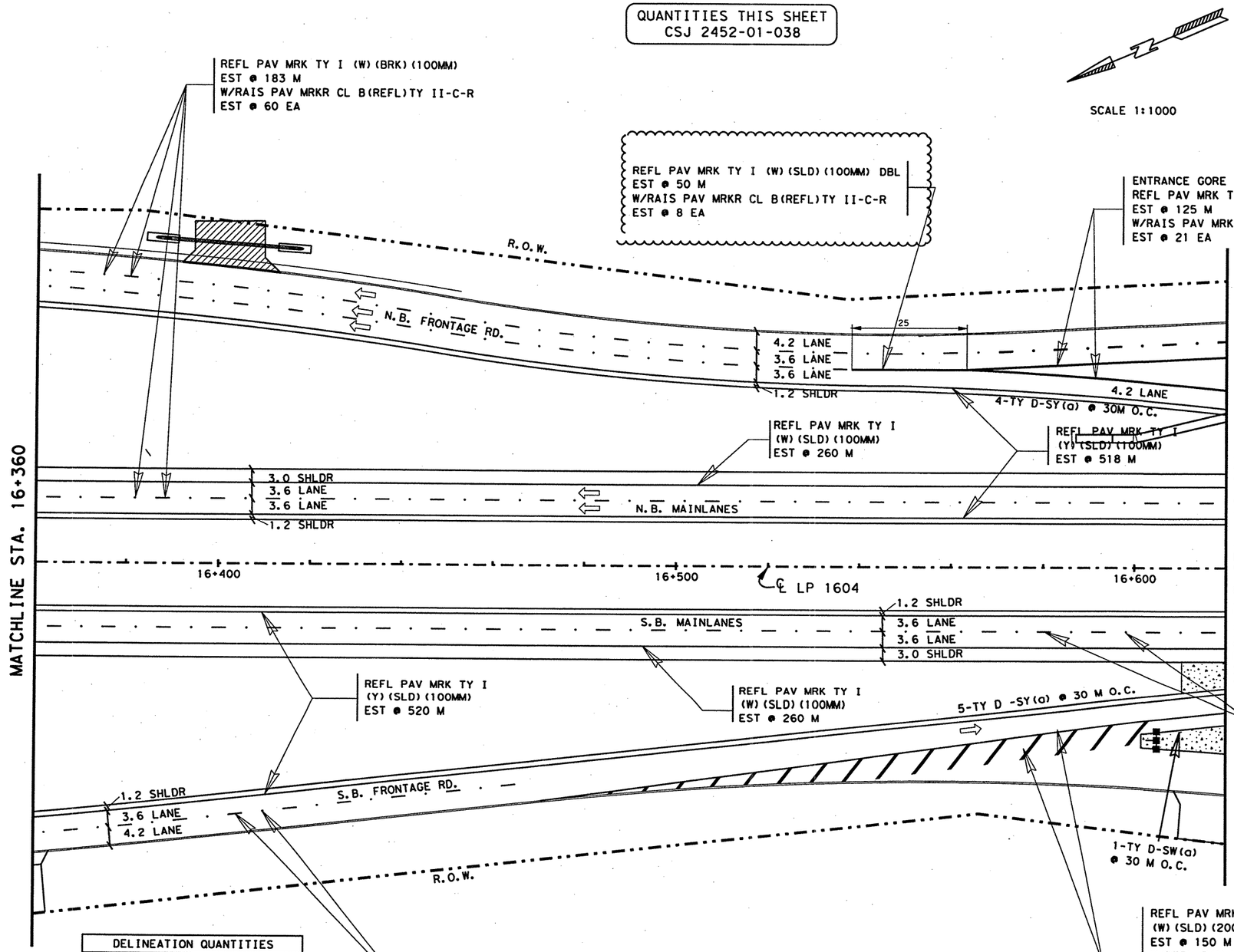


### DELINEATION QUANTITIES

| TYPE | EA. | ASM. | SPL. MNT. | SURF. MNT. |
|---|---|---|---|---|
| D-SW(a) | | 1 | | |
| D-DW(a) | | | | |
| D-SY(a) | | 9 | | |
| D-DY(a) | | | | |
| OM-2HP(Spl) | | 1 | | |
| OM-2SR(a) | | | | |
| | | | | |
| | | | | |
| | | | | |

NOTE(S):

ALL DIMENSIONS ARE IN METERS UNLESS OTHERWISE NOTED.

QUANTITIES AND PLACEMENT OF TY II REFLECTIVE PAVEMENT MARKINGS ARE EXACTLY THE SAME AS TY I REFLECTIVE PAVEMENT MARKINGS. TY II QUANTITIES ACCOUNTED FOR ON THE PAVEMENT MARKING /DELINEATION SUMMARY.

ANY PAVEMENT MARKING IN CONFLICT WITH PROPOSED PAVEMENT MARKINGS SHALL BE REMOVED BY THE CONTRACTOR OR AS DIRECTED BY THE ENGINEER.

CHANGE ORDER 76

REVISED SHEET

CHANGE ORDER NO. 76
-UPDATED VIEW
-REVISED QUANTITIES

STATE OF TEXAS
JEROME D. PAVLISKA
76075
REGISTERED
PROFESSIONAL ENGINEER

Jerome D. Pavliska, P.E. 01/08/04
Jerome D. Pavliska, P.E. — Date

©2000
Texas Department of Transportation

# PAVEMENT MARKING AND DELINEATION LAYOUT

SHEET 11 OF 57

| FED.RD. DIV.NO. | FEDERAL AID PROJECT NO. | | SHEET NO. |
|---|---|---|---|
| 6 | NH 2000(704),etc. | | 767A |
| STATE | DIST. | COUNTY | |
| TEXAS | SAT | BEXAR | |
| CONT. | SECT. | JOB | HIGHWAY NO. |
| 2452 | 01 | 036,etc. | LP 1604 |

LEVELS DISPLAYED
1 2 3 4 5 6 7 | 12 13 14 15 16
7 18 19 20 21 22 23 24 25 26 27 28 29 30 31 32
33 34 35 36 37 38 39 40 41 42 43 44 45 46 47 48
49 50 51 52 53 54 55 56 57 58 59 60 61 62 63

ACC: t:/oo/design/1p1604fm471-90/pave-sign/
FILE: pavmrkplan11*C076.dgn

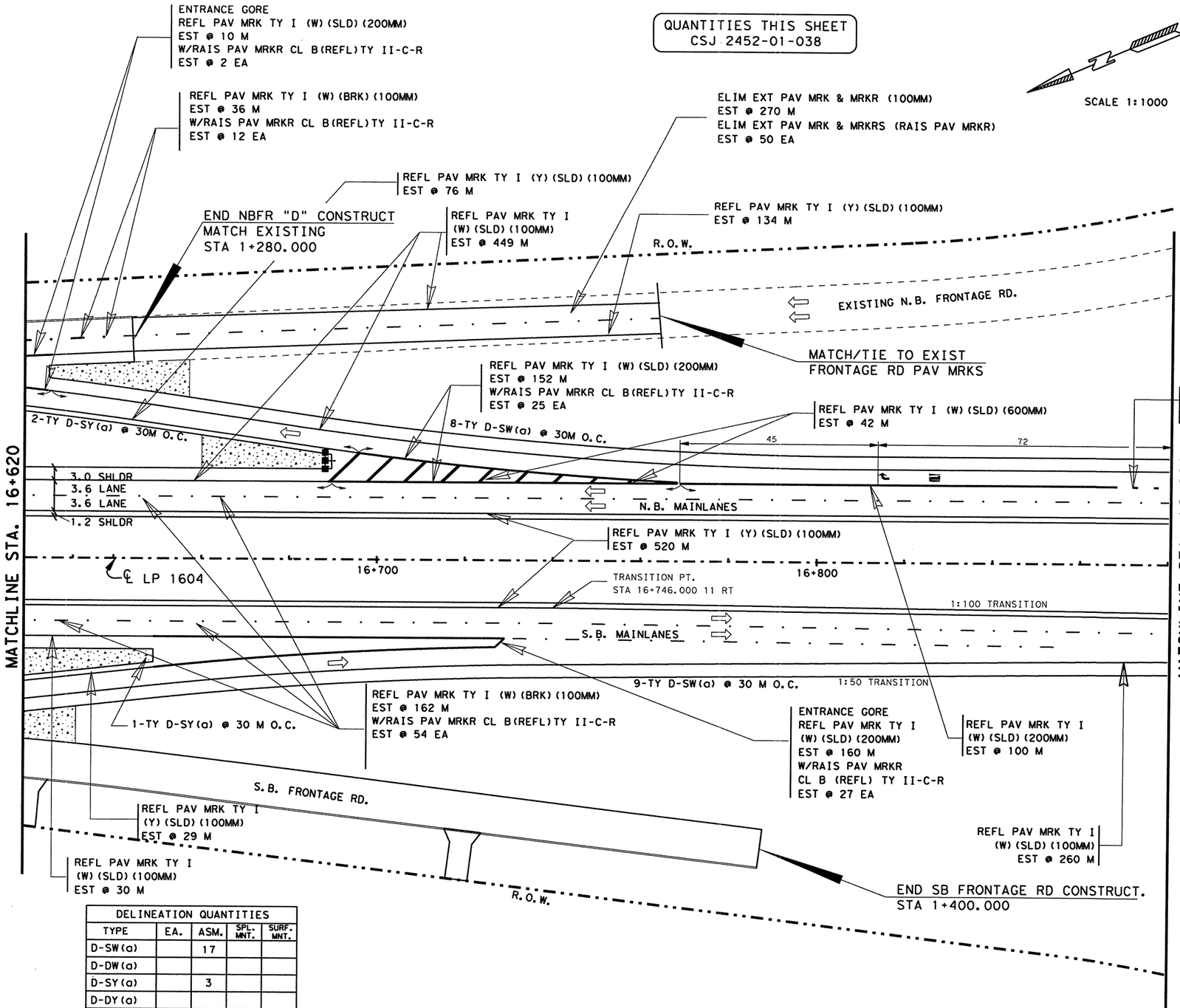


| DELINEATION QUANTITIES | | | | |
|---|---|---|---|---|
| TYPE | EA. | ASM. | SPL. MNT. | SURF. MNT. |
| D-SW(a) | | 17 | | |
| D-DW(a) | | | | |
| D-SY(a) | | 3 | | |
| D-DY(a) | | | | |
| OM-2HP(Spl) | | 1 | | |
| OM-2SR(a) | | | | |
| | | | | |
| | | | | |
| | | | | |

## ESTIMATED QUANTITIES

| ITEM | UNIT | QUANTITY |
|---|---|---|
| | | 2452-01-038 |
| REFL PAV MRK TY I (W) (SLD) (100MM) | M | 739 |
| REFL PAV MRK TY I (W) (BRK) (100MM) | M | 198 |
| REFL PAV MRK TY I (W) (SLD) (200MM) | M | 422 |
| REFL PAV MRK TY I (W) (BRK) (200MM) | M | 2 |
| REFL PAV MRK TY I (W) (SLD) (600MM) | M | 42 |
| REFL PAV MRK TY I (W) (ARROW) | EA | 1 |
| REFL PAV MRK TY I (W) (WORD) | EA | 1 |
| REFL PAV MRK TY I (Y) (SLD) (100MM) | M | 759 |
| RAIS PAV MRKR CL B (REFL) TY II C-R | EA | 120 |
| ELIM EXT PAV & PAV MRKR (100MM) | M | 270 |
| ELIM EXT PAV & PAV MRKR (RAIS PAV MRKR) | EA | 50 |
| | | |

NOTE(S):

ALL DIMENSIONS ARE IN METERS UNLESS OTHERWISE NOTED.

QUANTITIES AND PLACEMENT OF TY II REFLECTIVE PAVEMENT MARKINGS ARE EXACTLY THE SAME AS TY I REFLECTIVE PAVEMENT MARKINGS. TY II QUANTITIES ACCOUNTED FOR ON THE PAVEMENT MARKING /DELINEATION SUMMARY.

ANY PAVEMENT MARKING IN CONFLICT WITH PROPOSED PAVEMENT MARKINGS SHALL BE REMOVED BY THE CONTRACTOR OR AS DIRECTED BY THE ENGINEER.

STATE OF TEXAS
JOEL K. DAVENPORT, JR.
79276
REGISTERED
PROFESSIONAL ENGINEER

Joel K. Davenport, Jr. 9/19/00
Joel K. Davenport, Jr. P.E. 79276 Date

©2000

Texas Department of Transportation

# PAVEMENT MARKING AND DELINEATION LAYOUT

**SHEET 12 OF 57**

| FED. RD. DIV. NO. | FEDERAL AID PROJECT NO. | | SHEET NO. |
|---|---|---|---|
| 6 | NH 2000(704), etc. | | 768 |
| STATE | DIST. | COUNTY | |
| TEXAS | SAT | BEXAR | |
| CONT. | SECT. | JOB | HIGHWAY NO. |
| 2452 | 01 | 036, etc. | LP 1604 |

LEVELS DISPLAYED
1 2 3 4 5 6 7 8 9 10 11 12 13 14 15 16
33 34 35 36 37 38 39 40 41 42 43 44 45 46 47 48
49 50 51 52 53 54 55 56 57 58 59 60 61 62 63

ACC: t:\ao\design\lp1604fm471-90\pave-sign\
FILE: pavmrkplan12.dgn

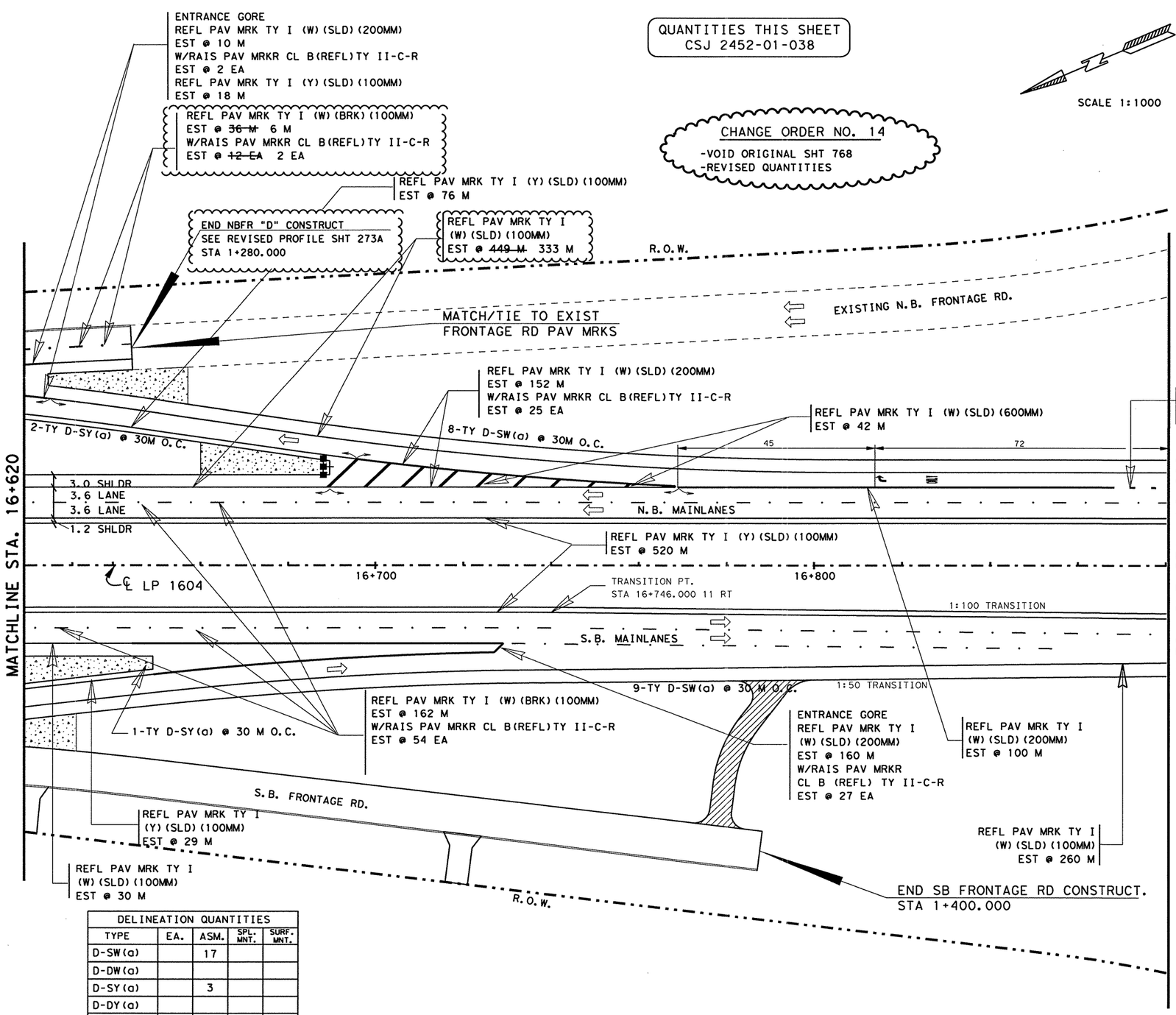


QUANTITIES THIS SHEET
CSJ 2452-01-038

CHANGE ORDER NO. 14
-VOID ORIGINAL SHT 768
-REVISED QUANTITIES

SCALE 1:1000

## ESTIMATED QUANTITIES

| ITEM | UNIT | QUANTITY |
|---|---|---|
| | | ~~2452-01-038~~ |
| REFL PAV MRK TY I (W)(SLD)(100MM) | M | 623 |
| REFL PAV MRK TY I (W)(BRK)(100MM) | M | 168 |
| REFL PAV MRK TY I (W)(SLD)(200MM) | M | 422 |
| REFL PAV MRK TY I (W)(BRK)(200MM) | M | 2 |
| REFL PAV MRK TY I (W)(SLD)(600MM) | M | 42 |
| REFL PAV MRK TY I (W)(ARROW) | EA | 1 |
| REFL PAV MRK TY I (W)(WORD) | EA | 1 |
| REFL PAV MRK TY I (Y)(SLD)(100MM) | M | 643 |
| RAIS PAV MRKR CL B (REFL) TY II C-R | EA | 110 |
| ELIM EXT PAV & PAV MRKR (100MM) | M | 0 |
| ELIM EXT PAV & PAV MRKR (RAIS PAV MRKR) | EA | 0 |

NOTE(S):

ALL DIMENSIONS ARE IN METERS UNLESS OTHERWISE NOTED.

QUANTITIES AND PLACEMENT OF TY II REFLECTIVE PAVEMENT MARKINGS ARE EXACTLY THE SAME AS TY I REFLECTIVE PAVEMENT MARKINGS. TY II QUANTITIES ACCOUNTED FOR ON THE PAVEMENT MARKING /DELINEATION SUMMARY.

ANY PAVEMENT MARKING IN CONFLICT WITH PROPOSED PAVEMENT MARKINGS SHALL BE REMOVED BY THE CONTRACTOR OR AS DIRECTED BY THE ENGINEER.

| DELINEATION QUANTITIES | | | | |
|---|---|---|---|---|
| TYPE | EA. | ASM. | SPL. MNT. | SURF. MNT. |
| D-SW(a) | | 17 | | |
| D-DW(a) | | | | |
| D-SY(a) | | 3 | | |
| D-DY(a) | | | | |
| OM-2HP(Spl) | | 1 | | |
| OM-2SR(a) | | | | |
| | | | | |
| | | | | |
| | | | | |

CHANGE ORDER 14

STATE OF TEXAS
TERRY G. McCOY
75016
REGISTERED PROFESSIONAL ENGINEER

Terry G. McCoy, P.E. 1-17-02
Date

FOR CO # 19 ONLY

©2000
Texas Department of Transportation

# PAVEMENT MARKING AND DELINEATION LAYOUT

SHEET 12 OF 57

| FED.RD. DIV.NO. | FEDERAL AID PROJECT NO. | | SHEET NO. |
|---|---|---|---|
| 6 | NH 2000(704),etc. | | 768A |
| STATE | DIST. | COUNTY | |
| TEXAS | SAT | BEXAR | |
| CONT. | SECT. | JOB | HIGHWAY NO. |
| 2452 | 01 | 036,etc. | LP 1604 |

LEVELS DISPLAYED
1 2 3 4 5 6 7 8 9 10 11 12 13 14 15 16
17 18 19 20 21 22 23 24 25 26 27 28 29 30 31 32
33 34 35 36 37 38 39 40 41 42 43 44 45 46 47 48
49 50 51 52 53 54 55 65 75 85 96 106 126 253

ACC: t:\ao\design\lp1604fm471-90\pave-sign\
FILE: pavmrkplan12.dgn

QUANTITIES THIS SHEET
CSJ 2452-01-038

SCALE 1:1000

**CHANGE ORDER NO. 76**
-ADDED WRONG WAY ARROW DETAIL
-NEW QUANTITIES

ENTRANCE GORE
REFL PAV MRK TY I (W)(SLD)(200MM)
EST @ 10 M
W/RAIS PAV MRKR CL B(REFL)TY II-C-R
EST @ 2 EA
REFL PAV MRK TY I (Y)(SLD)(100MM)
EST @ 18 M

14 REFL PAV MRK TY I (W)(BRK)(100MM)
EST @ ~~36 M~~ 6 M
W/RAIS PAV MRKR CL B(REFL)TY II-C-R
EST @ ~~12 EA~~ 2 EA

REFL PAV MRK TY I (Y)(SLD)(100MM)
EST @ 76 M

14 END NBFR "D" CONSTRUCT
SEE REVISED PROFILE SHT 273A
STA 1+280.000

14 REFL PAV MRK TY I
(W)(SLD)(100MM)
EST @ ~~449 M~~ 333 M

R.O.W.

MATCH/TIE TO EXIST
FRONTAGE RD PAV MRKS

EXISTING N.B. FRONTAGE RD.

REFL PAV MRK TY I (W)(SLD)(200MM)
EST @ 152 M
W/RAIS PAV MRKR CL B(REFL)TY II-C-R
EST @ 25 EA

REFL PAV MRK TY I (W)(SLD)(600MM)
EST @ 42 M

REFL PAV MRK TY I
(W)(BRK)(200MM)
EST @ 2 M

2-TY D-SY(a) @ 30M O.C.
8-TY D-SW(a) @ 30M O.C.
30
45
72

3.0 SHLDR
3.6 LANE
3.6 LANE
1.2 SHLDR

N.B. MAINLANES

WRONG WAY ARROW
RAIS PAV MRKR CL B(REFL)TY I-R
EST @ 28 EA

REFL PAV MRK TY I (Y)(SLD)(100MM)
EST @ 520 M

16+700
16+800

℄ LP 1604

TRANSITION PT.
STA 16+746.000 11 RT

1:100 TRANSITION

S.B. MAINLANES

9-TY D-SW(a) @ 30 M O.C.

1:50 TRANSITION

1-TY D-SY(a) @ 30 M O.C.

REFL PAV MRK TY I (W)(BRK)(100MM)
EST @ 162 M
W/RAIS PAV MRKR CL B(REFL)TY II-C-R
EST @ 54 EA

ENTRANCE GORE
REFL PAV MRK TY I
(W)(SLD)(200MM)
EST @ 160 M
W/RAIS PAV MRKR
CL B (REFL) TY II-C-R
EST @ 27 EA

REFL PAV MRK TY I
(W)(SLD)(200MM)
EST @ 100 M

S.B. FRONTAGE RD.

REFL PAV MRK TY I
(Y)(SLD)(100MM)
EST @ 29 M

REFL PAV MRK TY I
(W)(SLD)(100MM)
EST @ 30 M

REFL PAV MRK TY I
(W)(SLD)(100MM)
EST @ 260 M

R.O.W.

END SB FRONTAGE RD CONSTRUCT.
STA 1+400.000

MATCHLINE STA. 16+620

MATCHLINE STA. 16+880

DELINEATION QUANTITIES

| TYPE | EA. | ASM. | SPL. MNT. | SURF. MNT. |
|---|---|---|---|---|
| D-SW(a) | | 17 | | |
| D-DW(a) | | | | |
| D-SY(a) | | 3 | | |
| D-DY(a) | | | | |
| OM-2HP(Sp) | | 1 | | |
| OM-2SR(a) | | | | |
| | | | | |
| | | | | |
| | | | | |

ESTIMATED QUANTITIES

| | ITEM | UNIT | QUANTITY 2452-01-038 |
|---|---|---|---|
| 14 | REFL PAV MRK TY I (W)(SLD)(100MM) | M | 623 |
| 14 | REFL PAV MRK TY I (W)(BRK)(100MM) | M | 168 |
| | REFL PAV MRK TY I (W)(SLD)(200MM) | M | 422 |
| | REFL PAV MRK TY I (W)(BRK)(200MM) | M | 2 |
| | REFL PAV MRK TY I (W)(SLD)(600MM) | M | 42 |
| | REFL PAV MRK TY I (W)(ARROW) | EA | 1 |
| | REFL PAV MRK TY I (W)(WORD) | EA | 1 |
| 14 | REFL PAV MRK TY I (Y)(SLD)(100MM) | M | 643 |
| 14 | ~~RAIS PAV MRKR CL B (REFL) TY II-C-R~~ | ~~EA~~ | ~~110~~ |
| | RAIS PAV MRKR CL B (REFL) TY I-R | EA | 28 |
| 14 | ELIM EXT PAV & PAV MRKR (100MM) | M | 0 |
| 14 | ELIM EXT PAV & PAV MRKR (RAIS PAV MRKR) | EA | 0 |

NOTE(S):

ALL DIMENSIONS ARE IN METERS UNLESS OTHERWISE NOTED.

QUANTITIES AND PLACEMENT OF TY II REFLECTIVE PAVEMENT MARKINGS ARE EXACTLY THE SAME AS TY I REFLECTIVE PAVEMENT MARKINGS. TY II QUANTITIES ACCOUNTED FOR ON THE PAVEMENT MARKING /DELINEATION SUMMARY.

ANY PAVEMENT MARKING IN CONFLICT WITH PROPOSED PAVEMENT MARKINGS SHALL BE REMOVED BY THE CONTRACTOR OR AS DIRECTED BY THE ENGINEER.

△# DESIGNATES A CHANGE HAS BEEN MADE AND REFERS TO THE CHANGE ORDER NUMBER.

CHANGE ORDER 76

REVISED SHEET

STATE OF TEXAS
JEROME D. PAVLISKA
76075
REGISTERED PROFESSIONAL ENGINEER

Jerome D. Pavliska P.E. 01/08/04
Jerome D. Pavliska, P.E. Date

LEVELS DISPLAYED
1 2 3 4 5 6 7 8 9 10 11 12 13 14 15 16
17 18 19 20 21 22 23 24 25 26 27 28 29 30 31 32
33 34 35 36 37 38 39 40 41 42 43 44 45 46 47 48
49 50 51 52 53 54 55 56 57 58 59 60 61 62 63

ACC: t:\ao\design\
lp1604fm471-90\pave-sign\
FILE: pavmrkplan12.dgn

©2000 Texas Department of Transportation

# PAVEMENT MARKING AND DELINEATION LAYOUT

SHEET 12 OF 57

| FED.RD. DIV.NO. | FEDERAL AID PROJECT NO. | | SHEET NO. |
|---|---|---|---|
| 6 | NH 2000(704), etc. | | 70658 |
| STATE | DIST. | COUNTY | |
| TEXAS | SAT | BEXAR | |
| CONT. | SECT. | JOB | HIGHWAY NO. |
| 2452 | 01 | 036, etc. | LP 1604 |

11/12/03

## ESTIMATED QUANTITIES

| ITEM | UNIT | QUANTITY | |
|---|---|---|---|
| | | 2452-01-037 | 2452-01-038 |
| REFL PAV MRK TY I (W)(SLD)(100MM) | M | 280 | 240 |
| REFL PAV MRK TY I (W)(BRK)(100MM) | M | 69 | 60 |
| REFL PAV MRK TY I (W)(SLD)(200MM) | M | 60 | - |
| REFL PAV MRK TY I (W)(BRK)(200MM) | M | 16 | 26 |
| REFL PAV MRK TY I (W)(ARROW) | EA | 2 | 2 |
| REFL PAV MRK TY I (W)(WORD) | EA | 2 | 2 |
| REFL PAV MRK TY I (Y)(SLD)(100MM) | M | 280 | 240 |
| RAIS PAV MRKR CL B (REFL) TY II C-R | EA | 46 | 40 |
| | | | |

SCALE 1:1000

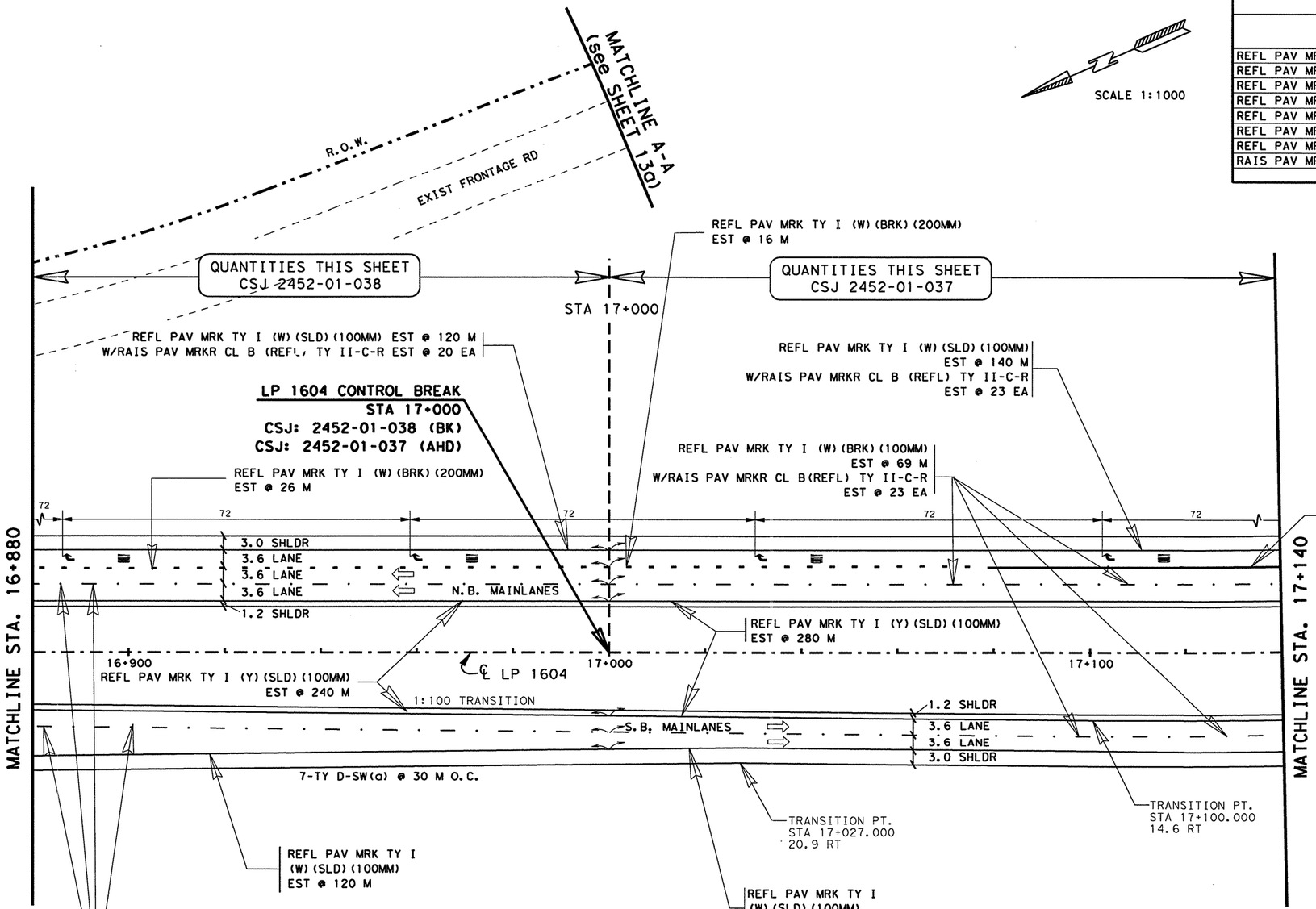


NOTE(S):

ALL DIMENSIONS ARE IN METERS UNLESS OTHERWISE NOTED.

QUANTITIES AND PLACEMENT OF TY II REFLECTIVE PAVEMENT MARKINGS ARE EXACTLY THE SAME AS TY I REFLECTIVE PAVEMENT MARKINGS. TY II QUANTITIES ACCOUNTED FOR ON THE PAVEMENT MARKING /DELINEATION SUMMARY.

ANY PAVEMENT MARKING IN CONFLICT WITH PROPOSED PAVEMENT MARKINGS SHALL BE REMOVED BY THE CONTRACTOR OR AS DIRECTED BY THE ENGINEER.

CSJ 2452-01-038

| DELINEATION QUANTITIES | | | | |
|---|---|---|---|---|
| TYPE | EA. | ASM. | SPL. MNT. | SURF. MNT. |
| D-SW(a) | | 4 | | |
| D-DW(a) | | | | |
| D-SY(a) | | | | |
| D-DY(a) | | | | |
| OM-2SR(a) | | | | |
| | | | | |
| | | | | |
| | | | | |
| | | | | |

CSJ 2452-01-037

| DELINEATION QUANTITIES | | | | |
|---|---|---|---|---|
| TYPE | EA. | ASM. | SPL. MNT. | SURF. MNT. |
| D-SW(a) | | 3 | | |
| D-DW(a) | | | | |
| D-SY(a) | | | | |
| D-DY(a) | | | | |
| OM-2SR(a) | | | | |
| | | | | |
| | | | | |
| | | | | |
| | | | | |

STATE OF TEXAS
JOEL K. DAVENPORT, JR.
79276
REGISTERED PROFESSIONAL ENGINEER

Joel K. Davenport, Jr. 9/19/00
Joel K. Davenport, Jr. P.E. 79276 Date

©2000

Texas Department of Transportation

# PAVEMENT MARKING AND DELINEATION LAYOUT

SHEET 13 OF 57

| FED. RD. DIV. NO. | FEDERAL AID PROJECT NO. | SHEET NO. |
|---|---|---|
| 6 | NH 2000(704), etc. | 769 |

| STATE | DIST. | COUNTY |
|---|---|---|
| TEXAS | SAT | BEXAR |

| CONT. | SECT. | JOB | HIGHWAY NO. |
|---|---|---|---|
| 2452 | 01 | 036, etc. | LP 1604 |

LEVELS DISPLAYED
1 2 3 4 5 6 7 8 9 10 11 12 13 14 15 16
17 21 22 23 24 25 26 27 28 29 30 31 32
33 34 35 36 37 38 39 40 41 42 43 44 45 46 47 48
49 50 51 52 53 54 55 56 57 58 59 60 61 62 63

ACC: t:\ao\design\
lp1604fm471-90\pave-sign\
FILE: pavmrkplan13.dgn

QUANTITIES THIS SHEET
CSJ 2452-01-037

SCALE 1:1000

| ESTIMATED QUANTITIES | | |
|---|---|---|
| ITEM | UNIT | QUANTITY 2452-01-037 |
| REFL PAV MRK TY I (W)(SLD)(100MM) | M | 763 |
| REFL PAV MRK TY I (W)(BRK)(100MM) | M | 137 |
| REFL PAV MRK TY I (W)(SLD)(200MM) | M | 85 |
| REFL PAV MRK TY I (W)(SLD)(600MM) | M | 18 |
| REFL PAV MRK TY I (W)(ARROW) | EA | 2 |
| REFL PAV MRK TY I (W)(WORD) | EA | 4 |
| REFL PAV MRK TY I (Y)(SLD)(100MM) | M | 590 |
| RAIS PAV MRKR CL B (REFL) TY II C-R | EA | 67 |

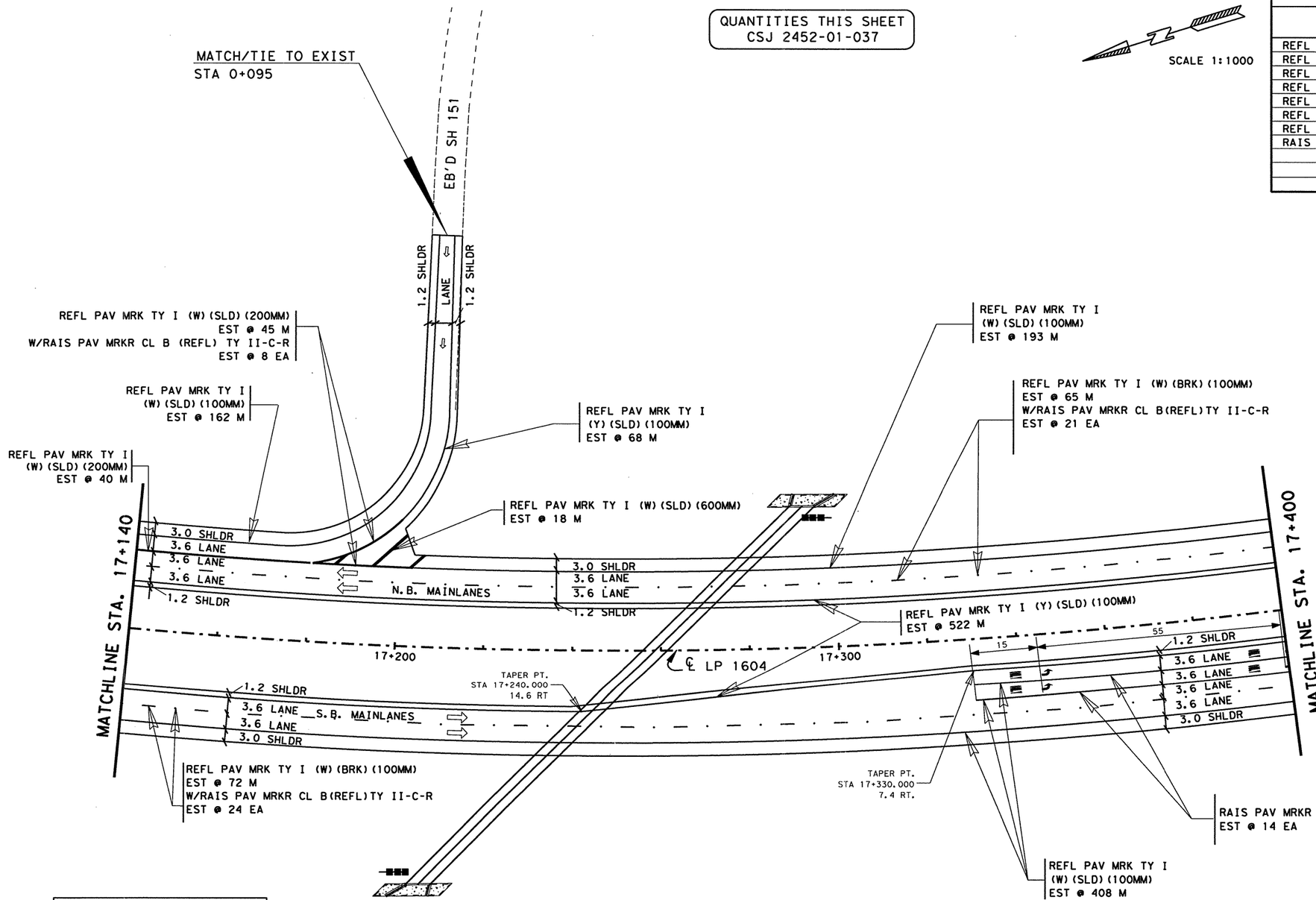


| DELINEATION QUANTITIES | | | | |
|---|---|---|---|---|
| TYPE | EA. | ASM. | SPL. MNT. | SURF. MNT. |
| D-SW(a) | | | | |
| D-DW(a) | | | | |
| D-SY(a) | | | | |
| D-DY(a) | | | | |
| OM-2SR(a) | | 2 | | |
| | | | | |
| | | | | |
| | | | | |
| | | | | |

NOTE(S):

ALL DIMENSIONS ARE IN METERS UNLESS OTHERWISE NOTED.

QUANTITIES AND PLACEMENT OF TY II REFLECTIVE PAVEMENT MARKINGS ARE EXACTLY THE SAME AS TY I REFLECTIVE PAVEMENT MARKINGS. TY II QUANTITIES ACCOUNTED FOR ON THE PAVEMENT MARKING /DELINEATION SUMMARY.

ANY PAVEMENT MARKING IN CONFLICT WITH PROPOSED PAVEMENT MARKINGS SHALL BE REMOVED BY THE CONTRACTOR OR AS DIRECTED BY THE ENGINEER.

STATE OF TEXAS
JOEL K. DAVENPORT, JR.
79276
REGISTERED
PROFESSIONAL ENGINEER

Joel K. Davenport, Jr. 9/19/00
Joel K. Davenport, Jr. P.E. 79276 Date

©2000
Texas Department of Transportation

# PAVEMENT MARKING AND DELINEATION LAYOUT

SHEET 14 OF 57

| FED.RD. DIV.NO. | FEDERAL AID PROJECT NO. | SHEET NO. |
|---|---|---|
| 6 | NH 2000(704),etc. | 770 |
| STATE | DIST. | COUNTY |
| TEXAS | SAT | BEXAR |
| CONT. | SECT. | JOB / HIGHWAY NO. |
| 2452 | 01 | 036,etc. / LP 1604 |

LEVELS DISPLAYED
1 2 3 4 5 6 7 8 9 10 11 12 13 14 15 16
17 18 21 22 23 24 25 26 27 28 29 30 31 32
33 34 35 36 37 38 39 40 41 42 43 44 45 46 47 48
49 50 51 52 53 54 55 56 57 58 59 60 61 62 63

ACC: t:\ao\design\lp1604fm471-90\pave-sign
FILE: pavmrkplan14.dgn

QUANTITIES THIS SHEET
CSJ 2452-01-037

SCALE 1:1000

## ESTIMATED QUANTITIES

| ITEM | UNIT | QUANTITY 2452-01-037 |
|---|---|---|
| REFL PAV MRK TY I (W)(SLD)(100MM) | M | 792 |
| REFL PAV MRK TY I (W)(BRK)(100MM) | M | 137 |
| REFL PAV MRK TY I (W)(SLD)(200MM) | M | 85 |
| REFL PAV MRK TY I (W)(SLD)(600MM) | M | 18 |
| REFL PAV MRK TY I (W)(ARROW) | EA | 2 |
| REFL PAV MRK TY I (W)(WORD) | EA | 4 |
| REFL PAV MRK TY I (Y)(SLD)(100MM) | M | 620 |
| RAIS PAV MRKR CL B (REFL) TY II C-R | EA | 98 |

NOTE(S):

ALL DIMENSIONS ARE IN METERS UNLESS OTHERWISE NOTED.

QUANTITIES AND PLACEMENT OF TY II REFLECTIVE PAVEMENT MARKINGS ARE EXACTLY THE SAME AS TY I REFLECTIVE PAVEMENT MARKINGS. TY II QUANTITIES ACCOUNTED FOR ON THE PAVEMENT MARKING /DELINEATION SUMMARY.

ANY PAVEMENT MARKING IN CONFLICT WITH PROPOSED PAVEMENT MARKINGS SHALL BE REMOVED BY THE CONTRACTOR OR AS DIRECTED BY THE ENGINEER.

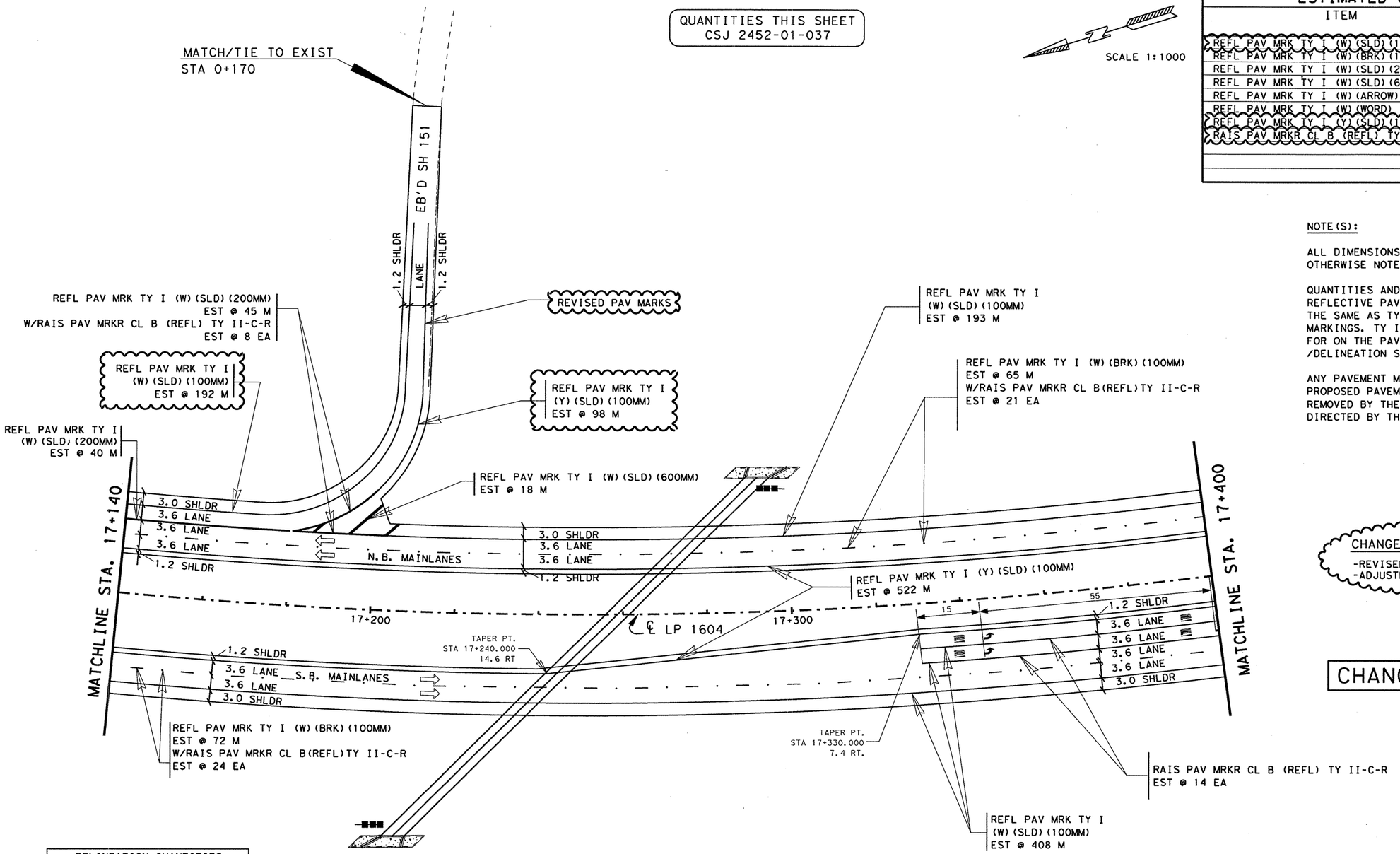


CHANGE ORDER NO. 7 11
-REVISED PAVEMENT MARKS
-ADJUSTED QUANTITIES

CHANGE ORDER 7 11

| DELINEATION QUANTITIES | | | | |
|---|---|---|---|---|
| TYPE | EA. | ASM. | SPL. MNT. | SURF. MNT. |
| D-SW(a) | | | | |
| D-DW(a) | | | | |
| D-SY(a) | | | | |
| D-DY(a) | | | | |
| OM-2SR(a) | | 2 | | |
| | | | | |
| | | | | |
| | | | | |
| | | | | |

FOR MODIFICATIONS ASSOCIATED WITH CHANGE ORDER NO. 11 ONLY

STATE OF TEXAS
TERRY G. McCOY
75016
REGISTERED PROFESSIONAL ENGINEER

Terry G. McCoy, P.E. 10-17-01
Date

FOR MODIFICATIONS ASSOCIATED WITH CO # 11 ONLY

© 2001

Texas Department of Transportation

# PAVEMENT MARKING AND DELINEATION LAYOUT

SHEET 14 OF 57

| FED. RD. DIV. NO. | FEDERAL AID PROJECT NO. | SHEET NO. |
|---|---|---|
| 6 | NH 2000(704), etc. | 77 OR |
| STATE | DIST. | COUNTY |
| TEXAS | SAT | BEXAR |
| CONT. | SECT. | JOB / HIGHWAY NO. |
| 2452 | 01 | 036, etc. / LP 1604 |

10-15-01

LEVELS DISPLAYED
1 2 3 4 5 6 7 8 9 10 11 12 13 14 15 16
21 22 23 24 25 26 27 28 29 30 31 32
33 34 35 36 37 38 39 40 41 42 43 44 45 46 47 48
49 50 51 52 53 54 55 56 57 58 59 60 61 62 63

ACC: t:\ao\design\lp1604fm471-90\pove-sign
FILE: pavmrkplan14.dgn

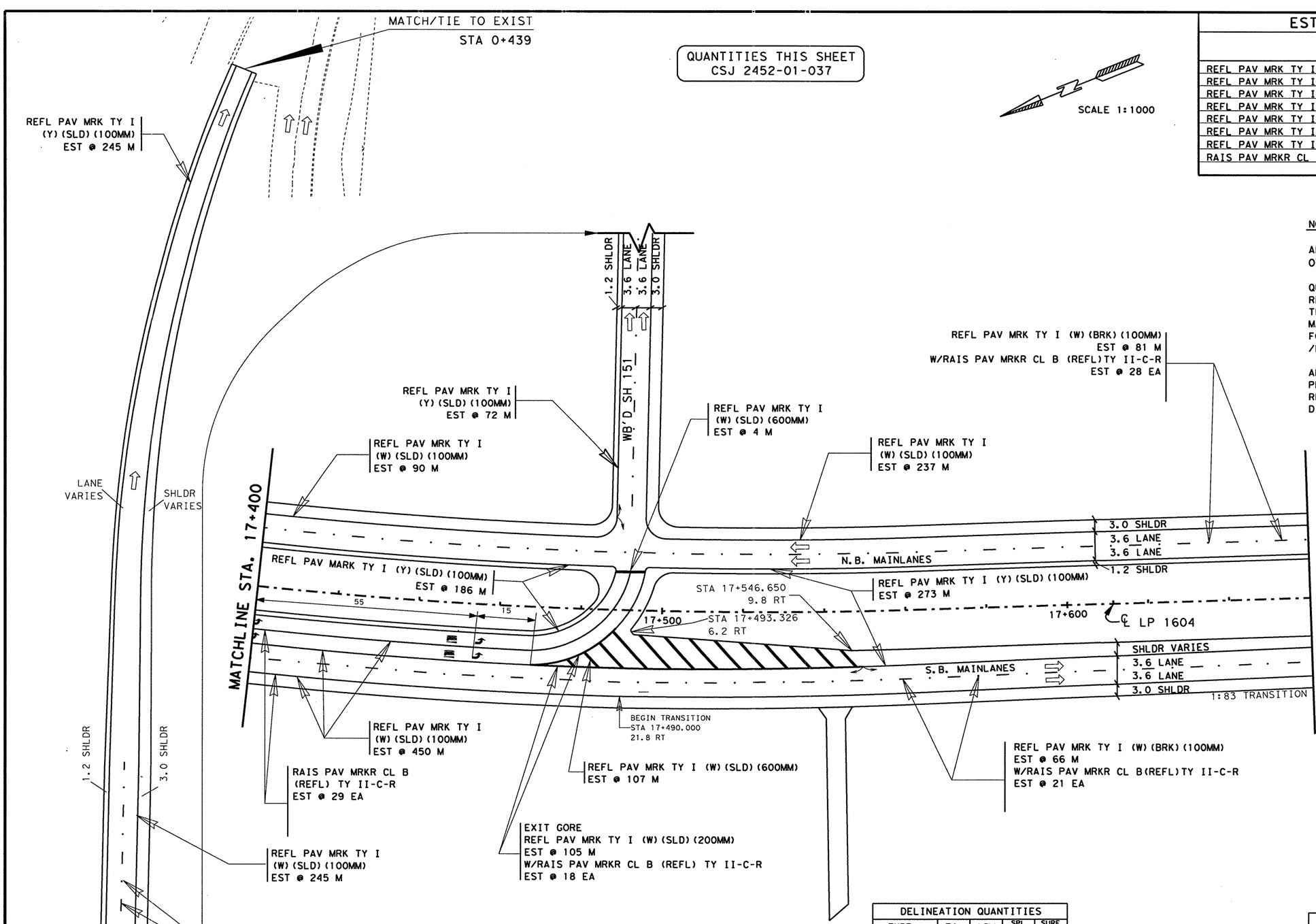


## ESTIMATED QUANTITIES

| ITEM | UNIT | QUANTITY 2452-01-037 |
|---|---|---|
| REFL PAV MRK TY I (W) (SLD) (100MM) | M | 1022 |
| REFL PAV MRK TY I (W) (BRK) (100MM) | M | 165 |
| REFL PAV MRK TY I (W) (SLD) (200MM) | M | 105 |
| REFL PAV MRK TY I (W) (SLD) (600MM) | M | 111 |
| REFL PAV MRK TY I (W) (ARROW) | EA | 4 |
| REFL PAV MRK TY I (W) (WORD) | EA | 2 |
| REFL PAV MRK TY I (Y) (SLD) (100MM) | M | 776 |
| RAIS PAV MRKR CL B (REFL) TY II C-R | EA | 101 |

NOTE(S):

ALL DIMENSIONS ARE IN METERS UNLESS OTHERWISE NOTED.

QUANTITIES AND PLACEMENT OF TY II REFLECTIVE PAVEMENT MARKINGS ARE EXACTLY THE SAME AS TY I REFLECTIVE PAVEMENT MARKINGS. TY II QUANTITIES ACCOUNTED FOR ON THE PAVEMENT MARKING /DELINEATION SUMMARY.

ANY PAVEMENT MARKING IN CONFLICT WITH PROPOSED PAVEMENT MARKINGS SHALL BE REMOVED BY THE CONTRACTOR OR AS DIRECTED BY THE ENGINEER.

## DELINEATION QUANTITIES

| TYPE | EA. | ASM. | SPL. MNT. | SURF. MNT. |
|---|---|---|---|---|
| D-SW(a) | | | | |
| D-DW(a) | | | | |
| D-SY(a) | | | | |
| D-DY(a) | | | | |
| OM-2SR(a) | | | | |
| | | | | |
| | | | | |

STATE OF TEXAS
JOEL K. DAVENPORT, JR.
79276
REGISTERED
PROFESSIONAL ENGINEER

Joel K. Davenport, Jr. P.E. 79276 — 9/19/00 Date

©2000

Texas Department of Transportation

# PAVEMENT MARKING AND DELINEATION LAYOUT

SHEET 15 OF 57

| FED. RD. DIV. NO. | FEDERAL AID PROJECT NO. | | SHEET NO. |
|---|---|---|---|
| 6 | NH 2000(704), etc. | | 771 |
| STATE | DIST. | COUNTY | |
| TEXAS | SAT | BEXAR | |
| CONT. | SECT. | JOB | HIGHWAY NO. |
| 2452 | 01 | 036, etc. | LP 1604 |

LEVELS DISPLAYED
1 2 3 4 5 6 7 8 9 10 11 12 13 14 15 16
21 22 23 24 25 26 27 28 29 30 31 32
33 34 35 36 37 38 39 40 41 42 43 44 45 46 47 48
49 51 52 53 54 55 56 57 58 59 60 61 62

ACC: t:\oo\design\lp1604fm471-90\pave-sign\
FILE: pavmrkplan15.dgn

QUANTITIES THIS SHEET
CSJ 2452-01-037

SCALE 1:1000

| ESTIMATED QUANTITIES | | |
|---|---|---|
| ITEM | UNIT | QUANTITY |
| | | 2452-01-037 |
| REFL PAV MRK TY I (W)(SLD)(100MM) | M | 520 |
| REFL PAV MRK TY I (W)(BRK)(100MM) | M | 132 |
| REFL PAV MRK TY I (Y)(SLD)(100MM) | M | 520 |
| RAIS PAV MRKR CL B (REFL) TY II C-R | EA | 43 |
| | | |
| | | |
| | | |
| | | |
| | | |

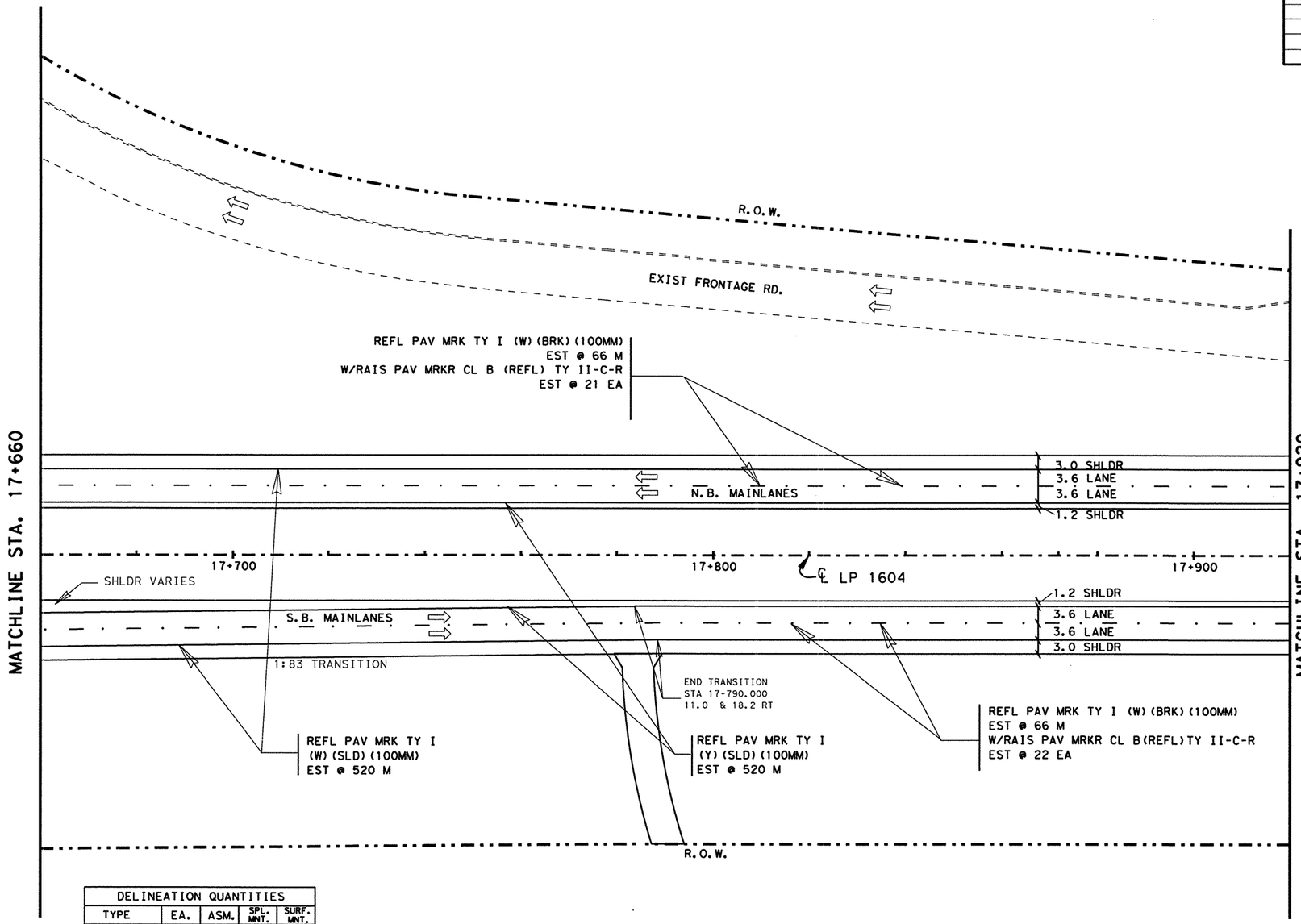


| DELINEATION QUANTITIES | | | | |
|---|---|---|---|---|
| TYPE | EA. | ASM. | SPL. MNT. | SURF. MNT. |
| D-SW(a) | | | | |
| D-DW(a) | | | | |
| D-SY(a) | | | | |
| D-DY(a) | | | | |
| OM-2SR(a) | | | | |
| | | | | |
| | | | | |
| | | | | |
| | | | | |

NOTE(S):

ALL DIMENSIONS ARE IN METERS UNLESS OTHERWISE NOTED.

QUANTITIES AND PLACEMENT OF TY II REFLECTIVE PAVEMENT MARKINGS ARE EXACTLY THE SAME AS TY I REFLECTIVE PAVEMENT MARKINGS. TY II QUANTITIES ACCOUNTED FOR ON THE PAVEMENT MARKING /DELINEATION SUMMARY.

ANY PAVEMENT MARKING IN CONFLICT WITH PROPOSED PAVEMENT MARKINGS SHALL BE REMOVED BY THE CONTRACTOR OR AS DIRECTED BY THE ENGINEER.

STATE OF TEXAS
JOEL K. DAVENPORT, JR.
79276
REGISTERED PROFESSIONAL ENGINEER

Joel K. Davenport, Jr. P.E. 79276 — 9/19/00
Joel K. Davenport, Jr. P.E. 79276 — Date

LEVELS DISPLAYED
1|2|3|4|5|6|7|8|9|10|11|12|13|14|15|16
2|12|23|24|25|26|27|28|29|30|31|32
33|34|35|36|37|38|39|40|41|42|43|44|45|46|47|48
49|50|51|52|53|54|55|56|57|58|59|60|61|263

ACC: t:\ao\design\
lp1604fm471-90\pave-sign\
FILE: pavMrkplan16.dgn

Texas Department of Transportation

# PAVEMENT MARKING AND DELINEATION LAYOUT

SHEET 16 OF 57

| FED.RD. DIV.NO. | FEDERAL AID PROJECT NO. | | SHEET NO. |
|---|---|---|---|
| 6 | NH 2000(704),etc. | | 772 |
| STATE | DIST. | COUNTY | |
| TEXAS | SAT | BEXAR | |
| CONT. | SECT. | JOB | HIGHWAY NO. |
| 2452 | 01 | 036,etc. | LP 1604 |

QUANTITIES THIS SHEET
CSJ 2452-01-037

SCALE 1:1000

| ESTIMATED QUANTITIES | | |
|---|---|---|
| ITEM | UNIT | QUANTITY 2452-01-037 |
| REFL PAV MRK TY I (W)(SLD)(100MM) | M | 573 |
| REFL PAV MRK TY I (W)(BRK)(100MM) | M | 174 |
| REFL PAV MRK TY I (Y)(SLD)(100MM) | M | 818 |
| RAIS PAV MRKR CL B (REFL) TY II C-R | EA | 60 |
| ELIM EXT PAV MRK & MRKR (100MM) | M | 204 |
| ELIM EXT PAV MRK & MRKR (RAIS PAV MRKR) | EA | 39 |
| | | |
| | | |
| | | |

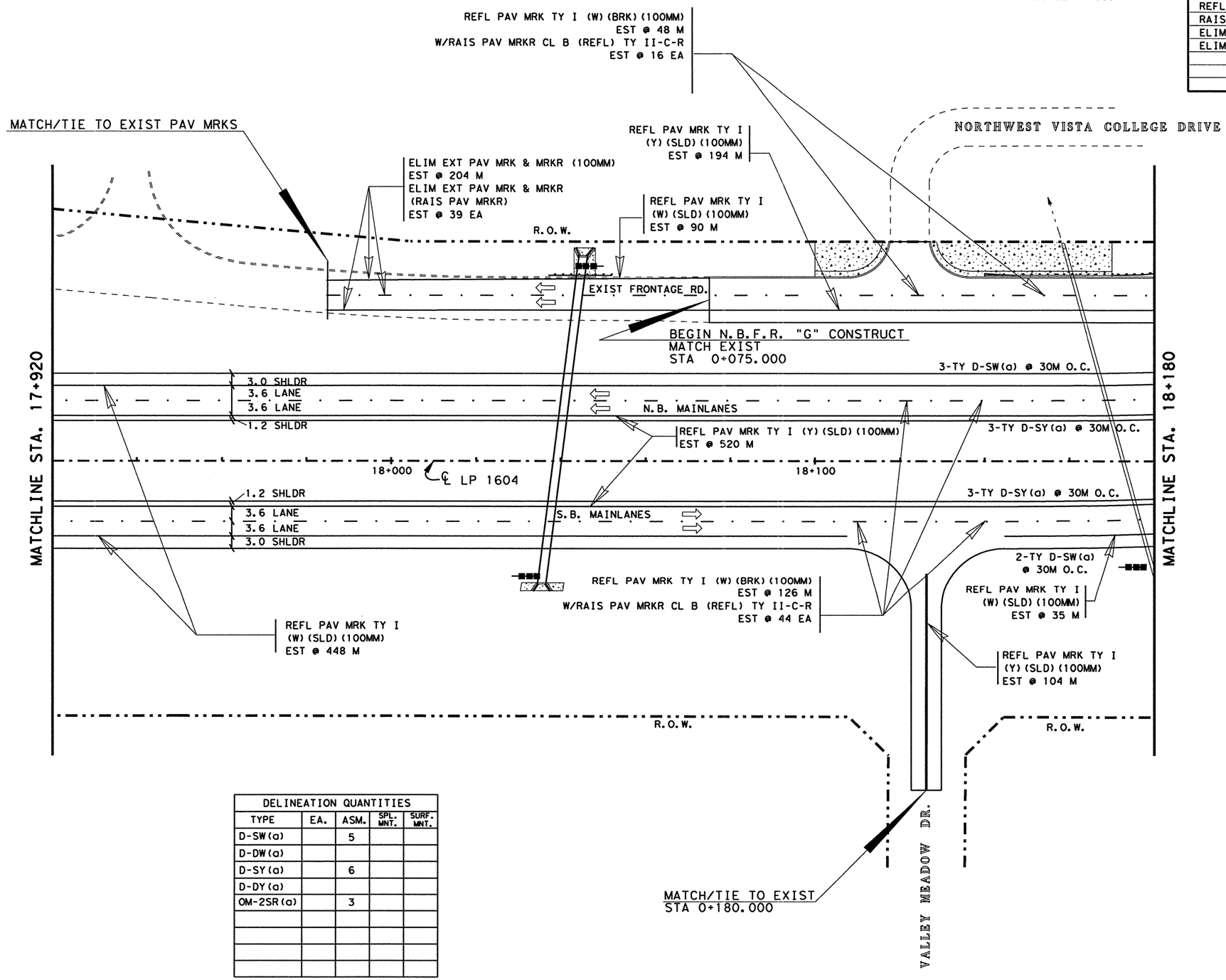


| DELINEATION QUANTITIES | | | | |
|---|---|---|---|---|
| TYPE | EA. | ASM. | SPL. MNT. | SURF. MNT. |
| D-SW(a) | | 5 | | |
| D-DW(a) | | | | |
| D-SY(a) | | 6 | | |
| D-DY(a) | | | | |
| OM-2SR(a) | | 3 | | |
| | | | | |
| | | | | |
| | | | | |
| | | | | |

NOTE(S):

ALL DIMENSIONS ARE IN METERS UNLESS OTHERWISE NOTED.

QUANTITIES AND PLACEMENT OF TY II REFLECTIVE PAVEMENT MARKINGS ARE EXACTLY THE SAME AS TY I REFLECTIVE PAVEMENT MARKINGS. TY II QUANTITIES ACCOUNTED FOR ON THE PAVEMENT MARKING /DELINEATION SUMMARY.

ANY PAVEMENT MARKING IN CONFLICT WITH PROPOSED PAVEMENT MARKINGS SHALL BE REMOVED BY THE CONTRACTOR OR AS DIRECTED BY THE ENGINEER.

STATE OF TEXAS
JOEL K. DAVENPORT, JR.
79276
REGISTERED
PROFESSIONAL ENGINEER

Joel K Davenport Jr 9/19/00
Joel K. Davenport, Jr. P.E. 79276 Date

©2000
Texas Department of Transportation

# PAVEMENT MARKING AND DELINEATION LAYOUT

SHEET 17 OF 57

| FED.RD. DIV.NO. | FEDERAL AID PROJECT NO. | | SHEET NO. |
|---|---|---|---|
| 6 | NH 2000(704),etc. | | 773 |
| STATE | DIST. | COUNTY | |
| TEXAS | SAT | BEXAR | |
| CONT. | SECT. | JOB | HIGHWAY NO. |
| 2452 | 01 | 036,etc. | LP 1604 |

LEVELS DISPLAYED
1 2 3 4 5 6 7 8 9 10 11 12 13 14 15 16
1 2 12 22 32 42 52 62 72 82 93 03 13 23
33 43 53 63 73 83 94 04 14 24 34 44 54 64 74 84
96 05 15 25 35 45 55 65 75 85 96 06 16 26 36

ACC: t:\oa\design\
lp1604fm471-90\pave-sign\
FILE: pavmrkplan17.dgn

QUANTITIES THIS SHEET
CSJ 2452-01-037

SCALE 1:1000

| ESTIMATED QUANTITIES | | |
|---|---|---|
| ITEM | UNIT | QUANTITY |
| | | 2452-01-037 |
| REFL PAV MRK TY I (W)(SLD)(100MM) | M | 758 |
| REFL PAV MRK TY I (W)(BRK)(100MM) | M | 174 |
| REFL PAV MRK TY I (Y)(SLD)(100MM) | M | 818 |
| RAIS PAV MRKR CL B (REFL) TY II C-R | EA | 76 |
| ELIM EXT PAV MRK & MRKR (100MM) | M | 204 |
| ELIM EXT PAV MRK & MRKR (RAIS PAV MRKR) | EA | 39 |
| REFL PAV MRK TY I (W)(ARROW) | EA | 2 |
| REFL PAV MRK TY I (W)(WORD) | EA | 2 |

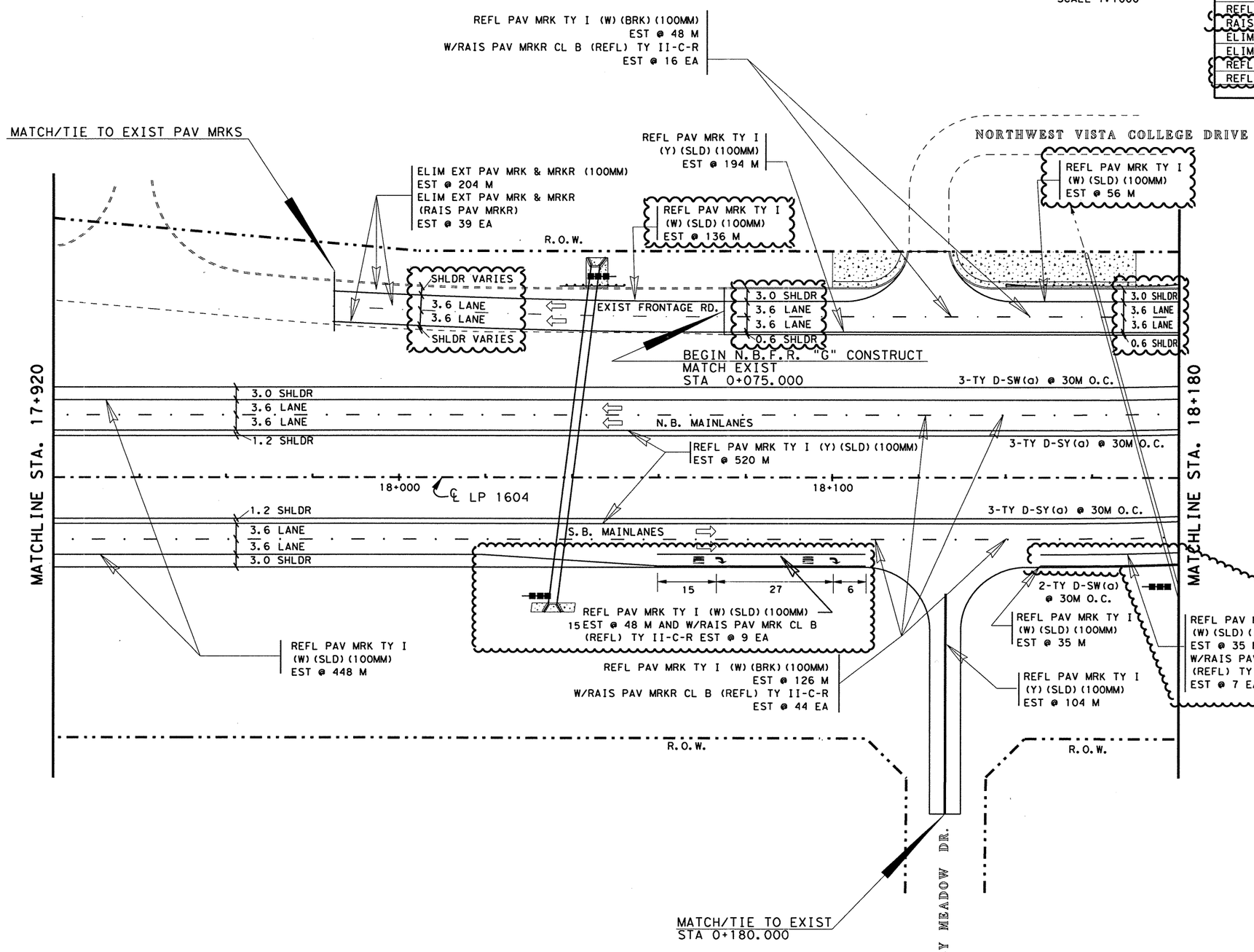


NOTE(S):

ALL DIMENSIONS ARE IN METERS UNLESS OTHERWISE NOTED.

QUANTITIES AND PLACEMENT OF TY II REFLECTIVE PAVEMENT MARKINGS ARE EXACTLY THE SAME AS TY I REFLECTIVE PAVEMENT MARKINGS. TY II QUANTITIES ACCOUNTED FOR ON THE PAVEMENT MARKING /DELINEATION SUMMARY.

ANY PAVEMENT MARKING IN CONFLICT WITH PROPOSED PAVEMENT MARKINGS SHALL BE REMOVED BY THE CONTRACTOR OR AS DIRECTED BY THE ENGINEER.

| DELINEATION QUANTITIES | | | | |
|---|---|---|---|---|
| TYPE | EA. | ASM. | SPL. MNT. | SURF. MNT. |
| D-SW(a) | | 5 | | |
| D-DW(a) | | | | |
| D-SY(a) | | 6 | | |
| D-DY(a) | | | | |
| OM-2SR(a) | | 3 | | |
| | | | | |
| | | | | |
| | | | | |
| | | | | |

CHANGE ORDER NO. 65
-REVISED FRONT. RD. LANE CONFIG.
-ADD ACCEL/DECEL LANES ON SB MAIN LANES AT VALLEY MEADOW
-REVISED QUANTITIES

CHANGE ORDER 65

REVISED SHEET

STATE OF TEXAS
JEROME D. PAVLISKA
76075
REGISTERED PROFESSIONAL ENGINEER

Jerome D. Pavliska P.E. 4-16-04
Jerome D. Pavliska, P.E. Date

LEVELS DISPLAYED
1 2 3 4 5 6 7 8 9 10 11 12 13 14 15 16
17 18 21 22 23 24 25 26 27 28 29 30 31 32
33 34 35 36 37 38 39 40 41 42 43 44 45 46 47 48
49 50 51 52 53 54 55 56 57 58 59 60 61 62 63

ACC: t:\ao\design\lp1604fm471-90\pave-sign\
FILE: pavmrkplan17*CO.dgn

©2000 Texas Department of Transportation

# PAVEMENT MARKING AND DELINEATION LAYOUT

SHEET 17 OF 57

| FED. RD. DIV. NO. | FEDERAL AID PROJECT NO. | | SHEET NO. |
|---|---|---|---|
| 6 | NH 2000(704), etc. | | 773A |
| STATE | DIST. | COUNTY | |
| TEXAS | SAT | BEXAR | |
| CONT. | SECT. | JOB | HIGHWAY NO. |
| 2452 | 01 | 036, etc. | LP 1604 |

QUANTITIES THIS SHEET
CSJ 2452-01-037

SCALE 1:1000

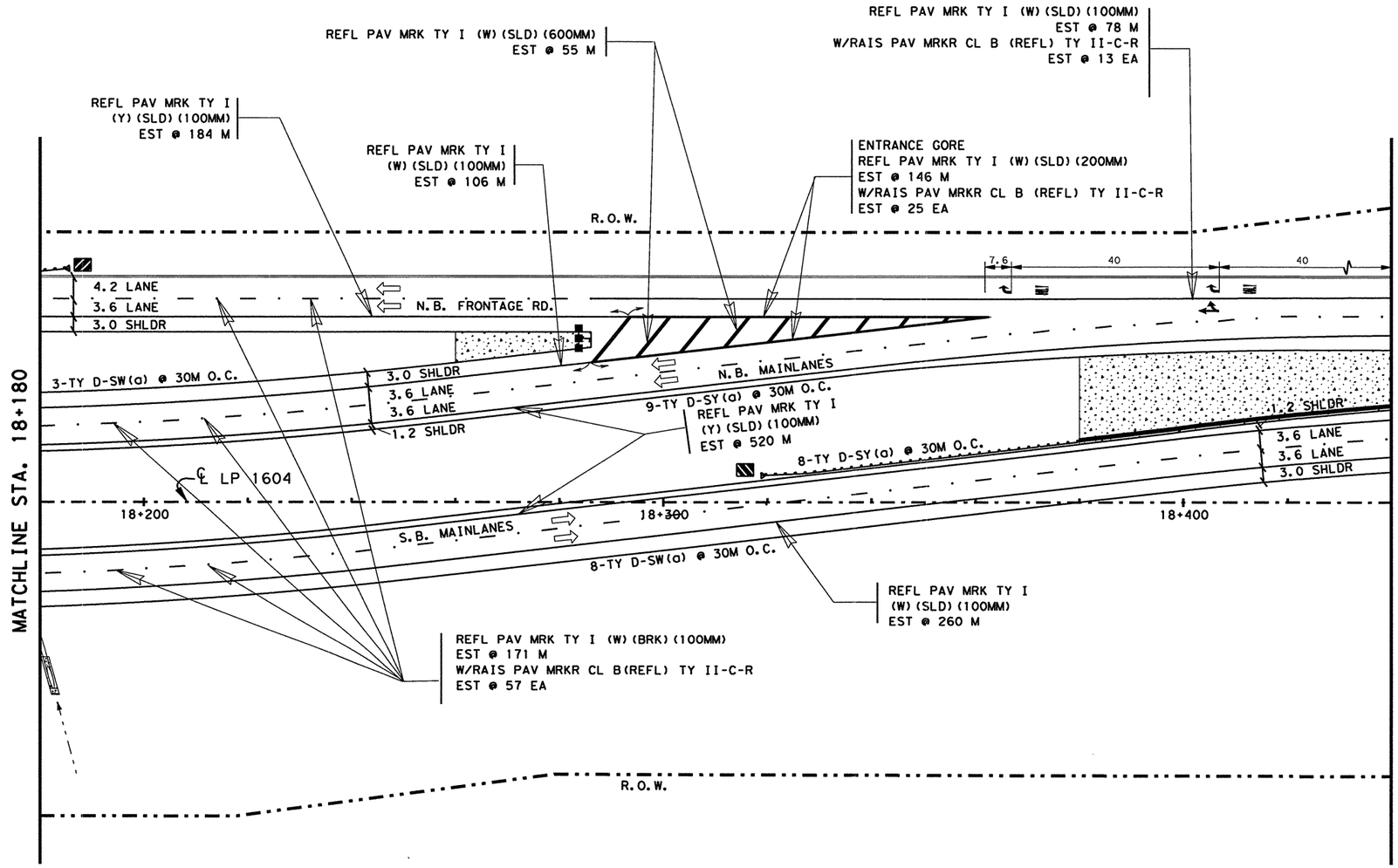


## ESTIMATED QUANTITIES

| ITEM | UNIT | QUANTITY 2452-01-037 |
|---|---|---|
| REFL PAV MRK TY I (W) (SLD) (100MM) | M | 444 |
| REFL PAV MRK TY I (W) (BRK) (100MM) | M | 171 |
| REFL PAV MRK TY I (W) (SLD) (200MM) | M | 146 |
| REFL PAV MRK TY I (W) (SLD) (600MM) | M | 55 |
| REFL PAV MRK TY I (W) (ARROW) | EA | 2 |
| REFL PAV MRK TY I (W) (DBL ARROW) | EA | 1 |
| REFL PAV MRK TY I (W) (WORD) | EA | 2 |
| REFL PAV MRK TY I (Y) (SLD) (100MM) | M | 704 |
| RAIS PAV MRKR CL B (REFL) TY II C-R | EA | 95 |
| | | |
| | | |

NOTE(S):

ALL DIMENSIONS ARE IN METERS UNLESS OTHERWISE NOTED.

QUANTITIES AND PLACEMENT OF TY II REFLECTIVE PAVEMENT MARKINGS ARE EXACTLY THE SAME AS TY I REFLECTIVE PAVEMENT MARKINGS. TY II QUANTITIES ACCOUNTED FOR ON THE PAVEMENT MARKING /DELINEATION SUMMARY.

ANY PAVEMENT MARKING IN CONFLICT WITH PROPOSED PAVEMENT MARKINGS SHALL BE REMOVED BY THE CONTRACTOR OR AS DIRECTED BY THE ENGINEER.

## DELINEATION QUANTITIES

| TYPE | EA. | ASM. | SPL. MNT. | SURF. MNT. |
|---|---|---|---|---|
| D-SW(a) | | 11 | | |
| D-DW(a) | | | | |
| D-SY(a) | | 7 | | |
| D-DY(a) | | | | |
| OM-2HP(Spl) | | 1 | | |
| OM-2SR(a) | | | | |
| OM-3L | 1 | | | |
| OM-3R | 1 | | | |
| | | | | |

LEVELS DISPLAYED
1 2 3 4 5 6 7 8 9 10 11 12 13 14 15 16
17 18 19 20 21 22 23 24 25 26 27 28 29 30 31 32
33 34 35 36 37 38 39 40 41 42 43 44 45 46 47 48
49 50 51 52 53 54 55 56 57 58 59 60 61 62 63

ACC: *:\ao\design\
lp1604fm471-90\pave-sign\
FILE: pavmrkplan18.dgn

STATE OF TEXAS
JOEL K. DAVENPORT, JR.
79276
REGISTERED
PROFESSIONAL ENGINEER

Joel K. Davenport, Jr. P.E. 79276 — 9/19/00
Joel K. Davenport, Jr. P.E. 79276 — Date

©2000 Texas Department of Transportation

# PAVEMENT MARKING AND DELINEATION LAYOUT

SHEET 18 OF 57

| FED.RD. DIV.NO. | FEDERAL AID PROJECT NO. | | SHEET NO. |
|---|---|---|---|
| 6 | NH 2000(704), etc. | | 774 |
| STATE | DIST. | COUNTY | |
| TEXAS | SAT | BEXAR | |
| CONT. | SECT. | JOB | HIGHWAY NO. |
| 2452 | 01 | 036, etc. | LP 1604 |

QUANTITIES THIS SHEET
CSJ 2452-01-037

SCALE 1:1000

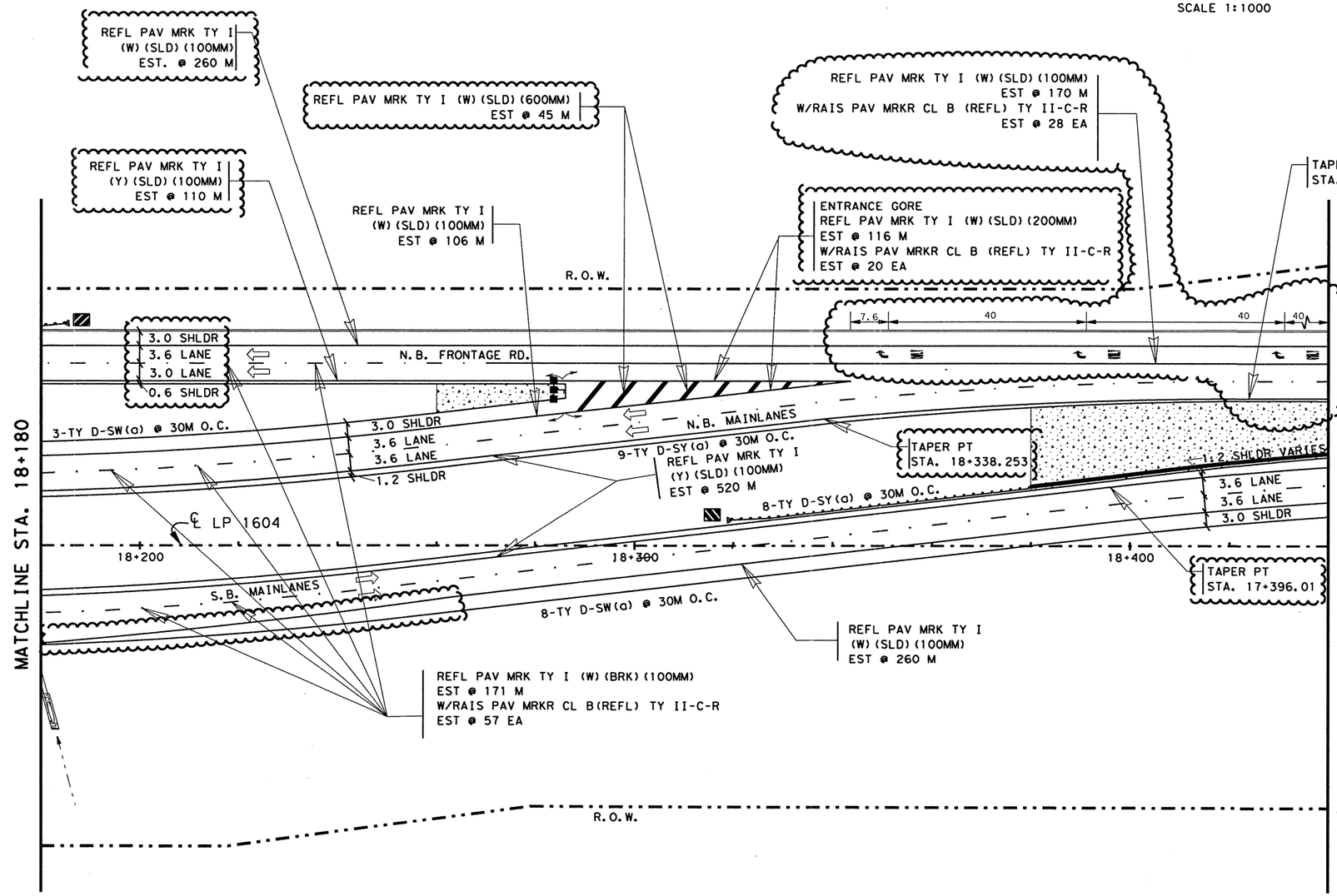


## ESTIMATED QUANTITIES

| ITEM | UNIT | QUANTITY 2452-01-037 |
|---|---|---|
| REFL PAV MRK TY I (W) (SLD) (100MM) | M | 796 |
| REFL PAV MRK TY I (W) (BRK) (100MM) | M | 171 |
| REFL PAV MRK TY I (W) (SLD) (200MM) | M | 116 |
| REFL PAV MRK TY I (W) (SLD) (600MM) | M | 45 |
| REFL PAV MRK TY I (W) (ARROW) | EA | 3 |
| ~~REFL PAV MRK TY I (W) (DBL ARROW)~~ | ~~EA~~ | ~~1~~ |
| REFL PAV MRK TY I (W) (WORD) | EA | 3 |
| REFL PAV MRK TY I (Y) (SLD) (100MM) | M | 630 |
| RAIS PAV MRKR CL B (REFL) TY II C-R | EA | 105 |

NOTE(S):

ALL DIMENSIONS ARE IN METERS UNLESS OTHERWISE NOTED.

QUANTITIES AND PLACEMENT OF TY II REFLECTIVE PAVEMENT MARKINGS ARE EXACTLY THE SAME AS TY I REFLECTIVE PAVEMENT MARKINGS. TY II QUANTITIES ACCOUNTED FOR ON THE PAVEMENT MARKING /DELINEATION SUMMARY.

ANY PAVEMENT MARKING IN CONFLICT WITH PROPOSED PAVEMENT MARKINGS SHALL BE REMOVED BY THE CONTRACTOR OR AS DIRECTED BY THE ENGINEER.

| DELINEATION QUANTITIES | | | | |
|---|---|---|---|---|
| TYPE | EA. | ASM. | SPL. MNT. | SURF. MNT. |
| D-SW(a) | | 11 | | |
| D-DW(a) | | | | |
| D-SY(a) | | 17 | | |
| D-DY(a) | | | | |
| OM-2HP(Spl) | | 1 | | |
| OM-2SR(a) | | | | |
| OM-3L | 1 | | | |
| OM-3R | 1 | | | |
| | | | | |

CHANGE ORDER NO. 65
-REVISED FRONTAGE RD. LANE CONFIGURATION
-ADDED ACCELERATION LN ON SB MAIN LANES
-REVISED QUANTITIES

CHANGE ORDER 65

REVISED SHEET

STATE OF TEXAS
JEROME D. PAVLISKA
76075
REGISTERED PROFESSIONAL ENGINEER

Jerome D. Pavliska, P.E. 4-16-04
Jerome D. Pavliska, P.E. — Date

©2000

Texas Department of Transportation

# PAVEMENT MARKING AND DELINEATION LAYOUT

SHEET 18 OF 57

| FED.RD. DIV.NO. | FEDERAL AID PROJECT NO. | SHEET NO. |
|---|---|---|
| 6 | NH 2000(704), etc. | 774A |

| STATE | DIST. | COUNTY |
|---|---|---|
| TEXAS | SAT | BEXAR |

| CONT. | SECT. | JOB | HIGHWAY NO. |
|---|---|---|---|
| 2452 | 01 | 036, etc. | LP 1604 |

LEVELS DISPLAYED
1 2 3 4 5 6 7 8 9 10 11 12 13 14 15 16
21 22 23 24 25 26 27 28 29 30 31 32
33 34 35 36 37 38 39 40 41 42 43 44 45 46 47 48
49 50 51 52 53 54 55 56 57 58 59 60 61 62 63

ACC: t:\so\design\
lp1604fm471-90\pave-sign\
FILE: pavmrkplan18.dgn

QUANTITIES THIS SHEET
CSJ 2452-01-037

SCALE 1:1000

| ESTIMATED QUANTITIES | | |
|---|---|---|
| ITEM | UNIT | QUANTITY |
| | | 2452-01-037 |
| REFL PAV MRK TY I (W)(SLD)(100MM) | M | 267 |
| REFL PAV MRK TY I (W)(BRK)(100MM) | M | 192 |
| REFL PAV MRK TY I (W)(SLD)(200MM) | M | 13 |
| REFL PAV MRK TY I (W)(SLD)(600MM) | M | 2 |
| REFL PAV MRK TY I (W)(ARROW) | EA | 1 |
| REFL PAV MRK TY I (W)(DBL ARROW) | EA | 1 |
| REFL PAV MRK TY I (W)(WORD) | EA | 1 |
| REFL PAV MRK TY I (Y)(SLD)(100MM) | M | 602 |
| RAIS PAV MRKR CL B (REFL) TY II C-R | EA | 68 |
| | | |

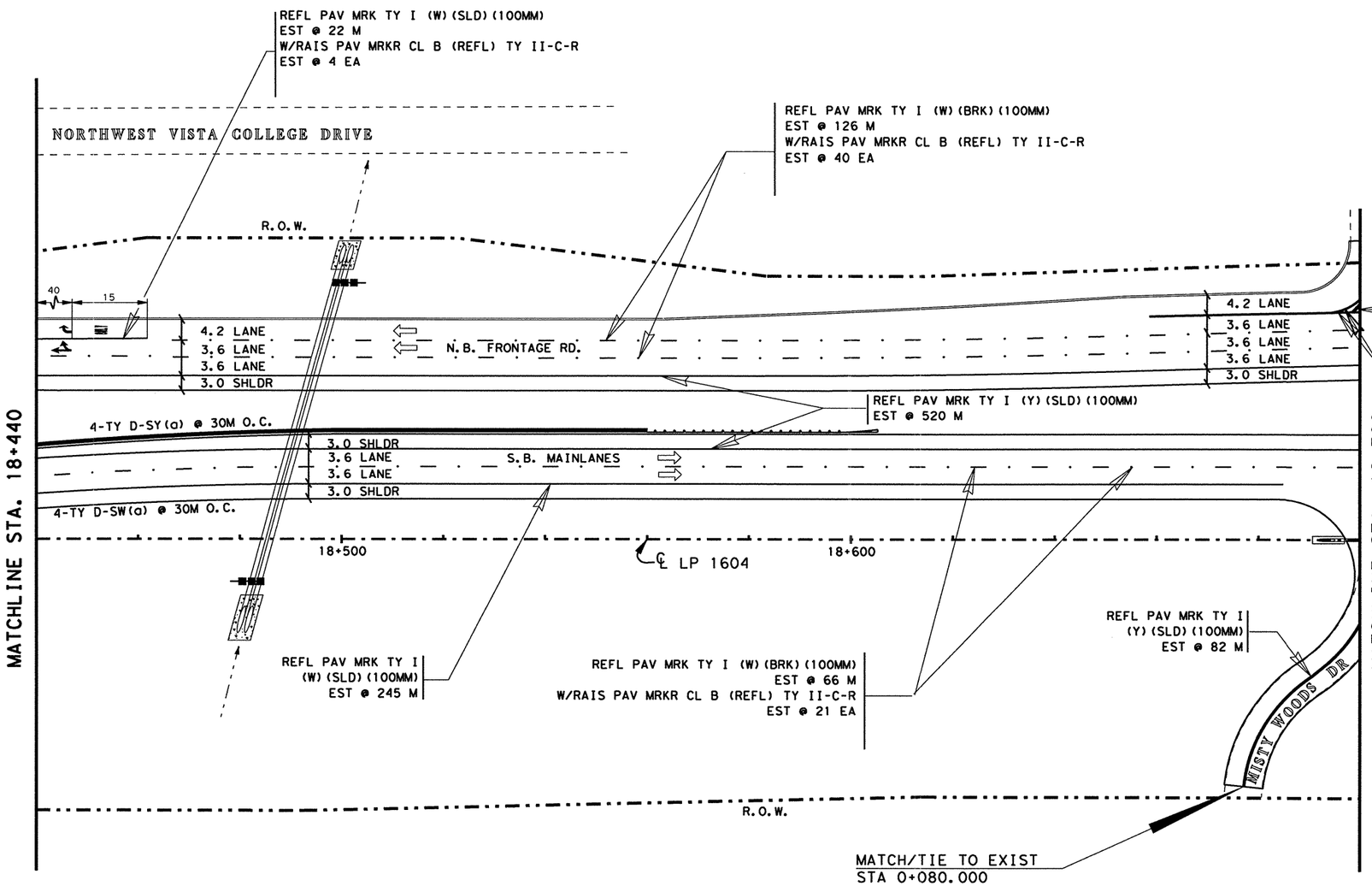


| DELINEATION QUANTITIES | | | | |
|---|---|---|---|---|
| TYPE | EA. | ASM. | SPL. MNT. | SURF. MNT. |
| D-SW(a) | | 4 | | |
| D-DW(a) | | | | |
| D-SY(a) | | 4 | | |
| D-DY(a) | | | | |
| OM-2SR(a) | | 2 | | |
| | | | | |
| | | | | |
| | | | | |
| | | | | |

NOTE(S):

ALL DIMENSIONS ARE IN METERS UNLESS OTHERWISE NOTED.

QUANTITIES AND PLACEMENT OF TY II REFLECTIVE PAVEMENT MARKINGS ARE EXACTLY THE SAME AS TY I REFLECTIVE PAVEMENT MARKINGS. TY II QUANTITIES ACCOUNTED FOR ON THE PAVEMENT MARKING /DELINEATION SUMMARY.

ANY PAVEMENT MARKING IN CONFLICT WITH PROPOSED PAVEMENT MARKINGS SHALL BE REMOVED BY THE CONTRACTOR OR AS DIRECTED BY THE ENGINEER.

FOR ADDITIONAL DATA/DIMENSIONS, SEE INTERSECTION LAYOUT SHEET(S) 321-322 .

STATE OF TEXAS
JOEL K. DAVENPORT, JR.
79276
REGISTERED PROFESSIONAL ENGINEER

Joel K Davenport Jr 9/19/00
Joel K. Davenport, Jr. P.E. 79276 Date

Texas Department of Transportation

# PAVEMENT MARKING AND DELINEATION LAYOUT

SHEET 19 OF 57

| FED.RD. DIV.NO. | FEDERAL AID PROJECT NO. | | SHEET NO. |
|---|---|---|---|
| 6 | NH 2000(704), etc. | | 775 |
| STATE | DIST. | COUNTY | |
| TEXAS | SAT | BEXAR | |
| CONT. | SECT. | JOB | HIGHWAY NO. |
| 2452 | 01 | 036, etc. | LP 1604 |

LEVELS DISPLAYED
1 2 3 4 5 6 7 8 9 10 11 12 13 14 15 16
17 18 19 20 21 22 23 24 25 26 27 28 29 30 31 32
33 34 35 36 37 38 39 40 41 42 43 44 45 46 47 48
49 50 51 52 53 54 55 65 75 85 96 06 16 26 3

ACC: t:\ao\design\lp1604fm471-90\pave-sign\
FILE: pavmrkplan19.dgn

QUANTITIES THIS SHEET
CSJ 2452-01-037

SCALE 1:1000

## ESTIMATED QUANTITIES

| ITEM | UNIT | QUANTITY 2452-01-037 |
|---|---|---|
| REFL PAV MRK TY I (W)(SLD)(100MM) | M | 618 |
| REFL PAV MRK TY I (W)(BRK)(100MM) | M | 201 |
| REFL PAV MRK TY I (W)(SLD)(200MM) | M | 23 |
| REFL PAV MRK TY I (W)(SLD)(600MM) | M | 7 |
| REFL PAV MRK TY I (W)(ARROW) | EA | 3 |
| ~~REFL PAV MRK TY I (W)(DBL ARROW)~~ | ~~EA~~ | ~~1~~ |
| REFL PAV MRK TY I (W)(WORD) | EA | 2 |
| REFL PAV MRK TY I (Y)(SLD)(100MM) | M | 630 |
| RAIS PAV MRKR CL B (REFL) TY II C-R | EA | 94 |

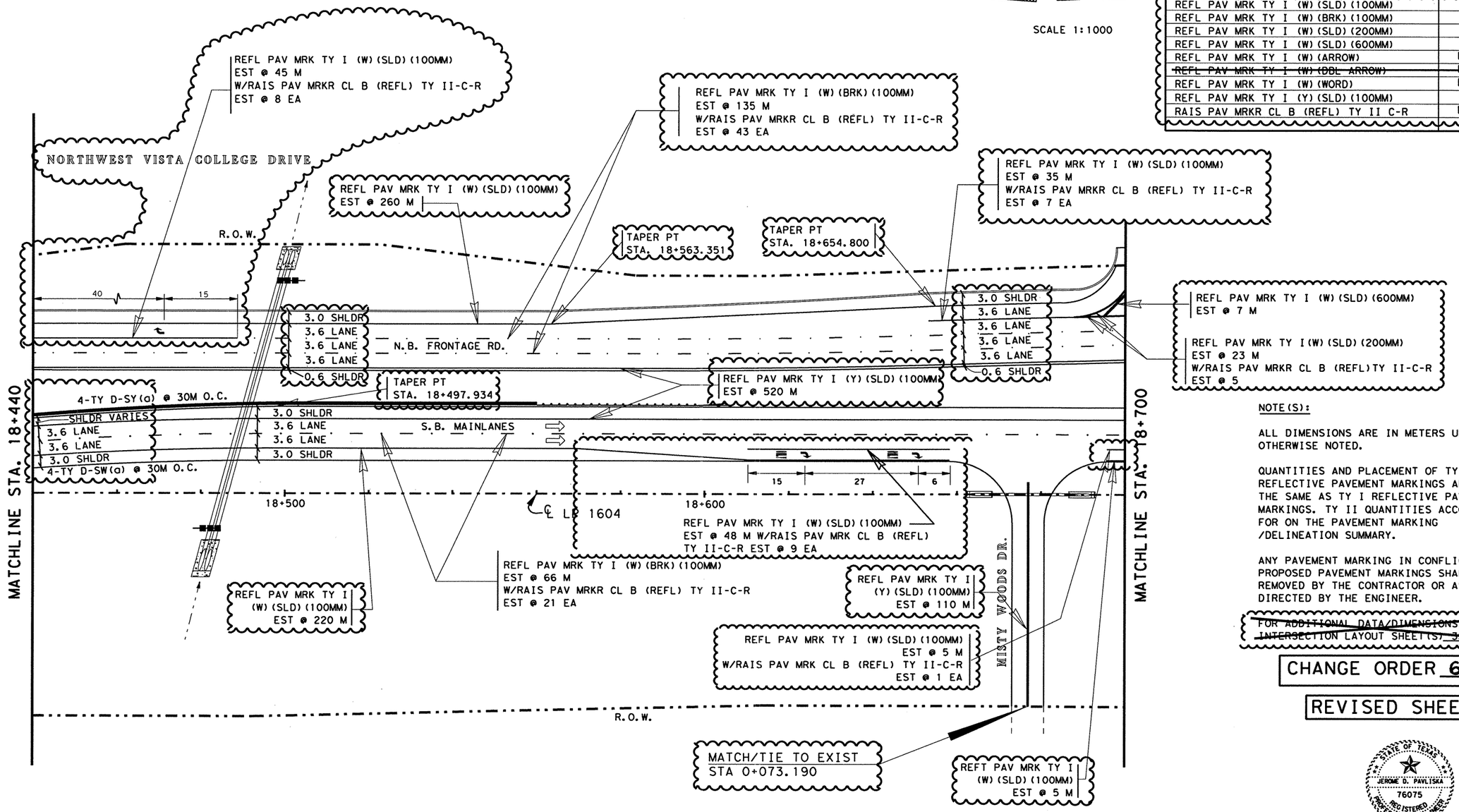


NOTE(S):

ALL DIMENSIONS ARE IN METERS UNLESS OTHERWISE NOTED.

QUANTITIES AND PLACEMENT OF TY II REFLECTIVE PAVEMENT MARKINGS ARE EXACTLY THE SAME AS TY I REFLECTIVE PAVEMENT MARKINGS. TY II QUANTITIES ACCOUNTED FOR ON THE PAVEMENT MARKING /DELINEATION SUMMARY.

ANY PAVEMENT MARKING IN CONFLICT WITH PROPOSED PAVEMENT MARKINGS SHALL BE REMOVED BY THE CONTRACTOR OR AS DIRECTED BY THE ENGINEER.

~~FOR ADDITIONAL DATA/DIMENSIONS, SEE INTERSECTION LAYOUT SHEET(S) 321-322~~

CHANGE ORDER 65

REVISED SHEET

| DELINEATION QUANTITIES | | | | |
|---|---|---|---|---|
| TYPE | EA. | ASM. | SPL. MNT. | SURF. MNT. |
| D-SW(a) | | 4 | | |
| D-DW(a) | | | | |
| D-SY(a) | | 4 | | |
| D-DY(a) | | | | |
| OM-2SR(a) | | 2 | | |
| | | | | |
| | | | | |
| | | | | |
| | | | | |

CHANGE ORDER NO. 65
-REVISED FRONT. RD. LANE CONFIG.
-RE-ALIGNED MISTY WOODS AND ADDED ACCEL/DECEL LANES ON SB MAIN LANES
-REVISED STRIPING/PAV. MRKS.
-REVISED QUANTITIES

STATE OF TEXAS
JEROME D. PAVLISKA
76075
REGISTERED
PROFESSIONAL ENGINEER

Jerome D. Pavliska, P.E. 416-04
Jerome D. Pavliska, P.E. Date

©2000 Texas Department of Transportation

# PAVEMENT MARKING AND DELINEATION LAYOUT

SHEET 19 OF 57

| FED.RD. DIV.NO. | FEDERAL AID PROJECT NO. | SHEET NO. |
|---|---|---|
| 6 | NH 2000(704),etc. | 775A |
| STATE | DIST. | COUNTY |
| TEXAS | SAT | BEXAR |
| CONT. | SECT. | JOB | HIGHWAY NO. |
| 2452 | 01 | 036 etc | LP 1604 |

LEVELS DISPLAYED
1 2 3 4 5 6 7 8 9 10 11 12 13 14 15 16
17 18 19 20 21 22 23 24 25 26 27 28 29 30 31 32
33 34 35 36 37 38 39 40 41 42 43 44 45 46 47 48
49 50 51 52 53 54 55 56 57 58 59 60 61 62 63

ACC: t:\ao\design\lp1604fm471-90\pave-sign\
FILE: pavmrkplan19*CO.dgn

QUANTITIES THIS SHEET
CSJ 2452-01-037

SCALE 1:1000

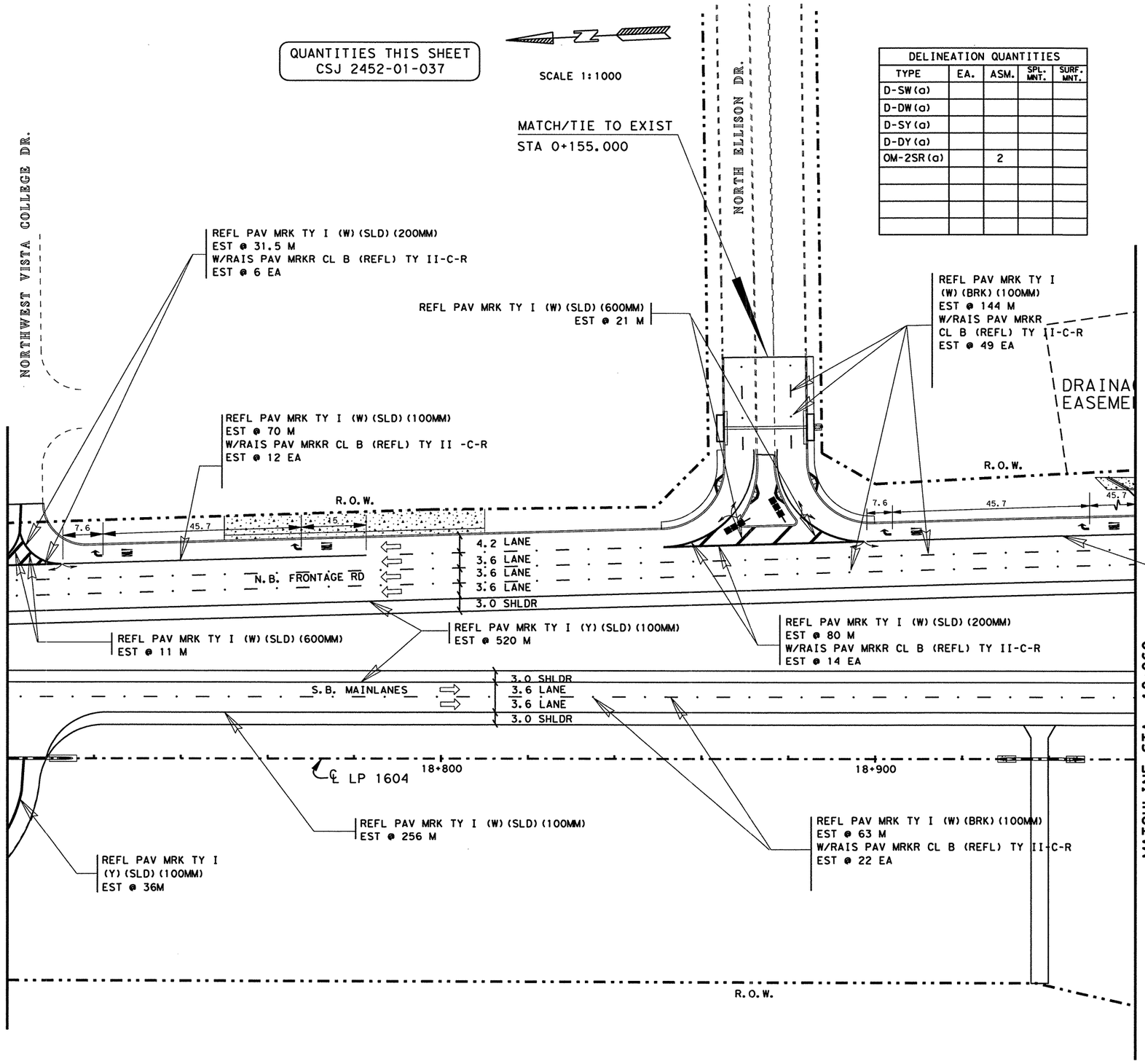


| DELINEATION QUANTITIES | | | | |
|---|---|---|---|---|
| TYPE | EA. | ASM. | SPL. MNT. | SURF. MNT. |
| D-SW(a) | | | | |
| D-DW(a) | | | | |
| D-SY(a) | | | | |
| D-DY(a) | | | | |
| OM-2SR(a) | | 2 | | |
| | | | | |
| | | | | |
| | | | | |
| | | | | |

| ESTIMATED QUANTITIES | | |
|---|---|---|
| ITEM | UNIT | QUANTITY |
| | | 2452-01-037 |
| REFL PAV MRK TY I (W) (SLD) (100MM) | M | 418 |
| REFL PAV MRK TY I (W) (BRK) (100MM) | M | 207 |
| REFL PAV MRK TY I (W) (SLD) (200MM) | M | 112 |
| REFL PAV MRK TY I (W) (SLD) (600MM) | M | 32 |
| REFL PAV MRK TY I (W) (ARROW) | EA | 4 |
| REFL PAV MRK TY I (W) (WORD) | EA | 4 |
| REFL PAV MRK TY I (Y) (SLD) (100MM) | M | 556 |
| RAIS PAV MRKR CL B (REFL) TY II C-R | EA | 114 |
| | | |
| | | |

NOTE(S):

ALL DIMENSIONS ARE IN METERS UNLESS OTHERWISE NOTED

QUANTITIES AND PLACEMENT OF TY II REFLECTIVE PAVEMENT MARKINGS ARE EXACTLY THE SAME AS TY I REFLECTIVE PAVEMENT MARKINGS. TY II QUANTITIES ACCOUNTED FOR ON THE PAVEMENT MARKING /DELINEATION SUMMARY

ANY PAVEMENT MARKING IN CONFLICT WITH PROPOSED PAVEMENT MARKINGS SHALL BE REMOVED BY THE CONTRACTOR OR AS DIRECTED BY THE ENGINEER.

FOR ADDITIONAL DATA/DIMENSIONS SEE INTERSECTION LAYOUT SHEET(S) 321-322.

STATE OF TEXAS
JOEL K. DAVENPORT, JR.
79276
REGISTERED
PROFESSIONAL ENGINEER

Joel K Davenport Jr 9/19/00
Joel K. Davenport, Jr. P.E. 79276 Date

Texas Department of Transportation

# PAVEMENT MARKING AND DELINEATION LAYOUT

SHEET 20 OF 57

| FED. RD. DIV. NO. | FEDERAL AID PROJECT NO. | | SHEET NO. |
|---|---|---|---|
| 6 | NH 2000(704), etc. | | 776 |
| STATE | DIST. | COUNTY | |
| TEXAS | SAT | BEXAR | |
| CONT. | SECT. | JOB | HIGHWAY NO. |
| 2452 | 01 | 036, etc. | LP 1604 |

LEVELS DISPLAYED
1 2 3 4 5 6 7 8 9 10 11 12 13 14 15 16
33 34 35 36 37 38 39 40 41 42 43 44 45 46 47 48
49 50 51 52 53 54 55 65 75 85 96 01 62 63

ACC: t:\oo\design\lp1604fm471-90\pave-sign\
FILE: pavmrkplan20.dgn

QUANTITIES THIS SHEET
CSJ 2452-01-037

SCALE 1:1000

NORTHWEST VISTA COLLEGE DR.

NORTH ELLISON DR.

MATCH/TIE TO EXIST
STA 0+155.000

| DELINEATION QUANTITIES | | | | |
|---|---|---|---|---|
| TYPE | EA. | ASM. | SPL. MNT. | SURF. MNT. |
| D-SW(a) | | | | |
| D-DW(a) | | | | |
| D-SY(a) | | | | |
| D-DY(a) | | | | |
| OM-2SR(a) | | 2 | | |
| | | | | |
| | | | | |
| | | | | |
| | | | | |

| ESTIMATED QUANTITIES | | |
|---|---|---|
| ITEM | UNIT | QUANTITY 2452-01-037 |
| REFL PAV MRK TY I (W)(SLD)(100MM) | M | 662 |
| REFL PAV MRK TY I (W)(BRK)(100MM) | M | 222 |
| REFL PAV MRK TY I (W)(SLD)(200MM) | M | 130 |
| REFL PAV MRK TY I (W)(SLD)(600MM) | M | 44 |
| REFL PAV MRK TY I (W)(ARROW) | EA | 4 |
| REFL PAV MRK TY I (W)(WORD) | EA | 4 |
| REFL PAV MRK TY I (Y)(SLD)(100MM) | M | 520 |
| RAIS PAV MRKR CL B (REFL) TY II C-R | EA | 128 |
| | | |
| | | |

NOTE(S):

ALL DIMENSIONS ARE IN METERS UNLESS OTHERWISE NOTED

QUANTITIES AND PLACEMENT OF TY II REFLECTIVE PAVEMENT MARKINGS ARE EXACTLY THE SAME AS TY I REFLECTIVE PAVEMENT MARKINGS. TY II QUANTITIES ACCOUNTED FOR ON THE PAVEMENT MARKING /DELINEATION SUMMARY

ANY PAVEMENT MARKING IN CONFLICT WITH PROPOSED PAVEMENT MARKINGS SHALL BE REMOVED BY THE CONTRACTOR OR AS DIRECTED BY THE ENGINEER.

~~FOR ADDITIONAL DATA/DIMENSIONS SEE INTERSECTION LAYOUT SHEET(S) 321-322.~~

REFL PAV MRK TY I (W)(SLD)(200MM)
EST @ 40 M
W/RAIS PAV MRKR CL B (REFL) TY II-C-R
EST @ 8 EA

REFL PAV MRK TY I (W)(SLD)(600MM)
EST @ 29 M

REFL PAV MRK TY I (W)(SLD)(100MM)
EST @ 160 M

REFL PAV MRK TY I (W)(SLD)(100MM)
EST @ 70 M
W/RAIS PAV MRKR CL B (REFL) TY II -C-R
EST @ 12 EA

REFL PAV MRK TY I
(W)(BRK)(100MM)
EST @ 159 M
W/RAIS PAV MRKR
CL B (REFL) TY II-C-R
EST @ 53 EA

DRAINA
EASEME

REFL PAV MRK TY I (W)(SLD)(100MM)
EST. @ 80 M

R.O.W.

7.6 45.7 15 45.7 7.6

3.0 SHLDR
3.6 LANE
3.6 LANE
3.6 LANE
0.6 SHLDR

N.B. FRONTAGE RD

3.0 SHLDR
3.6 LANE
3.6 LANE
3.6 LANE
3.6 LANE
0.6 SHLDR

REFL PAV MRK TY I (W)(SLD)(100MM)
EST @ 62 M
W/RAIS PAV MRKR CL B (REFL) TY II-C-R
EST @ 11 EA

BEGIN TAPER POINT
STA 18+960

REFL PAV MRK TY I (W)(SLD)(600MM)
EST @ 15 M

REFL PAV MRK TY I (Y)(SLD)(100MM)
EST @ 520 M

REFL PAV MRK TY I (W)(SLD)(200MM)
EST @ 90 M
W/RAIS PAV MRKR CL B (REFL) TY II-C-R
EST @ 16 EA

MATCHLINE STA. 18+700

S.B. MAINLANES

3.0 SHLDR
3.6 LANE
3.6 LANE
3.0 SHLDR

℄ LP 1604

18+800

18+900

MATCHLINE STA. 18+960

REFL PAV MRK TY I
(W)(SLD)(100MM)
EST @ 30 M
W/RAIS PAV MRK CL B
(REFL) TY II-C-R
EST @ 6 EA

REFL PAV MRK TY I (W)(SLD)(100MM)
EST @ 260 M

REFL PAV MRK TY I (W)(BRK)(100MM)
EST @ 63 M
W/RAIS PAV MRKR CL B (REFL) TY II-C-R
EST @ 22 EA

R.O.W.

CHANGE ORDER NO. 65
-REVISED FRONT. RD LANE CONFIG.
-RE-ALIGNED MISTY WOODS AND ADD ACCEL/DECEL LANES ON SB MAIN LANES
-REVISED STRIPING/PAV. MRKS
-REVISED QUANTITIES

CHANGE ORDER 65

REVISED SHEET

STATE OF TEXAS
JEROME D. PAVLISKA
76075
REGISTERED
PROFESSIONAL ENGINEER

Jerome D. Pavliska, P.E. 4-16-04
Jerome D. Pavliska, P.E. Date

©2000

Texas Department of Transportation

# PAVEMENT MARKING AND DELINEATION LAYOUT

SHEET 20 OF 57

| FED. RD. DIV. NO. | FEDERAL AID PROJECT NO. | | SHEET NO. |
|---|---|---|---|
| 6 | NH 2000(704),etc. | | 776A |
| STATE | DIST. | COUNTY | |
| TEXAS | SAT | BEXAR | |
| CONT. | SECT. | JOB | HIGHWAY NO. |
| 2452 | 01 | 036,etc. | LP 1604 |

LEVELS DISPLAYED
1 2 3 4 5 6 7 8 9 10 11 12 13 14 15 16
17 18 19 20 21 22 23 24 25 26 27 28 29 30 31 32
33 34 35 36 37 38 39 40 41 42 43 44 45 46 47 48
49 50 51 52 53 54 55 56 57 58 59 60 61 62 63

ACC: t:\ao\design\lp1604fm471-90\pave-sign\
FILE: pavmrkplan20*CO*.dgn

NOTE(S):

ALL DIMENSIONS ARE IN METERS UNLESS OTHERWISE NOTED.

QUANTITIES AND PLACEMENT OF TY II REFLECTIVE PAVEMENT MARKINGS ARE EXACTLY THE SAME AS TY I REFLECTIVE PAVEMENT MARKINGS. TY I AND TY II QUANTITIES ACCOUNTED FOR ON THE PAVEMENT MARKING /DELINEATION SUMMARY UNDER CHANGE ORDER NO. 65 AND 140.

ANY PAVEMENT MARKING IN CONFLICT WITH PROPOSED PAVEMENT MARKINGS SHALL BE REMOVED BY THE CONTRACTOR OR AS DIRECTED BY THE ENGINEER.

SCALE 1:1000

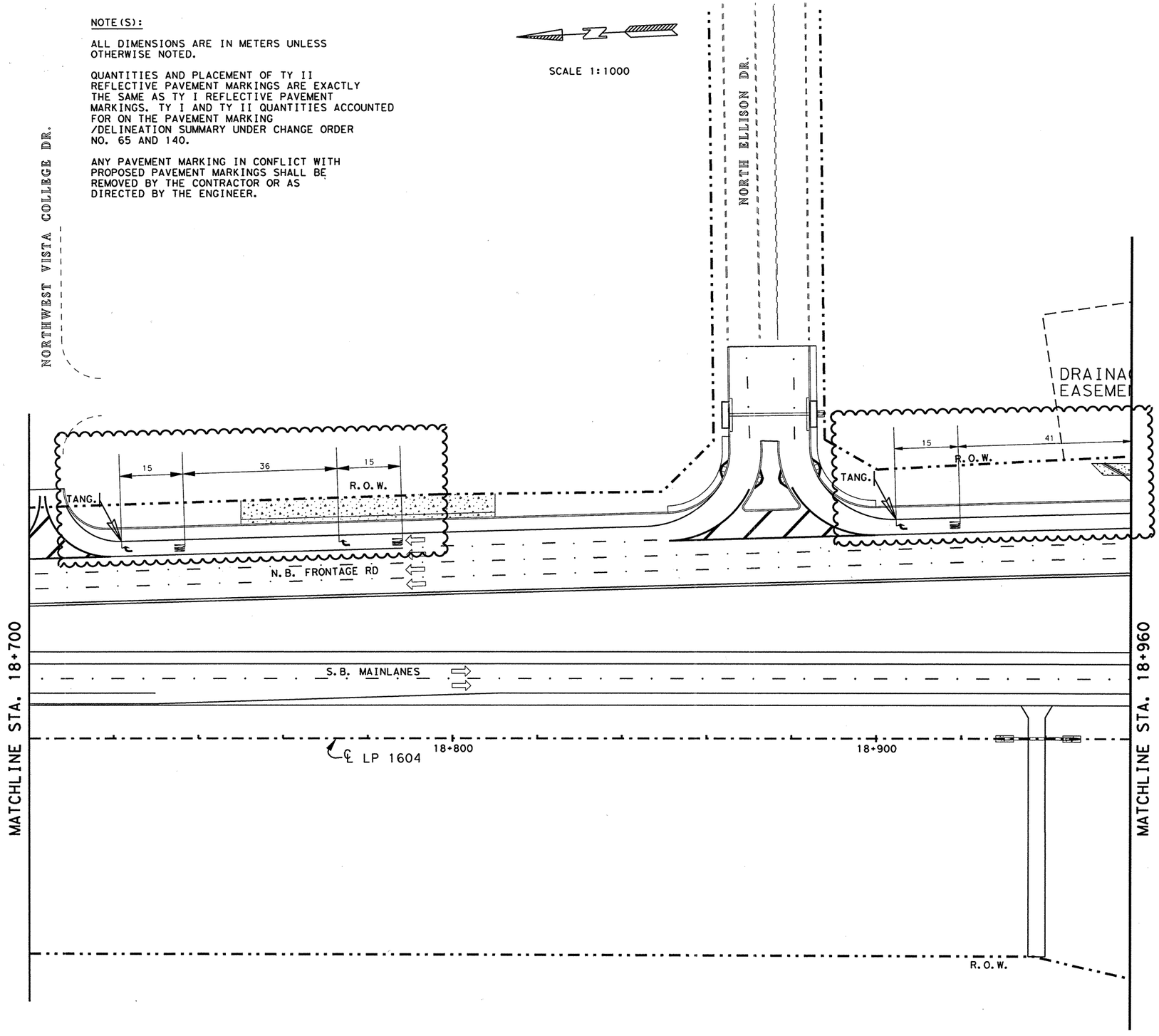


10 ONLY

**SUPPLEMENT SHEET**

-REVISE LP 1604 NBFR SPACING FOR "ARROW" & "WORD" STRIPING.

-ELIMINATE "ARROW" & "WORD" ON LP 1604 NBFR THRU LANES.

STATE OF TEXAS
MIGUEL G. ROGERIO
96620
LICENSED
PROFESSIONAL ENGINEER

Miguel G. Rogerio, P.E. 5/7/2007
Miguel G. Rogerio, P.E. Date

©2007

Texas Department of Transportation

# PAVEMENT MARKING LAYOUT

**SHEET 20a OF 57**

| FED.RD. DIV.NO. | FEDERAL AID PROJECT NO. | | SHEET NO. |
|---|---|---|---|
| 6 | NH 2000(704),etc. | | 776AA |
| STATE | DIST. | COUNTY | |
| TEXAS | SAT | BEXAR | |
| CONT. | SECT. | JOB | HIGHWAY NO. |
| 2452 | 01 | 036,etc. | LP 1604 |

Revised sheets

LEVELS DISPLAYED
1 2 3 4 5 6 7 8 | 11 12 13 14 15 16
21 22 23 24 25 26 27 28 29 30 31 32
33 34 35 36 37 38 39 40 41 42 43 44 | 46 | 48
49 50 51 52 53 54 55 56 57 58 59 60 61 | 63

ACC: t:\ao\design\lp1604fm471-90\pave-sign\
FILE: pavmrkplan20*CO*.dgn

QUANTITIES THIS SHEET
CSJ 2452-01-037

SCALE 1:1000

| ESTIMATED QUANTITIES | | |
|---|---|---|
| ITEM | UNIT | QUANTITY |
| | | 2452-01-037 |
| REFL PAV MRK TY I (W)(SLD)(100MM) | M | 348 |
| REFL PAV MRK TY I (W)(BRK)(100MM) | M | 249 |
| REFL PAV MRK TY I (W)(ARROW) | EA | 3 |
| REFL PAV MRK TY I (W)(WORD) | EA | 2 |
| REFL PAV MRK TY I (W)(DBL ARROW) | EA | 3 |
| REFL PAV MRK TY I (Y)(SLD)(100MM) | M | 520 |
| RAIS PAV MRKR CL B (REFL) TY II C-R | EA | 99 |
| | | |
| | | |

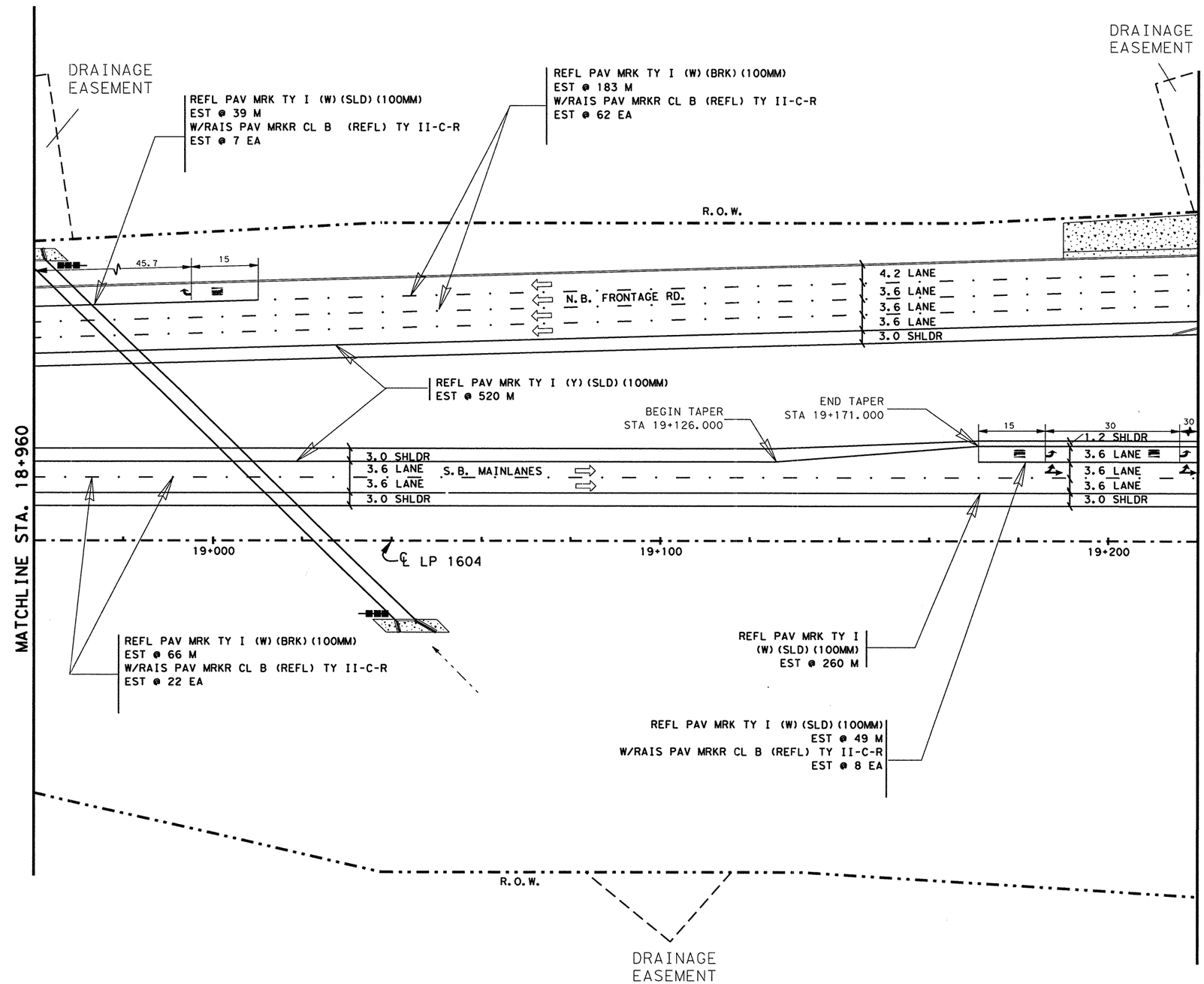


NOTE(S):

ALL DIMENSIONS ARE IN METERS UNLESS OTHERWISE NOTED.

QUANTITIES AND PLACEMENT OF TY II REFLECTIVE PAVEMENT MARKINGS ARE EXACTLY THE SAME AS TY I REFLECTIVE PAVEMENT MARKINGS. TY II QUANTITIES ACCOUNTED FOR ON THE PAVEMENT MARKING /DELINEATION SUMMARY.

ANY PAVEMENT MARKING IN CONFLICT WITH PROPOSED PAVEMENT MARKINGS SHALL BE REMOVED BY THE CONTRACTOR OR AS DIRECTED BY THE ENGINEER.

| DELINEATION QUANTITIES | | | | |
|---|---|---|---|---|
| TYPE | EA. | ASM. | SPL. MNT. | SURF. MNT. |
| D-SW(a) | | | | |
| D-DW(a) | | | | |
| D-SY(a) | | | | |
| D-DY(a) | | | | |
| OM-2SR(a) | | 2 | | |
| | | | | |
| | | | | |
| | | | | |
| | | | | |

STATE OF TEXAS
JOEL K. DAVENPORT, JR.
79276
REGISTERED PROFESSIONAL ENGINEER

Joel K Davenport Jr 9/9/00
Joel K. Davenport, Jr. P.E. 79276 Date

©2000

Texas Department of Transportation

# PAVEMENT MARKING AND DELINEATION LAYOUT

SHEET 21 OF 57

| FED.RD. DIV.NO. | FEDERAL AID PROJECT NO. | | SHEET NO. |
|---|---|---|---|
| 6 | NH 2000(704),etc. | | 777 |
| STATE | DIST. | COUNTY | |
| TEXAS | SAT | BEXAR | |
| CONT. | SECT. | JOB | HIGHWAY NO. |
| 2452 | 01 | 036,etc. | LP 1604 |

LEVELS DISPLAYED
1 2 3 4 5 6 7 8 9 10 11 12 13 14 15 16
- - 2 12 22 32 42 52 62 72 82 92 03 03 13 23
33 43 53 63 73 83 94 04 14 24 34 44 54 64 74 84
49 05 15 25 35 45 55 65 75 85 96 06 16 26 3

ACC: t:\ao\design\
lp1604fm471-90\pave-sign\
FILE: pavmrkplan21.dgn

Plotted on: $DATE$

QUANTITIES THIS SHEET
CSJ 2452-01-037

SCALE 1:1000

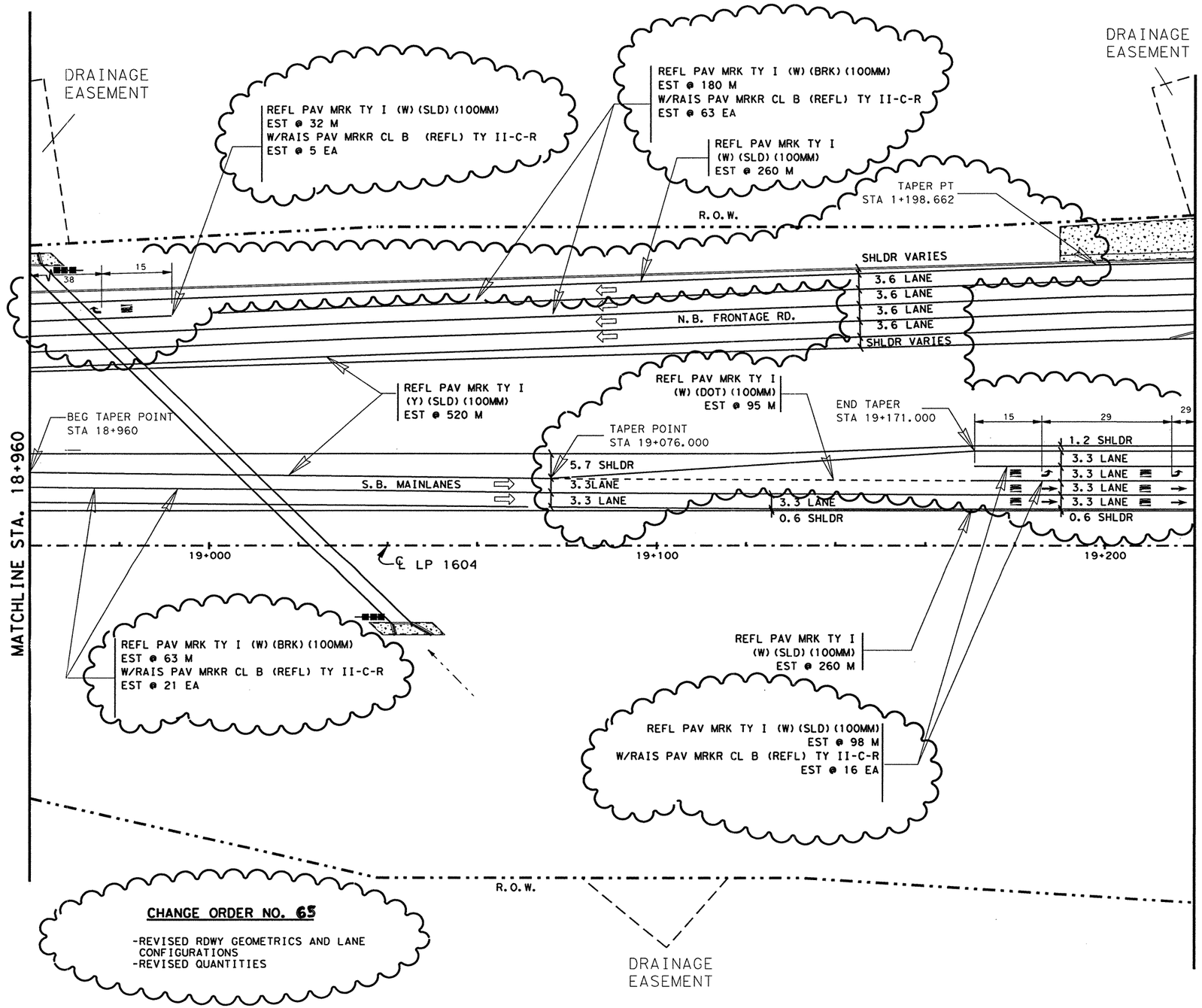


## ESTIMATED QUANTITIES

| ITEM | UNIT | QUANTITY 2452-01-037 |
|---|---|---|
| REFL PAV MRK TY I (W)(SLD)(100MM) | M | 650 |
| REFL PAV MRK TY I (W)(BRK)(100MM) | M | 243 |
| REFL PAV MRK TY I (W)(DOT)(100MM) | M | 95 |
| REFL PAV MRK TY I (W)(ARROW) | EA | 7 |
| REFL PAV MRK TY I (W)(WORD) | EA | 7 |
| REFL PAV MRK TY I (W)(DBL ARROW) | EA | 0 |
| REFL PAV MRK TY I (Y)(SLD)(100MM) | M | 520 |
| RAIS PAV MRKR CL B (REFL) TY II C-R | EA | 105 |

NOTE(S):

ALL DIMENSIONS ARE IN METERS UNLESS OTHERWISE NOTED.

QUANTITIES AND PLACEMENT OF TY II REFLECTIVE PAVEMENT MARKINGS ARE EXACTLY THE SAME AS TY I REFLECTIVE PAVEMENT MARKINGS. TY II QUANTITIES ACCOUNTED FOR ON THE PAVEMENT MARKING /DELINEATION SUMMARY.

ANY PAVEMENT MARKING IN CONFLICT WITH PROPOSED PAVEMENT MARKINGS SHALL BE REMOVED BY THE CONTRACTOR OR AS DIRECTED BY THE ENGINEER.

| DELINEATION QUANTITIES | | | | |
|---|---|---|---|---|
| TYPE | EA. | ASM. | SPL. MNT. | SURF. MNT. |
| D-SW(a) | | | | |
| D-DW(a) | | | | |
| D-SY(a) | | | | |
| D-DY(a) | | | | |
| OM-2SR(a) | | 2 | | |
| | | | | |
| | | | | |
| | | | | |
| | | | | |

CHANGE ORDER NO. 65 | REVISED SHEET

STATE OF TEXAS
JEROME D. PAVLISKA
76075
REGISTERED PROFESSIONAL ENGINEER

Jerome D. Pavliska, P.E. 4-06-04
Jerome D. Pavliska, P.E. Date

© 2000 Texas Department of Transportation

# PAVEMENT MARKING AND DELINEATION LAYOUT

SHEET 21 OF 57

| FED.RD. DIV.NO. | FEDERAL AID PROJECT NO. | | SHEET NO. |
|---|---|---|---|
| 6 | NH 2000(704), etc. | | 777A |
| STATE | DIST. | COUNTY | |
| TEXAS | SAT | BEXAR | |
| CONT. | SECT. | JOB | HIGHWAY NO. |
| 2452 | 01 | 036, etc. | LP 1604 |

02-04-04

Design Filename: $FILE$

LEVELS DISPLAYED
1 2 3 4 5 6 7 8 9 10 11 12 13 14 15 16
33 34 35 36 37 38 39 40 41 42 43 44 45 46 47 48
49 50 51 52 53 54 55 56 57 58 59 60 61 62 63

t:\co\design\p1604fm471-90\
P-D*Phase2*CO\
FILE: pavmrkplan21.dgn

Plotted on: 5/3/2007
Design Filename: T:\AO\Design\lp1604fm471-90\PD*Phase2*change*order*mylars\TxDOT*revisions\pavmrkplan21aa.dgn

NOTE(S):

ALL DIMENSIONS ARE IN METERS UNLESS OTHERWISE NOTED.

QUANTITIES AND PLACEMENT OF TY II REFLECTIVE PAVEMENT MARKINGS ARE EXACTLY THE SAME AS TY I REFLECTIVE PAVEMENT MARKINGS. TY I AND TY II QUANTITIES ACCOUNTED FOR ON THE PAVEMENT MARKING /DELINEATION SUMMARY UNDER CHANGE ORDER NO. 65 AND 140.

ANY PAVEMENT MARKING IN CONFLICT WITH PROPOSED PAVEMENT MARKINGS SHALL BE REMOVED BY THE CONTRACTOR OR AS DIRECTED BY THE ENGINEER.

SCALE 1:1000

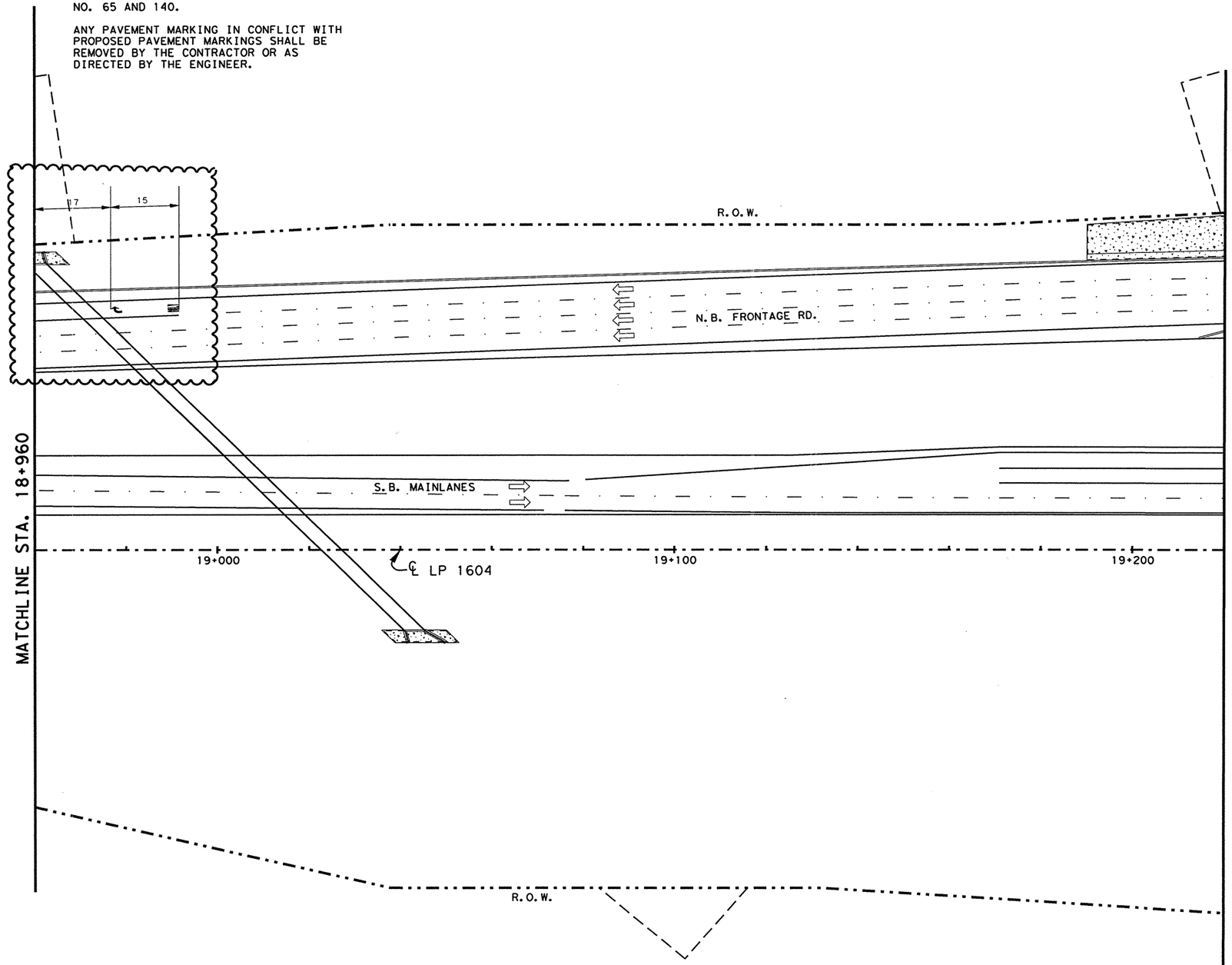


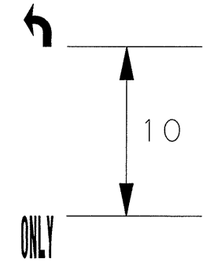


**SUPPLEMENT SHEET**

-REVISE LP 1604 NBFR SPACING FOR "ARROW" & "WORD" STRIPING.

-ELIMINATE "ARROW" & "WORD" ON LP 1604 NBFR THRU LANES.

STATE OF TEXAS
MIGUEL G. ROGERIO
96620
LICENSED
PROFESSIONAL ENGINEER

Miguel G. Rogerio, P.E. 5/7/2007
Miguel G. Rogerio, P.E. Date

©2007

Texas Department of Transportation

# PAVEMENT MARKING LAYOUT

**SHEET 21a OF 57**

| FED. RD. DIV. NO. | FEDERAL AID PROJECT NO. | | SHEET NO. |
|---|---|---|---|
| 6 | NH 2000(704), etc. | | 777AA |
| STATE | DIST. | COUNTY | |
| TEXAS | SAT | BEXAR | |
| CONT. | SECT. | JOB | HIGHWAY NO. |
| 2452 | 01 | 036, etc. | LP 1604 |

Revised Sheets

02-04-02

LEVELS DISPLAYED
1 2 3 4 5 6 7 8 | 1 3 11 41 51 61
2 12 22 32 42 52 62 72 82 93 03 13 2
3 33 43 53 63 73 83 93 04 14 24 34 44 54 64 74 84
49 50 51 52 53 54 55 56 57 58 59 60 61 | 63
T:\AO\design\lp1604fm471-90\
P-D*Phase2*CO\
FILE: pavmrkplan21.dgn

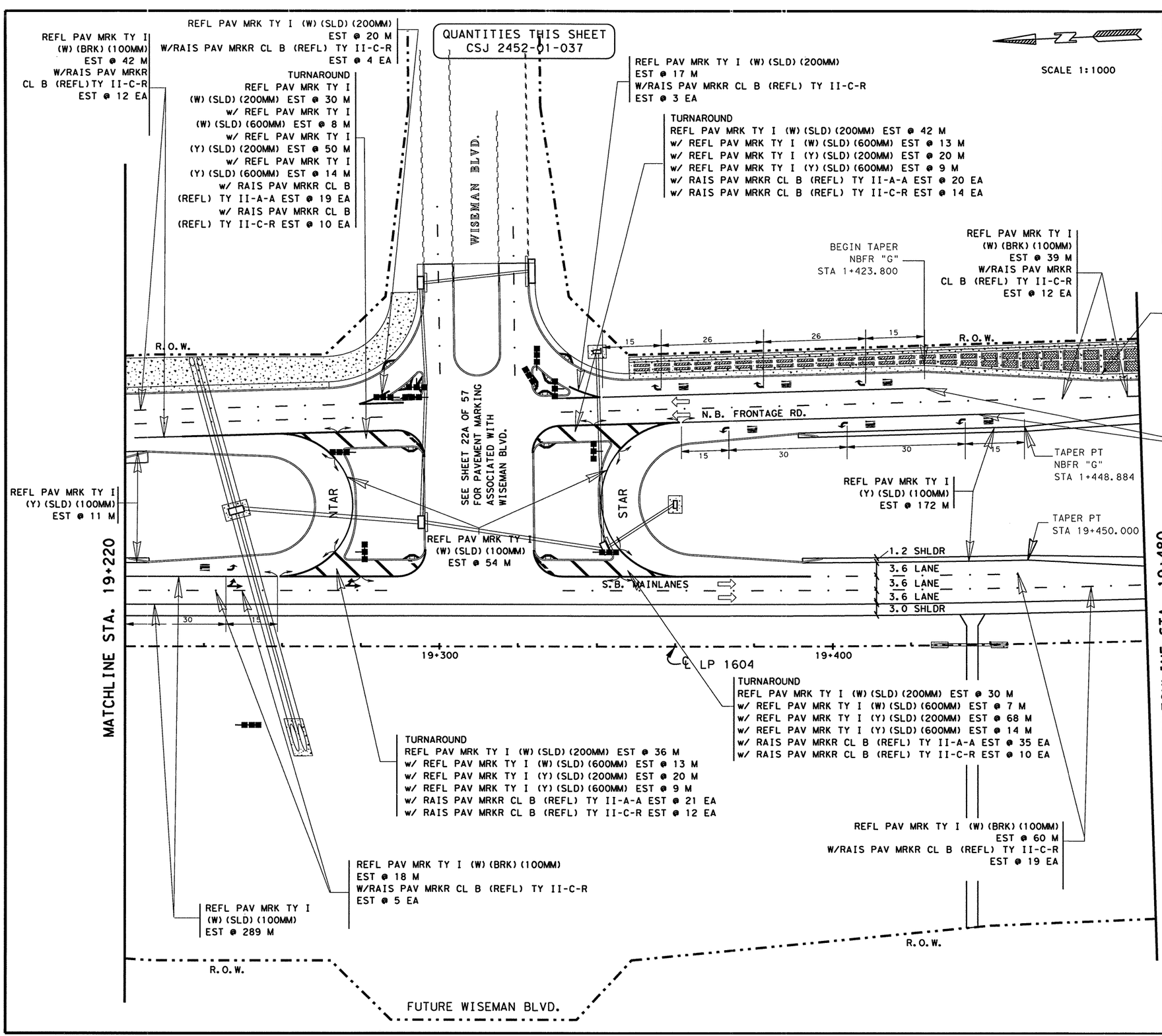


## ESTIMATED QUANTITIES

| ITEM | UNIT | QUANTITY 2452-01-037 |
|---|---|---|
| REFL PAV MRK TY I (W) (SLD) (100MM) | M | 537 |
| REFL PAV MRK TY I (W) (BRK) (100MM) | M | 159 |
| REFL PAV MRK TY I (W) (SLD) (200MM) | M | 175 |
| REFL PAV MRK TY I (W) (SLD) (600MM) | M | 41 |
| REFL PAV MRK TY I (W) (ARROW) | EA | 7 |
| REFL PAV MRK TY I (W) (DBL ARROW) | EA | 2 |
| REFL PAV MRK TY I (W) (WORD) | EA | 7 |
| REFL PAV MRK TY I (Y) (SLD) (100MM) | M | 183 |
| REFL PAV MRK TY I (Y) (SLD) (200MM) | M | 158 |
| REFL PAV MRK TY I (Y) (SLD) (600MM) | M | 46 |
| RAIS PAV MRKR CL B (REFL) TY II A-A | EA | 95 |
| RAIS PAV MRKR CL B (REFL) TY II C-R | EA | 133 |

## DELINEATION QUANTITIES

| TYPE | EA. | ASM. | SPL. MNT. | SURF. MNT. |
|---|---|---|---|---|
| D-SW(a) | | | | |
| D-DW(a) | | | | |
| D-SY(a) | | | | |
| D-DY(a) | | | | |
| OM-2HP(Spl) | | 4 | | |
| OM-2SR(a) | | 7 | | |
| | | | | |
| | | | | |
| TOTAL | | | | |

REFL PAV MRK TY I (W) (SLD) (100MM) EST @ 194 M W/RAIS PAV MRKR CL B (REFL) TY II-C-R EST @ 32 EA

NOTE(S):

ALL DIMENSIONS ARE IN METERS UNLESS OTHERWISE NOTED

QUANTITIES AND PLACEMENT OF TY II REFLECTIVE PAVEMENT MARKINGS ARE EXACTLY THE SAME AS TY I REFLECTIVE PAVEMENT MARKINGS. TY II QUANTITIES ACCOUNTED FOR ON THE PAVEMENT MARKING /DELINEATION SUMMARY

ANY PAVEMENT MARKING IN CONFLICT WITH PROPOSED PAVEMENT MARKINGS SHALL BE REMOVED BY THE CONTRACTOR OR AS DIRECTED BY THE ENGINEER.

STATE OF TEXAS
JOEL K. DAVENPORT, JR.
79276
REGISTERED PROFESSIONAL ENGINEER

Joel K. Davenport, Jr. 9/9/00
Joel K. Davenport, Jr. P.E. 79276 Date

LEVELS DISPLAYED
1 2 3 4 5 6 7 8 9 10 11 12 13 14 15 16
17 18 19 20 21 22 23 24 25 26 27 28 29 30 31 32
33 34 35 36 37 38 39 40 41 42 43 44 45 46 47 48
49 50 51 52 53 54 55 56 57 58 59 60 61 62

ACC: t:\ao\design\lp1604fm471-90\pave-sign\
FILE: pavmrkplan22.dgn

©2000

Texas Department of Transportation

# PAVEMENT MARKING AND DELINEATION LAYOUT

**SHEET 22 OF 57**

| FED. RD. DIV. NO. | FEDERAL AID PROJECT NO. | | SHEET NO. |
|---|---|---|---|
| 6 | NH 2000(704), etc. | | 778 |
| STATE | DIST. | COUNTY | |
| TEXAS | SAT | BEXAR | |
| CONT. | SECT. | JOB | HIGHWAY NO. |
| 2452 | 01 | 036, etc. | LP 1604 |

Plotted on: 01/27/2004

Design Filename: p:\52\2011\design\civil\plansheets\traffic\pave-mark\pavmrkplan22.dgn

LEVELS DISPLAYED
1 2 3 4 5 6 7 8 9 10 11 12 13 41 51 6
2 12 22 32 42 52 62 72 82 92 03 13 23
33 43 53 63 73 83 93 04 14 24 34 44 54 64 74 84
95 05 15 25 35 45 55 65 75 85 95 06 16 26
ACC: t:\ao\design\
lp1604fm471-90\pave-sign\
FILE: pavmrkplan22.dgn

QUANTITIES THIS SHEET
CSJ 2452-01-037

SCALE 1:1000

REFL PAV MRK TY I (W)(BRK)(100MM) EST @ 45 M W/RAIS PAV MRKR CL B (REFL) TY II-C-R EST @ 15 EA

REFL PAV MRK TY I (W)(SLD)(200MM) EST @ 20 M
REFL PAV MRK TY I (W)(SLD)(600MM) EST @ 3M
W/RAIS PAV MRKR CL B (REFL) TY II-C-R EST @ 11 EA

TURNAROUND
REFL PAV MRK TY I (W)(SLD)(200MM) EST @ 32 M
w/ REFL PAV MRK TY I (W)(SLD)(600MM) EST @ 12 M
w/ REFL PAV MRK TY I (Y)(SLD)(200MM) EST @ 23 M
w/ REFL PAV MRK TY I (Y)(SLD)(600MM) EST @ 14 M
w/ RAIS PAV MRKR CL B (REFL) TY II-A-A EST @ 20 EA
w/ RAIS PAV MRKR CL B (REFL) TY II-C-R EST @ 11 EA

REFL PAV MRK TY I (W)(SLD)(100MM) EST @ 52 M

CROSSWALK
REFL PAV MRK TY I (W)(SLD)(600MM) EST @ 60 M

STOPBAR
REFL PAV MRK TY I (W)(SLD)(600MM) EST @ 11 M

REFL PAV MRK TY I (W)(SLD)(200MM) EST @ 62 M
REFL PAV MRK TY I (W)(SLD)(600 MM) EST @ 4 M
W/RAIS PAV MRKR CL B (REFL) TY II-C-R EST @ 21 EA

TURNAROUND
REFL PAV MRK TY I (W)(SLD)(200MM) EST @ 22 M
w/ REFL PAV MRK TY I (W)(SLD)(600MM) EST @ 5 M
w/ REFL PAV MRK TY I (Y)(SLD)(200MM) EST @ 12 M
w/ RAIS PAV MRKR CL B (REFL) TY II-A-A EST @ 10 EA
w/ RAIS PAV MRKR CL B (REFL) TY II-C-R EST @ 8 EA

REFL PAV MRK TY I (W)(SLD)(100MM) EST @ 132 M

BEGIN TAPER
NBFR "G"
STA 1+423.800

REFL PAV MRK TY I (W)(BRK)(100MM) EST @ 39 M W/RAIS PAV MRKR CL B (REFL) TY II-C-R EST @ 12 EA

END TAPER
NBFR "G"
STA 1+468.800

REFL PAV MRK TY I (W)(DOT)(100MM) EST @ 15M

REFL PAV MRK TY I (W)(SLD)(100MM) EST @ 289 M
W/RAIS PAV MRKR CL B (REFL) TY II-C-R EST @ 52 EA

TAPER PT
NBFR "G"
STA 1+448.909

TAPER PT
STA 19+448.661

REFL PAV MRK TY I (Y)(SLD)(100MM) EST @ 11 M

REFL PAV MRK TY I (W)(SLD)(100MM) EST @ 34 M

REFL PAV MRK TY I (W)(SLD)(100MM) EST @ 280 M

REFL PAV MRK TY I (Y)(SLD)(100MM) EST @ 232 M

CROSSWALK
REFL PAV MRK TY I (W)(SLD)(600MM) EST @ 48 M

STOPBAR
REFL PAV MRK TY I (W)(SLD)(600MM) EST @ 10 M

TURNAROUND
REFL PAV MRK TY I (W)(SLD)(200MM) EST @ 39 M
w/ REFL PAV MRK TY I (W)(SLD)(600MM) EST @ 13 M
w/ REFL PAV MRK TY I (Y)(SLD)(200MM) EST @ 19 M
w/ REFL PAV MRK TY I (Y)(SLD)(600MM) EST @ 9 M
w/ RAIS PAV MRKR CL B (REFL) TY II-A-A EST @ 24 EA
w/ RAIS PAV MRKR CL B (REFL) TY II-C-R EST @ 14 EA

TURNAROUND
REFL PAV MRK TY I (W)(SLD)(200MM) EST @ 44 M
w/ REFL PAV MRK TY I (W)(SLD)(600MM) EST @ 5 M
w/ REFL PAV MRK TY I (Y)(SLD)(200MM) EST @ 32 M
w/ REFL PAV MRK TY I (Y)(SLD)(600MM) EST @ 28 M
w/ RAIS PAV MRKR CL B (REFL) TY II-A-A EST @ 26 EA
w/ RAIS PAV MRKR CL B (REFL) TY II-C-R EST @ 16 EA

REFL PAV MRK TY I (W)(BRK)(100MM) EST @ 57 M W/RAIS PAV MRKR CL B (REFL) TY II-C-R EST @ 19 EA

REFL PAV MRK TY I (W)(SLD)(100MM) EST @ 110 M

REFL PAV MRK TY I (W)(BRK)(100MM) EST @ 18 M W/RAIS PAV MRKR CL B (REFL) TY II-C-R EST @ 6 EA

R.O.W.
0.6 SHLDR
3.6 LANE
3.6 LANE
3.6 LANE
3.6 LANE
3.6 LANE
3.6 LANE
1.2 SHLDR
N.B. FRONTAGE RD.
30
30
11
15
29
15
3.3 LANE
3.3 LANE
3.3 LANE
3.3 LANE
3.3 LANE
3.3 LANE
4.5 SHLDR
S.B. MAINLANES
0.6 SHLDR
WISEMAN BLVD.
200
SEE SHEET 22A OF 57 FOR PAVEMENT MARKING ASSOCIATED WITH WISEMAN BLVD.
MATCHLINE STA. 19+220
MATCHLINE STA. 19+480
19+300
19+400
0+00
℄ LP 1604
FUTURE WISEMAN BLVD.

## ESTIMATED QUANTITIES

| ITEM | UNIT | QUANTITY 2452-01-037 |
|---|---|---|
| REFL PAV MRK TY I (W)(SLD)(100MM) | M | 897 |
| REFL PAV MRK TY I (W)(BRK)(100MM) | M | 159 |
| REFL PAV MRK TY I (W)(DOT)(100MM) | M | 15 |
| REFL PAV MRK TY I (W)(SLD)(200MM) | M | 219 |
| REFL PAV MRK TY I (W)(SLD)(600MM) | M | 171 |
| REFL PAV MRK TY I (W)(ARROW) | EA | 19 |
| REFL PAV MRK TY I (W)(DBL ARROW) | EA | 0 |
| REFL PAV MRK TY I (W)(WORD) | EA | 19 |
| REFL PAV MRK TY I (Y)(SLD)(100MM) | M | 243 |
| REFL PAV MRK TY I (Y)(SLD)(200MM) | M | 86 |
| REFL PAV MRK TY I (Y)(SLD)(600MM) | M | 51 |
| RAIS PAV MRKR CL B (REFL) TY II A-A | EA | 80 |
| RAIS PAV MRKR CL B (REFL) TY II C-R | EA | 185 |

## DELINEATION QUANTITIES

| TYPE | EA. | ASM. | SPL. MNT. | SURF. MNT. |
|---|---|---|---|---|
| D-SW(a) | | | | |
| D-DW(a) | | | | |
| D-SY(a) | | | | |
| D-DY(a) | | | | |
| OM-2HP(Spl) | | 4 | | |
| OM-2SR(a) | | 7 | | |
| | | | | |
| | | | | |
| TOTAL | | | | |

NOTE(S):

ALL DIMENSIONS ARE IN METERS UNLESS OTHERWISE NOTED

QUANTITIES AND PLACEMENT OF TY II REFLECTIVE PAVEMENT MARKINGS ARE EXACTLY THE SAME AS TY I REFLECTIVE PAVEMENT MARKINGS. TY II QUANTITIES ACCOUNTED FOR ON THE PAVEMENT MARKING /DELINEATION SUMMARY

ANY PAVEMENT MARKING IN CONFLICT WITH PROPOSED PAVEMENT MARKINGS SHALL BE REMOVED BY THE CONTRACTOR OR AS DIRECTED BY THE ENGINEER.

**CHANGE ORDER NO. 65** | **REVISED SHEET**

**CHANGE ORDER NO. 65**

-REVISED RDWY GEOMETRICS AND LANE CONFIGURATIONS
-REVISED QUANTITIES

555 EAST RAMSEY SAN ANTONIO TEXAS 78216
PHONE (210)375-9000
FAX (210)375-9010
PAPE-DAWSON ENGINEERS
CIVIL & ENVIRONMENTAL
STATE OF TEXAS J. KENT O'BRIEN 64398 LICENSED PROFESSIONAL ENGINEER
J. KENT O'BRIEN P.E. 1/27/2004
DATE

©2000

Texas Department of Transportation

# PAVEMENT MARKING AND DELINEATION LAYOUT

SHEET 22 OF 57

| FED.RD. DIV.NO. | FEDERAL AID PROJECT NO. | SHEET NO. |
|---|---|---|
| 6 | NH 2000(704), etc. | 778A |

| STATE | DIST. | COUNTY |
|---|---|---|
| TEXAS | SAT | BEXAR |

| CONT. | SECT. | JOB | HIGHWAY NO. |
|---|---|---|---|
| 2452 | 01 | 036, etc. | LP 1604 |

QUANTITIES THIS SHEET
CSJ 2452-01-037

SCALE 1:1000

| QUANTITY SUMMARY CSJ: 2452-01-036, etc. | | | |
|---|---|---|---|
| | ITEM | UNIT | QUANTITY |
| A | OBJ MRK ASM TY 2 FLEX (OM-2SR)(1.8 M) | EA | 10 |
| B | OBJ MRK ASM TY 2 SURF MNT (OM-2HP)(SPL) | EA | 6 |
| C | REFL PAV MRK TY I (W)(SLD)(100 MM) | M | 1,255 |
| D | REFL PAV MRK TY I (W)(BRK)(100 MM) | M | 159 |
| E | REFL PAV MRK TY I (W)(DOT)(100 MM) | M | 15 |
| F | REFL PAV MRK TY I (W)(SLD)(200 MM) | M | 387 |
| G | REFL PAV MRK TY I (W)(BRK)(200 MM) | M | 0 |
| H | REFL PAV MRK TY I (W)(SLD)(600 MM) | M | 229 |
| I | REFL PAV MRK TY I (W)(ARROW) | EA | 23 |
| J | REFL PAV MRK TY I (W)(DBL ARROW) | EA | 0 |
| K | REFL PAV MRK TY I (W)(WORD) | EA | 23 |
| L | REFL PAV MRK TY I (Y)(SLD)(100 MM) | M | 243 |
| M | REFL PAV MRK TY I (Y)(SLD)(200 MM) | M | 83 |
| N | REFL PAV MRK TY I (Y)(SLD)(600 MM) | M | 44 |
| O | REFL PAV MRK TY I (Y)(MED NOSE) | EA | 0 |
| P | RAIS PAV MRKR CL B (REFL) TY II-A-A (HV) | EA | 50 |
| Q | RAIS PAV MRKR CL B (REFL) TY II-C-R (HV) | EA | 217 |

PENDING C.O.

WISEMAN BLVD.

65 D EST @ 45 M W/ Q EST @ 15 EA

65 F EST @ 41 M H EST @ 3 M Q EST @ 11 EA

65 C EST @ 52 M

65 STOPBAR H EST @ 11 M

65 F EST @ 65 M H EST @ 5 M W/ Q EST @ 21 EA

65 C EST @ 132 M

BEGIN TAPER NBFR "G" STA 1+423.800 7.2 RT

65 D EST @ 39 M Q EST @ 12 EA

END TAPER NBFR "G" STA 1+468.800 3.9 RT

65 E EST @ 15M

65 C EST @ 289 M W/Q EST @ 52 EA

R.O.W.

0.6 SHLDR
3.6 LANE
3.6 LANE
3.6 LANE

0.6 SHLDR
3.6 LANE
3.6 LANE
3.6 LANE
3.6 LANE
1.2 SHLDR

N.B. FRONTAGE RD.

30 30 11

15

TAPER PT NBFR"G" STA 1+448.909 11.1 RT

L EST @ 11 M

L EST @ 232 M

TAPER PT STA 19+448.661 18.2 LT 65

SEE SHEET 22A OF 57 FOR PAVEMENT MARKING ASSOCIATED WITH WISEMAN BLVD.

H EST @ 78 M

+300

MATCHLINE STA. 19+220

29 15

3.3 LANE
3.3 LANE
3.3 LANE
4.2 LANE
1.2 SHLDR

C EST @ 34 M

3.3 LANE
3.3 LANE

S.B. MAINLANES

PC 19+374.004

4.5 SHLDR
3.3 LANE
3.3 LANE
3.3 LANE
4.2 LANE
1.2 SHLDR

65

9+300

19+400

MATCHLINE STA. 19+480

LP 1604

WISEMAN BLVD (CONSTR. BY OTHERS)

32.5 32.5

C EST @ 110 M

65 D EST @ 18 M W / Q EST @ 6 EA

C EST @ 97 M

C EST @ 52 M W/ Q EST @ 19

TURNAROUND
F EST @ 79 M
w/ H EST @ 25 M
w/ M EST @ 44 M
w/ N EST @ 19 M
w/ P EST @ 24 EA
w/ Q EST @ 14 EA

65 TURNAROUND
C EST @ 25 M
F EST @ 105 M
w/ H EST @ 19 M
w/ M EST @ 39 M
w/ N @ 25 M
w/ P EST @ 26 EA
w/ Q EST @ 16 EA

F EST @ 50 M
H EST @ 3 M
Q EST @ 14 EA

F EST @ 47 M
H EST @ 9 M
W/Q EST @ 18 EA

C EST @ 175 M

CROSSWALK
H EST @ 48 M

TAPER PT. BY OTHERS STA 19+432.12 (±) 4.3 LT

65 D EST @ 57 M W/ Q EST @ 19 EA

END TAPER PT BY OTHERS STA 19+480 (±) 18.4 LT

65 STOPBAR H EST @ 10 M

WISEMAN BLVD.
(CONSTRUCTED BY OTHERS)

R.O.W.

CHANGE ORDER NO. 140

-ALLOWED FOR WISEMAN BLVD INTERSECTION MODIFICATIONS, CONSTRUCTED BY OTHERS.

-REVISED QUANTITIES

# REFERS TO CHANGES MADE AS PART OF CHANGE ORDER.

NOTE(S):

ALL DIMENSIONS ARE IN METERS UNLESS OTHERWISE NOTED

QUANTITIES AND PLACEMENT OF TY II REFLECTIVE PAVEMENT MARKINGS ARE EXACTLY THE SAME AS TY I REFLECTIVE PAVEMENT MARKINGS.

ANY PAVEMENT MARKING IN CONFLICT WITH PROPOSED PAVEMENT MARKINGS SHALL BE REMOVED BY THE CONTRACTOR OR AS DIRECTED BY THE ENGINEER.

CHANGE ORDER #140 | REVISED SHEET

STATE OF TEXAS
MIGUEL G. ROGERIO
96620
LICENSED
PROFESSIONAL ENGINEER

Miguel G. Rogerio 10/10/2006
Miguel G. Rogerio, P.E. Date

©2006

Texas Department of Transportation

# PAVEMENT MARKING AND DELINEATION LAYOUT

SHEET 22 OF 57

| FED. RD. DIV. NO. | FEDERAL AID PROJECT NO. | | SHEET NO. |
|---|---|---|---|
| 6 | NH 2000(704), etc. | | 778AA |
| STATE | DIST. | COUNTY | |
| TEXAS | SAT | BEXAR | |
| CONT. | SECT. | JOB | HIGHWAY NO. |
| 2452 | 01 | 036, etc. | LP 1604 |

T:\AO\Construction\2452-01-036\CO\CO#140\pavmrkplan22.dgn
10/17/2006

LEVELS DISPLAYED
1 2 4 5 6 7 8 9 10 11 12 13 14 15 16
18 19 20 21 22 23 24 25 26 27 28 29 30 31 32
33 34 35 36 37 38 39 40 41 42 43 44 45 46 47 48
49 50 51 52 53 54 55 56 57 58 59 60 61 62 63

T:\AO\Construction\2452-01-036\CO\CO#140\pavmrkplan22.dgn
10/17/2006
5:46:50 PM

NOTE(S):

ALL DIMENSIONS ARE IN METERS UNLESS OTHERWISE NOTED.

QUANTITIES AND PLACEMENT OF TY II REFLECTIVE PAVEMENT MARKINGS ARE EXACTLY THE SAME AS TY I REFLECTIVE PAVEMENT MARKINGS. TY I AND TY II QUANTITIES ACCOUNTED FOR ON THE PAVEMENT MARKING /DELINEATION SUMMARY UNDER CHANGE ORDER NO. 65 AND 140.

ANY PAVEMENT MARKING IN CONFLICT WITH PROPOSED PAVEMENT MARKINGS SHALL BE REMOVED BY THE CONTRACTOR OR AS DIRECTED BY THE ENGINEER.

SCALE 1:1000

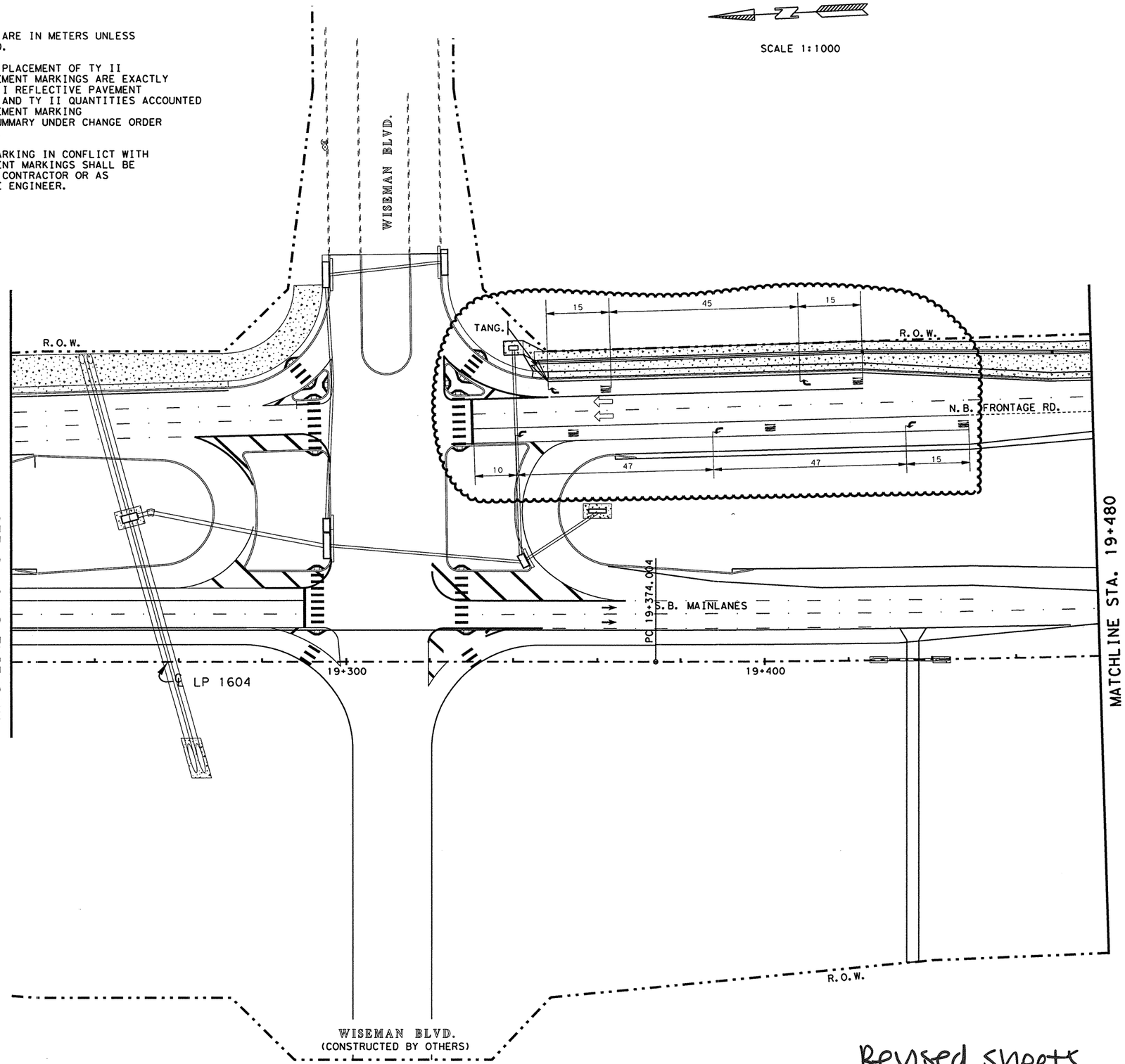


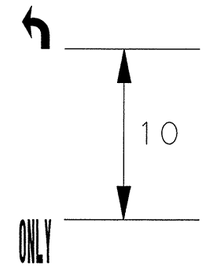


**SUPPLEMENT SHEET**

-REVISE LP 1604 NBFR SPACING FOR "ARROW" & "WORD" STRIPING.

-ELIMINATE "ARROW" & "WORD" ON LP 1604 NBFR THRU LANES.

STATE OF TEXAS
MIGUEL G. ROGERIO
96620
LICENSED PROFESSIONAL ENGINEER

Miguel G. Rogerio, P.E. 5/7/2007
Miguel G. Rogerio, P.E. Date

©2007

Texas Department of Transportation

# PAVEMENT MARKING LAYOUT

**SHEET 22a OF 57**

| FED.RD. DIV.NO. | FEDERAL AID PROJECT NO. | | SHEET NO. |
|---|---|---|---|
| 6 | NH 2000(704), etc. | | 778AAA |
| STATE | DIST. | COUNTY | |
| TEXAS | SAT | BEXAR | |
| CONT. | SECT. | JOB | HIGHWAY NO. |
| 2452 | 01 | 036, etc. | LP 1604 |

Revised sheets

T:\AO\Construction\2452-01-036 (Lp 1604)\CO\CO#140\pavmrkplan22aa.dgn
5/3/2007

LEVELS DISPLAYED
1 2 | 4 5 6 7 8 | 11 12 13 41 51 61
18 19 20 21 22 32 42 62 78 29 30 31 52
33 45 53 63 73 89 90 | 124 134 144 154 164 748
99 501 502 503 504 505 506 507 508 509 601 | 63

T:\AO\Construction\2452-01-036 (Lp 1604)\CO\CO#140\pavmrkplan22aa.dgn
5/3/2007 9:49:52 AM

QUANTITIES THIS SHEET
CSJ 2452-01-037

SCALE 1:1000

| ESTIMATED QUANTITIES | | |
|---|---|---|
| ITEM | UNIT | QUANTITY |
| | | 2452-01-037 |
| REFL PAV MRK TY I (W)(SLD)(100MM) | M | 21 |
| REFL PAV MRK TY I (W)(BRK)(100MM) | M | 21 |
| REFL PAV MRK TY I (W)(DOT)(100MM) | M | 17 |
| REFL PAV MRK TY I (W)(SLD)(600MM) | M | 8 |
| REFL PAV MRK TY I (W)(ARROW) | EA | 2 |
| REFL PAV MRK TY I (W)(WORD) | EA | 2 |
| REFL PAV MRK TY I (Y)(SLD)(100MM) | M | 58 |
| REFL PAV MRK TY I (Y)(SLD)(600MM) | M | 30 |
| REFL PAV MRK TY I (Y)(MED NOSE) | EA | 2 |
| RAIS PAV MRKR CL B (REFL) TY II A-A | EA | 37 |
| RAIS PAV MRKR CL B (REFL) TY II C-R | EA | 10 |
| | | |
| | | |

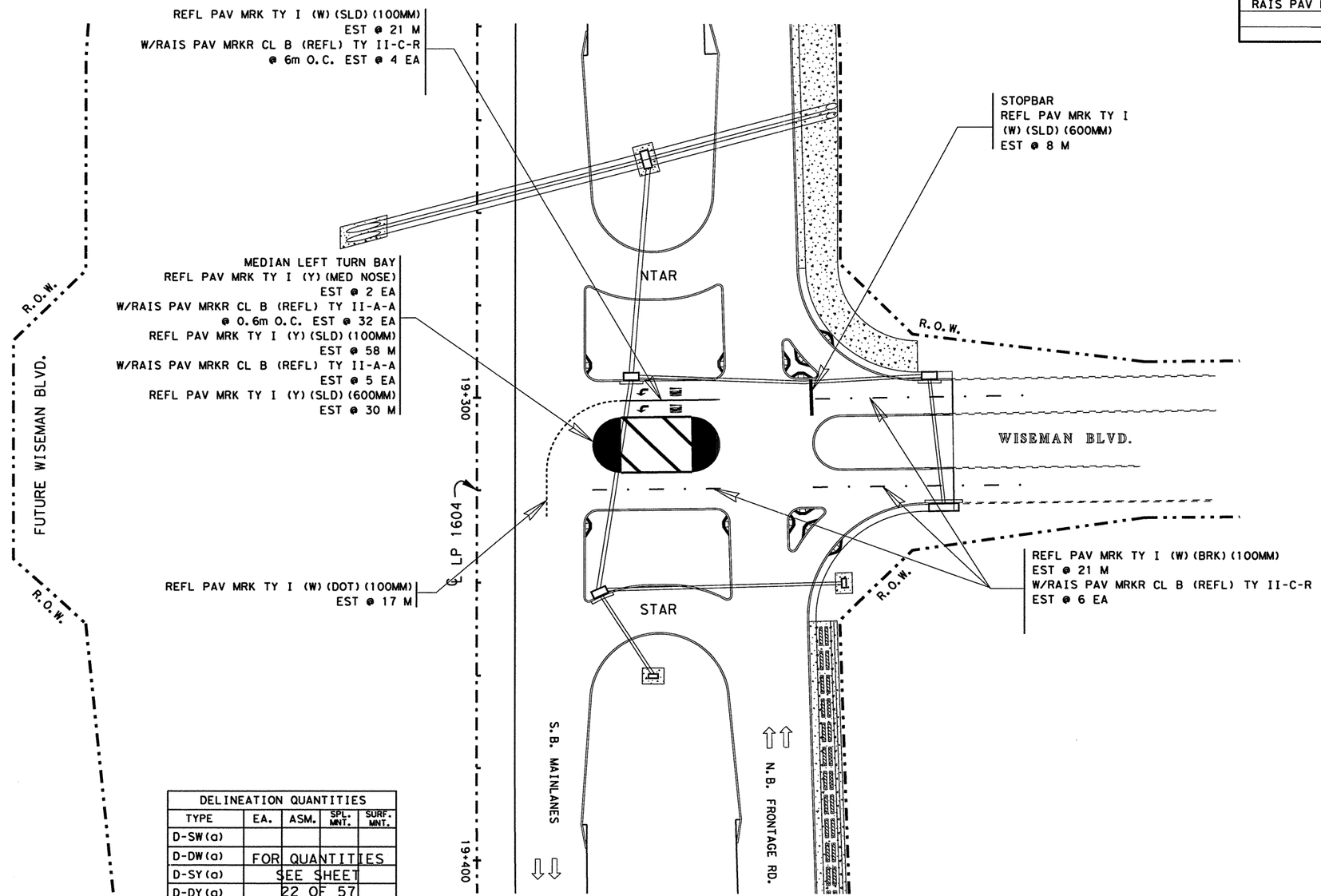


| DELINEATION QUANTITIES | | | | |
|---|---|---|---|---|
| TYPE | EA. | ASM. | SPL. MNT. | SURF. MNT. |
| D-SW(a) | | | | |
| D-DW(a) | FOR QUANTITIES | | | |
| D-SY(a) | SEE SHEET | | | |
| D-DY(a) | 22 OF 57 | | | |
| OM-2SR(a) | | | | |
| | | | | |
| | | | | |
| | | | | |
| | | | | |

NOTE(S):

ALL DIMENSIONS ARE IN METERS UNLESS OTHERWISE NOTED.

QUANTITIES AND PLACEMENT OF TY II REFLECTIVE PAVEMENT MARKINGS ARE EXACTLY THE SAME AS TY I REFLECTIVE PAVEMENT MARKINGS. TY II QUANTITIES ACCOUNTED FOR ON THE PAVEMENT MARKING /DELINEATION SUMMARY.

ANY PAVEMENT MARKING IN CONFLICT WITH PROPOSED PAVEMENT MARKINGS SHALL BE REMOVED BY THE CONTRACTOR OR AS DIRECTED BY THE ENGINEER.

FOR ADDITIONAL DATA/DIMENSIONS, SEE INTERSECTION LAYOUT SHEET(S) 324.

STATE OF TEXAS
JOEL K. DAVENPORT, JR.
79276
REGISTERED
PROFESSIONAL ENGINEER

Joel K Davenport Jr 9/19/00
Joel K. Davenport, Jr., P.E. 79276 Date

Texas Department of Transportation

# PAVEMENT MARKING AND DELINEATION LAYOUT

SHEET 22a OF 57

| FED.RD. DIV.NO. | FEDERAL AID PROJECT NO. | | SHEET NO. |
|---|---|---|---|
| 6 | NH 2000(704), etc. | | 779 |
| STATE | DIST. | COUNTY | |
| TEXAS | SAT | BEXAR | |
| CONT. | SECT. | JOB | HIGHWAY NO. |
| 2452 | 01 | 036, etc. | LP 1604 |

LEVELS DISPLAYED
1 2 3 4 5 6 7 8 9 10 11 12 13 14 15 16
21 22 32 42 52 62 72 82 93 03 13 32
33 43 53 63 73 83 93 04 14 24 34 44 54 64 74 84
49 50 51 52 53 54 55 56 57 58 59 60 61 62

ACC: t:/ao/design/lp1604fm471-90/pave-sign/
FILE: pavmrkplan22a.dgn

Plotted on: $DATE$

QUANTITIES THIS SHEET
CSJ 2452-01-037

SCALE 1:1000

| ESTIMATED QUANTITIES | | |
|---|---|---|
| ITEM | UNIT | QUANTITY |
| | | 2452-01-037 |
| REFL PAV MRK TY I (W) (SLD) (100MM) | M | 21 |
| REFL PAV MRK TY I (W) (BRK) (100MM) | M | 21 |
| REFL PAV MRK TY I (W) (DOT) (100MM) | M | 17 |
| REFL PAV MRK TY I (W) (SLD) (600MM) | M | 64 |
| REFL PAV MRK TY I (W) (ARROW) | EA | 2 |
| REFL PAV MRK TY I (W) (WORD) | EA | 2 |
| REFL PAV MRK TY I (Y) (SLD) (100MM) | M | 58 |
| REFL PAV MRK TY I (Y) (SLD) (600MM) | M | 30 |
| REFL PAV MRK TY I (Y) (MED NOSE) | EA | 2 |
| RAIS PAV MRKR CL B (REFL) TY II A-A | EA | 37 |
| RAIS PAV MRKR CL B (REFL) TY II C-R | EA | 10 |
| | | |
| | | |

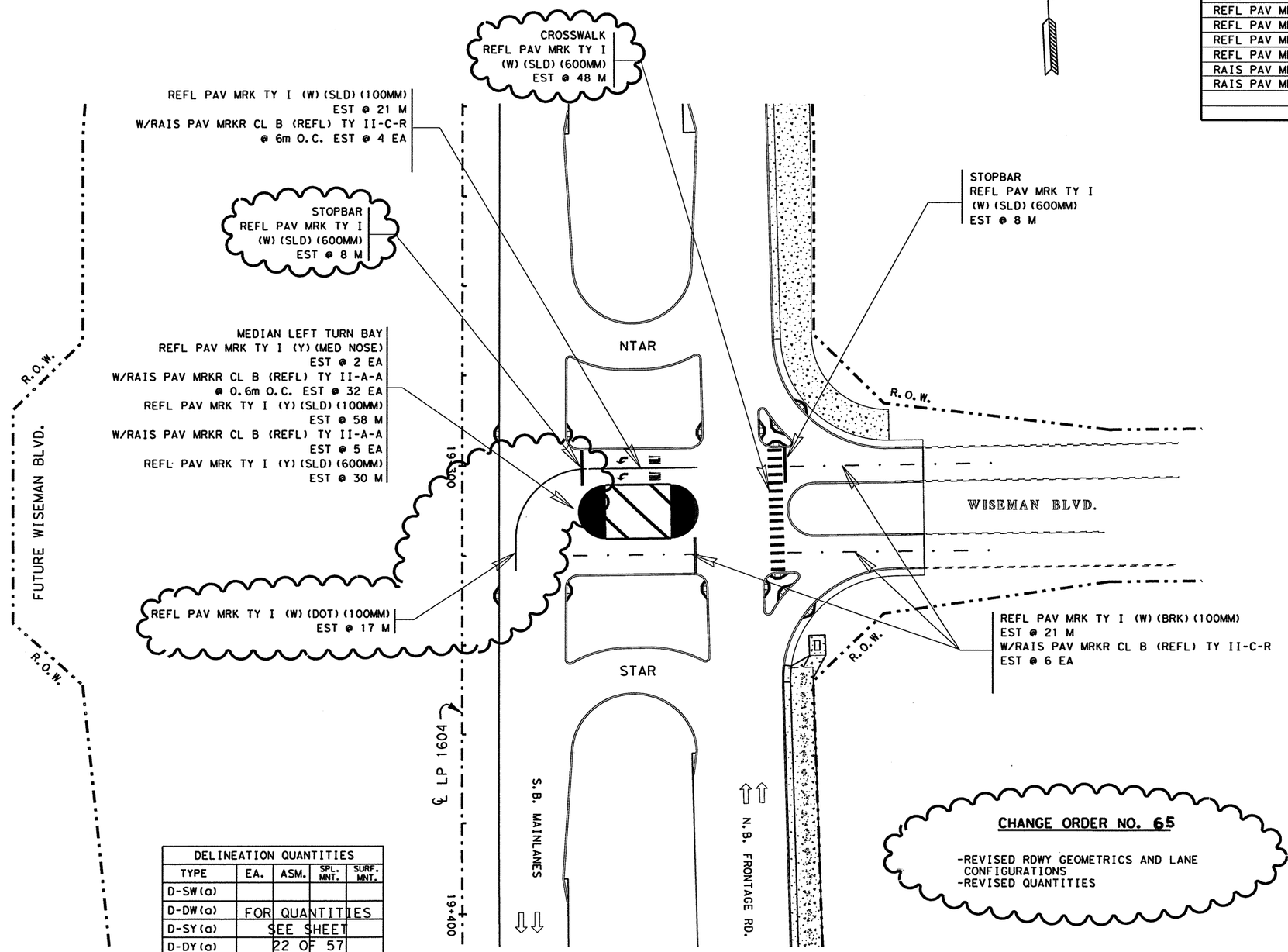


| DELINEATION QUANTITIES | | | | |
|---|---|---|---|---|
| TYPE | EA. | ASM. | SPL. MNT. | SURF. MNT. |
| D-SW(a) | | | | |
| D-DW(a) | FOR QUANTITIES | | | |
| D-SY(a) | SEE SHEET | | | |
| D-DY(a) | 22 OF 57 | | | |
| OM-2SR(a) | | | | |
| | | | | |
| | | | | |
| | | | | |
| | | | | |

NOTE(S):

ALL DIMENSIONS ARE IN METERS UNLESS OTHERWISE NOTED.

QUANTITIES AND PLACEMENT OF TY II REFLECTIVE PAVEMENT MARKINGS ARE EXACTLY THE SAME AS TY I REFLECTIVE PAVEMENT MARKINGS. TY II QUANTITIES ACCOUNTED FOR ON THE PAVEMENT MARKING /DELINEATION SUMMARY.

ANY PAVEMENT MARKING IN CONFLICT WITH PROPOSED PAVEMENT MARKINGS SHALL BE REMOVED BY THE CONTRACTOR OR AS DIRECTED BY THE ENGINEER.

FOR ADDITIONAL DATA/DIMENSIONS, SEE INTERSECTION LAYOUT SHEET(S) 324.

CHANGE ORDER NO. 65

-REVISED RDWY GEOMETRICS AND LANE CONFIGURATIONS
-REVISED QUANTITIES

CHANGE ORDER NO. 65 | REVISED SHEET

STATE OF TEXAS
JEROME D. PAVLISKA
76075
REGISTERED PROFESSIONAL ENGINEER

Jerome D. Pavliska P.E. 4-06-04
Jerome D. Pavliska, P.E. Date

©2000
Texas Department of Transportation

# PAVEMENT MARKING AND DELINEATION LAYOUT

SHEET 22a OF 57

| FED.RD. DIV.NO. | FEDERAL AID PROJECT NO. | | SHEET NO. |
|---|---|---|---|
| 6 | NH 2000(704), etc. | | 779A |
| STATE | DIST. | COUNTY | |
| TEXAS | SAT | BEXAR | |
| CONT. | SECT. | JOB | HIGHWAY NO. |
| 2452 | 01 | 036, etc. | LP 1604 |

02-04-04

Design Filename: $FILE$
LEVELS DISPLAYED
T:/A0/Design/lp1604fm471-90/P-DxPhase2*CO/
FILE: pavmrkplan22a.dgn

QUANTITIES THIS SHEET
CSJ 2452-01-037

SCALE 1:1000

MEDIAN LEFT TURN BAY
O EST @ 2 EA
W/ P @ 0.6m O.C. EST @ 15 EA
L EST @ 88 M
W/ Q EST @ 32 EA
N EST @ 16 M

RADIUS PT (±)
STA 10+308.87
26.27 LT

CROSSWALK
H EST @ 63 M

RADIUS PT, (±)
STA 19+307.785
0.71 LT

D EST @ 54 M
W/ Q EST @ 16 EA

C EST @ 152 M

TAPER PT (±)
STA 19+308.894
21.90 RT

MATCH EXIST PAV MARKINGS

WISEMAN BLVD.
(CONSTRUCTED BY OTHERS)

R.O.W.

℄ LP 1604

R=24.17

C EST @ 47 M
W/ Q EST @ 9 EA

TAPER PT (±)
STA 19+308.889
45.25 RT

BEG PC PT (±)
STA 19+013.080
65.24 RT

MEDIAN LEFT TURN BAY
O EST @ 1 EA
W/ P @ 0.6m O.C. EST @ 110 EA
L EST @ 352 M
N EST @ 49 M

H EST @ 11 M

E EST @ 29 M

PC 19+374.004

S.B. MAINLANES

TAPER PT (±)
STA 19+320.62
22.38 LT

STOPBAR
H EST @ 13 M

C EST @ 51 M
W/ Q EST @ 19 EA

NTAR

9.83 14.00

R=1 R=14 R=10 R=1.66

STAR

F EST @ 26 M
M EST @ 6 M
H EST @ 14 M
W/ Q EST @ 10 EA

N.B. FRONTAGE RD.

D EST @ 6 M
W/ Q EST @ 2 EA

RADIUS PT (±)
STA 10+308.87
26.27 LT

E EST @ 26 M

CROSSWALK
H EST @ 57 M

STOPBAR
H EST @ 13 M

C EST @ 48 M
W/ Q EST @ 9 EA

R.O.W.

WISEMAN BLVD.

ADDED LT. TURN

D EST @ 37 M
W/ Q EST @ 8 EA

TAPER PT (±)
STA 19+321.72
49.49 LT

STOPBAR
H EST @ 13 M

# REFERS TO CHANGES MADE AS PART OF CHANGE ORDER.

**CHANGE ORDER NO. 140**

-ALLOWED FOR WISEMAN BLVD INTERSECTION MODIFICATIONS CONSTRUCTED BY OTHERS

-REVISED QUANTITIES.

**QUANTITY SUMMARY CSJ: 2452-01-036, etc.**

| | ITEM | UNIT | QUANTITY |
|---|---|---|---|
| A | OBJ MRK ASM TY 2 FLEX (OM-2SR)(1.8 M) | EA | 0 |
| B | OBJ MRK ASM TY 2 SURF MNT (OM-2HP)(SPL) | EA | 0 |
| C | REFL PAV MRK TY I (W)(SLD)(100 MM) | M | 298 |
| D | REFL PAV MRK TY I (W)(BRK)(100 MM) | M | 97 |
| E | REFL PAV MRK TY I (W)(DOT)(100 MM) | M | 55 |
| F | REFL PAV MRK TY I (W)(SLD)(200 MM) | M | 26 |
| G | REFL PAV MRK TY I (W)(BRK)(200 MM) | M | 0 |
| H | REFL PAV MRK TY I (W)(SLD)(600 MM) | M | 184 |
| I | REFL PAV MRK TY I (W)(ARROW) | EA | 2 |
| J | REFL PAV MRK TY I (W)(DBL ARROW) | EA | 4 |
| K | REFL PAV MRK TY I (W)(WORD) | EA | 2 |
| L | REFL PAV MRK TY I (Y)(SLD)(100 MM) | M | 440 |
| M | REFL PAV MRK TY I (Y)(SLD)(200 MM) | M | 0 |
| N | REFL PAV MRK TY I (Y)(SLD)(600 MM) | M | 65 |
| O | REFL PAV MRK TY I (Y)(MED NOSE) | EA | 3 |
| P | RAIS PAV MRKR CL B (REFL) TY II-A-A (HV) | EA | 125 |
| Q | RAIS PAV MRKR CL B (REFL) TY II-C-R (HV) | EA | 105 |

NOTE(S):

ALL DIMENSIONS ARE IN METERS UNLESS OTHERWISE NOTED.

QUANTITIES AND PLACEMENT OF TY II REFLECTIVE PAVEMENT MARKINGS ARE EXACTLY THE SAME AS TY I REFLECTIVE PAVEMENT MARKINGS.

ANY PAVEMENT MARKING IN CONFLICT WITH PROPOSED PAVEMENT MARKINGS SHALL BE REMOVED BY THE CONTRACTOR OR AS DIRECTED BY THE ENGINEER.

FOR ADDITIONAL DATA/DIMENSIONS, SEE INTERSECTION LAYOUT SHEET(S) 324.

CHANGE ORDER #140

REVISED SHEET

STATE OF TEXAS
MIGUEL G. ROGERIO
96620
LICENSED
PROFESSIONAL ENGINEER

Miguel G. Rogerio 10/18/2006
Miguel G. Rogerio, P.E. Date

©2006
Texas Department of Transportation

# PAVEMENT MARKING AND DELINEATION LAYOUT

SHEET 22a OF 57

| FED.RD. DIV.NO. | FEDERAL AID PROJECT NO. | | SHEET NO. |
|---|---|---|---|
| 6 | NH 2000(704), etc. | | 779AA |
| STATE | DIST. | COUNTY | |
| TEXAS | SAT | BEXAR | |
| CONT. | SECT. | JOB | HIGHWAY NO. |
| 2452 | 01 | 036, etc. | LP 1604 |

T:\AO\Construction\2452-01-036\CO\CO#140\pavmrkplan22a.dgn
10/17/2006

| LEVELS DISPLAYED | | | | | | | | | | | | | | | | |
|---|---|---|---|---|---|---|---|---|---|---|---|---|---|---|---|---|
| 1 | 2 | 3 | 4 | 5 | 6 | 7 | 8 | 9 | 10 | 11 | 12 | 13 | 14 | 15 | 16 | |
| 17 | 18 | 19 | 20 | 21 | 22 | 23 | 24 | 25 | 26 | 27 | 28 | 29 | 30 | 31 | 32 | |
| 33 | 34 | 35 | 36 | 37 | 38 | 39 | 40 | 41 | 42 | 43 | 44 | 45 | 46 | 47 | 48 | |
| 49 | 50 | 51 | 52 | 53 | 54 | 55 | 56 | 57 | 58 | 59 | 60 | 61 | 62 | | | |

T:\AO\Construction\2452-01-036\CO\CO#140\pavmrkplan22a.dgn
10/17/2006
5:47:17 PM

QUANTITIES THIS SHEET
CSJ 2452-01-037

SCALE 1:1000

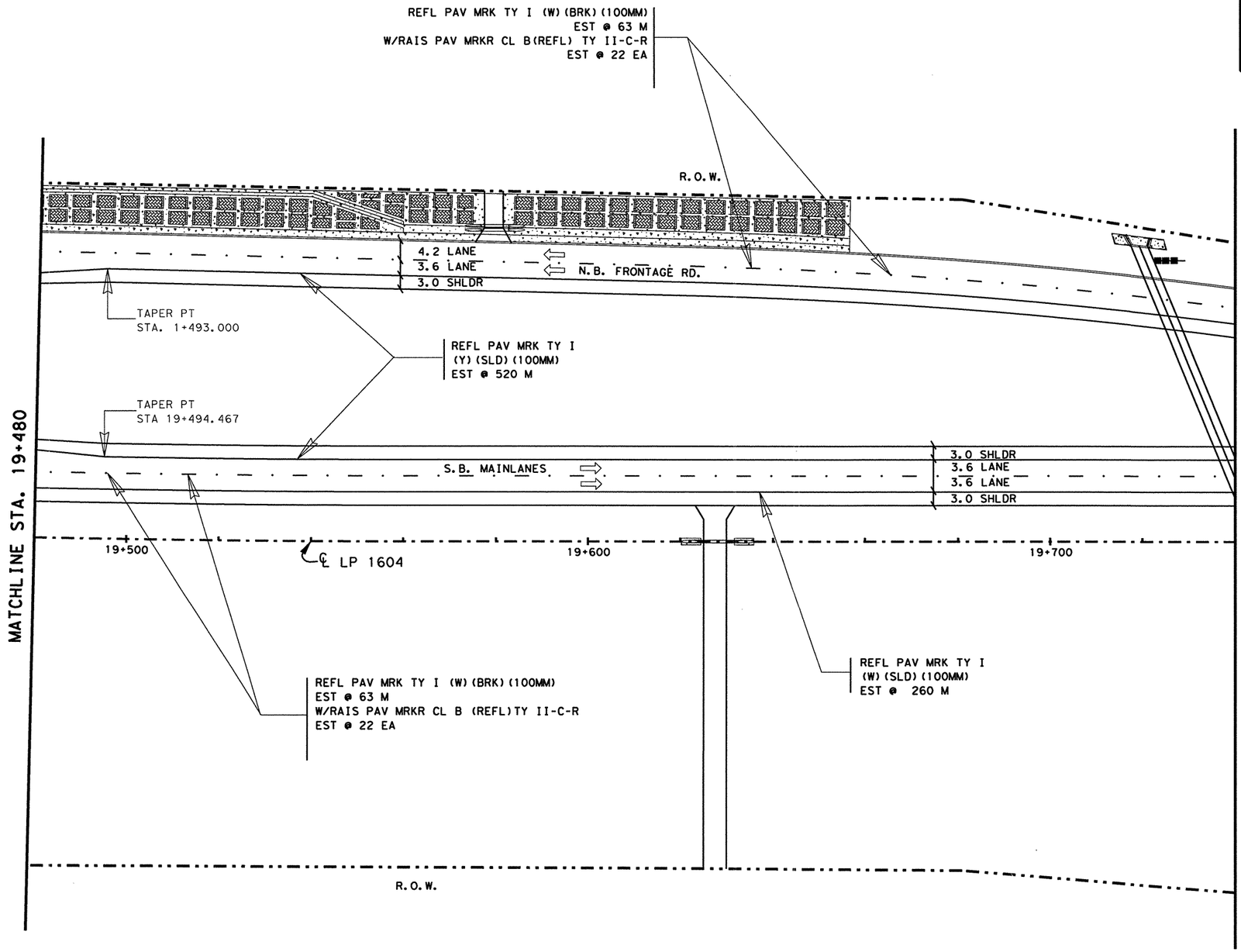


## ESTIMATED QUANTITIES

| ITEM | UNIT | QUANTITY 2452-01-037 |
|---|---|---|
| REFL PAV MRK TY I (W)(SLD)(100MM) | M | 260 |
| REFL PAV MRK TY I (W)(BRK)(100MM) | M | 126 |
| REFL PAV MRK TY I (Y)(SLD)(100MM) | M | 520 |
| RAIS PAV MRKR CL B (REFL) TY II C-R | EA | 44 |
| | | |
| | | |
| | | |
| | | |
| | | |

NOTE(S):

ALL DIMENSIONS ARE IN METERS UNLESS OTHERWISE NOTED.

QUANTITIES AND PLACEMENT OF TY II REFLECTIVE PAVEMENT MARKINGS ARE EXACTLY THE SAME AS TY I REFLECTIVE PAVEMENT MARKINGS. TY II QUANTITIES ACCOUNTED FOR ON THE PAVEMENT MARKING /DELINEATION SUMMARY.

ANY PAVEMENT MARKING IN CONFLICT WITH PROPOSED PAVEMENT MARKINGS SHALL BE REMOVED BY THE CONTRACTOR OR AS DIRECTED BY THE ENGINEER.

| DELINEATION QUANTITIES | | | | |
|---|---|---|---|---|
| TYPE | EA. | ASM. | SPL. MNT. | SURF. MNT. |
| D-SW(a) | | | | |
| D-DW(a) | | | | |
| D-SY(a) | | | | |
| D-DY(a) | | | | |
| OM-2SR | | 1 | | |
| | | | | |
| | | | | |
| | | | | |
| | | | | |

LEVELS DISPLAYED
1 2 3 4 5 6 7 8 9 10 11 12 13 14 15 16
17 18 19 20 21 22 23 24 25 26 27 28 29 30 31 32
33 34 35 36 37 38 39 40 41 42 43 44 45 46 47 48
49 50 51 62 53 54 55 65 75 85 96 06 16 26 3

ACC: t:\ao\design\ip1604fm471-90\pave-sign\
FILE: pavmrkplan23.dgn

STATE OF TEXAS
JOEL K. DAVENPORT, JR.
79276
REGISTERED PROFESSIONAL ENGINEER

Joel K. Davenport, Jr. P.E. 79276 — Date 9/9/00

Texas Department of Transportation

# PAVEMENT MARKING AND DELINEATION LAYOUT

SHEET 23 OF 57

| FED.RD. DIV.NO. | FEDERAL AID PROJECT NO. | | SHEET NO. |
|---|---|---|---|
| 6 | NH 2000(704), etc. | | 780 |
| STATE | DIST. | COUNTY | |
| TEXAS | SAT | BEXAR | |
| CONT. | SECT. | JOB | HIGHWAY NO. |
| 2452 | 01 | 036, etc. | LP 1604 |

Plotted on: 01/26/2004

QUANTITIES THIS SHEET
CSJ 2452-01-037

SCALE 1:1000

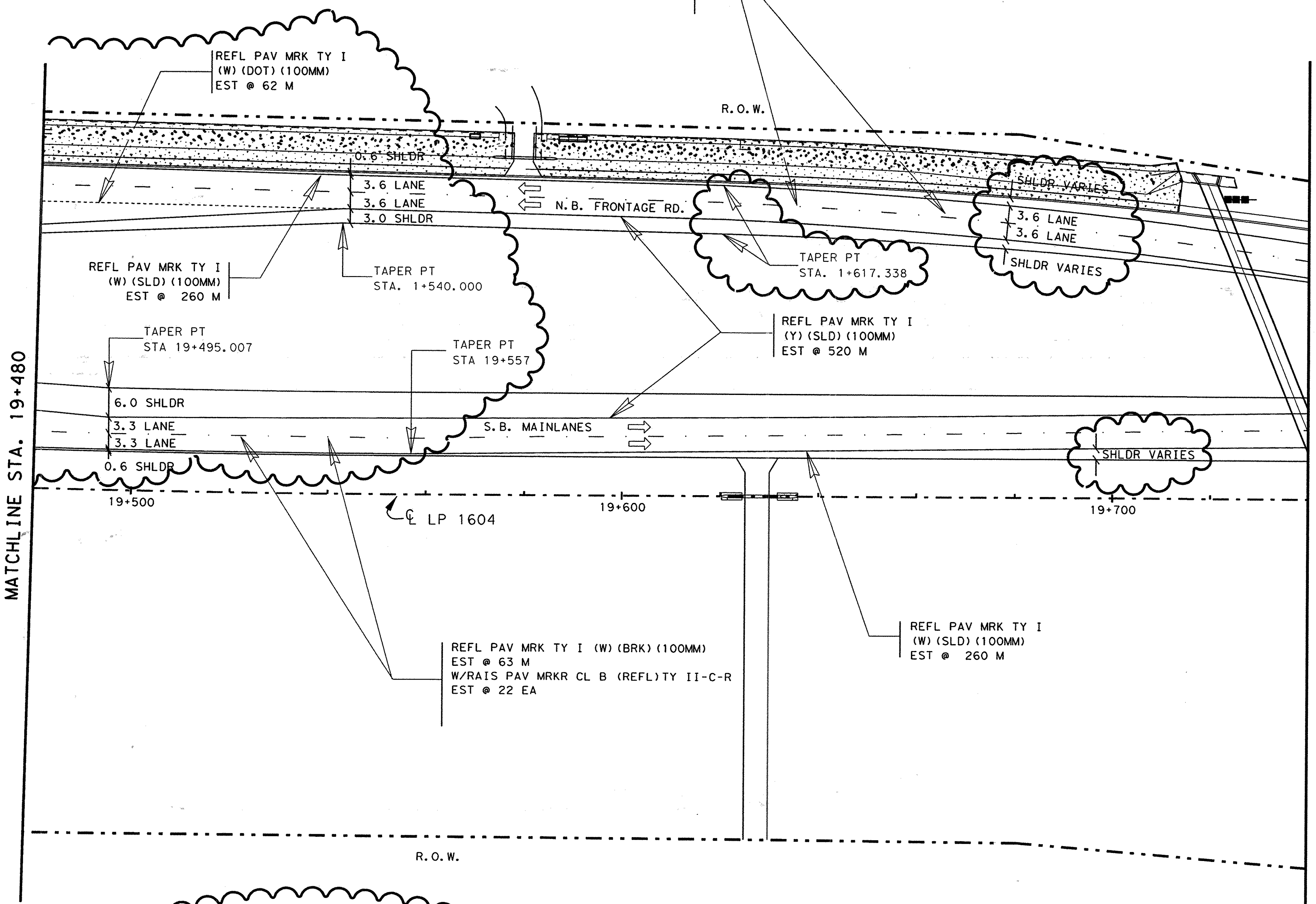


## ESTIMATED QUANTITIES

| ITEM | UNIT | QUANTITY 2452-01-037 |
|---|---|---|
| REFL PAV MRK TY I (W)(SLD)(100MM) | M | 520 |
| REFL PAV MRK TY I (W)(BRK)(100MM) | M | 126 |
| REFL PAV MRK TY I (W)(DOT)(100MM) | M | 62 |
| REFL PAV MRK TY I (Y)(SLD)(100MM) | M | 520 |
| RAIS PAV MRKR CL B (REFL) TY II C-R | EA | 44 |
| | | |
| | | |
| | | |
| | | |

NOTE(S):

ALL DIMENSIONS ARE IN METERS UNLESS OTHERWISE NOTED.

QUANTITIES AND PLACEMENT OF TY II REFLECTIVE PAVEMENT MARKINGS ARE EXACTLY THE SAME AS TY I REFLECTIVE PAVEMENT MARKINGS. TY II QUANTITIES ACCOUNTED FOR ON THE PAVEMENT MARKING /DELINEATION SUMMARY.

ANY PAVEMENT MARKING IN CONFLICT WITH PROPOSED PAVEMENT MARKINGS SHALL BE REMOVED BY THE CONTRACTOR OR AS DIRECTED BY THE ENGINEER.

| DELINEATION QUANTITIES | | | | |
|---|---|---|---|---|
| TYPE | EA. | ASM. | SPL. MNT. | SURF. MNT. |
| D-SW(a) | | | | |
| D-DW(a) | | | | |
| D-SY(a) | | | | |
| D-DY(a) | | | | |
| OM-2SR | | 1 | | |
| | | | | |
| | | | | |
| | | | | |
| | | | | |

CHANGE ORDER NO. 65

-REVISED RDWY GEOMETRICS AND LANE CONFIGURATIONS
-REVISED QUANTITIES

CHANGE ORDER NO. 65 | REVISED SHEET


555 EAST RAMSEY SAN ANTONIO TEXAS 78216 PHONE (210)375-9000 FAX (210)375-9010
PAPE-DAWSON ENGINEERS
CIVIL & ENVIRONMENTAL
STATE OF TEXAS
J. KENT O'BRIEN
64398
LICENSED
PROFESSIONAL ENGINEER
J. KENT O'BRIEN P.E.
1/27/2004
DATE


©2000 Texas Department of Transportation

# PAVEMENT MARKING AND DELINEATION LAYOUT

SHEET 23 OF 57

| FED. RD. DIV. NO. | FEDERAL AID PROJECT NO. | | | SHEET NO. |
|---|---|---|---|---|
| 6 | NH 2000(704),etc. | | | 780A |
| STATE | DIST. | COUNTY | | |
| TEXAS | SAT | BEXAR | | |
| CONT. | SECT. | JOB | HIGHWAY NO. | |
| 2452 | 01 | 036,etc. | LP 1604 | |

Design Filename: p:\52\20\11\design\civil\plansheets\traffic\pave-mark\pavmrkplan23.dgn

| LEVELS DISPLAYED | | | | | | | | | | | | | | | |
|---|---|---|---|---|---|---|---|---|---|---|---|---|---|---|---|
| 1 | 2 | 3 | 4 | 5 | 6 | 7 | 8 | 9 | 10 | 11 | 12 | 13 | 14 | 15 | 16 |
| | | | | 21 | 22 | 23 | 24 | 25 | 26 | 27 | 28 | 29 | 30 | 31 | 32 |
| 33 | 34 | 35 | 36 | 37 | 38 | 39 | 40 | 41 | 42 | 43 | 44 | 45 | 46 | 47 | 48 |
| 49 | 50 | 51 | 52 | 53 | 54 | 55 | 56 | 57 | 58 | 59 | 60 | 61 | 62 | 63 | |

ACC: t:\ao\design\lp1604fm471-90\pave-sign\
FILE: pavmrkplan23.dgn

QUANTITIES THIS SHEET
CSJ 2452-01-037

SCALE 1:1000

| ESTIMATED QUANTITIES | | |
|---|---|---|
| ITEM | UNIT | QUANTITY |
| | | 2452-01-037 |
| REFL PAV MRK TY I (W)(SLD)(100MM) | M | 260 |
| REFL PAV MRK TY I (W)(BRK)(100MM) | M | 132 |
| REFL PAV MRK TY I (Y)(SLD)(100MM) | M | 520 |
| RAIS PAV MRKR CL B (REFL) TY II C-R | EA | 43 |
| | | |

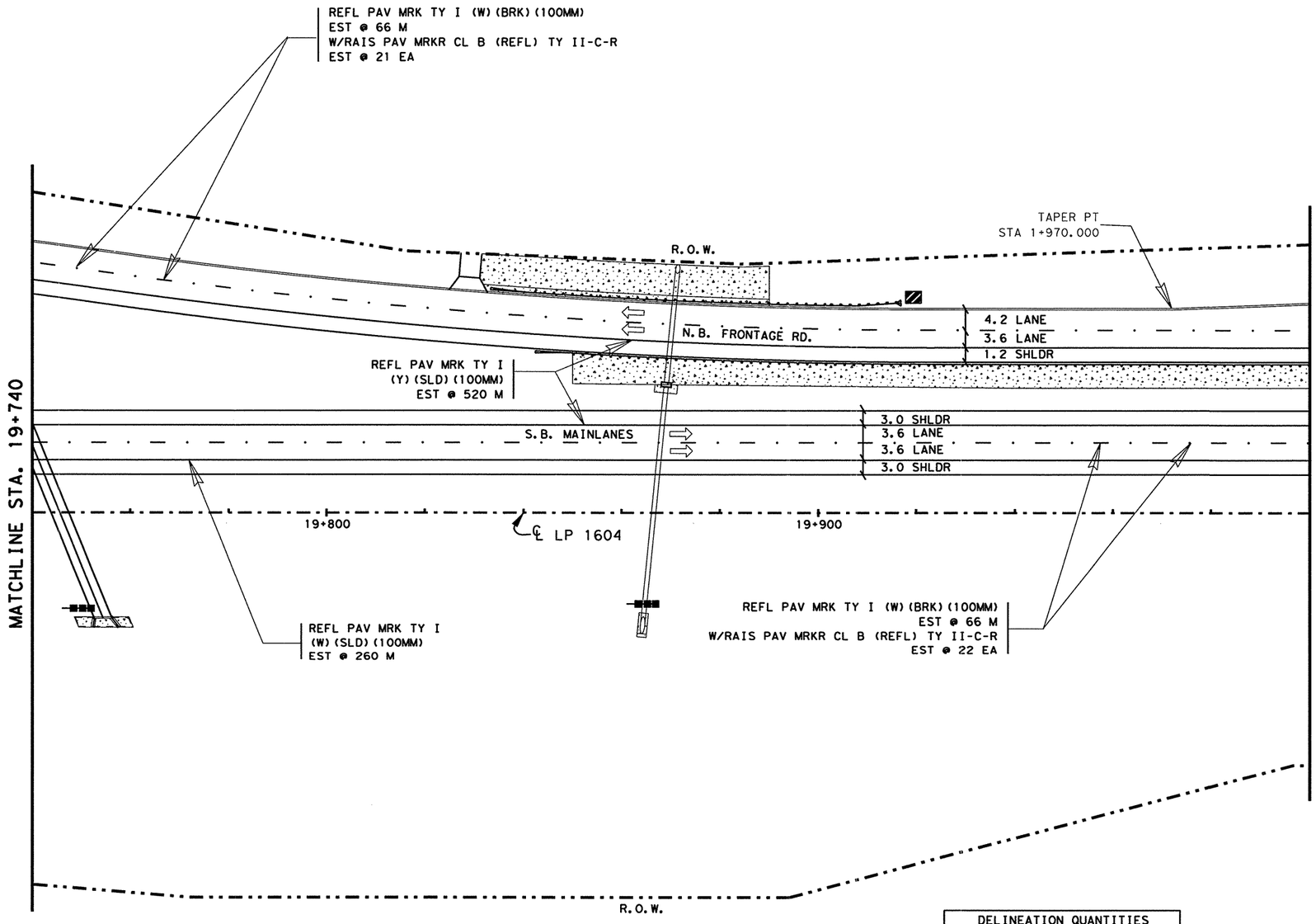


NOTE(S):

ALL DIMENSIONS ARE IN METERS UNLESS OTHERWISE NOTED.

QUANTITIES AND PLACEMENT OF TY II REFLECTIVE PAVEMENT MARKINGS ARE EXACTLY THE SAME AS TY I REFLECTIVE PAVEMENT MARKINGS. TY II QUANTITIES ACCOUNTED FOR ON THE PAVEMENT MARKING /DELINEATION SUMMARY.

ANY PAVEMENT MARKING IN CONFLICT WITH PROPOSED PAVEMENT MARKINGS SHALL BE REMOVED BY THE CONTRACTOR OR AS DIRECTED BY THE ENGINEER.

| DELINEATION QUANTITIES | | | | |
|---|---|---|---|---|
| TYPE | EA. | ASM. | SPL. MNT. | SURF. MNT. |
| D-SW(a) | | | | |
| D-DW(a) | | | | |
| D-SY(a) | | | | |
| D-DY(a) | | | | |
| OM-2SR(a) | | 2 | | |
| OM-3R | 1 | | | |
| | | | | |
| | | | | |
| | | | | |

LEVELS DISPLAYED
1 2 3 4 5 6 7 8 9 10 11 12 13 14 15 16
17 18 19 20 21 22 23 24 25 26 27 28 29 30 31 32
33 34 35 36 37 38 39 40 41 42 43 44 45 46 47 48
49 50 51 52 53 54 55 56 57 58 59 60 61 62 63

ACC: t:\ao\design\
lp1604fm471-90\pave-sign\
FILE: pavmrkplan24.dgn

STATE OF TEXAS
JOEL K. DAVENPORT, JR.
79276
REGISTERED
PROFESSIONAL ENGINEER

Joel K Davenport Jr 9/19/00
Joel K. Davenport, Jr. P.E. 79276 Date

©2000 Texas Department of Transportation

# PAVEMENT MARKING AND DELINEATION LAYOUT

SHEET 24 OF 57

| FED.RD. DIV.NO. | FEDERAL AID PROJECT NO. | | SHEET NO. |
|---|---|---|---|
| 6 | NH 2000(704), etc. | | 71 |
| STATE | DIST. | COUNTY | |
| TEXAS | SAT | EXAR | |
| CONT. | SECT. | JOB | HIGHWAY NO. |
| 2452 | 01 | 036, etc. | LP 1604 |

QUANTITIES THIS SHEET
CSJ 2452-01-037

SCALE 1:1000

| ESTIMATED QUANTITIES | | |
|---|---|---|
| ITEM | UNIT | QUANTITY 2452-01-037 |
| REFL PAV MRK TY I (W)(SLD)(100MM) | M | 520 |
| REFL PAV MRK TY I (W)(BRK)(100MM) | M | 132 |
| REFL PAV MRK TY I (Y)(SLD)(100MM) | M | 520 |
| RAIS PAV MRKR CL B (REFL) TY II C-R | EA | 43 |
| | | |

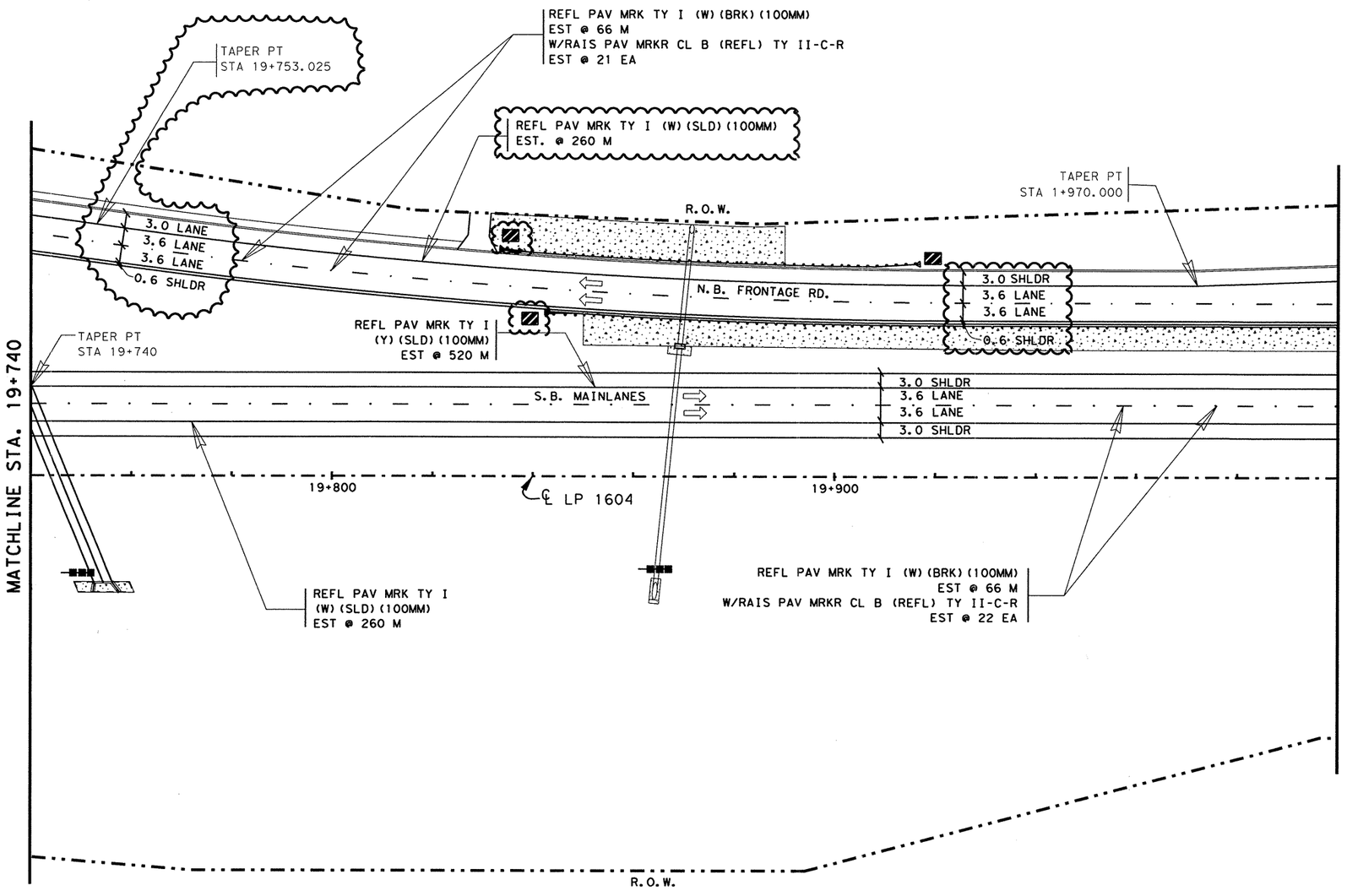


NOTE(S):

ALL DIMENSIONS ARE IN METERS UNLESS OTHERWISE NOTED.

QUANTITIES AND PLACEMENT OF TY II REFLECTIVE PAVEMENT MARKINGS ARE EXACTLY THE SAME AS TY I REFLECTIVE PAVEMENT MARKINGS. TY II QUANTITIES ACCOUNTED FOR ON THE PAVEMENT MARKING /DELINEATION SUMMARY.

ANY PAVEMENT MARKING IN CONFLICT WITH PROPOSED PAVEMENT MARKINGS SHALL BE REMOVED BY THE CONTRACTOR OR AS DIRECTED BY THE ENGINEER.

| DELINEATION QUANTITIES | | | | |
|---|---|---|---|---|
| TYPE | EA. | ASM. | SPL. MNT. | SURF. MNT. |
| D-SW(a) | | | | |
| D-DW(a) | | | | |
| D-SY(a) | | | | |
| D-DY(a) | | | | |
| OM-2SR(a) | | 2 | | |
| OM-3R | 2 | | | |
| OM-3L | 1 | | | |
| | | | | |
| | | | | |

CHANGE ORDER NO. 65
-REVISED FRONT. RD LANE CONFIG.
-REVISED QUANTITIES

CHANGE ORDER 65

REVISED SHEET

STATE OF TEXAS
JEROME D. PAVLISKA
76075
REGISTERED
PROFESSIONAL ENGINEER

Jerome D. Pavliska, P.E. 4-16-04
Jerome D. Pavliska, P.E. Date

©2000 Texas Department of Transportation

PAVEMENT MARKING AND DELINEATION LAYOUT

SHEET 24 OF 57

| FED.RD. DIV.NO. | FEDERAL AID PROJECT NO. | | SHEET NO. |
|---|---|---|---|
| 6 | NH 2000(704), etc. | | 781A |
| STATE | DIST. | COUNTY | |
| TEXAS | SAT | BEXAR | |
| CONT. | SECT. | JOB | HIGHWAY NO. |
| 2452 | 01 | 036, etc. | LP 1604 |

04-16-04

LEVELS DISPLAYED
1 2 3 4 5 6 7 8 9 10 11 21 31 41 51 61
1 12 22 32 42 52 62 72 82 92 03 13 23
33 43 53 63 73 83 94 04 14 24 34 44 54 64 74 84
95 05 15 26 35 45 55 65 75 86 96 06 16 26 36

ACC: t:\ao\design\
lp1604fm471-90\pave-sign\
FILE: pavmrkplan24*CO.dgn

QUANTITIES THIS SHEET
CSJ 2452-01-037

SCALE 1:1000

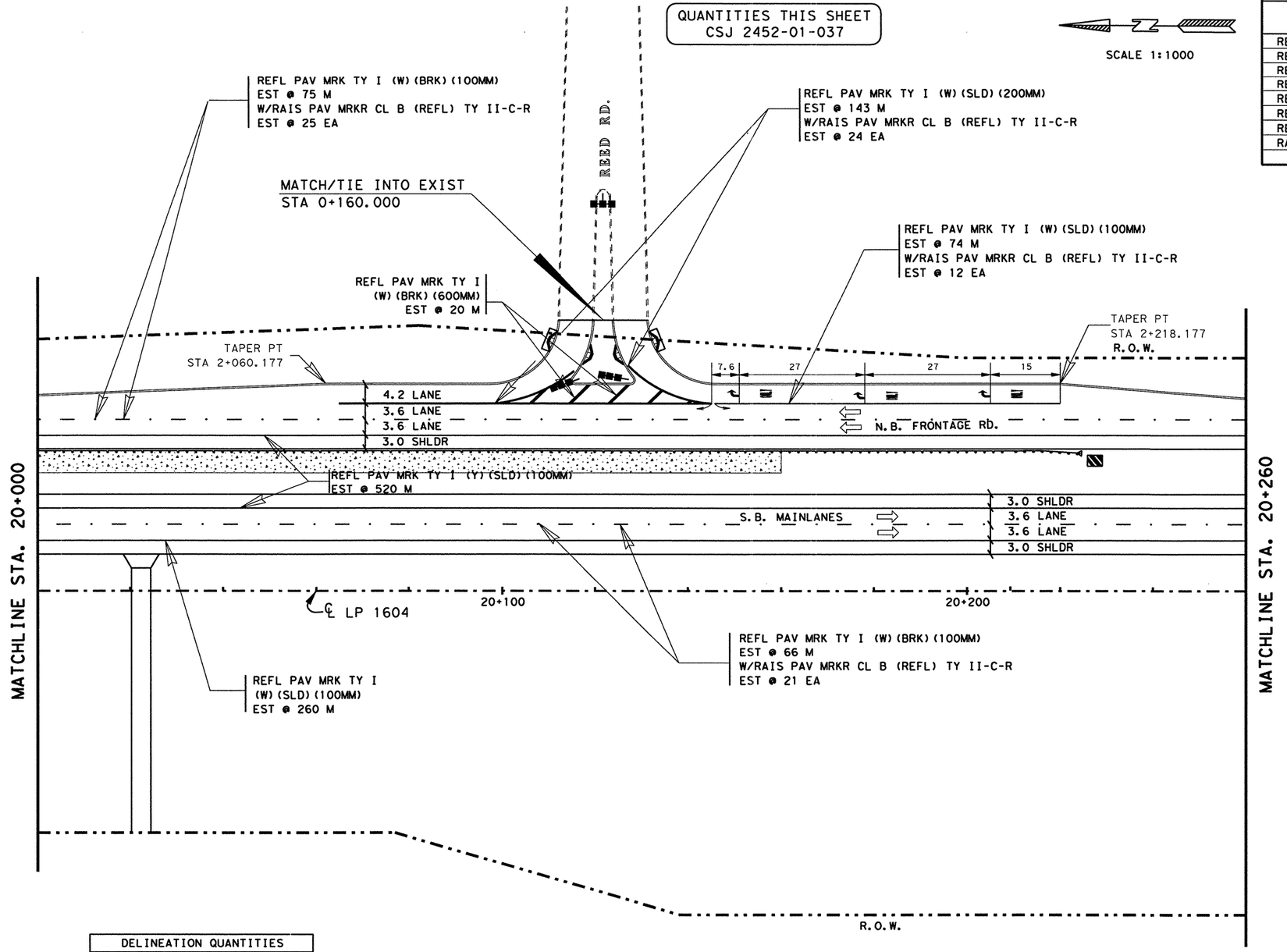


## ESTIMATED QUANTITIES

| ITEM | UNIT | QUANTITY |
|---|---|---|
| | | 2452-01-037 |
| REFL PAV MRK TY I (W)(SLD)(100MM) | M | 334 |
| REFL PAV MRK TY I (W)(BRK)(100MM) | M | 141 |
| REFL PAV MRK TY I (W)(SLD)(200MM) | M | 143 |
| REFL PAV MRK TY I (W)(SLD)(600MM) | M | 20 |
| REFL PAV MRK TY I (W)(ARROW) | EA | 3 |
| REFL PAV MRK TY I (W)(WORD) | EA | 3 |
| REFL PAV MRK TY I (Y)(SLD)(100MM) | M | 520 |
| RAIS PAV MRKR CL B (REFL) TY II C-R | EA | 82 |
| | | |

NOTE(S):

ALL DIMENSIONS ARE IN METERS UNLESS OTHERWISE NOTED.

QUANTITIES AND PLACEMENT OF TY II REFLECTIVE PAVEMENT MARKINGS ARE EXACTLY THE SAME AS TY I REFLECTIVE PAVEMENT MARKINGS. TY II QUANTITIES ACCOUNTED FOR ON THE PAVEMENT MARKING /DELINEATION SUMMARY.

ANY PAVEMENT MARKING IN CONFLICT WITH PROPOSED PAVEMENT MARKINGS SHALL BE REMOVED BY THE CONTRACTOR OR AS DIRECTED BY THE ENGINEER.

FOR ADDITIONAL DATA/DIMENSIONS, SEE INTERSECTION LAYOUT SHEET(S) 325 .

## DELINEATION QUANTITIES

| TYPE | EA. | ASM. | SPL. MNT. | SURF. MNT. |
|---|---|---|---|---|
| D-SW(a) | | | | |
| D-DW(a) | | | | |
| D-SY(a) | | | | |
| D-DY(a) | | | | |
| OM-2HP(Spl) | | 1 | | |
| OM-2SR(a) | | 2 | | |
| OM-3L | 1 | | | |
| | | | | |
| | | | | |

LEVELS DISPLAYED
1 2 3 4 5 6 7 8 9 10 11 12 13 14 15 16 17 18 19 20 21 22 23 24 25 26 27 28 29 30 31 32 33 34 35 36 37 38 39 40 41 42 43 44 45 46 47 48 49 50 51 52 53 54 55 56 57 58 59 60 61 62 63

ACC: t:\ao\design\lp1604fm471-90\pave-sign\
FILE: pavmrkplan25.dgn

STATE OF TEXAS
JOEL K. DAVENPORT, JR.
79276
REGISTERED PROFESSIONAL ENGINEER

Joel K Davenport Jr 9/19/00
Joel K. Davenport, Jr. P.E. 79276 Date

©2000 Texas Department of Transportation

# PAVEMENT MARKING AND DELINEATION LAYOUT

SHEET 25 OF 57

| FED. RD. DIV. NO. | FEDERAL AID PROJECT NO. | | SHEET NO. |
|---|---|---|---|
| 6 | NH 2000(704), etc. | | 782 |
| STATE | DIST. | COUNTY | |
| TEXAS | SAT | BEXAR | |
| CONT. | SECT. | JOB | HIGHWAY N |
| 2452 | 01 | 036, etc. | LP 1604 |

QUANTITIES THIS SHEET
CSJ 2452-01-037

SCALE 1:1000

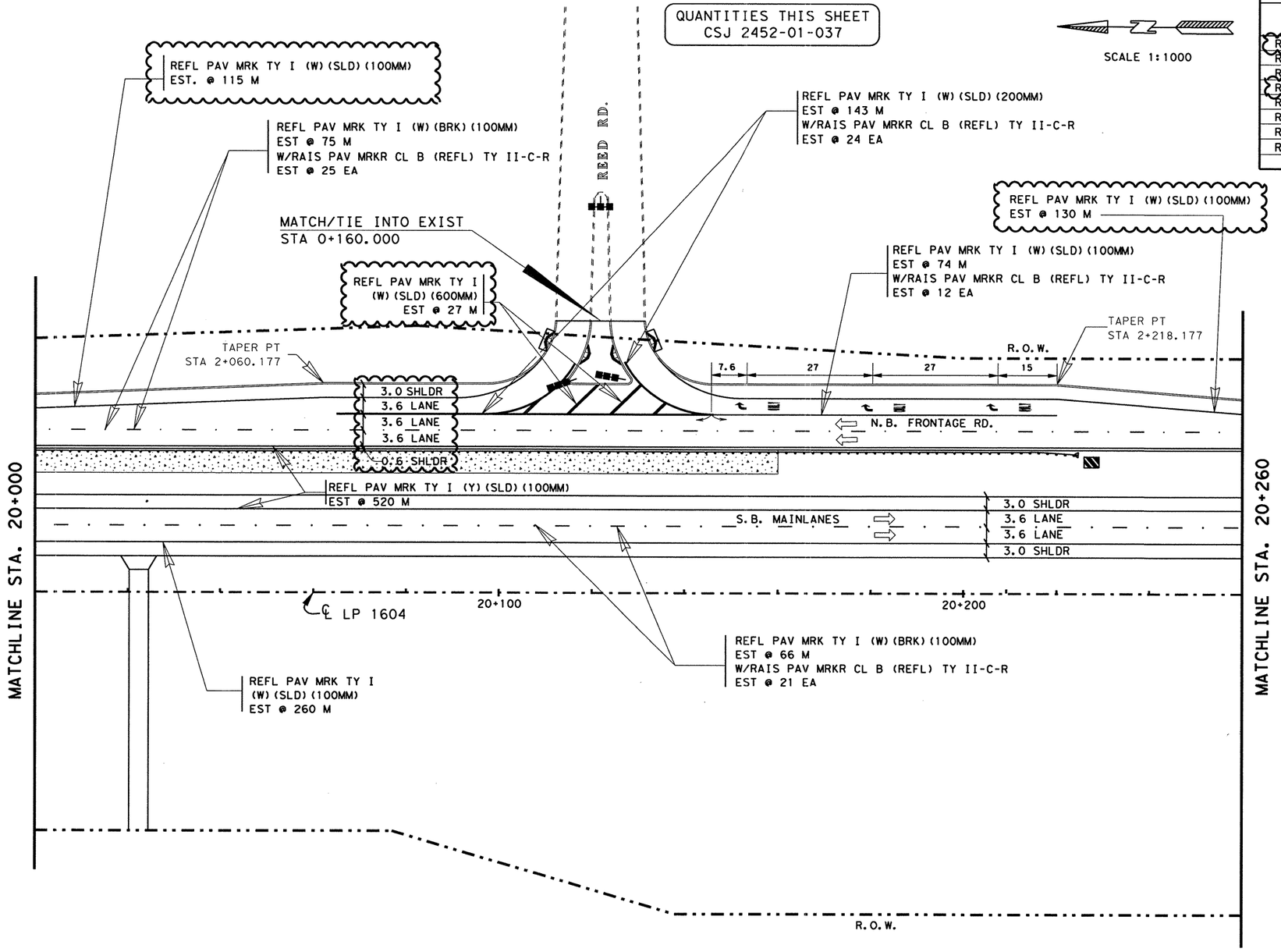


## ESTIMATED QUANTITIES

| ITEM | UNIT | QUANTITY 2452-01-037 |
|---|---|---|
| REFL PAV MRK TY I (W)(SLD)(100MM) | M | 579 |
| REFL PAV MRK TY I (W)(BRK)(100MM) | M | 141 |
| REFL PAV MRK TY I (W)(SLD)(200MM) | M | 143 |
| REFL PAV MRK TY I (W)(SLD)(600MM) | M | 27 |
| REFL PAV MRK TY I (W)(ARROW) | EA | 3 |
| REFL PAV MRK TY I (W)(WORD) | EA | 3 |
| REFL PAV MRK TY I (Y)(SLD)(100MM) | M | 520 |
| RAIS PAV MRKR CL B (REFL) TY II C-R | EA | 82 |

NOTE(S):

ALL DIMENSIONS ARE IN METERS UNLESS OTHERWISE NOTED.

QUANTITIES AND PLACEMENT OF TY II REFLECTIVE PAVEMENT MARKINGS ARE EXACTLY THE SAME AS TY I REFLECTIVE PAVEMENT MARKINGS. TY II QUANTITIES ACCOUNTED FOR ON THE PAVEMENT MARKING /DELINEATION SUMMARY.

ANY PAVEMENT MARKING IN CONFLICT WITH PROPOSED PAVEMENT MARKINGS SHALL BE REMOVED BY THE CONTRACTOR OR AS DIRECTED BY THE ENGINEER.

FOR ADDITIONAL DATA/DIMENSIONS, SEE INTERSECTION LAYOUT SHEET(S) 325 .

### DELINEATION QUANTITIES

| TYPE | EA. | ASM. | SPL. MNT. | SURF. MNT. |
|---|---|---|---|---|
| D-SW(a) | | | | |
| D-DW(a) | | | | |
| D-SY(a) | | | | |
| D-DY(a) | | | | |
| OM-2HP(Spl) | | 1 | | |
| OM-2SR(a) | | 2 | | |
| OM-3L | 1 | | | |
| | | | | |
| | | | | |

CHANGE ORDER NO. 65
-REVISED FRONT. RD LANE CONFIG.
-REVISED QUANTITIES

CHANGE ORDER 65

REVISED SHEET

STATE OF TEXAS
JEROME D. PAVLISKA
76075
REGISTERED PROFESSIONAL ENGINEER

Jerome D. Pavliska P.E. 4-16-04
Jerome D. Pavliska, P.E. Date

LEVELS DISPLAYED
1 2 3 4 5 6 7 8 9 10 11 12 13 14 15 16
1 2 3 4 5 6 7 8 9 10 11 12 13 14 15 16
3 3 4 5 5 6 6 7 8 8 9 10 11 12 13 14 15 16
9 9 0 5 1 5 2 6 3 5 4 5 5 6 6 7 8 6 5 9 6 0 6 1 6 2 6 3

ACC: t:\ao\design\lp1604fm471-90\pave-sign\
FILE: pavmrkplan25*co.dgn

©2000

Texas Department of Transportation

# PAVEMENT MARKING AND DELINEATION LAYOUT

SHEET 25 OF 57

| FED. RD. DIV. NO. | FEDERAL AID PROJECT NO. | | SHEET NO. |
|---|---|---|---|
| 6 | NH 2000(704), etc. | | 782A |
| STATE | DIST. | COUNTY | |
| TEXAS | SAT | BEXAR | |
| CONT. | SECT. | JOB | HIGHWAY NO. |
| 2452 | 01 | 036, etc. | LP 1604 |

SCALE 1:1000

10 ONLY

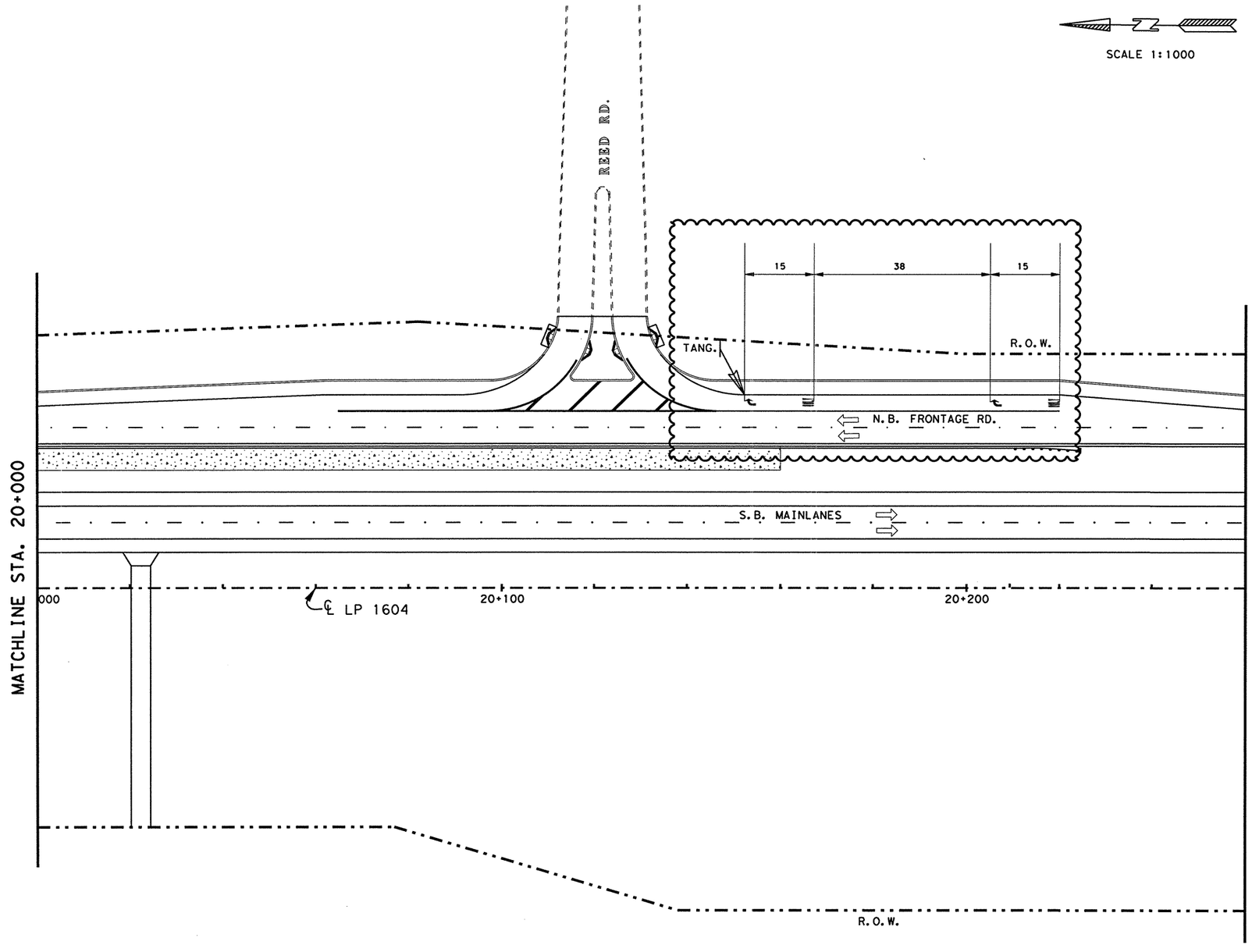


NOTE(S):

ALL DIMENSIONS ARE IN METERS UNLESS OTHERWISE NOTED.

QUANTITIES AND PLACEMENT OF TY II REFLECTIVE PAVEMENT MARKINGS ARE EXACTLY THE SAME AS TY I REFLECTIVE PAVEMENT MARKINGS. TY I AND TY II QUANTITIES ACCOUNTED FOR ON THE PAVEMENT MARKING /DELINEATION SUMMARY UNDER CHANGE ORDER NO. 65 AND 140.

ANY PAVEMENT MARKING IN CONFLICT WITH PROPOSED PAVEMENT MARKINGS SHALL BE REMOVED BY THE CONTRACTOR OR AS DIRECTED BY THE ENGINEER.

**SUPPLEMENT SHEET**

-REVISE LP 1604 NBFR SPACING FOR "ARROW" & "WORD" STRIPING.

-ELIMINATE "ARROW" & "WORD" ON LP 1604 NBFR THRU LANES.

Revised sheets

STATE OF TEXAS
MIGUEL G. ROGERIO
96620
LICENSED PROFESSIONAL ENGINEER

Miguel G. Rogerio, P.E. 5/3/2007
Miguel G. Rogerio, P.E. Date

©2007

Texas Department of Transportation

# PAVEMENT MARKING LAYOUT

**SHEET 25a OF 57**

| FED. RD. DIV. NO. | FEDERAL AID PROJECT NO. | | SHEET NO. |
|---|---|---|---|
| 6 | NH 2000(704), etc. | | 782AA |
| STATE | DIST. | COUNTY | |
| TEXAS | SAT | BEXAR | |
| CONT. | SECT. | JOB | HIGHWAY NO. |
| 2452 | 01 | 036, etc. | LP 1604 |

LEVELS DISPLAYED
1 2 3 4 5 6 7 8 | 1 1 1 1 1 1 1 1 | 1 2 3 4 5 6 7 8 | 1 2 3 4 5 6 7 8 | 1 2 3 4 5 6 7 8 | 1 2 3 4 5 6 7 8 | 1 2 3 4 5 6 7 8 | 1 2 3 4 5 6 7 8 | 1 2 3 4 5 6 7 8 | 1 2 3 4 5 6 7 8 | 1 2 3 4 5 6 7 8 | 1 2 3 4 5 6 7 8 | 1 2 3 4 5 6 7 8 | 1 2 3 4 5 6 7 8 | 1 2 3 4 5 6 7 8 | 1 2 3 4 5 6 7 8 | 1 2 3 4 5 6 7 8

ACC: +:\oo\design\tp1604fm471-90\pave-sign\
FILE: pavmrkplan25*co.dgn

QUANTITIES THIS SHEET
CSJ 2452-01-037

SCALE 1:1000

| ESTIMATED QUANTITIES | | |
|---|---|---|
| ITEM | UNIT | QUANTITY 2452-01-037 |
| REFL PAV MRK TY I (W)(SLD)(100MM) | M | 260 |
| REFL PAV MRK TY I (W)(BRK)(100MM) | M | 126 |
| REFL PAV MRK TY I (Y)(SLD)(100MM) | M | 520 |
| RAIS PAV MRKR CL B (REFL) TY II C-R | EA | 44 |
| | | |

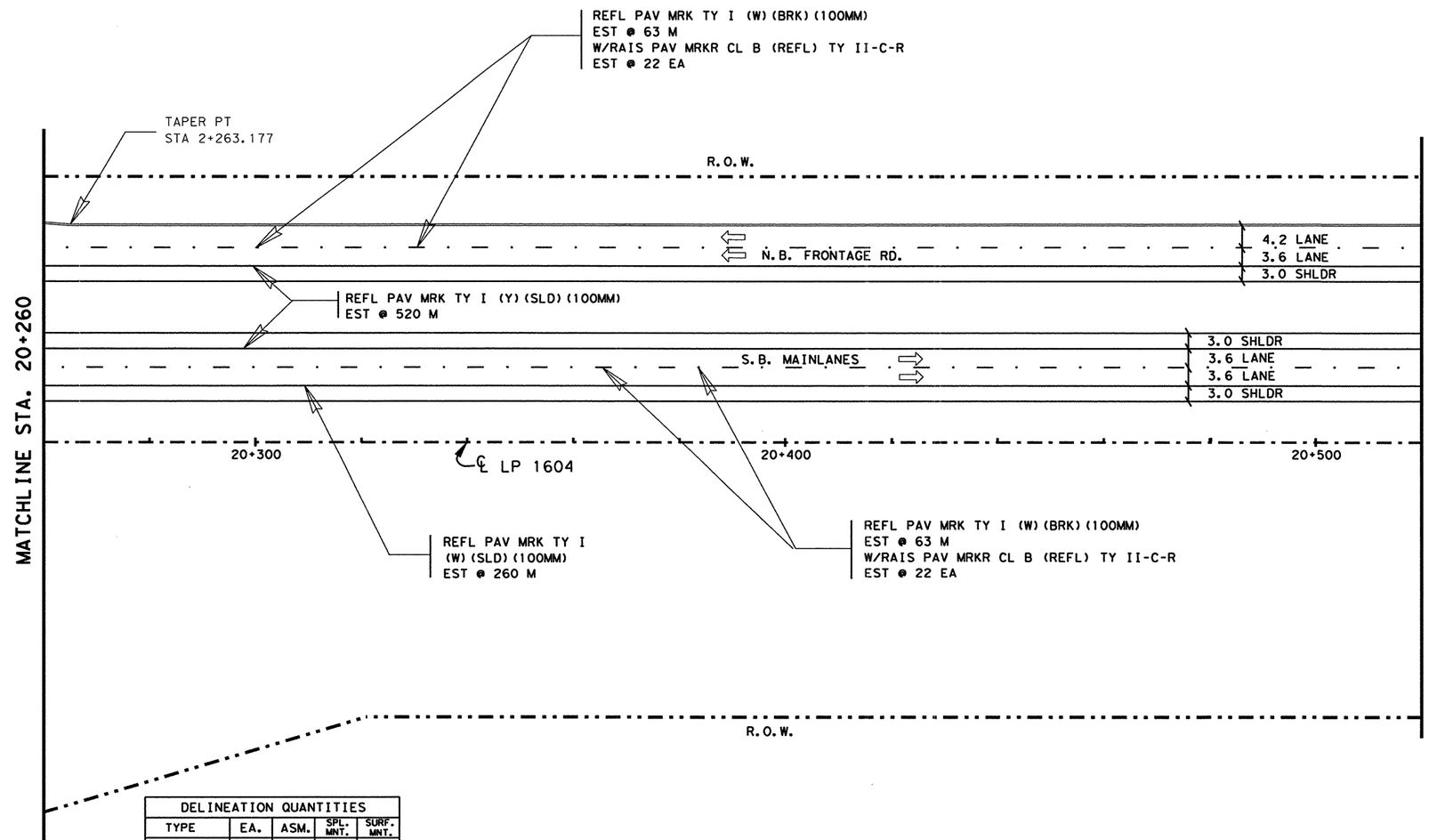


| DELINEATION QUANTITIES | | | | |
|---|---|---|---|---|
| TYPE | EA. | ASM. | SPL. MNT. | SURF. MNT. |
| D-SW(a) | | | | |
| D-DW(a) | | | | |
| D-SY(a) | | | | |
| D-DY(a) | | | | |
| OM-2SR(a) | | | | |
| | | | | |
| | | | | |
| | | | | |
| | | | | |

NOTE(S):

ALL DIMENSIONS ARE IN METERS UNLESS OTHERWISE NOTED.

QUANTITIES AND PLACEMENT OF TY II REFLECTIVE PAVEMENT MARKINGS ARE EXACTLY THE SAME AS TY I REFLECTIVE PAVEMENT MARKINGS. TY II QUANTITIES ACCOUNTED FOR ON THE PAVEMENT MARKING /DELINEATION SUMMARY.

ANY PAVEMENT MARKING IN CONFLICT WITH PROPOSED PAVEMENT MARKINGS SHALL BE REMOVED BY THE CONTRACTOR OR AS DIRECTED BY THE ENGINEER.

LEVELS DISPLAYED
1 2 3 4 5 6 7 8 9 10 11 12 13 14 15 16 17 18
1 2 3 23 24 25 26 27 28 29 30 31 32
33 34 35 36 37 38 39 40 41 42 43 44 45 46 47 48
49 50 51 52 53 54 55 56 57 58 59 60 61 62 63

ACC: t:\ao\design\ip1604fm471-90\pave-sign\
FILE: pavmrkplan26.dgn

STATE OF TEXAS
JOEL K. DAVENPORT, JR.
79276
REGISTERED PROFESSIONAL ENGINEER

Joel K. Davenport, Jr. 9/19/00
Joel K. Davenport, Jr. P.E. 79276 Date

Texas Department of Transportation

# PAVEMENT MARKING AND DELINEATION LAYOUT

SHEET 26 OF 57

| FED. RD. DIV. NO. | FEDERAL AID PROJECT NO. | | SHEET NO. |
|---|---|---|---|
| 6 | NH 2000(704), etc. | | 783 |
| STATE | DIST. | COUNTY | |
| TEXAS | SAT | BEXAR | |
| CONT. | SECT. | JOB | HIGHWAY NO. |
| 2452 | 01 | 036, etc. | LP 1604 |

QUANTITIES THIS SHEET
CSJ 2452-01-037

SCALE 1:1000

| ESTIMATED QUANTITIES | | |
|---|---|---|
| ITEM | UNIT | QUANTITY 2452-01-037 |
| REFL PAV MRK TY I (W)(SLD)(100MM) | M | 520 |
| REFL PAV MRK TY I (W)(BRK)(100MM) | M | 126 |
| REFL PAV MRK TY I (Y)(SLD)(100MM) | M | 520 |
| RAIS PAV MRKR CL B (REFL) TY II C-R | EA | 44 |

NOTE(S):

ALL DIMENSIONS ARE IN METERS UNLESS OTHERWISE NOTED.

QUANTITIES AND PLACEMENT OF TY II REFLECTIVE PAVEMENT MARKINGS ARE EXACTLY THE SAME AS TY I REFLECTIVE PAVEMENT MARKINGS. TY II QUANTITIES ACCOUNTED FOR ON THE PAVEMENT MARKING /DELINEATION SUMMARY.

ANY PAVEMENT MARKING IN CONFLICT WITH PROPOSED PAVEMENT MARKINGS SHALL BE REMOVED BY THE CONTRACTOR OR AS DIRECTED BY THE ENGINEER.

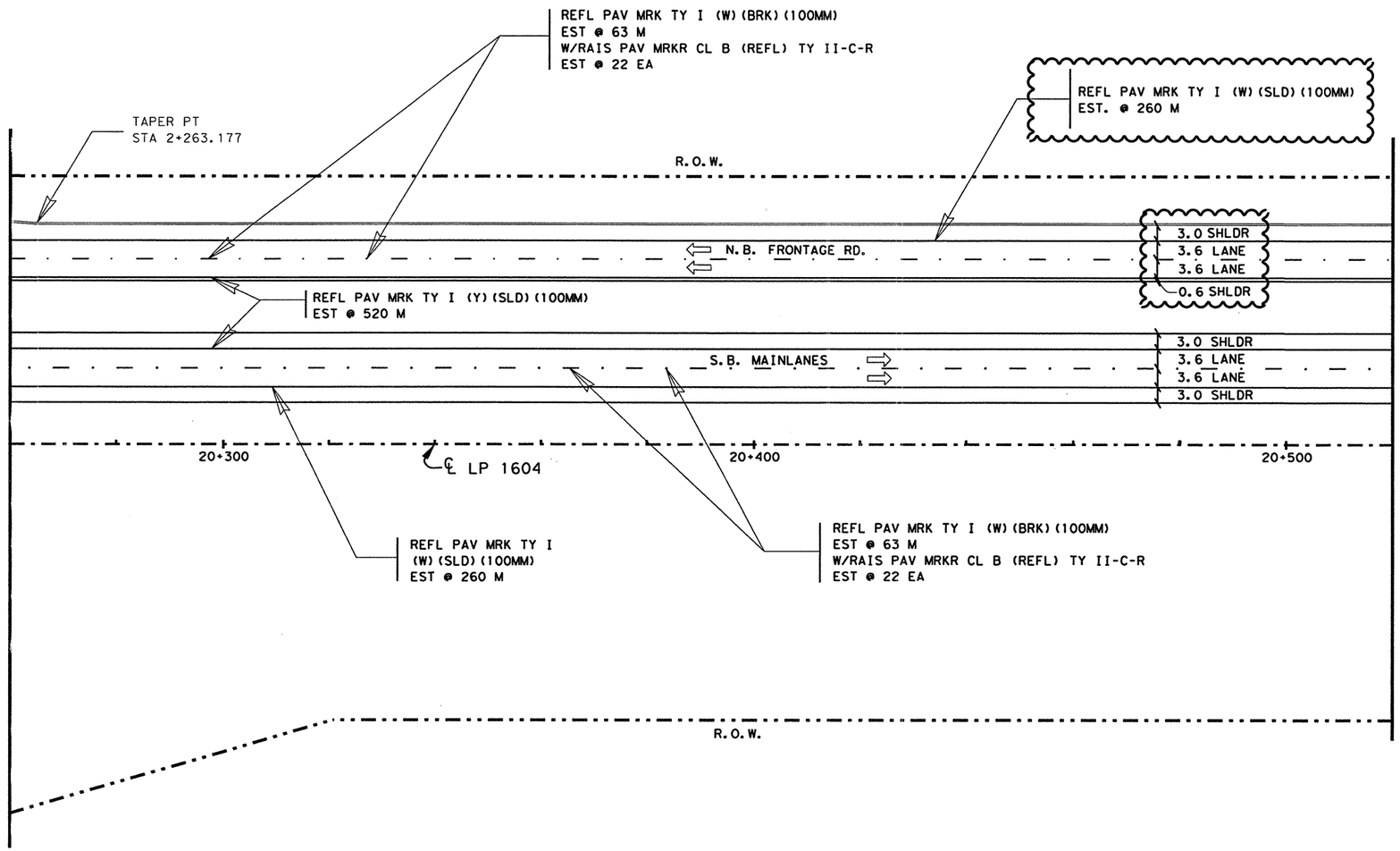


| DELINEATION QUANTITIES | | | | |
|---|---|---|---|---|
| TYPE | EA. | ASM. | SPL. MNT. | SURF. MNT. |
| D-SW(a) | | | | |
| D-DW(a) | | | | |
| D-SY(a) | | | | |
| D-DY(a) | | | | |
| OM-2SR(a) | | | | |
| | | | | |
| | | | | |
| | | | | |
| | | | | |

CHANGE ORDER NO. 65
-REVISED FRONT. RD LANE CONFIG.
-REVISED QUANTITIES

CHANGE ORDER 65

REVISED SHEET

STATE OF TEXAS
JEROME D. PAVLISKA
76075
REGISTERED
PROFESSIONAL ENGINEER

Jerome D. Pavliska, P.E. 4-06-04
Jerome D. Pavliska, P.E. Date

©2000
Texas Department of Transportation

PAVEMENT MARKING AND DELINEATION LAYOUT

SHEET 26 OF 57

| FED.RD. DIV.NO. | FEDERAL AID PROJECT NO. | | SHEET NO. |
|---|---|---|---|
| 6 | NH 2000(704),etc. | | 783A |
| STATE | DIST. | COUNTY | |
| TEXAS | SAT | BEXAR | |
| CONT. | SECT. | JOB | HIGHWAY NO. |
| 2452 | 01 | 036,etc. | LP 1604 |

LEVELS DISPLAYED
1 2 3 4 5 6 7 8 9 10 11 12 13 14 15 16
2 12 22 32 42 52 62 72 82 92 103 113 2
33 43 53 63 73 83 94 104 114 124 134 144 154 164 174 184 3
49 50 51 52 53 54 55 56 57 58 59 60 61 62 63 4

ACC: t:\ao\design\lp1604fm471-90\pave-sign\
FILE: pavmrkplan26.dgn

03.04.04

SCALE 1:1000

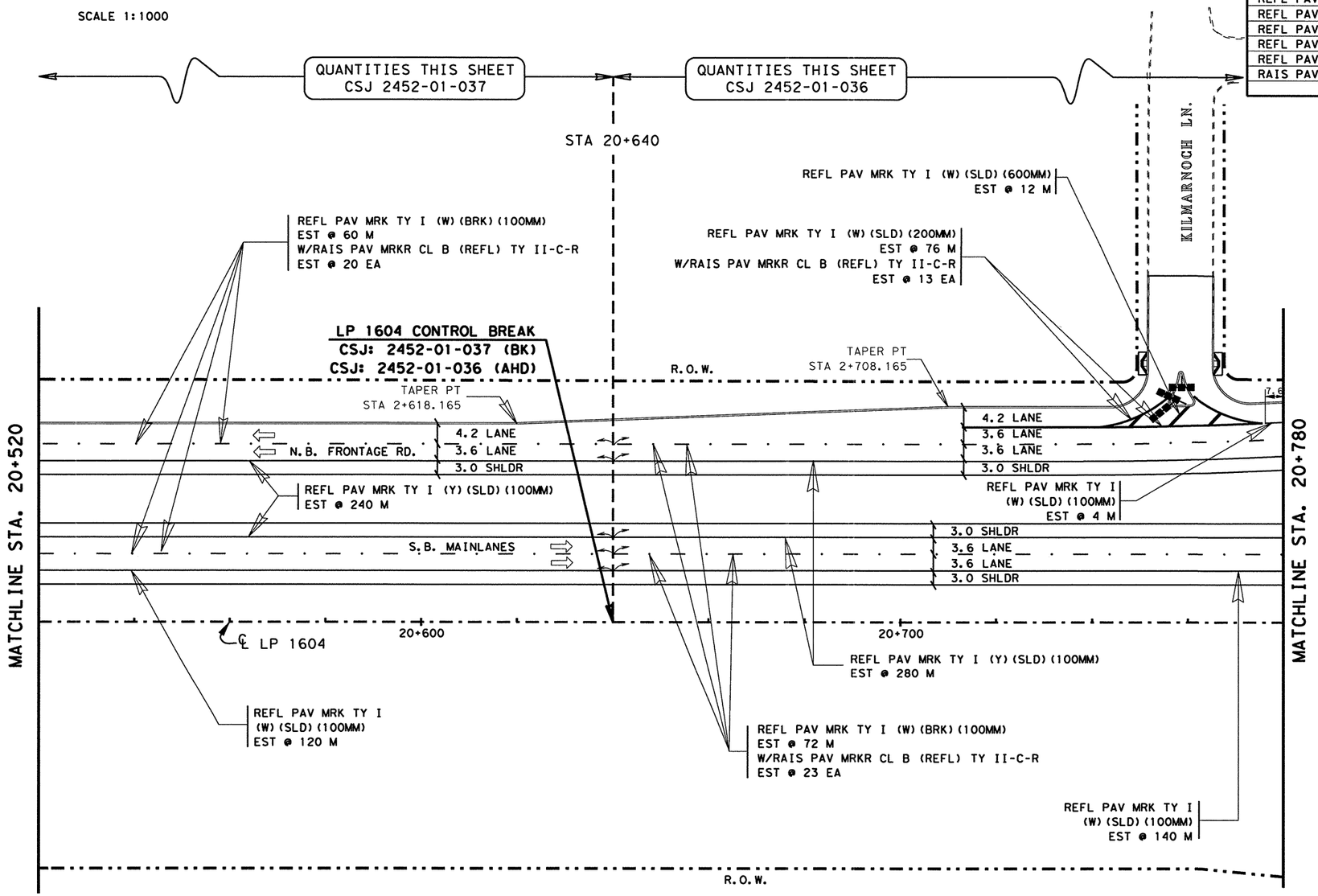


## ESTIMATED QUANTITIES

| ITEM | UNIT | QUANTITY | |
|---|---|---|---|
| | | 2452-01-036 | 2452-01-037 |
| REFL PAV MRK TY I (W) (SLD) (100MM) | M | 144 | 120 |
| REFL PAV MRK TY I (W) (BRK) (100MM) | M | 72 | 60 |
| REFL PAV MRK TY I (W) (SLD) (200MM) | M | 76 | - |
| REFL PAV MRK TY I (W) (SLD) (600MM) | M | 12 | - |
| REFL PAV MRK TY I (Y) (SLD) (100MM) | M | 280 | 240 |
| RAIS PAV MRKR CL B (REFL) TY II C-R | EA | 36 | 20 |
| | | | |

NOTE(S):

ALL DIMENSIONS ARE IN METERS UNLESS OTHERWISE NOTED.

QUANTITIES AND PLACEMENT OF TY II REFLECTIVE PAVEMENT MARKINGS ARE EXACTLY THE SAME AS TY I REFLECTIVE PAVEMENT MARKINGS. TY II QUANTITIES ACCOUNTED FOR ON THE PAVEMENT MARKING /DELINEATION SUMMARY.

ANY PAVEMENT MARKING IN CONFLICT WITH PROPOSED PAVEMENT MARKINGS SHALL BE REMOVED BY THE CONTRACTOR OR AS DIRECTED BY THE ENGINEER.

FOR ADDITIONAL DATA/DIMENSIONS, SEE INTERSECTION LAYOUT SHEET(S) 26.

CSJ 2452-01-036

| DELINEATION QUANTITIES | | | | |
|---|---|---|---|---|
| TYPE | EA. | ASM. | SPL. MNT. | SURF. MNT. |
| D-SW(a) | | | | |
| D-DW(a) | | | | |
| D-SY(a) | | | | |
| D-DY(a) | | | | |
| OM-2SR(a) | | 2 | | |
| OM-2HP(Spl) | | 1 | | |
| | | | | |
| | | | | |
| | | | | |

LEVELS DISPLAYED
1 2 3 4 5 6 7 8 9 10 11 12 13 14 15 16
1 2 21 22 23 24 25 26 27 28 29 30 31 32
33 34 35 36 37 38 39 40 41 42 43 44 45 46 47 48
49 50 51 52 53 54 55 56 57 58 59 60 61 62 63

ACC: t:\oa\design\
lp1604fm471-90\pave-sign\
FILE: pavmrkplan27.dgn

STATE OF TEXAS
JOEL K. DAVENPORT, JR.
79276
REGISTERED
PROFESSIONAL ENGINEER

Joel K. Davenport, Jr. 9/19/00
Joel K. Davenport, Jr. P.E. 79276 Date

©2000 Texas Department of Transportation

# PAVEMENT MARKING AND DELINEATION LAYOUT

SHEET 27 OF 57

| FED.RD. DIV.NO. | FEDERAL AID PROJECT NO. | | SHEET NO. |
|---|---|---|---|
| 6 | NH 2000(704), etc. | | 784 |
| STATE | DIST. | COUNTY | |
| TEXAS | SAT | BEXAR | |
| CONT. | SECT. | JOB | HIGHWAY NO. |
| 2 52 | 01 | 036, etc. | LP 1604 |

SCALE 1:1000

QUANTITIES THIS SHEET
CSJ 2452-01-037

QUANTITIES THIS SHEET
CSJ 2452-01-036

STA 20+640

KILMARNOCH LN.

REFL PAV MRK TY I (W) (SLD) (600MM)
EST @ 19 M

REFL PAV MRK TY I (W) (BRK) (100MM)
EST @ 60 M
W/RAIS PAV MRKR CL B (REFL) TY II-C-R
EST @ 20 EA

REFL PAV MRK TY I (W) (SLD) (200MM)
EST @ 115 M
W/RAIS PAV MRKR CL B (REFL) TY II-C-R
EST @ 19 EA

REFL PAV MRK TY I
(W) (SLD) (100MM)
EST. @ 15 M

REFL PAV MRK TY I (W) (SLD) (100MM)
EST. @ 120 M

REFL PAV MRK TY I
(W) (SLD) (100MM)
EST. @ 115 M

REFL PAV MRK TY I
(W) (SLD) (100MM)
EST @ 4 M

**LP 1604 CONTROL BREAK**
**CSJ: 2452-01-037 (BK)**
**CSJ: 2452-01-036 (AHD)**

R.O.W.

TAPER PT
STA 2+618.165

TAPER PT
STA 2+708.165

7.6

MATCHLINE STA. 20+520

3.0 SHLDR
3.6 LANE
3.6 LANE
0.6 SHLDR

N.B. FRONTAGE RD.

REFL PAV MRK TY I (Y) (SLD) (100MM)
EST @ 240 M

3.0 SHLDR
3.6 LANE
3.6 LANE
0.6 SHLDR

S.B. MAINLANES

3.0 SHLDR
3.6 LANE
3.6 LANE
3.0 SHLDR

MATCHLINE STA. 20+780

℄ LP 1604

20+600

20+700

REFL PAV MRK TY I (Y) (SLD) (100MM)
EST @ 280 M

REFL PAV MRK TY I
(W) (SLD) (100MM)
EST @ 120 M

REFL PAV MRK TY I (W) (BRK) (100MM)
EST @ 72 M
W/RAIS PAV MRKR CL B (REFL) TY II-C-R
EST @ 23 EA

REFL PAV MRK TY I
(W) (SLD) (100MM)
EST @ 140 M

R.O.W.

## ESTIMATED QUANTITIES

| ITEM | UNIT | QUANTITY 2452-01-036 | QUANTITY 2452-01-037 |
|---|---|---|---|
| REFL PAV MRK TY I (W) (SLD) (100MM) | M | 270 | 240 |
| REFL PAV MRK TY I (W) (BRK) (100MM) | M | 72 | 60 |
| REFL PAV MRK TY I (W) (SLD) (200MM) | M | 115 | - |
| REFL PAV MRK TY I (W) (SLD) (600MM) | M | 19 | - |
| REFL PAV MRK TY I (Y) (SLD) (100MM) | M | 280 | 240 |
| RAIS PAV MRKR CL B (REFL) TY II C-R | EA | 42 | 20 |

NOTE(S):

ALL DIMENSIONS ARE IN METERS UNLESS OTHERWISE NOTED.

QUANTITIES AND PLACEMENT OF TY II REFLECTIVE PAVEMENT MARKINGS ARE EXACTLY THE SAME AS TY I REFLECTIVE PAVEMENT MARKINGS. TY II QUANTITIES ACCOUNTED FOR ON THE PAVEMENT MARKING /DELINEATION SUMMARY.

ANY PAVEMENT MARKING IN CONFLICT WITH PROPOSED PAVEMENT MARKINGS SHALL BE REMOVED BY THE CONTRACTOR OR AS DIRECTED BY THE ENGINEER.

FOR ADDITIONAL DATA/DIMENSIONS, SEE INTERSECTION LAYOUT SHEET(S) 326.

CSJ 2452-01-036

| DELINEATION QUANTITIES | | | | |
|---|---|---|---|---|
| TYPE | EA. | ASM. | SPL. MNT. | SURF. MNT. |
| D-SW(a) | | | | |
| D-DW(a) | | | | |
| D-SY(a) | | | | |
| D-DY(a) | | | | |
| OM-2SR(a) | | 2 | | |
| OM-2HP(Spl) | | 1 | | |
| | | | | |
| | | | | |
| | | | | |

CHANGE ORDER NO. 65
-REVISED FRONT. RD LANE CONFIG.
-REVISED QUANTITIES

**CHANGE ORDER 65**

**REVISED SHEET**

STATE OF TEXAS
JEROME D. PAVLISKA
76075
REGISTERED
PROFESSIONAL ENGINEER

Jerome D. Pavliska, P.E. 2/06/04
Jerome D. Pavliska, P.E. Date

©2000

Texas Department of Transportation

# PAVEMENT MARKING AND DELINEATION LAYOUT

**SHEET 27 OF 57**

| FED.RD. DIV.NO. | FEDERAL AID PROJECT NO. | | SHEET NO. |
|---|---|---|---|
| 6 | NH 2000(704), etc. | | 784A |
| STATE | DIST. | COUNTY | |
| TEXAS | SAT | BEXAR | |
| CONT. | SECT. | JOB | HIGHWAY NO. |
| 2452 | 01 | 036, etc. | LP 1604 |

LEVELS DISPLAYED
1 2 3 4 5 6 7 8 9 10 11 12 13 14 15 16
18
33 34 35 36 37 38 39 40 41 42 43 44 45 46 47 48
49 50 51 52 53 54 55 56 57 58 59 60 61 62 63

ACC: t:\oa\design\
lp1604fm471-90\pave-sign\
FILE: pavmrkplan27.dgn

QUANTITIES THIS SHEET
CSJ 2452-01-036

SCALE 1:1000

| ESTIMATED QUANTITIES | | |
|---|---|---|
| ITEM | UNIT | QUANTITY |
| | | 2452-01-036 |
| REFL PAV MRK TY I (W)(SLD)(100MM) | M | 287 |
| REFL PAV MRK TY I (W)(BRK)(100MM) | M | 132 |
| REFL PAV MRK TY I (W)(ARROW) | EA | 1 |
| REFL PAV MRK TY I (W)(WORD) | EA | 1 |
| REFL PAV MRK TY I (Y)(SLD)(100MM) | M | 520 |
| RAIS PAV MRKR CL B (REFL) TY II C-R | EA | 48 |
| | | |

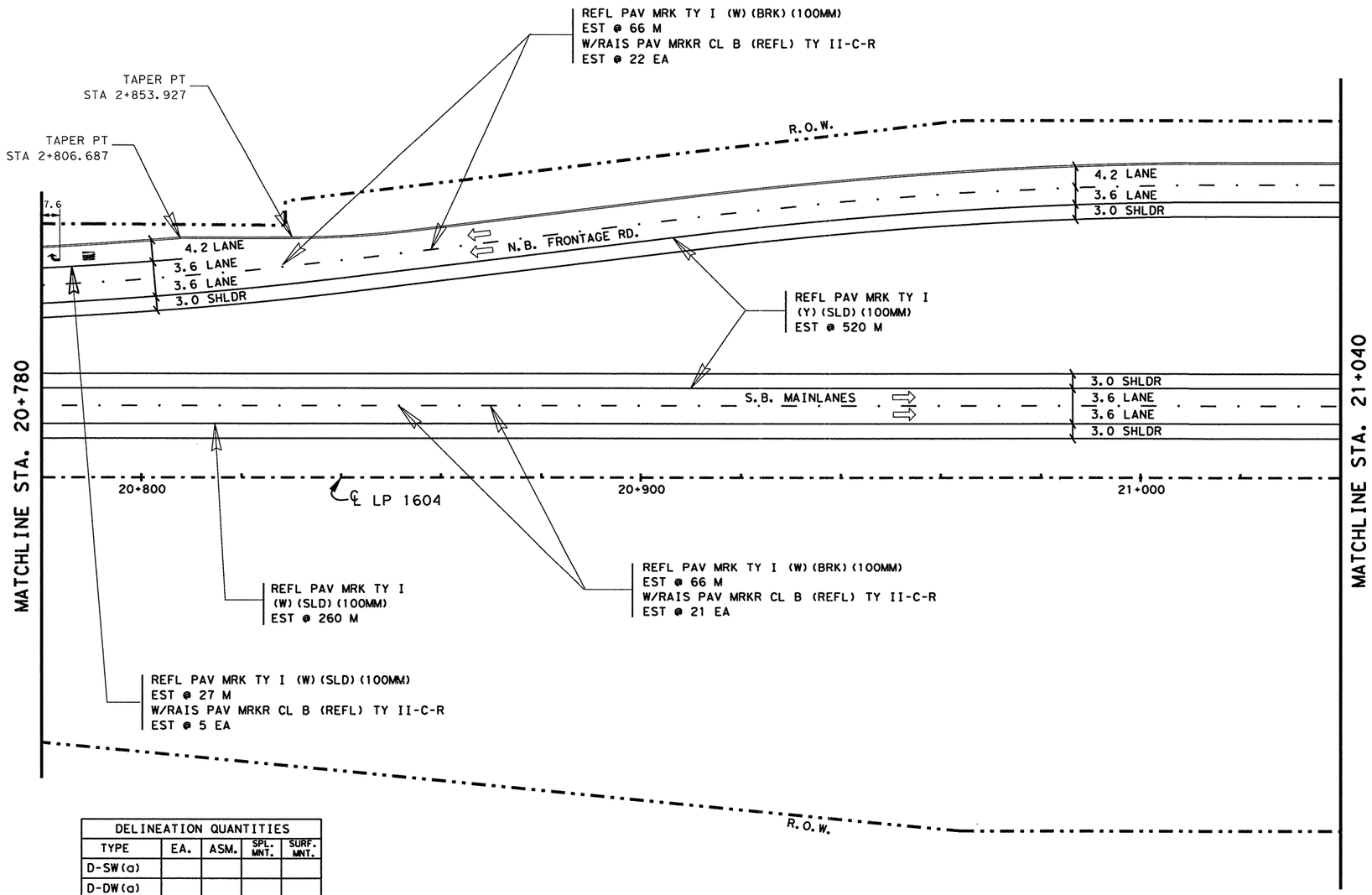


| DELINEATION QUANTITIES | | | | |
|---|---|---|---|---|
| TYPE | EA. | ASM. | SPL. MNT. | SURF. MNT. |
| D-SW(a) | | | | |
| D-DW(a) | | | | |
| D-SY(a) | | | | |
| D-DY(a) | | | | |
| OM-2SR(a) | | | | |
| | | | | |
| | | | | |
| | | | | |
| | | | | |

NOTE(S):

ALL DIMENSIONS ARE IN METERS UNLESS OTHERWISE NOTED.

QUANTITIES AND PLACEMENT OF TY II REFLECTIVE PAVEMENT MARKINGS ARE EXACTLY THE SAME AS TY I REFLECTIVE PAVEMENT MARKINGS. TY II QUANTITIES ACCOUNTED FOR ON THE PAVEMENT MARKING /DELINEATION SUMMARY.

ANY PAVEMENT MARKING IN CONFLICT WITH PROPOSED PAVEMENT MARKINGS SHALL BE REMOVED BY THE CONTRACTOR OR AS DIRECTED BY THE ENGINEER.

STATE OF TEXAS
JOEL K. DAVENPORT, JR.
79276
REGISTERED
PROFESSIONAL ENGINEER

Joel K. Davenport, Jr. P.E. 79276 — 9/19/00
Joel K. Davenport, Jr. P.E. 79276 — Date

©2000

Texas Department of Transportation

# PAVEMENT MARKING AND DELINEATION LAYOUT

SHEET 28 OF 57

| FED. RD. DIV. NO. | FEDERAL AID PROJECT NO. | | SHEET NO. |
|---|---|---|---|
| 6 | NH 2000(704),etc. | | 785 |
| STATE | DIST. | COUNTY | |
| TEXAS | SAT | BEXAR | |
| CONT. | SECT. | JOB | HIGHWAY NO. |
| 2452 | 01 | 036,etc. | LP 1604 |

LEVELS DISPLAYED
1 2 3 4 5 6 7 8 9 10 11 12 13 14 15 16
33 34 35 36 37 38 39 40 41 42 43 44 45 46 47 48
49 50 51 52 53 54 55 56 57 58 59 60 61 62 63

ACC: t:\ao\design\lp1604fm471-90\pave-sign\
FILE: pavmrkplan28.dgn

Plotted on: 01/26/2004

QUANTITIES THIS SHEET
CSJ 2452-01-036

SCALE 1:1000

## ESTIMATED QUANTITIES

| ITEM | UNIT | QUANTITY |
|---|---|---|
| | | 2452-01-036 |
| REFL PAV MRK TY I (W)(SLD)(100MM) | M | 54 |
| REFL PAV MRK TY I (W)(BRK)(100MM) | M | 132 |
| REFL PAV MRK TY I (W)(DOT)(100MM) | M | 15 |
| REFL PAV MRK TY I (W)(ARROW) | EA | 1 |
| REFL PAV MRK TY I (W)(WORD) | EA | 1 |
| REFL PAV MRK TY I (Y)(SLD)(100MM) | M | 520 |
| RAIS PAV MRKR CL B (REFL) TY II C-R | EA | 48 |

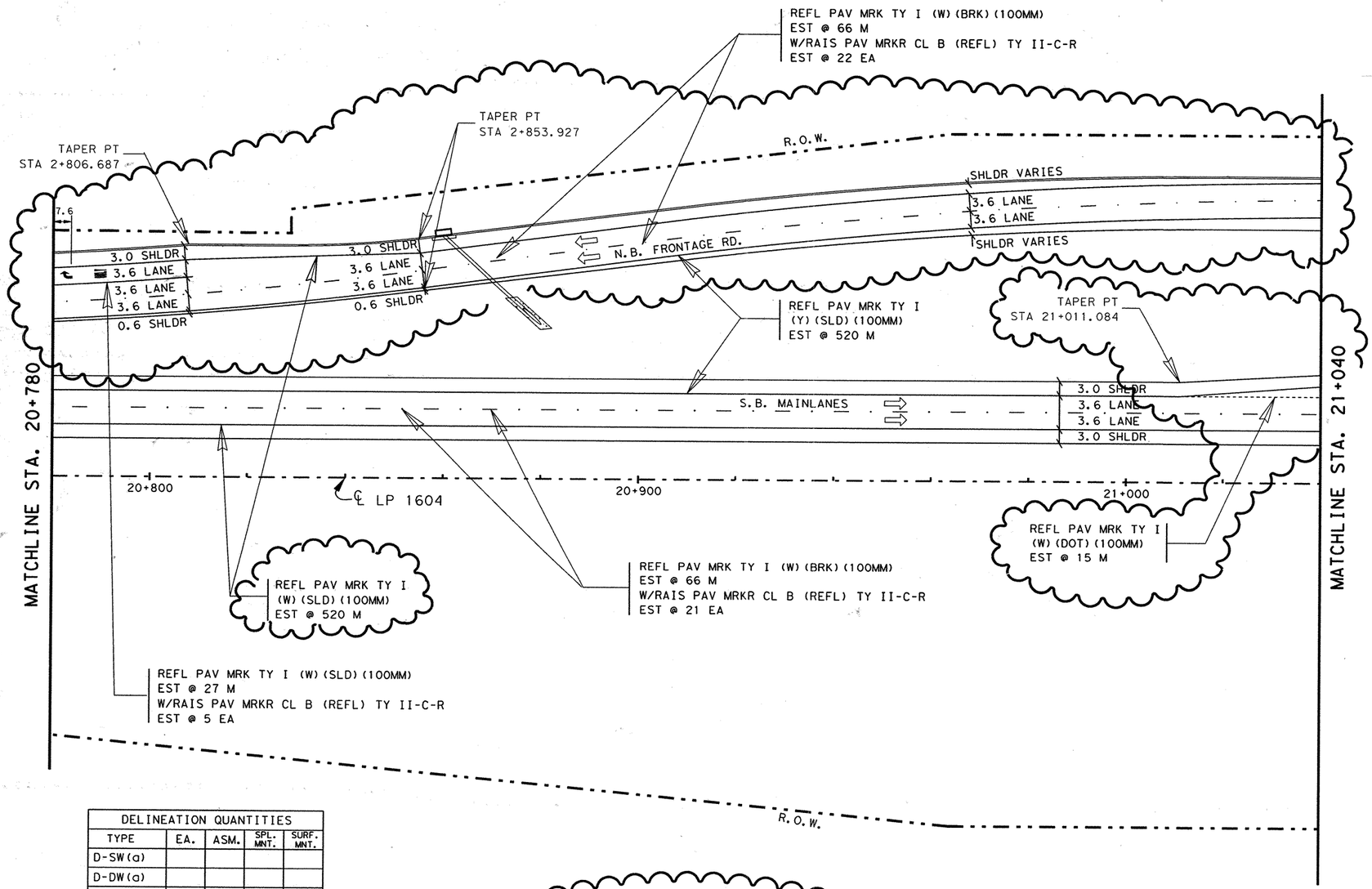


| DELINEATION QUANTITIES | | | | |
|---|---|---|---|---|
| TYPE | EA. | ASM. | SPL. MNT. | SURF. MNT. |
| D-SW(a) | | | | |
| D-DW(a) | | | | |
| D-SY(a) | | | | |
| D-DY(a) | | | | |
| OM-2SR(a) | | | | |
| | | | | |
| | | | | |
| | | | | |
| | | | | |

CHANGE ORDER NO. 65

-REVISED RDWY GEOMETRICS AND LANE CONFIGURATIONS
-REVISED QUANTITIES

NOTE(S):

ALL DIMENSIONS ARE IN METERS UNLESS OTHERWISE NOTED.

QUANTITIES AND PLACEMENT OF TY II REFLECTIVE PAVEMENT MARKINGS ARE EXACTLY THE SAME AS TY I REFLECTIVE PAVEMENT MARKINGS. TY II QUANTITIES ACCOUNTED FOR ON THE PAVEMENT MARKING /DELINEATION SUMMARY.

ANY PAVEMENT MARKING IN CONFLICT WITH PROPOSED PAVEMENT MARKINGS SHALL BE REMOVED BY THE CONTRACTOR OR AS DIRECTED BY THE ENGINEER.

CHANGE ORDER NO. 65 | REVISED SHEET

555 EAST RAMSEY SAN ANTONIO TEXAS 78216
PHONE (210)375-9000
FAX (210)375-9010
PAPE-DAWSON ENGINEERS
CIVIL & ENVIRONMENTAL
STATE OF TEXAS
J. KENT O'BRIEN
64398
LICENSED
PROFESSIONAL ENGINEER
J. KENT O'BRIEN P.E. 1/27/2004
DATE

©2000
Texas Department of Transportation

# PAVEMENT MARKING AND DELINEATION LAYOUT

SHEET 28 OF 57

| FED.RD. DIV.NO. | FEDERAL AID PROJECT NO. | | SHEET NO. |
|---|---|---|---|
| 6 | NH 2000(704),etc. | | 785A |
| STATE | DIST. | COUNTY | |
| TEXAS | SAT | BEXAR | |
| CONT. | SECT. | JOB | HIGHWAY NO. |
| 2452 | 01 | 036,etc. | LP 1604 |

Design Filename: p:\52\20\11\design\civil\plansheets\traffic\pave-mark\pavmrkplan28.dgn

LEVELS DISPLAYED
1 2 3 4 5 6 7 8 9 10 11 12 13 14 15 16
2 24 26 32 42 52 62 72 82 93 03 13 23
33 43 53 63 73 83 93 04 14 24 34 44 54 64 74 84
96 05 15 25 35 45 55 65 75 85 96 06 16 26 36

ACC: t:\oa\design\
lp1604fm471-90\pave-sign\
FILE: pavmrkplan28.dgn

SCALE 1:1000

10 ONLY

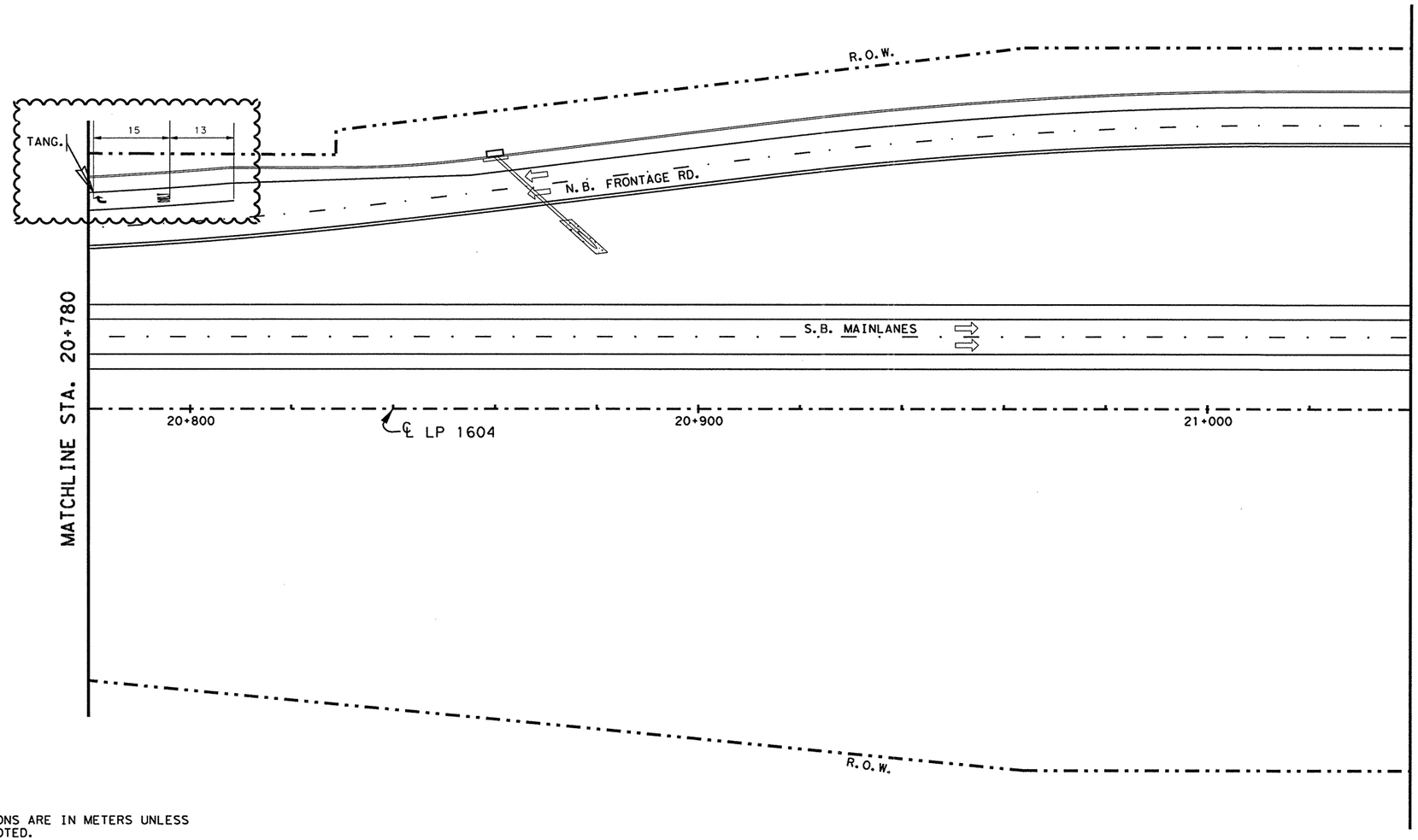


NOTE(S):

ALL DIMENSIONS ARE IN METERS UNLESS OTHERWISE NOTED.

QUANTITIES AND PLACEMENT OF TY II REFLECTIVE PAVEMENT MARKINGS ARE EXACTLY THE SAME AS TY I REFLECTIVE PAVEMENT MARKINGS. TY I AND TY II QUANTITIES ACCOUNTED FOR ON THE PAVEMENT MARKING /DELINEATION SUMMARY UNDER CHANGE ORDER NO. 65 AND 140.

ANY PAVEMENT MARKING IN CONFLICT WITH PROPOSED PAVEMENT MARKINGS SHALL BE REMOVED BY THE CONTRACTOR OR AS DIRECTED BY THE ENGINEER.

**SUPPLEMENT SHEET**

-REVISE LP 1604 NBFR SPACING FOR "ARROW" & "WORD" STRIPING.

-ELIMINATE "ARROW" & "WORD" ON LP 1604 NBFR THRU LANES.

Revised Sheets

STATE OF TEXAS — MIGUEL G. ROGERIO — 96620 — LICENSED PROFESSIONAL ENGINEER

Miguel G. Rogerio, P.E. — 5/7/2007 Date

©2007

Texas Department of Transportation

# PAVEMENT MARKING LAYOUT

**SHEET 28a OF 57**

| FED.RD. DIV.NO. | FEDERAL AID PROJECT NO. | | SHEET NO. |
|---|---|---|---|
| 6 | NH 2000(704), etc. | | 785AA |
| STATE | DIST. | COUNTY | |
| TEXAS | SAT | BEXAR | |
| CONT. | SECT. | JOB | HIGHWAY NO. |
| 2452 | 01 | 036, etc. | LP 1604 |

LEVELS DISPLAYED
1 2 3 4 5 6 7 8 | 1 2 3 4 5
2 1 2 2 3 2 4 2 5 2 6 2 7 2 8 2 9 3 0 3 1 3 2
3 3 3 4 3 5 3 6 3 7 3 8 3 9 4 0 4 1 4 2 4 3 4 4 4 5 4 6 4 7 4 8
4 9 5 0 5 1 5 2 5 3 5 4 5 5 5 6 5 7 5 8 5 9 6 0 6 1 6 2 6 3

ACC: t:\oo\design\lp1604fm471-90\pave-sign\
FILE: pavmrkplan28.dgn

REFL PAV MRK TY I (W)(SLD)(200MM) EST @ 17 M
W/RAIS PAV MRKR CL B (REFL) TY II-C-R EST @ 3 EA

REFL PAV MRK TY I (W)(SLD)(600MM) EST @ 78 M

TURNAROUND
REFL PAV MRK TY I (W)(SLD)(200MM) EST @ 31 M
w/ REFL PAV MRK TY I (W)(SLD)(600MM) EST @ 8 M
w/ REFL PAV MRK TY I (Y)(SLD)(200MM) EST @ 24 M
w/ REFL PAV MRK TY I (Y)(SLD)(600MM) EST @ 13 M
w/ RAIS PAV MRKR CL B (REFL) TY II-A-A EST @ 23 EA
w/ RAIS PAV MRKR CL B (REFL) TY II-C-R EST @ 11 EA

REFL PAV MRK TY I (Y)(SLD)(100MM) EST @ 233 M

REFL PAV MRK TY I (W)(BRK)(100MM) EST @ 87 M
W/RAIS PAV MRKR CL B (REFL) TY II-C-R EST @ 28 EA

R.O.W.

TAPER PT STA 3+084.277

TAPER PT STA 3+129.277

4.2 LANE
3.6 LANE
3.6 LANE
3.6 LANE
1.2 SHLDR

N.B. FRONTAGE RD.

TAPER PT STA 3+057.589

TAPER PT STA 3+102.589

REFL PAV MRK TY I (W)(SLD)(100MM) EST @ 200 M
W/RAIS PAV MRKR CL B (REFL) TY II-C-R EST @ 33 EA

NTAR

TAPER PT STA 21+058.312

TAPER PT STA 21+103.312

15 33 33 15

MATCHLINE STA. 21+040

TAPER PT STA 21+084.000

TAPER PT STA 21+129.000

15 26 26 15

21+100

℄ LP 1604

21+200

REFL PAV MRK TY I (W)(SLD)(100MM) EST @ 164 M

TURNAROUND
REFL PAV MRK TY I (W)(SLD)(200MM) EST @ 30 M
w/ REFL PAV MRK TY I (W)(SLD)(600MM) EST @ 12 M
w/ REFL PAV MRK TY I (Y)(SLD)(200MM) EST @ 24 M
w/ REFL PAV MRK TY I (Y)(SLD)(600MM) EST @ 9 M
w/ RAIS PAV MRKR CL B (REFL) TY II-A-A EST @ 23 EA
w/ RAIS PAV MRKR CL B (REFL) TY II-C-R EST @ 10 EA

REFL PAV MRK TY I (W)(BRK)(100MM) EST @ 45 M
W/RAIS PAV MRKR CL B (REFL) TY II-C-R EST @ 15 EA

REFL PAV MRK TY I (W)(SLD)(200MM) EST @ 17 M
W/RAIS PAV MRKR CL B (REFL) TY II-C-R EST @ 3 EA

REFL PAV MRK TY I (W)(SLD)(600MM) EST @ 78 M

R.O.W.

NOTE(S):

ALL DIMENSIONS ARE IN METERS UNLESS OTHERWISE NOTED.

QUANTITIES AND PLACEMENT OF TY II REFLECTIVE PAVEMENT MARKINGS ARE EXACTLY THE SAME AS TY I REFLECTIVE PAVEMENT MARKINGS. TY II QUANTITIES ACCOUNTED FOR ON THE PAVEMENT MARKING /DELINEATION SUMMARY.

ANY PAVEMENT MARKING IN CONFLICT WITH PROPOSED PAVEMENT MARKINGS SHALL BE REMOVED BY THE CONTRACTOR OR AS DIRECTED BY THE ENGINEER.

| DELINEATION QUANTITIES | | | | |
|---|---|---|---|---|
| TYPE | EA. | ASM. | SPL. MNT. | SURF. MNT. |
| D-SW(a) | | | | |
| D-DW(a) | | | | |
| D-SY(a) | | | | |
| D-DY(a) | | | | |
| OM-2HP(Spl) | | 6 | | |
| OM-2SR(a) | | 10 | | |
| | | | | |
| | | | | |
| | | | | |

REFL PAV MRK TY I (W)(SLD)(200MM) EST @ 17 M
W/RAIS PAV MRKR CL B (REFL) TY II-C-R EST @ 3 EA

SCALE 1:1000

R.O.W.

MILITARY DRIVE

SEE SHEET 29A OF 57 FOR PAVEMENT MARKING ASSOCIATED WITH MILITARY DRIVE.

15 28 28

REFL PAV MRK TY I (W)(SLD)(100MM) EST @ 80 M
W/RAIS PAV MRKR CL B (REFL) TY II-C-R EST @ 14 EA

STAR

15 33

TURNAROUND
REFL PAV MRK TY I
(W)(SLD)(200MM) EST @ 26 M
w/ REFL PAV MRK TY I
(W)(SLD)(600MM) EST @ 11 M
w/ REFL PAV MRK TY I
(Y)(SLD)(200MM) EST @ 21 M
w/ REFL PAV MRK TY I
(Y)(SLD)(600MM) EST @ 9 M
w/ RAIS PAV MRKR
CL B (REFL) TY II-A-A EST @ 20 EA
w/ RAIS PAV MRKR
CL B (REFL) TY II-C-R EST @ 11 EA

S.B. MAINLANES

MATCHLINE STA. 21+320

21+300

REFL PAV MRK TY I (W)(BRK)(100MM) EST @ 48 M
W/RAIS PAV MRKR CL B (REFL) TY II-C-R EST @ 16 EA

REFL PAV MRK TY I (W)(SLD)(100MM) EST @ 68 M

REFL PAV MRK TY I (W)(SLD)(200MM) EST @ 16 M
W/RAIS PAV MRKR CL B (REFL) TY II-C-R EST @ 3 EA

TURNAROUND
REFL PAV MRK TY I
(W)(SLD)(200MM) EST @ 24 M
w/ REFL PAV MRK TY I
(W)(SLD)(600MM) EST @ 8 M
w/ REFL PAV MRK TY I
(Y)(SLD)(200MM) EST @ 24 M
w/ REFL PAV MRK TY I
(Y)(SLD)(600MM) EST @ 13 M
w/ RAIS PAV MRKR
CL B (REFL) TY II-A-A EST @ 23 EA
w/ RAIS PAV MRKR
CL B (REFL) TY II-C-R EST @ 11 EA

R.O.W.

## ESTIMATED QUANTITIES

| ITEM | UNIT | QUANTITY 2452-01-036 |
|---|---|---|
| REFL PAV MRK TY I (W)(SLD)(100MM) | M | 512 |
| REFL PAV MRK TY I (W)(BRK)(100MM) | M | 180 |
| REFL PAV MRK TY I (W)(SLD)(200MM) | M | 178 |
| REFL PAV MRK TY I (W)(SLD)(600MM) | M | 195 |
| REFL PAV MRK TY I (W)(ARROW) | EA | 9 |
| REFL PAV MRK TY I (W)(DBL ARROW) | EA | 5 |
| REFL PAV MRK TY I (W)(WORD) | EA | 9 |
| REFL PAV MRK TY I (Y)(SLD)(100MM) | M | 233 |
| REFL PAV MRK TY I (Y)(SLD)(200MM) | M | 93 |
| REFL PAV MRK TY I (Y)(SLD)(600MM) | M | 44 |
| RAIS PAV MRKR CL B (REFL) TY II A-A | EA | 89 |
| RAIS PAV MRKR CL B (REFL) TY II C-R | EA | 161 |

STATE OF TEXAS
JOEL K. DAVENPORT, JR.
79276
REGISTERED PROFESSIONAL ENGINEER

Joel K. Davenport, Jr. 9/19/00
Joel K. Davenport, Jr. P.E. 79276 Date

QUANTITIES THIS SHEET
CSJ 2452-01-036

©2000

Texas Department of Transportation

# PAVEMENT MARKING AND DELINEATION LAYOUT

SHEET 29 OF 57

| FED.RD. DIV.NO. | FEDERAL AID PROJECT NO. | | SHEET NO. |
|---|---|---|---|
| 6 | NH 2000(704),etc. | | 786 |
| STATE | DIST. | COUNTY | |
| TEXAS | SAT | BEXAR | |
| CONT. | SECT. | JOB | HIGHWAY NO. |
| 2452 | 01 | 036,etc. | LP 1604 |

LEVELS DISPLAYED
1 2 3 4 5 6 7 8 9 10 11 12 13 14 15 16
17 18 19 20 21 22 23 24 25 26 27 28 29 30 31 32
33 34 35 36 37 38 39 40 41 42 43 44 45 46 47 48
49 50 51 52 53 54 55 56 57 58 59 60 61 62 63

ACC: t:\ao\design\
lp1604fm471-90\pave-sign\
FILE: pavmrkplan29.dgn

Plotted on: 01/26/2004

Design Filename: p:\52\20\11\design\civil\plansheets\traffic\pave-mark\pavmrkplan29.dgn

LEVELS DISPLAYED
1 2 3 4 5 6 7 8 9 10 11 12 13 14 15 16
17 18 19 20 21 22 23 24 25 26 27 28 29 30 31 32
33 34 35 36 37 38 39 40 41 42 43 44 45 46 47 48
49 50 51 52 53 54 55 56 57 58 59 60 61 62 63
ACC: t:\ao\design\
lp1604fm471-90\pave-sign\
FILE: pavmrkplan29.dgn

REFL PAV MRK TY I (W) (SLD) (600MM) EST @ 4 M
REFL PAV MRK TY I (W) (SLD) (200MM) EST @ 17 M
W/RAIS PAV MRKR CL B (REFL) TY II-C-R EST @ 3 EA

CROSSWALK
REFL PAV MRK TY I
(W) (SLD) (600MM)
EST @ 66 M

MILITARY DRIVE

REFL PAV MRK TY I (W) (SLD)
(200MM) EST @ 17 M
REFL PAV MRK TY I (W) (SLD)
(600MM) EST @ 6 M
W/RAIS PAV MRKR CL B (REFL)
TY II-C-R EST @ 3 EA

SCALE 1:1000

REFL PAV MRK TY I (W)
(SLD) (100MM) EST @ 50

R.O.W.

TURNAROUND
REFL PAV MRK TY I (W) (SLD) (200MM) EST @ 29 M
w/ REFL PAV MRK TY I (W) (SLD) (600MM) EST @ 8 M
w/ REFL PAV MRK TY I (Y) (SLD) (200MM) EST @ 27 M
w/ REFL PAV MRK TY I (Y) (SLD) (600MM) EST @ 13 M
w/ RAIS PAV MRKR CL B (REFL) TY II-A-A EST @ 47 EA
w/ RAIS PAV MRKR CL B (REFL) TY II-C-R EST @ 11 EA

REFL PAV MRK TY I
(Y) (SLD) (100MM)
EST @ 233 M

REFL PAV MRK TY I
(W) (BRK) (100MM)
EST @ 87 M
W/RAIS PAV MRKR
CL B (REFL) TY II-C-R
EST @ 28 EA

R.O.W.

TAPER PT
STA 3+084.277

TAPER PT
STA 3+129.277

0.6 SHLDR
3.6 LANE
3.6 LANE
3.6 LANE
3.6 LANE
1.2 SHLDR

N.B. FRONTAGE RD.

REFL PAV MRK TY I
(W) (SLD) (100MM)
EST @ 164 M

TAPER PT
STA 3+084.297

TAPER PT
STA 3+102.343

REFL PAV MRK TY I (W) (SLD) (100MM) EST @ 342 M
W/RAIS PAV MRKR CL B (REFL) TY II-C-R EST @ 60 EA

TAPER PT
STA 21+058.312

TAPER PT
STA 21+103.084

15 32 33 31 15

1.2 SHLDR
3.6 LANE
3.6 LANE
3.6 LANE
3.6 LANE
3.6 LANE

TAPER PT
STA 21+084.000

TAPER PT
STA 21+129.000

6.2 1.2 SHLDR

℄ LP 1604

21+100 21+200 21+300

15 28 28 31

REFL PAV MRK TY I
(W) (DOT) (100MM)
EST @ 32 M

REFL PAV MRK TY I
(W) (SLD) (100MM)
EST @ 164 M

TURNAROUND
REFL PAV MRK TY I (W) (SLD) (200MM) EST @ 30 M
w/ REFL PAV MRK TY I (W) (SLD) (600MM) EST @ 12 M
w/ REFL PAV MRK TY I (Y) (SLD) (200MM) EST @ 14 M
w/ RAIS PAV MRKR CL B (REFL) TY II-A-A EST @ 6 EA
w/ RAIS PAV MRKR CL B (REFL) TY II-C-R EST @ 12 EA

REFL PAV MRK TY I (W) (BRK) (100MM)
EST @ 45 M
W/RAIS PAV MRKR CL B (REFL) TY II-C-R
EST @ 15 EA

REFL PAV MRK TY I (W) (SLD) (100MM) EST @ 4 M
REFL PAV MRK TY I (W) (SLD) (200MM) EST @ 17 M
REFL PAV MRK TY I (W) (SLD) (600MM) EST @ 4 M
W/RAIS PAV MRKR CL B (REFL) TY II-C-R EST @ 8 EA

STOPBAR
REFL PAV MRK TY I (W) (SLD) (600MM)
EST @ 12 M

CROSSWALK
REFL PAV MRK TY I
(W) (SLD) (600MM)
EST @ 66 M

R.O.W.

MATCHLINE STA. 21+040

NTAR

STOPBAR
REFL PAV MRK
TY I (W) (SLD)
(600MM)
EST @ 12 M

SEE SHEET 29A OF 57
FOR PAVEMENT MARKING
ASSOCIATED WITH
MILITARY DRIVE.

STAR

15 31 33

S.B. MAINLANES

TURNAROUND
REFL PAV MRK TY I
(W) (SLD) (100MM) EST @ 14 M
REFL PAV MRK TY I
(W) (SLD) (200MM) EST @ 31 M
w/ REFL PAV MRK TY I
(W) (SLD) (600MM) EST @ 8 M
w/ REFL PAV MRK TY I
(Y) (SLD) (200MM) EST @ 27 M
w/ REFL PAV MRK TY I
(Y) (SLD) (600MM) EST @ 15 M
w/ RAIS PAV MRKR
CL B (REFL) TY II-A-A EST @ 45 EA
w/ RAIS PAV MRKR
CL B (REFL) TY II-C-R EST @ 12 EA

REFL PAV MRK TY I (W) (BRK) (100MM) EST @ 15 M
W/RAIS PAV MRKR CL B (REFL) TY II-C-R EST @ 6 EA

REFL PAV MRK TY I (W) (SLD) (100MM) EST @ 139 M
W/RAIS PAV MRKR CL B (REFL) TY II-C-R EST @ 26 EA

REFL PAV MRK TY I
(Y) (SLD) (100MM)
EST @ 24 M

TURNAROUND
REFL PAV MRK TY I
(W) (SLD) (100MM) EST @ 9 M
REFL PAV MRK TY I
(W) (SLD) (200MM) EST @ 20 M
w/ REFL PAV MRK TY I
(W) (SLD) (600MM) EST @ 4 M
w/ REFL PAV MRK TY I
(Y) (SLD) (200MM) EST @ 15 M
w/ REFL PAV MRK TY I
CL B (REFL) TY II-A-A EST @ 6 EA
w/ RAIS PAV MRKR
CL B (REFL) TY II-C-R EST @ 8 EA

REFL PAV MRK TY I (W) (BRK) (100MM)
EST @ 33 M
W/RAIS PAV MRKR CL B (REFL) TY II-C-R
EST @ 11 EA

REFL PAV MRK TY I
(W) (SLD) (100MM)
EST @ 68 M

REFL PAV MRK TY I (W) (SLD) (100MM) EST @ 5 M
REFL PAV MRK TY I (W) (SLD) (200MM) EST @ 16 M
REFL PAV MRK TY I (W) (SLD) (600MM) EST @ 4 M
W/RAIS PAV MRKR CL B (REFL) TY II-C-R
EST @ 8 EA

MATCHLINE STA. 21+320

## ESTIMATED QUANTITIES

| ITEM | UNIT | QUANTITY |
|---|---|---|
| | | 2452-01-036 |
| REFL PAV MRK TY I (W) (SLD) (100MM) | M | 2059 |
| REFL PAV MRK TY I (W) (BRK) (100MM) | M | 180 |
| REFL PAV MRK TY I (W) (DOT) (100MM) | M | 32 |
| REFL PAV MRK TY I (W) (SLD) (200MM) | M | 177 |
| REFL PAV MRK TY I (W) (SLD) (600MM) | M | 206 |
| REFL PAV MRK TY I (W) (ARROW) | EA | 19 |
| REFL PAV MRK TY I (W) (DBL ARROW) | EA | 0 |
| REFL PAV MRK TY I (W) (WORD) | EA | 19 |
| REFL PAV MRK TY I (Y) (SLD) (100MM) | M | 257 |
| REFL PAV MRK TY I (Y) (SLD) (200MM) | M | 83 |
| REFL PAV MRK TY I (Y) (SLD) (600MM) | M | 28 |
| RAIS PAV MRKR CL B (REFL) TY II A-A | EA | 104 |
| RAIS PAV MRKR CL B (REFL) TY II C-R | EA | 211 |

CHANGE ORDER NO. 65 | REVISED SHEET

NOTE(S):

ALL DIMENSIONS ARE IN METERS UNLESS OTHERWISE NOTED.

QUANTITIES AND PLACEMENT OF TY II REFLECTIVE PAVEMENT MARKINGS ARE EXACTLY THE SAME AS TY I REFLECTIVE PAVEMENT MARKINGS. TY II QUANTITIES ACCOUNTED FOR ON THE PAVEMENT MARKING /DELINEATION SUMMARY.

ANY PAVEMENT MARKING IN CONFLICT WITH PROPOSED PAVEMENT MARKINGS SHALL BE REMOVED BY THE CONTRACTOR OR AS DIRECTED BY THE ENGINEER.

## DELINEATION QUANTITIES

| TYPE | EA. | ASM. | SPL. MNT. | SURF. MNT. |
|---|---|---|---|---|
| D-SW(a) | | | | |
| D-DW(a) | | | | |
| D-SY(a) | | | | |
| D-DY(a) | | | | |
| OM-2HP(Spl) | | 6 | | |
| OM-2SR(a) | | 10 | | |
| | | | | |
| | | | | |
| | | | | |

CHANGE ORDER NO. 65

-REVISED RDWY GEOMETRICS AND LANE CONFIGURATIONS
-REVISED QUANTITIES

QUANTITIES THIS SHEET
CSJ 2452-01-036

555 EAST RAMSEY SAN ANTONIO TEXAS 78216
PHONE (210)375-9000
FAX (210)375-9010
PAPE-DAWSON ENGINEERS
CIVIL & ENVIRONMENTAL
STATE OF TEXAS
J. KENT O'BRIEN
64398
LICENSED
PROFESSIONAL ENGINEER
J. KENT O'BRIEN P.E.
1/27/2004
DATE

©2000

Texas Department of Transportation

# PAVEMENT MARKING AND DELINEATION LAYOUT

SHEET 29 OF 57

| FED. RD. DIV. NO. | FEDERAL AID PROJECT NO. | | SHEET NO. |
|---|---|---|---|
| 6 | NH 2000(704), etc. | | 786A |
| STATE | DIST. | COUNTY | |
| TEXAS | SAT | BEXAR | |
| CONT. | SECT. | JOB | HIGHWAY NO. |
| 2452 | 01 | 036, etc. | LP 1604 |

Plotted on: 5/3/2007

Design Filename: T:\AO\Design\lp1604fm471-90\PD*Phase2*change*order*mylars\TxDOT*revisions\pavmrkplan29aa.dgn

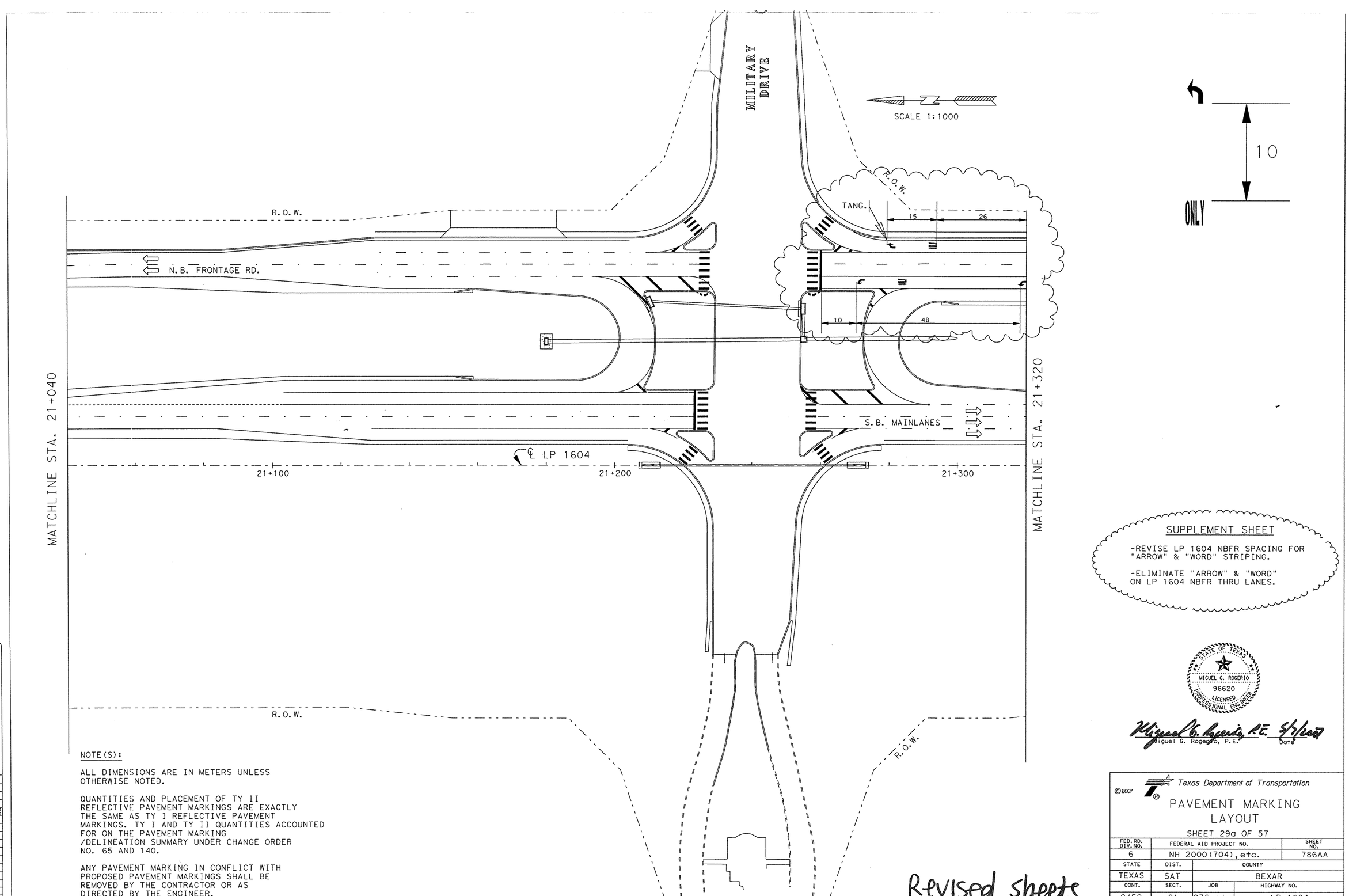


10

ONLY

NOTE(S):

ALL DIMENSIONS ARE IN METERS UNLESS OTHERWISE NOTED.

QUANTITIES AND PLACEMENT OF TY II REFLECTIVE PAVEMENT MARKINGS ARE EXACTLY THE SAME AS TY I REFLECTIVE PAVEMENT MARKINGS. TY I AND TY II QUANTITIES ACCOUNTED FOR ON THE PAVEMENT MARKING /DELINEATION SUMMARY UNDER CHANGE ORDER NO. 65 AND 140.

ANY PAVEMENT MARKING IN CONFLICT WITH PROPOSED PAVEMENT MARKINGS SHALL BE REMOVED BY THE CONTRACTOR OR AS DIRECTED BY THE ENGINEER.

SUPPLEMENT SHEET

-REVISE LP 1604 NBFR SPACING FOR "ARROW" & "WORD" STRIPING.

-ELIMINATE "ARROW" & "WORD" ON LP 1604 NBFR THRU LANES.

STATE OF TEXAS
MIGUEL G. ROGERIO
96620
LICENSED
PROFESSIONAL ENGINEER

Miguel G. Rogerio, P.E. 5/3/2007
Miguel G. Rogerio, P.E. Date

Revised sheets

LEVELS DISPLAYED
1 25 37 60

ACC: t:\ao\design\lp1604fm471-90\pave-sign\
FILE: pavmrkplan29.dgn

©2007

Texas Department of Transportation

PAVEMENT MARKING LAYOUT

SHEET 29a OF 57

| FED.RD. DIV.NO. | FEDERAL AID PROJECT NO. | | SHEET NO. |
|---|---|---|---|
| 6 | NH 2000(704),etc. | | 786AA |
| STATE | DIST. | COUNTY | |
| TEXAS | SAT | BEXAR | |
| CONT. | SECT. | JOB | HIGHWAY NO. |
| 2452 | 01 | 036,etc. | LP 1604 |

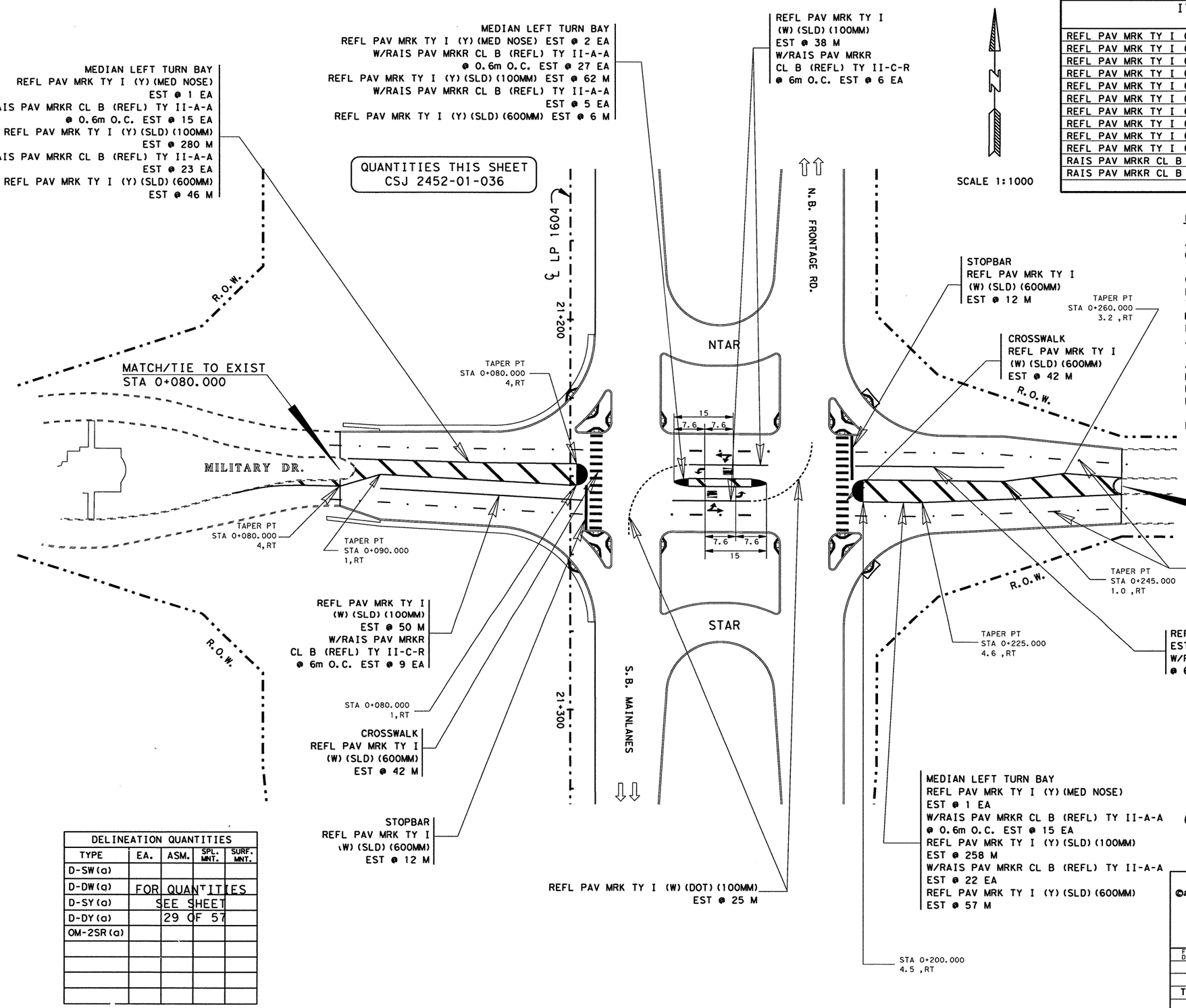


## ESTIMATED QUANTITIES

| ITEM | UNIT | QUANTITY 2452-01-036 |
|---|---|---|
| REFL PAV MRK TY I (W) (SLD) (100MM) | M | 125 |
| REFL PAV MRK TY I (W) (BRK) (100MM) | M | 81 |
| REFL PAV MRK TY I (W) (DOT) (100MM) | M | 25 |
| REFL PAV MRK TY I (W) (SLD) (600MM) | M | 108 |
| REFL PAV MRK TY I (W) (ARROW) | EA | 2 |
| REFL PAV MRK TY I (W) (DBL ARROW) | EA | 2 |
| REFL PAV MRK TY I (W) (WORD) | EA | 2 |
| REFL PAV MRK TY I (Y) (SLD) (100MM) | M | 600 |
| REFL PAV MRK TY I (Y) (SLD) (600MM) | M | 109 |
| REFL PAV MRK TY I (Y) (MED NOSE) | EA | 4 |
| RAIS PAV MRKR CL B (REFL) TY II A-A | EA | 107 |
| RAIS PAV MRKR CL B (REFL) TY II C-R | EA | 46 |

NOTE(S):

ALL DIMENSIONS ARE IN METERS UNLESS OTHERWISE NOTED.

QUANTITIES AND PLACEMENT OF TY II REFLECTIVE PAVEMENT MARKINGS ARE EXACTLY THE SAME AS TY I REFLECTIVE PAVEMENT MARKINGS. TY II QUANTITIES ACCOUNTED FOR ON THE PAVEMENT MARKING /DELINEATION SUMMARY.

ANY PAVEMENT MARKING IN CONFLICT WITH PROPOSED PAVEMENT MARKINGS SHALL BE REMOVED BY THE CONTRACTOR OR AS DIRECTED BY THE ENGINEER.

FOR ADDITIONAL DATA/DIMENSIONS, SEE INTERSECTION LAYOUT SHEET(S) 327-328 .

| DELINEATION QUANTITIES | | | | |
|---|---|---|---|---|
| TYPE | EA. | ASM. | SPL. MNT. | SURF. MNT. |
| D-SW(a) | | | | |
| D-DW(a) | FOR QUANTITIES | | | |
| D-SY(a) | SEE SHEET | | | |
| D-DY(a) | 29 OF 57 | | | |
| OM-2SR(a) | | | | |
| | | | | |
| | | | | |
| | | | | |
| | | | | |

STATE OF TEXAS
JOEL K. DAVENPORT, JR.
79276
REGISTERED
PROFESSIONAL ENGINEER

Joel K. Davenport Jr. 9/9/00
Joel K. Davenport, Jr. P.E. 79276 Date

LEVELS DISPLAYED
1 2 3 4 5 6 7 8 9 10 11 12 21 31 41 51 61
21 22 23 24 25 26 27 28 29 30 31 32
33 34 35 36 37 38 39 40 41 42 43 44 45 46 47 48
49 50 51 52 53 54 55 56 57 58 59 60 61 62 63

ACC: t:/ao/design/
lp1604fm471-90/pave-sign/
FILE: pavmrkplan29a.dgn

©2000
Texas Department of Transportation

# PAVEMENT MAPKING AND DELINEATION LAYOUT

SHEET 29a OF 57

| FED. RD. DIV. NO. | FEDERAL AID PROJECT NO. | | SHEET NO. |
|---|---|---|---|
| 6 | NH 2000(704), etc. | | 787 |
| STATE | DIST. | COUNTY | |
| TEXAS | SAT | BEXAR | |
| CONT. | SECT. | JOB | HIGHWAY NO. |
| 2452 | 01 | 036, et. | LP 1604 |

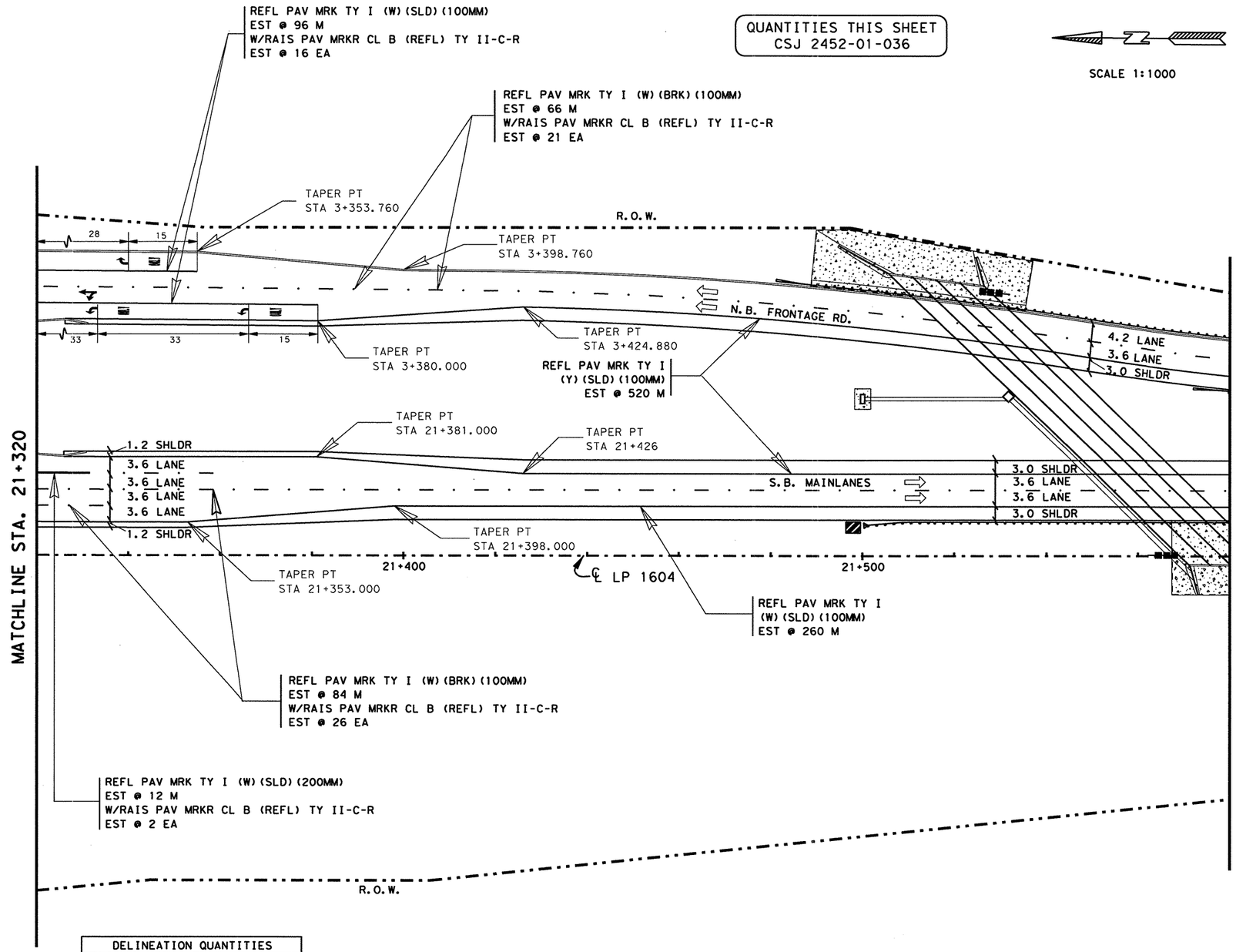


## ESTIMATED QUANTITIES

| ITEM | UNIT | QUANTITY 2452-01-036 |
|---|---|---|
| REFL PAV MRK TY I (W)(SLD)(100MM) | M | 356 |
| REFL PAV MRK TY I (W)(BRK)(100MM) | M | 150 |
| REFL PAV MRK TY I (W)(SLD)(200MM) | M | 12 |
| REFL PAV MRK TY I (W)(ARROW) | EA | 3 |
| REFL PAV MRK TY I (W)(DBL ARROW) | EA | 1 |
| REFL PAV MRK TY I (W)(WORD) | EA | 3 |
| REFL PAV MRK TY I (Y)(SLD)(100MM) | M | 520 |
| RAIS PAV MRKR CL B (REFL) TY II C-R | EA | 65 |
| | | |

NOTE(S):

ALL DIMENSIONS ARE IN METERS UNLESS OTHERWISE NOTED.

QUANTITIES AND PLACEMENT OF TY II REFLECTIVE PAVEMENT MARKINGS ARE EXACTLY THE SAME AS TY I REFLECTIVE PAVEMENT MARKINGS. TY II QUANTITIES ACCOUNTED FOR ON THE PAVEMENT MARKING /DELINEATION SUMMARY.

ANY PAVEMENT MARKING IN CONFLICT WITH PROPOSED PAVEMENT MARKINGS SHALL BE REMOVED BY THE CONTRACTOR OR AS DIRECTED BY THE ENGINEER.

## DELINEATION QUANTITIES

| TYPE | EA. | ASM. | SPL. MNT. | SURF. MNT. |
|---|---|---|---|---|
| D-SW(a) | | | | |
| D-DW(a) | | | | |
| D-SY(a) | | | | |
| D-DY(a) | | | | |
| OM-2SR(a) | | 2 | | |
| OM-3R | 1 | | | |
| | | | | |
| | | | | |
| | | | | |

LEVELS DISPLAYED
1 2 3 4 5 6 7 8 9 10 11 12 13 14 15 16
33 35 45 55 63 70 83 94 104 124 134 144 154 164 174 184
95 105 125 135 145 155 165 175 185 195 205 215 225 235 245 255 263

ACC: t:\oo\design\lp1604fm471-90\pave-sign\
FILE: pavmrkplan30.dgn

STATE OF TEXAS
JOEL K. DAVENPORT, JR.
79276
REGISTERED PROFESSIONAL ENGINEER

Joel K. Davenport, Jr. 9/19/00
Joel K. Davenport, Jr. P.E. 79276 Date

©2000

Texas Department of Transportation

# PAVEMENT MARKING AND DELINEATION LAYOUT

**SHEET 30 OF 57**

| FED. RD. DIV. NO. | FEDERAL AID PROJECT NO. | | SHEET NO. |
|---|---|---|---|
| 6 | NH 2000(704), etc. | | 788 |
| STATE | DIST. | COUNTY | |
| TEXAS | SAT | BEXAR | |
| CONT. | SECT. | JOB | HIGHWAY NO. |
| 2452 | 01 | 036, etc. | LP 1604 |

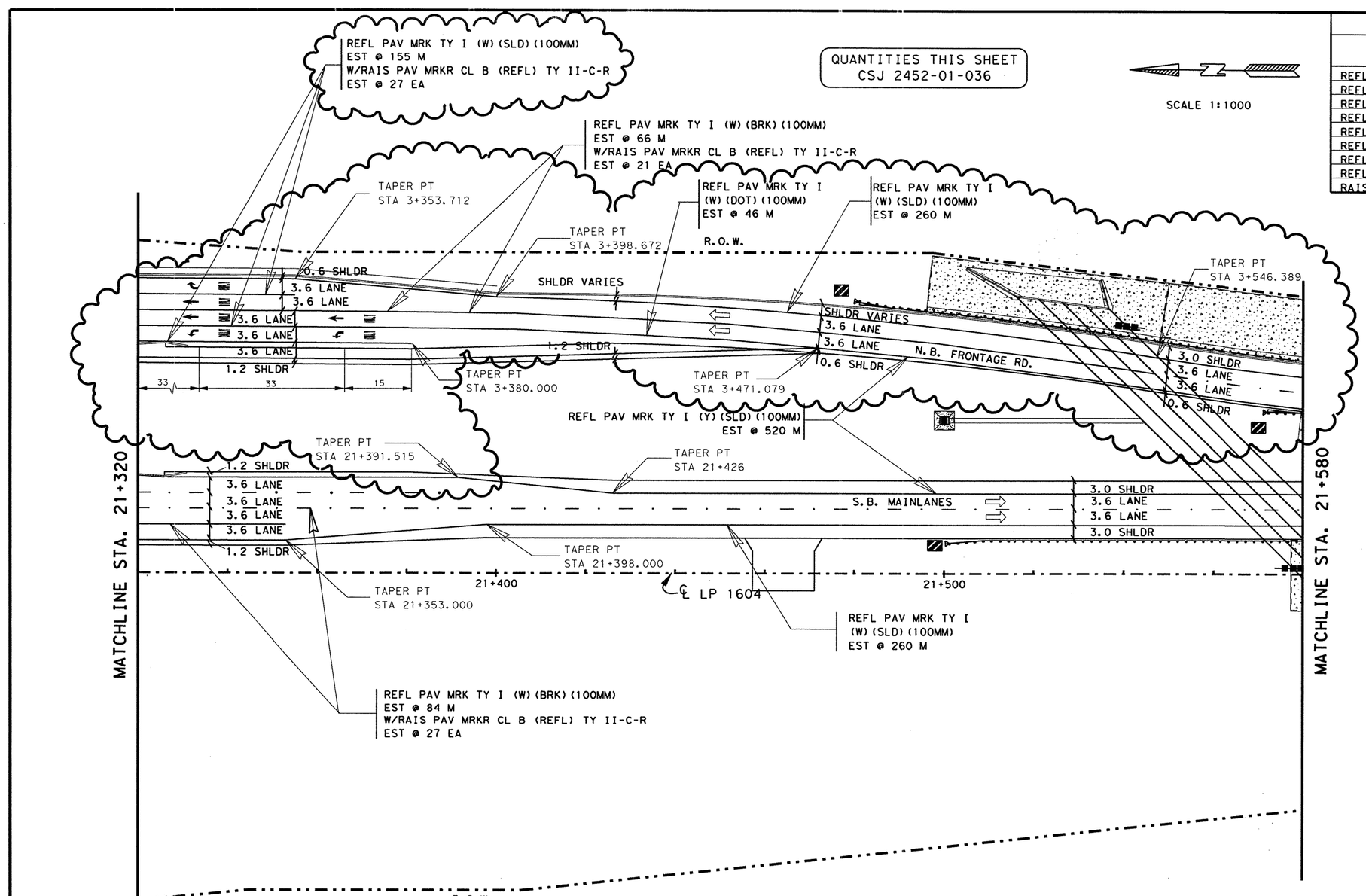


QUANTITIES THIS SHEET
CSJ 2452-01-036

SCALE 1:1000

## ESTIMATED QUANTITIES

| ITEM | UNIT | QUANTITY 2452-01-036 |
|---|---|---|
| REFL PAV MRK TY I (W) (SLD) (100MM) | M | 675 |
| REFL PAV MRK TY I (W) (BRK) (100MM) | M | 150 |
| REFL PAV MRK TY I (W) (DOT) (100MM) | M | 46 |
| REFL PAV MRK TY I (W) (SLD) (200MM) | M | 0 |
| REFL PAV MRK TY I (W) (ARROW) | EA | 6 |
| REFL PAV MRK TY I (W) (DBL ARROW) | EA | 0 |
| REFL PAV MRK TY I (W) (WORD) | EA | 6 |
| REFL PAV MRK TY I (Y) (SLD) (100MM) | M | 520 |
| RAIS PAV MRKR CL B (REFL) TY II C-R | EA | 75 |

NOTE(S):

ALL DIMENSIONS ARE IN METERS UNLESS OTHERWISE NOTED.

QUANTITIES AND PLACEMENT OF TY II REFLECTIVE PAVEMENT MARKINGS ARE EXACTLY THE SAME AS TY I REFLECTIVE PAVEMENT MARKINGS. TY II QUANTITIES ACCOUNTED FOR ON THE PAVEMENT MARKING /DELINEATION SUMMARY.

ANY PAVEMENT MARKING IN CONFLICT WITH PROPOSED PAVEMENT MARKINGS SHALL BE REMOVED BY THE CONTRACTOR OR AS DIRECTED BY THE ENGINEER.

## DELINEATION QUANTITIES

| TYPE | EA. | ASM. | SPL. MNT. | SURF. MNT. |
|---|---|---|---|---|
| D-SW(a) | | | | |
| D-DW(a) | | | | |
| D-SY(a) | | | | |
| D-DY(a) | | | | |
| OM-2SR(a) | | 2 | | |
| OM-3R | 2 | | | |
| OM-3L | 1 | | | |
| | | | | |
| | | | | |

CHANGE ORDER NO. 65

-REVISED RDWY GEOMETRICS AND LANE CONFIGURATIONS
-REVISED QUANTITIES

CHANGE ORDER NO. 65 | REVISED SHEET

STATE OF TEXAS
JEROME D. PAVLISKA
76075
REGISTERED PROFESSIONAL ENGINEER

Jerome D. Pavliska, P.E. 4-16-04
Jerome D. Pavliska, P.E. Date

©2000
Texas Department of Transportation

# PAVEMENT MARKING AND DELINEATION LAYOUT

SHEET 30 OF 57

| FED. RD. DIV. NO. | FEDERAL AID PROJECT NO. | | SHEET NO. |
|---|---|---|---|
| 6 | NH 2000(704), etc. | | 788A |
| STATE | DIST. | COUNTY | |
| TEXAS | SAT | BEXAR | |
| CONT. | SECT. | JOB | HIGHWAY NO. |
| 2452 | 01 | 036, etc. | LP 1604 |

Plotted on: $DATE$
Design Filename: $FILE$
LEVELS DISPLAYED
ACC: t:\oo\design\lp1604fm471-90\PD*Phase2\TxDOT Revisions\
FILE: pavmrkplan30.dgn

Plotted on: 5/3/2007

Design Filename: T:\AO\Design\lp1604fm471-90\PD*Phase2*change*order*mylars\TxDOT*revisions\pavmrkplan30aa.dgn

| LEVELS DISPLAYED | | | | | | | | | | | | | | | |
|---|---|---|---|---|---|---|---|---|---|---|---|---|---|---|---|
| 1 | 3 | 4 | 5 | 6 | 7 | 8 | | 11 | 12 | 13 | 14 | 15 | 16 | | |
| | | | 21 | 22 | 23 | 24 | 25 | 26 | 27 | 28 | 29 | 30 | 31 | 32 | |
| 33 | 34 | 35 | 36 | 37 | 38 | 39 | 40 | 41 | 42 | 43 | 44 | 45 | 46 | 47 | 48 |
| 49 | 50 | 51 | 52 | 53 | 54 | 55 | 56 | 57 | 58 | 59 | 60 | 61 | | 63 | |

ACC: t:\ao\design\lp1604fm471-90\PD*Phase2\TxDOT Revisions\
FILE: pavmrkplan30.dgn

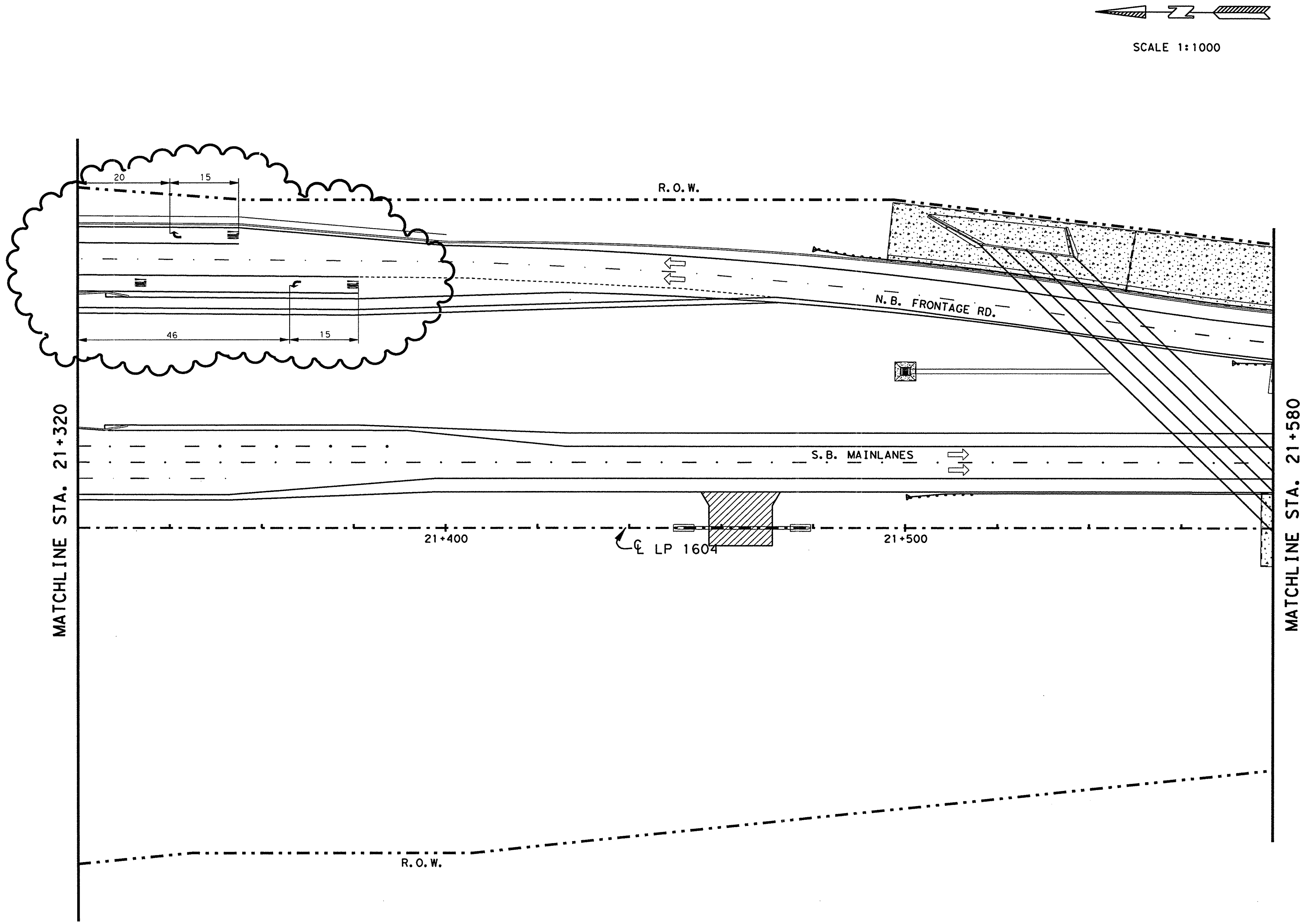


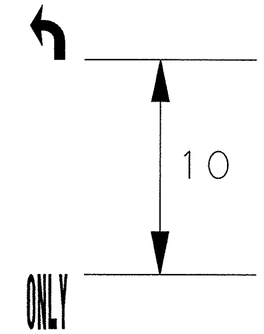


**SUPPLEMENT SHEET**

-REVISE LP 1604 NBFR SPACING FOR "ARROW" & "WORD" STRIPING.

-ELIMINATE "ARROW" & "WORD" ON LP 1604 NBFR THRU LANES.

STATE OF TEXAS
MIGUEL G. ROGERIO
96620
LICENSED PROFESSIONAL ENGINEER

Miguel G. Rogerio, P.E. 5/7/2007
Miguel G. Rogerio, P.E. Date

NOTE(S):

ALL DIMENSIONS ARE IN METERS UNLESS OTHERWISE NOTED.

QUANTITIES AND PLACEMENT OF TY II REFLECTIVE PAVEMENT MARKINGS ARE EXACTLY THE SAME AS TY I REFLECTIVE PAVEMENT MARKINGS. TY I AND TY II QUANTITIES ACCOUNTED FOR ON THE PAVEMENT MARKING /DELINEATION SUMMARY UNDER CHANGE ORDER NO. 65 AND 140.

ANY PAVEMENT MARKING IN CONFLICT WITH PROPOSED PAVEMENT MARKINGS SHALL BE REMOVED BY THE CONTRACTOR OR AS DIRECTED BY THE ENGINEER.

Revised Sheets

©2007 Texas Department of Transportation

# PAVEMENT MARKING LAYOUT

**SHEET 30a OF 57**

| FED. RD. DIV. NO. | FEDERAL AID PROJECT NO. | | | SHEET NO. |
|---|---|---|---|---|
| 6 | NH 2000(704), etc. | | | 788AA |
| STATE | DIST. | COUNTY | | |
| TEXAS | SAT | BEXAR | | |
| CONT. | SECT. | JOB | HIGHWAY NO. | |
| 2452 | 01 | 036, etc. | LP 1604 | |

04-16-04

| ESTIMATED QUANTITIES | | |
|---|---|---|
| ITEM | UNIT | QUANTITY |
| | | 2452-01-036 |
| REFL PAV MRK TY I (W)(SLD)(100MM) | M | 332 |
| REFL PAV MRK TY I (W)(BRK)(100MM) | M | 139 |
| REFL PAV MRK TY I (Y)(SLD)(100MM) | M | 638 |
| RAIS PAV MRKR CL B (REFL) TY II C-R | EA | 58 |
| | | |

QUANTITIES THIS SHEET
CSJ 2452-01-036

SCALE 1:1000

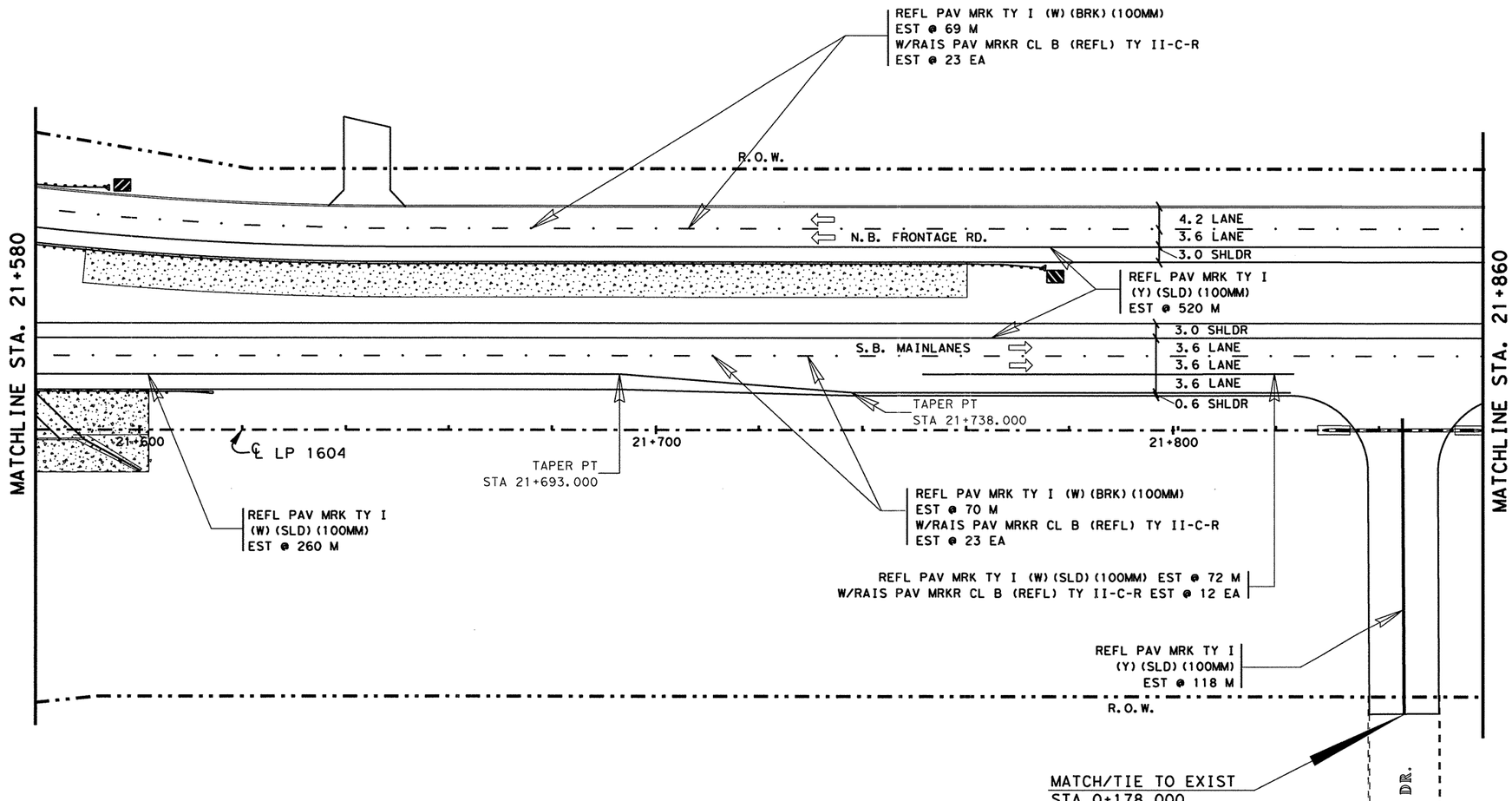


| DELINEATION QUANTITIES | | | | |
|---|---|---|---|---|
| TYPE | EA. | ASM. | SPL. MNT. | SURF. MNT. |
| D-SW(a) | | | | |
| D-DW(a) | | | | |
| D-SY(a) | | | | |
| D-DY(a) | | | | |
| OM-2SR(a) | | | | |
| OM-3L | 1 | | | |
| OM-3R | 1 | | | |
| | | | | |
| | | | | |

NOTE(S):

ALL DIMENSIONS ARE IN METERS UNLESS OTHERWISE NOTED.

QUANTITIES AND PLACEMENT OF TY II REFLECTIVE PAVEMENT MARKINGS ARE EXACTLY THE SAME AS TY I REFLECTIVE PAVEMENT MARKINGS. TY II QUANTITIES ACCOUNTED FOR ON THE PAVEMENT MARKING /DELINEATION SUMMARY.

ANY PAVEMENT MARKING IN CONFLICT WITH PROPOSED PAVEMENT MARKINGS SHALL BE REMOVED BY THE CONTRACTOR OR AS DIRECTED BY THE ENGINEER.

FOR ADDITIONAL DATA/DIMENSIONS, SEE INTERSECTION LAYOUT SHEET(S) 326.

STATE OF TEXAS
JOEL K. DAVENPORT, JR.
79276
REGISTERED
PROFESSIONAL ENGINEER

Joel K. Davenport, Jr. 9/9/00
Joel K. Davenport, Jr. P.E. 79276 Date

©2000

Texas Department of Transportation

# PAVEMENT MARKING AND DELINEATION LAYOUT

SHEET 31 OF 57

| FED. RD. DIV. NO. | FEDERAL AID PROJECT NO. | | SHEET NO. |
|---|---|---|---|
| 6 | NH 2000(704), etc. | | 789 |
| STATE | DIST. | COUNTY | |
| TEXAS | SAT | BEXAR | |
| CONT. | SECT. | JOB | HIGHWAY NO. |
| 2452 | 01 | 036, etc. | LP 1604 |

LEVELS DISPLAYED
1 2 3 4 5 6 7 8 9 10 11 12 21 31 41 51 61
1 2 21 22 32 42 52 62 72 82 93 03 13 23
3 33 43 53 63 73 83 94 04 14 24 34 44 54 64 74 84
4 9 6 0 5 1 6 2 6 3 5 4 5 5 5 6 5 7 6 5 8 5 9 6 0 6 1 6 2 6 3

ACC: t:\oo\design\
lp1604fm471-90\pave-sign\
FILE: pavmrkplan31.dgn

QUANTITIES THIS SHEET
CSJ 2452-01-036

SCALE 1:1000

## ESTIMATED QUANTITIES

| ITEM | UNIT | QUANTITY |
|---|---|---|
| | | 2452-01-036 |
| REFL PAV MRK TY I (W)(SLD)(100MM) | M | 612 |
| REFL PAV MRK TY I (W)(BRK)(100MM) | M | 139 |
| REFL PAV MRK TY I (Y)(SLD)(100MM) | M | 638 |
| RAIS PAV MRKR CL B (REFL) TY II C-R | EA | 58 |
| | | |

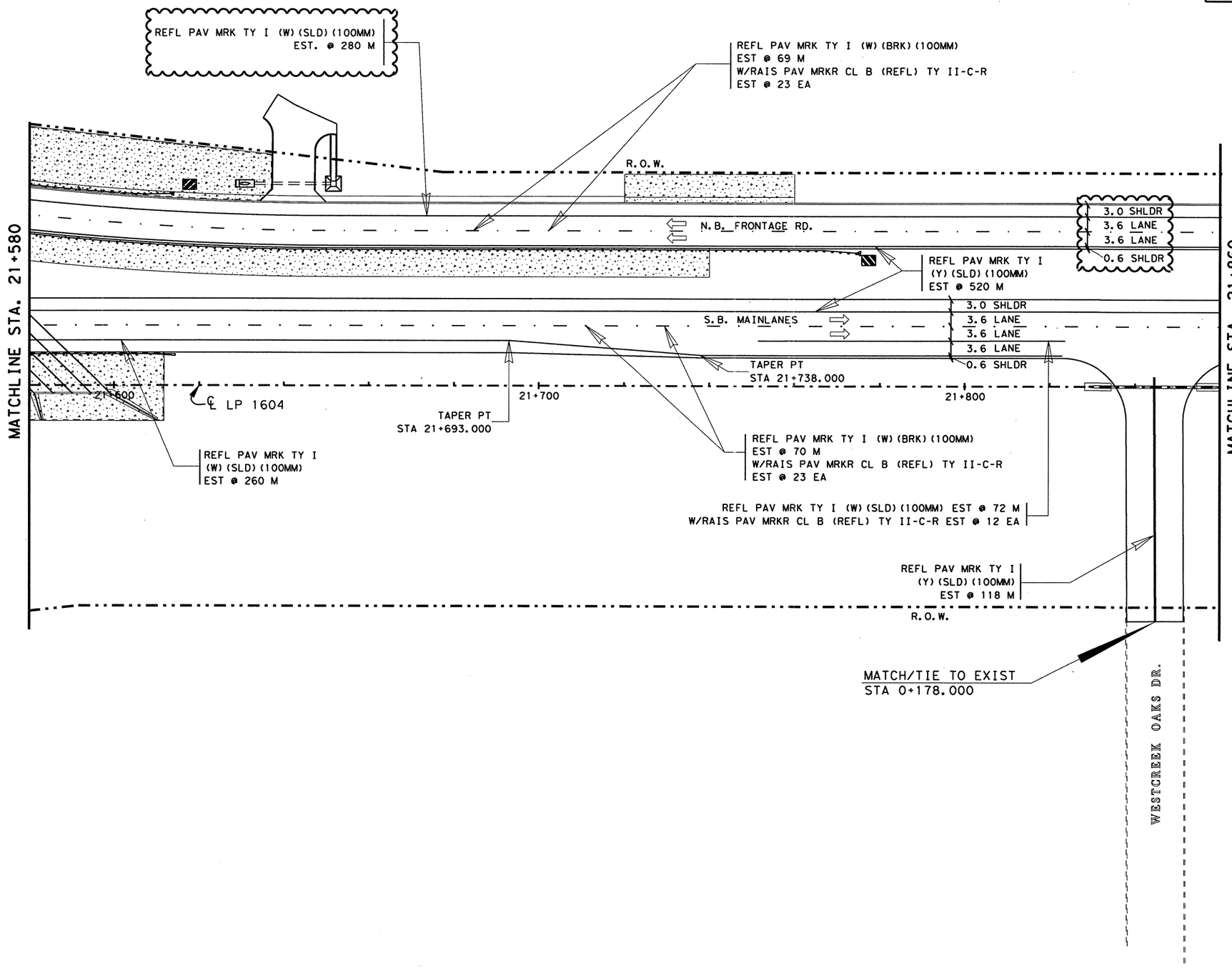


NOTE(S):

ALL DIMENSIONS ARE IN METERS UNLESS OTHERWISE NOTED.

QUANTITIES AND PLACEMENT OF TY II REFLECTIVE PAVEMENT MARKINGS ARE EXACTLY THE SAME AS TY I REFLECTIVE PAVEMENT MARKINGS. TY II QUANTITIES ACCOUNTED FOR ON THE PAVEMENT MARKING /DELINEATION SUMMARY.

ANY PAVEMENT MARKING IN CONFLICT WITH PROPOSED PAVEMENT MARKINGS SHALL BE REMOVED BY THE CONTRACTOR OR AS DIRECTED BY THE ENGINEER.

FOR ADDITIONAL DATA/DIMENSIONS, SEE INTERSECTION LAYOUT SHEET(S) 326.

| DELINEATION QUANTITIES | | | | |
|---|---|---|---|---|
| TYPE | EA. | ASM. | SPL. MNT. | SURF. MNT. |
| D-SW(a) | | | | |
| D-DW(a) | | | | |
| D-SY(a) | | | | |
| D-DY(a) | | | | |
| OM-2SR(a) | | | | |
| OM-3L | 1 | | | |
| OM-3R | 1 | | | |
| | | | | |
| | | | | |

CHANGE ORDER NO. 65
-REVISED FRONT. RD LANE CONFIG.
-REVISED QUANTITIES

CHANGE ORDER 65

REVISED SHEET

STATE OF TEXAS
JEROME D. PAVLISKA
76075
REGISTERED PROFESSIONAL ENGINEER

Jerome D. Pavliska, P.E. 4-16-04
Jerome D. Pavliska, P.E. — Date

©2000
Texas Department of Transportation

# PAVEMENT MARKING AND DELINEATION LAYOUT

SHEET 31 OF 57

| FED.RD. DIV.NO. | FEDERAL AID PROJECT NO. | | SHEET NO. |
|---|---|---|---|
| 6 | NH 2000(704),etc. | | 789A |
| STATE | DIST. | COUNTY | |
| TEXAS | SAT | BEXAR | |
| CONT. | SECT. | JOB | HIGHWAY NO. |
| 2452 | 01 | 036,etc. | LP 1604 |

04-16-04

LEVELS DISPLAYED
1 2 3 4 5 6 7 8 9 10 11 12 13 14 15 16
17 18 21 22 23 24 25 26 27 28 29 30 31 32
33 34 35 36 37 38 39 40 41 42 43 44 45 46 47 48
49 50 51 52 53 54 55 56 57 58 59 60 61 62 63

ACC: t:\ao\design\lp1604fm471-90\pave-sign\
FILE: pavmrkplan31xCO.dgn

QUANTITIES THIS SHEET
CSJ 2452-01-036

SCALE 1:1000

| ESTIMATED QUANTITIES | | |
|---|---|---|
| ITEM | UNIT | QUANTITY |
| | | 2452-01-036 |
| REFL PAV MRK TY I (W)(SLD)(100MM) | M | 291 |
| REFL PAV MRK TY I (W)(BRK)(100MM) | M | 132 |
| REFL PAV MRK TY I (Y)(SLD)(100MM) | M | 520 |
| RAIS PAV MRKR CL B (REFL) TY II C-R | EA | 51 |
| | | |

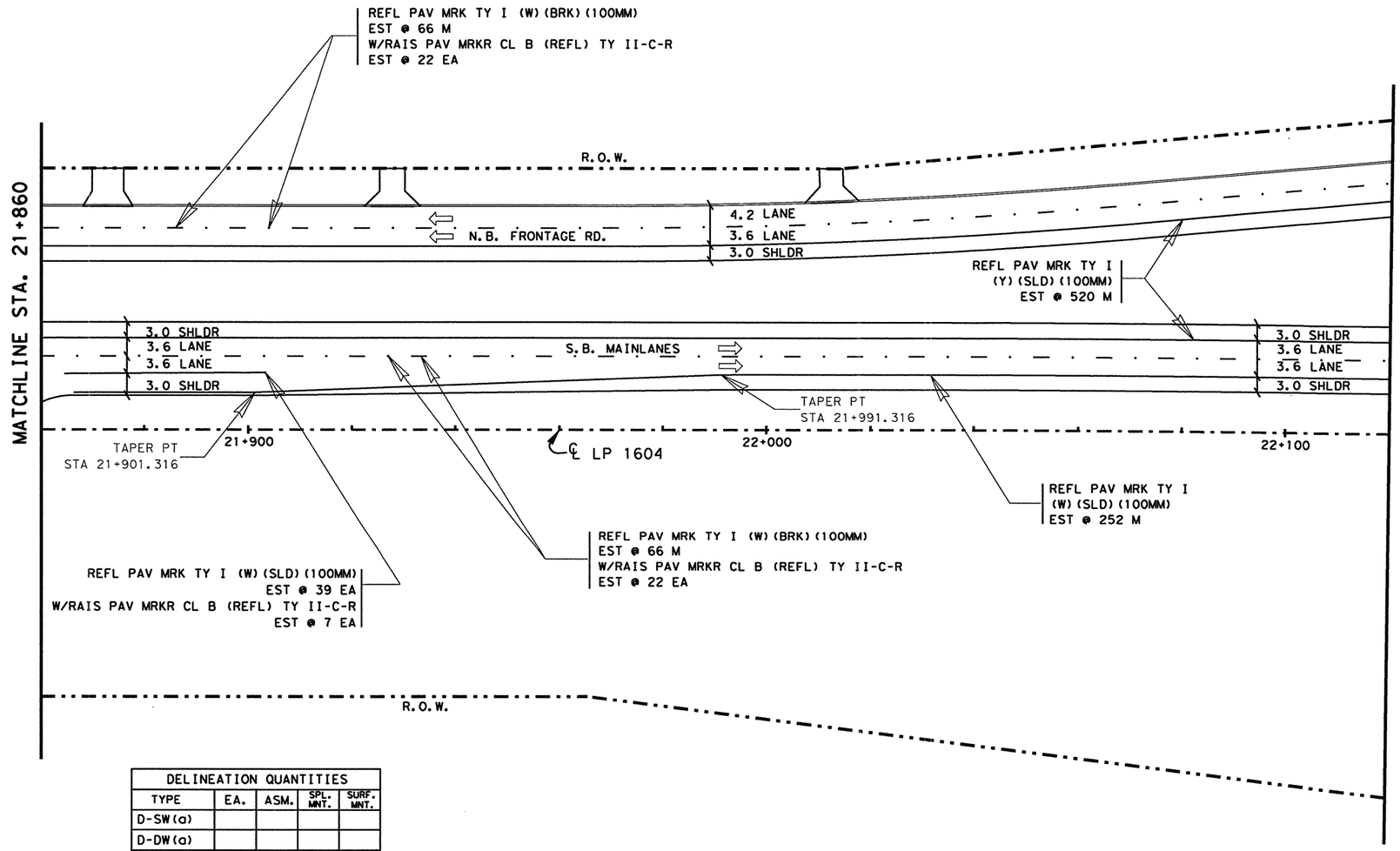


| DELINEATION QUANTITIES | | | | |
|---|---|---|---|---|
| TYPE | EA. | ASM. | SPL. MNT. | SURF. MNT. |
| D-SW(a) | | | | |
| D-DW(a) | | | | |
| D-SY(a) | | | | |
| D-DY(a) | | | | |
| OM-2SR(a) | | | | |
| | | | | |
| | | | | |
| | | | | |
| | | | | |

NOTE(S):

ALL DIMENSIONS ARE IN METERS UNLESS OTHERWISE NOTED.

QUANTITIES AND PLACEMENT OF TY II REFLECTIVE PAVEMENT MARKINGS ARE EXACTLY THE SAME AS TY I REFLECTIVE PAVEMENT MARKINGS. TY II QUANTITIES ACCOUNTED FOR ON THE PAVEMENT MARKING /DELINEATION SUMMARY.

ANY PAVEMENT MARKING IN CONFLICT WITH PROPOSED PAVEMENT MARKINGS SHALL BE REMOVED BY THE CONTRACTOR OR AS DIRECTED BY THE ENGINEER.

STATE OF TEXAS
JOEL K. DAVENPORT, JR.
79276
REGISTERED
PROFESSIONAL ENGINEER

Joel K. Davenport Jr. 9/19/00
Joel K. Davenport, Jr. P.E. 79276 Date

LEVELS DISPLAYED
1 2 3 4 5 6 7 8 9 10 11 21 31 41 51 61 71 81 91 101 111 121 131 141 151 161 171 181 191 201 211 221 231 241 251 261 271 281 291 301 311 321 331 341 351 361 371 381 391 401 411 421 431 441 451 461 471 481 491 501 511 521 531 541 551 561 571 581 591 601 611 621 631

ACC: *:\oo\design\
lp1604fm471-90\pave-sign\
FILE: pavmrkplan32.dgn

Texas Department of Transportation

# PAVEMENT MARKING AND DELINEATION LAYOUT

SHEET 32 OF 57

| FED.RD. DIV.NO. | FEDERAL AID PROJECT NO. | | SHEET NO. |
|---|---|---|---|
| 6 | NH 2000(704),etc. | | 790 |
| STATE | DIST. | COUNTY | |
| TEXAS | SAT | BEXAR | |
| CONT. | SECT. | JOB | HIGHWAY NO. |
| 2452 | 01 | 036,etc. | LP 1604 |

QUANTITIES THIS SHEET
CSJ 2452-01-036

SCALE 1:1000

| ESTIMATED QUANTITIES | | |
|---|---|---|
| ITEM | UNIT | QUANTITY |
| | | 2452-01-036 |
| REFL PAV MRK TY I (W)(SLD)(100MM) | M | 551 |
| REFL PAV MRK TY I (W)(BRK)(100MM) | M | 132 |
| REFL PAV MRK TY I (Y)(SLD)(100MM) | M | 520 |
| RAIS PAV MRKR CL B (REFL) TY II C-R | EA | 51 |
| | | |

NOTE(S):

ALL DIMENSIONS ARE IN METERS UNLESS OTHERWISE NOTED.

QUANTITIES AND PLACEMENT OF TY II REFLECTIVE PAVEMENT MARKINGS ARE EXACTLY THE SAME AS TY I REFLECTIVE PAVEMENT MARKINGS. TY II QUANTITIES ACCOUNTED FOR ON THE PAVEMENT MARKING /DELINEATION SUMMARY.

ANY PAVEMENT MARKING IN CONFLICT WITH PROPOSED PAVEMENT MARKINGS SHALL BE REMOVED BY THE CONTRACTOR OR AS DIRECTED BY THE ENGINEER.

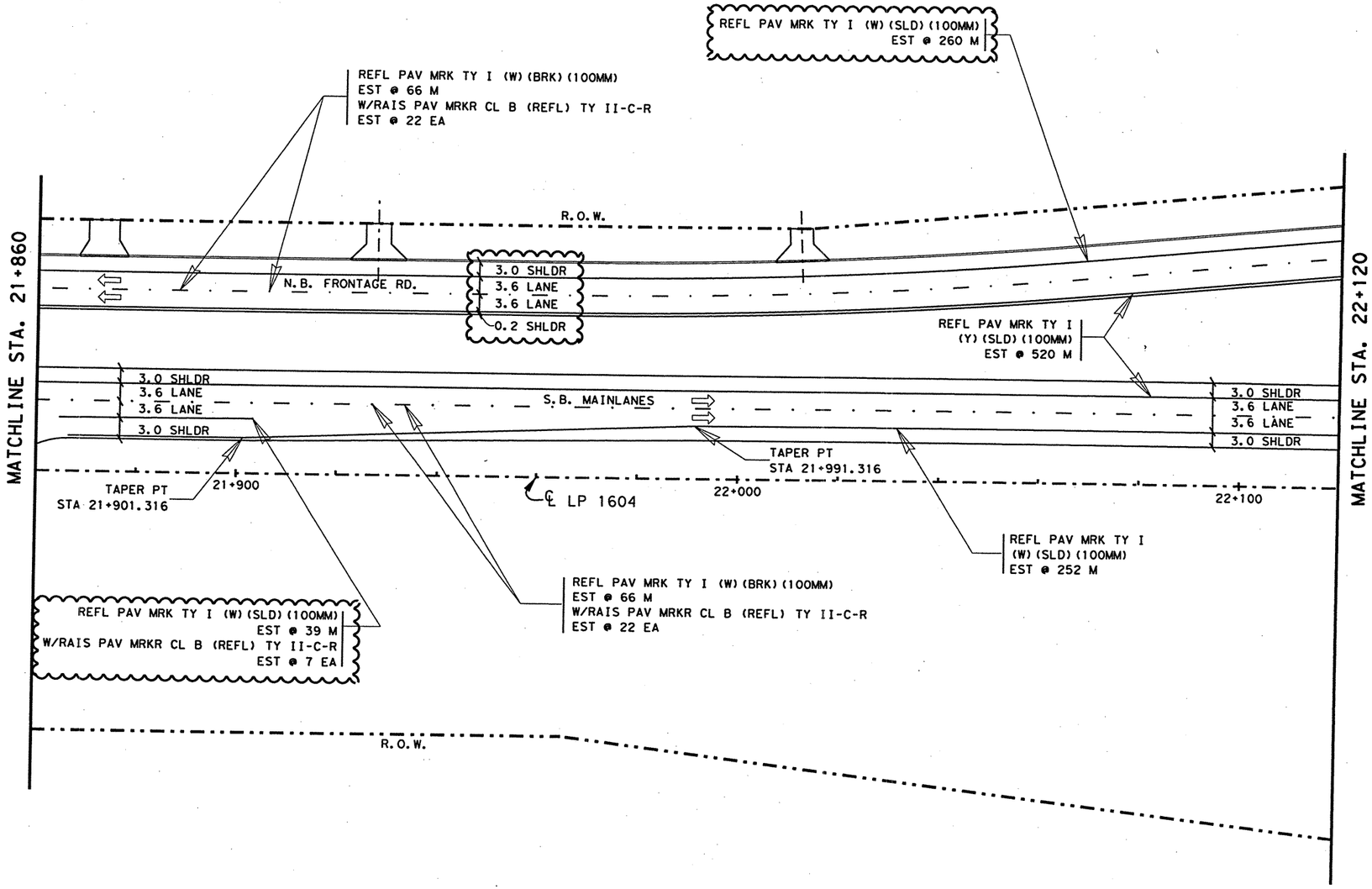


| DELINEATION QUANTITIES | | | | |
|---|---|---|---|---|
| TYPE | EA. | ASM. | SPL. MNT. | SURF. MNT. |
| D-SW(a) | | | | |
| D-DW(a) | | | | |
| D-SY(a) | | | | |
| D-DY(a) | | | | |
| OM-2SR(a) | | | | |
| | | | | |
| | | | | |
| | | | | |
| | | | | |

CHANGE ORDER NO. 65
-REVISED FRONT. RD LANE CONFIG.
-REVISED QUANTITIES

CHANGE ORDER 65

REVISED SHEET

STATE OF TEXAS
JEROME D. PAVLISKA
76075
REGISTERED
PROFESSIONAL ENGINEER

Jerome D. Pavliska, P.E. 2/06/04
Jerome D. Pavliska, P.E. — Date

©2000 Texas Department of Transportation

# PAVEMENT MARKING AND DELINEATION LAYOUT

SHEET 32 OF 57

| FED.RD. DIV.NO. | FEDERAL AID PROJECT NO. | | SHEET NO. |
|---|---|---|---|
| 6 | NH 2000(704),etc. | | 790A |
| STATE | DIST. | COUNTY | |
| TEXAS | SAT | BEXAR | |
| CONT. | SECT. | JOB | HIGHWAY NO. |
| 2452 | 01 | 036,etc. | LP 1604 |

02-04-04

LEVELS DISPLAYED
1 2 3 4 5 6 7 8 9 10 11 12 21 31 41 51 61
33 34 35 36 37 38 40 41 42 43 44 45 46 47 48
49 50 51 52 53 54 55 56 57 58 59 60 61 62 63

ACC: t:\oo\design\
lp1604fm471-90\pave-sign\
FILE: pavmrkplan32.dgn

QUANTITIES THIS SHEET
CSJ 2452-01-036

SCALE 1:1000

| ESTIMATED QUANTITIES | | |
|---|---|---|
| ITEM | UNIT | QUANTITY |
| | | 2452-01-036 |
| REFL PAV MRK TY I (W)(SLD)(100MM) | M | 260 |
| REFL PAV MRK TY I (W)(BRK)(100MM) | M | 132 |
| REFL PAV MRK TY I (Y)(SLD)(100MM) | M | 520 |
| RAIS PAV MRKR CL B (REFL) TY II C-R | EA | 42 |
| | | |

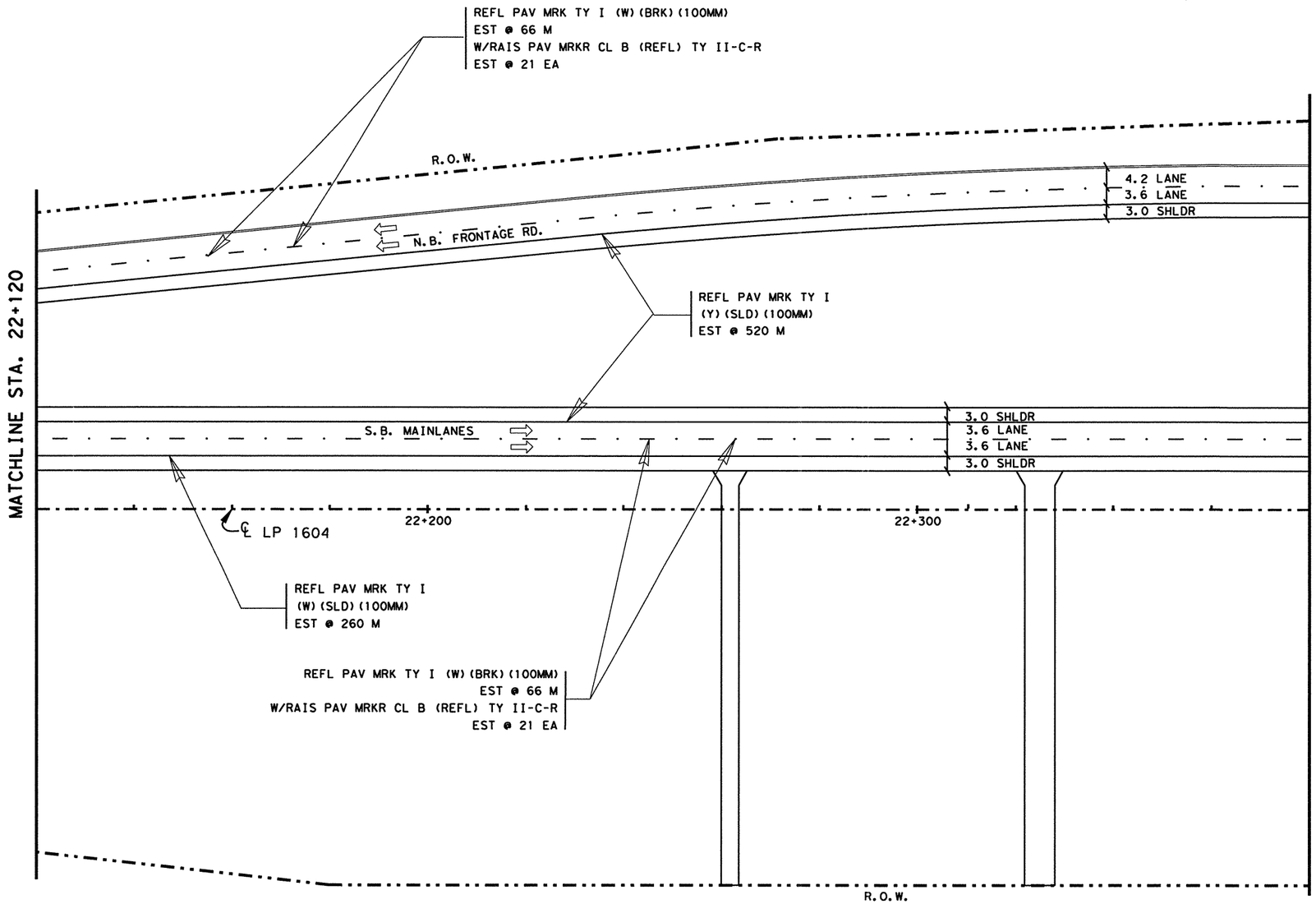


NOTE(S):

ALL DIMENSIONS ARE IN METERS UNLESS OTHERWISE NOTED.

QUANTITIES AND PLACEMENT OF TY II REFLECTIVE PAVEMENT MARKINGS ARE EXACTLY THE SAME AS TY I REFLECTIVE PAVEMENT MARKINGS. TY II QUANTITIES ACCOUNTED FOR ON THE PAVEMENT MARKING /DELINEATION SUMMARY.

ANY PAVEMENT MARKING IN CONFLICT WITH PROPOSED PAVEMENT MARKINGS SHALL BE REMOVED BY THE CONTRACTOR OR AS DIRECTED BY THE ENGINEER.

| DELINEATION QUANTITIES | | | | |
|---|---|---|---|---|
| TYPE | EA. | ASM. | SPL. MNT. | SURF. MNT. |
| D-SW(a) | | | | |
| D-DW(a) | | | | |
| D-SY(a) | | | | |
| D-DY(a) | | | | |
| OM-2SR(a) | | | | |
| | | | | |
| | | | | |
| | | | | |
| | | | | |

STATE OF TEXAS
JOEL K. DAVENPORT, JR.
79276
REGISTERED PROFESSIONAL ENGINEER

Joel K Davenport Jr 9/8/00
Joel K. Davenport, Jr. P.E. 79276 Date

©2000

Texas Department of Transportation

# PAVEMENT MARKING AND DELINEATION LAYOUT

SHEET 33 OF 57

| FED.RD. DIV.NO. | FEDERAL AID PROJECT NO. | | SHEET NO. |
|---|---|---|---|
| 6 | NH 2000(704),etc. | | 791 |
| STATE | DIST. | COUNTY | |
| TEXAS | SAT | BEXAR | |
| CONT. | SECT. | JOB | HIGHWAY NO. |
| 2452 | 01 | 036,etc. | LP 1604 |

LEVELS DISPLAYED
1 2 3 4 15 6 7 8 9 10 11 12 13 14 15 16 ACC: t:\oa\design\
21 22 23 24 25 26 27 28 29 30 31 32 lp1604fm471-90\pave-sign\
33 34 35 36 37 38 39 40 41 42 43 44 45 46 47 48 FILE: pavmrkplan33.dgn
49 50 51 52 53 54 55 56 57 58 59 60 61 62 63

Plotted on: 01/26/2004

QUANTITIES THIS SHEET
CSJ 2452-01-036

SCALE 1:1000

| ESTIMATED QUANTITIES | | |
|---|---|---|
| ITEM | UNIT | QUANTITY |
| | | 2452-01-036 |
| REFL PAV MRK TY I (W)(SLD)(100MM) | M | 520 |
| REFL PAV MRK TY I (W)(BRK)(100MM) | M | 132 |
| REFL PAV MRK TY I (Y)(SLD)(100MM) | M | 520 |
| RAIS PAV MRKR CL B (REFL) TY II C-R | EA | 42 |
| | | |

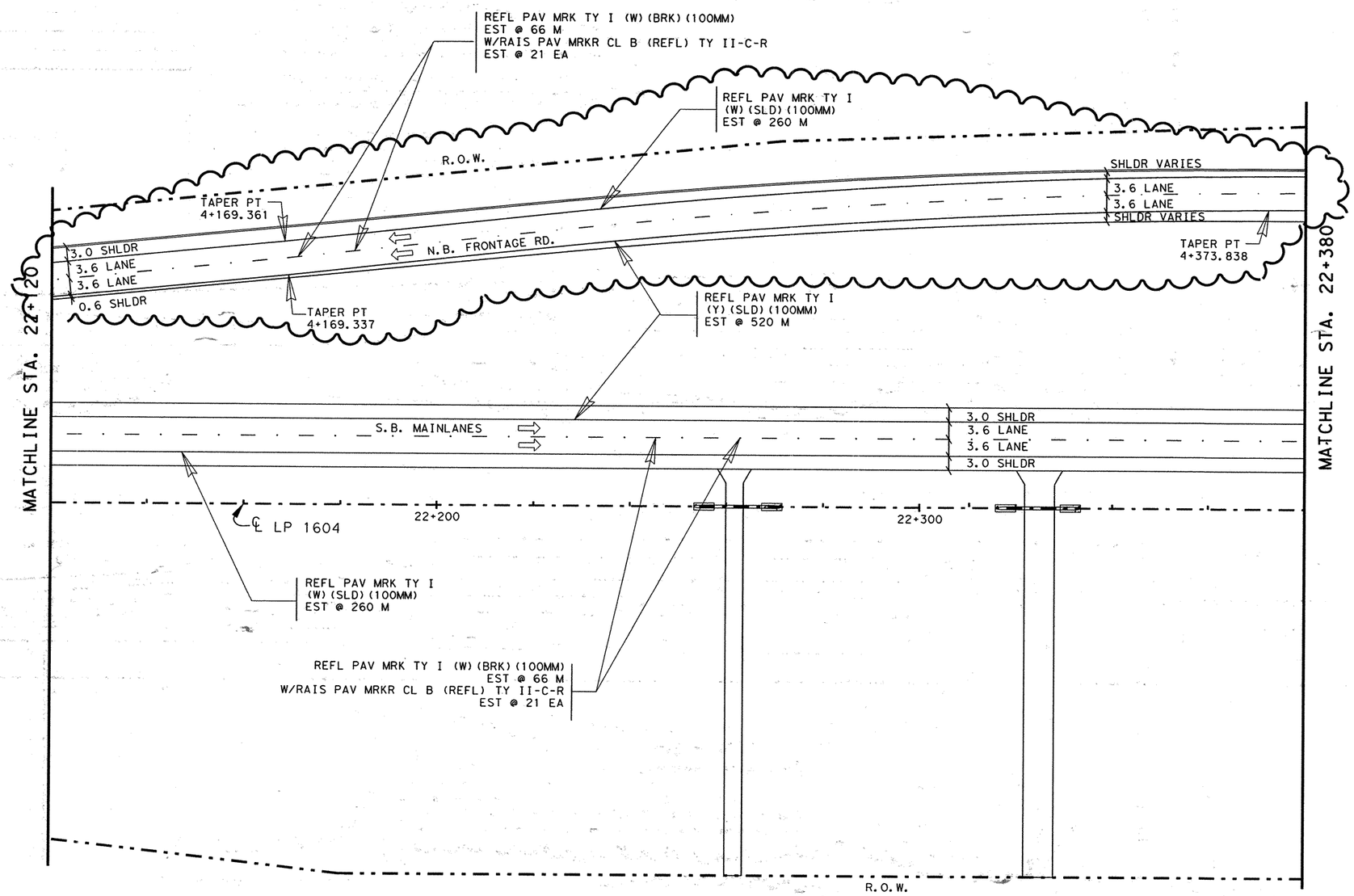


**CHANGE ORDER NO. 65**

-REVISED RDWY GEOMETRICS AND LANE CONFIGURATIONS
-REVISED QUANTITIES

NOTE(S):

ALL DIMENSIONS ARE IN METERS UNLESS OTHERWISE NOTED.

QUANTITIES AND PLACEMENT OF TY II REFLECTIVE PAVEMENT MARKINGS ARE EXACTLY THE SAME AS TY I REFLECTIVE PAVEMENT MARKINGS. TY II QUANTITIES ACCOUNTED FOR ON THE PAVEMENT MARKING /DELINEATION SUMMARY.

ANY PAVEMENT MARKING IN CONFLICT WITH PROPOSED PAVEMENT MARKINGS SHALL BE REMOVED BY THE CONTRACTOR OR AS DIRECTED BY THE ENGINEER.

| DELINEATION QUANTITIES | | | | |
|---|---|---|---|---|
| TYPE | EA. | ASM. | SPL. MNT. | SURF. MNT. |
| D-SW(a) | | | | |
| D-DW(a) | | | | |
| D-SY(a) | | | | |
| D-DY(a) | | | | |
| OM-2SR(a) | | | | |
| | | | | |
| | | | | |
| | | | | |
| | | | | |

CHANGE ORDER NO. 65 | REVISED SHEET

555 EAST RAMSEY SAN ANTONIO TEXAS 78216
PHONE (210)375-9000
FAX (210)375-9010
PAPE-DAWSON ENGINEERS
CIVIL & ENVIRONMENTAL
STATE OF TEXAS
J. KENT O'BRIEN
64398
LICENSED
PROFESSIONAL ENGINEER
J. KENT O'BRIEN P.E.
1/27/2004
DATE

©2000
Texas Department of Transportation

# PAVEMENT MARKING AND DELINEATION LAYOUT

SHEET 33 OF 57

| FED. RD. DIV. NO. | FEDERAL AID PROJECT NO. | | SHEET NO. |
|---|---|---|---|
| 6 | NH 2000(704), etc. | | 791A |
| STATE | DIST. | COUNTY | |
| TEXAS | SAT | BEXAR | |
| CONT. | SECT. | JOB | HIGHWAY NO. |
| 2452 | 01 | 036, etc. | LP 1604 |

Design Filename: p:\52\20\11\design\civil\plansheets\traffic\pave-mark\pavmrkplan33.dgn

LEVELS DISPLAYED
1 2 3 4 5 6 7 8 9 10 11 12 13 14 15 16
17 18 19 20 21 22 23 24 25 26 27 28 29 30 31 32
33 34 35 36 37 38 39 40 41 42 43 44 45 46 47 48
49 50 51 52 53 54 55 56 57 58 59 60 61 62 63

ACC: t:\ao\design\
lp1604fm471-90\pave-sign\
FILE: pavmrkplan33.dgn

| DELINEATION QUANTITIES | | | | |
|---|---|---|---|---|
| TYPE | EA. | ASM. | SPL. MNT. | SURF. MNT. |
| D-SW(a) | | | | |
| D-DW(a) | | | | |
| D-SY(a) | | | | |
| D-DY(a) | | | | |
| OM-2SR(a) | | 10 | | |
| OM-2HP(Spl) | | 8 | | |
| | | | | |
| | | | | |
| | | | | |

SCALE 1:1000

QUANTITIES THIS SHEET
CSJ 2452-01-036

| ESTIMATED QUANTITIES | | |
|---|---|---|
| ITEM | UNIT | QUANTITY 2452-01-036 |
| REFL PAV MRK TY I (W)(SLD)(100MM) | M | 660 |
| REFL PAV MRK TY I (W)(BRK)(100MM) | M | 210 |
| REFL PAV MRK TY I (W)(SLD)(200MM) | M | 225 |
| REFL PAV MRK TY I (W)(SLD)(600MM) | M | 186 |
| REFL PAV MRK TY I (W)(ARROW) | EA | 9 |
| REFL PAV MRK TY I (W)(DBL ARROW) | EA | 5 |
| REFL PAV MRK TY I (W)(WORD) | EA | 9 |
| REFL PAV MRK TY I (Y)(SLD)(100MM) | M | 305 |
| REFL PAV MRK TY I (Y)(SLD)(200MM) | M | 92 |
| REFL PAV MRK TY I (Y)(SLD)(600MM) | M | 48 |
| RAIS PAV MRKR CL B (REFL) TY II A-A | EA | 90 |
| RAIS PAV MRKR CL B (REFL) TY II C-R | EA | 183 |
| | | |

TURNAROUND
REFL PAV MRK TY I (W)(SLD)(200MM) EST @ 38 M
w/ REFL PAV MRK TY I (W)(SLD)(600MM) EST @ 6 M
w/ REFL PAV MRK TY I (Y)(SLD)(200MM) EST @ 22 M
w/ REFL PAV MRK TY I (Y)(SLD)(600MM) EST @ 13 M
w/RAIS PAV MRKR CL B (REFL) TY II-A-A EST @ 23 EA
w/RAIS PAV MRKR CL B (REFL) TY II-C-R EST @ 13 EA

REFL PAV MRK TY I (W)(SLD)(200MM) EST @ 35 M
W/RAIS PAV MRKR CL B (REFL) TY II-C-R EST @ 6 EA

REFL PAV MRK TY I (W)(SLD)(200MM) EST @ 47 M
W/RAIS PAV MRKR CL B (REFL) TY II-C-R EST @ 8 EA

TURNAROUND
REFL PAV MRK TY I (W)(SLD)(200MM) EST @ 38 M
w/ REFL PAV MRK TY I (W)(SLD)(600MM) EST @ 9 M
w/ REFL PAV MRK TY I (Y)(SLD)(200MM) EST @ 22 M
w/ REFL PAV MRK TY I (Y)(SLD)(600MM) EST @ 12 M
w/RAIS PAV MRKR CL B (REFL) TY II-A-A EST @ 21 EA
w/RAIS PAV MRKR CL B (REFL) TY II-C-R EST @ 13 EA

CROSSWALK
REFL PAV MRK TY I
(W)(SLD)(600MM)
EST @ 70 M

SEE SHEET 34A OF 57
FOR PAVEMENT MARKING
ASSOCIATED WITH
POTRANCO RD.

REFL PAV MRK TY I (W)(SLD)(100MM)
EST @ 130 M
W/RAIS PAV MRKR CL B (REFL) TY II-C-R
EST @ 22 EA

REFL PAV MRK TY I
(W)(BRK)(100MM)
EST @ 18 M
W/RAIS PAV MRKR
CL B (REFL) TY II-C-R
EST @ 6 EA

REFL PAV MRK TY I
(Y)(SLD)(100MM)
EST @ 10 M

REFL PAV MRK TY I
(W)(SLD)(100MM)
EST @ 98 M

REFL PAV MRK TY I
(W)(BRK)(100MM)
EST @ 39 M
W/RAIS PAV MRKR
CL B (REFL) TY II-C-R
EST @ 10 EA

STOPBAR
REFL PAV MRK
TY I (W)(SLD)
(600MM)
EST @ 8 M

STOPBAR
REFL PAV MRK TY I
(W)(SLD)(600MM)
EST @ 8 M

REFL PAV MRK TY I
(W)(SLD)(100MM)
EST @ 35 M

REFL PAV MRK TY I
(Y)(SLD)(100MM)
EST @ 295 M

REFL PAV MRK TY I (W)(BRK)(100MM)
EST @ 153 M
W/RAIS PAV MRKR CL B (REFL) TY II-C-R
EST @ 49 EA

REFL PAV MRK TY I
(W)(SLD)(100MM)
EST @ 197 M
W/RAIS PAV MRKR
CL B (REFL) TY II-C-R
EST @ 33 EA

REFL PAV MRK TY I (W)(SLD)(100MM)
EST @ 200 M

TURNAROUND
REFL PAV MRK TY I (W)(SLD)(200MM) EST @ 36 M
w/ REFL PAV MRK TY I (W)(SLD)(600MM) EST @ 7 M
w/ REFL PAV MRK TY I (Y)(SLD)(200MM) EST @ 24 M
w/ REFL PAV MRK TY I (Y)(SLD)(600MM) EST @ 12 M
w/RAIS PAV MRKR CL B (REFL) TY II-A-A EST @ 23 EA
w/RAIS PAV MRKR CL B (REFL) TY II-C-R EST @ 12 EA

CROSSWALK
REFL PAV MRK TY I
(W)(SLD)(600MM)
EST @ 70 M

TURNAROUND
REFL PAV MRK TY I (W)(SLD)(200MM) EST @ 31 M
w/ REFL PAV MRK TY I (W)(SLD)(600MM) EST @ 8 M
w/ REFL PAV MRK TY I (Y)(SLD)(200MM) EST @ 24 M
w/ REFL PAV MRK TY I (Y)(SLD)(600MM) EST @ 11 M
w/RAIS PAV MRKR CL B (REFL) TY II-A-A EST @ 23 EA
w/RAIS PAV MRKR CL B (REFL) TY II-C-R EST @ 11 EA

R.O.W.
TAPER PT STA 4+452.345
TAPER PT STA 4+497.345
4.2 LANE
3.6 LANE
3.6 LANE
3.6 LANE
1.2 SHLDR
N.B. FRONTAGE RD.
TAPER PT STA 4+474.648
TAPER PT STA 4+429.648
TAPER PT STA 22+428.126
TAPER PT STA 22+473.126
S.B. MAINLANES
TAPER PT STA 22+459.514
TAPER PT STA 22+504.514
22+400
℄ LP 1604
22+500
22+600
MATCHLINE STA. 22+380
MATCHLINE STA. 22+700
POTRANCO RD
NTAR
STAR
FM 1957
15
27
27
15
30
15
30
30
15
15
26
26
15

NOTE(S):

ALL DIMENSIONS ARE IN METERS UNLESS OTHERWISE NOTED.

QUANTITIES AND PLACEMENT OF TY II REFLECTIVE PAVEMENT MARKINGS ARE EXACTLY THE SAME AS TY I REFLECTIVE PAVEMENT MARKINGS. TY II QUANTITIES ACCOUNTED FOR ON THE PAVEMENT MARKING /DELINEATION SUMMARY.

ANY PAVEMENT MARKING IN CONFLICT WITH PROPOSED PAVEMENT MARKINGS SHALL BE REMOVED BY THE CONTRACTOR OR AS DIRECTED BY THE ENGINEER.

STATE OF TEXAS
JOEL K. DAVENPORT, JR.
79276
REGISTERED PROFESSIONAL ENGINEER

Joel K. Davenport Jr. 9/19/00
Joel K. Davenport Jr., P.E. Date

LEVELS DISPLAYED
1 2 3 4 5 6 7 8 9 10 11 12 13 14 15 16
– – 2 12 22 32 42 52 62 72 82 92 303 132
33 34 55 56 57 58 59 404 1424 2434 4454 4647 48
495 0515 2535 4555 6575 8595 6061 6263

ACC: t:\ao\design\lp1604fm471-90\pave-sign\
FILE: pavmrkplan34.dgn

©2000 Texas Department of Transportation

# PAVEMENT MARKING AND DELINEATION LAYOUT

SHEET 34 OF 57

| FED.RD. DIV.NO. | FEDERAL AID PROJECT NO. | SHEET NO. |
|---|---|---|
| 6 | NH 2000(704),etc. | 792 |
| STATE | DIST. | COUNTY |
| TEXAS | SAT | BEXAR |
| CONT. | SECT. | JOB / HIGHWAY NO. |
| 2452 | 01 | 036,etc. / LP 1604 |

Plotted on: 01/26/2004

| DELINEATION QUANTITIES | | | | |
|---|---|---|---|---|
| TYPE | EA. | ASM. | SPL. MNT. | SURF. MNT. |
| D-SW(a) | | | | |
| D-DW(a) | | | | |
| D-SY(a) | | | | |
| D-DY(a) | | | | |
| OM-2SR(a) | | 10 | | |
| OM-2HP(Spl) | | 8 | | |
| | | | | |
| | | | | |
| | | | | |

SCALE 1:1000

QUANTITIES THIS SHEET
CSJ 2452-01-036

| ESTIMATED QUANTITIES | | |
|---|---|---|
| ITEM | UNIT | QUANTITY |
| | | ~~2452-01-036~~ |
| REFL PAV MRK TY I (W)(SLD)(100MM) | M | 1020 |
| REFL PAV MRK TY I (W)(BRK)(100MM) | M | 2 |
| REFL PAV MRK TY I (W)(DOT)(100MM) | M | 46 |
| REFL PAV MRK TY I (W)(SLD)(200MM) | M | 223 |
| REFL PAV MRK TY I (W)(SLD)(600MM) | M | 204 |
| REFL PAV MRK TY I (W)(ARROW) | EA | 23 |
| REFL PAV MRK TY I (W)(DBL ARROW) | EA | 0 |
| REFL PAV MRK TY I (W)(WORD) | EA | 20 |
| REFL PAV MRK TY I (Y)(SLD)(100MM) | M | 333 |
| REFL PAV MRK TY I (Y)(SLD)(200MM) | M | 65 |
| REFL PAV MRK TY I (Y)(SLD)(600MM) | M | 17 |
| RAIS PAV MRKR CL B (REFL) TY II A-A | EA | 51 |
| RAIS PAV MRKR CL B (REFL) TY II C-R | EA | 218 |

TURNAROUND
REFL PAV MRK TY I (W)(SLD)(100MM) EST @ 13 M
REFL PAV MRK TY I (W)(SLD)(200MM) EST @ 19 M
w/ REFL PAV MRK TY I (W)(SLD)(600MM) EST @ 6 M
w/ REFL PAV MRK TY I (Y)(SLD)(200MM) EST @ 11 M
w/RAIS PAV MRKR CL B (REFL) TY II-A-A EST @ 4 EA
w/RAIS PAV MRKR CL B (REFL) TY II-C-R EST @ 7 EA

REFL PAV MRK TY I (W)(SLD)(200MM) EST @ 35 M
REFL PAV MRK TY I (W)(SLD)(600MM) EST @ 3 M
RAIS PAV MRKR CL B (REFL) TY II-C-R EST @ 6 EA

REFL PAV MRK TY I (W)(SLD)(200MM) EST @ 47 M
REFL PAV MRK TY I (W)(SLD)(600MM) EST @ 6 M
W/RAIS PAV MRKR CL B (REFL) TY II-C-R EST @ 10 EA

TURNAROUND
REFL PAV MRK TY I (W)(SLD)(100MM) EST @ 6 M
REFL PAV MRK TY I (W)(SLD)(200MM) EST @ 33 M
w/ REFL PAV MRK TY I (W)(SLD)(600MM) EST @ 5 M
w/ REFL PAV MRK TY I (Y)(SLD)(200MM) EST @ 22 M
w/ REFL PAV MRK TY I (Y)(SLD)(600MM) EST @ 5 M
w/RAIS PAV MRKR CL B (REFL) TY II-A-A EST @ 23 EA
w/RAIS PAV MRKR CL B (REFL) TY II-C-R EST @ 10 EA

REFL PAV MRK TY I (W)(SLD)(100MM) EST @ 209 M

REFL PAV MRK TY I (W)(SLD)(100MM) EST @ 56 M
W/RAIS PAV MRKR CL B (REFL) TY II-C-R EST @ 15 EA

CROSSWALK
REFL PAV MRK TY I (W)(SLD)(600MM) EST @ 66 M

SEE SHEET 34A OF 57 FOR PAVEMENT MARKING ASSOCIATED WITH POTRANCO RD.

REFL PAV MRK TY I (W)(SLD)(100MM) EST @ 178 M
W/RAIS PAV MRKR CL B (REFL) TY II-C-R EST @ 32 EA

REFL PAV MRK TY I (W)(BRK)(100MM) EST @ 18 M
W/RAIS PAV MRKR CL B (REFL) TY II-C-R EST @ 6 EA

REFL PAV MRK TY I (Y)(SLD)(100MM) EST @ 38 M

REFL PAV MRK TY I (W)(BRK)(100MM) EST @ 39 M
W/RAIS PAV MRKR CL B (REFL) TY II-C-R EST @ 10 EA

REFL PAV MRK TY I (W)(SLD)(100MM) EST @ 61 M

REFL PAV MRK TY I (Y)(SLD)(100MM) EST @ 295 M

REFL PAV MRK TY I (W)(DOT)(100MM) EST @ 46 M

REFL PAV MRK TY I (W)(BRK)(100MM) EST @ 153 M
W/RAIS PAV MRKR CL B (REFL) TY II-C-R EST @ 49 EA

REFL PAV MRK TY I (W)(SLD)(100MM) EST @ 286 M
W/RAIS PAV MRKR CL B (REFL) TY II-C-R EST @ 49 EA

REFL PAV MRK TY I (W)(SLD)(100MM) EST @ 200 M

REFL PAV MRK TY I (W)(SLD)(200MM) EST @ 56 M
w/ REFL PAV MRK TY I (W)(SLD)(600MM) EST @ 6 M
w/ REFL PAV MRK TY I (Y)(SLD)(200MM) EST @ 13 M
w/RAIS PAV MRKR CL B (REFL) TY II-A-A EST @ 5 EA
w/RAIS PAV MRKR CL B (REFL) TY II-C-R EST @ 13 EA

STOPBAR
REFL PAV MRK TY I (W)(SLD)(600MM) EST @ 12 M

CROSSWALK
REFL PAV MRK TY I (W)(SLD)(600MM) EST @ 66 M

TURNAROUND
REFL PAV MRK TY I (W)(SLD)(100MM) EST @ 11 M
REFL PAV MRK TY I (W)(SLD)(200MM) EST @ 33 M
w/ REFL PAV MRK TY I (W)(SLD)(600MM) EST @ 6 M
w/ REFL PAV MRK TY I (Y)(SLD)(600MM) EST @ 19 M
w/ REFL PAV MRK TY I (Y)(SLD)(600MM) EST @ 12 M
w/ RAIS PAV MRKR CL B (REFL) TY II-A-A EST @ 19 EA
w/ RAIS PAV MRKR CL B (REFL) TY II-C-R EST @ 11 EA

STOPBAR
REFL PAV MRK TY I (W)(SLD)(600MM) EST @ 12 M

MATCHLINE STA. 22+380

MATCHLINE STA. 22+700

TAPER PT STA 4+452.345

TAPER PT STA 4+497.345

TAPER PT STA 4+429.648

TAPER PT STA 4+474.648

TAPER PT STA 22+479.256

TAPER PT STA 22+460.000

TAPER PT STA 22+505.000

SHLDR VARIES

3.6 LANE

N.B. FRONTAGE RD.

S.B. MAINLANES

0.6 SHLDR

1.2 SHLDR

6.2

R.O.W.

POTRANCO RD

VITAR

STAR

FM 1957

℄ LP 1604

22+400

22+500

22+600

NOTE(S):

ALL DIMENSIONS ARE IN METERS UNLESS OTHERWISE NOTED.

QUANTITIES AND PLACEMENT OF TY II REFLECTIVE PAVEMENT MARKINGS ARE EXACTLY THE SAME AS TY I REFLECTIVE PAVEMENT MARKINGS. TY II QUANTITIES ACCOUNTED FOR ON THE PAVEMENT MARKING /DELINEATION SUMMARY.

ANY PAVEMENT MARKING IN CONFLICT WITH PROPOSED PAVEMENT MARKINGS SHALL BE REMOVED BY THE CONTRACTOR OR AS DIRECTED BY THE ENGINEER.

CHANGE ORDER NO. 65

-REVISED RDWY GEOMETRICS AND LANE CONFIGURATIONS
-REVISED QUANTITIES

CHANGE ORDER NO. 65 | REVISED SHEET

555 EAST RAMSEY SAN ANTONIO TEXAS 78216 PHONE (210)375-9000 FAX (210)375-9010
PAPE-DAWSON ENGINEERS CIVIL & ENVIRONMENTAL
STATE OF TEXAS J. KENT O'BRIEN 64398 LICENSED PROFESSIONAL ENGINEER
1/27/2004 DATE
J. KENT O'BRIEN P.E.

©2000

Texas Department of Transportation

# PAVEMENT MARKING AND DELINEATION LAYOUT

SHEET 34 OF 57

| FED.RD. DIV.NO. | FEDERAL AID PROJECT NO. | | SHEET NO. |
|---|---|---|---|
| 6 | NH 2000(704),etc. | | 792A |
| STATE | DIST. | COUNTY | |
| TEXAS | SAT | BEXAR | |
| CONT. | SECT. | JOB | HIGHWAY NO. |
| 2452 | 01 | 036,etc. | LP 1604 |

LEVELS DISPLAYED
1 2 3 4 5 6 7 8 9 10 11 12 13 14 15 16
33 34 35 36 37 38 39 40 41 42 43 44 45 46 47 48
49 50 51 52 53 54 55 56 57 58 59 60 61 62 63

ACC: t:\oa\design\1p1604fm471-90\pave-sign\
FILE: pavmrkplan34.dgn

Design Filename: p:\52\2011\design\civil\plansheets\traffic\pave-mark\pavmrkplan34.dgn

Plotted on: 5/3/2007

Design Filename: T:\AO\Design\lp1604fm471-90\PD*Phase2*change*order*mylars\TxDOT*revisions\pavmrkplan34aa.dgn

| LEVELS DISPLAYED | | | | | | | | | | | | | | | |
|---|---|---|---|---|---|---|---|---|---|---|---|---|---|---|---|
| 1 | | 3 | 4 | 5 | 6 | 7 | 8 | | | | | | | | |
| | | | | 21 | 22 | 23 | 24 | 25 | 26 | 27 | 28 | 29 | 30 | 31 | 32 |
| 33 | 34 | 35 | 36 | 37 | 38 | 39 | 40 | 41 | 42 | 43 | 44 | 45 | 46 | 47 | 48 |
| 49 | 50 | 51 | 52 | 53 | 54 | 55 | 56 | 57 | 58 | 59 | 60 | 61 | | 63 | |

ACC: t:\ao\design\lp1604fm471-90\pave-sign\
FILE: pavmrkplan34aa.dgn

SCALE 1:1000

NOTE(S):

ALL DIMENSIONS ARE IN METERS UNLESS OTHERWISE NOTED.

QUANTITIES AND PLACEMENT OF TY II REFLECTIVE PAVEMENT MARKINGS ARE EXACTLY THE SAME AS TY I REFLECTIVE PAVEMENT MARKINGS. TY I AND TY II QUANTITIES ACCOUNTED FOR ON THE PAVEMENT MARKING /DELINEATION SUMMARY UNDER CHANGE ORDER NO. 65 AND 140.

ANY PAVEMENT MARKING IN CONFLICT WITH PROPOSED PAVEMENT MARKINGS SHALL BE REMOVED BY THE CONTRACTOR OR AS DIRECTED BY THE ENGINEER.

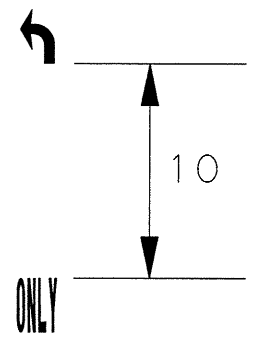


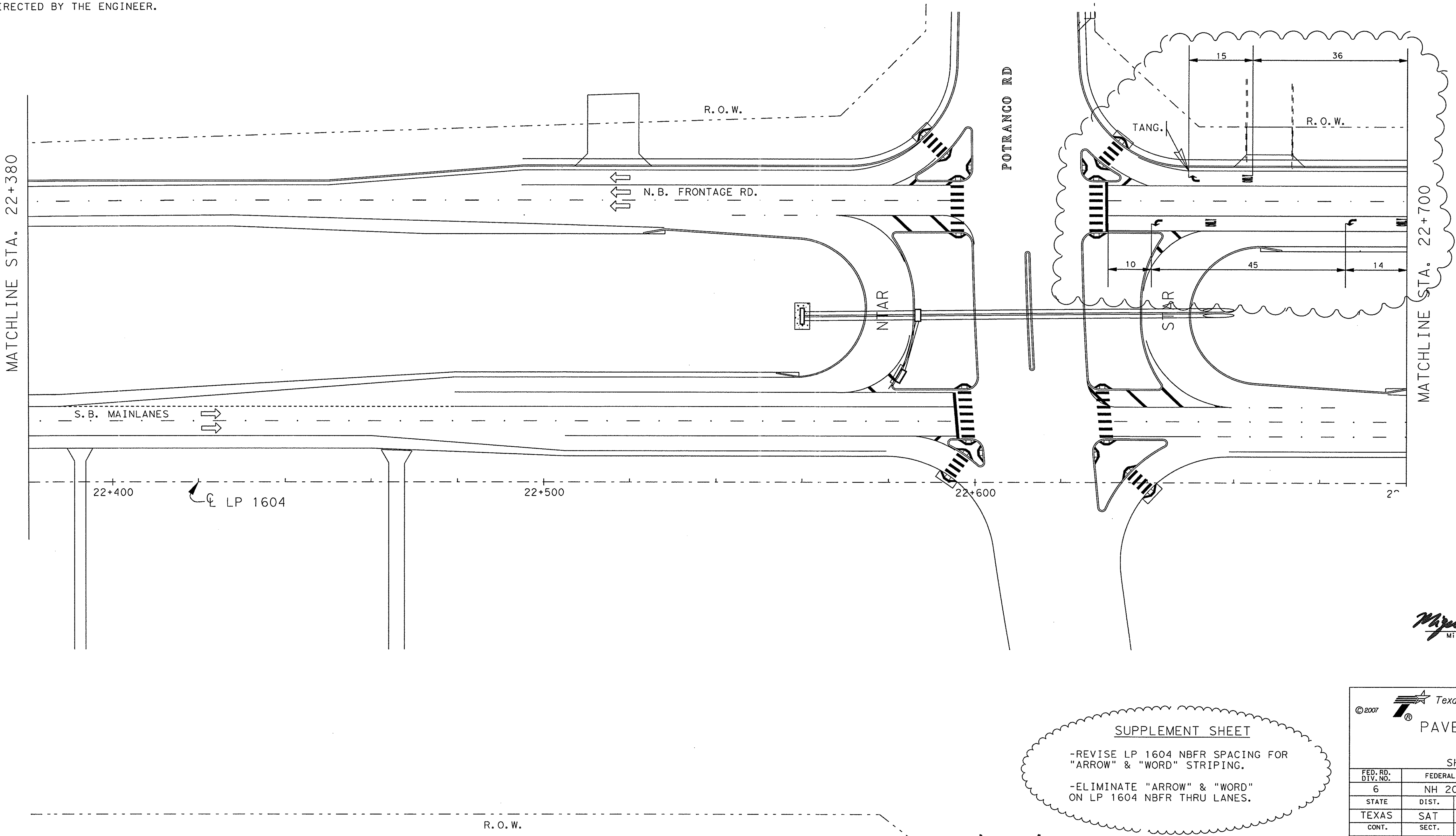


MIGUEL G. ROGERIO
96620
LICENSED PROFESSIONAL ENGINEER
STATE OF TEXAS

Miguel G. Rogerio, P.E. 5/7/2007
Miguel G. Rogerio, P.E. Date

**SUPPLEMENT SHEET**

-REVISE LP 1604 NBFR SPACING FOR "ARROW" & "WORD" STRIPING.

-ELIMINATE "ARROW" & "WORD" ON LP 1604 NBFR THRU LANES.

©2007

Texas Department of Transportation

PAVEMENT MARKING LAYOUT

SHEET 34a OF 57

| FED. RD. DIV. NO. | FEDERAL AID PROJECT NO. | | SHEET NO. |
|---|---|---|---|
| 6 | NH 2000(704), etc. | | 792AA |
| STATE | DIST. | COUNTY | |
| TEXAS | SAT | BEXAR | |
| CONT. | SECT. | JOB | HIGHWAY NO. |
| 2452 | 01 | 036, etc. | LP 1604 |

Revised Sheets

| DELINEATION QUANTITIES | | | | |
|---|---|---|---|---|
| TYPE | EA. | ASM. | SPL. MNT. | SURF. MNT. |
| D-SW(a) | | | | |
| D-DW(a) | | | | |
| D-SY(a) | FOR QUANTITIES | | | |
| D-DY(a) | SEE PRIOR SHEET | | | |
| OM-2SR(a) | 34 OF 57 | | | |
| | | | | |
| | | | | |
| | | | | |
| | | | | |

QUANTITIES THIS SHEET
CSJ 2452-01-036

SCALE 1:1000

| ESTIMATED QUANTITIES | | |
|---|---|---|
| ITEM | UNIT | QUANTITY |
| | | 2452-01-036 |
| REFL PAV MRK TY I (W)(SLD)(100MM) | M | 445 |
| REFL PAV MRK TY I (W)(BRK)(100MM) | M | 138 |
| REFL PAV MRK TY I (W)(DOT)(100MM) | M | 25 |
| REFL PAV MRK TY I (W)(SLD)(600MM) | M | 138 |
| REFL PAV MRK TY I (W)(ARROW) | EA | 7 |
| REFL PAV MRK TY I (W)(DBL ARROW) | EA | 4 |
| REFL PAV MRK TY I (W)(WORD) | EA | 7 |
| REFL PAV MRK TY I (Y)(SLD)(100MM) | M | 1052 |
| REFL PAV MRK TY I (Y)(SLD)(600MM) | M | 161 |
| REFL PAV MRK TY I (Y)(MED NOSE) | EA | 2 |
| RAIS PAV MRKR CL B (REFL) TY II A-A | EA | 116 |
| RAIS PAV MRKR CL B (REFL) TY II C-R | EA | 412 |
| | | |

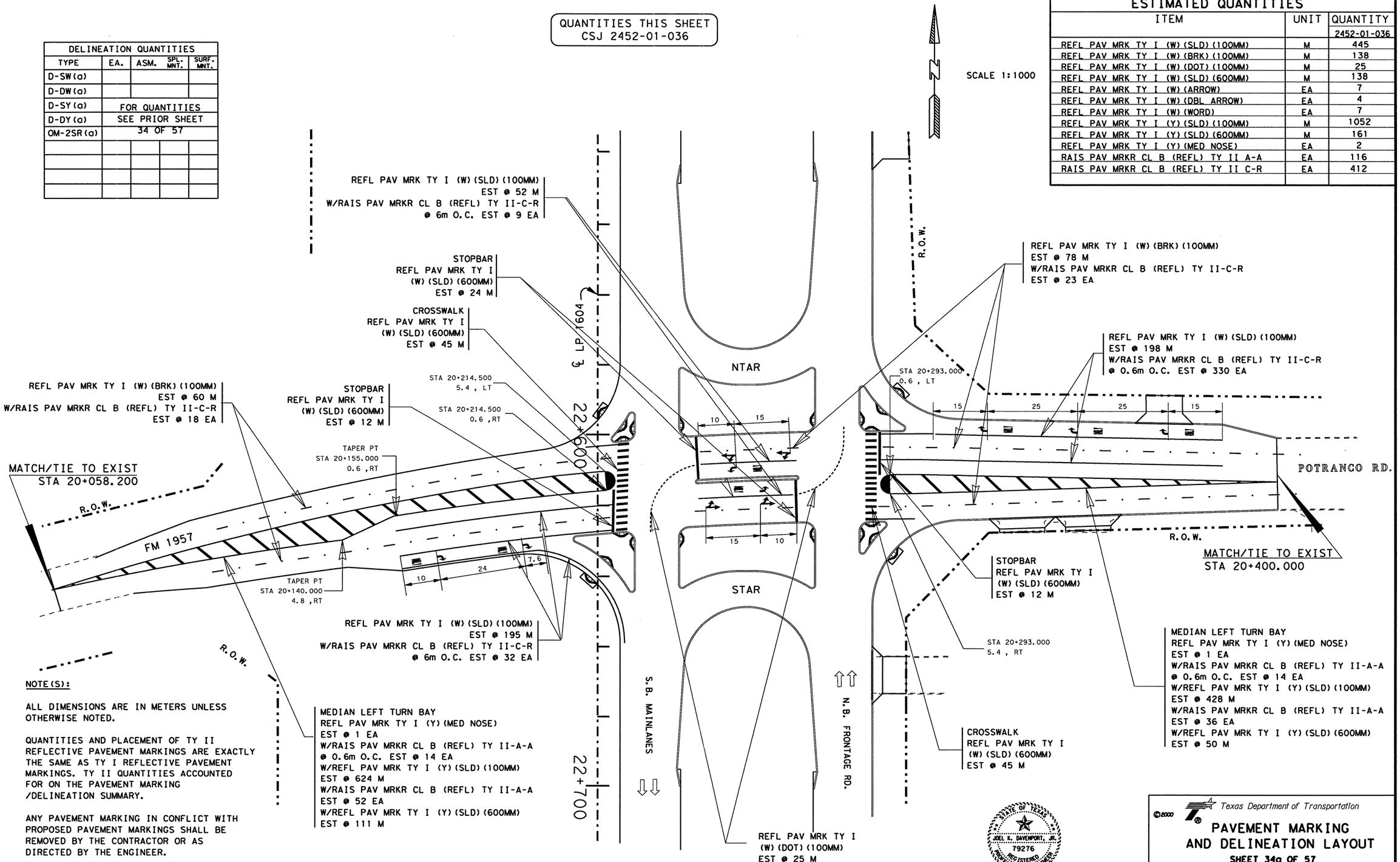


NOTE(S):

ALL DIMENSIONS ARE IN METERS UNLESS OTHERWISE NOTED.

QUANTITIES AND PLACEMENT OF TY II REFLECTIVE PAVEMENT MARKINGS ARE EXACTLY THE SAME AS TY I REFLECTIVE PAVEMENT MARKINGS. TY II QUANTITIES ACCOUNTED FOR ON THE PAVEMENT MARKING /DELINEATION SUMMARY.

ANY PAVEMENT MARKING IN CONFLICT WITH PROPOSED PAVEMENT MARKINGS SHALL BE REMOVED BY THE CONTRACTOR OR AS DIRECTED BY THE ENGINEER.

FOR ADDITIONAL DATA/DIMENSIONS, SEE INTERSECTION LAYOUT SHEET(S) 329-331 .

LEVELS DISPLAYED
1 2 3 4 5 6 7 8 9 10 11 12 13 14 15 16
17 18 19 20 21 22 23 24 25 26 27 28 29 30 31 32
33 34 35 36 37 38 39 40 41 42 43 44 45 46 47 48
49 50 51 52 53 54 55 56 57 58 59 60 61 62 63 64

ACC: t:/ao/design/lp1604fm471-90/pave-sign/
FILE: pavmrkplan34a.dgn

STATE OF TEXAS
JOEL K. DAVENPORT, JR.
79276
REGISTERED
PROFESSIONAL ENGINEER

Joel K. Davenport 9/19/00
Joel K. Davenport Jr., P.E. Date

©2000

Texas Department of Transportation

# PAVEMENT MARKING AND DELINEATION LAYOUT

SHEET 34a OF 57

| FED.RD. DIV.NO. | FEDERAL AID PROJECT NO. | | SHEET NO. |
|---|---|---|---|
| 6 | NH 2000(704),etc. | | 793 |
| STATE | DIST. | COUNTY | |
| TEXAS | SAT | BEXAR | |
| CONT. | SECT. | JOB | HIGHWAY NO. |
| 2452 | 01 | 036,etc. | LP 1604 |

7/18/00

Plotted on: 01/27/2004

| DELINEATION QUANTITIES | | | | |
|---|---|---|---|---|
| TYPE | EA. | ASM. | SPL. MNT. | SURF. MNT. |
| D-SW(a) | | | | |
| D-DW(a) | | | | |
| D-SY(a) | FOR QUANTITIES | | | |
| D-DY(a) | SEE PRIOR SHEET | | | |
| OM-2SR(a) | 34 OF 57 | | | |
| | | | | |
| | | | | |
| | | | | |
| | | | | |

QUANTITIES THIS SHEET
CSJ 2452-01-036

SCALE 1:1000

| ESTIMATED QUANTITIES | | |
|---|---|---|
| ITEM | UNIT | QUANTITY |
| | | 2452-01-036 |
| REFL PAV MRK TY I (W)(SLD)(100MM) | M | 445 |
| REFL PAV MRK TY I (W)(BRK)(100MM) | M | 138 |
| REFL PAV MRK TY I (W)(DOT)(100MM) | M | 50 |
| REFL PAV MRK TY I (W)(SLD)(600MM) | M | 38 |
| REFL PAV MRK TY I (W)(ARROW) | EA | 12 |
| REFL PAV MRK TY I (W)(DBL ARROW) | EA | 9 |
| REFL PAV MRK TY I (W)(WORD) | EA | 12 |
| REFL PAV MRK TY I (Y)(SLD)(100MM) | M | 1052 |
| REFL PAV MRK TY I (Y)(SLD)(600MM) | M | 161 |
| REFL PAV MRK TY I (Y)(MED NOSE) | EA | 2 |
| RAIS PAV MRKR CL B (REFL) TY II A-A | EA | 116 |
| RAIS PAV MRKR CL B (REFL) TY II C-R | EA | 412 |

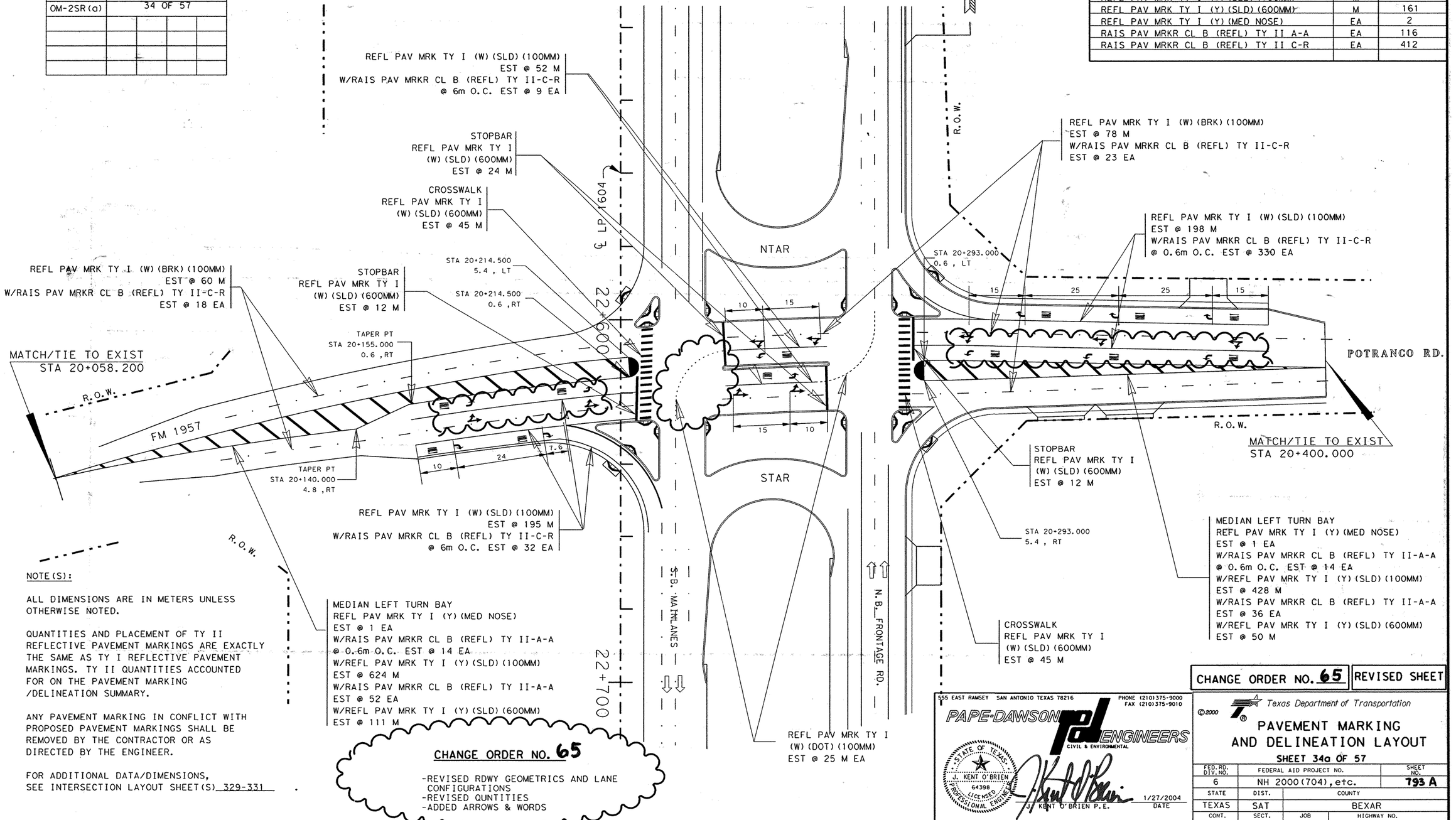


NOTE(S):

ALL DIMENSIONS ARE IN METERS UNLESS OTHERWISE NOTED.

QUANTITIES AND PLACEMENT OF TY II REFLECTIVE PAVEMENT MARKINGS ARE EXACTLY THE SAME AS TY I REFLECTIVE PAVEMENT MARKINGS. TY II QUANTITIES ACCOUNTED FOR ON THE PAVEMENT MARKING /DELINEATION SUMMARY.

ANY PAVEMENT MARKING IN CONFLICT WITH PROPOSED PAVEMENT MARKINGS SHALL BE REMOVED BY THE CONTRACTOR OR AS DIRECTED BY THE ENGINEER.

FOR ADDITIONAL DATA/DIMENSIONS, SEE INTERSECTION LAYOUT SHEET(S) 329-331 .

**CHANGE ORDER NO. 65**

-REVISED RDWY GEOMETRICS AND LANE CONFIGURATIONS
-REVISED QUNTITIES
-ADDED ARROWS & WORDS

CHANGE ORDER NO. 65 | REVISED SHEET

555 EAST RAMSEY SAN ANTONIO TEXAS 78216
PHONE (210)375-9000
FAX (210)375-9010
PAPE-DAWSON ENGINEERS
CIVIL & ENVIRONMENTAL

STATE OF TEXAS
J. KENT O'BRIEN
64398
LICENSED PROFESSIONAL ENGINEER

J. KENT O'BRIEN P.E. 1/27/2004 DATE

©2000
Texas Department of Transportation

# PAVEMENT MARKING AND DELINEATION LAYOUT

SHEET 34a OF 57

| FED.RD. DIV.NO. | FEDERAL AID PROJECT NO. | | SHEET NO. |
|---|---|---|---|
| 6 | NH 2000(704),etc. | | 793 A |
| STATE | DIST. | COUNTY | |
| TEXAS | SAT | BEXAR | |
| CONT. | SECT. | JOB | HIGHWAY NO. |
| 2452 | 01 | 036,etc. | LP 1604 |

LEVELS DISPLAYED
1 2 3 4 5 6 7 8 9 10 11 12 13 14 15 16
33 34 35 36 37 38 39 40 41 42 43 44 45 46 47 48
49 50 51 52 53 54 55 56 57 58 59 60 261

ACC: t:/ao/design/lp1604fm471-90/pave-sign/
FILE: pavmrkplan34a.dgn

Design Filename: p:\52\2011\design\civil\plansheets\traffic\pave-mark\pavmrkplan34a.dgn

Plotted on: 5/7/2007

Design Filename: T:\AO\Design\lp1604fm471-90\PD*Phase2*change*order*mylars\TxDOT*revisions\pavmrkplan34ab.dgn

| LEVELS DISPLAYED | | | | | | | | | | | | | | | |
|---|---|---|---|---|---|---|---|---|---|---|---|---|---|---|---|
| 1 | 2 | 3 | 4 | 5 | 6 | 7 | 8 | | | | 12 | 13 | 14 | 15 | 16 |
| | | | | 21 | 22 | 23 | 24 | 25 | 26 | 27 | 28 | 29 | 30 | 31 | 32 |
| 33 | 34 | 35 | 36 | 37 | 38 | 39 | 40 | 41 | 42 | 43 | 44 | 45 | 46 | 47 | 48 |
| 49 | 50 | 51 | 52 | 53 | 54 | 55 | 56 | 57 | 58 | 59 | 60 | | | 63 | |

ACC: t:/ao/design/
lp1604fm471-90/pave-sign/
FILE: pavmrkplan34a.dgn

NOTE(S):

ALL DIMENSIONS ARE IN METERS UNLESS OTHERWISE NOTED.

QUANTITIES AND PLACEMENT OF TY II REFLECTIVE PAVEMENT MARKINGS ARE EXACTLY THE SAME AS TY I REFLECTIVE PAVEMENT MARKINGS. TY I AND TY II QUANTITIES ACCOUNTED FOR ON THE PAVEMENT MARKING /DELINEATION SUMMARY UNDER CHANGE ORDER NO. 65 AND 140.

ANY PAVEMENT MARKING IN CONFLICT WITH PROPOSED PAVEMENT MARKINGS SHALL BE REMOVED BY THE CONTRACTOR OR AS DIRECTED BY THE ENGINEER.

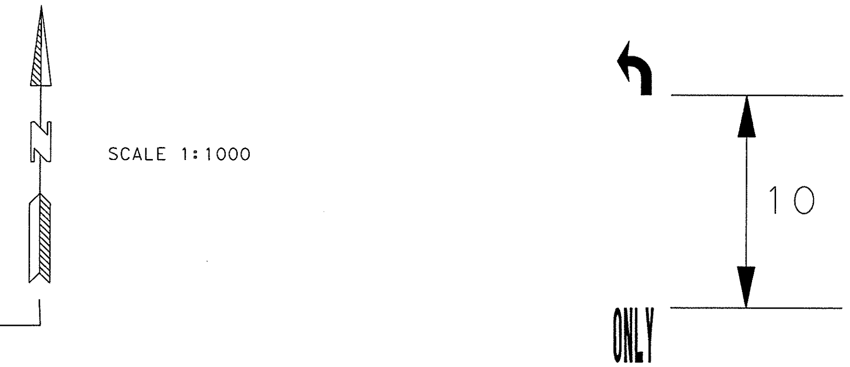


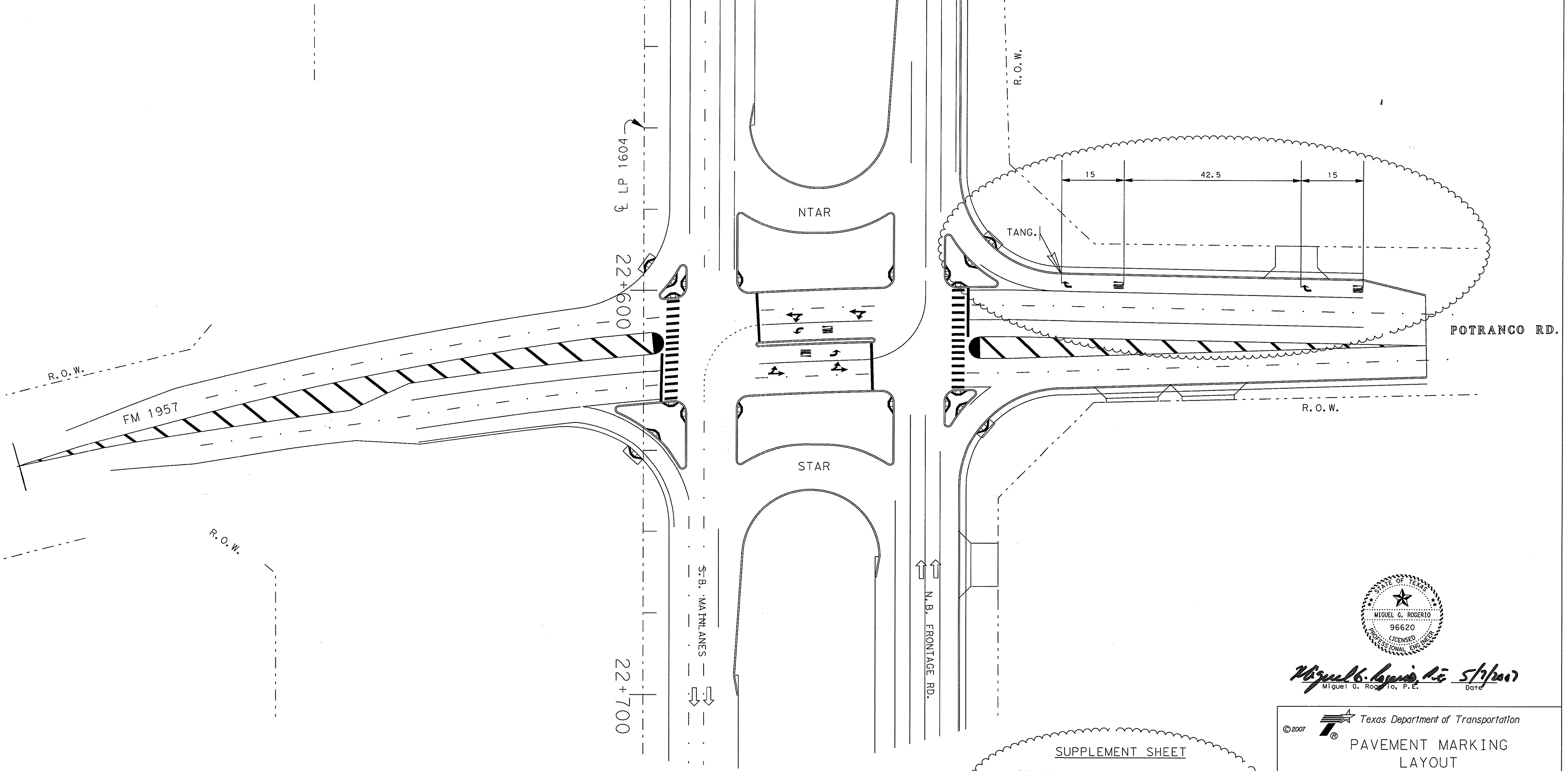


SUPPLEMENT SHEET

-REVISE LP 1604 NBFR & POTRANCO SPACING FOR "ARROW" & "WORD" STRIPING.

-ELIMINATE "ARROW" & "WORD" ON LP 1604 NBFR & POTRANCO WB THRU LANES.

Revised sheet

STATE OF TEXAS
MIGUEL G. ROGERIO
96620
LICENSED
PROFESSIONAL ENGINEER

Miguel G. Rogerio, P.E. 5/7/2007
Date

© 2007 Texas Department of Transportation

PAVEMENT MARKING LAYOUT

SHEET 34aa OF 57

| FED. RD. DIV. NO. | FEDERAL AID PROJECT NO. | | SHEET NO. |
|---|---|---|---|
| 6 | NH 2000(704), etc. | | 793AA |
| STATE | DIST. | COUNTY | |
| TEXAS | SAT | BEXAR | |
| CONT. | SECT. | JOB | HIGHWAY NO. |
| 2452 | 01 | 036, etc. | LP 1604 |

QUANTITIES THIS SHEET
CSJ 2452-01-036

SCALE 1:1000

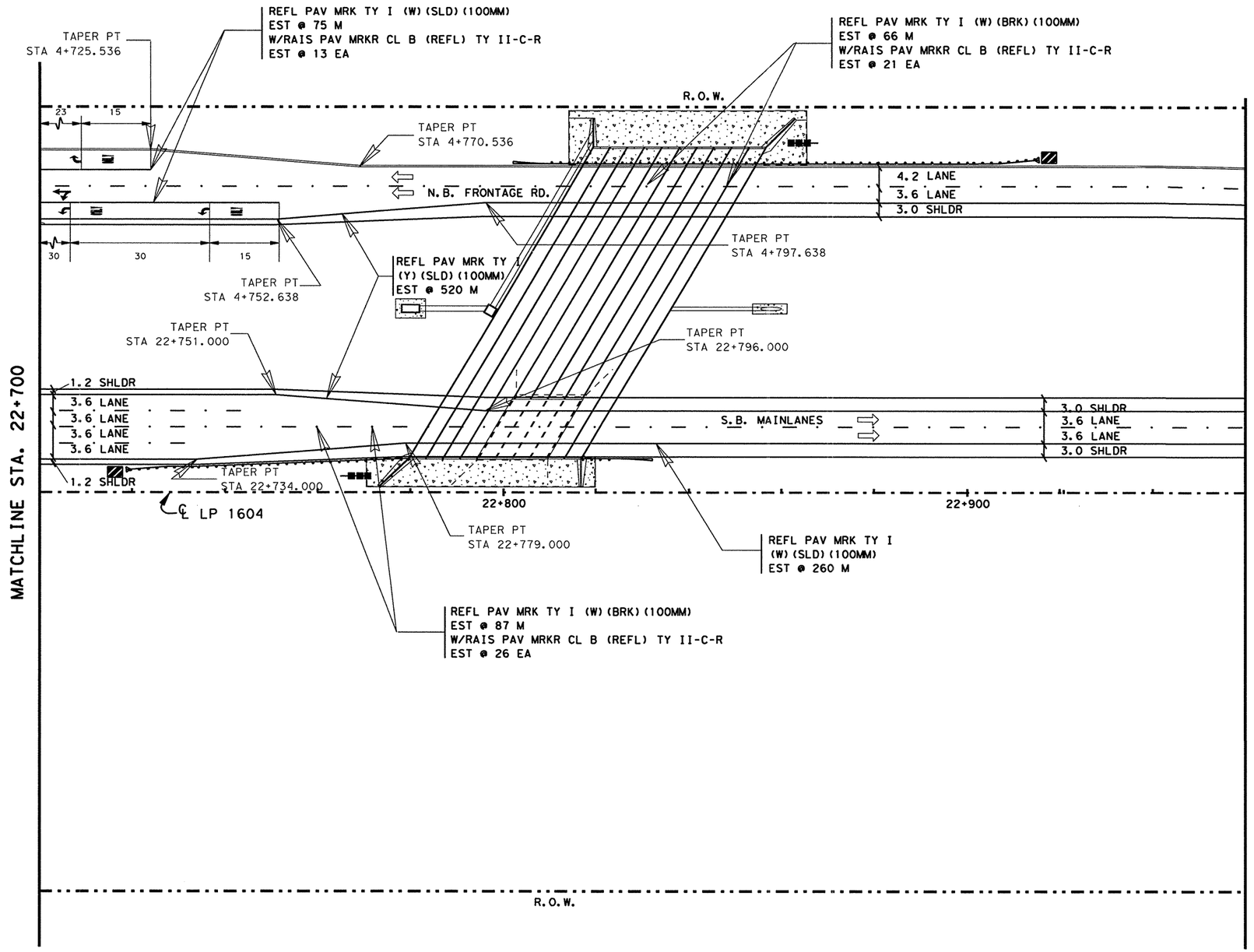


| ESTIMATED QUANTITIES | | |
|---|---|---|
| ITEM | UNIT | QUANTITY 2452-01-036 |
| REFL PAV MRK TY I (W)(SLD)(100MM) | M | 335 |
| REFL PAV MRK TY I (W)(BRK)(100MM) | M | 153 |
| REFL PAV MRK TY I (W)(ARROW) | EA | 3 |
| REFL PAV MRK TY I (W)(DBL ARROW) | EA | 1 |
| REFL PAV MRK TY I (W)(WORD) | EA | 3 |
| REFL PAV MRK TY I (Y)(SLD)(100MM) | M | 520 |
| RAIS PAV MRKR CL B (REFL) TY II C-R | EA | 60 |
| | | |

NOTE(S):

ALL DIMENSIONS ARE IN METERS UNLESS OTHERWISE NOTED.

QUANTITIES AND PLACEMENT OF TY II REFLECTIVE PAVEMENT MARKINGS ARE EXACTLY THE SAME AS TY I REFLECTIVE PAVEMENT MARKINGS. TY II QUANTITIES ACCOUNTED FOR ON THE PAVEMENT MARKING /DELINEATION SUMMARY.

ANY PAVEMENT MARKING IN CONFLICT WITH PROPOSED PAVEMENT MARKINGS SHALL BE REMOVED BY THE CONTRACTOR OR AS DIRECTED BY THE ENGINEER.

| DELINEATION QUANTITIES | | | | |
|---|---|---|---|---|
| TYPE | EA. | ASM. | SPL. MNT. | SURF. MNT. |
| D-SW(a) | | | | |
| D-DW(a) | | | | |
| D-SY(a) | | | | |
| D-DY(a) | | | | |
| OM-2SR(a) | | 2 | | |
| OM-3R | 2 | | | |
| | | | | |
| | | | | |
| | | | | |

STATE OF TEXAS
JOEL K. DAVENPORT, JR.
79276
REGISTERED
PROFESSIONAL ENGINEER

Joel K. Davenport Jr. 9/19/00
Joel K. Davenport Jr., P.E. Date

LEVELS DISPLAYED
1 2 3 4 5 6 7 8 9 10 11 12 13 14 15 16
- - 2 12 23 24 25 26 27 28 29 30 31 32
33 34 35 36 57 58 59 40 41 42 43 44 45 46 47 48
49 50 51 52 53 54 55 56 57 58 59 60 61 62 63

ACC: t:\ao\design\
lp1604fm471-90\pave-sign\
FILE: pavmrkplan35.dgn

©2000
Texas Department of Transportation

# PAVEMENT MARKING AND DELINEATION LAYOUT

SHEET 35 OF 57

| FED.RD. DIV.NO. | FEDERAL AID PROJECT NO. | SHEET NO. |
|---|---|---|
| 6 | NH 2000(704), etc. | 794 |
| STATE | DIST. | COUNTY |
| TEXAS | SAT | BEXAR |
| CONT. | SECT. | JOB / HIGHWAY NO. |
| 2452 | 01 | 036, etc. / LP 1604 |

QUANTITIES THIS SHEET
CSJ 2452-01-036

SCALE 1:1000

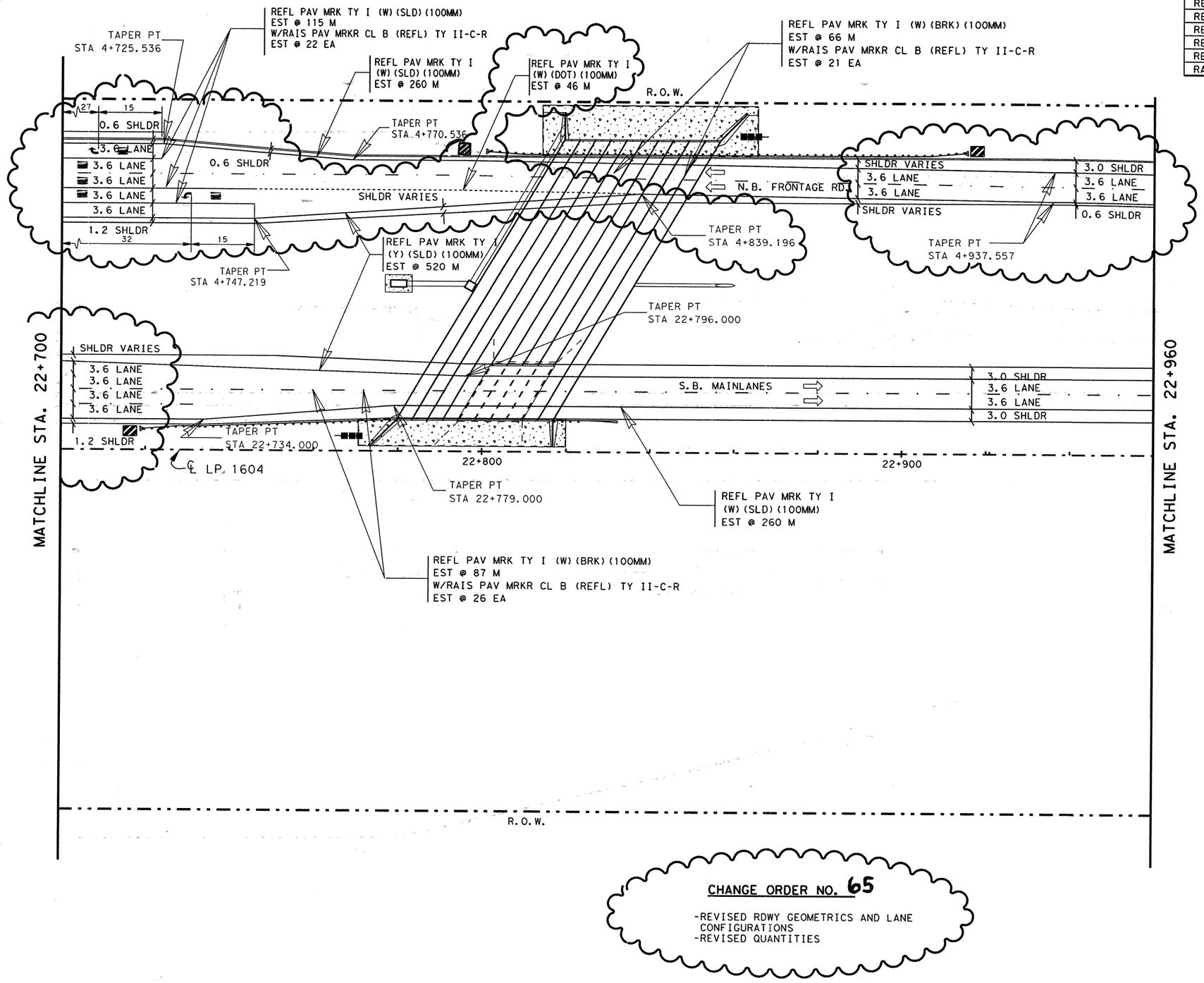


CHANGE ORDER NO. 65

-REVISED RDWY GEOMETRICS AND LANE CONFIGURATIONS
-REVISED QUANTITIES

## ESTIMATED QUANTITIES

| ITEM | UNIT | QUANTITY 2452-01-036 |
|---|---|---|
| REFL PAV MRK TY I (W) (SLD) (100MM) | M | 635 |
| REFL PAV MRK TY I (W) (BRK) (100MM) | M | 15 |
| REFL PAV MRK TY I (W) (DOT) (100MM) | M | 46 |
| REFL PAV MRK TY I (W) (ARROW) | EA | 2 |
| REFL PAV MRK TY I (W) (DBL ARROW) | EA | 0 |
| REFL PAV MRK TY I (W) (WORD) | EA | 5 |
| REFL PAV MRK TY I (Y) (SLD) (100MM) | M | 520 |
| RAIS PAV MRKR CL B (REFL) TY II C-R | EA | 69 |

NOTE(S):

ALL DIMENSIONS ARE IN METERS UNLESS OTHERWISE NOTED.

QUANTITIES AND PLACEMENT OF TY II REFLECTIVE PAVEMENT MARKINGS ARE EXACTLY THE SAME AS TY I REFLECTIVE PAVEMENT MARKINGS. TY II QUANTITIES ACCOUNTED FOR ON THE PAVEMENT MARKING /DELINEATION SUMMARY.

ANY PAVEMENT MARKING IN CONFLICT WITH PROPOSED PAVEMENT MARKINGS SHALL BE REMOVED BY THE CONTRACTOR OR AS DIRECTED BY THE ENGINEER.

## DELINEATION QUANTITIES

| TYPE | EA. | ASM. | SPL. MNT. | SURF. MNT. |
|---|---|---|---|---|
| D-SW(a) | | | | |
| D-DW(a) | | | | |
| D-SY(a) | | | | |
| D-DY(a) | | | | |
| OM-2SR(a) | | 2 | | |
| OM-3R | 2 | | | |
| OM-3L | 1 | | | |
| | | | | |
| | | | | |

CHANGE ORDER NO. 65 | REVISED SHEET

555 EAST RAMSEY SAN ANTONIO TEXAS 78216
PHONE (210)375-9000
FAX (210)375-9010
PAPE-DAWSON ENGINEERS
CIVIL & ENVIRONMENTAL
STATE OF TEXAS
J. KENT O'BRIEN
64398
LICENSED
PROFESSIONAL ENGINEER
J. KENT O'BRIEN P.E. 1/27/2004 DATE

©2000

Texas Department of Transportation

# PAVEMENT MARKING AND DELINEATION LAYOUT

SHEET 35 OF 57

| FED. RD. DIV. NO. | FEDERAL AID PROJECT NO. | | SHEET NO. |
|---|---|---|---|
| 6 | NH 2000(704), etc. | | 794A |
| STATE | DIST. | COUNTY | |
| TEXAS | SAT | BEXAR | |
| CONT. | SECT. | JOB | HIGHWAY NO. |
| 2452 | 01 | 036, etc. | LP 1604 |

Plotted on: 01/26/2004
Design Filename: p:\52\20\11\design\civil\plansheets\traffic\pave-mark\pavmrkplan35.dgn
ACC: t:\ao\design\lp1604fm471-90\pave-sign\pavmrkplan35.dgn
FILE: pavmrkplan35.dgn
LEVELS DISPLAYED

Plotted on: 5/1/2007

Design Filename: T:\AO\Design\lp1604fm471-90\PD*Phase2*change*order*mylars\TxDOT*revisions\pavmrkplan35aa.dgn

LEVELS DISPLAYED
1 2 3 4 5 6 7 8 9 10 11 12 13 14 15 16
17 18 19 20 21 22 23 24 25 26 27 28 29 30 31 32
33 34 35 36 37 38 39 40 41 42 43 44 45 46 47 48
49 50 51 52 53 54 55 56 57 58 59 60 61 62 63
ACC: t:\ao\design\
lp1604fm471-90\pave-sign\
FILE: pavmrkplan35aa.dgn

SCALE 1:1000

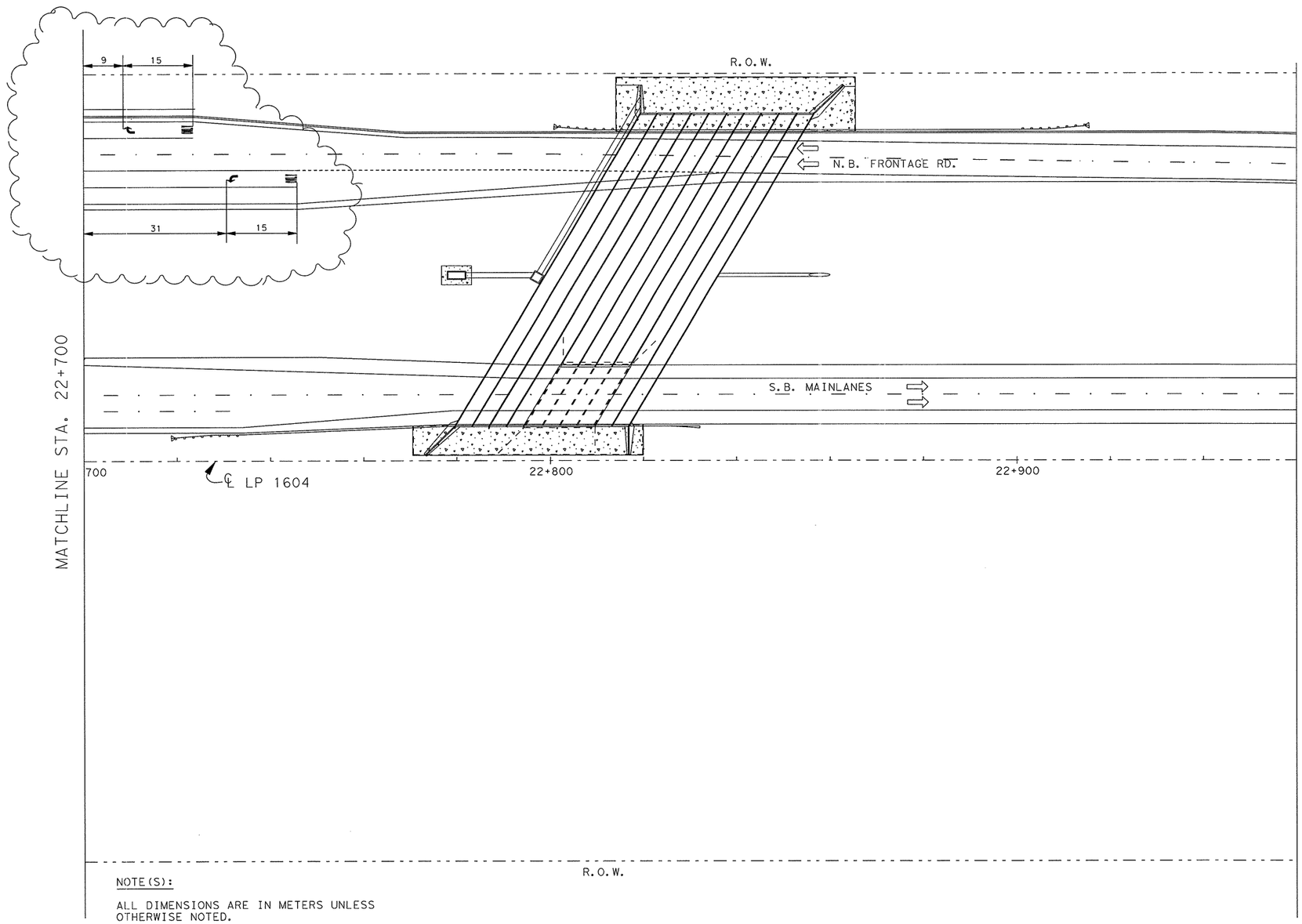


10 ONLY

SUPPLEMENT SHEET

-REVISE LP 1604 NBFR SPACING FOR "ARROW" & "WORD" STRIPING.

-ELIMINATE "ARROW" & "WORD" ON LP 1604 NBFR THRU LANES.

NOTE(S):

ALL DIMENSIONS ARE IN METERS UNLESS OTHERWISE NOTED.

QUANTITIES AND PLACEMENT OF TY II REFLECTIVE PAVEMENT MARKINGS ARE EXACTLY THE SAME AS TY I REFLECTIVE PAVEMENT MARKINGS. TY I AND TY II QUANTITIES ACCOUNTED FOR ON THE PAVEMENT MARKING /DELINEATION SUMMARY UNDER CHANGE ORDER NO. 65 AND 140.

ANY PAVEMENT MARKING IN CONFLICT WITH PROPOSED PAVEMENT MARKINGS SHALL BE REMOVED BY THE CONTRACTOR OR AS DIRECTED BY THE ENGINEER.

Revised Sheet

STATE OF TEXAS
MIGUEL G. ROGERIO
96620
LICENSED
PROFESSIONAL ENGINEER

Miguel G. Rogerio, P.E. 5/1/2007
Miguel G. Rogerio, P.E. Date

©2007 Texas Department of Transportation

# PAVEMENT MARKING LAYOUT

SHEET 35a OF 57

| FED. RD. DIV. NO. | FEDERAL AID PROJECT NO. | | SHEET NO. |
|---|---|---|---|
| 6 | NH 2000(704), etc. | | 794AA |
| STATE | DIST. | COUNTY | |
| TEXAS | SAT | BEXAR | |
| CONT. | SECT. | JOB | HIGHWAY NO. |
| 2452 | 01 | 036, etc. | LP 1604 |

QUANTITIES THIS SHEET
CSJ 2452-01-036

SCALE 1:1000

| ESTIMATED QUANTITIES | | |
|---|---|---|
| ITEM | UNIT | QUANTITY |
| | | 2452-01-036 |
| REFL PAV MRK TY I (W)(SLD)(100MM) | M | 260 |
| REFL PAV MRK TY I (W)(BRK)(100MM) | M | 129 |
| REFL PAV MRK TY I (Y)(SLD)(100MM) | M | 520 |
| RAIS PAV MRKR CL B (REFL) TY II C-R | EA | 44 |
| | | |

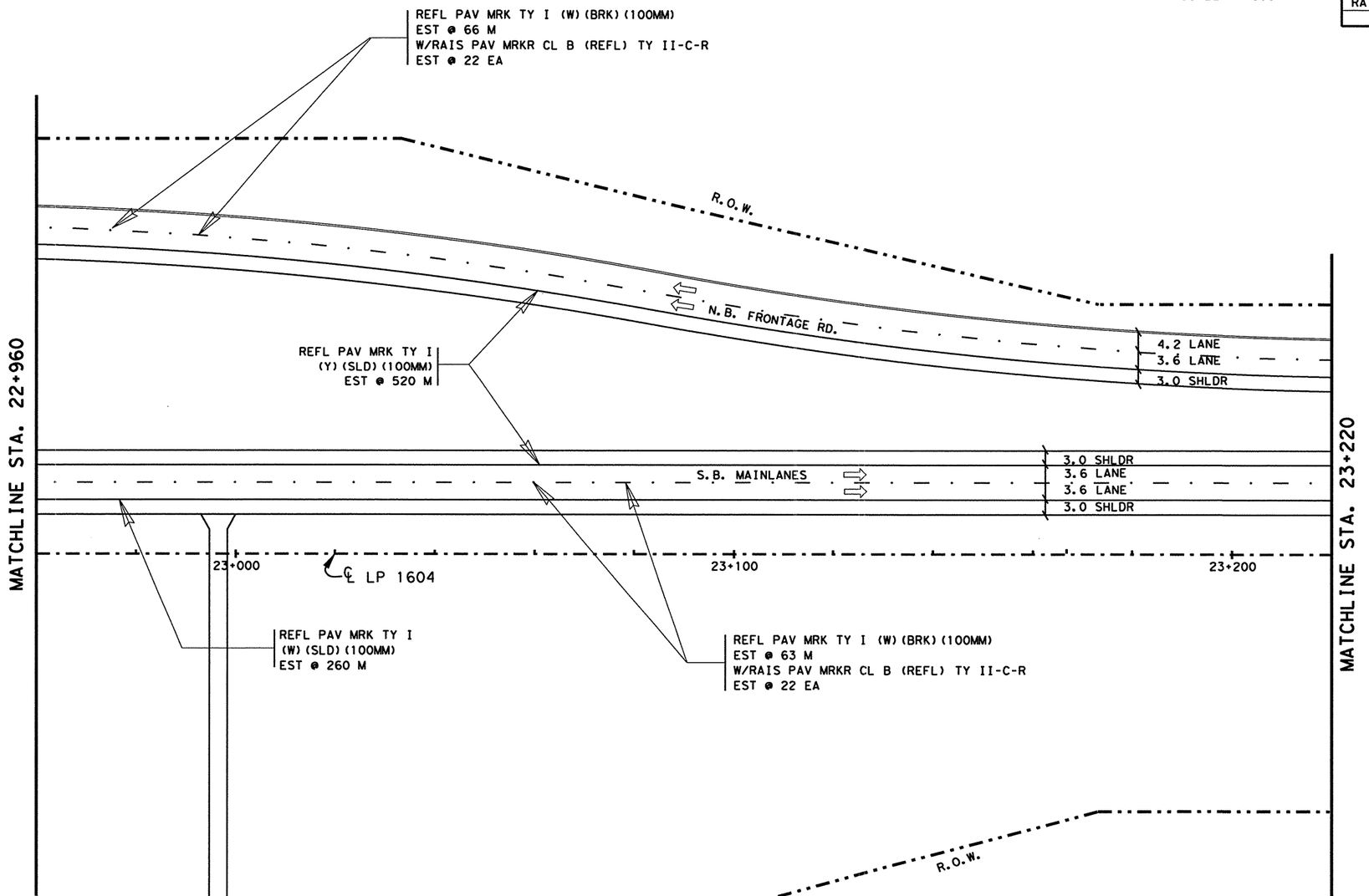


| DELINEATION QUANTITIES | | | | |
|---|---|---|---|---|
| TYPE | EA. | ASM. | SPL. MNT. | SURF. MNT. |
| D-SW(a) | | | | |
| D-DW(a) | | | | |
| D-SY(a) | | | | |
| D-DY(a) | | | | |
| OM-2SR(a) | | | | |
| | | | | |
| | | | | |
| | | | | |
| | | | | |

NOTE(S):

ALL DIMENSIONS ARE IN METERS UNLESS OTHERWISE NOTED.

QUANTITIES AND PLACEMENT OF TY II REFLECTIVE PAVEMENT MARKINGS ARE EXACTLY THE SAME AS TY I REFLECTIVE PAVEMENT MARKINGS. TY II QUANTITIES ACCOUNTED FOR ON THE PAVEMENT MARKING /DELINEATION SUMMARY.

ANY PAVEMENT MARKING IN CONFLICT WITH PROPOSED PAVEMENT MARKINGS SHALL BE REMOVED BY THE CONTRACTOR OR AS DIRECTED BY THE ENGINEER.

STATE OF TEXAS
JOEL K. DAVENPORT, JR.
79276
REGISTERED
PROFESSIONAL ENGINEER

Joel K. Davenport Jr., P.E. 9/19/00
Joel K. Davenport Jr., P.E. Date

©2000
Texas Department of Transportation

# PAVEMENT MARKING AND DELINEATION LAYOUT

SHEET 36 OF 57

| FED.RD. DIV.NO. | FEDERAL AID PROJECT NO. | | SHEET NO. |
|---|---|---|---|
| 6 | NH 2000(704),etc. | | 795 |
| STATE | DIST. | COUNTY | |
| TEXAS | SAT | BEXAR | |
| CONT. | SECT. | JOB | HIGHWAY NO. |
| 2452 | 01 | 036,etc. | LP 1604 |

LEVELS DISPLAYED
1 2 3 4 5 6 7 8 9 10 11 12 13 14 15 16
17 18 19 20 21 22 23 24 25 26 27 28 29 30 31 32
33 34 35 36 37 38 39 40 41 42 43 44 45 46 47 48
49 50 51 52 53 54 55 56 57 58 59 60 61 62 63

ACC: t:\oo\design\
lp1604fm471-90\pave-sign\
FILE: pavmrkplan36.dgn

QUANTITIES THIS SHEET
CSJ 2452-01-036

SCALE 1:1000

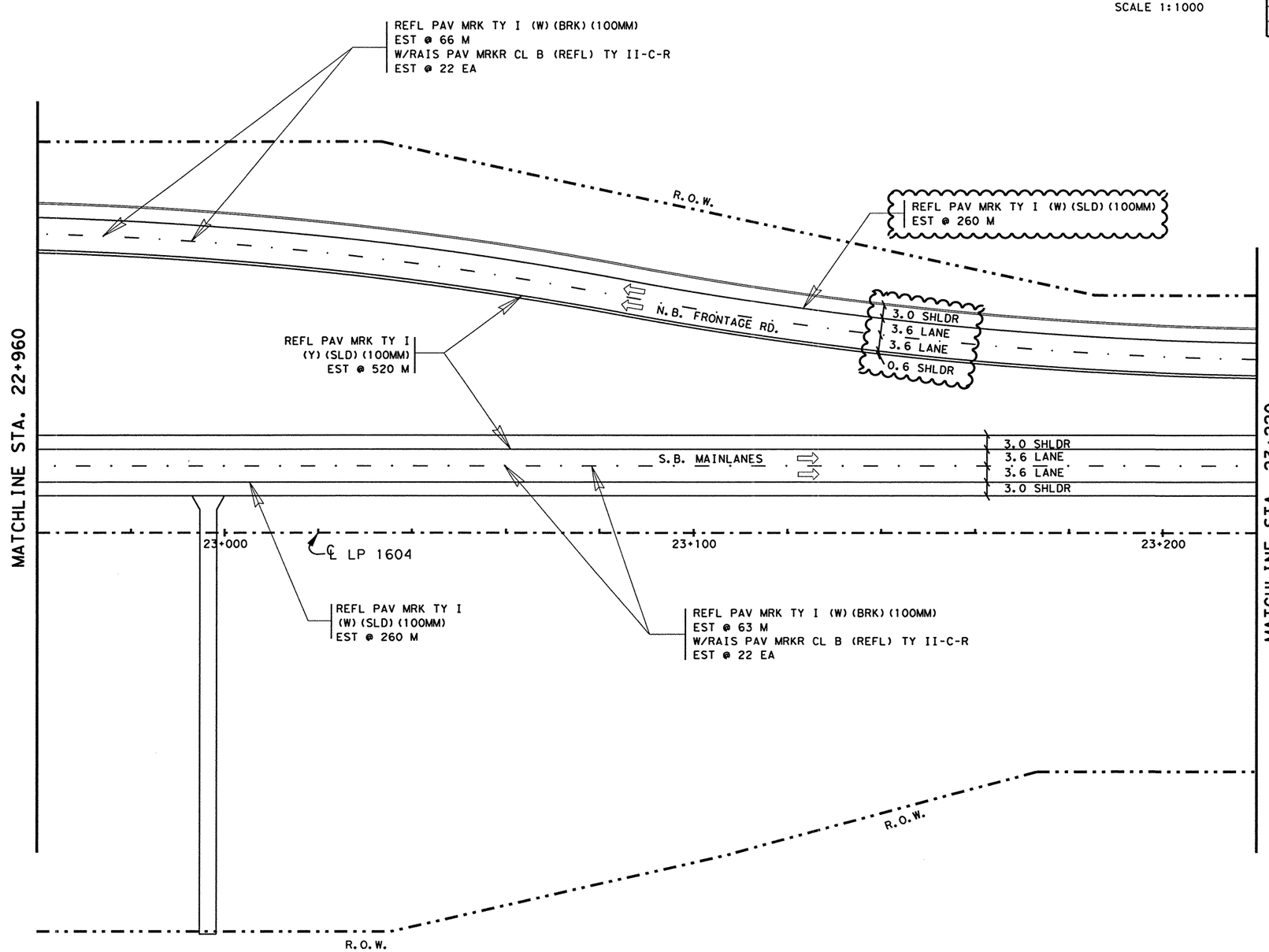


## ESTIMATED QUANTITIES

| ITEM | UNIT | QUANTITY 2452-01-036 |
|---|---|---|
| REFL PAV MRK TY I (W) (SLD) (100MM) | M | 520 |
| REFL PAV MRK TY I (W) (BRK) (100MM) | M | 129 |
| REFL PAV MRK TY I (Y) (SLD) (100MM) | M | 520 |
| RAIS PAV MRKR CL B (REFL) TY II C-R | EA | 44 |
| | | |

NOTE(S):

ALL DIMENSIONS ARE IN METERS UNLESS OTHERWISE NOTED.

QUANTITIES AND PLACEMENT OF TY II REFLECTIVE PAVEMENT MARKINGS ARE EXACTLY THE SAME AS TY I REFLECTIVE PAVEMENT MARKINGS. TY II QUANTITIES ACCOUNTED FOR ON THE PAVEMENT MARKING /DELINEATION SUMMARY.

ANY PAVEMENT MARKING IN CONFLICT WITH PROPOSED PAVEMENT MARKINGS SHALL BE REMOVED BY THE CONTRACTOR OR AS DIRECTED BY THE ENGINEER.

| DELINEATION QUANTITIES | | | | |
|---|---|---|---|---|
| TYPE | EA. | ASM. | SPL. MNT. | SURF. MNT. |
| D-SW(a) | | | | |
| D-DW(a) | | | | |
| D-SY(a) | | | | |
| D-DY(a) | | | | |
| OM-2SR(a) | | | | |
| | | | | |
| | | | | |
| | | | | |
| | | | | |

CHANGE ORDER 65

REVISED SHEET

CHANGE ORDER NO. 65
-REVISED FRONT. RD. LANE CONFIG.
-REVISED QUANTITIES

STATE OF TEXAS
JEROME D. PAVLISKA
76075
REGISTERED
PROFESSIONAL ENGINEER

Jerome D. Pavliska, P.E. 2/06/04
Jerome D. Pavliska, P.E. Date

LEVELS DISPLAYED
1 2 3 4 5 6 7 8 9 0 11 12 21 31 41 51 61
2 22 32 42 52 62 72 82 93 03 13 2
33 43 53 63 73 83 94 04 14 24 34 44 54 64 74 84
49 50 51 52 53 54 55 65 75 85 96 06 16 26 3

ACC: t:\ao\design\lp1604fm471-90\pave-sign\
FILE: pavmrkplan36.dgn

©2000
Texas Department of Transportation

# PAVEMENT MARKING AND DELINEATION LAYOUT

SHEET 36 OF 57

| FED. RD. DIV. NO. | FEDERAL AID PROJECT NO. | | SHEET NO. |
|---|---|---|---|
| 6 | NH 2000(704), etc. | | 795A |
| STATE | DIST. | COUNTY | |
| TEXAS | SAT | BEXAR | |
| CONT. | SECT. | JOB | HIGHWAY NO. |
| 2452 | 01 | 036, etc. | LP 1604 |

QUANTITIES THIS SHEET
CSJ 2452-01-036

SCALE 1:1000

| ESTIMATED QUANTITIES | | |
|---|---|---|
| ITEM | UNIT | QUANTITY |
| | | 2452-01-036 |
| REFL PAV MRK TY I (W)(SLD)(100MM) | M | 260 |
| REFL PAV MRK TY I (W)(BRK)(100MM) | M | 141 |
| REFL PAV MRK TY I (Y)(SLD)(100MM) | M | 520 |
| RAIS PAV MRKR CL B (REFL) TY II C-R | EA | 46 |
| | | |

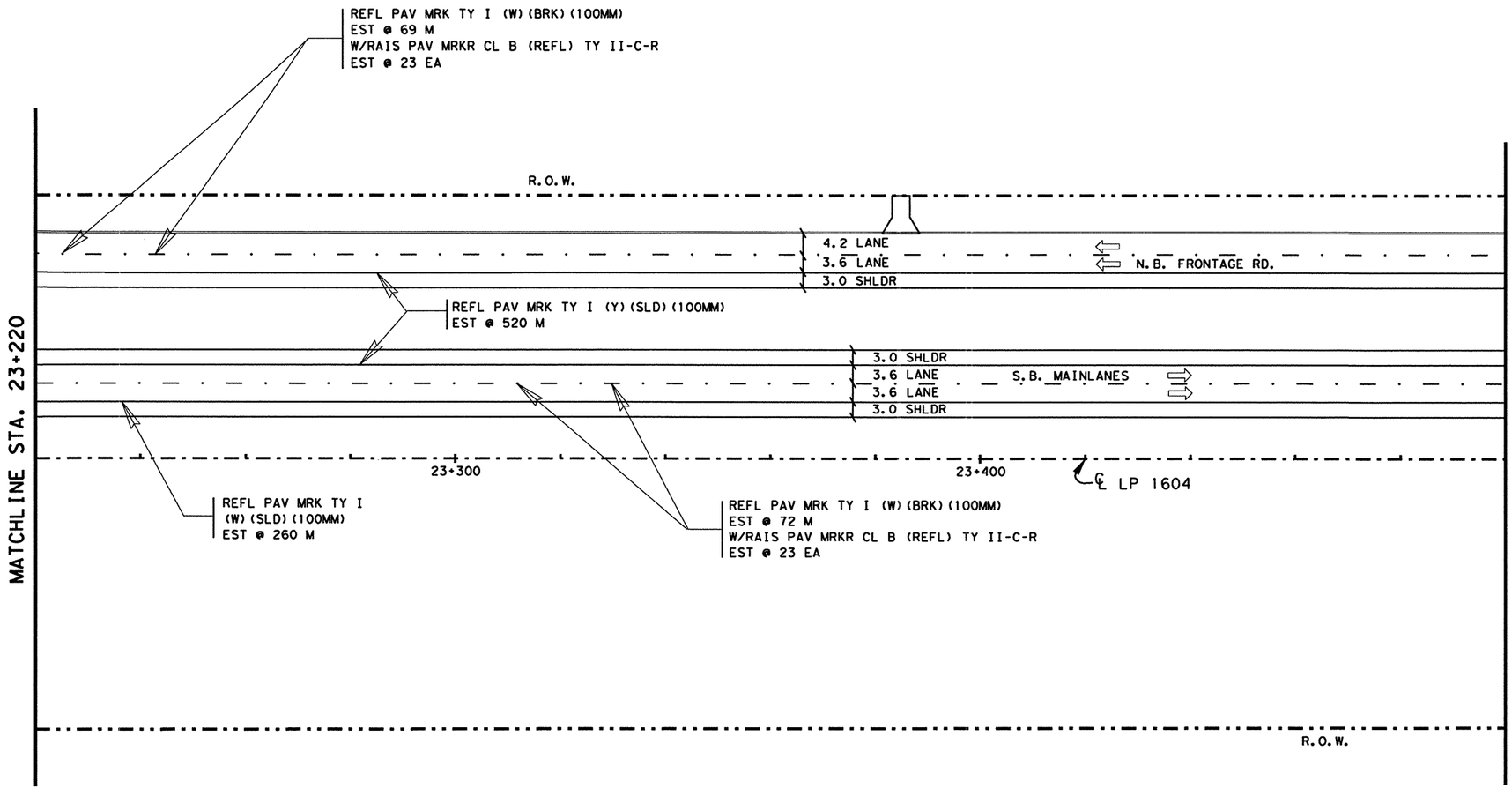


| DELINEATION QUANTITIES | | | | |
|---|---|---|---|---|
| TYPE | EA. | ASM. | SPL. MNT. | SURF. MNT. |
| D-SW(a) | | | | |
| D-DW(a) | | | | |
| D-SY(a) | | | | |
| D-DY(a) | | | | |
| OM-2SR(a) | | | | |
| | | | | |
| | | | | |
| | | | | |
| | | | | |

NOTE(S):

ALL DIMENSIONS ARE IN METERS UNLESS OTHERWISE NOTED.

QUANTITIES AND PLACEMENT OF TY II REFLECTIVE PAVEMENT MARKINGS ARE EXACTLY THE SAME AS TY I REFLECTIVE PAVEMENT MARKINGS. TY II QUANTITIES ACCOUNTED FOR ON THE PAVEMENT MARKING /DELINEATION SUMMARY.

ANY PAVEMENT MARKING IN CONFLICT WITH PROPOSED PAVEMENT MARKINGS SHALL BE REMOVED BY THE CONTRACTOR OR AS DIRECTED BY THE ENGINEER.

STATE OF TEXAS
JOEL K. DAVENPORT, JR.
79276
REGISTERED
PROFESSIONAL ENGINEER

Joel K. Davenport Jr. 9/19/00
Joel K. Davenport Jr., P.E. Date

©2000

Texas Department of Transportation

# PAVEMENT MARKING AND DELINEATION LAYOUT

SHEET 37 OF 57

| FED. RD. DIV. NO. | FEDERAL AID PROJECT NO. | | SHEET NO. |
|---|---|---|---|
| 6 | NH 2000(704),etc. | | 796 |
| STATE | DIST. | COUNTY | |
| TEXAS | SAT | BEXAR | |
| CONT. | SECT. | JOB | HIGHWAY NO. |
| 2452 | 01 | 036,etc. | LP 1604 |

LEVELS DISPLAYED
1 2 3 4 5 6 7 8 9 10 11 12 13 14 15 16
21 22 23 24 25 26 27 28 29 30 31 32
33 34 35 36 37 38 39 40 41 42 43 44 45 46 47 48
49 50 51 52 53 54 55 56 57 58 59 60 61 62 63

ACC: t:\oo\design\lp1604fm471-90\pave-sign\
FILE: pavmrkplan37.dgn

QUANTITIES THIS SHEET
CSJ 2452-01-036

SCALE 1:1000

| ESTIMATED QUANTITIES | | |
|---|---|---|
| ITEM | UNIT | QUANTITY |
| | | 2452-01-036 |
| REFL PAV MRK TY I (W) (SLD) (100MM) | M | 560 |
| REFL PAV MRK TY I (W) (BRK) (100MM) | M | 141 |
| REFL PAV MRK TY I (Y) (SLD) (100MM) | M | 520 |
| RAIS PAV MRKR CL B (REFL) TY II C-R | EA | 46 |
| | | |

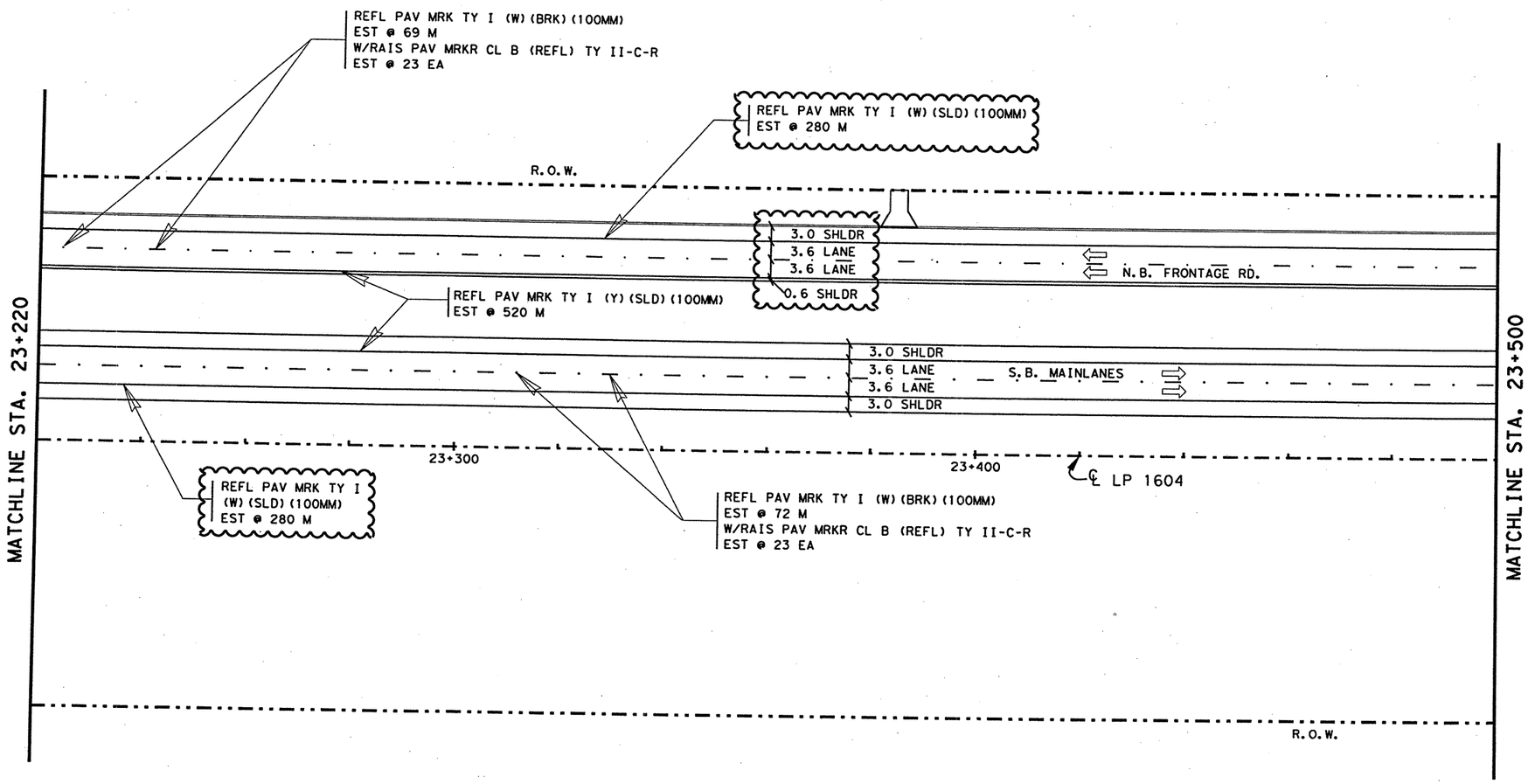


NOTE(S):

ALL DIMENSIONS ARE IN METERS UNLESS OTHERWISE NOTED.

QUANTITIES AND PLACEMENT OF TY II REFLECTIVE PAVEMENT MARKINGS ARE EXACTLY THE SAME AS TY I REFLECTIVE PAVEMENT MARKINGS. TY II QUANTITIES ACCOUNTED FOR ON THE PAVEMENT MARKING /DELINEATION SUMMARY.

ANY PAVEMENT MARKING IN CONFLICT WITH PROPOSED PAVEMENT MARKINGS SHALL BE REMOVED BY THE CONTRACTOR OR AS DIRECTED BY THE ENGINEER.

| DELINEATION QUANTITIES | | | | |
|---|---|---|---|---|
| TYPE | EA. | ASM. | SPL. MNT. | SURF. MNT. |
| D-SW(a) | | | | |
| D-DW(a) | | | | |
| D-SY(a) | | | | |
| D-DY(a) | | | | |
| OM-2SR(a) | | | | |
| | | | | |
| | | | | |
| | | | | |
| | | | | |

CHANGE ORDER 65

REVISED SHEET

CHANGE ORDER NO. 65
-REVISED FRONT. RD. LANE CONFIG.
-REVISED QUANTITIES

STATE OF TEXAS
JEROME D. PAVLISKA
76075
REGISTERED
PROFESSIONAL ENGINEER

Jerome D. Pavliska, P.E. 2/06/04
Jerome D. Pavliska, P.E. Date

LEVELS DISPLAYED
1 2 3 4 5 6 7 8 9 10 11 12 13 14 15 16
33 43 53 63 73 83 93 103 113 123 133 143 153 163
49 50 51 52 53 54 55 56 57 58 59 60 61 62 63

ACC: t:\ao\design\
lp1604fm471-90\pave-sign\
FILE: pavmrkplan37.dgn

©2000
Texas Department of Transportation

# PAVEMENT MARKING AND DELINEATION LAYOUT

SHEET 37 OF 57

| FED. RD. DIV. NO. | FEDERAL AID PROJECT NO. | | SHEET NO. |
|---|---|---|---|
| 6 | NH 2000(704), etc. | | 796A |
| STATE | DIST. | COUNTY | |
| TEXAS | SAT | BEXAR | |
| CONT. | SECT. | JOB | HIGHWAY NO. |
| 2452 | 01 | 036, etc. | LP 1604 |

02-04-04

QUANTITIES THIS SHEET
CSJ 2452-01-036

SCALE 1:1000

| ESTIMATED QUANTITIES | | |
|---|---|---|
| ITEM | UNIT | QUANTITY |
| | | 2452-01-036 |
| REFL PAV MRK TY I (W)(SLD)(100MM) | M | 257 |
| REFL PAV MRK TY I (W)(BRK)(100MM) | M | 126 |
| REFL PAV MRK TY I (Y)(SLD)(100MM) | M | 504 |
| RAIS PAV MRKR CL B (REFL) TY II C-R | EA | 43 |
| | | |

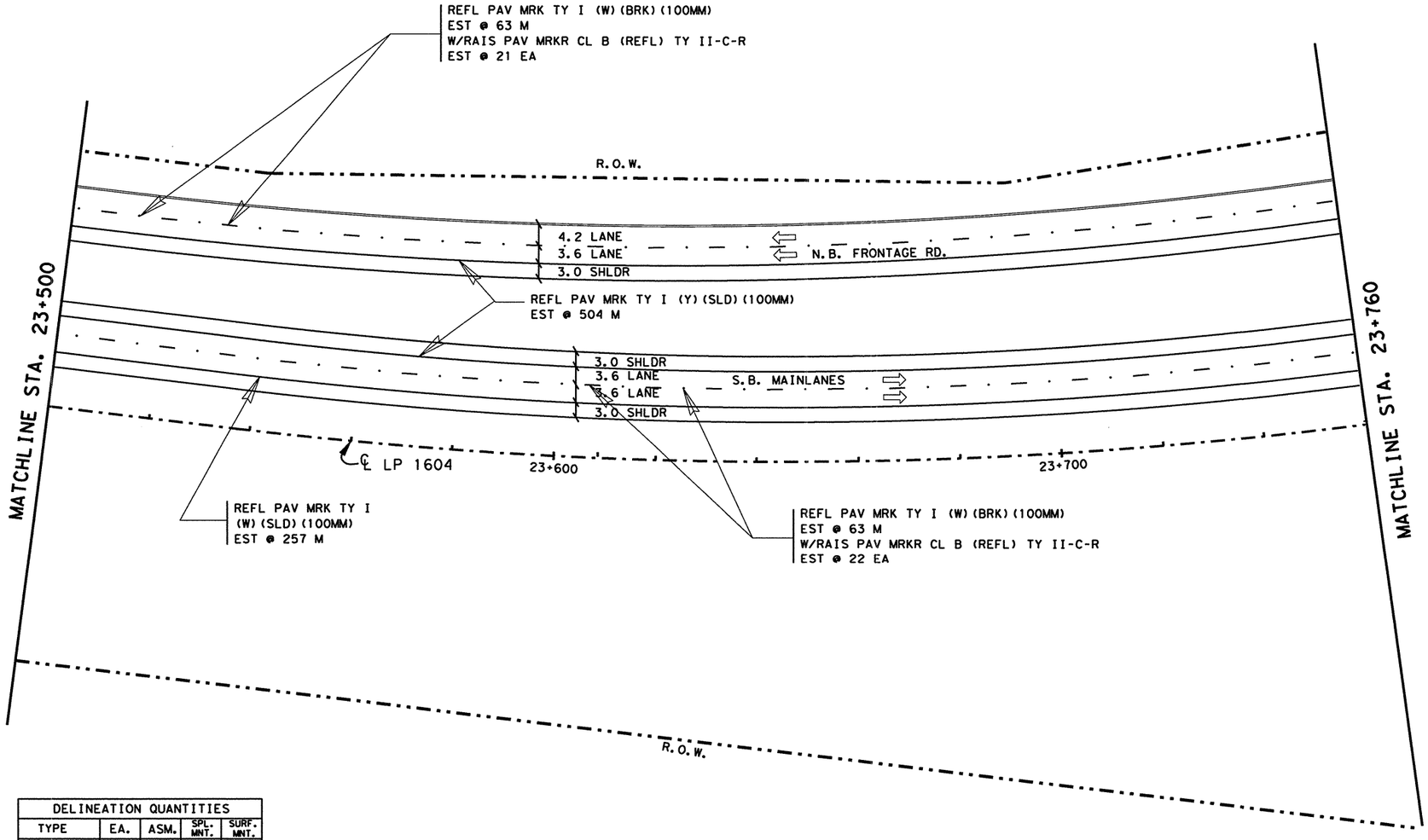


| DELINEATION QUANTITIES | | | | |
|---|---|---|---|---|
| TYPE | EA. | ASM. | SPL. MNT. | SURF. MNT. |
| D-SW(a) | | | | |
| D-DW(a) | | | | |
| D-SY(a) | | | | |
| D-DY(a) | | | | |
| OM-2SR(a) | | | | |
| | | | | |
| | | | | |
| | | | | |
| TOTAL | | | | |

NOTE(S):

ALL DIMENSIONS ARE IN METERS UNLESS OTHERWISE NOTED.

QUANTITIES AND PLACEMENT OF TY II REFLECTIVE PAVEMENT MARKINGS ARE EXACTLY THE SAME AS TY I REFLECTIVE PAVEMENT MARKINGS. TY II QUANTITIES ACCOUNTED FOR ON THE PAVEMENT MARKING /DELINEATION SUMMARY.

ANY PAVEMENT MARKING IN CONFLICT WITH PROPOSED PAVEMENT MARKINGS SHALL BE REMOVED BY THE CONTRACTOR OR AS DIRECTED BY THE ENGINEER.

STATE OF TEXAS
JOEL K. DAVENPORT, JR.
79276
REGISTERED PROFESSIONAL ENGINEER

Joel K. Davenport Jr. 9/19/00
Joel K. Davenport Jr., P.E. — Date

©2000
Texas Department of Transportation

# PAVEMENT MARKING AND DELINEATION LAYOUT

SHEET 38 OF 57

| FED.RD. DIV.NO. | FEDERAL AID PROJECT NO. | | SHEET NO. |
|---|---|---|---|
| 6 | NH 2000(704),etc. | | 797 |
| STATE | DIST. | COUNTY | |
| TEXAS | SAT | BEXAR | |
| CONT. | SECT. | JOB | HIGHWAY NO. |
| 2452 | 01 | 036,etc. | LP 1604 |

LEVELS DISPLAYED
1 2 3 4 5 6 7 8 9 10 11 12 13 14 15 16
17 18 19 20 21 22 23 24 25 26 27 28 29 30 31 32
33 34 35 36 37 38 39 40 41 42 43 44 45 46 47 48
49 50 51 52 53 54 55 56 57 58 59 60 61 62 63

ACC: t:\ao\design\lp1604fm471-90\pave-sign\
FILE: pavmrkplan38.dgn

QUANTITIES THIS SHEET
CSJ 2452-01-036

SCALE 1:1000

| ESTIMATED QUANTITIES | | |
|---|---|---|
| ITEM | UNIT | QUANTITY |
| | | 2452-01-036 |
| REFL PAV MRK TY I (W) (SLD) (100MM) | M | 517 |
| REFL PAV MRK TY I (W) (BRK) (100MM) | M | 126 |
| REFL PAV MRK TY I (Y) (SLD) (100MM) | M | 520 |
| RAIS PAV MRKR CL B (REFL) TY II C-R | EA | 43 |

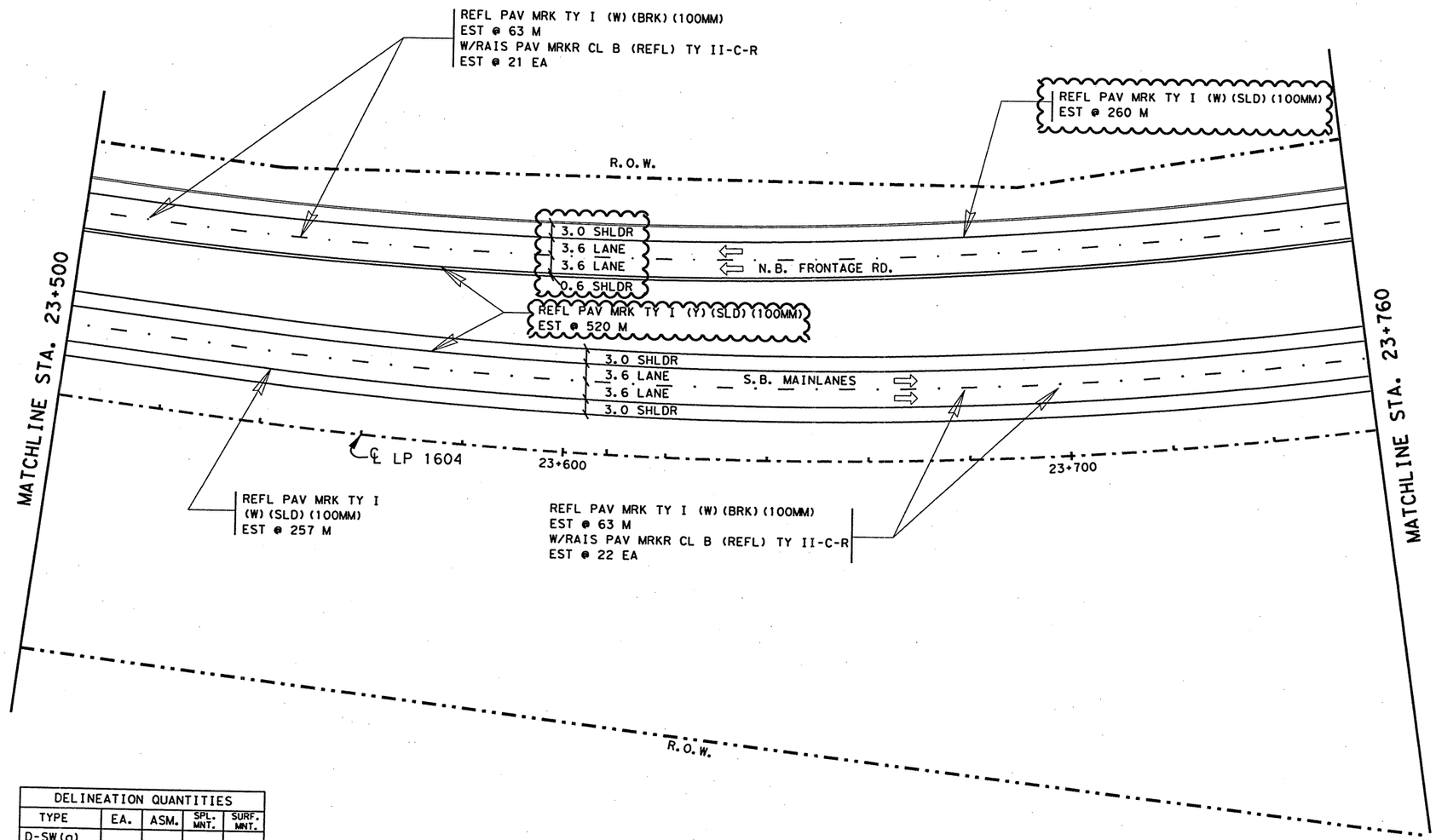


| DELINEATION QUANTITIES | | | | |
|---|---|---|---|---|
| TYPE | EA. | ASM. | SPL. MNT. | SURF. MNT. |
| D-SW(a) | | | | |
| D-DW(a) | | | | |
| D-SY(a) | | | | |
| D-DY(a) | | | | |
| OM-2SR(a) | | | | |
| | | | | |
| | | | | |
| | | | | |
| TOTAL | | | | |

NOTE(S):

ALL DIMENSIONS ARE IN METERS UNLESS OTHERWISE NOTED.

QUANTITIES AND PLACEMENT OF TY II REFLECTIVE PAVEMENT MARKINGS ARE EXACTLY THE SAME AS TY I REFLECTIVE PAVEMENT MARKINGS. TY II QUANTITIES ACCOUNTED FOR ON THE PAVEMENT MARKING /DELINEATION SUMMARY.

ANY PAVEMENT MARKING IN CONFLICT WITH PROPOSED PAVEMENT MARKINGS SHALL BE REMOVED BY THE CONTRACTOR OR AS DIRECTED BY THE ENGINEER.

CHANGE ORDER 65

REVISED SHEET

CHANGE ORDER NO. 65
-REVISED FRONT. RD. LANE CONFIG.
-REVISED QUANTITIES

STATE OF TEXAS
JEROME D. PAVLISKA
76075
REGISTERED PROFESSIONAL ENGINEER

Jerome D. Pavliska P.E. 2/06/04
Jerome D. Pavliska, P.E. Date

LEVELS DISPLAYED
1 2 3 4 5 6 7 8 9 10 11 12 13 14 15 16 17 18 19 20 21 22 23 24 25 26 27 28 29 30 31 32 33 34 35 36 37 38 39 40 41 42 43 44 45 46 47 48 49 50 51 52 53 54 55 56 57 58 59 60 61 62 63

ACC: t:\oo\design\lp1604fm471-90\pave-sign\
FILE: pavmrkplan38.dgn

©2000
Texas Department of Transportation

# PAVEMENT MARKING AND DELINEATION LAYOUT

SHEET 38 OF 57

| FED. RD. DIV. NO. | FEDERAL AID PROJECT NO. | | SHEET NO. |
|---|---|---|---|
| 6 | NH 2000(704), etc. | | 797A |
| STATE | DIST. | COUNTY | |
| TEXAS | SAT | BEXAR | |
| CONT. | SECT. | JOB | HIGHWAY NO. |
| 2452 | 01 | 036, etc. | LP 1604 |

02-04-04

QUANTITIES THIS SHEET
CSJ 2452-01-036

SCALE 1:1000

| ESTIMATED QUANTITIES | | |
|---|---|---|
| ITEM | UNIT | QUANTITY |
| | | 2452-01-036 |
| REFL PAV MRK TY I (W)(SLD)(100MM) | M | 258 |
| REFL PAV MRK TY I (W)(BRK)(100MM) | M | 129 |
| REFL PAV MRK TY I (Y)(SLD)(100MM) | M | 515 |
| RAIS PAV MRKR CL B (REFL) TY II C-R | EA | 43 |
| | | |

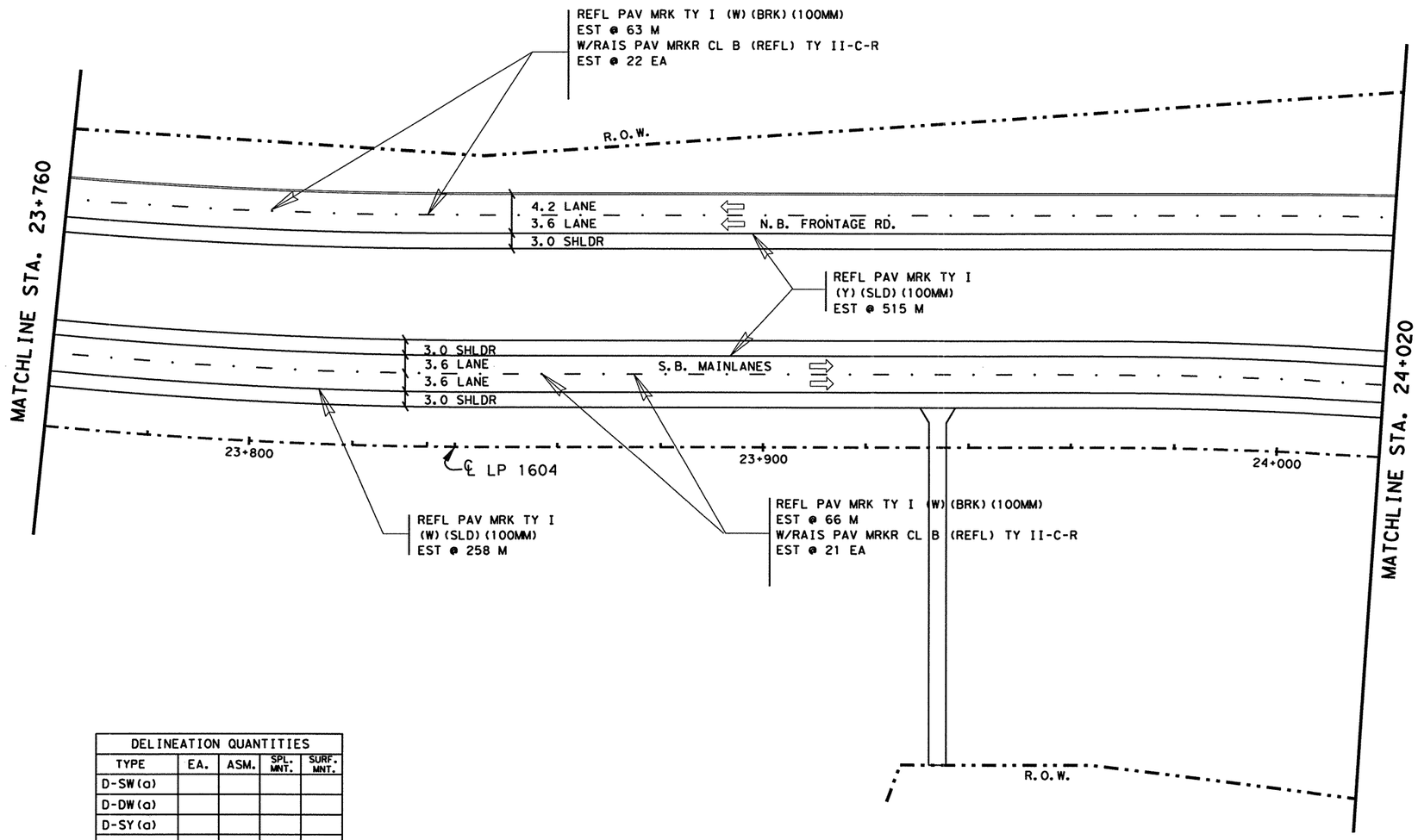


NOTE(S):

ALL DIMENSIONS ARE IN METERS UNLESS OTHERWISE NOTED.

QUANTITIES AND PLACEMENT OF TY II REFLECTIVE PAVEMENT MARKINGS ARE EXACTLY THE SAME AS TY I REFLECTIVE PAVEMENT MARKINGS. TY II QUANTITIES ACCOUNTED FOR ON THE PAVEMENT MARKING /DELINEATION SUMMARY.

ANY PAVEMENT MARKING IN CONFLICT WITH PROPOSED PAVEMENT MARKINGS SHALL BE REMOVED BY THE CONTRACTOR OR AS DIRECTED BY THE ENGINEER.

| DELINEATION QUANTITIES | | | | |
|---|---|---|---|---|
| TYPE | EA. | ASM. | SPL. MNT. | SURF. MNT. |
| D-SW(a) | | | | |
| D-DW(a) | | | | |
| D-SY(a) | | | | |
| D-DY(a) | | | | |
| OM-2SR(a) | | | | |
| | | | | |
| | | | | |
| | | | | |
| | | | | |

STATE OF TEXAS
JOEL K. DAVENPORT, JR.
79276
REGISTERED
PROFESSIONAL ENGINEER

Joel K Davenport, Jr 9/19/00
Joel K. Davenport, Jr. P.E. 79276 Date

©2000
Texas Department of Transportation

# PAVEMENT MARKING AND DELINEATION LAYOUT

SHEET 39 OF 57

| FED.RD. DIV.NO. | FEDERAL AID PROJECT NO. | | SHEET NO. |
|---|---|---|---|
| 6 | NH 2000(704),etc. | | 798 |
| STATE | DIST. | COUNTY | |
| TEXAS | SAT | BEXAR | |
| CONT. | SECT. | JOB | HIGHWAY NO. |
| 2452 | 01 | 036,etc. | LP 1604 |

LEVELS DISPLAYED
1 2 3 4 5 6 7 8 9 10 11 12 21 31 41 51 61
2 20 21 22 23 24 25 26 27 28 29 30 31 32
33 34 35 36 37 38 39 40 41 42 43 44 45 46 47 48
49 50 51 52 53 54 55 56 57 58 59 60 61 62 63

ACC: t:\ao\design\ip1604fm471-90\pave-sign\
FILE: pavmrkplan39.dgn

7218700

QUANTITIES THIS SHEET
CSJ 2452-01-036

SCALE 1:1000

| ESTIMATED QUANTITIES | | |
|---|---|---|
| ITEM | UNIT | QUANTITY |
| | | 2452-01-036 |
| REFL PAV MRK TY I (W)(SLD)(100MM) | M | 520 |
| REFL PAV MRK TY I (W)(BRK)(100MM) | M | 129 |
| REFL PAV MRK TY I (Y)(SLD)(100MM) | M | 515 |
| RAIS PAV MRKR CL B (REFL) TY II C-R | EA | 43 |
| | | |

NOTE(S):

ALL DIMENSIONS ARE IN METERS UNLESS OTHERWISE NOTED.

QUANTITIES AND PLACEMENT OF TY II REFLECTIVE PAVEMENT MARKINGS ARE EXACTLY THE SAME AS TY I REFLECTIVE PAVEMENT MARKINGS. TY II QUANTITIES ACCOUNTED FOR ON THE PAVEMENT MARKING /DELINEATION SUMMARY.

ANY PAVEMENT MARKING IN CONFLICT WITH PROPOSED PAVEMENT MARKINGS SHALL BE REMOVED BY THE CONTRACTOR OR AS DIRECTED BY THE ENGINEER.

| DELINEATION QUANTITIES | | | | |
|---|---|---|---|---|
| TYPE | EA. | ASM. | SPL. MNT. | SURF. MNT. |
| D-SW(a) | | | | |
| D-DW(a) | | | | |
| D-SY(a) | | | | |
| D-DY(a) | | | | |
| OM-2SR(a) | | | | |
| | | | | |
| | | | | |
| | | | | |
| | | | | |

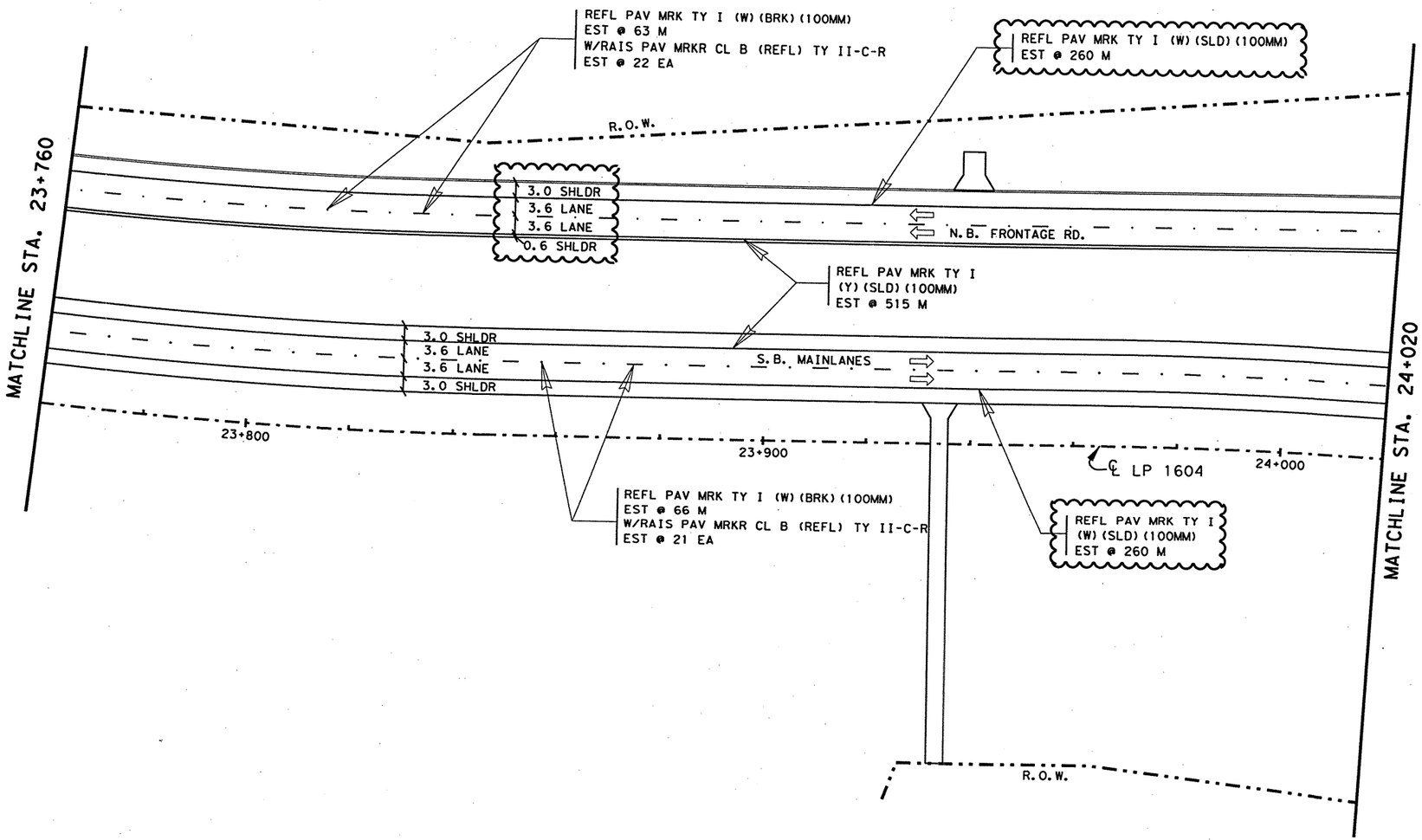


CHANGE ORDER 65

REVISED SHEET

CHANGE ORDER NO. 65
-REVISED FRONT. RD. LANE CONFIG.
-REVISED QUANTITIES

STATE OF TEXAS
JEROME D. PAVLISKA
76075
REGISTERED PROFESSIONAL ENGINEER

Jerome D. Pavliska, P.E. 2/06/04
Jerome D. Pavliska, P.E. Date

Texas Department of Transportation

# PAVEMENT MARKING AND DELINEATION LAYOUT

SHEET 39 OF 57

| FED.RD. DIV.NO. | FEDERAL AID PROJECT NO. | | SHEET NO. |
|---|---|---|---|
| 6 | NH 2000(704), etc. | | 798A |
| STATE | DIST. | COUNTY | |
| TEXAS | SAT | BEXAR | |
| CONT. | SECT. | JOB | HIGHWAY NO. |
| 2452 | 01 | 036, etc. | LP 1604 |

02-04-04

LEVELS DISPLAYED
1 2 3 4 5 6 7 8 9 10 11 12 13 14 15 16
2 20 21 22 23 24 25 26 27 28 29 30 31 32
3 33 34 35 36 37 38 39 40 41 42 43 44 45 46 47 48
49 50 51 52 53 54 55 56 57 58 59 60 61 62 63

ACC: t:\oa\design\lp1604fm471-90\pave-sign\
FILE: pavmrkplan39.dgn

QUANTITIES THIS SHEET
CSJ 2452-01-036

SCALE 1:1000

| ESTIMATED QUANTITIES | | |
|---|---|---|
| ITEM | UNIT | QUANTITY |
| | | 2452-01-036 |
| REFL PAV MRK TY I (W)(SLD)(100MM) | M | 242 |
| REFL PAV MRK TY I (W)(BRK)(100MM) | M | 123 |
| REFL PAV MRK TY I (Y)(SLD)(100MM) | M | 496 |
| RAIS PAV MRKR CL B (REFL) TY II C-R | EA | 41 |
| | | |

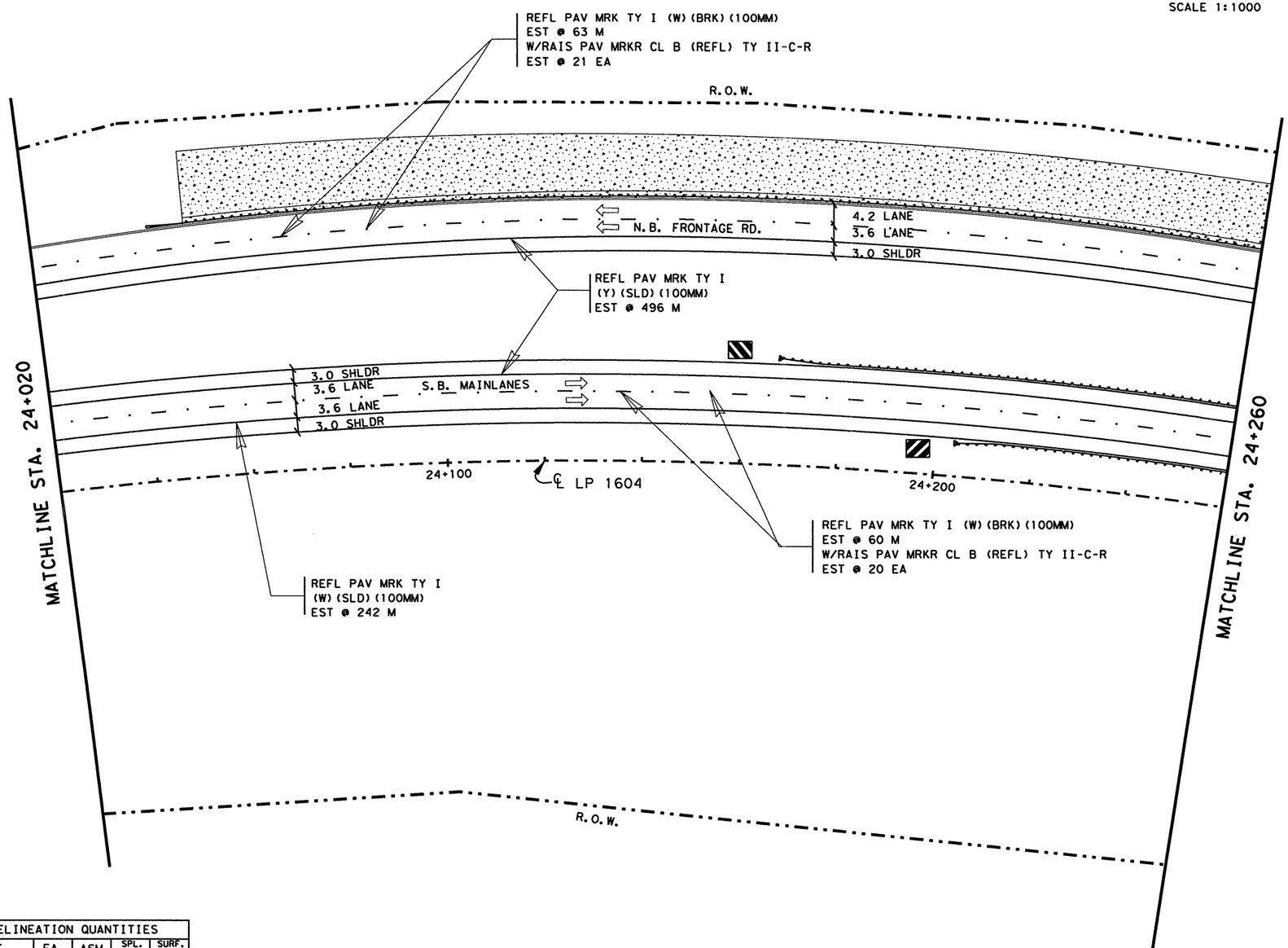


NOTE(S):

ALL DIMENSIONS ARE IN METERS UNLESS OTHERWISE NOTED.

QUANTITIES AND PLACEMENT OF TY II REFLECTIVE PAVEMENT MARKINGS ARE EXACTLY THE SAME AS TY I REFLECTIVE PAVEMENT MARKINGS. TY II QUANTITIES ACCOUNTED FOR ON THE PAVEMENT MARKING /DELINEATION SUMMARY.

ANY PAVEMENT MARKING IN CONFLICT WITH PROPOSED PAVEMENT MARKINGS SHALL BE REMOVED BY THE CONTRACTOR OR AS DIRECTED BY THE ENGINEER.

| DELINEATION QUANTITIES | | | | |
|---|---|---|---|---|
| TYPE | EA. | ASM. | SPL. MNT. | SURF. MNT. |
| D-SW(a) | | | | |
| D-DW(a) | | | | |
| D-SY(a) | | | | |
| D-DY(a) | | | | |
| OM-2SR(a) | | | | |
| OM-3L | 1 | | | |
| OM-3R | 1 | | | |
| | | | | |
| | | | | |

LEVELS DISPLAYED
1 2 3 4 5 6 7 8 9 10 11 12 13 14 15 16 17 18 19 20 21 22 23 24 25 26 27 28 29 30 31 32 33 34 35 36 37 38 39 40 41 42 43 44 45 46 47 48 49 50 51 52 53 54 55 56 57 58 59 60 61 62 63

ACC: t:\ao\design\ip1604fm471-90\pave-sign\
FILE: pavmrkplan40.dgn

STATE OF TEXAS
JOEL K. DAVENPORT, JR.
79276
REGISTERED
PROFESSIONAL ENGINEER

Joel K. Davenport, Jr. 9/19/00
Joel K. Davenport, Jr. P.E. 79276 Date

©2000 Texas Department of Transportation

# PAVEMENT MARKING AND DELINEATION LAYOUT

SHEET 40 OF 57

| FED.RD. DIV.NO. | FEDERAL AID PROJECT NO. | | SHEET NO. |
|---|---|---|---|
| 6 | NH 2000(704), etc. | | 799 |
| STATE | DIST. | COUNTY | |
| TEXAS | SAT | BEXAR | |
| CONT. | SECT. | JOB | HIGHWAY NO. |
| 2452 | 01 | 036, etc. | LP 1604 |

7718700

QUANTITIES THIS SHEET
CSJ 2452-01-036

SCALE 1:1000

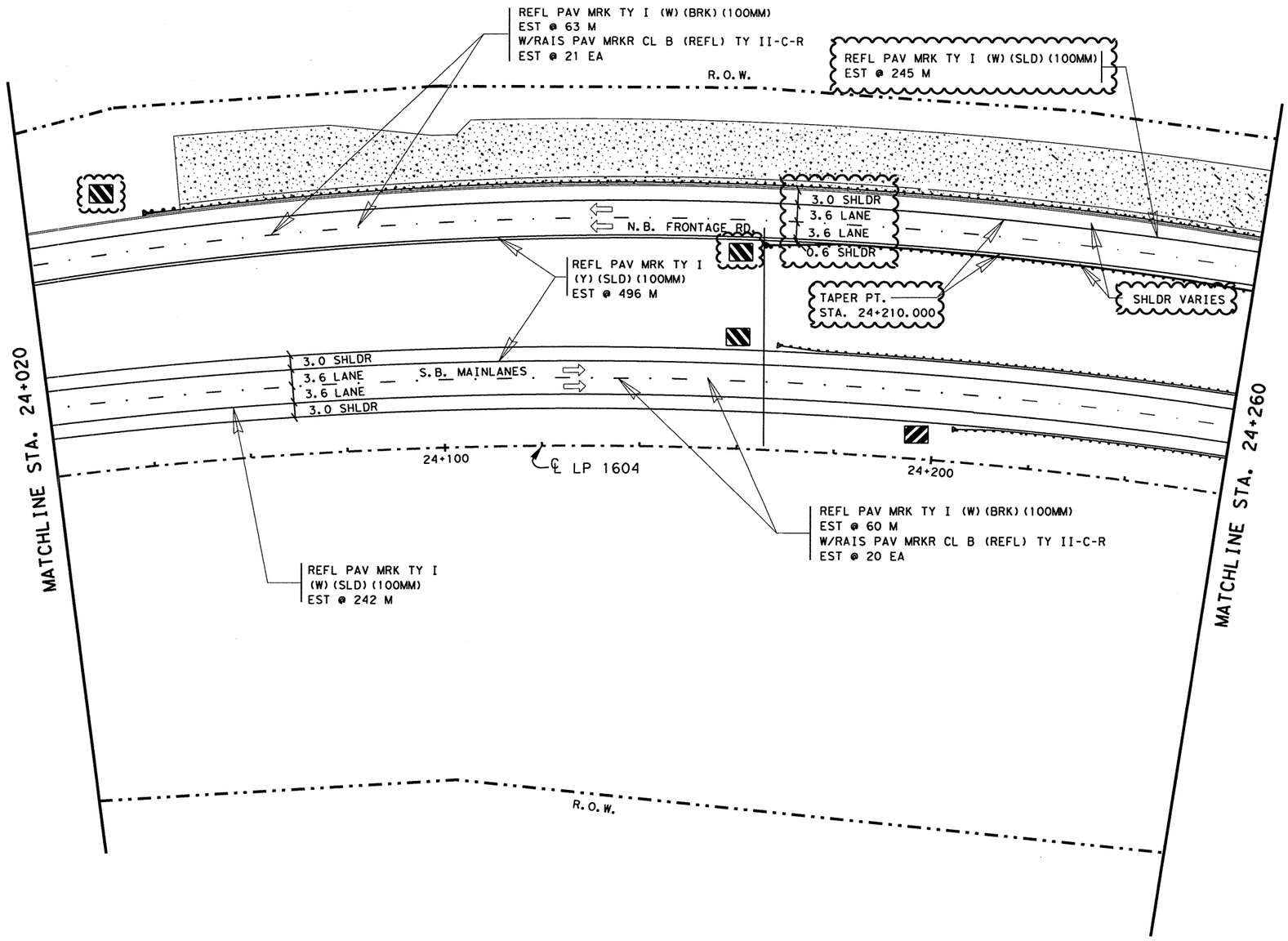


## ESTIMATED QUANTITIES

| ITEM | UNIT | QUANTITY |
|---|---|---|
| | | 2452-01-036 |
| REFL PAV MRK TY I (W)(SLD)(100MM) | M | 485 |
| REFL PAV MRK TY I (W)(BRK)(100MM) | M | 123 |
| REFL PAV MRK TY I (Y)(SLD)(100MM) | M | 496 |
| RAIS PAV MRKR CL B (REFL) TY II C-R | EA | 41 |
| | | |

NOTE(S):

ALL DIMENSIONS ARE IN METERS UNLESS OTHERWISE NOTED.

QUANTITIES AND PLACEMENT OF TY II REFLECTIVE PAVEMENT MARKINGS ARE EXACTLY THE SAME AS TY I REFLECTIVE PAVEMENT MARKINGS. TY II QUANTITIES ACCOUNTED FOR ON THE PAVEMENT MARKING /DELINEATION SUMMARY.

ANY PAVEMENT MARKING IN CONFLICT WITH PROPOSED PAVEMENT MARKINGS SHALL BE REMOVED BY THE CONTRACTOR OR AS DIRECTED BY THE ENGINEER.

| DELINEATION QUANTITIES | | | | |
|---|---|---|---|---|
| TYPE | EA. | ASM. | SPL. MNT. | SURF. MNT. |
| D-SW(a) | | | | |
| D-DW(a) | | | | |
| D-SY(a) | | | | |
| D-DY(a) | | | | |
| OM-2SR(a) | | | | |
| OM-3L | 2 | | | |
| OM-3R | 2 | | | |
| | | | | |
| | | | | |

CHANGE ORDER 65

REVISED SHEET

CHANGE ORDER NO. 65
-REVISED FRONT. RD. LANE CONFIG.
-REVISED QUANTITIES
-REVISED OBJECT MARKER QUANTITIES

STATE OF TEXAS
JEROME D. PAVLISKA
76075
REGISTERED
PROFESSIONAL ENGINEER

Jerome D. Pavliska, P.E. 4-16-04
Jerome D. Pavliska, P.E. Date

LEVELS DISPLAYED
1 2 3 4 5 6 7 8 9 10 11 12 13 14 15 16
17 18 19 20 21 22 23 24 25 26 27 28 29 30 31 32
33 34 35 36 37 38 39 40 41 42 43 44 45 46 47 48
49 50 51 52 53 54 55 56 57 58 59 60 61 62 63

ACC: t:\ao\design\
lp1604fm471-90\pave-sign\
FILE: pavmrkplan40xCO.dgn

© 2000 Texas Department of Transportation

# PAVEMENT MARKING AND DELINEATION LAYOUT

SHEET 40 OF 57

| FED.RD. DIV.NO. | FEDERAL AID PROJECT NO. | | SHEET NO. |
|---|---|---|---|
| 6 | NH 2000(704),etc. | | 799A |
| STATE | DIST. | COUNTY | |
| TEXAS | SAT | BEXAR | |
| CONT. | SECT. | JOB | HIGHWAY NO. |
| 2452 | 01 | 036,etc. | LP 1604 |

QUANTITIES THIS SHEET
CSJ 2452-01-036

SCALE 1:1000

| ESTIMATED QUANTITIES | | |
|---|---|---|
| ITEM | UNIT | QUANTITY |
| | | 2452-01-036 |
| REFL PAV MRK TY I (W)(SLD)(100MM) | M | 260 |
| REFL PAV MRK TY I (W)(BRK)(100MM) | M | 131 |
| REFL PAV MRK TY I (Y)(SLD)(100MM) | M | 520 |
| RAIS PAV MRKR CL B (REFL) TY II C-R | EA | 43 |

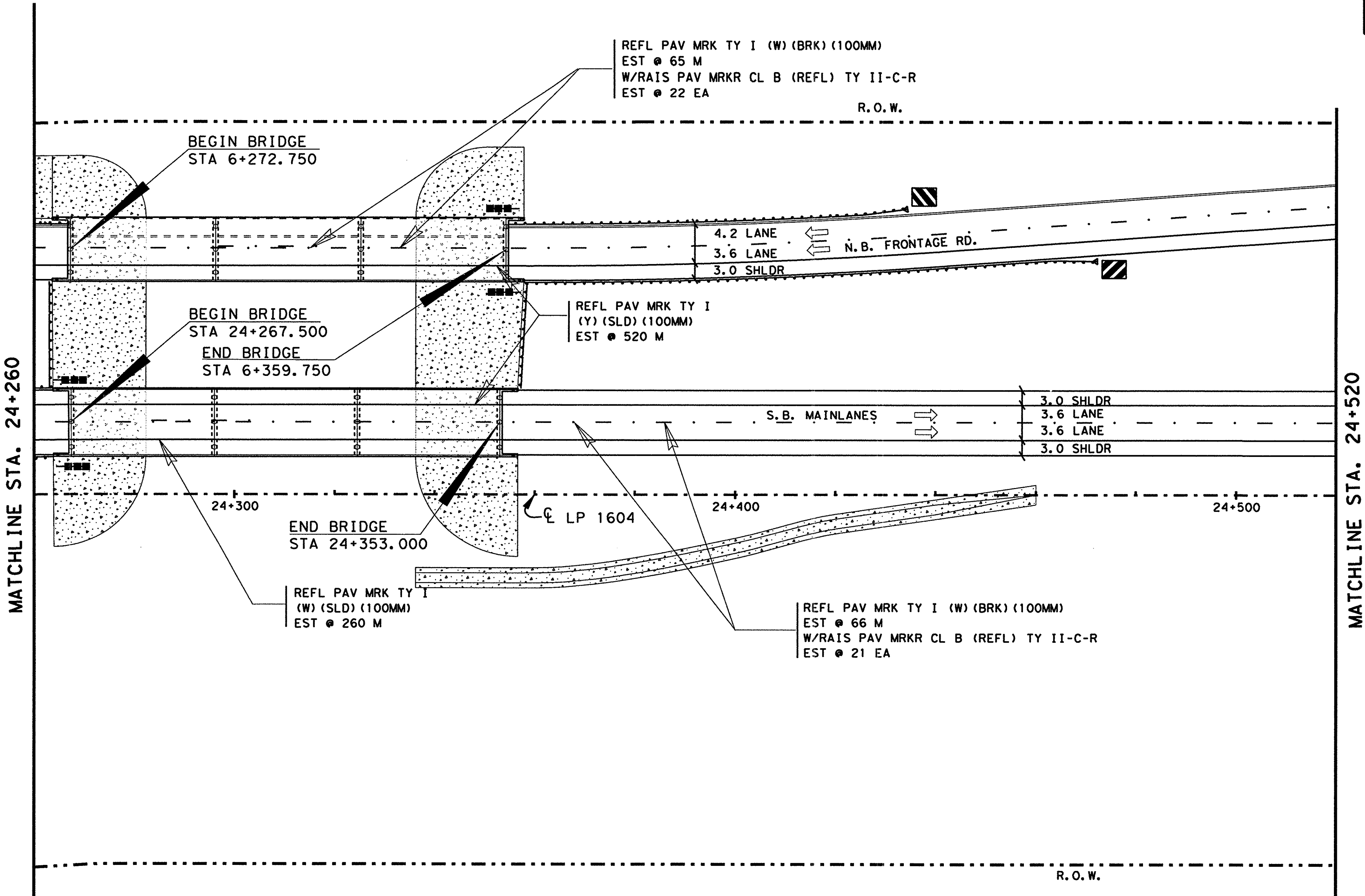


NOTE(S):

ALL DIMENSIONS ARE IN METERS UNLESS OTHERWISE NOTED.

QUANTITIES AND PLACEMENT OF TY II REFLECTIVE PAVEMENT MARKINGS ARE EXACTLY THE SAME AS TY I REFLECTIVE PAVEMENT MARKINGS. TY II QUANTITIES ACCOUNTED FOR ON THE PAVEMENT MARKING /DELINEATION SUMMARY.

ANY PAVEMENT MARKING IN CONFLICT WITH PROPOSED PAVEMENT MARKINGS SHALL BE REMOVED BY THE CONTRACTOR OR AS DIRECTED BY THE ENGINEER.

| DELINEATION QUANTITIES | | | | |
|---|---|---|---|---|
| TYPE | EA. | ASM. | SPL. MNT. | SURF. MNT. |
| D-SW(a) | | | | |
| D-DW(a) | | | | |
| D-SY(a) | | | | |
| D-DY(a) | | | | |
| OM-2SR(a) | | 4 | | |
| OM-3L | 1 | | | |
| OM-3R | 1 | | | |
| | | | | |
| TOTAL | | | | |

STATE OF TEXAS
JOEL K. DAVENPORT, JR.
79276
REGISTERED PROFESSIONAL ENGINEER

Joel K. Davenport, Jr. 9/19/00
Joel K. Davenport, Jr. P.E. 79276 Date

©2000 Texas Department of Transportation

**PAVEMENT MARKING AND DELINEATION LAYOUT**

**SHEET 41 OF 57**

| FED. RD. DIV. NO. | FEDERAL AID PROJECT NO. | | SHEET NO. |
|---|---|---|---|
| 6 | NH 2000(704),etc. | | 800 |
| STATE | DIST. | COUNTY | |
| TEXAS | SAT | BEXAR | |
| CONT. | SECT. | JOB | HIGHWAY NO. |
| 2452 | 01 | 036,etc. | LP 1604 |

LEVELS DISPLAYED
ACC: t:\ao\design\lp1604fm471-90\pave-sign\
FILE: pavmrkplan41.dgn

QUANTITIES THIS SHEET
CSJ 2452-01-036

SCALE 1:1000

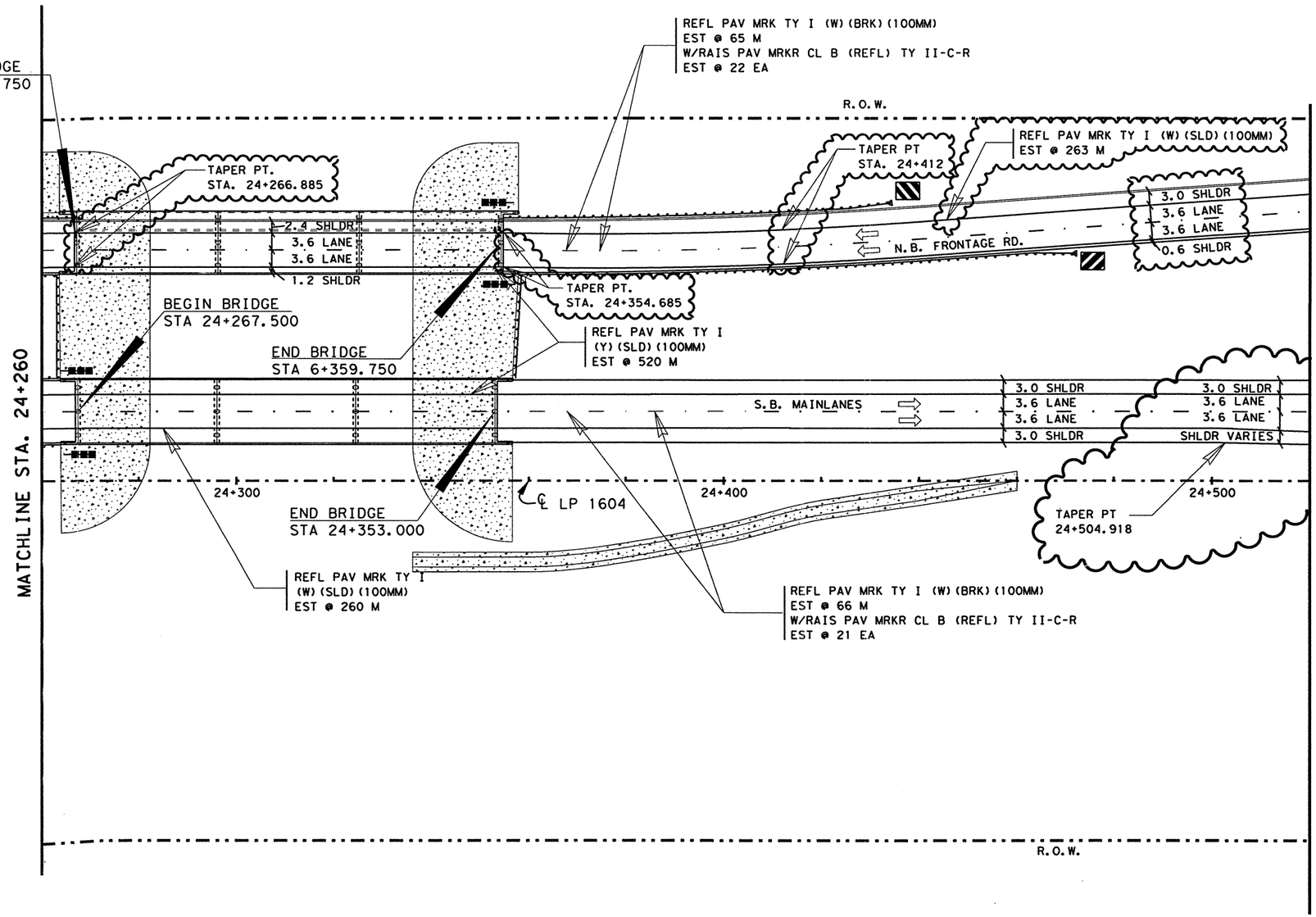


## ESTIMATED QUANTITIES

| ITEM | UNIT | QUANTITY 2452-01-036 |
|---|---|---|
| REFL PAV MRK TY I (W)(SLD)(100MM) | M | 523 |
| REFL PAV MRK TY I (W)(BRK)(100MM) | M | 131 |
| REFL PAV MRK TY I (Y)(SLD)(100MM) | M | 520 |
| RAIS PAV MRKR CL B (REFL) TY II C-R | EA | 43 |
| | | |

NOTE(S):

ALL DIMENSIONS ARE IN METERS UNLESS OTHERWISE NOTED.

QUANTITIES AND PLACEMENT OF TY II REFLECTIVE PAVEMENT MARKINGS ARE EXACTLY THE SAME AS TY I REFLECTIVE PAVEMENT MARKINGS. TY II QUANTITIES ACCOUNTED FOR ON THE PAVEMENT MARKING /DELINEATION SUMMARY.

ANY PAVEMENT MARKING IN CONFLICT WITH PROPOSED PAVEMENT MARKINGS SHALL BE REMOVED BY THE CONTRACTOR OR AS DIRECTED BY THE ENGINEER.

| DELINEATION QUANTITIES | | | | |
|---|---|---|---|---|
| TYPE | EA. | ASM. | SPL. MNT. | SURF. MNT. |
| D-SW(a) | | | | |
| D-DW(a) | | | | |
| D-SY(a) | | | | |
| D-DY(a) | | | | |
| OM-2SR(a) | | 4 | | |
| OM-3L | 1 | | | |
| OM-3R | 1 | | | |
| | | | | |
| TOTAL | | | | |

CHANGE ORDER NO. 65

-REVISED RDWY GEOMETRICS AND LANE CONFIGURATIONS

CHANGE ORDER NO. 65 | REVISED SHEET

STATE OF TEXAS
JEROME D. PAVLISKA
76075
REGISTERED
PROFESSIONAL ENGINEER

Jerome D. Pavliska, P.E. 4-06-04
Jerome D. Pavliska, P.E. Date

©2000 Texas Department of Transportation

# PAVEMENT MARKING AND DELINEATION LAYOUT

SHEET 41 OF 57

| FED. RD. DIV. NO. | FEDERAL AID PROJECT NO. | | SHEET NO. |
|---|---|---|---|
| 6 | NH 2000(704), etc. | | 800A |
| STATE | DIST. | COUNTY | |
| TEXAS | SAT | BEXAR | |
| CONT. | SECT. | JOB | HIGHWAY NO. |
| 2452 | 01 | 036, etc. | LP 1604 |

03.04.04

Plotted on: $DATE$

Design Filename: $FILE$

LEVELS DISPLAYED
1 2 3 4 5 6 7 8 9 10 11 12 13 14 15 16
17 18 19 20 21 22 23 24 25 26 27 28 29 30 31 32
33 34 35 36 37 38 39 40 41 42 43 44 45 46 47 48
49 50 51 52 53 54 55 56 57 58 59 60 61 62 63

T:\AO\Design\lp1604fm471-90\P-D*Phase2*CO\
FILE: pavmrkplan41.dgn

QUANTITIES THIS SHEET
CSJ 2452-01-036

SCALE 1:1000

| ESTIMATED QUANTITIES | | |
|---|---|---|
| ITEM | UNIT | QUANTITY |
| | | 2452-01-036 |
| REFL PAV MRK TY I (W)(SLD)(100MM) | M | 260 |
| REFL PAV MRK TY I (W)(BRK)(100MM) | M | 138 |
| REFL PAV MRK TY I (Y)(SLD)(100MM) | M | 520 |
| RAIS PAV MRKR CL B (REFL) TY II C-R | EA | 46 |
| | | |

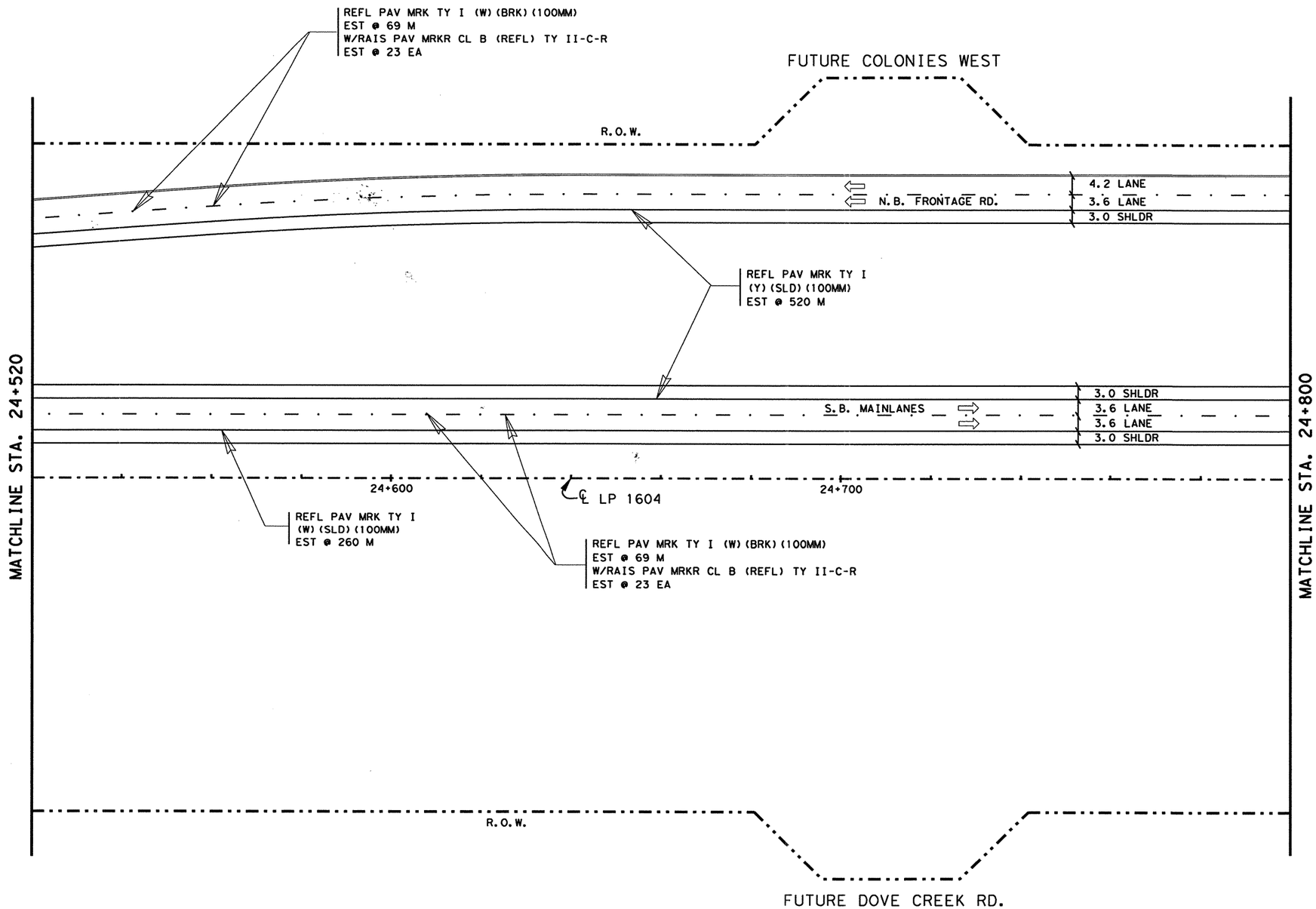


NOTE(S):

ALL DIMENSIONS ARE IN METERS UNLESS OTHERWISE NOTED.

QUANTITIES AND PLACEMENT OF TY II REFLECTIVE PAVEMENT MARKINGS ARE EXACTLY THE SAME AS TY I REFLECTIVE PAVEMENT MARKINGS. TY II QUANTITIES ACCOUNTED FOR ON THE PAVEMENT MARKING /DELINEATION SUMMARY.

ANY PAVEMENT MARKING IN CONFLICT WITH PROPOSED PAVEMENT MARKINGS SHALL BE REMOVED BY THE CONTRACTOR OR AS DIRECTED BY THE ENGINEER.

| DELINEATION QUANTITIES | | | | |
|---|---|---|---|---|
| TYPE | EA. | ASM. | SPL. MNT. | SURF. MNT. |
| D-SW(a) | | | | |
| D-DW(a) | | | | |
| D-SY(a) | | | | |
| D-DY(a) | | | | |
| OM-2SR(a) | | | | |
| | | | | |
| | | | | |
| | | | | |
| | | | | |

STATE OF TEXAS
JOEL K. DAVENPORT, JR.
79276
REGISTERED PROFESSIONAL ENGINEER

Joel K Davenport Jr 9/19/00
Joel K. Davenport, Jr. P.E. 79276 Date

Texas Department of Transportation

# PAVEMENT MARKING AND DELINEATION LAYOUT

SHEET 42 OF 57

| FED.RD. DIV.NO. | FEDERAL AID PROJECT NO. | | SHEET NO. |
|---|---|---|---|
| 6 | NH 2000(704),etc. | | 801 |
| STATE | DIST. | COUNTY | |
| TEXAS | SAT | BEXAR | |
| CONT. | SECT. | JOB | HIGHWAY NO. |
| 2452 | 01 | 036,etc. | LP 1604 |

LEVELS DISPLAYED
1 2 3 4 5 6 7 8 9 10 11 12 13 14 15 16
17 18 19 20 21 22 23 24 25 26 27 28 29 30 31 32
33 34 35 36 37 38 39 40 41 42 43 44 45 46 47 48
49 50 51 52 53 54 55 56 57 58 59 60 61 62 63

ACC: t:\ao\design\lp1604fm471-90\pave-sign\
FILE: pavmrkplan42.dgn

Plotted on: 01/26/2004

QUANTITIES THIS SHEET
CSJ 2452-01-036

SCALE 1:1000

| ESTIMATED QUANTITIES | | |
|---|---|---|
| ITEM | UNIT | QUANTITY 2452-01-036 |
| REFL PAV MRK TY I (W)(SLD)(100MM) | M | 65 |
| REFL PAV MRK TY I (W)(BRK)(100MM) | M | 138 |
| REFL PAV MRK TY I (W) ARROW | EA | 3 |
| RELF PAV MRK TY I (W) WORD | EA | 3 |
| REFL PAV MRK TY I (Y)(SLD)(100MM) | M | 811 |
| RAIS PAV MRKR CL B (REFL) TY II C-R | EA | 69 |

NOTE(S):

ALL DIMENSIONS ARE IN METERS UNLESS OTHERWISE NOTED.

QUANTITIES AND PLACEMENT OF TY II REFLECTIVE PAVEMENT MARKINGS ARE EXACTLY THE SAME AS TY I REFLECTIVE PAVEMENT MARKINGS. TY II QUANTITIES ACCOUNTED FOR ON THE PAVEMENT MARKING /DELINEATION SUMMARY.

ANY PAVEMENT MARKING IN CONFLICT WITH PROPOSED PAVEMENT MARKINGS SHALL BE REMOVED BY THE CONTRACTOR OR AS DIRECTED BY THE ENGINEER.

REFL PAV MRK TY I (W)(BRK)(100MM)
EST @ 69 M
W/RAIS PAV MRKR CL B (REFL) TY II-C-R
EST @ 23 EA

REFL PAV MRK TY I
(W)(SLD)(100MM)
EST @ 280 M

FUTURE COLONIES WEST

R.O.W.

3.0 SHLDR
3.6 LANE
3.6 LANE
0.6 SHLDR

N.B. FRONTAGE RD.

REFL PAV MRK TY I
(Y)(SLD)(100MM)
EST @ 560 M

REFL PAV MRK TY I(W)(SLD)(100MM)
EST @ 37 M
W/ RAIS PAV MRK CL B (REFL) TY II-C-R
EST @ 6 EA

15 36 36 15

S.B. MAINLANES

3.0 SHLDR
3.6 LANE
3.6 LANE
3.6 LANE
1.2 SHLDR

MATCHLINE STA. 24+520

SHLDR VARIES

24+600

℄ LP 1604

24+700

TAPER PT
24+596.157
7.4 RT

TAPER PT
24+775.967
7.4 RT

REFL PAV MRK TY I
(W)(SLD)(100MM)
EST @ 174 M

REFL PAV MRK TY I(W)(SLD)(100MM)
EST @ 101 M
W/ RAIS PAV MRK CL B (REFL) TY II-C-R
EST @ 17 EA

REFL PAV MRK TY I (W)(BRK)(100MM)
EST @ 69 M
W/RAIS PAV MRKR CL B (REFL) TY II-C-R
EST @ 23 EA

REFL PAV MRK TY I
(W)(SLD)(100MM)
EST @ 59 M

REFL PAV MRK TY I
(Y)(SLD)(100MM)
EST @ 251 M

MATCHLINE STA. 24+800

R.O.W.

MATCH EXIST PVMNT MRKNGS
DOVE CANYON RD
STA 0+143

DOVE CANYON RD.

CHANGE ORDER NO. 65

-REVISED RDWY GEOMETRICS AND LANE CONFIGURATIONS
-ADDED DOVE CANYON ROAD
-REVISED QUANTITIES

| DELINEATION QUANTITIES | | | | |
|---|---|---|---|---|
| TYPE | EA. | ASM. | SPL. MNT. | SURF. MNT. |
| D-SW(a) | | | | |
| D-DW(a) | | | | |
| D-SY(a) | | | | |
| D-DY(a) | | | | |
| OM-2SR(a) | | | | |

CHANGE ORDER NO. 65 | REVISED SHEET

555 EAST RAMSEY SAN ANTONIO TEXAS 78216
PHONE (210)375-9000
FAX (210)375-9010
PAPE-DAWSON ENGINEERS
CIVIL & ENVIRONMENTAL
STATE OF TEXAS
J. KENT O'BRIEN
64398
LICENSED
PROFESSIONAL ENGINEER
J. KENT O'BRIEN P.E. 1/27/2004
DATE

©2000
Texas Department of Transportation

# PAVEMENT MARKING AND DELINEATION LAYOUT

SHEET 42 OF 57

| FED. RD. DIV. NO. | FEDERAL AID PROJECT NO. | SHEET NO. |
|---|---|---|
| 6 | NH 2000(704), etc. | 801A |
| STATE | DIST. | COUNTY |
| TEXAS | SAT | BEXAR |
| CONT. | SECT. | JOB / HIGHWAY NO. |
| 2452 | 01 | 036, etc. / LP 1604 |

Design Filename: p:\52\2011\design\civil\plansheets\traffic\pave-mark\pavmrkplan42.dgn

LEVELS DISPLAYED
1 2 3 4 5 6 7 8 9 10 11 12 13 14 15 16
33 34 35 36 37 38 39 40 41 44 45 46 47 48 49
49 50 51 52 53 54 55 56 57 58 59 60 61 62 63

ACC: t:\oo\design\lp1604fm471-90\pave-sign\
FILE: pavmrkplan42.dgn

QUANTITIES THIS SHEET
CSJ 2452-01-036

SCALE 1:1000

FALCON WOLF

[D] EST @ 69 M
W/ [Q] EST @ 23 EA

[C] EST @ 185 M

[L] EST @ 88 M

[C] EST @ 90 M

R.O.W.

R=30 R=24 R=18 R=15

9.5 30

3.0 SHLDR
3.6 LANE
3.6 LANE
0.6 SHLDR

6+600

6+700

N.B. FRONTAGE RD.

[F] EST @ 77 M
[H] EST @ 28
W / [Q] EST @ 19 EA

[C] EST @ 85 M
W/ [Q] EST @ 22 EA

3.6 SHLDR
3.6 LANE
3.6 LANE
3.6 LANE
0.6 SHLDR

6+800

[L] EST @ 560 M

TAPER PT
6+800.674
4.8 LT

MATCHLINE STA. 24+520

15 36 36 15

S.B. MAINLANES

[C] EST @ 37 M
W/ [Q] EST @ 14 EA

3.0 SHLDR
3.6 LANE
3.6 LANE
3.6 LANE
1.2 SHLDR

SHLDR VARIES

[C] EST @ 174 M

24+600
TAPER PT
24+596.157
7.4 LT

℄ LP 1604

R=22 R=22

24+700

TAPER PT
24+775.967
7.4 LT

[C] EST @ 59 M

[D] EST @ 69 M
W/ [Q] EST @ 23 EA

[C] EST @ 101 M
W/ [Q] EST @ 35 EA

[F] EST @ 112 M
[H] EST @ 45
W/ [Q] EST @ 32 EA

MATCHLINE STA. 24+800

R.O.W.

[L] EST @ 226 M

MATCH EXIST PVMNT MRKNGS
DOVE CANYON RD
STA 0+143

DOVE CANYON RD.

**CHANGE ORDER NO. 140**

-ADDED NEW INTERSECTION DOVE CANYON RO
-ADDED NEW INTERSECTION FALCON WOLF
-ADDED/REVISED QUANTITIES

# REFERS TO CHANGES MADE AS PART OF CHANGE ORDER.

**QUANTITY SUMMARY CSJ: 2452-01-036, etc.**

| | ITEM | UNIT | QUANTITY |
|---|---|---|---|
| A | OBJ MRK ASM TY 2 FLEX (OM-2SR)(1.8 M) | EA | 0 |
| B | OBJ MRK ASM TY 2 SURF MNT (OM-2HP)(SPL) | EA | 0 |
| C | REFL PAV MRK TY I (W)(SLD)(100 MM) | M | 731 |
| D | REFL PAV MRK TY I (W)(BRK)(100 MM) | M | 138 |
| E | REFL PAV MRK TY I (W)(DOT)(100 MM) | M | 0 |
| F | REFL PAV MRK TY I (W)(SLD)(200 MM) | M | 189 |
| G | REFL PAV MRK TY I (W)(BRK)(200 MM) | M | 0 |
| H | REFL PAV MRK TY I (W)(SLD)(600 MM) | M | 73 |
| I | REFL PAV MRK TY I (W)(ARROW) | EA | 5 |
| J | REFL PAV MRK TY I (W)(DBL ARROW) | EA | 0 |
| K | REFL PAV MRK TY I (W)(WORD) | EA | 5 |
| L | REFL PAV MRK TY I (Y)(SLD)(100 MM) | M | 874 |
| M | REFL PAV MRK TY I (Y)(SLD)(200 MM) | M | 0 |
| N | REFL PAV MRK TY I (Y)(SLD)(600 MM) | M | 0 |
| O | REFL PAV MRK TY I (Y)(MED NOSE) | EA | 0 |
| P | RAIS PAV MRKR CL B (REFL) TY II-A-A (HV) | EA | 0 |
| Q | RAIS PAV MRKR CL B (REFL) TY II-C-R (HV) | EA | 168 |

NOTE(S):

ALL DIMENSIONS ARE IN METERS UNLESS OTHERWISE NOTED.

QUANTITIES AND PLACEMENT OF TY II REFLECTIVE PAVEMENT MARKINGS ARE EXACTLY THE SAME AS TY I REFLECTIVE PAVEMENT MARKINGS.

ANY PAVEMENT MARKING IN CONFLICT WITH PROPOSED PAVEMENT MARKINGS SHALL BE REMOVED BY THE CONTRACTOR OR AS DIRECTED BY THE ENGINEER.

CHANGE ORDER #140

REVISED SHEET

STATE OF TEXAS
MIGUEL G. ROGERIO
96620
LICENSED
PROFESSIONAL ENGINEER

Miguel G. Rogerio 10/17/2006
Miguel G. Rogerio, P.E. Date

©2006

Texas Department of Transportation

## PAVEMENT MARKING AND DELINEATION LAYOUT

SHEET 42 OF 57

| FED.RD. DIV.NO. | FEDERAL AID PROJECT NO. | | SHEET NO. |
|---|---|---|---|
| 6 | NH 2000(704), etc. | | 801AA |
| STATE | DIST. | COUNTY | |
| TEXAS | SAT | BEXAR | |
| CONT. | SECT. | JOB | HIGHWAY NO. |
| 2452 | 01 | 036, etc. | LP 1604 |

T:\AO\Construction\2452-01-036\CO\CO#140\pavmrkplan42.dgn
10/17/2006

LEVELS DISPLAYED
1 2 3 4 5 6 7 8 9 10 11 12 13 14 15 16
17 18 20 21 22 23 24 25 26 27 28 29 30 31 32
33 34 41 55 63 78 89 94 101 124 134 144 154 164 174 184
190 5 15 25 35 45 55 65 76 85 96 106 116 126 136

T:\AO\Construction\2452-01-036\CO\CO#140\pavmrkplan42.dgn
10/17/2006 5:48:26 PM

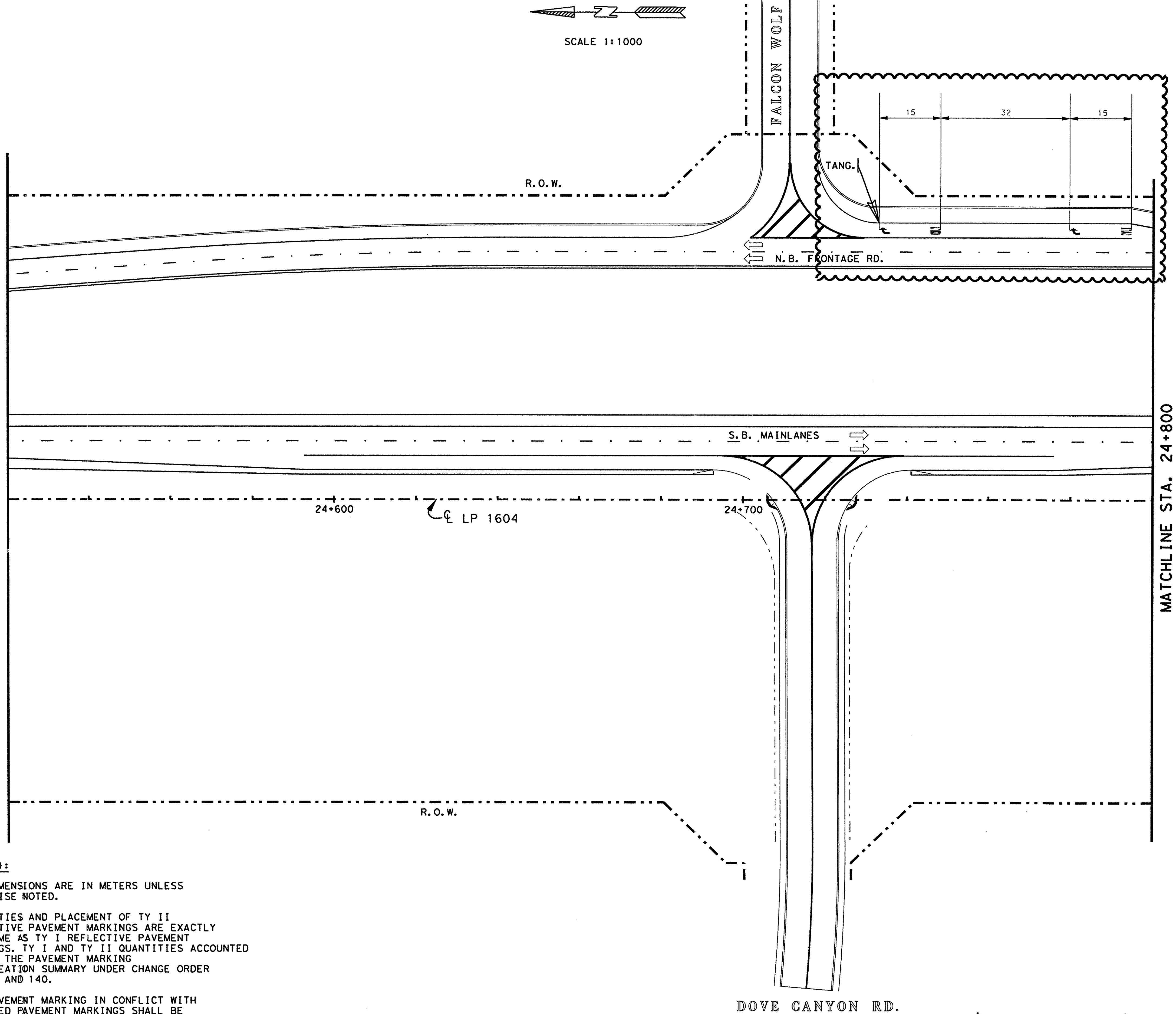


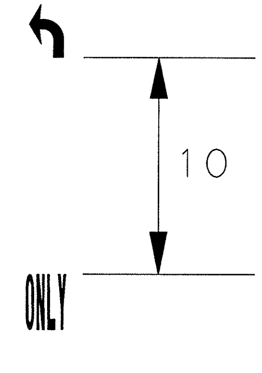


NOTE(S):

ALL DIMENSIONS ARE IN METERS UNLESS OTHERWISE NOTED.

QUANTITIES AND PLACEMENT OF TY II REFLECTIVE PAVEMENT MARKINGS ARE EXACTLY THE SAME AS TY I REFLECTIVE PAVEMENT MARKINGS. TY I AND TY II QUANTITIES ACCOUNTED FOR ON THE PAVEMENT MARKING /DELINEATION SUMMARY UNDER CHANGE ORDER NO. 65 AND 140.

ANY PAVEMENT MARKING IN CONFLICT WITH PROPOSED PAVEMENT MARKINGS SHALL BE REMOVED BY THE CONTRACTOR OR AS DIRECTED BY THE ENGINEER.

**SUPPLEMENT SHEET**

-REVISE LP 1604 NBFR SPACING FOR "ARROW" & "WORD" STRIPING.

-ELIMINATE "ARROW" & "WORD" ON LP 1604 NBFR THRU LANES.

STATE OF TEXAS
MIGUEL G. ROGERIO
96620
LICENSED
PROFESSIONAL ENGINEER

Miguel G. Rogerio, P.E. 5/7/2007
Miguel G. Rogerio, P.E. Date

Revised Sheet

©2007 Texas Department of Transportation

**PAVEMENT MARKING LAYOUT**

**SHEET 42a OF 57**

| FED. RD. DIV. NO. | FEDERAL AID PROJECT NO. | | SHEET NO. |
|---|---|---|---|
| 6 | NH 2000(704), etc. | | 801AAA |
| STATE | DIST. | COUNTY | |
| TEXAS | SAT | BEXAR | |
| CONT. | SECT. | JOB | HIGHWAY NO. |
| 2452 | 01 | 036, etc. | LP 1604 |

T:\AO\Construction\2452-01-036 (Lp 1604)\CO\CO#140\pavmrkplan42aa.dgn
5/3/2007

| LEVELS DISPLAYED | | | | | | | | | | | | | | | | T:\AO\Construction\2452-01-036 (Lp 1604)\CO\CO#140\pavmrkplan42aa.dgn |
|---|---|---|---|---|---|---|---|---|---|---|---|---|---|---|---|---|
| 1 | 2 | 3 | 4 | 5 | 6 | 7 | 8 | 9 | 10 | 11 | 12 | 13 | 14 | 15 | 16 | 5/3/2007 |
| | | | 20 | 21 | 22 | 23 | 24 | 25 | 26 | 27 | 28 | 29 | 30 | 31 | 32 | 11:19:36 AM |
| 33 | 34 | 35 | 36 | 37 | 38 | 39 | 40 | 41 | 42 | 43 | 44 | 45 | 46 | 47 | 48 | |
| 49 | 50 | 51 | 52 | 53 | 54 | 55 | 56 | 57 | 58 | 59 | 60 | 61 | 62 | 63 | | |

QUANTITIES THIS SHEET
CSJ 2452-01-036

SCALE 1:1000

| ESTIMATED QUANTITIES | | |
|---|---|---|
| ITEM | UNIT | QUANTITY |
| | | 2452-01-036 |
| REFL PAV MRK TY I (W)(SLD)(100MM) | M | 260 |
| REFL PAV MRK TY I (W)(BRK)(100MM) | M | 132 |
| REFL PAV MRK TY I (Y)(SLD)(100MM) | M | 520 |
| RAIS PAV MRKR CL B (REFL) TY II C-R | EA | 43 |
| | | |

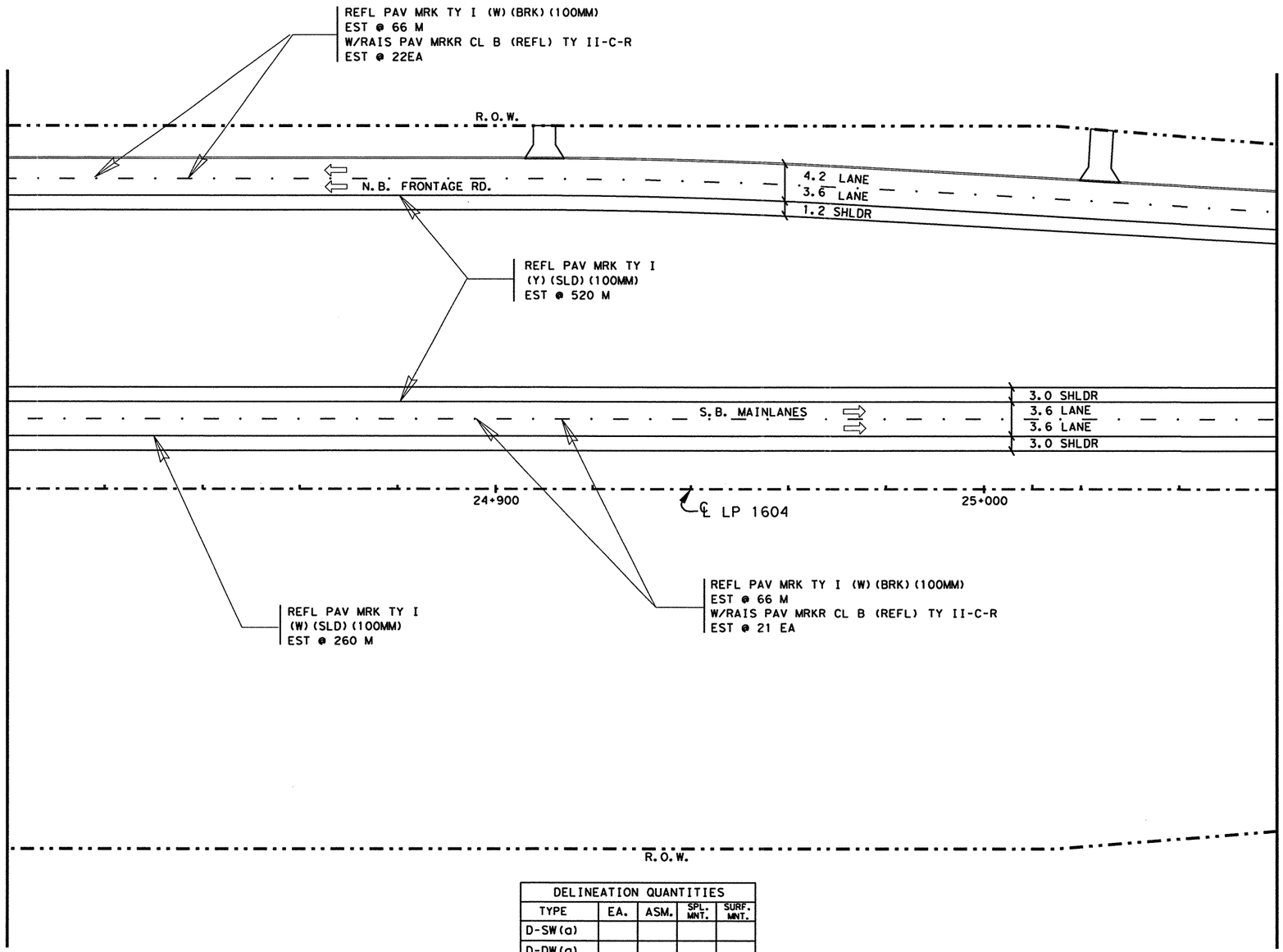


| DELINEATION QUANTITIES | | | | |
|---|---|---|---|---|
| TYPE | EA. | ASM. | SPL. MNT. | SURF. MNT. |
| D-SW(a) | | | | |
| D-DW(a) | | | | |
| D-SY(a) | | | | |
| D-DY(a) | | | | |
| OM-2SR(a) | | | | |
| | | | | |
| | | | | |
| | | | | |
| | | | | |

NOTE(S):

ALL DIMENSIONS ARE IN METERS UNLESS OTHERWISE NOTED.

QUANTITIES AND PLACEMENT OF TY II REFLECTIVE PAVEMENT MARKINGS ARE EXACTLY THE SAME AS TY I REFLECTIVE PAVEMENT MARKINGS. TY II QUANTITIES ACCOUNTED FOR ON THE PAVEMENT MARKING /DELINEATION SUMMARY.

ANY PAVEMENT MARKING IN CONFLICT WITH PROPOSED PAVEMENT MARKINGS SHALL BE REMOVED BY THE CONTRACTOR OR AS DIRECTED BY THE ENGINEER.

LEVELS DISPLAYED
1 2 3 4 5 6 7 8 9 10 11 12 13 14 15 16
17 18 19 20 21 22 23 24 25 26 27 28 29 30 31 32
33 34 35 36 37 38 39 40 41 42 43 44 45 46 47 48
49 50 51 52 53 54 55 56 57 58 59 60 61 62 63 64

ACC: t:\oo\design\
lp1604fm471-90\pave-sign\
FILE: pavmrkplan43.dgn

STATE OF TEXAS
JOEL K. DAVENPORT, JR.
79276
REGISTERED PROFESSIONAL ENGINEER

Joel K. Davenport, Jr. 9/19/00
Joel K. Davenport, Jr. P.E. 79276 Date

©2000
Texas Department of Transportation

# PAVEMENT MARKING AND DELINEATION LAYOUT

SHEET 43 OF 57

| FED. RD. DIV. NO. | FEDERAL AID PROJECT NO. | | SHEET NO. |
|---|---|---|---|
| 6 | NH 2000(704), etc. | | 802 |
| STATE | DIST. | COUNTY | |
| TEXAS | SAT | BEXAR | |
| CONT. | SECT. | JOB | HIGHWAY NO. |
| 2452 | 01 | 036, etc. | LP 1604 |

Plotted on: 01/26/2004

QUANTITIES THIS SHEET
CSJ 2452-01-036

SCALE 1:1000

| ESTIMATED QUANTITIES | | |
|---|---|---|
| ITEM | UNIT | QUANTITY |
| | | 2452-01-036 |
| REFL PAV MRK TY I (W)(SLD)(100MM) | M | 520 |
| REFL PAV MRK TY I (W)(BRK)(100MM) | M | 132 |
| REFL PAV MRK TY I (Y)(SLD)(100MM) | M | 520 |
| RAIS PAV MRKR CL B (REFL) TY II C-R | EA | 43 |
| | | |

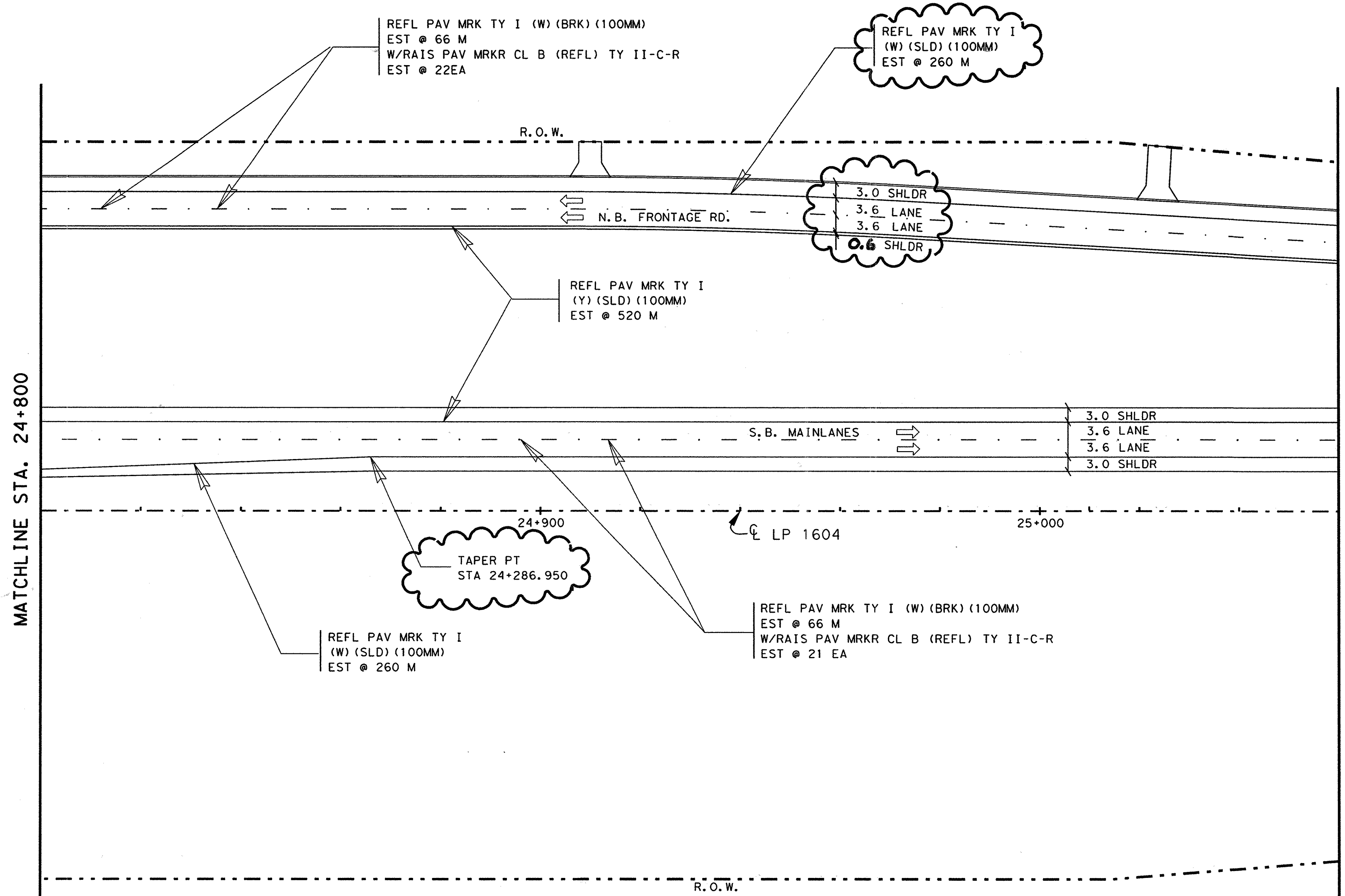


| DELINEATION QUANTITIES | | | | |
|---|---|---|---|---|
| TYPE | EA. | ASM. | SPL. MNT. | SURF. MNT. |
| D-SW(a) | | | | |
| D-DW(a) | | | | |
| D-SY(a) | | | | |
| D-DY(a) | | | | |
| OM-2SR(a) | | | | |
| | | | | |
| | | | | |
| | | | | |
| | | | | |

NOTE(S):

ALL DIMENSIONS ARE IN METERS UNLESS OTHERWISE NOTED.

QUANTITIES AND PLACEMENT OF TY II REFLECTIVE PAVEMENT MARKINGS ARE EXACTLY THE SAME AS TY I REFLECTIVE PAVEMENT MARKINGS. TY II QUANTITIES ACCOUNTED FOR ON THE PAVEMENT MARKING /DELINEATION SUMMARY.

ANY PAVEMENT MARKING IN CONFLICT WITH PROPOSED PAVEMENT MARKINGS SHALL BE REMOVED BY THE CONTRACTOR OR AS DIRECTED BY THE ENGINEER.

**CHANGE ORDER NO. 65**

-REVISED RDWY GEOMETRICS AND LANE CONFIGURATIONS

CHANGE ORDER NO. 65 | REVISED SHEET


555 EAST RAMSEY SAN ANTONIO TEXAS 78216 PHONE (210)375-9000 FAX (210)375-9010
PAPE-DAWSON ENGINEERS
CIVIL & ENVIRONMENTAL
STATE OF TEXAS
J. KENT O'BRIEN
64398
LICENSED
PROFESSIONAL ENGINEER
J. KENT O'BRIEN P.E. 1/27/2004
DATE


©2000 Texas Department of Transportation

## PAVEMENT MARKING AND DELINEATION LAYOUT

SHEET 43 OF 57

| FED. RD. DIV. NO. | FEDERAL AID PROJECT NO. | | SHEET NO. |
|---|---|---|---|
| 6 | NH 2000(704), etc. | | 802A |
| STATE | DIST. | COUNTY | |
| TEXAS | SAT | BEXAR | |
| CONT. | SECT. | JOB | HIGHWAY NO. |
| 2452 | 01 | 036, etc. | LP 1604 |

Design Filename: p:\52\20\11\design\civil\plansheets\traffic\pave-mark\pavmrkplan43.dgn

| LEVELS DISPLAYED | | | | | | | | | | | | | | | |
|---|---|---|---|---|---|---|---|---|---|---|---|---|---|---|---|
| 1 | 2 | 3 | 4 | 5 | 6 | 7 | 8 | 9 | 10 | 11 | 12 | 13 | 14 | 15 | 16 |
| | | | | 20 | 21 | 22 | 23 | 24 | 25 | 26 | 27 | 28 | 29 | 30 | 31 | 32 |
| 33 | 34 | 35 | 36 | 37 | 38 | 39 | 40 | 41 | 42 | 43 | 44 | 45 | 46 | 47 | 48 |
| 49 | 50 | 51 | 52 | 53 | 54 | 55 | 56 | 57 | 58 | 59 | 60 | 61 | 62 | 63 | |

ACC: t:\ao\design\lp1604fm471-90\pave-sign\
FILE: pavmrkplan43.dgn

QUANTITIES THIS SHEET
CSJ 2452-01-036

SCALE 1:1000

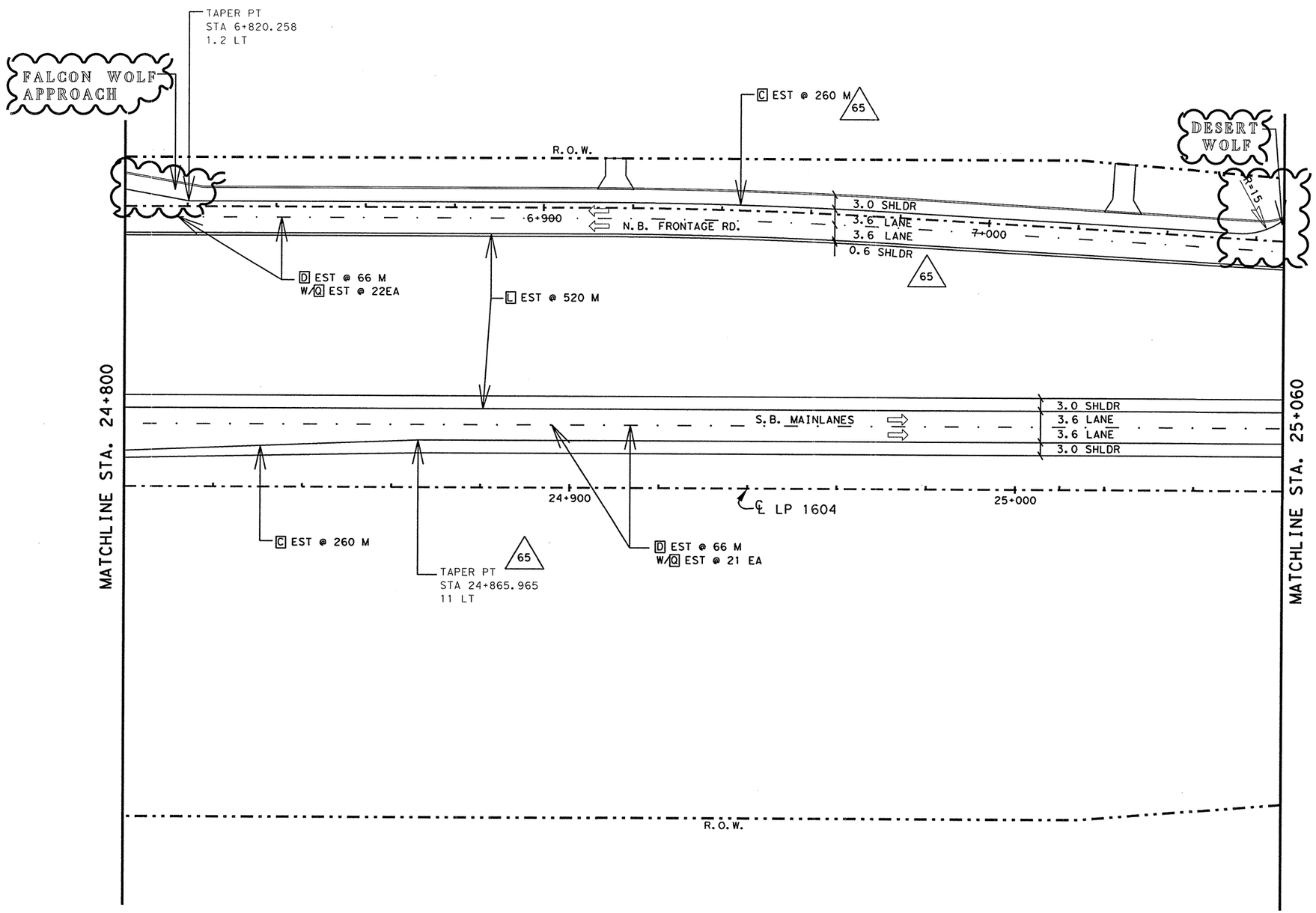


| | QUANTITY SUMMARY CSJ: 2452-01-036, etc. | | |
|---|---|---|---|
| | ITEM | UNIT | QUANTITY |
| A | OBJ MRK ASM TY 2 FLEX (OM-2SR)(1.8 M) | EA | 0 |
| B | OBJ MRK ASM TY 2 SURF MNT (OM-2HP)(SPL) | EA | 0 |
| C | REFL PAV MRK TY I (W)(SLD)(100 MM) | M | 520 |
| D | REFL PAV MRK TY I (W)(BRK)(100 MM) | M | 132 |
| E | REFL PAV MRK TY I (W)(DOT)(100 MM) | M | 0 |
| F | REFL PAV MRK TY I (W)(SLD)(200 MM) | M | 0 |
| G | REFL PAV MRK TY I (W)(BRK)(200 MM) | M | 0 |
| H | REFL PAV MRK TY I (W)(SLD)(600 MM) | M | 0 |
| I | REFL PAV MRK TY I (W)(ARROW) | EA | 0 |
| J | REFL PAV MRK TY I (W)(DBL ARROW) | EA | 0 |
| K | REFL PAV MRK TY I (W)(WORD) | EA | 0 |
| L | REFL PAV MRK TY I (Y)(SLD)(100 MM) | M | 520 |
| M | REFL PAV MRK TY I (Y)(SLD)(200 MM) | M | 0 |
| N | REFL PAV MRK TY I (Y)(SLD)(600 MM) | M | 0 |
| O | REFL PAV MRK TY I (Y)(MED NOSE) | EA | 0 |
| P | RAIS PAV MRKR CL B (REFL) TY II-A-A (HV) | EA | 0 |
| Q | RAIS PAV MRKR CL B (REFL) TY II-C-R (HV) | EA | 43 |

NOTE(S):

ALL DIMENSIONS ARE IN METERS UNLESS OTHERWISE NOTED.

QUANTITIES AND PLACEMENT OF TY II REFLECTIVE PAVEMENT MARKINGS ARE EXACTLY THE SAME AS TY I REFLECTIVE PAVEMENT MARKINGS.

ANY PAVEMENT MARKING IN CONFLICT WITH PROPOSED PAVEMENT MARKINGS SHALL BE REMOVED BY THE CONTRACTOR OR AS DIRECTED BY THE ENGINEER.

**CHANGE ORDER NO. 140**
- ADDED NEW INTERSECTION APPROACH FOR FALCON WOLF
- ADDED NEW INTERSECTION DESERT WOLF
- NO QUANTITIES CHANGES

CHANGE ORDER #140

REVISED SHEET

STATE OF TEXAS
MIGUEL G. ROGERIO
96620
LICENSED
PROFESSIONAL ENGINEER

Miguel G. Rogerio, P.E. — 10/18/2006 Date

# REFERS TO CHANGES MADE AS PART OF CHANGE ORDER.

©2006

Texas Department of Transportation

# PAVEMENT MARKING AND DELINEATION LAYOUT

SHEET 43 OF 57

| FED. RD. DIV. NO. | FEDERAL AID PROJECT NO. | | SHEET NO. |
|---|---|---|---|
| 6 | NH 2000(704), etc. | | 802AA |
| STATE | DIST. | COUNTY | |
| TEXAS | SAT | BEXAR | |
| CONT. | SECT. | JOB | HIGHWAY NO. |
| 2452 | 01 | 036, etc. | LP 1604 |

7-31-06

T:\AO\Construction\2452-01-036\CO\CO#140\pavmrkplan43.dgn
10/17/2006

LEVELS DISPLAYED
1 2 3 4 5 6 7 8 9 10 11 12 31 41 51 61
33 45 55 65 75 85 96 06 16 26 3
99 05 15 25 35 45 55 65 75 85 96 06 16 26 3

T:\AO\Construction\2452-01-036\CO\CO#140\pavmrkplan43.dgn
10/17/2006
5:48:45 PM

QUANTITIES THIS SHEET
CSJ 2452-01-036

SCALE 1:1000

| ESTIMATED QUANTITIES | | |
|---|---|---|
| ITEM | UNIT | QUANTITY |
| | | 2452-01-036 |
| REFL PAV MRK TY I (W)(SLD)(100MM) | M | 260 |
| REFL PAV MRK TY I (W)(BRK)(100MM) | M | 129 |
| REFL PAV MRK TY I (Y)(SLD)(100MM) | M | 520 |
| RAIS PAV MRKR CL B (REFL) TY II C-R | EA | 43 |
| | | |

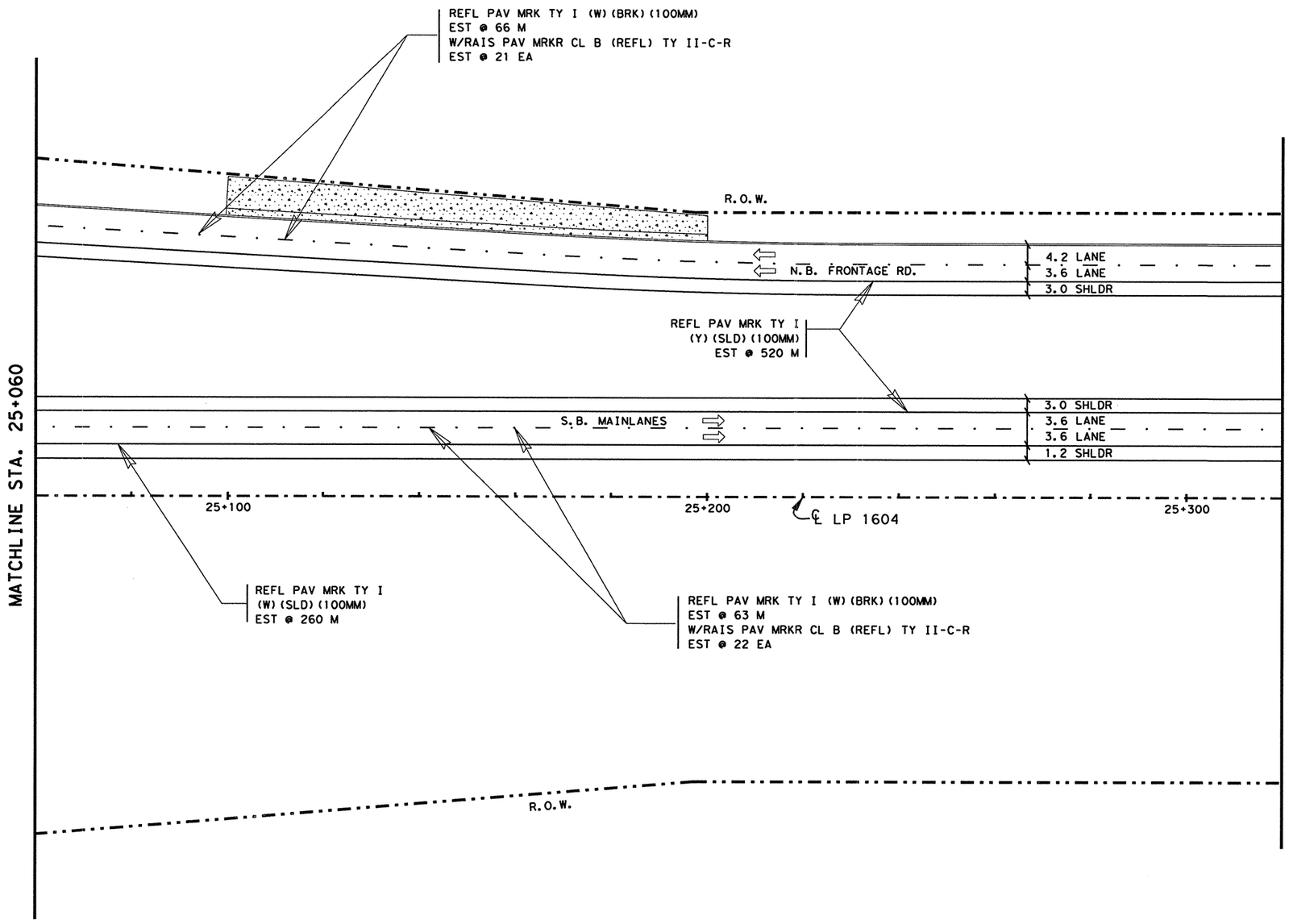


NOTE(S):

ALL DIMENSIONS ARE IN METERS UNLESS OTHERWISE NOTED.

QUANTITIES AND PLACEMENT OF TY II REFLECTIVE PAVEMENT MARKINGS ARE EXACTLY THE SAME AS TY I REFLECTIVE PAVEMENT MARKINGS. TY II QUANTITIES ACCOUNTED FOR ON THE PAVEMENT MARKING /DELINEATION SUMMARY.

ANY PAVEMENT MARKING IN CONFLICT WITH PROPOSED PAVEMENT MARKINGS SHALL BE REMOVED BY THE CONTRACTOR OR AS DIRECTED BY THE ENGINEER.

| DELINEATION QUANTITIES | | | | |
|---|---|---|---|---|
| TYPE | EA. | ASM. | SPL. MNT. | SURF. MNT. |
| D-SW(a) | | | | |
| D-DW(a) | | | | |
| D-SY(a) | | | | |
| D-DY(a) | | | | |
| OM-2SR(a) | | | | |
| | | | | |
| | | | | |
| | | | | |
| | | | | |

STATE OF TEXAS
JOEL K. DAVENPORT, JR.
79276
REGISTERED
PROFESSIONAL ENGINEER

Joel K. Davenport Jr 9/19/00
Joel K. Davenport, Jr. P.E. 79276 Date

©2000

Texas Department of Transportation

# PAVEMENT MARKING AND DELINEATION LAYOUT

SHEET 44 OF 57

| FED.RD. DIV.NO. | FEDERAL AID PROJECT NO. | | SHEET NO. |
|---|---|---|---|
| 6 | NH 2000(704),etc. | | 803 |
| STATE | DIST. | COUNTY | |
| TEXAS | SAT | BEXAR | |
| CONT. | SECT. | JOB | HIGHWAY NO. |
| 2452 | 01 | 036,etc. | LP 1604 |

LEVELS DISPLAYED
1 2 3 4 5 6 7 8 9 10 11 12 13 14 15 16
17 18 20 21 22 23 24 25 26 27 28 29 30 31 32
33 34 35 36 37 38 39 40 41 42 43 44 45 46 47 48
49 50 51 52 53 54 55 56 57 58 59 60 61 62 63

ACC: t:\ao\design\lp1604fm471-90\pavesign\
FILE: pavmrkplan44.dgn

QUANTITIES THIS SHEET
CSJ 2452-01-036

SCALE 1:1000

| ESTIMATED QUANTITIES | | |
|---|---|---|
| ITEM | UNIT | QUANTITY |
| | | 2452-01-036 |
| REFL PAV MRK TY I (W) (SLD) (100MM) | M | 520 |
| REFL PAV MRK TY I (W) (BRK) (100MM) | M | 129 |
| REFL PAV MRK TY I (Y) (SLD) (100MM) | M | 520 |
| RAIS PAV MRKR CL B (REFL) TY II C-R | EA | 43 |
| | | |

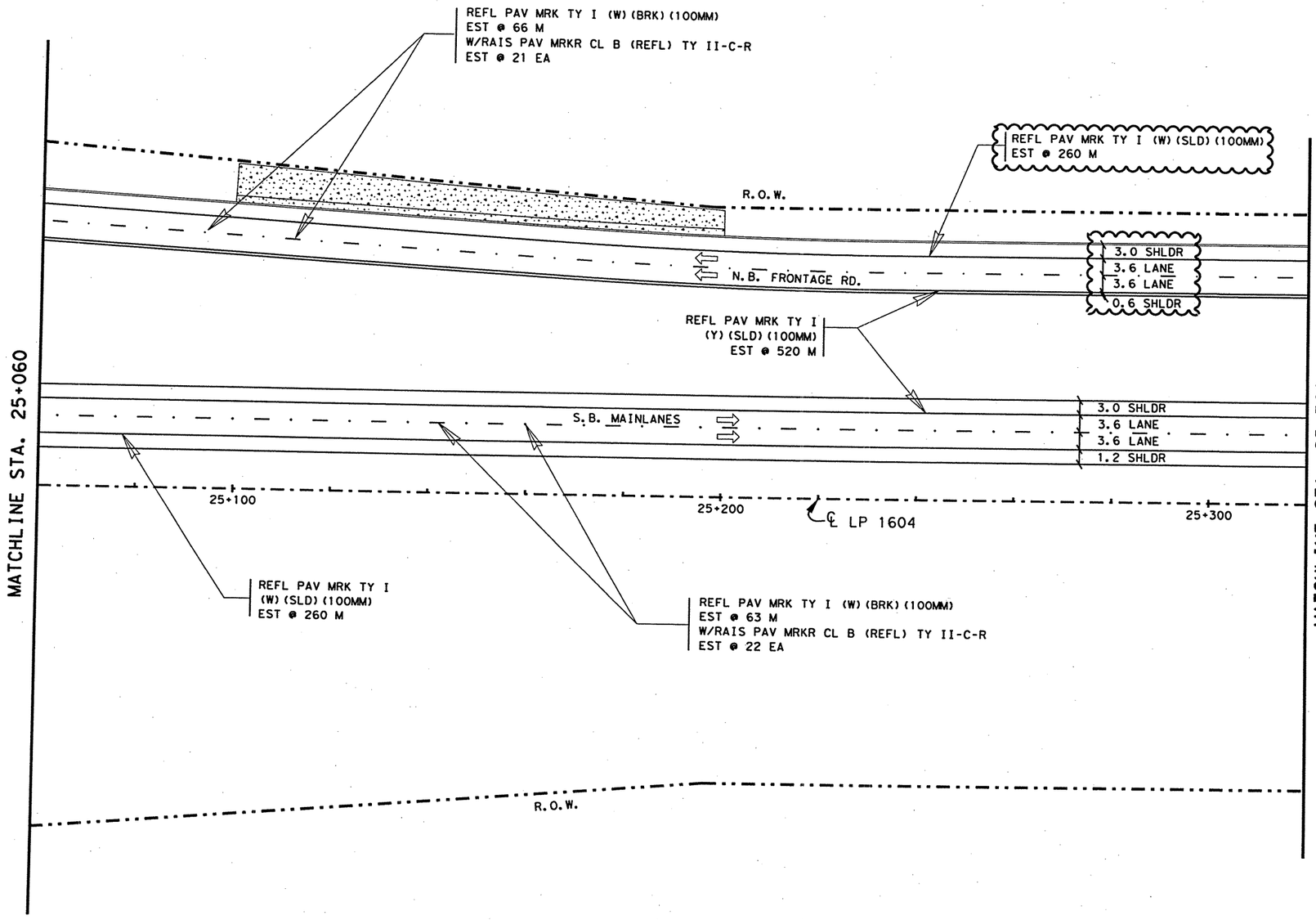


NOTE(S):

ALL DIMENSIONS ARE IN METERS UNLESS OTHERWISE NOTED.

QUANTITIES AND PLACEMENT OF TY II REFLECTIVE PAVEMENT MARKINGS ARE EXACTLY THE SAME AS TY I REFLECTIVE PAVEMENT MARKINGS. TY II QUANTITIES ACCOUNTED FOR ON THE PAVEMENT MARKING /DELINEATION SUMMARY.

ANY PAVEMENT MARKING IN CONFLICT WITH PROPOSED PAVEMENT MARKINGS SHALL BE REMOVED BY THE CONTRACTOR OR AS DIRECTED BY THE ENGINEER.

| DELINEATION QUANTITIES | | | | |
|---|---|---|---|---|
| TYPE | EA. | ASM. | SPL. MNT. | SURF. MNT. |
| D-SW(a) | | | | |
| D-DW(a) | | | | |
| D-SY(a) | | | | |
| D-DY(a) | | | | |
| OM-2SR(a) | | | | |
| | | | | |
| | | | | |
| | | | | |
| | | | | |

CHANGE ORDER 65

REVISED SHEET

CHANGE ORDER NO. 65
-REVISED FRONT. RD. LANE CONFIG.
-REVISED QUANTITIES

STATE OF TEXAS
JEROME D. PAVLISKA
76075
REGISTERED
PROFESSIONAL ENGINEER

Jerome D. Pavliska, P.E. 2/06/04
Jerome D. Pavliska, P.E. — Date

LEVELS DISPLAYED
1 2 3 4 5 6 7 8 9 10 11 12 13 14 15 16
2 20 21 22 23 24 25 26 27 28 29 30 31 32
33 34 35 36 37 38 39 40 41 42 43 44 45 46 47 48
49 50 51 52 53 54 55 56 57 58 59 60 61 62 63

ACC: t:\ao\design\
lp1604fm471-90\pavesign\
FILE: pavmrkplan44.dgn

©2000 Texas Department of Transportation

PAVEMENT MARKING AND DELINEATION LAYOUT

SHEET 44 OF 57

| FED.RD. DIV.NO. | FEDERAL AID PROJECT NO. | | SHEET NO. |
|---|---|---|---|
| 6 | NH 2000(704), etc. | | 803A |
| STATE | DIST. | COUNTY | |
| TEXAS | SAT | BEXAR | |
| CONT. | SECT. | JOB | HIGHWAY NO. |
| 2452 | 01 | 036, etc. | LP 1604 |

02-04-04

QUANTITIES THIS SHEET
CSJ 2452-01-036

SCALE 1:1000

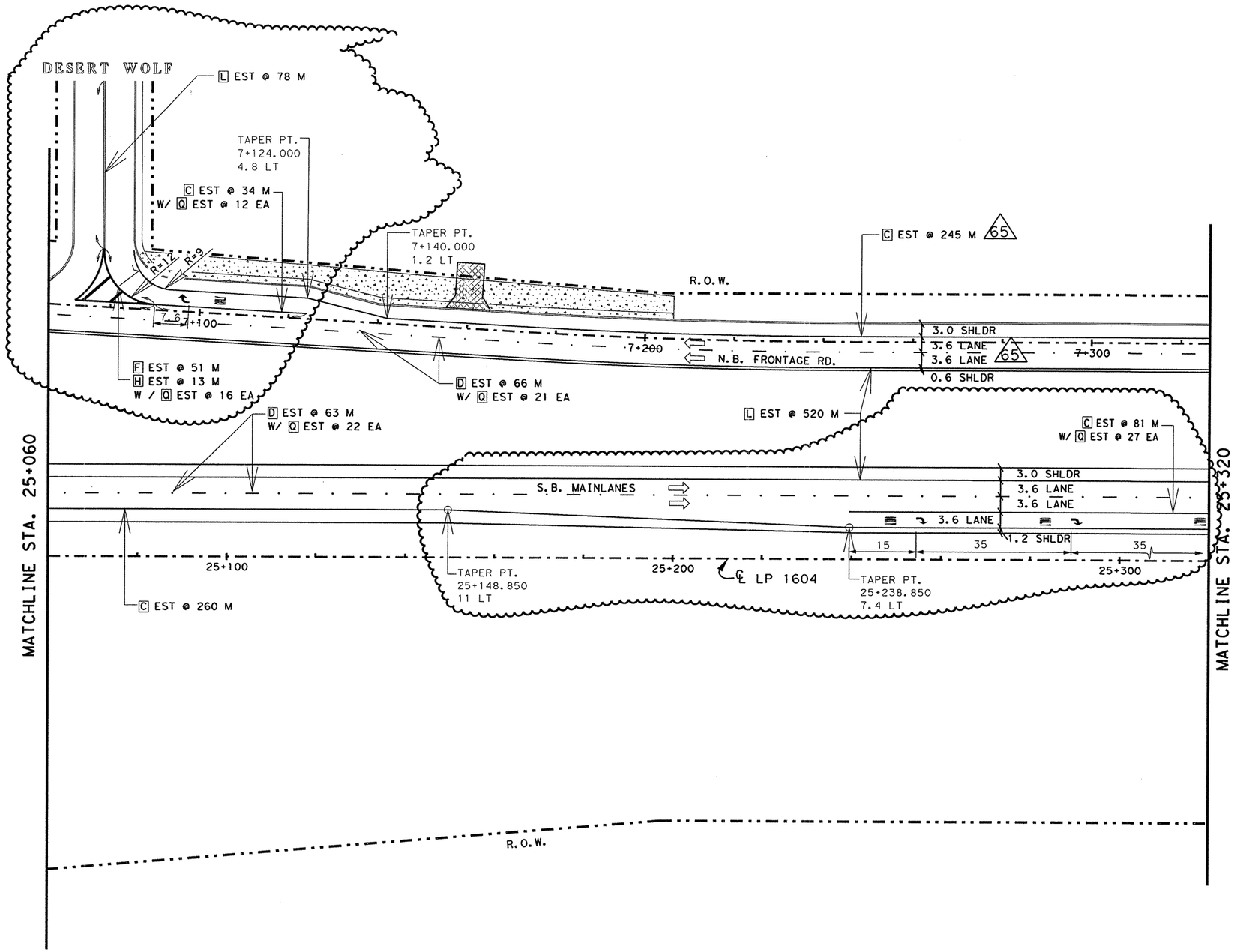


| | QUANTITY SUMMARY CSJ: 2452-01-036, etc. | | |
|---|---|---|---|
| | ITEM | UNIT | QUANTITY |
| A | OBJ MRK ASM TY 2 FLEX (OM-2SR)(1.8 M) | EA | 0 |
| B | OBJ MRK ASM TY 2 SURF MNT (OM-2HP)(SPL) | EA | 0 |
| C | REFL PAV MRK TY I (W)(SLD)(100 MM) | M | 620 |
| D | REFL PAV MRK TY I (W)(BRK)(100 MM) | M | 129 |
| E | REFL PAV MRK TY I (W)(DOT)(100 MM) | M | 0 |
| F | REFL PAV MRK TY I (W)(SLD)(200 MM) | M | 51 |
| G | REFL PAV MRK TY I (W)(BRK)(200 MM) | M | 0 |
| H | REFL PAV MRK TY I (W)(SLD)(600 MM) | M | 13 |
| I | REFL PAV MRK TY I (W)(ARROW) | EA | 3 |
| J | REFL PAV MRK TY I (W)(DBL ARROW) | EA | 0 |
| K | REFL PAV MRK TY I (W)(WORD) | EA | 4 |
| L | REFL PAV MRK TY I (Y)(SLD)(100 MM) | M | 598 |
| M | REFL PAV MRK TY I (Y)(SLD)(200 MM) | M | 0 |
| N | REFL PAV MRK TY I (Y)(SLD)(600 MM) | M | 0 |
| O | REFL PAV MRK TY I (Y)(MED NOSE) | EA | 0 |
| P | RAIS PAV MRKR CL B (REFL) TY II-A-A (HV) | EA | 0 |
| Q | RAIS PAV MRKR CL B (REFL) TY II-C-R (HV) | EA | 98 |

NOTE(S):

ALL DIMENSIONS ARE IN METERS UNLESS OTHERWISE NOTED.

QUANTITIES AND PLACEMENT OF TY II REFLECTIVE PAVEMENT MARKINGS ARE EXACTLY THE SAME AS TY I REFLECTIVE PAVEMENT MARKINGS.

ANY PAVEMENT MARKING IN CONFLICT WITH PROPOSED PAVEMENT MARKINGS SHALL BE REMOVED BY THE CONTRACTOR OR AS DIRECTED BY THE ENGINEER.

CHANGE ORDER #140

REVISED SHEET

CHANGE ORDER NO. 140
- ADDED NEW INTERSECTION DESERT WOLF
- ADDED EMORY PEAK INTERSECTION APPROACH
- ADDED / REVISED QUANTITIES

# REFERS TO CHANGES MADE AS PART OF CHANGE ORDER.

STATE OF TEXAS
MIGUEL G. ROGERIO
96620
LICENSED
PROFESSIONAL ENGINEER

Miguel G. Rogerio 10/18/2006
Miguel G. Rogerio, P.E. Date

©2006
Texas Department of Transportation

PAVEMENT MARKING AND DELINEATION LAYOUT

SHEET 44 OF 57

| FED.RD. DIV.NO. | FEDERAL AID PROJECT NO. | | SHEET NO. |
|---|---|---|---|
| 6 | NH 2000(704), etc. | | 803AA |
| STATE | DIST. | COUNTY | |
| TEXAS | SAT | BEXAR | |
| CONT. | SECT. | JOB | HIGHWAY NO. |
| 2452 | 01 | 036, etc. | LP 1604 |

T:\AO\Construction\2452-01-036\CO\CO#140\pavmrkplan44*co*.dgn
10/17/2006
LEVELS DISPLAYED
1 2 4 5 6 7 8 9 10 11 20 31 41 51 61
200 201 202 203 204 205 206 207 208 209 210 211 212 213 214
3334 3335 3336 3337 3338 3339 3340 3341 3342 3343 3344 3345 3346 3347 3348
4955 5152 5354 5555 5657 5859 6061 6263
T:\AO\Construction\2452-01-036\CO\CO#140\pavmrkplan44*co*.dgn
10/17/2006
5:49:08 PM

SCALE 1:1000

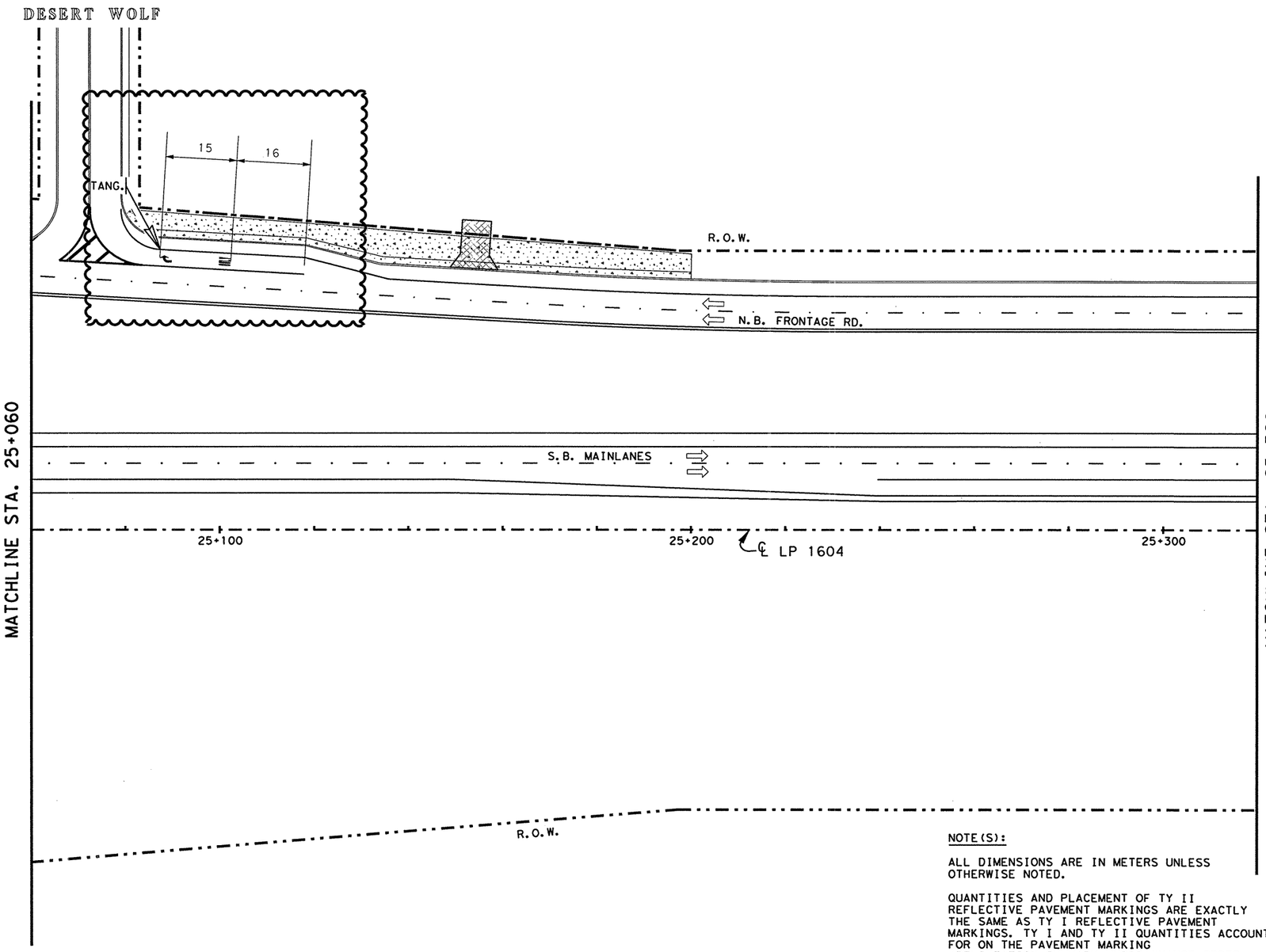


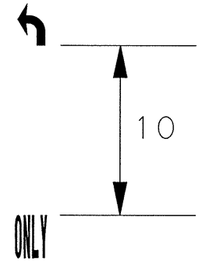


**SUPPLEMENT SHEET**

-REVISE LP 1604 NBFR SPACING FOR "ARROW" & "WORD" STRIPING.

-ELIMINATE "ARROW" & "WORD" ON LP 1604 NBFR THRU LANES.

NOTE(S):

ALL DIMENSIONS ARE IN METERS UNLESS OTHERWISE NOTED.

QUANTITIES AND PLACEMENT OF TY II REFLECTIVE PAVEMENT MARKINGS ARE EXACTLY THE SAME AS TY I REFLECTIVE PAVEMENT MARKINGS. TY I AND TY II QUANTITIES ACCOUNTED FOR ON THE PAVEMENT MARKING /DELINEATION SUMMARY UNDER CHANGE ORDER NO. 65 AND 140.

ANY PAVEMENT MARKING IN CONFLICT WITH PROPOSED PAVEMENT MARKINGS SHALL BE REMOVED BY THE CONTRACTOR OR AS DIRECTED BY THE ENGINEER.

Revised sheet

STATE OF TEXAS
MIGUEL G. ROGERIO
96620
LICENSED
PROFESSIONAL ENGINEER

Miguel G. Rogerio, P.E. 5/7/2007
Miguel G. Rogerio, P.E. Date

©2007

Texas Department of Transportation

# PAVEMENT MARKING LAYOUT

**SHEET 44a OF 57**

| FED.RD. DIV.NO. | FEDERAL AID PROJECT NO. | | SHEET NO. |
|---|---|---|---|
| 6 | NH 2000(704),etc. | | 803AAA |
| STATE | DIST. | COUNTY | |
| TEXAS | SAT | BEXAR | |
| CONT. | SECT. | JOB | HIGHWAY NO. |
| 2452 | 01 | 036,etc. | LP 1604 |

T:\AO\Construction\2452-01-036 (Lp 1604)\CO\CO#140\pavmrkplan44*co*aa.dgn
5/3/2007

LEVELS DISPLAYED
1 2 | 4 5 6 7 8 | 1 1 1 2 1 3 1 4 1 5
2 0 2 1 2 2 2 3 2 4 2 5 2 6 2 7 2 8 2 9 3 0 3 1 3 2
3 3 3 4 3 5 3 6 3 7 3 8 3 9 4 0 | 4 2 4 3 4 4 4 5 4 6 4 7 4 8
4 9 5 0 5 1 5 2 5 3 5 4 5 5 5 6 5 7 5 8 5 9 6 0 6 1 | 6 3

T:\AO\Construction\2452-01-036 (Lp 1604)\CO\CO#140\pavmrkplan44*co*aa.dgn
5/3/2007 11:24:23 AM

QUANTITIES THIS SHEET
CSJ 2452-01-036

SCALE 1:1000

| ESTIMATED QUANTITIES | | |
|---|---|---|
| ITEM | UNIT | QUANTITY |
| | | 2452-01-036 |
| REFL PAV MRK TY I (W)(SLD)(100MM) | M | 258 |
| REFL PAV MRK TY I (W)(BRK)(100MM) | M | 129 |
| REFL PAV MRK TY I (Y)(SLD)(100MM) | M | 512 |
| RAIS PAV MRKR CL B (REFL) TY II C-R | EA | 43 |
| | | |

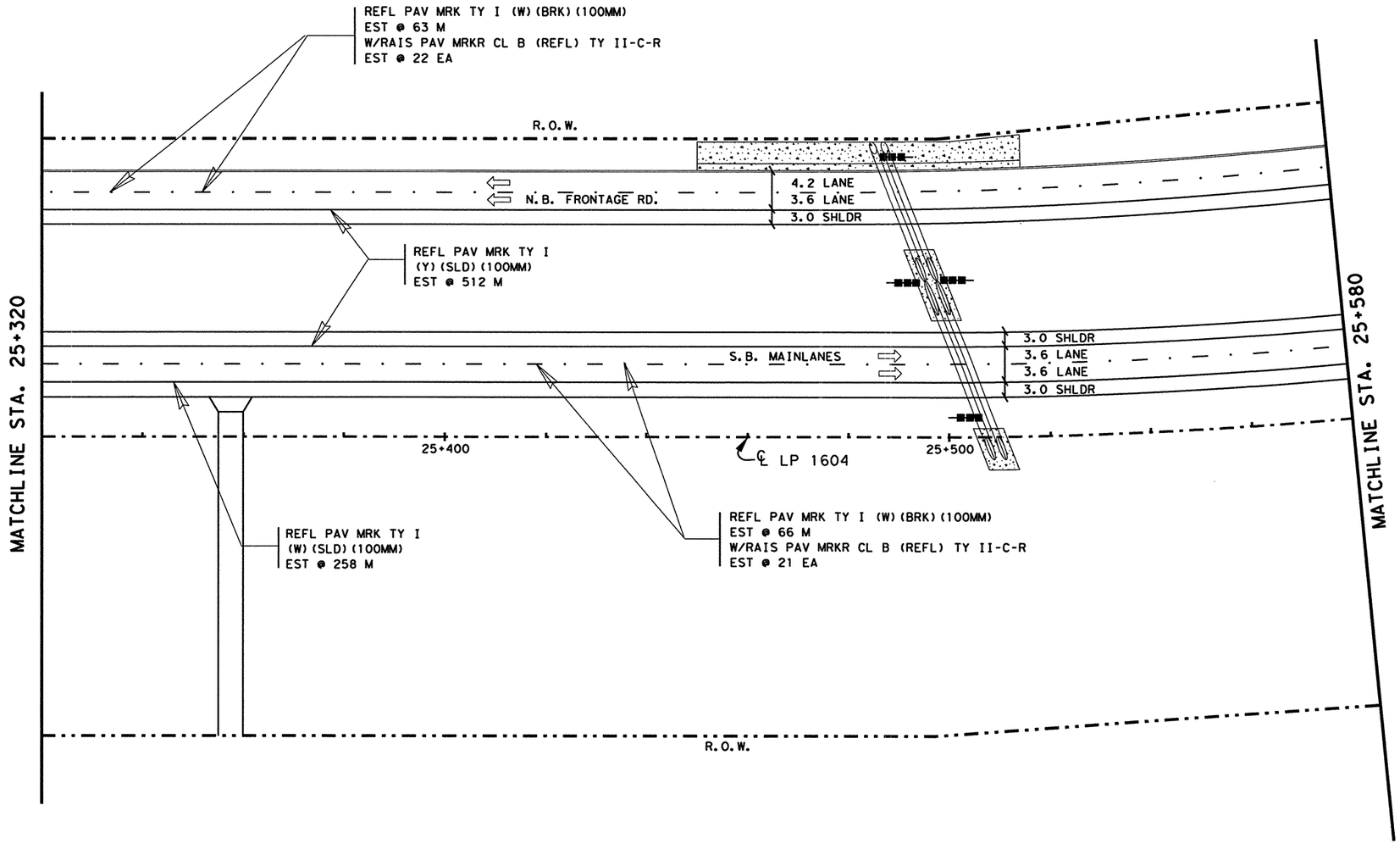


NOTE(S):

ALL DIMENSIONS ARE IN METERS UNLESS OTHERWISE NOTED.

QUANTITIES AND PLACEMENT OF TY II REFLECTIVE PAVEMENT MARKINGS ARE EXACTLY THE SAME AS TY I REFLECTIVE PAVEMENT MARKINGS. TY II QUANTITIES ACCOUNTED FOR ON THE PAVEMENT MARKING /DELINEATION SUMMARY.

ANY PAVEMENT MARKING IN CONFLICT WITH PROPOSED PAVEMENT MARKINGS SHALL BE REMOVED BY THE CONTRACTOR OR AS DIRECTED BY THE ENGINEER.

| DELINEATION QUANTITIES | | | | |
|---|---|---|---|---|
| TYPE | EA. | ASM. | SPL. MNT. | SURF. MNT. |
| D-SW(a) | | | | |
| D-DW(a) | | | | |
| D-SY(a) | | | | |
| D-DY(a) | | | | |
| OM-2SR(a) | | 4 | | |
| | | | | |
| | | | | |
| | | | | |
| | | | | |


LEVELS DISPLAYED
1 2 3 4 5 6 7 8 9 10 11 12 13 14 15 16
17 18 19 20 21 22 23 24 25 26 27 28 29 30 31 32
33 34 35 36 37 38 39 40 41 42 43 44 45 46 47 48
49 50 51 52 53 54 55 56 57 58 59 60 61 62 63
ACC: t:\oa\design\
lp1604fm471-90\pave-sign\
FILE: pavmrkplan45.dgn


STATE OF TEXAS
JOEL K. DAVENPORT, JR.
79276
REGISTERED
PROFESSIONAL ENGINEER

Joel K. Davenport Jr. 9/19/00
Joel K. Davenport, Jr. P.E. 79276 Date

©2000
Texas Department of Transportation

# PAVEMENT MARKING AND DELINEATION LAYOUT

**SHEET 45 OF 57**

| FED.RD. DIV.NO. | FEDERAL AID PROJECT NO. | SHEET NO. |
|---|---|---|
| 6 | NH 2000(704),etc. | 804 |

| STATE | DIST. | COUNTY |
|---|---|---|
| TEXAS | SAT | BEXAR |

| CONT. | SECT. | JOB | HIGHWAY NO. |
|---|---|---|---|
| 2452 | 01 | 036,etc. | LP 1604 |

QUANTITIES THIS SHEET
CSJ 2452-01-036

SCALE 1:1000

| ESTIMATED QUANTITIES | | |
|---|---|---|
| ITEM | UNIT | QUANTITY |
| | | 2452-01-036 |
| REFL PAV MRK TY I (W)(SLD)(100MM) | M | 518 |
| REFL PAV MRK TY I (W)(BRK)(100MM) | M | 129 |
| REFL PAV MRK TY I (Y)(SLD)(100MM) | M | 512 |
| RAIS PAV MRKR CL B (REFL) TY II C-R | EA | 43 |
| | | |

NOTE(S):

ALL DIMENSIONS ARE IN METERS UNLESS OTHERWISE NOTED.

QUANTITIES AND PLACEMENT OF TY II REFLECTIVE PAVEMENT MARKINGS ARE EXACTLY THE SAME AS TY I REFLECTIVE PAVEMENT MARKINGS. TY II QUANTITIES ACCOUNTED FOR ON THE PAVEMENT MARKING /DELINEATION SUMMARY.

ANY PAVEMENT MARKING IN CONFLICT WITH PROPOSED PAVEMENT MARKINGS SHALL BE REMOVED BY THE CONTRACTOR OR AS DIRECTED BY THE ENGINEER.

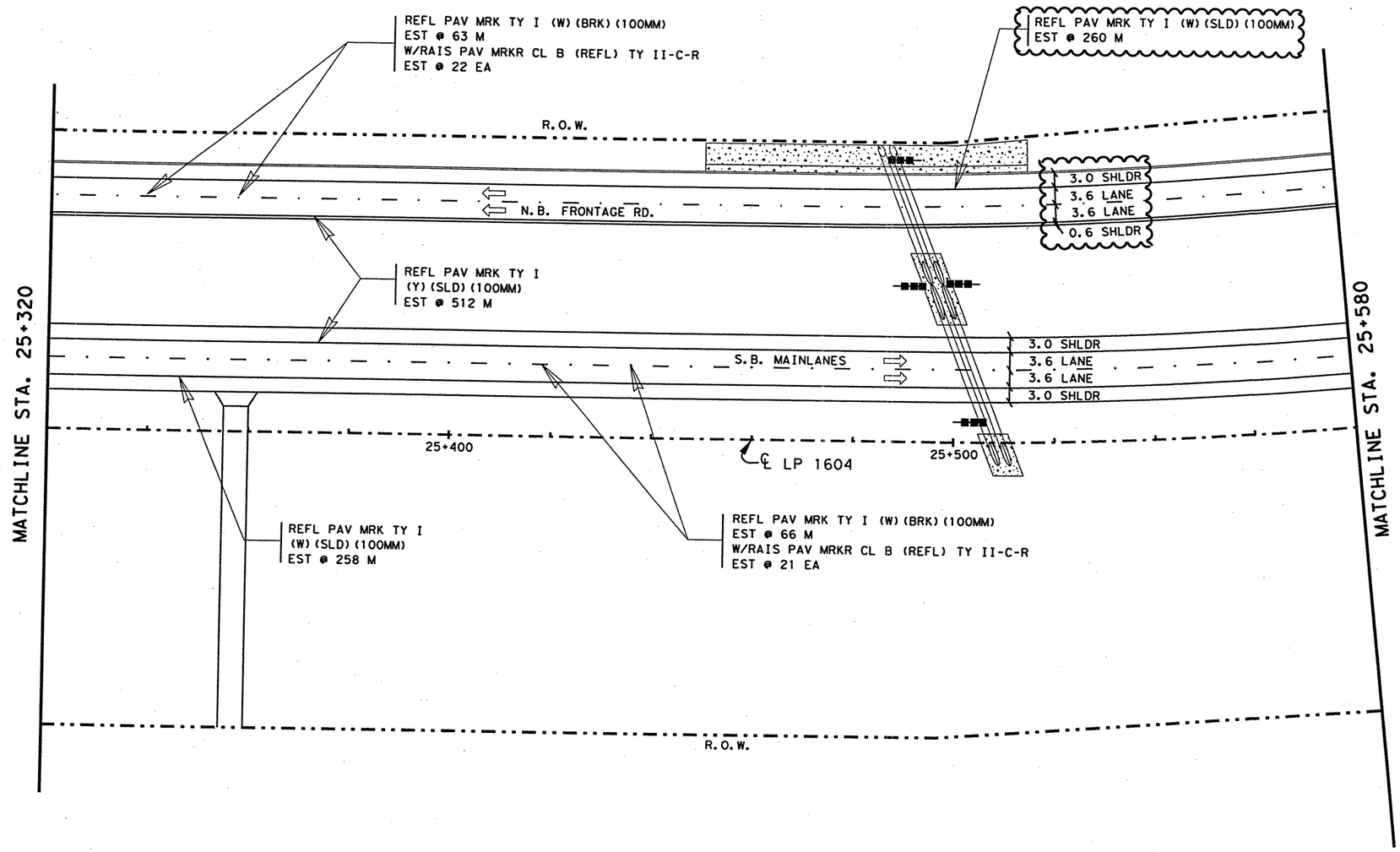


| DELINEATION QUANTITIES | | | | |
|---|---|---|---|---|
| TYPE | EA. | ASM. | SPL. MNT. | SURF. MNT. |
| D-SW(a) | | | | |
| D-DW(a) | | | | |
| D-SY(a) | | | | |
| D-DY(a) | | | | |
| OM-2SR(a) | | 4 | | |
| | | | | |
| | | | | |
| | | | | |
| | | | | |

CHANGE ORDER 65

REVISED SHEET

CHANGE ORDER NO. 65
-REVISED FRONT. RD. LANE CONFIG.
-REVISED QUANTITIES

STATE OF TEXAS
JEROME D. PAVLISKA
76075
REGISTERED
PROFESSIONAL ENGINEER

Jerome D. Pavliska, P.E. 2/06/04
Jerome D. Pavliska, P.E. Date

LEVELS DISPLAYED
1 2 3 4 5 6 7 8 9 10 11 12 13 14 15 16
20 21 22 32 42 52 62 72 82 92 93 95 152
33 34 35 36 37 58 394 404 414 424 434 454 464 476
496 501 526 535 545 555 565 758 596 606 616 626 3

ACC: t:\ao\design\lp1604fm471-90\pave-sign\
FILE: pavmrkplan45.dgn

©2000 Texas Department of Transportation

PAVEMENT MARKING AND DELINEATION LAYOUT

SHEET 45 OF 57

| FED.RD. DIV.NO. | FEDERAL AID PROJECT NO. | | SHEET NO. |
|---|---|---|---|
| 6 | NH 2000(704), etc. | | 804A |
| STATE | DIST. | COUNTY | |
| TEXAS | SAT | BEXAR | |
| CONT. | SECT. | JOB | HIGHWAY NO. |
| 2452 | 01 | 036, etc. | LP 1604 |

02-04-04

QUANTITIES THIS SHEET
CSJ 2452-01-036

SCALE 1:1000

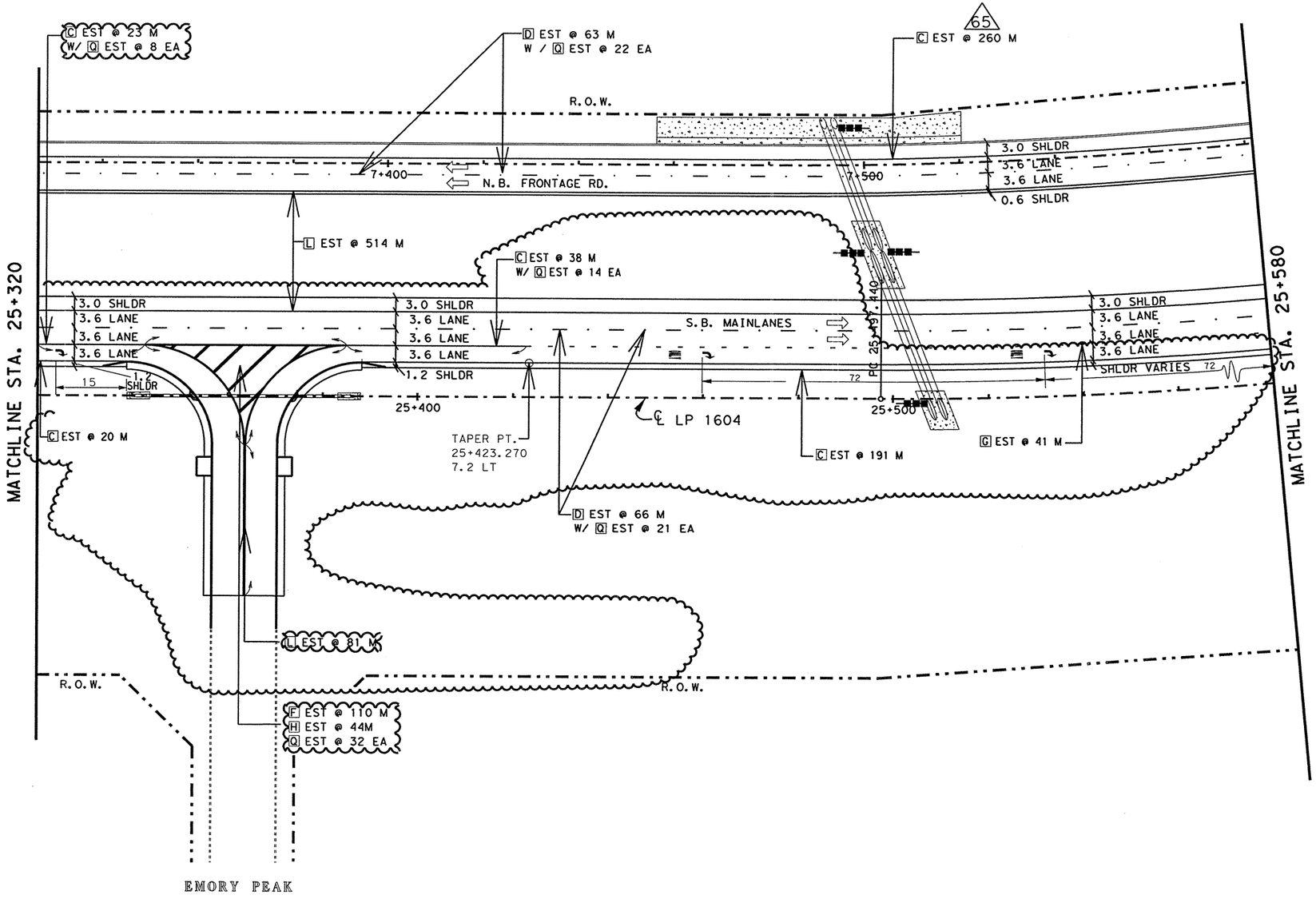


| | QUANTITY SUMMARY CSJ: 2452-01-036, etc. | | |
|---|---|---|---|
| | ITEM | UNIT | QUANTITY |
| A | OBJ MRK ASM TY 2 FLEX (OM-2SR)(1.8 M) | EA | 4 |
| B | OBJ MRK ASM TY 2 SURF MNT (OM-2HP)(SPL) | EA | 0 |
| C | REFL PAV MRK TY I (W)(SLD)(100 MM) | M | 532 |
| D | REFL PAV MRK TY I (W)(BRK)(100 MM) | M | 129 |
| E | REFL PAV MRK TY I (W)(DOT)(100 MM) | M | 0 |
| F | REFL PAV MRK TY I (W)(SLD)(200 MM) | M | 110 |
| G | REFL PAV MRK TY I (W)(BRK)(200 MM) | M | 41 |
| H | REFL PAV MRK TY I (W)(SLD)(600 MM) | M | 44 |
| I | REFL PAV MRK TY I (W)(ARROW) | EA | 3 |
| J | REFL PAV MRK TY I (W)(DBL ARROW) | EA | 0 |
| K | REFL PAV MRK TY I (W)(WORD) | EA | 2 |
| L | REFL PAV MRK TY I (Y)(SLD)(100 MM) | M | 595 |
| M | REFL PAV MRK TY I (Y)(SLD)(200 MM) | M | 0 |
| N | REFL PAV MRK TY I (Y)(SLD)(600 MM) | M | 0 |
| O | REFL PAV MRK TY I (Y)(MED NOSE) | EA | 0 |
| P | RAIS PAV MRKR CL B (REFL) TY II-A-A (HV) | EA | 0 |
| Q | RAIS PAV MRKR CL B (REFL) TY II-C-R (HV) | EA | 97 |

NOTE(S):

ALL DIMENSIONS ARE IN METERS UNLESS OTHERWISE NOTED.

QUANTITIES AND PLACEMENT OF TY II REFLECTIVE PAVEMENT MARKINGS ARE EXACTLY THE SAME AS TY I REFLECTIVE PAVEMENT MARKINGS.

ANY PAVEMENT MARKING IN CONFLICT WITH PROPOSED PAVEMENT MARKINGS SHALL BE REMOVED BY THE CONTRACTOR OR AS DIRECTED BY THE ENGINEER.

CHANGE ORDER #140

REVISED SHEET

CHANGE ORDER NO. 140
-ALLOWED FOR NEW EMORY PEAK INTERSECTION
-ADDED / REVISED QUANTITIES

STATE OF TEXAS
MIGUEL G. ROGERIO
96620
LICENSED
PROFESSIONAL ENGINEER

Miguel G. Rogerio, P.E. — 10/18/2006 Date

# (#) REFERS TO CHANGES MADE AS PART OF CHANGE ORDER.

©2006

Texas Department of Transportation

## PAVEMENT MARKING AND DELINEATION LAYOUT

SHEET 45 OF 57

| FED.RD. DIV.NO. | FEDERAL AID PROJECT NO. | | SHEET NO. |
|---|---|---|---|
| 6 | NH 2000(704),etc. | | 804AA |
| STATE | DIST. | COUNTY | |
| TEXAS | SAT | BEXAR | |
| CONT. | SECT. | JOB | HIGHWAY NO. |
| 2452 | 01 | 036,etc. | LP 1604 |

LEVELS DISPLAYED
1 2 3 4 15 6 7 8 9 10 11 12 13 14 15 16
33 34 35 36 37 38 39 40 41 42 43 44 45 46 47 48
49 50 51 52 53 54 55 56 57 58 59 60 61 62 63

T:\AO\Construction\2452-01-036\CO\CO#140\pavmrkplan45*co*.dgn
10/17/2006
5:49:43 PM

QUANTITIES THIS SHEET
CSJ 2452-01-036

SCALE 1:1000

| ESTIMATED QUANTITIES | | |
|---|---|---|
| ITEM | UNIT | QUANTITY |
| | | 2452-01-036 |
| REFL PAV MRK TY I (W)(SLD)(100MM) | M | 256 |
| REFL PAV MRK TY I (W)(BRK)(100MM) | M | 123 |
| REFL PAV MRK TY I (Y)(SLD)(100MM) | M | 499 |
| RAIS PAV MRKR CL B (REFL) TY II C-R | EA | 42 |
| RAIS PAV MRKR CL C (TRAF BTN) TY W | EA | 164 |
| | | |
| | | |
| | | |
| | | |

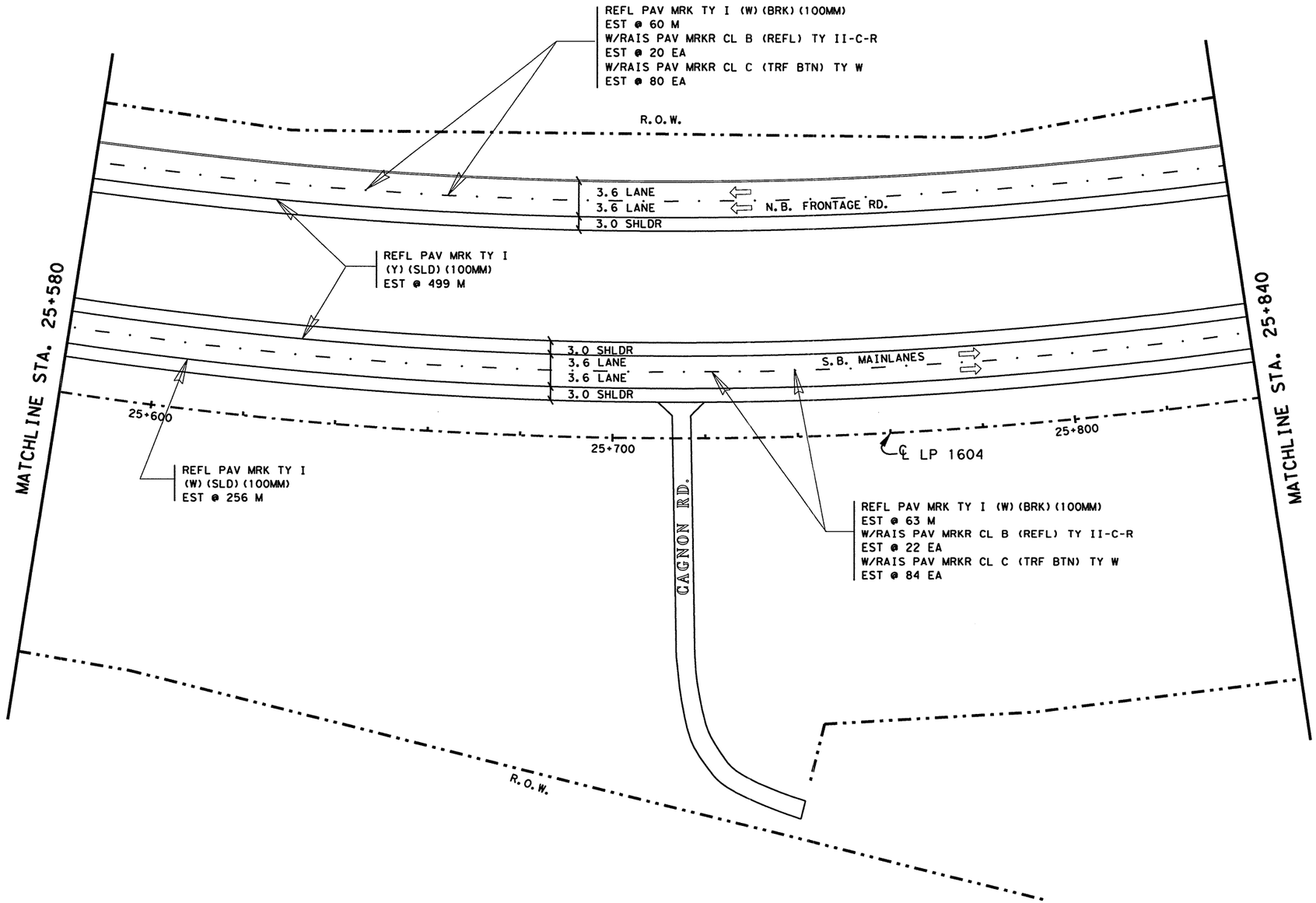


NOTE(S):

ALL DIMENSIONS ARE IN METERS UNLESS OTHERWISE NOTED.

QUANTITIES AND PLACEMENT OF TY II REFLECTIVE PAVEMENT MARKINGS ARE EXACTLY THE SAME AS TY I REFLECTIVE PAVEMENT MARKINGS. TY II QUANTITIES ACCOUNTED FOR ON THE PAVEMENT MARKING /DELINEATION SUMMARY.

ANY PAVEMENT MARKING IN CONFLICT WITH PROPOSED PAVEMENT MARKINGS SHALL BE REMOVED BY THE CONTRACTOR OR AS DIRECTED BY THE ENGINEER.

| DELINEATION QUANTITIES | | | | |
|---|---|---|---|---|
| TYPE | EA. | ASM. | SPL. MNT. | SURF. MNT. |
| D-SW(a) | | | | |
| D-DW(a) | | | | |
| D-SY(a) | | | | |
| D-DY(a) | | | | |
| OM-2SR(a) | | | | |
| | | | | |
| | | | | |
| | | | | |

STATE OF TEXAS
JOEL K. DAVENPORT, JR.
79276
REGISTERED
PROFESSIONAL ENGINEER

Joel K. Davenport, Jr. 9/19/00
Joel K. Davenport, Jr., P.E. 79276 Date

LEVELS DISPLAYED
1 2 3 4 5 6 7 8 9 10 11 21 31 41 51 61
- - 20 21 22 23 24 25 26 27 28 29 30 31 32
33 34 35 36 37 38 39 40 41 42 43 44 45 46 47 48
49 50 51 52 53 54 55 56 57 58 59 60 61 62 63

ACC: t:\ao\design\
lp1604fm471-90\pave-sign\
FILE: pavmrkplan46.dgn

Texas Department of Transportation

# PAVEMENT MARKING AND DELINEATION LAYOUT

SHEET 46 OF 57

| FED. RD. DIV. NO. | FEDERAL AID PROJECT NO. | | SHEET NO. |
|---|---|---|---|
| 6 | NH 2000(704), etc. | | 805 |
| STATE | DIST. | COUNTY | |
| TEXAS | SAT | BEXAR | |
| CONT. | SECT. | JOB | HIGHWAY NO. |
| 2452 | 01 | 036, etc. | LP 1604 |

QUANTITIES THIS SHEET
CSJ 2452-01-036

SCALE 1:1000

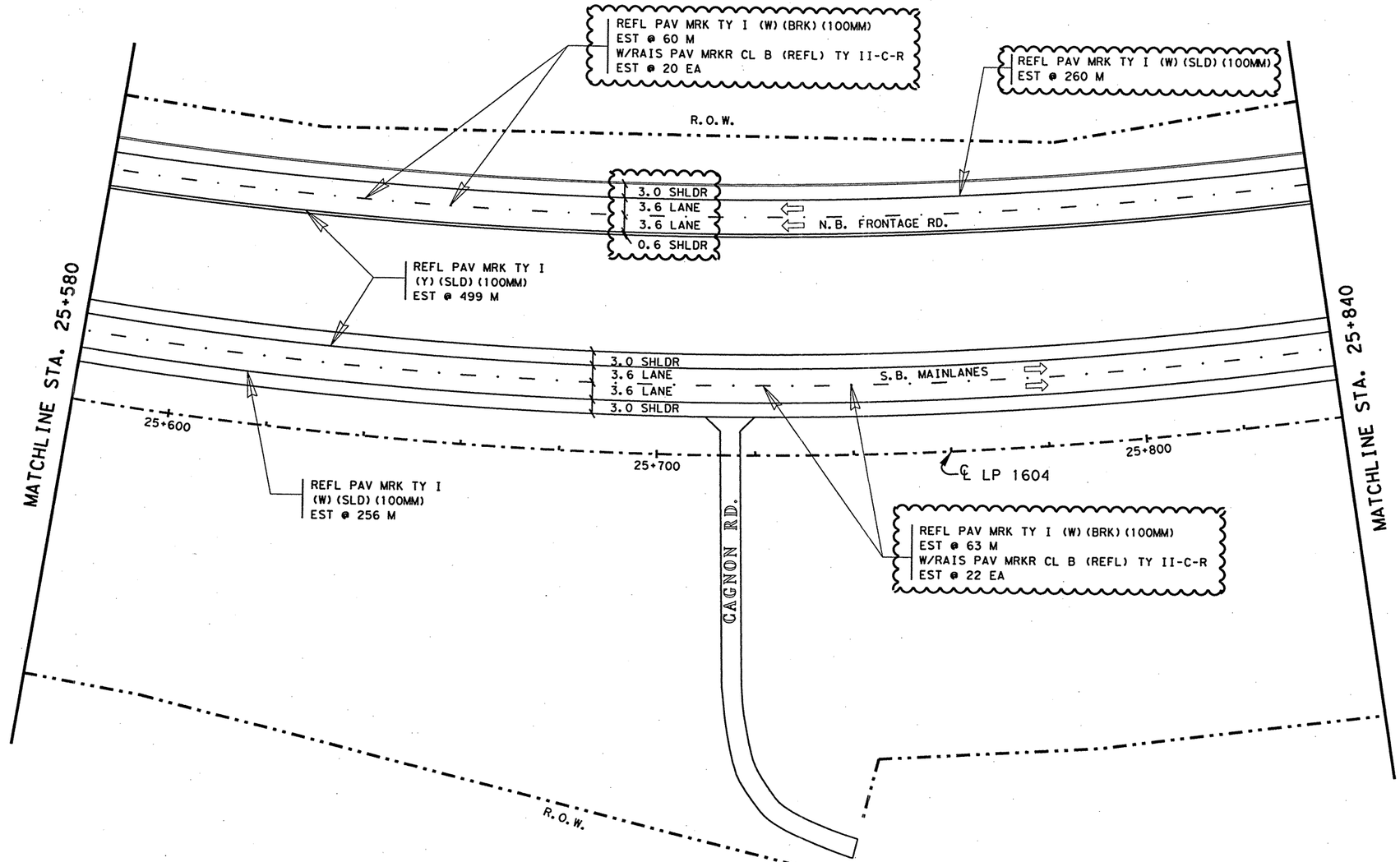


| ESTIMATED QUANTITIES | | |
|---|---|---|
| ITEM | UNIT | QUANTITY |
| | | 2452-01-036 |
| REFL PAV MRK TY I (W)(SLD)(100MM) | M | 516 |
| REFL PAV MRK TY I (W)(BRK)(100MM) | M | 123 |
| REFL PAV MRK TY I (Y)(SLD)(100MM) | M | 499 |
| RAIS PAV MRKR CL B (REFL) TY II C-R | EA | 42 |
| RAIS PAV MRKR CL C (TRAF BTN) TY W | EA | 164 |

NOTE(S):

ALL DIMENSIONS ARE IN METERS UNLESS OTHERWISE NOTED.

QUANTITIES AND PLACEMENT OF TY II REFLECTIVE PAVEMENT MARKINGS ARE EXACTLY THE SAME AS TY I REFLECTIVE PAVEMENT MARKINGS. TY II QUANTITIES ACCOUNTED FOR ON THE PAVEMENT MARKING /DELINEATION SUMMARY.

ANY PAVEMENT MARKING IN CONFLICT WITH PROPOSED PAVEMENT MARKINGS SHALL BE REMOVED BY THE CONTRACTOR OR AS DIRECTED BY THE ENGINEER.

| DELINEATION QUANTITIES | | | | |
|---|---|---|---|---|
| TYPE | EA. | ASM. | SPL. MNT. | SURF. MNT. |
| D-SW(a) | | | | |
| D-DW(a) | | | | |
| D-SY(a) | | | | |
| D-DY(a) | | | | |
| OM-2SR(a) | | | | |
| | | | | |
| | | | | |

CHANGE ORDER 65

REVISED SHEET

CHANGE ORDER NO. 65
-REVISED FRONT. RD. LANE CONFIG.
-REVISED QUANTITIES

STATE OF TEXAS
JEROME D. PAVLISKA
76075
REGISTERED
PROFESSIONAL ENGINEER

Jerome D. Pavliska P.E. 2/06/04
Jerome D. Pavliska, P.E. Date

LEVELS DISPLAYED
1 2 3 4 5 6 7 8 9 10 11 12 13 14 15 16
1 2 3 12 22 32 42 52 62 72 82 92 102 112 122 132
33 34 35 36 37 38 39 40 41 42 43 44 45 46 47 48
49 50 51 52 53 54 55 56 57 58 59 60 61 62 63

ACC: t:\ao\design\lp1604fm471-90\pave-sign\
FILE: pavmrkplan46.dgn

©2000
Texas Department of Transportation

PAVEMENT MARKING AND DELINEATION LAYOUT

SHEET 46 OF 57

| FED.RD. DIV.NO. | FEDERAL AID PROJECT NO. | | SHEET NO. |
|---|---|---|---|
| 6 | NH 2000(704),etc. | | 805A |
| STATE | DIST. | COUNTY | |
| TEXAS | SAT | BEXAR | |
| CONT. | SECT. | JOB | HIGHWAY NO. |
| 2452 | 01 | 036,etc. | LP 1604 |

02-04-04

QUANTITIES THIS SHEET
CSJ 2452-01-036

SCALE 1:1000

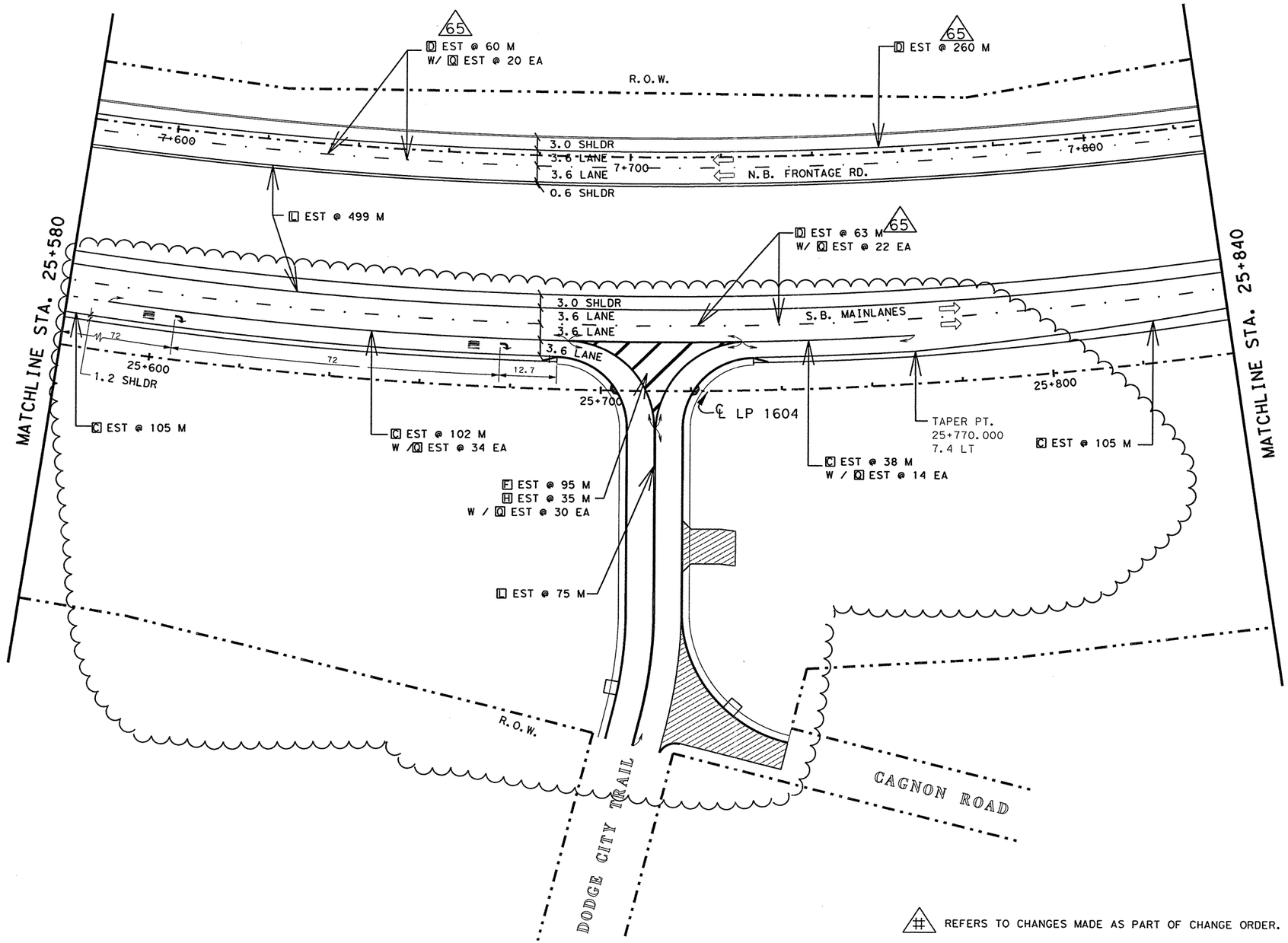


| | QUANTITY SUMMARY CSJ: 2452-01-036, etc. | | |
|---|---|---|---|
| | ITEM | UNIT | QUANTITY |
| A | OBJ MRK ASM TY 2 FLEX (OM-2SR)(1.8 M) | EA | 0 |
| B | OBJ MRK ASM TY 2 SURF MNT (OM-2HP)(SPL) | EA | 0 |
| C | REFL PAV MRK TY I (W)(SLD)(100 MM) | M | 610 |
| D | REFL PAV MRK TY I (W)(BRK)(100 MM) | M | 123 |
| E | REFL PAV MRK TY I (W)(DOT)(100 MM) | M | 0 |
| F | REFL PAV MRK TY I (W)(SLD)(200 MM) | M | 95 |
| G | REFL PAV MRK TY I (W)(BRK)(200 MM) | M | 0 |
| H | REFL PAV MRK TY I (W)(SLD)(600 MM) | M | 35 |
| I | REFL PAV MRK TY I (W)(ARROW) | EA | 2 |
| J | REFL PAV MRK TY I (W)(DBL ARROW) | EA | 0 |
| K | REFL PAV MRK TY I (W)(WORD) | EA | 2 |
| L | REFL PAV MRK TY I (Y)(SLD)(100 MM) | M | 574 |
| M | REFL PAV MRK TY I (Y)(SLD)(200 MM) | M | 0 |
| N | REFL PAV MRK TY I (Y)(SLD)(600 MM) | M | 0 |
| O | REFL PAV MRK TY I (Y)(MED NOSE) | EA | 0 |
| P | RAIS PAV MRKR CL B (REFL) TY II-A-A (HV) | EA | 0 |
| Q | RAIS PAV MRKR CL B (REFL) TY II-C-R (HV) | EA | 120 |

NOTE(S):

ALL DIMENSIONS ARE IN METERS UNLESS OTHERWISE NOTED.

QUANTITIES AND PLACEMENT OF TY II REFLECTIVE PAVEMENT MARKINGS ARE EXACTLY THE SAME AS TY I REFLECTIVE PAVEMENT MARKINGS.

ANY PAVEMENT MARKING IN CONFLICT WITH PROPOSED PAVEMENT MARKINGS SHALL BE REMOVED BY THE CONTRACTOR OR AS DIRECTED BY THE ENGINEER.

# REFERS TO CHANGES MADE AS PART OF CHANGE ORDER.

CHANGE ORDER #140

REVISED SHEET

CHANGE ORDER NO. 140
-ADDED NEW INTERSECTION DODGE CITY TRAIL
-ADDED/REVISED QUANTITIES

STATE OF TEXAS
MIGUEL G. ROGERIO
96620
LICENSED PROFESSIONAL ENGINEER

Miguel G. Rogerio 10/18/2006
Miguel G. Rogerio, P.E. Date

©2006
Texas Department of Transportation

# PAVEMENT MARKING AND DELINEATION LAYOUT

SHEET 46 OF 57

| FED.RD. DIV.NO. | FEDERAL AID PROJECT NO. | | SHEET NO. |
|---|---|---|---|
| 6 | NH 2000(704), etc. | | 805AA |
| STATE | DIST. | COUNTY | |
| TEXAS | SAT | BEXAR | |
| CONT. | SECT. | JOB | HIGHWAY NO. |
| 2452 | 01 | 036, etc. | LP 1604 |

LEVELS DISPLAYED
1 2 3 4 5 6 7 8 9 10 11 12 13 14 15 16
17 18 19 20 21 22 23 24 25 26 27 28 29 30 31 32
33 34 35 36 37 38 39 40 41 42 43 44 45 46 47 48
49 50 51 52 53 54 55 56 57 58 59 60 61 62 63
T:\AO\Construction\2452-01-036\CO\CO#140\pavmrkplan46*co.dgn
10/17/2006
5:51:03 PM

QUANTITIES THIS SHEET
CSJ 2452-01-036

SCALE 1:1000

| ESTIMATED QUANTITIES | | |
|---|---|---|
| ITEM | UNIT | QUANTITY |
| | | 2452-01-036 |
| REFL PAV MRK TY I (W)(SLD)(100MM) | M | 258 |
| REFL PAV MRK TY I (W)(BRK)(100MM) | M | 129 |
| REFL PAV MRK TY I (Y)(SLD)(100MM) | M | 511 |
| RAIS PAV MRKR CL B (REFL) TY II C-R | EA | 42 |
| | | |

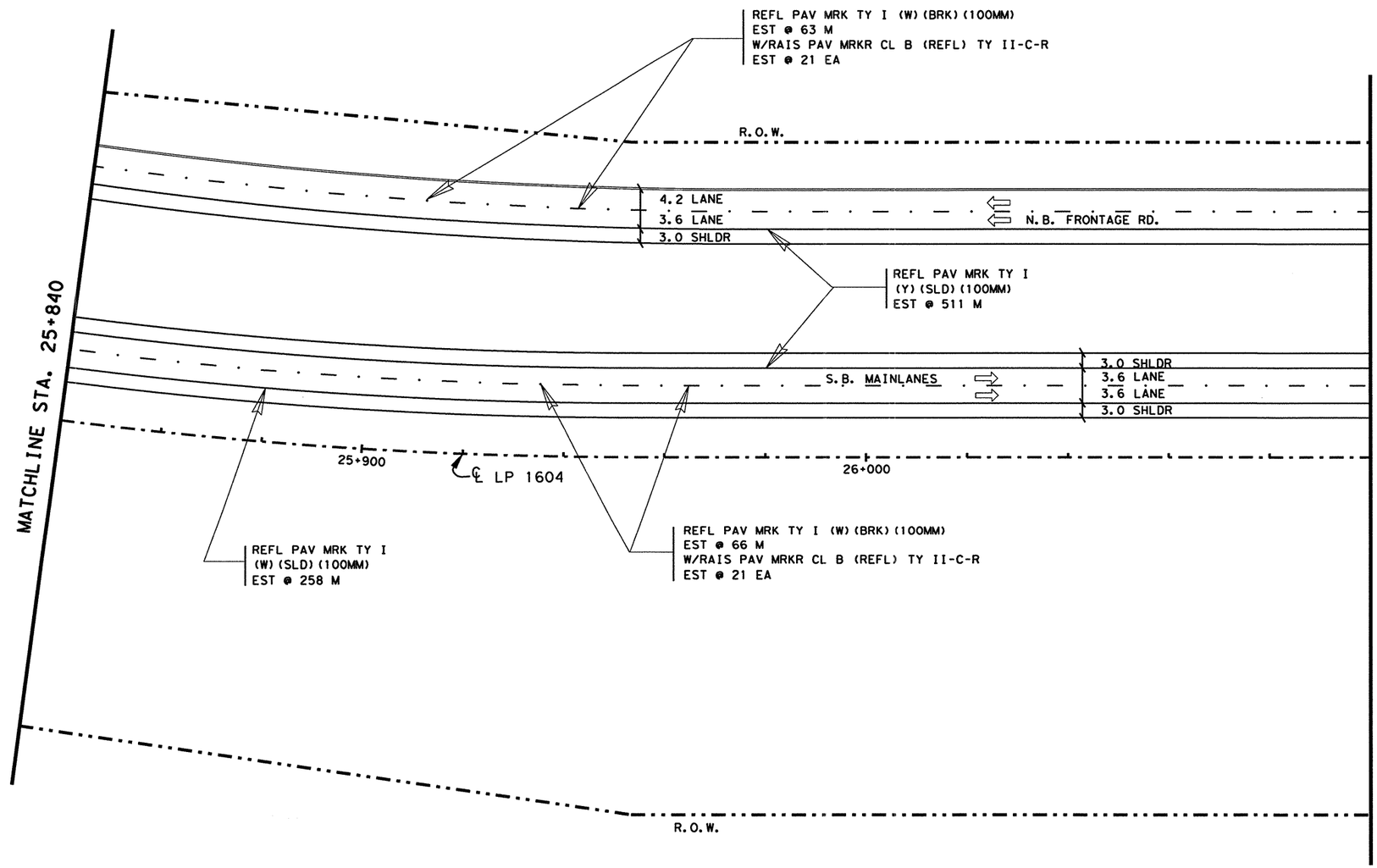


NOTE(S):

ALL DIMENSIONS ARE IN METERS UNLESS OTHERWISE NOTED.

QUANTITIES AND PLACEMENT OF TY II REFLECTIVE PAVEMENT MARKINGS ARE EXACTLY THE SAME AS TY I REFLECTIVE PAVEMENT MARKINGS. TY II QUANTITIES ACCOUNTED FOR ON THE PAVEMENT MARKING /DELINEATION SUMMARY.

ANY PAVEMENT MARKING IN CONFLICT WITH PROPOSED PAVEMENT MARKINGS SHALL BE REMOVED BY THE CONTRACTOR OR AS DIRECTED BY THE ENGINEER.

| DELINEATION QUANTITIES | | | | |
|---|---|---|---|---|
| TYPE | EA. | ASM. | SPL. MNT. | SURF. MNT. |
| D-SW(a) | | | | |
| D-DW(a) | | | | |
| D-SY(a) | | | | |
| D-DY(a) | | | | |
| OM-2SR(a) | | | | |
| | | | | |
| | | | | |
| | | | | |
| | | | | |

LEVELS DISPLAYED
1 2 3 4 1 5 1 6 1 7 1 8 1 9 1 10 1 11 2 1 3 1 4 1 5 1 6
1 2 0 2 1 2 2 3 2 4 2 5 2 6 2 7 2 8 2 9 3 0 3 1 3 2
3 3 3 4 3 5 3 6 3 7 3 8 3 9 4 0 4 1 4 2 4 3 4 4 4 5 4 6 4 7 4 8
4 9 6 0 5 1 5 2 6 3 5 4 5 5 5 6 5 7 5 8 5 9 6 0 6 1 6 2 6 3
ACC: t:\oa\design\
\lp1604fm471-90\pave-sign\
FILE: pavmrkplan47.dgn

STATE OF TEXAS
JOEL K. DAVENPORT, JR.
79276
REGISTERED PROFESSIONAL ENGINEER

Joel K. Davenport Jr. 9/19/00
Joel K. Davenport, Jr. P.E. 79276 Date

©2000

Texas Department of Transportation

# PAVEMENT MARKING AND DELINEATION LAYOUT

**SHEET 47 OF 57**

| FED.RD. DIV.NO. | FEDERAL AID PROJECT NO. | | SHEET NO. |
|---|---|---|---|
| 6 | NH 2000(704), etc. | | 806 |
| STATE | DIST. | COUNTY | |
| TEXAS | SAT | BEXAR | |
| CONT. | SECT. | JOB | HIGHWAY NO. |
| 2452 | 01 | 036, etc. | LP 1604 |

Plotted on: 01/26/2004

QUANTITIES THIS SHEET
CSJ 2452-01-036

SCALE 1:1000

| ESTIMATED QUANTITIES | | |
|---|---|---|
| ITEM | UNIT | QUANTITY |
| | | 2452-01-036 |
| REFL PAV MRK TY I (W)(SLD)(100MM) | M | 513 |
| REFL PAV MRK TY I (W)(BRK)(100MM) | M | 129 |
| REFL PAV MRK TY I (Y)(SLD)(100MM) | M | 511 |
| RAIS PAV MRKR CL B (REFL) TY II C-R | EA | 42 |
| | | |

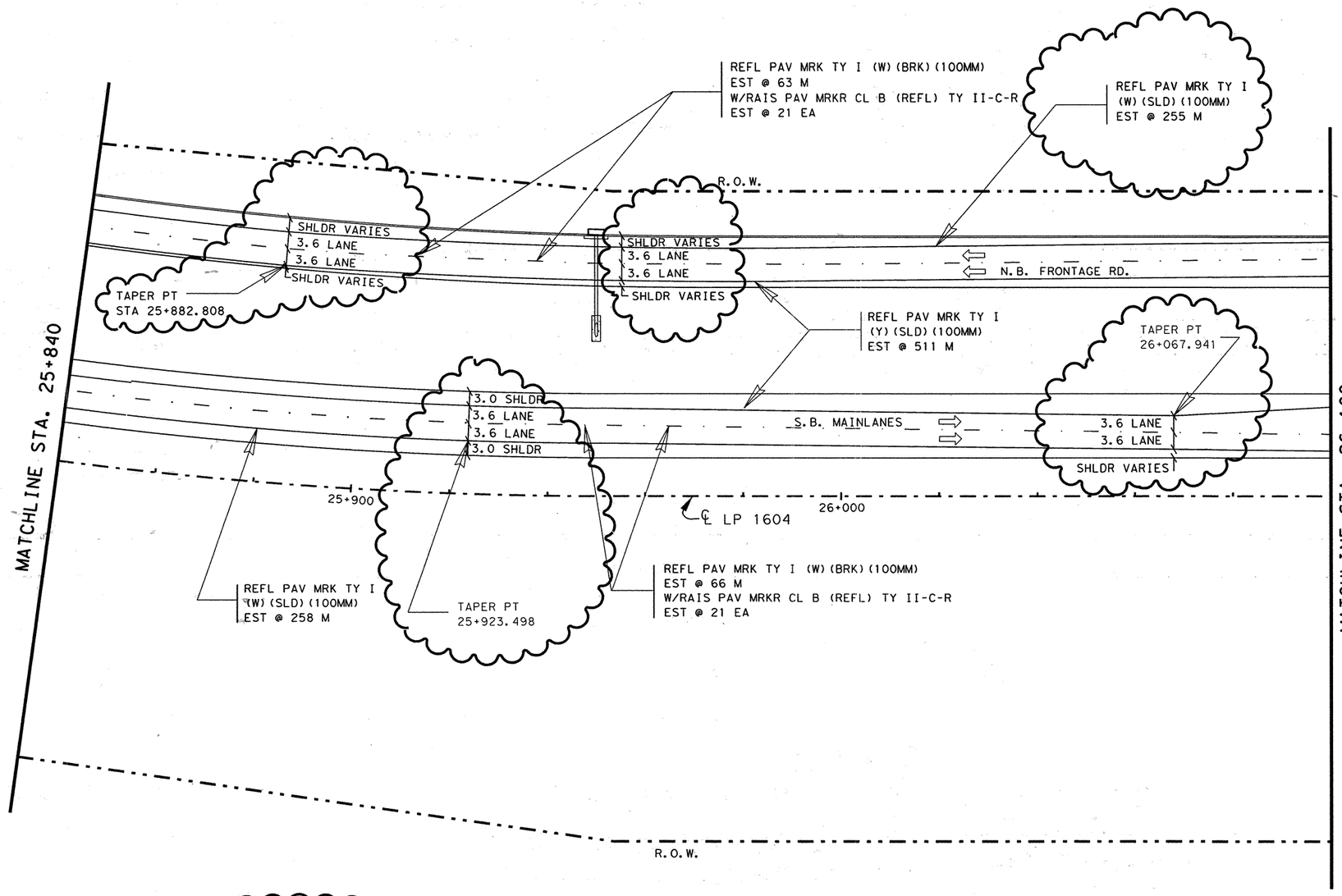


NOTE(S):

ALL DIMENSIONS ARE IN METERS UNLESS OTHERWISE NOTED.

QUANTITIES AND PLACEMENT OF TY II REFLECTIVE PAVEMENT MARKINGS ARE EXACTLY THE SAME AS TY I REFLECTIVE PAVEMENT MARKINGS. TY II QUANTITIES ACCOUNTED FOR ON THE PAVEMENT MARKING /DELINEATION SUMMARY.

ANY PAVEMENT MARKING IN CONFLICT WITH PROPOSED PAVEMENT MARKINGS SHALL BE REMOVED BY THE CONTRACTOR OR AS DIRECTED BY THE ENGINEER.

| DELINEATION QUANTITIES | | | | |
|---|---|---|---|---|
| TYPE | EA. | ASM. | SPL. MNT. | SURF. MNT. |
| D-SW(a) | | | | |
| D-DW(a) | | | | |
| D-SY(a) | | | | |
| D-DY(a) | | | | |
| OM-2SR(a) | | | | |
| | | | | |
| | | | | |
| | | | | |
| | | | | |

CHANGE ORDER NO. 65

-REVISED RDWY GEOMETRICS AND LANE CONFIGURATIONS
-REVISED QUANTITIES

CHANGE ORDER NO. 65 | REVISED SHEET

555 EAST RAMSEY SAN ANTONIO TEXAS 78216
PHONE (210)375-9000
FAX (210)375-9010
PAPE-DAWSON ENGINEERS
CIVIL & ENVIRONMENTAL

STATE OF TEXAS
J. KENT O'BRIEN
64398
LICENSED
PROFESSIONAL ENGINEER

J. KENT O'BRIEN P.E. — 1/27/2004 DATE

©2000

Texas Department of Transportation

# PAVEMENT MARKING AND DELINEATION LAYOUT

SHEET 47 OF 57

| FED. RD. DIV. NO. | FEDERAL AID PROJECT NO. | | SHEET NO. |
|---|---|---|---|
| 6 | NH 2000(704),etc. | | 806A |
| STATE | DIST. | COUNTY | |
| TEXAS | SAT | BEXAR | |
| CONT. | SECT. | JOB | HIGHWAY NO. |
| 2452 | 01 | 036,etc. | LP 1604 |

Design Filename: p:\52\20\11\design\civil\plansheets\traffic\pave-mark\pavmrkplan47.dgn

LEVELS DISPLAYED
1 2 3 4 5 6 7 8 9 10 11 12 13 14 15 16
17 18 19 20 21 22 23 24 25 26 27 28 29 30 31 32
33 34 35 36 37 38 39 40 41 42 43 44 45 46 47 48
49 50 51 52 53 54 55 56 57 58 59 60 61 62 63

ACC: t:\ao\design\
\lp1604fm471-90\pave-sign\
FILE: pavmrkplan47.dgn

| DELINEATION QUANTITIES | | | | |
|---|---|---|---|---|
| TYPE | EA. | ASM. | SPL. MNT. | SURF. MNT. |
| D-SW(a) | | | | |
| D-DW(a) | | | | |
| D-SY(a) | | | | |
| D-DY(a) | | | | |
| OM-2SR(a) | | 6 | | |
| OM-2HP(Spl) | | 4 | | |
| | | | | |
| | | | | |
| | | | | |

QUANTITIES THIS SHEET
CSJ 2452-01-036

SCALE 1:1000

| ESTIMATED QUANTITIES | | |
|---|---|---|
| ITEM | UNIT | QUANTITY |
| | | 2452-01-036 |
| REFL PAV MRK TY I (W)(SLD)(100MM) | M | 558 |
| REFL PAV MRK TY I (W)(BRK)(100MM) | M | 170 |
| REFL PAV MRK TY I (W)(SLD)(200MM) | M | 111 |
| REFL PAV MRK TY I (W)(SLD)(600MM) | M | 169 |
| REFL PAV MRK TY I (W)(ARROW) | EA | 6 |
| REFL PAV MRK TY I (W)(DBL ARROW) | EA | 3 |
| REFL PAV MRK TY I (W)(WORD) | EA | 6 |
| REFL PAV MRK TY I (Y)(SLD)(100MM) | M | 216 |
| REFL PAV MRK TY I (Y)(SLD)(200MM) | M | 72 |
| REFL PAV MRK TY I (Y)(SLD)(600MM) | M | 47 |
| RAIS PAV MRKR CL B (REFL) TY II A-A | EA | 25 |
| RAIS PAV MRKR CL B (REFL) TY II C-R | EA | 107 |
| | | |

MARBACH RD.

MATCH/TIE TO EXIST
STA 0+219.243

REFL PAV MRK TY I (W)(SLD)(100MM)
EST @ 39 M

REFL PAV MRK
TY I
(W)(SLD)(600MM)
EST @ 78 M

REFL PAV MRK TY I
(W)(BRK)(100MM) EST @ 90 M
W/RAIS PAV MRKR CL B
(REFL) TY II-C-R EST @ 28 EA

TURNAROUND
REFL PAV MRK TY I (W)(SLD)(200MM) EST @ 28 M
w/REFL PAV MRK TY I (W)(SLD)(600MM) EST @ 7 M
w/REFL PAV MRK TY I (Y)(SLD)(200MM) EST @ 19 M
w/REFL PAV MRK TY I (Y)(SLD)(600MM) EST @ 11 M
w/RAIS PAV MRKR CL B (REFL) TY II-A-A EST @ 6 EA
w/RAIS PAV MRKR CL B (REFL) TY II-C-R EST @ 10 EA

REFL PAV MRK TY I (W)(BRK)(100MM)
EST @ 17 M
W/RAIS PAV MRKR CL B (REFL) TY II-C-R
EST @ 5 EA

R.O.W.

TURNAROUND
REFL PAV MRK TY I (W)(SLD)(200MM) EST @ 29 M
w/REFL PAV MRK TY I (W)(SLD)(600MM) EST @ 9 M
w/REFL PAV MRK TY I (Y)(SLD)(200MM) EST @ 17 M
w/REFL PAV MRK TY I (Y)(SLD)(600MM) EST @ 12 M
w/RAIS PAV MRKR CL B (REFL) TY II-A-A EST @ 6 EA
w/RAIS PAV MRKR CL B (REFL) TY II-C-R EST @ 10 EA

TAPER PT.
STA 8+123.737

TAPER PT.
STA 8+168.737

3.6 LANE
3.6 LANE
3.6 LANE
3.6 LANE
N.B. FRONTAGE RD.
1.2 SHLDR

TAPER PT.
STA 8+139.715

TAPER PT.
STA 8+139.715

REFL PAV MRK TY I
(Y)(SLD)(100MM)
EST @ 216 M

TAPER PT.
STA 26+115.303

TAPER PT.
STA 26+160.303

REFL PAV MRK TY I
(W)(SLD)(100MM)
EST @ 16 M

NTAR

SEE SHEET 48A OF 57
FOR PAVEMENT MARKING
ASSOCIATED WITH MARBACH RD.

SHAR

15 28 28

15 30

REFL PAV MRK TY I (W)(SLD)(100MM) EST @ 134 M
W/RAIS PAV MRKR CL B (REFL) TY II-C-R EST @ 13 EA

MATCHLINE STA. 26+100

MATCHLINE STA. 26+380

S.B. MAINLANES

15 30 30 15 15

26+200

26+300

℄ LP 1604

REFL PAV MRK TY I
(W)(SLD)(100MM)
EST @ 280 M

TURNAROUND
REFL PAV MRK TY I (W)(SLD)(200MM) EST @ 28 M
w/REFL PAV MRK TY I (W)(SLD)(600MM) EST @ 8 M
w/REFL PAV MRK TY I (Y)(SLD)(200MM) EST @ 17 M
w/REFL PAV MRK TY I (Y)(SLD)(600MM) EST @ 12 M
w/RAIS PAV MRKR CL B (REFL) TY II-A-A EST @ 6 EA
w/RAIS PAV MRKR CL B (REFL) TY II-C-R EST @ 10 EA

REFL PAV MRK TY I
(W)(SLD)(600MM)
EST @ 60 M

REFL PAV MRK TY I
(W)(BRK)(100MM) EST @ 45 M
W/RAIS PAV MRKR CL B
(REFL) TY II-C-R EST @ 15 EA

TURNAROUND
REFL PAV MRK TY I (W)(SLD)(200MM) EST @ 26 M
w/REFL PAV MRK TY I (W)(SLD)(600MM) EST @ 7 M
w/REFL PAV MRK TY I (Y)(SLD)(200MM) EST @ 19 M
w/REFL PAV MRK TY I (Y)(SLD)(600MM) EST @ 12 M
w/RAIS PAV MRKR CL B (REFL) TY II-A-A EST @ 7 EA
w/RAIS PAV MRKR CL B (REFL) TY II-C-R EST @ 9 EA

REFL PAV MRK TY I (W)(SLD)(100MM)
EST @ 89 M
W/RAIS PAV MRKR CL B (REFL) TY II-C-R
EST @ 15 EA

REFL PAV MRK TY I
(W)(BRK)(100MM) EST @ 18 M
W/RAIS PAV MRKR CL B
(REFL) TY II-C-R EST @ 5 EA

R.O.W.

FUTURE MARBACH RD.

NOTE(S):

ALL DIMENSIONS ARE IN METERS UNLESS OTHERWISE NOTED.

QUANTITIES AND PLACEMENT OF TY II REFLECTIVE PAVEMENT MARKINGS ARE EXACTLY THE SAME AS TY I REFLECTIVE PAVEMENT MARKINGS. TY II QUANTITIES ACCOUNTED FOR ON THE PAVEMENT MARKING /DELINEATION SUMMARY.

ANY PAVEMENT MARKING IN CONFLICT WITH PROPOSED PAVEMENT MARKINGS SHALL BE REMOVED BY THE CONTRACTOR OR AS DIRECTED BY THE ENGINEER.

STATE OF TEXAS
JOEL K. DAVENPORT, JR.
79276
REGISTERED
PROFESSIONAL ENGINEER

Joel K. Davenport, Jr. 9/9/00
Joel K. Davenport, Jr P.E. 79276 Date

LEVELS DISPLAYED
1 2 3 4 5 6 7 8 9 10 11 12 13 14 15 16
17 18 19 20 21 22 23 24 25 26 27 28 29 30 31 32
33 34 35 36 37 38 39 40 41 42 43 44 45 46 47 48
49 50 51 52 53 54 55 56 57 58 59 60 61 62 63

ACC: t:\ao\design\
lp1604fm417-90\pave-sign\
FILE: pavmrkplan48.dgn

©2000 Texas Department of Transportation

# PAVEMENT MARKING AND DELINEATION LAYOUT

SHEET 48 OF 57

| FED.RD. DIV.NO. | FEDERAL AID PROJECT NO. | | SHEET NO. |
|---|---|---|---|
| 6 | NH 2000(704),etc. | | 807 |
| STATE | DIST. | COUNTY | |
| TEXAS | SAT | BEXAR | |
| CONT. | SECT. | JOB | HIGHWAY NO. |
| 2452 | 01 | 036,etc. | LP 1604 |

Plotted on: 01/27/2004

Design Filename: p:\52\2011\design\civil\plansheets\traffic\pave-mark\pavmrkplan48.dgn

| LEVELS DISPLAYED | ACC: t:\oo\design\ |
|---|---|
| 1 2 3 4 5 6 7 8 9 10 11 12 13 14 15 16 | lp1604fm417-90\pave-sign\ |
| 20 21 22 23 24 25 26 27 28 29 30 31 32 | |
| 33 34 35 36 37 38 39 40 41 42 43 44 45 46 47 48 | FILE: pavmrkplan48.dgn |
| 49 50 51 52 53 54 55 56 57 58 59 60 61 62 63 | |

| DELINEATION QUANTITIES | | | | |
|---|---|---|---|---|
| TYPE | EA. | ASM. | SPL. MNT. | SURF. MNT. |
| D-SW(a) | | | | |
| D-DW(a) | | | | |
| D-SY(a) | | | | |
| D-DY(a) | | | | |
| OM-2SR(a) | | 6 | | |
| OM-2HP(Spl) | | 4 | | |
| | | | | |
| | | | | |
| | | | | |

QUANTITIES THIS SHEET
CSJ 2452-01-036

SCALE 1:1000

| ESTIMATED QUANTITIES | | |
|---|---|---|
| ITEM | UNIT | QUANTITY 2452-01-036 |
| REFL PAV MRK TY I (W)(SLD)(100MM) | M | 869 |
| REFL PAV MRK TY I (W)(BRK)(100MM) | M | 153 |
| REFL PAV MRK TY I (W)(DOT)(100MM) | M | 30 |
| REFL PAV MRK TY I (W)(SLD)(200MM) | M | 150 |
| REFL PAV MRK TY I (W)(SLD)(600MM) | M | 158 |
| REFL PAV MRK TY I (W)(ARROW) | EA | 19 |
| REFL PAV MRK TY I (W)(DBL ARROW) | EA | 0 |
| REFL PAV MRK TY I (W)(WORD) | EA | 19 |
| REFL PAV MRK TY I (Y)(SLD)(100MM) | M | 286 |
| REFL PAV MRK TY I (Y)(SLD)(200MM) | M | 74 |
| REFL PAV MRK TY I (Y)(SLD)(600MM) | M | 35 |
| RAIS PAV MRKR CL B (REFL) TY II A-A | EA | 30 |
| RAIS PAV MRKR CL B (REFL) TY II C-R | EA | 163 |

MARBACH RD.

MATCH/TIE TO EXIST
STA 0+219.243

R.O.W.

REFL PAV MRK TY I (W)(SLD)(200MM) EST @ 18 M
w/RAIS PAV MRKR CL B (REFL) TY II-C-R EST @ 4 EA

TURNAROUND
REFL PAV MRK TY I (W)(SLD)(100MM) EST @ 3 M
REFL PAV MRK TY I (W)(SLD)(200MM) EST @ 21 M
w/REFL PAV MRK TY I (Y)(SLD)(200MM) EST @ 19 M
w/REFL PAV MRK TY I (Y)(SLD)(600MM) EST @ 15 M
w/RAIS PAV MRKR CL B (REFL) TY II-A-A EST @ 8 EA
w/RAIS PAV MRKR CL B (REFL) TY II-C-R EST @ 8 EA

CROSSWALK
REFL PAV MRK TY I
(W)(SLD)(600MM) EST @ 66 M

STOPBAR
REFL PAV MRK TY I (W)(SLD)(600MM)
EST @ 12 M

REFL PAV MRK TY I (W)(SLD)(200MM) EST @ 36 M
REFL PAV MRK TY I (W)(SLD)(600MM) EST @ 3 M
W/RAIS PAV MRKR CL B (REFL) TY II-C-R EST @ 7 EA

REFL PAV MRK TY I (W)(BRK)(100MM) EST @ 15 M
W/RAIS PAV MRKR CL B (REFL) TY II-C-R EST @ 5 EA

REFL PAV MRK TY I
(W)(BRK)(100MM) EST @ 75 M
W/RAIS PAV MRKR CL B
(REFL) TY II-C-R EST @ 25 EA

REFL PAV MRK TY I
(W)(SLD)(100MM)
EST @ 161 M

REFL PAV MRK TY I
(W)(SLD)(100MM)
EST @ 60 M

TURNAROUND
REFL PAV MRK TY I (W)(SLD)(200MM) EST @ 18 M
w/REFL PAV MRK TY I (W)(SLD)(600MM) EST @ 4 M
w/REFL PAV MRK TY I (Y)(SLD)(200MM) EST @ 18 M
w/RAIS PAV MRKR CL B (REFL) TY II-A-A EST @ 7 EA
w/RAIS PAV MRKR CL B (REFL) TY II-C-R EST @ 7 EA

REFL PAV MRK TY I (W)(SLD)(100MM) EST @ 136 M
W/RAIS PAV MRKR CL B (REFL) TY II-C-R EST @ 24 EA

REFL PAV MRK TY I (Y)(SLD)(100MM) EST @ 27 M

REFL PAV MRK TY I (W)(SLD)(100MM) EST @ 15 M

TAPER PT.
STA 8+123.737

SHLDR VARIES
3.6 LANE
3.6 LANE
SHLDR VARIES

N.B. FRONTAGE RD.

TAPER PT.
STA 8+167.393

0.6 SHLDR
3.6 LANE
3.6 LANE
3.6 LANE
3.6 LANE

TAPER PT.
STA 8+139.134

REFL PAV MRK TY I
(Y)(SLD)(100MM)
EST @ 216 M

15 31.7 31.7 15 18 15

1.2 SHLDR
3.3 LANE
3.3 LANE
3.3 LANE
3.3 LANE
0.6 SHLDR

TAPER PT.
STA 26+160.021

S.B. MAINLANES

MATCHLINE STA. 26+100

26+200

℄ LP 1604

26+300

MATCHLINE STA. 26+380

SEE SHEET 48A OF 57
FOR PAVEMENT MARKING
ASSOCIATED WITH MARBACH RD.

STAR

64

15 19 15 28.6

REFL PAV MRK TY I
(W)(DOT)(100MM)
EST @ 30 M

REFL PAV MRK TY I
(W)(SLD)(100MM)
EST @ 280 M

REFL PAV MRK TY I
(W)(BRK)(100MM) EST @ 45 M
W/RAIS PAV MRKR CL B
(REFL) TY II-C-R EST @ 15 EA

REFL PAV MRK TY I (W)(SLD)(100MM)
EST @ 214 M
W/RAIS PAV MRKR CL B (REFL) TY II-C-R
EST @ 38 EA

TURNAROUND
REFL PAV MRK TY I (W)(SLD)(200MM) EST @ 21 M
w/REFL PAV MRK TY I (W)(SLD)(600MM) EST @ 4 M
w/REFL PAV MRK TY I (Y)(SLD)(200MM) EST @ 18 M
w/REFL PAV MRK TY I (Y)(SLD)(600MM) EST @ 10 M
w/RAIS PAV MRKR CL B (REFL) TY II-A-A EST @ 8 EA
w/RAIS PAV MRKR CL B (REFL) TY II-C-R EST @ 10 EA

CROSSWALK
REFL PAV MRK TY I
(W)(SLD)(600MM)
EST @ 48 M

STOPBAR
REFL PAV MRK TY I
(W)(SLD)(600MM)
EST @ 11 M

TURNAROUND
REFL PAV MRK TY I (W)(SLD)(200MM) EST @ 36 M
w/REFL PAV MRK TY I (W)(SLD)(600MM) EST @ 10 M
w/REFL PAV MRK TY I (Y)(SLD)(200MM) EST @ 19 M
w/REFL PAV MRK TY I (Y)(SLD)(600MM) EST @ 10 M
w/RAIS PAV MRKR CL B (REFL) TY II-A-A EST @ 7 EA
w/RAIS PAV MRKR CL B (REFL) TY II-C-R EST @ 13 EA

REFL PAV MRK TY I
(W)(BRK)(100MM) EST @ 18 M
W/RAIS PAV MRKR CL B
(REFL) TY II-C-R EST @ 7 EA

REFL PAV MRK TY I
(Y)(SLD)(100MM) EST @ 43 M

R.O.W.

FUTURE MARBACH RD.

**CHANGE ORDER NO. 65**

-REVISED RDWY GEOMETRICS AND LANE CONFIGURATIONS
-REVISED QUANTITIES

NOTE(S):

ALL DIMENSIONS ARE IN METERS UNLESS OTHERWISE NOTED.

QUANTITIES AND PLACEMENT OF TY II REFLECTIVE PAVEMENT MARKINGS ARE EXACTLY THE SAME AS TY I REFLECTIVE PAVEMENT MARKINGS. TY II QUANTITIES ACCOUNTED FOR ON THE PAVEMENT MARKING /DELINEATION SUMMARY.

ANY PAVEMENT MARKING IN CONFLICT WITH PROPOSED PAVEMENT MARKINGS SHALL BE REMOVED BY THE CONTRACTOR OR AS DIRECTED BY THE ENGINEER.

555 EAST RAMSEY SAN ANTONIO TEXAS 78216 PHONE (210)375-9000 FAX (210)375-9010
PAPE-DAWSON ENGINEERS CIVIL & ENVIRONMENTAL
STATE OF TEXAS J. KENT O'BRIEN 64398 LICENSED PROFESSIONAL ENGINEER
J. KENT O'BRIEN P.E. 1/27/2004 DATE

©2000 Texas Department of Transportation

# PAVEMENT MARKING AND DELINEATION LAYOUT

SHEET 48 OF 57

| FED. RD. DIV. NO. | FEDERAL AID PROJECT NO. | | SHEET NO. |
|---|---|---|---|
| 6 | NH 2000(704), etc. | | 807A |
| STATE | DIST. | COUNTY | |
| TEXAS | SAT | BEXAR | |
| CONT. | SECT. | JOB | HIGHWAY NO. |
| 2452 | 01 | 036, etc. | LP 1604 |

CHANGE ORDER NO. 65 REVISED SHEET

QUANTITIES THIS SHEET
CSJ 2452-01-036

SCALE 1:1000

MATCH/TIE TO EXIST
STA 0+219.243

MARBACH RD.

STOPBAR
H EST @ 20 M

F EST @ 69 M
H EST @ 8 M
W/ Q EST @ 21 EA

CROSSWALK
H EST @ 93 M

F EST @ 51 M
w/ Q EST @ 21 EA

D EST @ 15 M
W/ Q EST @ 5 EA

65

C EST @ 60 M

R.O.W.

C EST @ 144 M
W/ Q EST @ 24 EA

D EST @ 75 M
W/ Q EST @ 25 EA

C EST @ 178 M

TAPER PT.
STA 8+123.737
3.6 LT

TAPER PT.
STA 8+167.393
7.2 LT

0.6 SHLDR

SHLDR VARIES
3.6 LANE
3.6 LANE
N.B. FRONTAGE RD.
SHLDR VARIES

3.6 LANE
3.6 LANE
3.6 LANE
3.6 LANE

8+200

8+300

64

L EST @ 27 M

L EST @ 216 M

TAPER PT.
STA 8+139.134
3.6 RT

15 19 15 28.6

C EST @ 15 M

15 31.7 31.7 15 18 15

1.2 SHLDR VAR.

3.3 LANE
3.3 LANE
3.3 LANE
3.3 LANE

TAPER PT.
STA 26+160
21.8 LT

S.B. MAINLANES

TAPER PT.
STA 26+139
8.8 LT

E EST @ 30 M

C EST @ 190 M

D EST @ 45 M
W/ Q @ 15 EA

26+200

℄ LP 1604

26+300

F EST @ 69 M
H EST @ 15 M
W/ Q EST @ 26 EA

CROSSWALK
H EST @ 108 M

C EST @ 55 M

D EST @ 21 M
W/ Q EST @ 7 EA

L EST @ 38 M

TURNAROUND
F EST @ 42 M
w/ H EST @ 4 M
w/ M EST @ 79 M
w/ N EST @ 58 M
w/ P EST @ 80 EA
w/ Q EST @ 13 EA

TURNAROUND
C EST @ 15 M
w/ F EST @ 47 M
w/ H EST @ 3 M
w/ M EST @ 73 M
w/ N EST @ 47 M
w/ P EST @ 7 EA
w/ Q EST @ 13 EA

C EST @ 280 M
W/ Q EST @ 94 EA

STOPBAR
H EST @ 21 M

F EST @ 69 M
H EST @ 12 M
W/ Q EST @ 19 EA

MATCHLINE STA. 26+100

MATCHLINE STA. 26+380

SEE SHEET 48A OF 57 FOR PAVEMENT MARKING ASSOCIATED WITH MARBACH RD

R.O.W.

MARBACH RD.
(CONSTRUCTED BY OTHERS)

CHANGE ORDER NO. 140
-ALLOWED FOR MARBACH RD. EXTENSION.
-REVISED QUANTITIES

# REFERS TO CHANGES MADE AS PART OF CHANGE ORDER

| QUANTITY SUMMARY CSJ: 2452-01-036, etc. | | | |
|---|---|---|---|
| | ITEM | UNIT | QUANTITY |
| A | OBJ MRK ASM TY 2 FLEX (OM-2SR)(1.8 M) | EA | 8 |
| B | OBJ MRK ASM TY 2 SURF MNT (OM-2HP)(SPL) | EA | 6 |
| C | REFL PAV MRK TY I (W)(SLD)(100 MM) | M | 937 |
| D | REFL PAV MRK TY I (W)(BRK)(100 MM) | M | 156 |
| E | REFL PAV MRK TY I (W)(DOT)(100 MM) | M | 30 |
| F | REFL PAV MRK TY I (W)(SLD)(200 MM) | M | 347 |
| G | REFL PAV MRK TY I (W)(BRK)(200 MM) | M | 0 |
| H | REFL PAV MRK TY I (W)(SLD)(600 MM) | M | 264 |
| I | REFL PAV MRK TY I (W)(ARROW) | EA | 20 |
| J | REFL PAV MRK TY I (W)(DBL ARROW) | EA | 0 |
| K | REFL PAV MRK TY I (W)(WORD) | EA | 21 |
| L | REFL PAV MRK TY I (Y)(SLD)(100 MM) | M | 281 |
| M | REFL PAV MRK TY I (Y)(SLD)(200 MM) | M | 152 |
| N | REFL PAV MRK TY I (Y)(SLD)(600 MM) | M | 105 |
| O | REFL PAV MRK TY I (Y)(MED NOSE) | EA | 0 |
| P | RAIS PAV MRKR CL B (REFL) TY II-A-A (HV) | EA | 87 |
| Q | RAIS PAV MRKR CL B (REFL) TY II-C-R (HV) | EA | 283 |

NOTE(S):

ALL DIMENSIONS ARE IN METERS UNLESS OTHERWISE NOTED.

QUANTITIES AND PLACEMENT OF TY II REFLECTIVE PAVEMENT MARKINGS ARE EXACTLY THE SAME AS TY I REFLECTIVE PAVEMENT MARKINGS.

ANY PAVEMENT MARKING IN CONFLICT WITH PROPOSED PAVEMENT MARKINGS SHALL BE REMOVED BY THE CONTRACTOR OR AS DIRECTED BY THE ENGINEER.

STATE OF TEXAS
MIGUEL G. ROGERIO
96620
LICENSED PROFESSIONAL ENGINEER

Miguel G. Rogerio, P.E. 10/18/2006
Date

©2006

Texas Department of Transportation

# PAVEMENT MARKING AND DELINEATION LAYOUT

SHEET 48 OF 57

| FED.RD. DIV.NO. | FEDERAL AID PROJECT NO. | | SHEET NO. |
|---|---|---|---|
| 6 | NH 2000(704), etc. | | 807AA |
| STATE | DIST. | COUNTY | |
| TEXAS | SAT | BEXAR | |
| CONT. | SECT. | JOB | HIGHWAY NO. |
| 2452 | 01 | 036, etc. | LP 1604 |

CHANGE ORDER NO. 140

REVISED SHEET

LEVELS DISPLAYED
1 2 3 4 5 6 7 8 9 10 11 12 13 14 15 16 17 18 19 20 21 22 23 24 25 26 27 28 29 30 31 32 33 34 35 36 37 38 39 40 41 42 43 44 45 46 47 48 49 50 51 52 53 54 55 56 57 58 59 60 61 62 63

T:\AO\Construction\2452-01-036\CO\CO#140\pavmrkplan48A.dgn
10/17/2006
8:51:29 PM

NOTE(S):

ALL DIMENSIONS ARE IN METERS UNLESS OTHERWISE NOTED.

QUANTITIES AND PLACEMENT OF TY II REFLECTIVE PAVEMENT MARKINGS ARE EXACTLY THE SAME AS TY I REFLECTIVE PAVEMENT MARKINGS. TY I AND TY II QUANTITIES ACCOUNTED FOR ON THE PAVEMENT MARKING /DELINEATION SUMMARY UNDER CHANGE ORDER NO. 65 AND 140.

ANY PAVEMENT MARKING IN CONFLICT WITH PROPOSED PAVEMENT MARKINGS SHALL BE REMOVED BY THE CONTRACTOR OR AS DIRECTED BY THE ENGINEER.

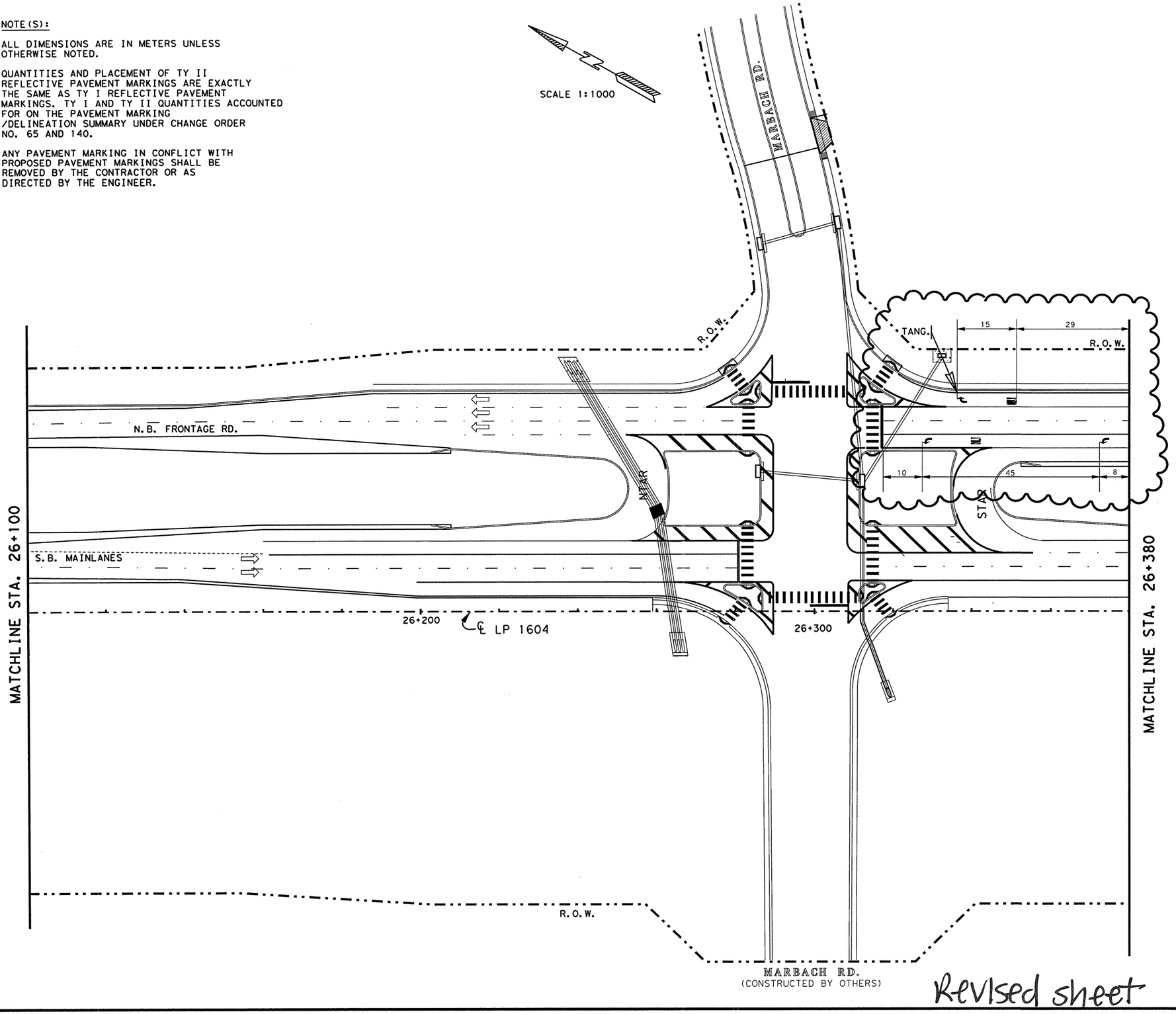


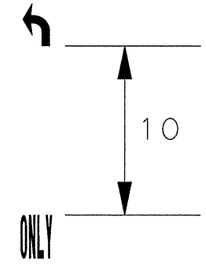


**SUPPLEMENT SHEET**

-REVISE LP 1604 NBFR SPACING FOR "ARROW" & "WORD" STRIPING.

-ELIMINATE "ARROW" & "WORD" ON LP 1604 NBFR THRU LANES.

STATE OF TEXAS
MIGUEL G. ROGERIO
96620
LICENSED
PROFESSIONAL ENGINEER

Miguel G. Rogerio, P.E. 5/7/2007
Miguel G. Rogerio, P.E. Date

©2007

Texas Department of Transportation

# PAVEMENT MARKING LAYOUT

**SHEET 48a OF 57**

| FED.RD. DIV.NO. | FEDERAL AID PROJECT NO. | | SHEET NO. |
|---|---|---|---|
| 6 | NH 2000(704), etc. | | 807AAA |
| STATE | DIST. | COUNTY | |
| TEXAS | SAT | BEXAR | |
| CONT. | SECT. | JOB | HIGHWAY NO. |
| 2452 | 01 | 036, etc. | LP 1604 |

Revised sheet

LEVELS DISPLAYED
1 2 3 4 5 6 7 8 9 10 11 12 13 14 15 16
20 21 22 23 24 25 26 27 28 29 30 31 32
33 34 35 36 37 38 39 40 41 42 43 44 45 46 47 48
49 50 51 52 53 54 55 56 57 58 59 60 61 62 63

T:\AO\Construction\2452-01-036 (LP 1604)\CO\CO#140\pavmrkplan48Aaa.dgn
5/3/2007
10:59:45 AM

Plotted on: 10/17/2006

QUANTITIES THIS SHEET
CSJ 2452-01-036

SCALE 1:1000

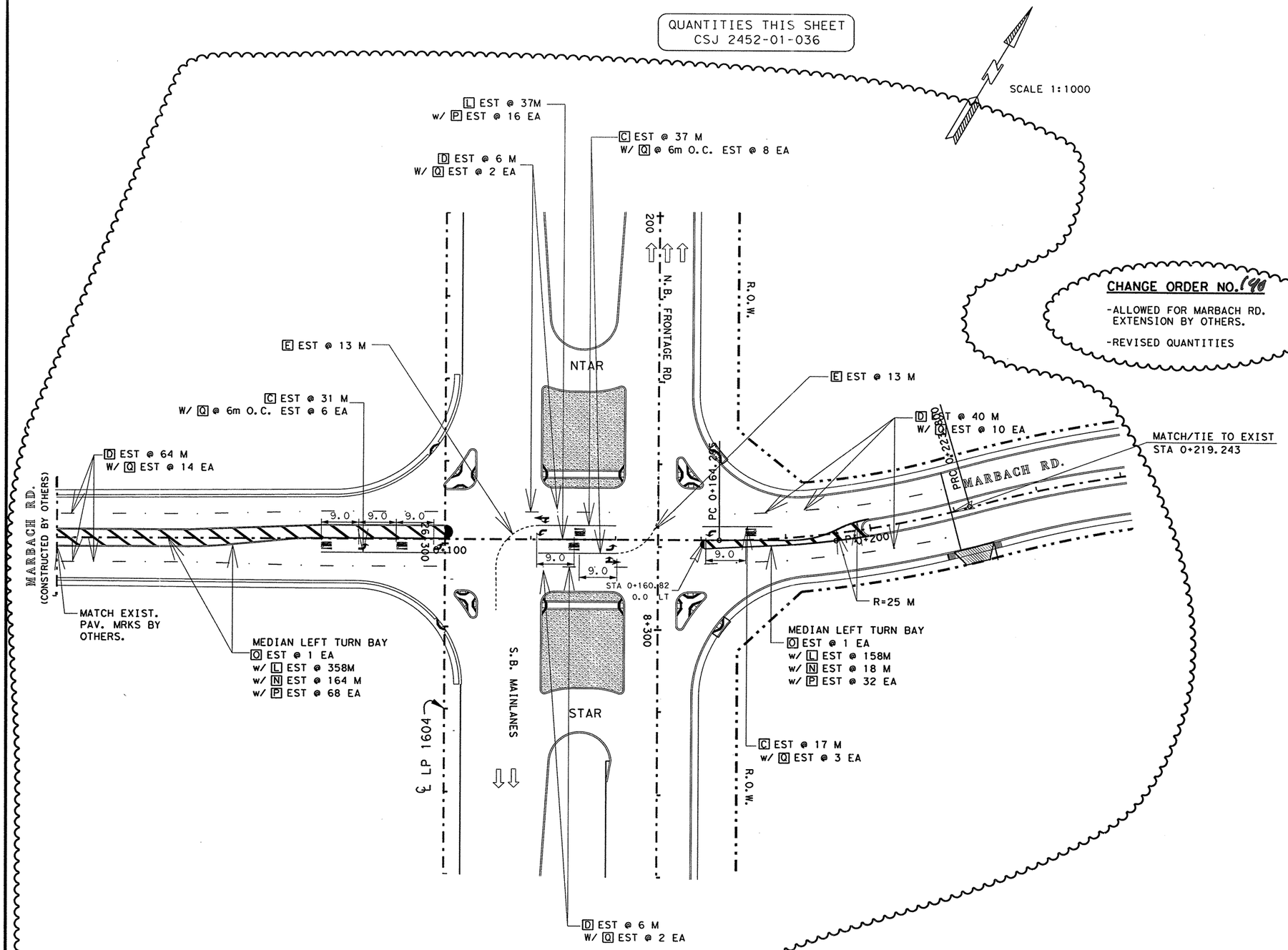


| | QUANTITY SUMMARY CSJ#: 2452-01-036, etc. | | |
|---|---|---|---|
| | ITEM | UNIT | QUANTITY |
| A | OBJ MRK ASM TY 2 FLEX (OM-2SR)(1.8 M) | EA | 0 |
| B | OBJ MRK ASM TY 2 SURF MNT (OM-2HP)(SPL) | EA | 0 |
| C | REFL PAV MRK TY I (W)(SLD)(100 MM) | M | 85 |
| D | REFL PAV MRK TY I (W)(BRK)(100 MM) | M | 116 |
| E | REFL PAV MRK TY I (W)(DOT)(100 MM) | M | 26 |
| F | REFL PAV MRK TY I (W)(SLD)(200 MM) | M | 0 |
| G | REFL PAV MRK TY I (W)(BRK)(200 MM) | M | 0 |
| H | REFL PAV MRK TY I (W)(SLD)(600 MM) | M | 0 |
| I | REFL PAV MRK TY I (W)(ARROW) | EA | 5 |
| J | REFL PAV MRK TY I (W)(DBL ARROW) | EA | 2 |
| K | REFL PAV MRK TY I (W)(WORD) | EA | 5 |
| L | REFL PAV MRK TY I (Y)(SLD)(100 MM) | M | 553 |
| M | REFL PAV MRK TY I (Y)(SLD)(200 MM) | M | 0 |
| N | REFL PAV MRK TY I (Y)(SLD)(600 MM) | M | 182 |
| O | REFL PAV MRK TY I (Y)(MED NOSE) | EA | 2 |
| P | RAIS PAV MRKR CL B (REFL) TY II-A-A (HV) | EA | 116 |
| Q | RAIS PAV MRKR CL B (REFL) TY II-C-R (HV) | EA | 45 |

**CHANGE ORDER NO. 140**

-ALLOWED FOR MARBACH RD. EXTENSION BY OTHERS.

-REVISED QUANTITIES

NOTE(S):
ALL DIMENSIONS ARE IN METERS UNLESS OTHERWISE NOTED.

QUANTITIES AND PLACEMENT OF TY II REFLECTIVE PAVEMENT MARKINGS ARE EXACTLY THE SAME AS TY I REFLECTIVE PAVEMENT MARKINGS.

ANY PAVEMENT MARKING IN CONFLICT WITH PROPOSED PAVEMENT MARKINGS SHALL BE REMOVED BY THE CONTRACTOR OR AS DIRECTED BY THE ENGINEER.
FOR ADDITIONAL DATA/DIMENSIONS, SEE INTERSECTION LAYOUT SHEET(S) 332.

**CHANGE ORDER NO. 140** | **REVISED SHEET**

STATE OF TEXAS
MIGUEL G. ROGERIO
96620
LICENSED
PROFESSIONAL ENGINEER

Miguel G. Rogerio 10/18/2006
Miguel G. Rogerio, P.E. — Date

©2006
Texas Department of Transportation

# PAVEMENT MARKING AND DELINEATION LAYOUT

**SHEET 48a OF 57**

| FED.RD. DIV.NO. | FEDERAL AID PROJECT NO. | SHEET NO. |
|---|---|---|
| 6 | NH 2000(704), etc. | 807B |
| STATE | DIST. / COUNTY | |
| TEXAS | SAT / BEXAR | |
| CONT. | SECT. / JOB / HIGHWAY NO. | |
| 2452 | 01 / 036, etc. / LP 1604 | |

Design Filename: T:\AO\Construction\2452-01-036\CO\CO#140\pavmrkplan48b.dgn
T:\AO\Construction\2452-01-036\CO\CO#140\pavmrkplan48b.dgn
10/17/2006
5:52:55 PM
LEVELS DISPLAYED
1 2 3 4 6 7 8 9 10 11 12 13 14 15 16 19 20 21 22 23 24 25 26 27 28 29 30 31 32 33 34 35 36 37 38 39 40 41 42 43 44 45 46 47 48 49 50 51 52 53 54 55 56 57 58 59 60 62 63 64 65 66 67 68 69 70 71 72 73 74 75 76 77 78 79 80 81 82 83 84 85 86 87 88 89 90 91 92 93 94 95 96 97 98 99 100 101 102 103 104 105 106 107 108 109 110 111 112 113 114 115 116 117 118 119 120 121 122 123 124 125 126 127 128 129 130 131 132 133 134 135 136 137 138 139 140 141 142 143 144 145 146 147 148 149 150 151 152 153 154 155 156 157 158 159 160 161 162 163 164 165 166 167 168 169 170 171 172 173 174 175 176 177 178 179 180 181 182 183 184 185 186 187 188 189 190 191 192 193 194 195 196 197 198 199 200 201 202 203 204 205 206 207 208 209 210 211 212 213 214 215 216 217 218 219 220 221 222 223 224 225 226 227 228 229 230 231 232 233 234 235 236 237 238 239 240 241 242 243 244 245 246 247 248 249 250 251 252 253 254 255

NOTE(S):

ALL DIMENSIONS ARE IN METERS UNLESS OTHERWISE NOTED.

QUANTITIES AND PLACEMENT OF TY II REFLECTIVE PAVEMENT MARKINGS ARE EXACTLY THE SAME AS TY I REFLECTIVE PAVEMENT MARKINGS. TY I AND TY II QUANTITIES ACCOUNTED FOR ON THE PAVEMENT MARKING /DELINEATION SUMMARY UNDER CHANGE ORDER NO. 65 AND 140.

ANY PAVEMENT MARKING IN CONFLICT WITH PROPOSED PAVEMENT MARKINGS SHALL BE REMOVED BY THE CONTRACTOR OR AS DIRECTED BY THE ENGINEER.

SCALE 1:1000

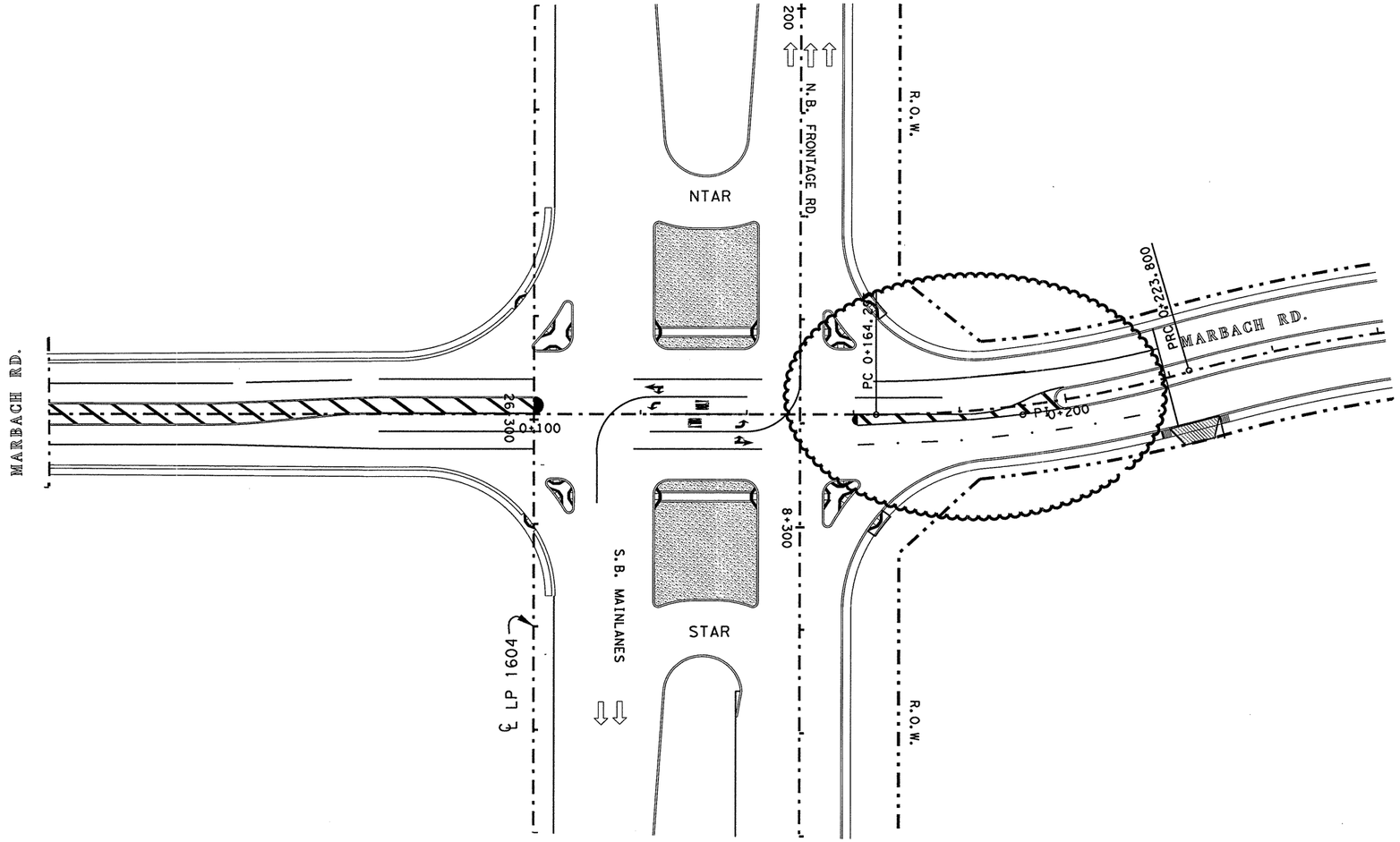


**SUPPLEMENT SHEET**

-REVISE LP 1604 NBFR SPACING FOR "ARROW" & "WORD" STRIPING.

-ELIMINATE "ARROW" & "WORD" ON LP 1604 NBFR THRU LANES & MARBACH WB LT TURN LANE.

STATE OF TEXAS
MIGUEL G. ROGERIO
96620
LICENSED PROFESSIONAL ENGINEER

Miguel G. Rogerio, P.E. 5/7/2007
Miguel G. Rogerio, P.E. Date

Revised sheet

©2007

Texas Department of Transportation

# PAVEMENT MARKING LAYOUT

**SHEET 48aa OF 57**

| FED. RD. DIV. NO. | FEDERAL AID PROJECT NO. | | SHEET NO. |
|---|---|---|---|
| 6 | NH 2000(704), etc. | | 807BB |
| STATE | DIST. | COUNTY | |
| TEXAS | SAT | BEXAR | |
| CONT. | SECT. | JOB | HIGHWAY NO. |
| 2452 | 01 | 036, etc. | LP 1604 |

Plotted on: 5/7/2007

Design Filename: T:\AO\Construction\2452-01-036 (Lp 1604)\CO\CO#140\pavmrkplan48C.dgn

T:\AO\Construction\2452-01-036 (Lp 1604)\CO\CO#140\pavmrkplan48C.dgn
5/7/2007
2:43:55 PM

LEVELS DISPLAYED
1 2 3 4 7 8 12 31 41 51
19 20 21 23 25 62 72 82 93 103 132
33 34 35 53 63 73 88 101 141 143 144 146 148
49 50 51 52 53 54 55 56 57 58 59 60

QUANTITIES THIS SHEET
CSJ 2452-01-036

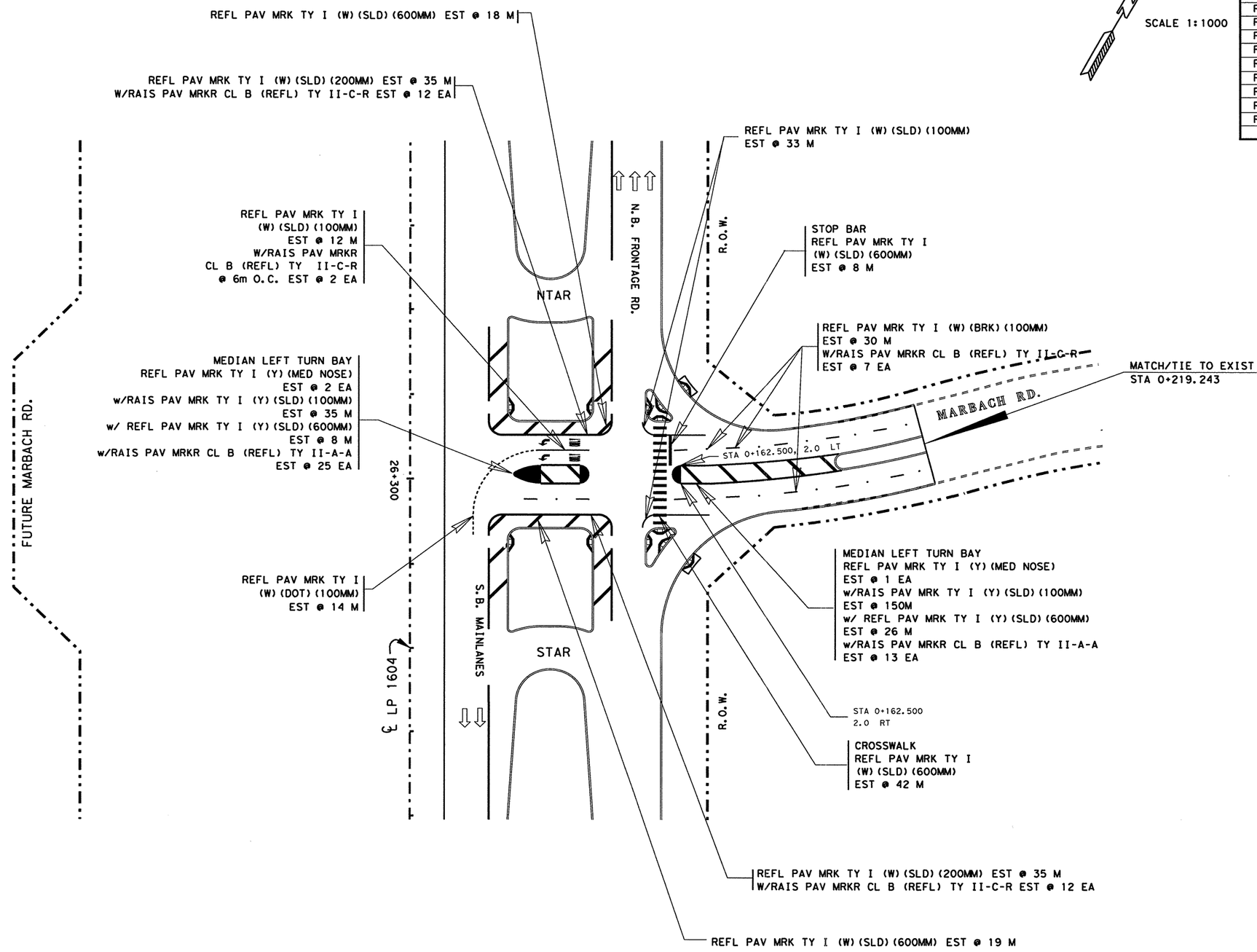


SCALE 1:1000

## ESTIMATED QUANTITIES

| ITEM | UNIT | QUANTITY 2452-01-037 |
|---|---|---|
| REFL PAV MRK TY I (W)(SLD)(100MM) | M | 45 |
| REFL PAV MRK TY I (W)(BRK)(100MM) | M | 30 |
| REFL PAV MRK TY I (W)(DOT)(100MM) | M | 14 |
| REFL PAV MRK TY I (W)(SLD)(200MM) | M | 70 |
| REFL PAV MRK TY I (W)(SLD)(600MM) | M | 87 |
| REFL PAV MRK TY I (W)(ARROW) | EA | 2 |
| REFL PAV MRK TY I (W)(WORD) | EA | 2 |
| REFL PAV MRK TY I (Y)(SLD)(100MM) | M | 185 |
| REFL PAV MRK TY I (Y)(SLD)(600MM) | M | 34 |
| REFL PAV MRK TY I (Y)(MED NOSE) | EA | 3 |
| RAIS PAV MRKR CL B (REFL) TY II A-A | EA | 38 |
| RAIS PAV MRKR CL B (REFL) TY II C-R | EA | 33 |

NOTE(S):

ALL DIMENSIONS ARE IN METERS UNLESS OTHERWISE NOTED.

QUANTITIES AND PLACEMENT OF TY II REFLECTIVE PAVEMENT MARKINGS ARE EXACTLY THE SAME AS TY I REFLECTIVE PAVEMENT MARKINGS. TY II QUANTITIES ACCOUNTED FOR ON THE PAVEMENT MARKING /DELINEATION SUMMARY.

ANY PAVEMENT MARKING IN CONFLICT WITH PROPOSED PAVEMENT MARKINGS SHALL BE REMOVED BY THE CONTRACTOR OR AS DIRECTED BY THE ENGINEER.

FOR ADDITIONAL DATA/DIMENSIONS, SEE INTERSECTION LAYOUT SHEET(S) 332.

| DELINEATION QUANTITIES | | | | |
|---|---|---|---|---|
| TYPE | EA. | ASM. | SPL. MNT. | SURF. MNT. |
| D-SW(a) | | | | |
| D-DW(a) | FOR QUANTITIES | | | |
| D-SY(a) | SEE PRIOR SHEET | | | |
| D-DY(a) | | 48 OF 57 | | |
| OM-2SR(a) | | | | |
| | | | | |
| | | | | |
| | | | | |
| | | | | |

LEVELS DISPLAYED
1 2 3 4 5 6 7 8 9 10 11 12 13 14 15 16
2 2 2 2 2 2 2 2 2 2 2 2 2 2 2 2
33 34 35 36 37 38 39 40 41 42 43 44 45 46 47 48
49 50 51 52 53 54 55 56 57 58 59 60 62 63

ACC: t:\oa\design\
lp1604fm471-90\pave-sign\
FILE: pavmrkplan48a.dgn

STATE OF TEXAS
JOEL K. DAVENPORT, JR.
79276
REGISTERED
PROFESSIONAL ENGINEER

Joel K. Davenport, Jr. 9/19/00
Joel K. Davenport, Jr. P.E. 79276 Date

©2000 Texas Department of Transportation

# PAVEMENT MARKING AND DELINEATION LAYOUT

SHEET 48a OF 57

| FED. RD. DIV. NO. | FEDERAL AID PROJECT NO. | | SHEET NO. |
|---|---|---|---|
| 6 | NH 2000(704), etc. | | 808 |
| STATE | DIST. | COUNTY | |
| TEXAS | SAT | BEXAR | |
| CONT. | SECT. | JOB | HIGHWAY NO. |
| 2452 | 01 | 036, etc. | LP 1604 |

QUANTITIES THIS SHEET
CSJ 2452-01-036

SCALE 1:1000

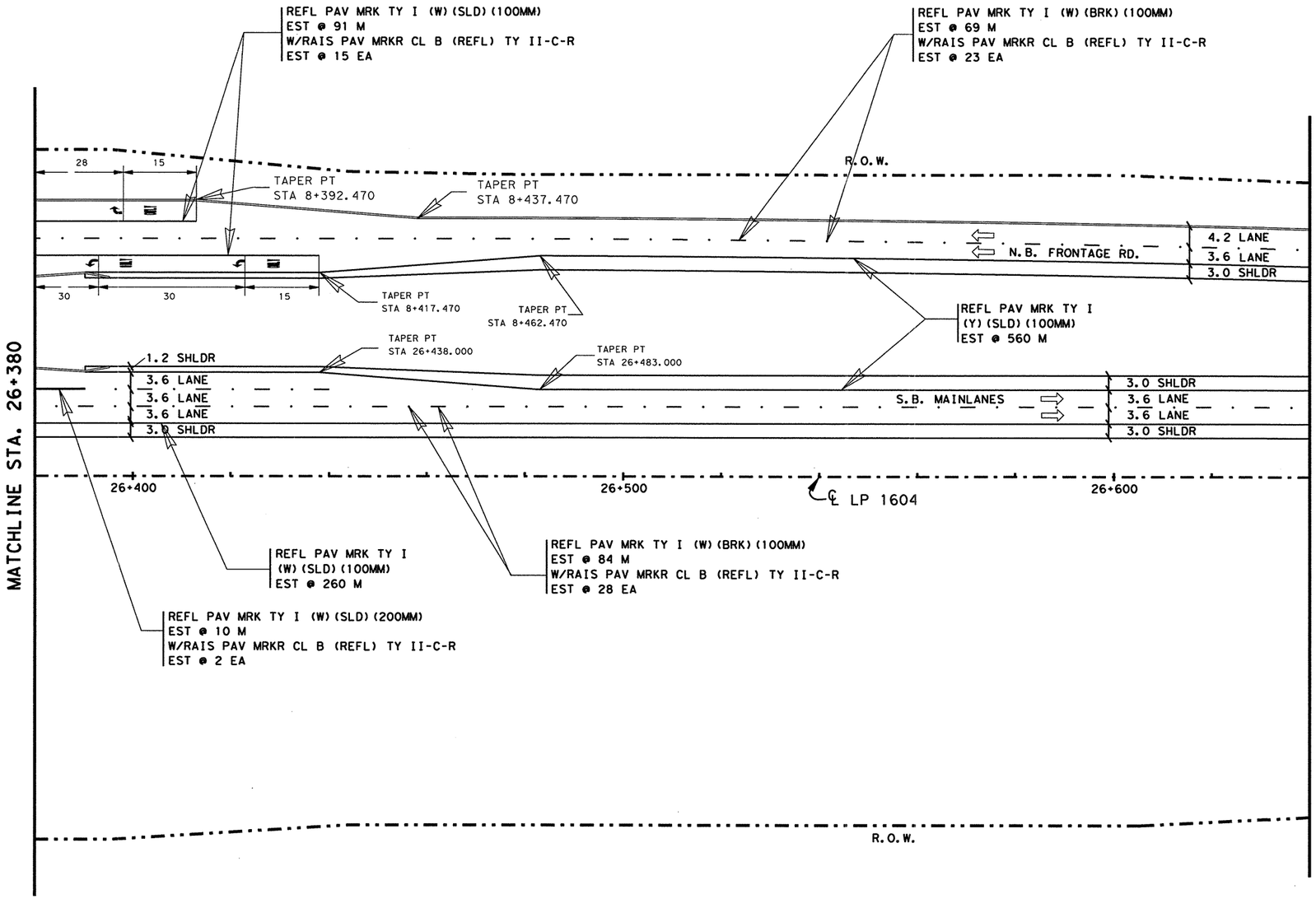


## ESTIMATED QUANTITIES

| ITEM | UNIT | QUANTITY 2452-01-036 |
|---|---|---|
| REFL PAV MRK TY I (W) (SLD) (100MM) | M | 351 |
| REFL PAV MRK TY I (W) (BRK) (100MM) | M | 153 |
| REFL PAV MRK TY I (W) (SLD) (200MM) | M | 10 |
| REFL PAV MRK TY I (W) (ARROW) | EA | 3 |
| REFL PAV MRK TY I (W) (WORD) | EA | 3 |
| REFL PAV MRK TY I (Y) (SLD) (100MM) | M | 560 |
| RAIS PAV MRKR CL B (REFL) TY II C-R | EA | 68 |
| | | |

NOTE(S):

ALL DIMENSIONS ARE IN METERS UNLESS OTHERWISE NOTED.

QUANTITIES AND PLACEMENT OF TY II REFLECTIVE PAVEMENT MARKINGS ARE EXACTLY THE SAME AS TY I REFLECTIVE PAVEMENT MARKINGS. TY II QUANTITIES ACCOUNTED FOR ON THE PAVEMENT MARKING /DELINEATION SUMMARY.

ANY PAVEMENT MARKING IN CONFLICT WITH PROPOSED PAVEMENT MARKINGS SHALL BE REMOVED BY THE CONTRACTOR OR AS DIRECTED BY THE ENGINEER.

| DELINEATION QUANTITIES | | | | |
|---|---|---|---|---|
| TYPE | EA. | ASM. | SPL. MNT. | SURF. MNT. |
| D-SW(a) | | | | |
| D-DW(a) | | | | |
| D-SY(a) | | | | |
| D-DY(a) | | | | |
| OM-2SR(a) | | | | |
| | | | | |
| | | | | |
| | | | | |
| TOTAL | | | | |

LEVELS DISPLAYED
1 2 3 4 5 6 7 8 9 0 11 12 13 14 15 16
21 23 24 25 26 27 28 29 30 31 32
33 34 35 36 37 38 39 40 41 42 43 44 45 46 47 48
49 50 51 52 53 54 55 56 57 58 59 60 61 62 63

ACC: t:\ao\design\lp1604fm471-90\pave-sign\
FILE: pavmrkplan49.dgn

STATE OF TEXAS
JOEL K. DAVENPORT, JR.
79276
REGISTERED PROFESSIONAL ENGINEER

Joel K. Davenport Jr. 9/19/00
Joel K. Davenport, Jr., P.E. 79276 Date

Texas Department of Transportation

# PAVEMENT MARKING AND DELINEATION LAYOUT

SHEET 49 OF 57

| FED. RD. DIV. NO. | FEDERAL AID PROJECT NO. | | SHEET NO. |
|---|---|---|---|
| 6 | NH 2000(704), etc. | | 809 |
| STATE | DIST. | COUNTY | |
| TEXAS | SAT | BEXAR | |
| CONT. | SECT. | JOB | HIGHWAY NO. |
| 2452 | 01 | 036, etc. | LP 1604 |

Plotted on: $DATE$

QUANTITIES THIS SHEET
CSJ 2452-01-036

SCALE 1:1000

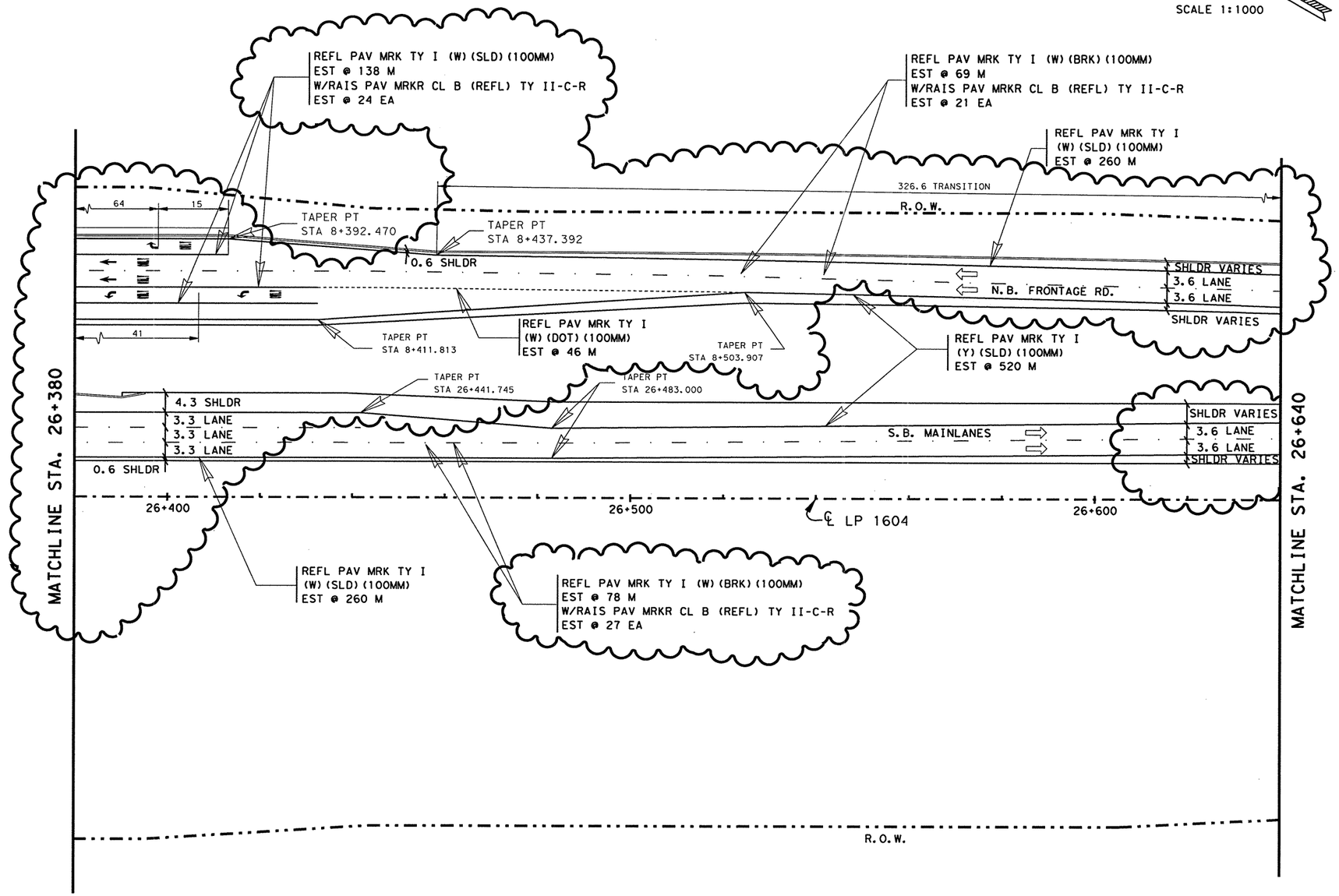


## ESTIMATED QUANTITIES

| ITEM | UNIT | QUANTITY 2452-01-036 |
|---|---|---|
| REFL PAV MRK TY I (W) (SLD) (100MM) | M | 658 |
| REFL PAV MRK TY I (W) (BRK) (100MM) | M | 147 |
| REFL PAV MRK TY I (W) (DOT) (100MM) | M | 46 |
| REFL PAV MRK TY I (W) (SLD) (200MM) | M | 0 |
| REFL PAV MRK TY I (W) (ARROW) | EA | 5 |
| REFL PAV MRK TY I (W) (WORD) | EA | 5 |
| REFL PAV MRK TY I (Y) (SLD) (100MM) | M | 520 |
| RAIS PAV MRKR CL B (REFL) TY II C-R | EA | 72 |

NOTE(S):

ALL DIMENSIONS ARE IN METERS UNLESS OTHERWISE NOTED.

QUANTITIES AND PLACEMENT OF TY II REFLECTIVE PAVEMENT MARKINGS ARE EXACTLY THE SAME AS TY I REFLECTIVE PAVEMENT MARKINGS. TY II QUANTITIES ACCOUNTED FOR ON THE PAVEMENT MARKING /DELINEATION SUMMARY.

ANY PAVEMENT MARKING IN CONFLICT WITH PROPOSED PAVEMENT MARKINGS SHALL BE REMOVED BY THE CONTRACTOR OR AS DIRECTED BY THE ENGINEER.

## DELINEATION QUANTITIES

| TYPE | EA. | ASM. | SPL. MNT. | SURF. MNT. |
|---|---|---|---|---|
| D-SW(a) | | | | |
| D-DW(a) | | | | |
| D-SY(a) | | | | |
| D-DY(a) | | | | |
| OM-2SR(a) | | | | |
| | | | | |
| | | | | |
| | | | | |
| TOTAL | | | | |

**CHANGE ORDER NO. 65**

-REVISED RDWY GEOMETRICS AND LANE CONFIGURATIONS
-REVISED QUANTITIES

**CHANGE ORDER NO. 65** | **REVISED SHEET**

STATE OF TEXAS
JEROME D. PAVLISKA
76075
REGISTERED PROFESSIONAL ENGINEER

Jerome D. Pavliska, P.E. 2-10-04
Jerome D. Pavliska, P.E. — Date

©2000 Texas Department of Transportation

# PAVEMENT MARKING AND DELINEATION LAYOUT

SHEET 49 OF 57

| FED.RD. DIV.NO. | FEDERAL AID PROJECT NO. | | SHEET NO. |
|---|---|---|---|
| 6 | NH 2000(704), etc. | | 809A |
| STATE | DIST. | COUNTY | |
| TEXAS | SAT | BEXAR | |
| CONT. | SECT. | JOB | HIGHWAY NO. |
| 2452 | 01 | 036, etc. | LP 1604 |

Design Filename: $FILE$

LEVELS DISPLAYED
1 2 3 4 5 6 7 8 9 10 11 12 13 14 15 16
17 18 19 20 21 22 23 24 25 26 27 28 29 30 31 32
33 34 35 36 37 38 39 40 41 42 43 44 45 46 47 48
49 50 51 52 53 54 55 56 57 58 59 60 61 62 63

ACC: t:\ao\design\
lp1604fm471-90\pave-sign\
FILE: pavmrkplan49.dgn

Plotted on: 5/1/2007

Design Filename: T:\AO\Design\lp1604fm471-90\PD*Phase2*change*order*mylars\Txdot*revisions\pavmrkplan49aa.dgn

LEVELS DISPLAYED
1 2 3 4 5 6 7 8 9 10 11 12 13 14 15 16
17 18 19 20 21 22 23 24 25 26 27 28 29 30 31 32
33 34 35 36 37 38 39 40 41 42 43 44 45 46 47 48
49 50 51 52 53 54 55 56 57 58 59 60 61 62 63

ACC: T:\ao\design\lp1604fm471-90\pave-sign\
FILE: pavmrkplan49.dgn

SCALE 1:1000

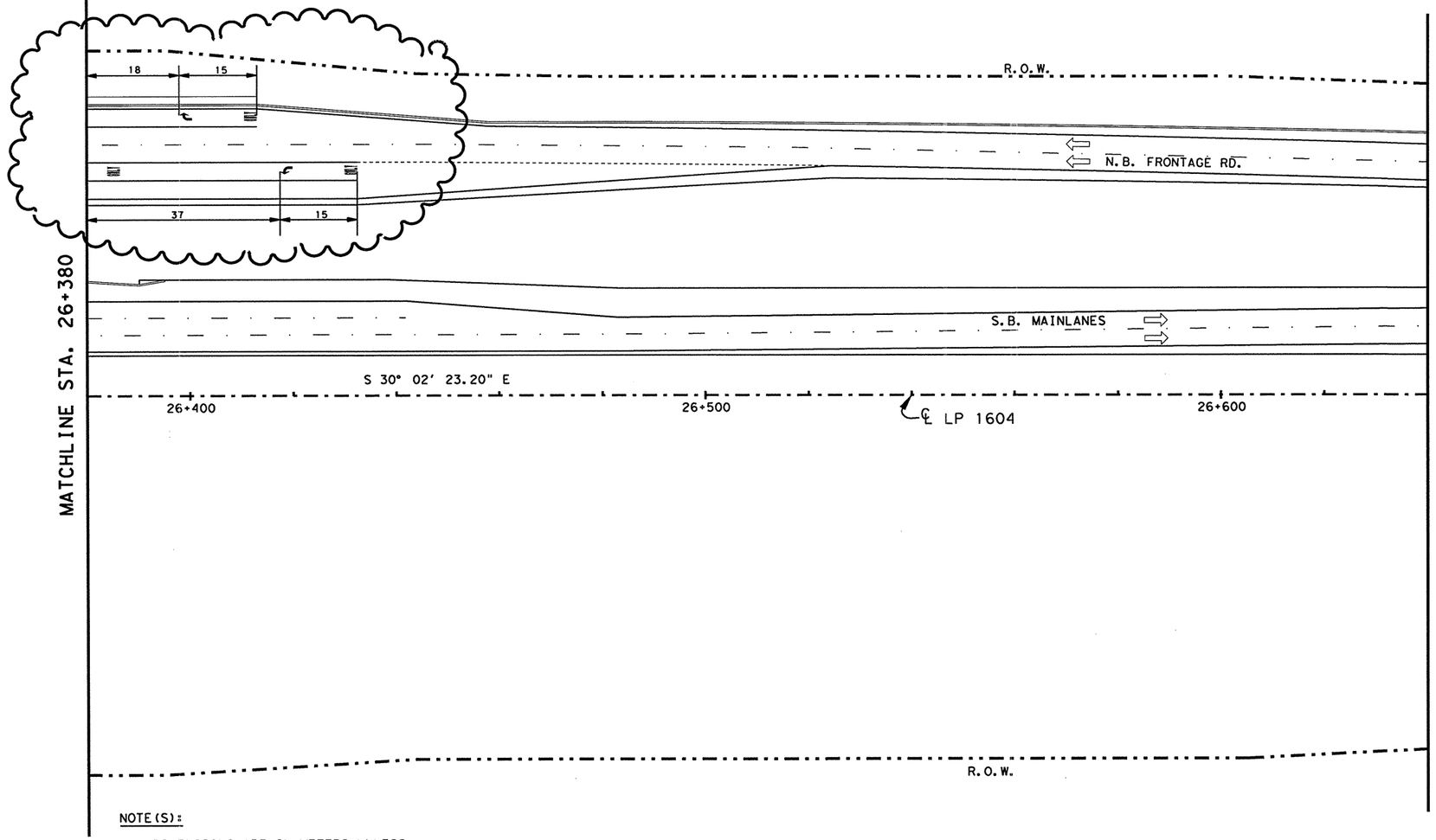


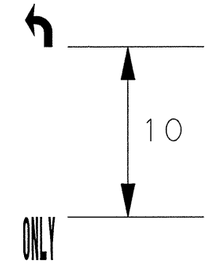


**SUPPLEMENT SHEET**

-REVISE LP 1604 NBFR SPACING FOR "ARROW" & "WORD" STRIPING.

-ELIMINATE "ARROW" & "WORD" ON LP 1604 NBFR THRU LANES.

NOTE(S):

ALL DIMENSIONS ARE IN METERS UNLESS OTHERWISE NOTED.

QUANTITIES AND PLACEMENT OF TY II REFLECTIVE PAVEMENT MARKINGS ARE EXACTLY THE SAME AS TY I REFLECTIVE PAVEMENT MARKINGS. TY I AND TY II QUANTITIES ACCOUNTED FOR ON THE PAVEMENT MARKING /DELINEATION SUMMARY UNDER CHANGE ORDER NO. 65 AND 140.

ANY PAVEMENT MARKING IN CONFLICT WITH PROPOSED PAVEMENT MARKINGS SHALL BE REMOVED BY THE CONTRACTOR OR AS DIRECTED BY THE ENGINEER.

STATE OF TEXAS
MIGUEL G. ROGERIO
96620
LICENSED
PROFESSIONAL ENGINEER

Miguel G. Rogerio, P.E. — Date 5/1/2007

©2007

Texas Department of Transportation

# PAVEMENT MARKING LAYOUT

**SHEET 49a OF 57**

| FED.RD. DIV.NO. | FEDERAL AID PROJECT NO. | | SHEET NO. |
|---|---|---|---|
| 6 | NH 2000(704),etc. | | 809AA |
| STATE | DIST. | COUNTY | |
| TEXAS | SAT | BEXAR | |
| CONT. | SECT. | JOB | HIGHWAY NO. |
| 2452 | 01 | 036,etc. | LP 1604 |

Revised Sheet

02-04-04

QUANTITIES THIS SHEET
CSJ 2452-01-036

SCALE 1:1000

| ESTIMATED QUANTITIES | | |
|---|---|---|
| ITEM | UNIT | QUANTITY |
| | | 2452-01-036 |
| REFL PAV MRK TY I (W)(SLD)(100MM) | M | 260 |
| REFL PAV MRK TY I (W)(BRK)(100MM) | M | 132 |
| REFL PAV MRK TY I (Y)(SLD)(100MM) | M | 521 |
| RAIS PAV MRKR CL B (REFL) TY II C-R | EA | 42 |
| | | |

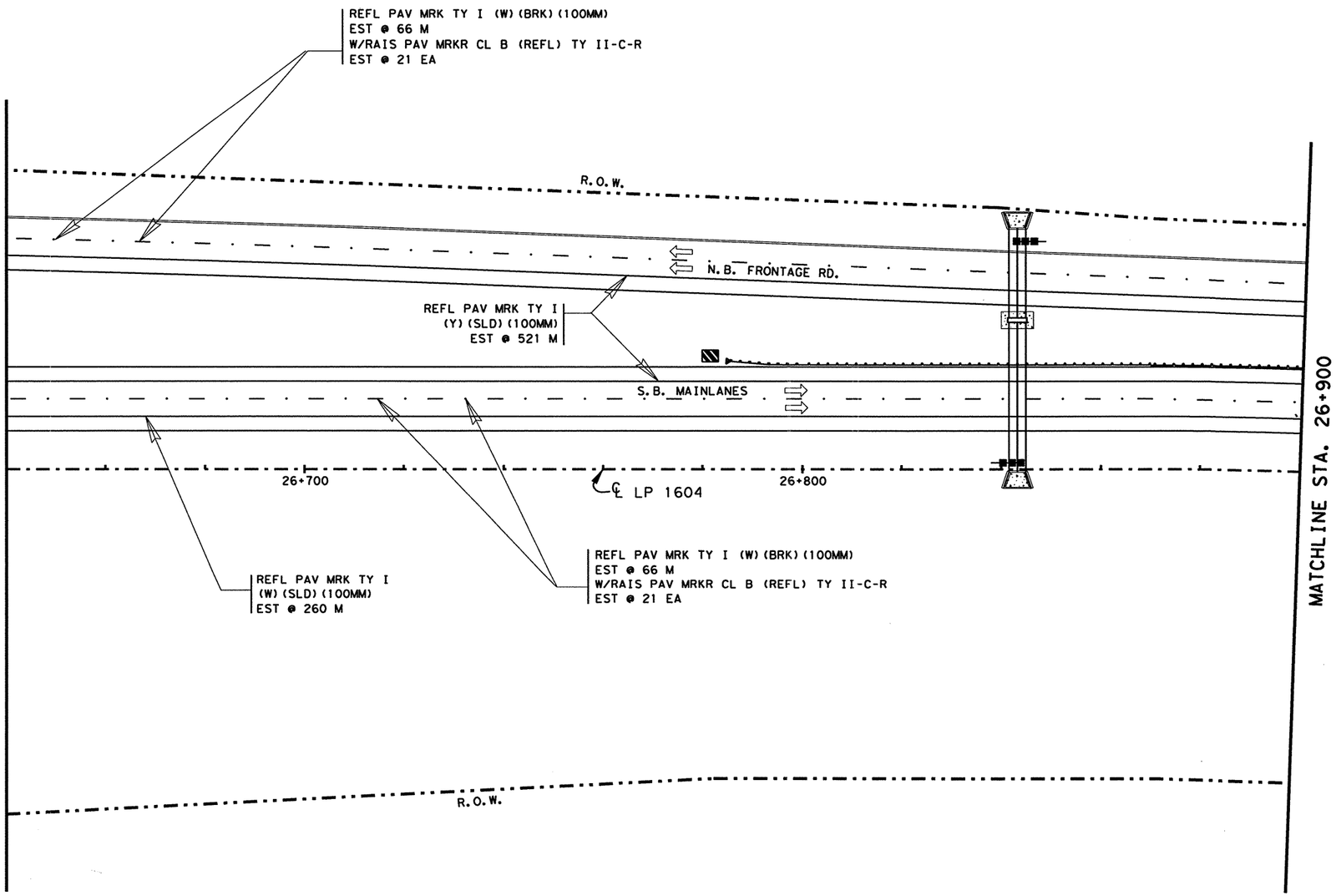


NOTE(S):

ALL DIMENSIONS ARE IN METERS UNLESS OTHERWISE NOTED.

QUANTITIES AND PLACEMENT OF TY II REFLECTIVE PAVEMENT MARKINGS ARE EXACTLY THE SAME AS TY I REFLECTIVE PAVEMENT MARKINGS. TY II QUANTITIES ACCOUNTED FOR ON THE PAVEMENT MARKING /DELINEATION SUMMARY.

ANY PAVEMENT MARKING IN CONFLICT WITH PROPOSED PAVEMENT MARKINGS SHALL BE REMOVED BY THE CONTRACTOR OR AS DIRECTED BY THE ENGINEER.

| DELINEATION QUANTITIES | | | | |
|---|---|---|---|---|
| TYPE | EA. | ASM. | SPL. MNT. | SURF. MNT. |
| D-SW(a) | | | | |
| D-DW(a) | | | | |
| D-SY(a) | | | | |
| D-DY(a) | | | | |
| OM-2SR(a) | | 2 | | |
| OM-3L | 1 | | | |
| | | | | |
| | | | | |
| | | | | |

LEVELS DISPLAYED
1 2 3 4 1 5 6 7 8 9 1 0 1 1 2 1 3 1 4 1 5 1 6
2 0 2 1 2 2 3 2 4 2 5 2 6 2 7 2 8 2 9 3 0 3 1 3 2
3 3 3 4 3 5 3 6 3 7 3 8 3 9 4 0 4 1 4 2 4 3 4 4 4 5 4 6 4 7 4 8
4 9 5 0 5 1 5 2 5 3 5 4 5 5 5 6 5 7 5 8 5 9 6 0 6 1 6 2 6 3

ACC: t:\ao\design\
lp1604fm471-90\pave-sign\
FILE: pavmrkplan50.dgn

STATE OF TEXAS
JOEL K. DAVENPORT, JR.
79276
REGISTERED
PROFESSIONAL ENGINEER

Joel K. Davenport, Jr. 9/19/00
Joel K. Davenport, Jr. P.E. 79276 Date

©2000 Texas Department of Transportation

# PAVEMENT MARKING AND DELINEATION LAYOUT

SHEET 50 OF 57

| FED. RD. DIV. NO. | FEDERAL AID PROJECT NO. | | SHEET NO. |
|---|---|---|---|
| 6 | NH 2000(704), etc. | | 810 |
| STATE | DIST. | COUNTY | |
| TEXAS | SAT | BEXAR | |
| CONT. | SECT. | JOB | HIGHWAY NO. |
| 2452 | 01 | 036, etc. | LP 1604 |

QUANTITIES THIS SHEET
CSJ 2452-01-036

SCALE 1:1000

| ESTIMATED QUANTITIES | | |
|---|---|---|
| ITEM | UNIT | QUANTITY |
| | | 2452-01-036 |
| REFL PAV MRK TY I (W)(SLD)(100MM) | M | 520 |
| REFL PAV MRK TY I (W)(BRK)(100MM) | M | 132 |
| REFL PAV MRK TY I (Y)(SLD)(100MM) | M | 521 |
| RAIS PAV MRKR CL B (REFL) TY II C-R | EA | 42 |
| | | |

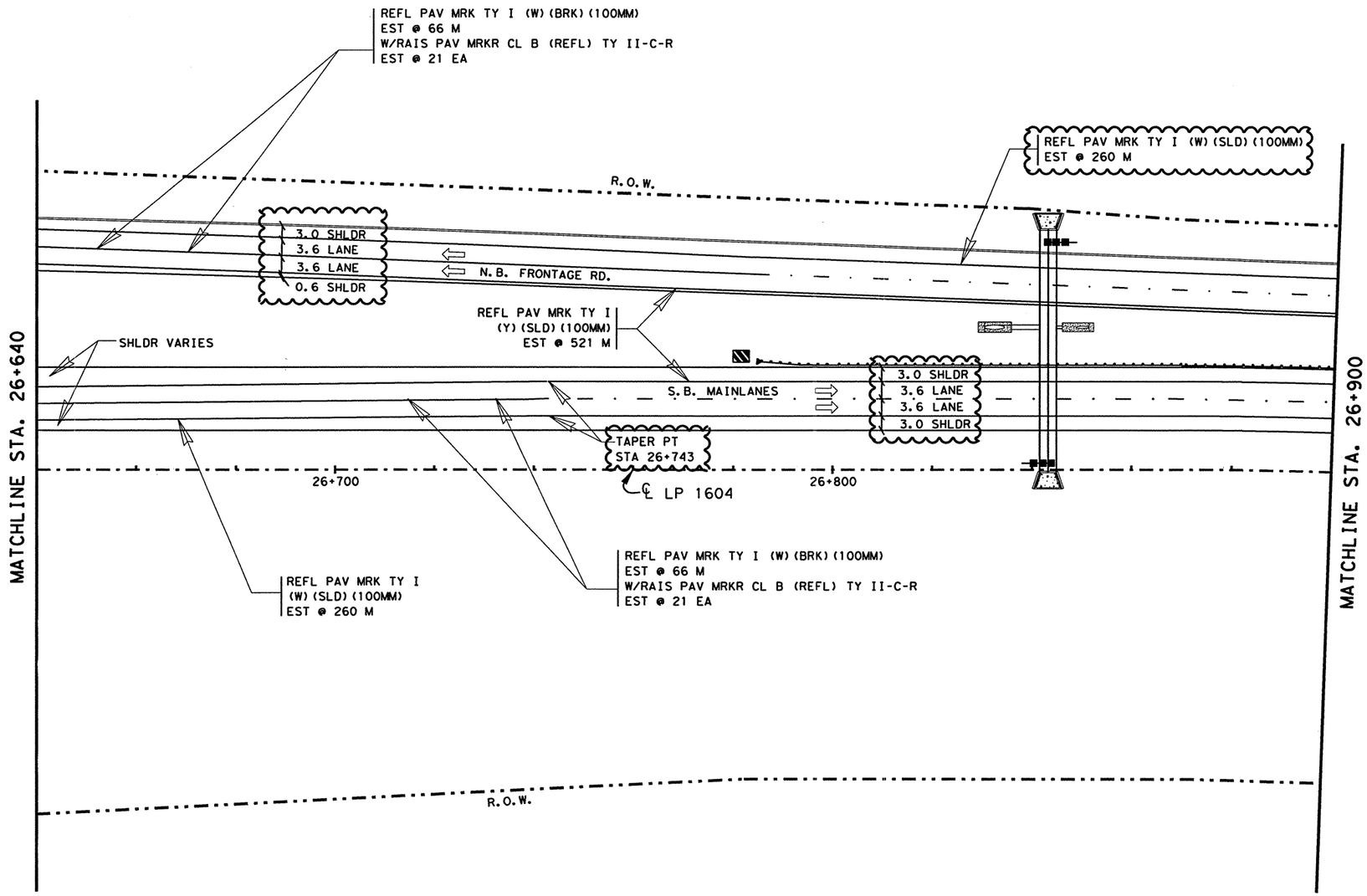


NOTE(S):

ALL DIMENSIONS ARE IN METERS UNLESS OTHERWISE NOTED.

QUANTITIES AND PLACEMENT OF TY II REFLECTIVE PAVEMENT MARKINGS ARE EXACTLY THE SAME AS TY I REFLECTIVE PAVEMENT MARKINGS. TY II QUANTITIES ACCOUNTED FOR ON THE PAVEMENT MARKING /DELINEATION SUMMARY.

ANY PAVEMENT MARKING IN CONFLICT WITH PROPOSED PAVEMENT MARKINGS SHALL BE REMOVED BY THE CONTRACTOR OR AS DIRECTED BY THE ENGINEER.

| DELINEATION QUANTITIES | | | | |
|---|---|---|---|---|
| TYPE | EA. | ASM. | SPL. MNT. | SURF. MNT. |
| D-SW(a) | | | | |
| D-DW(a) | | | | |
| D-SY(a) | | | | |
| D-DY(a) | | | | |
| OM-2SR(a) | | 2 | | |
| OM-3L | 1 | | | |
| | | | | |
| | | | | |
| | | | | |

CHANGE ORDER 65

REVISED SHEET

CHANGE ORDER NO. 65
-REVISED FRONT. RD. LANE CONFIG.
-REVISED QUANTITIES

STATE OF TEXAS
JEROME D. PAVLISKA
76075
REGISTERED PROFESSIONAL ENGINEER

Jerome D. Pavliska P.E. 4-06-04
Jerome D. Pavliska, P.E. Date

©2000

Texas Department of Transportation

# PAVEMENT MARKING AND DELINEATION LAYOUT

SHEET 50 OF 57

| FED. RD. DIV. NO. | FEDERAL AID PROJECT NO. | | SHEET NO. |
|---|---|---|---|
| 6 | NH 2000(704),etc. | | 810A |
| STATE | DIST. | COUNTY | |
| TEXAS | SAT | BEXAR | |
| CONT. | SECT. | JOB | HIGHWAY NO. |
| 2452 | 01 | 036,etc. | LP 1604 |

04-04-04

LEVELS DISPLAYED
1 2 3 4 5 6 7 8 9 10 11 12 13 14 15 16
2 0 2 1 2 2 2 3 2 4 2 5 2 6 2 7 2 8 2 9 3 0 3 1 3 2
3 3 3 4 3 5 3 6 3 7 3 8 3 9 4 0 4 1 4 2 4 3 4 4 4 5 4 6 4 7 4 8
4 9 5 0 5 1 5 2 5 3 5 4 5 5 5 6 5 7 5 8 5 9 6 0 6 1 6 2 6 3

ACC: t:\ao\design\
lp1604fm471-90\pave-sign\
FILE: pavmrkplan50*co.dgn

QUANTITIES THIS SHEET
CSJ 2452-01-036

SCALE 1:1000

| ESTIMATED QUANTITIES | | |
|---|---|---|
| ITEM | UNIT | QUANTITY |
| | | 2452-01-036 |
| REFL PAV MRK TY I (W)(SLD)(100MM) | M | 262 |
| REFL PAV MRK TY I (W)(BRK)(100MM) | M | 135 |
| REFL PAV MRK TY I (Y)(SLD)(100MM) | M | 535 |
| RAIS PAV MRKR CL B (REFL) TY II C-R | EA | 43 |
| | | |

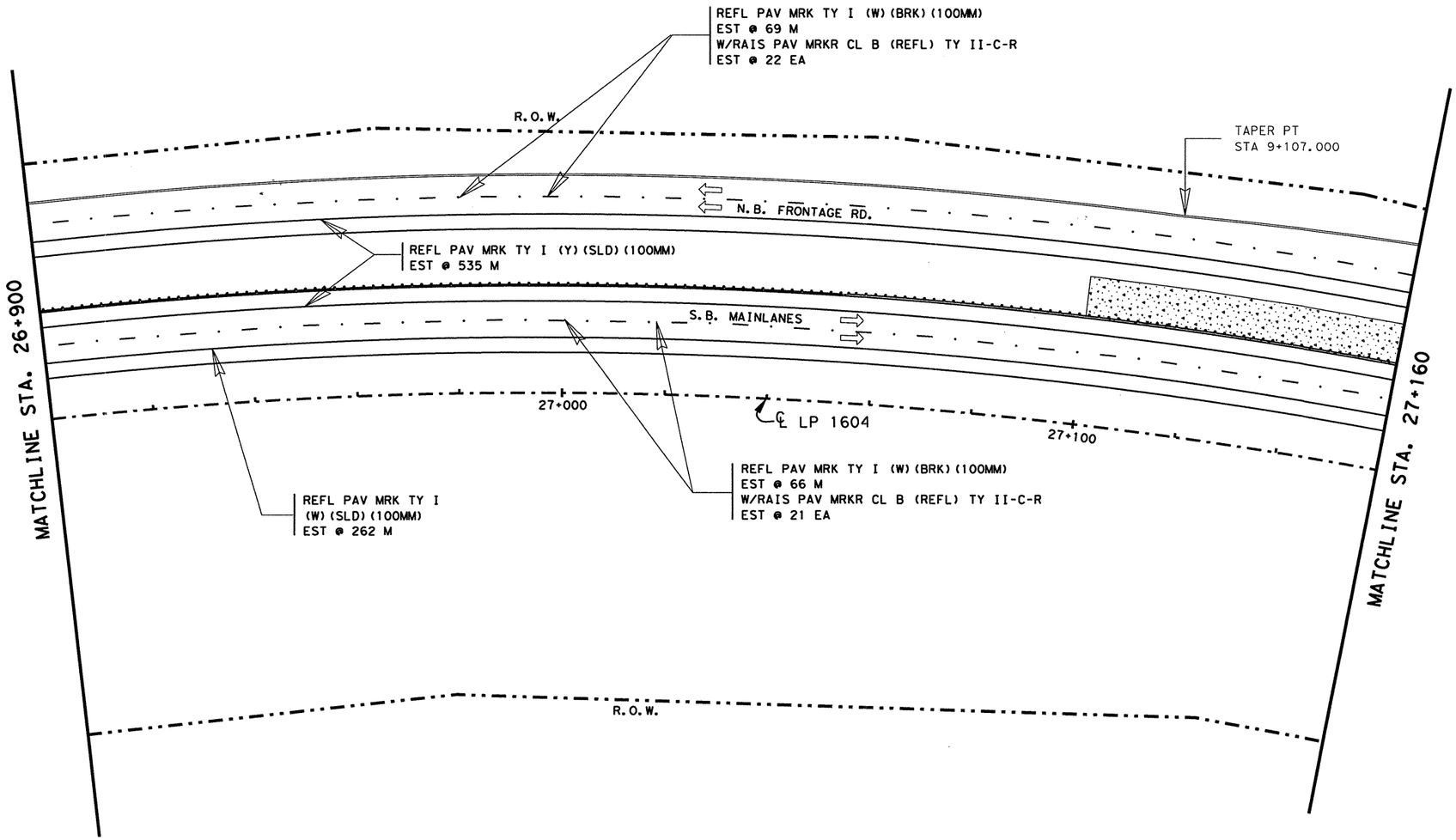


NOTE(S):

ALL DIMENSIONS ARE IN METERS UNLESS OTHERWISE NOTED.

QUANTITIES AND PLACEMENT OF TY II REFLECTIVE PAVEMENT MARKINGS ARE EXACTLY THE SAME AS TY I REFLECTIVE PAVEMENT MARKINGS. TY II QUANTITIES ACCOUNTED FOR ON THE PAVEMENT MARKING /DELINEATION SUMMARY.

ANY PAVEMENT MARKING IN CONFLICT WITH PROPOSED PAVEMENT MARKINGS SHALL BE REMOVED BY THE CONTRACTOR OR AS DIRECTED BY THE ENGINEER.

| DELINEATION QUANTITIES | | | | |
|---|---|---|---|---|
| TYPE | EA. | ASM. | SPL. MNT. | SURF. MNT. |
| D-SW(a) | | | | |
| D-DW(a) | | | | |
| D-SY(a) | | | | |
| D-DY(a) | | | | |
| OM-2SR(a) | | | | |
| | | | | |
| | | | | |
| | | | | |
| | | | | |

STATE OF TEXAS
JOEL K. DAVENPORT, JR.
79276
REGISTERED PROFESSIONAL ENGINEER

Joel K. Davenport, Jr. 9/19/00
Joel K. Davenport, Jr. P.E. 79276 Date

LEVELS DISPLAYED
1 2 3 4 5 6 7 8 9 10 11 12 13 14 15 16
33 34 35 36 37 38 39 40 41 42 43 44 45 46 47 48
49 50 51 52 53 54 55 56 57 58 59 60 61 62 63

ACC: H:\oo\design\
lp1604fm471-90\pave-sign
FILE: pavmrkplan51.dgn

©2000 Texas Department of Transportation

# PAVEMENT MARKING AND DELINEATION LAYOUT

SHEET 51 OF 57

| FED. RD. DIV. NO. | FEDERAL AID PROJECT NO. | | SHEET NO. |
|---|---|---|---|
| 6 | NH 2000(704),etc. | | 811 |
| STATE | DIST. | COUNTY | |
| TEXAS | SAT | BEXAR | |
| CONT. | SECT. | JOB | HIGHWAY NO. |
| 2452 | 01 | 036,etc. | LP 1604 |

QUANTITIES THIS SHEET
CSJ 2452-01-036

SCALE 1:1000

| ESTIMATED QUANTITIES | | |
|---|---|---|
| ITEM | UNIT | QUANTITY |
| | | 2452-01-036 |
| REFL PAV MRK TY I (W)(SLD)(100MM) | M | 527 |
| REFL PAV MRK TY I (W)(BRK)(100MM) | M | 135 |
| REFL PAV MRK TY I (Y)(SLD)(100MM) | M | 535 |
| RAIS PAV MRKR CL B (REFL) TY II C-R | EA | 43 |
| | | |

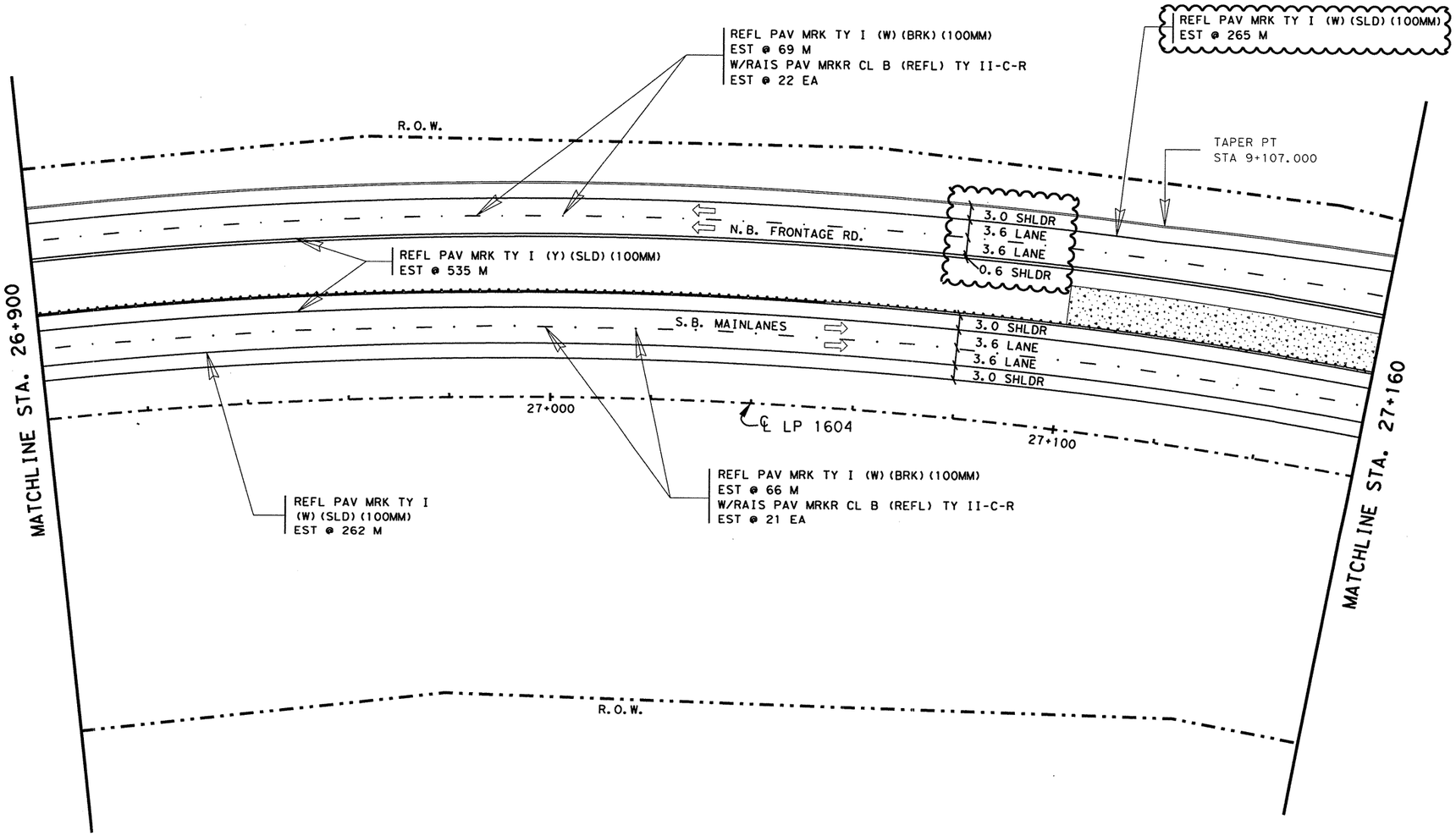


NOTE(S):

ALL DIMENSIONS ARE IN METERS UNLESS OTHERWISE NOTED.

QUANTITIES AND PLACEMENT OF TY II REFLECTIVE PAVEMENT MARKINGS ARE EXACTLY THE SAME AS TY I REFLECTIVE PAVEMENT MARKINGS. TY II QUANTITIES ACCOUNTED FOR ON THE PAVEMENT MARKING /DELINEATION SUMMARY.

ANY PAVEMENT MARKING IN CONFLICT WITH PROPOSED PAVEMENT MARKINGS SHALL BE REMOVED BY THE CONTRACTOR OR AS DIRECTED BY THE ENGINEER.

| DELINEATION QUANTITIES | | | | |
|---|---|---|---|---|
| TYPE | EA. | ASM. | SPL. MNT. | SURF. MNT. |
| D-SW(a) | | | | |
| D-DW(a) | | | | |
| D-SY(a) | | | | |
| D-DY(a) | | | | |
| OM-2SR(a) | | | | |
| | | | | |
| | | | | |
| | | | | |
| | | | | |

CHANGE ORDER 65

REVISED SHEET

CHANGE ORDER NO. 65
-REVISED FRONT. RD. LANE CONFIG.
-REVISED QUANTITIES

STATE OF TEXAS
JEROME D. PAVLISKA
76075
REGISTERED
PROFESSIONAL ENGINEER

Jerome D. Pavliska, P.E. 4-16-04
Jerome D. Pavliska, P.E. — Date

LEVELS DISPLAYED
1 2 3 4 5 6 7 8 9 10 11 12 13 14 15 16
17 18 19 20 21 22 23 24 25 26 27 28 29 30 31 32
33 34 35 36 37 38 39 40 41 42 43 44 45 46 47 48
49 50 51 52 53 54 55 56 57 58 59 60 61 62 63

ACC: t:\co\design\
lp1604fm471-90\pave-sign
FILE: pavmrkplan51*CO.dgn

©2000
Texas Department of Transportation

# PAVEMENT MARKING AND DELINEATION LAYOUT

SHEET 51 OF 57

| FED.RD. DIV.NO. | FEDERAL AID PROJECT NO. | | SHEET NO. |
|---|---|---|---|
| 6 | NH 2000(704),etc. | | 811A |
| STATE | DIST. | COUNTY | |
| TEXAS | SAT | BEXAR | |
| CONT. | SECT. | JOB | HIGHWAY NO. |
| 2452 | 01 | 036,etc. | LP 1604 |

QUANTITIES THIS SHEET
CSJ 2452-01-036

SCALE 1:1000

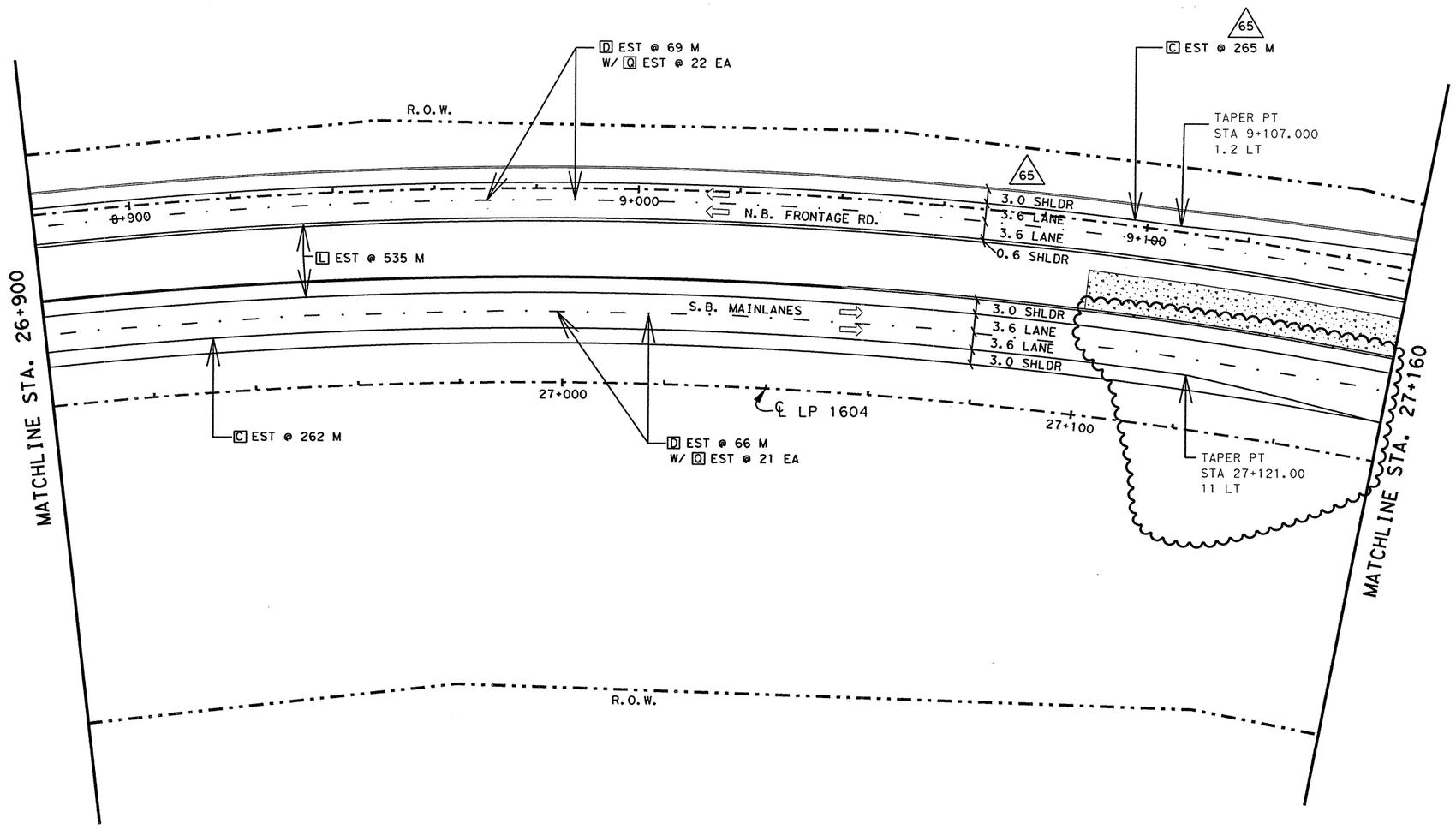


| | QUANTITY SUMMARY CSJ: 2452-01-036, etc. | | |
|---|---|---|---|
| | ITEM | UNIT | QUANTITY |
| A | OBJ MRK ASM TY 2 FLEX (OM-2SR)(1.8 M) | EA | 0 |
| B | OBJ MRK ASM TY 2 SURF MNT (OM-2HP)(SPL) | EA | 0 |
| C | REFL PAV MRK TY I (W)(SLD)(100 MM) | M | 527 |
| D | REFL PAV MRK TY I (W)(BRK)(100 MM) | M | 135 |
| E | REFL PAV MRK TY I (W)(DOT)(100 MM) | M | 0 |
| F | REFL PAV MRK TY I (W)(SLD)(200 MM) | M | 0 |
| G | REFL PAV MRK TY I (W)(BRK)(200 MM) | M | 0 |
| H | REFL PAV MRK TY I (W)(SLD)(600 MM) | M | 0 |
| I | REFL PAV MRK TY I (W)(ARROW) | EA | 0 |
| J | REFL PAV MRK TY I (W)(DBL ARROW) | EA | 0 |
| K | REFL PAV MRK TY I (W)(WORD) | EA | 0 |
| L | REFL PAV MRK TY I (Y)(SLD)(100 MM) | M | 535 |
| M | REFL PAV MRK TY I (Y)(SLD)(200 MM) | M | 0 |
| N | REFL PAV MRK TY I (Y)(SLD)(600 MM) | M | 0 |
| O | REFL PAV MRK TY I (Y)(MED NOSE) | EA | 0 |
| P | RAIS PAV MRKR CL B (REFL) TY II-A-A (HV) | EA | 0 |
| Q | RAIS PAV MRKR CL B (REFL) TY II-C-R (HV) | EA | 43 |

NOTE(S):

ALL DIMENSIONS ARE IN METERS UNLESS OTHERWISE NOTED.

QUANTITIES AND PLACEMENT OF TY II REFLECTIVE PAVEMENT MARKINGS ARE EXACTLY THE SAME AS TY I REFLECTIVE PAVEMENT MARKINGS.

ANY PAVEMENT MARKING IN CONFLICT WITH PROPOSED PAVEMENT MARKINGS SHALL BE REMOVED BY THE CONTRACTOR OR AS DIRECTED BY THE ENGINEER.

CHANGE ORDER #140

REVISED SHEET

CHANGE ORDER NO. 140
-ADDED NEW INTERSECTION SPURS RANCH RD.
-NO QUANTITY CHANGE

STATE OF TEXAS
MIGUEL G. ROGERIO
96620
LICENSED PROFESSIONAL ENGINEER

Miguel G. Rogerio 10/18/2006
Miguel G. Rogerio, P.E. Date

# REFERS TO CHANGES MADE AS PART OF CHANGE ORDER.

©2006

Texas Department of Transportation

PAVEMENT MARKING AND DELINEATION LAYOUT

SHEET 51 OF 57

| FED.RD. DIV.NO. | FEDERAL AID PROJECT NO. | | SHEET NO. |
|---|---|---|---|
| 6 | NH 2000(704), etc. | | 811AA |
| STATE | DIST. | COUNTY | |
| TEXAS | SAT | BEXAR | |
| CONT. | SECT. | JOB | HIGHWAY NO. |
| 2452 | 01 | 036, etc. | LP 1604 |

LEVELS DISPLAYED
1 2 3 4 5 6 7 8 9 10 11 12 13 14 15 16
17 18 19 20 21 22 23 24 25 26 27 28 29 30 31 32
33 34 35 36 37 38 39 40 41 42 43 44 45 46 47 48
49 50 51 52 53 54 55 56 57 58 59 60 61 62 63 64

T:\AO\Construction\2452-01-036\CO\CO#140\pavmrkplan51*co.dgn
10/17/2006
5:53:17 PM

QUANTITIES THIS SHEET
CSJ 2452-01-036

SCALE 1:1000

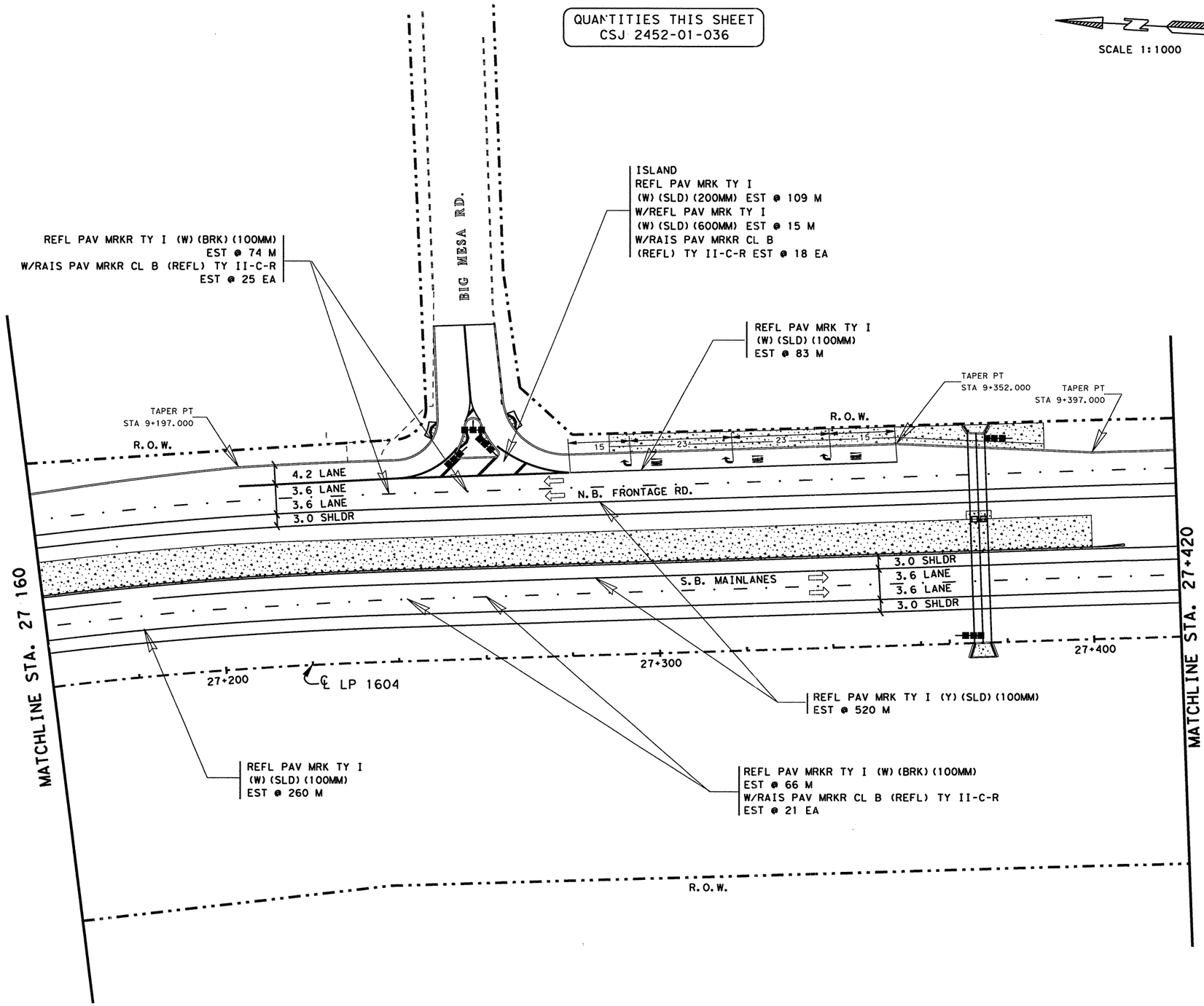


## ESTIMATED QUANTITIES

| ITEM | UNIT | QUANTITY 2452-01-036 |
|---|---|---|
| REFL PAV MRK TY I (W)(SLD)(100MM) | M | 343 |
| REFL PAV MRK TY I (W)(BRK)(100MM) | M | 140 |
| REFL PAV MRK TY I (W)(SLD)(200MM) | M | 109 |
| REFL PAV MRK TY I (W)(SLD)(600MM) | M | 15 |
| REFL PAV MRK TY I (W)(ARROW) | EA | 3 |
| REFL PAV MRK TY I (W)(WORD) | EA | 3 |
| REFL PAV MRK TY I (Y)(SLD)(100MM) | M | 520 |
| RAIS PAV MRKR CL B (REFL) TY II C-R | EA | 64 |
| | | |

NOTE(S):

ALL DIMENSIONS ARE IN METERS UNLESS OTHERWISE NOTED.

QUANTITIES AND PLACEMENT OF TY II REFLECTIVE PAVEMENT MARKINGS ARE EXACTLY THE SAME AS TY I REFLECTIVE PAVEMENT MARKINGS. TY II QUANTITIES ACCOUNTED FOR ON THE PAVEMENT MARKING /DELINEATION SUMMARY.

ANY PAVEMENT MARKING IN CONFLICT WITH PROPOSED PAVEMENT MARKINGS SHALL BE REMOVED BY THE CONTRACTOR OR AS DIRECTED BY THE ENGINEER.

FOR ADDITIONAL DATA/DIMENSIONS, SEE INTERSECTION LAYOUT DETAIL SHEET(S) 333 .

## DELINEATION QUANTITIES

| TYPE | EA. | ASM. | SPL. MNT. | SURF. MNT. |
|---|---|---|---|---|
| D-SW(a) | | | | |
| D-DW(a) | | | | |
| D-SY(a) | | | | |
| D-DY(a) | | | | |
| OM-2SR(a) | | 4 | | |
| OM-2HP(Spl) | | 1 | | |
| | | | | |
| | | | | |
| | | | | |

STATE OF TEXAS
JOEL K. DAVENPORT, JR.
79276
REGISTERED PROFESSIONAL ENGINEER

Joel K. Davenport, Jr. 9/19/00
Joel K. Davenport, Jr. P.E. 79276 Date

LEVELS DISPLAYED
1 1 2 3 4 5 6 7 8 9 10 11 12 13 14 15 16
- - 2 12 22 32 42 52 62 72 82 92 103 132
33 34 35 36 37 38 39 40 41 42 43 44 45 46 47 48
49 50 51 52 53 54 55 65 75 85 96 106 163

ACC: t:\ao\design\lp1604fm471-90\pave-sign\
FILE: pavmrkplan52.dgn

© 2000 Texas Department of Transportation

# PAVEMENT MARKING AND DELINEATION LAYOUT

SHEET 52 OF 57

| FED. RD. DIV. NO. | FEDERAL AID PROJECT NO. | | SHEET NO. |
|---|---|---|---|
| 6 | NH 2000(704), etc. | | 812 |
| STATE | DIST. | COUNTY | |
| TEXAS | SAT | BEXAR | |
| CONT. | SECT. | JOB | HIGHWAY NO. |
| 2452 | 01 | 036, etc. | LP 1604 |

QUANTITIES THIS SHEET
CSJ 2452-01-036

SCALE 1:1000

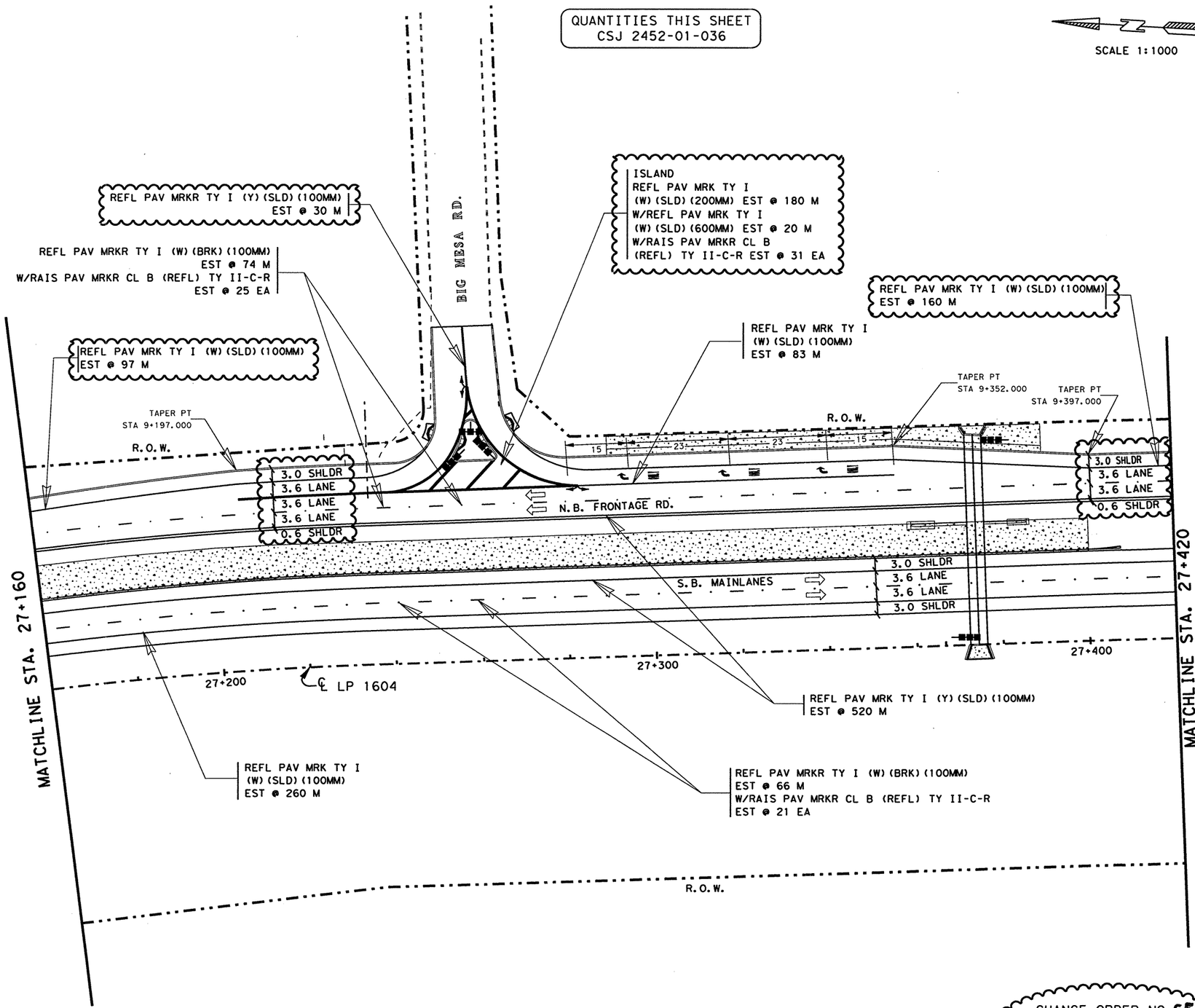


## ESTIMATED QUANTITIES

| ITEM | UNIT | QUANTITY 2452-01-036 |
|---|---|---|
| REFL PAV MRK TY I (W) (SLD) (100MM) | M | 600 |
| REFL PAV MRK TY I (W) (BRK) (100MM) | M | 40 |
| REFL PAV MRK TY I (W) (SLD) (200MM) | M | 180 |
| REFL PAV MRK TY I (W) (SLD) (600MM) | M | 30 |
| REFL PAV MRK TY I (W) (ARROW) | EA | 3 |
| REFL PAV MRK TY I (W) (WORD) | EA | 3 |
| REFL PAV MRK TY I (Y) (SLD) (100MM) | M | 550 |
| RAIS PAV MRKR CL B (REFL) TY II C-R | EA | 77 |

NOTE(S):

ALL DIMENSIONS ARE IN METERS UNLESS OTHERWISE NOTED.

QUANTITIES AND PLACEMENT OF TY II REFLECTIVE PAVEMENT MARKINGS ARE EXACTLY THE SAME AS TY I REFLECTIVE PAVEMENT MARKINGS. TY II QUANTITIES ACCOUNTED FOR ON THE PAVEMENT MARKING /DELINEATION SUMMARY.

ANY PAVEMENT MARKING IN CONFLICT WITH PROPOSED PAVEMENT MARKINGS SHALL BE REMOVED BY THE CONTRACTOR OR AS DIRECTED BY THE ENGINEER.

FOR ADDITIONAL DATA/DIMENSIONS, SEE INTERSECTION LAYOUT DETAIL SHEET(S) 333 .

## DELINEATION QUANTITIES

| TYPE | EA. | ASM. | SPL. MNT. | SURF. MNT. |
|---|---|---|---|---|
| D-SW(a) | | | | |
| D-DW(a) | | | | |
| D-SY(a) | | | | |
| D-DY(a) | | | | |
| OM-2SR(a) | | 4 | | |
| OM-2HP(Spl) | | 1 | | |
| | | | | |
| | | | | |
| | | | | |

CHANGE ORDER 65

REVISED SHEET

CHANGE ORDER NO. 65
-REVISED FRONT. RD. LANE CONFIG.
-REVISED QUANTITIES

STATE OF TEXAS
JEROME D. PAVLISKA
76075
REGISTERED PROFESSIONAL ENGINEER

Jerome D. Pavliska, P.E. 4-06-04
Jerome D. Pavliska, P.E. Date

©2000
Texas Department of Transportation

# PAVEMENT MARKING AND DELINEATION LAYOUT

SHEET 52 OF 57

| FED.RD. DIV.NO. | FEDERAL AID PROJECT NO. | | SHEET NO. |
|---|---|---|---|
| 6 | NH 2000(704), etc. | | 812A |
| STATE | DIST. | COUNTY | |
| TEXAS | SAT | BEXAR | |
| CONT. | SECT. | JOB | HIGHWAY NO. |
| 2452 | 01 | 036, etc. | LP 1604 |

04-04-04

LEVELS DISPLAYED
1 2 3 4 5 6 7 8 9 10 11 12 13 14 15 16
3 3 3 5 3 5 6 7 8 3 9 4 0 4 1 4 2 4 3 4 4 5 4 6 4 7 4 8
4 9 5 0 5 1 5 2 5 3 5 4 5 5 5 6 5 7 5 8 5 9 6 0 6 1 6 2 6 3

ACC: t:\oo\design\
lp1604fm471-90\pave-sign\
FILE: pavmrkplan52.dgn

QUANTITIES THIS SHEET
CSJ 2452-01-036

SCALE 1:1000

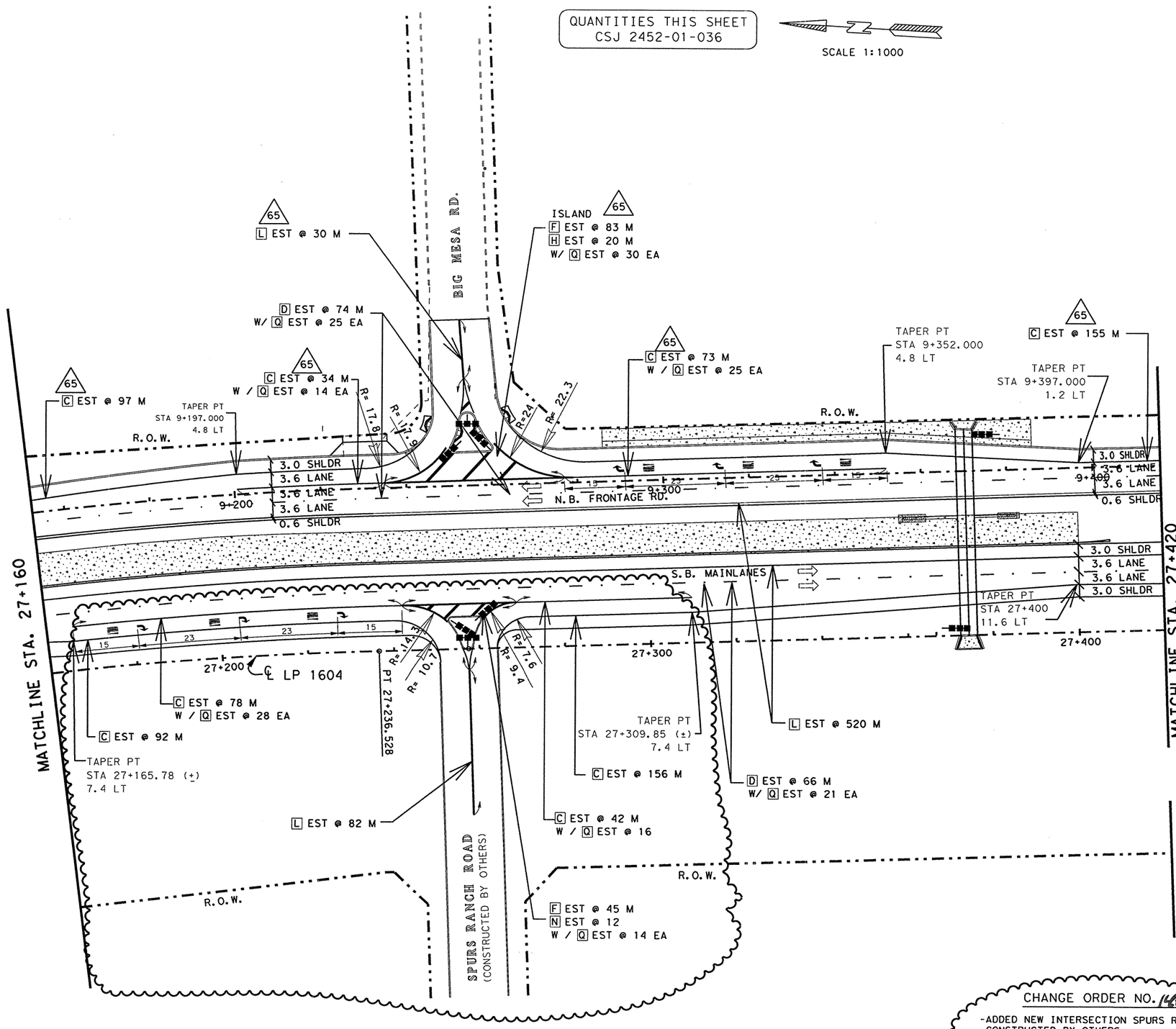


| | QUANTITY SUMMARY CSJ: 2452-01-036, etc. | | |
|---|---|---|---|
| | ITEM | UNIT | QUANTITY |
| A | OBJ MRK ASM TY 2 FLEX (OM-2SR)(1.8 M) | EA | 6 |
| B | OBJ MRK ASM TY 2 SURF MNT (OM-2HP)(SPL) | EA | 2 |
| C | REFL PAV MRK TY I (W)(SLD)(100 MM) | M | 727 |
| D | REFL PAV MRK TY I (W)(BRK)(100 MM) | M | 140 |
| E | REFL PAV MRK TY I (W)(DOT)(100 MM) | M | 0 |
| F | REFL PAV MRK TY I (W)(SLD)(200 MM) | M | 128 |
| G | REFL PAV MRK TY I (W)(BRK)(200 MM) | M | 0 |
| H | REFL PAV MRK TY I (W)(SLD)(600 MM) | M | 32 |
| I | REFL PAV MRK TY I (W)(ARROW) | EA | 6 |
| J | REFL PAV MRK TY I (W)(DBL ARROW) | EA | 0 |
| K | REFL PAV MRK TY I (W)(WORD) | EA | 6 |
| L | REFL PAV MRK TY I (Y)(SLD)(100 MM) | M | 632 |
| M | REFL PAV MRK TY I (Y)(SLD)(200 MM) | M | 0 |
| N | REFL PAV MRK TY I (Y)(SLD)(600 MM) | M | 0 |
| O | REFL PAV MRK TY I (Y)(MED NOSE) | EA | 0 |
| P | RAIS PAV MRKR CL B (REFL) TY II-A-A (HV) | EA | 0 |
| Q | RAIS PAV MRKR CL B (REFL) TY II-C-R (HV) | EA | 173 |

NOTE(S):

ALL DIMENSIONS ARE IN METERS UNLESS OTHERWISE NOTED.

QUANTITIES AND PLACEMENT OF TY II REFLECTIVE PAVEMENT MARKINGS ARE EXACTLY THE SAME AS TY I REFLECTIVE PAVEMENT MARKINGS.

ANY PAVEMENT MARKING IN CONFLICT WITH PROPOSED PAVEMENT MARKINGS SHALL BE REMOVED BY THE CONTRACTOR OR AS DIRECTED BY THE ENGINEER.

FOR ADDITIONAL DATA/DIMENSIONS, SEE INTERSECTION LAYOUT DETAIL SHEET(S) 333 .

CHANGE ORDER #140

REVISED SHEET

CHANGE ORDER NO. 140
-ADDED NEW INTERSECTION SPURS RANCH ROAD, CONSTRUCTED BY OTHERS.
-ADDED/REVISED QUANTITIES

# REFERS TO CHANGE'S MADE AS PART OF CHANGE ORDER.

STATE OF TEXAS
MIGUEL G. ROGERIO
96620
LICENSED
PROFESSIONAL ENGINEER

Miguel G. Rogerio P.E. — Date 10/18/2006

©2006
Texas Department of Transportation

# PAVEMENT MARKING AND DELINEATION LAYOUT

SHEET 52 OF 57

| FED.RD. DIV.NO. | FEDERAL AID PROJECT NO. | | SHEET NO. |
|---|---|---|---|
| 6 | NH 2000(704), etc. | | 812AA |
| STATE | DIST. | COUNTY | |
| TEXAS | SAT | BEXAR | |
| CONT. | SECT. | JOB | HIGHWAY NO. |
| 2452 | 01 | 036, etc. | LP 1604 |

LEVELS DISPLAYED
1 2 3 4 5 6 7 8 9 10 11 12 31 41 51 6
33 43 53 63 73 83 94 04 14 24 34 44 54 64 74 84
49 50 51 52 53 54 55 56 57 58 59 60 61 62 63
T:\AO\Construction\2452-01-036\CO\CO#140\pavmrkplan52*co.dgn
10/17/2006
5:53:45 PM

NOTE(S):

ALL DIMENSIONS ARE IN METERS UNLESS OTHERWISE NOTED.

QUANTITIES AND PLACEMENT OF TY II REFLECTIVE PAVEMENT MARKINGS ARE EXACTLY THE SAME AS TY I REFLECTIVE PAVEMENT MARKINGS. TY I AND TY II QUANTITIES ACCOUNTED FOR ON THE PAVEMENT MARKING /DELINEATION SUMMARY UNDER CHANGE ORDER NO. 65 AND 140.

ANY PAVEMENT MARKING IN CONFLICT WITH PROPOSED PAVEMENT MARKINGS SHALL BE REMOVED BY THE CONTRACTOR OR AS DIRECTED BY THE ENGINEER.

SCALE 1:1000

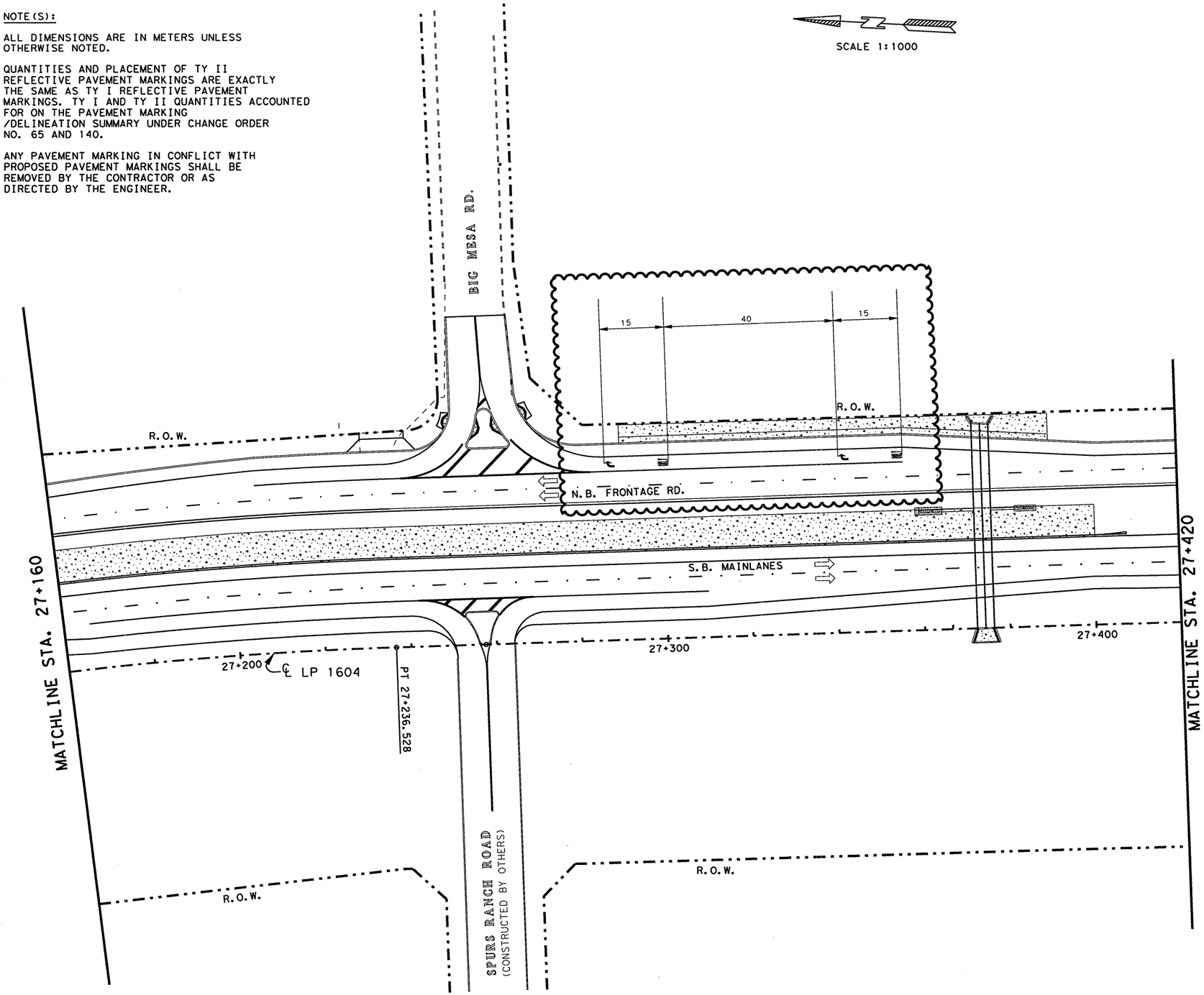


10 ONLY

**SUPPLEMENT SHEET**

-REVISE LP 1604 NBFR SPACING FOR "ARROW" & "WORD" STRIPING.

-ELIMINATE "ARROW" & "WORD" ON LP 1604 NBFR THRU LANES.

STATE OF TEXAS
MIGUEL G. ROGERIO
96620
LICENSED
PROFESSIONAL ENGINEER

Miguel G. Rogerio, P.E. 5/7/2007
Miguel G. Rogerio, P.E. Date

Revised sheet

©2007

Texas Department of Transportation

# PAVEMENT MARKING LAYOUT

**SHEET 52a OF 57**

| FED. RD. DIV. NO. | FEDERAL AID PROJECT NO. | | SHEET NO. |
|---|---|---|---|
| 6 | NH 2000(704), etc. | | 812AAA |
| STATE | DIST. | COUNTY | |
| TEXAS | SAT | BEXAR | |
| CONT. | SECT. | JOB | HIGHWAY NO. |
| 2452 | 01 | 036, etc. | LP 1604 |

LEVELS DISPLAYED
1 2 3 4 5 6 7 8 | 1 2 3 4 5 6
2 2 2 2 2 2 2 2 2 3 0 3 1 2
3 3 3 4 3 4 3 5 3 6 3 7 4 1 4 2 4 3 4 4 4 5 4 6 4 7 4 8
4 9 5 0 5 1 5 2 5 3 5 4 5 5 5 6 5 7 5 8 5 9 6 0 6 1

T:\AO\Construction\2452-01-036 (LP 1604)\CO\CO#140\pavmrkplan52*cooa.dgn
5/22/2007
5:15:12 PM
BJS

QUANTITIES THIS SHEET
CSJ 2452-01-036

SCALE 1:1000

| ESTIMATED QUANTITIES | | |
|---|---|---|
| ITEM | UNIT | QUANTITY |
| | | 2452-01-036 |
| REFL PAV MRK TY I (W)(SLD)(100MM) | M | 284 |
| REFL PAV MRK TY I (W)(BRK)(100MM) | M | 126 |
| REFL PAV MRK TY I (Y)(SLD)(100MM) | M | 520 |
| RAIS PAV MRKR CL B (REFL) TY II C-R | EA | 44 |
| | | |

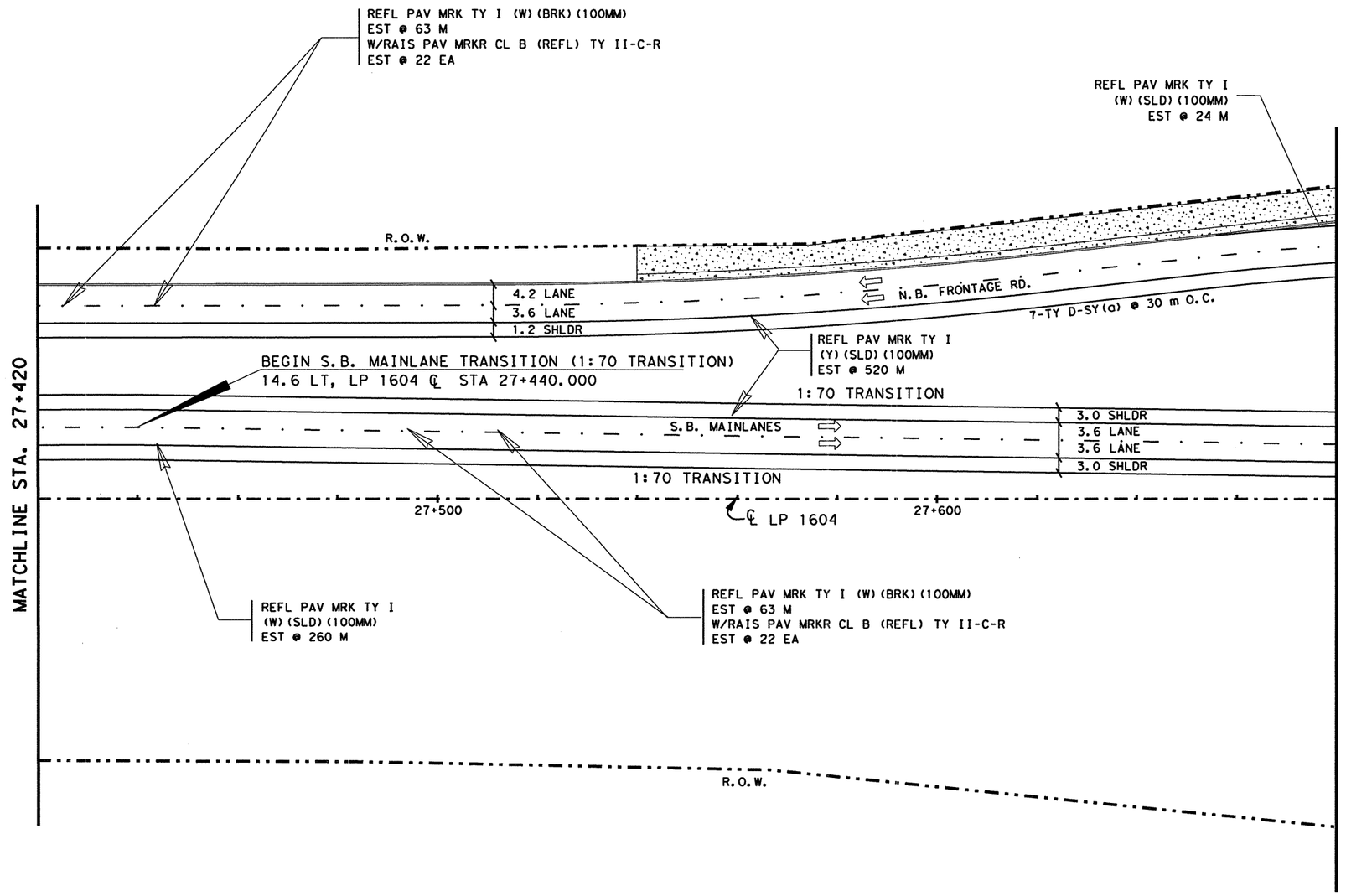


NOTE(S):

ALL DIMENSIONS ARE IN METERS UNLESS OTHERWISE NOTED.

QUANTITIES AND PLACEMENT OF TY II REFLECTIVE PAVEMENT MARKINGS ARE EXACTLY THE SAME AS TY I REFLECTIVE PAVEMENT MARKINGS. TY II QUANTITIES ACCOUNTED FOR ON THE PAVEMENT MARKING /DELINEATION SUMMARY.

ANY PAVEMENT MARKING IN CONFLICT WITH PROPOSED PAVEMENT MARKINGS SHALL BE REMOVED BY THE CONTRACTOR OR AS DIRECTED BY THE ENGINEER.

| DELINEATION QUANTITIES | | | | |
|---|---|---|---|---|
| TYPE | EA. | ASM. | SPL. MNT. | SURF. MNT. |
| D-SW(a) | | | | |
| D-DW(a) | | | | |
| D-SY(a) | | 7 | | |
| D-DY(a) | | | | |
| OM-2SR(a) | | | | |
| | | | | |
| | | | | |
| | | | | |
| | | | | |

LEVELS DISPLAYED
1 2 3 4 5 6 7 8 9 10 11 12 21 31 41 51 61
1 2 22 32 42 52 62 72 82 93 03 13 23
33 43 53 63 73 83 94 04 14 24 34 44 54 64 74 84 94
49 60 51 52 53 54 55 56 57 58 59 60 61 62 63

ACC: t:\oo\design\
lp1604fm471-90\pave-sign
FILE: pavmrkplan53.dgn

STATE OF TEXAS
JOEL K. DAVENPORT, JR.
79276
REGISTERED
PROFESSIONAL ENGINEER

Joel K. Davenport, Jr. P.E. 79276 — 9/19/00
Date

©2000 Texas Department of Transportation

# PAVEMENT MARKING AND DELINEATION LAYOUT

SHEET 53 OF 57

| FED.RD. DIV.NO. | FEDERAL AID PROJECT NO. | | SHEET NO. |
|---|---|---|---|
| 6 | NH 2000(704),etc. | | 813 |
| STATE | DIST. | COUNTY | |
| TEXAS | SAT | BEXAR | |
| CONT. | SECT. | JOB | HIGHWAY NO. |
| 2452 | 01 | 036,etc. | LP 1604 |

QUANTITIES THIS SHEET
CSJ 2452-01-036

SCALE 1:1000

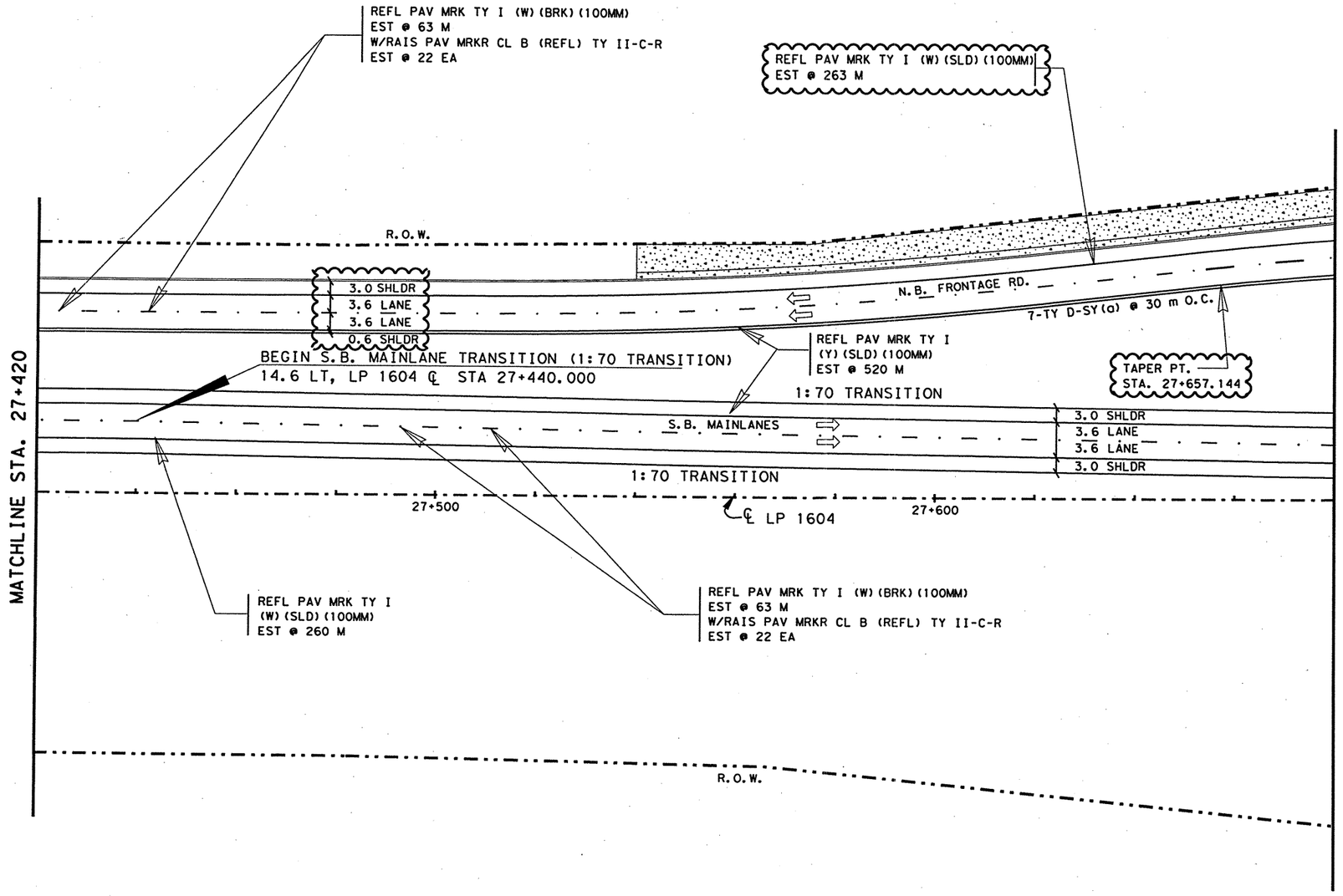


## ESTIMATED QUANTITIES

| ITEM | UNIT | QUANTITY |
|---|---|---|
| | | 2452-01-036 |
| REFL PAV MRK TY I (W)(SLD)(100MM) | M | 523 |
| REFL PAV MRK TY I (W)(BRK)(100MM) | M | 126 |
| REFL PAV MRK TY I (Y)(SLD)(100MM) | M | 520 |
| RAIS PAV MRKR CL B (REFL) TY II C-R | EA | 44 |
| | | |

NOTE(S):

ALL DIMENSIONS ARE IN METERS UNLESS OTHERWISE NOTED.

QUANTITIES AND PLACEMENT OF TY II REFLECTIVE PAVEMENT MARKINGS ARE EXACTLY THE SAME AS TY I REFLECTIVE PAVEMENT MARKINGS. TY II QUANTITIES ACCOUNTED FOR ON THE PAVEMENT MARKING /DELINEATION SUMMARY.

ANY PAVEMENT MARKING IN CONFLICT WITH PROPOSED PAVEMENT MARKINGS SHALL BE REMOVED BY THE CONTRACTOR OR AS DIRECTED BY THE ENGINEER.

## DELINEATION QUANTITIES

| TYPE | EA. | ASM. | SPL. MNT. | SURF. MNT. |
|---|---|---|---|---|
| D-SW(a) | | | | |
| D-DW(a) | | | | |
| D-SY(a) | | 7 | | |
| D-DY(a) | | | | |
| OM-2SR(a) | | | | |
| | | | | |
| | | | | |
| | | | | |
| | | | | |

CHANGE ORDER 65

REVISED SHEET

CHANGE ORDER NO. 65
-REVISED FRONT. RD. LANE CONFIG.
-REVISED QUANTITIES

STATE OF TEXAS
JEROME D. PAVLISKA
76075
REGISTERED
PROFESSIONAL ENGINEER

Jerome D. Pavliska, P.E. 2/06/04
Jerome D. Pavliska, P.E. — Date

©2000
Texas Department of Transportation

# PAVEMENT MARKING AND DELINEATION LAYOUT

SHEET 53 OF 57

| FED.RD. DIV.NO. | FEDERAL AID PROJECT NO. | | SHEET NO. |
|---|---|---|---|
| 6 | NH 2000(704), etc. | | 813A |
| STATE | DIST. | COUNTY | |
| TEXAS | SAT | BEXAR | |
| CONT. | SECT. | JOB | HIGHWAY NO. |
| 2452 | 01 | 036, etc. | LP 1604 |

02-04-04

LEVELS DISPLAYED
1 2 3 4 5 6 7 8 9 10 11 12 13 14 15 16
33 34 35 36 37 38 39 40 41 42 43 44 45 46 47 48
49 50 51 52 53 54 55 56 57 58 59 60 61 62 63

ACC: t:\oo\design\
lp1604fm471-90\pave-sign

FILE: pavmrkplan53.dgn

QUANTITIES THIS SHEET
CSJ 2452-01-036

SCALE 1:1000

## ESTIMATED QUANTITIES

| ITEM | UNIT | QUANTITY 2452-01-036 |
|---|---|---|
| REFL PAV MRK TY I (W) (SLD) (100MM) | M | 520 |
| REFL PAV MRK TY I (W) (BRK) (100MM) | M | 132 |
| REFL PAV MRK TY I (W) (SLD) (600MM) | M | 52 |
| REFL PAV MRK TY I (Y) (SLD) (100MM) | M | 512 |
| REFL PAV MRK TY I (Y) (SLD) (200MM) | M | 9 |
| REFL PAV MRK TY I (Y) (SLD) (600MM) | M | 5 |
| RAIS PAV MRKR CL B (REFL) TY II C-R | EA | 46 |
| | | |

NOTE(S):

ALL DIMENSIONS ARE IN METERS UNLESS OTHERWISE NOTED.

QUANTITIES AND PLACEMENT OF TY II REFLECTIVE PAVEMENT MARKINGS ARE EXACTLY THE SAME AS TY I REFLECTIVE PAVEMENT MARKINGS. TY II QUANTITIES ACCOUNTED FOR ON THE PAVEMENT MARKING /DELINEATION SUMMARY.

ANY PAVEMENT MARKING IN CONFLICT WITH PROPOSED PAVEMENT MARKINGS SHALL BE REMOVED BY THE CONTRACTOR OR AS DIRECTED BY THE ENGINEER.

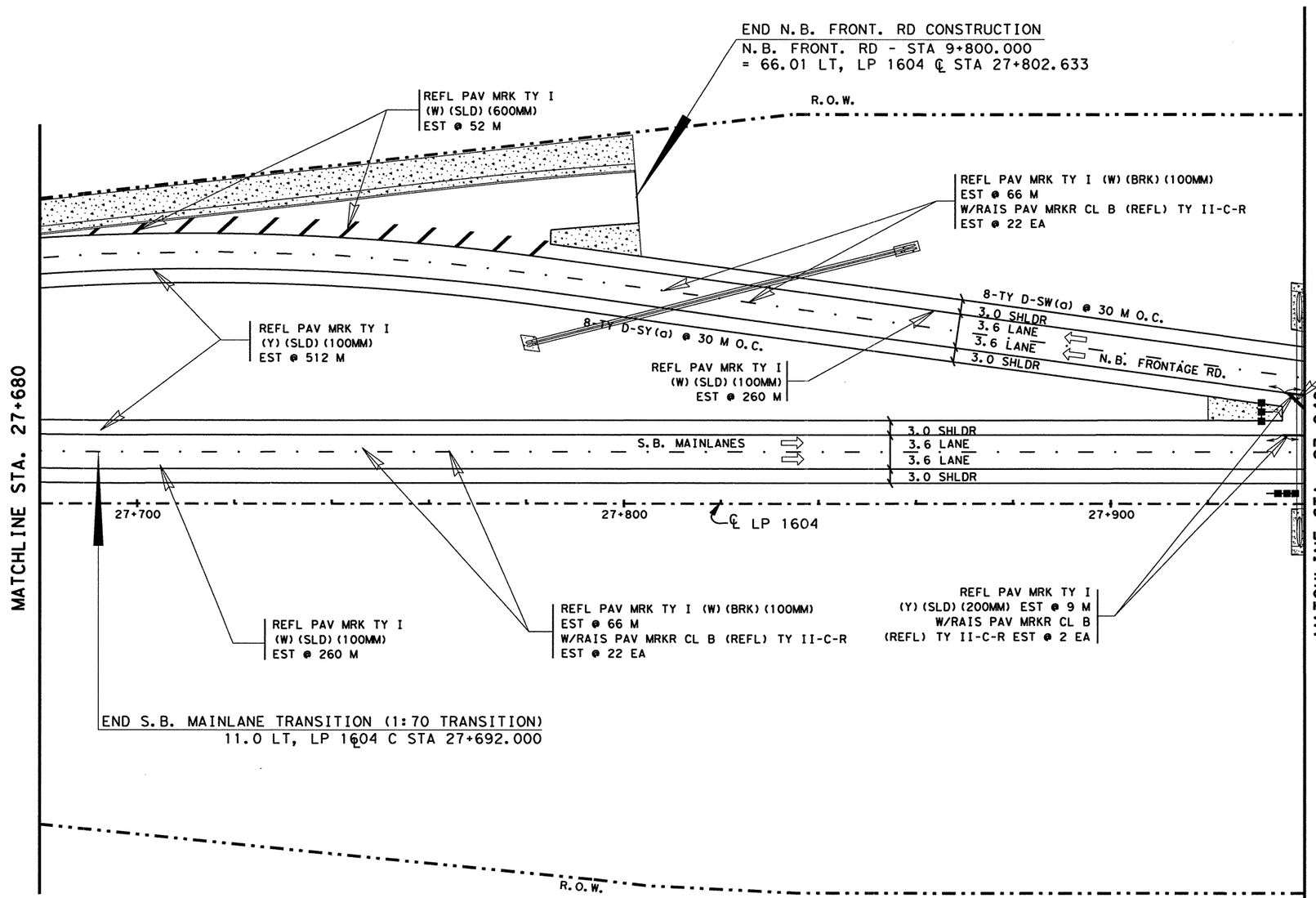


### DELINEATION QUANTITIES

| TYPE | EA. | ASM. | SPL. MNT. | SURF. MNT. |
|---|---|---|---|---|
| D-SW(a) | | 8 | | |
| D-DW(a) | | | | |
| D-SY(a) | | 8 | | |
| D-DY(a) | | | | |
| OM-2SR | | 1 | | |
| OM-2HP(Spl) | | 1 | | |
| | | | | |
| | | | | |
| | | | | |

STATE OF TEXAS
JOEL K. DAVENPORT, JR.
79276
REGISTERED
PROFESSIONAL ENGINEER

Joel K Davenport Jr 9/19/00
Joel K. Davenport, Jr. P.E. 79276 Date

©2000

Texas Department of Transportation

# PAVEMENT MARKING AND DELINEATION LAYOUT

SHEET 54 OF 57

| FED. RD. DIV. NO. | FEDERAL AID PROJECT NO. | | SHEET NO. |
|---|---|---|---|
| 6 | NH 2000(704), etc. | | 814 |
| STATE | DIST. | COUNTY | |
| TEXAS | SAT | BEXAR | |
| CONT. | SECT. | JOB | HIGHWAY NO. |
| 2452 | 01 | 036, etc. | LP 1604 |

LEVELS DISPLAYED
1 2 3 4 5 6 7 8 9 10 11 12 31 48 51 63
20 21 22 32 62 72 92 93 131 132
33 34 35 53 63 73 83 93 94 101 142 143 144 145 146 147 148
49 50 51 52 53 54 55 56 57 58 59 60 61 62 63

ACC: t:\ao\design\
ip1604fm471-90\pave-sign\
FILE: pavmrkplan54.dgn

QUANTITIES THIS SHEET
CSJ 2452-01-036

SCALE 1:1000

| ESTIMATED QUANTITIES | | |
|---|---|---|
| ITEM | UNIT | QUANTITY |
| | | 2452-01-036 |
| REFL PAV MRK TY I (W)(SLD)(100MM) | M | 520 |
| REFL PAV MRK TY I (W)(BRK)(100MM) | M | 132 |
| REFL PAV MRK TY I (W)(SLD)(600MM) | M | 66 |
| REFL PAV MRK TY I (Y)(SLD)(100MM) | M | 512 |
| REFL PAV MRK TY I (Y)(SLD)(200MM) | M | 9 |
| REFL PAV MRK TY I (Y)(SLD)(600MM) | M | 5 |
| RAIS PAV MRKR CL B (REFL) TY II C-R | EA | 46 |
| | | |

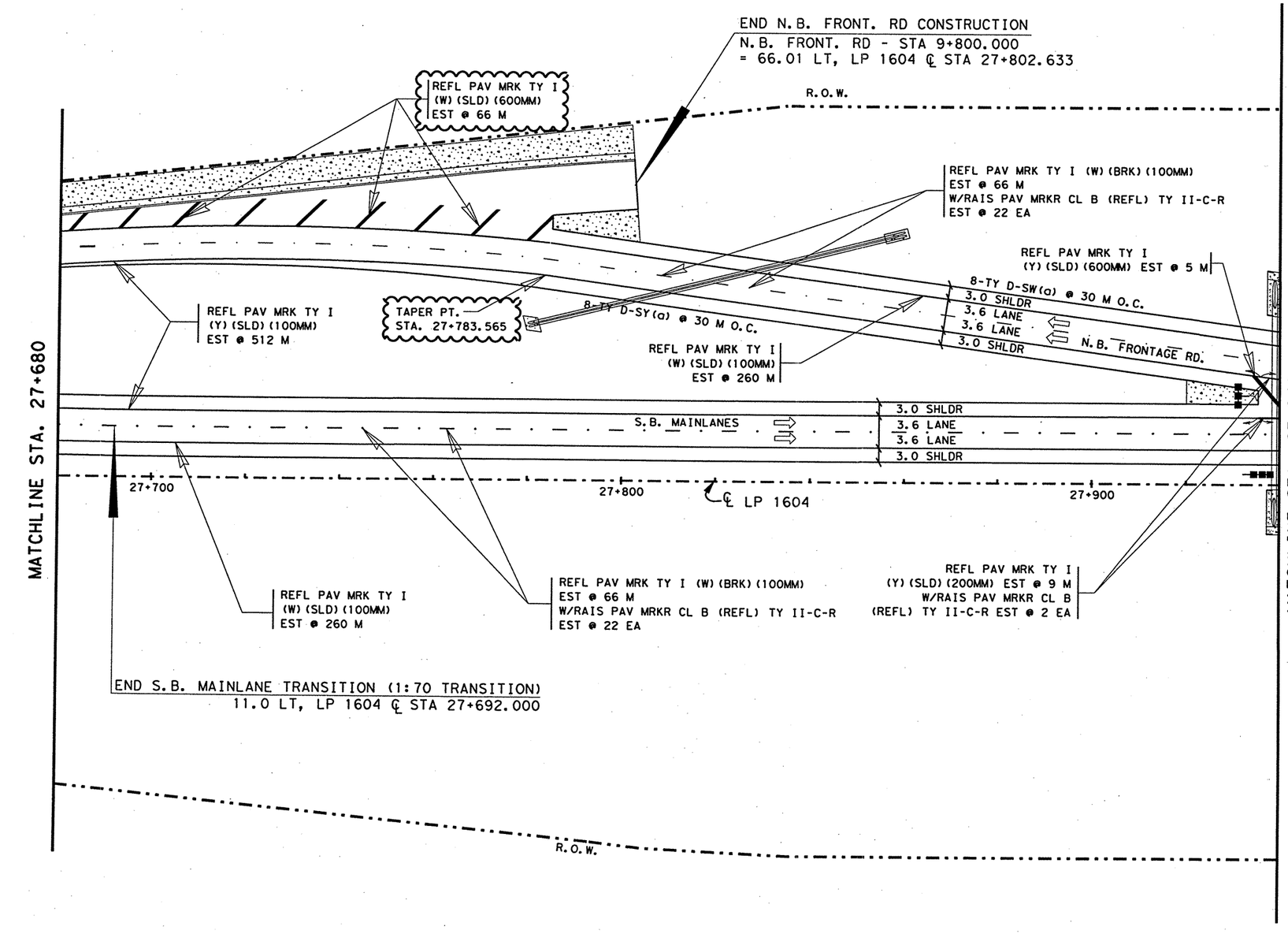


NOTE(S):

ALL DIMENSIONS ARE IN METERS UNLESS OTHERWISE NOTED.

QUANTITIES AND PLACEMENT OF TY II REFLECTIVE PAVEMENT MARKINGS ARE EXACTLY THE SAME AS TY I REFLECTIVE PAVEMENT MARKINGS. TY II QUANTITIES ACCOUNTED FOR ON THE PAVEMENT MARKING /DELINEATION SUMMARY.

ANY PAVEMENT MARKING IN CONFLICT WITH PROPOSED PAVEMENT MARKINGS SHALL BE REMOVED BY THE CONTRACTOR OR AS DIRECTED BY THE ENGINEER.

| DELINEATION QUANTITIES | | | | |
|---|---|---|---|---|
| TYPE | EA. | ASM. | SPL. MNT. | SURF. MNT. |
| D-SW(a) | | 8 | | |
| D-DW(a) | | | | |
| D-SY(a) | | 8 | | |
| D-DY(a) | | | | |
| OM-2SR | | 1 | | |
| OM-2HP(Spl) | | 1 | | |
| | | | | |

CHANGE ORDER 65

REVISED SHEET

CHANGE ORDER NO. 65
-REVISED FRONT. RD. LANE CONFIG.
-REVISED QUANTITIES

STATE OF TEXAS
JEROME D. PAVLISKA
76075
REGISTERED PROFESSIONAL ENGINEER

Jerome D. Pavliska, P.E. 2/06/04
Jerome D. Pavliska, P.E. Date

LEVELS DISPLAYED
1 2 3 4 5 6 7 8 9 10 11 12 13 14 15 16
2 20 21 22 32 42 52 62 72 82 92 93 131 132
33 43 53 63 73 83 94 104 124 134 144 154 164 174 18
49 50 51 52 53 54 55 56 57 58 59 60 61 62 63

ACC: t:\ao\design\ip1604fm471-90\pave-sign\
FILE: pavmrkplan54.dgn

©2000
Texas Department of Transportation

# PAVEMENT MARKING AND DELINEATION LAYOUT

SHEET 54 OF 57

| FED.RD. DIV.NO. | FEDERAL AID PROJECT NO. | | SHEET NO. |
|---|---|---|---|
| 6 | NH 2000(704),etc. | | 814A |
| STATE | DIST. | COUNTY | |
| TEXAS | SAT | BEXAR | |
| CONT. | SECT. | JOB | HIGHWAY NO. |
| 2452 | 01 | 036,etc. | LP 1604 |

02-04-04

QUANTITIES THIS SHEET
CSJ 2452-01-036

SCALE 1:1000

## ESTIMATED QUANTITIES

| ITEM | UNIT | QUANTITY 2452-01-036 |
|---|---|---|
| REFL PAV MRK TY I (W)(SLD)(100MM) | M | 520 |
| REFL PAV MRK TY I (W)(BRK)(100MM) | M | 132 |
| REFL PAV MRK TY I (Y)(SLD)(100MM) | M | 320 |
| REFL PAV MRK TY I (Y)(SLD)(200MM) | M | 195 |
| REFL PAV MRK TY I (Y)(SLD)(600MM) | M | 50 |
| RAIS PAV MRKR CL B (REFL) TY II A-A | EA | 87 |
| RAIS PAV MRKR CL B (REFL) TY II C-R | EA | 42 |
| | | |

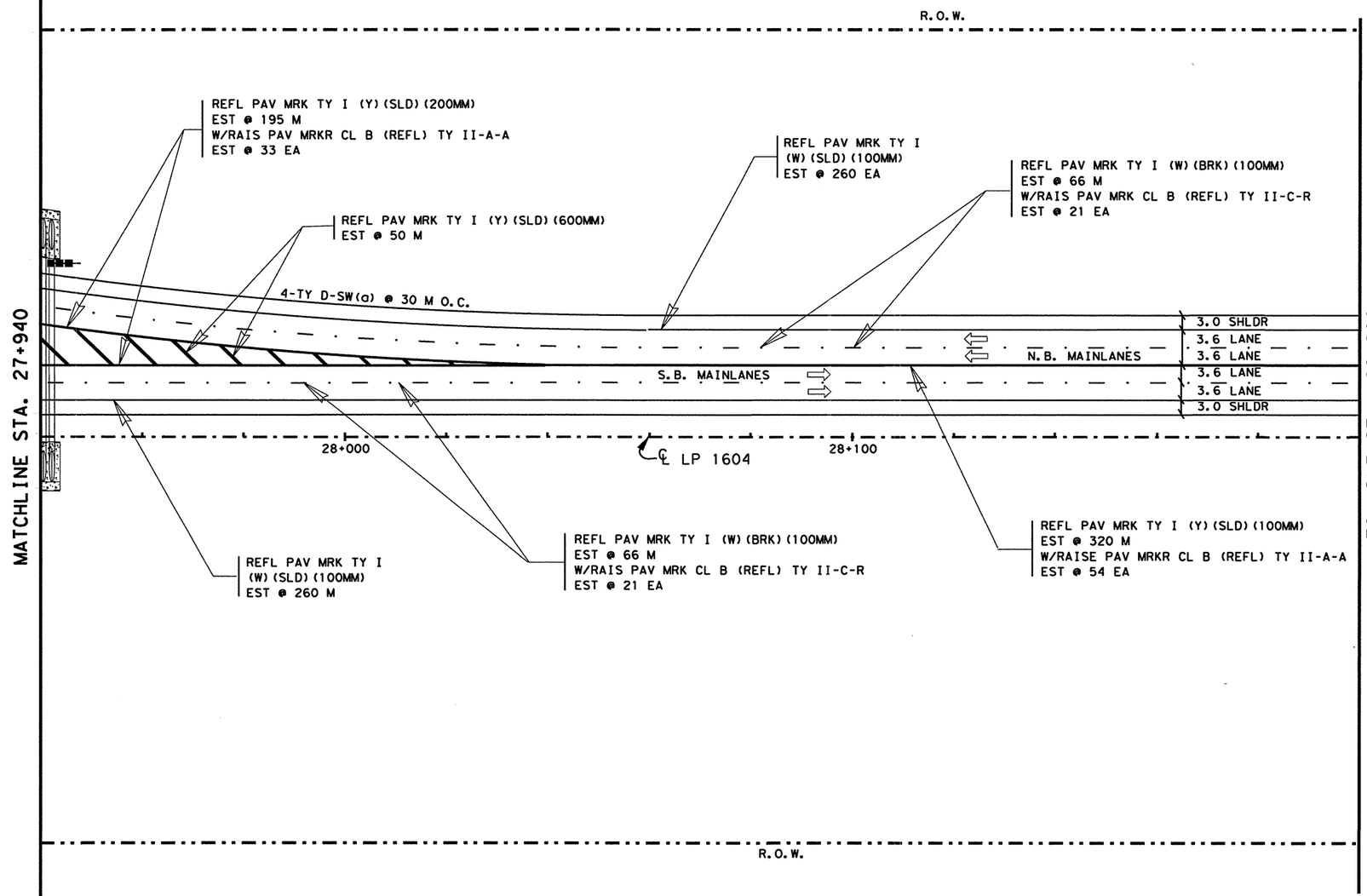


NOTE(S):

ALL DIMENSIONS ARE IN METERS UNLESS OTHERWISE NOTED.

QUANTITIES AND PLACEMENT OF TY II REFLECTIVE PAVEMENT MARKINGS ARE EXACTLY THE SAME AS TY I REFLECTIVE PAVEMENT MARKINGS. TY II QUANTITIES ACCOUNTED FOR ON THE PAVEMENT MARKING /DELINEATION SUMMARY.

ANY PAVEMENT MARKING IN CONFLICT WITH PROPOSED PAVEMENT MARKINGS SHALL BE REMOVED BY THE CONTRACTOR OR AS DIRECTED BY THE ENGINEER.

| DELINEATION QUANTITIES | | | | |
|---|---|---|---|---|
| TYPE | E/. | ASM. | SPL. MNT. | SURF. MNT. |
| D-SW(a) | | 4 | | |
| D-DW(a) | | | | |
| D-SY(a) | | | | |
| D-DY(a) | | | | |
| OM-2SR(a) | | 1 | | |
| | | | | |
| | | | | |
| | | | | |
| | | | | |

STATE OF TEXAS
JOEL K. DAVENPORT, JR.
79276
REGISTERED
PROFESSIONAL ENGINEER

Joel K. Davenport, Jr. 9/9/00
Joel K. Davenport, Jr. P.E. 79276 Date

LEVELS DISPLAYED
1 2 3 4 5 6 7 8 9 10 11 12 13 41 51 61
2 22 32 42 52 62 72 82 92 93 103 132
33 43 53 63 73 83 93 103 113 123 133 143 153 163 173 183
48 58 68 78 88 98 108 118 128 138 148 158 168 178 188 198
ACC: t:\ao\design\
lp1604fm471-90\pave-sign\
FILE: pavmrkplan55.dgn

Texas Department of Transportation

# PAVEMENT MARKING AND DELINEATION LAYOUT

SHEET 55 OF 57

| FED. RD. DIV. NO. | FEDERAL AID PROJECT NO. | | SHEET NO. |
|---|---|---|---|
| 6 | NH 2000(704), etc. | | 815 |
| STATE | DIST. | COUNTY | |
| TEXAS | SAT | BEXAR | |
| CONT. | SECT. | JOB | HIGHWAY NO. |
| 2452 | 01 | 036, etc. | LP 1604 |

QUANTITIES THIS SHEET
CSJ 2452-01-036

SCALE 1:1000

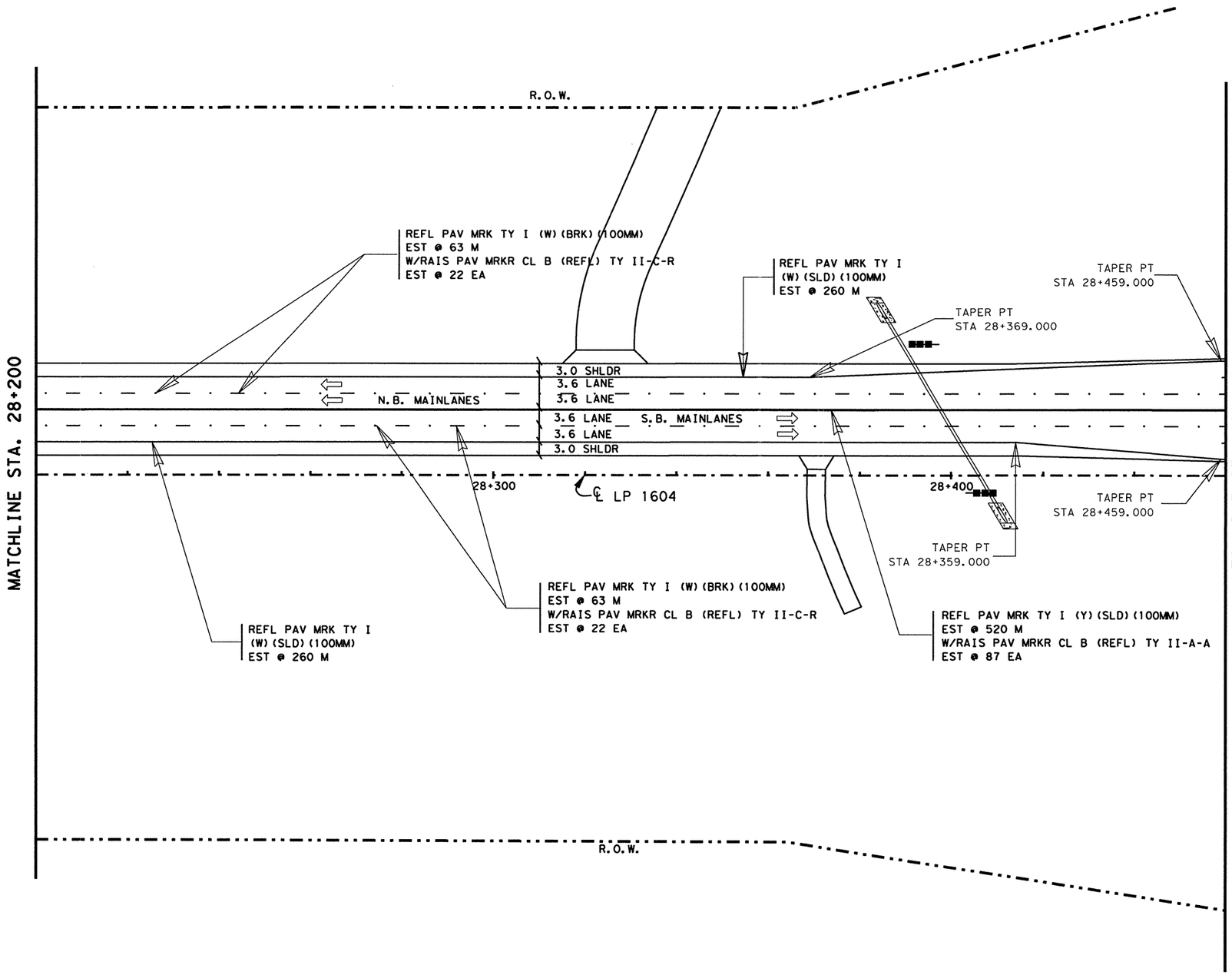


## ESTIMATED QUANTITIES

| ITEM | UNIT | QUANTITY 2452-01-036 |
|---|---|---|
| REFL PAV MRK TY I (W)(SLD)(100MM) | M | 520 |
| REFL PAV MRK TY I (W)(BRK)(100MM) | M | 126 |
| REFL PAV MRK TY I (Y)(SLD)(100MM) | M | 520 |
| RAIS PAV MRKR CL B (REFL) TY II A-A | EA | 87 |
| RAIS PAV MRKR CL B (REFL) TY II C-R | EA | 44 |
| | | |

NOTE(S):

ALL DIMENSIONS ARE IN METERS UNLESS OTHERWISE NOTED.

QUANTITIES AND PLACEMENT OF TY II REFLECTIVE PAVEMENT MARKINGS ARE EXACTLY THE SAME AS TY I REFLECTIVE PAVEMENT MARKINGS. TY II QUANTITIES ACCOUNTED FOR ON THE PAVEMENT MARKING /DELINEATION SUMMARY.

ANY PAVEMENT MARKING IN CONFLICT WITH PROPOSED PAVEMENT MARKINGS SHALL BE REMOVED BY THE CONTRACTOR OR AS DIRECTED BY THE ENGINEER.

## DELINEATION QUANTITIES

| TYPE | EA. | ASM. | SPL. MNT. | SURF. MNT. |
|---|---|---|---|---|
| D-SW(a) | | | | |
| D-DW(a) | | | | |
| D-SY(a) | | | | |
| D-DY(a) | | | | |
| OM-2SR(a) | | 2 | | |
| | | | | |
| | | | | |
| | | | | |
| | | | | |

STATE OF TEXAS
JOEL K. DAVENPORT, JR.
79276
REGISTERED PROFESSIONAL ENGINEER

Joel K. Davenport Jr. 9/19/00
Joel K. Davenport, Jr. P.E. 79276 Date

©2000

Texas Department of Transportation

# PAVEMENT MARKING AND DELINEATION LAYOUT

SHEET 56 OF 57

| FED.RD. DIV.NO. | FEDERAL AID PROJECT NO. | | SHEET NO. |
|---|---|---|---|
| 6 | NH 2000(704),etc. | | 816 |
| STATE | DIST. | COUNTY | |
| TEXAS | SAT | BEXAR | |
| CONT. | SECT. | JOB | HIGHWAY NO. |
| 2452 | 01 | 036,etc. | LP 1604 |

LEVELS DISPLAYED
1 2 3 4 5 6 7 8 9 10 11 12 13 14 15 16
20 21 22 23 24 25 26 27 28 29 30 31 32
33 34 35 36 37 38 39 40 41 42 43 44 45 46 47 48
49 50 51 52 53 54 55 56 57 58 59 60 61 62 63

ACC: t:\ao\design\
lp1604fm471-90\pave-sign\
FILE: pavmrkplan56.dgn

QUANTITIES THIS SHEET
CSJ 2452-01-036

SCALE 1:1000

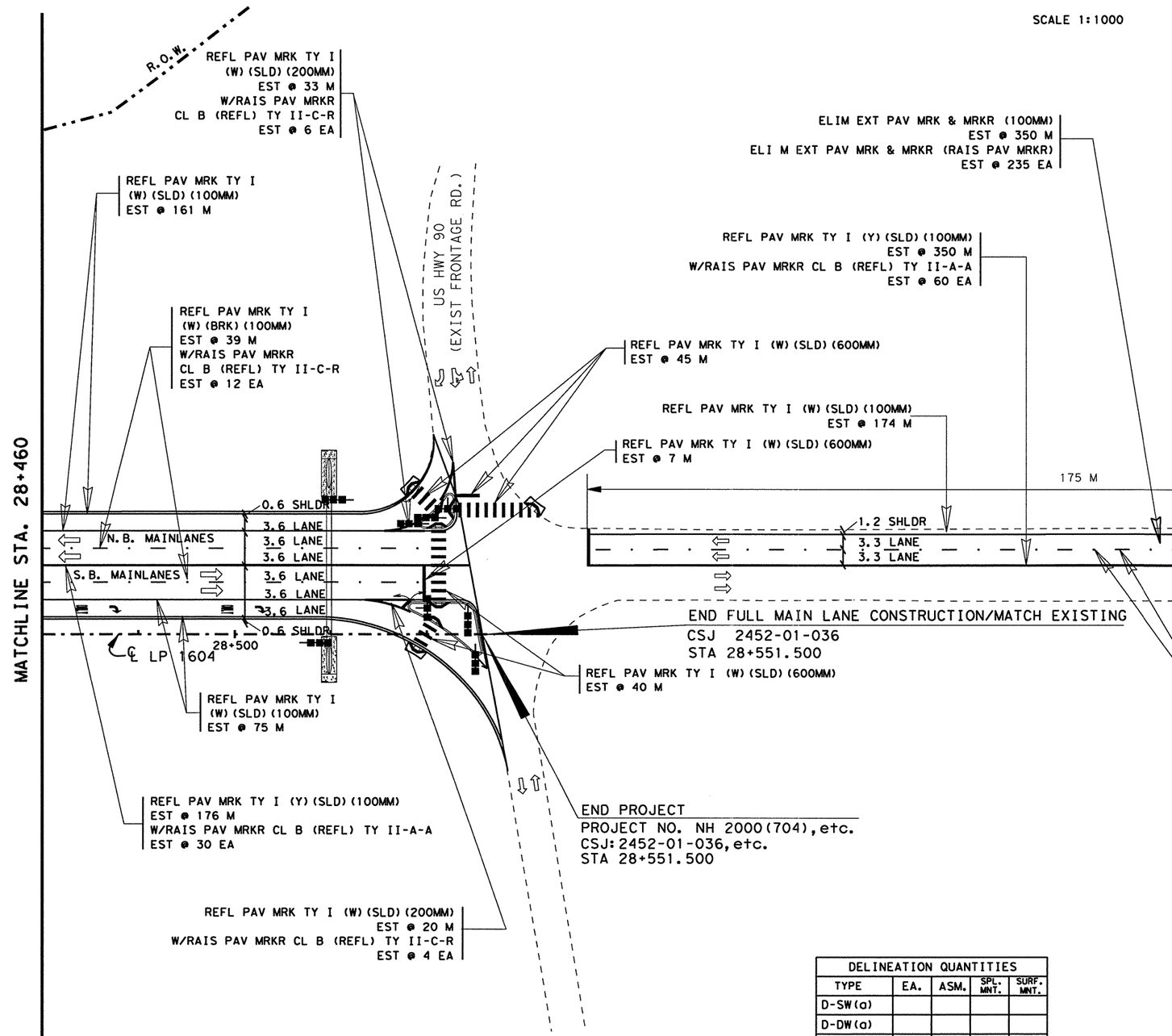


## ESTIMATED QUANTITIES

| ITEM | UNIT | QUANTITY 2452-01-036 |
|---|---|---|
| REFL PAV MRK TY I (W) (SLD) (100MM) | M | 410 |
| REFL PAV MRK TY I (W) (BRK) (100MM) | M | 72 |
| REFL PAV MRK TY I (W) (SLD) (200MM) | M | 53 |
| REFL PAV MRK TY I (W) (SLD) (600MM) | M | 92 |
| REFL PAV MRK TY I (W) (ARROW) | EA | 2 |
| REFL PAV MRK TY I (W) (WORD) | EA | 2 |
| REFL PAV MRK TY I (Y) (SLD) (100MM) | M | 526 |
| RAIS PAV MRKR CL B (REFL) TY II A-A | EA | 90 |
| RAIS PAV MRKR CL B (REFL) TY II C-R | EA | 32 |
| ELIM EXT PAV MRK & MRKR (100MM) | M | 350 |
| ELIM EXT PAV MRK & MRKR (RAIS PAV MRKR) | EA | 235 |

NOTE(S):

ALL DIMENSIONS ARE IN METERS UNLESS OTHERWISE NOTED.

QUANTITIES AND PLACEMENT OF TY II REFLECTIVE PAVEMENT MARKINGS ARE EXACTLY THE SAME AS TY I REFLECTIVE PAVEMENT MARKINGS. TY II QUANTITIES ACCOUNTED FOR ON THE PAVEMENT MARKING /DELINEATION SUMMARY.

ANY PAVEMENT MARKING IN CONFLICT WITH PROPOSED PAVEMENT MARKINGS SHALL BE REMOVED BY THE CONTRACTOR OR AS DIRECTED BY THE ENGINEER.

FOR ADDITIONAL DATA/DIMENSIONS, SEE INTERSECTION LAYOUT DETAIL SHEET(S) 334 .

## DELINEATION QUANTITIES

| TYPE | EA. | ASM. | SPL. MNT. | SURF. MNT. |
|---|---|---|---|---|
| D-SW(a) | | | | |
| D-DW(a) | | | | |
| D-SY(a) | | | | |
| D-DY(a) | | | | |
| OM-2HP(Spl) | | 2 | | |
| OM-2SR(a) | | 6 | | |
| | | | | |
| | | | | |
| | | | | |

STATE OF TEXAS
JOEL K. DAVENPORT, JR.
79276
REGISTERED PROFESSIONAL ENGINEER

Joel K. Davenport, Jr. 9/19/00
Joel K. Davenport, Jr. P.E. 79276 — Date

©2000

Texas Department of Transportation

# PAVEMENT MARKING AND DELINEATION LAYOUT

SHEET 57 OF 57

| FED. RD. DIV. NO. | FEDERAL AID PROJECT NO. | | SHEET NO. |
|---|---|---|---|
| 6 | NH 2000(704), etc. | | 817 |
| STATE | DIST. | COUNTY | |
| TEXAS | SAT | BEXAR | |
| CONT. | SECT. | JOB | HIGHWAY NO. |
| 2452 | 01 | 036, etc. | LP 1604 |

LEVELS DISPLAYED
1 2 3 4 5 6 7 8 9 10 11 12 13 14 15 16
1 2 21 22 32 42 52 62 72 82 92 103 113 123
33 43 53 63 73 83 94 04 14 24 34 44 54 64 74 84
96 05 15 25 35 45 55 65 75 85 96 06 16 26 3

ACC: t:\ao\design\lp1604fm471-90\pave-sign\
FILE: pavmrkplan57.dgn

## TWO LANE TWO-WAY ROADWAY WITH OR WITHOUT SHOULDERS

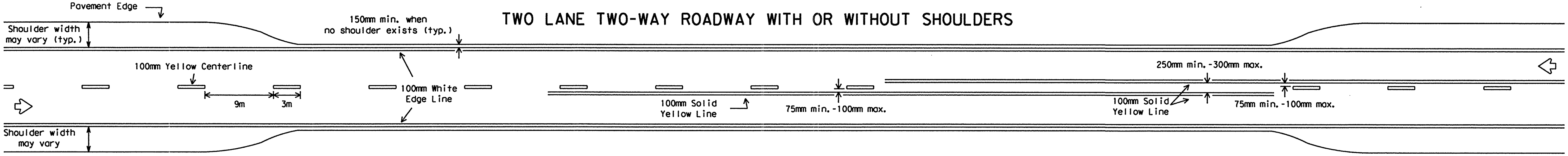


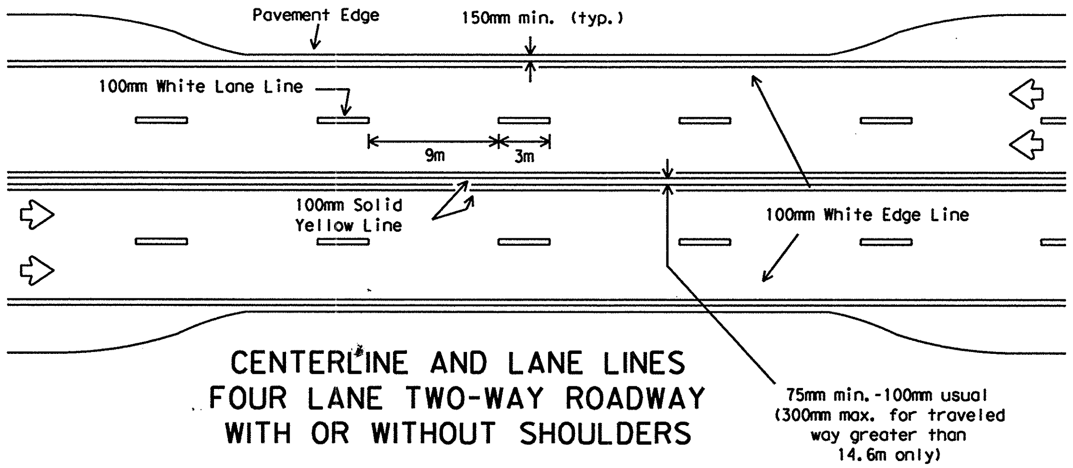


## CENTERLINE AND LANE LINES FOUR LANE TWO-WAY ROADWAY WITH OR WITHOUT SHOULDERS

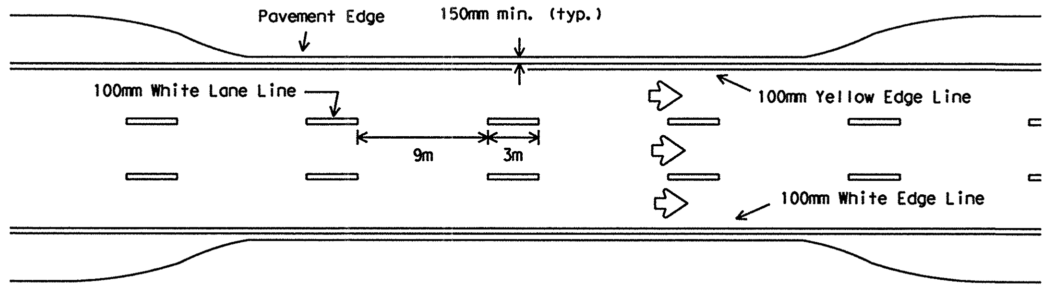


## EDGE LINE AND LANE LINES ONE-WAY ROADWAY WITH OR WITHOUT SHOULDERS

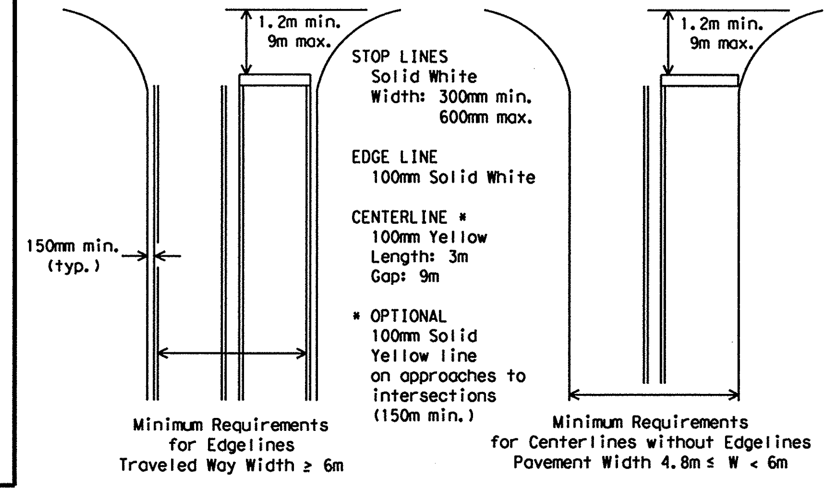


STOP LINES
Solid White
Width: 300mm min. 600mm max.

EDGE LINE
100mm Solid White

CENTERLINE *
100mm Yellow
Length: 3m
Gap: 9m

* OPTIONAL
100mm Solid Yellow line on approaches to intersections (150m min.)

## GUIDE FOR PLACEMENT OF STOP LINES, EDGE LINE & CENTERLINE

Based on Traveled Way and Pavement Widths for Undivided Highways

## FOUR LANE DIVIDED ROADWAY INTERSECTIONS

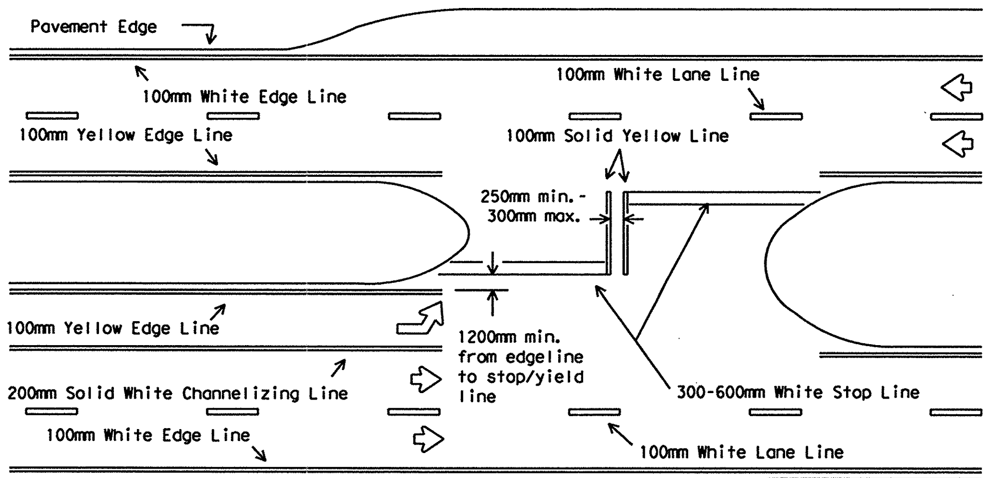


All medians shall be field measured to determine the location of necessary striping. Stop/Yield bars and centerlines shall be placed when the longitudinal distance between the inside of the Stop/Yield bars is 9 meters or greater. If the placement of the Stop/Yield bars would not allow a minimum of 9m distance between the Stop/Yield bars, then no Stop/Yield signs or markings should be installed in the median, unless directed by the Engineer.

## ROADWAYS WITH REDUCED SHOULDER WIDTHS ACROSS BRIDGE OR CULVERT

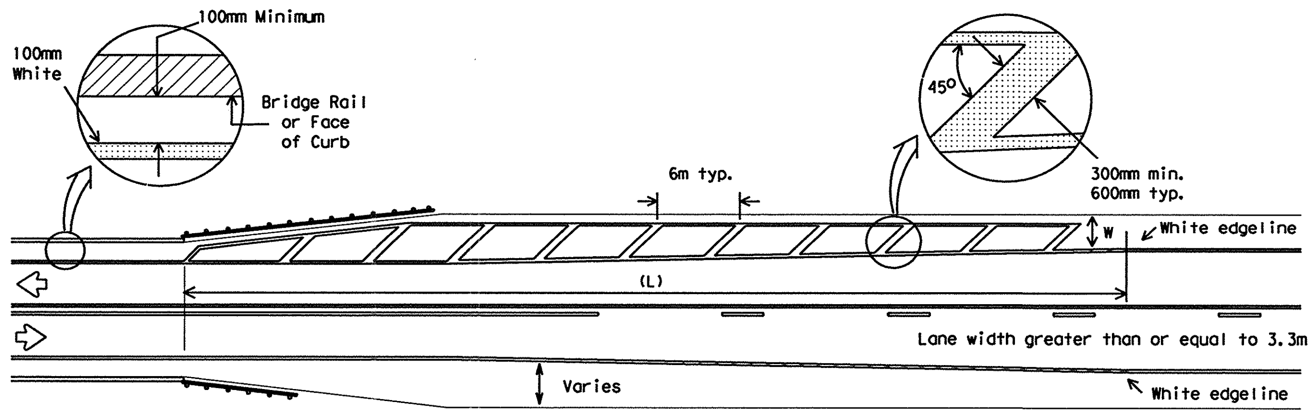


NOTES:

1. No-passing zone on bridge approach is optional but if used, it shall be a minimum 150m long.
2. For crosshatching length (L) see Table 1.
3. The width of the offset (W) and the required crosshatching width is the full shoulder width in advance of the bridge.
4. The crosshatching should be required if the shoulder width in advance of the bridge is 1.2m or wider and any reduction in shoulder width across the bridge occurs.
5. For guard fence details, refer elsewhere in the plans.

## TABLE 1 - TYPICAL LENGTH (L)

| Posted Speed * | Formula |
|---|---|
| 30, 35, 40 | $L = \frac{WS^2}{60}$ |
| 45, 50, 55, 60, 65, 70 | L=WS |

* 85th Percentile Speed may be used on roads where traffic speeds normally exceed the posted speed limit.
Crosshatching length should be rounded up to nearest 1.5m increment.

L=Length of Crosshatching (m) W=Width of Offset (m)
S=Posted Speed (MPH)

EXAMPLES:

A 2.4m shoulder in advance of a bridge reduces to 1.2m on a 70 MPH roadway. The length of the cross-hatching should be:
L = 2.4 x 70 = 168m

A 1.2m shoulder in advance of a bridge reduces to 0.6m on a 40 MPH roadway. The length of the cross-hatching should be:
$L = 1.2(40)^2 / 60 = 32m$

GENERAL NOTES:

Edgeline striping shall be as shown in the plans or as directed by the Engineer. The edgeline should typically be placed a minimum of 150mm from the edge of pavement. This distance may vary due to pavement raveling or other conditions. Edgelines are not required in curb and gutter sections of roadways.

The traveled way includes only that portion of the roadway used for vehicular travel and not the parking lanes, sidewalks, berms and shoulders. The traveled ways shall be measured from the inside of edgeline to inside of edgeline of a two lane roadway.

All pavement marking materials shall meet the required Departmental Material Specifications as specified by the plans.

SPECIFICATION REFERENCE TABLE
MATERIAL SPECIFICATIONS

| | |
|---|---|
| PAVEMENT MARKERS (REFLECT.) | DMS-4200 |
| EPOXY | DMS-6100 |
| BITUMINOUS ADHESIVE FOR PAVEMENT MARKERS | DMS-6130 |

STANDARD PLANS
*Texas Department of Transportation*
*Traffic Operations Division*

# TYPICAL STANDARD PAVEMENT MARKINGS

## PM(1)-00A(M)

©TxDOT November 1978 DN:- BAS CK:- GRB DW:- FDN CK:- CAL NEG NO.:

| REVISIONS | STATE DISTRICT | FEDERAL REGION | FEDERAL AID PROJECT | | | SHEET |
|---|---|---|---|---|---|---|
| 7-92 | SAT | 6 | NH 2000(704),etc. | | | 818 |
| 8-95 | COUNTY | | CONTROL | SECTION | JOB | HIGHWAY |
| 5-00, 8-00 | BEXAR | | 2452 | 01 | 036,etc. | LP 1604 |

DISCLAIMER
The use of this standard is governed by the "Texas Engineering Practice Act". No warranty of any kind is made by TxDOT for any purpose whatsoever. TxDOT assumes no responsibility for the conversion of this standard to other formats or for incorrect results or damages resulting from its use.

ACC:

DISCLAIMER
The use of this standard is governed by the "Texas Engineering Practice Act". No warranty of any kind is made by TxDOT for any purpose whatsoever. TxDOT assumes no responsibility for the conversion of this standard to other formats or for incorrect results or damages resulting from its use.

# REFLECTIVE RAISED PAVEMENT MARKERS FOR VEHICLE POSITIONING GUIDANCE

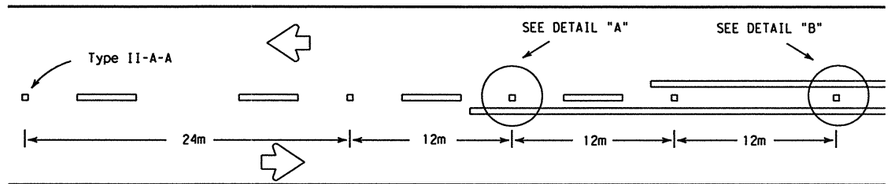


## CENTERLINE FOR ALL TWO LANE ROADWAYS

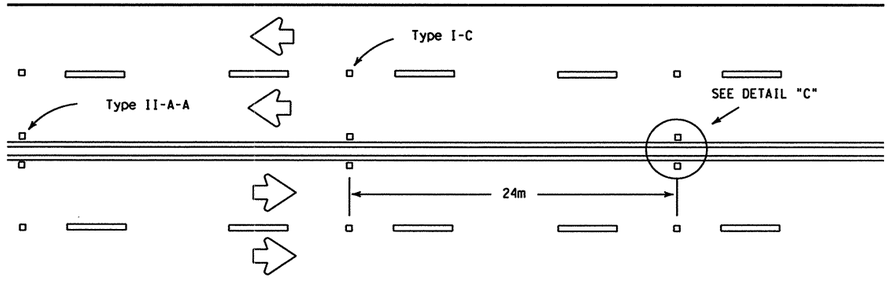


## CENTERLINE & LANE LINES FOR FOUR LANE TWO-WAY HIGHWAYS

Raised pavement marker Type I-C, clear face toward normal traffic, shall be placed on 24m centers.

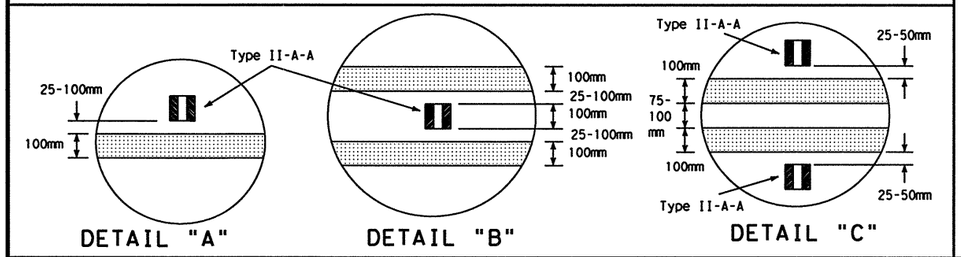


DETAIL "A" DETAIL "B" DETAIL "C"

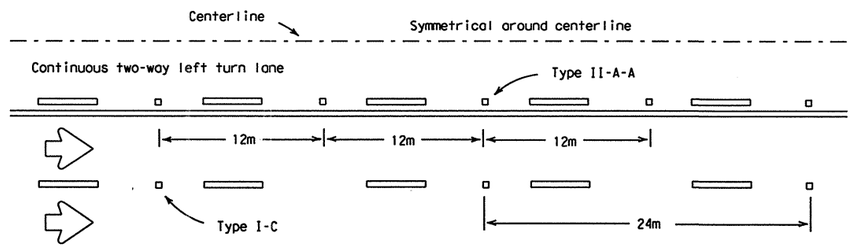


## CENTERLINE AND LANE LINES FOR TWO-WAY LEFT TURN LANE

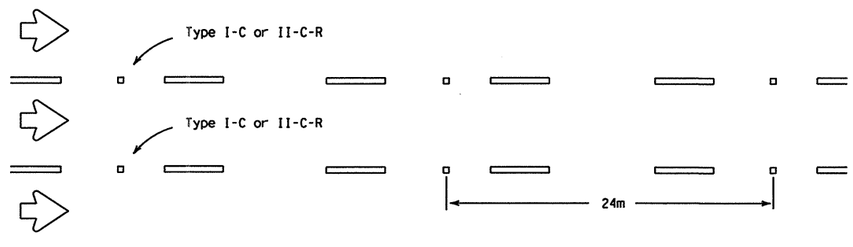


## LANE LINES FOR ONE-WAY ROADWAY (NON-FREEWAY FACILITIES)

Raised pavement markers Type II-C-R shall have clear face toward normal traffic and red face toward wrong-way traffic.

As required by the Engineer or shown elsewhere in the plans, Type II-C-R or Type I-C markers may be placed on 12m centers for the below listed conditions:

1. horizontal curves,
2. continuously illuminated sections,
3. high volume roadways
4. or roadways where safety concerns exist.

## RAISED PAVEMENT MARKERS

(REFLECTORIZED)

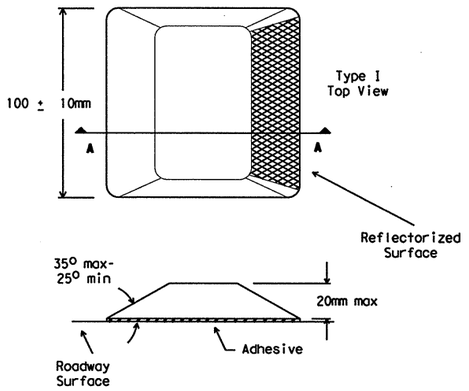


SECTION A

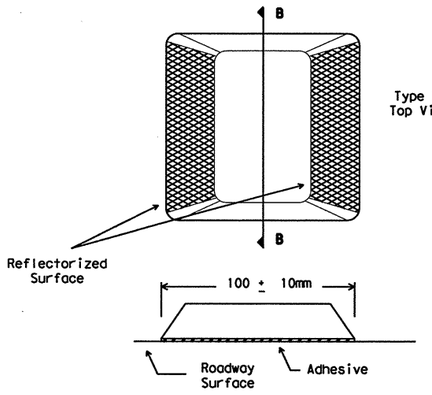


SECTION B

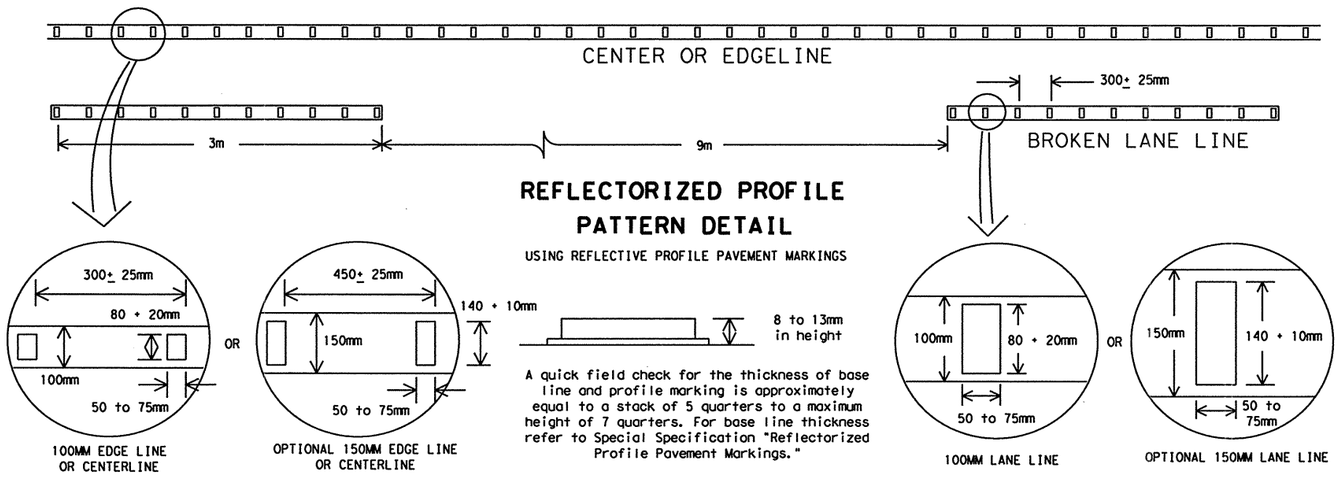


## REFLECTORIZED PROFILE PATTERN DETAIL

USING REFLECTIVE PROFILE PAVEMENT MARKINGS

A quick field check for the thickness of base line and profile marking is approximately equal to a stack of 5 quarters to a maximum height of 7 quarters. For base line thickness refer to Special Specification "Reflectorized Profile Pavement Markings."

GENERAL NOTES:

All raised pavement markers placed in broken lines shall be placed in line with and midway between the stripes.

On concrete pavements the raised pavement markers should be placed to one side of the longitudinal joints.

All pavement marking materials shall meet the required Departmental Material Specifications as specified by the plans.

SPECIFICATION REFERENCE TABLE

| MATERIAL SPECIFICATIONS | |
|---|---|
| PAVEMENT MARKERS (REFLECT.) | DMS-4200 |
| EPOXY | DMS-6100 |
| BITUMINOUS ADHESIVE FOR PAVEMENT MARKERS | DMS-6130 |

STANDARD PLANS
Texas Department of Transportation
Traffic Operations Division

# POSITION GUIDANCE USING RAISED MARKERS
# REFLECTORIZED PROFILE MARKINGS
# PM(2)-00A(M)

| ©TxDOT April 1977 | DN: BAS | CK: GRB | DW: FDN | CK: CAL |
|---|---|---|---|---|
| REVISIONS | STATE DISTRICT | FEDERAL REGION | FEDERAL AID PROJECT | SHEET |
| 10-86 | SAT | 6 | NH 2000(704), etc. | 819 |
| 4-92 | | | | |
| 5-00 | COUNTY | CONTROL | SECTION | JOB | HIGHWAY |
| 8-00 | BEXAR | 2452 | 01 | 036, etc. | LP 1604 |

FED RD DIV NO | 1 2 3 4 5 | 6 7 8 9 10 11 12 13 14 15 16 | ACC:

DISCLAIMER
The use of this standard is governed by the "Texas Engineering Practice Act". No warranty of any kind is made by TxDOT for any purpose whatsoever. TxDOT assumes no responsibility for the conversion of this standard to other formats or for incorrect results or damages resulting from its use.

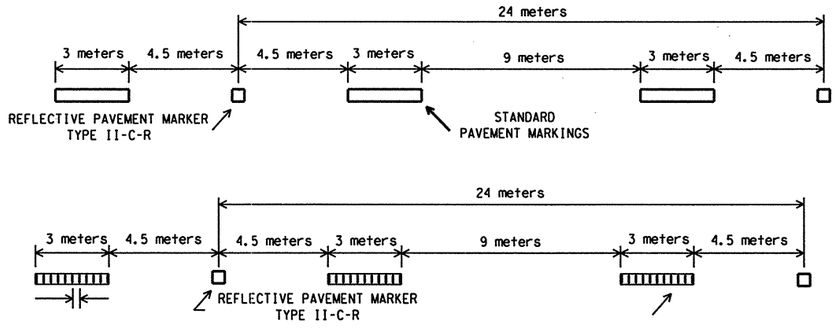


PAVEMENT MARKERS (REFLECTORIZED) TYPE II-C-R SHALL BE SPACED ON 24 METER CENTERS WITH THE CLEAR FACE TOWARD NORMAL TRAFFIC AND THE RED FACE TOWARD WRONG WAY TRAFFIC.

## TRAFFIC LANE LINES PAVEMENT MARKING DETAILS

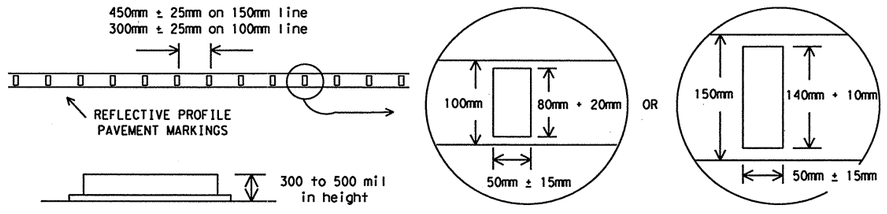


## EDGELINE PAVEMENT MARKING DETAIL

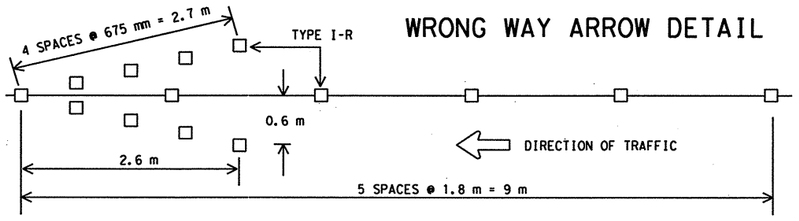


## WRONG WAY ARROW DETAIL

ALL RAISED MARKERS IN THE WRONG WAY ARROW SHALL BE TYPE I-R REFLECTORIZED PAVEMENT MARKERS WITH THE REFLECTORIZED SURFACE FACING THE WRONG WAY TRAFFIC. TYPE II-C-R SHALL NOT BE USED.

REFLECTORIZED WRONG WAY ARROWS, NOT TO EXCEED TWO, MAY BE PLACED ON EXIT RAMPS. LOCATION OF THE ARROWS SHALL BE AS SHOWN IN THE PLANS OR AS DIRECTED BY THE ENGINEER.

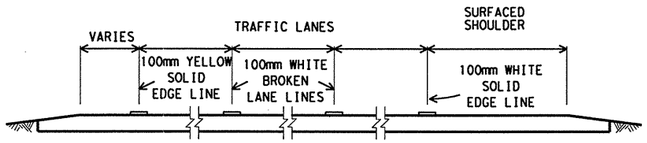


## TYPICAL SECTIONS SHOWING STANDARD PAVEMENT MARKING LOCATIONS

LANE LINES AND EDGE LINES MAY CONSIST OF VARIOUS MATERIALS AS CALLED FOR ELSEWHERE IN THE PLANS.

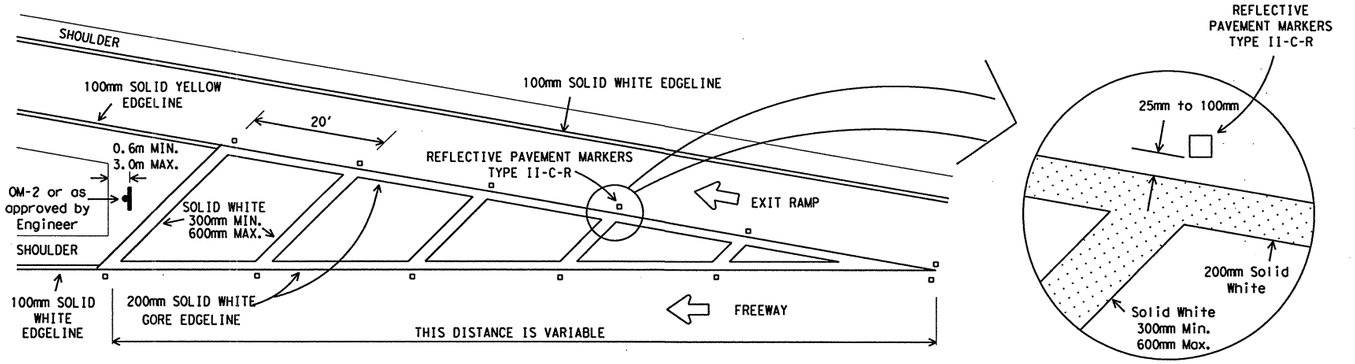


THE SHAPE OF THE GORE MARKING WILL VARY DEPENDING ON THE RAMP DESIGN AND WILL BE AS SHOWN IN THE PLANS OR AS DIRECTED BY THE ENGINEER. OM-2 OR SURFACE MOUNT OBJECT MARKER MOUNTING HEIGHT IS 900mm.

## TYPICAL EXIT RAMP GORE MARKING

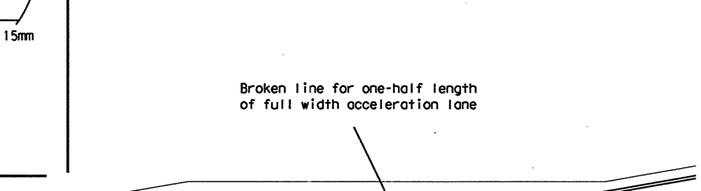


## PARALLEL ACCELERATION LANE

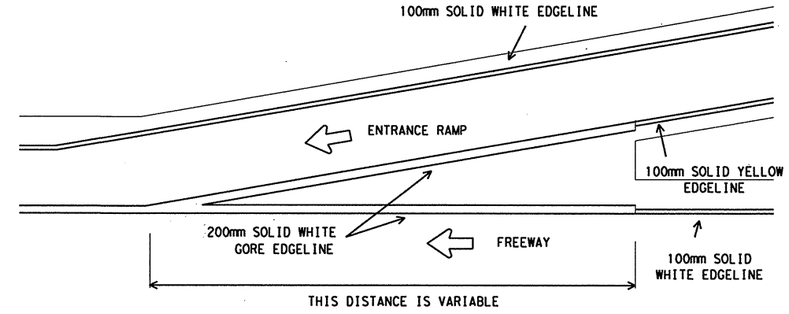


## TYPICAL ENTRANCE RAMP GORE MARKING

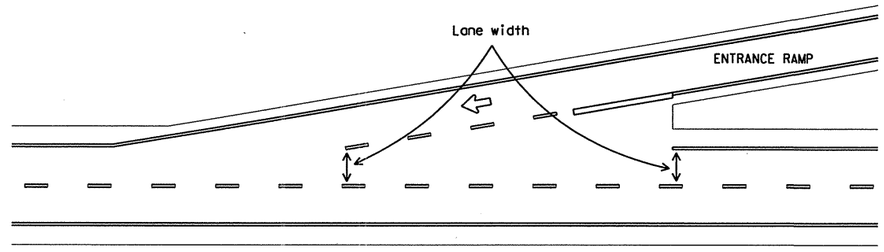


## TAPERED ACCELERATION LANE

All pavement marking materials shall meet the required Departmental Material Specifications as specified by the plans.

SPECIFICATION REFERENCE TABLE

| MATERIALS AND TESTS SPECIFICATIONS | |
|---|---|
| PAVEMENT MARKERS (REFLECT.) | DMS-4200 |
| EPOXY | DMS-6100 |
| BITUMINOUS ADHESIVE FOR PAVE. MKS. | DMS-6130 |

**STANDARD PLANS**
*Texas Department of Transportation*
*Traffic Operations Division*

# TYPICAL STANDARD FREEWAY PAVEMENT MARKINGS WITH RAISED PAVEMENT MARKERS

**FPM(1)-00(M)**

| ©TxDOT May 1974 | DN: BAS | CK: GRB | DN: FDN | CK: CAL |
|---|---|---|---|---|
| REVISIONS 7-86 12-90 4-92 5-00 | STATE DISTRICT: SAT | FEDERAL REGION: 6 | FEDERAL AID PROJECT: NH 2000(704),etc. | SHEET: 820 |
| COUNTY: BEXAR | CONTROL: 2452 | SECTION: 01 | JOB: 036,etc. | HIGHWAY: LP 1604 |

ACC:
RED
G
1

DISCLAIMER
The use of this standard is governed by the "Texas Engineering Practice Act". No warranty of any kind is made by TxDOT for any purpose whatsoever. TxDOT assumes no responsibility for the conversion of this standard to other formats or for incorrect results or damages resulting from its use.

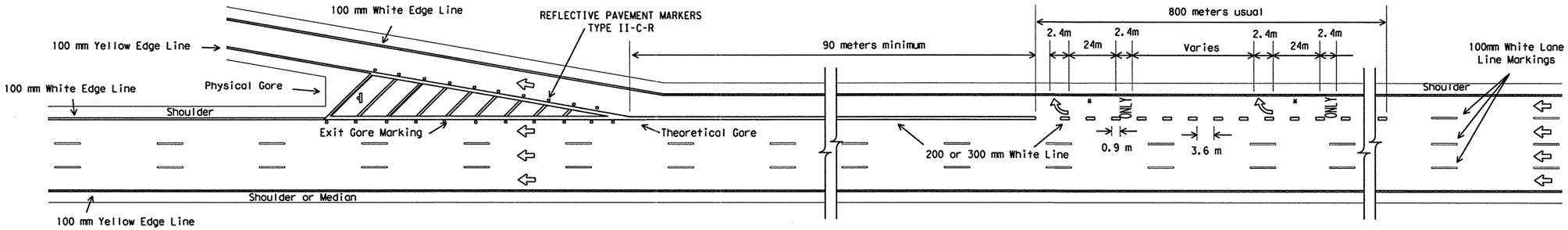


## SINGLE LANE EXIT - LANE DROP OR EXIT ONLY

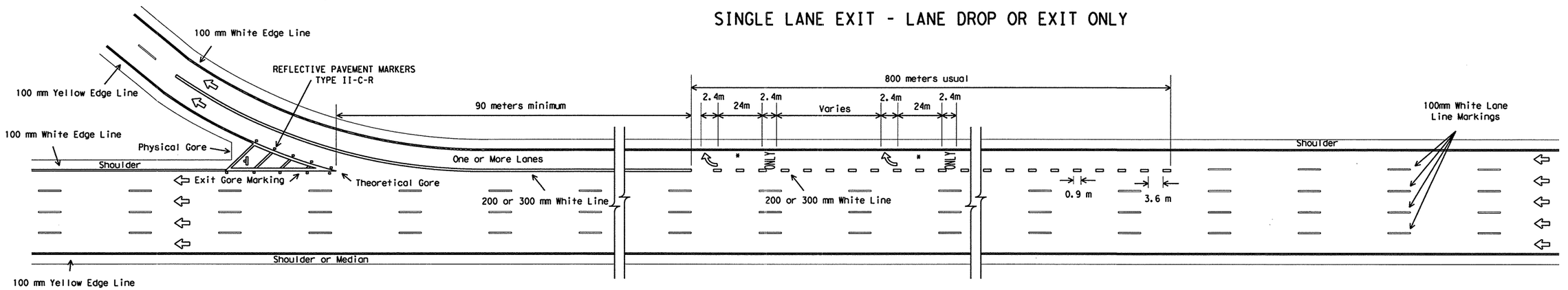


## MULTIPLE LANE EXIT - EXIT ONLY WITH OPTION LANE

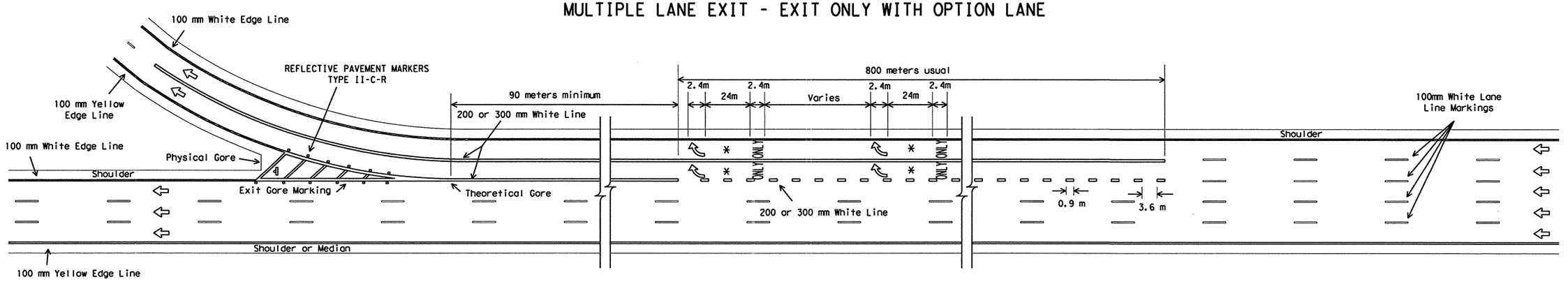


## MULTIPLE LANE EXIT ONLY

LEGEND

- OM-2HR, OM-2HP or surface mount object marker (K-Marker) installed 0.6 to 3 meters from Physical Gore. Mounting height is approximately 450 mm. K-Marker may be Carsonite, Safe-Hit or equal.
- ⇦ - Denotes direction of traffic.
- ↱ - Pavement marking arrows (white).
- * - Arrow markings are optional, however "ONLY" is required if arrow is used.

GENERAL NOTES:

1. Pavement markings shall be white except as otherwise noted.
2. Pavement marking arrows to be located as specified elsewhere in the plans.
3. Length of 200-300 mm white line may vary depending on location.
4. Lane drop markings are to be used to separate lanes that are required to go in different directions.
5. A lane drop (EXIT ONLY) condition is typically when the nearest entrance theoretical gore of entrance ramp to theoretical gore of exit ramp.
6. All pavement marking materials shall meet the required Departmental Material Specifications as specified by the plans.

SPECIFICATION REFERENCE TABLE

| MATERIALS AND TESTS SPECIFICATIONS | |
|---|---|
| PAVEMENT MARKERS (REFLECT.) | DMS-4200 |
| EPOXY | DMS-6100 |
| BITUMINOUS ADHESIVE FOR PAVE. MKS. | DMS-6130 |

STANDARD PLANS
Texas Department of Transportation
Traffic Operations Division

# TYPICAL STANDARD FREEWAY PAVEMENT MARKINGS LANE DROP (EXIT ONLY) EXIT RAMPS

FPM(3)-00(M)

| ©TxDOT April 1992 | DN: BAS | CK: GRB | DW: FDN | CK: CAL |
|---|---|---|---|---|
| REVISIONS 5-00 | STATE DISTRICT: SAT | FEDERAL REGION: 6 | FEDERAL AID PROJECT: NH 2000(704), etc. | SHEET: 821 |
| COUNTY: BEXAR | CONTROL: 2452 | SECTION: 01 | JOB: 036, etc. | HIGHWAY: LP 1604 |

ACC:
FED
D
1

DISCLAIMER
The use of this standard is governed by the "Texas Engineering Practice Act". No warranty of any kind is made by TxDOT for any purpose whatsoever. TxDOT assumes no responsibility for the conversion of this standard to other formats or for incorrect results or damages resulting from its use.

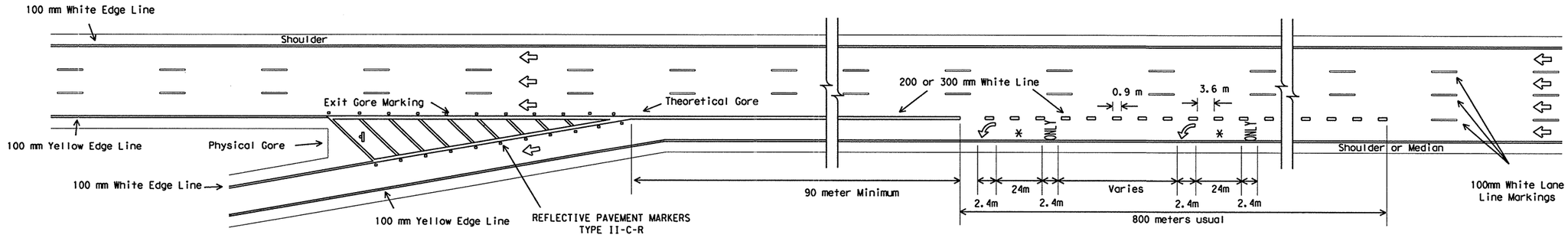


## SINGLE LANE EXIT - LANE DROP OR EXIT ONLY (LEFTHAND)

## PAVEMENT MARKING DETAILS

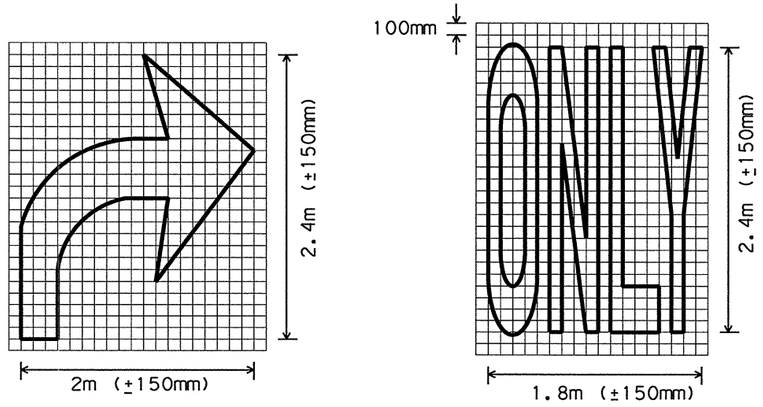


## LANE DROP PAVEMENT MARKING DETAILS

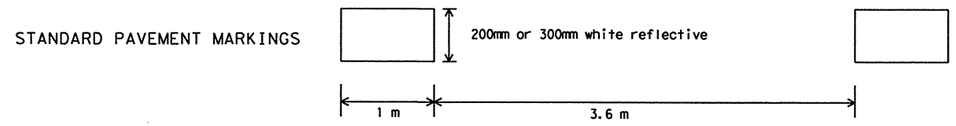


LEGEND

- OM-2, or approved surface mount object marker installed 0.6 to 3.0 meters from Physical Gore. Mounting height is approximately 900mm.
- Denotes direction of traffic.
- Pavement marking arrows (white).
- * - Arrow markings are optional, however "ONLY" is required if arrow is used.

GENERAL NOTES:

1. Pavement markings shall be white except as otherwise noted.
2. Pavement marking arrows to be located as specified elsewhere in the plans.
3. Length of 200mm or 300mm white line may vary depending on location.
4. Lane drop markings are to be used to separate lanes that are required to go in different directions.
5. A lane drop (EXIT ONLY) condition is typically when the nearest entrance ramp is greater than 600 meters upstream of the exit ramp, measured from theoretical gore of entrance ramp to theoretical gore of exit ramp.
6. All pavement marking materials shall meet the required Departmental Material Specifications as specified by the plans.

SPECIFICATION REFERENCE TABLE

| MATERIALS AND TESTS SPECIFICATIONS | |
|---|---|
| PAVEMENT MARKERS (REFLECT.) | DMS-4200 |
| EPOXY | DMS-6100 |
| BITUMINOUS ADHESIVE FOR PAVE. MKS. | DMS-6130 |

STANDARD PLANS
Texas Department of Transportation
Traffic Operations Division

# TYPICAL STANDARD FREEWAY PAVEMENT MARKINGS LANE DROP (EXIT ONLY) DETAILS

FPM(4)-00(M)

| ©TxDOT April 1992 | DN: - BAS | CK: - GRB | DW: - FDN | CK: - CAL |
|---|---|---|---|---|
| REVISIONS 5-00 | STATE DISTRICT: SAT | FEDERAL REGION: 6 | FEDERAL AID PROJECT: NH 2000(704), etc. | SHEET: 822 |
| COUNTY: BEXAR | CONTROL: 2452 | SECTION: 01 | JOB: 036, etc. | HIGHWAY: LP 1604 |

## LEGEND

- ■ 150mm YELLOW JIGGLE BAR
- ▫ REFLECTIVE MARKER
- ○ 100mm TRAFFIC BUTTON (WHITE)
- ○ 100mm TRAFFIC BUTTON (YELLOW)

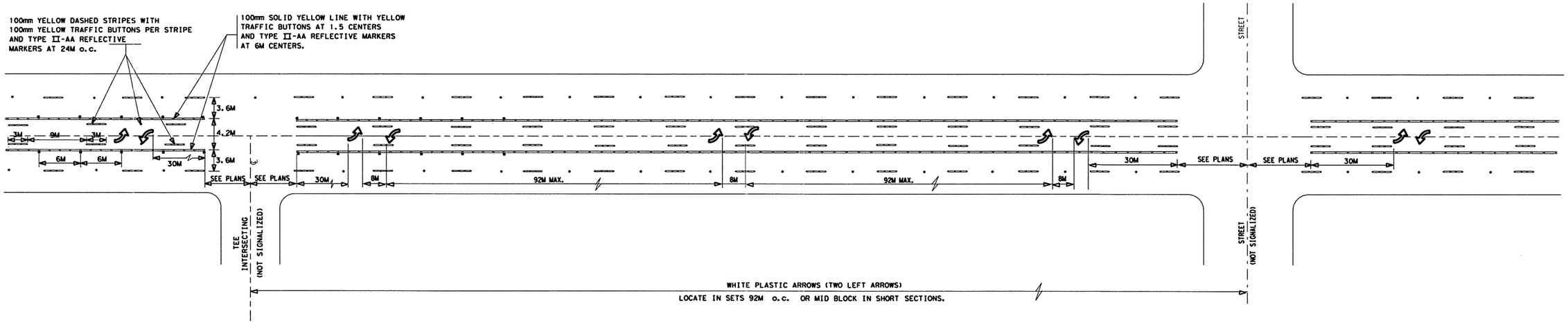


## TWO WAY LEFT TURN LANE DETAILS
NON-SIGNALIZED INTERSECTIONS

NOTE: PAVEMENT MARKING ARROWS SHALL COMPLY TO TEXAS M.U.T.C.D.

REVISED: JULY 1998

## TWLTLD(M)
TWO WAY LEFT TURN LANE DETAILS
(SAN ANTONIO DISTRICT)

SHEET 1 OF 3

© 2000 ® Texas Department of Transportation

| FED.RD. DIV.NO. | FEDERAL AID PROJECT NO. | | SHEET NO. |
|---|---|---|---|
| 6 | NH 2000(704),etc. | | 823 |
| STATE | STATE DIST.NO. | COUNTY | |
| TEXAS | SAT | BEXAR | |
| CONT. | SECT. | JOB | HIGHWAY NO. |
| 2452 | 01 | 036,etc. | LP 1604 |

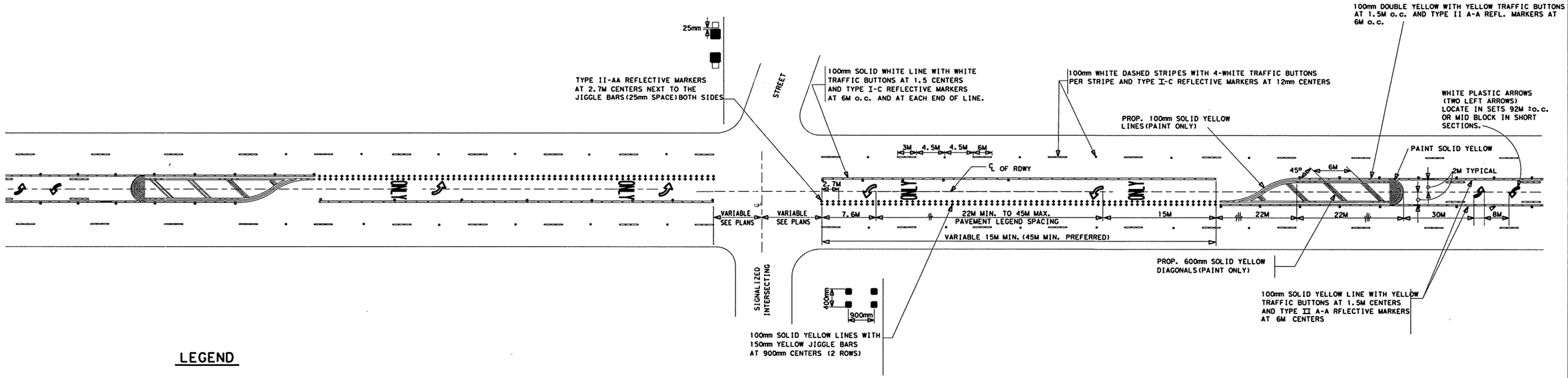


## LEGEND

- ■ 150mm YELLOW JIGGLE BAR
- ▫ REFLECTIVE MARKER
- ○ 100mm TRAFFIC BUTTON (WHITE)
- ○ 100mm TRAFFIC BUTTON (YELLOW)

## TYPICAL
## TWO WAY LEFT TURN LANE DETAILS
## SIGNALIZED INTERSECTION

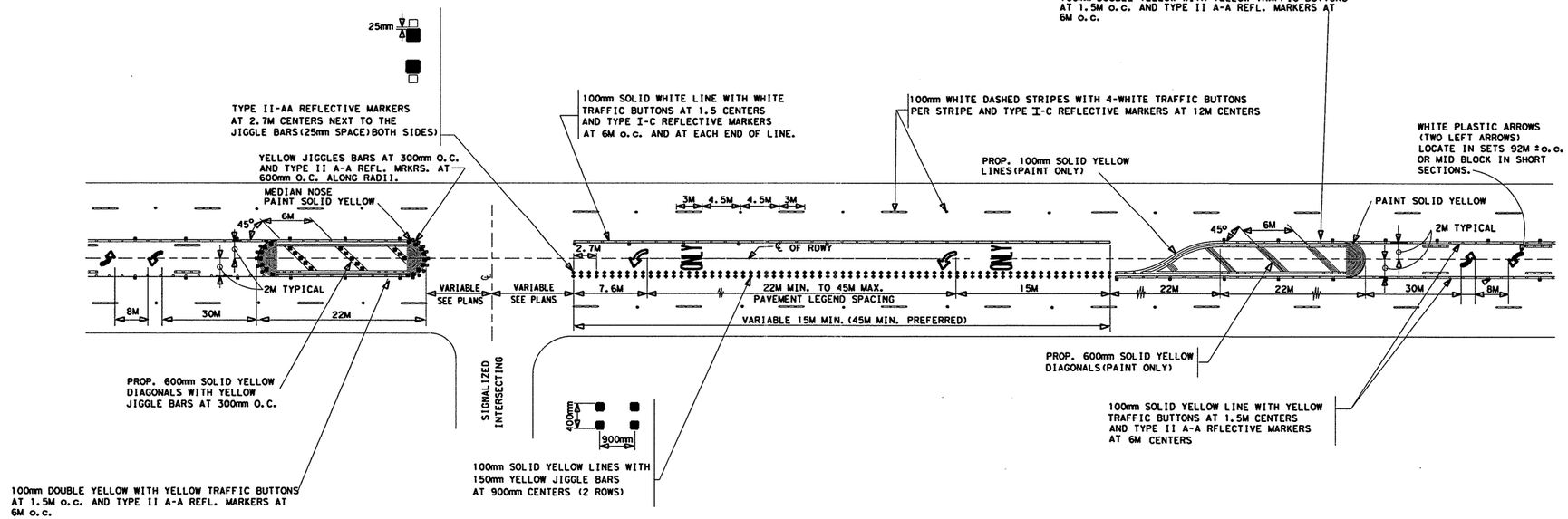


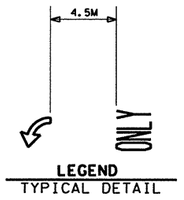


**LEGEND**
TYPICAL DETAIL

## TYPICAL
## TWO WAY LEFT TURN LANE DETAILS
## SIGNALIZED TEE INTERSECTION

NOTE: PAVEMENT MARKING ARROWS SHALL COMPLY TO TEXAS M.U.T.C.D.

REVISED: JULY 1998

# TWLTLD(M)II

## TWO WAY LEFT TURN LANE DETAILS (SAN ANTONIO DISTRICT)



© 2000 Texas Department of Transportation

| FED. RD. DIV. NO. | FEDERAL AID PROJECT NO. | | SHEET NO. |
|---|---|---|---|
| 6 | NH 2000(704),etc. | | 824 |
| STATE | STATE DIST. NO. | COUNTY | |
| TEXAS | SAT | BEXAR | |
| CONT. | SECT. | JOB | HIGHWAY NO. |
| 2452 | 01 | 036,etc. | LP 1604 |

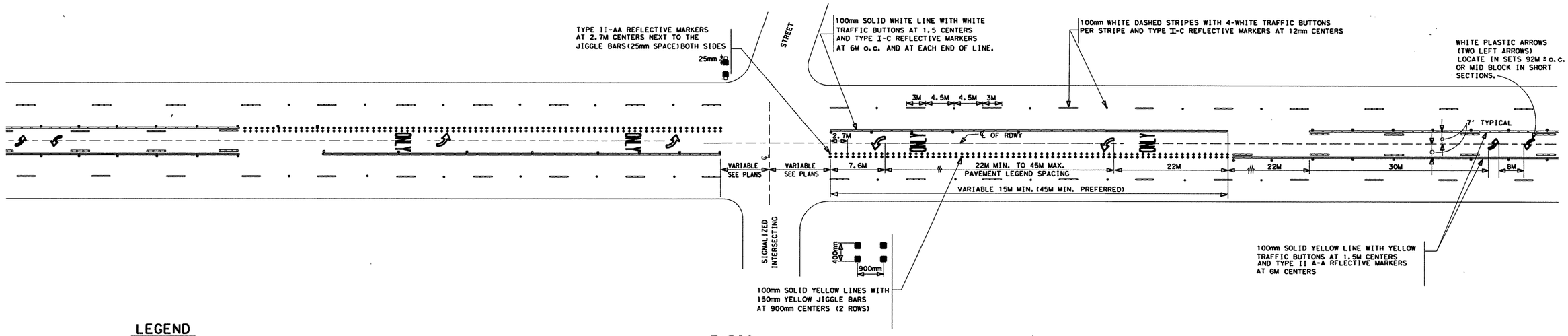


## LEGEND

- ■ 150mm YELLOW JIGGLE BAR
- ▫ REFLECTIVE MARKER
- ○ 100mm TRAFFIC BUTTON (WHITE)
- ○ 100mm TRAFFIC BUTTON (YELLOW)

## TYPICAL
## TWO WAY LEFT TURN LANE DETAILS
## SIGNALIZED INTERSECTION

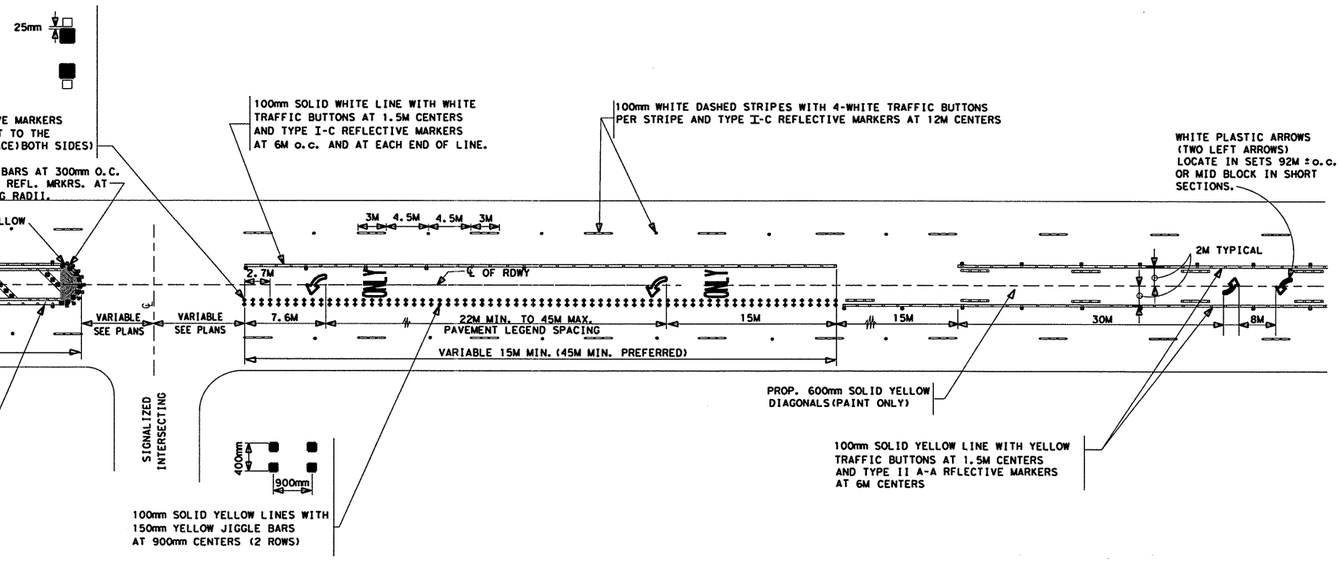


## TYPICAL
## TWO WAY LEFT TURN LANE DETAILS
## SIGNALIZED TEE INTERSECTION

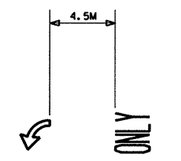


**LEGEND**
TYPICAL DETAIL

# TWLTLD(M)

## TWO WAY LEFT TURN LANE DETAILS
## (SAN ANTONIO DISTRICT)

NOTE: PAVEMENT MARKING ARROWS SHALL COMPLY TO TEXAS M.U.T.C.D.

REVISED: JULY 1998



© 2000 Texas Department of Transportation

| FED.RD. DIV.NO. | FEDERAL AID PROJECT NO. | | SHEET NO. |
|---|---|---|---|
| 6 | NH 2000(704),etc. | | 825 |
| STATE | STATE DIST.NO. | COUNTY | |
| TEXAS | SAT | BEXAR | |
| CONT. | SECT. | JOB | HIGHWAY NO. |
| 2452 | 01 | 036,etc. | LP 1604 |

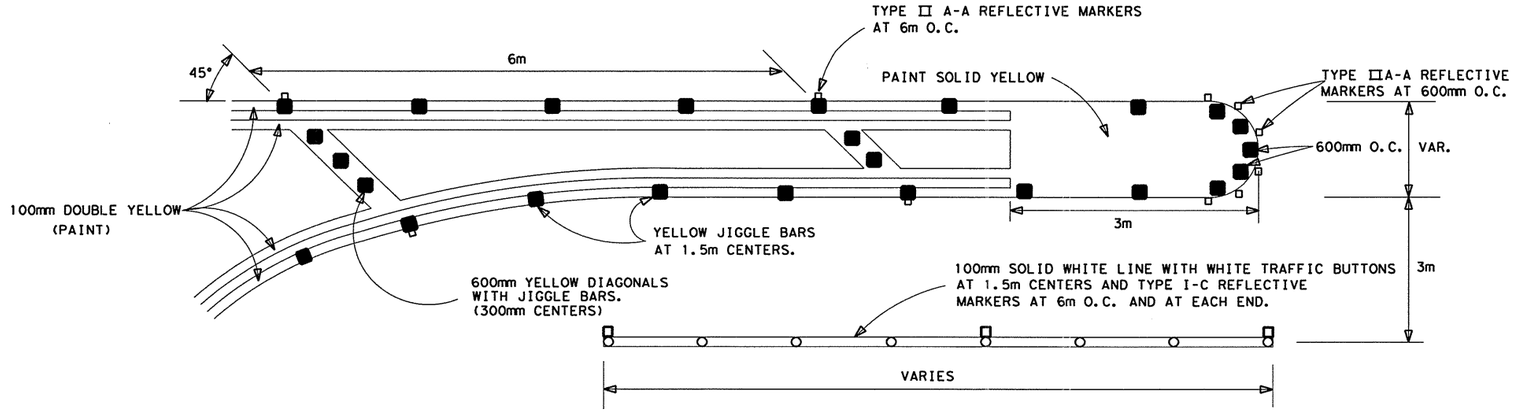


## LEGEND

- 150mm YELLOW JIGGLE BAR
- REFLECTIVE MARKER
- 100mm TRAFFIC BUTTON (WHITE)




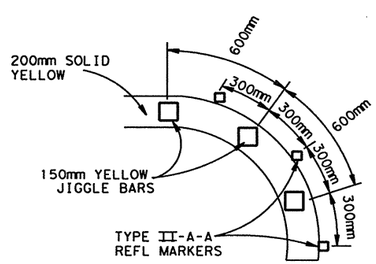


RADIUS DETAIL

# MEDIAN LEFT TURN BAY DETAILS

## MLTBD (M)

MEDIAN LEFT TURN BAY DETAILS
(SAN ANTONIO DISTRICT)

SHEET 1 OF 1

© 2000 Texas Department of Transportation

| FED.RD. DIV.NO. | FEDERAL AID PROJECT NO. | | SHEET NO. |
|---|---|---|---|
| 6 | NH 2000(704), etc. | | 826 |
| STATE | STATE DIST. NO. | COUNTY | |
| TEXAS | SAT | BEXAR | |
| CONT. | SECT. | JOB | HIGHWAY NO. |
| 2452 | 01 | 036, etc. | LP 1604 |

REV.: JULY 98

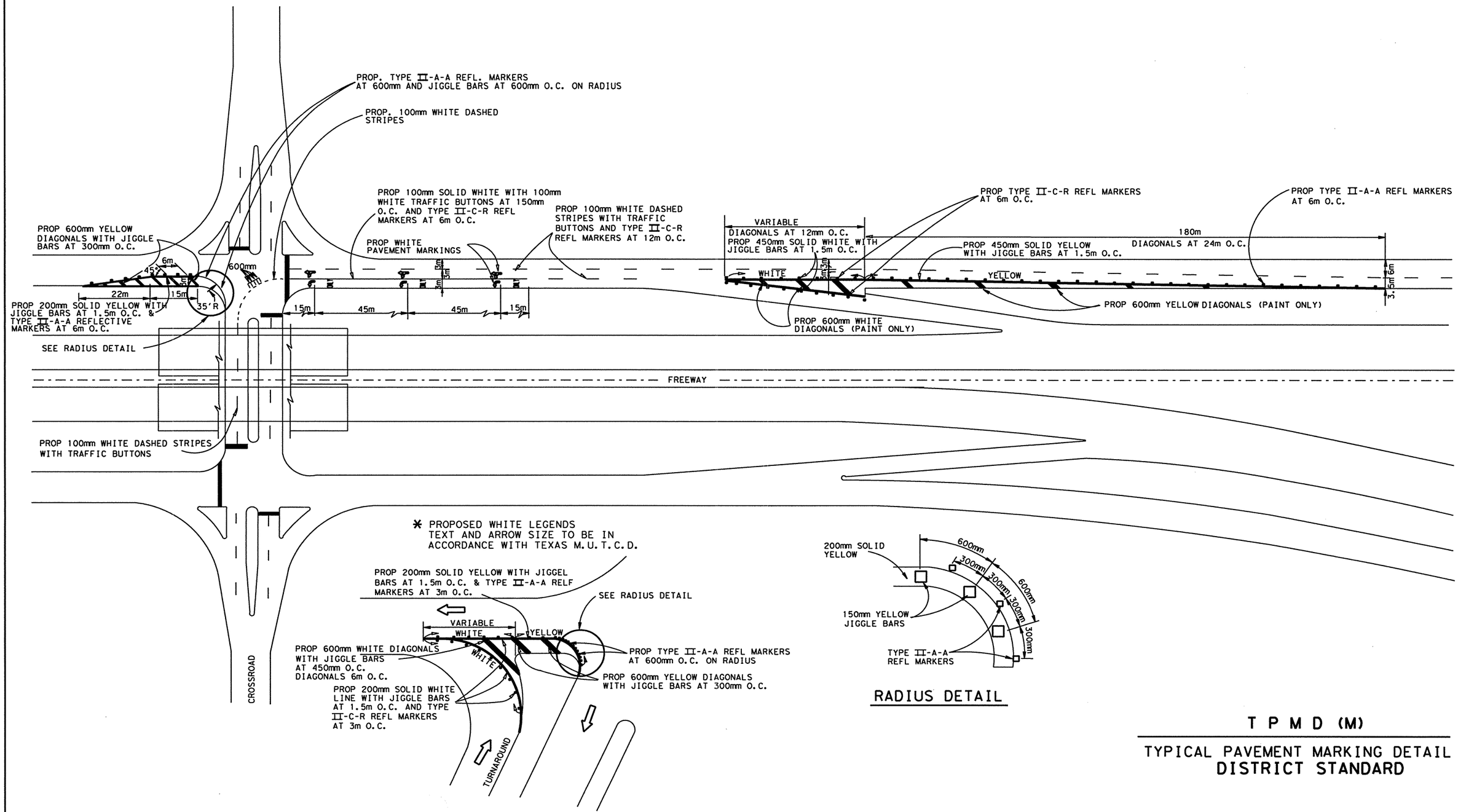





TYPICAL TURNAROUND PAVEMENT MARKING DETAIL




RADIUS DETAIL

# T P M D (M)

## TYPICAL PAVEMENT MARKING DETAIL
## DISTRICT STANDARD

© 2000 Texas Department of Transportation

| FED. RD. DIV. NO. | FEDERAL AID PROJECT NO. | | SHEET NO. |
|---|---|---|---|
| 6 | NH 2000(704), etc. | | 827 |
| STATE | STATE DIST. NO. | COUNTY | |
| TEXAS | | BEXAR | |
| SECT. | SECT. | JOB | HIGHWAY NO. |
| 2452 | 01 | 036, etc. | LP 1604 |

REV. 9-99

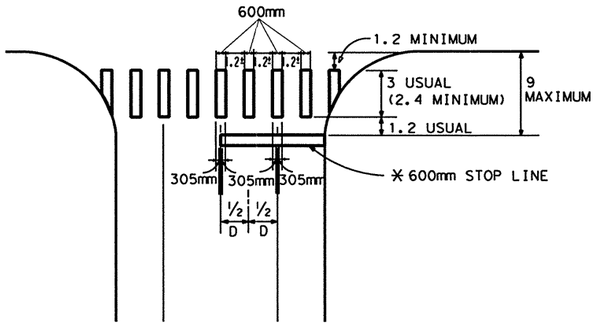


TWO LANES WITH SHOUDERS

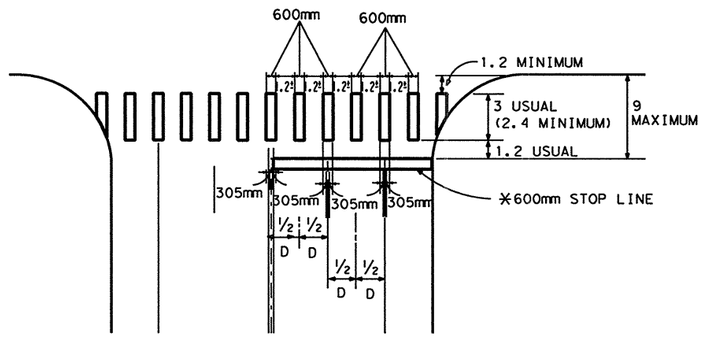


FOUR LANES WITH SHOULDERS

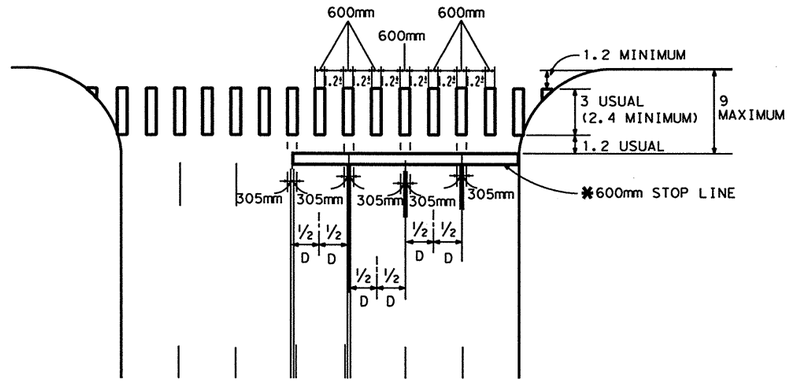


MULTI - LANES

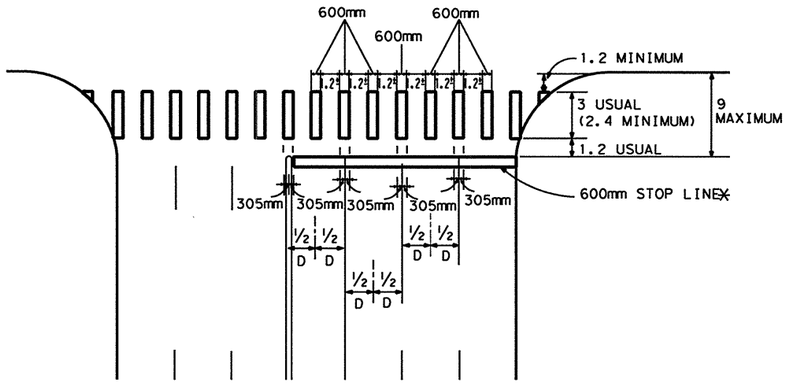


MULTI - LANE WITH MEDIAN

NOTES:

1. ALL LONGITUDINAL LINES FORMING CROSSWALK AND STOP LINES SHALL BE WHITE
*2. STOP LINES AS REQUIRED ON DETAILED PAVEMENT MARKING PLANS.
3. "D" IS EQUAL TO ONE HALF THE DISTANCE.

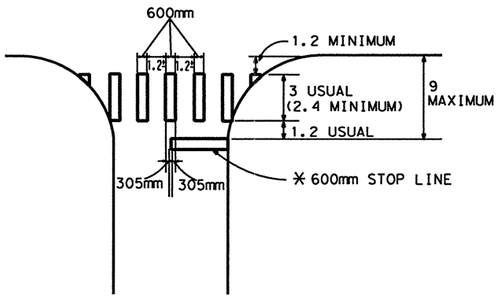


TWO LANES

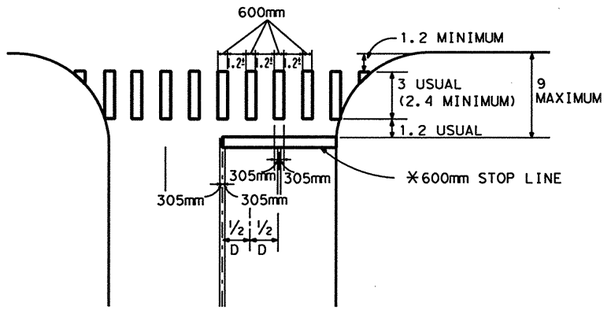


FOUR LANES

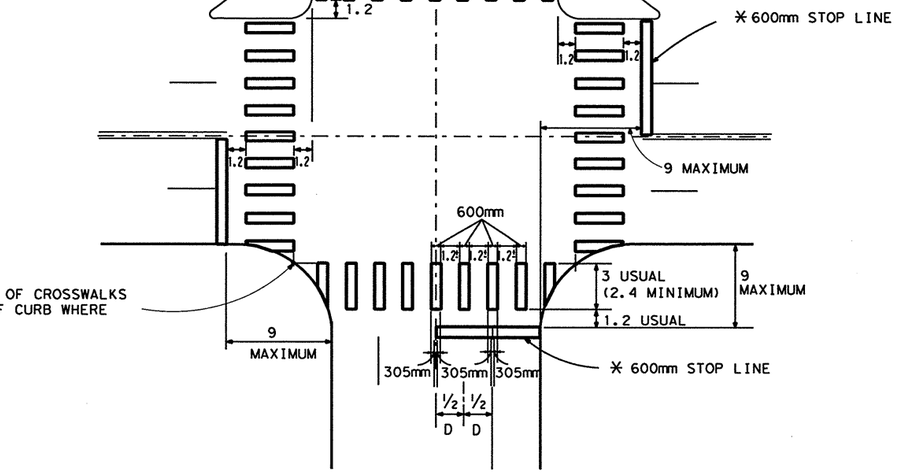


INTERSECTION WITH RIGHT - TURN ISLANDS

All dimensions are in meters unless otherwise noted

# TYPICAL CROSSWALK DETAILS (M)

## DISTRICT STANDARD

DEC 30, 1997

© 2000 Texas Department of Transportation

| FED. RD. DIV. NO. | FEDERAL AID PROJECT NO. | SHEET NO. |
|---|---|---|
| 6 | NH 2000(704), etc. | 828 |

| STATE | STATE DIST. NO. | COUNTY | |
|---|---|---|---|
| TEXAS | SAT. | BEXAR | |
| CONT. | SECT. | JOB | HIGHWAY NO. |
| 2452 | 01 | 036, etc. | LP 1604 |

| TRAFFIC MANAGEMENT ESTIMATED QUANTITIES | | 2452-01-037 |
|---|---|---|
| ITEM | UNIT | QTY |
| 100 mm PVC MULTIDUCT (2-WAY) CONCRETE ENCASED | M | 680 |
| 100 mm PVC MULTIDUCT (BORED) | M | 60 |
| TY A MANHOLE | EA | 1 |
| ** 1/C #14 AWG (TRACER WIRE) | M | 710 |

QUANTITIES THIS SHEET
CSJ 2452-01-037

SCALE 1:2000

BEGIN PROJECT
STA 14+420
CSJ: 2452-01-037

NOTE(S):

ALL DIMENSIONS ARE IN METERS UNLESS OTHERWISE NOTED.

CONDUIT SHALL BE INSTALLED 4 m FROM EDGE OF PAVEMENT.

▲=CONCRETE ENCASED CONDUIT.

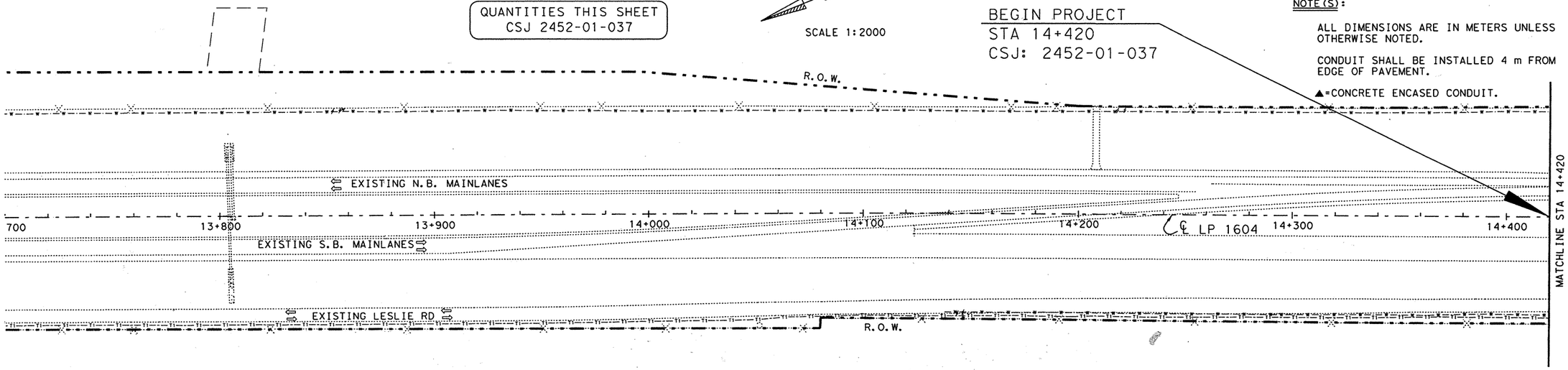


SCALE 1:2000

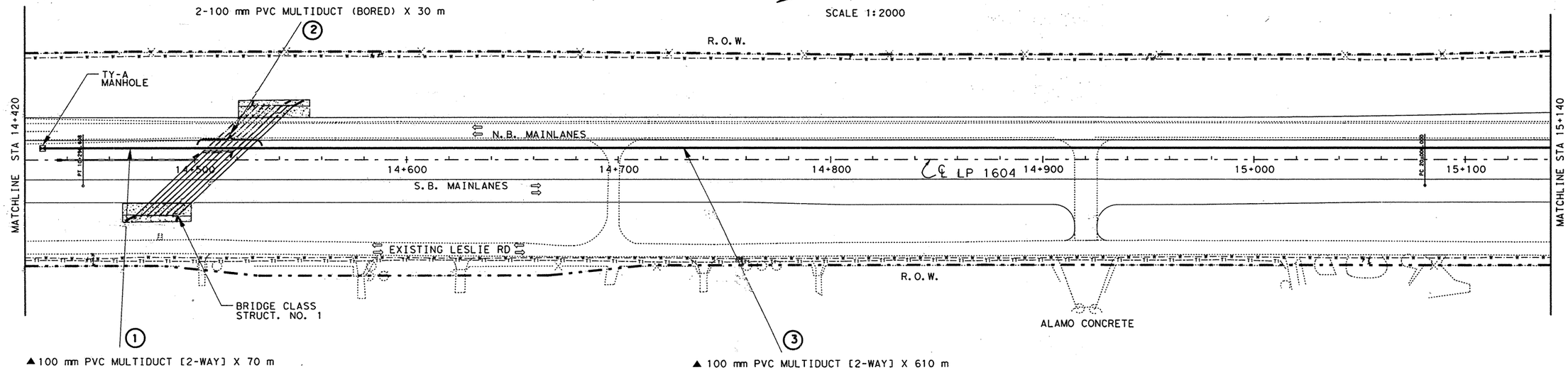


| UTILITY LEGEND | |
|---|---|
| W | WATER LINE |
| T1 | TELEPHONE LINE |
| C | CABLE LINE |
| G1 | GAS LINE |

** FOR CONTRACTORS INFO ONLY
(SEE TRENCH DETAILS).

STATE OF TEXAS
BRIAN G. FARIELLO
66186
REGISTERED PROFESSIONAL ENGINEER

Brian G. Fariello, P.E. 9/11/00
Brian G. Fariello DATE

©2000 Texas Department of Transportation

# TRAFFIC MANAGEMENT SYSTEM LAYOUT

SHEET 1 OF 12

| FED. RD. DIV. NO. | FEDERAL AID PROJECT NO. | | SHEET NO. |
|---|---|---|---|
| 6 | NH 2000(704), etc. | | 829 |
| STATE | DIST. | COUNTY | |
| TEXAS | SAT | BEXAR | |
| CONT. | SECT. | JOB | HIGHWAY NO. |
| 2452 | 01 | 036, ETC | LP 1604 |

13:31:49
11 SEP 2000
I:\everyone\tms\1604to90new\tms01.dgn

lp1604fm471-90\align01.dgn

QUANTITIES THIS SHEET
CSJ 2452-01-038

QUANTITIES THIS SHEET
CSJ 2452-01-037

| TRAFFIC MANAGEMENT ESTIMATED QUANTITIES | | 2452-01-037 | 2452-01-038 |
|---|---|---|---|
| ITEM | UNIT | QTY | QTY |
| 100 mm PVC MULTIDUCT (2-WAY) CONCRETE ENCASED | M | 350 | 355 |
| 100 mm PVC MULTIDUCT (BORED) | M | 60 | 20 |
| TY A MANHOLE | EA | 2 | 1 |
| 1/C #14 AWG (TRACER WIRE) | M | 380 | 365 |

** SCALE 1:2000

LP 1604 CONTROL BREAK
STA 15+500
CSJ: 2452-01-037 (BK)
CSJ: 2452-01-038 (AHD)

NOTE(S):

ALL DIMENSIONS ARE IN METERS UNLESS OTHERWISE NOTED.

CONDUIT SHALL BE INSTALLED 4 m FROM EDGE OF PAVEMENT.

▲=CONCRETE ENCASED CONDUIT.

▲ 100 mm PVC MULTIDUCT [2-WAY] X 45 m ①

▲ 100 mm PVC MULTIDUCT [2-WAY] X 55 m ⑤

2-100 mm PVC MULTIDUCT (BORED) X 20 m ④

▲ 100 mm PVC MULTIDUCT [2-WAY] X 25 m ⑥

▲ 100 mm PVC MULTIDUCT [2-WAY] X 75 m ⑧

▲ 100 mm PVC MULTIDUCT [2-WAY] X 255 m ⑨

2-100 mm PVC MULTIDUCT (BORED) X 10 m ②

▲ 100 mm PVC MULTIDUCT [2-WAY] X 250 m ③

2-100 mm PVC MULTIDUCT (BORED) X 10 m ⑦

DRAINAGE EASEMENT

R.O.W.

CULVERT NO. 2

TY-A MANHOLE

TY-A MANHOLE

TY-A MANHOLE

N.B. FRONTAGE RD.

N.B. MAINLANES

S.B. MAINLANES

S.B. FRONTAGE RD.

℄ LP 1604

15+200 15+300 15+400 15+500 15+600 15+700 15+800

MATCHLINE STA 15+140

MATCHLINE STA 15+860

WESTWOOD LOOP

WESTWOOD VISTA

-037 -038

UTILITY LEGEND

| | |
|---|---|
| —W—W—W—W—W— | WATER LINE |
| —T1—T1—T1—T1—T1— | TELEPHONE LINE |
| —C—C—C—C— | CABLE LINE |
| —G1—G1—G1—G1—G1— | GAS LINE |

** FOR CONTRACTORS INFO ONLY (SEE TRENCH DETAILS).

STATE OF TEXAS
BRIAN G. FARIELLO
66186
REGISTERED PROFESSIONAL ENGINEER

Brian G. Fariello P.E. 9/11/00
Brian G. Fariello DATE

©2000 Texas Department of Transportation

# TRAFFIC MANAGEMENT SYSTEM LAYOUT

SHEET 2 OF 12

| FED.RD. DIV.NO. | FEDERAL AID PROJECT NO. | | SHEET NO. |
|---|---|---|---|
| 6 | NH 2000(704),etc. | | 830 |
| STATE | DIST. | COUNTY | |
| TEXAS | SAT | BEXAR | |
| CONT. | SECT. | JOB | HIGHWAY NO. |
| 2452 | 01 | 036,ETC | LP 1604 |

13:33:23
11 SEP 2000
t:\everyone\tms\1604to90new\tms02.dgn

lp1604fm471-90\align02.dgn

QUANTITIES THIS SHEET
CSJ 2452-01-038

| TRAFFIC MANAGEMENT ESTIMATED QUANTITIES | | 2452-01-038 |
|---|---|---|
| ITEM | UNIT | QTY |
| 100 mm PVC MULTIDUCT (2-WAY) CONCRETE ENCASED | M | 620 |
| 100 mm PVC MULTIDUCT (BORED) | M | 346 |
| TY A MANHOLE | EA | 4 |
| ** 1/C #14 AWG (TRACER WIRE) | M | 793 |

SCALE 1:2000

NOTE(S):

ALL DIMENSIONS ARE IN METERS UNLESS OTHERWISE NOTED.

CONDUIT SHALL BE INSTALLED 4 m FROM EDGE OF PAVEMENT.

▲ =CONCRETE ENCASED CONDUIT.

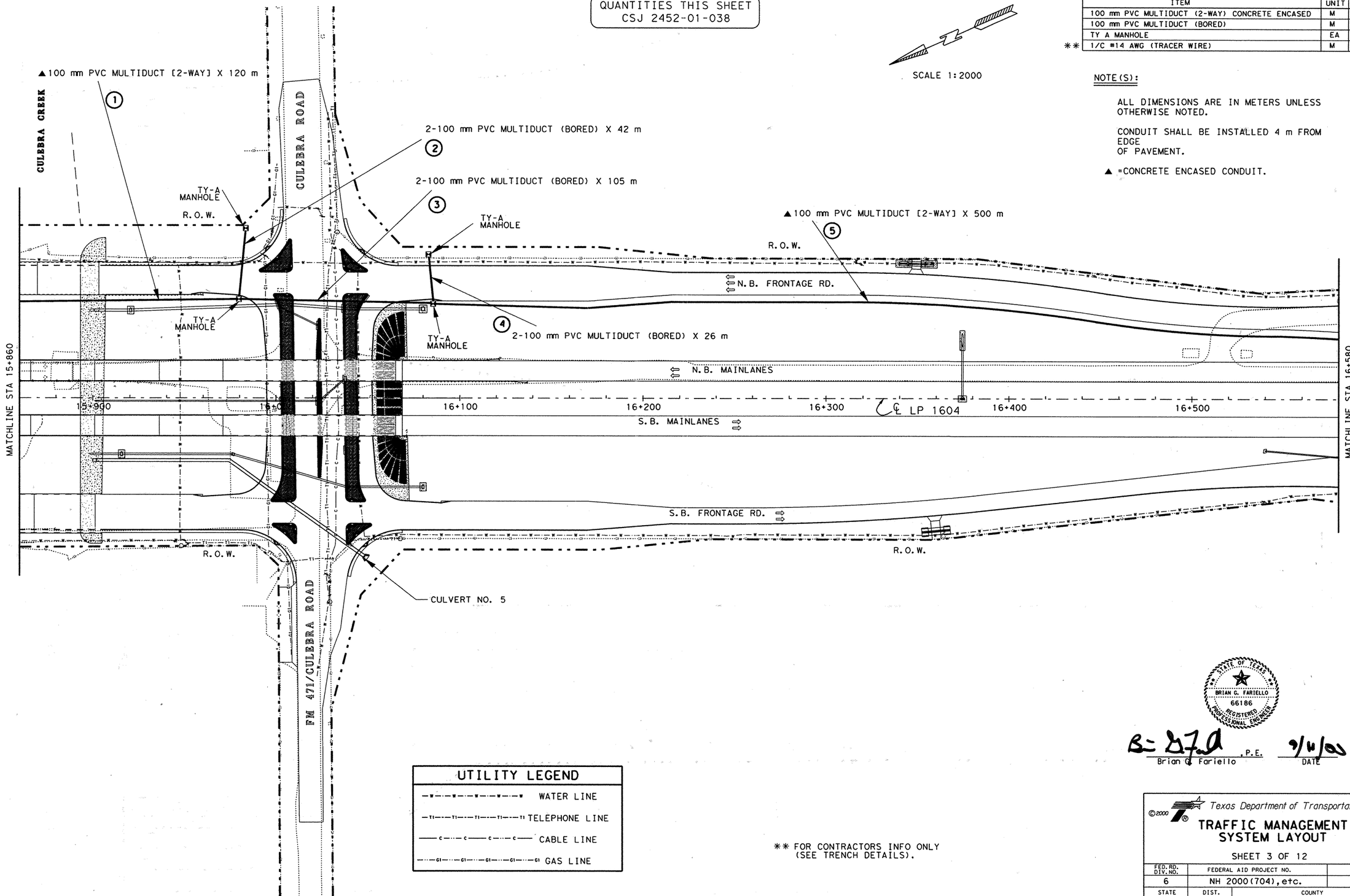


UTILITY LEGEND

| | |
|---|---|
| -W-W-W-W- | WATER LINE |
| -T1-T1-T1-T1-T1- | TELEPHONE LINE |
| -C-C-C-C-C- | CABLE LINE |
| -G1-G1-G1-G1-G1- | GAS LINE |

** FOR CONTRACTORS INFO ONLY (SEE TRENCH DETAILS).

STATE OF TEXAS
BRIAN G. FARIELLO
66186
REGISTERED PROFESSIONAL ENGINEER

B= Dzd , P.E. 9/6/00
Brian G. Fariello DATE

©2000
Texas Department of Transportation

# TRAFFIC MANAGEMENT SYSTEM LAYOUT

SHEET 3 OF 12

| FED. RD. DIV. NO. | FEDERAL AID PROJECT NO. | | SHEET NO. |
|---|---|---|---|
| 6 | NH 2000(704), etc. | | 831 |
| STATE | DIST. | COUNTY | |
| TEXAS | SAT | BEXAR | |
| CONT. | SECT. | JOB | HIGHWAY NO. |
| 2452 | 01 | 036, etc. | LP 1604 |

13:34:39
11 SEP 2000
I:\everyone\tms\1604to90new\tms03.dgn

lp1604fm471-90align03.dgn

| TRAFFIC MANAGEMENT ESTIMATED QUANTITIES | | 2452-01-038 | 2452-01-037 |
|---|---|---|---|
| ITEM | UNIT | QTY | QTY |
| 100 mm PVC MULTIDUCT (2-WAY) CONCRETE ENCASED | M | 358 | 866 |
| 100 mm PVC MULTIDUCT (BORED) | M | 124 | 292 |
| TY A MANHOLE | EA | 2 | 4 |
| ** 1/C #14 AWG (TRACER WIRE) | M | 420 | 1012 |

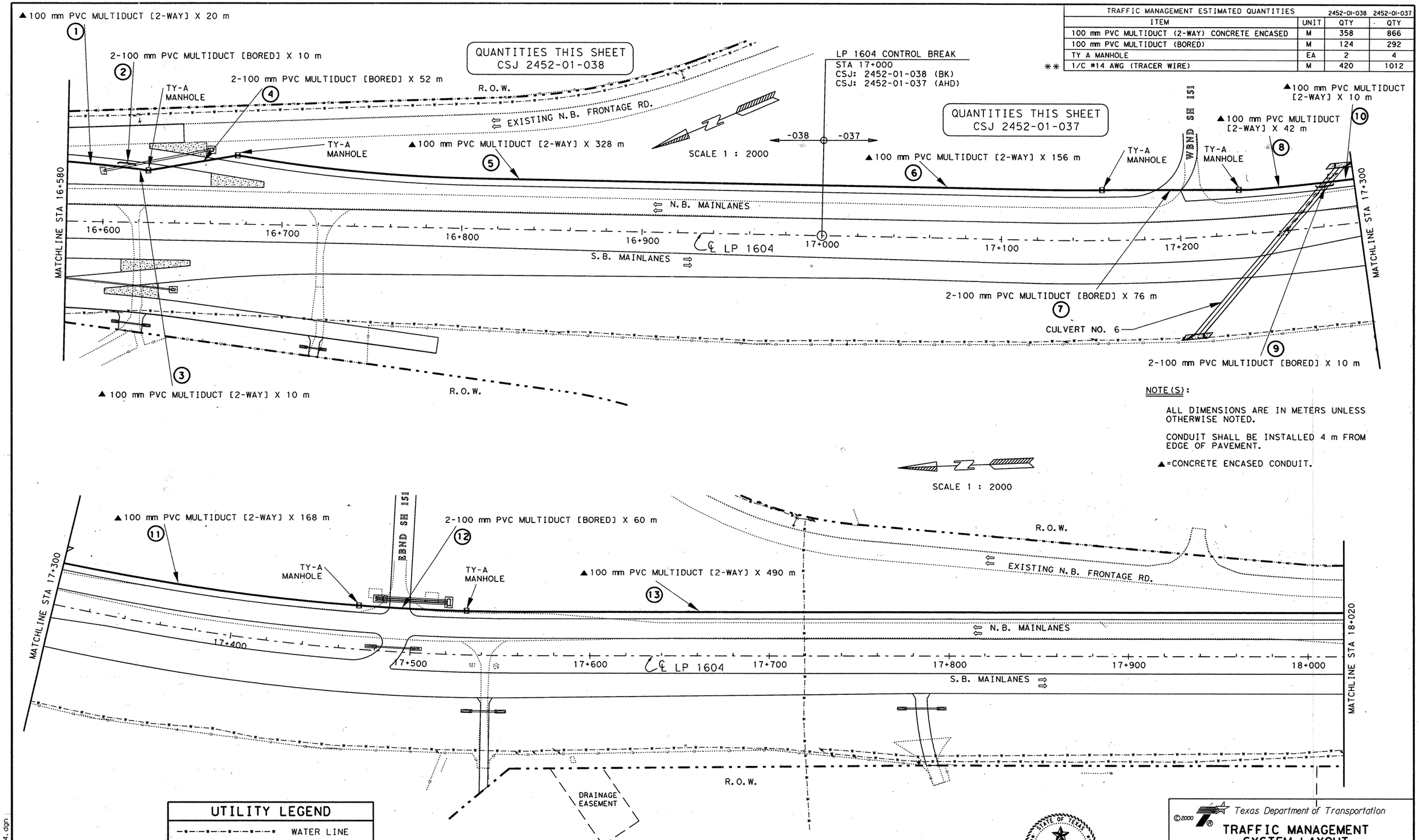


NOTE(S):

ALL DIMENSIONS ARE IN METERS UNLESS OTHERWISE NOTED.

CONDUIT SHALL BE INSTALLED 4 m FROM EDGE OF PAVEMENT.

▲=CONCRETE ENCASED CONDUIT.




| UTILITY LEGEND | |
|---|---|
| —W—W—W—W—W— | WATER LINE |
| —T1—T1—T1—T1—T1— | TELEPHONE LINE |
| —C—C—C—C—C— | CABLE LINE |
| —G1—G1—G1—G1—G1— | GAS LINE |

** FOR CONTRACTORS INFO ONLY (SEE TRENCH DETAILS).

STATE OF TEXAS
BRIAN C. FARIELLO
66186
REGISTERED PROFESSIONAL ENGINEER

Brian C. Fariello, P.E.

9/11/00
DATE

© 2000 Texas Department of Transportation

# TRAFFIC MANAGEMENT SYSTEM LAYOUT

SHEET 4 OF 12

| FED. RD. DIV. NO. | FEDERAL AID PROJECT NO. | | SHEET NO. |
|---|---|---|---|
| 6 | NH 2000(704), etc. | | 832 |
| STATE | DIST. | COUNTY | |
| TEXAS | SAT | BEXAR | |
| CONT. | SECT. | JOB | HIGHWAY NO. |
| 2452 | 01 | 036, etc. | LP 1604 |

13:36:17
11 SEP 2000
t:\everyone\tms\1604to90new\tms04.dgn

lp1604fm471-90\align04.dgn

| TRAFFIC MANAGEMENT ESTIMATED QUANTITIES | | 2452-01-037 |
|---|---|---|
| ITEM | UNIT | QTY |
| 100 mm PVC MULTIDUCT (2-WAY) CONCRETE ENCASED | M | 1237 |
| 100 mm PVC MULTIDUCT (BORED) | M | 710 |
| TY A MANHOLE | EA | 12 |
| ** 1/C #14 AWG (TRACER WIRE) | M | 1592 |

QUANTITIES THIS SHEET
CSJ 2452-01-037

SCALE 1:2000

▲100 mm PVC MULTIDUCT [2-WAY] X 16 m
▲100 mm PVC MULTIDUCT [2-WAY] X 112 m
▲100 mm PVC MULTIDUCT [2-WAY] X 92 m
2-100 mm PVC MULTIDUCT (BORED) X 108 m
2-100 mm PVC MULTIDUCT (BORED) X 25 m
▲100 mm PVC MULTIDUCT [2-WAY] X 118 m
▲100 mm PVC MULTIDUCT [2-WAY] X 180 m
▲100 mm PVC MULTIDUCT [2-WAY] X 62 m
2-100 mm PVC MULTIDUCT (BORED) X 10 m
2-100 mm PVC MULTIDUCT (BORED) X 10 m
2-100 mm PVC MULTIDUCT (BORED) X 10 m
2-100 mm PVC MULTIDUCT (BORED) X 10 m

NORTH VISTA COLLEGE DRIVE
DRAINAGE EASEMENT
TY-A MANHOLE
R.O.W.
N.B. FRONTAGE RD.
N.B. MAINLANES
S.B. MAINLANES
MATCHLINE STA 18+020
MATCHLINE STA 18+740
18+100
18+200
18+300
18+400
18+500
℄ LP 1604
18+600
18+700
VALLEY MEADOW
MISTY WOODS
NORTHWES COLL
CULVERT NO. 7
CULVERT NO. 8
CULVERT NO. 9

NOTE(S):

ALL DIMENSIONS ARE IN METERS UNLESS OTHERWISE NOTED.

CONDUIT SHALL BE INSTALLED 4 m FROM EGDE OF PAVEMENT.

▲ =CONCRETE ENCASED CONDUIT.

SCALE 1:2000

▲100 mm PVC MULTIDUCT [2-WAY] X 114 m
2-100 mm PVC MULTIDUCT (BORED) X 28 m
▲100 mm PVC MULTIDUCT [2-WAY] X 250 m
2-100 mm PVC MULTIDUCT (BORED) X 36 m
2-100 mm PVC MULTIDUCT (BORED) X 33 m
▲100 mm PVC MULTIDUCT [2-WAY] X 126 m
▲100 mm PVC MULTIDUCT [2-WAY] X 43 m
2-100 mm PVC MULTIDUCT (BORED) X 10 m
2-100 mm PVC MULTIDUCT (BORED) X 30 m
▲100 mm PVC MULTIDUCT [2-WAY] X 86 m
2-100 mm PVC MULTIDUCT (BORED) X 10 m
2-100 mm PVC MULTIDUCT (BORED) X 45 m
▲100 mm PVC MULTIDUCT [2-WAY] X 38 m

NORTH ELLISON DRIVE
WISEMAN BLVD.
DRAINAGE EASEMENT
TY-A MANHOLE
R.O.W.
N.B. FRONTAGE RD.
S.B. MAINLANES
MATCHLINE STA 18+740
MATCHLINE STA 19+460
18+800
18+900
19+000
19+100
℄ LP 1604
19+200
19+300
19+400
CULVERT NO. 10
CULVERT NO. 11

** FOR CONTRACTORS INFO ONLY (SEE TRENCH DETAILS).

| UTILITY LEGEND | |
|---|---|
| W W W W W | WATER LINE |
| T1 T1 T1 T1 T1 | TELEPHONE LINE |
| C C C C | CABLE LINE |
| G1 G1 G1 G1 G1 | GAS LINE |

STATE OF TEXAS
BRIAN G. FARIELLO
66186
REGISTERED PROFESSIONAL ENGINEER

Brian G. Fariello, P.E. 9/11/00
Brian G. Fariello DATE

©2000 Texas Department of Transportation

# TRAFFIC MANAGEMENT SYSTEM LAYOUT

SHEET 5 OF 12

| FED. RD. DIV. NO. | FEDERAL AID PROJECT NO. | | SHEET NO. |
|---|---|---|---|
| 6 | NH 2000(704), etc. | | 833 |
| STATE | DIST. | COUNTY | |
| TEXAS | SAT | BEXAR | |
| CONT. | SECT. | JOB | HIGHWAY NO. |
| 2452 | 01 | 036, etc. | LP 1604 |

13:37:46
11 SEP 2000
t:\everyone\tms\1604to90new\tms05.dgn
lp1604fm471-90valign06.dgn

| TRAFFIC MANAGEMENT ESTIMATED QUANTITIES | | 2452-01-037 |
|---|---|---|
| ITEM | UNIT | QTY |
| 100 mm PVC MULTIDUCT (2-WAY) CONCRETE ENCASED | M | 1364 ~~1237~~ |
| 100 mm PVC MULTIDUCT (BORED) | M | 456 ~~710~~ |
| TY A MANHOLE | EA | 9 ~~12~~ |
| ** 1/C #14 AWG (TRACER WIRE) | M | 1592 |
| TY-D GROUND BOX | EA | 2 |

CHANGE ORDER ITEMS CLOUDED AND/OR BOLD SLANT TEXT

QUANTITIES THIS SHEET
CSJ 2452-01-037

SCALE 1:2000

▲100 mm PVC MULTIDUCT [2-WAY] X 16 m ①

▲100 mm PVC MULTIDUCT [2-WAY] X 112 m ③

▲100 mm PVC MULTIDUCT [2-WAY] X 92 m ⑤

NORTH VISTA COLLEGE DRIVE

DRAINAGE EASEMENT

TY-A MANHOLE

2-100 mm PVC MULTIDUCT (BORED) X 108 m ⑥

R.O.W.

2-100 mm PVC MULTIDUCT (BORED) X 25 m ⑩

NORTHWEST VISTA COLL

N.B. FRONTAGE RD.

N.B. MAINLANES

S.B. MAINLANES

MATCHLINE STA 18+020

18+100 18+200 18+300 18+400 18+500 18+600 18+700

℄ LP 1604

MATCHLINE STA 18+740

2-100 mm PVC MULTIDUCT (BORED) X 10 m ④

CULVERT NO. 8

▲100 mm PVC MULTIDUCT [2-WAY] X 118 m ⑦

CULVERT NO. 9

2-100 mm PVC MULTIDUCT (BORED) X 10 m ⑧

▲100 mm PVC MULTIDUCT [2-WAY] X 180 m ⑨

VALLEY MEADOW

MISTY WOODS

▲100 mm PVC MULTIDUCT [2-WAY] X 62 m ⑪

CULVERT NO. 7

2-100 mm PVC MULTIDUCT (BORED) X 10 m ②

NOTE(S):

ALL DIMENSIONS ARE IN METERS UNLESS OTHERWISE NOTED.

CONDUIT SHALL BE INSTALLED 4 m FROM EGDE OF PAVEMENT.

▲=CONCRETE ENCASED CONDUIT.

SCALE 1:2000

▲2-100 mm PVC MULTIDUCT ~~(BORED)~~ X 33 m ㉓

TY-D GROUND BOX
~~TY-A MANHOLE~~

WISEMAN BLVD.

▲2-100 mm PVC MULTIDUCT ~~(BORED)~~ X 28 m ⑭

▲2-100 mm PVC MULTIDUCT ~~(BORED)~~ X 36 m ㉑

▲100 mm PVC MULTIDUCT [2-WAY] X 126 m ㉔

▲100 mm PVC MULTIDUCT [2-WAY] X 114 m ⑫

TY-D GROUND BOX
~~TY-A MANHOLE~~

NORTH ELLISON DRIVE

DRAINAGE EASEMENT

TY-A MANHOLE

▲100 mm PVC MULTIDUCT [2-WAY] X 250 m ⑱

R.O.W.

N.B. FRONTAGE RD.

TY-A MANHOLE

S.B. MAINLANES

MATCHLINE STA 18+740

18+800 18+900 19+000 19+100 19+200 19+300 19+400

℄ LP 1604

MATCHLINE STA 19+460

TY-A MANHOLE ⑬

TY-A MANHOLE

▲100 mm PVC MULTIDUCT [2-WAY] X 43 m

2-100 mm PVC MULTIDUCT (BORED) X 10 m ⑰

CULVERT NO. 10

2-100 mm PVC MULTIDUCT (BORED) X 10 m ⑲

2-100 mm PVC MULTIDUCT (BORED) X 45 m ㉒

TY-A MANHOLE

CULVERT NO. 11

▲100 mm PVC MULTIDUCT [2-WAY] X 38 m ⑳

▲2-100 mm PVC MULTIDUCT ~~(BORED)~~ X 30 m ⑮

▲100 mm PVC MULTIDUCT [2-WAY] X 86 m ⑯

R.O.W.

DRAINAGE EASEMENT

DRAINAGE EASEMENT

UTILITY LEGEND

- WATER LINE
- TELEPHONE LINE
- CABLE LINE
- GAS LINE

** FOR CONTRACTORS INFO ONLY (SEE TRENCH DETAILS)

STATE OF TEXAS
BRIAN G. FARIELLO
66186
REGISTERED PROFESSIONAL ENGINEER

Brian G. Fariello, P.E. 12/27/2004
Brian G. Fariello DATE

CHANGE ORDER NO. 90

12-22-04

©2000

Texas Department of Transportation

# TRAFFIC MANAGEMENT SYSTEM LAYOUT

SHEET 5 OF 12

| FED. RD. DIV. NO. | FEDERAL AID PROJECT NO. | | SHEET NO. |
|---|---|---|---|
| 6 | NH 2000(704), etc. | | 833 A |
| STATE | DIST. | COUNTY | |
| TEXAS | SAT | BEXAR | |
| CONT. | SECT. | JOB | HIGHWAY NO. |
| 2452 | 01 | 036, etc. | LP 1604 |

10:04:45 AM
12/27/2004
T:\TMS\1604=2452-01-036\tms05 CO.dgn

lp1604fm471-90\sign06.dgn

| TRAFFIC MANAGEMENT ESTIMATED QUANTITIES | | 2452-01-037 | 2452-01-036 |
|---|---|---|---|
| ITEM | UNIT | QTY | QTY |
| 100 mm PVC MULTIDUCT (2-WAY) CONCRETE ENCASED | M | 1157 | 250 |
| 100 mm PVC MULTIDUCT (BORED) | M | 40 | 20 |
| TY A MANHOLE | EA | 2 | 2 |
| ** 1/C #14 AWG (TRACER WIRE) | M | 1177 | 260 |

SCALE 1: 2000

NOTE(S):

ALL DIMENSIONS ARE IN METERS UNLESS OTHERWISE NOTED.

CONDUIT SHALL BE INSTALLED 4 m FROM EDGE OF PAVEMENT.

▲=CONCRETE ENCASED CONDUIT.

▲ 100 mm PVC MULTIDUCT [2-WAY] X 262 m (1)

▲ 100 mm PVC MULTIDUCT [2-WAY] X 130 m (3)

▲ 100 mm PVC MULTIDUCT [2-WAY] X 200 m (5)

▲ 100 mm PVC MULTIDUCT [2-WAY] X 90 m (6)

DRAINAGE EASEMENT

R.O.W.

N.B. FRONTAGE RD.

S.B. MAINLANES

REED ROAD

TY-A MANHOLE

TY-A MANHOLE

MATCHLINE STA 19+460

19+500 19+600 ℄ LP 1604 19+700 19+800 19+900 20+000 20+100

MATCHLINE STA 20+180

2-100 mm PVC MULTIDUCT (BORED) X 10 m (2)

CULVERT NO. 12

2-100 mm PVC MULTIDUCT (BORED) X 10 m (4)

CULVERT NO. 13

▲ 100 mm PVC MULTIDUCT [2-WAY] X 15 m (7)

DRAINAGE EASEMENT

R.O.W.

DRAINAGE EASEMENT

DRAINAGE EASEMENT

DRAINAGE EASEMENT

KILMARNOCH LANE

2-100 mm PVC MULTIDUCT (BORED) X 10 m (12)

QUANTITIES THIS SHEET
CSJ 2452-01-037

QUANTITIES THIS SHEET
CSJ 2452-01-036

▲ 100 mm PVC MULTIDUCT [2-WAY] X 85 m (9)

LP 1604 CONTROL BREAK
STA 20+640
CSJ: 2452-01-037 (BK)
CSJ: 2452-01-036 (AHD)

▲ 100 mm PVC MULTIDUCT [2-WAY] X 85 m (10)

TY-A MANHOLE

▲ 100 mm PVC MULTIDUCT [2-WAY] X 460 m (8)

SCALE 1: 2000

-037 -036

R.O.W.

N.B. FRONTAGE RD.

S.B. MAINLANES

MATCHLINE STA 20+180

20+200 20+300 20+400 20+500 ℄ LP 1604 20+600 20+700 20+800

TY-A MANHOLE

▲ 100 mm PVC MULTIDUCT [2-WAY] X 60 m (11)

▲ 100 mm PVC MULTIDUCT [2-WAY] X 20 m (13)

MATCHLINE SAT 20+900

R.O.W.

DRAINAGE EASEMENT

DRAINAGE EASEMENT

| UTILITY LEGEND | |
|---|---|
| W W W W W W W | WATER LINE |
| T1 T1 T1 T1 T1 T1 T1 | TELEPHONE LINE |
| C C C C C | CABLE LINE |
| G1 G1 G1 G1 G1 G1 G1 | GAS LINE |

** FOR CONTRACTORS INFO ONLY (SEE TRENCH DETAILS).

STATE OF TEXAS
BRIAN G. FARIELLO
66186
REGISTERED PROFESSIONAL ENGINEER

Brian G. Fariello, P.E.

9/11/00
DATE

©2000 Texas Department of Transportation

# TRAFFIC MANAGEMENT SYSTEM LAYOUT

SHEET 6 OF 12

| FED.RD. DIV.NO. | FEDERAL AID PROJECT NO. | | SHEET NO. |
|---|---|---|---|
| 6 | NH 2000(704),etc. | | 834 |
| STATE | DIST. | COUNTY | |
| TEXAS | SAT | BEXAR | |
| CONT. | SECT. | JOB | HIGHWAY NO. |
| 2452 | 01 | 036,etc. | LP 1604 |

13:38:48
11 SEP 2000
t:\everyone\tms\1604to90new\tms06.dgn

lp1604fm471-90align08.dgn

| TRAFFIC MANAGEMENT ESTIMATED QUANTITIES | | | 2452-01-036 |
|---|---|---|---|
| | ITEM | UNIT | QTY |
| | 100 mm PVC MULTIDUCT (2-WAY) CONCRETE ENCASED | M | 610 |
| | 100 mm PVC MULTIDUCT (BORED) | M | 400 |
| | TY A MANHOLE | EA | 4 |
| ** | 1/C #14 AWG (TRACER WIRE) | M | 810 |

QUANTITIES THIS SHEET
CSJ 2452-01-036

SCALE 1:2000

NOTE(S):

ALL DIMENSIONS ARE IN METERS UNLESS OTHERWISE NOTED.

CONDUIT SHALL BE INSTALLED 4 m FROM EDGE OF PAVEMENT.

▲=CONCRETE ENCASED CONDUIT.

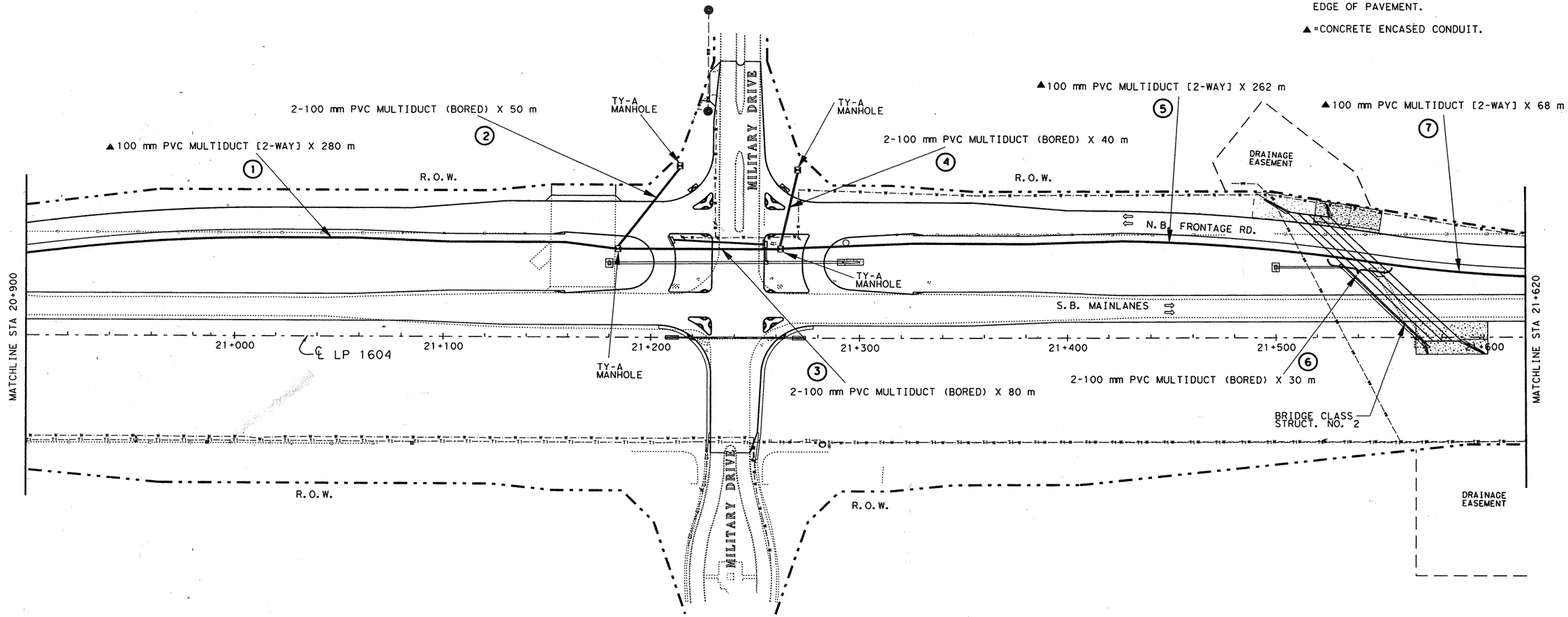


| UTILITY LEGEND | |
|---|---|
| -W-W-W-W- | WATER LINE |
| -T1-T1-T1-T1- | TELEPHONE LINE |
| -C-C-C-C- | CABLE LINE |
| -G1-G1-G1-G1-G1- | GAS LINE |

** FOR CONTRACTORS INFO ONLY (SEE TRENCH DETAILS).

STATE OF TEXAS
BRIAN G. FARIELLO
66186
REGISTERED PROFESSIONAL ENGINEER

Brian G. Fariello, P.E.

9/11/00
DATE

©2000 Texas Department of Transportation

# TRAFFIC MANAGEMENT SYSTEM LAYOUT

SHEET 7 OF 12

| FED.RD. DIV.NO. | FEDERAL AID PROJECT NO. | | SHEET NO. |
|---|---|---|---|
| 6 | NH 2000(704),etc. | | 835 |
| STATE | DIST. | COUNTY | |
| TEXAS | SAT | BEXAR | |
| CONT. | SECT. | JOB | HIGHWAY NO. |
| 2452 | 01 | 036,etc. | LP 1604 |

13:39:42
11 SEP 2000
t:\everyone\tms\1604to90new\tms07.dgn

lp1604fm471-90\altgn10.dgn

| TRAFFIC MANAGEMENT ESTIMATED QUANTITIES | | 2452-01-036 |
|---|---|---|
| ITEM | UNIT | QTY |
| 100 mm PVC MULTIDUCT (2-WAY) CONCRETE ENCASED | M | 1311 |
| 100 mm PVC MULTIDUCT (BORED) | M | 450 |
| TY A MANHOLE | EA | 4 |
| ** 1/C #14 AWG (TRACER WIRE) | M | 1536 |

NOTE(S):

ALL DIMENSIONS ARE IN METERS UNLESS OTHERWISE NOTED.

CONDUIT SHALL BE INSTALLED 4 m FROM EDGE OF PAVEMENT.

▲= CONCRETE ENCASED CONDUIT.

QUANTITIES THIS SHEET
CSJ 2452-01-036

SCALE 1:2000

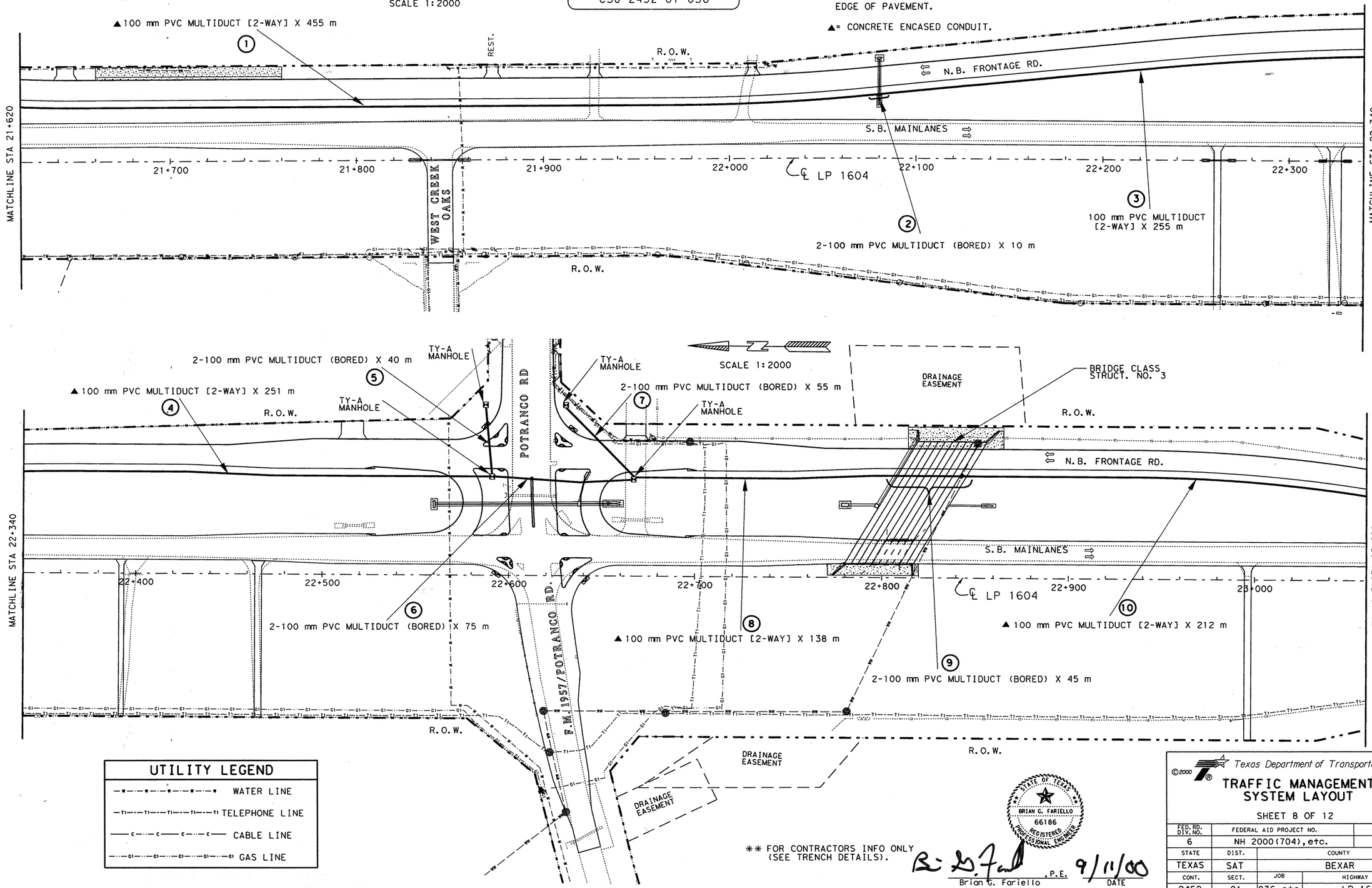


SCALE 1:2000

| UTILITY LEGEND | |
|---|---|
| W W W W W | WATER LINE |
| T1 T1 T1 T1 T1 | TELEPHONE LINE |
| C C C C | CABLE LINE |
| G1 G1 G1 G1 G1 | GAS LINE |

** FOR CONTRACTORS INFO ONLY (SEE TRENCH DETAILS).

STATE OF TEXAS
BRIAN G. FARIELLO
66186
REGISTERED PROFESSIONAL ENGINEER

Brian G. Fariello, P.E. 9/11/00
DATE

©2000

Texas Department of Transportation

# TRAFFIC MANAGEMENT SYSTEM LAYOUT

SHEET 8 OF 12

| FED.RD. DIV.NO. | FEDERAL AID PROJECT NO. | | SHEET NO. |
|---|---|---|---|
| 6 | NH 2000(704),etc. | | 836 |
| STATE | DIST. | COUNTY | |
| TEXAS | SAT | BEXAR | |
| CONT. | SECT. | JOB | HIGHWAY NO. |
| 2452 | 01 | 036,etc. | LP 1604 |

13:59:52
11 SEP 2000
t:\everyone\tms\1604to90new\tms08.dgn

lp1604fm471-90valignll.dgn

NOTE(S):

ALL DIMENSIONS ARE IN METERS UNLESS OTHERWISE NOTED.

CONDUIT SHALL BE INSTALLED 4 m FROM EDGE OF PAVEMENT.

▲ = CONCRETE ENCASED CONDUIT.

| TRAFFIC MANAGEMENT ESTIMATED QUANTITIES | | | 2452-01-036 |
|---|---|---|---|
| | ITEM | UNIT | QTY |
| | 100 mm PVC MULTIDUCT (2-WAY) CONCRETE ENCASED | M | 1311 |
| | 100 mm PVC MULTIDUCT (BORED) | M | 450 |
| | TY A MANHOLE | EA | 4 |
| ** | 1/C #14 AWG (TRACER WIRE) | M | 1536 |

QUANTITIES THIS SHEET
CSJ 2452-01-036

SCALE 1:2000

▲ 100 mm PVC MULTIDUCT [2-WAY] X 455 m

MATCHLINE STA 21+620

MATCHLINE STA 22+340

REST.

R.O.W.

105 m

N.B. FRONTAGE RD.

50 m

S.B. MAINLANES

21+700 21+800 21+900 22+000 22+100 22+200 22+300

℄ LP 1604

WEST CREEK OAKS

TY-D GROUND BOX W/APRON

TY-D GROUND BOX W/APRON

2-100 mm PVC MULTIDUCT (BORED) X 10 m

100 mm PVC MULTIDUCT [2-WAY] X 255 m

R.O.W.

2-100 mm PVC MULTIDUCT (BORED) X 40 m

TY-A MANHOLE

▲ 100 mm PVC MULTIDUCT [2-WAY] X 251 m

TY-A MANHOLE

R.O.W.

POTRANCO RD

TY-A MANHOLE

2-100 mm PVC MULTIDUCT (BORED) X 55 m

TY-A MANHOLE

SCALE 1:2000

DRAINAGE EASEMENT

BRIDGE CLASS STRUCT. NO. 3

R.O.W.

N.B. FRONTAGE RD.

MATCHLINE STA 22+340

MATCHLINE STA 23+060

S.B. MAINLANES

22+400 22+500 22+600 22+700 22+800 22+900 23+000

℄ LP 1604

2-100 mm PVC MULTIDUCT (BORED) X 75 m

▲ 100 mm PVC MULTIDUCT [2-WAY] X 138 m

▲ 100 mm PVC MULTIDUCT [2-WAY] X 212 m

2-100 mm PVC MULTIDUCT (BORED) X 45 m

F.M. 1957/POTRANCO RD.

R.O.W.

DRAINAGE EASEMENT

DRAINAGE EASEMENT

R.O.W.

TY-D GROUND BOX ADDITION NOTES:

1. CONTRACTOR SHALL BREAK OUT CONDUIT AND INSTALL TY-D GROUND BOXES (W/APRON) AS SHOWN ON THIS LAYOUT AND ACCORDING TO ED (2)-98(M).
2. LABEL GROUND BOXES "DANGER HIGH VOLTAGE - TMS" AS SHOWN IN GENERAL NOTES.
3. GROUND BOX LOCATIONS ARE APPROXIMATE AND MAY BE ADJUSTED BY CONTRACTOR TO FACILITATE PULLING OF 1/C #14 TRACER WIRE.
4. CONTRACTOR IS RESPONSIBLE FOR TCP, SW3P, AND VEGETATION DURING AND AFTER INSTALLATION OF TY-D GROUND BOXES.

** FOR CONTRACTORS INFO ONLY (SEE TRENCH DETAILS).

STATE OF TEXAS
BRIAN G. FARIELLO
66186
LICENSED PROFESSIONAL ENGINEER

Brian G. Fariello, P.E. — DATE 10/18/07

ADDITIONAL GROUND BOXES

10-17-07

©2000

Texas Department of Transportation

TRAFFIC MANAGEMENT SYSTEM LAYOUT

SHEET 8 OF 12

| FED.RD. DIV.NO. | FEDERAL AID PROJECT NO. | | SHEET NO. |
|---|---|---|---|
| 6 | NH 2000(704),etc. | | 836A |
| STATE | DIST. | COUNTY | |
| TEXAS | SAT | BEXAR | |
| CONT. | SECT. | JOB | HIGHWAY NO. |
| 2452 | 01 | 036,etc. | LP 1604 |

8:24:02 AM
10/17/2007
T:\TMS\1604+2452-01-036\tms08 rev.dgn

tp1604fm471-90\align11.dgn

| TRAFFIC MANAGEMENT ESTIMATED QUANTITIES | | 2452-01-036 |
|---|---|---|
| ITEM | UNIT | QTY |
| 100 mm PVC MULTIDUCT (2-WAY) CONCRETE ENCASED | M | 1432 |
| 100 mm PVC MULTIDUCT (BORED) | M | 40 |
| TY A MANHOLE | EA | 1 |
| 1/C #14 AWG (TRACER WIRE) | M | 1452 |

NOTE(S):

ALL DIMENSIONS ARE IN METERS UNLESS OTHERWISE NOTED.

CONDUIT SHALL BE INSTALLED 4 m FROM EDGE OF PAVEMENT.

▲=CONCRETE ENCASED CONDUIT.

QUANTITIES THIS SHEET
CSJ 2452-01-036

SCALE 1:2000

▲100 mm PVC MULTIDUCT [2-WAY] X 65 m

▲100 mm PVC MULTIDUCT [2-WAY] X 227 m

TY-A MANHOLE

R.O.W.

N.B. FRONTAGE RD.

S.B. MAINLANES

MATCHLINE STA 23+060

23+100 23+200 23+300 23+400 23+500 23+600 23+700

℄ LP 1604

MATCHLINE STA 23+780

2-100 mm PVC MULTIDUCT (BORED) X 10 m

▲100 mm PVC MULTIDUCT [2-WAY] X 418 m

R.O.W.

SCALE 1:2000

▲100 mm PVC MULTIDUCT [2-WAY] X 707 m

DRAINAGE EASEMENT

▲ 100 mm PVC MULTIDUCT [2-WAY] X 15 m

R.O.W.

N.B. FRONTAGE RD.

S.B. MAINLANES

24+000 24+100 24+200 24+300 24+400

℄ LP 1604

MATCHLINE STA 24+500

23+900 23+800

MATCHLINE STA 23+780

2-100 mm PVC MULTIDUCT (BORED) X 10 m

R.O.W.

DRAINAGE EASEMENT

UTILITY LEGEND

WATER LINE
TELEPHONE LINE
CABLE LINE
GAS LINE

** FOR CONTRACTORS INFO ONLY (SEE TRENCH DETAILS).

STATE OF TEXAS
BRIAN G. FARIELLO
66186
REGISTERED PROFESSIONAL ENGINEER

Brian G. Fariello, P.E. 9/11/00
DATE

13:42:38
11 SEP 2000
t:\everyone\tms\1604to90new\tms09.dgn

lp1604fm471-90align13.dgn

©2000 Texas Department of Transportation

# TRAFFIC MANAGEMENT SYSTEM LAYOUT

SHEET 9 OF 12

| FED.RD. DIV.NO. | FEDERAL AID PROJECT NO. | | SHEET NO. |
|---|---|---|---|
| 6 | NH 2000(704),etc. | | 837 |
| STATE | DIST. | COUNTY | |
| TEXAS | SAT | BEXAR | |
| CONT. | SECT. | JOB | HIGHWAY NO. |
| 2452 | 01 | 036,etc. | LP 1604 |

| TRAFFIC MANAGEMENT ESTIMATED QUANTITIES | | 2452-01-036 |
|---|---|---|
| ITEM | UNIT | QTY |
| 100 mm PVC MULTIDUCT (2-WAY) CONCRETE ENCASED | M | 1432 |
| 100 mm PVC MULTIDUCT (BORED) | M | 40 |
| TY A MANHOLE | EA | 1 |
| 1/C #14 AWG (TRACER WIRE) | M | 1452 |

QUANTITIES THIS SHEET
CSJ 2452-01-036

NOTE(S):

ALL DIMENSIONS ARE IN METERS UNLESS OTHERWISE NOTED.

** CONDUIT SHALL BE INSTALLED 4 m FROM EDGE OF PAVEMENT.

▲=CONCRETE ENCASED CONDUIT.

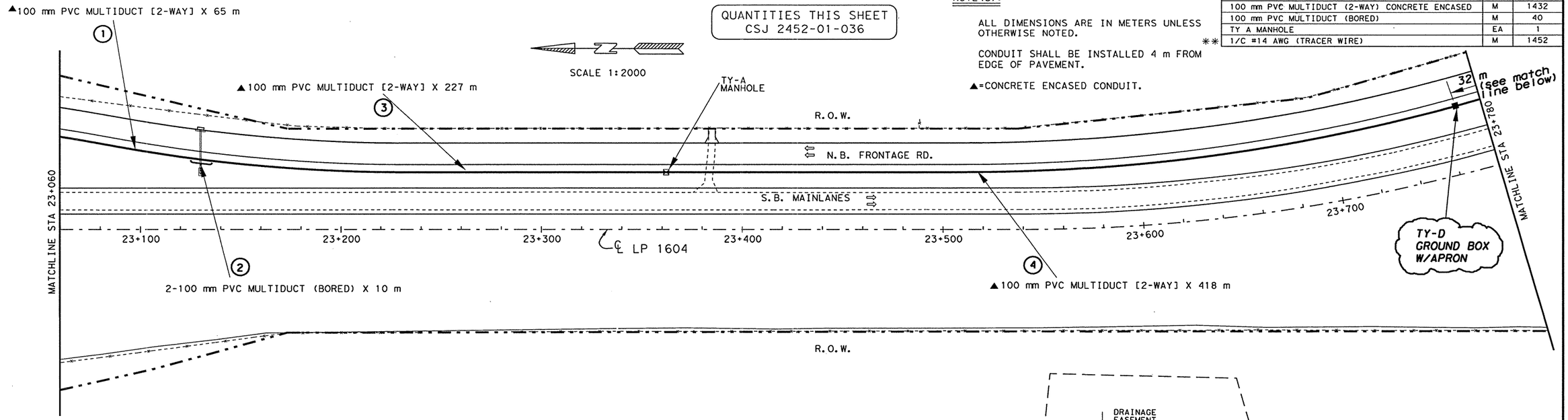


** FOR CONTRACTORS INFO ONLY (SEE TRENCH DETAILS).

*TY-D GROUND BOX ADDITION NOTES:*

1. *CONTRACTOR SHALL BREAK OUT CONDUIT AND INSTALL TY-D GROUND BOXES (W/APRON) AS SHOWN ON THIS LAYOUT AND ACCORDING TO ED (2)-98(M).*
2. *LABEL GROUND BOXES "DANGER HIGH VOLTAGE - TMS" AS SHOWN IN GENERAL NOTES.*
3. *GROUND BOX LOCATIONS ARE APPROXIMATE AND MAY BE ADJUSTED BY CONTRACTOR TO FACILITATE PULLING OF 1/C #14 TRACER WIRE.*
4. *CONTRACTOR IS RESPONSIBLE FOR TCP, SW3P, AND VEGETATION DURING AND AFTER INSTALLATION OF TY-D GROUND BOXES.*

STATE OF TEXAS
BRIAN G. FARIELLO
66186
LICENSED PROFESSIONAL ENGINEER

Brian G. Fariello, P.E. — DATE 10/8/07

## ADDITIONAL GROUND BOXES

10-17-07

©2000

Texas Department of Transportation

## TRAFFIC MANAGEMENT SYSTEM LAYOUT

SHEET 9 OF 12

| FED.RD. DIV.NO. | FEDERAL AID PROJECT NO. | | SHEET NO. |
|---|---|---|---|
| 6 | NH 2000(704),etc. | | 837 A |
| STATE | DIST. | COUNTY | |
| TEXAS | SAT | BEXAR | |
| CONT. | SECT. | JOB | HIGHWAY NO. |
| 2452 | 01 | 036,etc. | LP 1604 |

8:26:04 AM
10/17/2007
T:\TMS\1604=2452-01-036\tms09 rev.dgn

lp1604fm471-90\align13.dgn

| TRAFFIC MANAGEMENT ESTIMATED QUANTITIES | | 2452-01-036 |
|---|---|---|
| ITEM | UNIT | QTY |
| 100 mm PVC MULTIDUCT (2-WAY) CONCRETE ENCASED | M | 1420 |
| 100 mm PVC MULTIDUCT (BORED) | M | 20 |
| TY A MANHOLE | EA | 1 |
| 1/C #14 AWG (TRACER WIRE) | M | 1430 |

SCALE 1:2000

QUANTITIES THIS SHEET
CSJ 2452-01-036

NOTE(S):

ALL DIMENSIONS ARE IN METERS UNLESS OTHERWISE NOTED.

CONDUIT SHALL BE INSTALLED 4 m FROM EDGE OF PAVEMENT. **

▲=CONCRETE ENCASED CONDUIT.

R.O.W.

N.B. FRONTAGE RD.

TY-A MANHOLE

S.B. MAINLANES

MATCHLINE STA 24+500

24+600 24+700 24+800 24+900 25+000 25+100 25+200

℄ LP 1604

① ▲100 mm PVC MULTIDUCT [2-WAY] X 140 m

② ▲100 mm PVC MULTIDUCT [2-WAY] X 580 m

MATCHLINE STA 25+220

R.O.W.

CPS ELECTRIC UTILITY EASEMENT

CPS ELECTRIC UTILITY EASEMENT

P&E GAS PIPELINE EASEMENT

▲100 mm PVC MULTIDUCT [2-WAY] X 430 m

⑤

SCALE 1:2000

DRAINAGE EASEMENT

CULVERT NO. 20

▲100 mm PVC MULTIDUCT [2-WAY] X 270 m

③

MATCHLINE STA 25+220

R.O.W.

N.B. FRONTAGE RD.

S.B. MAINLANES

25+300 25+400 25+500 25+600 25+700 25+800 25+900

MATCHLINE STA 25+940

℄ LP 1604

④ 2-100 mm PVC MULTIDUCT (BORED) X 10 m

R.O.W.

DRAINAGE EASEMENT

| UTILITY LEGEND | |
|---|---|
| | WATER LINE |
| T1 T1 T1 T1 T1 | TELEPHONE LINE |
| C C C C | CABLE LINE |
| G1 G1 G1 G1 G1 | GAS LINE |

** FOR CONTRACTORS INFO ONLY (SEE TRENCH DETAILS).

STATE OF TEXAS
BRIAN G. FARIELLO
66186
REGISTERED PROFESSIONAL ENGINEER

B. G. Fariello, P.E. 9/11/00
Brian G. Fariello DATE

©2000 Texas Department of Transportation

# TRAFFIC MANAGEMENT SYSTEM LAYOUT

SHEET 10 OF 12

| FED. RD. DIV. NO. | FEDERAL AID PROJECT NO. | | SHEET NO. |
|---|---|---|---|
| 6 | NH 2000(704), etc. | | 838 |
| STATE | DIST. | COUNTY | |
| TEXAS | SAT | BEXAR | |
| CONT. | SECT. | JOB | HIGHWAY NO. |
| 2452 | 01 | 036, etc. | LP 1604 |

13:43:40
11 SEP 2000
t: \everyone\tms\1604to90new\tms10.dgn

lp1604fm471-90align5.dgn

| TRAFFIC MANAGEMENT ESTIMATED QUANTITIES | | 2452-01-036 |
|---|---|---|
| ITEM | UNIT | QTY |
| 100 mm PVC MULTIDUCT (2-WAY) CONCRETE ENCASED | M | 1420 |
| 100 mm PVC MULTIDUCT (BORED) | M | 20 |
| TY A MANHOLE | EA | 1 |
| 1/C #14 AWG (TRACER WIRE) | M | 1430 |

NOTE(S):

ALL DIMENSIONS ARE IN METERS UNLESS OTHERWISE NOTED.

CONDUIT SHALL BE INSTALLED 4 m FROM EDGE OF PAVEMENT. **

▲=CONCRETE ENCASED CONDUIT.

SCALE 1:2000

QUANTITIES THIS SHEET
CSJ 2452-01-036

R.O.W.

N.B. FRONTAGE RD.

TY-A MANHOLE

S.B. MAINLANES

MATCHLINE STA 24+500

24+600 24+700 24+800 24+900 25+000 25+100 25+200

℄ LP 1604

① ▲100 mm PVC MULTIDUCT [2-WAY] X 140 m

② ▲100 mm PVC MULTIDUCT [2-WAY] X 580 m

35 m

TY-D GROUND BOX W/APRON

MATCHLINE STA 25+220

R.O.W.

*TY-D GROUND BOX ADDITION NOTES:*

1. *CONTRACTOR SHALL BREAK OUT CONDUIT AND INSTALL TY-D GROUND BOXES (W/APRON) AS SHOWN ON THIS LAYOUT AND ACCORDING TO ED (2)-98(M).*
2. *LABEL GROUND BOXES "DANGER HIGH VOLTAGE - TMS" AS SHOWN IN GENERAL NOTES.*
3. *GROUND BOX LOCATIONS ARE APPROXIMATE AND MAY BE ADJUSTED BY CONTRACTOR TO FACILITATE PULLING OF 1/C #14 TRACER WIRE.*
4. *CONTRACTOR IS RESPONSIBLE FOR TCP, SW3P, AND VEGETATION DURING AND AFTER INSTALLATION OF TY-D GROUND BOXES.*

CPS ELECTRIC UTILITY EASEMENT

CPS ELECTRIC UTILITY EASEMENT

PG&E GAS PIPELINE EASEMENT

▲100 mm PVC MULTIDUCT [2-WAY] X 430 m

⑤

MATCHLINE STA 25+940

R.O.W.

N.B. FRONTAGE RD.

18 m

S.B. MAINLANES

25+900 25+800 25+700 25+600 25+500 25+400 25+300

℄ LP 1604

MATCHLINE STA 25+220

SCALE 1:2000

DRAINAGE EASEMENT

CULVERT NO. 20

▲100 mm PVC MULTIDUCT [2-WAY] X 270 m

③

④ 2-100 mm PVC MULTIDUCT (BORED) X 10 m

TY-D GROUND BOX W/APRON

CAGNON RD

R.O.W.

DRAINAGE EASEMENT

** FOR CONTRACTORS INFO ONLY (SEE TRENCH DETAILS).

STATE OF TEXAS
BRIAN G. FARIELLO
66186
LICENSED PROFESSIONAL ENGINEER

Brian G. Fariello, P.E. 10/18/07
Brian G. Fariello DATE

## ADDITIONAL GROUND BOXES

10-17-07

©2000

Texas Department of Transportation

# TRAFFIC MANAGEMENT SYSTEM LAYOUT

SHEET 10 OF 12

| FED.RD. DIV.NO. | FEDERAL AID PROJECT NO. | | SHEET NO. |
|---|---|---|---|
| 6 | NH 2000(704), etc. | | 838A |
| STATE | DIST. | COUNTY | |
| TEXAS | SAT | BEXAR | |
| CONT. | SECT. | JOB | HIGHWAY NO. |
| 2452 | 01 | 036, etc. | LP 1604 |

8:27:30 AM
10/17/2007
I:\TMS\1604=2452-01-036\tms10 rev.dgn

lp1604fm471-90\align15.dgn

QUANTITIES THIS SHEET
CSJ 2452-01-036

NOTE(S):

ALL DIMENSIONS ARE IN METERS UNLESS OTHERWISE NOTED.

CONDUIT SHALL BE PLACED 4 m FROM EDGE OF PAVEMENT. **

▲=CONCRETE ENCASED CONDUIT.

| TRAFFIC MANAGEMENT ESTIMATED QUANTITIES | | 2452-01-036 |
|---|---|---|
| ITEM | UNIT | QTY |
| 100 mm PVC MULTIDUCT (2-WAY) CONCRETE ENCASED | M | 1339 |
| 100 mm PVC MULTIDUCT (BORED) | M | 484 |
| TY A MANHOLE | EA | 8 |
| 1/C #14 AWG (TRACER WIRE) | M | 1581 |

SCALE 1:2000

2-100 mm PVC MULTIDUCT (BORED) X 10 m

2-100 mm PVC MULTIDUCT (BORED) X 45 m

TY-A MANHOLE

TY-A MANHOLE

MARBACH RD

R.O.W.

R.O.W.

N.B. FRONTAGE RD.

S.B. MAINLANES

2-100 mm PVC MULTIDUCT (BORED) X 27 m

MATCHLINE STA 25+940

MATCHLINE STA 26+660

26+000 26+100 26+200 26+300 26+400 26+500 26+600

℄ LP 1604

▲100 mm PVC MULTIDUCT [2-WAY] X 5 m

▲ 100 mm PVC MULTIDUCT [2-WAY] X 280 m

TY-A MANHOLE

2-100 mm PVC MULTIDUCT (BORED) X 90 m

TY-A MANHOLE

▲100 mm PVC MULTIDUCT [2-WAY] X 337 m

R.O.W.

DRAINAGE EASEMENT

SCALE 1:2000

DRAINAGE EASEMENT

▲ 100 mm PVC MULTIDUCT [2-WAY] X 390 m

2-100 mm PVC MULTIDUCT (BORED) X 26 m

TY-A MANHOLE

BIG MESA DRIVE

TY-A MANHOLE

2-100 mm PVC MULTIDUCT (BORED) X 24 m

▲ 100 mm PVC MULTIDUCT [2-WAY] X 180 m

R.O.W.

N.B. FRONTAGE RD.

CULVERT NO. 23

R.O.W.

TY-A MANHOLE

S.B. MAINLANES

MATCHLINE STA 26+660

26+700 26+800 26+900 27+000 27+100 27+200 27+300

℄ LP 1604

CULVERT NO. 22

▲ 100 mm PVC MULTIDUCT [2-WAY] X 57 m

▲ 100 mm PVC MULTIDUCT [2-WAY] X 90 m

MATCHLINE STA 27+380

2-100 mm PVC MULTIDUCT (BORED) X 10 m

R.O.W.

2-100 mm PVC MULTIDUCT (BORED) X 10 m

DRAINAGE EASEMANT

DRAINAGE EASEMANT

| UTILITY LEGEND | |
|---|---|
| —W—W—W—W—W— | WATER LINE |
| —T1—T1—T1—T1—T1— | TELEPHONE LINE |
| —C—C—C—C—C— | CABLE LINE |
| —G1—G1—G1—G1—G1— | GAS LINE |

** FOR CONTRACTORS INFO ONLY (SEE TRENCH DETAILS).

STATE OF TEXAS
BRIAN G. FARIELLO
66186
REGISTERED PROFESSIONAL ENGINEER

Brian G. Fariello, P.E.

9/11/00
DATE

©2000

Texas Department of Transportation

# TRAFFIC MANAGEMENT SYSTEM LAYOUT

SHEET 11 OF 12

| FED.RD. DIV.NO. | FEDERAL AID PROJECT NO. | | SHEET NO. |
|---|---|---|---|
| 6 | NH 2000(704),etc. | | 839 |
| STATE | DIST. | COUNTY | |
| TEXAS | SAT | BEXAR | |
| CONT. | SECT. | JOB | HIGHWAY NO. |
| 2452 | 01 | 036,etc. | LP 1604 |

13:28:05
11 SEP 2000
I:\everyone\tms\1604to90new\tms11.dgn

lp1604fm471-90align17.dgn

NOTE(S):

ALL DIMENSIONS ARE IN METERS UNLESS OTHERWISE NOTED.

CONDUIT SHALL BE PLACED 4 m FROM EDGE OF PAVEMENT. **

▲=CONCRETE ENCASED CONDUIT.

| TRAFFIC MANAGEMENT ESTIMATED QUANTITIES | | 2452-01-036 |
|---|---|---|
| ITEM | UNIT | QTY |
| 100 mm PVC MULTIDUCT (2-WAY) CONCRETE ENCASED | M | 1389 ~~1339~~ |
| 100 mm PVC MULTIDUCT (BORED) | M | 384 ~~484~~ |
| TY A MANHOLE | EA | 6 ~~8~~ |
| 1/C #14 AWG (TRACER WIRE) | M | 1581 |
| TY-D GROUND BOX | EA | 2 |

QUANTITIES THIS SHEET
CSJ 2452-01-036

SCALE 1:2000

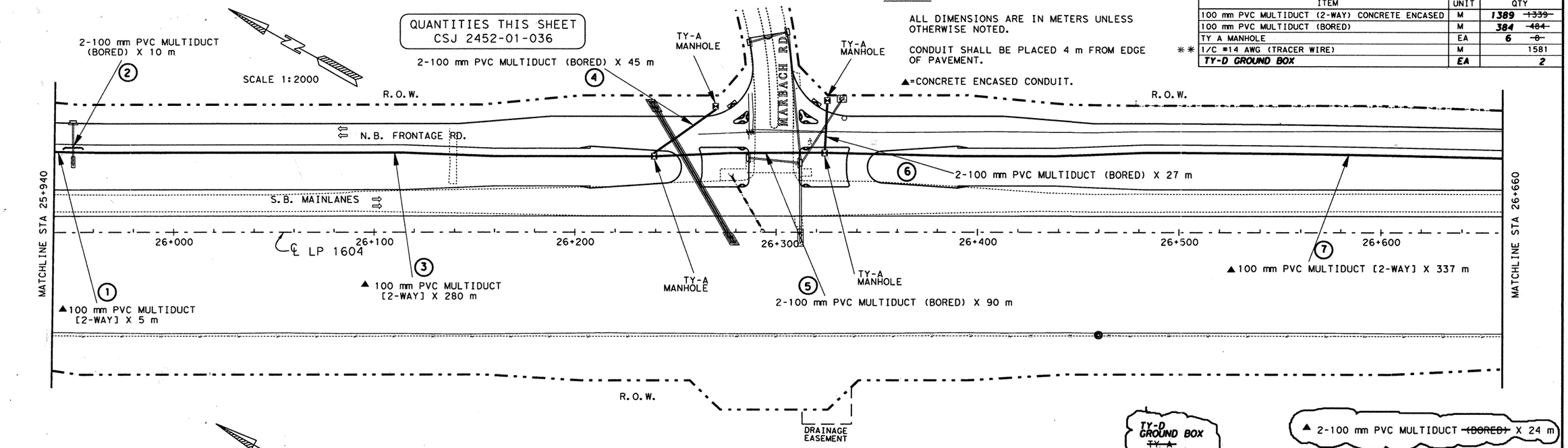


SCALE 1:2000

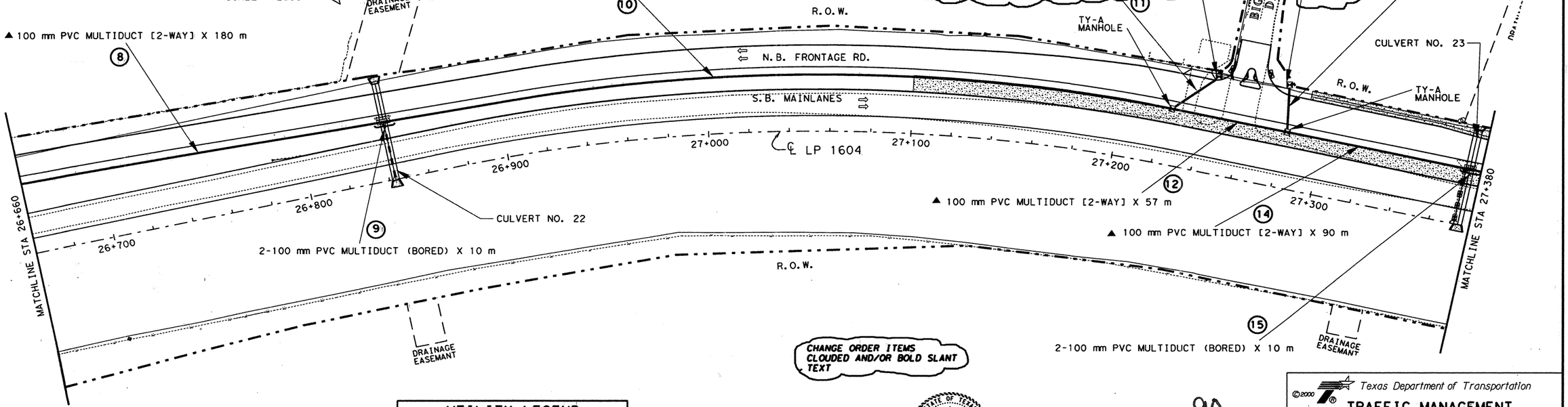


CHANGE ORDER ITEMS CLOUDED AND/OR BOLD SLANT TEXT

| UTILITY LEGEND |
|---|
| WATER LINE |
| TELEPHONE LINE |
| CABLE LINE |
| GAS LINE |

** FOR CONTRACTORS INFO ONLY (SEE TRENCH DETAILS).

STATE OF TEXAS
BRIAN G. FARIELLO
66186
REGISTERED PROFESSIONAL ENGINEER

Brian G. Fariello, P.E.

12/27/2004
DATE

CHANGE ORDER NO. 90

12-22-04

©2000

Texas Department of Transportation

TRAFFIC MANAGEMENT SYSTEM LAYOUT

SHEET 11 OF 12

| FED.RD. DIV.NO. | FEDERAL AID PROJECT NO. | | SHEET NO. |
|---|---|---|---|
| 6 | NH 2000(704),etc. | | 839 A |
| STATE | DIST. | COUNTY | |
| TEXAS | SAT | BEXAR | |
| CONT. | SECT. | JOB | HIGHWAY NO. |
| 2452 | 01 | 036,etc. | LP 1604 |

3:02:12 PM
12/22/2004
T:\TMS\1604+2452-01-036\tms11 CO.dgn

lp1604fm471-90\align17.dgn

QUANTITIES THIS SHEET
CSJ 2452-01-036

| TRAFFIC MANAGEMENT ESTIMATED QUANTITIES | | 2452-01-036 |
|---|---|---|
| ITEM | UNIT | QTY |
| 100 mm PVC MULTIDUCT (2-WAY) CONCRETE ENCASED | M | 80 |
| 100 mm PVC MULTIDUCT (BORED) | M | 0 |
| TY A MANHOLE | EA | 1 |
| 1/C #14 AWG (TRACER WIRE) | M | 80 |

SCALE 1:2000

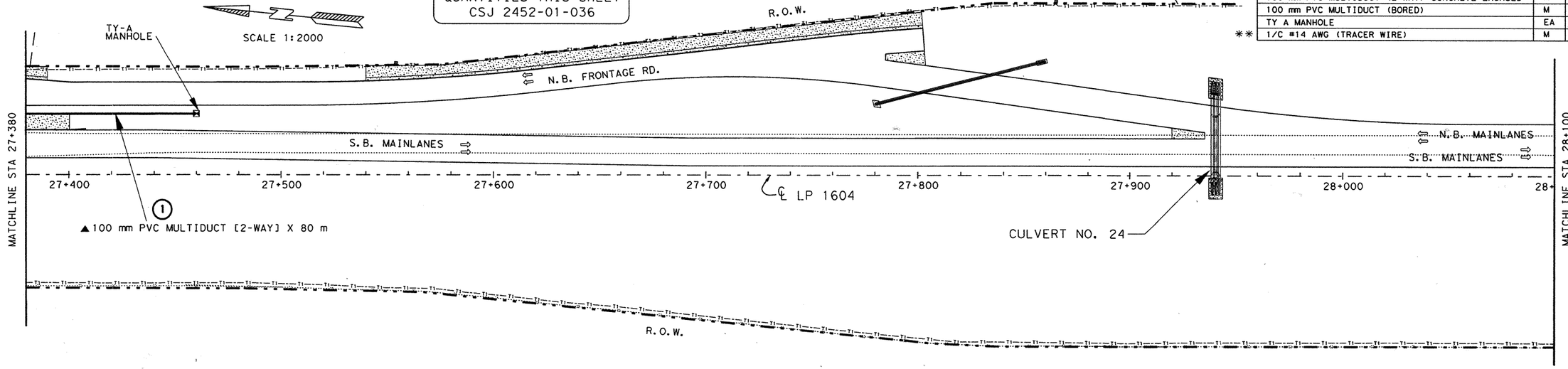


SCALE 1:2000

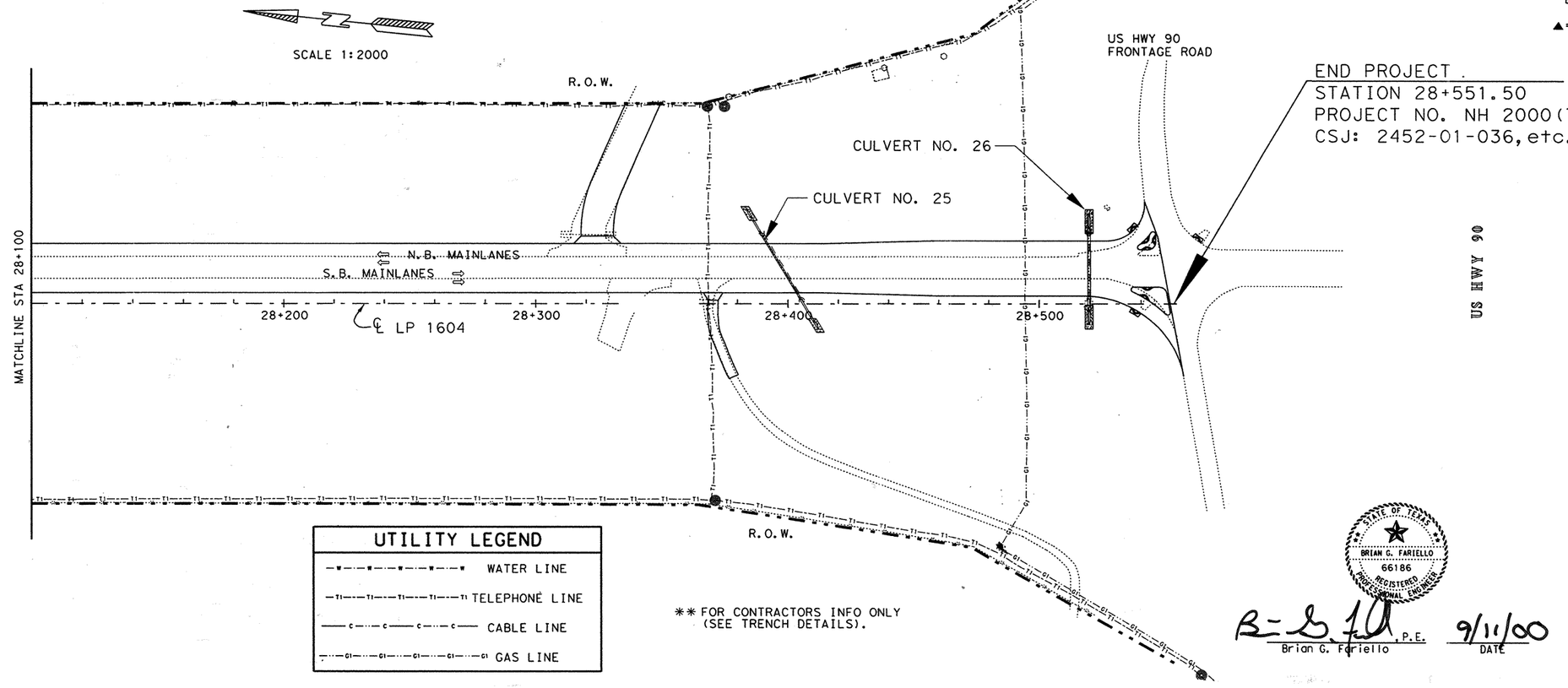


NOTE(S):

ALL DIMENSIONS ARE IN METERS UNLESS OTHERWISE NOTED.

CONDUIT SHALL BE INSTALLED 4 m FROM EDGE OF PAVEMENT.

▲=CONCRETE ENCASED CONDUIT.

| UTILITY LEGEND | |
|---|---|
| —W—W—W—W— | WATER LINE |
| —T1—T1—T1—T1—T1 | TELEPHONE LINE |
| —C—C—C—C— | CABLE LINE |
| —G1—G1—G1—G1—G1 | GAS LINE |

** FOR CONTRACTORS INFO ONLY (SEE TRENCH DETAILS).

STATE OF TEXAS
BRIAN G. FARIELLO
66186
REGISTERED PROFESSIONAL ENGINEER

Brian G. Fariello, P.E.

9/11/00
DATE

©2000

Texas Department of Transportation

# TRAFFIC MANAGEMENT SYSTEM LAYOUT

SHEET 12 OF 12

| FED. RD. DIV. NO. | FEDERAL AID PROJECT NO. | | SHEET NO. |
|---|---|---|---|
| 6 | NH 2000(704),etc. | | 840 |
| STATE | DIST. | COUNTY | |
| TEXAS | SAT | BEXAR | |
| CONT. | SECT. | JOB | HIGHWAY NO. |
| 2452 | 01 | 036,etc. | LP 1604 |

13:30:39
11 SEP 2000
t:\everyone\fms\1604to90new\fms12.dgn

lp1604fm471-90\align19.dgn

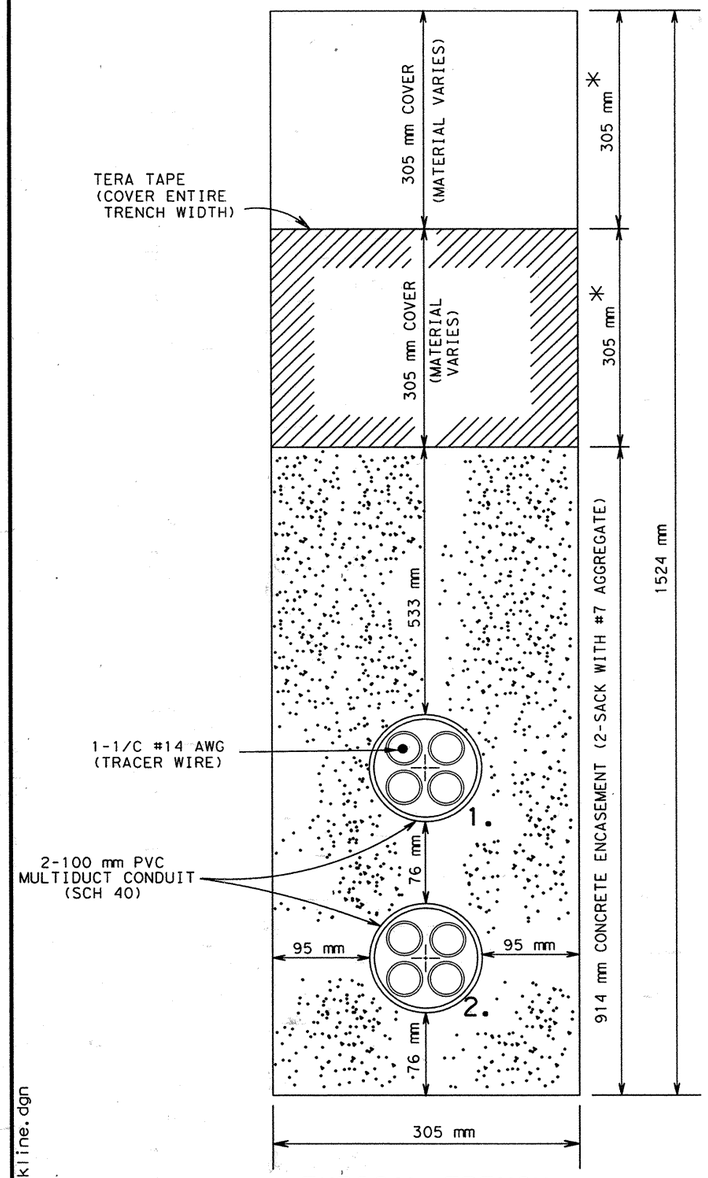


## TYPICAL TRENCH

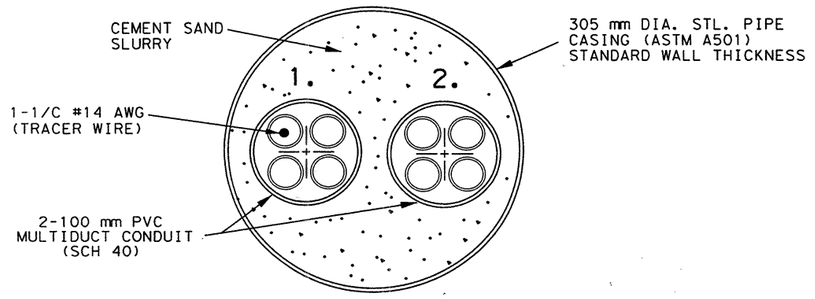


## TYPICAL BORE

## NOTES:

1. THE LOCATION OF UTILITIES, EITHER UNDERGROUND OR OVERHEAD, SHALL BE VERIFIED BY THE CONTRACTOR BEFORE BEGINNING CONSTRUCTION OPERATIONS.

2. SPECIAL ATTENTION SHOULD BE MADE TO THE EXISTING UTILITIES. THE CONTRACTOR MAY HAVE TO VARY THE DEPTH OF THE TRENCH IN ORDER TO PASS OVER/UNDER ANY EXISTING UTILITY.

3. A TEMPLATE SHALL BE PROVIDED AT 3 m INTERVALS TO INSURE THAT THE CONDUIT REMAINS IN ITS ORIGINAL POSITION AS APPROVED BY THE ENGINEER.

4. A PULL CORD SHALL BE INSTALLED IN ALL INNERDUCTS. THE PULL CORD SHALL HAVE A MINIMUM TENSIL STRENGTH OF 362.8 KG. ALL PULL CORDS SHALL BE WATER RESISTANT AND RESISTANT TO ENVIRONMENTAL CONDITIONS WITHIN CONDUIT. ALL INNERDUCTS SHALL BE PLUGGED WITH EYELET PLUGS AND PULL CORDS SHALL BE ATTACHED TO EYELETS OF PLUGS.

5. A SINGLE 1/C #14 AWG INSULATED CABLE (TRACER WIRE) SHALL BE INSTALLED IN ONE EMPTY CONDUIT FOR ALL RUNS. 1/C #14 SHALL TERMINATE AT EACH MANHOLE. 1/C #14 AWG SHALL BE CONTINUOUS (NO SPLICES PERMITTED) BETWEEN MANHOLES.

6. NO DIRECT PAYMENT SHALL BE MADE FOR THE PULL CORDS, EYELET PLUGS, 1/C #14 AWG, STEEL PIPE CASING, CONCRETE ENCASEMENT, TEMPLATES, BUT THESE SHALL BE CONSIDERED SUBSIDIARY TO THE ITEM [2-WAY SYSTEM].

7. FOR TYPICAL BORE, A 610 MM PLUG OF CEMENT SAND SLURRY SHALL BE INJECTED INTO EACH END OF STEEL PIPE CASING TO MAKE IT WATERTIGHT.

* CONTRACTOR SHALL CONCRETE ENCASE 1524 mm IN DEPTH (WITH CLASS "A" CONCRETE) ANY TRENCHES THROUGH MAINLANES, FRONTAGE ROADS, INTERSECTIONS, OR RAMPS. TOP OF CONCRETE SHALL BE 38 mm BELOW FINISHED GRADE OR AS DIRECTED BY THE ENGINEER. 38 mm OF ASPHALT SHALL BE PLACED ON TOP OF CONCRETE ENCASEMENT TO FINISHED GRADE. ANY ADDITIONAL CONCRETE SHALL NOT BE PAID FOR DIRECTLY BUT SHALL BE CONSIDERED SUBSIDIARY TO THE VARIOUS BID ITEMS.

1524 mm TRENCH FOR 1604 PROJECT

BRIAN G. FARIELLO
66186
REGISTERED PROFESSIONAL ENGINEER
STATE OF TEXAS

Brian G. Fariello, P.E. 9/11/00
Brian G. Fariello DATE

# TRENCH DETAILS
## 100 mm PVC MULTIDUCT CONDUIT [2-WAY SYSTEM]

| FED.RD. DIV.NO. | FEDERAL AID PROJECT NO. | | SHEET NO. |
|---|---|---|---|
| 6 | NH 2000(704),etc. | | 841 |
| STATE | STATE DIST.NO. | COUNTY | |
| TEXAS | 15 | BEXAR | |
| CONT. | SECT. | JOB | HIGHWAY NO. |
| 2452 | 01 | 036,etc. | LP 1604 |

ORIGINAL DRAWING DATE: JUNE 1997
REVISIONS
8-30-99
4-6-00 8-23-00


LEVELS DISPLAYED
1 3 5 6 7 8 9 10 11 12 13 14 15 16
17 18 19 20 21 22 23 24 25 26 27 28 33 34 35 36
37 38 43 53 63 73 83 93 103 113 123 133 143 153 163 173
45 55 65 75 85 95 105 115 125 135 145 155 165 175 185 195 205 215 225 263
ACC:
FILE: .DGN
FTM: mtrunkline.dgn
14:28:51
11 SEP 2000
I:\everyone\tms\1604to90new\trunkln.dgn

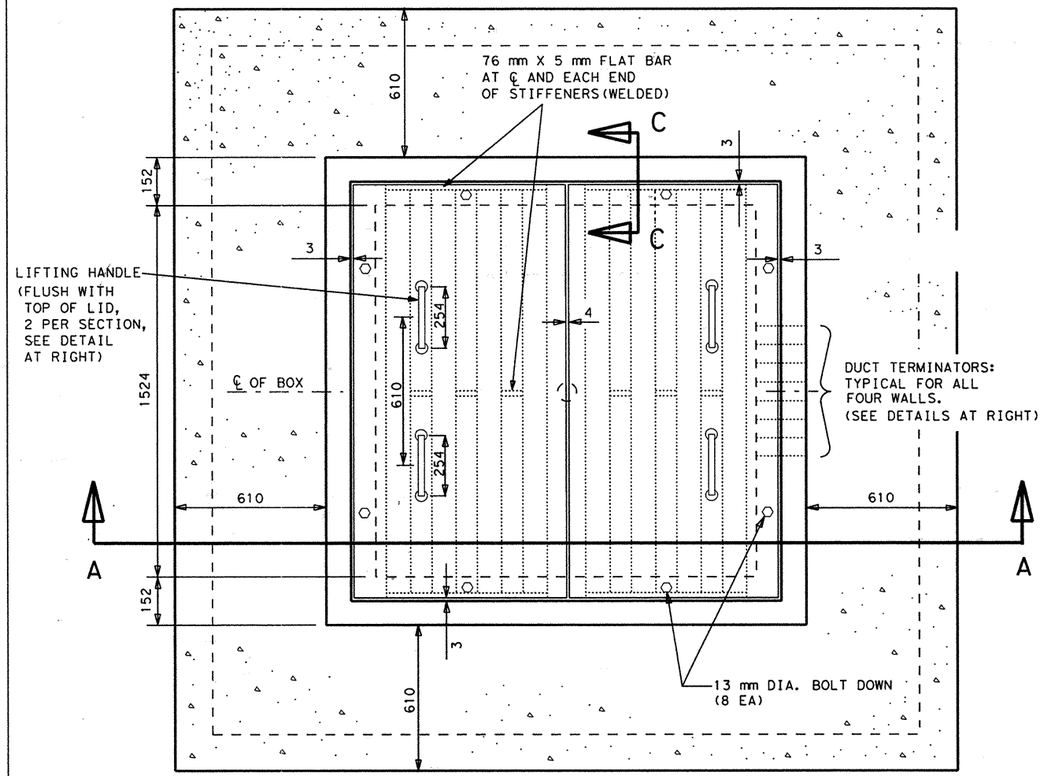


PLAN

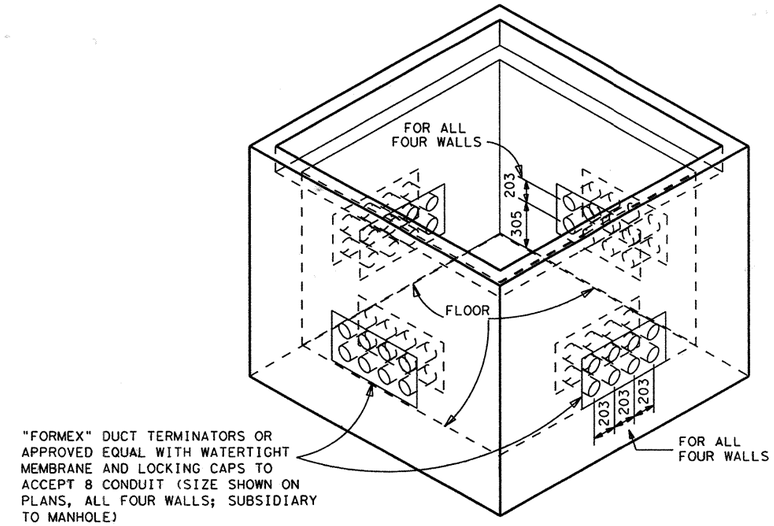


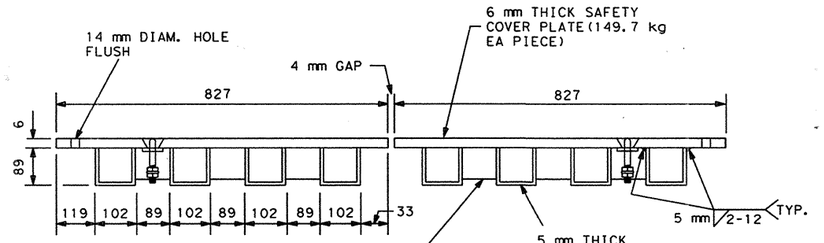


LID DETAIL

NOTES:

***ALL DIMENSIONS ARE IN MILLIMETERS UNLESS OTHERWISE NOTED.***

1. ALL CONCRETE SHALL BE CLASS A
2. CONTRACTOR SHALL BE PERMITTED TO SUBMIT EQUIVALENT DESIGN FOR APPROVAL BY THE ENGINEER.
3. ALL STRUCTURAL STEEL SHALL BE HOT DIPPED GALVANIZED
4. ALL STRUCTURAL STEEL SHALL BE DESIGNED FOR H-20 LOADING FOR MANHOLES IN ROADWAY AND H-15 LOADING FOR MANHOLES NOT IN ROADWAY.
5. REINFORCING STEEL SHALL BE ADJUSTED AS NEEDED FOR THE CONDUITS
6. MANHOLE SHALL BE INSTALLED PARALLEL TO GRADE
7. PRIOR TO SETTING, THE CONTRACTOR SHALL PROVIDE A MINIMUM OF 152 mm OF SAND OR BASE MATERIAL SUITABLE AS A BASE TO RECEIVE MANHOLE. THE BASE MATERIAL SHALL BE COMPACTED AND GRADED LEVEL AND AT A PROPER ELEVATION TO RECEIVE THE MANHOLE IN RELATION TO THE CONDUIT GRADE OR GROUND COVER REQUIREMENTS AS DESIGNATED IN THE PLANS.
8. CONDUIT SHALL BE ATTACHED TO 4 HOLES CLOSEST TO R.O.W. LINE.
9. DRAIN HOLE SHALL BE PLACED ON LOW END OF MANHOLE (LOWEST ELEVATION).

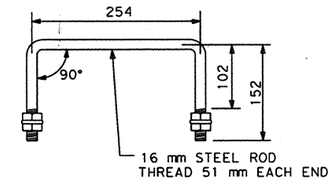


HANDLE DETAIL

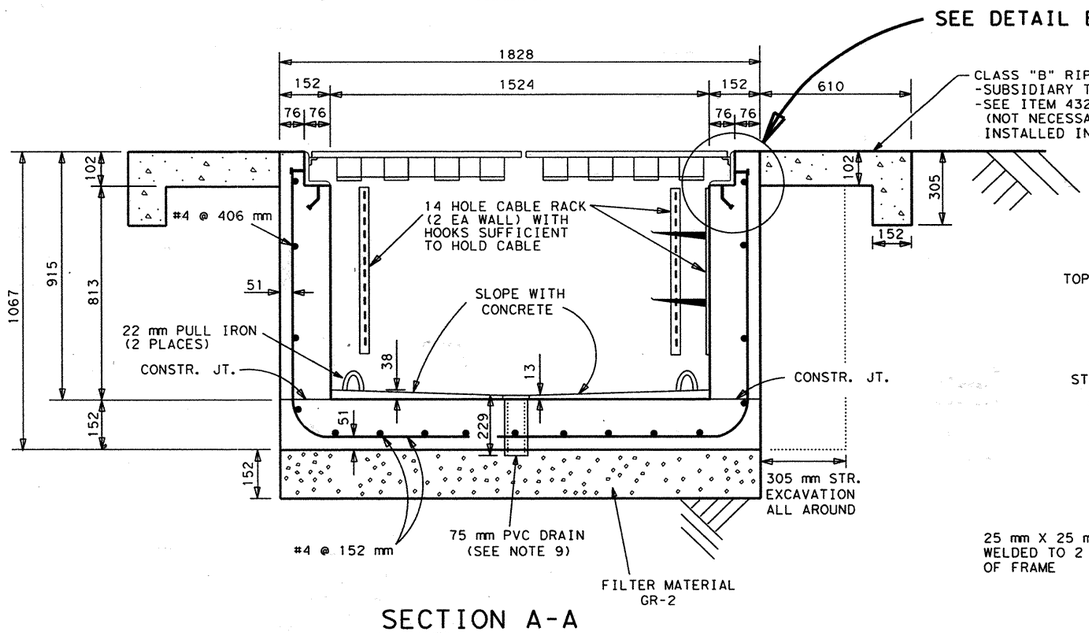


SECTION A-A

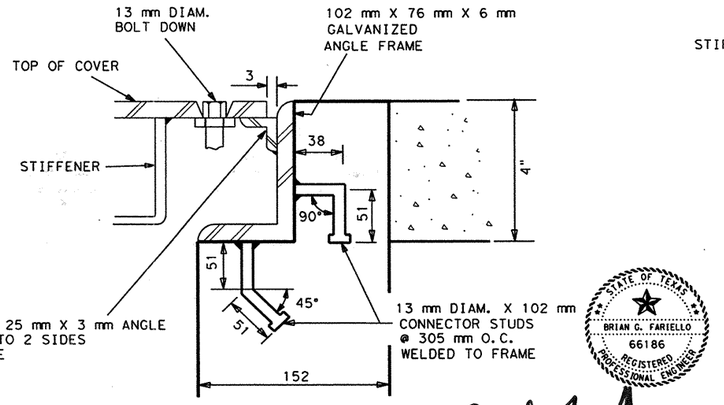


DETAIL B

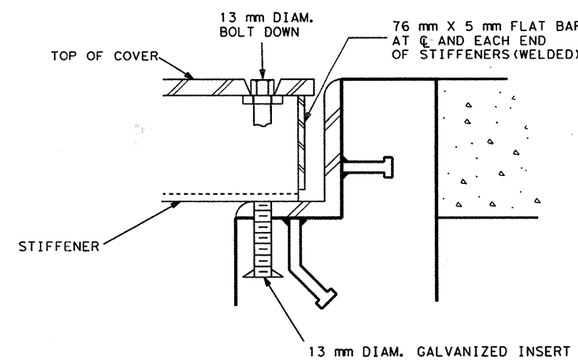


SECTION C-C

STATE OF TEXAS
BRIAN G. FARIELLO
66186
REGISTERED
PROFESSIONAL ENGINEER

B-D7 , P.E.
Brian G. Fariello

9/11/00
DATE

# METRIC
# MANHOLE (COMPLETE) (JUNCTION BOX) (TY A)

© 2000 Texas Department of Transportation

| FED. RD. DIV. NO. | FEDERAL AID PROJECT NO. | | SHEET NO. |
|---|---|---|---|
| 6 | NH 2000(704), etc. | | 842 |
| STATE | STATE DIST. NO. | COUNTY | |
| TEXAS | 15 | BEXAR | |
| CONT. | SECT. | JOB | HIGHWAY NO. |
| 2452 | 01 | 036, etc. | LP 1604 |

ORIGINAL DRAWING DATE: JUNE 1997

REVISIONS
3-26-98
10-15-98

FTM: \standard\typea_m.dgn
14:11:50
11 SEP 2000
†:\everyone\tms\1604to90new\typea*m.dgn

Plotted on: 09/19/00

Design Filename: j:\...41\16\civil\design\swppp\394116swnar.dgn

# STORM WATER POLLUTION PREVENTION PLAN
## SITE DESCRIPTION

PROJECT LIMITS: Loop 1604 From: 1.6 km North of FM 471
To: US Hwy 90

PROJECT DESCRIPTION:
For work consisting of upgrade to 4 lane divided by adding northbound lanes

MAJOR SOIL DISTURBING ACTIVITIES:

1) Soil disturbing activities will include but are not limited to removal of existing concrete items, excavation and embankment to the proposed roadway subgrade, installation of culverts, and placement of topsoil and seed.
2) Since the project will disturb more than 2 ha (5ac) of land, a Notice of Intent(NOI) will be required.
3) Seven (7) U.S. Army Corps of Engineers (COE) Nationwide Permits #14 are required.

TOTAL PROJECT AREA: 218.85 hectares

TOTAL AREA TO BE DISTURBED: 164.14 hectares

WEIGHTED RUNOFF COEFFICIENT (After Construction): 0.64

EXISTING CONDITION OF SOIL AND VEGETATION COVER AND % OF EXISTING VEGETATIVE COVER:

The existing soil consists of Houston Black Clay and Austin Silty Clay.

Stabilized soil with established native grasses and landscaping covering approximately 65% of the project area.

NAME OF RECEIVING WATERS:

All drainage associated with project primarily feed two watersheds. On the North end, runoff basically drains into Helotes and Culebra Creeks which in turn drains to Leon Creek (stream segement 1906) which drains into the Medina River (stream segment 1903) and then ultimately drains into the San Antonio River (stream segement 1911). The South end of the project runoff basically drains to the Medio and Caracol Creeks which drains to the San Antonio River (stream segment 1911).

## EROSION AND SEDIMENT CONTROLS

SOIL STABILIZATION PRACTICES:

- X Temporary Seeding
- X Permanent Planting, Sodding, or Seeding
- _ Mulching
- _ Soil Retention Blanket
- X Buffer Zones
- X Preservation of Natural Resources

Other: Disturbed areas on which construction activity has ceased (temporarily or permanently) shall be stabilized within 14 days unless construction activities are scheduled to resume within 21 days.

STRUCTURAL PRACTICES:

- X Temporary Sediment Control Fence (Item No. 5012)
- _ Hay Bales
- X Rock filter dam (Item No. 5002)(Temporary)
- _ Diversion, Interceptor, or Perimeter Dikes
- _ Diversion, Interceptor, or Perimeter Swales
- _ Diversion Dike and Swale Combinations
- _ Pipe Slope Drains
- X Paved Flumes (Perm)
- X Rock Bedding at Construction Exit (Item No. 5006)
- _ Timber Matting at Construction Exit
- _ Channel Liners
- _ Sediment Trap
- _ Sediment Basin
- X Storm Inlet Sediment Trap (Temp)
- _ Stone Outlet Structures
- X Curbs and Gutters (Perm)
- _ Storm Sewers
- _ Velocity Control Devices
- X Concrete Truck Washout Pits (as directed by Engineer)

Other: The use of these structural features is largely dependent on the phasing of construction. Therefore, such structural features shall be installed as required and/or at the discretion of the Engineer.

NARRATIVE - SEQUENCE OF CONSTRUCTION (STORM WATER MANAGEMENT)
ACTIVITIES:

The order of activities will be as follows:

1. The Contractor shall limit vegetation & soil disturbance to essential construction sites only.

2. Install project initiation temporary erosion & sedimentation control structures and stabilization features as necessary to protect existing drainage structures and off-site property.

3. Implement phased construction.

4. Adjust erosion & sedimentation control features during phased construction to meet requirements and changing conditions and as directed by the Engineer.

5. When all construction activity is complete and site soils are stabilized to a condition approved by the Engineer, temporary structural controls shall be removed with any vegetation disturbed during this process to be replaced.

DESCRIPTION OF CONTROL MEASURES:

Sediment control fences and rock filter dams shall be placed at select locations as directed by the engineer where storm water drains off-site. Storm water originating on-site and/or storm water originating off-site but draining onto the construction site will be collected in the roadways and/or in drainage channels for discharge off-site. Sediment Control Fences and Rock Filter Dams will filter and slow the velocity of runoff thereby enhancing sedimentation and capture of contaminants that may accumulate in storm water runoff exiting this construction project. Standard sheets for structural practices are included in the construction plans.

MAINTENANCE:

All erosion and sediment control structures and features shall be maintained in good working order to perform the function as intended. If a repair is deemed necessary, the structure shall be repaired or replaced to perform its full function as specified no later than seven calendar days after a storm event, structural damage, or any event creating the structural dysfunction, or as directed by the Engineer. The areas adjacent to creeks and drainageways shall have priority followed by devices protecting storm drains.

INSPECTION:

An inspection shall be performed by a TxDOT Inspector every 14 days as well as after every half inch or more of rain as reported on a non-freezing rain gauge to be located at the project site. An Inspection and Maintenance Report shall be made for each inspection. Based on the inspection results, erosion and sedimentation controls shall be revised as required by the inspection report and as directed by the Engineer.

WASTE MATERIALS:

All waste materials shall be collected and stored in a securely lidded metal dumpster. The dumpster shall meet all state and local city solid waste management regulations. All trash and construction debris from the site shall be deposited in the dumpster. The dumpster shall be emptied as necessary or as required by local regulation and the trash shall be hauled to a local landfill. No construction waste material will be buried on site.

HAZARDOUS WASTE (INCLUDING SPILL REPORTING):

At a minimum, any products in the following categories are considered to be hazardous: paints, acids for cleaning masonry surfaces, cleaning solvents, asphalt products, chemical additives for soil stabilization, or concrete curing compounds and additives. In the event of a hazardous material spill, the TxDOT Spill Coordinator shall be contacted immediately.

SANITARY WASTE:

All sanitary waste shall be collected from portable units as necessary or as required by local regulations by a licensed sanitary waste management contractor.

OFF SITE VEHICLE TRACKING:

- X Haul roads dampened for dust control
- X Excess dirt on road removed on a regular basis or as directed by the Engineer
- X Stabilized construction exit(s)
- X Stabilized construction exits shall be installed at all ingress and egress at the site, including material storage areas.

POST-CONSTRUCTION STORM WATER MANAGEMENT:

Vegetation will be utilized as a natural filter for water quality and for runoff purposes.

REMARKS:

Disposal areas, stockpiles, and haul roads shall be constructed in a manner that will minimize and control the amount of sediment that may enter receiving waters. Disposal areas shall not be located in any wetland, water body, stream bed or 100 yr floodplain.

Construction staging areas and vehicle maintenance areas shall be constructed by the Contractor in a manner to minimize the runoff of pollutants. Such areas shall be bordered on the downgrade sides with temporary sediment control fencing.

All waterways shall be cleared as soon as practicable of temporary embankment, temporary bridges, matting, falseworks, piling, debris or other construction materials placed during construction operations that are not part of the final work.

GENERAL NOTES:

1. Sediment Control Fence shall be installed on the downgrade side of any disturbed area which will discharge storm water runoff off-site, including excavation spoils temporarily stored on-site, as directed by the Engineer.

2. Temporary erosion and sediment control structures placed around drop inlets and placed in drainage channels shall remain in place and be maintained until the drainage area discharging to the erosion control structure and/or feature is adequately stabilized, or as directed by the Engineer.

3. When deemed necessary by the Engineer, vehicular traffic leaving the construction site (prior to stabilized roadways) shall exit through a construction exit and wheel cleaning area at a location directed by the Engineer. When soils have collected on the exit to an extent which reduces its intended effectiveness, the surface shall be cleaned and reestablished for its designed or intended effectiveness. Mud/dirt inadvertently tracked off site and onto public streets shall be removed immediately by hand or mechanical means.

4. Controlled areas on-site shall be designated as rinse-out pits for concrete trucks. Rinse-out pits shall be periodically drained and cleaned and waste shall be disposed of off-site in accordance with applicable regulations. Rinse-out pits shall be surrounded by a berm or hay bales to prevent runoff of contaminated water.

5. Permits required for this job include the following:
   - Notice of Intent (NOI)/EPA NPDES Construction General Permit
   - Six (6) U.S. Army Corps of Engineers (COE) Nationwide Permit # 14

   Location by Sta. No. (approximate)

| | | |
|---|---|---|
| Helotes Creek Tributary | Sta 14+500 | |
| Culebra Creek & Wetland | Sta 15+900 | (notification required) |
| Caracol Creek Tributary | Sta 21+550 | (notification required) |
| Caracol Creek | Sta 22+800 | |
| Medio Creek | Sta 24+300 | |
| Medio Creek Tributary | Sta 25+500 | |

555 EAST RAMSEY SAN ANTONIO TEXAS 78216
PHONE (210)375-9000
FAX (210)375-9010
PAPE-DAWSON ENGINEERS
CIVIL & ENVIRONMENTAL

STATE OF TEXAS
K. STEPHEN BONNETTE
60928
REGISTERED
PROFESSIONAL ENGINEER

K. STEPHEN BONNETTE, P.E. 9/20/00 DATE

© 2000 Texas Department of Transportation

## LOOP 1604
## STORM WATER POLLUTION PREVENTION PLAN NARRATIVE

SHEET 1 OF 1

| DN: | | | | | PROJECT NO. | | |
|---|---|---|---|---|---|---|---|
| CK DN: | | | | | NH 2000 (704), etc. | | |
| DW: | CONTROL | SECTION | JOB | DIST. | STATE | COUNTY | HIGHWAY NO. | SHEET NO. |
| CK DW: | 2452 | 01 | 036 | SAT | TX | BEXAR | LOOP 1604 | 843 |
| | | | etc. | | | | | |

Plotted on: 09/19/00

| ESTIMATED QUANTITIES | | | |
|---|---|---|---|
| DESCRIPTION | UNIT | EST. | FINAL |
| ROCK FILTER DAM (TY 2) | M | 20 | |
| ROCK FILTER DAM (TY 2) (REMOVE & REPLACE) | M | 40 | |
| ROCK FILTER DAM (TY 2) (REMOVE) | M | 20 | |

QUANTITIES THIS SHEET
CSJ 2452-01-037

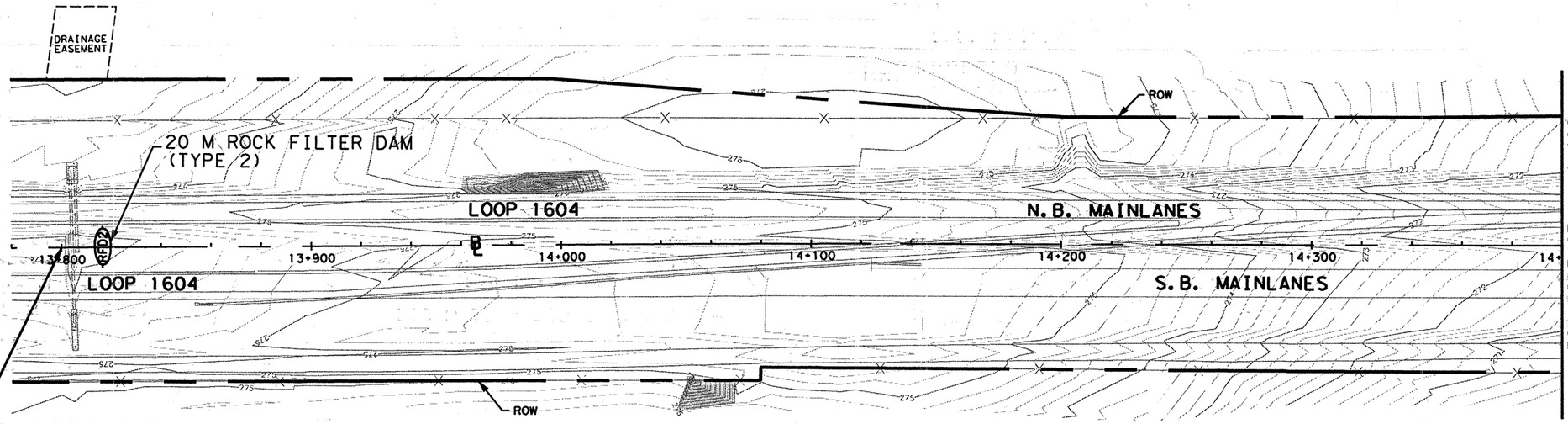


BEGIN INCIDENTAL WORK
CSJ: 2452-01-037
STA 13+800.000

## LEGEND

| | |
|---|---|
| —SCF— | TEMP SED CONT FENCE |
| RFD2 | ROCK FILTER DAM, TY 2 |
| RFD3 | ROCK FILTER DAM, TY 3 |

NOTES:
1.) ALL DIMENSIONS ARE IN METERS UNLESS NOTED OTHERWISE.
2.) EXISTING FEATURES ARE SHOWN SCREENED BACK, I.E. FADED.
3.) ALL WATER POLLUTION PREVENTION MEASURES SHALL BE PLACED WITHIN THE RIGHT-OF-WAY OR DRAINAGE EASEMENT OF THE PROPOSED ROADWAY.
4.) ALL PROJECT INITIATION SW-3P MEASURES SHALL REMAIN IN PLACE THROUGHOUT THE DURATION OF THE PROJECT UNTIL DEEMED APPROPRIATE FOR REMOVAL BY THE ENGINEER DUE TO IMPLEMENTATION OF SUBSEQUENT MEASURES AS DETAILED ON THE SW-3P CONSTRUCTION PHASE SHEETS OR AT SUCH TIME AS THE WATERSHED AREA HAS BEEN RE STABILIZED.

PRIOR TO BEGINNING CONSTRUCTION WITHIN ANY WATERSHED, ALL PROJECT INITIATION SW-3P FACILITIES AS SHOWN HEREON OR AS APPROVED BY THE ENGINEER SHALL BE IN PLACE.

SCALE: 1:2000

555 EAST RAMSEY SAN ANTONIO TEXAS 78216
PHONE (210)375-9000
FAX (210)375-9010
PAPE-DAWSON ENGINEERS
CIVIL & ENVIRONMENTAL
STATE OF TEXAS
K. STEPHEN BONNETTE
60928
REGISTERED
PROFESSIONAL ENGINEER
K. STEPHEN BONNETTE, P.E.
5/20/00
DATE

© 2000 Texas Department of Transportation

# LOOP 1604
# STORMWATER POLLUTION PREVENTION PLAN
# PROJECT INITIATION

SHEET 1 OF 15

| DN: | | | | | PROJECT NO. | | |
|---|---|---|---|---|---|---|---|
| CK DN: | | | | | NH 2000 (704), etc. | | |
| DW: | CONTROL | SECTION | JOB | DIST. | STATE | COUNTY | HIGHWAY NO. | SHEET NO. |
| CK DW: | 2452 | 01 | 036 etc. | SAT | TX | BEXAR | LOOP 1604 | 844 |

Design Filename: j:\3941\16\civil\design\swppp\3941166sw01-pre.dgn

Plotted on: 09/19/00

| ESTIMATED QUANTITIES - CSJ: 2452-01-037 | | | |
|---|---|---|---|
| DESCRIPTION | UNIT | EST. | FINAL |
| ROCK FILTER DAM (TY 3) | M | 85 | |
| ROCK FILTER DAM (TY 3) (REMOVE & REPLACE) | M | 170 | |
| ROCK FILTER DAM (TY 3) (REMOVE) | M | 85 | |
| TEMP SED CONT FENCE | M | 1020 | |
| TEMP SED CONT FENCE (REMOVE & REPLACE) | M | 2040 | |
| TEMP SED CONT FENCE (REMOVE) | M | 1020 | |

| ESTIMATED QUANTITIES - CSJ: 2452-01-038 | | | |
|---|---|---|---|
| DESCRIPTION | UNIT | EST. | FINAL |
| TEMP SED CONT FENCE | M | 356 | |
| TEMP SED CONT FENCE (REMOVE & REPLACE) | M | 712 | |
| TEMP SED CONT FENCE (REMOVE) | M | 356 | |

LEGEND

- SCF — TEMP SED CONT FENCE
- RFD2 — ROCK FILTER DAM, TY 2
- RFD3 — ROCK FILTER DAM, TY 3

45 M ROCK FILTER DAM (TYPE 3)

135 M TEMP SED CONT FENCE

DRAINAGE EASEMENT

520 M TEMP SED CONT FENCE

MATCH LINE STA. 14+400

MATCH LINE STA. 15+100

ROW

N.B. MAINLANES

LOOP 1604

S.B. MAINLANES

ALAMO CONCRETE

END INCIDENTAL WORK
BEGIN PROJECT
CSJ: 2452-01-037
STA 14+420.000

END CSJ: 2452-01-037
BEGIN CSJ: 2452-01-038
STA 15+500.000

200 M TEMP SED CONT FENCE

40 M ROCK FILTER DAM (TYPE 3)

265 M TEMP SED CONT FENCE

100 M TEMP SED CONT FENCE

N.B. FRONTAGE RD.

N.B. MAINLANES

S.B. MAINLANES

S.B. FRONTAGE RD.

MATCH LINE STA. 15+100

MATCH LINE STA. 15+700

156 M TEMP SED CONT FENCE

PRIOR TO BEGINNING CONSTRUCTION WITHIN ANY WATERSHED, ALL PROJECT INITIATION SW-3P FACILITIES AS SHOWN HEREON OR AS APPROVED BY THE ENGINEER SHALL BE IN PLACE.

NOTES:
1.) ALL DIMENSIONS ARE IN METERS UNLESS NOTED OTHERWISE.
2.) EXISTING FEATURES ARE SHOWN SCREENED BACK, I.E. FADED.
3.) ALL WATER POLLUTION PREVENTION MEASURES SHALL BE PLACED WITHIN THE RIGHT-OF-WAY OR DRAINAGE EASEMENT OF THE PROPOSED ROADWAY.
4.) ALL PROJECT INITIATION SW-3P MEASURES SHALL REMAIN IN PLACE THROUGHOUT THE DURATION OF THE PROJECT UNTIL DEEMED APPROPRIATE FOR REMOVAL BY THE ENGINEER DUE TO IMPLEMENTATION OF SUBSEQUENT MEASURES AS DETAILED ON THE SW-3P CONSTRUCTION PHASE SHEETS OR AT SUCH TIME AS THE WATERSHED AREA HAS BEEN RESTABILIZED.

SCALE: 1:2000

555 EAST RAMSEY SAN ANTONIO TEXAS 78216 PHONE (210)375-9000 FAX (210)375-9010
PAPE-DAWSON ENGINEERS CIVIL & ENVIRONMENTAL
STATE OF TEXAS K. STEPHEN BONNETTE 60928 REGISTERED PROFESSIONAL ENGINEER
K. STEPHEN BONNETTE, P.E. 9/20/00 DATE

© 2000 Texas Department of Transportation

# LOOP 1604 STORMWATER POLLUTION PREVENTION PLAN PROJECT INITIATION

SHEET 2 OF 15

| DN: | | | | | PROJECT NO. | | |
|---|---|---|---|---|---|---|---|
| CK DN: | | | | | NH 2000 (704), etc. | | |
| DW: | CONTROL | SECTION | JOB | DIST. | COUNTY | HIGHWAY NO. | SHEET NO. |
| CK DW: | 2452 | 01 | 036 etc. | SAT | BEXAR | LOOP 1604 | 845 |

Design Filename: j:\3941\16\civil\design\swppp\3941160sw02-pre.dgn

Plotted on: 09/19/00

Design Filename: j:\3941\16\civil\design\swppp\394116sw03-pre.dgn

| ESTIMATED QUANTITIES | | | |
|---|---|---|---|
| DESCRIPTION | UNIT | EST. | FINAL |
| ROCK FILTER DAM (TY 3) | M | 95 | |
| ROCK FILTER DAM (TY 3) (REMOVE & REPLACE) | M | 190 | |
| ROCK FILTER DAM (TY 3) (REMOVE) | M | 95 | |
| TEMP SED CONT FENCE | M | 1935 | |
| TEMP SED CONT FENCE (REMOVE & REPLACE) | M | 3870 | |
| TEMP SED CONT FENCE (REMOVE) | M | 1935 | |
| | | | |
| | | | |

QUANTITIES THIS SHEET
CSJ 2452-01-038

95 M ROCK FILTER DAM (TYPE 3)

190 M TEMP SED CONT FENCE

260 M TEMP SED CONT FENCE

400 M TEMP SED CONT FENCE

15 M TEMP SED CONT FENCE

15 M TEMP SED CONT FENCE

15 M TEMP SED CONT FENCE

225 M TEMP SED CONT FENCE

450 M TEMP SED CONT FENCE

220 M TEMP SED CONT FENCE

100 M TEMP SED CONT FENCE

45 M TEMP SED CONT FENCE

CULEBRA CREEK

CULEBRA RD.

DRAINAGE EASEMENT

N. B. FRONTAGE RD.

S. B. FRONTAGE RD.

N. B. MAINLANES

S. B. MAINLANES

LOOP 1604

LOOP 1604

MATCH LINE STA. 15+700

MATCH LINE STA. 16+400

ROW

SCF

RFD2

RFD3

## LEGEND

| | |
|---|---|
| —SCF— | TEMP SED CONT FENCE |
| RFD2 | ROCK FILTER DAM, TY 2 |
| RFD3 | ROCK FILTER DAM, TY 3 |

PRIOR TO BEGINNING CONSTRUCTION WITHIN ANY WATERSHED, ALL PROJECT INITIATION SW-3P FACILITIES AS SHOWN HEREON OR AS APPROVED BY THE ENGINEER SHALL BE IN PLACE.

NOTES:
1.) ALL DIMENSIONS ARE IN METERS UNLESS NOTED OTHERWISE.
2.) EXISTING FEATURES ARE SHOWN SCREENED BACK, I.E. FADED.
3.) ALL WATER POLLUTION PREVENTION MEASURES SHALL BE PLACED WITHIN THE RIGHT-OF-WAY OR DRAINAGE EASEMENT OF THE PROPOSED ROADWAY.
4.) ALL PROJECT INITIATION SW-3P MEASURES SHALL REMAIN IN PLACE THROUGHOUT THE DURATION OF THE PROJECT UNTIL DEEMED APPROPRIATE FOR REMOVAL BY THE ENGINEER DUE TO IMPLEMENTATION OF SUBSEQUENT MEASURES AS DETAILED ON THE SW-3P CONSTRUCTION PHASE SHEETS OR AT SUCH TIME AS THE WATERSHED AREA HAS BEEN RESTABILIZED.

SCALE: 1:2000

555 EAST RAMSEY SAN ANTONIO TEXAS 78216
PHONE (210)375-9000
FAX (210)375-9010
PAPE-DAWSON ENGINEERS
CIVIL & ENVIRONMENTAL

STATE OF TEXAS · K. STEPHEN BONNETTE · 60928 · REGISTERED PROFESSIONAL ENGINEER

K. STEPHEN BONNETTE, P.E. 9/20/00 DATE

© 2000 Texas Department of Transportation

# LOOP 1604
# STORMWATER POLLUTION PREVENTION PLAN
# PROJECT INITIATION

SHEET 3 OF 15

| DN: | | | | | PROJECT NO. | | |
|---|---|---|---|---|---|---|---|
| CK DN: | | | | | NH 2000 (704), etc. | | |
| DW: | CONTROL | SECTION | JOB | DIST. | COUNTY | HIGHWAY NO. | SHEET NO. |
| CK DW: | 2452 | 01 | 036 etc. | SAT | BEXAR | LOOP 1604 | 846 |

Plotted on: 03/19/00

Design Filename: J:\3941\16\civil\design\swppp\3941168sw04-pre.dgn

| ESTIMATED QUANTITIES | | | |
|---|---|---|---|
| DESCRIPTION | UNIT | EST. | FINAL |
| ROCK FILTER DAM (TY 2) | M | 15 | |
| ROCK FILTER DAM (TY 2) (REMOVE & REPLACE) | M | 30 | |
| ROCK FILTER DAM (TY 2) (REMOVE) | M | 15 | |
| TEMP SED CONT FENCE | M | 460 | |
| TEMP SED CONT FENCE (REMOVE & REPLACE) | M | 920 | |
| TEMP SED CONT FENCE (REMOVE) | M | 460 | |
| | | | |
| | | | |

QUANTITIES THIS SHEET
CSJ 2452-01-038

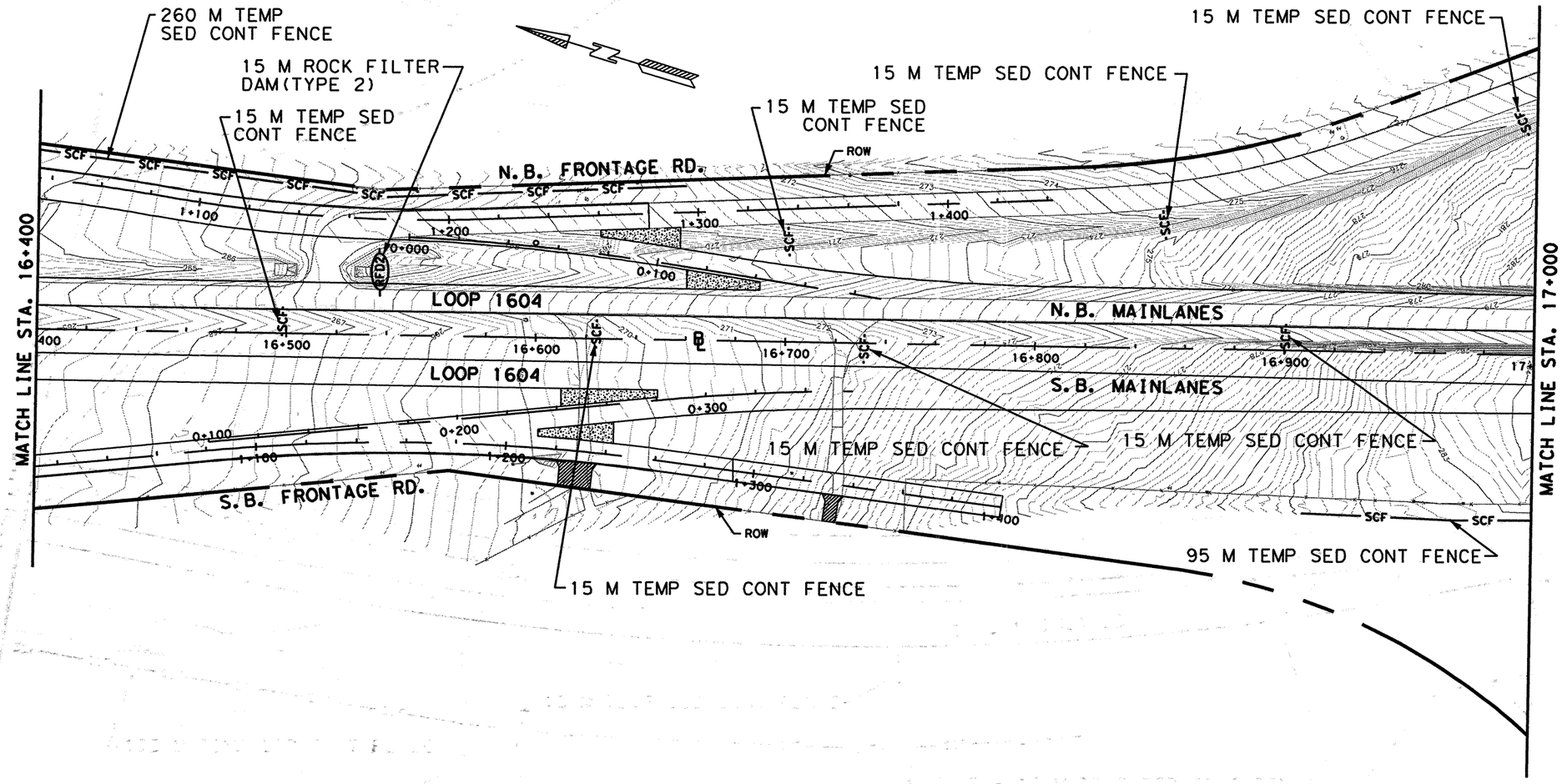


## LEGEND

- —SCF— TEMP SED CONT FENCE
- RFD2 ROCK FILTER DAM, TY 2
- RFD3 ROCK FILTER DAM, TY 3

NOTES:
1.) ALL DIMENSIONS ARE IN METERS UNLESS NOTED OTHERWISE.
2.) EXISTING FEATURES ARE SHOWN SCREENED BACK, I.E. FADED.
3.) ALL WATER POLLUTION PREVENTION MEASURES SHALL BE PLACED WITHIN THE RIGHT-OF-WAY OR DRAINAGE EASEMENT OF THE PROPOSED ROADWAY.
4.) ALL PROJECT INITIATION SW-3P MEASURES SHALL REMAIN IN PLACE THROUGHOUT THE DURATION OF THE PROJECT UNTIL DEEMED APPROPRIATE FOR REMOVAL BY THE ENGINEER DUE TO IMPLEMENTATION OF SUBSEQUENT MEASURES AS DETAILED ON THE SW-3P CONSTRUCTION PHASE SHEETS OR AT SUCH TIME AS THE WATERSHED AREA HAS BEEN RESTABILIZED.

SCALE: 1:2000

PRIOR TO BEGINNING CONSTRUCTION WITHIN ANY WATERSHED, ALL PROJECT INITIATION SW-3P FACILITIES AS SHOWN HEREON OR AS APPROVED BY THE ENGINEER SHALL BE IN PLACE.


555 EAST RAMSEY SAN ANTONIO TEXAS 78216
PHONE (210)375-9000
FAX (210)375-9010
PAPE-DAWSON ENGINEERS
CIVIL & ENVIRONMENTAL
STATE OF TEXAS K. STEPHEN BONNETTE 60928 REGISTERED PROFESSIONAL ENGINEER
K. STEPHEN BONNETTE, P.E. 3/20/00 DATE


© 2000 Texas Department of Transportation

# LOOP 1604
# STORMWATER POLLUTION PREVENTION PLAN
# PROJECT INITIATION

SHEET 4 OF 15

| DN: | | | | | | PROJECT NO. | | |
|---|---|---|---|---|---|---|---|---|
| CK DN: | | | | | | NH 2000 (704), etc. | | |
| DW: | CONTROL | SECTION | JOB | DIST. | STATE | COUNTY | HIGHWAY NO. | SHEET NO. |
| CK DW: | 2452 | 01 | 036 etc. | SAT | TX | BEXAR | LOOP 1604 | 847 |

Plotted on: 09/19/00

Design Filename: J:\3941\V16\civil\design\swppp\3941161sw05-pre.dgn

| ESTIMATED QUANTITIES | | | |
|---|---|---|---|
| DESCRIPTION | UNIT | EST. | FINAL |
| ROCK FILTER DAM (TY 2) | M | 40 | |
| ROCK FILTER DAM (TY 2)(REMOVE & REPLACE) | M | 80 | |
| ROCK FILTER DAM (TY 2)(REMOVE) | M | 40 | |
| TEMP SED CONT FENCE | M | 495 | |
| TEMP SED CONT FENCE (REMOVE & REPLACE) | M | 990 | |
| TEMP SED CONT FENCE (REMOVE) | M | 495 | |
| ROCK FILTER DAM (TY 3) | M | 30 | |
| ROCK FILTER DAM (TY 3)(REMOVE & REPLACE) | M | 60 | |
| ROCK FILTER DAM (TY 3)(REMOVE) | M | 30 | |

QUANTITIES THIS SHEET
CSJ 2452-01-037

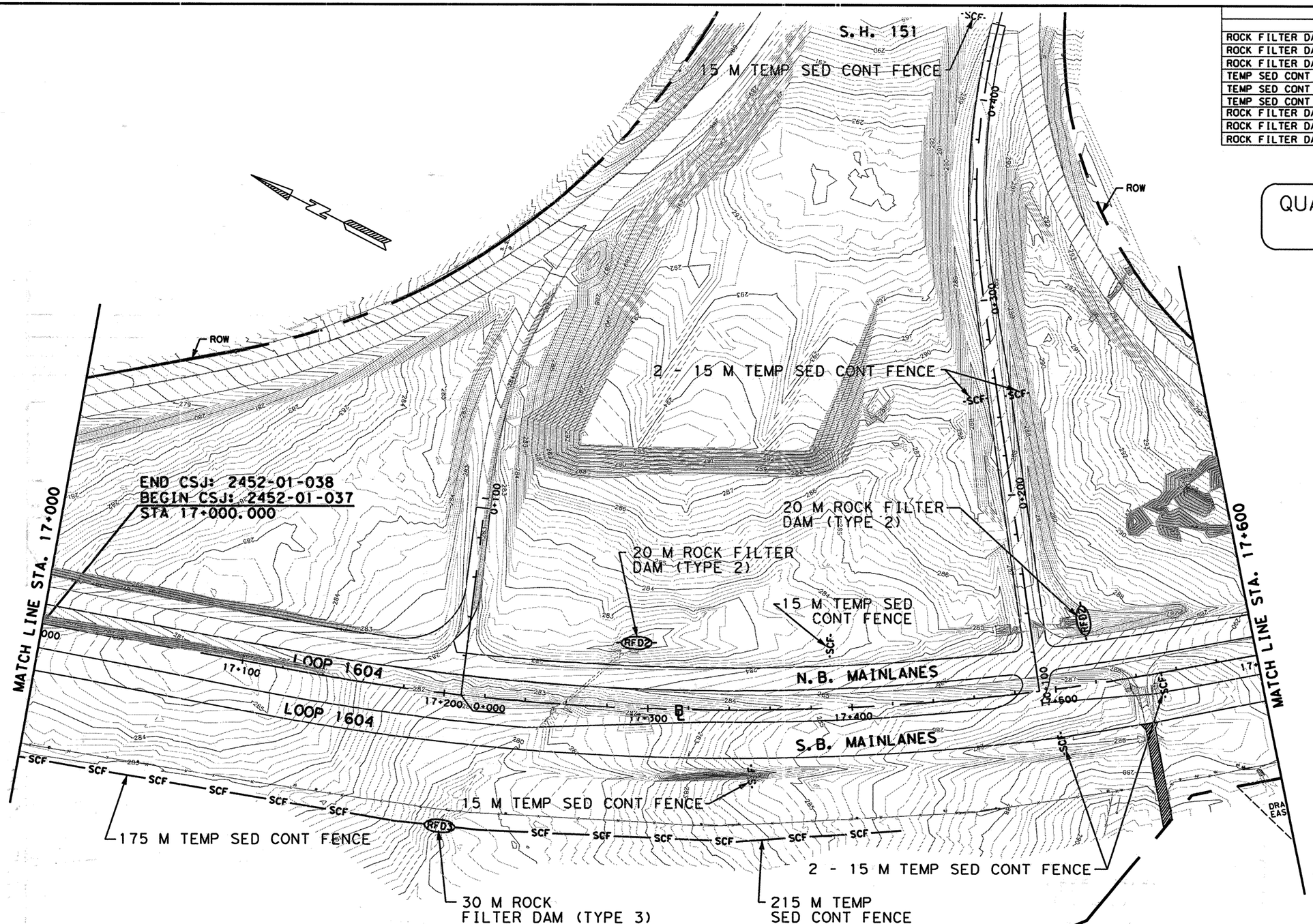


LEGEND

—SCF— TEMP SED CONT FENCE
RFD2 ROCK FILTER DAM, TY 2
RFD3 ROCK FILTER DAM, TY 3

NOTES:
1.) ALL DIMENSIONS ARE IN METERS UNLESS NOTED OTHERWISE.
2.) EXISTING FEATURES ARE SHOWN SCREENED BACK, I.E. FADED.
3.) ALL WATER POLLUTION PREVENTION MEASURES SHALL BE PLACED WITHIN THE RIGHT-OF-WAY OR DRAINAGE EASEMENT OF THE PROPOSED ROADWAY.
4.) ALL PROJECT INITIATION SW-3P MEASURES SHALL REMAIN IN PLACE THROUGHOUT THE DURATION OF THE PROJECT UNTIL DEEMED APPROPRIATE FOR REMOVAL BY THE ENGINEER DUE TO IMPLEMENTATION OF SUBSEQUENT MEASURES AS DETAILED ON THE SW-3P CONSTRUCTION PHASE SHEETS OR AT SUCH TIME AS THE WATERSHED AREA HAS BEEN RESTABILIZED.

SCALE: 1:2000

PRIOR TO BEGINNING CONSTRUCTION WITHIN ANY WATERSHED, ALL PROJECT INITIATION SW-3P FACILITIES AS SHOWN HEREON OR AS APPROVED BY THE ENGINEER SHALL BE IN PLACE.

555 EAST RAMSEY SAN ANTONIO TEXAS 78216
PHONE (210)375-9000
FAX (210)375-9010
PAPE-DAWSON ENGINEERS
CIVIL & ENVIRONMENTAL
STATE OF TEXAS K. STEPHEN BONNETTE 60928 REGISTERED PROFESSIONAL ENGINEER
K. STEPHEN BONNETTE, P.E. 9/20/00 DATE

© 2000 Texas Department of Transportation

# LOOP 1604 STORMWATER POLLUTION PREVENTION PLAN PROJECT INITIATION

SHEET 5 OF 15

| | | | | | | | | |
|---|---|---|---|---|---|---|---|---|
| DN: | | | | | | PROJECT NO. | | |
| CK DN: | | | | | | NH 2000 (704), etc. | | |
| DW: | CONTROL | SECTION | JOB | DIST. | STATE | COUNTY | HIGHWAY NO. | SHEET NO. |
| CK DW: | 2452 | 01 | 036 etc. | SAT | TX | BEXAR | LOOP 1604 | 848 |

Plotted on: 09/19/00

Design Filename: j:\3941\16civil\design\swppp\3941116sw06-pre.dgn

# QUANTITIES THIS SHEET
# CSJ 2452-01-037

**LEGEND**

- SCF — TEMP SED CONT FENCE
- RFD2 — ROCK FILTER DAM, TY 2
- RFD3 — ROCK FILTER DAM, TY 3

| ESTIMATED QUANTITIES | | | |
|---|---|---|---|
| DESCRIPTION | UNIT | EST. | FINAL |
| ROCK FILTER DAM (TY 2) | M | 55 | |
| ROCK FILTER DAM (TY 2) (REMOVE & REPLACE) | M | 110 | |
| ROCK FILTER DAM (TY 2) (REMOVE) | M | 55 | |
| ROCK FILTER DAM (TY 3) | M | 50 | |
| ROCK FILTER DAM (TY 3) (REMOVE & REPLACE) | M | 100 | |
| ROCK FILTER DAM (TY 3) (REMOVE) | M | 50 | |
| TEMP SED CONT FENCE | M | 1055 | |
| TEMP SED CONT FENCE (REMOVE & REPLACE) | M | 2110 | |
| TEMP SED CONT FENCE (REMOVE) | M | 1055 | |

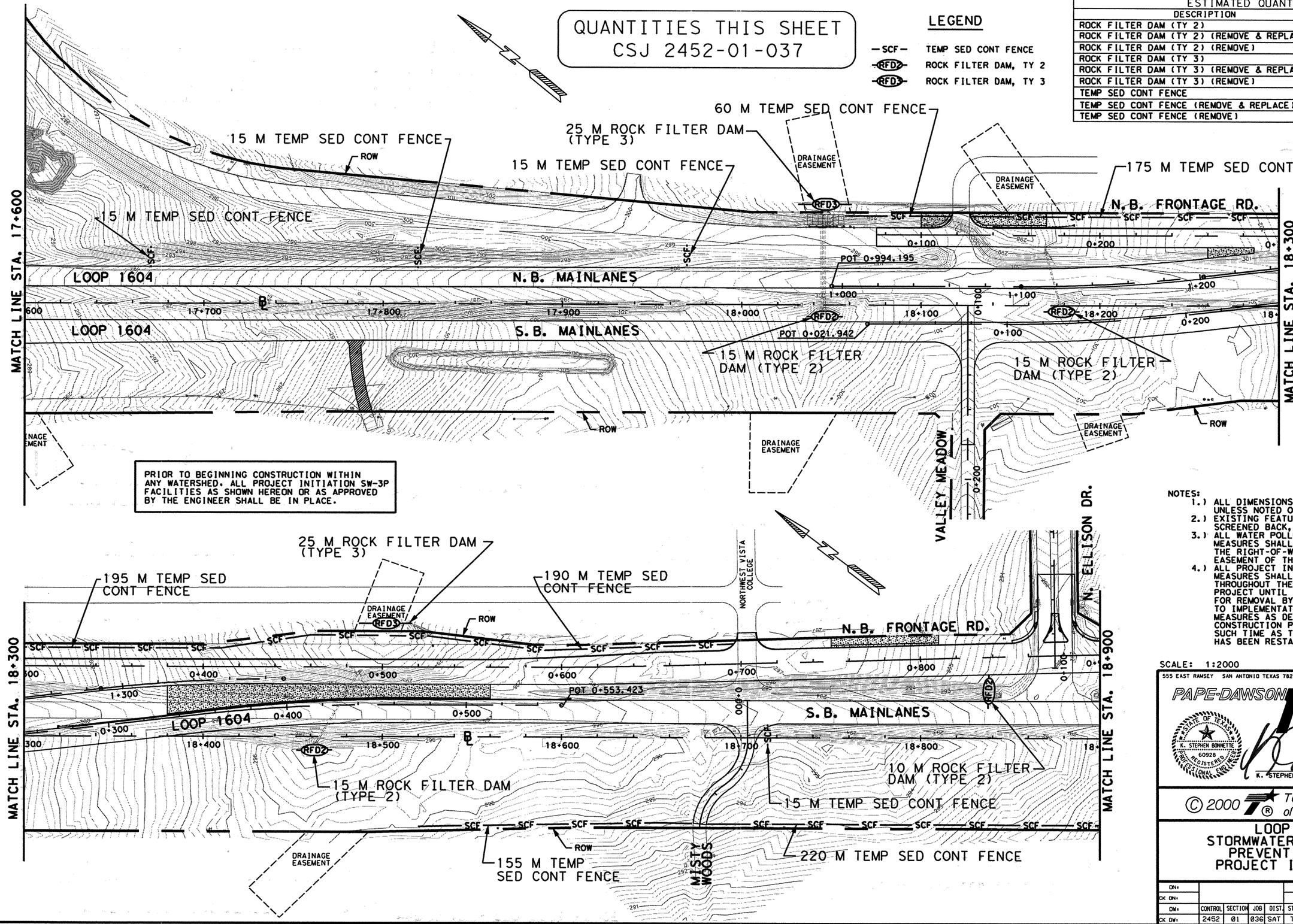


NOTES:
1. ALL DIMENSIONS ARE IN METERS UNLESS NOTED OTHERWISE.
2. EXISTING FEATURES ARE SHOWN SCREENED BACK, I.E. FADED.
3. ALL WATER POLLUTION PREVENTION MEASURES SHALL BE PLACED WITHIN THE RIGHT-OF-WAY OR DRAINAGE EASEMENT OF THE PROPOSED ROADWAY.
4. ALL PROJECT INITIATION SW-3P MEASURES SHALL REMAIN IN PLACE THROUGHOUT THE DURATION OF THE PROJECT UNTIL DEEMED APPROPRIATE FOR REMOVAL BY THE ENGINEER DUE TO IMPLEMENTATION OF SUBSEQUENT MEASURES AS DETAILED ON THE SW-3P CONSTRUCTION PHASE SHEETS OR AT SUCH TIME AS THE WATERSHED AREA HAS BEEN RESTABILIZED.

SCALE: 1:2000


555 EAST RAMSEY SAN ANTONIO TEXAS 78216
PHONE (210)375-9000
FAX (210)375-9010
PAPE-DAWSON ENGINEERS
CIVIL & ENVIRONMENTAL
STATE OF TEXAS — K. STEPHEN BONNETTE — 60928 — REGISTERED PROFESSIONAL ENGINEER
K. STEPHEN BONNETTE, P.E. 9/20/00 DATE



© 2000 Texas Department of Transportation


# LOOP 1604
# STORMWATER POLLUTION PREVENTION PLAN
# PROJECT INITIATION

SHEET 6 OF 15

| DN: | | | | | PROJECT NO. | | |
|---|---|---|---|---|---|---|---|
| CK DN: | | | | | NH 2000 (704), etc. | | |
| DW: | CONTROL | SECTION | JOB | DIST. | COUNTY | HIGHWAY NO. | SHEET NO. |
| CK DW: | 2452 | 01 | 036 etc. | SAT | BEXAR | LOOP 1604 | 849 |
| | | | | STATE: TX | | | |

PRIOR TO BEGINNING CONSTRUCTION WITHIN ANY WATERSHED. ALL PROJECT INITIATION SW-3P FACILITIES AS SHOWN HEREON OR AS APPROVED BY THE ENGINEER SHALL BE IN PLACE.

## LEGEND

| | |
|---|---|
| —SCF— | TEMP SED CONT FENCE |
| RFD2 | ROCK FILTER DAM, TY 2 |
| RFD3 | ROCK FILTER DAM, TY 3 |

QUANTITIES THIS SHEET
CSJ 2452-01-037

ESTIMATED QUANTITIES

| DESCRIPTION | UNIT | EST. | FINAL |
|---|---|---|---|
| ROCK FILTER DAM (TY 2) | M | 100 | |
| ROCK FILTER DAM (TY 2) (REMOVE & REPLACE) | M | 200 | |
| ROCK FILTER DAM (TY 2) (REMOVE) | M | 100 | |
| ROCK FILTER DAM (TY 3) | M | 135 | |
| ROCK FILTER DAM (TY 3) (REMOVE & REPLACE) | M | 270 | |
| ROCK FILTER DAM (TY 3) (REMOVE) | M | 135 | |
| TEMP SED CONT FENCE | M | 930 | |
| TEMP SED CONT FENCE (REMOVE & REPLACE) | M | 1860 | |
| TEMP SED CONT FENCE (REMOVE) | M | 930 | |
| | | | |

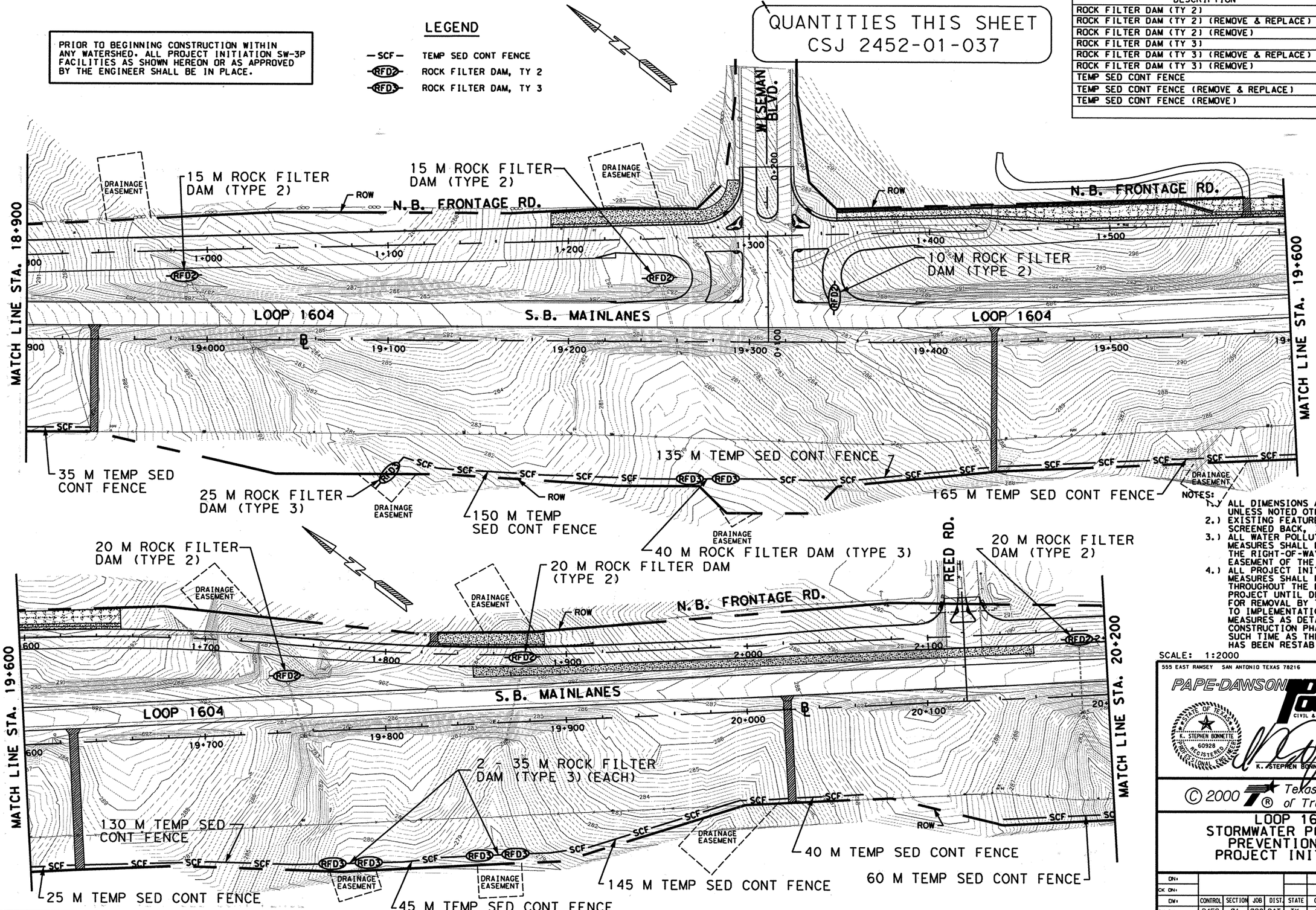


NOTES:
1.) ALL DIMENSIONS ARE IN METERS UNLESS NOTED OTHERWISE.
2.) EXISTING FEATURES ARE SHOWN SCREENED BACK, I.E. FADED.
3.) ALL WATER POLLUTION PREVENTION MEASURES SHALL BE PLACED WITHIN THE RIGHT-OF-WAY OR DRAINAGE EASEMENT OF THE PROPOSED ROADWAY.
4.) ALL PROJECT INITIATION SW-3P MEASURES SHALL REMAIN IN PLACE THROUGHOUT THE DURATION OF THE PROJECT UNTIL DEEMED APPROPRIATE FOR REMOVAL BY THE ENGINEER DUE TO IMPLEMENTATION OF SUBSEQUENT MEASURES AS DETAILED ON THE SW-3P CONSTRUCTION PHASE SHEETS OR AT SUCH TIME AS THE WATERSHED AREA HAS BEEN RESTABILIZED.

SCALE: 1:2000

555 EAST RAMSEY SAN ANTONIO TEXAS 78216 PHONE (210)375-9000 FAX (210)375-9010
PAPE-DAWSON ENGINEERS CIVIL & ENVIRONMENTAL
K. STEPHEN BONNETTE 60928 REGISTERED PROFESSIONAL ENGINEER STATE OF TEXAS
K. STEPHEN BONNETTE, P.E. 9/20/00 DATE

© 2000 Texas Department of Transportation

# LOOP 1604 STORMWATER POLLUTION PREVENTION PLAN PROJECT INITIATION

SHEET 7 OF 15

| DN: | | | | | PROJECT NO. | |
|---|---|---|---|---|---|---|
| CK DN: | | | | | NH 2000 (704), etc. | |
| DW: | CONTROL | SECTION | JOB | DIST. | COUNTY | HIGHWAY NO. | SHEET NO. |
| CK DW: | 2452 | 01 | 036 etc. | SAT | BEXAR | LOOP 1604 | 850 |

Plotted on: 09/19/00
Design Filename: j:\3941\16\civil\design\swppp\394116sw07-pre.dgn

Plotted on: 09/19/00

Design Filename: j:\394116\civil\design\swppp\394116sw08-pre.dgn

PRIOR TO BEGINNING CONSTRUCTION WITHIN ANY WATERSHED, ALL PROJECT INITIATION SW-3P FACILITIES AS SHOWN HEREON OR AS APPROVED BY THE ENGINEER SHALL BE IN PLACE.

## LEGEND

| | |
|---|---|
| —SCF— | TEMP SED CONT FENCE |
| RFD2 | ROCK FILTER DAM, TY 2 |
| RFD3 | ROCK FILTER DAM, TY 3 |

| ESTIMATED QUANTITIES - CSJ: 2452-01-036 | | | |
|---|---|---|---|
| DESCRIPTION | UNIT | EST. | FINAL |
| ROCK FILTER DAM (TY 2) | M | 20 | |
| ROCK FILTER DAM (TY 2) (REMOVE & REPLACE) | M | 40 | |
| ROCK FILTER DAM (TY 2) (REMOVE) | M | 20 | |
| TEMP SED CONT FENCE | M | 1620 | |
| TEMP SED CONT FENCE (REMOVE & REPLACE) | M | 3240 | |
| TEMP SED CONT FENCE (REMOVE) | M | 1620 | |

| ESTIMATED QUANTITIES - CSJ: 2452-01-037 | | | |
|---|---|---|---|
| DESCRIPTION | UNIT | EST. | FINAL |
| ROCK FILTER DAM (TY 2) | M | 15 | |
| ROCK FILTER DAM (TY 2) (REMOVE & REPLACE) | M | 30 | |
| ROCK FILTER DAM (TY 2) (REMOVE) | M | 15 | |
| ROCK FILTER DAM (TY 3) | M | 20 | |
| ROCK FILTER DAM (TY 3) (REMOVE & REPLACE) | M | 40 | |
| ROCK FILTER DAM (TY 3) (REMOVE) | M | 20 | |
| TEMP SED CONT FENCE | M | 810 | |
| TEMP SED CONT FENCE (REMOVE & REPLACE) | M | 1620 | |
| TEMP SED CONT FENCE (REMOVE) | M | 810 | |

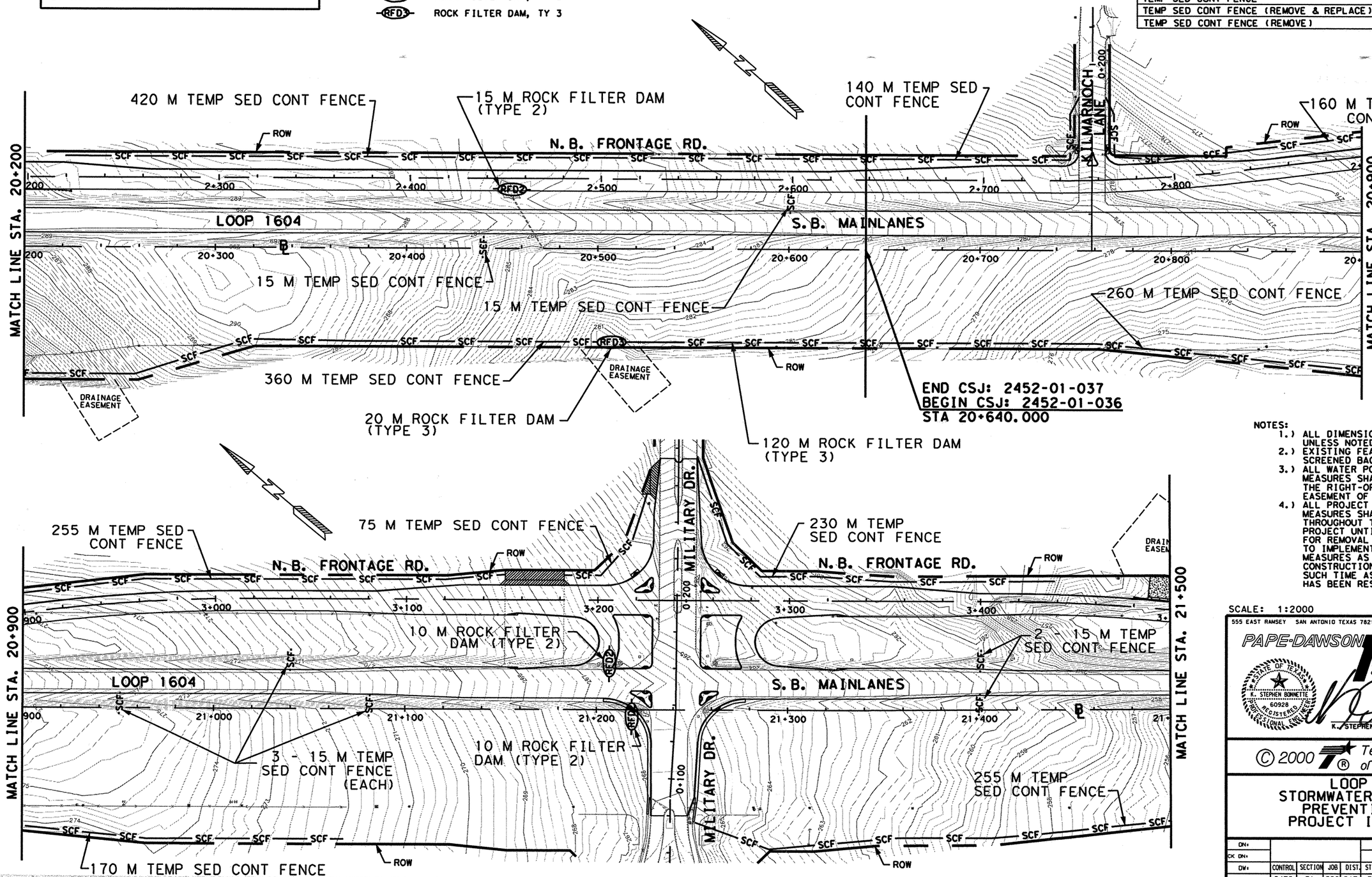


NOTES:
1.) ALL DIMENSIONS ARE IN METERS UNLESS NOTED OTHERWISE.
2.) EXISTING FEATURES ARE SHOWN SCREENED BACK, I.E. FADED.
3.) ALL WATER POLLUTION PREVENTION MEASURES SHALL BE PLACED WITHIN THE RIGHT-OF-WAY OR DRAINAGE EASEMENT OF THE PROPOSED ROADWAY.
4.) ALL PROJECT INITIATION SW-3P MEASURES SHALL REMAIN IN PLACE THROUGHOUT THE DURATION OF THE PROJECT UNTIL DEEMED APPROPRIATE FOR REMOVAL BY THE ENGINEER DUE TO IMPLEMENTATION OF SUBSEQUENT MEASURES AS DETAILED ON THE SW-3P CONSTRUCTION PHASE SHEETS OR AT SUCH TIME AS THE WATERSHED AREA HAS BEEN RESTABILIZED.

SCALE: 1:2000


555 EAST RAMSEY SAN ANTONIO TEXAS 78216 PHONE (210)375-9000 FAX (210)375-9010
PAPE-DAWSON ENGINEERS CIVIL & ENVIRONMENTAL
STATE OF TEXAS K. STEPHEN BONNETTE 60928 REGISTERED PROFESSIONAL ENGINEER
K. STEPHEN BONNETTE, P.E. 9/20/00 DATE


© 2000 Texas Department of Transportation

# LOOP 1604 STORMWATER POLLUTION PREVENTION PLAN PROJECT INITIATION

SHEET 8 OF 15

| DN: | | | | | | | PROJECT NO. | |
|---|---|---|---|---|---|---|---|---|
| CK DN: | | | | | | | NH 2000 (704), etc. | |
| DW: | CONTROL | SECTION | JOB | DIST. | STATE | COUNTY | HIGHWAY NO. | SHEET NO. |
| CK DW: | 2452 | 01 | 036 etc. | SAT | TX | BEXAR | LOOP 1604 | 851 |

Plotted on: 09/19/00

| ESTIMATED QUANTITIES | | | |
|---|---|---|---|
| DESCRIPTION | UNIT | EST. | FINAL |
| ROCK FILTER DAM (TY 2) | M | 20 | |
| ROCK FILTER DAM (TY 2) (REMOVE & REPLACE) | M | 40 | |
| ROCK FILTER DAM (TY 2) (REMOVE) | M | 20 | |
| ROCK FILTER DAM (TY 3) | M | 80 | |
| ROCK FILTER DAM (TY 3) (REMOVE & REPLACE) | M | 160 | |
| ROCK FILTER DAM (TY 3) (REMOVE) | M | 80 | |
| TEMP SED CONT FENCE | M | 805 | |
| TEMP SED CONT FENCE (REMOVE & REPLACE) | M | 1610 | |
| TEMP SED CONT FENCE (REMOVE) | M | 805 | |

QUANTITIES THIS SHEET
CSJ 2452-01-036

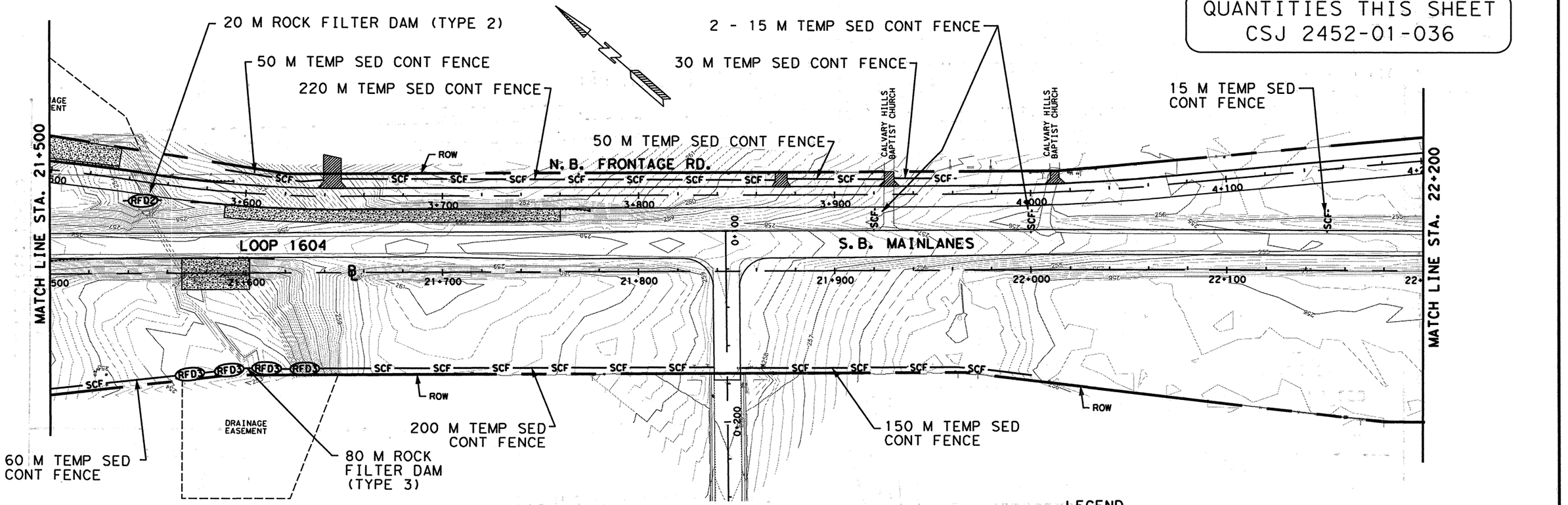


LEGEND

—SCF— TEMP SED CONT FENCE
RFD2 ROCK FILTER DAM, TY 2
RFD3 ROCK FILTER DAM, TY 3

PRIOR TO BEGINNING CONSTRUCTION WITHIN ANY WATERSHED, ALL PROJECT INITIATION SW-3P FACILITIES AS SHOWN HEREON OR AS APPROVED BY THE ENGINEER SHALL BE IN PLACE.

NOTES:
1.) ALL DIMENSIONS ARE IN METERS UNLESS NOTED OTHERWISE.
2.) EXISTING FEATURES ARE SHOWN SCREENED BACK, I.E. FADED.
3.) ALL WATER POLLUTION PREVENTION MEASURES SHALL BE PLACED WITHIN THE RIGHT-OF-WAY OR DRAINAGE EASEMENT OF THE PROPOSED ROADWAY.
4.) ALL PROJECT INITIATION SW-3P MEASURES SHALL REMAIN IN PLACE THROUGHOUT THE DURATION OF THE PROJECT UNTIL DEEMED APPROPRIATE FOR REMOVAL BY THE ENGINEER DUE TO IMPLEMENTATION OF SUBSEQUENT MEASURES AS DETAILED ON THE SW-3P CONSTRUCTION PHASE SHEETS OR AT SUCH TIME AS THE WATERSHED AREA HAS BEEN RESTABILIZED.

SCALE: 1:2000

555 EAST RAMSEY SAN ANTONIO TEXAS 78216 PHONE (210)375-9000 FAX (210)375-9010
PAPE-DAWSON ENGINEERS CIVIL & ENVIRONMENTAL
STATE OF TEXAS K. STEPHEN BONNETTE 60928 REGISTERED PROFESSIONAL ENGINEER
9/20/00
K. STEPHEN BONNETTE, P.E. DATE

© 2000 Texas Department of Transportation

# LOOP 1604 STORMWATER POLLUTION PREVENTION PLAN PROJECT INITIATION

SHEET 9 OF 15

| DN: | | | | | PROJECT NO. | | | |
|---|---|---|---|---|---|---|---|---|
| CK DN: | | | | | NH 2000 (704), etc. | | | |
| DW: | CONTROL | SECTION | JOB | DIST. | STATE | COUNTY | HIGHWAY NO. | SHEET NO. |
| CK DW: | 2452 | 01 | 036 etc. | SAT | TX | BEXAR | LOOP 1604 | 852 |

Design Filename: J:\394116\civil\design\swppp\394116sw09-pre.dgn

Plotted on: 09/19/00

| ESTIMATED QUANTITIES | | | |
|---|---|---|---|
| DESCRIPTION | UNIT | EST. | FINAL |
| ROCK FILTER DAM (TY 2) | M | 70 | |
| ROCK FILTER DAM (TY 2) (REMOVE & REPLACE) | M | 140 | |
| ROCK FILTER DAM (TY 2) (REMOVE) | M | 70 | |
| ROCK FILTER DAM (TY 3) | M | 80 | |
| ROCK FILTER DAM (TY 3) (REMOVE & REPLACE) | M | 160 | |
| ROCK FILTER DAM (TY 3) (REMOVE) | M | 80 | |
| TEMP SED CONT FENCE | M | 1135 | |
| TEMP SED CONT FENCE (REMOVE & REPLACE) | M | 2270 | |
| TEMP SED CONT FENCE (REMOVE) | M | 1135 | |

QUANTITIES THIS SHEET
CSJ 2452-01-036

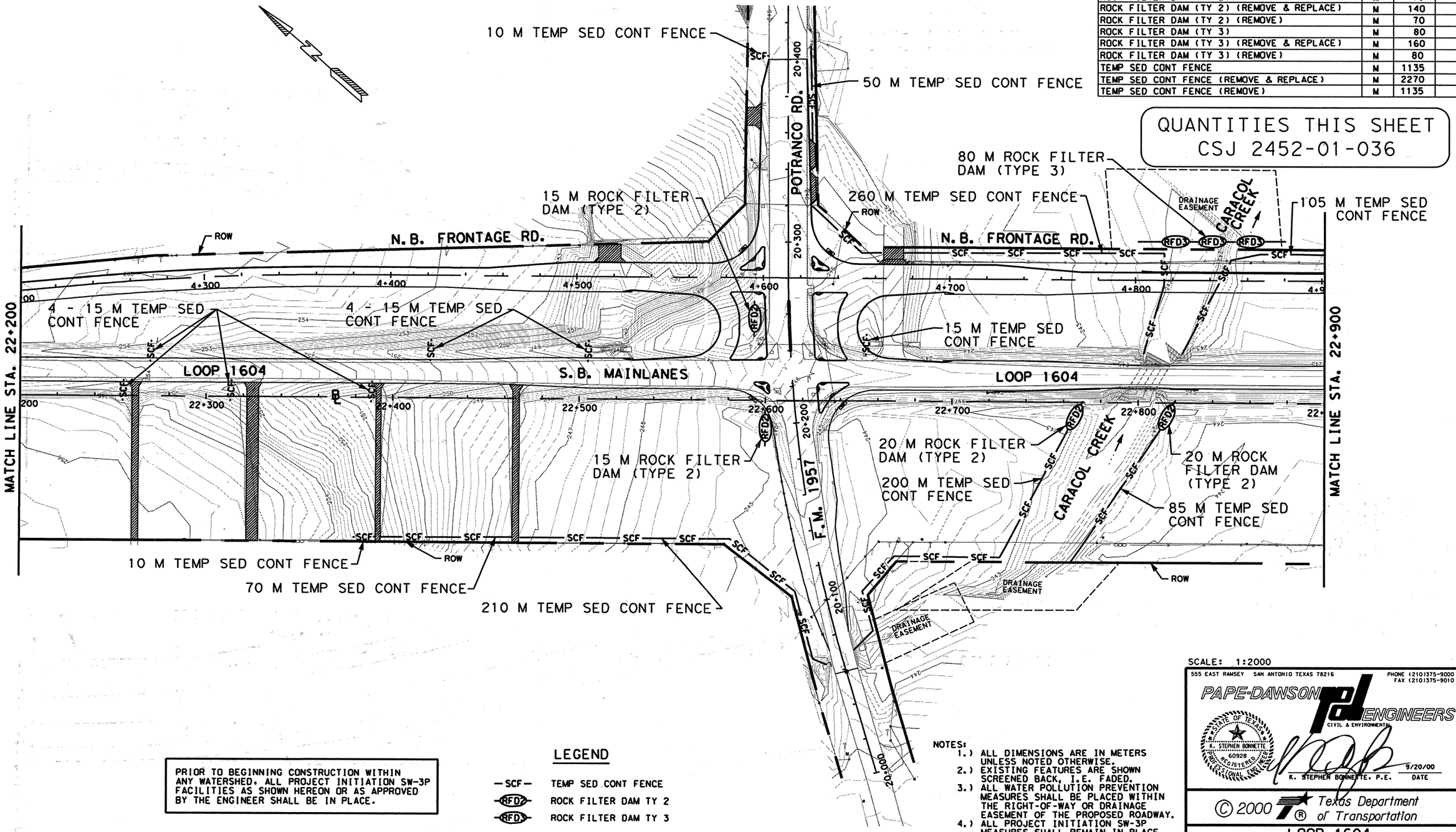


SCALE: 1:2000

PRIOR TO BEGINNING CONSTRUCTION WITHIN ANY WATERSHED, ALL PROJECT INITIATION SW-3P FACILITIES AS SHOWN HEREON OR AS APPROVED BY THE ENGINEER SHALL BE IN PLACE.

LEGEND

- —SCF— TEMP SED CONT FENCE
- RFD2 ROCK FILTER DAM TY 2
- RFD3 ROCK FILTER DAM TY 3

NOTES:
1.) ALL DIMENSIONS ARE IN METERS UNLESS NOTED OTHERWISE.
2.) EXISTING FEATURES ARE SHOWN SCREENED BACK, I.E. FADED.
3.) ALL WATER POLLUTION PREVENTION MEASURES SHALL BE PLACED WITHIN THE RIGHT-OF-WAY OR DRAINAGE EASEMENT OF THE PROPOSED ROADWAY.
4.) ALL PROJECT INITIATION SW-3P MEASURES SHALL REMAIN IN PLACE THROUGHOUT THE DURATION OF THE PROJECT UNTIL DEEMED APPROPRIATE FOR REMOVAL BY THE ENGINEER DUE TO IMPLEMENTATION OF SUBSEQUENT MEASURES AS DETAILED ON THE SW-3P CONSTRUCTION PHASE SHEETS OR AT SUCH TIME AS THE WATERSHED AREA HAS BEEN RESTABILIZED.

555 EAST RAMSEY SAN ANTONIO TEXAS 78216
PHONE (210)375-9000
FAX (210)375-9010
PAPE-DAWSON ENGINEERS
CIVIL & ENVIRONMENTAL

STATE OF TEXAS
K. STEPHEN BONNETTE
60928
REGISTERED PROFESSIONAL ENGINEER

9/20/00
K. STEPHEN BONNETTE, P.E. DATE

© 2000 Texas Department of Transportation

LOOP 1604
STORMWATER POLLUTION PREVENTION PLAN
PROJECT INITIATION
SHEET 10 OF 15

| | | | | | | | | |
|---|---|---|---|---|---|---|---|---|
| DN: | | | | | | PROJECT NO. | | |
| CK DN: | | | | | | NH 2000 (704), etc. | | |
| DW: | CONTROL | SECTION | JOB | DIST. | STATE | COUNTY | HIGHWAY NO. | SHEET NO. |
| CK DW: | 2452 | 01 | 036 etc. | SAT | TX | BEXAR | LOOP 1604 | 953 |

Design Filename: J:\2341\16\civil\design\swppp\394116sw10-pre.dgn

Plotted on: 09/19/00

Design Filename: j:\2441\16\civil\design\swppp\394116swll-pre.dgn

PRIOR TO BEGINNING CONSTRUCTION WITHIN ANY WATERSHED, ALL PROJECT INITIATION SW-3P FACILITIES AS SHOWN HEREON OR AS APPROVED BY THE ENGINEER SHALL BE IN PLACE.

## LEGEND

- —SCF— TEMP SED CONT FENCE
- —RFD2— ROCK FILTER DAM, TY 2
- —RFD3— ROCK FILTER DAM, TY 3

## ESTIMATED QUANTITIES

| DESCRIPTION | UNIT | EST. | FINAL |
|---|---|---|---|
| TEMP SED CONT FENCE | M | 1990 | |
| TEMP SED CONT FENCE (REMOVE & REPLACE) | M | 3980 | |
| TEMP SED CONT FENCE (REMOVE) | M | 1990 | |
| | | | |
| | | | |
| | | | |
| | | | |

QUANTITIES THIS SHEET
CSJ 2452-01-036

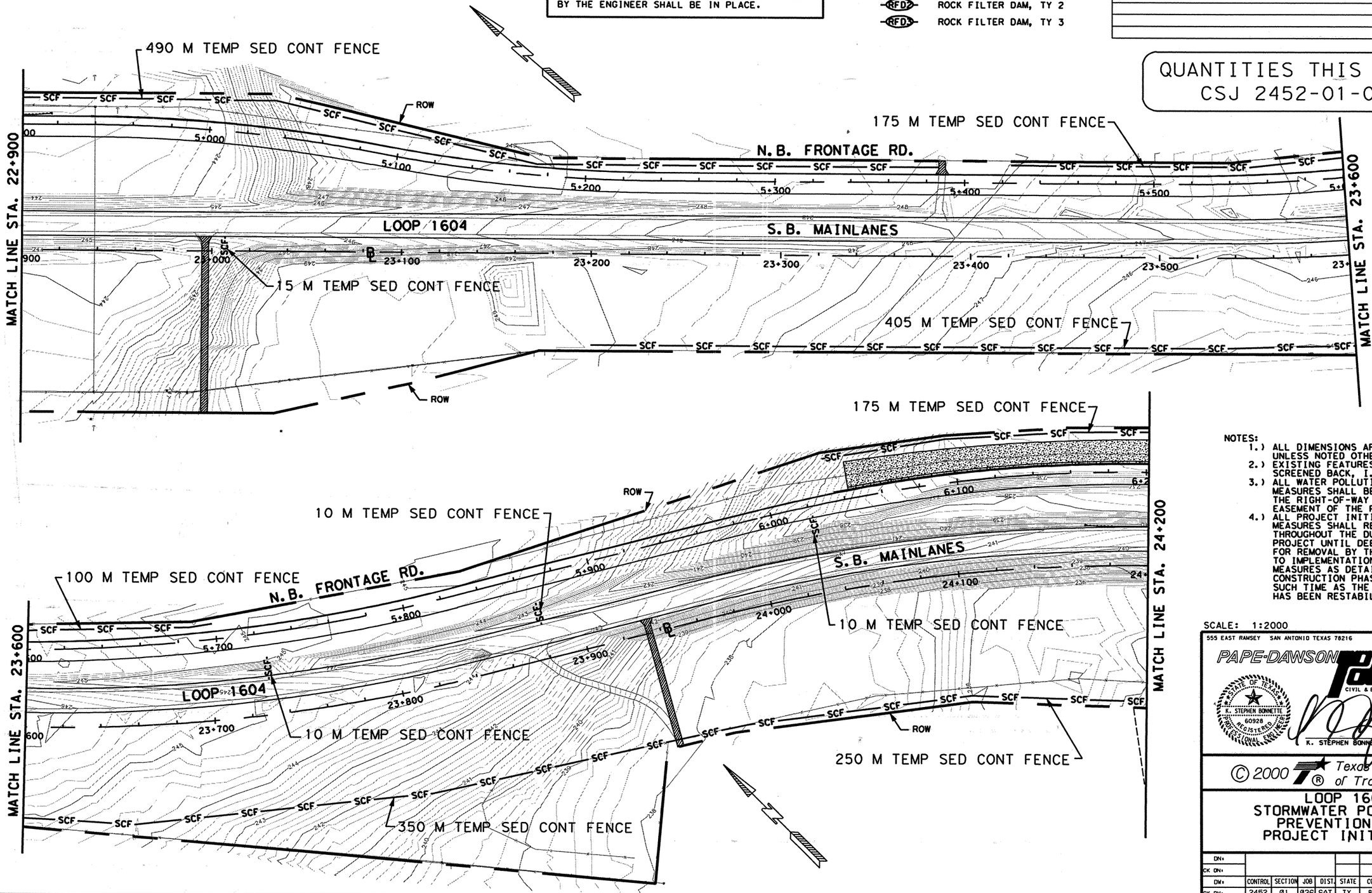


NOTES:
1.) ALL DIMENSIONS ARE IN METERS UNLESS NOTED OTHERWISE.
2.) EXISTING FEATURES ARE SHOWN SCREENED BACK, I.E. FADED.
3.) ALL WATER POLLUTION PREVENTION MEASURES SHALL BE PLACED WITHIN THE RIGHT-OF-WAY OR DRAINAGE EASEMENT OF THE PROPOSED ROADWAY.
4.) ALL PROJECT INITIATION SW-3P MEASURES SHALL REMAIN IN PLACE THROUGHOUT THE DURATION OF THE PROJECT UNTIL DEEMED APPROPRIATE FOR REMOVAL BY THE ENGINEER DUE TO IMPLEMENTATION OF SUBSEQUENT MEASURES AS DETAILED ON THE SW-3P CONSTRUCTION PHASE SHEETS OR AT SUCH TIME AS THE WATERSHED AREA HAS BEEN RESTABILIZED.

SCALE: 1:2000

555 EAST RAMSEY SAN ANTONIO TEXAS 78216
PHONE (210)375-9000
FAX (210)375-9010
PAPE-DAWSON ENGINEERS
CIVIL & ENVIRONMENTAL
STATE OF TEXAS K. STEPHEN BONNETTE 60928 REGISTERED PROFESSIONAL ENGINEER
K. STEPHEN BONNETTE, P.E. 9/20/00 DATE

© 2000 Texas Department of Transportation

# LOOP 1604 STORMWATER POLLUTION PREVENTION PLAN PROJECT INITIATION

SHEET 11 OF 15

| | | | | | | | | |
|---|---|---|---|---|---|---|---|---|
| DN: | | | | | | PROJECT NO. | | |
| CK DN: | | | | | | NH 2000 (704), etc. | | |
| DW: | CONTROL | SECTION | JOB | DIST. | STATE | COUNTY | HIGHWAY NO. | SHEET NO. |
| CK DW: | 2452 | 01 | 036 | SAT | TX | BEXAR | LOOP 1604 | 854 |

etc.

PRIOR TO BEGINNING CONSTRUCTION WITHIN ANY WATERSHED. ALL PROJECT INITIATION SW-3P FACILITIES AS SHOWN HEREON OR AS APPROVED BY THE ENGINEER SHALL BE IN PLACE.

## QUANTITIES THIS SHEET
## CSJ 2452-01-036

ESTIMATED QUANTITIES

| DESCRIPTION | UNIT | EST. | FINAL |
|---|---|---|---|
| ROCK FILTER DAM (TY 2) | M | 10 | |
| ROCK FILTER DAM (TY 2) (REMOVE & REPLACE) | M | 20 | |
| ROCK FILTER DAM (TY 2) (REMOVE) | M | 10 | |
| ROCK FILTER DAM (TY 3) | M | 70 | |
| ROCK FILTER DAM (TY 3) (REMOVE & REPLACE) | M | 140 | |
| ROCK FILTER DAM (TY 3) (REMOVE) | M | 70 | |
| TEMP SED CONT FENCE | M | 1935 | |
| TEMP SED CONT FENCE (REMOVE & REPLACE) | M | 3870 | |
| TEMP SED CONT FENCE (REMOVE) | M | 1935 | |

LEGEND

- —SCF— TEMP SED CONT FENCE
- RFD2 ROCK FILTER DAM, TY 2
- RFD3 ROCK FILTER DAM, TY 3

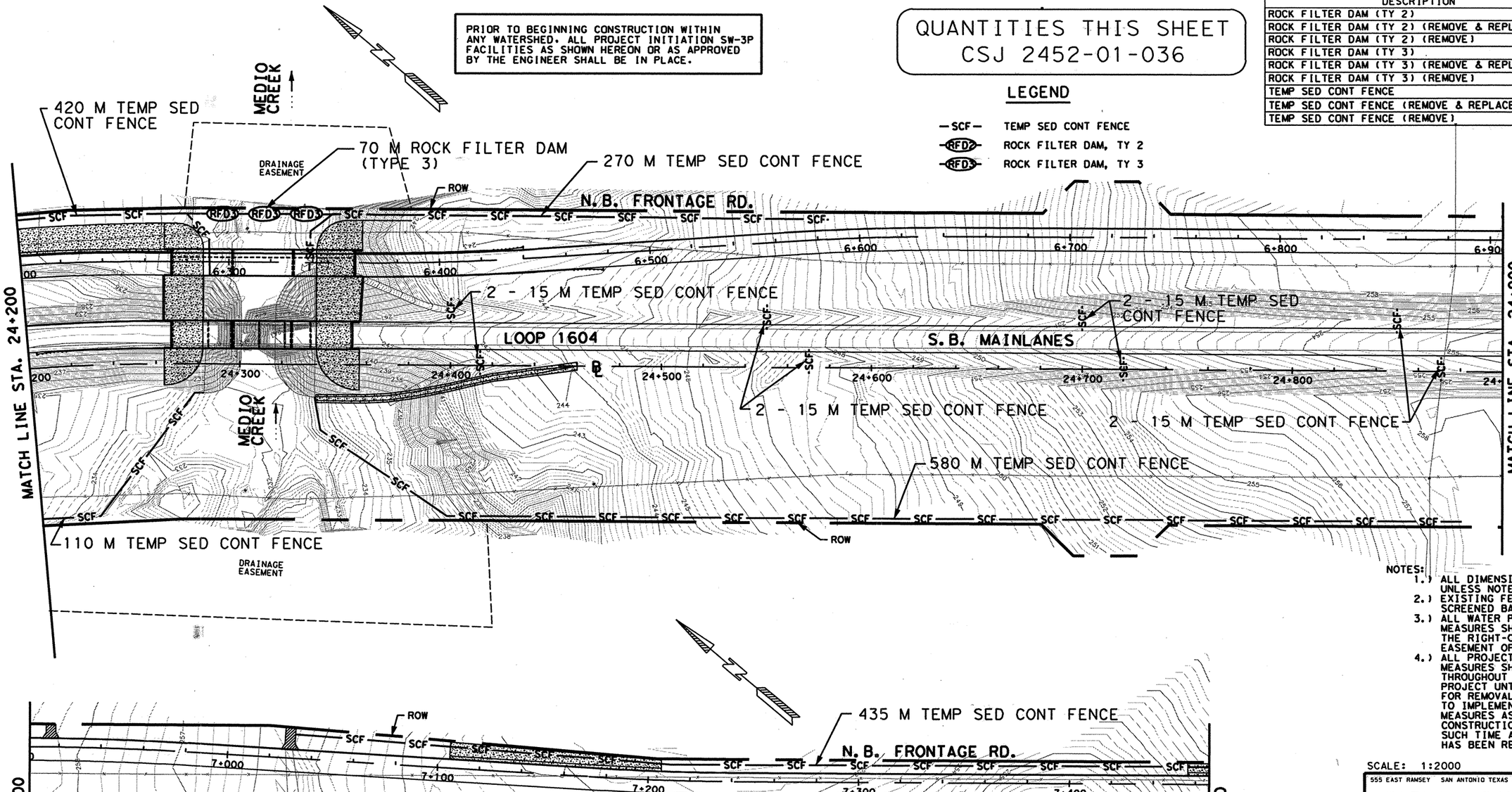


NOTES:
1.) ALL DIMENSIONS ARE IN METERS UNLESS NOTED OTHERWISE.
2.) EXISTING FEATURES ARE SHOWN SCREENED BACK, I.E. FADED.
3.) ALL WATER POLLUTION PREVENTION MEASURES SHALL BE PLACED WITHIN THE RIGHT-OF-WAY OR DRAINAGE EASEMENT OF THE PROPOSED ROADWAY.
4.) ALL PROJECT INITIATION SW-3P MEASURES SHALL REMAIN IN PLACE THROUGHOUT THE DURATION OF THE PROJECT UNTIL DEEMED APPROPRIATE FOR REMOVAL BY THE ENGINEER DUE TO IMPLEMENTATION OF SUBSEQUENT MEASURES AS DETAILED ON THE SW-3P CONSTRUCTION PHASE SHEETS OR AT SUCH TIME AS THE WATERSHED AREA HAS BEEN RESTABILIZED.

SCALE: 1:2000

555 EAST RAMSEY SAN ANTONIO TEXAS 78216 PHONE (210)375-9000 FAX (210)375-9010
PAPE-DAWSON ENGINEERS CIVIL & ENVIRONMENTAL
K. STEPHEN BONNETTE 60928 REGISTERED PROFESSIONAL ENGINEER STATE OF TEXAS
K. STEPHEN BONNETTE, P.E. 9/20/00 DATE

© 2000 Texas Department of Transportation

# LOOP 1604
# STORMWATER POLLUTION PREVENTION PLAN
# PROJECT INITIATION

SHEET 12 OF 15

| DN: | | | | | | PROJECT NO. | |
|---|---|---|---|---|---|---|---|
| CK DN: | | | | | | NH 2000 (704), etc. | |
| DW: | CONTROL | SECTION | JOB | DIST. | STATE | COUNTY | HIGHWAY NO. | SHEET NO. |
| CK DW: | 2452 | 01 | 036 etc. | SAT | TX | BEXAR | LOOP 1604 | 855 |

Plotted on: 09/19/00

Design Filename: j:\2941\16\civil\design\swppp\394116swl2-pre.dgn

Plotted on: 09/19/00

Design Filename: j:\dal\16\civil\design\swppp\3941168wl3-pre.dgn

PRIOR TO BEGINNING CONSTRUCTION WITHIN ANY WATERSHED, ALL PROJECT INITIATION SW-3P FACILITIES AS SHOWN HEREON OR AS APPROVED BY THE ENGINEER SHALL BE IN PLACE.

NOTES:
1.) ALL DIMENSIONS ARE IN METERS UNLESS NOTED OTHERWISE.
2.) EXISTING FEATURES ARE SHOWN SCREENED BACK, I.E. FADED.
3.) ALL WATER POLLUTION PREVENTION MEASURES SHALL BE PLACED WITHIN THE RIGHT-OF-WAY OR DRAINAGE EASEMENT OF THE PROPOSED ROADWAY.
4.) ALL PROJECT INITIATION SW-3P MEASURES SHALL REMAIN IN PLACE THROUGHOUT THE DURATION OF THE PROJECT UNTIL DEEMED APPROPRIATE FOR REMOVAL BY THE ENGINEER DUE TO IMPLEMENTATION OF SUBSEQUENT MEASURES AS DETAILED ON THE SW-3P CONSTRUCTION PHASE SHEETS OR AT SUCH TIME AS THE WATERSHED AREA HAS BEEN RESTABILIZED.

ESTIMATED QUANTITIES

| DESCRIPTION | UNIT | EST. | FINAL |
|---|---|---|---|
| ROCK FILTER DAM (TY 2) | M | 30 | |
| ROCK FILTER DAM (TY 2) (REMOVE & REPLACE) | M | 60 | |
| ROCK FILTER DAM (TY 2) (REMOVE) | M | 30 | |
| ROCK FILTER DAM (TY 3) | M | 30 | |
| ROCK FILTER DAM (TY 3) (REMOVE & REPLACE) | M | 60 | |
| ROCK FILTER DAM (TY 3) (REMOVE) | M | 30 | |
| TEMP SED CONT FENCE | M | 945 | |
| TEMP SED CONT FENCE (REMOVE & REPLACE) | M | 1890 | |
| TEMP SED CONT FENCE (REMOVE) | M | 945 | |

LEGEND

| | |
|---|---|
| —SCF— | TEMP SED CONT FENCE |
| RFD2 | ROCK FILTER DAM, TY 2 |
| RFD3 | ROCK FILTER DAM, TY 3 |

QUANTITIES THIS SHEET
CSJ 2452-01-036

10 M TEMP SED CONT FENCE
30 M ROCK FILTER DAM (TYPE 3)
180 M TEMP SED CONT FENCE
MATCH LINE STA. 25+460
20 M ROCK FILTER DAM (TYPE 2)
LOOP 1604
DRAINAGE EASEMENT
ROW
N. B. FRONTAGE RD.
S. B. MAINLANES
100 M TEMP SED CONT FENCE
MATCH LINE STA. 26+200
MARBACH RD.
320 M TEMP SED CONT FENCE
10 M ROCK FILTER DAM (TYPE 2)
10 M TEMP SED CONT FENCE
315 M TEMP SED CONT FENCE
MATCH LINE STA. 26+800

SCALE: 1:2000

555 EAST RAMSEY SAN ANTONIO TEXAS 78216
PHONE (210)375-9000
FAX (210)375-9010
PAPE-DAWSON ENGINEERS
CIVIL & ENVIRONMENTAL
STATE OF TEXAS K. STEPHEN BONNETTE 60928 REGISTERED PROFESSIONAL ENGINEER
K. STEPHEN BONNETTE, P.E. 9/20/00 DATE

© 2000 Texas Department of Transportation

LOOP 1604
STORMWATER POLLUTION PREVENTION PLAN
PROJECT INITIATION
SHEET 13 OF 15

| DN: | | | | | PROJECT NO. | | |
|---|---|---|---|---|---|---|---|
| CK DN: | | | | | NH 2000 (704), etc. | | |
| DW: | CONTROL | SECTION | JOB | DIST. | STATE | COUNTY | HIGHWAY NO. | SHEET NO. |
| CK DW: | 2452 | 01 | 036 etc. | SAT | TX | BEXAR | LOOP 1604 | 856 |

PRIOR TO BEGINNING CONSTRUCTION WITHIN ANY WATERSHED, ALL PROJECT INITIATION SW-3P FACILITIES AS SHOWN HEREON OR AS APPROVED BY THE ENGINEER SHALL BE IN PLACE.

## LEGEND

- —SCF— TEMP SED CONT FENCE
- RFD2 ROCK FILTER DAM, TY 2
- RFD3 ROCK FILTER DAM, TY 3

## QUANTITIES THIS SHEET
CSJ 2452-01-036

| ESTIMATED QUANTITIES | | | |
|---|---|---|---|
| DESCRIPTION | UNIT | EST. | FINAL |
| ROCK FILTER DAM (TY 2) | M | 40 | |
| ROCK FILTER DAM (TY 2) (REMOVE & REPLACE) | M | 80 | |
| ROCK FILTER DAM (TY 2) (REMOVE) | M | 40 | |
| ROCK FILTER DAM (TY 3) | M | 35 | |
| ROCK FILTER DAM (TY 3) (REMOVE & REPLACE) | M | 70 | |
| ROCK FILTER DAM (TY 3) (REMOVE) | M | 35 | |
| TEMP SED CONT FENCE | M | 1135 | |
| TEMP SED CONT FENCE (REMOVE & REPLACE) | M | 2270 | |
| TEMP SED CONT FENCE (REMOVE) | M | 1135 | |

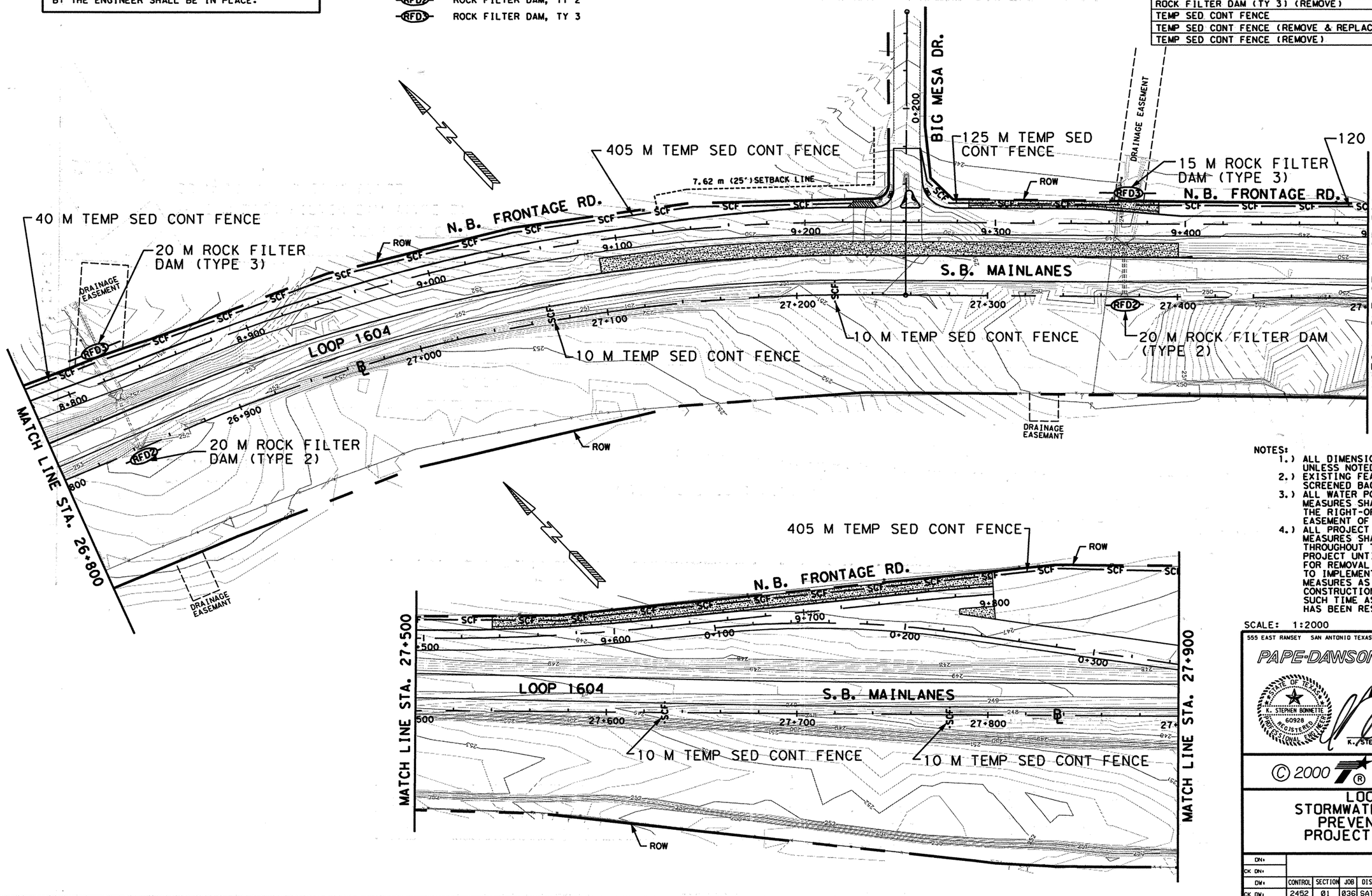


NOTES:
1.) ALL DIMENSIONS ARE IN METERS UNLESS NOTED OTHERWISE.
2.) EXISTING FEATURES ARE SHOWN SCREENED BACK, I.E. FADED.
3.) ALL WATER POLLUTION PREVENTION MEASURES SHALL BE PLACED WITHIN THE RIGHT-OF-WAY OR DRAINAGE EASEMENT OF THE PROPOSED ROADWAY.
4.) ALL PROJECT INITIATION SW-3P MEASURES SHALL REMAIN IN PLACE THROUGHOUT THE DURATION OF THE PROJECT UNTIL DEEMED APPROPRIATE FOR REMOVAL BY THE ENGINEER DUE TO IMPLEMENTATION OF SUBSEQUENT MEASURES AS DETAILED ON THE SW-3P CONSTRUCTION PHASE SHEETS OR AT SUCH TIME AS THE WATERSHED AREA HAS BEEN RESTABILIZED.

SCALE: 1:2000

555 EAST RAMSEY SAN ANTONIO TEXAS 78216
PHONE (210)375-9000
FAX (210)375-9010
PAPE-DAWSON ENGINEERS
CIVIL & ENVIRONMENTAL
STATE OF TEXAS K. STEPHEN BONNETTE 60928 REGISTERED PROFESSIONAL ENGINEER
K. STEPHEN BONNETTE, P.E. 9/20/00 DATE

© 2000 Texas Department of Transportation

# LOOP 1604
# STORMWATER POLLUTION PREVENTION PLAN
# PROJECT INITIATION

SHEET 14 OF 15

| DN: | | | | | PROJECT NO. | | |
|---|---|---|---|---|---|---|---|
| CK DN: | | | | | NH 2000 (704), etc. | | |
| DW: | CONTROL | SECTION | JOB | DIST. | COUNTY | HIGHWAY NO. | SHEET NO. |
| CK DW: | 2452 | 01 | 036 etc. | SAT | BEXAR | LOOP 1604 | 857 |

Plotted on: 09/19/00

Design Filename: j:\24116\civil\design\swppp\394116sw14-pre.dgn

Plotted on: 09/19/00

Design Filename: j:\2452\16\civil\design\swppp\394116sw15-pre.dgn

## QUANTITIES THIS SHEET
## CSJ 2452-01-036

| ESTIMATED QUANTITIES | | | |
|---|---|---|---|
| DESCRIPTION | UNIT | EST. | FINAL |
| ROCK FILTER DAM (TY 2) | M | 60 | |
| ROCK FILTER DAM (TY 2) (REMOVE & REPLACE) | M | 120 | |
| ROCK FILTER DAM (TY 2) (REMOVE) | M | 60 | |
| ROCK FILTER DAM (TY 3) | M | 45 | |
| ROCK FILTER DAM (TY 3) (REMOVE & REPLACE) | M | 90 | |
| ROCK FILTER DAM (TY 3) (REMOVE) | M | 45 | |
| TEMP SED CONT FENCE | M | 575 | |
| TEMP SED CONT FENCE (REMOVE & REPLACE) | M | 1150 | |
| TEMP SED CONT FENCE (REMOVE) | M | 575 | |

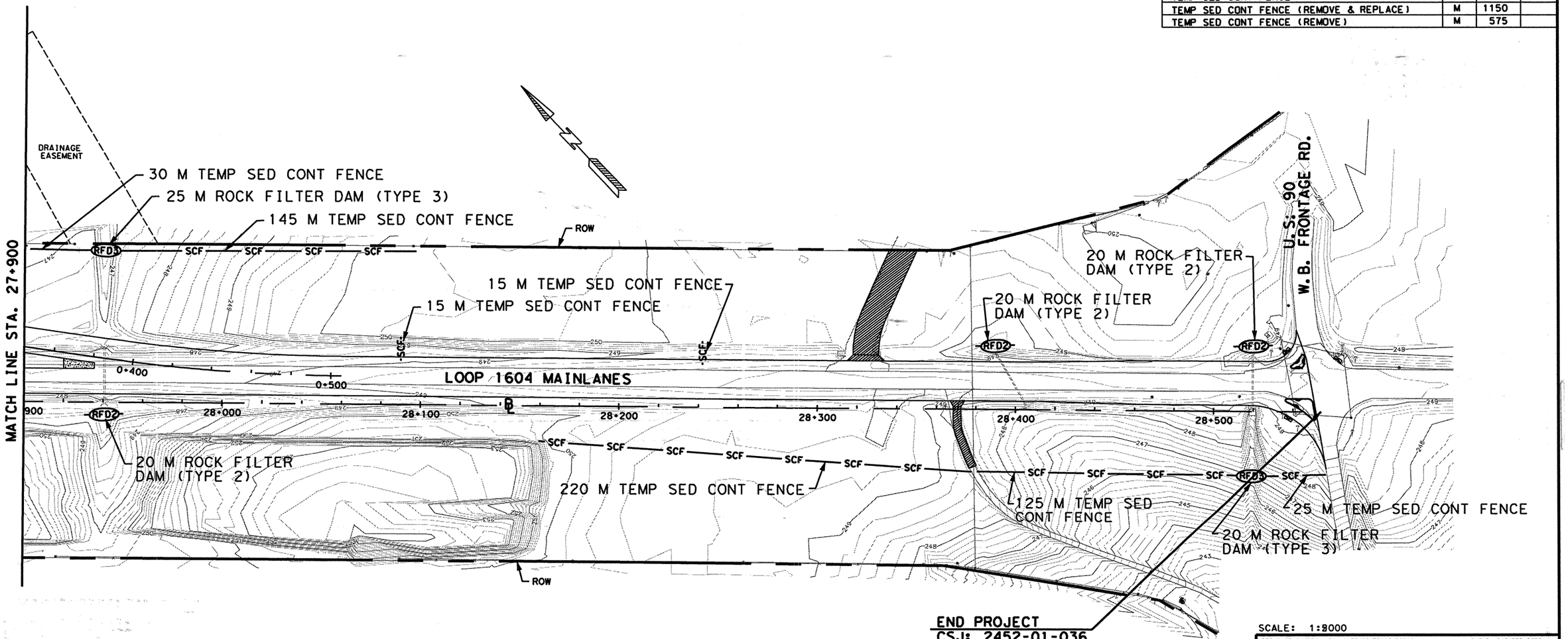


SCALE: 1:2000

PRIOR TO BEGINNING CONSTRUCTION WITHIN ANY WATERSHED, ALL PROJECT INITIATION SW-3P FACILITIES AS SHOWN HEREON OR AS APPROVED BY THE ENGINEER SHALL BE IN PLACE.

### LEGEND

- —SCF— TEMP SED CONT FENCE
- RFD2 ROCK FILTER DAM, TY 2
- RFD3 ROCK FILTER DAM, TY 3

NOTES:
1. ALL DIMENSIONS ARE IN METERS UNLESS NOTED OTHERWISE.
2. EXISTING FEATURES ARE SHOWN SCREENED BACK, I.E. FADED.
3. ALL WATER POLLUTION PREVENTION MEASURES SHALL BE PLACED WITHIN THE RIGHT-OF-WAY OR DRAINAGE EASEMENT OF THE PROPOSED ROADWAY.
4. ALL PROJECT INITIATION SW-3P MEASURES SHALL REMAIN IN PLACE THROUGHOUT THE DURATION OF THE PROJECT UNTIL DEEMED APPROPRIATE FOR REMOVAL BY THE ENGINEER DUE TO IMPLEMENTATION OF SUBSEQUENT MEASURES AS DETAILED ON THE SW-3P CONSTRUCTION PHASE SHEETS OR AT SUCH TIME AS THE WATERSHED AREA HAS BEEN RESTABILIZED.


555 EAST RAMSEY SAN ANTONIO TEXAS 78216
PHONE (210)375-9000
FAX (210)375-9010
PAPE-DAWSON ENGINEERS
CIVIL & ENVIRONMENTAL
STATE OF TEXAS K. STEPHEN BONNETTE 60928 REGISTERED PROFESSIONAL ENGINEER
K. STEPHEN BONNETTE, P.E. 9/20/00



© 2000 Texas Department of Transportation


# LOOP 1604
# STORMWATER POLLUTION PREVENTION PLAN
# PROJECT INITIATION

SHEET 15 OF 15

| DN: | | | | | | PROJECT NO. | |
|---|---|---|---|---|---|---|---|
| CK DN: | | | | | | NH 2000 (704), etc. | |
| DW: | CONTROL | SECTION | JOB | DIST. | STATE | COUNTY | HIGHWAY NO. | SHEET NO. |
| CK DW: | 2452 | 01 | 036 | SAT | TX | BEXAR | LOOP 1604 | 858 |

etc.

Plotted on: 3/00

Design Filename: ...\f6\civil\design\swppp\394116sw01-fin.dgn

| ESTIMATED QUANTITIES | | | |
|---|---|---|---|
| DESCRIPTION | UNIT | EST. | FINAL |
| | | | |
| | | | |
| | | | |
| | | | |
| | | | |
| | | | |
| | | | |
| | | | |

QUANTITIES THIS SHEET
CSJ 2452-01-037

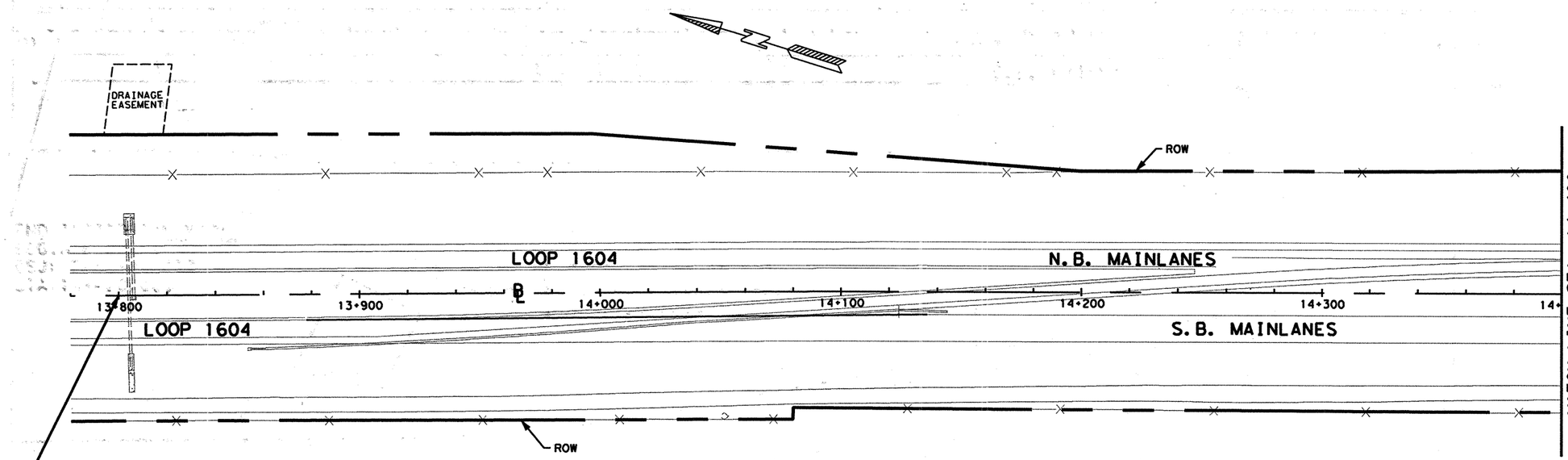


BEGIN INCIDENTAL WORK
CSJ: 2452-01-037
STA 13+800.000

## LEGEND

| | |
|---|---|
| —SCF— | TEMP SED CONT FENCE |
| ST-DI | SED TRAP-DROP INLET I |
| RFD2 | ROCK FILTER DAM, TY 2 |
| RFD3 | ROCK FILTER DAM, TY 3 |

SCALE: 1:2000

NOTES:
1.) ALL DIMENSIONS ARE IN METERS UNLESS NOTED OTHERWISE.
2.) EXISTING FEATURES ARE SHOWN SCREENED BACK, I.E. FADED.
3.) ALL WATER POLLUTION PREVENTION MEASURES SHALL BE PLACED WITHIN THE RIGHT-OF-WAY OR DRAINAGE EASEMENT OF THE PROPOSED ROADWAY.
4.) ALL PROJECT INITIATION SW-3P MEASURES SHALL REMAIN IN PLACE THROUGHOUT THE DURATION OF THE PROJECT UNTIL DEEMED APPROPRIATE FOR REMOVAL BY THE ENGINEER DUE TO IMPLEMENTATION OF SUBSEQUENT MEASURES AS DETAILED ON THE SW-3P CONSTRUCTION PHASE SHEETS OR AT SUCH TIME AS THE WATERSHED AREA HAS BEEN RESTABILIZED.

555 EAST RAMSEY SAN ANTONIO TEXAS 78216
PHONE (210)375-9000
FAX (210)375-9010
PAPE-DAWSON ENGINEERS
CIVIL & ENVIRONMENTAL
STATE OF TEXAS
K. STEPHEN BONNETTE
60928
REGISTERED
PROFESSIONAL ENGINEER
K. STEPHEN BONNETTE, P.E. 9/20/00 DATE

© 2000 Texas Department of Transportation

# LOOP 1604
# STORMWATER POLLUTION PREVENTION PLAN
# CONSTRUCTION PHASE

SHEET 1 OF 15

| | | | | | | | | |
|---|---|---|---|---|---|---|---|---|
| DN: | | | | | | PROJECT NO. | | |
| CK DN: | | | | | | NH 2000 (704), etc. | | |
| DW: | CONTROL | SECTION | JOB | DIST. | STATE | COUNTY | HIGHWAY NO. | SHEET NO. |
| CK DW: | 2452 | 01 | 036 | SAT | TX | BEXAR | LOOP 1604 | 859 |

Plotted on: 09/19/00

Design Filename: j:\3941\16\civil\design\swppp\394116sw02-fin.dgn

| ESTIMATED QUANTITIES - CSJ: 2452-01-037 | | | |
|---|---|---|---|
| DESCRIPTION | UNIT | EST. | FINAL |
| BK HOE WORK (EROSN CONT) (CL 1) | HR | 8 | |
| FRONT END LDR WORK (EROSN CONT)(CL 1) | HR | 8 | |
| ROCK FILTER DAM (TY 2) | M | 40 | |
| ROCK FILTER DAM (TY 2) (REMOV & REPLAC) | M | 80 | |
| ROCK FILTER DAM (TY 2) (REMOVE) | M | 40 | |
| TEMP SED CONT FENCE | M | 50 | |
| TEMP SED CONT FENCE (REMOVE & REPLACE) | M | 100 | |
| TEMP SED CONT FENCE (REMOVE) | M | 50 | |
| | M | | |

| ESTIMATED QUANTITIES - CSJ: 2452-01-038 | | | |
|---|---|---|---|
| DESCRIPTION | UNIT | EST. | FINAL |
| TEMP SED CONT FENCE | M | 30 | |
| TEMP SED CONT FENCE (REMOVE & REPLACE) | M | 60 | |
| TEMP SED CONT FENCE (REMOVE) | M | 30 | |

LEGEND

| | |
|---|---|
| -SCF- | TEMP SED CONT FENCE |
| ST-D1 | SED TRAP-DROP INLET I |
| RFD2 | ROCK FILTER DAM, TY 2 |
| RFD3 | ROCK FILTER DAM, TY 3 |

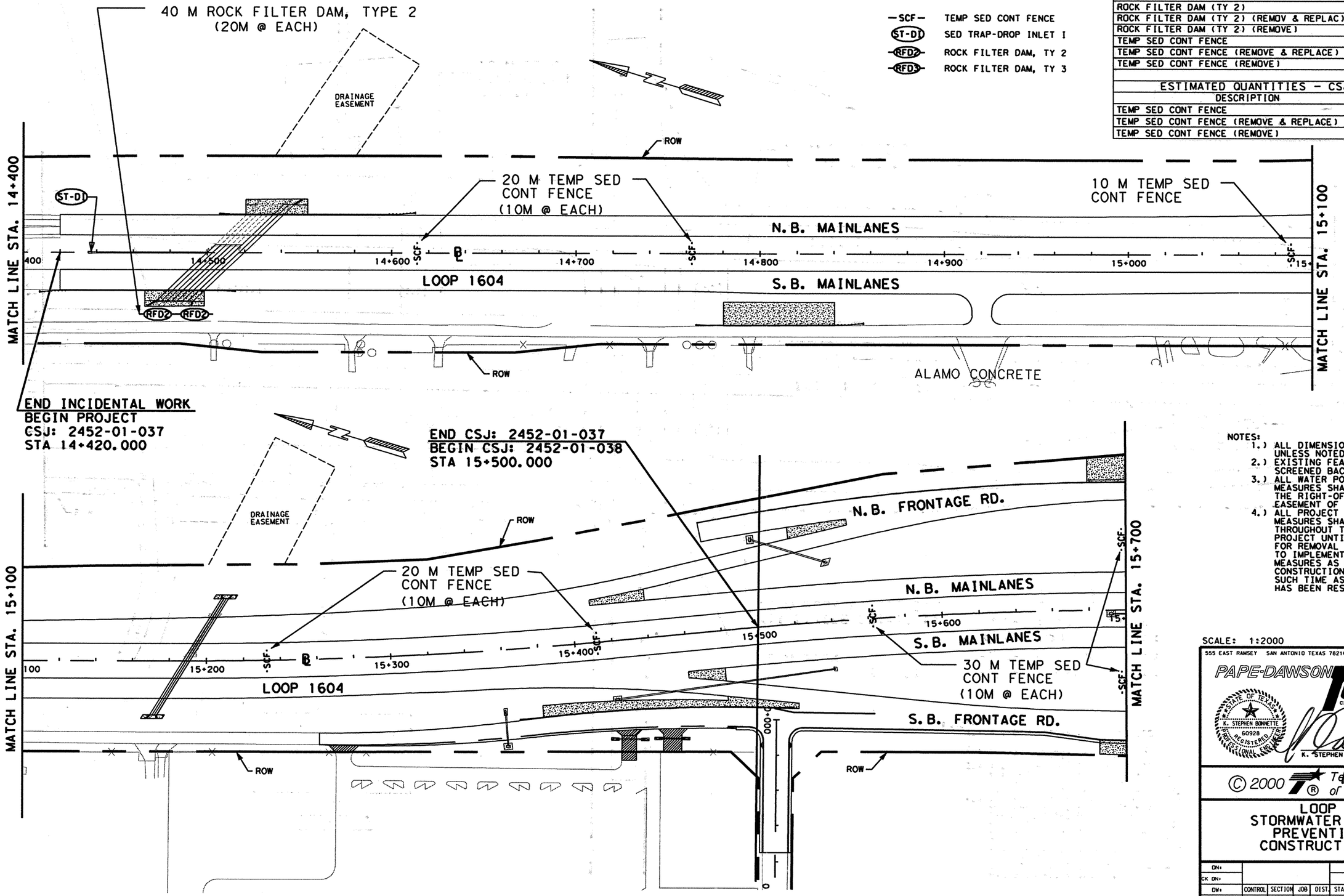


NOTES:
1.) ALL DIMENSIONS ARE IN METERS UNLESS NOTED OTHERWISE.
2.) EXISTING FEATURES ARE SHOWN SCREENED BACK, I.E. FADED.
3.) ALL WATER POLLUTION PREVENTION MEASURES SHALL BE PLACED WITHIN THE RIGHT-OF-WAY OR DRAINAGE EASEMENT OF THE PROPOSED ROADWAY.
4.) ALL PROJECT INITIATION SW-3P MEASURES SHALL REMAIN IN PLACE THROUGHOUT THE DURATION OF THE PROJECT UNTIL DEEMED APPROPRIATE FOR REMOVAL BY THE ENGINEER DUE TO IMPLEMENTATION OF SUBSEQUENT MEASURES AS DETAILED ON THE SW-3P CONSTRUCTION PHASE SHEETS OR AT SUCH TIME AS THE WATERSHED AREA HAS BEEN RESTABILIZED.

SCALE: 1:2000

555 EAST RAMSEY SAN ANTONIO TEXAS 78216
PHONE (210)375-9000
FAX (210)375-9010
PAPE-DAWSON ENGINEERS
CIVIL & ENVIRONMENTAL
STATE OF TEXAS K. STEPHEN BONNETTE 60928 REGISTERED PROFESSIONAL ENGINEER
K. STEPHEN BONNETTE, P.E. 9/20/00 DATE

© 2000 Texas Department of Transportation

# LOOP 1604 STORMWATER POLLUTION PREVENTION PLAN CONSTRUCTION PHASE

SHEET 2 OF 15

| DN: | | | | | PROJECT NO. | | |
|---|---|---|---|---|---|---|---|
| CK DN: | | | | | NH 2000 (704), etc. | | |
| DW: | CONTROL | SECTION | JOB | DIST. | COUNTY | HIGHWAY NO. | SHEET NO. |
| CK DW: | 2452 | 01 | 036 etc. | SAT | BEXAR | LOOP 1604 | 960 |
| | STATE: TX | | | | | | |

| ESTIMATED QUANTITIES | | | |
|---|---|---|---|
| DESCRIPTION | UNIT | EST. | FINAL |
| ROCK FILTER DAM (TY 2) | M | 75 | |
| ROCK FILTER DAM (TY 2) (REMOV & REPLAC) | M | 150 | |
| ROCK FILTER DAM (TY 2) (REMOVE) | M | 75 | |
| TEMP SED CONT FENCE | M | 20 | |
| TEMP SED CONT FENCE (REMOVE & REPLACE) | M | 40 | |
| TEMP SED CONT FENCE (REMOVE) | M | 20 | |
| | | | |
| | | | |

QUANTITIES THIS SHEET
CSJ 2452-01-038

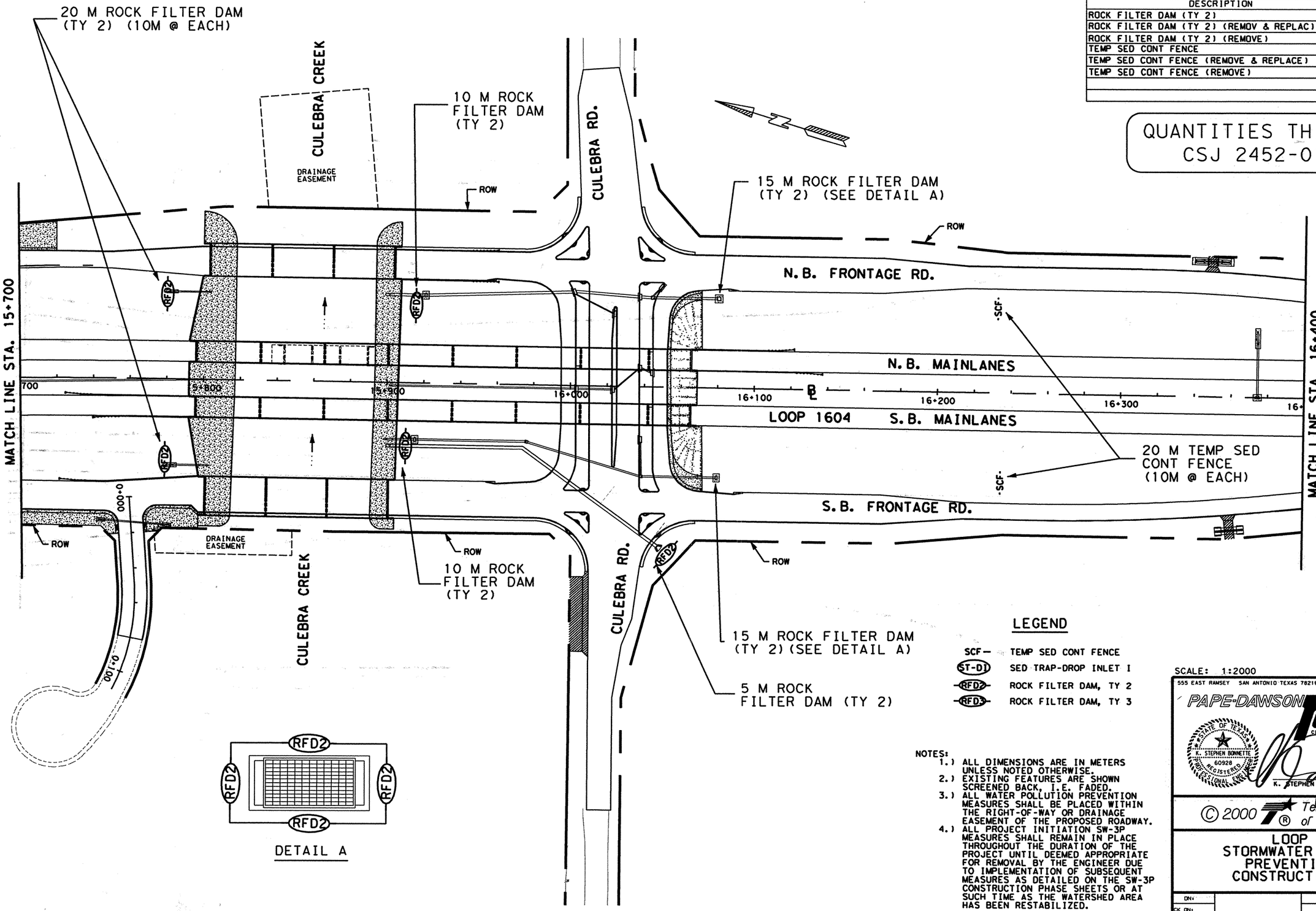


DETAIL A

LEGEND

| | |
|---|---|
| SCF— | TEMP SED CONT FENCE |
| ST-DI | SED TRAP-DROP INLET I |
| RFD2 | ROCK FILTER DAM, TY 2 |
| RFD3 | ROCK FILTER DAM, TY 3 |

NOTES:
1.) ALL DIMENSIONS ARE IN METERS UNLESS NOTED OTHERWISE.
2.) EXISTING FEATURES ARE SHOWN SCREENED BACK, I.E. FADED.
3.) ALL WATER POLLUTION PREVENTION MEASURES SHALL BE PLACED WITHIN THE RIGHT-OF-WAY OR DRAINAGE EASEMENT OF THE PROPOSED ROADWAY.
4.) ALL PROJECT INITIATION SW-3P MEASURES SHALL REMAIN IN PLACE THROUGHOUT THE DURATION OF THE PROJECT UNTIL DEEMED APPROPRIATE FOR REMOVAL BY THE ENGINEER DUE TO IMPLEMENTATION OF SUBSEQUENT MEASURES AS DETAILED ON THE SW-3P CONSTRUCTION PHASE SHEETS OR AT SUCH TIME AS THE WATERSHED AREA HAS BEEN RESTABILIZED.

SCALE: 1:2000

555 EAST RAMSEY SAN ANTONIO TEXAS 78216
PHONE (210)375-9000
FAX (210)375-9010
PAPE-DAWSON ENGINEERS
CIVIL & ENVIRONMENTAL
STATE OF TEXAS K. STEPHEN BONNETTE 60928 REGISTERED PROFESSIONAL ENGINEER
K. STEPHEN BONNETTE, P.E. 9/20/00 DATE

© 2000 Texas Department of Transportation

# LOOP 1604 STORMWATER POLLUTION PREVENTION PLAN CONSTRUCTION PHASE

SHEET 3 OF 15

| DN: | | | | | | PROJECT NO. | |
|---|---|---|---|---|---|---|---|
| CK DN: | | | | | | NH 2000 (704), etc. | |
| DW: | CONTROL | SECTION | JOB | DIST. | STATE | COUNTY | HIGHWAY NO. | SHEET NO. |
| CK DW: | 2452 | 01 | 036 etc. | SAT | TX | BEXAR | LOOP 1604 | 861 |

Plotted on: 09/19/00
Design Filename: j:\3941\16\civil\design\swppp\394116sw03-fin.dgn

Plotted on: 09/19/00

| ESTIMATED QUANTITIES | | | |
|---|---|---|---|
| DESCRIPTION | UNIT | EST. | FINAL |
| BK HOE WORK (EROSN CONT) (CL 1) | HR | 4 | |
| FRONT END LDR WORK (EROSN CONT)(CL 1) | HR | 4 | |
| TEMP SED CONT FENCE | M | 60 | |
| TEMP SED CONT FENCE (REMOVE & REPLACE) | M | 120 | |
| TEMP SED CONT FENCE (REMOVE) | M | 60 | |
| ROCK FILTER DAM (TY 2) | M | 15 | |
| ROCK FILTER DAM (TY 2) (REMOVE & REPLACE) | M | 30 | |
| ROCK FILTER DAM (TY 2) (REMOVE) | M | 15 | |

QUANTITIES THIS SHEET
CSJ 2452-01-038

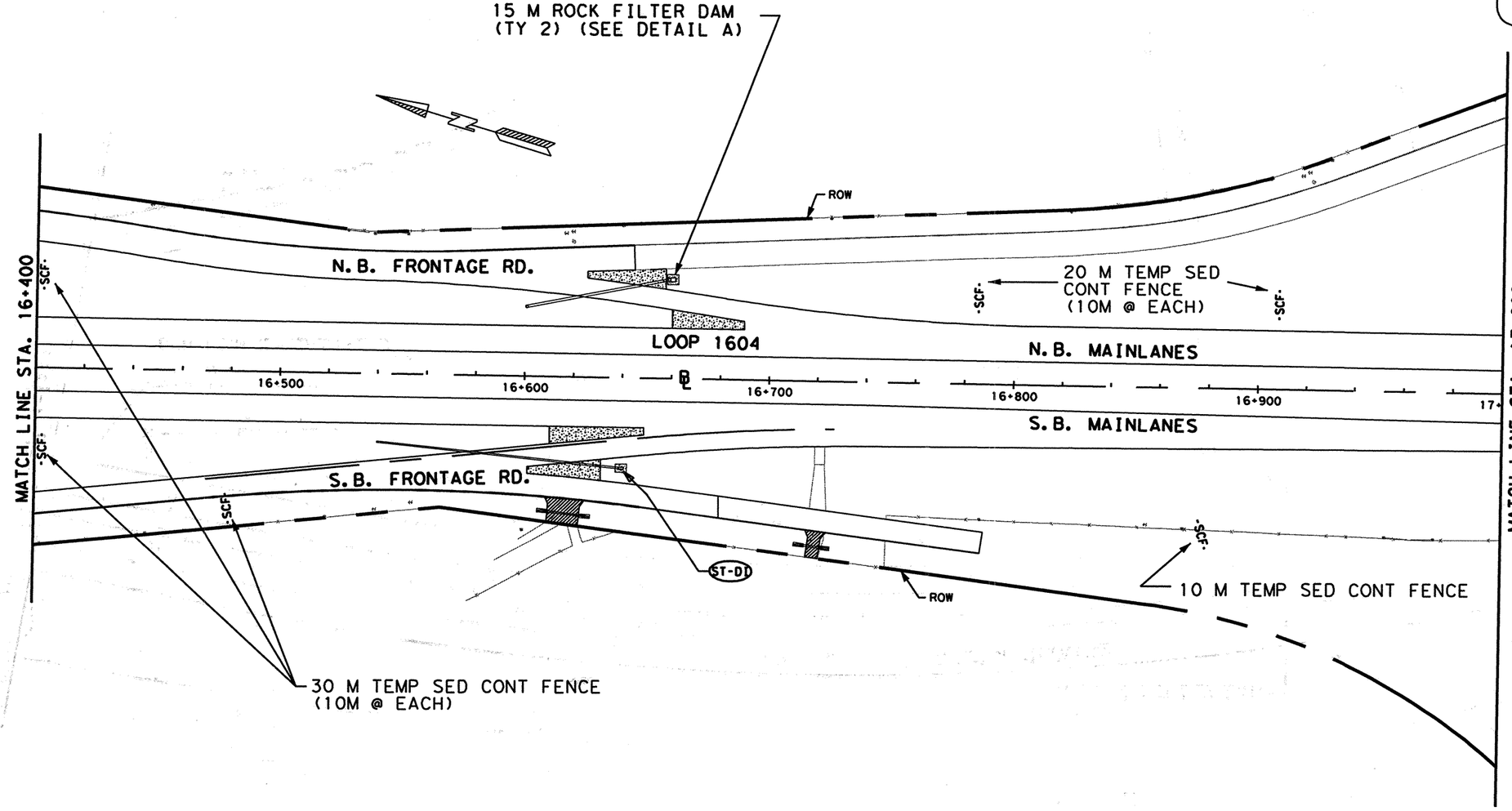


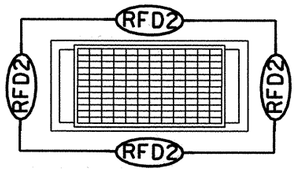


DETAIL A

LEGEND

| | |
|---|---|
| —SCF— | TEMP SED CONT FENCE |
| ST-D1 | SED TRAP-DROP INLET I |
| RFD2 | ROCK FILTER DAM, TY 2 |
| RFD3 | ROCK FILTER DAM, TY 3 |

NOTES:
1.) ALL DIMENSIONS ARE IN METERS UNLESS NOTED OTHERWISE.
2.) EXISTING FEATURES ARE SHOWN SCREENED BACK, I.E. FADED.
3.) ALL WATER POLLUTION PREVENTION MEASURES SHALL BE PLACED WITHIN THE RIGHT-OF-WAY OR DRAINAGE EASEMENT OF THE PROPOSED ROADWAY.
4.) ALL PROJECT INITIATION SW-3P MEASURES SHALL REMAIN IN PLACE THROUGHOUT THE DURATION OF THE PROJECT UNTIL DEEMED APPROPRIATE FOR REMOVAL BY THE ENGINEER DUE TO IMPLEMENTATION OF SUBSEQUENT MEASURES AS DETAILED ON THE SW-3P CONSTRUCTION PHASE SHEETS OR AT SUCH TIME AS THE WATERSHED AREA HAS BEEN RESTABILIZED.

SCALE: 1:2000

555 EAST RAMSEY SAN ANTONIO TEXAS 78216
PHONE (210)375-9000
FAX (210)375-9010
PAPE-DAWSON ENGINEERS
CIVIL & ENVIRONMENTAL
STATE OF TEXAS
K. STEPHEN BONNETTE
60928
REGISTERED
PROFESSIONAL ENGINEER
K. STEPHEN BONNETTE, P.E. 9/20/00
DATE

© 2000 Texas Department of Transportation

# LOOP 1604
# STORMWATER POLLUTION PREVENTION PLAN
# CONSTRUCTION PHASE

SHEET 4 OF 15

| DN: | | | | | PROJECT NO. | | |
|---|---|---|---|---|---|---|---|
| CK DN: | | | | | NH 2000 (704), etc. | | |
| DW: | CONTROL | SECTION | JOB | DIST. | STATE | COUNTY | HIGHWAY NO. | SHEET NO. |
| CK DW: | 2452 | 01 | 036 etc. | SAT | TX | BEXAR | LOOP 1604 | 862 |

Design Filename: j:\3941\16\civil\design\swppp\394116sw04-fin.dgn

Plotted on: 09/19/00

S.H. 151

| ESTIMATED QUANTITIES | | | |
|---|---|---|---|
| DESCRIPTION | UNIT | EST. | FINAL |
| ROCK FILTER DAM (TY 2) | M | 25 | |
| ROCK FILTER DAM (TY 2) (REMOV & REPLAC) | M | 50 | |
| ROCK FILTER DAM (TY 2) (REMOVE) | M | 25 | |
| TEMP SED CONT FENCE | M | 40 | |
| TEMP SED CONT FENCE (REMOVE & REPLACE) | M | 80 | |
| TEMP SED CONT FENCE (REMOVE) | M | 40 | |
| | | | |
| | | | |

QUANTITIES THIS SHEET
CSJ 2452-01-037

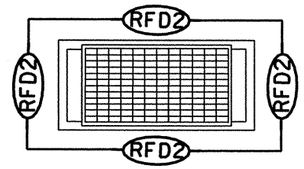


DETAIL A

LEGEND

| | |
|---|---|
| —SCF— | TEMP SED CONT FENCE |
| ST-D1 | SED TRAP-DROP INLET I |
| RFD2 | ROCK FILTER DAM, TY 2 |
| RFD3 | ROCK FILTER DAM, TY 3 |

NOTES:
1.) ALL DIMENSIONS ARE IN METERS UNLESS NOTED OTHERWISE.
2.) EXISTING FEATURES ARE SHOWN SCREENED BACK, I.E. FADED.
3.) ALL WATER POLLUTION PREVENTION MEASURES SHALL BE PLACED WITHIN THE RIGHT-OF-WAY OR DRAINAGE EASEMENT OF THE PROPOSED ROADWAY.
4.) ALL PROJECT INITIATION SW-3P MEASURES SHALL REMAIN IN PLACE THROUGHOUT THE DURATION OF THE PROJECT UNTIL DEEMED APPROPRIATE FOR REMOVAL BY THE ENGINEER DUE TO IMPLEMENTATION OF SUBSEQUENT MEASURES AS DETAILED ON THE SW-3P CONSTRUCTION PHASE SHEETS OR AT SUCH TIME AS THE WATERSHED AREA HAS BEEN RESTABILIZED.

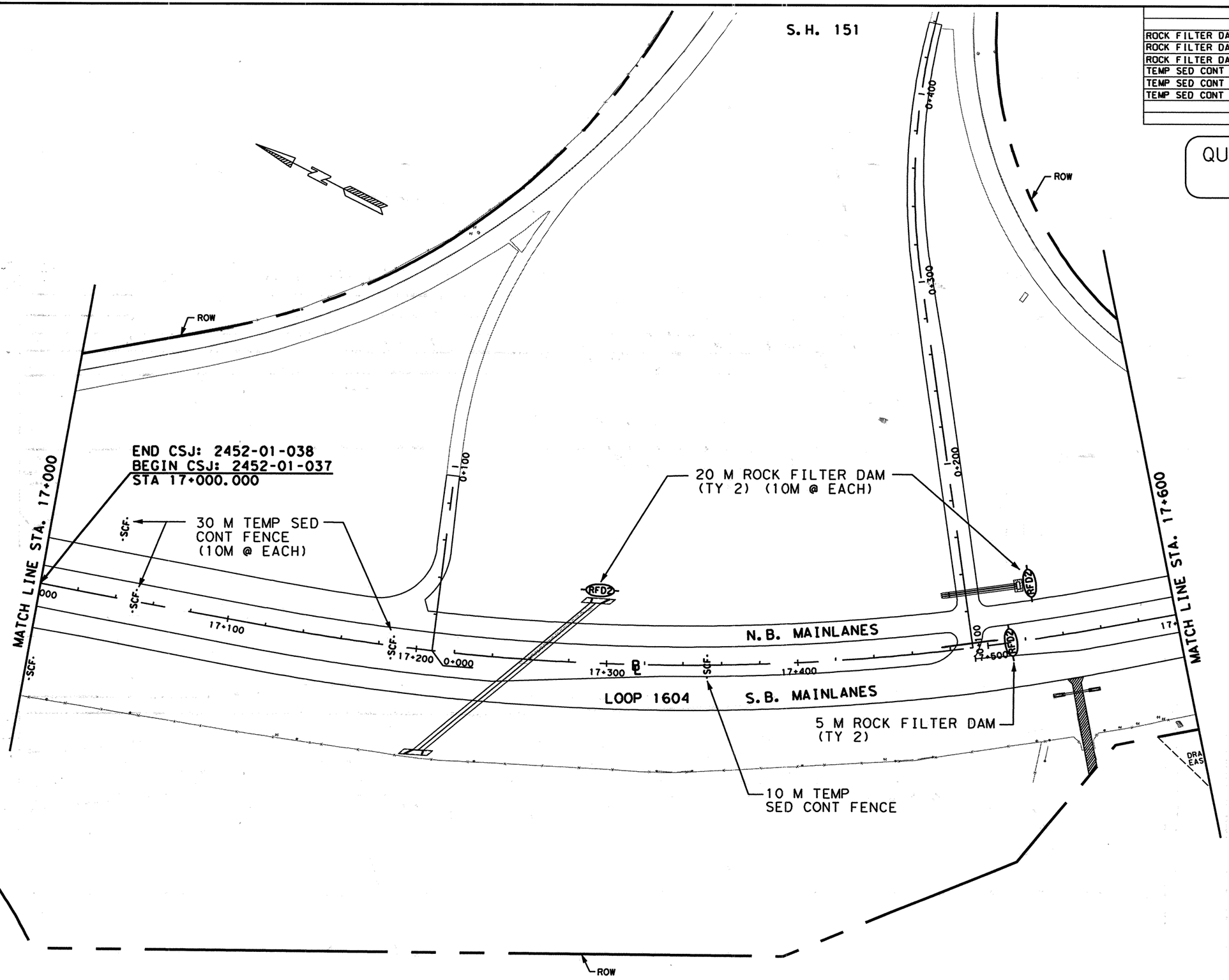


SCALE: 1:2000

555 EAST RAMSEY SAN ANTONIO TEXAS 78216
PHONE (210)375-9000
FAX (210)375-9010
PAPE-DAWSON ENGINEERS
CIVIL & ENVIRONMENTAL

STATE OF TEXAS
K. STEPHEN BONNETTE
60928
REGISTERED PROFESSIONAL ENGINEER

9/20/00
K. STEPHEN BONNETTE, P.E. DATE

© 2000 Texas Department of Transportation

LOOP 1604
STORMWATER POLLUTION PREVENTION PLAN
CONSTRUCTION PHASE

SHEET 5 OF 15

| | | | | | | | | |
|---|---|---|---|---|---|---|---|---|
| DN: | | | | | | PROJECT NO. | | |
| CK DN: | | | | | | NH 2000 (704), etc. | | |
| DW: | CONTROL | SECTION | JOB | DIST. | STATE | COUNTY | HIGHWAY NO. | SHEET NO. |
| CK DW: | 2452 | 01 | 036 etc. | SAT | TX | BEXAR | LOOP 1604 | 863 |

Design Filename: j:\3941\16\civil\design\swppp\394116sw05-fin.dgn

Plotted on: 09/19/00

Design Filename: j:\394116\civil\design\swppp\394116sw06-fin.dgn

## LEGEND

| | |
|---|---|
| —SCF— | TEMP SED CONT FENCE |
| ST-DI | SED TRAP-DROP INLET I |
| RFD2 | ROCK FILTER DAM, TY 2 |
| RFD3 | ROCK FILTER DAM, TY 3 |

### ESTIMATED QUANTITIES

| DESCRIPTION | UNIT | EST. | FINAL |
|---|---|---|---|
| ROCK FILTER DAM (TY 2) | M | 25 | |
| ROCK FILTER DAM (TY 2) (REMOVE & REPLACE) | M | 50 | |
| ROCK FILTER DAM (TY 2) (REPLACE) | M | 25 | |
| TEMP SED CONT FENCE | M | 50 | |
| TEMP SED CONT FENCE(REMOVE & REPLACE) | M | 100 | |
| TEMP SED CONT FENCE(REMOVE & REPLACE) | M | 50 | |

## QUANTITIES THIS SHEET
## CSJ 2452-01-037

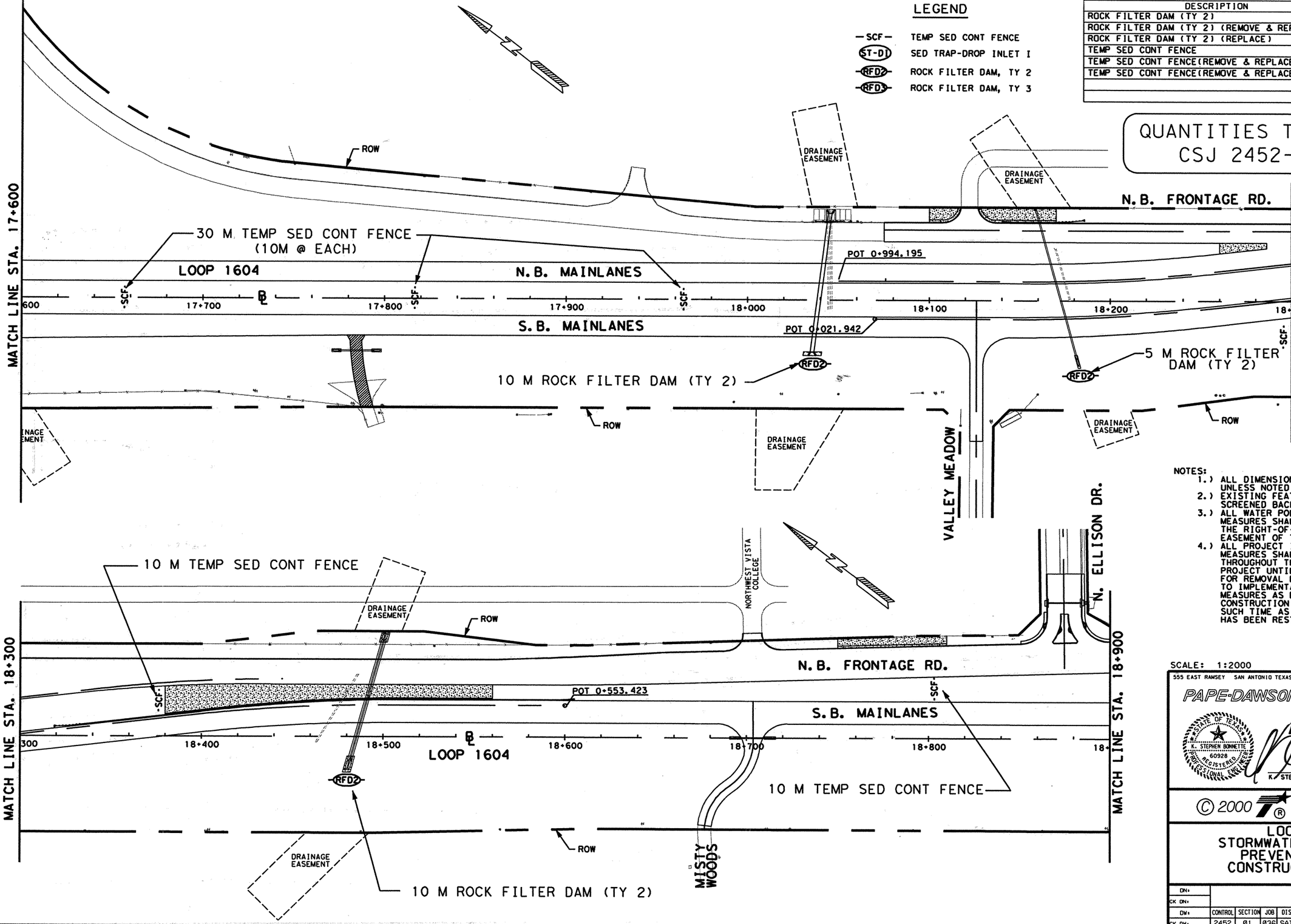


NOTES:
1.) ALL DIMENSIONS ARE IN METERS UNLESS NOTED OTHERWISE.
2.) EXISTING FEATURES ARE SHOWN SCREENED BACK, I.E. FADED.
3.) ALL WATER POLLUTION PREVENTION MEASURES SHALL BE PLACED WITHIN THE RIGHT-OF-WAY OR DRAINAGE EASEMENT OF THE PROPOSED ROADWAY.
4.) ALL PROJECT INITIATION SW-3P MEASURES SHALL REMAIN IN PLACE THROUGHOUT THE DURATION OF THE PROJECT UNTIL DEEMED APPROPRIATE FOR REMOVAL BY THE ENGINEER DUE TO IMPLEMENTATION OF SUBSEQUENT MEASURES AS DETAILED ON THE SW-3P CONSTRUCTION PHASE SHEETS OR AT SUCH TIME AS THE WATERSHED AREA HAS BEEN RESTABILIZED.

SCALE: 1:2000


555 EAST RAMSEY SAN ANTONIO TEXAS 78216
PHONE (210)375-9000
FAX (210)375-9010
PAPE-DAWSON ENGINEERS
CIVIL & ENVIRONMENTAL
STATE OF TEXAS K. STEPHEN BONNETTE 60928 REGISTERED PROFESSIONAL ENGINEER
K. STEPHEN BONNETTE, P.E. 9/20/00 DATE



© 2000 Texas Department of Transportation


# LOOP 1604
# STORMWATER POLLUTION PREVENTION PLAN
# CONSTRUCTION PHASE

SHEET 6 OF 15

| DN: | | | | | | | PROJECT NO. | |
|---|---|---|---|---|---|---|---|---|
| CK DN: | | | | | | | NH 2000 (704), etc. | |
| DW: | CONTROL | SECTION | JOB | DIST. | STATE | COUNTY | HIGHWAY NO. | SHEET NO. |
| CK DW: | 2452 | 01 | 036 etc. | SAT | TX | BEXAR | LOOP 1604 | 864 |

Plotted on: 09/19/00

Design Filename: j:\39411\16\civil\design\swppp\394116sw07-fin.dgn

## LEGEND

| | |
|---|---|
| —SCF— | TEMP SED CONT FENCE |
| ST-DI | SED TRAP-DROP INLET 1 |
| RFD2 | ROCK FILTER DAM, TY 2 |
| RFD3 | ROCK FILTER DAM, TY 3 |

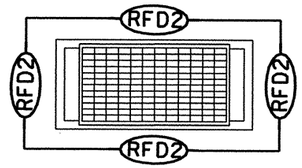


DETAIL A

| ESTIMATED QUANTITIES | | | |
|---|---|---|---|
| DESCRIPTION | UNIT | EST. | FINAL |
| ROCK FILTER DAM (TY 2) | M | 59 | |
| ROCK FILTER DAM (TY 2) (REMOVE & REPLACE) | M | 118 | |
| ROCK FILTER DAM (TY 2) (REPLACE) | M | 59 | |
| TEMP SED CONT FENCE | M | 30 | |
| TEMP SED CONT FENCE (REMOVE & REPLACE) | M | 60 | |
| TEMP SED CONT FENCE (REMOVE & REPLACE) | M | 30 | |
| BKHOE WORK (EROSN CONT) (CL 1) | HR | 4 | |
| FRNT END LDR WORK (EROSN CONT) (CL 1) | HR | 4 | |

QUANTITIES THIS SHEET
CSJ 2452-01-037

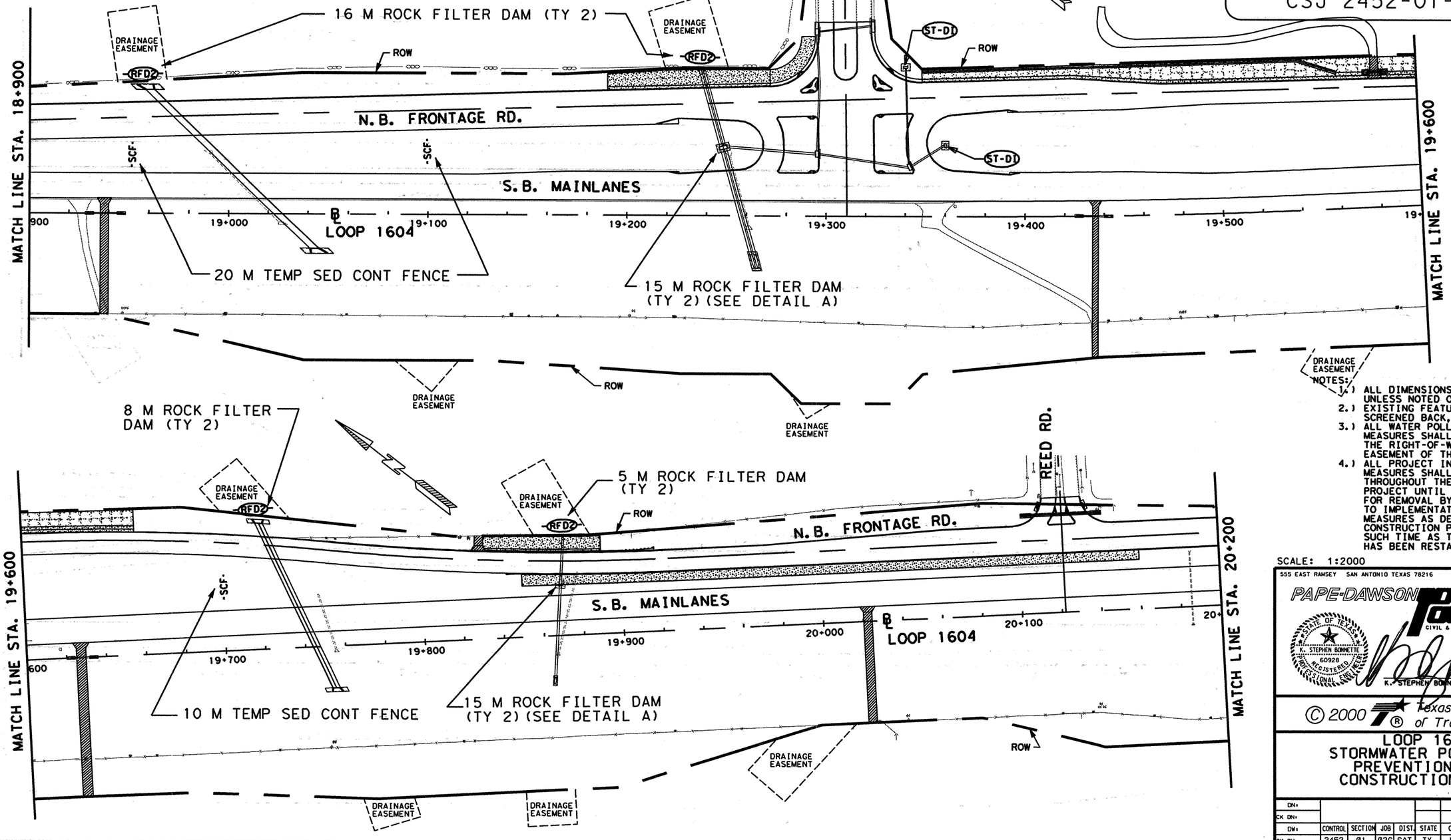


NOTES:

1.) ALL DIMENSIONS ARE IN METERS UNLESS NOTED OTHERWISE.
2.) EXISTING FEATURES ARE SHOWN SCREENED BACK, I.E. FADED.
3.) ALL WATER POLLUTION PREVENTION MEASURES SHALL BE PLACED WITHIN THE RIGHT-OF-WAY OR DRAINAGE EASEMENT OF THE PROPOSED ROADWAY.
4.) ALL PROJECT INITIATION SW-3P MEASURES SHALL REMAIN IN PLACE THROUGHOUT THE DURATION OF THE PROJECT UNTIL DEEMED APPROPRIATE FOR REMOVAL BY THE ENGINEER DUE TO IMPLEMENTATION OF SUBSEQUENT MEASURES AS DETAILED ON THE SW-3P CONSTRUCTION PHASE SHEETS OR AT SUCH TIME AS THE WATERSHED AREA HAS BEEN RESTABILIZED.

SCALE: 1:2000

555 EAST RAMSEY SAN ANTONIO TEXAS 78216
PHONE (210)375-9000
FAX (210)375-9010
PAPE-DAWSON ENGINEERS
CIVIL & ENVIRONMENTAL
K. STEPHEN BONNETTE 60928 REGISTERED PROFESSIONAL ENGINEER
STATE OF TEXAS
K. STEPHEN BONNETTE, P.E. 9/20/00 DATE

© 2000 Texas Department of Transportation

# LOOP 1604
# STORMWATER POLLUTION PREVENTION PLAN
# CONSTRUCTION PHASE

SHEET 7 OF 15

| DN: | | | | | | PROJECT NO. | | |
|---|---|---|---|---|---|---|---|---|
| CK DN: | | | | | | NH 2000 (704), etc. | | |
| DW: | CONTROL | SECTION | JOB | DIST. | STATE | COUNTY | HIGHWAY NO. | SHEET NO. |
| CK DW: | 2452 | 01 | 036 etc. | SAT | TX | BEXAR | LOOP 1604 | 865 |

Plotted on: 09/19/00

## LEGEND

| | |
|---|---|
| —SCF— | TEMP SED CONT FENCE |
| ST-D1 | SED TRAP-DROP INLET 1 |
| RFD2 | ROCK FILTER DAM, TY 2 |
| RFD3 | ROCK FILTER DAM, TY 3 |




DETAIL A

| ESTIMATED QUANTITIES - CSJ: 2452-01-037 | | | |
|---|---|---|---|
| DESCRIPTION | UNIT | EST. | FINAL |
| TEMP SED CONT FENCE | M | 10 | |
| TEMP SED CONT FENCE (REMOVE & REPLACE) | M | 20 | |
| TEMP SED CONT FENCE (REMOVE & REPLACE) | M | 10 | |

| ESTIMATED QUANTITIES - CSJ: 2452-01-036 | | | |
|---|---|---|---|
| DESCRIPTION | UNIT | EST. | FINAL |
| ROCK FILTER DAM (TY 2) | M | 15 | |
| ROCK FILTER DAM (TY 2) (REMOVE & REPLACE) | M | 30 | |
| ROCK FILTER DAM (TY 2) (REPLACE) | M | 15 | |
| TEMP SED CONT FENCE | M | 20 | |
| TEMP SED CONT FENCE (REMOVE & REPLACE) | M | 40 | |
| TEMP SED CONT FENCE (REMOVE & REPLACE) | M | 20 | |

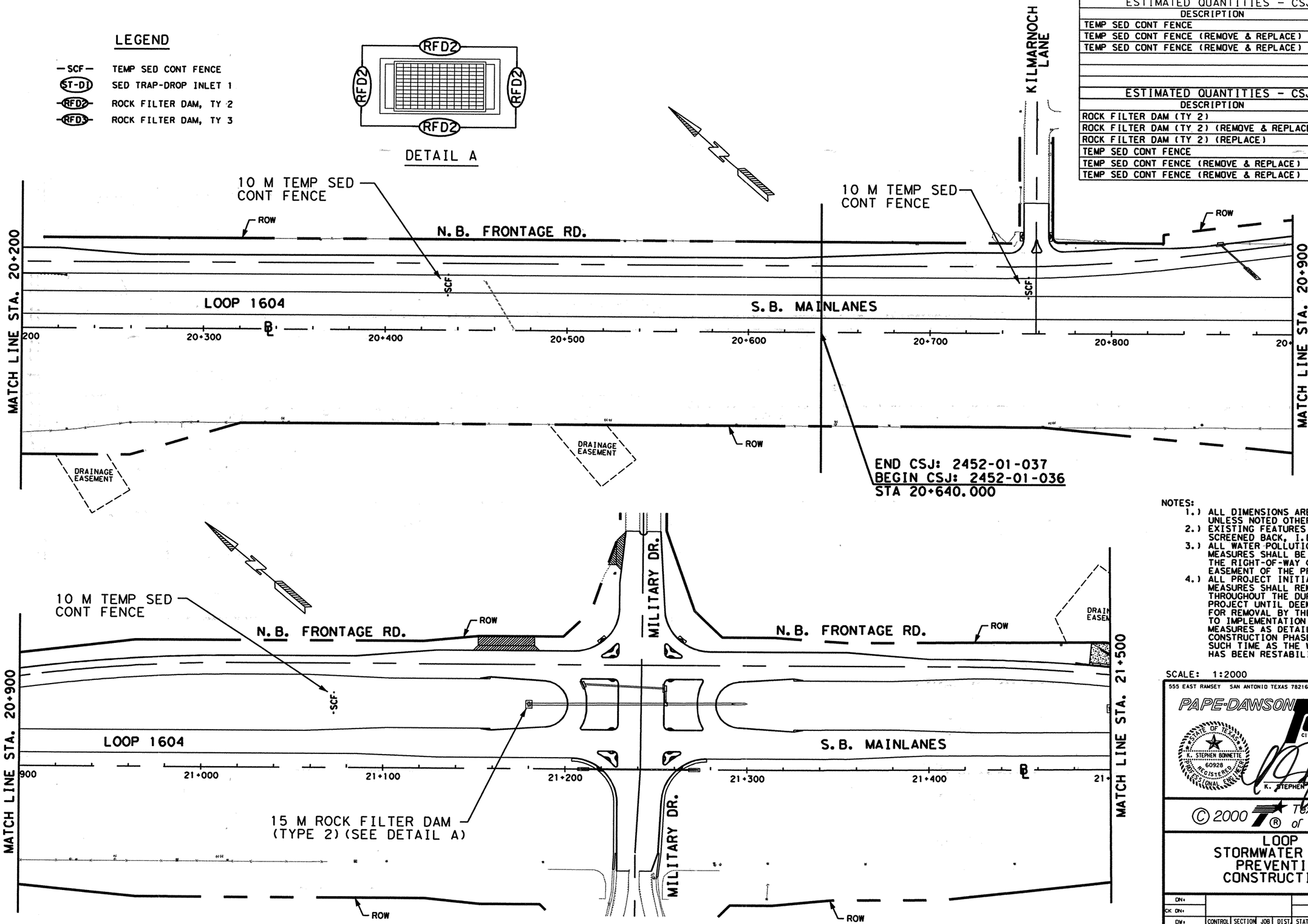


NOTES:
1.) ALL DIMENSIONS ARE IN METERS UNLESS NOTED OTHERWISE.
2.) EXISTING FEATURES ARE SHOWN SCREENED BACK, I.E. FADED.
3.) ALL WATER POLLUTION PREVENTION MEASURES SHALL BE PLACED WITHIN THE RIGHT-OF-WAY OR DRAINAGE EASEMENT OF THE PROPOSED ROADWAY.
4.) ALL PROJECT INITIATION SW-3P MEASURES SHALL REMAIN IN PLACE THROUGHOUT THE DURATION OF THE PROJECT UNTIL DEEMED APPROPRIATE FOR REMOVAL BY THE ENGINEER DUE TO IMPLEMENTATION OF SUBSEQUENT MEASURES AS DETAILED ON THE SW-3P CONSTRUCTION PHASE SHEETS OR AT SUCH TIME AS THE WATERSHED AREA HAS BEEN RESTABILIZED.

SCALE: 1:2000

555 EAST RAMSEY SAN ANTONIO TEXAS 78216
PHONE (210)375-9000
FAX (210)375-9010
PAPE-DAWSON ENGINEERS
CIVIL & ENVIRONMENTAL
STATE OF TEXAS K. STEPHEN BONNETTE 60928 REGISTERED PROFESSIONAL ENGINEER
K. STEPHEN BONNETTE, P.E. 9/20/00 DATE

© 2000 Texas Department of Transportation

# LOOP 1604 STORMWATER POLLUTION PREVENTION PLAN CONSTRUCTION PHASE

SHEET 8 OF 15

| DN: | | | | | PROJECT NO. | | | |
|---|---|---|---|---|---|---|---|---|
| CK DN: | | | | | NH 2000 (704), etc. | | | |
| DW: | CONTROL | SECTION | JOB | DIST. | STATE | COUNTY | HIGHWAY NO. | SHEET NO. |
| CK DW: | 2452 | 01 | 036 | SAT | TX | BEXAR | LOOP 1604 | 866 |

etc.

Design File: j:\pw341\16\civil\design\swppp\39411 6sw08-fin.dgn

Plotted on: 09/19/00

| ESTIMATED QUANTITIES | | | |
|---|---|---|---|
| DESCRIPTION | UNIT | EST. | FINAL |
| ROCK FILTER DAM (TY 2) | M | 65 | |
| ROCK FILTER DAM (TY 2) (REMOVE & REPLACE) | M | 130 | |
| ROCK FILTER DAM (TY 2) (REPLACE) | M | 65 | |
| TEMP SED CONT FENCE | M | 10 | |
| TEMP SED CONT FENCE (REMOVE & REPLACE) | M | 20 | |
| TEMP SED CONT FENCE (REMOVE & REPLACE) | M | 10 | |
| | | | |
| | | | |

QUANTITIES THIS SHEET
CSJ 2452-01-036

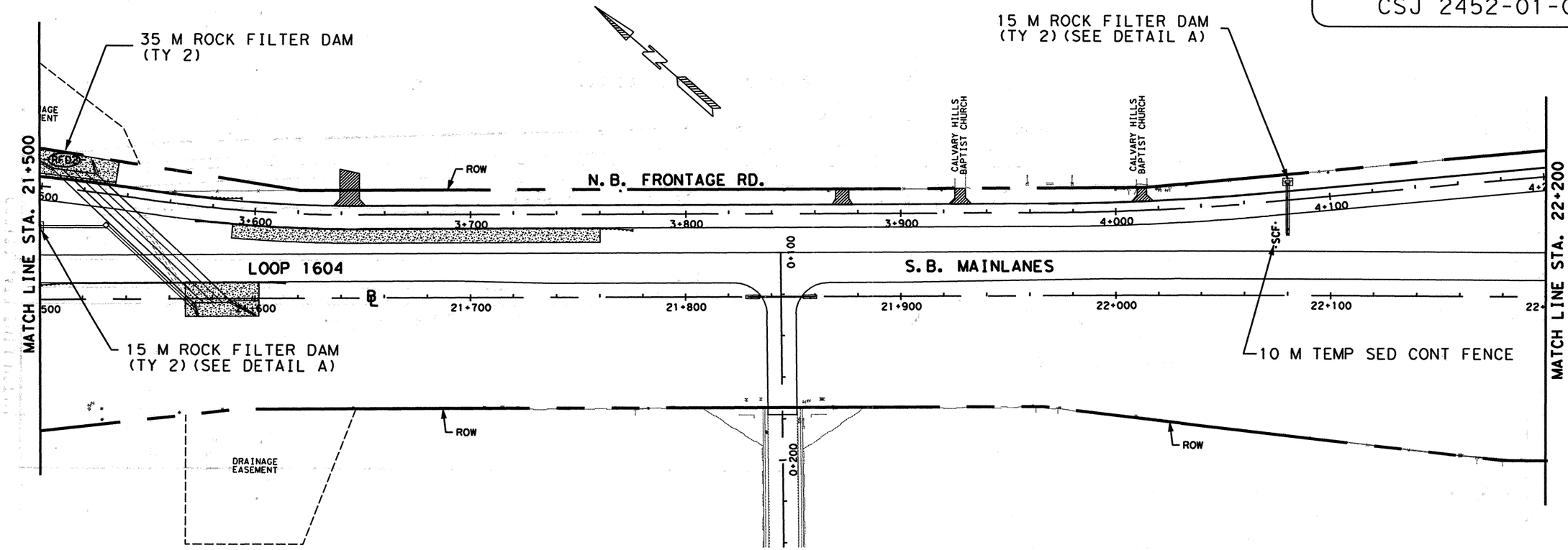


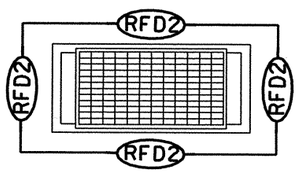


DETAIL A

## LEGEND

| | |
|---|---|
| —SCF— | TEMP SED CONT FENCE |
| ST-DI | SED TRAP-DROP INLET 1 |
| RFD2 | ROCK FILTER DAM, TY 2 |
| RFD3 | ROCK FILTER DAM, TY 3 |

NOTES:
1.) ALL DIMENSIONS ARE IN METERS UNLESS NOTED OTHERWISE.
2.) EXISTING FEATURES ARE SHOWN SCREENED BACK, I.E. FADED.
3.) ALL WATER POLLUTION PREVENTION MEASURES SHALL BE PLACED WITHIN THE RIGHT-OF-WAY OR DRAINAGE EASEMENT OF THE PROPOSED ROADWAY.
4.) ALL PROJECT INITIATION SW-3P MEASURES SHALL REMAIN IN PLACE THROUGHOUT THE DURATION OF THE PROJECT UNTIL DEEMED APPROPRIATE FOR REMOVAL BY THE ENGINEER DUE TO IMPLEMENTATION OF SUBSEQUENT MEASURES AS DETAILED ON THE SW-3P CONSTRUCTION PHASE SHEETS OR AT SUCH TIME AS THE WATERSHED AREA HAS BEEN RESTABILIZED.

SCALE: 1:2000

555 EAST RAMSEY SAN ANTONIO TEXAS 78216
PHONE (210)375-9000
FAX (210)375-9010
PAPE-DAWSON ENGINEERS
CIVIL & ENVIRONMENTAL
STATE OF TEXAS
K. STEPHEN BONNETTE
60928
REGISTERED
PROFESSIONAL ENGINEER
9/20/00
K. STEPHEN BONNETTE, P.E. DATE

© 2000 Texas Department of Transportation

# LOOP 1604
# STORMWATER POLLUTION PREVENTION PLAN
# CONSTRUCTION PHASE

SHEET 9 OF 15

| DN: | | | | | PROJECT NO. | | |
|---|---|---|---|---|---|---|---|
| CK DN: | | | | | NH 2000 (704), etc. | | |
| DW: | CONTROL | SECTION | JOB | DIST. | COUNTY | HIGHWAY NO. | SHEET NO. |
| CK DW: | 2452 | 01 | 036 etc. | SAT | BEXAR | LOOP 1604 | 867 |

Design Filename: j:\...41\16\civil\design\swppp\394116sw09-fin.dgn

plotted on: 09/19/00

| ESTIMATED QUANTITIES | | | |
|---|---|---|---|
| DESCRIPTION | UNIT | EST. | FINAL |
| ROCK FILTER DAM (TY 2) | M | 35 | |
| ROCK FILTER DAM (TY 2) (REMOVE & REPLACE) | M | 70 | |
| ROCK FILTER DAM (TY 2) (REPLACE) | M | 35 | |
| TEMP SED CONT FENCE | M | 20 | |
| TEMP SED CONT FENCE (REMOVE & REPLACE) | M | 40 | |
| TEMP SED CONT FENCE (REMOVE & REPLACE) | M | 20 | |
| | | | |
| | | | |

QUANTITIES THIS SHEET
CSJ 2452-01-036

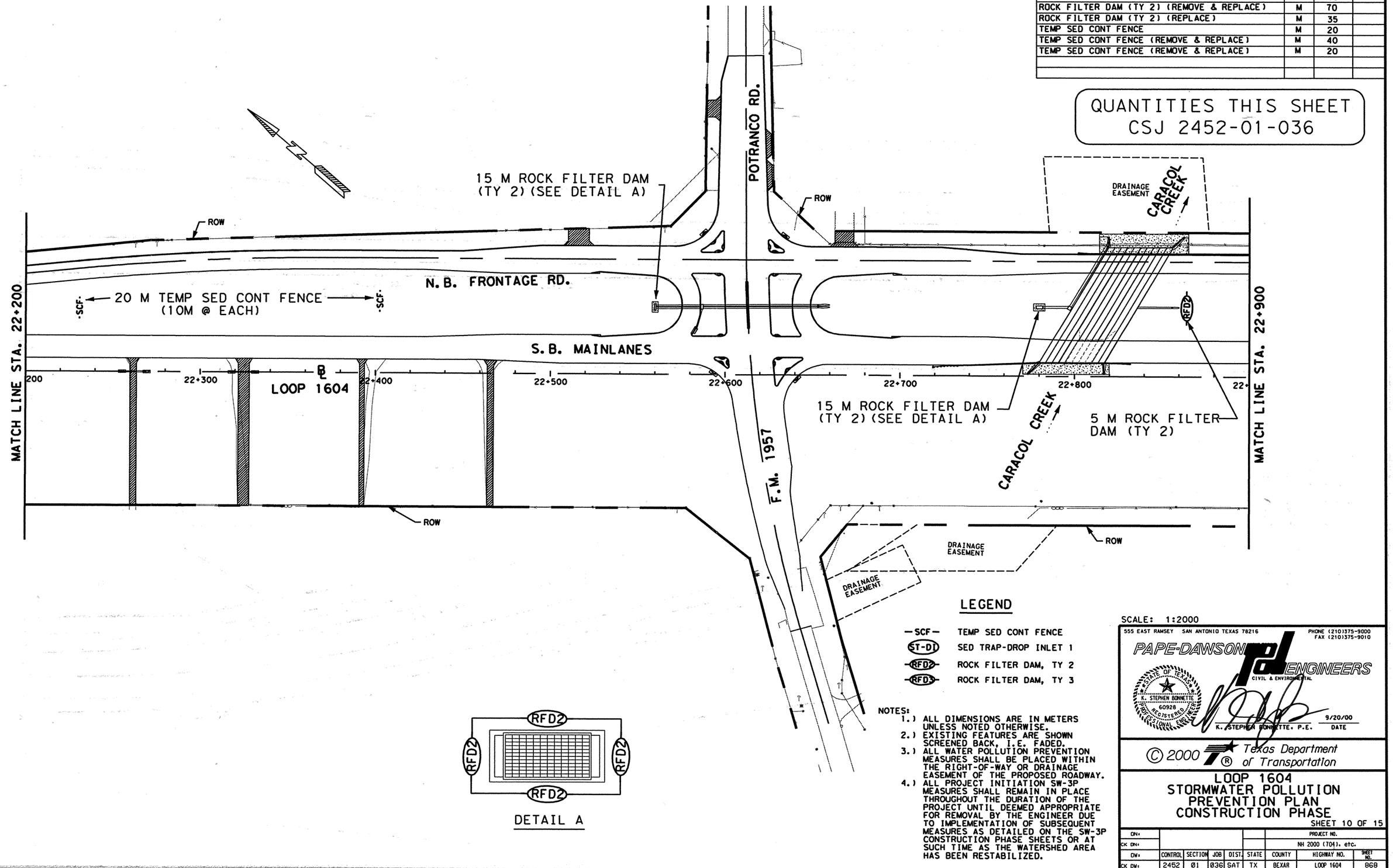





DETAIL A

## LEGEND

| | |
|---|---|
| -SCF- | TEMP SED CONT FENCE |
| ST-D1 | SED TRAP-DROP INLET 1 |
| RFD2 | ROCK FILTER DAM, TY 2 |
| RFD3 | ROCK FILTER DAM, TY 3 |

NOTES:
1.) ALL DIMENSIONS ARE IN METERS UNLESS NOTED OTHERWISE.
2.) EXISTING FEATURES ARE SHOWN SCREENED BACK, I.E. FADED.
3.) ALL WATER POLLUTION PREVENTION MEASURES SHALL BE PLACED WITHIN THE RIGHT-OF-WAY OR DRAINAGE EASEMENT OF THE PROPOSED ROADWAY.
4.) ALL PROJECT INITIATION SW-3P MEASURES SHALL REMAIN IN PLACE THROUGHOUT THE DURATION OF THE PROJECT UNTIL DEEMED APPROPRIATE FOR REMOVAL BY THE ENGINEER DUE TO IMPLEMENTATION OF SUBSEQUENT MEASURES AS DETAILED ON THE SW-3P CONSTRUCTION PHASE SHEETS OR AT SUCH TIME AS THE WATERSHED AREA HAS BEEN RESTABILIZED.

SCALE: 1:2000

555 EAST RAMSEY SAN ANTONIO TEXAS 78216
PHONE (210)375-9000
FAX (210)375-9010
PAPE-DAWSON ENGINEERS
CIVIL & ENVIRONMENTAL
STATE OF TEXAS K. STEPHEN BONNETTE 60928 REGISTERED PROFESSIONAL ENGINEER
K. STEPHEN BONNETTE, P.E. 9/20/00 DATE

© 2000 Texas Department of Transportation

# LOOP 1604 STORMWATER POLLUTION PREVENTION PLAN CONSTRUCTION PHASE

SHEET 10 OF 15

| | | | | | | | | |
|---|---|---|---|---|---|---|---|---|
| DN: | | | | | | PROJECT NO. | | |
| CK DN: | | | | | | NH 2000 (704), etc. | | |
| DW: | CONTROL | SECTION | JOB | DIST. | STATE | COUNTY | HIGHWAY NO. | SHEET NO. |
| CK DW: | 2452 | 01 | 036 etc. | SAT | TX | BEXAR | LOOP 1604 | 868 |

Design Filename: j:\3941\16\civil\design\swppp\394116sw10-fin.dgn

Plotted on: 09/19/00

Design Filename: J:\041\16\civil\design\swppp\394116swp11-fin.dgn

## LEGEND

| | |
|---|---|
| —SCF— | TEMP SED CONT FENCE |
| ST-D1 | SED TRAP-DROP INLET 1 |
| RFD2 | ROCK FILTER DAM, TY 2 |
| RFD3 | ROCK FILTER DAM, TY 3 |

ESTIMATED QUANTITIES

| DESCRIPTION | UNIT | EST. | FINAL |
|---|---|---|---|
| TEMP SED CONT FENCE | M | 70 | |
| TEMP SED CONT FENCE (REMOVE & REPLACE) | M | 140 | |
| TEMP SED CONT FENCE (REMOVE & REPLACE) | M | 70 | |
| | | | |
| | | | |
| | | | |
| | | | |

QUANTITIES THIS SHEET
CSJ 2452-01-036

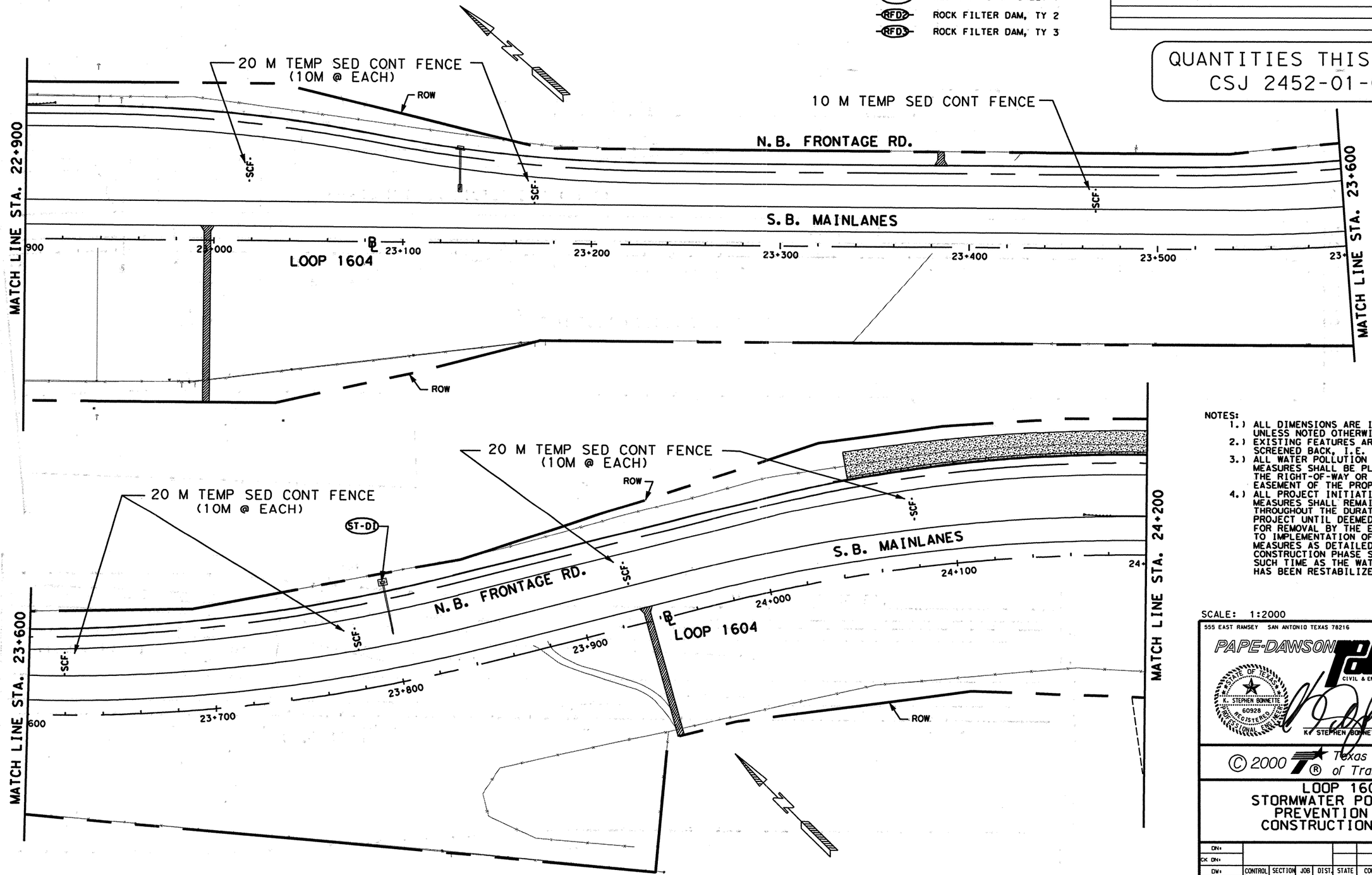


NOTES:
1.) ALL DIMENSIONS ARE IN METERS UNLESS NOTED OTHERWISE.
2.) EXISTING FEATURES ARE SHOWN SCREENED BACK, I.E. FADED.
3.) ALL WATER POLLUTION PREVENTION MEASURES SHALL BE PLACED WITHIN THE RIGHT-OF-WAY OR DRAINAGE EASEMENT OF THE PROPOSED ROADWAY.
4.) ALL PROJECT INITIATION SW-3P MEASURES SHALL REMAIN IN PLACE THROUGHOUT THE DURATION OF THE PROJECT UNTIL DEEMED APPROPRIATE FOR REMOVAL BY THE ENGINEER DUE TO IMPLEMENTATION OF SUBSEQUENT MEASURES AS DETAILED ON THE SW-3P CONSTRUCTION PHASE SHEETS OR AT SUCH TIME AS THE WATERSHED AREA HAS BEEN RESTABILIZED.

SCALE: 1:2000

555 EAST RAMSEY SAN ANTONIO TEXAS 78216
PHONE (210)375-9000
FAX (210)375-9010
PAPE-DAWSON ENGINEERS
CIVIL & ENVIRONMENTAL
STATE OF TEXAS
K. STEPHEN BONNETTE
60928
REGISTERED
PROFESSIONAL ENGINEER
K. STEPHEN BONNETTE, P.E. 9/20/00 DATE

© 2000 Texas Department of Transportation

# LOOP 1604 STORMWATER POLLUTION PREVENTION PLAN CONSTRUCTION PHASE

SHEET 11 OF 15

| DN: | | | | | PROJECT NO. | | |
|---|---|---|---|---|---|---|---|
| CK DN: | | | | | NH 2000 (704), etc. | | |
| DW: | CONTROL | SECTION | JOB | DIST. | STATE | COUNTY | HIGHWAY NO. | SHEET NO. |
| CK DW: | 2452 | 01 | 036 etc. | SAT | TX | BEXAR | LOOP 1604 | 869 |

Plotted on: 09/19/00

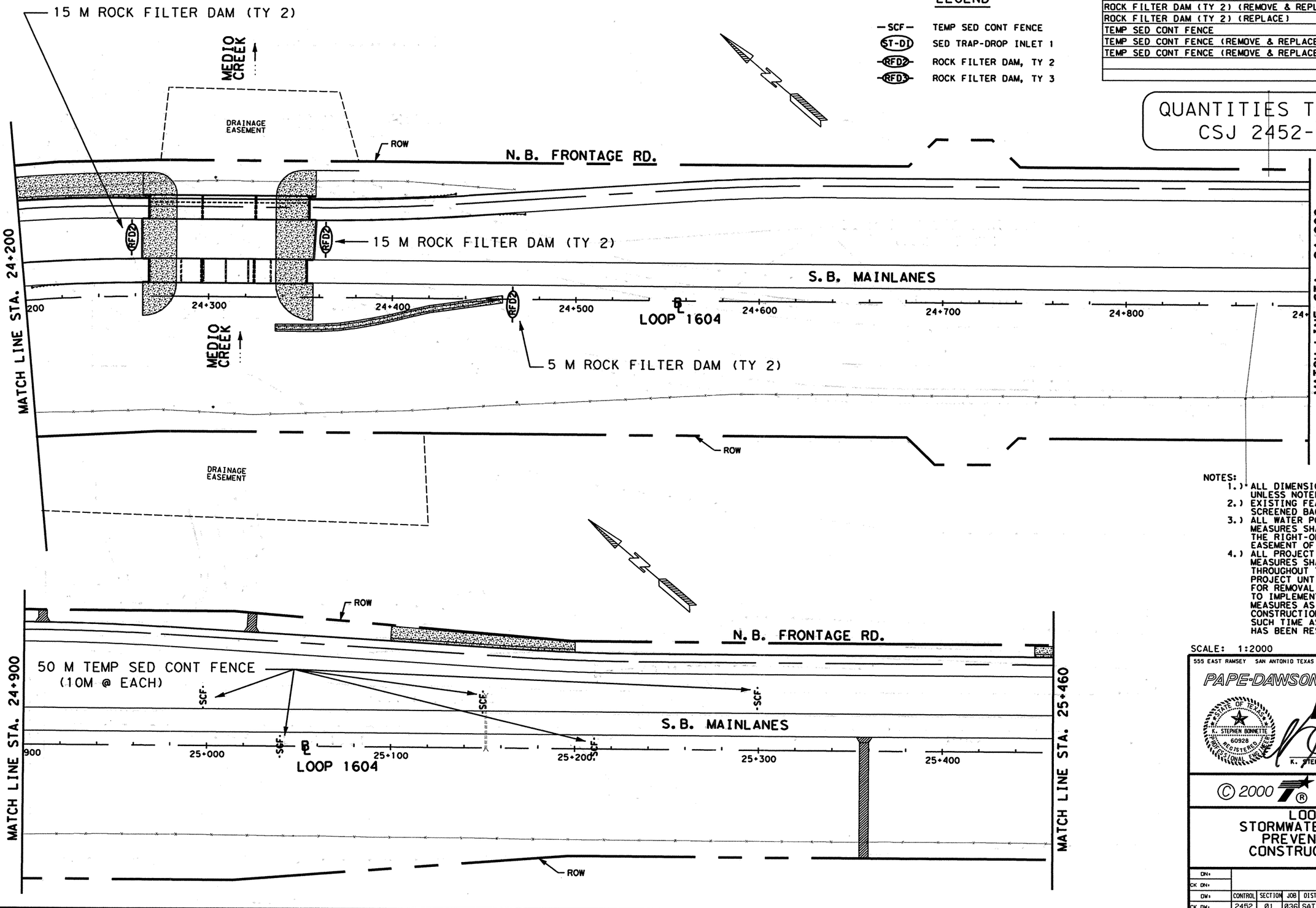


## LEGEND

| | |
|---|---|
| —SCF— | TEMP SED CONT FENCE |
| ST-D1 | SED TRAP-DROP INLET 1 |
| RFD2 | ROCK FILTER DAM, TY 2 |
| RFD3 | ROCK FILTER DAM, TY 3 |

ESTIMATED QUANTITIES

| DESCRIPTION | UNIT | EST. | FINAL |
|---|---|---|---|
| ROCK FILTER DAM (TY 2) | M | 35 | |
| ROCK FILTER DAM (TY 2) (REMOVE & REPLACE) | M | 70 | |
| ROCK FILTER DAM (TY 2) (REPLACE) | M | 35 | |
| TEMP SED CONT FENCE | M | 50 | |
| TEMP SED CONT FENCE (REMOVE & REPLACE) | M | 100 | |
| TEMP SED CONT FENCE (REMOVE & REPLACE) | M | 50 | |
| | | | |
| | | | |

QUANTITIES THIS SHEET
CSJ 2452-01-036

NOTES:
1.) ALL DIMENSIONS ARE IN METERS UNLESS NOTED OTHERWISE.
2.) EXISTING FEATURES ARE SHOWN SCREENED BACK, I.E. FADED.
3.) ALL WATER POLLUTION PREVENTION MEASURES SHALL BE PLACED WITHIN THE RIGHT-OF-WAY OR DRAINAGE EASEMENT OF THE PROPOSED ROADWAY.
4.) ALL PROJECT INITIATION SW-3P MEASURES SHALL REMAIN IN PLACE THROUGHOUT THE DURATION OF THE PROJECT UNTIL DEEMED APPROPRIATE FOR REMOVAL BY THE ENGINEER DUE TO IMPLEMENTATION OF SUBSEQUENT MEASURES AS DETAILED ON THE SW-3P CONSTRUCTION PHASE SHEETS OR AT SUCH TIME AS THE WATERSHED AREA HAS BEEN RESTABILIZED.

SCALE: 1:2000

555 EAST RAMSEY SAN ANTONIO TEXAS 78216
PHONE (210)375-9000
FAX (210)375-9010
PAPE-DAWSON ENGINEERS
CIVIL & ENVIRONMENTAL

STATE OF TEXAS
K. STEPHEN BONNETTE
60928
REGISTERED PROFESSIONAL ENGINEER

K. STEPHEN BONNETTE, P.E. 9/20/00 DATE

© 2000 Texas Department of Transportation

# LOOP 1604
# STORMWATER POLLUTION PREVENTION PLAN
# CONSTRUCTION PHASE

SHEET 12 OF 15

| DN: | | | | | PROJECT NO. | | |
|---|---|---|---|---|---|---|---|
| CK DN: | | | | | NH 2000 (704), etc. | | |
| DW: | CONTROL | SECTION | JOB | DIST. | COUNTY | HIGHWAY NO. | SHEET NO. |
| CK DW: | 2452 | Ø1 | Ø36 etc. | SAT | BEXAR | LOOP 1604 | 870 |

Design Filename: j:\...041\16\civil\design\swppp\394116swl2-fin.dgn

Plotted on: 09/19/00

Design Filename: j:\w41\16\civil\design\swppp\3941168wl3-fin.dgn

NOTES:
1.) ALL DIMENSIONS ARE IN METERS UNLESS NOTED OTHERWISE.
2.) EXISTING FEATURES ARE SHOWN SCREENED BACK, I.E. FADED.
3.) ALL WATER POLLUTION PREVENTION MEASURES SHALL BE PLACED WITHIN THE RIGHT-OF-WAY OR DRAINAGE EASEMENT OF THE PROPOSED ROADWAY.
4.) ALL PROJECT INITIATION SW-3P MEASURES SHALL REMAIN IN PLACE THROUGHOUT THE DURATION OF THE PROJECT UNTIL DEEMED APPROPRIATE FOR REMOVAL BY THE ENGINEER DUE TO IMPLEMENTATION OF SUBSEQUENT MEASURES AS DETAILED ON THE SW-3P CONSTRUCTION PHASE SHEETS OR AT SUCH TIME AS THE WATERSHED AREA HAS BEEN RESTABILIZED.

ESTIMATED QUANTITIES

| DESCRIPTION | UNIT | EST. | FINAL |
|---|---|---|---|
| ROCK FILTER DAM (TY 2) | M | 23 | |
| ROCK FILTER DAM (TY 2) (REMOVE & REPLACE) | M | 46 | |
| ROCK FILTER DAM (TY 2) (REMOVE) | M | 23 | |
| TEMP SED CONT FENCE | M | 110 | |
| TEMP SED CONT FENCE (REMOVE & REPLACE) | M | 220 | |
| TEMP SED CONT FENCE (REMOVE) | M | 110 | |
| | | | |
| | | | |

QUANTITIES THIS SHEET
CSJ 2452-01-036

LEGEND
- —SCF— TEMP SED CONT FENCE
- ST-D1 SED TRAP-DROP INLET 1
- RFD2 ROCK FILTER DAM, TY 2
- RFD3 ROCK FILTER DAM, TY 3

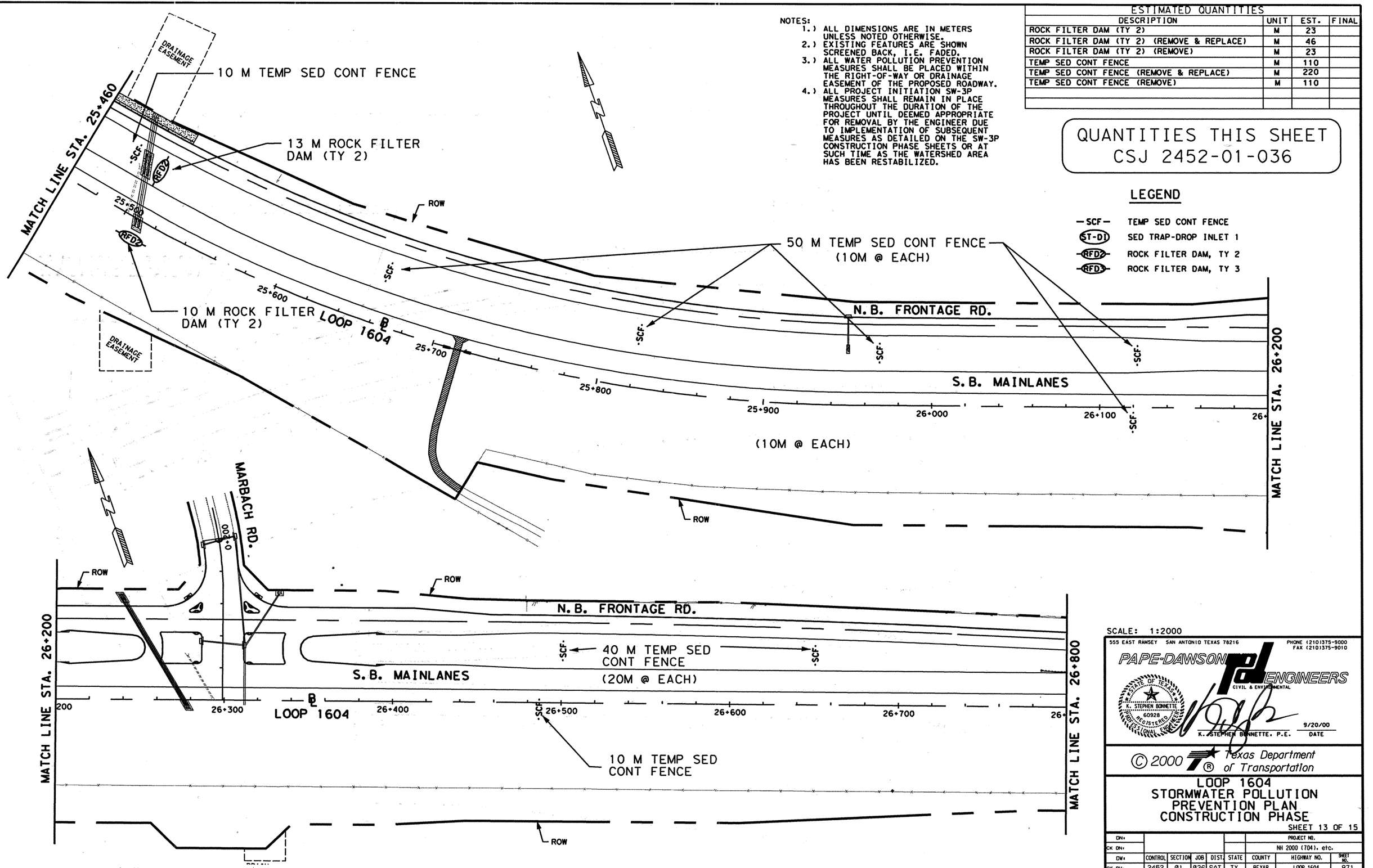


SCALE: 1:2000


555 EAST RAMSEY SAN ANTONIO TEXAS 78216
PHONE (210)375-9000
FAX (210)375-9010
PAPE-DAWSON ENGINEERS
CIVIL & ENVIRONMENTAL
STATE OF TEXAS K. STEPHEN BONNETTE 60928 REGISTERED PROFESSIONAL ENGINEER
K. STEPHEN BONNETTE, P.E. 9/20/00 DATE



© 2000 Texas Department of Transportation


# LOOP 1604 STORMWATER POLLUTION PREVENTION PLAN CONSTRUCTION PHASE

SHEET 13 OF 15

| DN: | | | | | | PROJECT NO. | |
|---|---|---|---|---|---|---|---|
| CK DN: | | | | | | NH 2000 (704), etc. | |
| DW: | CONTROL | SECTION | JOB | DIST. | STATE | COUNTY | HIGHWAY NO. | SHEET NO. |
| CK DW: | 2452 | 01 | 036 etc. | SAT | TX | BEXAR | LOOP 1604 | 871 |

Plotted on: 9/00

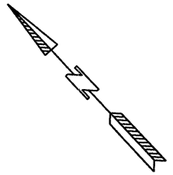

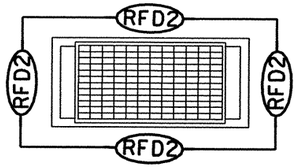


DETAIL A

## LEGEND

| | |
|---|---|
| —SCF— | TEMP SED CONT FENCE |
| ST-DI | SED TRAP-DROP INLET 1 |
| RFD2 | ROCK FILTER DAM, TY 2 |
| RFD3 | ROCK FILTER DAM, TY 3 |

## ESTIMATED QUANTITIES

| DESCRIPTION | UNIT | EST. | FINAL |
|---|---|---|---|
| ROCK FILTER DAM (TY 2) | M | 65 | |
| ROCK FILTER DAM (TY 2) (REMOVE & REPLACE) | M | 130 | |
| ROCK FILTER DAM (TY 2) (REMOVE) | M | 65 | |
| TEMP SED CONT FENCE | M | 10 | |
| TEMP SED CONT FENCE (REMOVE & REPLACE) | M | 20 | |
| TEMP SED CONT FENCE (REMOVE) | M | 10 | |
| | | | |
| | | | |

QUANTITIES THIS SHEET
CSJ 2452-01-036

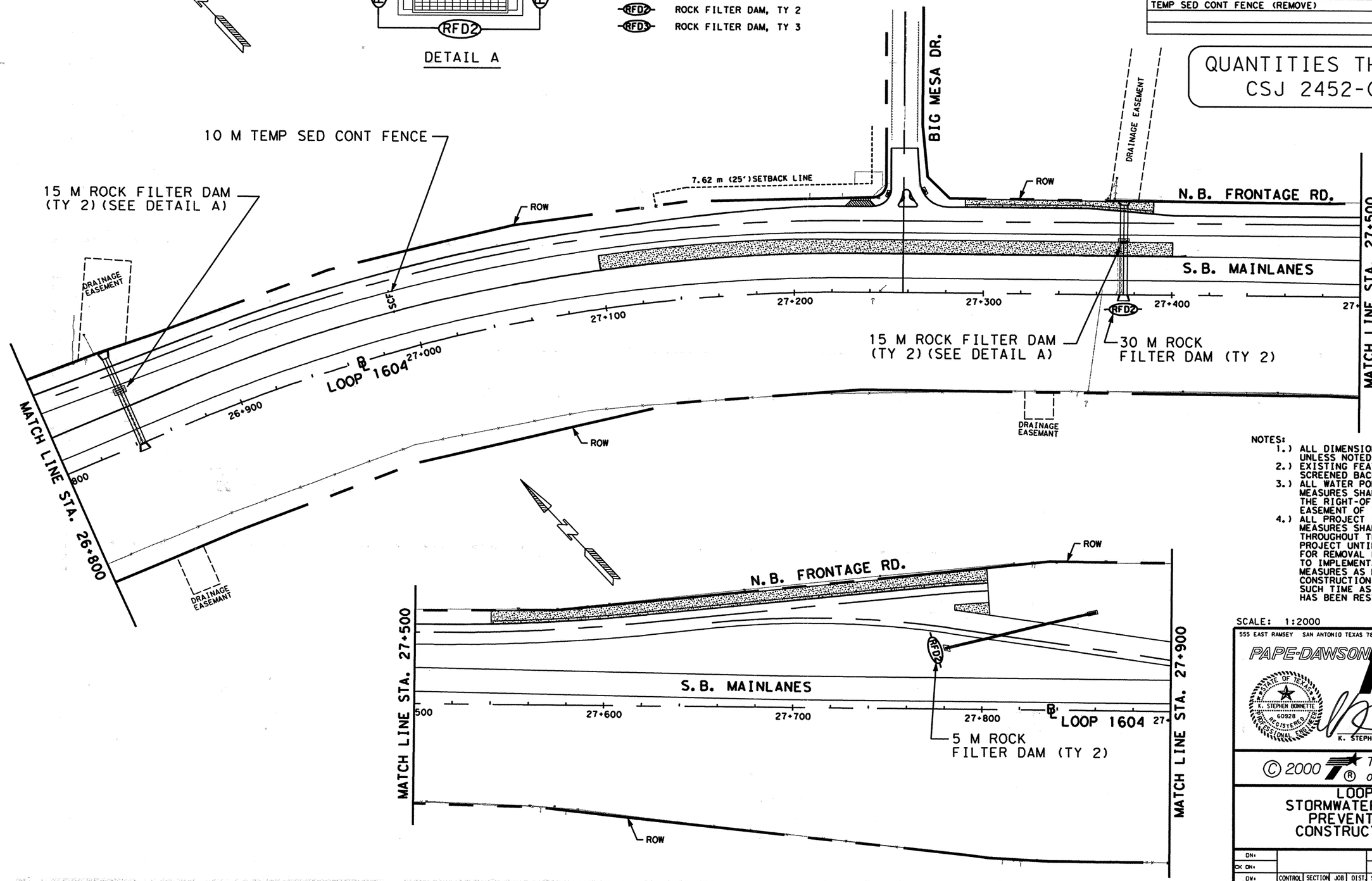


NOTES:
1.) ALL DIMENSIONS ARE IN METERS UNLESS NOTED OTHERWISE.
2.) EXISTING FEATURES ARE SHOWN SCREENED BACK, I.E. FADED.
3.) ALL WATER POLLUTION PREVENTION MEASURES SHALL BE PLACED WITHIN THE RIGHT-OF-WAY OR DRAINAGE EASEMENT OF THE PROPOSED ROADWAY.
4.) ALL PROJECT INITIATION SW-3P MEASURES SHALL REMAIN IN PLACE THROUGHOUT THE DURATION OF THE PROJECT UNTIL DEEMED APPROPRIATE FOR REMOVAL BY THE ENGINEER DUE TO IMPLEMENTATION OF SUBSEQUENT MEASURES AS DETAILED ON THE SW-3P CONSTRUCTION PHASE SHEETS OR AT SUCH TIME AS THE WATERSHED AREA HAS BEEN RESTABILIZED.

SCALE: 1:2000

555 EAST RAMSEY SAN ANTONIO TEXAS 78216
PHONE (210)375-9000
FAX (210)375-9010
PAPE-DAWSON ENGINEERS
CIVIL & ENVIRONMENTAL

STATE OF TEXAS
K. STEPHEN BONNETTE
60928
REGISTERED
PROFESSIONAL ENGINEER

K. STEPHEN BONNETTE, P.E. 9/20/00
DATE

© 2000 Texas Department of Transportation

# LOOP 1604
# STORMWATER POLLUTION PREVENTION PLAN
# CONSTRUCTION PHASE

SHEET 14 OF 15

| DN: | | | | | | PROJECT NO. | | |
|---|---|---|---|---|---|---|---|---|
| CK DN: | | | | | | NH 2000 (704), etc. | | |
| DW: | CONTROL | SECTION | JOB | DIST. | STATE | COUNTY | HIGHWAY NO. | SHEET NO. |
| CK DW: | 2452 | 01 | 036 | SAT | TX | BEXAR | LOOP 1604 | 872 |

Design Filename 3_16\civil\design\swppp\394116sw14-rfn.dgn

Plotted on: 09/19/00

Design Filename: j:_41\16\civil\design\swppp\394116sw15-fin.dgn

| ESTIMATED QUANTITIES | | | |
|---|---|---|---|
| DESCRIPTION | UNIT | EST. | FINAL |
| ROCK FILTER DAM (TY 2) | M | 20 | |
| ROCK FILTER DAM (TY 2) (REMOVE & REPLACE) | M | 40 | |
| ROCK FILTER DAM (TY 2) (REMOVE) | M | 20 | |
| | | | |
| | | | |
| | | | |
| | | | |
| | | | |

QUANTITIES THIS SHEET
CSJ 2452-01-036

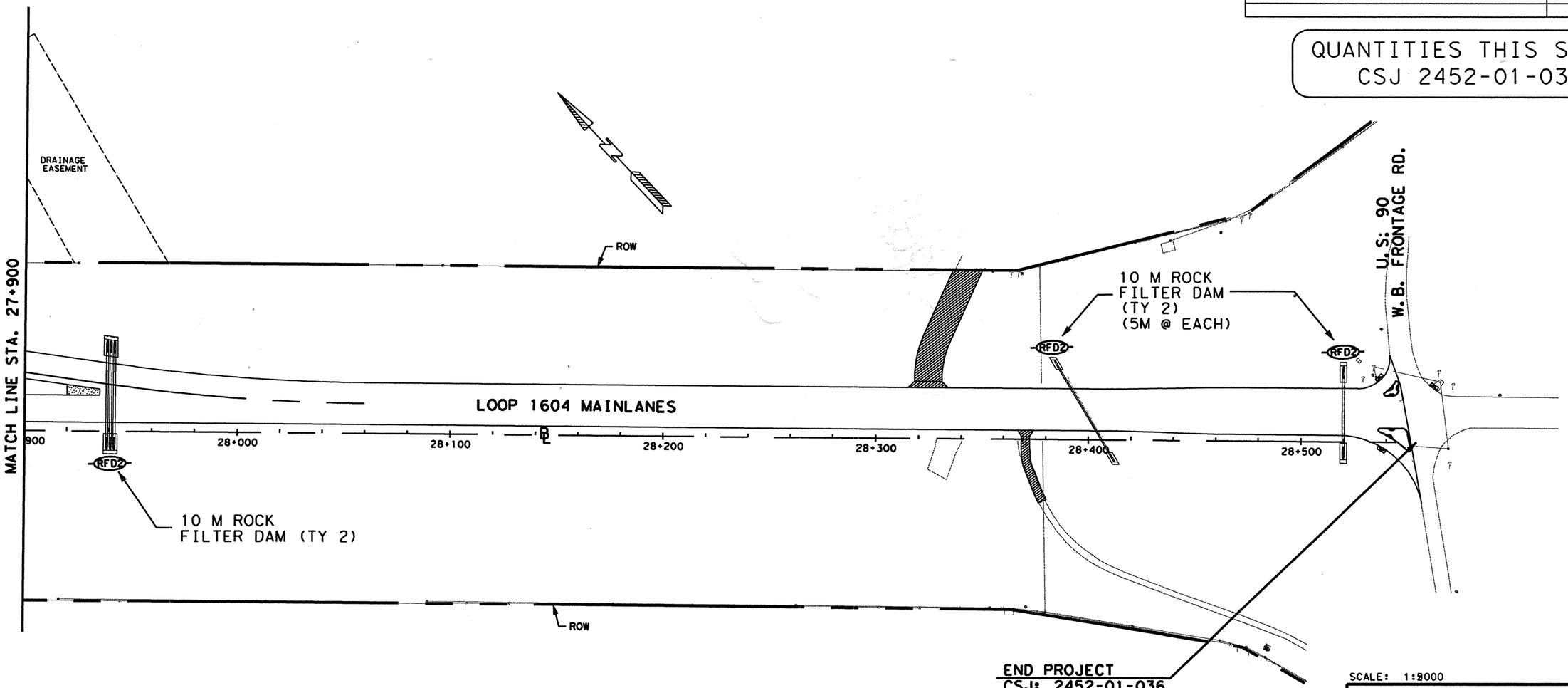


SCALE: 1:2000

## LEGEND

| | |
|---|---|
| —SCF— | TEMP SED CONT FENCE |
| ST-D1 | SED TRAP-DROP INLET 1 |
| RFD2 | ROCK FILTER DAM, TY 2 |
| RFD3 | ROCK FILTER DAM, TY 3 |

NOTES:
1.) ALL DIMENSIONS ARE IN METERS UNLESS NOTED OTHERWISE.
2.) EXISTING FEATURES ARE SHOWN SCREENED BACK, I.E. FADED.
3.) ALL WATER POLLUTION PREVENTION MEASURES SHALL BE PLACED WITHIN THE RIGHT-OF-WAY OR DRAINAGE EASEMENT OF THE PROPOSED ROADWAY.
4.) ALL PROJECT INITIATION SW-3P MEASURES SHALL REMAIN IN PLACE THROUGHOUT THE DURATION OF THE PROJECT UNTIL DEEMED APPROPRIATE FOR REMOVAL BY THE ENGINEER DUE TO IMPLEMENTATION OF SUBSEQUENT MEASURES AS DETAILED ON THE SW-3P CONSTRUCTION PHASE SHEETS OR AT SUCH TIME AS THE WATERSHED AREA HAS BEEN RESTABILIZED.

555 EAST RAMSEY SAN ANTONIO TEXAS 78216
PHONE (210)375-9000
FAX (210)375-9010
PAPE-DAWSON ENGINEERS
CIVIL & ENVIRONMENTAL
STATE OF TEXAS
K. STEPHEN BONNETTE
60928
REGISTERED PROFESSIONAL ENGINEER
K. STEPHEN BONNETTE, P.E. 9/20/00 DATE

© 2000 Texas Department of Transportation

# LOOP 1604 STORMWATER POLLUTION PREVENTION PLAN CONSTRUCTION PHASE

SHEET 15 OF 15

| DN: | | | | | PROJECT NO. | | |
|---|---|---|---|---|---|---|---|
| CK DN: | | | | | NH 2000 (704), etc. | | |
| DW: | CONTROL | SECTION | JOB | DIST. | COUNTY | HIGHWAY NO. | SHEET NO. |
| CK DW: | 2452 | 01 | 036 etc. | SAT | BEXAR | LOOP 1604 | 873 |

QUANTITIES THIS SHEET
CSJ 2452-01-036

SCALE: 1:1000

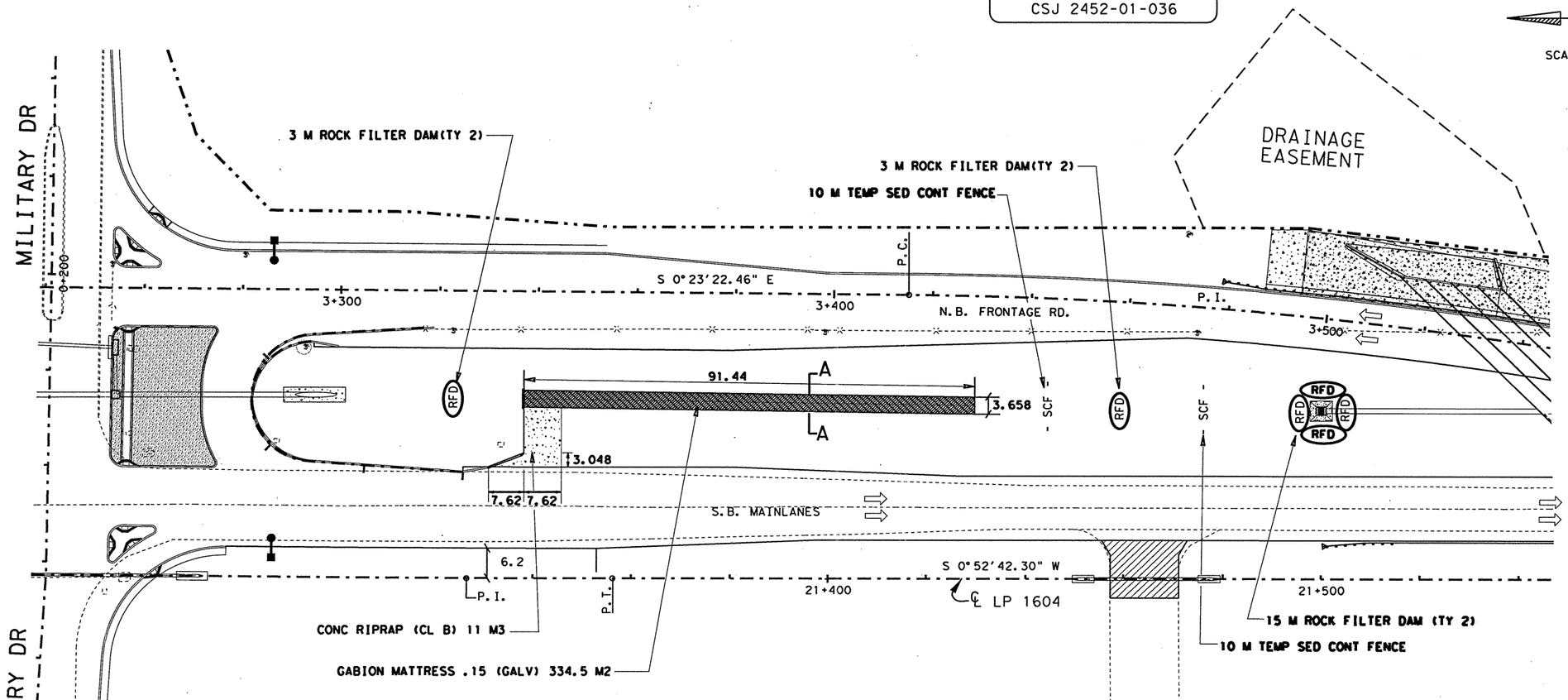


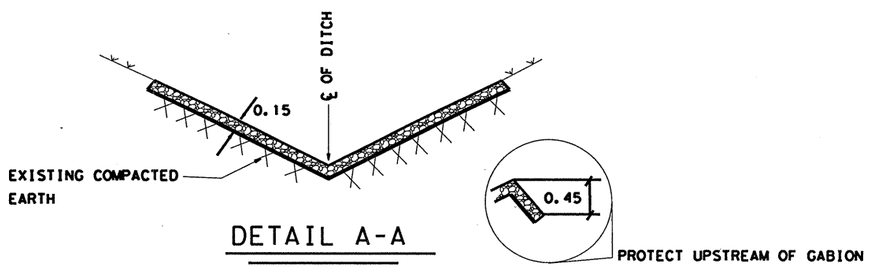


DETAIL A-A

NOTE:
1) GABION MATTRESS SHALL BE CONSTRUCTED IN ACCORDANCE WITH ITEM 5032
2) MATCH PROPOSED SLOPE

## ESTIMATED QUANTITIES

| ITEM | UNIT | QTY. |
|---|---|---|
| TEMP SED CONT FENCE | M | 20 |
| TEMP SED CONT FENCE (REMOVED | M | 20 |
| ROCK FILTER DAM (TY 2) | M | 21 |
| ROCK FILTER DAM (TY 2) (REMOVE | M | 21 |
| CONC RIPRAP (CL B) | M3 | 11 |
| GABION MATTRESS .15 (GALV) | M2 | 334.5 |
| | | |
| | | |

CHANGE ORDER NO. 161

-ADD SEDIMENT CONTROL DEVICES

STATE OF TEXAS
MIGUEL G. ROGERIO
96620
LICENSED PROFESSIONAL ENGINEER

Miguel G. Rogerio, P.E. 7/17/07
Miguel G. Rogerio, P.E. Date

CHANGE ORDER 161

NEW SHEET

© 2007
Texas Department of Transportation

# STORMWATER POLLUTION PREVENTION PLAN CONSTRUCTION PHASE

| FED. RD. DIV. NO. | FEDERAL AID PROJECT NO. | | SHEET NO. |
|---|---|---|---|
| 6 | NH 2000(704), etc. | | 873a |
| STATE | DIST. | COUNTY | |
| TEXAS | SAT | BEXAR | |
| CONT. | SECT. | JOB | HIGHWAY NO. |
| 2452 | 01 | 036, etc. | LP 1604 |

7-11-07

LEVELS DISPLAYED
1 2 3 4 5 6 7 8 9 10 11 12 13 14 15 16
17 18 19 20 21 22 23 24 25 26 27 28 29 30 31 32
33 34 35 36 37 38 39 40 41 42 43 44 45 46 47 48
49 50 51 52 53 54 55 56 57 58 59 60 61 62 63

ACC:

FILE: plan30*ch.dgn
t:\go\design\lp1604fm471-90\chg*order*files\GMplan*CO.dgn

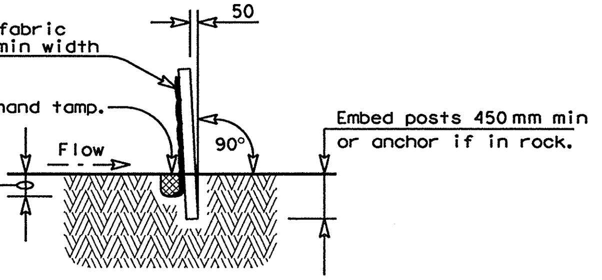


## SECTION A-A

### SEDIMENT CONTROL FENCE USAGE GUIDELINES

A sediment control fence may be constructed near the downstream perimeter of a disturbed area along a contour to intercept sediment from overland runoff. A 2 year storm frequency may be used to calculate the flow rate to be filtered.

Sediment control fence should be sized to filter a max. flow through rate of 0.07 $\frac{m^3/sec}{m^2}$ . Sediment control fence is not recommended to control erosion from a drainage area larger than .8 ha.

### GENERAL NOTES

1. The guidelines shown hereon are suggestions only and may be modified by the Engineer.

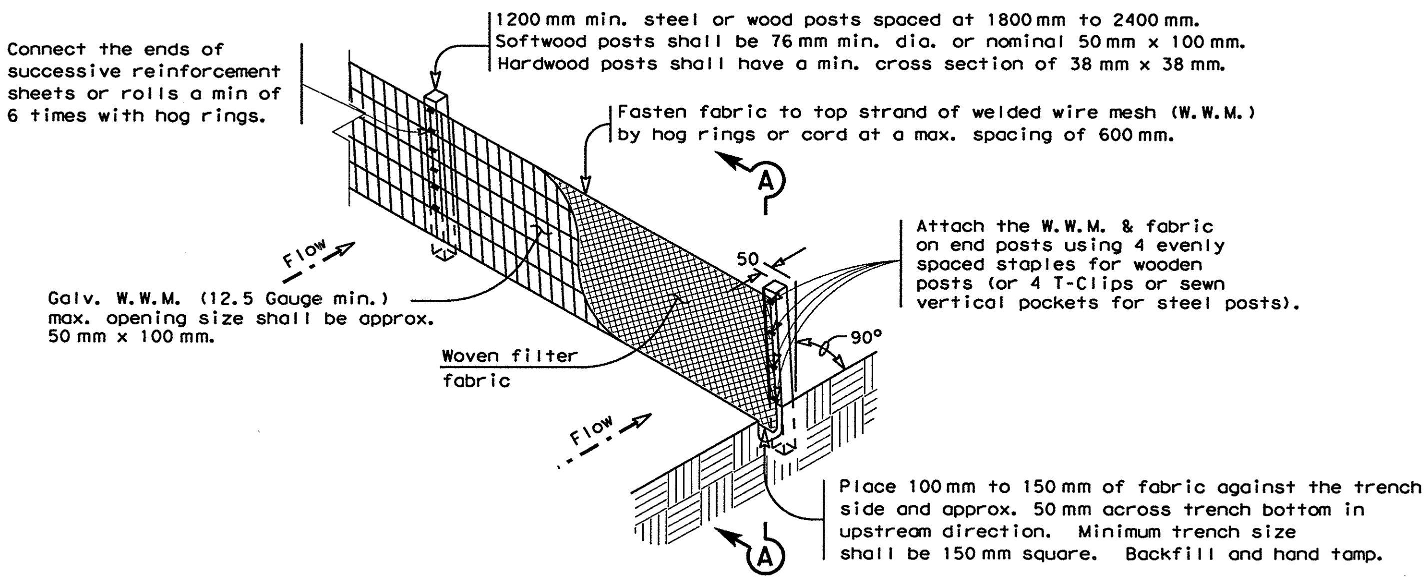


## TEMPORARY SEDIMENT CONTROL FENCE

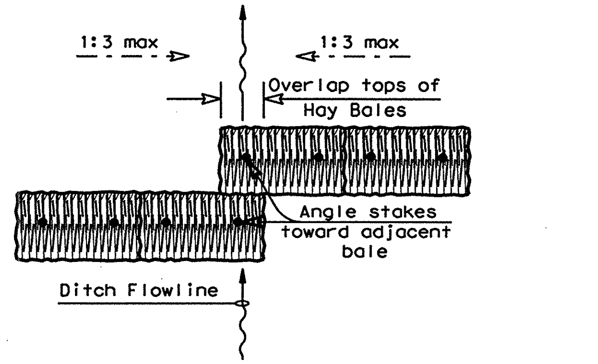


## PLAN VIEW

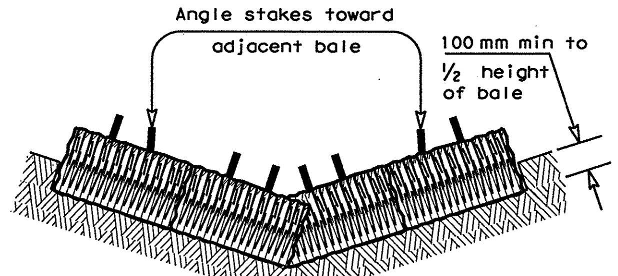


## PROFILE VIEW

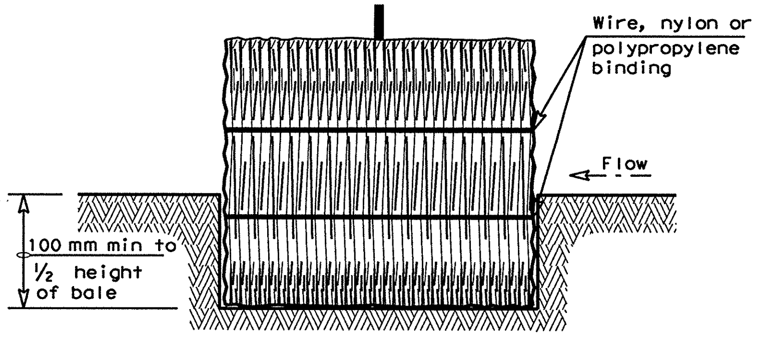


## SECTION B-B

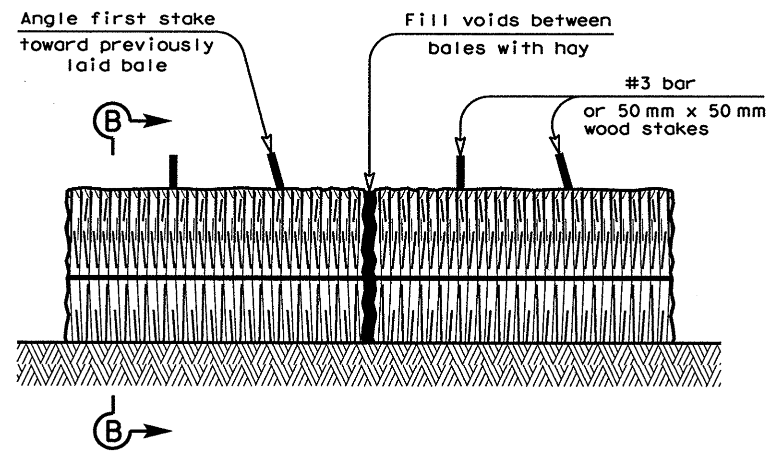


## BALED HAY FOR EROSION CONTROL

### BALED HAY USAGE GUIDELINES

A Baled Hay installation may be constructed near the downstream perimeter of a disturbed area along a contour to intercept sediment from overland runoff. A two year storm frequency may be used to calculate the flow rate to be filtered. The installation should be sized to filter a maximum flow thru rate of 0.004 $\frac{m^3/sec}{m^2}$ of cross sectional area. Baled hay may be used at the following locations:

1. Where the runoff approaching the baled hay flows over disturbed soil for less than 30 meters. If the slope of the disturbed soil exceeds 10%, the length of slope upstream the baled hay should be less than 15 meters.
2. Where the installation will be required for less than 3 months.
3. Where the contributing drainage area is less than .2 ha.

For Baled Hay installations in small ditches, the additional following considerations apply:

1. The ditch sideslopes should be graded as flat as possible to maximize the drainage flowrate thru the hay.
2. The ditch should be graded large enough to contain the overtopping drainage when sediment has filled to the top of the baled hay.

Bales should be replaced usually every 2 months or more often during wet weather when loss of structural integrity is accelerated.

### GENERAL NOTES

1. Hay bales shall be a minimum of 750 mm in length and weigh a minimum of 22.5 kilograms.
2. Hay bales shall be bound by either wire or nylon or polypropylene string. The bales shall be composed entirely of vegetable matter.
3. Hay bales shall be embedded in the soil a minimum of 100 mm and where possible one-half the height of the bale.
4. Hay bales shall be placed in a row with ends tightly abutting the adjacent bales. The bales shall be placed with bindings parallel to the ground.
5. Hay bales shall be securely anchored in place with #3 bar or 50 mm x 50 mm wood stakes, driven through the bales. The first stake shall be angled towards the previously laid bale to force the bales together.
6. The guidelines shown hereon are suggestions only and may be modified by the Engineer.

R = Radius
D = Diameter

All unit-less dimensions are millimeters

Texas Department of Transportation
Design Division (Roadway)

# TEMPORARY EROSION, SEDIMENT AND WATER POLLUTION CONTROL MEASURES

## FENCE & BALED HAY

## EC(1)-95(M)

| | | | | | | | |
|---|---|---|---|---|---|---|---|
| FILE: EC195M.DGN | DN: HEJ | CK: HEJ | DW: BGD | CK: | NEG: | | |
| © TxDOT 1995 | DIST | FED REG | FEDERAL AID PROJECT • | | | | SHEET |
| REVISIONS | SAT | 6 | NH 2000(704), etc. | | | | 874 |
| | COUNTY | | CONTROL | SECT | JOB | | HIGHWAY |
| | BEXAR | | 2452 | 01 | 036, etc. | | LP 1604 |

DISCLAIMER:
The use of this standard is governed by the "Texas Engineering Practice Act". No warranty of any kind is made by TxDOT for any purpose whatsoever. TxDOT assumes no responsibility for the conversion of this standard to other formats or for incorrect results or damages resulting from its use.

LEVELS DISPLAYED

| | | | | | | | | | | | | | | |
|---|---|---|---|---|---|---|---|---|---|---|---|---|---|---|
| 1 | 3 | 4 | 5 | 6 | 7 | 8 | 9 | 10 | 11 | 12 | 13 | 14 | 15 | 16 |
| 17 | 18 | 19 | 20 | 21 | 22 | 23 | 24 | 25 | 26 | 27 | 28 | 29 | 30 | 31 | 32 |
| 33 | 34 | 35 | 36 | 37 | 38 | 39 | 40 | 41 | 42 | 43 | 44 | 45 | 46 | 47 | 48 |
| 49 | 50 | 51 | 52 | 53 | 54 | 55 | 56 | 57 | 58 | 59 | 60 | 61 | 62 | 63 |

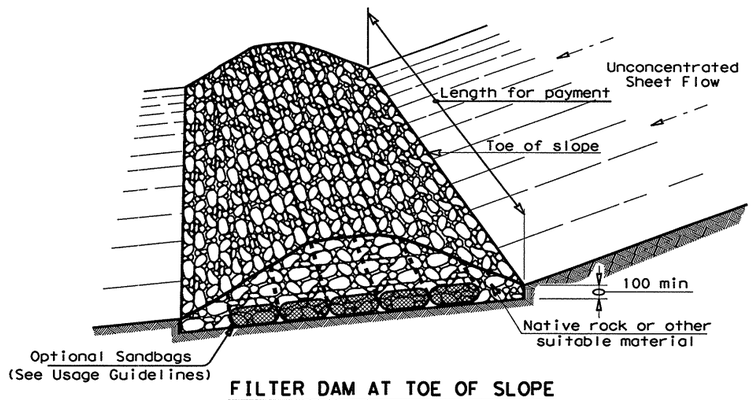


## FILTER DAM AT TOE OF SLOPE

(RFD1)
TYPE 1

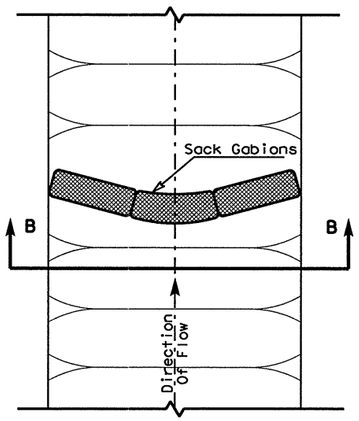


## PLAN VIEW

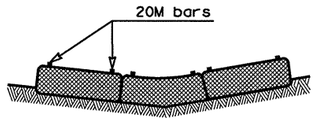


## SECTION B-B

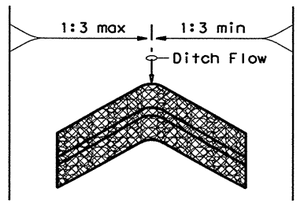


## "V" SHAPE
(Plan View)

## PLANS SHEET LEGEND

(RFD1) Type 1 Rock Filter Dam
(RFD2) Type 2 Rock Filter Dam
(RFD3) Type 3 Rock Filter Dam

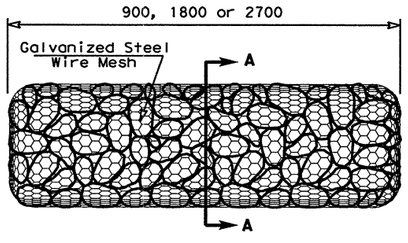


## TYPE 4 (SACK GABIONS)

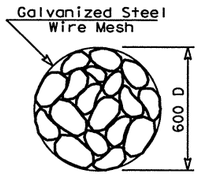


## SECTION A-A

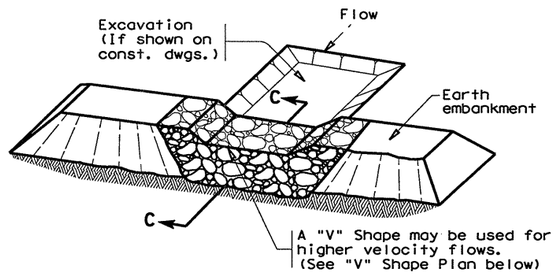


## FILTER DAM AT SEDIMENT TRAP

(RFD1) OR (RFD2)
TYPE 1 OR TYPE 2

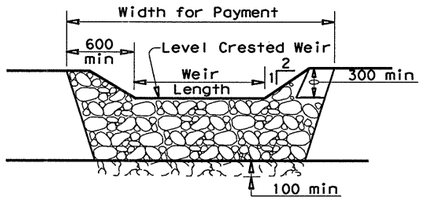


## PROFILE

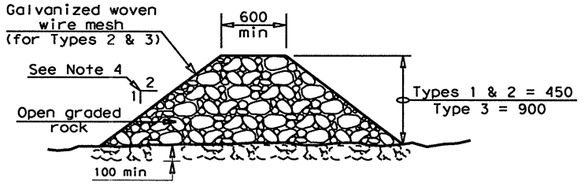


## SECTION C-C

## ROCK FILTER DAM USAGE GUIDELINES

Rock Filter Dams should be constructed downstream from disturbed areas to intercept sediment from overland runoff and/or concentrated flow. The dams should be sized to filter a maximum flow through rate of 0.04 $\frac{m^3/sec}{m^2}$ of cross sectional area. A 2 year storm frequency may be used to calculate the flow rate.

Type 1 (450 mm high with no wire mesh): Type 1 may be used at the toe of slopes, around inlets, in small ditches, and at dike or swale outlets. This type of dam is recommended to control erosion from a drainage area of 2 ha. or less. Type 1 may not be used in concentrated high velocity flows (approx. 2.4 m/sec or more) in which aggregate wash out may occur. Sandbags may be used at the embedded foundation (100 mm deep min.) for better filtering efficiency of low flows if called for on the plans or directed by the Engineer.

Type 2 (450 mm high with wire mesh): Type 2 may be used in ditches and at dike or swale outlets.

Type 3 (900 mm high with wire mesh): Type 3 may be used in stream flow and should be secured to the stream bed.

Type 4 (Sack gabions): Type 4 May be used in ditches and smaller channels to form an erosion control dam.

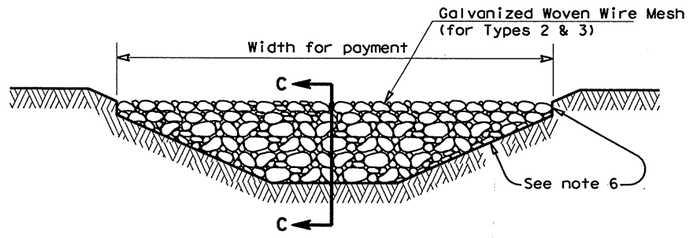


## FILTER DAM AT CHANNEL SECTIONS

(RFD1) OR (RFD2) OR (RFD3)
TYPE 1 OR TYPE 2

## GENERAL NOTES

1. If shown on the plans or directed by the Engineer, filter dams should be placed near the toe of slopes where erosion is anticipated, upstream and/or downstream at drainage structures, and in roadway ditches and channels to collect sediment.
2. Materials (aggregate, wire mesh, sandbags, etc.) shall be as indicated by the specification for "Rock Filter Dams for Erosion and Sedimentation Control".
3. The rock filter dam dimensions shall be as indicated on the SW3P plans.
4. Side slopes should be 1:2 (vertical : horizontal) or flatter. Dams within the safety zone shall have sideslopes of 1:6 or flatter.
5. Maintain a minimum of 300 mm between top of rock filter dam weir and top of embankment for filter dams at sediment traps.
6. Filter dams should be embedded a minimum of 100 mm into existing ground.
7. The sediment trap for ponding of sediment laden runoff shall be of the dimensions shown on the plans.
8. Rock filter dam types 2 & 3 shall be secured with 20 gauge galvanized woven wire mesh with 25 mm diameter hexagonal openings. The aggregate shall be placed on the mesh to the height & slopes specified. The mesh shall be folded at the upstream side over the aggregate and tightly secured to itself on the downstream side using wire ties or hog rings. In stream use the mesh should be secured or staked to the stream bed prior to aggregate placement.
9. Sack Gabions should be staked down with #6 bars.
10. Flow outlet should be onto a stabilized area (vegetation, rock, etc.).
11. The guidelines shown hereon are suggestions only and may be modified by the Engineer.

R = Radius
D = Diameter

All unit-less dimensions are millimeters

DISCLAIMER:
The use of this standard is governed by the "Texas Engineering Practice Act". No warranty of any kind is made by TxDOT for any purpose whatsoever. TxDOT assumes no responsibility for the conversion of this standard to other formats or for incorrect results or damages resulting from its use.

LEVELS DISPLAYED
1 2 3 4 5 6 7 8 9 10 11 12 13 14 15 16
17 18 19 20 21 22 23 24 25 26 27 28 29 30 31 32
33 34 35 36 37 38 39 40 41 42 43 44 45 46 47 48
49 50 51 52 53 54 55 56 57 58 59 60 61 62 63

Texas Department of Transportation
Design Division (Roadway)

# TEMPORARY EROSION, SEDIMENT AND WATER POLLUTION CONTROL MEASURES

## ROCK FILTER DAMS

## EC(2)-95(M)

| FILE: EC295M.DGN | DN: HEJ | CK: HEJ | DW: BGD | CK: | NEG: |
|---|---|---|---|---|---|
| ©TxDOT 1995 | DIST | FED REG | FEDERAL AID PROJECT • | | SHEET |
| REVISIONS | SAT | 6 | NH 2000(704), etc. | | 875 |
| | COUNTY | | CONTROL | SECT | JOB | HIGHWAY |
| | BEXAR | | 2452 | 01 | 036, etc. | LP 1604 |

DISCLAIMER:
The use of this standard is governed by the "Texas Engineering Practice Act". No warranty of any kind is made by TxDOT for any purpose whatsoever. TxDOT assumes no responsibility for the conversion of this standard to other formats or for incorrect results or damages resulting from its use.

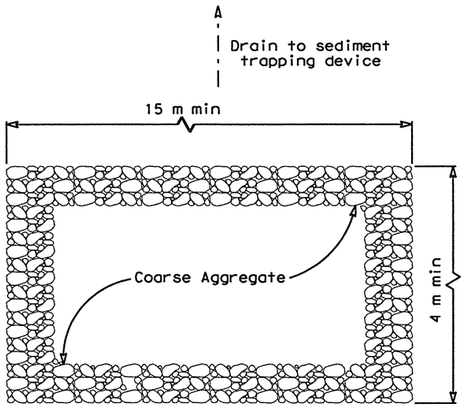


PLAN

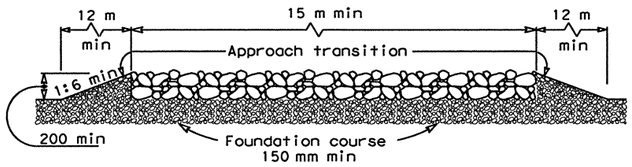


PROFILE

## CONSTRUCTION EXIT (TYPE 1)

### GENERAL NOTES

1. The length of the type 1 construction exit shall be as indicated on the plans, but not less than 15 meters.
2. The coarse aggregate should be open graded with a size of 50 mm to 200 mm.
3. The approach transitions should be no steeper than 1:6 (vertical : horizontal) and constructed as directed by the Engineer.
4. The construction exit foundation course shall be flexible base, bituminous concrete, Portland cement concrete or other material as approved by the Engineer.
5. The construction exit shall be graded to allow drainage to a sediment trapping device.
6. The guidelines shown hereon are suggestions only and may be modified by the Engineer.

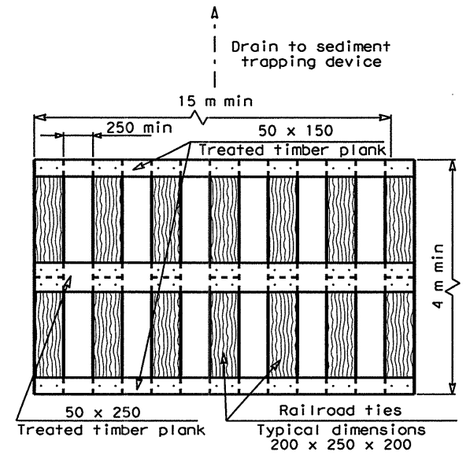


PLAN

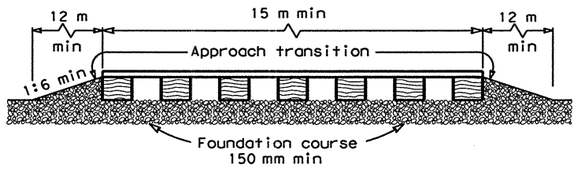


PROFILE

## CONSTRUCTION EXIT (TYPE 2)

### GENERAL NOTES

1. The length of the type 2 construction exit shall be as indicated on the plans, but not less than 15 meters.
2. The treated timber planks shall be attached to the railroad ties with 12.5 mm x 15 mm min. lag bolts. Other fasteners may be used as approved by the Engineer.
3. The treated timber planks shall be #2 grade min., and should be free from large and loose knots.
4. The approach transitions should be no steeper than 1:6 (vertical : horizontal) and constructed as directed by the Engineer.
5. The construction exit foundation course shall be flexible base, bituminous concrete, Portland cement concrete or other material as approved by the Engineer.
6. The construction exit should be graded to allow drainage to a sediment trapping device.
7. The guidelines shown hereon are suggestions only and may be modified by the Engineer.

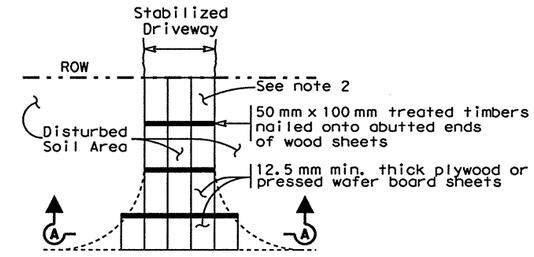


PLAN

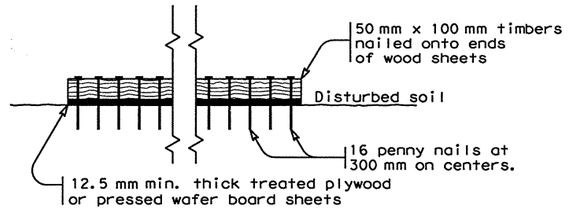


SECTION A-A

## CONSTRUCTION EXIT (TYPE 3)

### GENERAL NOTES

1. The length of the type 3 construction exit shall be as shown on the plans, or as directed by the Engineer.
2. The type 3 construction exit may be constructed from open graded crushed stone with a size of 50 to 100 millimeters spread a min. of 100 mm thick to the limits shown on the plans.
3. The treated timber planks shall be #2 grade min., and should be free from large and loose knots.
4. The guidelines shown hereon are suggestions only and may be modified by the Engineer.

R = Radius
D = Diameter

All unit-less dimensions are millimeters

Texas Department of Transportation
Design Division (Roadway)

# TEMPORARY EROSION, SEDIMENT AND WATER POLLUTION CONTROL MEASURES

## CONSTRUCTION EXITS

## EC(3)-95(M)

| FILE: EC395M.DGN | DN: HEJ | CK: HEJ | DW: BGD | CK: | NEG: | |
|---|---|---|---|---|---|---|
| ©TxDOT 1995 | DIST | FED REG | FEDERAL AID PROJECT # | | | SHEET |
| REVISIONS | SAT | 6 | NH 2000(704),etc. | | | 876 |
| | COUNTY | | CONTROL | SECT | JOB | HIGHWAY |
| | BEXAR | | 2452 | 01 | 036,etc. | LP 1604 |

LEVELS DISPLAYED
1 2 3 4 5 6 7 8 9 10 11 12 13 14 15 16
7 8 19 20 21 22 23 24 25 26 27 28 29 30 31 32
33 34 35 36 37 38 39 40 41 42 43 44 45 46 47 48
49 50 51 52 53 54 55 56 57 58 59 60 61 62 63

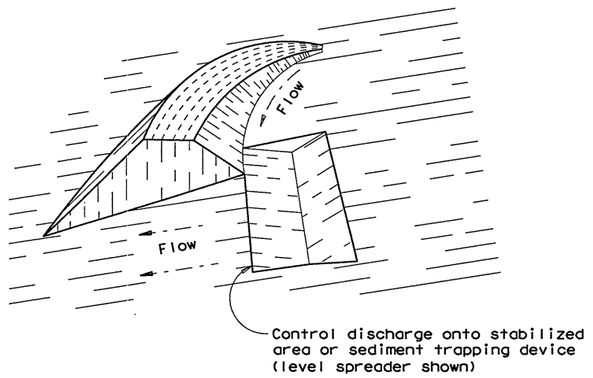


## PERIMETER DIKE

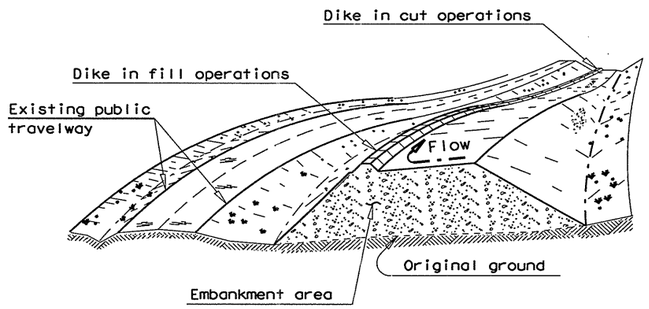


## DIVERSION DIKE

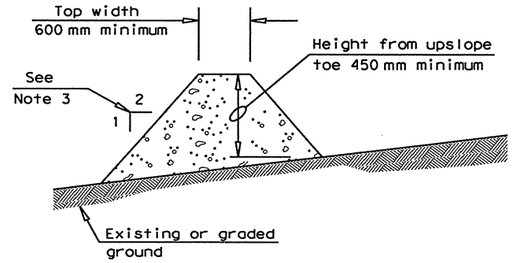


## TYPICAL DIKE CONFIGURATION

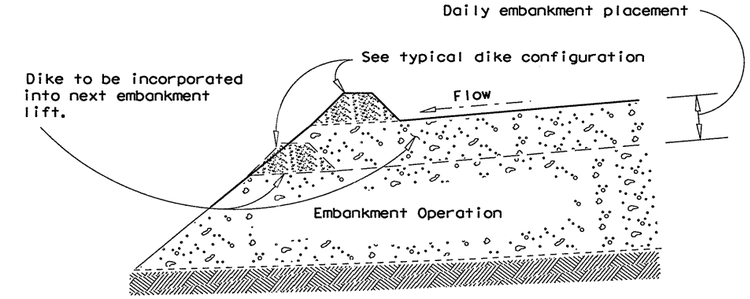


## EMBANKMENT SECTION - DIVERSION DIKE

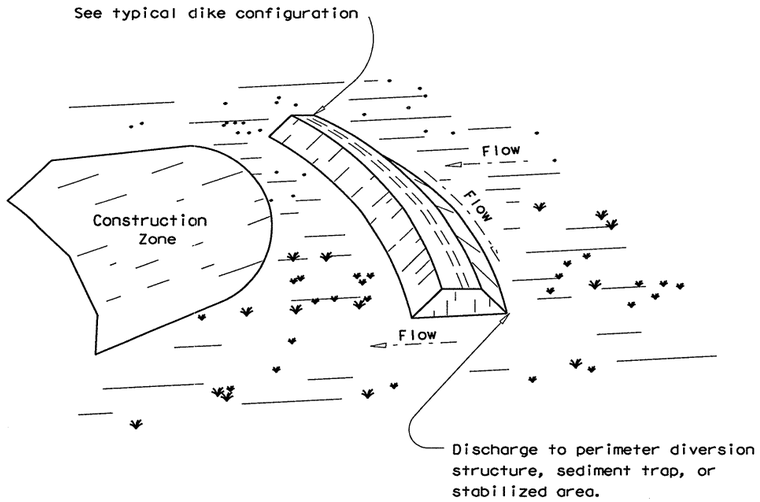


## INTERCEPTOR DIKE

## DIKE USAGE GUIDELINES

A dike may be used to intercept runoff and divert it around unstabilized areas or to divert sediment laden runoff to an erosion control device (sediment basin or trap, rock filter dam, etc.).

The drainage area contributing runoff to a dike should not exceed 2 ha. The spacing of dikes should be as follows:

| Slope of disturbed areas above dike | greater than 10% | 5 - 10% | less than 5% |
|---|---|---|---|
| Maximum distance between dikes | 30 m | 60 m | 90 m |

Intercepted runoff flowing along a dike should outlet to a stabilized area (vegetation, rock, etc.).

## GENERAL NOTES

1. Soil used in dike construction shall be machine compacted.
2. Top width and height of dike may be modified with prior approval of the Engineer.
3. Side slopes within the safety clear zone of a roadway shall be 1:6 (vertical: horizontal) or flatter.
4. Grading shall be shown elsewhere in the plans or as directed by the Engineer.
5. The Engineer reserves the right to modify the dimensions shown for the dike dependent on runoff volume characteristics.
6. Dikes that are in place for more than 14 calendar days should be stabilized to prevent sediment runoff.
7. The guidelines shown hereon are suggestions only and may be modified by the Engineer.

R = Radius
D = Diameter

All unit-less dimensions are millimeters

DISCLAIMER:
The use of this standard is governed by the "Texas Engineering Practice Act". No warranty of any kind is made by TxDOT for any purpose whatsoever. TxDOT assumes no responsibility for the conversion of this standard to other formats or for incorrect results or damages resulting from its use.

LEVELS USED
1 3 4 5 6 7 8 9 10 11 12 13 14 15 16
17 18 19 20 21 22 23 24 25 26 27 28 29 30 31 32
33 34 35 36 37 38 39 40 41 42 43 44 45 46 47 48
49 50 51 52 53 54 55 56 57 58 59 60 61 62 63

Texas Department of Transportation
Design Division (Roadway)

# TEMPORARY EROSION, SEDIMENT AND WATER POLLUTION CONTROL MEASURES
## DIKES
## (EARTHWORK FOR EROSION CONTROL)
## EC(4)-95(M)

| FILE: EC495M.DGN | DN: HEJ | CK: HEJ | DW: BGD | CK: | NEG: | |
|---|---|---|---|---|---|---|
| ©TxDOT 1995 | DIST | FED REG | FEDERAL AID PROJECT # | | | SHEET |
| REVISIONS | SAT | 6 | NH 2000(704), etc. | | | 877 |
| | COUNTY | | CONTROL | SECT | JOB | HIGHWAY |
| | BEXAR | | 2452 | 01 | 036, etc. | LP 1604 |

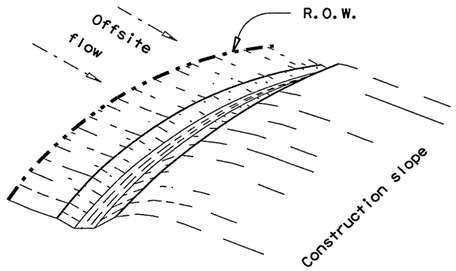


PERIMETER SWALE

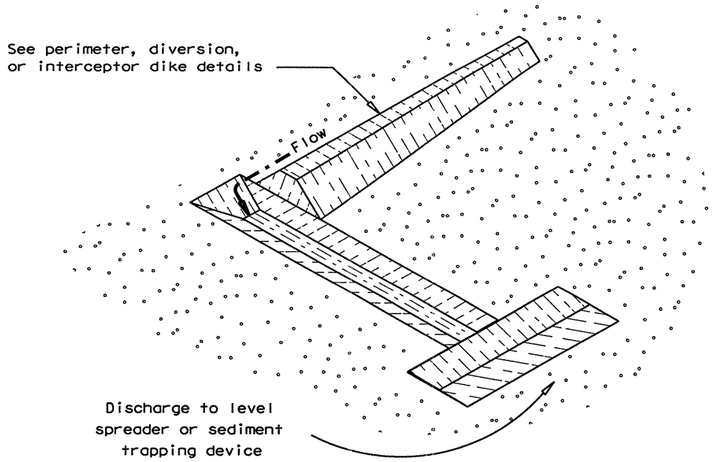


DIVERSION SWALE

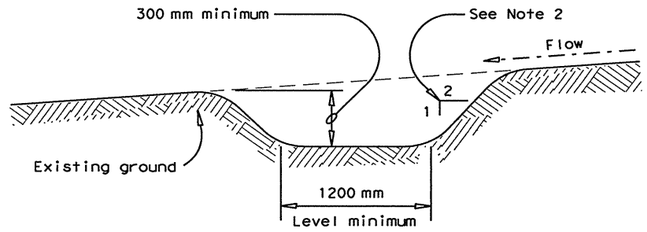


TYPICAL SWALE CONFIGURATION

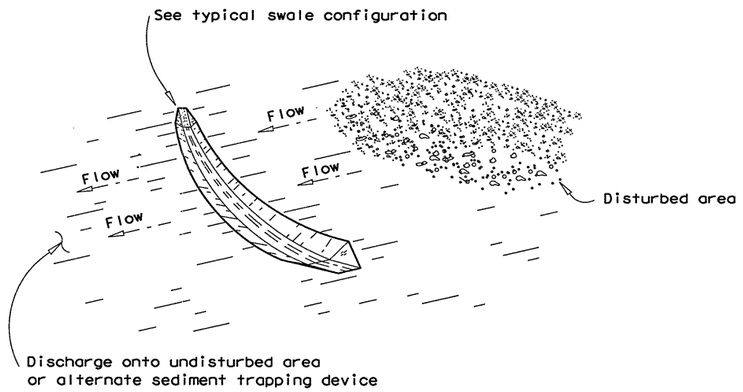


INTERCEPTOR SWALE

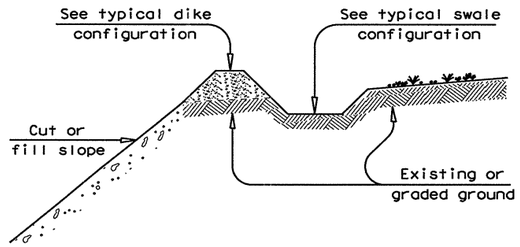


DIVERSION DIKE WITH SWALE

## SWALE AND DIKE/SWALE USAGE GUIDELINES

A swale or dike/swale may be used to intercept runoff and divert it around unstabilized areas or to divert sediment laden runoff to an erosion control device (sediment basin or trap, rock filter dam, etc.).

The drainage area contributing runoff to a swale or dike/swale should not exceed 2 ha. The spacing of swales and dike/swales should be as follows:

| Slope of disturbed areas above dike | greater than 10% | 5 - 10% | less than 5% |
|---|---|---|---|
| Maximum distance between dikes | 30 m | 60 m | 90 m |

Intercepted runoff flowing in a swale or dike/swale should outlet to a stabilized area (vegetation, rock, etc.).

## GENERAL NOTES

1. Dimensions of swale may be modified with prior approval of the Engineer.
2. Side slopes within the safety clear zone of a roadway shall be 1:6 (vertical: horizontal) or flatter.
3. Grading shall be shown elsewhere on the plans or as directed by the Engineer.
4. The Engineer reserves the right to modify the dimensions shown for the swale dependent on runoff volume characteristics.
5. Swales that are in place for more than 14 calender days should be stabilized through seeding or other measures to control sediment runoff.
6. The guidelines shown hereon are suggestions only and may be modified by the Engineer.

R = Radius
D = Diameter

All unit-less dimensions are millimeters

DISCLAIMER:
The Use of this standard is governed by the "Texas Engineering Practice Act". No warranty of any kind is made by TxDOT for any purpose whatsoever. TxDOT assumes no responsibility for errors or omissions in this standard or other formats or for incorrect results or damages resulting from its use.

LEVELS & XREF
1 3 4 5 6 7 8 9 10 11 12 13 14 15 16
17 18 19 20 21 22 23 24 25 26 27 28 29 30 31 32
33 34 35 36 37 38 39 40 41 42 44 45 46 47 48
49 50 51 52 53 54 55 56 57 58 59 60 61 62 63

Texas Department of Transportation
Design Division (Roadway)

# TEMPORARY EROSION, SEDIMENT AND WATER POLLUTION CONTROL MEASURES
## SWALES
## (EARTHWORK FOR EROSION CONTROL)
## EC(5)-95(M)

| FILE: EC595M.DGN | DN: HEJ | CK: HEJ | DW: BGD | CK: | NEG: | |
|---|---|---|---|---|---|---|
| ©TxDOT 1995 | DIST | FED REG | FEDERAL AID PROJECT • | | | SHEET |
| REVISIONS | SAT | 6 | NH 2000(704),etc. | | | 878 |
| | COUNTY | | CONTROL | SECT | JOB | HIGHWAY |
| | BEXAR | | 2452 | 01 | 036,etc. | LP 1604 |

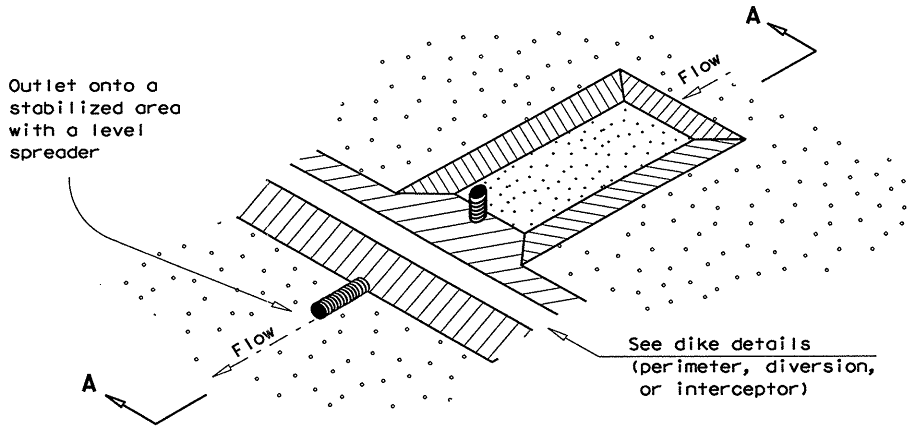


## SEDIMENT BASIN AND/OR TRAP WITH PIPE OUTLET

(ST/PO)

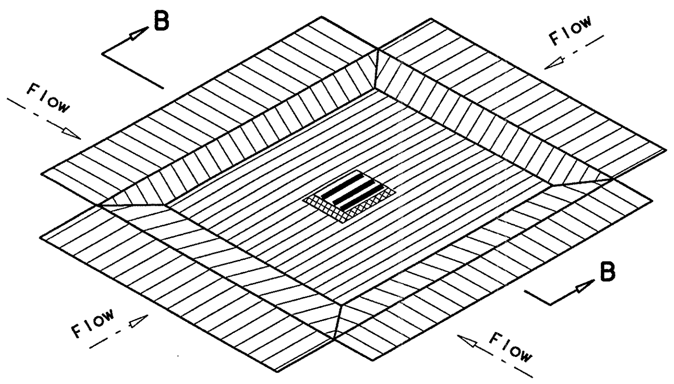


## DROP INLET SEDIMENT TRAP

(ST-DI)

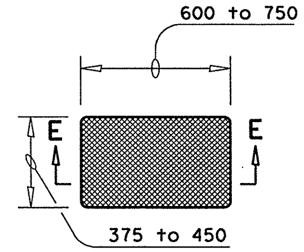


## SANDBAG DETAIL

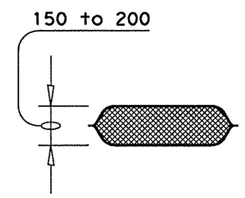


## SECTION E-E

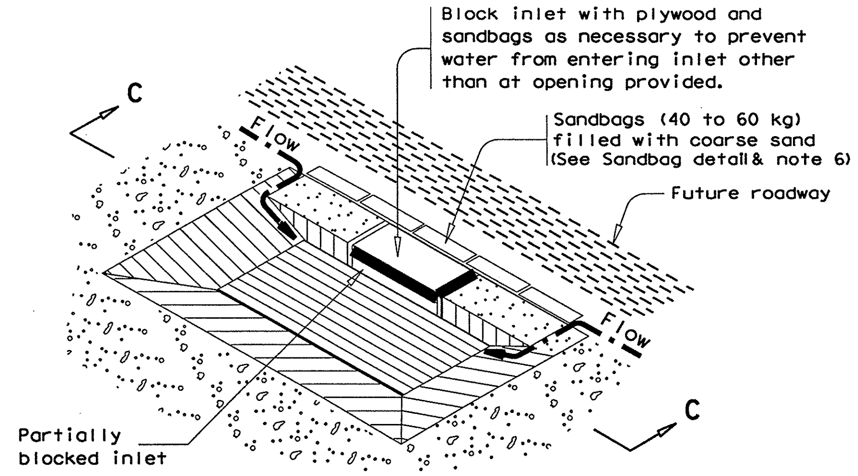


## CURB INLET SEDIMENT TRAP

(ST-CI)

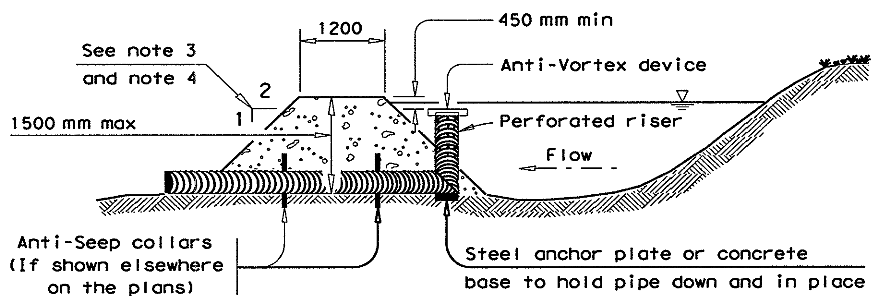


## SECTION A-A

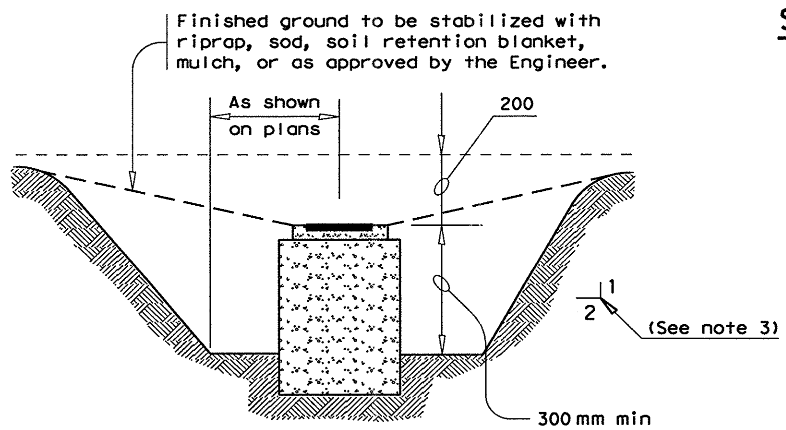


## SECTION B-B

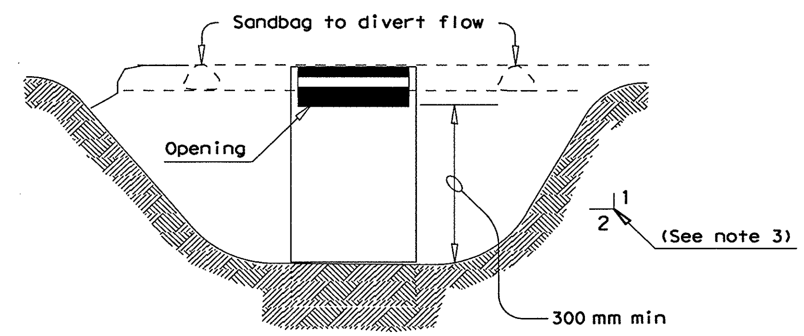


## SECTION C-C

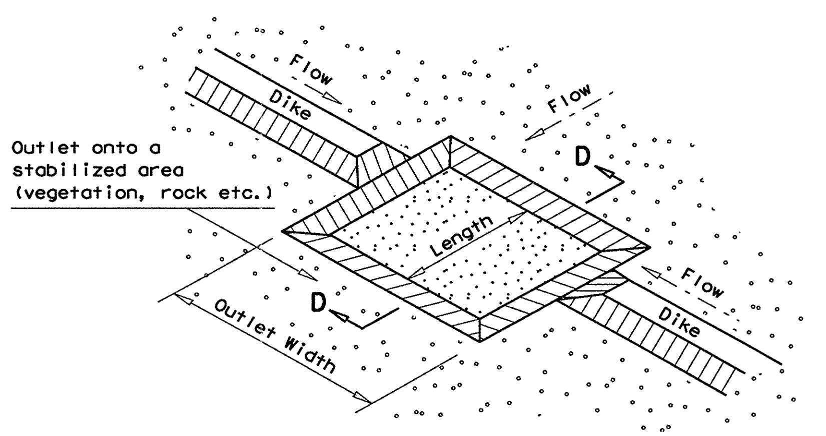


## SEDIMENT TRAP WITH LEVEL STABILIZED OUTLET

(ST)

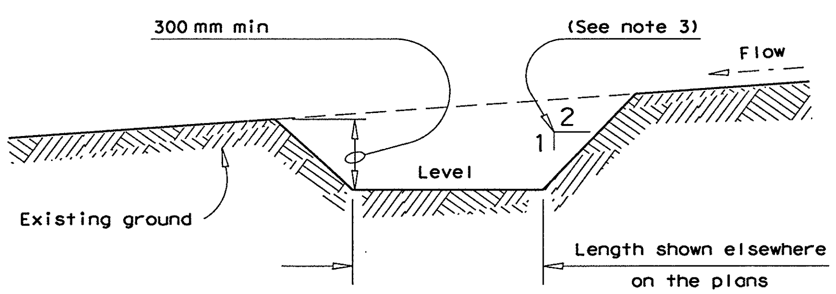


## SECTION D-D

## PLANS SHEET LEGEND

(ST/PO) Sediment Basin and/or Trap with Pipe Outlet

(ST-DI) Drop Inlet Sediment Trap

(ST-CI) Curb Inlet Sediment Trap

(ST) Sediment Trap with Level Stabilized Outlet

## SEDIMENT BASIN & TRAP USAGE GUIDELINES

A sediment basin and/or trap may be used to precipitate sediment out of runoff draining from an unstabilized area.

Basins: The drainage area for a sediment basin should not exceed 40 ha. The basin capacity shall be at least 125 $m^3$/ha of drainage area (13 mm over the drainage area). If the disturbed area draining to the basin is larger than 4 ha, the basin capacity should be 250 $m^3$/ha (25 mm over the drainage area).

The basin should have a 40 hour draw-down time with an emergency spillway. The spillway may be designed to pass the peak rate of runoff from a 25 year frequency storm. The 100 year storm should be investigated to consider possible flooding impacts.

The entrance into the basin should be protected from erosion. The basin should be cleaned when the capacity has been reduced by one-third.

Traps: The drainage area for a sediment trap should not exceed 2 ha. The trap capacity should be 125 $m^3$/ha (13 mm over the drainage area).

Sediment traps should be placed in the following locations:
1. Within drainage ditches spaced at 150 ± meters on center
2. Immediately preceding ditch inlets
3. Just before the drainage enters a water course
4. Just before the drainage leaves the right of way

The trap outlet may either be through a perforated riser and pipe assembly designed to achieve a 40 hour draw-down time or over a level stabilized area (vegetation, rock, etc.).

The trap should be cleaned when the capacity has been reduced by one-half or the sediment has accumulated to a depth of 300 mm, whichever is less.

## GENERAL NOTES

1. Pipe outlet material shall conform to the Item "Pipe Underdrains" or as accepted by the Engineer.
2. All pipe connections shall be watertight.
3. Side slopes within the safety clear zone of a roadway shall be 1:6 (vertical : horizontal) or flatter. Protect the traveling public from inlet stacks within the clear zone.
4. Sediment basins shall have side slopes of 1:3 (vertical: horizontal) or flatter.
5. The dimensions and limits of excavation for sediment basins and traps will be as shown elsewhere on the plans.
6. The sandbag material shall be made of polypropylene, polyethylene or polyamide woven fabric, min. unit weight 125 grams/$m^2$, Mullen burst strength exeeding 2000 kPa and ultraviolet stability exeeding 70%.
7. The guidelines shown hereon are suggestions only and may be modified by the Engineer.

R = Radius
D = Diameter

All unit-less dimensions are millimeters

Texas Department of Transportation
Design Division (Roadway)

# TEMPORARY EROSION, SEDIMENT AND WATER POLLUTION CONTROL MEASURES

## SEDIMENT BASINS AND TRAPS (EARTHWORK FOR EROSION CONTROL)

## EC(6)-95(M)

| FILE: EC695M.DGN | DN: HEJ | CK: HEJ | DW: BGD | CK: | NEG: |
|---|---|---|---|---|---|
| © TxDOT 1995 | DIST | FED REG | FEDERAL AID PROJECT • | | SHEET |
| REVISIONS | SAT | 6 | NH 2000(704), etc. | | 879 |
| | COUNTY | | CONTROL | SECT | JOB | HIGHWAY |
| | BEXAR | | 2452 | 01 | 036, etc. | LP 1604 |


DISCLAIMER:
The use of this standard is governed by the "Texas Engineering Practice Act". No warranty of any kind is made by TxDOT for any purpose whatsoever. TxDOT assumes no responsibility for the conversion of this standard to other formats or for incorrect results or damages resulting from its use.


LEVELS DISPLAYED

| | | | | | | | | | | | | | | | |
|---|---|---|---|---|---|---|---|---|---|---|---|---|---|---|---|
| 1 | | 3 | 4 | 5 | 6 | 7 | 8 | 9 | 10 | 11 | 12 | 13 | 14 | 15 | 16 |
| 17 | 18 | 19 | 20 | 21 | 22 | 23 | 24 | 25 | 26 | 27 | 28 | 29 | 30 | 31 | 32 |
| 33 | 34 | 35 | 36 | 37 | 38 | 39 | 40 | 41 | 42 | 43 | 44 | 45 | 46 | 47 | 48 |
| 49 | 50 | 51 | 52 | 53 | 54 | 55 | 56 | 57 | 58 | 59 | 60 | 61 | 62 | 63 | |

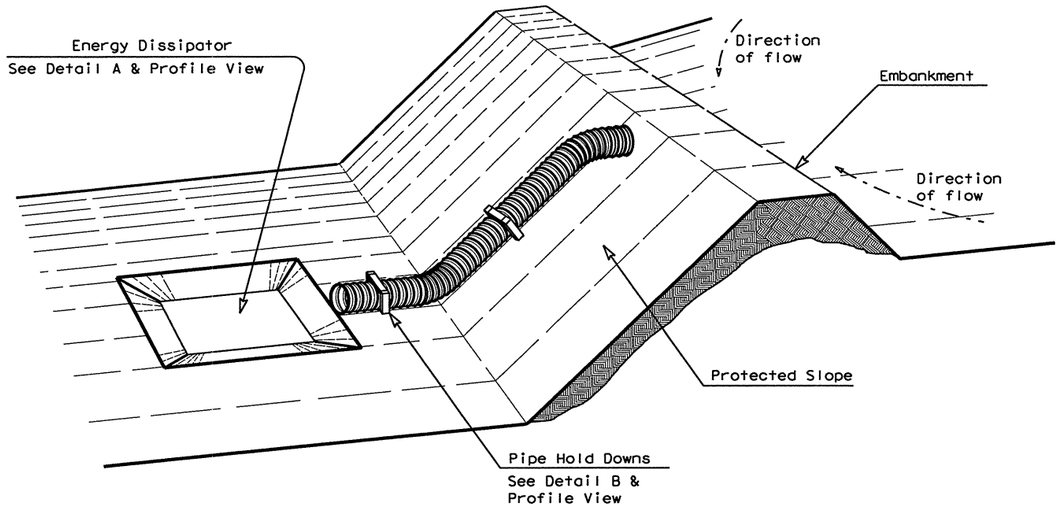


**PERSPECTIVE VIEW**

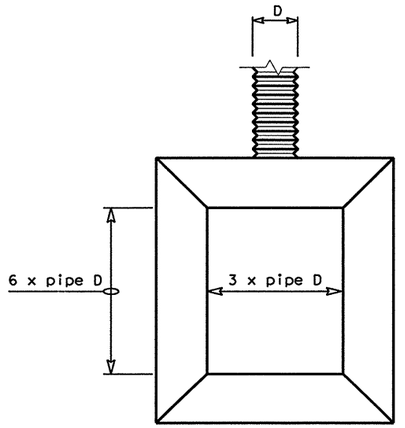


**DETAIL A**
(Plan View)

| Pipe slope drain design criteria | | |
|---|---|---|
| PIPE/TUBING SIZE | DIAMETER | MAXIMUM DRAINAGE AREA |
| PSD 12 | 300 | 0.2 ha |
| PSD 18 | 450 | 0.6 ha |
| PSD 21 | 525 | 1.0 ha |
| PSD 24 | 600 | 1.4 ha |
| PSD 30 | 750 | 2.0 ha |

## GENERAL NOTES

1. The inlet pipe shall have a slope of 3 percent or greater. Pipe diameter shall be as indicated on the construction drawings.
2. The top of embankment shall be at least 300 mm than the top of the inlet pipe at all points.
3. The pipe shall be galvanized corrugated metal pipe, PVC, or flexible tubing with watertight connection bands.
4. Pipe shall be secured with hold-down grommets spaced a maximum of 3000 mm on centers or with pipe hold downs as shown in Detail B.
5. The sediment trap shall be constructed to the dimensions as shown and in accordance with Special Specification. "Earthwork for Erosion Control". As otherwise detailed on the plans, the sediment trap may be stabilized using concrete or rubble riprap as per item,"Riprap".
6. A standard flared entrance section shall be used with the pipe slope drain. See TxDOT standard MH-1 for details.
7. The guidelines shown hereon are suggestions only and may be modified by the Engineer.

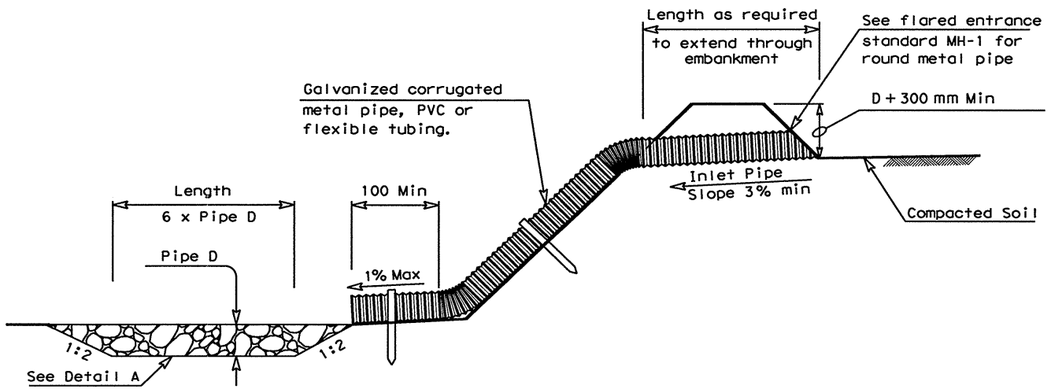


**PROFILE VIEW**

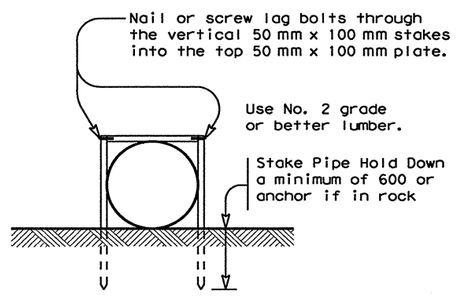


**DETAIL B**
(Elevation View)

# PIPE SLOPE DRAIN WITH ENERGY DISSIPATOR

### PIPE SLOPE DRAIN USAGE GUIDELINES

A Pipe Slope Drain (PSD) should be constructed to drain concentrated surface runoff safely down slopes without causing erosion. The drainage area contributing runoff to a PSD should not exceed 2 ha. The PSD should be sized to drain the peak rate of runoff without over-topping at the earth dike enrtance. A 25 year storm frequency may be used to calculate the flow rate.

R = Radius
D = Diameter

All unit-less dimensions are millimeters

DISCLAIMER:
The use of this standard is governed by the "Texas Engineering Practice Act". No warranty of any kind is made by TxDOT for any purpose whatsoever. TxDOT assumes no responsibility for the conversion of this standard to other formats or for incorrect results or damages resulting from its use.

LEVELS USED
1 3 4 5 6 7 8 9 10 11 12 13 14 15 16
17 18 19 20 21 22 23 24 25 26 27 28 29 30 31 32
33 34 35 36 37 38 39 40 41 42 43 44 45 46 47 48
49 50 51 52 53 54 55 65 75 85 96 06 16 26 63

Texas Department of Transportation
Design Division (Roadway)

# TEMPORARY EROSION, SEDIMENT AND WATER POLLUTION CONTROL MEASURES

## TEMPORARY PIPE SLOPE DRAINS

## EC(7)-95(M)

| FILE: EC795M.DGN | DN: HEJ | CK: HEJ | DW: BGD | CK: | NEG: | |
|---|---|---|---|---|---|---|
| ©TxDOT 1995 | DIST | FED REG | FEDERAL AID PROJECT • | | | SHEET |
| REVISIONS | SAT | 6 | NH 2000(704),etc. | | | 880 |
| | COUNTY | | CONTROL | SECT | JOB | HIGHWAY |
| | BEXAR | | 2452 | 01 | 036,etc. | LP 1604 |

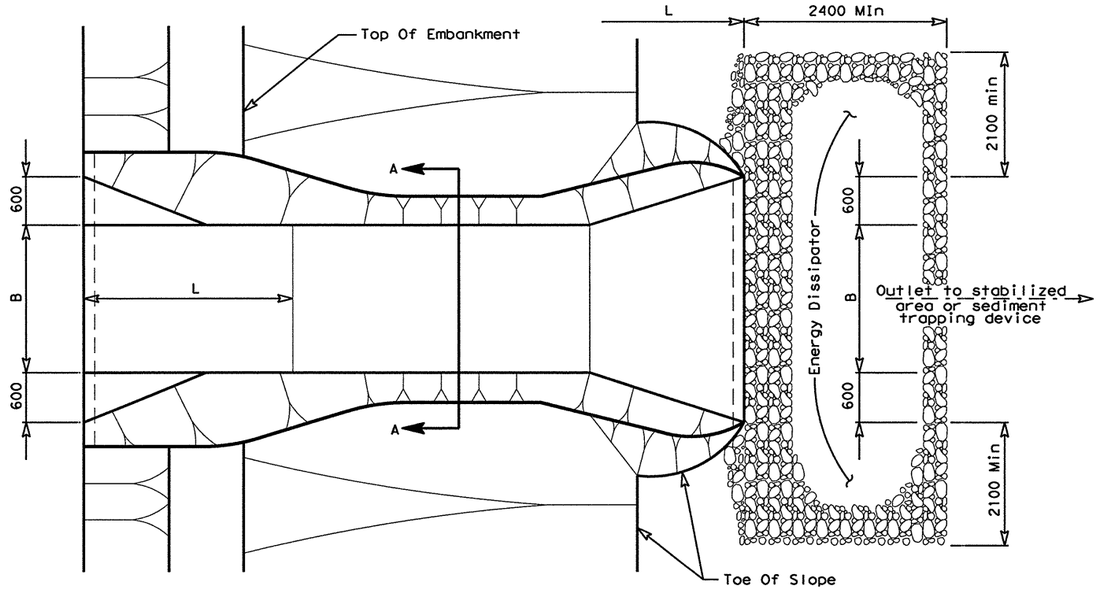


PLAN VIEW

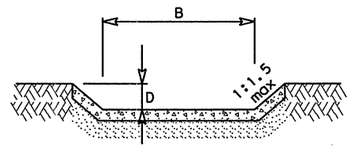


SECTION A-A

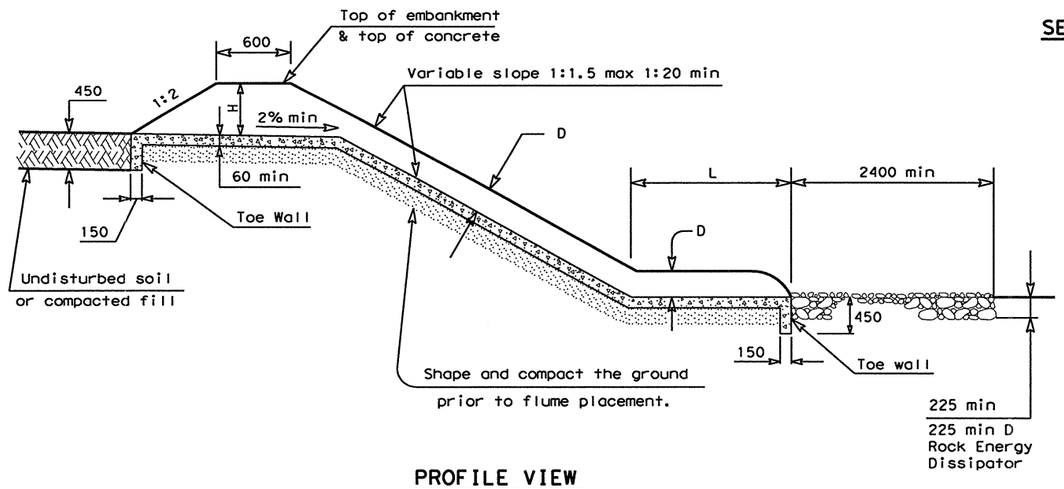


PROFILE VIEW

| DESIGN CRITERIA | | | | | |
|---|---|---|---|---|---|
| Group/ Size | B Bottom Width | H Min | D Min | L Min | Maximum Drainage Area |
| A-2 | 600 | 450 | 200 | 1500 | 2.0 ha |
| A-4 | 1200 | 450 | 200 | 1500 | 3.2 ha |
| A-6 | 1800 | 450 | 200 | 1500 | 4.4 ha |
| A-8 | 2400 | 450 | 200 | 1500 | 5.6 ha |
| A-10 | 3000 | 450 | 200 | 1500 | 7.2 ha |
| B-4 | 1200 | 600 | 250 | 1800 | 5.6 ha |
| B-6 | 1800 | 600 | 250 | 1800 | 8.0 ha |
| B-8 | 2400 | 600 | 250 | 1800 | 10.0 ha |
| B-10 | 3000 | 600 | 250 | 1800 | 12.5 ha |
| B-12 | 3600 | 600 | 250 | 1800 | 14.5 ha |

PAVED FLUME USAGE GUIDELINES

A Paved Flume should be constructed to drain concentrated surface runoff safely down slopes without causing erosion. The drainage area contributing runoff to a paved flume should not exceed that given in the Design Criteria above. The paved flume should be sized to drain the peak rate of runoff without overtopping the embankment at the earth dike entrance. A 25 year storm frequency may be used to calculate the flow rate.

GENERAL NOTES

1. The group/size is a designater for the dimensions of the paved flume. The group/size is designated by a letter (A or B) and the bottom (B) dimension. The appropriate size shall be indicated on the construction plans.
2. For high velocity flows, the aggregate of the energy dissipator should be secured with 20 gauge galvanized woven wire mesh with 25 mm diameter hexagonal openings. The aggegrate should be placed on the mesh to the dimensions specified. The mesh shall be folded at the upstream side over the aggegrate and tightly secured to itself on the downstream side using wire ties or hog rings.
3. The guidelines should hereon are suggestions only and may be modified by the Engineer.

R = Radius
D = Diameter

All unit-less dimensions are millimeters

DISCLAIMER:
The use of this standard is governed by the "Texas Engineering Practice Act". No warranty of any kind is made by TxDOT for any purpose whatsoever. TxDOT assumes no responsibility for the conversion of this standard to other formats or for incorrect results or damages resulting from its use.

Texas Department of Transportation
Design Division (Roadway)

# TEMPORARY EROSION, SEDIMENT AND WATER POLLUTION CONTROL MEASURES

## TEMPORARY PAVED FLUMES

## EC(8)-95(M)

| FILE: EC895M.DGN | DN: HEJ | CK: HEJ | DW: BGD | CK: | NEG: | |
|---|---|---|---|---|---|---|
| ©TxDOT 1995 | DIST | FED REG | FEDERAL AID PROJECT # | | | SHEET |
| REVISIONS | SAT | 6 | NH 2000(704),etc. | | | 881 |
| | COUNTY | | CONTROL | SECT | JOB | HIGHWAY |
| | BEXAR | | 2452 | 01 | 036,etc. | LP 1604 |

LEVELS D... FED
11 13 14 15 16 17 18 19 10 11 12 21 31 41 51 61
17 18 19 20 21 22 23 24 25 26 27 28 29 30 31 32
33 34 35 36 37 38 39 40 41 42 43 44 45 46 47 48
49 50 51 52 53 54 55 56 57 58 59 60 61 62 63

QUANTITIES THIS SHEET
CSJ 2452-01-038

SCALE 1:3000

| ESTIMATED QUANTITIES | | | |
|---|---|---|---|
| ITEM # | ITEM | UNIT | QTY. |
| 192-5281 | CEDAR ELM | EA | 35 |
| 192-5325 | LIVE OAK | EA | 35 |
| 192-5581 | LACEY OAK | EA | 36 |
| 193-5001 | LANDSCAPE MAINTENCE | MO | 4 |
| 193-5003 | VEGETATIVE WATERING | KL | 73 |
| | | | |
| | | | |

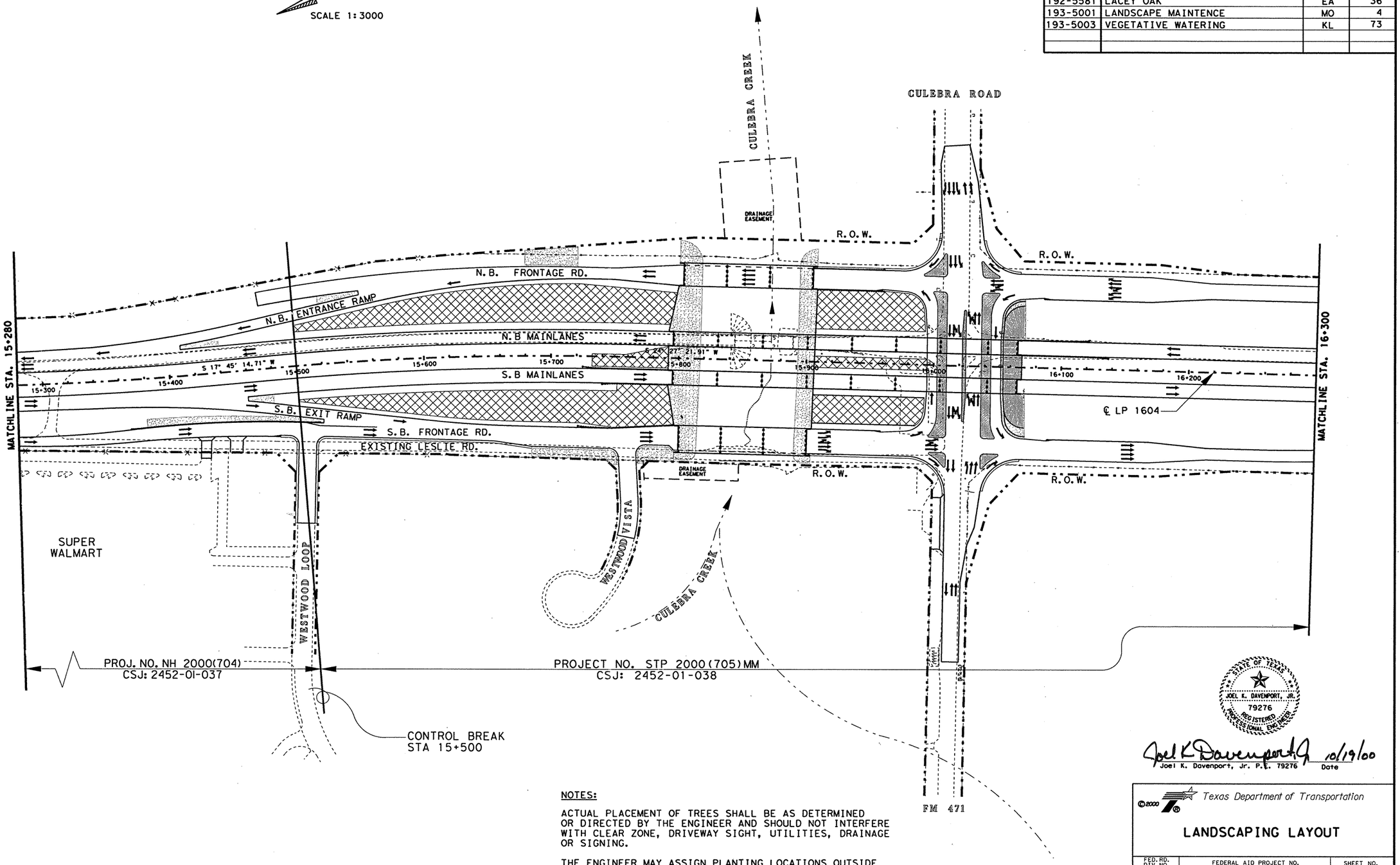


NOTES:

ACTUAL PLACEMENT OF TREES SHALL BE AS DETERMINED OR DIRECTED BY THE ENGINEER AND SHOULD NOT INTERFERE WITH CLEAR ZONE, DRIVEWAY SIGHT, UTILITIES, DRAINAGE OR SIGNING.

THE ENGINEER MAY ASSIGN PLANTING LOCATIONS OUTSIDE OF THOSE AREAS IDENTIFIED HEREON.

POTENTIAL PLANTING AREA

STATE OF TEXAS
JOEL K. DAVENPORT, JR.
79276
REGISTERED
PROFESSIONAL ENGINEER

Joel K Davenport Jr 10/19/00
Joel K. Davenport, Jr. P.E. 79276 Date

©2000 Texas Department of Transportation

# LANDSCAPING LAYOUT

| FED.RD. DIV.NO. | FEDERAL AID PROJECT NO. | | SHEET NO. |
|---|---|---|---|
| 6 | NH 2000(704), etc. | | 881A |
| STATE | DIST. | COUNTY | |
| TEXAS | SAT | BEXAR | |
| CONT. | SECT. | JOB | HIGHWAY NO. |
| 2452 | 01 | 036, etc. | LP 1604 |

lp1604fm471-90\projloy01.dgn

## FERTILIZER SCHEDULE: PLANTING

| TREES | SHRUBS AND PERENNIALS: |
|---|---|
| CNT. NM 5 TREES<br>2 AGRIFORM 21 GRAM TABLETS<br>CNT. NM 15 TREES<br>3 AGRIFORM 21 GRAM TABLETS<br>CNT. NM 30 AND LARGER, 600 MM BOX AND LARGER, AND ALL B&B MATERIAL<br>1 AGRIFORM 21 GRAM TABLET PER EACH 12 MM OF CALIPER | CNT. NM 2 AND SMALLER<br>1 AGRIFORM 21 GRAM TABLET<br>CNT. NM 3 TO 5 AND B&B MATERIAL WITH SPREADS TO ONE (1) METER<br>2 AGRIFORM 21 GRAM TABLETS<br>CNT. NM 15 AND B&B MATERIAL WITH SPREADS GREATER THAN ONE (1) METER<br>3 AGRIFORM 21 GRAM TABLETS |
| SPACE TABLETS EVENLY AROUND ROOT BALL APPROX. 200 MM BELOW GRADE. PLACE NEXT TO BALL. (SEE TREE PLANTING DETAIL)<br>* OR APPROVED EQUAL | SPACE TABLETS EVENLY AROUND ROOT BALL AND PLACE AT A DEPTH APPROX. 1/3 BALL DEPTH NEXT TO BALL. (SEE SHRUB PLANTING' DETAIL)<br>* OR APPROVED EQUAL. |

PLAN VIEW

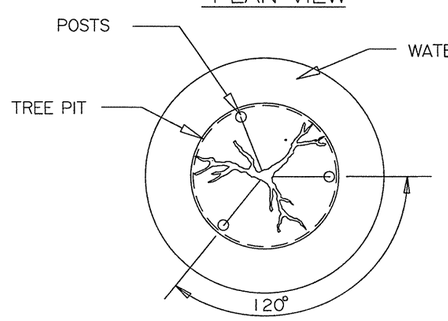


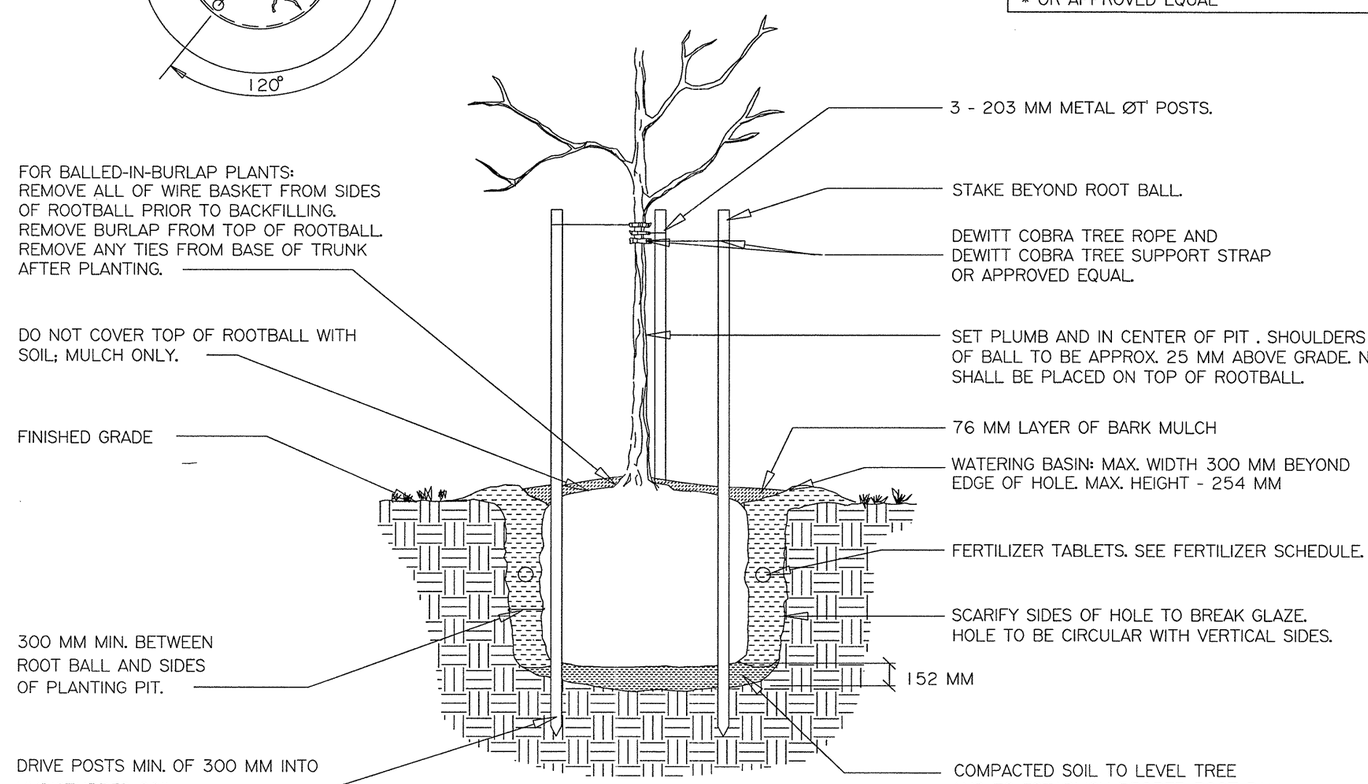


## TREE PLANTING - B&B, BOX, CAN

N.T.S.

STAKING FOR SINGLE TRUNK TREES LESS THAN 76 MM CAL., FOR ALL OTHER SIZES, SEE APPLICABLE DETAILS.

STATE OF TEXAS
JOEL K. DAVENPORT, JR.
79276
REGISTERED PROFESSIONAL ENGINEER

Joel K. Davenport Jr 10/19/00
Joel K. Davenport, Jr., P.E. 79276 Date

FILE $FILE$ LEVEL DISPLAYED 1 2 3 4 5 6 7 8 9 10 11 12 13 14 15 16 17 18 19 20 21 22 23 24 25 26 27 28 29 30 31 32 33 34 35 36 37 38 39 40 41 42 43 44 45 46 47 48 49 50 51 52 53 54 55 56 57 58 59 60 61 62 63 $DATE$

©2000

Texas Department of Transportation

# LANDSCAPING DETAILS

| FED. RD. DIV. NO. | FEDERAL AID PROJECT NO. | | SHEET NO. |
|---|---|---|---|
| 6 | NH 2000(704), etc. | | 881B |
| STATE | DIST. | COUNTY | |
| TEXAS | SAT | BEXAR | |
| CONT. | SECT. | JOB | HIGHWAY NO. |
| 2452 | 01 | 036, ETC | LP 1604 |

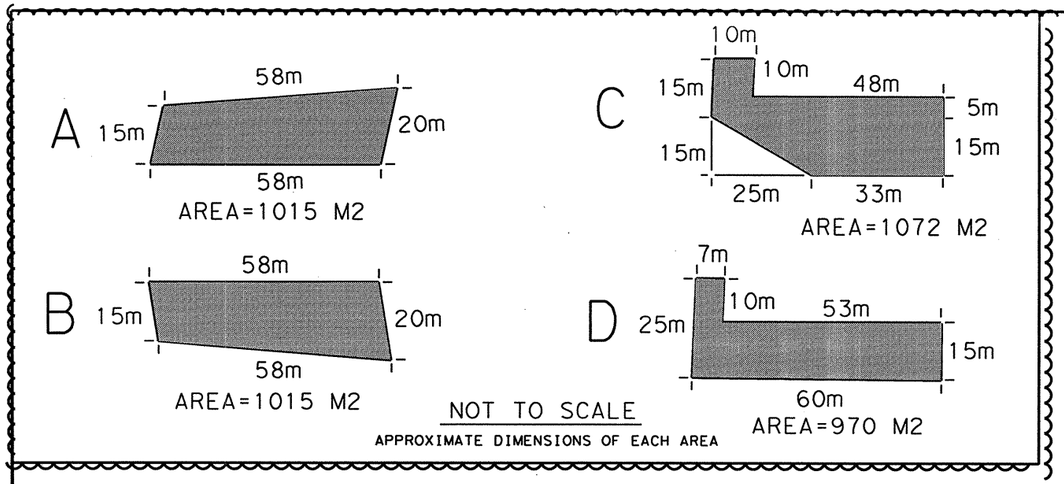


NOT TO SCALE

APPROXIMATE DIMENSIONS OF EACH AREA

QUANTITIES THIS SHEET
CSJ 2452-01-038

SCALE 1:3000

## ESTIMATED QUANTITIES

| ITEM # | ITEM | UNIT | QTY |
|---|---|---|---|
| 170-5001 | IRRIGATION SYSTEM | LS | 1 |
| 192-5281 | CEDAR ELM | EA | 37 |
| 192-5325 | LIVE OAK | EA | 37 |
| 192-5581 | LACEY OAK | EA | 38 |
| 193-5001 | LANDSCAPE MAINTENANCE | MO | 12 |
| 193-5003 | VEGETATIVE WATERING | KL | 73 |
| 193-5004 | IRRIGATION SYS OPER & MAINT | MO | 12 |
| ✱ 644-5001 | SMALL RDSD SGN ASSM (TY A) | EA | 12 |
| ◒ 432-5001 | RIPRAP CONC CL B | M3 | 12 |

✱ SPECIAL SIGNS TO BE PROVIDED BY THE STATE.
◒ RIPRAP APRON DETAILS ARE FOUND ON SHEET 753.

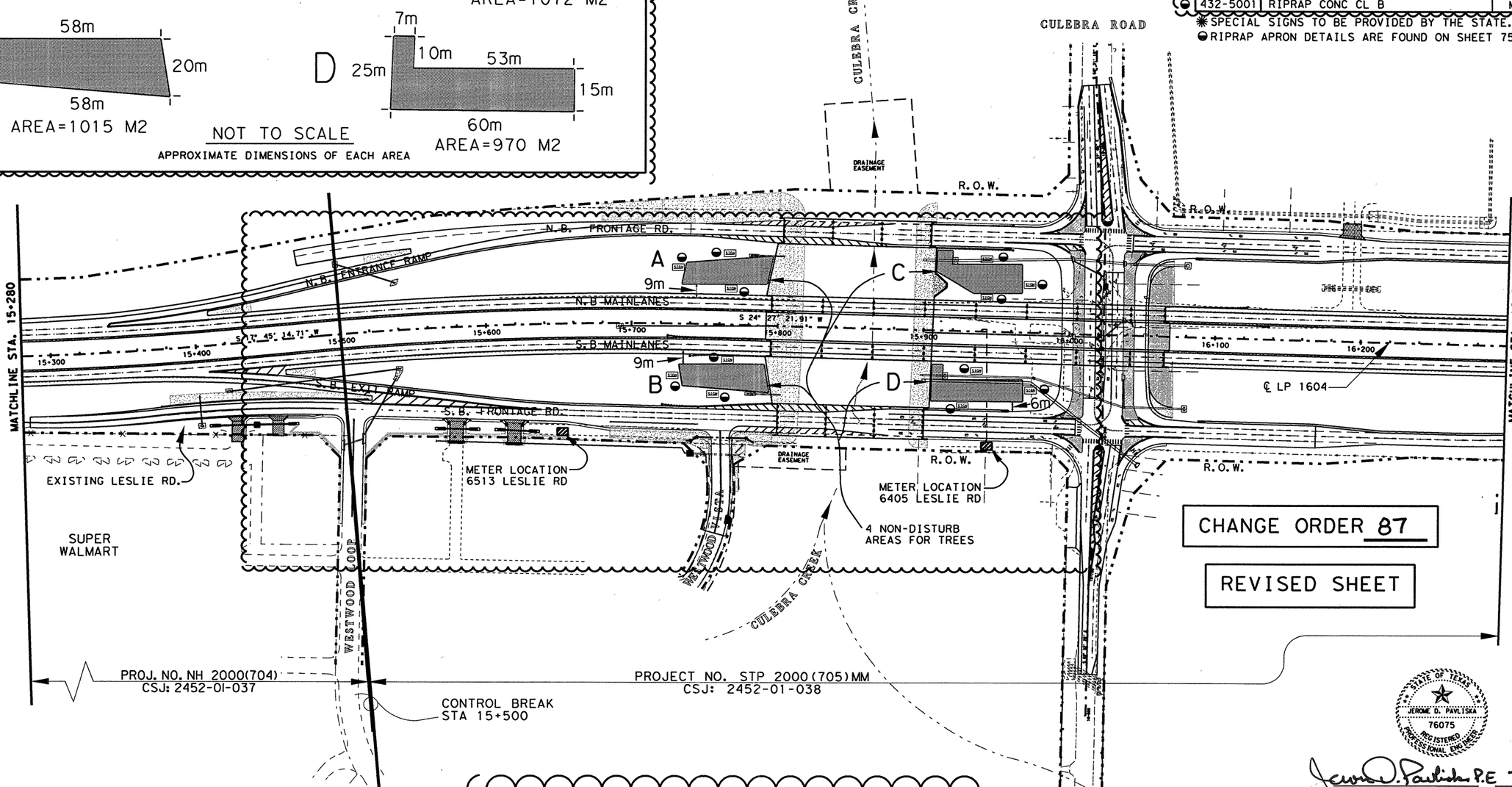


CHANGE ORDER 87

REVISED SHEET

CHANGE ORDER NO. 87

-REDEFINES PLANTING AREAS
-REVISES QUANTITIES
-LOCATION OF METERS

## LEGEND:

THE TREE PLANTING AREA / NO DISTURB AREA WILL HAVE AN IRRIGATION SYSTEM.

SIGN — SPECIAL SIGNS TO BE PROVIDED BY THE STATE AND PLACED BY THE CONTRACTOR.

STATE OF TEXAS
JEROME D. PAVLISKA
76075
REGISTERED PROFESSIONAL ENGINEER

Jerome D. Pavliska P.E. 7-2-04
Jerome D. Pavliska, P.E. — Date

©2004
Texas Department of Transportation

## LANDSCAPING LAYOUT

| FED. RD. DIV. NO. | FEDERAL AID PROJECT NO. | | SHEET NO. |
|---|---|---|---|
| 6 | NH 2000(704), etc. | | 881C |
| STATE | DIST. | COUNTY | |
| TEXAS | SAT | BEXAR | |
| CONT. | SECT. | JOB | HIGHWAY NO. |
| 2452 | 01 | 036, etc. | LP 1604 |

t:\AO\Design\lp1604fm471-90\barrlynn#west\Rev#Culebra#Planting.dgn

NOT TO SCALE



NOTES:

1. TREES SHALL BE PLANTED IN AN ALTERNATING PATTERN IN ORDER TO SIMULATE A NATURAL ENVIRONMENT OR AS DIRECTED BY THE ENGINEER. TREES SHALL NOT INTERFERE WITH CLEAR ZONE, UTILITIES, DRAINAGE OR SIGNING. THERE ARE APPROXIMATELY 28 TREES PER AREA.

2. TYPICAL TREE LAYOUT SPACING FROM CENTER TO CENTER SHALL BE AT LEAST 4.5 M. (SEE DETAIL ON THIS SHEET)

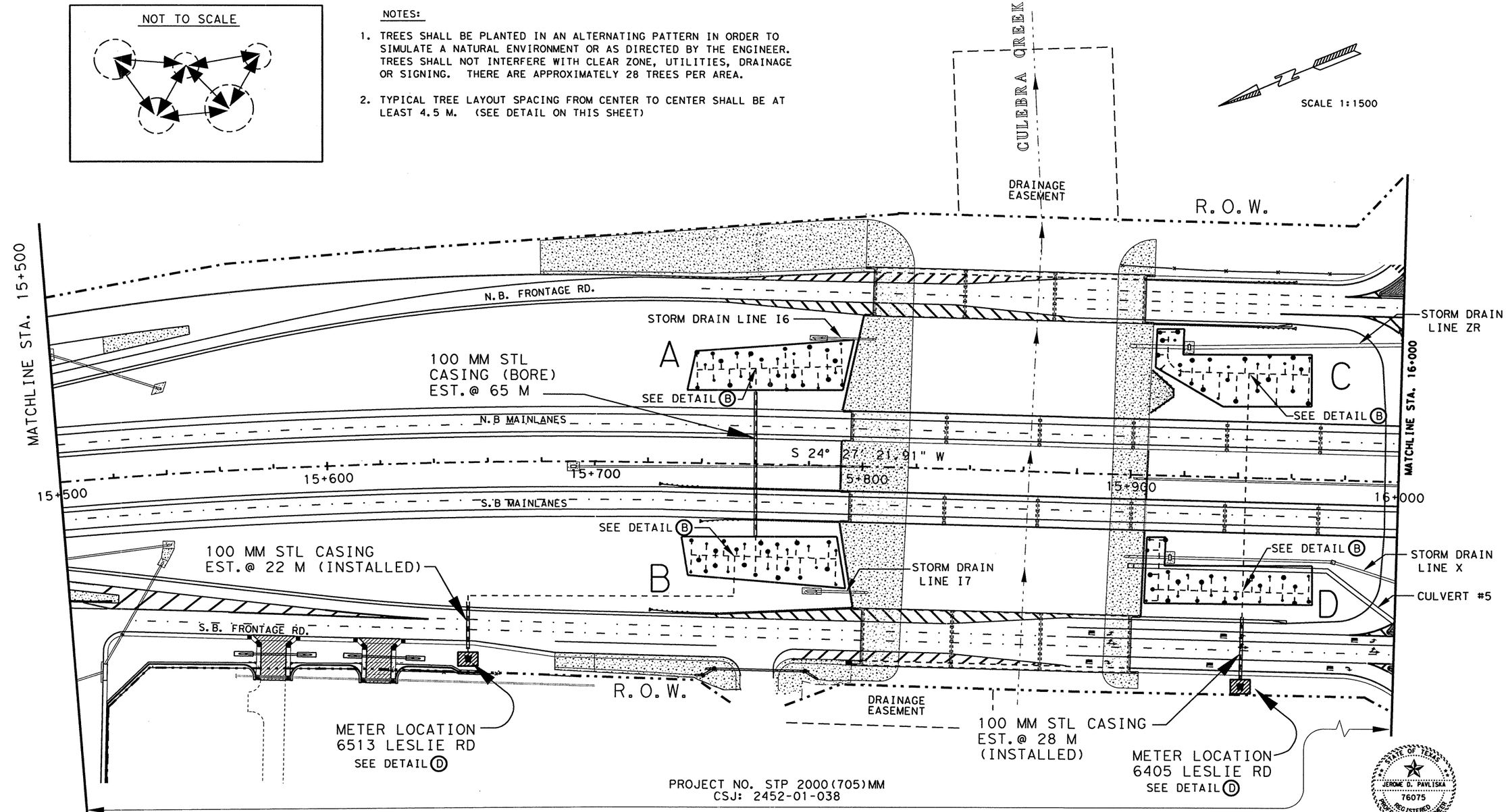


STATE OF TEXAS
JEROME D. PAVLISKA
76075
REGISTERED PROFESSIONAL ENGINEER

Jerome D. Pavliska, P.E. 7-2-04
Jerome D. Pavliska, P.E. Date

CHANGE ORDER NO. 87

- LOCATION OF METERS
- ADDED IRRIGATION SYSTEM

CHANGE ORDER 87

NEW SHEET

©2004 Texas Department of Transportation

## IRRIGATION LAYOUT

| FED. RD. DIV. NO. | FEDERAL AID PROJECT NO. | | SHEET NO. |
|---|---|---|---|
| 6 | NH 2000(704), etc. | | 881 D |
| STATE | DIST. | COUNTY | |
| TEXAS | SAT | BEXAR | |
| CONT. | SECT. | JOB | HIGHWAY NO. |
| 2452 | 01 | 036, etc. | LP 1604 |

t:\Ao\Design\lp1604fm471-90\barrlynn*west\Rev*CulebraPlanting.dgn

1. CONTRACTOR SHALL VERIFY THAT ALL PLANTING MEETS THE FOLLOWING MINIMUM STANDARDS:
   SHRUBS/TREES: 9.0 METERS FROM EDGE OF TRAVELED LANE UNLESS PROTECTED BY A CURB OR OTHER BARRIER.

2. APPLY SOLUTION OF 15-30-15 HIGH SOLUBLE FERTILIZER (EX: RAPID GRO OR MIRACLE GRO OR AS APPROVED BY ENGINEER) ACCORDING TO DIRECTIONS. APPLY 3.8L (1 GAL.) PER 13 MM (1/2") CALIPER OF PLANT TO PLANTING PIT, APPLY NO LESS THAN 3.8L OF FERTILIZER SOLUTION PER TREE.

3. PLANT MATERIAL SHALL BE PLANTED AS TO NOT INTERFERE WITH THE SIGHT LINE OF TRAFFIC, SIGNS, OR LIGHTS. PLANT MATERIAL SHALL NOT IMPEDE EXISTING DRAINAGE OF THE SITE OR REQUIRED CLEAR ZONES, FIELD ADJUSTMENTS MAY BE WITH THE APPROVAL OF THE ENGINEER.

4. SPECIES SHALL BE DISTRIBUTED AMONG THE FOUR PLANTING GROUPS AS TO HAVE APPROXIMATELY EQUAL NUMBERS OF EACH SPECIES DIVIDED AMONG THE FOUR GROUPS (FOR EXAMPLE, 9 CEDAR ELM, 10 LIVE OAK AND 9 LACEY OAK).

5. TREES SHALL BE PLANTED IN AN ALTERNATING PATTERN IN ORDER TO SIMULATE A NATURAL ENVIRONMENT OR AS DIRECTED BY THE ENGINEER. TREES SHALL NOT INTERFERE WITH CLEAR ZONE, UTILITIES, DRAINAGE OR SIGNING. THERE ARE APPROXIMATELY 28 TREES PER AREA FOR A TOTAL OF 112 TREES:
   [37] CEDAR ELM
   [37] LIVE OAK
   [38] LACEY OAK

6. EACH TREE PLANTING AREA/NO DISTURB AREA WILL HAVE AN IRRIGATION SYSTEM.

7. SPECIAL SIGNS TO BE PROVIDED BY THE STATE AND PLACED BY THE CONTRACTOR.

8. TREES SHALL BE PLANTED IN AN ALTERNATING PATTERN IN ORDER TO SIMULATE A NATURAL ENVIRONMENT OR AS DIRECTED BY THE ENGINEER. THERE ARE APPROXIMATELY 28 TREES PER AREA.

9. ITEM 170-5001 IRRIGATION SYSTEM SHOWN ON THE "IRRIGATION LAYOUT" PLAN SHEET IS A GENERAL LAYOUT, THE CONTRACTOR IS RESPONSIBLE FOR LAYING OUT AN IRRIGATION SYSTEM THAT WOULD ALLOW FOR THE REQUIRED TREE LAYOUT SPACING AND REQUIRED WATER RATE, DURING THE ESTABLISHMENT PERIOD FOR THE TREES IN THE DESIGNATED PLANTING AREAS. THE BORE SHALL BE CONSIDERED SUBSIDIARY TO ITEM 170.

10. FOR ADDDITIONAL MITIGATION REQURIED, SEE SHEET(S) 519A.

CHANGE ORDER NO. 87

NEW SHEET

STATE OF TEXAS
JEROME D. PAVLISKA
76075
REGISTERED
PROFESSIONAL ENGINEER

Jerome D. Pavliska, P.E. 7-2-04
Jerome D. Pavliska, P.E. Date

©2004 Texas Department of Transportation

# NOTES FOR LANDSCAPING AND IRRIGATION LAYOUTS

| FED. RD. DIV. NO. | PROJECT NO. | | SHEET NO. |
|---|---|---|---|
| 6 | NH 2000(704), ETC. | | 881 E |
| STATE | DIST. | COUNTY | |
| TEXAS | SAT | BEXAR | |
| CONT. | SECT. | JOB | HIGHWAY NO. |
| 2452 | 01 | 036, ETC. | LP 1604 |

LEVELS DISPLAYED
1 2 3 4 5 6 7 8 9 10 11 12 13 14 15 16
17 18 19 20 21 22 23 24 25 26 27 28 29 30 31 32
33 34 35 36 37 38 39 40 41 42 43 44 45 46 47 48
49 50 51 52 53 54 55 56 57

FILE: T:/Ao/Design/lp1604fm471-90/barrlyn*west/Landscape.dgn

NOTES:

1. LOCATION SHOWN FOR NEW TAPS, METERS AND CONTROLLERS ARE APPROXIMATE AND MAY BE ADJUSTED AT THE SITE WITH APPROVAL OF THE ENGINEER AND RECORDED ON THE AS-BUILT DRAWING.
2. QUICK-COUPLING VALVES SHALL BE LOCATED IN SEPARATE BOXES FROM SECTION VALVES.
3. THERE ARE ABOVE GROUND AND UNDERGROUND UTILITIES IN THE AREA. THE CONTRACTOR SHALL VERIFY THE LOCATIONS OF ALL UTILITIES WITH THE CONTROLLING AUTHORITIES PRIOR TO ANY EVCAVATION.
4. DRIPLINE TUBING SHALL BE 0.3 M EMITTER SPACING.
5. THE IRRIGATION SYSTEM SHALL BE OPERABLE UP TO THE QUICK-COUPLING VALVES BEFORE ANY PLANTS MAY BE DELIVERED TO THE SITE.
6. DRIP IRRIGATION SHALL BE INSTALLED THE SAME DAY AS PLANT MATERIAL.
7. SEE DETAIL 'G' ON IRRIGATION DETAIL SHEET FOR SECTION VALVE
8. SEE DETAIL 'I' ON IRRIGATION DETAIL SHEET FOR QUICK-COUPLING VALVE
9. EACH SECTION SHALL INCLUDE THE SECTION VALVE ASSEMBLY AS SHOWN IN DETAIL 'C' THIS SHEET
10. ALL VALVES, QUICK-COUPLERS, ETC. IN BOXES SHALL BE MARKED WITH A PERMANENT MARKER SUCH AS A T-POST. THE POST SHALL BE INSTALLED CONCURRENTLY WITH THE BOX. ALL BOXES SHALL BE LOCATED A MINIMUM OF 2 M INSIDE THE PERIMETER OF THE PLANTING AREA.

## IRRIGATION MATERIALS SPECIFICATIONS

| DESCRIPTION | EXAMPLE OR EQUAL | SIZE |
|---|---|---|
| DRIPLINE TUBING | RAINBIRD LD-06-12-100 | 2.3 L/H EMITTER (0.6 GPM) |
| WYE FILTER | RAINBIRD RBY-075-200MX | 75 MICRONS (200 MESH) |
| PRESSURE REGULATOR | PSI-L30X-075 | 19 mm ( 3/4" ) |
| QUICK COUPLING VALVE | RAINBIRD 33 DRC | 13 mm ( 1/2" ) |
| SECTION VALVE | RAINBIRD PEB-PRS-B SERIES | 19 mm ( 3/4" ) |
| CONTROLLER | NELSON 8015 SERIES | |
| METER | | 25mm (1") |
| BALL VALVE | RAINBIRD XBV-075 | 19 mm ( 3/4" ) |
| BACKFLOW PREVENTOR | DGDC | 25mm (1") |

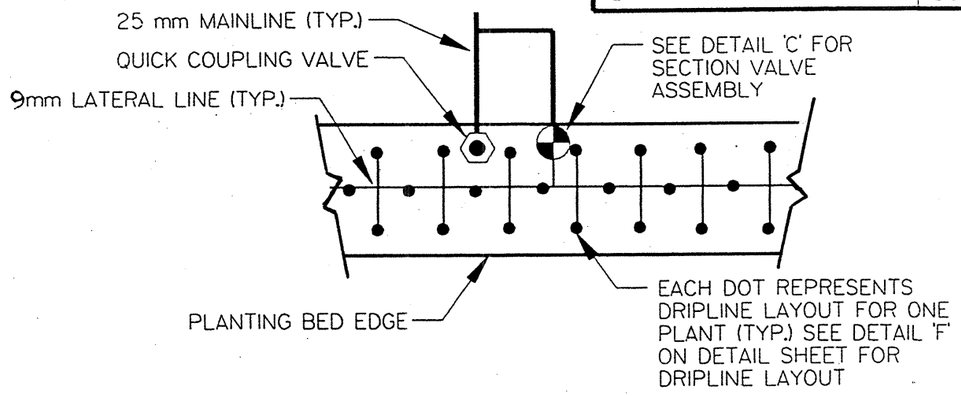


## (B) DRIP EMITTER LAYOUT (TYP.)

NTS

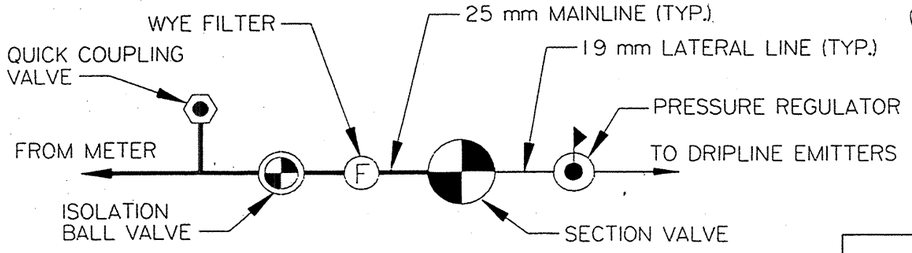


## (C) SECTION VALVE ASSEMBLY (TYP.)

NTS

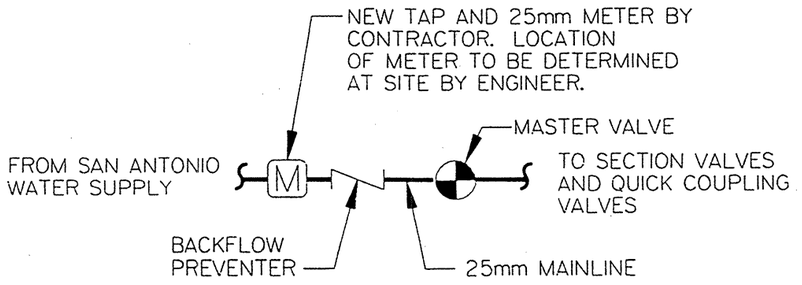


## (D) METER/MASTER VALVE ASSEMBLY (TYP)

NTS

N. T. S.

CHANGE ORDER NO. 87

NEW SHEET

STATE OF TEXAS
JEROME D. PAVLISKA
76075
REGISTERED PROFESSIONAL ENGINEER

Jerome D. Pavliska, P.E 7-2-04
Jerome D. Pavliska, P.E. Date

©2004 Texas Department of Transportation

# NOTES AND DETAILS FOR IRRIGATION LAYOUT

| FED. RD. DIV. NO. | PROJECT NO. | | SHEET NO. |
|---|---|---|---|
| 6 | NH 2000(704), ETC. | | 881 F |
| STATE | DIST. | COUNTY | |
| TEXAS | SAT | BEXAR | |
| CONT. | SECT. | JOB | HIGHWAY NO. |
| 2452 | 01 | 036, ETC. | LP 1604 |

07-01-04

LEVELS DISPLAYED
1 2 3 4 5 6 7 8 9 10 11 12 13 14 15 16
17 18 19 20 21 22 23 24 25 26 27 28 29 30 31 32
33 34 55 56 57 58 59 60 41 42 43 44 45 46 47 48
49 50 51 52 53 54 55 56 57

FILE: T:/Ao/Design/lp1604fm471-90/barrlyn*west/Landscape.dgn

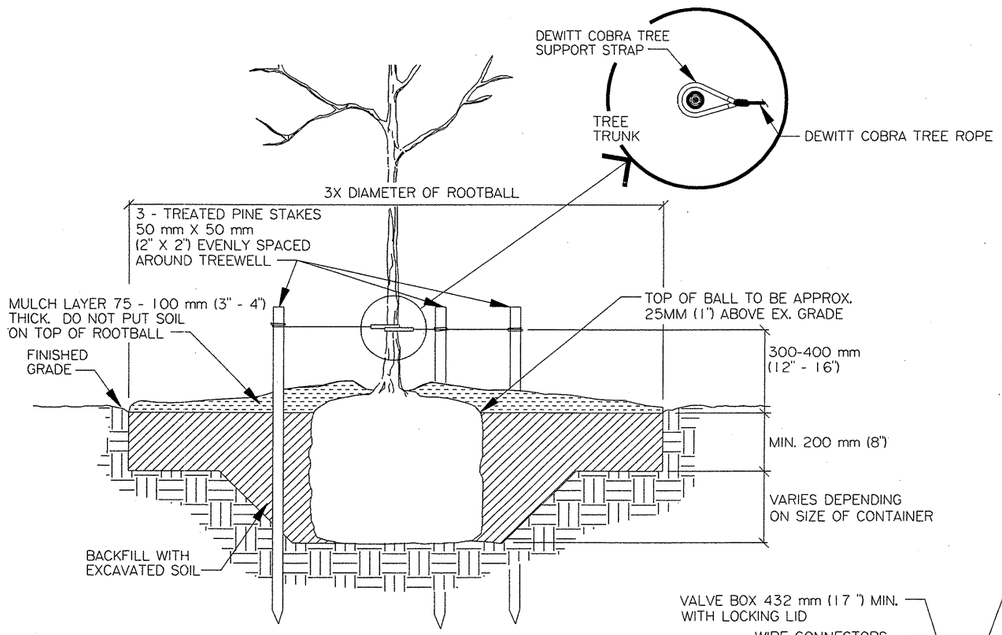


## E TREE PLANTING AND STAKING

NTS

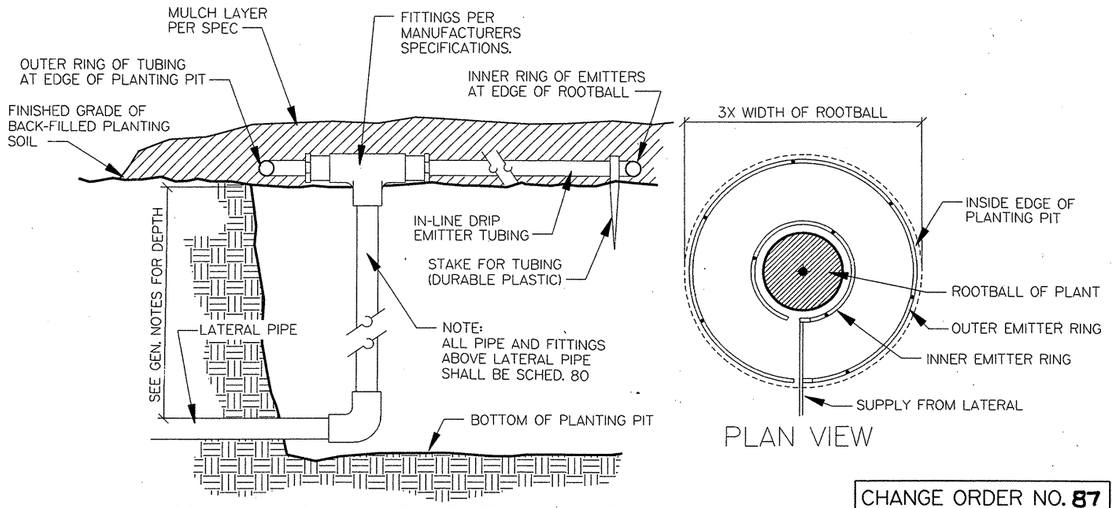


## F INSTALLATION OF DRIP TUBING AT TREES

NTS

CHANGE ORDER NO. 87

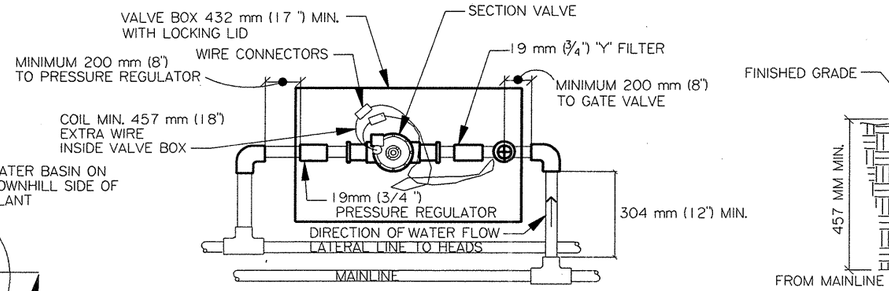


NOTE: SEE PLAN SHEETS FOR PIPE AND VALVE SIZES.

## G PLAN OF PIPING TO SECTION VALVE

NTS

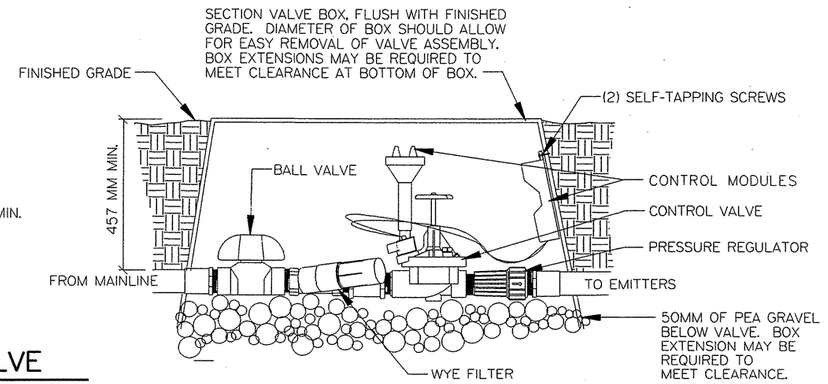


NOTE: VALVES ASSEMBLY SHALL BE LOCATED WITHIN THE DESIGNATED PLANTING BED AREA AS APPROVED BY THE ENGINEER.

NOTE: BANK/GROUP VALVES AS SHOWN ON PLANS AND DETAIL, WIRE DISTANCE FOR CONTROLLERS SHALL NOT EXCEED MANUFACTURERS REQUIREMENTS.

## J REMOTE CONTROL VALVE ASSEMBLY

NTS

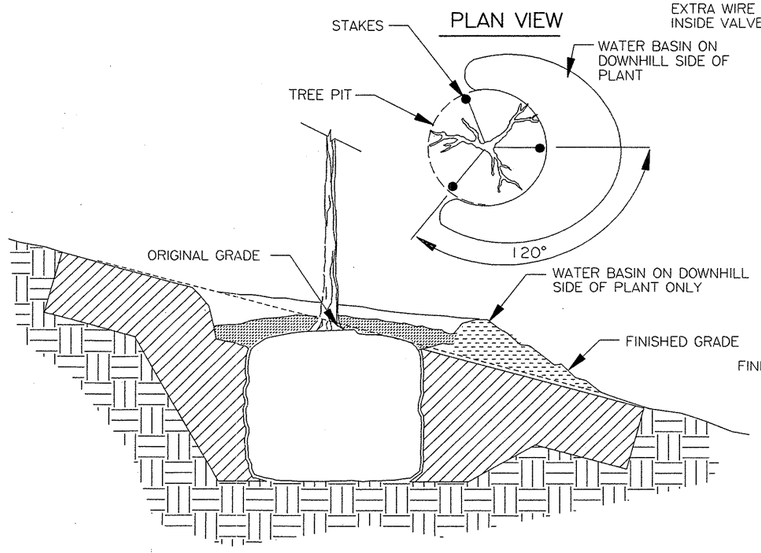


NOTE;

FOR PLANTING INSTRUCTIONS, STAKING, GUYING AND/OR BRACING, SEE APPLICABLE DETAILS AND SPECIFICATIONS.

## H PLANT PIT ON SLOPE

NTS

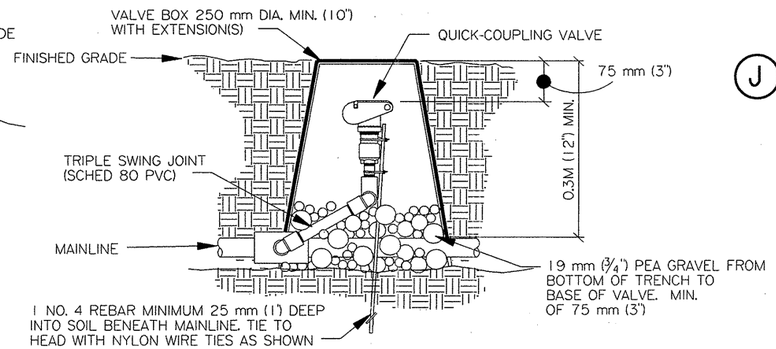


## I QUICK-COUPLING VALVE

NTS

CHANGE ORDER NO. 87

-NEW DETAILS
-NEW SHEET

STATE OF TEXAS
MICHAEL A. TEAL
1955
REGISTERED LANDSCAPE ARCHITECT

# PLANTING AND IRRIGATION DETAILS

TEXAS TRANSPORTATION INSTITUTE

ENVIRONMENTAL MANAGEMENT PROGRAM

TEXAS A&M UNIVERSITY

TEXAS DEPARTMENT OF TRANSPORTATION

## LANDSCAPE DEVELOPMENT

| DGN | | FED. RD. DIV. RD. | STATE | PROJECT NO. | | | HIGHWAY |
|---|---|---|---|---|---|---|---|
| REF | | 6 | TX | NH 2000(704),etc. | | | LP 1604 |
| DATE | | DISTRICT | COUNTY | CONTROL | SECT | JOB | SHEET |
| PLOT SCALE: | | SAT | BEXAR | 2452 | 01 | 036,etc. | 881G |

# F.M. LOOP 1604 - CULEBRA TO U.S. HWY. 90
# WATER MAIN ADJUSTMENTS
## SAWS JOB NO. 00-5023

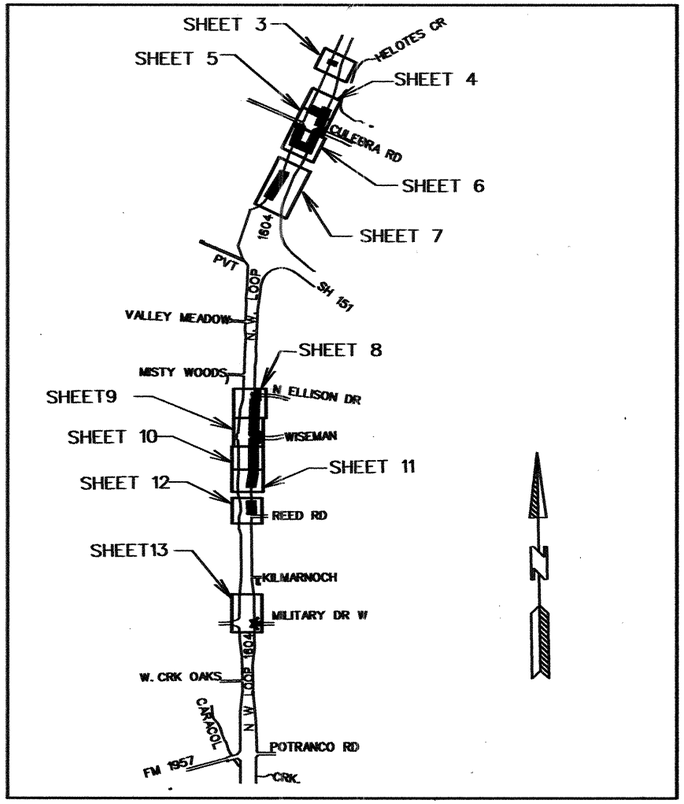


LOCATION MAP

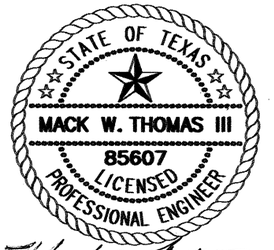


9/25/00

LEGEND

| | |
|---|---|
| PROP. WATER MAIN | |
| EXIST. WATER MAIN | —o—6"C.I.W.— |
| GAS MAIN | —2"G— |
| SANITARY SEWER | —8"SS— |
| PROP SAN SEWER | —8"SS— |
| STORM SEWER | —24"ST— |
| UTILITY POLE LINE | |
| ELECTRIC CABLE | —E— |
| TELEPHONE CABLE | —T— |
| SERVICE RECONNECT: | |
| 3/4" | |
| 1" OR LARGER | |
| SERVICE RELAY: | |
| 3/4" | |
| 1" OR LARGER | |
| RELOCATE METER | ▷ |
| NEW SERVICE: | |

**FM LOOP 1604**

**CULEBRA RD. TO U.S. HWY. 90**

**S.A.W.S. JOB NO. 00-5023**

GENERAL NOTES

1. ALL MATERIALS AND CONSTRUCTION PROCEDURES WITHIN THE SCOPE OF THIS CONTRACT SHALL BE APPROVED BY THE SAN ANTONIO WATER SYSTEM (SAWS) AND COMPLY WITH THE FOLLOWING AS APPLICABLE:
   - A. CURRENT TXDOT "STANDARD SPECIFICATIONS FOR CONSTRUCTION OF HIGHWAYS, STREETS AND DRAINAGE."
   - B. CURRENT "SAN ANTONIO WATER SYSTEM STANDARD SPECIFICATIONS FOR CONSTRUCTION."
   - C. CURRENT CITY OF SAN ANTONIO STANDARD SPECIFICATIONS FOR PUBLIC WORKS CONSTRUCTION."
2. THE CONTRACTOR IS TO NOTIFY AND MAKE ARRANGEMENTS WITH THE SAWS CONSTRUCTION INSPECTION DIVISION AT 704-7121, AND INVOLVED HOME RESIDENT AND/OR PROPERTY OWNERS 48 HOURS PRIOR TO EXCAVATION.
3. THE CONTRACTOR SHALL AVOID CUTTING ROOTS LARGER THAN ONE INCH IN DIAMETER WHEN EXCAVATING NEAR EXISTING TREES. EXCAVATION IN VICINITY OF TREES SHALL PROCEED WITH CAUTION. THE CONTRACTOR SHALL CONTACT THE CITY ARBORIST AT 207-8053 FOR GUIDANCE. SAWS CONSTRUCTION INSPECTOR SHALL ALSO BE NOTIFIED.
4. THE LOCATION AND DEPTH OF EXISTING UTILITIES, INCLUDING SERVICE LINES, SHOWN IN THESE PLANS ARE APPROXIMATE ONLY. IT SHALL BE THE CONTRACTOR'S RESPONSIBILITY TO LOCATE UTILITY SERVICE LINES 48 HOURS PRIOR TO EXCAVATION AND TO PROTECT THE SAME DURING CONSTRUCTION.

| | |
|---|---|
| SAN ANTONIO WATER SYSTEM | 704-7107/7109 |
| COSA DRAINAGE | 207-8048 |
| COSA TRAFFIC SIGNAL OPERATIONS | 207-7720 |
| TEXAS STATE WIDE ONE CALL LOCATOR | 1-800-545-6005 |

5. THE CONTRACTOR SHALL BE RESPONSIBLE FOR RESTORING TO ITS ORIGINAL OR BETTER CONDITION FROM DAMAGES DONE TO EXISTING FENCES, CURBS, STREETS, DRIVEWAYS, SIDEWALKS, LANDSCAPING AND STRUCTURES.
6. A MINIMUM OF TWO (2) FEET OF COVER IS TO BE MAINTAINED OVER THE SERVICE LINES AT SUBGRADE.
7. ALL ELEVATIONS FOR SAN ANTONIO WATER SYSTEM FACILITY ADJUSTMENTS SHALL BE REFERENCED FROM BENCH MARKS ESTABLISHED FOR THIS PROJECT BY TXDOT AT 615-5892.

SHEET 1 OF 19

Texas Department of Transportation

| FED.RD. DIV.NO. | FEDERAL AID PROJECT NO. | | SHEET NO. |
|---|---|---|---|
| 6 | NH 2000(704),ETC. | | 881 |
| STATE | DIST. | COUNTY | |
| TEXAS | SAT | BEXAR | |
| CONT. | SECT. | JOB | HIGHWAY NO. |
| 2452 | 01 | 036,ETC | LP. 1604 |

# SUMMARY OF QUANTITIES

| ITEM | DESCRIPTION | UNITS | SHT.NO.3 | SHT.NO.4 | SHT.NO.5 | SHT.NO.6 | SHT.No.7 | SHT.NO.8 | SHT.NO.9 | SHT.NO.10 | SHT.NO.11 | SHT.NO.12 | SHT.NO.13 | TOTAL |
|---|---|---|---|---|---|---|---|---|---|---|---|---|---|---|
| 0500-5001 | MOBILIZATION | LS | | | | | | | | | | | | 1 |
| 5324-5004 | ADJUST EXIST VALVE BOX | EA | | 1 | | | | 5 | | | | | | 6 |
| 5324-5006 | TRENCH EXCAVATION PROTECTION | M | 75.3 | 275.6 | 323.1 | 385.4 | 265.2 | 252 | 336.7 | 240 | 174.4 | 169.3 | 109.7 | 2,606.7 |
| 5324-5010 | PIPE WTR MAIN (DI) (400mm) | M | | | | | | 252 | 336.7 | 240 | 174.4 | 169.3 | 103.6 | 1,276.0 |
| 5324-5011 | PIPE WTR MAIN (DI) (600mm) | M | | 104 | 130.6 | 276.1 | 265.2 | | | | | | | 775.9 |
| 5324-5015 | GATE VALVE AND BOX (400mm) | EA | | | | | | | 3 | 1 | | 1 | 2 | 7 |
| 5324-5018 | TIE-IN (MAIN) (300mm) | EA | | | | | | | | | | | 1 | 1 |
| 5324-5019 | TIE-IN (MAIN) (600mm) | EA | | 1 | 1 | 1 | 2 | | | | | | | 5 |
| 5324-5020 | STD FIRE HYDRANT W/150mm VALVE & BOX | EA | | | 2 | | | | 1 | 1 | | 1 | 1 | 6 |
| 5324-5023 | TEMP BLOW-OFF (50mm) | EA | | | | | | | | | 1 | | | 1 |
| 5324-5024 | PERM BLOW-OFF (50mm) | EA | | | | | | | | | | | 1 | 1 |
| 5324-5027 | CUT & REPL ASPH PAV W/150mm ASPH TRT B | m2 | 20.6 | | 26.7 | | | | 14.2 | 3.3 | | | 18.7 | 83.5 |
| 5324-5028 | RELAY SHRT SERV (19mm) | EA | | | | | | | | | | 1 | | 1 |
| 5324-5038 | DUCTILE IRON FITTINGS | KG | 5,416 | 15,231.8 | 17,871.8 | 8,231 | 1,995.8 | 1,397 | 3,120.7 | 336.1 | 1,633 | 1,560.8 | 2,209.5 | 59,003.5 |
| 5324-5039 | HYDROSTATIC PRESSURE TEST | EA | 1 | 2 | 1 | | 1 | | | | 1 | 1 | 1 | 8 |
| 5324-5051 | GATE VALVE AND BOX (300mm) | EA | | | | | | | | | | | 1 | 1 |
| 5324-5053 | AUTOMATIC AIR RELEASE VALVE (25mm) | EA | | | | | | 1 | | 1 | | | | 2 |
| 5324-5054 | TIE-IN (MAIN) (400mm) | EA | | | | | | 1 | 1 | | | 2 | 1 | 5 |
| 5324-5056 | CUT AND REPLACE CONC SDWLK, DRWY, ETC | m2 | .52 | | | | | | .52 | | | | .52 | 1.56 |
| 5324-5058 | PIPE WATER MAIN (DI) (500mm) | M | | | 4.9 | | | | | | | | | 4.9 |
| 5324-5059 | TIE-IN (MAIN) (500mm) | EA | | | 1 | | | | | | | | | 1 |
| 5324-5061 | AUTOMATIC AIR RELEASE VALVE (50mm) | EA | 1 | 1 | | | | | | | | | | 2 |
| 5324-5062 | FLOWABLE BACKFILL | m3 | | 239 | 29 | 167.6 | | | | | | | 13.7 | 449.3 |
| 5324-5063 | BUTTERFLY VALVE AND BOX (500mm) | EA | | | 1 | | | | | | | | | 1 |
| 5324-5074 | TEMP BLOW-OFF (100mm) | EA | 1 | 2 | 1 | | 1 | | | | | | | 5 |
| 5324-5083 | BUTTERFLY VALVE AND BOX (600mm) | EA | | | | 2 | | | | | | | | 2 |
| 5324-5127 | PIPE WTR MAIN (DI) (300mm) | M | | | | | | | | | | | 6.1 | 6.1 |
| 5324-XXXX | BUTTERFLY VALVE AND BOX (925mm) | EA | 1 | 2 | 1 | | | | | | | | | 4 |
| 5324-XXXX | PIPE WTR MAIN (DI) (925mm) | M | 75.3 | 188.8 | 187.6 | 126.9 | | | | | | | | 578.60 |
| 5324-XXXX | PIPE STL CASING (1375mm I D) (OPEN CUT) | M | | 136.7 | 32.9 | | | | | | | | | 169.6 |
| 5324-XXXX | TIE-IN (MAIN) (925mm) | EA | 2 | 1 | | 1 | | | | | | | | 4 |
| 5324-XXXX | PIPE STL CASING (1075mm I D) (OPEN CUT) | M | | | | 126.5 | | | | | | | | 126.5 |
| 5324-XXXX | JACK OR BORE CASING (STL) (1375mm) | M | | 17.2 | | | | | | | | | | 17.2 |
| 5324-XXXX | JACK OR BORE CASING (STL) (1075mm) | M | | | | 17.7 | | | | | | | | 17.7 |

Void

STATE OF TEXAS
MACK W. THOMAS III
85607
LICENSED
PROFESSIONAL ENGINEER

9/25/00



**FM LOOP 1604**

**CULEBRA RD. TO U.S. HWY. 90**

**S.A.W.S. JOB NO. 00-5023**

Texas Department of Transportation

| FED.RD. DIV.NO. | FEDERAL AID PROJECT NO. | | SHEET NO. |
|---|---|---|---|
| 6 | NH 2000(704),ETC. | | 883 |
| STATE | DIST. | COUNTY | |
| TEXAS | SAT | BEXAR | |
| CONT. | SECT. | JOB | HIGHWAY NO. |
| 2452 | 01 | 036,ETC | LP 1604 |

# SUMMARY OF CHANGES

| ITEM | DESCRIPTION | UNITS | CSJ 2452-01-038 QUANTITIES | | | | | | | | | | | | | | | CSJ 2452-01-037 QUANTITIES | | | | | | | CSJ 2452-01-036 QUANTITIES | | | | |
|---|---|---|---|---|---|---|---|---|---|---|---|---|---|---|---|---|---|---|---|---|---|---|---|---|---|---|---|---|---|
| | | | SHT.NO.3 | 5. REVISED SHT. NO.3A | SHT.NO.4 | 1. REVISED SHT.NO.4A | 17. REVISED SHT.NO.4B | SHT.NO.5 | 1. SHT.NO.5A | 17. REVISED SHT.NO.5B | SHT.NO.6 | 1. REVISED SHT.NO.6A | NEW SHT.NO.15 | NEW SHT.NO.16 | SHT.No.7 | SHT.No.7A | TOTAL | SHT.NO.8 | SHT.NO.9 | SHT.NO.10 | SHT.NO.11 | SHT.NO.12 | TOTAL | SHT.NO.13 | 1. NEW SHT.NO.14 | TOTAL | PROJECT TOTALS (ORIGINAL) | REVISED PROJECT TOTALS |
| 0500-5001 | MOBILIZATION | LS | | | | | | | | | | | | | | | | | | | | | | | | 1 | |
| 5324-5004 | ADJUST EXIST VALVE BOX | EA | | | 1 | | | | | | | | 2 | | | | 3 | 5 | | | | | 5 | | | | ~~8~~ | (8) |
| 5324-5006 | TRENCH EXCAVATION PROTECTION | M | ~~75.3~~ | (103) | 275.6 | | | ~~328.1~~ | | (369.9) | ~~385.4~~ | (307) | 144 | 217.4 | ~~265.2~~ | (262) | 1,678.9 | 252 | 336.7 | 240 | 174.4 | 169.3 | 1,172.4 | 109.7 | 177.2 | 286.90 | ~~2,506.7~~ | (3,138.2) |
| 5324-5010 | PIPE WTR MAIN (DI) (400mm) | M | | | | | | | | | | | | | | | | 252 | 336.7 | 240 | 174.4 | 169.3 | 1,172.4 | 103.6 | | 103.6 | 1,276.0 | |
| 5324-5011 | PIPE WTR MAIN (DI) (600mm) | M | | | 104 | | | ~~130.6~~ | | (153.7) | ~~276.1~~ | (260.4) | 152.6 | 217.4 | ~~265.2~~ | (262) | 1,150.1 | | | | | | | | | | ~~775.9~~ | (1,150.1) |
| 5324-5015 | GATE VALVE AND BOX (400mm) | EA | | | | | | | | | | | | | | | | | 3 | 1 | | 1 | 5 | 2 | | 2 | | |
| 5324-5018 | TIE-IN (MAIN) (300mm) | EA | | (1) | | | | | | | | | | | | | 1 | | | | | | | 1 | 2 | 3 | ~~1~~ | (4) |
| 5324-5019 | TIE-IN (MAIN) (600mm) | EA | | | 1 | | | ~~1~~ | | (2) | 1 | | | 1 | ~~2~~ | (1) | 6 | | | | | | | | | | ~~3~~ | (6) |
| 5324-5020 | STD FIRE HYDRANT W/150mm VALVE & BOX | EA | | | | | | 2 | | | | | | | | (1) | 3 | | 1 | 1 | | 1 | 3 | 1 | | 1 | ~~6~~ | (7) |
| 5324-5023 | TEMP BLOW-OFF (50mm) | EA | | (1) | | | | | | | | | | | | | 1 | | | | 1 | | 1 | | 1 | 1 | ~~1~~ | (3) |
| 5324-5024 | PERM BLOW-OFF (50mm) | EA | | | | | | | | | | | | | | | | | | | | | | 1 | | 1 | | |
| 5324-5027 | CUT&REPL ASPH PAV W/150mm ASPHTRT B | m2 | ~~20.6~~ | (39.4) | | | | ~~28.7~~ | | (48.7) | | | 12 | | | | 100.1 | | 14.2 | 3.3 | | | 17.5 | 18.7 | | 18.7 | ~~83.5~~ | (136.3) |
| 5324-5028 | RELAY SHRT SERV (19mm) | EA | | | | | | | | | | | | | | | | | | | | 1 | 1 | | | 1 | | |
| 5324-5038 | DUCTILE IRON FITTINGS | KG | ~~5,416~~ | (11,884.3) | 15,231.8 | | | ~~17,871.8~~ | (21,848.3) | (28,244.1) | 8,231 | | 2,258.9 | 1,895.6 | ~~1,905.8~~ | (1,395.2) | 69,140.9 | 1,397 | 3,120.7 | 336.1 | 1,633 | 1,560.8 | 8,047.6 | 2,209.5 | 1,090.9 | 3,300.4 | ~~59,003.5~~ | (80,488.9) |
| 5324-5039 | HYDROSTATIC PRESSURE TEST | EA | ~~1~~ | (2) | 2 | | | ~~1~~ | | (2) | | | 1 | | 1 | | 8 | | | | 1 | 1 | 2 | 1 | 1 | 2 | ~~8~~ | (12) |
| 5324-5049 | JACK OR BOR CASING (STL) (600mmm) | M | | | | | | | | | | | | | | | | | | | | | | | 22.3 | 22.3 | | (22.3) |
| 5324-5051 | GATE VALVE AND BOX (300mm) | EA | | (1) | | | | | | | | | | | | | 1 | | | | | | | 1 | 4 | 5 | ~~1~~ | (6) |
| 5324-5053 | AUTOMATIC AIR RELEASE VALVE (25mm) | EA | | | | | | | | | | | | | | | | 1 | | 1 | | | 2 | | | | 2 | |
| 5324-5054 | TIE-IN (MAIN) (400mm) | EA | | | | | | | | | | | | | | | | 1 | 1 | | | 2 | 4 | 1 | | 1 | 5 | |
| 5324-5056 | CUT AND REPLACE CONC SDWLK, DRWY, ETC | m2 | ~~52~~ | (.77) | | | | | | | | | | | | | .77 | | .52 | | | | .52 | .52 | | .52 | ~~1.56~~ | (1.81) |
| 5324-5058 | PIPE WATER MAIN (DI) (500mm) | M | | | | | | 5 | | | | | 5.43 | | | | 10.43 | | | | | | | | | | ~~4.8~~ | (10.43) |
| 5324-5059 | TIE-IN (MAIN) (500mm) | EA | | | | | | ~~1~~ | (~~1~~) | (0) | | | | | | | 0 | | | | | | | | | | ~~1~~ | (0) |
| 5324-5061 | AUTOMATIC AIR RELEASE VALVE (50mm) | EA | 1 | | 1 | | | | | | | | | | | | 2 | | | | | | | | | | 2 | |
| 5324-5062 | FLOWABLE BACKFILL | m3 | | | 239 | | | 29 | | (74) | 167.7 | | 110 | | | | 619.7 | | | | | | | 13.7 | 8.7 | 22.4 | ~~419.3~~ | (642.1) |
| 5324-5063 | BUTTERFLY VALVE AND BOX (500mm) | EA | | | | | | ~~1~~ | (~~1~~) | (0) | | | | | | | 0 | | | | | | | | | | ~~1~~ | (0) |
| 5324-5074 | TEMP BLOW-OFF (100mm) | EA | 1 | | ~~2~~ | | (1) | ~~1~~ | | (2) | | (2) | 1 | | 1 | | 8 | | | | | | | | | | ~~5~~ | (8) |
| 5324-5080 | PIPE STL CASING (600mm ID) (OPEN-CUT) | M | | | | | | | | | | | | | | | | | | | | | | | 123.8 | 123.8 | | (123.8) |
| 5324-5083 | BUTTERFLY VALVE AND BOX (600mm) | EA | | | | (1) | | | (~~1~~) | (3) | ~~2~~ | (3) | | 2 | | | 9 | | | | | | | | | | ~~2~~ | (9) |
| 5324-5127 | PIPE WTR MAIN (DI) (300mm) | M | | (28.3) | | | | | | (11) | | | | | | | 39.3 | | | | | | | 6.1 | 199.5 | 205.6 | ~~6.1~~ | (244.9) |
| 5324-XXXX | BUTTERFLY VALVE AND BOX (925mm) | EA | 1 | | 2 | | | ~~1~~ | | (2) | | (1) | | | | | 6 | | | | | | | | | | ~~1~~ | (6) |
| 5324-XXXX | PIPE WTR MAIN (DI) (925mm) | M | ~~75.3~~ | (74.7) | ~~188.8~~ | | (193.8) | ~~187.6~~ | | (240.2) | ~~126.9~~ | (64.3) | | | | | 573 | | | | | | | | | | ~~578.60~~ | (573) |
| 5324-XXXX | PIPE STL CASING (1375mm I D) (OPEN CUT) | M | | | 136.7 | | | ~~32.9~~ | | | | | | | | | 136.7 | | | | | | | | | | ~~159.6~~ | (136.7) |
| 5324-XXXX | TIE-IN (MAIN) (925mm) | EA | 2 | | 1 | | | | | | 1 | | | | | | 4 | | | | | | | | | | 4 | |
| 5324-XXXX | PIPE STL CASING (1075mm I D) (OPEN CUT) | M | | | | | | | | (14.1) | ~~126.5~~ | (133.2) | 128 | | | | 275.3 | | | | | | | | | | ~~126.5~~ | (275.3) |
| 5324-XXXX | JACK OR BORE CASING (STL) (1375mm) | M | | | 17.2 | | | | (32.9) | | | | | | | | 50.1 | | | | | | | | | | ~~17.2~~ | (50.1) |
| 5324-XXXX | JACK OR BORE CASING (STL) (1075mm) | M | | | | | | | | | 17.7 | | 14 | | | | 31.7 | | | | | | | | | | ~~17.7~~ | (31.7) |
| 5324-XXXX | TAP SLEEV, VALV & BOX (925mm X 600mm) | EA | | | | | | | | | | | 1 | | | | 1 | | | | | | | | | | | (1) |
| 5324-XXXX | TAP SLEEV, VALV & BOX (600mm X 500mm) | EA | | | | | | | | | | | 1 | | | | 1 | | | | | | | | | | | (1) |

TAP Sleev, Value & Box (500 X 300mm) EA

(1)

(1)

⚠# CHANGE ORDER # 7 REVISIONS

- REVISED QUANTITIES ASSOCIATED WITH CHANGE ORDER.

STATE OF TEXAS
MACK W. THOMAS III
85607
LICENSED
PROFESSIONAL ENGINEER

Mack W. Thomas
9/24/01

CO#7 E

SHEET 2D OF 22

FM LOOP 1604

CULEBRA RD. TO U.S. HWY. 90

S.A.W.S. JOB NO. 00-5023

©2000 Texas Department of Transportation

PLAN SHEET

SHEET 7 OF 57

| FED.RD. DIV.NO. | FEDERAL AID PROJECT NO. | | SHEET NO. |
|---|---|---|---|
| 6 | NH 2000(704),ETC. | | 883A |
| STATE | DIST. | COUNTY | |
| TEXAS | SAT | BEXAR | |
| CONT. | SECT. | JOB | HIGHWAY NO. |
| 2452 | 01 | 036,ETC | LP 1604 |

# SUMMARY OF CHANGES

| ITEM | DESCRIPTION | UNITS | CSJ 2452-01-038 QUANTITIES | | | | | | | | | | | | | | | | | | | | CSJ 2452-01-037 QUANTITIES | | | | | | | | | CSJ 2452-01-036 QUANTITIES | | | | | |
|---|---|---|---|---|---|---|---|---|---|---|---|---|---|---|---|---|---|---|---|---|---|---|---|---|---|---|---|---|---|---|---|---|---|---|---|---|---|---|
| | | | SHT.NO.3 | 5. REVISED SHT. NO.3A | REVISED SHT.NO.3B | SHT.NO.4 | 1. REVISED SHT.NO.4A | 17. REVISED SHT.NO.4B | REVISED SHT.NO.4C | SHT.NO.5 | 1. | SHT.NO.5A | 17. REVISED SHT.NO.5B | SHT.NO.6 | 1. REVISED SHT.NO.6A | SHT.NO.7 | SHT.NO.7A | NEW SHT.NO.15 | NEW SHT.NO.16 | TOTAL | SHT.NO.8 | SHT.NO.9 | SHT.NO.10 | SHT.NO.11 | SHT.NO.12 | NEW SHT.NO.19 | 23 NEW SHT.NO.21 | TOTAL | SHT.NO.13 | NEW SHT.NO.14 | TOTAL | PROJECT TOTALS (ORIGINAL) | REVISED PROJECT TOTALS |
| 0500-5001 | MOBILIZATION | LS | | | | | | | | | | | | | | | | | | | | | | | | | | | | | 1 | |
| 5324-5004 | ADJUST EXIST VALVE BOX | EA | | | | 1 | | | | | | | | | | | | 2 | | 3 | 5 | | | | | | 5 | | | | ~~8~~ | 8 |
| 5324-5006 | TRENCH EXCAVATION PROTECTION | M | ~~75.3~~ | ~~103~~ | 128.7 | ~~275.6~~ | | | 481.4 | ~~325.1~~ | | | 369.9 | ~~385.4~~ | 307 | ~~265.2~~ | 262 | 144 | 217.4 | 1,910.4 | 252 | 336.7 | 240 | 174.4 | 169.3 | 37.9 | (58.5) | 1,268.8 | 109.7 | 177.2 | 286.90 | ~~2,806.7~~ | (3466.1) |
| 5324-5009 | PIPE WTR MAIN (DI) (200mm) | M | | | | | | | | | | | | | | | | | | | | | | | | | | | | | | | |
| 5324-5010 | PIPE WTR MAIN (DI) (400mm) | M | | | | | | | | | | | | | | | | | | | 252 | 336.7 | 240 | 174.4 | 169.3 | | | 1,172.4 | 103.6 | | 103.6 | 1,276.0 | |
| 5324-5011 | PIPE WTR MAIN (DI) (600mm) | M | | | | ~~184~~ | | | 186.1 | ~~198.6~~ | | | 153.7 | ~~276.1~~ | 260.4 | ~~283.2~~ | 262 | 152.6 | 217.4 | 1,232.2 | | | | | | | | | | ~~776.5~~ | 1,232.9 |
| 5324-5015 | GATE VALVE AND BOX (400mm) | EA | | | | | | | | | | | | | | | | | | | | 3 | 1 | | 1 | | | 5 | 2 | | 2 | | |
| 5324-5018 | TIE-IN (MAIN) (300mm) | EA | | 1 | | | | | | | | | | | | | | | | 1 | | | | | | | | | 1 | 2 | 3 | ~~X~~ | 4 |
| 5324-5019 | TIE-IN (MAIN) (600mm) | EA | | | | 1 | | | | ~~X~~ | | | 2 | 1 | | ~~X~~ | 1 | | 1 | 6 | | | | | | | | | | | | ~~5~~ | 6 |
| 5324-5020 | STD FIRE HYDRANT W/150mm VALVE & BOX | EA | | | 1 | | | | | 2 | | | | | | | 1 | | | 4 | | 1 | 1 | | 1 | | | 3 | 1 | | 1 | ~~6~~ | 8 |
| 5324-5023 | TEMP BLOW-OFF (50mm) | EA | | 1 | | | | | | | | | | | | | | | | 1 | | | | 1 | | | | 1 | | 1 | 1 | ~~X~~ | 3 |
| 5324-5024 | PERM BLOW-OFF (50mm) | EA | | | | | | | | | | | | | | | | | | | | | | | | | | | 1 | | 1 | 1 | |
| 5324-5027 | CUT&REPL ASPH PAV W/150mm ASPHTRT B | m2 | ~~20.6~~ | 39.4 | | | | | | ~~26.7~~ | | | 48.7 | | | | | 12 | | 100.1 | | 14.2 | 3.3 | | | | | 17.5 | 18.7 | | 18.7 | ~~83.5~~ | 136.3 |
| 5324-5028 | RELAY SHRT SERV (19mm) | EA | | | | | | | | | | | | | | | | | | | | | | | 1 | | | 1 | | | 1 | | |
| 5324-5038 | DUCTILE IRON FITTINGS | KG | ~~5,416~~ | ~~11,884.3~~ | 18,851.6 | ~~15,231.8~~ | | | 26,102.6 | ~~17,871.8~~ | ~~21,848.3~~ | | 28,244.1 | 8,231 | | ~~1,905.8~~ | 1,395.2 | 2,258.9 | 1,895.6 | 86,979 | 1,397 | 3,120.7 | 336.1 | 1,633 | 1,560.8 | 5,286.2 | (1) | 13,333.8 | 2,209.5 | 1,090.9 | 3,300.4 | ~~59,003.1~~ | (103,613.2) |
| 5324-5039 | HYDROSTATIC PRESSURE TEST | EA | ~~X~~ | ~~X~~ | 3 | 2 | | | | ~~X~~ | | | 2 | | | 1 | | 1 | | 9 | | | | 1 | 1 | 1 | 1 | 4 | 1 | 1 | 2 | ~~X~~ | 15 |
| 5324-5049 | JACK OR BOR CASING (STL) (600mmm) | M | | | | | | | | | | | | | | | | | | | | | | | | | | | | 22.3 | 22.3 | | 22.3 |
| 5324-5051 | GATE VALVE AND BOX (300mm) | EA | | 1 | | | | | | | | | | | | | | | | 1 | | | | | | | | | 1 | 4 | 5 | ~~X~~ | 6 |
| 5324-5053 | AUTOMATIC AIR RELEASE VALVE (25mm) | EA | | | | | | | | | | | | | | | | | | | 1 | | 1 | | | | | 2 | | | | 2 | |
| 5324-5054 | TIE-IN (MAIN) (400mm) | EA | | | | | | | | | | | | | | | | | | | 1 | 1 | | | 2 | | | 4 | 1 | | 1 | 5 | |
| 5324-5056 | CUT AND REPLACE CONC SDWLK, DRWY, ETC | m2 | ~~52~~ | .77 | | | | | | | | | | | | | | | | .77 | | .52 | | | | | | .52 | .52 | | .52 | ~~1.56~~ | 1.81 |
| 5324-5058 | PIPE WATER MAIN (DI) (500mm) | M | | | | | | | | 5 | | | | | | | | 5.43 | | 10.43 | | | | | | | | | | | | ~~1.8~~ | 10.43 |
| 5324-5059 | TIE-IN (MAIN) (500mm) | EA | | | | | | | | ~~X~~ | ~~X~~ | | | | | | | | | 0 | | | | | | | | | | | | ~~X~~ | 0 |
| 5324-5061 | AUTOMATIC AIR RELEASE VALVE (50mm) | EA | 1 | | | ~~X~~ | | | 2 | | | | | | | | | | | 3 | | | | | | | | | | | | ~~2~~ | 3 |
| 5324-5062 | FLOWABLE BACKFILL | m3 | | | | 239 | | | | 29 | | | 74 | 167.7 | | | | 110 | | 619.7 | | | | | | | (87.5) | 87.5 | 13.7 | 8.7 | 22.4 | ~~419.3~~ | 642.1 |
| 5324-5063 | BUTTERFLY VALVE AND BOX (500mm) | EA | | | | | | | | ~~X~~ | ~~X~~ | | 0 | | | | | | | 0 | | | | | | | | | | | | ~~X~~ | 0 |
| 5324-5074 | TEMP BLOW-OFF (100mm) | EA | 1 | | | ~~8~~ | | 1 | 2 | ~~X~~ | | | 2 | | 2 | 1 | | 1 | | 9 | | | | | | 1 | (1) | 2 | | | | ~~3~~ | (11) |
| 5324-5080 | PIPE STL CASING (600mm ID) (OPEN-CUT) | M | | | | | | | | | | | | | | | | | | | | | | | | | | | | 123.8 | 123.8 | | 123.8 |
| 5324-5083 | BUTTERFLY VALVE AND BOX (600mm) | EA | | | | | 1 | | | | ~~X~~ | | 3 | ~~2~~ | 3 | | | | 2 | 9 | | | | | | | | | | | | ~~2~~ | 9 |
| 5324-5127 | PIPE WTR MAIN (DI) (300mm) | M | | 28.3 | | | | | | | | | 11 | | | | | | | 39.3 | | | | | | | | | 6.1 | 199.5 | 205.6 | ~~6.1~~ | 244.9 |
| 5324-5151 | BUTTERFLY VALVE AND BOX (925mm) | EA | ~~X~~ | | 2 | 2 | | | | | | | 2 | | 1 | | | | | 7 | | | | | | | | | | | | ~~X~~ | 7 |
| 5324-5149 | PIPE WTR MAIN (DI) (925mm) | M | ~~76.3~~ | ~~74~~ | 100.4 | ~~188.8~~ | | 193.8 | 325.1 | ~~187.6~~ | | | 240.2 | ~~126.8~~ | 64.3 | | | | | 730 | | | | | | 37.9 | | 37.9 | | | | ~~578.60~~ | 767.9 |
| 5324-5148 | PIPE STL CASING (1375mm I D) (OPEN CUT) | M | | | | 136.7 | | | | ~~52.9~~ | | | | | | | | | | 136.7 | | | | | | 15.2 | | 15.2 | | | | ~~189.6~~ | 151.9 |
| 5324-5150 | TIE-IN (MAIN) (925mm) | EA | ~~X~~ | | 4 | ~~X~~ | | | 3 | | | | | 1 | | | | | | 8 | | | | | | 2 | | 2 | | | | ~~X~~ | 10 |
| 5324-5147 | PIPE STL CASING (1075mm I D) (OPEN CUT) | M | | | | | | | | | | | 14.1 | ~~126.5~~ | 133.2 | | | 128 | | 275.3 | | | | | | | | | | | | ~~126.5~~ | 275.3 |
| 5324-5146 | JACK OR BORE CASING (STL) (1375mm) | M | | | | 17.2 | | | | | 32.9 | | | | | | | | | 50.1 | | | | | | | | | | | | ~~17.2~~ | 50.1 |
| 5324-5145 | JACK OR BORE CASING (STL) (1075mm) | M | | | | | | | | | | | | 17.7 | | | | 14 | | 31.7 | | | | | | | | | | | | ~~17.7~~ | 31.7 |
| 5324-XXXX | TAP SLEEV, VALV & BOX (925mm X 600mm) | EA | | | | | | | | | | | | | | | | 1 | | 1 | | | | | | | | | | | | | 1 |
| 5324-XXXX | TAP SLEEV, VALV & BOX (600mm X 500mm) | EA | | | | | | | | | | | | | | | | 1 | | 1 | | | | | | | | | | | | | 1 |
| 5324-XXXX | TEMP (MAIN) (HDPE) (200mm) | M | | | | | | | 224.9 | | | | | | | | | | | 224.9 | | | | | | | | | | | | | 224.9 |
| 5324-XXXX | WATER (CONCRETE ENCASEMENT) | $M^3$ | | | | | | | 210 | | | | | | | | | | | 210 | | | | | | | | | | | | | 210 |
| 5127-XXXX | PIPE WTR MAIN (DI) (760mm) | M | | | | | | | | | | | | | | | | | | | | | | | | | (142.45) | 142.45 | | | | | (142.45) |
| 5127-XXXX | TIE-IN (MAIN) (760mm) | EA | | | | | | | | | | | | | | | | | | | | | | | | | (2) | 2 | | | | | (2) |
| 5127-XXXX | JACK OR BORE (STL. CASING) (1220mm) | M | | | | | | | | | | | | | | | | | | | | | | | | | (71.0) | 71.0 | | | | | (71.0) |
| 5127-XXXX | CUT-IN BUTTERFLY VALVE AND BOX(760mm) | EA | | | | | | | | | | | | | | | | | | | | | | | | | (1) | 1 | | | | | (1) |
| 5127-XXXX | DUCTILE IRON FITTINGS | KG | | | | | | | | | | | | | | | | | | | | | | | | | (5730) | 5730 | | | | | (5730) |
| 5127-XXXX | TEMP BLOW-OFF (50mm) | EA | | | | | | | | | | | | | | | | | | | | | | | | | (1) | 1 | | | | | (1) |
| 5127-XXXX | PIPE STL CASING (OPEN CUT) (1200) | M | | | | | | | | | | | | | | | | | | | | | | | | | (20) | 20 | | | | | (20) |

FM LOOP 1604
CULEBRA RD. TO U.S. HWY. 90
S.A.W.S. JOB NO. 00-5023

CO#23

SHEET 2F

Texas Department of Transportation

| FED.RD. DIV.NO. | FEDERAL AID PROJECT NO. | | SHEET NO. |
|---|---|---|---|
| 6 | NH 2000(704),ETC. | | 8836 |
| STATE | DIST. | COUNTY | |
| TEXAS | SAT | BEXAR | |
| CONT. | SECT. | JOB | HIGHWAY NO. |
| 2452 | 01 | 036,ETC | LP 1604 |

Total Change Order Costs Shall be paid by LS. as directed by SAWS.

RCB

# SUMMARY OF CHANGES

| | | | CSJ 2452-01-038 QUANTITIES | | | | | | | | | | | | | | | | | | CSJ 2452-01-037 QUANTITIES | | | | | | | |
|---|---|---|---|---|---|---|---|---|---|---|---|---|---|---|---|---|---|---|---|---|---|---|---|---|---|---|---|---|
| | | | | 5. | | | 1. | 17. | | | 1. | 17. | | 1. | | | | | | | | | | | | 23 | | |
| ITEM | DESCRIPTION | UNITS | SHT.NO.3 | REVISED SHT. NO.3A | REVISED SHT.NO.3B | SHT.NO.4 | REVISED SHT.NO.4A | REVISED SHT.NO.4B | REVISED SHT.NO.4C | SHT.NO.5 | SHT.NO.5A | REVISED SHT.NO.5B | SHT.NO.6 | REVISED SHT.NO.6A | SHT.NO.7 | SHT.NO.7A | NEW SHT.NO.15 | NEW SHT.NO.16 | TOTAL | SHT.NO.8 | SHT.NO.9 | SHT.NO.10 | SHT.NO.11 | SHT.NO.12 | NEW SHT.NO.19 | NEW SHT.NO.21 | TOTAL |
| 0500-5001 | MOBILIZATION | LS | | | | | | | | | | | | | | | | | | | | | | | | | |
| 5324-5004 | ADJUST EXIST VALVE BOX | EA | | | | 1 | | | | | | | | | | | 2 | | 3 | 5 | | | | | | | 5 |
| 5324-5006 | TRENCH EXCAVATION PROTECTION | M | ~~75.6~~ | ~~183~~ | 128.7 | ~~275.6~~ | | | 481.4 | ~~325.1~~ | | 369.9 | ~~385.4~~ | 307 | ~~265.2~~ | 262 | 144 | 217.4 | 1,910.4 | 252 | 336.7 | 240 | 174.4 | 169.3 | 37.9 | 58.5 | 1,268.8 |
| 5324-5009 | PIPE WTR MAIN (DI) (200mm) | M | | | | | | | | | | | | | | | | | | | | | | | | | |
| 5324-5010 | PIPE WTR MAIN (DI) (400mm) | M | | | | | | | | | | | | | | | | | | 252 | 336.7 | 240 | 174.4 | 169.3 | | | 1,172.4 |
| 5324-5011 | PIPE WTR MAIN (DI) (600mm) | M | | | | ~~184~~ | | | 186.1 | ~~138.6~~ | | 153.7 | ~~278.1~~ | 260.4 | ~~265.2~~ | 262 | 152.6 | 217.4 | 1,232.2 | | | | | | | | |
| 5324-5015 | GATE VALVE AND BOX (400mm) | EA | | | | | | | | | | | | | | | | | | | 3 | 1 | | 1 | | | 5 |
| 5324-5018 | TIE-IN (MAIN) (300mm) | EA | | 1 | | | | | | | | | | | | | | | 1 | | | | | | | | |
| 5324-5019 | TIE-IN (MAIN) (600mm) | EA | | | | 1 | | | | ~~X~~ | | 2 | 1 | | ~~X~~ | 1 | | 1 | 6 | | | | | | | | |
| 5324-5020 | STD FIRE HYDRANT W/150mm VALVE & BOX | EA | | | 1 | | | | | 2 | | | | | | 1 | | | 4 | | 1 | 1 | | 1 | | | 3 |
| 5324-5023 | TEMP BLOW-OFF (50mm) | EA | | 1 | | | | | | | | | | | | | | | 1 | | | | 1 | | | | 1 |
| 5324-5024 | PERM BLOW-OFF (50mm) | EA | | | | | | | | | | | | | | | | | | | | | | | | | |
| 5324-5027 | CUT&REPL ASPH PAV W/150mm ASPHTRT B | m2 | ~~20.6~~ | 39.4 | | | | | | ~~26.7~~ | | 48.7 | | | | | 12 | | 100.1 | | 14.2 | 3.3 | | | | | 17.5 |
| 5324-5028 | RELAY SHRT SERV (19mm) | EA | | | | | | | | | | | | | | | | | | | | | | 1 | | | 1 |
| 5324-5038 | DUCTILE IRON FITTINGS | KG | ~~5,416~~ | ~~11,884.3~~ | 18,851.6 | ~~15,234.8~~ | | | 26,102.6 | ~~17,871.8~~ | ~~21,848.3~~ | 28,244.1 | 8,231 | | ~~1,905.8~~ | 1,395.2 | 2,258.9 | 1,895.6 | 86,979 | 1,397 | 3,120.7 | 336.1 | 1,633 | 1,560.8 | 5,286.2 | | 13,333.8 |
| 5324-5039 | HYDROSTATIC PRESSURE TEST | EA | ~~X~~ | ~~2~~ | 3 | 2 | | | | ~~X~~ | | 2 | | | 1 | | 1 | | 9 | | | | 1 | 1 | 1 | 1 | 4 |
| 5324-5049 | JACK OR BOR CASING (STL) (600mmm) | M | | | | | | | | | | | | | | | | | | | | | | | | | |
| 5324-5051 | GATE VALVE AND BOX (300mm) | EA | | 1 | | | | | | | | | | | | | | | 1 | | | | | | | | |
| 5324-5053 | AUTOMATIC AIR RELEASE VALVE (25mm) | EA | | | | | | | | | | | | | | | | | | 1 | | 1 | | | | | 2 |
| 5324-5054 | TIE-IN (MAIN) (400mm) | EA | | | | | | | | | | | | | | | | | | 1 | 1 | | | 2 | | | 4 |
| 5324-505? | CUT AND REPLACE CONC SDWLK, DRWY, ETC | m2 | ~~52~~ | .77 | | | | | | | | | | | | | | | .77 | | .52 | | | | | | .52 |
| 5324-5058 | PIPE WATER MAIN (DI) (500mm) | M | | | | | | | | 5 | | | | | | | 5.43 | | 10.43 | | | | | | | | |
| 5324-5059 | TIE-IN (MAIN) (500mm) | EA | | | | | | | | ~~X~~ | ~~X~~ | | | | | | | | 0 | | | | | | | | |
| 5324-5061 | AUTOMATIC AIR RELEASE VALVE (50mm) | EA | 1 | | | ~~X~~ | | | 2 | | | | | | | | | | 3 | | | | | | | | |
| 5324-5062 | FLOWABLE BACKFILL | m3 | | | | 239 | | | | 29 | | 74 | 167.7 | | | | 110 | | 619.7 | | | | | | 87.5 | | 87.5 |
| 5324-5063 | BUTTERFLY VALVE AND BOX (500mm) | EA | | | | | | | | ~~X~~ | ~~X~~ | 0 | | | | | | | 0 | | | | | | | | |
| 5324-5074 | TEMP BLOW-OFF (100mm) | EA | 1 | | | ~~X~~ | | 1 | 2 | ~~X~~ | | 2 | | 2 | 1 | | 1 | | 9 | | | | | | 1 | 1 | 2 |
| 5324-5080 | PIPE STL CASING (600mm ID) (OPEN-CUT) | M | | | | | | | | | | | | | | | | | | | | | | | | | |
| 5324-5083 | BUTTERFLY VALVE AND BOX (600mm) | EA | | | | | 1 | | | | ~~X~~ | 3 | ~~X~~ | 3 | | | | 2 | 9 | | | | | | | | |
| 5324-5127 | PIPE WTR MAIN (DI) (300mm) | M | | 28.3 | | | | | | | | 11 | | | | | | | 39.3 | | | | | | | | |
| 5324-5151 | BUTTERFLY VALVE AND BOX (925mm) | EA | ~~X~~ | | 2 | 2 | | | | ~~X~~ | | 2 | | 1 | | | | | 7 | | | | | | | | |
| 5324-5149 | PIPE WTR MAIN (DI) (925mm) | M | ~~76.3~~ | ~~74.7~~ | 100.4 | ~~188.8~~ | | 193.8 | 325.1 | ~~187.6~~ | | 240.2 | ~~126.9~~ | 64.3 | | | | | 730 | | | | | | 37.9 | | 37.9 |
| 5324-5148 | PIPE STL CASING (1375mm I D) (OPEN CUT) | M | | | | 136.7 | | | | ~~32.9~~ | | | | | | | | | 136.7 | | | | | | 15.2 | | 15.2 |
| 5324-5150 | TIE-IN (MAIN) (925mm) | EA | ~~X~~ | | 4 | ~~X~~ | | | 3 | | | | 1 | | | | | | 8 | | | | | | 2 | | 2 |
| 5324-5147 | PIPE STL CASING (1075mm I D) (OPEN CUT) | M | | | | | | | | | | 14.1 | ~~126.5~~ | 133.2 | | | 128 | | 275.3 | | | | | | | | |
| 5324-5146 | JACK OR BORE CASING (STL) (1375mm) | M | | | | 17.2 | | | | | 32.9 | | | | | | | | 50.1 | | | | | | | | |
| 5324-5145 | JACK OR BORE CASING (STL) (1075mm) | M | | | | | | | | | | | 17.7 | | | | 14 | | 31.7 | | | | | | | | |
| 5324-XXXX | TAP SLEEV, VALV & BOX (925mm X 600mm) | EA | | | | | | | | | | | | | | | 1 | | 1 | | | | | | | | |
| 5324-XXXX | TAP SLEEV, VALV & BOX (600mm X 500mm) | EA | | | | | | | | | | | | | | | 1 | | 1 | | | | | | | | |
| 5324-XXXX | TEMP (MAIN) (HDPE) (200mm) | M | | | | | | | 224.9 | | | | | | | | | | 224.9 | | | | | | | | |
| 5324-XXXX | WATER (CONCRETE ENCASEMENT) | $M^3$ | | | | | | | 210 | | | | | | | | | | 210 | | | | | | | | |
| 5127-XXXX | PIPE WTR MAIN (DI) (760mm) | M | | | | | | | | | | | | | | | | | | | | | | | 142.45 | 142.45 |
| 5127-XXXX | TIE-IN (MAIN) (760mm) | EA | | | | | | | | | | | | | | | | | | | | | | | 2 | 2 |
| 5127-XXXX | JACK OR BORE (STL. CASING) (1220mm) | M | | | | | | | | | | | | | | | | | | | | | | | 71.0 | 71.0 |
| 5127-XXXX | CUT-IN BUTTERFLY VALVE AND BOX(760mm) | EA | | | | | | | | | | | | | | | | | | | | | | | 1 | 1 |
| 5127-XXXX | DUCTILE IRON FITTINGS | KG | | | | | | | | | | | | | | | | | | | | | | | 5730 | 5730 |
| 5127-XXXX | TEMP BLOW-OFF (50mm) | EA | | | | | | | | | | | | | | | | | | | | | | | 1 | 1 |
| 5127-XXXX | PIPE STL CASING (OPEN CUT) (1200) | M | | | | | | | | | | | | | | | | | | | | | | | 20 | 20 |
| | | | | | | | | | | | | | | | | | | | | | | | | | | | |

STATE OF TEXAS
ROBERT J. SCHROEDER
50026
REGISTERED PROFESSIONAL ENGINEER
9/17/02

CO#50
SHEET 2F
(PG 1 OF 2)

VICKREY & ASSOCIATES, INC.
CONSULTING ENGINEERS
7334 Blanco Road Suite 109 San Antonio, Texas 78216
Telephone: (210)349-3271

SAN ANTONIO WATER SYSTEM

FM LOOP 1604
CULEBRA RD.TO U.S.HWY.90
SAWS JOB NO. 00-5023

Texas Department of Transportation

| DESIGNED: | FED. RD. DIV. NO. | STATE | PROJECT NO. | | | HIGHWAY NO. |
|---|---|---|---|---|---|---|
| CHECKED: | 6 | TEXAS | NH 2000(704),etc. | | | LP1604 |
| DRAWN: | STATE DIST. | COUNTY | CONTROL NO. | SECTION NO. | JOB NO. | SHEET NO. |
| CHECKED: | SAT | BEXAR | 2452 | 01 | 036, etc. | 883C |

90% SUBMITTAL
09/17/02 11:38:07 AM
m:\1895-004\dgn\1895-004-016\SH_sum.dgn

# SUMMARY OF CHANGES

CSJ 2452-01-036 QUANTITIES

△ △1.

| ITEM | DESCRIPTION | UNITS | NEW SHT.NO.1 | SHT.NO.13 | SHT.NO.14 | TOTAL | PROJECT TOTALS (ORIGINAL) | REVISED PROJECT TOTALS |
|---|---|---|---|---|---|---|---|---|
| 0500-5001 | MOBILIZATION | LS | | | | | 1 | |
| 5324-5004 | ADJUST EXIST VALVE BOX | EA | | | | | ~~8~~ | 8 |
| 5324-5006 | TRENCH EXCAVATION PROTECTION | M | 134.0 | 109.7 | 177.2 | 286.90 | ~~2,806.7~~ | 3600.1 |
| 5324-5009 | PIPE WTR MAIN (DI) (200mm) | M | | | | | | |
| 5324-5010 | PIPE WTR MAIN (DI) (400mm) | M | | 103.6 | | 103.6 | 1,276.0 | |
| 5324-5011 | PIPE WTR MAIN (DI) (600mm) | M | | | | | ~~775.9~~ | 1,232.9 |
| 5324-5015 | GATE VALVE AND BOX (400mm) | EA | | 2 | | 2 | | |
| 5324-5018 | TIE-IN (MAIN) (300mm) | EA | | 1 | 2 | 3 | ~~1~~ | 4 |
| 5324-5019 | TIE-IN (MAIN) (600mm) | EA | | | | | ~~5~~ | 6 |
| 5324-5020 | STD FIRE HYDRANT W/150mm VALVE & BOX | EA | | 1 | | 1 | ~~6~~ | 8 |
| 5324-5023 | TEMP BLOW-OFF (50mm) | EA | | | 1 | 1 | ~~1~~ | 3 |
| 5324-5024 | PERM BLOW-OFF (50mm) | EA | | 1 | | 1 | 1 | |
| 5324-5027 | CUT&REPL ASPH PAV W/150mm ASPHTRT B | m2 | | 18.7 | | 18.7 | ~~83.5~~ | 136.3 |
| 5324-5028 | RELAY SHRT SERV (19mm) | EA | | | | | 1 | |
| 5324-5038 | DUCTILE IRON FITTINGS | KG | 3007.4 | 2,209.5 | 1,090.9 | 3,300.4 | ~~59,903.5~~ | 106,620.6 |
| 5324-5039 | HYDROSTATIC PRESSURE TEST | EA | | 1 | 1 | 2 | ~~8~~ | 15 |
| 5324-5049 | JACK OR BOR CASING (STL) (600mmm) | M | | | 22.3 | 22.3 | | 22.3 |
| 5324-5051 | GATE VALVE AND BOX (300mm) | EA | | 1 | 4 | 5 | ~~1~~ | 6 |
| 5324-5053 | AUTOMATIC AIR RELEASE VALVE (25mm) | EA | | | | | 2 | |
| 5324-5054 | TIE-IN (MAIN) (400mm) | EA | | 1 | | 1 | 5 | |
| 5324-5056 | CUT AND REPLACE CONC SDWLK, DRWY, ETC | m2 | | .52 | | .52 | ~~1.56~~ | 1.81 |
| 5324-5058 | PIPE WATER MAIN (DI) (500mm) | M | | | | | ~~1.8~~ | 10.43 |
| 5324-5059 | TIE-IN (MAIN) (500mm) | EA | | | | | ~~1~~ | 0 |
| 5324-5061 | AUTOMATIC AIR RELEASE VALVE (50mm) | EA | | | | | ~~2~~ | 3 |
| 5324-5062 | FLOWABLE BACKFILL | m3 | | 13.7 | 8.7 | 22.4 | ~~219.3~~ | 642.1 |
| 5324-5063 | BUTTERFLY VALVE AND BOX (500mm) | EA | | | | | ~~1~~ | 0 |
| 5324-5074 | TEMP BLOW-OFF (100mm) | EA | (1) | | | | ~~5~~ | (12) |
| 5324-5080 | PIPE STL CASING (600mm ID) (OPEN-CUT) | M | | | 123.8 | 123.8 | | 123.8 |
| 5324-5083 | BUTTERFLY VALVE AND BOX (600mm) | EA | | | | | ~~2~~ | 9 |
| 5324-5127 | PIPE WTR MAIN (DI) (300mm) | M | | 6.1 | 199.5 | 205.6 | ~~9.1~~ | 244.9 |
| 5324-5151 | BUTTERFLY VALVE AND BOX (925mm) | EA | | | | | ~~1~~ | 7 |
| 5324-5149 | PIPE WTR MAIN (DI) (925mm) | M | 134.0 | | | | ~~578.80~~ | 901.9 |
| 5324-5148 | PIPE STL CASING (1375mm I D) (OPEN CUT) | M | | | | | ~~169.6~~ | 151.9 |
| 5324-5150 | TIE-IN (MAIN) (925mm) | EA | | | | | ~~1~~ | 10 |
| 5324-5147 | PIPE STL CASING (1075mm I D) (OPEN CUT) | M | | | | | ~~126.5~~ | 275.3 |
| 5324-5146 | JACK OR BORE CASING (STL) (1375mm) | M | | | | | ~~17.2~~ | 50.1 |
| 5324-5145 | JACK OR BORE CASING (STL) (1075mm) | M | | | | | ~~17.7~~ | 31.7 |
| 5324-XXXX | TAP SLEEV, VALV & BOX (925mm X 600mm) | EA | | | | | | 1 |
| 5324-XXXX | TAP SLEEV, VALV & BOX (600mm X 500mm) | EA | | | | | | 1 |
| 5324-XXXX | TEMP (MAIN) (HDPE) (200mm) | M | | | | | | 224.9 |
| 5324-XXXX | WATER (CONCRETE ENCASEMENT) | $M^3$ | | | | | | 210 |
| 5127-XXXX | PIPE WTR MAIN (DI) (760mm) | M | | | | | | 142.45 |
| 5127-XXXX | TIE-IN (MAIN) (760mm) | EA | | | | | | 2 |
| 5127-XXXX | JACK OR BORE (STL. CASING) (1220mm) | M | | | | | | 71.0 |
| 5127-XXXX | CUT-IN BUTTERFLY VALVE AND BOX(760mm) | EA | | | | | | 1 |
| 5127-XXXX | DUCTILE IRON FITTINGS | KG | | | | | | 5730 |
| 5127-XXXX | TEMP BLOW-OFF (50mm) | EA | | | | | | 1 |
| 5127-XXXX | PIPE STL CASING (OPEN CUT) (1200) | M | | | | | | 20 |
| | | | | | | | | |

STATE OF TEXAS
ROBERT J. SCHROEDER
50026
REGISTERED PROFESSIONAL ENGINEER
9/17/02

C0#50
SHEET 2F
(PG 2 OF 2)

VICKREY & ASSOCIATES, INC.
CONSULTING ENGINEERS
7334 Blanco Road Suite 109 San Antonio, Texas 78216
Telephone: (210)349-3271

SAN ANTONIO WATER SYSTEM

FM LOOP 1604
CULEBRA RD.TO U.S.HWY.90
SAWS JOB NO. 00-5023

Texas Department of Transportation

| DESIGNED: | FED. RD. DIV. NO. | STATE | PROJECT NO. | | | HIGHWAY NO. |
|---|---|---|---|---|---|---|
| CHECKED: | 6 | TEXAS | NH 2000(704),etc. | | | LP1604 |
| DRAWN: | STATE DIST. | COUNTY | CONTROL NO. | SECTION NO. | JOB NO. | SHEET NO. |
| CHECKED: | SAT | BEXAR | 2452 | 01 | 036, etc. | 8830 |

90% SUBMITTAL
09/17/02 11:38:29 AM
m:\1895-004\dgn\1895-004-016\SH_sum1.dgn

# SUMMARY OF CHANGES

| ITEM | DESCRIPTION | UNITS | CSJ 2452-01-038 QUANTITIES | | | | | | | | | | | | | | | | | CSJ 2452-01-037 QUANTITIES | | | | | | | | | | |
|---|---|---|---|---|---|---|---|---|---|---|---|---|---|---|---|---|---|---|---|---|---|---|---|---|---|---|---|---|---|---|
| | | | SHT.NO.3 | 5. REVISED SHT. NO.3A | REVISED SHT.NO.3B | SHT.NO.4 | 1. REVISED SHT.NO.4A | 17. REVISED SHT.NO.4B | REVISED SHT.NO.4C | SHT.NO.5 | 1. SHT.NO.5A | 17. REVISED SHT.NO.5B | SHT.NO.6 | 1. REVISED SHT.NO.6A | SHT.NO.7 | SHT.NO.7A | NEW SHT.NO.15 | NEW SHT.NO.16 | TOTAL | SHT.NO.8 | SHT.NO.9 | SHT.NO.10 | SHT.NO.11 | SHT.NO.12 | NEW SHT.NO.19 | 23 NEW SHT.NO.21 | NEW SHT.NO.3-1 | NEW SHT.NO.4-1 | NEW SHT.NO.5-1 | TOTAL |
| 0500-5001 | MOBILIZATION | LS | | | | | | | | | | | | | | | | | | | | | | | | | | | | |
| 5324-5004 | ADJUST EXIST VALVE BOX | EA | | | | 1 | | | | | | | | | | | 2 | | 3 | 5 | | | | | | | | | | 5 |
| 5324-5006 | TRENCH EXCAVATION PROTECTION | M | ~~18.3~~ | ~~183~~ | 128.7 | ~~275.6~~ | | | 481.4 | ~~323.1~~ | | 369.9 | ~~385.4~~ | 307 | ~~265.2~~ | 262 | 144 | 217.4 | 1,910.4 | ~~252~~ | 336.7 | 240 | 174.4 | ~~189.3~~ | 37.9 | 58.5 | 161.8 | 139.3 | 216.4 | 1,365.0 |
| 5324-5009 | PIPE WTR MAIN (DI) (200mm) | M | | | | | | | | | | | | | | | | | | | | | | | | | | | | |
| 5324-5010 | PIPE WTR MAIN (DI) (400mm) | M | | | | | | | | | | | | | | | | | | ~~252~~ | 336.7 | 240 | 174.4 | ~~189.3~~ | | | 161.8 | 139.3 | 216.4 | 1,268.6 |
| 5324-5011 | PIPE WTR MAIN (DI) (600mm) | M | | | | ~~184~~ | | | 186.1 | ~~139.6~~ | | 153.7 | ~~276.1~~ | 260.4 | ~~265.2~~ | 262 | 152.6 | 217.4 | 1,232.2 | | | | | | | | | | | |
| 5324-5015 | GATE VALVE AND BOX (400mm) | EA | | | | | | | | | | | | | | | | | | | 3 | 1 | | ~~1~~ | | | | | 5 | 9 |
| 5324-5018 | TIE-IN (MAIN) (300mm) | EA | | 1 | | | | | | | | | | | | | | | 1 | | | | | | | | | | 1 | 1 |
| 5324-5019 | TIE-IN (MAIN) (600mm) | EA | | | | 1 | | | | ~~1~~ | | 2 | 1 | | ~~2~~ | 1 | | 1 | 6 | | | | | | | | | | | |
| 5324-5020 | STD FIRE HYDRANT W/150mm VALVE & BOX | EA | | | 1 | | | | | 2 | | | | | | 1 | | | 4 | | 1 | 1 | | ~~1~~ | | | | 1 | 1 | 4 |
| 5324-5023 | TEMP BLOW-OFF (50mm) | EA | | 1 | | | | | | | | | | | | | | | 1 | | | | 1 | | | | | 1 | | 2 |
| 5324-5024 | PERM BLOW-OFF (50mm) | EA | | | | | | | | | | | | | | | | | | | | | | | | | | | | |
| 5324-5027 | CUT&REPL ASPH PAV W/150mm ASPHTRT B | m2 | ~~20.6~~ | 39.4 | | | | | | ~~26.7~~ | | 48.7 | | | | | 12 | | 100.1 | | 14.2 | 3.3 | | | | | | | 30.0 | 47.5 |
| 5324-5028 | RELAY SHRT SERV (19mm) | EA | | | | | | | | | | | | | | | | | | | | | | ~~1~~ | | | | | 1 | 1 |
| 5324-5038 | DUCTILE IRON FITTINGS | KG | ~~5,416~~ | ~~11,884.3~~ | 18,851.6 | ~~15,231.8~~ | | | 26,102.6 | ~~17,871.8~~ | ~~21,848.3~~ | 28,244.1 | 8,231 | | ~~1,905.8~~ | 1,395.2 | 2,258.9 | 1,895.6 | 86,979 | ~~1,387~~ | 3,120.7 | 336.1 | 1,633 | ~~1,560.8~~ | 5,286.2 | | ~~1,846.1~~ | ~~1,787.7~~ | 3,940.0 | 17,949.8 |
| 5324-5039 | HYDROSTATIC PRESSURE TEST | EA | ~~1~~ | ~~2~~ | 3 | 2 | | | | ~~1~~ | | 2 | | | 1 | | 1 | | 9 | | | | 1 | ~~1~~ | 1 | 1 | | | 2 | 5 |
| 5324-5049 | JACK OR BOR CASING (STL) (600mmm) | M | | | | | | | | | | | | | | | | | | | | | | | | | | | | |
| 5324-5051 | GATE VALVE AND BOX (300mm) | EA | | 1 | | | | | | | | | | | | | | | 1 | | | | | | | | | | | |
| 5324-5053 | AUTOMATIC AIR RELEASE VALVE (25mm) | EA | | | | | | | | | | | | | | | | | | 1 | | 1 | | | | | | | 1 | 3 |
| 5324-5054 | TIE-IN (MAIN) (400mm) | EA | | | | | | | | | | | | | | | | | | 1 | 1 | | | ~~2~~ | | | | | 1 | 3 |
| 5324-5056 | CUT AND REPLACE CONC SDWLK, DRWY, ETC | m2 | ~~52~~ | .77 | | | | | | | | | | | | | | | .77 | | .52 | | | | | | | | 14.6 | 15.12 |
| 5324-5058 | PIPE WATER MAIN (DI) (500mm) | M | | | | | | | | 5 | | | | | | | 5.43 | | 10.43 | | | | | | | | | | | |
| 5324-5059 | TIE-IN (MAIN) (500mm) | EA | | | | | | | | ~~1~~ | ~~1~~ | | | | | | | | 0 | | | | | | | | | | | |
| 5324-5061 | AUTOMATIC AIR RELEASE VALVE (50mm) | EA | 1 | | | ~~1~~ | | | 2 | | | | | | | | | | 3 | | | | | | | | | | | |
| 5324-5062 | FLOWABLE BACKFILL | m3 | | | | 239 | | | | 29 | | 74 | 167.7 | | | | 110 | | 619.7 | | | | | | 87.5 | | | | 79.3 | 166.8 |
| 5324-5063 | BUTTERFLY VALVE AND BOX (500mm) | EA | | | | | | | | ~~1~~ | ~~1~~ | 0 | | | | | | | 0 | | | | | | | | | | | |
| 5324-5074 | TEMP BLOW-OFF (100mm) | EA | 1 | | | ~~2~~ | | 1 | 2 | ~~1~~ | | 2 | | 2 | 1 | | 1 | | 9 | | | | | | 1 | 1 | | | | 2 |
| 5324-5080 | PIPE STL CASING (600mm ID) (OPEN-CUT) | M | | | | | | | | | | | | | | | | | | | | | | | | | | | | |
| 5324-5083 | BUTTERFLY VALVE AND BOX (600mm) | EA | | | | | 1 | | | | ~~1~~ | 3 | ~~2~~ | 3 | | | | 2 | 9 | | | | | | | | | | | |
| 5324-5127 | PIPE WTR MAIN (DI) (300mm) | M | | 28.3 | | | | | | | | 11 | | | | | | | 39.3 | | | | | | | | | | | |
| 5324-5151 | BUTTERFLY VALVE AND BOX (925mm) | EA | ~~1~~ | | 2 | 2 | | | | ~~1~~ | | 2 | | 1 | | | | | 7 | | | | | | | | | | | |
| 5324-5149 | PIPE WTR MAIN (DI) (925mm) | M | ~~78.3~~ | ~~74.7~~ | 100.4 | ~~188.5~~ | | 193.8 | 325.1 | ~~187.6~~ | | 240.2 | ~~126.9~~ | 64.3 | | | | | 730 | | | | | | 37.9 | | | | | 37.9 |
| 5324-5148 | PIPE STL CASING (1375mm I D) (OPEN CUT) | M | | | | 136.7 | | | | ~~32.9~~ | | | | | | | | | 136.7 | | | | | | 15.2 | | | | | 15.2 |
| 5324-5150 | TIE-IN (MAIN) (925mm) | EA | ~~1~~ | | 4 | ~~1~~ | | | 3 | | | | 1 | | | | | | 8 | | | | | | 2 | | | | | 2 |
| 5324-5147 | PIPE STL CASING (1075mm I D) (OPEN CUT) | M | | | | | | | | | | 14.1 | ~~126.5~~ | 133.2 | | | 128 | | 275.3 | | | | | | | | | | | |
| 5324-5146 | JACK OR BORE CASING (STL) (1375mm) | M | | | | 17.2 | | | | | 32.9 | | | | | | | | 50.1 | | | | | | | | | | | |
| 5324-5145 | JACK OR BORE CASING (STL) (1075mm) | M | | | | | | | | | | | 17.7 | | | | 14 | | 31.7 | | | | | | | | | | | |
| 5324-XXXX | TAP SLEEV, VALV & BOX (925mmX600mm) | EA | | | | | | | | | | | | | | | 1 | | 1 | | | | | | | | | | | |
| 5324-XXXX | TAP SLEEV, VALV & BOX (600mmX500mm) | EA | | | | | | | | | | | | | | | 1 | | 1 | | | | | | | | | | | |
| 5324-XXXX | TEMP (MAIN) (HDPE) (200mm) | M | | | | | | | 224.9 | | | | | | | | | | 224.9 | | | | | | | | | | | |
| 5324-XXXX | WATER (CONCRETE ENCASEMENT) | $M^3$ | | | | | | | 210 | | | | | | | | | | 210 | | | | | | | | | | | |
| 5127-XXXX | PIPE WTR MAIN (DI) (760mm) | M | | | | | | | | | | | | | | | | | | | | | | | | 142.45 | | | | 142.45 |
| 5127-XXXX | TIE-IN (MAIN) (760mm) | EA | | | | | | | | | | | | | | | | | | | | | | | | 2 | | | | 2 |
| 5127-XXXX | JACK OR BORE (STL. CASING) (1220mm) | M | | | | | | | | | | | | | | | | | | | | | | | | 71.0 | | | | 71.0 |
| 5127-XXXX | CUT-IN BUTTERFLY VALVE AND BOX(760mm) | EA | | | | | | | | | | | | | | | | | | | | | | | | 1 | | | | 1 |
| 5127-XXXX | DUCTILE IRON FITTINGS | KG | | | | | | | | | | | | | | | | | | | | | | | | 5730 | | | | 5730 |
| 5127-XXXX | TEMP BLOW-OFF (50mm) | EA | | | | | | | | | | | | | | | | | | | | | | | | 1 | | | | 1 |
| 5127-XXXX | PIPE STL CASING (OPEN CUT) (1200) | M | | | | | | | | | | | | | | | | | | | | | | | | 20 | | | | 20 |
| 5324-XXXX | PIPE STL CASING (760mm ID) (OPEN CUT) | M | | | | | | | | | | | | | | | | | | | | | | | | | 11.3 | 4.0 | 23.0 | 38.3 |
| 5324-XXXX | JACK OR BORE CASING (STL) (760mm ID) | M | | | | | | | | | | | | | | | | | | | | | | | | | | | | |
| 5324-XXXX | TAP SLEEV, VALV & BOX (600mmX400mm) | EA | | | | | | | | | | | | | | | | | | | | | | | | | | | | |

STATE OF TEXAS
ROBERT J. SCHROEDER
50026
REGISTERED PROFESSIONAL ENGINEER

10/9/02

CO #51

SHEET 2F
(PG 1 OF 2)

**VICKREY & ASSOCIATES, INC.**
CONSULTING ENGINEERS
7334 Blanco Road Suite 109 San Antonio, Texas 78216
Telephone: (210)349-3271

SAN ANTONIO WATER SYSTEM

FM LOOP 1604
CULEBRA RD.TO U.S.HWY.90
SAWS JOB NO. 00-5023

Texas Department of Transportation

| DESIGNED: | FED. RD. DIV. NO. | STATE | PROJECT NO. | | | HIGHWAY NO. |
|---|---|---|---|---|---|---|
| CHECKED: | 6 | TEXAS | NH 2000(704),etc. | | | LP1604 |
| DRAWN: | STATE DIST. | COUNTY | CONTROL NO. | SECTION NO. | JOB NO. | SHEET NO. |
| CHECKED: | SAT | BEXAR | 2452 | 01 | 036, etc. | 083E |

10/14/2002 01:39:30 PM
M:\1895-004\dgn\1895-004-016 Change Orders\SH_sum.dgn

# SUMMARY OF CHANGES

CSJ 2452-01-036 QUANTITIES

| ITEM | DESCRIPTION | UNITS | NEW SHT.NO.1 | SHT.NO.13 | SHT.NO.14 | NEW SHT.NO.6-1 | NEW SHT.NO.8-1 | TOTAL | PROJECT TOTALS (ORIGINAL) | REVISED PROJECT TOTALS |
|---|---|---|---|---|---|---|---|---|---|---|
| 0500-5001 | MOBILIZATION | LS | | | | | | | 1 | |
| 5324-5004 | ADJUST EXIST VALVE BOX | EA | | | | 1 | 8 | 9 | ~~8~~ | 17 |
| 5324-5006 | TRENCH EXCAVATION PROTECTION | M | 134.0 | 109.7 | 177.2 | 60.3 | 133.2 | 614.4 | ~~2,806.7~~ | 3,889.8 |
| 5324-5009 | PIPE WTR MAIN (DI) (200mm) | M | | | | | | | | |
| 5324-5010 | PIPE WTR MAIN (DI) (400mm) | M | | 103.6 | | 60.3 | 133.2 | 297.1 | ~~1,278.0~~ | 1,565.7 |
| 5324-5011 | PIPE WTR MAIN (DI) (600mm) | M | | | | | | | ~~775.9~~ | 1,232.2 |
| 5324-5015 | GATE VALVE AND BOX (400mm) | EA | | 2 | | | | 2 | | 11 |
| 5324-5018 | TIE-IN (MAIN) (300mm) | EA | | 1 | 2 | | 1 | 4 | ~~4~~ | 6 |
| 5324-5019 | TIE-IN (MAIN) (600mm) | EA | | | | | | | ~~6~~ | 6 |
| 5324-5020 | STD FIRE HYDRANT W/150mm VALVE & BOX | EA | | 1 | | | | 1 | ~~8~~ | 9 |
| 5324-5023 | TEMP BLOW-OFF (50mm) | EA | | | 1 | 1 | 2 | 4 | ~~4~~ | 7 |
| 5324-5024 | PERM BLOW-OFF (50mm) | EA | | 1 | | | | 1 | | 1 |
| 5324-5027 | CUT&REPL ASPH PAV W/150mm ASPHTRT B | m2 | | 18.7 | | | | 18.7 | ~~83.5~~ | 166.3 |
| 5324-5028 | RELAY SHRT SERV (19mm) | EA | | | | | | | 1 | |
| 5324-5038 | DUCTILE IRON FITTINGS | KG | 3007.4 | 2,209.5 | 1,090.9 | 1,794.0 | 2,630.9 | 10,732.7 | ~~59,903.5~~ | 115,661.5 |
| 5324-5039 | HYDROSTATIC PRESSURE TEST | EA | | 1 | 1 | 1 | 2 | 5 | ~~8~~ | 19 |
| 5324-5049 | JACK OR BOR CASING (STL) (600mm) | M | | | 22.3 | | | 22.3 | | 22.3 |
| 5324-5051 | GATE VALVE AND BOX (300mm) | EA | | 1 | 4 | | | 5 | ~~1~~ | 6 |
| 5324-5053 | AUTOMATIC AIR RELEASE VALVE (25mm) | EA | | | | | | | ~~2~~ | 3 |
| 5324-5054 | TIE-IN (MAIN) (400mm) | EA | | 1 | | 2 | 3 | 6 | ~~6~~ | 9 |
| 5324-5056 | CUT AND REPLACE CONC SDWLK, DRWY, ETC | m2 | | .52 | | | | .52 | ~~1.56~~ | 16.41 |
| 5324-5058 | PIPE WATER MAIN (DI) (500mm) | M | | | | | | | ~~4.8~~ | 10.43 |
| 5324-5059 | TIE-IN (MAIN) (500mm) | EA | | | | | | | ~~1~~ | 0 |
| 5324-5061 | AUTOMATIC AIR RELEASE VALVE (50mm) | EA | | | | | | | ~~2~~ | 3 |
| 5324-5062 | FLOWABLE BACKFILL | m3 | | 13.7 | 8.7 | | | 22.4 | ~~215.3~~ | 808.9 |
| 5324-5063 | BUTTERFLY VALVE AND BOX (500mm) | EA | | | | | | | ~~1~~ | 0 |
| 5324-5074 | TEMP BLOW-OFF (100mm) | EA | 1 | | | | | 1 | ~~2~~ | 12 |
| 5324-5080 | PIPE STL CASING (600mm ID) (OPEN-CUT) | M | | | 123.8 | | | 123.8 | | 123.8 |
| 5324-5083 | BUTTERFLY VALVE AND BOX (600mm) | EA | | | | | | | ~~2~~ | 9 |
| 5324-5127 | PIPE WTR MAIN (DI) (300mm) | M | | 6.1 | 199.5 | | | 205.6 | ~~6.1~~ | 244.9 |
| 5324-5151 | BUTTERFLY VALVE AND BOX (925mm) | EA | | | | | | | ~~1~~ | 7 |
| 5324-5149 | PIPE WTR MAIN (DI) (925mm) | M | 134.0 | | | | | 134.0 | ~~578.60~~ | 901.9 |
| 5324-5148 | PIPE STL CASING (1375mm I D) (OPEN CUT) | M | | | | | | | ~~169.6~~ | 151.9 |
| 5324-5150 | TIE-IN (MAIN) (925mm) | EA | | | | | | | ~~1~~ | 10 |
| 5324-5147 | PIPE STL CASING (1075mm I D) (OPEN CUT) | M | | | | | | | ~~126.5~~ | 275.3 |
| 5324-5146 | JACK OR BORE CASING (STL) (1375mm) | M | | | | | | | ~~17.9~~ | 50.1 |
| 5324-5145 | JACK OR BORE CASING (STL) (1075mm) | M | | | | | | | ~~17.7~~ | 31.7 |
| 5324-XXXX | TAP SLEEV, VALV & BOX (925mm X 600mm) | EA | | | | | | | | 1 |
| 5324-XXXX | TAP SLEEV, VALV & BOX (600mm X 500mm) | EA | | | | | | | | 1 |
| 5324-XXXX | TEMP (MAIN) (HDPE) (200mm) | M | | | | | | | | 224.9 |
| 5324-XXXX | WATER (CONCRETE ENCASEMENT) | $M^3$ | | | | 2.4 | | 2.4 | | 12.4 |
| 5127-XXXX | PIPE WTR MAIN (DI) (760mm) | M | | | | | | | | 142.45 |
| 5127-XXXX | TIE-IN (MAIN) (760mm) | EA | | | | | | | | 2 |
| 5127-XXXX | JACK OR BORE (STL. CASING) (1220mm) | M | | | | | | | | 71.0 |
| 5127-XXXX | CUT-IN BUTTERFLY VALVE AND BOX(760mm) | EA | | | | | | | | 1 |
| 5127-XXXX | DUCTILE IRON FITTINGS | KG | | | | | | | | 5730 |
| 5127-XXXX | TEMP BLOW-OFF (50mm) | EA | | | | | | | | 1 |
| 5127-XXXX | PIPE STL CASING (OPEN CUT) (1200) | M | | | | | | | | 20 |
| 5324-XXXX | PIPE STL CASING (760mm ID) (OPEN CUT) | M | | | | 31.4 | | 31.4 | | 69.7 |
| 5324-XXXX | JACK OR BORE CASING (STL) (760mm ID) | M | | | | | | | | |
| 5324-XXXX | TAP SLEEV, VALV & BOX (600mmX400mm) | EA | | | | | | | | |

STATE OF TEXAS
ROBERT J. SCHROEDER
50026
REGISTERED
PROFESSIONAL ENGINEER
10/9/02

CO#51
SHEET 2F
(PG 2 OF 2)

VICKREY & ASSOCIATES, INC.
CONSULTING ENGINEERS
7334 Blanco Road Suite 109 San Antonio, Texas 78216
Telephone: (210)349-3271

SAN ANTONIO WATER SYSTEM

FM LOOP 1604
CULEBRA RD.TO U.S.HWY.90
SAWS JOB NO. 00-5023

Texas Department of Transportation

| DESIGNED: | FED. RD. DIV. NO. | STATE | PROJECT NO. | | | HIGHWAY NO. |
|---|---|---|---|---|---|---|
| CHECKED: | 6 | TEXAS | NH 2000(704),etc. | | | LP1604 |
| DRAWN: | STATE DIST. | COUNTY | CONTROL NO. | SECTION NO. | JOB NO. | SHEET NO. |
| CHECKED: | SAT | BEXAR | 2452 | 01 | 036, etc. | 883F |

M:\1895-004\dgn\1895-004-016 Change Orders\SH_sum1.dgn 10/14/2002 01:41:07 PM

# GENERAL NOTES

## GENERAL WATER NOTES

1. *All materials and construction procedures within the scope of this contract shall be approved by the San Antonio Water System (SAWS) and comply with the following as applicable:*

   A. *Current Texas Natural Resource Conversation Commission Design Criteria for Sewerage Systems [31 TAC 317.1, 31 TAC 317.2, 31 TAC 317.3, and 31 TAC 317.13 and 213].*

   B. *Current TXDOT "Standard Specifications for Construction of Highways, Streets and Drainage."*

   C. *Current "San Antonio Water System Standard Specifications for Construction."*
   D. *Current City of San Antonio "Standard Specifications for Public Works Construction."*

2. *The Contractor is to notify and make arrangements with the SAWS Construction Inspection Division at 704-7110 and the involved home residents and/or property owners 48 hours prior to excavation.*

3. *The location and depths of existing utilities, including service laterals, shown on the plans are approximate only. Actual locations and depths must be field verified by the Contractor 48 hours prior to construction and it shall be the Contractor's responsibility to locate utility service lines as required for construction and to protect them during construction.*

4. *The Contractor shall verify the exact location of the underground utilities and drainage structures at least 48 hours prior to construction whether shown on plans or not, and to protect the same during construction.*

| | |
|---|---|
| *San Antonio Water System* | *704-7107 / 7109* |
| *COSA Drainage* | *207-8048* |
| *COSA Traffic Signal Operations* | *207-7720* |
| *Texas State Wide One Call Locator* | *1-800-545-6005* |
| *Bexar Metropolitan Water District* | *354-6536* |

5. *The Contractor shall be responsible for restoring to its original or better condition from damages done to existing fences, curbs, streets, driveways, sidewalks, landscaping and structures.*

6. *The Contractor shall avoid cutting roots larger than one-inch in diameter when excavating near existing trees. Excavation in vicinity of trees shall proceed with caution. The Contractor shall contact the City Arborist at 207-8053 for guidance. SAWS Construction Inspector shall also be notified.*

7. *The Contractor shall not place any waste materials in the 100-year Flood Plain without first obtaining an approved Flood Plain Permit.*

## MISCELLANEOUS

*CABLE LOCATOR*
*CONTRACTOR TO CONTACT TIME WARNER CABLE LOCATOR 48 HOURS PRIOR TO EXCAVATION AT 1-800-545-6005. CONTRACTOR HAS RESPONSIBILITY TO PROTECT AND SUPPORT CABLE TV PLANT DURING CONSTRUCTION.*

*C.P.S. LOCATOR*
*CONTRACTOR SHALL CALL THE TEXAS STATE WIDE ONE LOCATOR NUMBER 1-800-545-6005 FOR LOCATES, 48 HOURS BEFORE BEGINNING ANY EXCAVATION. DUE TO FEDERAL REGULATIONS TITLE 49, PART 192.181, CPS MUST MAINTAIN ACCESS TO GAS VALVES AT ALL TIMES. THE CONTRACTOR MUST PROTECT AND WORK AROUND ANY GAS VALVES THAT ARE IN THE PROJECT AREA.*

*SAN ANTONIO WATER SYSTEM LOCATOR*
*CONTRACTOR TO NOTIFY THE SAN ANTONIO WATER SYSTEM MONITORING DIVISION AT 704-7109 48 HOURS PRIOR TO EXCAVATION.*

*TELEPHONE LOCATOR*
*CONTRACTOR TO CONTACT THE TELEPHONE COMPANY CABLE LOCATOR 48 HOURS PRIOR TO EXCAVATION AT 1-800-545-6005. CONTRACTOR HAS THE RESPONSIBILITY TO PROTECT AND SUPPORT TELEPHONE COMPANY PLANT DURING CONSTRUCTION.*

*CITY OF SAN ANTONIO TRAFFIC SIGNAL LOCATOR*
*CONTRACTOR TO CONTACT CITY OF SAN ANTONIO DEPARTMENT OF PUBLIC WORKS 48 HOURS PRIOR TO EXCAVATION AT 210-207-7765, CONTRACTOR HAS THE RESPONSIBILITY TO PROTECT AND SUPPORT CITY OF SAN ANTONIO SYSTEMS DURING CONSTRUCTION.*

*TXDOT TRAFFIC SIGNAL LOCATOR*
*CONTRACTOR TO CONTACT TXDOT TRAFFIC SIGNAL SHOP 48 HOURS PRIOR TO EXCAVATION AT 210-615-5975. CONTRACTOR HAS THE RESPONSIBILITY TO PROTECT AND SUPPORT TXDOT SYSTEMS DURING CONSTRUCTION.*

*TXDOT ELECTRICAL SYSTEMS LOCATOR*
*CONTRACTOR TO CONTACT TXDOT ELECTRICAL SYSTEMS SHOP 48 HOURS PRIOR TO EXCAVATION AT 210-615-5866. CONTRACTOR HAS THE RESPONSIBILITY TO PROTECT AND SUPPORT TXDOT SYSTEMS DURING CONSTRUCTION.*

*TXDOT TRANSGUIDE SYSTEMS LOCATOR*
*CONTRACTOR TO CONTACT TXDOT TRANSGUIDE SYSTEM SHOP 48 HOURS PRIOR TO EXCAVATION AT 210-731-5131. CONTRACTOR HAS THE RESPONSIBILITY TO PROTECT AND SUPPORT TXDOT SYSTEMS DURING CONSTRUCTION.*

STATE OF TEXAS
ROBERT J. SCHROEDER
50026
REGISTERED
PROFESSIONAL ENGINEER
10/9/02

Co#51

SHEET 1-1 OF 14

VICKREY & ASSOCIATES, INC.
CONSULTING ENGINEERS
7334 Blanco Road Suite 109 San Antonio, Texas 78216
Telephone: (210)349-3271

SAN ANTONIO WATER SYSTEM

FM LOOP 1604
CULEBRA RD.TO U.S.HWY.90
SAWS JOB NO. 00-5023

Texas Department of Transportation

| | | | | | | | |
|---|---|---|---|---|---|---|---|
| DESIGNED: | FED. RD. DIV. NO. | STATE | PROJECT NO. | | | | HIGHWAY NO. |
| CHECKED: | 6 | TEXAS | NH 2000(704),etc. | | | | LP1604 |
| DRAWN: | STATE DIST. | COUNTY | CONTROL NO. | SECTION NO. | JOB NO. | | SHEET NO. |
| CHECKED: | SAT | BEXAR | 2452 | 01 | 036, etc. | | 883G |

m:\1895-004\dgn\1895-004-016 Change Orders\sh_gennotes1.dgn 10/09/02 02:37:01 PM

# GENERAL NOTES

## WATER

1. FIRE HYDRANTS SHALL BE MINIMUM 1.5 METER BURY UNLESS OTHERWISE NOTED.
2. ALL WORK SHALL CONFORM WITH CURRENT SAN ANTONIO WATER SYSTEM (SAWS) SPECIFICATIONS.
3. ALL 16" AND 12" DUCTILE IRON (D.I.) AND PVC PIPE SHALL BE CLASS 150.
4. ALL MAINS SHALL BE HYDROSTATICALLY TESTED BY THE CONTRACTOR AS PROVIDED FOR IN THE SPECIAL CONDITIONS. THE ENGINEER AND INSPECTOR SHALL BE PRESENT DURING THE TEST.
5. ALL THRUST BLOCKING SHALL BE INSTALLED IN ACCORDANCE WITH SAWS STANDARD DRAWINGS INCLUDED IN THE PLANS. THERE WILL BE NO SEPARATE PAYMENT MADE FOR THRUST BLOCKING.
6. IT IS THE CONTRACTOR'S RESPOSIBILITY TO SEE THAT ALL SIGNS AND BARRICADES ARE PROPERLY INSTALLED AND MAINTAINED. ALL LOCATIONS AND DISTANCES WILL BE DECIDED UPON IN THE FIELD BY THE CONTRACTOR USING THE TEXAS MANUAL ON UNIFORM TRAFFIC CONTROL DEVICES.
7. BARRICADES, SIGNS AND LIGHTS SHALL BE CONFORM TO THE "TYPICAL SIGN AND BARRICADE STANDARDS" SHEETS ANDTHE TEXAS MANUAL ON UNIFORM TRAFFIC CONTROL DEVICES.
8. TRENCH EXCAVATION PROTECTION SHALL BE ACCOMPLISHED AS REQUIRED BY THE PROVISIONS OF PART 1926, SUBPART "P", EXCAVATION, TRENCHING, AND SHORING OF THE OCCUPATIONAL SAFETY AND HEALTH STANDARDS AND INTERPRETATIONS.
9. THE CONTRACTOR SHALL INSTALL MECHANICAL JOINT (M.J.) FITTINGS ON DUCTILE IRON (D.I.) PIPE. SHOULD OTHER PIPE MATERIALS BE UTILIZED IN ACCORDANCE WITH SAWS STANDARDS SPECIFICATIONS APPROPRIATE "RING-TIGHT" JOINT FITTINGS SHALL BE USED.
10. ALL FACILITIES SHOWN TO ABANDONED SHALL BE REMOVED AS NECESSARY AS PART OF RIGHT-OF-WAY PREPARATION. CONTRACTOR SHALL PLUG ALL FACILITIES LEFT IN PLACE TO INSURE STRUCTURAL STABILITY OF FINAL ROADWAY CONSTRUCTION. (SUBSIDIARY TO RIGHT-OF-WAY PREPARATION)
11. SAWS SHALL MACHINE CHLORINATE NEW WATER MAINS GREATER THAN 750 FEET IN LENGTH. CONTRACTOR SHALL CHLORINATE NEW MAINS HAVING LENGTHS OF 750 FEET OR LESS WITH HTH.

## NOTES:

NSPI DENOTES NO SEPARATE PAY ITEM

ALL TIE-INS ARE TO BE DONE AT NIGHT OR AT A TIME WHICH IS LEAST INCONVENIENT TO THE CUSTOMERS.(NO SEPARATE PAY ITEM)

THE LOCATION AND EXISTENCE OF UNDERGROUND CABLE INDICATED ON THE PLANS ARE TAKEN FROM THE BEST RECORDS AVAILABLE AND ARE NOT GUARANTEED TO BE ACCURATE.

THE CONTRACTOR SHALL BE RESPONSIBLE FOR RESTORING TO ITS ORIGINAL OR BETTER CONDITION FROM DAMAGES DONE TO EXISITING FENCES, CURBS, STREETS, DRIVEWAYS, SIDEWALKS, LANDSCAPING AND STRUCTURES.

THE CONTRACTOR SHALL NOT PLACE ANY WASTE MATERIALS IN THE 100 YEAR FLOOD PLAIN WITHOUT FIRST OBTAINING AN APPROVED FLOOD PLAIN PERMIT.

ALL ELEVATIONS FOR SAN ANTONIO WATER SYSTEM FACILITY ADLUSTMENT SHALL BE REFERENCED FROM BENCHMARKS ESTABLISHED FOR THIS PROJECT BY TXDOT.

### NPDES

1. THE CONTRACTOR SHALL BE RESPONSIBLE FOR THE PREPARATION, SUBMITTAL AND APPROVALS OF PERMIT APPLICATIONS AND OTHER SUPPORTING PLANS AND DOCUMENTS REQUIRED BY THE ENVIRONMENTAL PROTECTION AGENCY (EPA) AND THE CITY OF SAN ANTONIO FOR CONSTRUCTION ACTIVITIES AS RELATED TO THE NATIONAL POLLUTANT DISCHARGE ELIMINATION SYSTEM (NPDES).
2. THE CONTRACTOR SHALL BE RESPONSIBLE FOR MANAGING THE SITE DISCHARGE OF EROSION AND OTHER POLLUTANTS DURING THE COURSE OF CONSTRUCTION AND SHALL SUBMIT A NOTICE OF INTENT (NOI) 48 HOURS PRIOR TO CONSTRUCTION TO EPA AND SHALL MAINTAIN THE ATTACHED STORMWATER POLLUTION PREVENTION PLAN AS REQUIRED.
3. THE CONTRACTOR SHALL BE RESPONSIBLE FOR THE SITE CONDITIONS DURING CONSTRUCTION AND UNTIL THE SITE IS ACCEPTED FOR MAINTENANCE BY THE OWNER.
4. ALL DOCUMENTS RELATED TO THE STORM DISCHARGE PERMIT AND SITE POLLUTION PREVENTION PLANS SHALL BE KEPT ON FILE AT THE CONSTRUCTION SITE AND SHALL BE AVAILABLE TO THE OWNER FOR REVIEW WHEN REQUESTED.

## TRAFFIC CONTROL NOTES:

1. CONTRACTOR SHALL MAINTAIN OPEN TRAFFIC LANES ON LOOP 1604 AS DIRECTED IN THE LOOP 1604 TRAFFIC CONTROL PLANS AND/OR AS DIRECTED BY THE TxDOT INSPECTOR(S).
2. CONTRACTOR WORK ON LOOP 1604 SHALL BE LIMITED TO THE TIME SPECIFIED IN THE LOOP 1604 TRAFFIC CONTROL PLANS AND/OR AS DIRECTED BY THE TxDOT INSPECTOR(S).
3. TRAFFIC CONTROL FOR WATER MAIN AND SANITARY SEWER MAIN CONSTRUCTION SHALL CONFORM TO TxDOT TRAFFIC CONTROL PLAN STANDARD SHEETS: TCP NOTES - 98, TCP (1-1)-98, TCP (1-2)-98, TCP (1-3)-98, TCP (1-4)-98, TCP (2-1)-98, TCP (2-2)-98, TCP (2-3)-98, TCP (2)-98, TCP (6-1)-98A, TCP (6-2)-98A, TCP (6-3)-98A, TCP (6-4)-98A, TCP (6-5)-98A, TCP (6-6)-98A, TCP (6-7)-98A, TCP (6-8)-98, AND TCP (7-1)-98.
   IF THESE TRAFFIC CONTROL PLAN STANDARD SHEETS ARE NOT CONTAINED WITH THE LOOP 1604 TRAFFIC CONTROL PLANS, THEY MAY BE OBTAINED ON THE TxDOT WEBSITE AT 'www.dot.state.tx.us' UNDER THE HEADINGS OF "Business" & "Plans - TxDOT CAD Standard Plan Files" & Traffic Engineering Standard Plan Sheets (English and Metric)".
   TxDOT BARRICADE STANDARDS BC (1 THRU 9C)-98 SHALL ALSO BE IMPLEMENTED BY THE CONTRACTOR. THESE STANDARDS MAY BE FOUND IN THE LOOP 1604 PLANS OR MAY BE OBTAINED AT THE WEBSITE IDENTIFIED IN THE PRECEDING PARAGRAPH.

## TRENCH EXCAVATION PROTECTION:

CONTRACTOR AND/OR CONTRACTOR'S INDEPENDENTLY RETAINED EMPLOYEE OR STRUCTURAL DESIGN/GEOTECHNICAL/SAFETY/EQUIPMENT CONSULTANT, IF ANY, SHALL REVIEW THESE PLANS AND AVAILABLE GEOTECHNICAL INFORMATION AND THE ANTICIPATED INSTALLATION SITE(S) WITHIN THE PROJECT WORK AREA IN ORDER TO IMPLEMENT CONTRACTOR'S TRENCH EXCAVATION SAFETY PROTECTION SYSTEMS, PROGRAMS, AND/OR PROCEDURES FOR THE PROJECT DESCRIBED IN THE CONTRACT DOCUMENTS. THE CONTRACTOR'S IMPLEMENTATION OF THESE SYSTEMS, PROGRAMS, AND/OR PROCEDURES SHALL PROVIDE FOR ADEQUATE TRENCH EXCAVATION SAFETY PROTECTION THAT COMPLY WITH AS A MINIMUM, OSHA STANDARDS FOR TRENCH EXCAVATIONS. SPECIFICALLY, CONTRACTOR AND/OR CONTRACTOR'S INDEPENDENTLY RETAINED EMPLOYEE OR SAFETY CONSULTANT SHALL IMPLEMENT A TRENCH SAFETY PROGRAM IN ACCORDANCE WITH OSHA STANDARDS GOVERNING THE PRESENCE AND ACTIVITIES OF INDIVIDUALS WORKING IN AND AROUND TRENCH EXCAVATION.

## UTILITIES STATEMENT

THE UNDERGROUND UTILITIES SHOWN HAVE BEEN LOCATED FROM FIELD SURVEY INFORMATION AND/OR EXISTING DRAWINGS. THE ENGINEER MAKES NO GUARANTEE THAT THE UNDERGROUND UTILITIES COMPRISE ALL SUCH UTILITIES IN THE AREA, EITHER IN SERVICE OR ABANDON. THE ENGINEER FURTHER DOES NOT WARRANT THAT THE UNDERGROUND UTILITIES SHOWN ARE IN THE EXACT LOCATION INDICATED. THE ENGINEER HAS NOT PHYSICALLY LOCATED THE UNDERGROUND UTILITIES.

OTHER NOTES:

1) ALL WATER MAIN BEING INSTALLED IN LOOP 1604 RIGHT-OF-WAY SHALL BE INSTALLED IN ACCORDANCE WITH THE PHASING TRAFFIC CONTROL PLANS PREPARED BY THE TEXAS DEPARTMENT OF TRANSPORTATION FOR THE LOOP 1604 PROJECT.
2) CONTRACTOR SHALL VERIFY LOCATION OF ALL EXISTING UTILITIES PRIOR TO BEGINNING CONSTRUCTION.
3) ALL HORIZONTAL AND VERTICAL BENDS, PI's AND PVI's SHALL HAVE THRUST BLOCKING. THRUST BLOCKING SUBSIDIARY TO PIPE INSTALLATION.
4) PIPE WILL HAVE RESTRAINED JOINTS AS SHOWN ON PLANS RESTAINED JOINTS SUBSIDIARY TO PIPE INSTALLATION.
5) ABANDONMENT AND REMOVAL OF EXISTING WATER MAINS SHALL BE NO SEPARATE PAY ITEM (NSPI).
6) EXCESS EXCAVATED MATERIAL SHALL BE HAULED OFF SITE. THIS WORK SHALL BE SUBSIDIARY TO COST OF PIPE.
7) IF CONTRACTOR DAMAGES NEW VEGETATION, SEED, TOP SOIL OR OTHER IMPROVEMENTS INSTALLED BY TXDOT, CONTRACTOR SHALL REPAIR OR REPLACE DAMAGED GOODS TO SATISFACTION OF TXDOT AT CONTRACTOR'S EXPENSE.
8) EXISTING FIRE HYDRANTS ON MAINS TO BE ABANDONED WILL BE REMOVED AND RETURNED TO SAWS (NSPI).
9) 6" VALVE TO FIRE HYDRANT IS SUBSIDIARY TO FIRE HYDRANT INSTALLATION.
10) ALL WATER MAINS SHALL BE 1.5METER MINIMUM BURY FROM FINISHED GRADE UNLESS OTHERWISE NOTED.
11) CONTRACTOR SHALL BE RESPONSIBLE FOR OBTAINING ANY NECESSARY TEMPORARY CONSTRUCTION EASEMENTS
12) CONTRACTOR SHALL MAINTAIN ACCESS TO DRIVEWAYS AND ROADWAYS AT ALL TIMES AS DIRECTED BY TXDOT. TRAFFIC CONTROL NECESSARY FOR WATER MAIN INSTALLATION IS NO SEPARATE PAY ITEM.
13) RETAINER GLANDS ARE SUBSIDIARY TO COST OF FITTINGS.
14) COST OF INSTALLING WRAP, BANDS, CLEATS, ETC. AROUND WATER MAIN WITHIN CASING IS SUBSIDIARY TO THE COST OF THE WATER PIPE.
15) TIE-INS WILL BE DONE DURING OFF PEAK HOURS AS DIRECTED BY SAWS. DUAL TIE-INS WILL BE DONE SIMULTANEOUSLY UNLESS OTHERWISE DIRECTED BY SAWS.
16) ROCK EXCAVATION IS SUBSIDIARY TO THE COST OF WATER PIPE.
17) CONTRACTOR SHALL BE RESPONSIBLE FOR IDENTIFYING THE EXACT LOCATION OF EXISTING UTILITIES. UTILITIES SHOWN ON THE PLANS ARE NOT GUARANTEED TO ACCURATELY REFLECT FIELD CONDITIONS.
18) UNLESS OTHERWISE NOTED, CONTRACTOR WILL REMOVE ABANDONED WATER MAIN AS NEEDED TO CONSTRUCT NEW MAINS (NSPI).

STATE OF TEXAS
ROBERT J. SCHROEDER
50026
REGISTERED
PROFESSIONAL ENGINEER
10/9/02

CO#51

SHEET 2-1 OF 14

VICKREY & ASSOCIATES, INC.
CONSULTING ENGINEERS
7334 Blanco Road Suite 109 San Antonio, Texas 78216
Telephone: (210)349-3271

SAN ANTONIO WATER SYSTEM

FM LOOP 1604
CULEBRA RD.TO U.S.HWY.90
SAWS JOB NO. 00-5023

Texas Department of Transportation

| DESIGNED: | FED. RD. DIV. NO. | STATE | PROJECT NO. | | | HIGHWAY NO. |
|---|---|---|---|---|---|---|
| CHECKED: | 6 | TEXAS | NH 2000(704),etc. | | | LP1604 |
| DRAWN: | STATE DIST. | COUNTY | CONTROL NO. | SECTION NO. | JOB NO. | SHEET NO. |
| CHECKED: | SAT | BEXAR | 2452 | 01 | 036 etc. | 883H |

m:\1895-004\dgn\1895-004-016 Change Orders\sh_gennotes2.dgn 10/09/02 08:43:44 AM

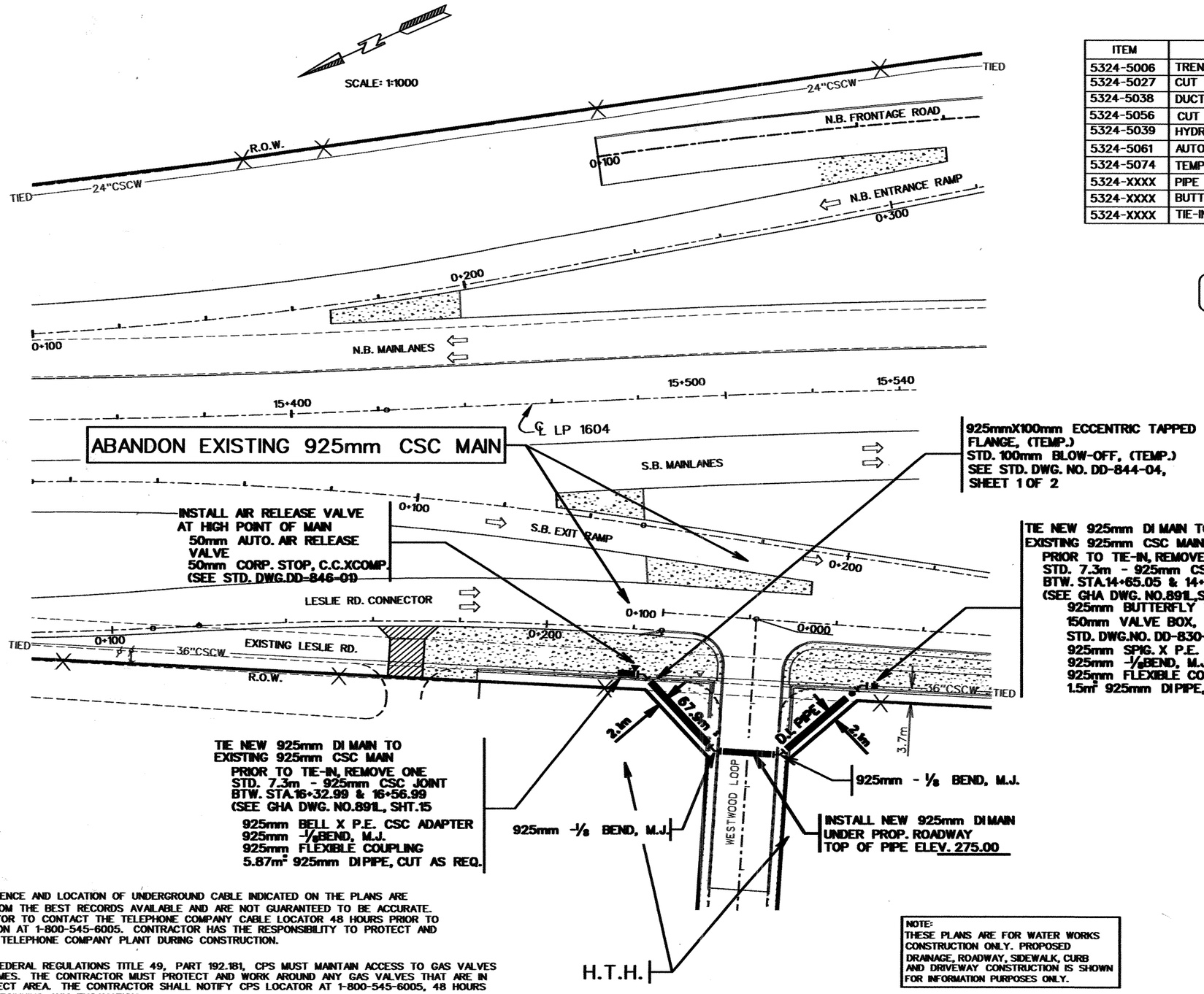


## SHEET QUANTITIES

| ITEM | DESCRIPTION | EST. | UNITS |
|---|---|---|---|
| 5324-5006 | TRENCH EXCAVATION PROTECTION | 75.3 | M |
| 5324-5027 | CUT & REPL ASPH PAV W/150mm ASPH TRT B | 20.6 | m2 |
| 5324-5038 | DUCTILE IRON FITTINGS | 5,416 | KG |
| 5324-5056 | CUT AND REPLACE CONC SDWLK, DRWY, ETC | .52 | M2 |
| 5324-5039 | HYDROSTATIC PRESSURE TEST | 1 | EA. |
| 5324-5061 | AUTOMATIC AIR RELEASE VALVE (50mm) | 1 | EA. |
| 5324-5074 | TEMP. BLOW-OFF (100mm) | 1 | EA. |
| 5324-XXXX | PIPE WTR (MAIN) (DI) (925mm) | 75.3 | M |
| 5324-XXXX | BUTTERFLY VALVE AND BOX (925mm) | 1 | EA. |
| 5324-XXXX | TIE-IN (MAIN) (925mm) | 2 | EA. |

QUANTITIES THIS SHEET
CSJ 2452-01-038

NOTE:

ALL DIMENSIONS ARE IN METERS UNLESS OTHERWISE NOTED.

NOTE:

1. THE EXISTENCE AND LOCATION OF UNDERGROUND CABLE INDICATED ON THE PLANS ARE TAKEN FROM THE BEST RECORDS AVAILABLE AND ARE NOT GUARANTEED TO BE ACCURATE. CONTRACTOR TO CONTACT THE TELEPHONE COMPANY CABLE LOCATOR 48 HOURS PRIOR TO EXCAVATION AT 1-800-545-6005. CONTRACTOR HAS THE RESPONSIBILITY TO PROTECT AND SUPPORT TELEPHONE COMPANY PLANT DURING CONSTRUCTION.

2. DUE TO FEDERAL REGULATIONS TITLE 49, PART 192.181, CPS MUST MAINTAIN ACCESS TO GAS VALVES AT ALL TIMES. THE CONTRACTOR MUST PROTECT AND WORK AROUND ANY GAS VALVES THAT ARE IN THE PROJECT AREA. THE CONTRACTOR SHALL NOTIFY CPS LOCATOR AT 1-800-545-6005, 48 HOURS BEFORE BEGINNING ANY EXCAVATION.

3. CONTRACTOR AND/OR CONTRACTOR'S INDEPENDENTLY RETAINED EMPLOYEE OR STRUCTURAL DESIGN/CONTRACTOR AND GEOTECHNICAL/SAFETY/EQUIPMENT CONSULTANT, IF ANY, SHALL REVIEW THESE PLANS AND ANY AVAILABLE GEOTECHNICAL INFORMATION AND THE ANTICIPATED INSTALLATION SITES WITHIN THE PROJECT WORK AREA IN ORDER TO DEVELOP THE CONTRACTOR'S PLANS TO IMPLEMENT THE PROJECT DESCRIBED IN THE CONTRACT DOCUMENTS. THE CONTRACTOR'S PLANS SHALL PROVIDE FOR ADEQUATE TRENCH SAFETY SYSTEMS THAT COMPLY WITH AS A MINIMUM O.S.H.A. STANDARDS FOR TRENCH EXCAVATIONS. SPECIFICALLY, CONTRACTOR AND/OR CONTRACTOR'S INDEPENDENTLY RETAINED EMPLOYEE OR SAFETY CONSULTANT SHALL DEVELOP AND IMPLEMENT A TRENCH SAFETY PROGRAM IN ACCORDANCE WITH O.S.H.A. STANDARDS GOVERNING THE PRESENCE AND ACTIVITIES OF INDIVIDUALS WORKING IN AND AROUND TRENCH EXCAVATION.

NOTE:
THESE PLANS ARE FOR WATER WORKS CONSTRUCTION ONLY. PROPOSED DRAINAGE, ROADWAY, SIDEWALK, CURB AND DRIVEWAY CONSTRUCTION IS SHOWN FOR INFORMATION PURPOSES ONLY.

STATE OF TEXAS
MACK W. THOMAS III
85607
LICENSED
PROFESSIONAL ENGINEER
9/25/00

FM LOOP 1604

CULEBRA RD. TO U.S. HWY. 90

BLK. MAP NO. 092-604

VOID

S.A.W.S. JOB NO. 00-5023

Texas Department of Transportation

PLAN SHEET

SHEET 7 OF 57

| FED.RD. DIV.NO. | FEDERAL AID PROJECT NO. | | SHEET NO. |
|---|---|---|---|
| 6 | NH 2000(704),ETC. | | 884 |
| STATE | DIST. | COUNTY | |
| TEXAS | SAT | BEXAR | |
| CONT. | SECT. | JOB | HIGHWAY NO. |
| 2452 | 01 | 036,ETC | LP 1604 |

QUANTITIES THIS SHEET
CSJ 2452-01-038

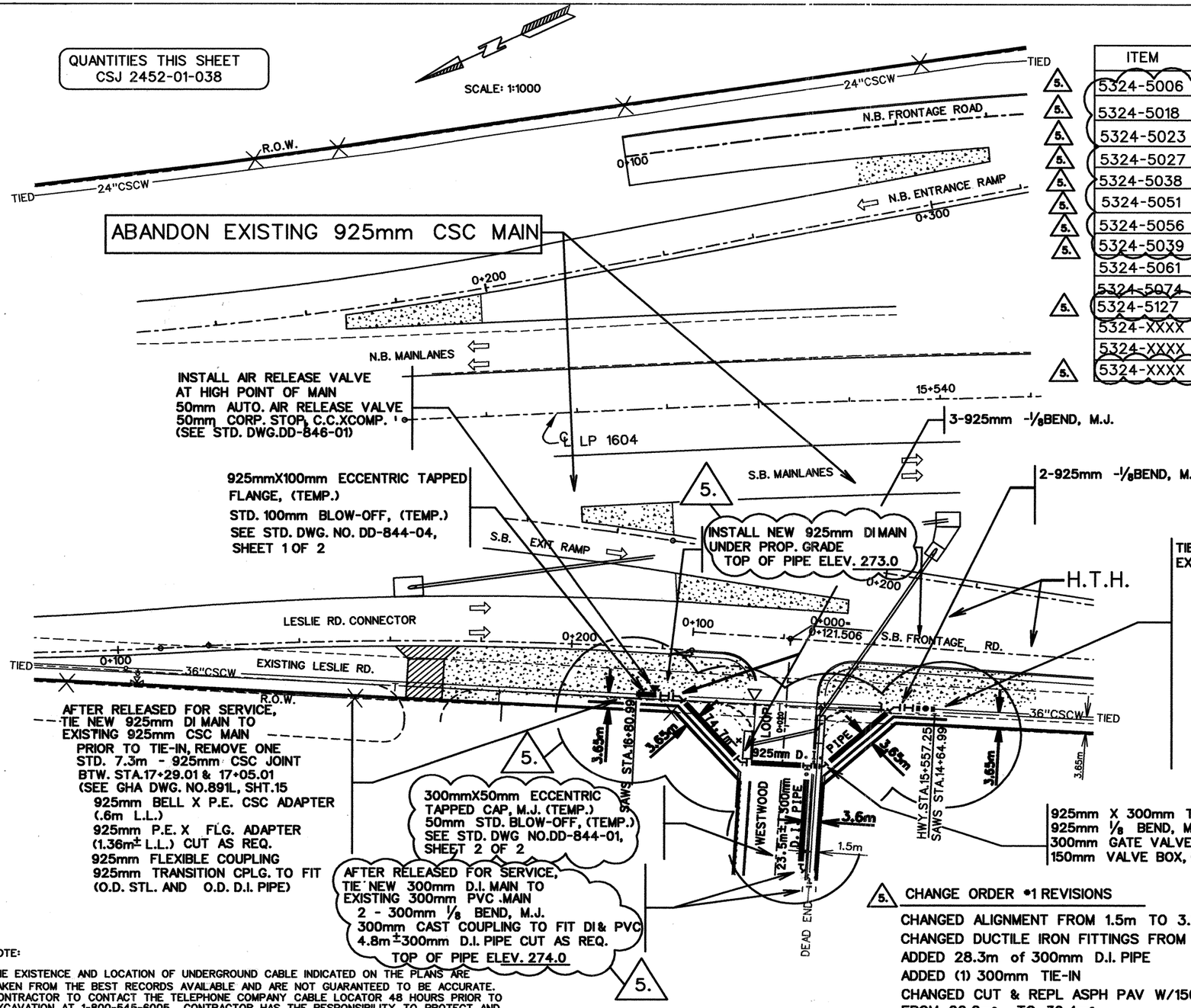


## SHEET QUANTITIES

| | ITEM | DESCRIPTION | EST. | UNITS |
|---|---|---|---|---|
| 5. | 5324-5006 | TRENCH EXCAVATION PROTECTION | 103 | M |
| 5. | 5324-5018 | TIE-IN (MAIN) (300mm) | 1 | EA. |
| 5. | 5324-5023 | TEMP BLOW-OFF (50mm) | 1 | EA. |
| 5. | 5324-5027 | CUT & REPL ASPH PAV W/150mm ASPH TRT B | 39.4 | $M^2$ |
| 5. | 5324-5038 | DUCTILE IRON FITTINGS | 11,884.3 | KG |
| 5. | 5324-5051 | GATE VALVE AND BOX (300mm) | 1 | EA. |
| 5. | 5324-5056 | CUT AND REPLACE CONC SDWLK, DRWY, ETC | .77 | $M^2$ |
| 5. | 5324-5039 | HYDROSTATIC PRESSURE TEST | 2 | EA. |
| | 5324-5061 | AUTOMATIC AIR RELEASE VALVE (50mm) | 1 | EA. |
| | 5324-5074 | TEMP. BLOW-OFF (100mm) | 1 | EA. |
| 5. | 5324-5127 | PIPE WTR MAIN (DI) (300mm) | 28.3 | M |
| | 5324-XXXX | BUTTERFLY VALVE AND BOX (925mm) | 1 | EA. |
| | 5324-XXXX | TIE-IN (MAIN) (925mm) | 2 | EA. |
| 5. | 5324-XXXX | PIPE WTR (MAIN) (DI) (925mm) | 74.7 | M |

NOTE:
1. ALL 600mm and 925mm D.I. PIPE WILL BE 1.50m BURY UNLESS OTHERWISE NOTED
2. ALL DIMENSIONS ARE IN METERS UNLESS OTHERWISE NOTED

NOTE:
THESE PLANS ARE FOR WATER WORKS CONSTRUCTION ONLY. PROPOSED DRAINAGE, ROADWAY, SIDEWALK, CURB AND DRIVEWAY CONSTRUCTION IS SHOWN FOR INFORMATION PURPOSES ONLY.

TIE NEW 925mm DI MAIN TO
EXISTING 925mm CSC MAIN
PRIOR TO TIE-IN, REMOVE ONE
STD. 7.3m - 925mm CSC JOINT
BTW. STA.14+40.97 & 14+16.97
(SEE GHA DWG. NO.891L,SHT.15
925mm BELL X FLANGE CSC ADAPTER
925mm BLIND FLANGE
925mm SPIG. X P.E. CSC ADAPTER
(.6m L.L.)
925mm FLEXIBLE COUPLING
925mm BUTTERFLY VALVE, FLG.
150mm VALVE BOX, COMPL.
STD. DWG.NO. DD-830-01, SHT 2 OF 4
925mm TRANSITION CPLG. TO FIT
(O.D. STL. AND O.D. D.I. PIPE)

NOTE:

1. THE EXISTENCE AND LOCATION OF UNDERGROUND CABLE INDICATED ON THE PLANS ARE TAKEN FROM THE BEST RECORDS AVAILABLE AND ARE NOT GUARANTEED TO BE ACCURATE. CONTRACTOR TO CONTACT THE TELEPHONE COMPANY CABLE LOCATOR 48 HOURS PRIOR TO EXCAVATION AT 1-800-545-6005. CONTRACTOR HAS THE RESPONSIBILITY TO PROTECT AND SUPPORT TELEPHONE COMPANY PLANT DURING CONSTRUCTION.

2. DUE TO FEDERAL REGULATIONS TITLE 49, PART 192.181, CPS MUST MAINTAIN ACCESS TO GAS VALVES AT ALL TIMES. THE CONTRACTOR MUST PROTECT AND WORK AROUND ANY GAS VALVES THAT ARE IN THE PROJECT AREA. THE CONTRACTOR SHALL NOTIFY CPS LOCATOR AT 1-800-545-6005, 48 HOURS BEFORE BEGINNING ANY EXCAVATION.

3. CONTRACTOR AND/OR CONTRACTOR'S INDEPENDENTLY RETAINED EMPLOYEE OR STRUCTURAL DESIGN/CONTRACTOR AND GEOTECHNICAL/SAFETY/EQUIPMENT CONSULTANT, IF ANY, SHALL REVIEW THESE PLANS AND ANY AVAILABLE GEOTECHNICAL INFORMATION AND THE ANTICIPATED INSTALLATION SITES WITHIN THE PROJECT WORK AREA IN ORDER TO DEVELOP THE CONTRACTOR'S PLANS TO IMPLEMENT THE PROJECT DESCRIBED IN THE CONTRACT DOCUMENTS. THE CONTRACTOR'S PLANS SHALL PROVIDE FOR ADEQUATE TRENCH SAFETY SYSTEMS THAT COMPLY WITH AS A MINIMUM O.S.H.A. STANDARDS FOR TRENCH EXCAVATIONS. SPECIFICALLY, CONTRACTOR AND/OR CONTRACTOR'S INDEPENDENTLY RETAINED EMPLOYEE OR SAFETY CONSULTANT SHALL DEVELOP AND IMPLEMENT A TRENCH SAFETY PROGRAM IN ACCORDANCE WITH O.S.H.A. STANDARDS GOVERNING THE PRESENCE AND ACTIVITIES OF INDIVIDUALS WORKING IN AND AROUND TRENCH EXCAVATION.

SHEET 3A OF 20

5. CHANGE ORDER #1 REVISIONS

CHANGED ALIGNMENT FROM 1.5m TO 3.65m.
CHANGED DUCTILE IRON FITTINGS FROM 5,416Kg TO 11,884.3Kg
ADDED 28.3m of 300mm D.I. PIPE
ADDED (1) 300mm TIE-IN
CHANGED CUT & REPL ASPH PAV W/150mm ASPH TRT B FROM 20.6m² TO 39.4m²
CHANGED TOP OF PIPE ELEVATIONS FROM 275 TO 273(925mm) & 274.0(300mm)
CHANGED 925mm PIPE FROM 75.3m TO 74.7m.
CHANGED TRENCH PROTECTION METERS FROM 75.3m TO 105.8m.
ADDED (1) 300mm GATE VALVE.
ADDED (1) 50mm TEMP. BLOW-OFF
CHANGED HYDROSTATIC PRESSURE TEST FROM 1 EA TO 2 EA.
CHANGED CUT & REPL CONC SDWLK, DRWY, ETC. FROM .52m² to .77m²

STATE OF TEXAS
MACK W. THOMAS III
85607
LICENSED
PROFESSIONAL ENGINEER
7/26/01

FM LOOP 1604

CULEBRA RD. TO U.S. HWY. 90
CO#7
BLK. MAP NO. 092-604
S.A.W.S. JOB NO. 00-5023

Texas Department of Transportation
PLAN SHEET
SHEET 7 OF 57

| FED.RD. DIV.NO. | FEDERAL AID PROJECT NO. | | SHEET NO. |
|---|---|---|---|
| 6 | NH 2000(704),ETC. | | 884A |
| STATE | DIST. | COUNTY | |
| TEXAS | SAT | BEXAR | |
| CONT. | SECT. | JOB | HIGHWAY NO. |
| 2452 | 01 | 036,ETC | LP 1604 |

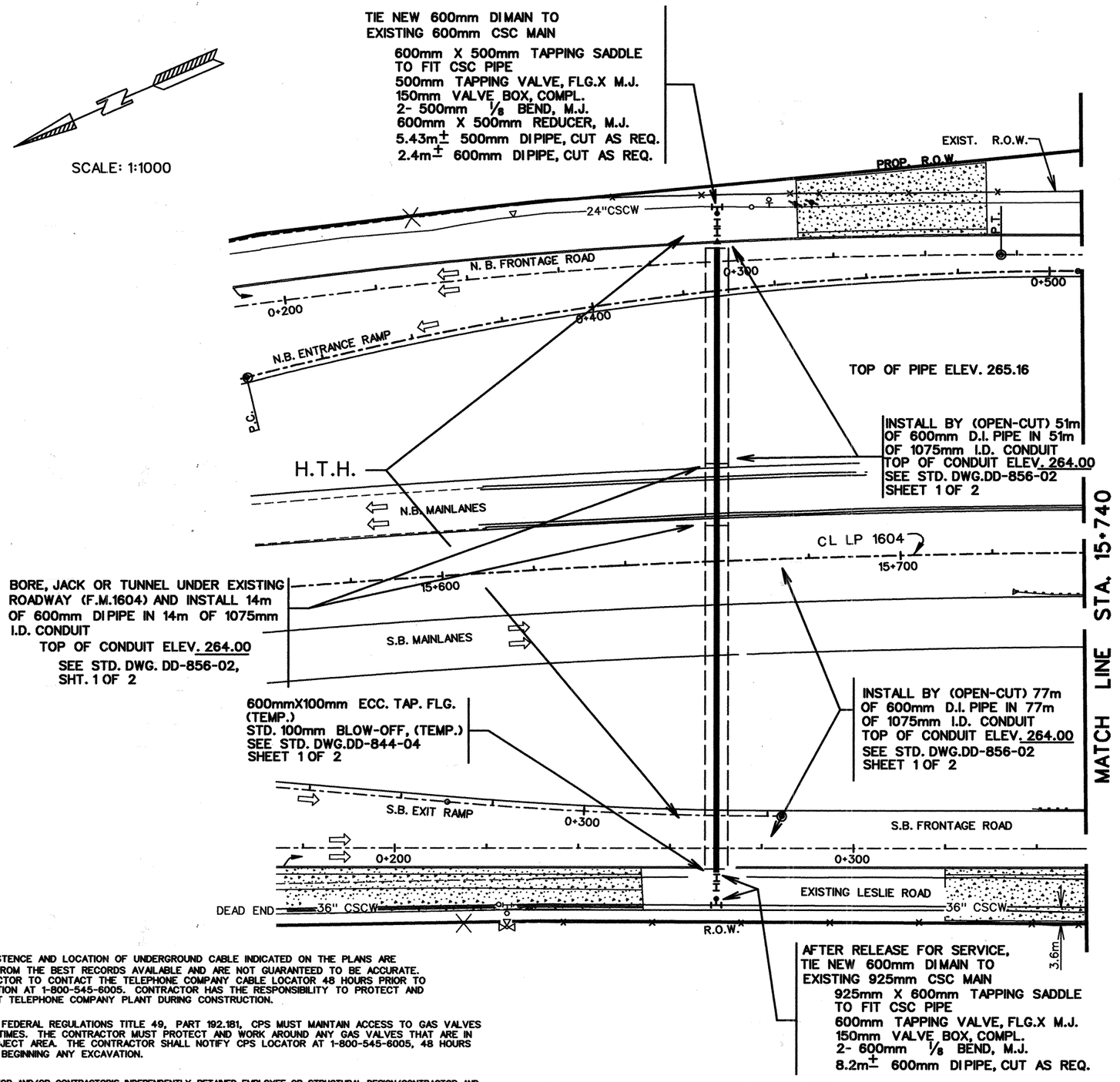


## ESTIMATED QUANTITIES

| | ITEM | DESCRIPTION | EST. | UNITS |
|---|---|---|---|---|
| | 5324-5006 | TRENCH EXCAVATION PROTECTION | 144 | M |
| | 5324-5004 | ADJUST EXIST. VALVE BOX | 2 | EA. |
| * | 5324-5011 | PIPE WTR (MAIN) (DI) (600mm) | 152.6 | M |
| | 5324-5027 | CUT&REPL. ASPH.PAV.W/150mm ASPH. TRT. BASE | 12 | $M^2$ |
| | 5324-5038 | DUCTILE IRON FITTINGS | 2,258.9 | KG |
| | 5324-5039 | HYDROSTATIC PRESSURE TEST | 1 | EA. |
| | 5324-5058 | PIPE WTR (MAIN) (DI) (500mm) | 5.43 | M |
| | 5324-5062 | FLOWABLE BACKFILL | 110 | $M^3$ |
| | 5324-5074 | TEMP. BLOW-OFF (100mm) | 1 | EA. |
| | 5324-XXXX | TAP SLEEV, VALV & BOX (925mm X 600mm) | 1 | EA. |
| | 5324-XXXX | TAP SLEEV, VALV & BOX (600mm X 500mm) | 1 | EA. |
| | 5324-XXXX | JACK OR BORE CASING (STL) (1075mm) | 14 | M |
| | 5324-XXXX | PIPE STL CASING (1075 ID) (OPEN-CUT) | 128 | M |
| | | | | |

* CONTRACTOR'S INFORMATION: 142m of 600mm (DI) IN 1075mm CASING

1. THE EXISTENCE AND LOCATION OF UNDERGROUND CABLE INDICATED ON THE PLANS ARE TAKEN FROM THE BEST RECORDS AVAILABLE AND ARE NOT GUARANTEED TO BE ACCURATE. CONTRACTOR TO CONTACT THE TELEPHONE COMPANY CABLE LOCATOR 48 HOURS PRIOR TO EXCAVATION AT 1-800-545-6005. CONTRACTOR HAS THE RESPONSIBILITY TO PROTECT AND SUPPORT TELEPHONE COMPANY PLANT DURING CONSTRUCTION.

2. DUE TO FEDERAL REGULATIONS TITLE 49, PART 192.181, CPS MUST MAINTAIN ACCESS TO GAS VALVES AT ALL TIMES. THE CONTRACTOR MUST PROTECT AND WORK AROUND ANY GAS VALVES THAT ARE IN THE PROJECT AREA. THE CONTRACTOR SHALL NOTIFY CPS LOCATOR AT 1-800-545-6005, 48 HOURS BEFORE BEGINNING ANY EXCAVATION.

3. CONTRACTOR AND/OR CONTRACTOR'S INDEPENDENTLY RETAINED EMPLOYEE OR STRUCTURAL DESIGN/CONTRACTOR AND GEOTECHNICAL/SAFETY/EQUIPMENT CONSULTANT, IF ANY, SHALL REVIEW THESE PLANS AND ANY AVAILABLE GEOTECHNICAL INFORMATION AND THE ANTICIPATED INSTALLATION SITES WITHIN THE PROJECT WORK AREA IN ORDER TO DEVELOP THE CONTRACTOR'S PLANS TO IMPLEMENT THE PROJECT DESCRIBED IN THE CONTRACT DOCUMENTS. THE CONTRACTOR'S PLANS SHALL PROVIDE FOR ADEQUATE TRENCH SAFETY SYSTEMS THAT COMPLY WITH AS A MINIMUM O.S.H.A. STANDARDS FOR TRENCH EXCAVATIONS. SPECIFICALLY, CONTRACTOR AND/OR CONTRACTOR'S INDEPENDENTLY RETAINED EMPLOYEE OR SAFETY CONSULTANT SHALL DEVELOP AND IMPLEMENT A TRENCH SAFETY PROGRAM IN ACCORDANCE WITH O.S.H.A. STANDARDS GOVERNING THE PRESENCE AND ACTIVITIES OF INDIVIDUALS WORKING IN AND AROUND TRENCH EXCAVATION.

4. ALL DIMENSIONS ARE IN METERS UNLESS OTHERWISE NOTED.

5. ALL 600mm and 925mm D.I. PIPE WILL BE 1.50m BURY UNLESS OTHERWISE NOTED.

6. CONTRACTOR IS RESPONSIBLE FOR MAINTAINING AND PROTECTING THE INTEGRITY OF THE POWER POLES DURING CONSTRUCTION

△ CHANGE ORDER NO.

NEW SHEET,
WATER ADDENDUM

STATE OF TEXAS
MACK W. THOMAS III
85607
LICENSED
PROFESSIONAL ENGINEER

9/14/01

FM LOOP 1604

CULEBRA RD. TO U.S. HWY. 90

BLK. MAP NO. 092-602 (CONT)

S.A.W.S. JOB NO. 00-5023

Texas Department of Transportation

| FED.RD. DIV.NO. | FEDERAL AID PROJECT NO. | | SHEET NO. |
|---|---|---|---|
| 6 | NH 2000(704),ETC. | | 884B |
| STATE | DIST. | COUNTY | |
| TEXAS | SAT | BEXAR | |
| CONT. | SECT. | JOB | HIGHWAY NO. |
| 2452 | 01 | 036,ETC | LP 1604 |

EXISTING 925mm CSC MAIN
PRIOR TO TIE–IN, REMOVE ONE
STD. 7.3m – 925mm CSC JOINT
925mm BELL X M.J. C.S.C. ADAPTER
CHANGE ORDER NO. 8
STA. 0+104.79

LOOP 1604

FRONTAGE RD.

SAWS
CHANGE ORDER NO. 7

0+100 0+080 0+060 0+040 0+020 0+000

R.O.W.

3.65

3.65

END CONSTRUCTION
CHANGE ORDER NO. 8

104.79M ~ 925mm D.I. PIPE

925mmX100mm ECCENTRIC TAPPED
FLANGE, (TEMP.) STD. 100mm BLOW–OFF,
(TEMP.) SEE STD. DWG. NO. DD–844–04,
SHEET 1 OF 2

REMOVE EXIST. 925mm CSC AND
REPLACE WITH 925mm D.I. PIPE.
HTH

BEGIN CONSTR. STA 0+000
CHANGE ORDER NO. 8
SAME AS SAWS STA 16+80.99
TIE TO EXIST. 925mm D.I. PIPE

R.O.W.

TxDOT CHANGE ORDER NO.__
SAWS CHANGE ORDER NO. 8
LOWERED PROP. 925mm D.I. PIPE
FROM STA 0+00.000 TO STA. 1+04.790

HORIZONTAL SCALE: 1:400
VERTICAL SCALE: 1:100

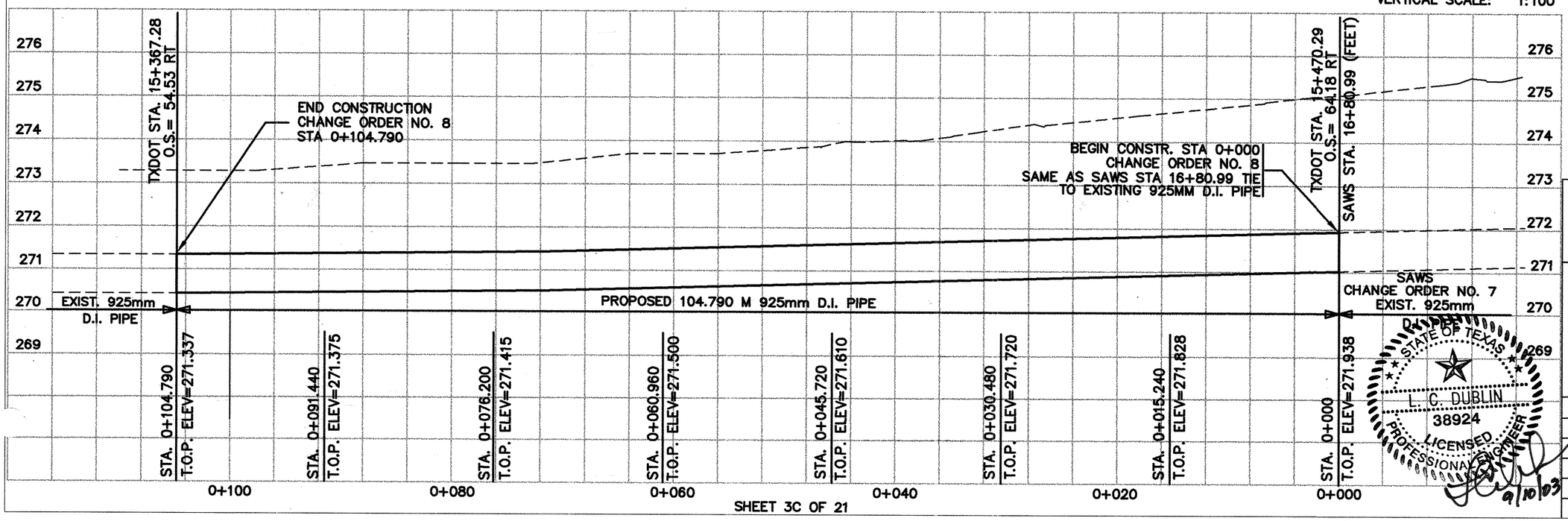


SHEET 3C OF 21

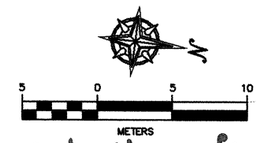


- for contractors information to be paid by force acct.
x Item already in contract

| SHEET TOTALS | | | |
|---|---|---|---|
| ITEM | DESCRIPTION | EST. | UNIT |
| 5324–5006 | TRENCH EXCAVATION PROTECTION | 104.79 | M |
| 5324–5038 | DUCTILE IRON FITTINGS | 0 | KG |
| 5324–5039 | HYDROSTATIC PRESSURE TEST | 1 | EA. |
| 5324–5074 | TEMP. BLOW–OFF (100mm) | 1 | EA. |
| 5324–XXXX | TIE–IN (MAIN) (925mm) | 1 | EA. |
| 5324–XXXX | PIPE WTR (MAIN) (DI) (925mm) | 104.79 | M |

1. ALL 600mm and 925mm D.I. PIPE WILL BE 1.50m BURY UNLESS OTHERWISE NOTED (SEE PROFILE).
2. ALL DIMENSIONS ARE IN METERS UNLESS OTHERWISE NOTED

NOTE:
1. THE EXISTENCE AND LOCATION OF UNDERGROUND CABLE INDICATED ON THE PLANS ARE TAKEN FROM THE BEST RECORDS AVAILABLE AND ARE NOT GUARANTEED TO BE ACCURATE. CONTRACTOR TO CONTACT THE TELEPHONE COMPANY CABLE LOCATOR 48 HOURS PRIOR TO EXCAVATION AT 1–800–346–5000. CONTRACTOR HAS THE RESPONSIBILITY TO PROTECT AND SUPPORT TELEPHONE COMPANY PLANT DURING CONSTRUCTION.

2. DUE TO FEDERAL REGULATIONS TITLE 49, PART 192.181, CPS MUST MAINTAIN ACCESS TO GAS VALVES AT ALL TIMES. THE CONTRACTOR MUST PROTECT AND SHOW GROUND ANY GAS VALVES THAT ARE IN THE PROJECT AREA. THE CONTRACTOR SHALL NOTIFY CPS LOCATOR AT 1–800–848–5000, 48 HOURS BEFORE BEGINNING ANY EXCAVATION.

TRENCH EXCAVATION SAFETY PROTECTION

CONTRACTOR AND/OR CONTRACTOR'S INDEPENDENTLY RETAINED EMPLOYEE OR STRUCTURAL DESIGN/GEOTECHNICAL/SAFETY/EQUIPMENT CONSULTANT, IF ANY, SHALL REVIEW THESE PLANS AND AVAILABLE GEOTECHNICAL INFORMATION AND THE ANTICIPATED INSTALLATION SITE(S) WITHIN THE PROJECT WORK AREA IN ORDER TO IMPLEMENT CONTRACTOR'S TRENCH EXCAVATION SAFETY PROTECTION SYSTEMS, PROGRAMS AND/OR PROCEDURES FOR THE PROJECT DESCRIBED IN THE CONTRACT DOCUMENTS. THE CONTRACTOR'S IMPLEMENTATION OF THESE SYSTEMS, PROGRAMS AND/OR PROCEDURES SHALL PROVIDE FOR ADEQUATE TRENCH EXCAVATION SAFETY PROTECTION THAT COMPLY WITH AS A MINIMUM, OSHA STANDARDS FOR TRENCH EXCAVATIONS. SPECIFICALLY, CONTRACTOR AND/OR CONTRACTOR'S INDEPENDENTLY RETAINED EMPLOYEE OR SAFETY CONSULTANT SHALL IMPLEMENT A TRENCH SAFETY PROGRAM IN ACCORDANCE WITH OSHA STANDARD GOVERNING THE PRESENCE AND ACTIVITIES OF INDIVIDUALS WORKING IN AND AROUND TRENCH EXCAVATION.

NOTE:
THESE PLANS ARE FOR WATER WORKS CONSTRUCTION ONLY. PROPOSED DRAINAGE, ROADWAY, SIDEWALK, CURB AND DRIVEWAY CONSTRUCTION IS SHOWN FOR INFORMATION PURPOSES ONLY.

Change Order #69
New Sheet


FORD ENGINEERING INC.
ENGINEERING • PLANNING • DEVELOPMENT
10927 WYE DRIVE, SUITE 104, SAN ANTONIO, TEXAS 78217, (210) 590–4777


SAN ANTONIO WATER SYSTEM

FM LOOP 1604
CULEBRA RD. TO
U.S. HWY 90
WESTWOOD
WATERLINE RELOCATION

SAWS JOB NO. 00-5023

STATE OF TEXAS
L. C. DUBLIN
38924
LICENSED
PROFESSIONAL ENGINEER
9/10/03

| FED. RD. DIV. NO. | FEDERAL AID PROJECT NO. | | SHEET NO. |
|---|---|---|---|
| 6 | NH 2000(704) etc | | 884a |
| STATE | STATE DIST. NO. | COUNTY | |
| TEXAS | 15 | BEXAR | |
| CONT. | SECT. | JOB | HIGHWAY NO. |
| 2452 | 01 | 036 etc. | LP 1604 |

SHEET QUANTITIES

| ITEM | DESCRIPTION | EST. | UNITS |
|---|---|---|---|
| 5324-5006 | TRENCH EXCAVATION PROTECTION | 275.6 | M |
| 5324-5004 | ADJUST EXIST. VALVE BOX | 1 | EA. |
| 5324-5011 | PIPE WTR (MAIN) (DI) (600mm) | 104 | M |
| 5324-5019 | TIE-IN (MAIN) (600mm) | 1 | EA. |
| 5324-5038 | DUCTILE IRON FITTINGS | 15,231.8 | KG |
| 5324-5039 | HYDROSTATIC PRESSURE TEST | 2 | EA. |
| 5324-5061 | AUTOMATIC AIR RELEASE VALVE (50mm) | 1 | EA. |
| 5324-5062 | FLOWABLE BACKFILL | 239 | $m^3$ |
| 5324-5074 | TEMP. BLOW-OFF (100mm) | 2 | EA. |
| * 5324-XXXX | PIPE WTR (MAIN) (DI) (925mm) | 188.8 | M |
| 5324-XXXX | BUTTERFLY VALVE AND BOX (925mm) | 2 | EA. |
| 5324-XXXX | TIE-IN (MAIN) (925mm) | 1 | EA. |
| 5324-XXXX | PIPE STL (CASING) (1375mm ID) (OPEN CUT) | 136.7 | M |
| 5324-XXXX | JACK OR BORE CASING (STL) (1375mm) | 17.2 | M |

* CONTRACTOR'S INFORMATION: 153.9m of 925mm (DI) IN 1375mm CASING

NOTE:

ALL DIMENSIONS ARE IN METERS UNLESS OTHERWISE NOTED

2-600mm - 1/8 BEND, M.J.

ABANDON EXISTING 925mm & 600mm C.S.C. MAINS

925mmX925mm TEE, M.J.
925mmX600mm REDUCER, M.J.
925mm BUTTERFLY VALVE, FLG.
150mm VALVE BOX, COMPL.
(SEE STD. DWG.DD-830-01, SHT. 2 OF 4)

24.3m 925mm D.I. PIPE

600mm - 1/8 BEND, M.J.

1.5m

2-600mm - 1/8BEND, M.J.

2.1m

CULEBRA CRK.

600mm 102.5m D.I. PIPE

2.1m

PROP. R.O.W.

EXIST. R.O.W.

SAWS STA.8+49.32 - TXDOT STA.15+775.665

600mm - 1/32 BEND, M.J.

EXIST. R.O.W.

2.1m

3.7m

TIED 24"CSCW

24"CSCW

INSTALL AIR RELEASE VALVE AT HIGH POINT OF MAIN
50mm AUTO. AIR RELEASE VALVE
50mm CORP. STOP, C.C. X COMP.
SEE STD. DWG.DD-846-01

0+500 0+400

0+540 0+560

NB FRT. ROAD

36"CSCW

AFTER RELEASED FOR SERVICE, TIE NEW 600mm DI MAIN TO EXISTING 600mm CSC MAIN
PRIOR TO TIE-IN, REMOVE ONE STD. 9.75m - 600mm CSC JOINT BTW. STA.8+49.32 & 8+17.32 (SEE U.S. PIPE DWG. NO.55-DA-5582, SHT.L-37)
600mm SPIG. X P.E. CSC ADAPTER
600mm FLEXIBLE COUPLING
600mm -1/8BEND, M.J.
1.5m 600mm DI PIPE, CUT AS REQ.

600mmX100mm ECC. TAP. FLG. (TEMP.)
100mm STD. BLOW-OFF, (TEMP.)
SEE STD. DWG.DD-844-04 SHEET 1 OF 2

PROP. 1375mm RCP

PROP. 1375mm RCP

INSTALL NEW 925mm D.I. MAIN UNDER PROP. 1350mm RCP TOP OF ELEV. 259.00m

INSTALL NEW 925mm D.I. MAIN UNDER PROP. 600mm S.B.C. TOP OF ELEV. 259.00m

N.B. MAINLANES

15+740 15+800 15+900

INSTALL NEW 925mm D.I. MAIN UNDER PROP. 1500mm S.B.C. AND 925mm RCP TOP OF ELEV. 259.00m

PROP. 600mm RCP

36"CSCW

S.B. MAINLANES

1604

925mmX100mm ECC. TAP. FLG. (TEMP.)
100mm STD. BLOW-OFF, (TEMP.)
SEE STD. DWG.DD-844-04 SHEET 1 OF 2

PROP. 1075mm RCP

PROP. 925mm RCP

PROP. 1500mm S.B.C.

AFTER RELEASED FOR SERVICE, CUT AND PLUG EXISTING 925mm X925mm TEE, CSC
925mm BLIND, FLG.

S.B. FRONTAGE ROAD

0+400 0+500

EXISTING LESLIE ROAD

TIED 36"CSCW

EXISTING LESLIE ROAD 36"CSCW

R.O.W.

3.7m

DRAINAGE EASEMENT

WESTWOOD VISTA

STA. 15+960

MATCH LINE

2-925mm - 1/8 BEND, M.J.

QUANTITIES THIS SHEET
CSJ 2452-01-038

INSTALL BY (OPEN-CUT) 55.6m OF 925mm D.I. PIPE IN 55.6m OF 1375mm I.D. CONDUIT
SEE STD. DWG.DD-856-02 SHEET 1 OF 2

SCALE: 1:1000

BORE, JACK OR TUNNEL UNDER EXISTING ROADWAY (F.M.1604) AND INSTALL 17.2m OF 925mm D.I. PIPE IN 17.2m OF 1375mm I.D. CONDUIT

INSTALL BY (OPEN-CUT) 81.1m OF 925mm D.I. PIPE IN 81.1m OF 1375mm I.D. CONDUIT
SEE STD. DWG.DD-856-02 SHEET 1 OF 2

925mm BUTTERFLY VALVE, FLG.
150mm VALVE BOX, COMPL.
(SEE STD. DWG.DD-830-01, SHT. 2 OF 4)

AFTER RELEASED FOR SERVICE, TIE NEW 925mm DI MAIN TO EXISTING 925mm CSC MAIN
2-925mm P.E X FLG. ADAPTER
2-925mm FLEX. COUPLING
925mmx925mm TEE, M.J.
2-925mm 1/8 BEND, M.J.
925mm SOLID PLUG, M.J.
10.6m 925mm D.I. PIPE, CUT AS REQ.

NOTE:
THESE PLANS ARE FOR WATER WORKS CONSTRUCTION ONLY. PROPOSED DRAINAGE, ROADWAY, SIDEWALK, CURB AND DRIVEWAY CONSTRUCTION IS SHOWN FOR INFORMATION PURPOSES ONLY.

NOTE:

1. THE EXISTENCE AND LOCATION OF UNDERGROUND CABLE INDICATED ON THE PLANS ARE TAKEN FROM THE BEST RECORDS AVAILABLE AND ARE NOT GUARANTEED TO BE ACCURATE. CONTRACTOR TO CONTACT THE TELEPHONE COMPANY CABLE LOCATOR 48 HOURS PRIOR TO EXCAVATION AT 1-800-545-6005. CONTRACTOR HAS THE RESPONSIBILITY TO PROTECT AND SUPPORT TELEPHONE COMPANY PLANT DURING CONSTRUCTION.

2. DUE TO FEDERAL REGULATIONS TITLE 49, PART 192.181, CPS MUST MAINTAIN ACCESS TO GAS VALVES AT ALL TIMES. THE CONTRACTOR MUST PROTECT AND WORK AROUND ANY GAS VALVES THAT ARE IN THE PROJECT AREA. THE CONTRACTOR SHALL NOTIFY CPS LOCATOR AT 1-800-545-6005, 48 HOURS BEFORE BEGINNING ANY EXCAVATION.

3. CONTRACTOR AND/OR CONTRACTOR'S INDEPENDENTLY RETAINED EMPLOYEE OR STRUCTURAL DESIGN/CONTRACTOR AND GEOTECHNICAL/SAFETY/EQUIPMENT CONSULTANT, IF ANY, SHALL REVIEW THESE PLANS AND ANY AVAILABLE GEOTECHNICAL INFORMATION AND THE ANTICIPATED INSTALLATION SITES WITHIN THE PROJECT WORK AREA IN ORDER TO DEVELOP THE CONTRACTOR'S PLANS TO IMPLEMENT THE PROJECT DESCRIBED IN THE CONTRACT DOCUMENTS. THE CONTRACTOR'S PLANS SHALL PROVIDE FOR ADEQUATE TRENCH SAFETY SYSTEMS THAT COMPLY WITH AS A MINIMUM O.S.H.A. STANDARDS FOR TRENCH EXCAVATIONS. SPECIFICALLY, CONTRACTOR AND/OR CONTRACTOR'S INDEPENDENTLY RETAINED EMPLOYEE OR SAFETY CONSULTANT SHALL DEVELOP AND IMPLEMENT A TRENCH SAFETY PROGRAM IN ACCORDANCE WITH O.S.H.A. STANDARDS GOVERNING THE PRESENCE AND ACTIVITIES OF INDIVIDUALS WORKING IN AND AROUND TRENCH EXCAVATION.

STATE OF TEXAS
MACK W. THOMAS III
85607
LICENSED PROFESSIONAL ENGINEER
9/25/00

FM LOOP 1604

CULEBRA RD. TO U.S. HWY. 90

BLK. MAP NO. 092-602

S.A.W.S. JOB NO. 00-5023

Texas Department of Transportation

| FEDERAL DIV.NO. | FEDERAL AID PROJECT NO. | | SHEET NO. |
|---|---|---|---|
| 6 | NH 2000(704)etc. | | 805 |
| STATE | DIST. | COUNTY | |
| TEXAS | SAT | BEXAR | |
| CONT. | SECT. | JOB | HIGHWAY NO. |
| 2452 | 01 | 036,ETC | LP 1604 |

QUANTITIES THIS SHEET
CSJ 2452-01-038

NOTE:

1. ALL 600mm and 925mm D.I. PIPE WILL BE 1.50m BURY UNLESS OTHERWISE NOTED
2. ALL DIMENSIONS ARE IN METERS UNLESS OTHERWISE NOTED

ABANDON EXISTING 925mm & 600mm C.S.C. MAINS

600mm - 1/8 BEND, M.J.

2-600mm - 1/8BEND, M.J.

925mmX925mm TEE, M.J.
925mmX600mm REDUCER, M.J.
925mm BUTTERFLY VALVE, FLG.
600mm BUTTERFLY VALVE, FLG.
2-150mm VALVE BOX, COMPL.
(SEE STD. DWG.DD-830-01, SHT. 2 OF 4)

24.3m² 925mm D.I. PIPE

SAWS STA.8+49.32 = TXDOT STA.15+775.665

CULEBRA CRK.

1.5m

2.1m

600mm - 1/32 BEND, M.J.

600mm — 102.5m — D.I. PIPE

PROP. R.O.W.

EXIST. R.O.W.

TIED — 24"CSCW

PROP. 3000mm X 2100mm SBC

3.7m

INSTALL AIR RELEASE VALVE AT HIGH POINT OF MAIN
50mm AUTO. AIR RELEASE VALVE
50mm CORP. STOP, C.C. X COMP.
SEE STD. DWG.DD-846-01

0+400 0+500 0+540 0+560

NB FRT. ROAD

36"CSCW

AFTER RELEASED FOR SERVICE, TIE NEW 600mm DI MAIN TO EXISTING 600mm CSC MAIN
PRIOR TO TIE-IN, REMOVE ONE STD. 9.75m - 600mm CSC JOINT BTW. STA.8+49.32 & 8+17.32 (SEE U.S. PIPE DWG. NO.55-DA-5582, SHT.L-37)
600mm SPIG. X P.E. CSC ADAPTER
600mm FLEXIBLE COUPLING
600mm -1/8BEND, M.J.
1.5m² 600mm DI PIPE, CUT AS REQ.

600mmX100mm ECC. TAP. FLG. (TEMP.)
STD. 100mm BLOW-OFF, (TEMP.)
SEE STD. DWG.DD-844-04 SHEET 1 OF 2

PROP. 1375mm RCP — PROP. 1375mm RCP

INSTALL NEW 925mm D.I. MAIN UNDER PROP. 1350mm RCP
TOP OF ELEV. 257.55

INSTALL NEW 925mm D.I. MAIN UNDER PROP. 600mm S.B.C.
TOP OF ELEV. 257.55

N.B. MAINLANES

15+740 15+780 15+800 15+900

INSTALL NEW 925mm D.I. MAIN UNDER PROP. 1500mm S.B.C. AND 925mm RCP
TOP OF ELEV. 257.55

PROP. 600mm RCP

S.B. MAINLANES 1604

PROP. 1075mm RCP — PROP. 925mm RCP

PROP. 1500mm S.B.C.

AFTER RELEASED FOR SERVICE, CUT AND PLUG EXISTING 925mm X925mm TEE, CSC
925mm BLIND, FLG.

S.B. FRONTAGE ROAD

PROP. 600mm RCP

0+000 0+400 0+500

S.B. FRONTAGE ROAD

TIED — 36"CSCW — EXISTING LESLIE ROAD — 36"CSCW

R.O.W.

3.6m 1.5m

WESTWOOD VISTA

DRAINAGE EASEMENT

STA. 15+960

MATCH LINE

INSTALL NEW 925mm D.I. MAIN UNDER PROP. 3000mm X 2100mm RCP
TOP OF ELEV. 257.55
2-925mm - 1/8 BEND, M.J.

INSTALL BY (OPEN-CUT) 55.6m OF 925mm D.I. PIPE IN 55.6m OF 1375mm I.D. CONDUIT
SEE STD. DWG.DD-856-02 SHEET 1 OF 2

BORE, JACK OR TUNNEL UNDER EXISTING ROADWAY (F.M.1604) AND INSTALL 17.2m OF 925mm D.I. PIPE IN 17.2m OF 1375mm I.D. CONDUIT

INSTALL BY (OPEN-CUT) 81.1m OF 925mm D.I. PIPE IN 81.1m OF 1375mm I.D. CONDUIT
SEE STD. DWG.DD-856-02 SHEET 1 OF 2

5m² 925mm D.I. PIPE

AFTER RELEASED FOR SERVICE, TIE NEW 925mm DI MAIN TO EXISTING 925mm CSC MAIN
2-925mm P.E X FLG. ADAPTER
2-925mm FLEX. COUPLING
925mmx925mm TEE, M.J.
2-925mm 1/8 BEND, M.J.
10.6m 925mm D.I. PIPE, CUT AS REQ.
925mm SOLID PLUG, M.J. (TEMP.)

SCALE: 1:1000

NOTE:
THESE PLANS ARE FOR WATER WORKS CONSTRUCTION ONLY. PROPOSED DRAINAGE, ROADWAY, SIDEWALK, CURB AND DRIVEWAY CONSTRUCTION IS SHOWN FOR INFORMATION PURPOSES ONLY.

1. THE EXISTENCE AND LOCATION OF UNDERGROUND CABLE INDICATED ON THE PLANS ARE TAKEN FROM THE BEST RECORDS AVAILABLE AND ARE NOT GUARANTEED TO BE ACCURATE. CONTRACTOR TO CONTACT THE TELEPHONE COMPANY CABLE LOCATOR 48 HOURS PRIOR TO EXCAVATION AT 1-800-545-6005. CONTRACTOR HAS THE RESPONSIBILITY TO PROTECT AND SUPPORT TELEPHONE COMPANY PLANT DURING CONSTRUCTION.
2. DUE TO FEDERAL REGULATIONS TITLE 49, PART 192.181, CPS MUST MAINTAIN ACCESS TO GAS VALVES AT ALL TIMES. THE CONTRACTOR MUST PROTECT AND WORK AROUND ANY GAS VALVES THAT ARE IN THE PROJECT AREA. THE CONTRACTOR SHALL NOTIFY CPS LOCATOR AT 1-800-545-6005, 48 HOURS BEFORE BEGINNING ANY EXCAVATION.
3. CONTRACTOR AND/OR CONTRACTOR'S INDEPENDENTLY RETAINED EMPLOYEE OR STRUCTURAL DESIGN/CONTRACTOR AND GEOTECHNICAL/SAFETY/EQUIPMENT CONSULTANT, IF ANY, SHALL REVIEW THESE PLANS AND ANY AVAILABLE GEOTECHNICAL INFORMATION AND THE ANTICIPATED INSTALLATION SITES WITHIN THE PROJECT WORK AREA IN ORDER TO DEVELOP THE CONTRACTOR'S PLANS TO IMPLEMENT THE PROJECT DESCRIBED IN THE CONTRACT DOCUMENTS. THE CONTRACTOR'S PLANS SHALL PROVIDE FOR ADEQUATE TRENCH SAFETY SYSTEMS THAT COMPLY WITH AS A MINIMUM O.S.H.A. STANDARDS FOR TRENCH EXCAVATIONS. SPECIFICALLY, CONTRACTOR AND/OR CONTRACTOR'S INDEPENDENTLY RETAINED EMPLOYEE OR SAFETY CONSULTANT SHALL DEVELOP AND IMPLEMENT A TRENCH SAFETY PROGRAM IN ACCORDANCE WITH O.S.H.A. STANDARDS GOVERNING THE PRESENCE AND ACTIVITIES OF INDIVIDUALS WORKING IN AND AROUND TRENCH EXCAVATION.

17 CHANGE ORDER #17 REVISIONS

CHANGE 925mm D.I. PIPE FROM 188.8 TO 193.8

CHANGE TEMP BLOW (100mm) FROM 2 EA TO 1 EA

## ESTIMATED QUANTITIES

| ITEM | DESCRIPTION | EST. | UNITS |
|---|---|---|---|
| 5324-5006 | TRENCH EXCAVATION PROTECTION | 275.6 | M |
| 5324-5004 | ADJUST EXIST. VALVE BOX | 1 | EA. |
| 5324-5011 | PIPE WTR (MAIN) (DI) (600mm) | 104 | M |
| 5324-5019 | TIE-IN (MAIN) (600mm) | 1 | EA. |
| 5324-5038 | DUCTILE IRON FITTINGS | 15,231.8 | KG |
| 5324-5039 | HYDROSTATIC PRESSURE TEST | 2 | EA. |
| 5324-5061 | AUTOMATIC AIR RELEASE VALVE (50mm) | 1 | EA. |
| 5324-5062 | FLOWABLE BACKFILL | 239 | M3 |
| 5324-5074 | TEMP. BLOW-OFF (100mm) | 1 | EA. |
| 5324-XXXX | PIPE WTR (MAIN) (DI) (925mm) | 193.8 | M |
| 5324-XXXX | BUTTERFLY VALVE AND BOX (925mm) | 2 | EA. |
| 5324-XXXX | TIE-IN (MAIN) (925mm) | 1 | EA. |
| 5324-XXXX | PIPE STL (CASING) (1375mm ID) (OPEN CUT) | 136.7 | M |
| 5324-XXXX | JACK OR BORE CASING (STL) (1375mm) | 17.2 | M |
| 5324-5083 | BUTTERFLY VALVE AND BOX (600mm) | 1 | EA. |

* CONTRACTOR'S INFORMATION: 153.9m of 925mm (DI) IN 1375mm CASING

STATE OF TEXAS
MACK W. THOMAS III
85607
LICENSED PROFESSIONAL ENGINEER
8/13/01

FM LOOP 1604

CULEBRA RD. TO U.S. HWY. 90

BLK. MAP NO. 092-602

(CO#1)

S.A.W.S. JOB NO. 00-5023

Texas Department of Transportation ©2000

| FED.RD. DIV.NO. | FEDERAL AID PROJECT NO. | | SHEET NO. |
|---|---|---|---|
| 6 | NH 2000(704),etc. | | 085A |
| STATE | DIST. | COUNTY | |
| TEXAS | SAT | BEXAR | |
| CONT. | SECT. | JOB | HIGHWAY NO. |
| 2452 | 01 | 036,ETC | LP 1604 |

QUANTITIES THIS SHEET
CSJ 2452-01-038

SEE SHEET 18 FOR PROFILE

NOTE:
1. ALL 600mm and 925mm D.I. PIPE WILL BE 1.50m BURY FROM FINISHED GRADE UNLESS OTHERWISE NOTED
2. ALL DIMENSIONS ARE IN METERS UNLESS OTHERWISE NOTED
3. SEE STANDARD DRAWINGS NO. DD-839-01 & DD-839-02 FOR THRUST BLOCKING

TXDOT STA. 15+675.665=
SAWS STA.11+77.40

600mmX100mm ECC. TAP. FLG., (TEMP.)
STD. 100mm BLOW-OFF, (TEMP.)
SEE STD. DWG.DD-844-04, SHT. 1 OF 2

PROP. R.O.W.

123.4m

1.2m

2.1m

24"CSCW

600mm - 1/8 BEND, M.J.

600mm - 1/32 BEND, M.J.

0+400

AFTER RELEASED FOR SERVICE,
TIE NEW 600mm DI MAIN TO
EXISTING 600mm CSC MAIN
PRIOR TO TIE-IN, REMOVE ONE
STD. 9.75m - 600mm CSC JOINT
BTW. STA.11+77.40 & 11+45.40
(SEE U.S. PIPE DWG. NO.55-DA-5582, SHT.L-37)
600mm BELL X M.J. CSC ADAPTER
(.52m LAYING LENGTH)
600mm P.E. X FLG. ADAPTER
600mm -1/8BEND, M.J.
3.5m± 600mm DIPIPE, CUT AS REQ.

AFTER RELEASED FOR SERVICE,
TIE NEW 925mm DI MAIN TO
EXISTING 925mm CSC MAIN
PRIOR TO TIE-IN, REMOVE ONE
STD. 7.3m - 925mm CSC JOINT
AT STA. 6+36.99, (SEE GHA DWG NO. 89-1L, SHEET 12)
925mm BELL X M.J. CSC ADAPTER
925mm - 1/32 BEND, M.J.
(VERTICAL OFFSET)
2-RETAINER GLANDS
1.5m± 925mm DI PIPE, CUT AS REQ.

INSTALL 600mm D.I. PIPE AT
TOP OF PIPE EL. 252.9
2-600mm - 1/8 BEND, M.J.

186.1m ± 600mm D.I. PIPE

CULEBRA CRK.

CONCRETE CAP

2-600mm - 1/8BEND, M.J.

925mmX925mm TEE, M.J.
925mmX600mm REDUCER, M.J.
925mm BUTTERFLY VALVE, FLG.
600mm BUTTERFLY VALVE, FLG.
2-150mm VALVE BOX, COMPL.
(SEE STD. DWG.DD-830-01, SHT. 2 OF 4)

24.3m± 925mm D.I. PIPE

2.1m

3.7m

EXIST. R.O.W.

2-600mm - 1/8 BEND, M.J.

PROP. 3000mm X 2100mm SBC

24"CSCW

INSTALL AIR RELEASE VALVE
AT HIGH POINT OF MAIN
50mm AUTO. AIR RELEASE VALVE
50mm CORP. STOP, C.C. X COMP.
SEE STD. DWG.DD-846-01

0+540

0+560

NB FRT. ROAD

36"CSCW

PROP. 1375mm RCP

PROP. 1375mm RCP

ABANDON EXISTING 925mm & 600mm C.S.C. MAINS

INSTALL NEW 925mm D.I. MAIN
UNDER PROP. 1350mm RCP
TOP OF ELEV. 257.55

STA. 15+960

INSTALL NEW 925mm D.I. MAIN
UNDER PROP. 600mm S.B.C.
TOP OF ELEV. 257.55

INSTALL NEW 925mm D.I. MAIN
UNDER PROP. 1500mm S.B.C.
AND 925mm RCP
TOP OF ELEV. 257.55

1604 N.B. MAINLANES

15+800

15+900

PROP. 600mm RCP

36"CSCW

FUTURE 36"SS BY OTHERS
(SEE JOB NO.00-4501/ W-EXT. "A" PROJECT)

STA. 15+740

MATCH LINE

S.B. MAINLANES

2-925mm 1/8 BEND, M.J.

PROP. 1075mm RCP

PROP. 925mm RCP

PROP. 1500mm S.B.C.

925mmX100mm ECC. TAP. FLG. (TEMP.)
STD. 100mm BLOW-OFF, (TEMP.)
SEE STD. DWG.DD-844-04
SHEET 1 OF 2

925mm BUTTERFLY VALVE, FLG.
150mm VALVE BOX, COMPL.
(SEE STD. DWG. DD-830-01,
SHT. 2 OF 4

HWY STA.15+916.25=
S.A.W.S. STA.12+29.82

0+000

0+380

PROP. 600mmRCP

S.B. FRONTAGE ROAD

0+500

36" CSCW

122.7m± 925mm D.I. PIPE

R.O.W.

3.6m

3.6m

1.5m

CPS GAS VALVE

WESTWOOD VISTA

DRAINAGE EASEMENT

CONCRETE CAP

925mm X 925mm TEE, M.J.
2-925mm BUTTERFLY VALVE, FLG.
2-150mm VALVE BOX, COMPL.
(SEE STD. DWG. DD-830-01,
SHT. 2 OF 4
10m± 925mm D.I. PIPE

925mm X 200mm TEE, M.J.
200mm X 150mm REDUCER, M.J.
150mm ANCHOR COULPLING
150mm GATE VALVLE, M.J.
150mm VALVE BOX, COMPL.
STD. FIRE HYDRANT
150mm D.I. PIPE, CUT AS REQ.

INSTALL 925mm D.I. PIPE AT
TOP OF PIPE EL. 253.48
3-925mm 1/16 BEND, M.J.
(VERTICAL OFFSET)
6-925mm RETAINER GLANDS

NOTE: (REMOVE 36" CSC PIPE (N.S.P.I)

SEE SHEET 17 FOR PROFILE

PART 192.181, CPS MUST MAINTAIN ACCESS TO GAS VALVES AT ALL TIMES. THE CONTRACTOR MUST PROTECT AND WORK AROUND ANY GAS VALVES THAT ARE IN THE PROJECT AREA. THE CONTRACTOR SHALL NOTIFY CPS LOCATOR AT 1-800-545-6005 48 HOURS BEFORE ANY EXCAVATION.

2. THE EXISTENCE AND LOCATION OF UNDERGROUND CABLE INDICATED ON THE PLANS ARE TAKEN FROM THE BEST RECORDS AVAILABLE AND ARE NOT GUARANTEED TO BE ACCURATE. CONTRACTOR TO CONTACT THE TELEPHONE COMPANY CABLE LOCATOR 48 HOURS PRIOR TO EXCAVATION AT 1-800-545-6005. CONTRACTOR HAS THE RESPONSIBILITY TO PROTECT AND SUPPORT TELEPHONE COMPANY PLANT DURING CONSTRUCTION.

3. CONTRACTOR AND/OR CONTRACTOR'S INDEPENDENTLY RETAINED EMPLOYEE OR STRUCTURAL DESIGN/CONTRACTOR AND GEOTECHNICAL/SAFETY/EQUIPMENT CONSULTANT, IF ANY, SHALL REVIEW THESE PLANS AND ANY AVAILABLE GEOTECHNICAL INFORMATION AND THE ANTICIPATED INSTALLATION SITES WITHIN THE PROJECT WORK AREA IN ORDER TO DEVELOP THE CONTRACTOR'S PLANS TO IMPLEMENT THE PROJECT DESCRIBED IN THE CONTRACT DOCUMENTS. THE CONTRACTOR'S PLANS SHALL PROVIDE FOR ADEQUATE TRENCH SAFETY SYSTEMS THAT COMPLY WITH AS A MINIMUM O.S.H.A. STANDARDS FOR TRENCH EXCAVATIONS. SPECIFICALLY, CONTRACTOR AND/OR CONTRACTOR'S INDEPENDENTLY RETAINED EMPLOYEE OR SAFETY CONSULTANT SHALL DEVELOP AND IMPLEMENT A TRENCH SAFETY PROGRAM IN ACCORDANCE WITH O.S.H.A. STANDARDS GOVERNING THE PRESENCE AND ACTIVITIES OF INDIVIDUALS WORKING IN AND AROUND TRENCH EXCAVATION.

## ESTIMATED QUANTITIES

| ITEM | DESCRIPTION | EST. | UNITS |
|---|---|---|---|
| 5324-5006 | TRENCH EXCAVATION PROTECTION | 608.2 | M |
| 5324-5004 | ADJUST EXIST. VALVE BOX | 1 | EA. |
| 5324-5011 | PIPE WTR (MAIN) (DI) (600mm) | 313 | M |
| 5324-5018 | TIE IN (MAIN) (600mm) | 1 | EA. |
| 5324-5020 | STD. FIRE HYDRANT W/150mm VALVE & BOX | 1 | EA. |
| 5324-5038 | DUCTILE IRON FITTINGS | 26,102.6 | KG |
| 5324-5039 | HYDROSTATIC PRESSURE TEST | 2 | EA. |
| 5324-5061 | AUTOMATIC AIR RELEASE VALVE (50mm) | 1 | EA. |
| 5324-5062 | FLOWABLE BACKFILL | 239 | m3 |
| 5324-5074 | TEMP. BLOW-OFF (100mm) | 2 | EA. |
| 5324-5149 | PIPE WTR (MAIN) (DI) (925mm) | 312.4 | M |
| 5324-5151 | BUTTERFLY VALVE AND BOX (925mm) | 3 | EA. |
| 5324-5150 | TIE IN (MAIN) (925mm) | 3 | EA. |
| 5324-5148 | PIPE STL (CASING) (1375mm ID) (OPEN CUT) | 136.7 | M |
| 5324-5146 | JACK OR BORE (STL CASING) (1375mm) | 17.2 | M |
| 5324-5083 | BUTTERFLY VALVE AND BOX (600mm) | 1 | EA |
| 5324-XXXX | WATER (CONCRETE CAP) | 53 | M3 |

x CONTRACTOR'S INFORMATION: 153.9m (DI) IN 1375mm CASING
x RETAINER GLANDS TO BE PAID AS FITTINGS

INSTALL NEW 925mm D.I. MAIN
UNDER PROP. 3000mm X
2100mm RCP
TOP OF ELEV. 257.55
2-925mm - 1/8 BEND, M.J.

INSTALL BY (OPEN-CUT) 55.6m
OF 925mm D.I. PIPE IN 55.6m
OF 1375mm I.D. CONDUIT
SEE STD. DWG.DD-856-02
SHEET 1 OF 2

BORE, JACK OR TUNNEL UNDER
EXISTING ROADWAY (F.M.1604) AND
INSTALL 17.2m OF 925mm D.I. PIPE
IN 17.2mOF 1375mm I.D. CONDUIT

INSTALL BY (OPEN-CUT) 81.1m
OF 925mm D.I. PIPE IN 81.1m
OF 1375mm I.D. CONDUIT
SEE STD. DWG.DD-856-02
SHEET 1 OF 2

SCALE: 1:1000

STATE OF TEXAS
PAUL M. MORAWSKI
46209
REGISTERED
PROFESSIONAL ENGINEER
Paul M. Morawski
4-01-02

△ CHANGE ORDER #15 REVISIONS

CHANGE DUCTILE IRON FITTINGS FROM 15,231.8 Kg TO 26,102.6 Kg.
CHANGE PIPE WTR (MAIN) (DI) (925 MM) FROM 193.8 m TO 312.4m.
CHANGE TEMP BLOW-OFF (100mm) FROM 1 EA TO 2 EA.
CHANGE TRENCH PROTECTION FROM 275.6m TO 608.2m.
ADDED 53 m3 OF CONCRETE CAP.
MOVED 925mm TIE-IN FROM STA. 15+916.25 TO STA. 15+792.22.
CHANGED 38.5m OF 600mm DI PIPE FROM 1.5m BURY TO DEPTH AS SHOWN ON PROFILE. SEE SHEET 18 (EXTRA DEPTH TO BE MEASURED FROM CURRENT GRADE TO PROPOSED PIPE ELEVATION.).
CHANGE PIPE WTR (MAIN)(DI) (600mm) FROM 104m TO 313m.
MOVED 600mm TIE-IN FROM STA. 15+775.665 TO STA. 15+665.665.
ADD (1) FIRE HYDRANT.
CHANGED BUTTERFLY VALVE (925mm) FROM 2EA TO 3EA.

FM LOOP 1604
CULEBRA RD. TO U.S. HWY. 90
BLK. MAP NO. 092-602
S.A.W.S. JOB NO. 00-5023

Texas Department of Transportation

| FED.RD. DIV.NO. | FEDERAL AID PROJECT NO. | | SHEET NO. |
|---|---|---|---|
| 6 | NH 2000(704),etc. | | 885 B |
| STATE | DIST. | COUNTY | |
| TEXAS | SAT | BEXAR | |
| CONT. | SECT. | JOB | HIGHWAY NO. |
| 2452 | 01 | 036,ETC | LP 1604 |

Co#15
REVISED SHEET 4C

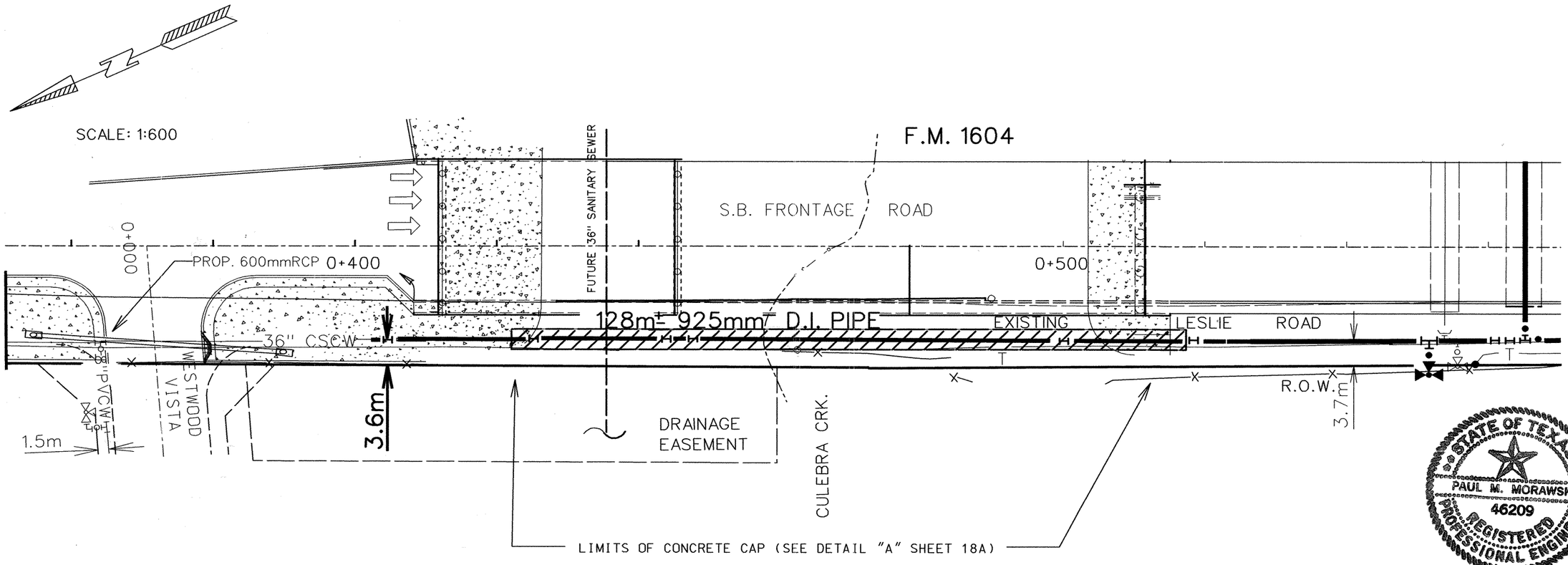


NOTE: SEE REVISED SHEET 4C FOR PLAN VIEW DETAILS

STATE OF TEXAS
PAUL M. MORAWSKI
46209
REGISTERED PROFESSIONAL ENGINEER
Paul M. Morawski
4-01-02

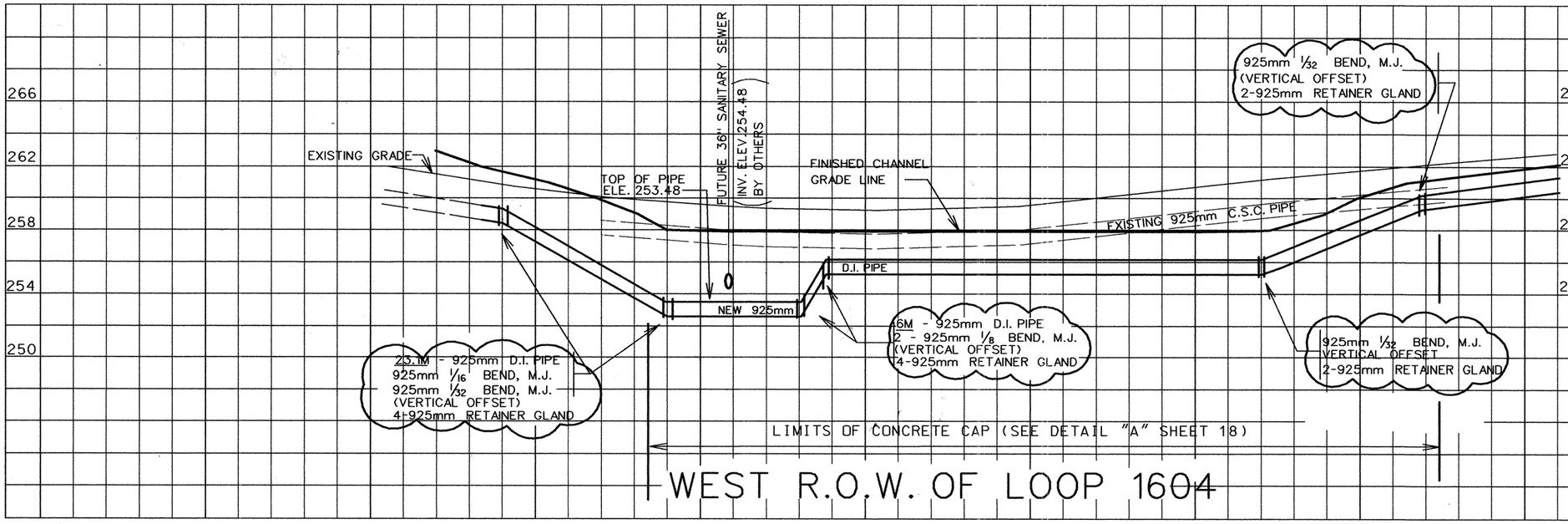


FM LOOP 1604

CULEBRA RD. TO U.S. HWY. 90

S.A.W.S. JOB NO. 00-5023

©2000 Texas Department of Transportation

| FED.RD. DIV.NO. | FEDERAL AID PROJECT NO. | | SHEET NO. |
|---|---|---|---|
| 6 | NH 2000(704),etc. | | 885 C |
| STATE | DIST. | COUNTY | |
| TEXAS | SAT | BEXAR | |
| CONT. | SECT. | JOB | HIGHWAY NO. |
| 2452 | 01 | 036,ETC | LP 1604 |

SHEET 17 CO#15

SCALE: 1:600

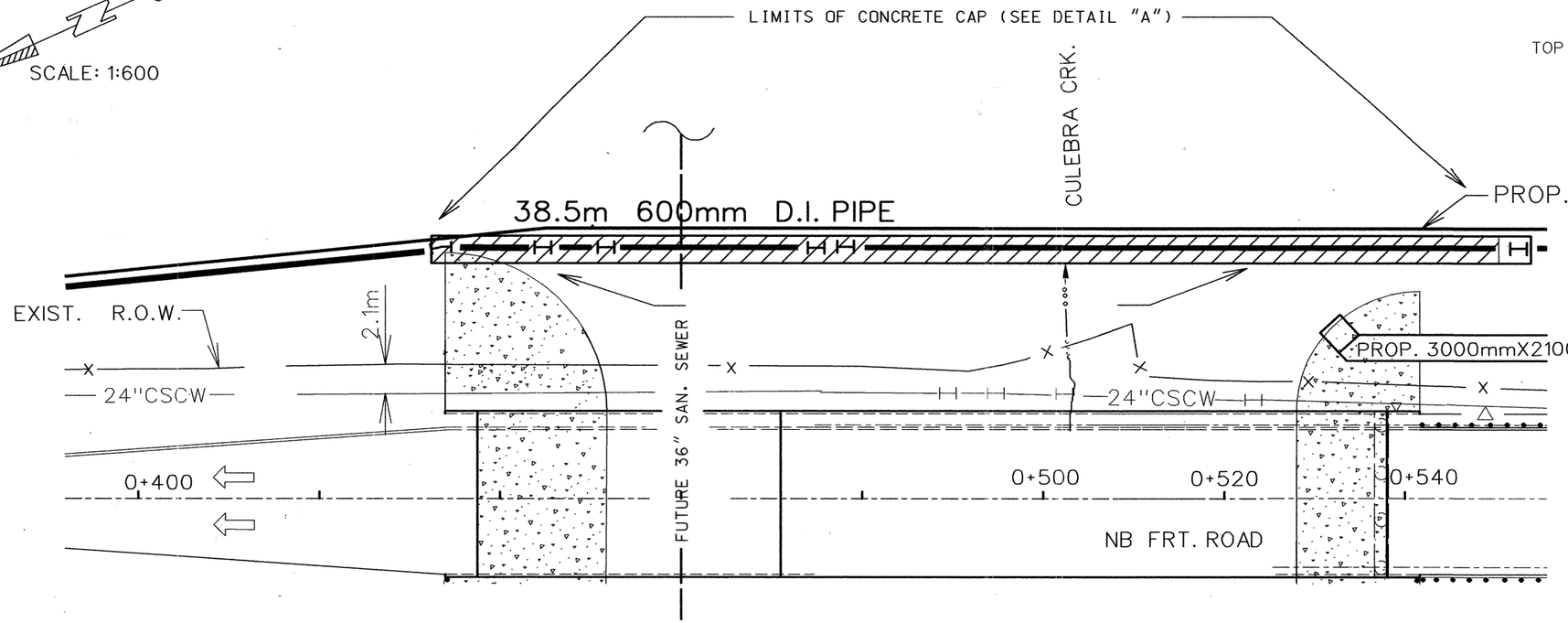


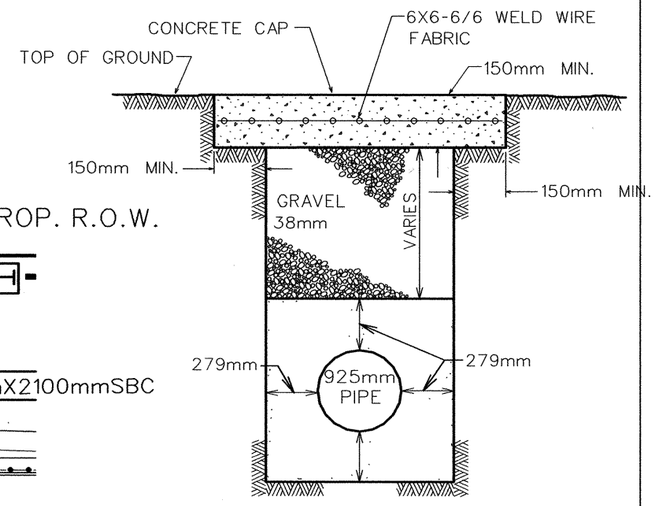


DETAIL-A

N.T.S.

△ FOR CONTRACTOR'S INFORMATION:
EXTRA DEPTH BEYOND 1.5M BURY BASED ON CURRENT FIELD ELEVATIONS

NOTE: SEE REVISED SHEET 4C FOR PLAN VIEW DETAILS

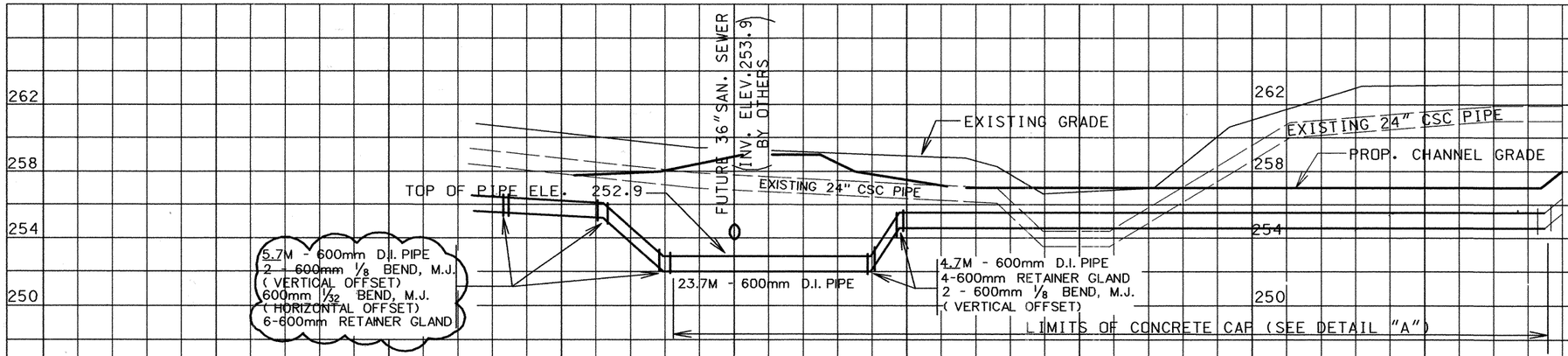


EAST R.O.W. OF LOOP 1604

*RETAINER GLANDS TO BE PAID AS FITTINGS

SCALE: 1:600 HORIZ
1:300 VERT

STATE OF TEXAS
PAUL M. WIORAWSKI
46209
REGISTERED PROFESSIONAL ENGINEER
Paul M. Wiorawski
4-01-02

FM LOOP 1604
CULEBRA RD. TO U.S. HWY. 90

S.A.W.S. JOB NO. 00-5023

©2000
Texas Department of Transportation

| FED.RD. DIV.NO. | FEDERAL AID PROJECT NO. | | SHEET NO. |
|---|---|---|---|
| 6 | NH 2000(704),etc. | | 885D |
| STATE | DIST. | COUNTY | |
| TEXAS | SAT | BEXAR | |
| CONT. | SECT. | JOB | HIGHWAY NO. |
| 2452 | 01 | 036,ETC | LP 1604 |

SHEET 18 CO#15

AFTER RELEASED FOR SERVICE,
TIE NEW 600mm DI MAIN TO
EXISTING 600mm CSC MAIN
PRIOR TO TIE-IN, REMOVE ONE
STD. 6.10m - 600mm CSC JOINT
BTW. STA.63+29.36 & STA.63+49.36
(SEE GH DWG.NO.78-254L
SHEET 15)
600mm FLEXIBLE COUPLING
600mm - 1/16 BEND, M.J.
600mm - 1/8 BEND, M.J.
3.0m±-600mm DI PIPE, CUT AS REQ.

QUANTITIES THIS SHEET
CSJ 2452-01-038

ABANDON EXISTING 36" CSC MAIN

NOTE:
THESE PLANS ARE FOR WATER WORKS CONSTRUCTION ONLY. PROPOSED DRAINAGE, ROADWAY, SIDEWALK, CURB AND DRIVEWAY CONSTRUCTION IS SHOWN FOR INFORMATION PURPOSES ONLY.

SCALE: 1:1000

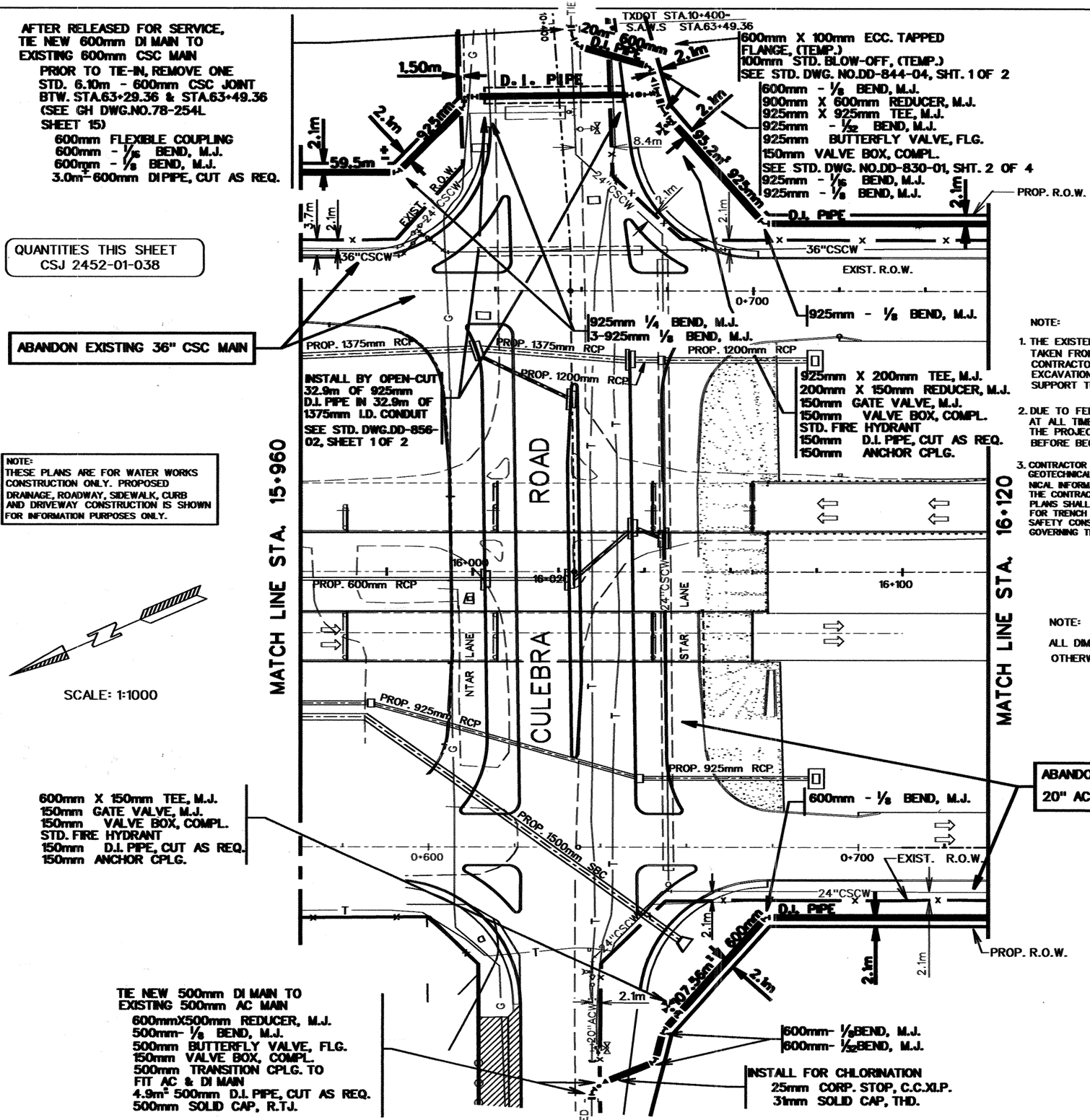


## ESTIMATED QUANTITIES

| | ITEM | DESCRIPTION | EST. | UNITS |
|---|---|---|---|---|
| | 5324-5006 | TRENCH EXCAVATION PROTECTION | 323.1 | M |
| | 5324-5011 | PIPE WTR (MAIN) (DI) (600mm) | 130.6 | M |
| | 5324-5019 | TIE-IN (MAIN) (600mm) | 1 | EA. |
| | 5324-5020 | STD FIRE HYDRANT W/VALVE & BOX COMPL | 2 | EA. |
| | 5324-5027 | CUT & REPL ASPH PAV W/150mm ASPH TRT B | 26.7 | m2 |
| | 5324-5038 | DUCTILE IRON FITTINGS | 17,871.8 | KG |
| | 5324-5039 | HYDROSTATIC PRESSURE TEST | 1 | EA. |
| | 5324-5058 | PIPE WTR (MAIN) (DI) (500mm) | 4.9 | M |
| | 5324-5059 | TIE-IN (MAIN) (500mm) | 1 | EA. |
| | 5324-5062 | FLOWABLE BACKFILL | 29 | $m^3$ |
| | 5324-5063 | BUTTERFLY VALVE AND BOX (500mm) | 1 | EA. |
| | 5324-5074 | TEMP. BLOW-OFF (100mm) | 1 | EA. |
| * | 5324-XXXX | PIPE WTR (MAIN) (DI) (925mm) | 187.6 | M |
| | 5324-XXXX | BUTTERFLY VALVE AND BOX (925mm) | 1 | EA. |
| | 5324-XXXX | PIPE STL CASING (1375mm ID) (OPEN CUT) | 32.9 | M |

* CONTRACTOR'S INFORMATION: 32.9m of 925mm (DI) IN 1375mm CASING

NOTE:

1. THE EXISTENCE AND LOCATION OF UNDERGROUND CABLE INDICATED ON THE PLANS ARE TAKEN FROM THE BEST RECORDS AVAILABLE AND ARE NOT GUARANTEED TO BE ACCURATE. CONTRACTOR TO CONTACT THE TELEPHONE COMPANY CABLE LOCATOR 48 HOURS PRIOR TO EXCAVATION AT 1-800-545-6005. CONTRACTOR HAS THE RESPONSIBILITY TO PROTECT AND SUPPORT TELEPHONE COMPANY PLANT DURING CONSTRUCTION.
2. DUE TO FEDERAL REGULATIONS TITLE 49, PART 192.181, CPS MUST MAINTAIN ACCESS TO GAS VALVES AT ALL TIMES. THE CONTRACTOR MUST PROTECT AND WORK AROUND ANY GAS VALVES THAT ARE IN THE PROJECT AREA. THE CONTRACTOR SHALL NOTIFY CPS LOCATOR AT 1-800-545-6005, 48 HOURS BEFORE BEGINNING ANY EXCAVATION.
3. CONTRACTOR AND/OR CONTRACTOR'S INDEPENDENTLY RETAINED EMPLOYEE OR STRUCTURAL DESIGN/CONTRACTOR AND GEOTECHNICAL/SAFETY/EQUIPMENT CONSULTANT, IF ANY, SHALL REVIEW THESE PLANS AND ANY AVAILABLE GEOTECHNICAL INFORMATION AND THE ANTICIPATED INSTALLATION SITES WITHIN THE PROJECT WORK AREA IN ORDER TO DEVELOP THE CONTRACTOR'S PLANS TO IMPLEMENT THE PROJECT DESCRIBED IN THE CONTRACT DOCUMENTS. THE CONTRACTOR'S PLANS SHALL PROVIDE FOR ADEQUATE TRENCH SAFETY SYSTEMS THAT COMPLY WITH AS A MINIMUM O.S.H.A. STANDARDS FOR TRENCH EXCAVATIONS. SPECIFICALLY, CONTRACTOR AND/OR CONTRACTOR'S INDEPENDENTLY RETAINED EMPLOYEE OR SAFETY CONSULTANT SHALL DEVELOP AND IMPLEMENT A TRENCH SAFETY PROGRAM IN ACCORDANCE WITH O.S.H.A. STANDARDS GOVERNING THE PRESENCE AND ACTIVITIES OF INDIVIDUALS WORKING IN AND AROUND TRENCH EXCAVATION.

NOTE:
ALL DIMENSIONS ARE IN METERS UNLESS OTHERWISE NOTED.

STATE OF TEXAS
MACK W. THOMAS III
85607
LICENSED
PROFESSIONAL ENGINEER
9/25/00

FM LOOP 1604

CULEBRA RD. TO U.S. HWY. 90

BLK. MAP NO. 092-602

S.A.W.S. JOB NO. 00-5023

Texas Department of Transportation

| FED.RD. DIV.NO. | FEDERAL AID PROJECT NO. | | SHEET NO. |
|---|---|---|---|
| 6 | NH 2000(704),ETC. | | 886 |
| STATE | DIST. | COUNTY | |
| TEXAS | SAT | BEXAR | |
| CONT. | SECT. | JOB | HIGHWAY NO. |
| 2452 | 01 | 036,ETC | LP 1604 |

AFTER RELEASED FOR SERVICE, TIE NEW 600mm DI MAIN TO EXISTING 600mm CSC MAIN
PRIOR TO TIE-IN, REMOVE ONE STD. 6.10m - 600mm CSC JOINT BTW. STA.63+29.36 & STA.63+49.36 (SEE GH DWG.NO.78-254L SHEET 15)
600mm FLEXIBLE COUPLING
600mm - 1/16 BEND, M.J.
600mm - 1/8 BEND, M.J.
4.9m± 600mm DI PIPE, CUT AS REQ.

QUANTITIES THIS SHEET
CSJ 2452-01-038

ABANDON EXISTING 36" CSC MAIN

NOTE:
THESE PLANS ARE FOR WATER WORKS CONSTRUCTION ONLY. PROPOSED DRAINAGE, ROADWAY, SIDEWALK, CURB AND DRIVEWAY CONSTRUCTION IS SHOWN FOR INFORMATION PURPOSES ONLY.

600mm X 150mm TEE, M.J.
150mm GATE VALVE, M.J.
150mm VALVE BOX, COMPL.
STD. FIRE HYDRANT
150mm D.I. PIPE, CUT AS REQ.

INSTALL FOR CHLORINATION
25mm CORP. STOP, C.C.XI.P.
31mm SOLID CAP, THD.

600mm X 100mm ECCENTRIC TAPPED FLG. (TEMP.)
STD. 100mm BLOW-OFF, (TEMP.)
SEE STD. DWG.NO.DD-844-04, SHT. 1 OF 2

CAUTION: PRIOR TO EXCAVATION CONTRACTOR TO VERIFY EXACT LOCATION AND DEPTH OF BURIED FIBER OPTIC CABLE

2-600mm- 1/8BEND, M.J.

925mm- 1/8BEND, M.J.

925mm x 600mm TEE, M.J.
925mm- 1/8BEND, M.J.
925mm BUTTERFLY VALVE, FLG.
600mm BUTTERFLY VALVE, FLG.
2-150mm VALVE BOX, COMPL.
SEE STD. DWG.NO.DD-830-01, SHT.2 OF 4
925mm SOLID CAP, M.J.
3m³ 925mm D.I. PIPE, CUT AS REQ.

TIE NEW 300mm D.I. MAIN TO EXISTING 500mm AC MAIN
500mm X 300mm TAPPING SLEEVE TO FIT AC PIPE
300mm TAPPING VALVE, M.J.
150mm VALVE BOX, COMPL.

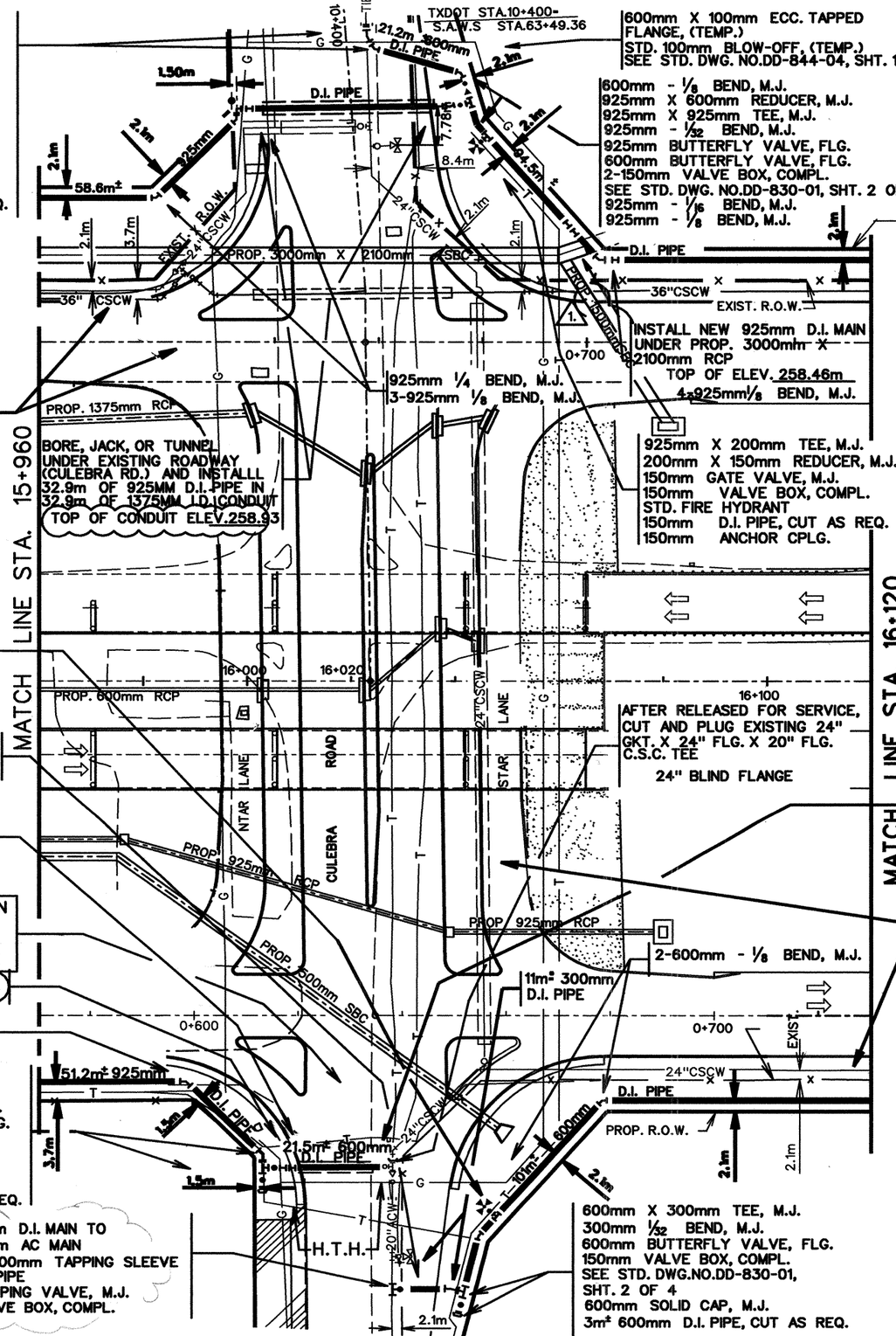


## ESTIMATED QUANTITIES

| ITEM | DESCRIPTION | EST. | UNITS |
|---|---|---|---|
| 5324-5006 | TRENCH EXCAVATION PROTECTION | 369.9 | M |
| 5324-5011 | PIPE WTR (MAIN) (DI) (600mm) | 153.7 | M |
| 5324-5019 | TIE-IN (MAIN) (600mm) | 2 | EA. |
| 5324-5020 | STD FIRE HYDRANT W/VALVE & BOX COMPL | 2 | EA. |
| 5324-5027 | CUT& REPL. ASPH. PAV. W/150mm ASPH. TRT. BASE | 48.7 | M2 |
| 5324-5038 | DUCTILE IRON FITTINGS | 28,244.1 | KG |
| 5324-5039 | HYDROSTATIC PRESSURE TEST | 2 | EA. |
| 5324-5058 | PIPE WTR (MAIN) (DI) (500mm) 5 | 4.9 | M |
| 5324-5059 | TIE-IN (MAIN) (500mm) 0 | 1 | EA. |
| 5324-5062 | FLOWABLE BACKFILL | 74 | M3 |
| 5324-5063 | BUTTERFLY VALVE AND BOX (500mm) 0 | 1 | EA. |
| 5324-5074 | TEMP. BLOW-OFF (100mm) | 2 | EA. |
| 5324-5083 | BUTTERFLY VALVE AND BOX (600mm) | 3 | EA. |
| 5324-5127 | PIPE WTR (MAIN) (DI) (300mm) | 11 | M |
| 5324-XXXX | PIPE WTR (MAIN) (DI) (925mm) | 240.2 | M |
| 5324-XXXX | BUTTERFLY VALVE AND BOX (925mm) | 2 | EA. |
| 5324-XXXX | JACK OR BORE CASING (STL) (1375)) | 32.9 | M |
| 5324-XXXX | PIPE STL CASING (1075mm ID) (OPEN-CUT) | 14.1 | M |

= CONTRACTOR'S INFORMATION: 32.9m of 925mm (DI) IN 1375mm CASING
== TOTAL IS FOR C.O. # 1 AND # 17

NOTES:

1. THE EXISTENCE AND LOCATION OF UNDERGROUND CABLE INDICATED ON THE PLANS ARE TAKEN FROM THE BEST RECORDS AVAILABLE AND ARE NOT GUARANTEED TO BE ACCURATE. CONTRACTOR TO CONTACT THE TELEPHONE COMPANY CABLE LOCATOR 48 HOURS PRIOR TO EXCAVATION AT 1-800-545-6005. CONTRACTOR HAS THE RESPONSIBILITY TO PROTECT AND SUPPORT TELEPHONE COMPANY PLANT DURING CONSTRUCTION.
2. DUE TO FEDERAL REGULATIONS TITLE 49, PART 192.181, CPS MUST MAINTAIN ACCESS TO GAS VALVES AT ALL TIMES. THE CONTRACTOR MUST PROTECT AND WORK AROUND ANY GAS VALVES THAT ARE IN THE PROJECT AREA. THE CONTRACTOR SHALL NOTIFY CPS LOCATOR AT 1-800-545-6005, 48 HOURS BEFORE BEGINNING ANY EXCAVATION.
3. CONTRACTOR AND/OR CONTRACTOR'S INDEPENDENTLY RETAINED EMPLOYEE OR STRUCTURAL DESIGN/CONTRACTOR AND GEOTECHNICAL/SAFETY/EQUIPMENT CONSULTANT, IF ANY, SHALL REVIEW THESE PLANS AND ANY AVAILABLE GEOTECHNICAL INFORMATION AND THE ANTICIPATED INSTALLATION SITES WITHIN THE PROJECT WORK AREA IN ORDER TO DEVELOP THE CONTRACTOR'S PLANS TO IMPLEMENT THE PROJECT DESCRIBED IN THE CONTRACT DOCUMENTS. THE CONTRACTOR'S PLANS SHALL PROVIDE FOR ADEQUATE TRENCH SAFETY SYSTEMS THAT COMPLY WITH AS A MINIMUM O.S.H.A. STANDARDS FOR TRENCH EXCAVATIONS. SPECIFICALLY, CONTRACTOR AND/OR CONTRACTOR'S INDEPENDENTLY RETAINED EMPLOYEE OR SAFETY CONSULTANT SHALL DEVELOP AND IMPLEMENT A TRENCH SAFETY PROGRAM IN ACCORDANCE WITH O.S.H.A. STANDARDS GOVERNING THE PRESENCE AND ACTIVITIES OF INDIVIDUALS WORKING IN AND AROUND TRENCH EXCAVATION.
4. ALL DIMENSIONS ARE IN METERS UNLESS OTHERWISE NOTED.
5. ALL 600mm and 925mm D.I. PIPE WILL BE 1.50m BURY UNLESS OTHERWISE NOTED.
6. CONTRACTOR IS RESPONSIBLE FOR MAINTAINING AND PROTECTING THE INTEGRITY OF THE POWER POLES DURING CONSTRUCTION

STATE OF TEXAS
MACK W. THOMAS III
85607
LICENSED PROFESSIONAL ENGINEER
9/17/01

FM LOOP 1604
CULEBRA RD. TO U.S. HWY. 90
BLK. MAP NO. 092-602
S.A.W.S. JOB NO. 00-5023 CCO#13

△ CHANGE ORDER #17 REVISIONS

CHANGED TOP OF CONDUIT ELEVATION FROM 261.50 TO 258.93
CHANGED AFTER RELEASED FOR SERVICE TO TIE NEW MAIN
CHANGED D.I. FITTING FROM 600mm 1/4BEND TO 600mm1/8 BEND

Texas Department of Transportation

| FED.RD. DIV.NO. | FEDERAL AID PROJECT NO. | | SHEET NO. |
|---|---|---|---|
| 6 | NH 2000(704),ETC. | | 5C6A |
| STATE | DIST. | COUNTY | |
| TEXAS | SAT | BEXAR | |
| CONT. | SECT. | JOB | HIGHWAY NO. |
| 2452 | 01 | 036,ETC | LP 1604 |

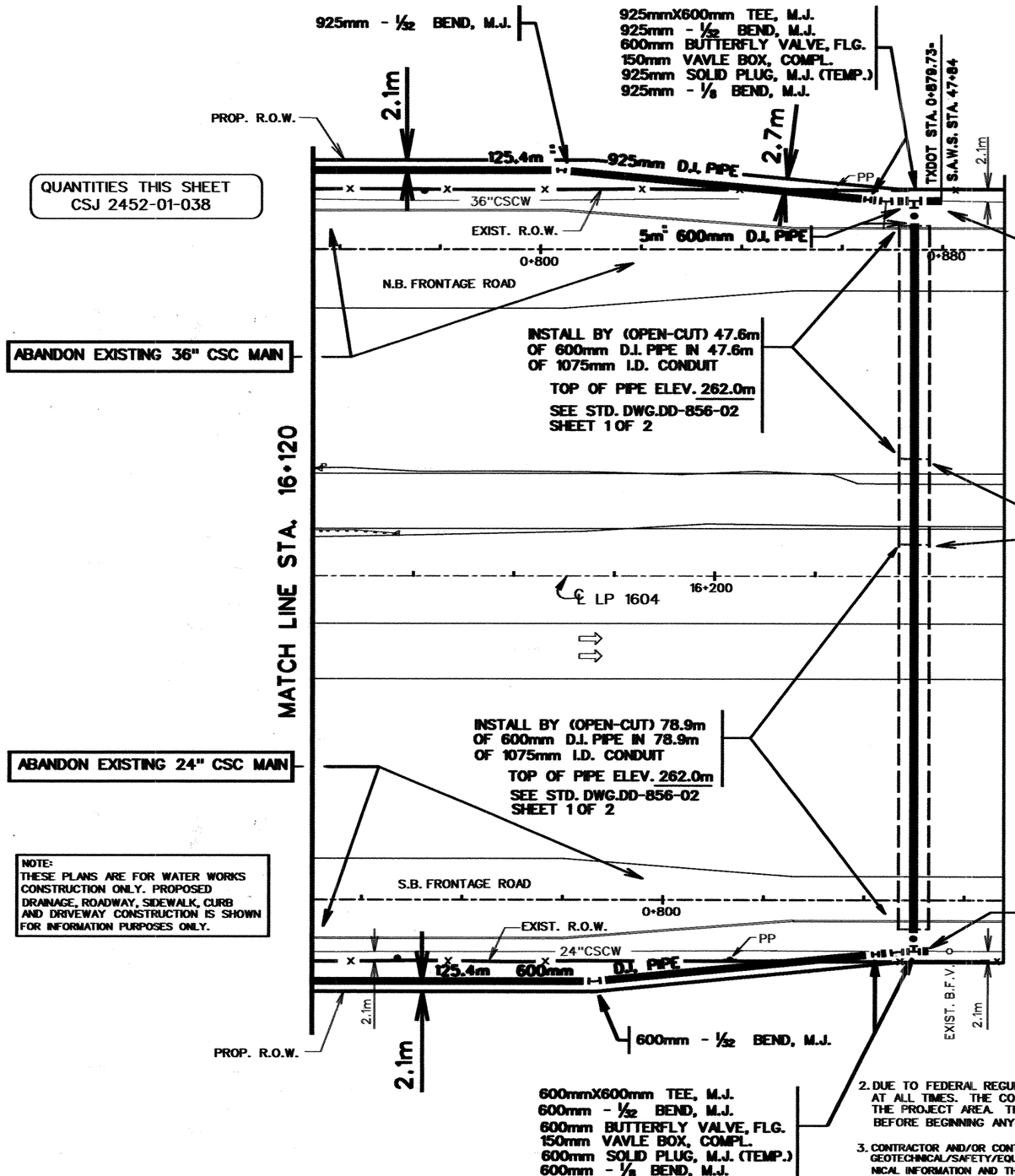


QUANTITIES THIS SHEET
CSJ 2452-01-038

AFTER RELEASED FOR SERVICE,
TIE NEW 925mm DI MAIN TO
EXISTING 925mm CSC MAIN
PRIOR TO TIE-IN, REMOVE THREE
STD. 6.10m - 925mm CSC JOINT
BTW. STA.48+56 & STA.47+84
(SEE GH DWG.NO.87150L
SHEET 8)
925mm FLEXIBLE COUPLING
1.50m 925mm DI PIPE, CUT AS REQ.
925mm BELL X P.E. CSC ADAPTER

OF 1375mm I.D. CONDUIT

BORE, JACK OR TUNNEL UNDER EXISTING
ROADWAY (F.M.1604) AND INSTALL 17.7m
OF 600mm D.I. PIPE IN 17.7m OF 1075mm
I.D. CONDUIT
TOP OF PIPE ELEV. 262.0m

AFTER RELEASED FOR SERVICE,
TIE NEW 600mm DI MAIN TO
EXISTING 600mm CSC MAIN
PRIOR TO TIE-IN, REMOVE TWO
STD. 6.10m - 600mm CSC JOINT
BTW. STA.50+61.69 & STA.50+21.69
(SEE GH DWG.NO.78-254L, SHEET 12 )
600mm SPIG. X P.E. CSC ADAPTER
600mm FLEXIBLE COUPLING
1.50m 600mm DIPIPE, CUT AS REQ.

## SHEET QUANTITIES

| | ITEM | DESCRIPTION | EST. | UNITS |
|---|---|---|---|---|
| | 5324-5006 | TRENCH EXCAVATION PROTECTION | 385.4 | M |
| * | 5324-5011 | PIPE WTR MAIN (DI) (600mm) | 276.1 | M |
| | 5324-5019 | TIE-IN (MAIN) (600mm) | 1 | EA. |
| | 5324-5038 | DUCTILE IRON FITTINGS | 8,231 | KG |
| | 5324-5062 | FLOWABLE BACKFILL | 167.7 | m3 |
| | 5324-5083 | BUTTERFLY VALVE AND BOX (600mm) | 2 | EA. |
| | 5324-XXXX | TIE-IN (MAIN) (925mm) | 1 | EA. |
| | 5324-XXXX | PIPE WTR MAIN (DI) (925mm) | 126.9 | M |
| | 5324-XXXX | PIPE STL CASING (1075mm ID) (OPEN-CUT) | 126.5 | M |
| | 5324-XXXX | JACK OR BORE CASING (STL) (1075mm) | 17.7 | M |

* CONTRACTOR'S INFORMATION: 144.2m of 600mm (DI) IN 1075mm CASING

SCALE: 1:1000

NOTE:

ALL DIMENSIONS ARE IN METERS UNLESS OTHERWISE NOTED.

NOTE:
THESE PLANS ARE FOR WATER WORKS CONSTRUCTION ONLY. PROPOSED DRAINAGE, ROADWAY, SIDEWALK, CURB AND DRIVEWAY CONSTRUCTION IS SHOWN FOR INFORMATION PURPOSES ONLY.

NOTE:

1. THE EXISTENCE AND LOCATION OF UNDERGROUND CABLE INDICATED ON THE PLANS ARE TAKEN FROM THE BEST RECORDS AVAILABLE AND ARE NOT GUARANTEED TO BE ACCURATE. CONTRACTOR TO CONTACT THE TELEPHONE COMPANY CABLE LOCATOR 48 HOURS PRIOR TO EXCAVATION AT 1-800-545-6005. CONTRACTOR HAS THE RESPONSIBILITY TO PROTECT AND SUPPORT TELEPHONE COMPANY PLANT DURING CONSTRUCTION.

2. DUE TO FEDERAL REGULATIONS TITLE 49, PART 192.181, CPS MUST MAINTAIN ACCESS TO GAS VALVES AT ALL TIMES. THE CONTRACTOR MUST PROTECT AND WORK AROUND ANY GAS VALVES THAT ARE IN THE PROJECT AREA. THE CONTRACTOR SHALL NOTIFY CPS LOCATOR AT 1-800-545-6005, 48 HOURS BEFORE BEGINNING ANY EXCAVATION.

3. CONTRACTOR AND/OR CONTRACTOR'S INDEPENDENTLY RETAINED EMPLOYEE OR STRUCTURAL DESIGN/CONTRACTOR AND GEOTECHNICAL/SAFETY/EQUIPMENT CONSULTANT, IF ANY, SHALL REVIEW THESE PLANS AND ANY AVAILABLE GEOTECHNICAL INFORMATION AND THE ANTICIPATED INSTALLATION SITES WITHIN THE PROJECT WORK AREA IN ORDER TO DEVELOP THE CONTRACTOR'S PLANS TO IMPLEMENT THE PROJECT DESCRIBED IN THE CONTRACT DOCUMENTS. THE CONTRACTOR'S PLANS SHALL PROVIDE FOR ADEQUATE TRENCH SAFETY SYSTEMS THAT COMPLY WITH AS A MINIMUM O.S.H.A. STANDARDS FOR TRENCH EXCAVATIONS. SPECIFICALLY, CONTRACTOR AND/OR CONTRACTOR'S INDEPENDENTLY RETAINED EMPLOYEE OR SAFETY CONSULTANT SHALL DEVELOP AND IMPLEMENT A TRENCH SAFETY PROGRAM IN ACCORDANCE WITH O.S.H.A. STANDARDS GOVERNING THE PRESENCE AND ACTIVITIES OF INDIVIDUALS WORKING IN AND AROUND TRENCH EXCAVATION.

STATE OF TEXAS
MACK W. THOMAS III
85607
LICENSED
PROFESSIONAL ENGINEER
9/25/00

FM LOOP 1604

CULEBRA RD. TO U.S. HWY. 90

BLK. MAP NO. 092-602

S.A.W.S. JOB NO. 00-5023

Texas Department of Transportation

| FED.RD. DIV.NO. | FEDERAL AID PROJECT NO. | | SHEET NO. |
|---|---|---|---|
| 6 | NH 2000(704),ETC. | | 337 |
| STATE | DIST. | COUNTY | |
| TEXAS | SAT | BEXAR | |
| CONT. | SECT. | JOB | HIGHWAY NO. |
| 2452 | 01 | 036,ETC | LP 1604 |

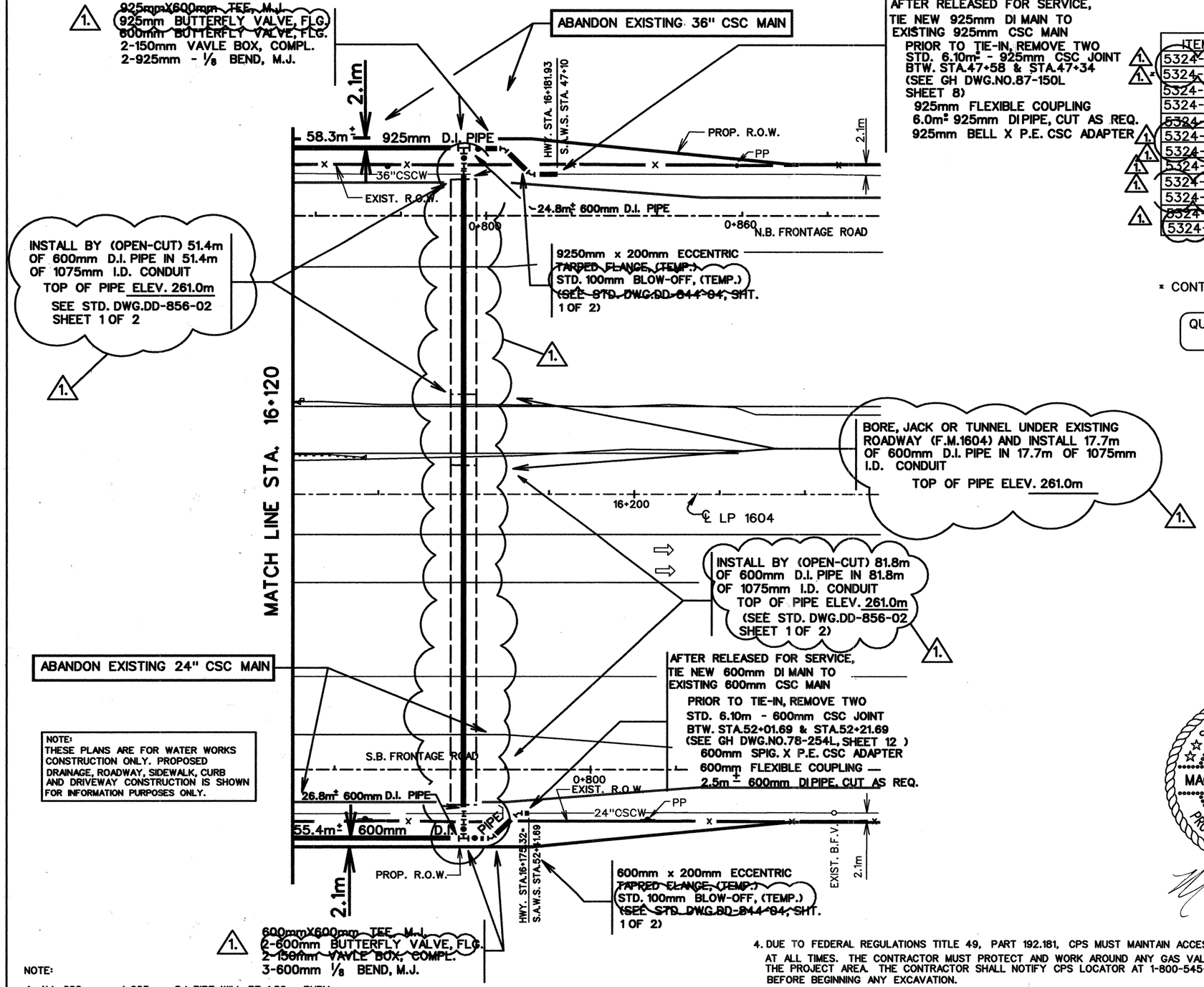


AFTER RELEASED FOR SERVICE,
TIE NEW 925mm DI MAIN TO
EXISTING 925mm CSC MAIN
PRIOR TO TIE-IN, REMOVE TWO
STD. 6.10m± - 925mm CSC JOINT
BTW. STA.47+58 & STA.47+34
(SEE GH DWG.NO.87-150L
SHEET 8)
925mm FLEXIBLE COUPLING
6.0m± 925mm DI PIPE, CUT AS REQ.
925mm BELL X P.E. CSC ADAPTER

## SHEET QUANTITIES

| | ITEM | DESCRIPTION | EST. | UNITS |
|---|---|---|---|---|
| 1. | 5324-5006 | TRENCH EXCAVATION PROTECTION | 307 | M |
| 1.* | 5324-5011 | PIPE, WTR MAIN (DI) (600mm) | 260.4 | M |
| | 5324-5019 | TIE-IN (MAIN) (600mm) | 1 | EA. |
| | 5324-5038 | DUCTILE IRON FITTINGS | 8,231 | KG |
| | 5324-5962 | FLOWABLE BACKFILL | 167.7 | m3 |
| 1. | 5324-5074 | TEMP BLOW-OFF (100mm) | 2 | EA. |
| 1. | 5324-5083 | BUTTERFLY VALVE AND BOX (600mm) | 3 | EA. |
| 1. | 5324-XXXX | TIE-IN (MAIN) (925mm) | 1 | EA. |
| 1. | 5324-XXXX | PIPE, WTR MAIN (DI) (925mm) | 64.3 | M |
| | 5324-XXXX | PIPE, STL CASING (1075mm ID) (OPEN-CUT) | 133.2 | M |
| 1. | 5324-XXXX | JACK OR BORE CASING (STL) (1075mm) | 17.7 | M |
| | 5324-XXXX | BUTTERFLY VALVE AND BOX (925mm) | 1 | EA. |

* CONTRACTOR'S INFORMATION: 150.9m of 600mm (DI) IN 1075mm CASING

QUANTITIES THIS SHEET
CSJ 2452-01-038

SCALE: 1:1000

1. CHANGE ORDER #1 REVISIONS

CHANGED TOP OF PIPE ELEVATIONS FROM 262.0 TO 261.0.

CHANGED 600mm CROSSING FROM STA. 16+240 TO STA. 16+160

CHANGED 600mm PIPE IN CONDUIT FROM 47.6m TO 51.4m & 78.9m TO 81.8m

CHANGED TRENCH PROTECTION METERS FROM 385.4m TO 307.0m

CHANGED QUANTITY OF 600mm BUTTERFLY VALVES FROM 2 EA TO 3 EA.

ADDED ONE 925mm BUTTERFLY VALVE.

CHANGED METERS OF 600mm DI PIPE FROM 276.1m TO 260.4m.

CHANGED METERS OF PIPE STL CASING (1075mm) FROM 126.5m TO 133.2m.

CHANGED METERS OF 925mm DI PIPE FROM 126.9m TO 64.3m.

ADDED TWO (100mm) TEMP BLOW-OFFS

STATE OF TEXAS
MACK W. THOMAS III
85607
LICENSED
PROFESSIONAL ENGINEER
7/26/01

NOTE:

1. ALL 600mm and 925mm D.I. PIPE WILL BE 1.50m BURY UNLESS OTHERWISE NOTED
2. ALL DIMENSIONS ARE IN METERS UNLESS OTHERWISE NOTED
3. THE EXISTENCE AND LOCATION OF UNDERGROUND CABLE INDICATED ON THE PLANS ARE TAKEN FROM THE BEST RECORDS AVAILABLE AND ARE NOT GUARANTEED TO BE ACCURATE. CONTRACTOR TO CONTACT THE TELEPHONE COMPANY CABLE LOCATOR 48 HOURS PRIOR TO EXCAVATION AT 1-800-545-6005. CONTRACTOR HAS THE RESPONSIBILITY TO PROTECT AND SUPPORT TELEPHONE COMPANY PLANT DURING CONSTRUCTION.
4. DUE TO FEDERAL REGULATIONS TITLE 49, PART 192.181, CPS MUST MAINTAIN ACCESS TO GAS VALVES AT ALL TIMES. THE CONTRACTOR MUST PROTECT AND WORK AROUND ANY GAS VALVES THAT ARE IN THE PROJECT AREA. THE CONTRACTOR SHALL NOTIFY CPS LOCATOR AT 1-800-545-6005, 48 HOURS BEFORE BEGINNING ANY EXCAVATION.
5. CONTRACTOR AND/OR CONTRACTOR'S INDEPENDENTLY RETAINED EMPLOYEE OR STRUCTURAL DESIGN/CONTRACTOR AND GEOTECHNICAL/SAFETY/EQUIPMENT CONSULTANT, IF ANY, SHALL REVIEW THESE PLANS AND ANY AVAILABLE GEOTECHNICAL INFORMATION AND THE ANTICIPATED INSTALLATION SITES WITHIN THE PROJECT WORK AREA IN ORDER TO DEVELOP THE CONTRACTOR'S PLANS TO IMPLEMENT THE PROJECT DESCRIBED IN THE CONTRACT DOCUMENTS. THE CONTRACTOR'S PLANS SHALL PROVIDE FOR ADEQUATE TRENCH SAFETY SYSTEMS THAT COMPLY WITH AS A MINIMUM O.S.H.A. STANDARDS FOR TRENCH EXCAVATIONS. SPECIFICALLY, CONTRACTOR AND/OR CONTRACTOR'S INDEPENDENTLY RETAINED EMPLOYEE OR SAFETY CONSULTANT SHALL DEVELOP AND IMPLEMENT A TRENCH SAFETY PROGRAM IN ACCORDANCE WITH O.S.H.A. STANDARDS GOVERNING THE PRESENCE AND ACTIVITIES OF INDIVIDUALS WORKING IN AND AROUND TRENCH EXCAVATION.

FM LOOP 1604

CULEBRA RD. TO U.S. HWY. 90

BLK. MAP NO. 092-602
CO#7
S.A.W.S. JOB NO. 00-5023

Texas Department of Transportation

| FED.RD. DIV.NO. | FEDERAL AID PROJECT NO. | | SHEET NO. |
|---|---|---|---|
| 6 | NH 2000(704),ETC. | | 8874 |
| STATE | DIST. | COUNTY | |
| TEXAS | SAT | BEXAR | |
| CONT. | SECT. | JOB | HIGHWAY NO. |
| 2452 | 01 | 036,ETC | LP 1604 |

## SHEET QUANTITIES

| ITEM | DESCRIPTION | EST. | UNITS |
|---|---|---|---|
| 5324-5006 | TRENCH EXCAVATION PROTECTION | 265.2 | M |
| 5324-5011 | PIPE WTR MAIN (DI) (600mm) | 265.2 | M |
| 5324-5019 | TIE-IN (MAIN) (600mm) | 2 | EA. |
| 5324-5038 | DUCTILE IRON FITTINGS | 1995.8 | Kg. |
| 5324-5039 | HYDROSTATIC PRESSURE TEST | 1 | EA. |
| 5324-5074 | TEMP BLOW-OFF (100mm) | 1 | EA. |
| | | | |

AFTER RELEASED FOR SERVICE,
TIE NEW 600mm D.I. MAIN TO
EXISTING 600mm CSC MAIN
PRIOR TO TIE-IN, REMOVE
TWO 600mm 6.1m± STD. JT.
BETWEEN STA. 38+21.21 & 37+81.21
(SEE G.H.A. DWG. NO.78-254L, SHT.10)
600mm BELL X P.E. CSC ADAPTOR
600mm - 1/32 BEND, M.J.
600mm FLEX. COUPLING
7.6m± 600mm D.I. PIPE, CUT AS REQ.

QUANTITIES THIS SHEET
CSJ 2452-01-037

SCALE: 1:1000

NOTE:

ALL DIMENSIONS ARE IN METERS UNLESS OTHERWISE NOTED.

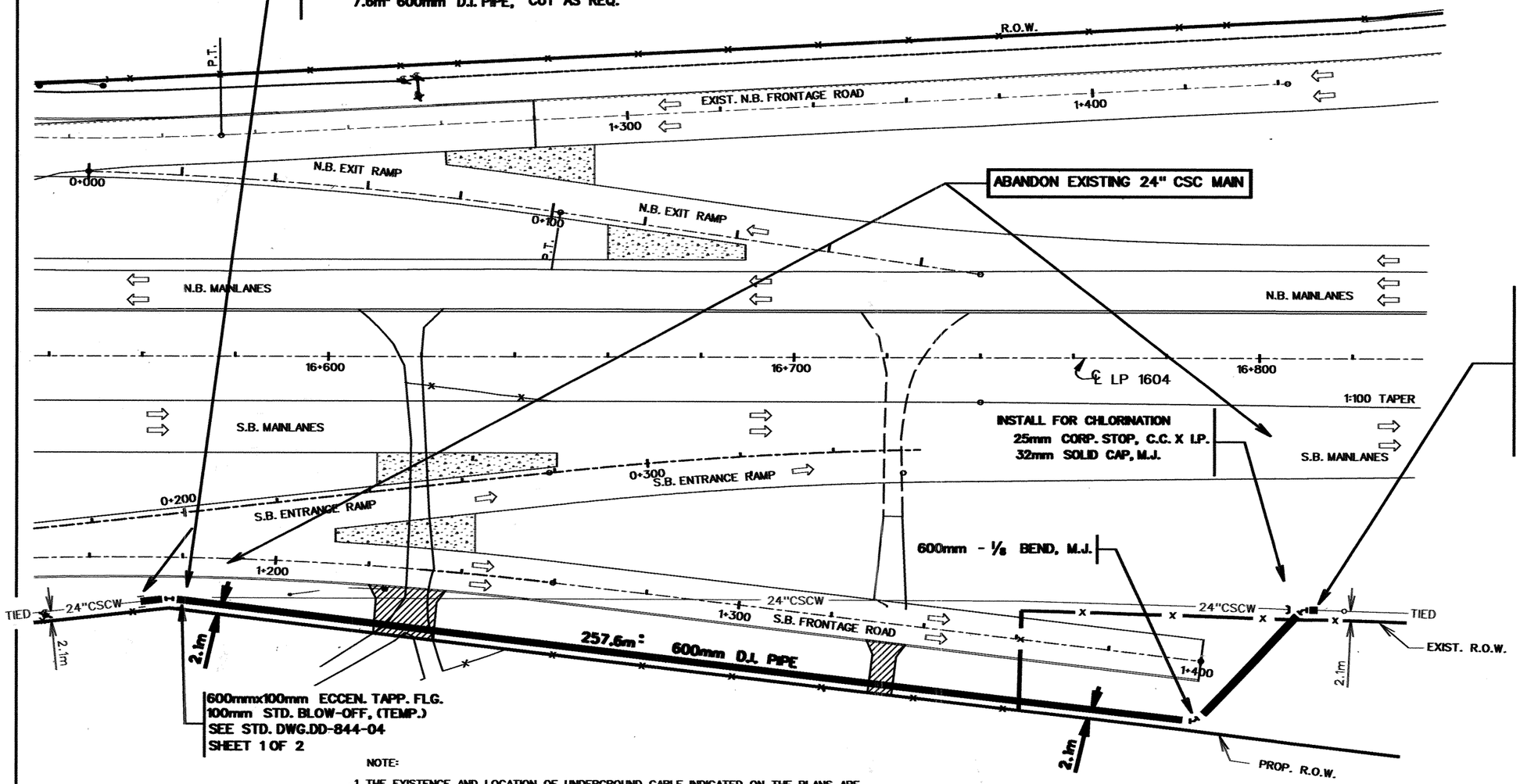


600mmx100mm ECCEN. TAPP. FLG.
100mm STD. BLOW-OFF, (TEMP.)
SEE STD. DWG.DD-844-04
SHEET 1 OF 2

TIE NEW 600mm D.I. MAIN TO
EXISTING 600mm CSC MAIN
PRIOR TO TIE-IN, REMOVE
ONE 600mm STD. 6.1m± JT. @
STA.30+21.66
(SEE G.H.A. DWG. NO.78-254L, SHT.10)
600mm P.E.XSPIG. CSC ADAPTOR
600mm FLEX. COUPLING
600mm BELLXP.E. CSC ADAPTOR
600mm SOLID CAP, M.J.
600mm - 1/8 BEND, M.J.

NOTE:

1. THE EXISTENCE AND LOCATION OF UNDERGROUND CABLE INDICATED ON THE PLANS ARE TAKEN FROM THE BEST RECORDS AVAILABLE AND ARE NOT GUARANTEED TO BE ACCURATE. CONTRACTOR TO CONTACT THE TELEPHONE COMPANY CABLE LOCATOR 48 HOURS PRIOR TO EXCAVATION AT 1-800-545-6005. CONTRACTOR HAS THE RESPONSIBILITY TO PROTECT AND SUPPORT TELEPHONE COMPANY PLANT DURING CONSTRUCTION.

2. DUE TO FEDERAL REGULATIONS TITLE 49, PART 192.181, CPS MUST MAINTAIN ACCESS TO GAS VALVES AT ALL TIMES. THE CONTRACTOR MUST PROTECT AND WORK AROUND ANY GAS VALVES THAT ARE IN THE PROJECT AREA. THE CONTRACTOR SHALL NOTIFY CPS LOCATOR AT 1-800-545-6005, 48 HOURS BEFORE BEGINNING ANY EXCAVATION.

3. CONTRACTOR AND/OR CONTRACTOR'S INDEPENDENTLY RETAINED EMPLOYEE OR STRUCTURAL DESIGN/CONTRACTOR AND GEOTECHNICAL/SAFETY/EQUIPMENT CONSULTANT, IF ANY, SHALL REVIEW THESE PLANS AND ANY AVAILABLE GEOTECHNICAL INFORMATION AND THE ANTICIPATED INSTALLATION SITES WITHIN THE PROJECT WORK AREA IN ORDER TO DEVELOP THE CONTRACTOR'S PLANS TO IMPLEMENT THE PROJECT DESCRIBED IN THE CONTRACT DOCUMENTS. THE CONTRACTOR'S PLANS SHALL PROVIDE FOR ADEQUATE TRENCH SAFETY SYSTEMS THAT COMPLY WITH AS A MINIMUM O.S.H.A. STANDARDS FOR TRENCH EXCAVATIONS. SPECIFICALLY, CONTRACTOR AND/OR CONTRACTOR'S INDEPENDENTLY RETAINED EMPLOYEE OR SAFETY CONSULTANT SHALL DEVELOP AND IMPLEMENT A TRENCH SAFETY PROGRAM IN ACCORDANCE WITH O.S.H.A. STANDARDS GOVERNING THE PRESENCE AND ACTIVITIES OF INDIVIDUALS WORKING IN AND AROUND TRENCH EXCAVATION.

NOTE:
THESE PLANS ARE FOR WATER WORKS CONSTRUCTION ONLY. PROPOSED DRAINAGE, ROADWAY, SIDEWALK, CURB AND DRIVEWAY CONSTRUCTION IS SHOWN FOR INFORMATION PURPOSES ONLY.

STATE OF TEXAS
MACK W. THOMAS III
85607
LICENSED
PROFESSIONAL ENGINEER
9/25/00

FM LOOP 1604

CULEBRA RD. TO U.S. HWY. 90

BLK. MAP NO. 092-600

S.A.W.S. JOB NO. 00-5023

Texas Department of Transportation

| FED.RD. DIV.NO. | FEDERAL AID PROJECT NO. | SHEET NO. |
|---|---|---|
| 6 | NH 2000(704)ETC | 596 |
| STATE | DIST. | COUNTY |
| TEXAS | SAT | BEXAR |
| CONT. | SECT. JOB | HIGHWAY NO. |
| 2452 | 01 036,ETC | LP 1604 |

AFTER RELEASED FOR SERVICE,
TIE NEW 600mm D.I. MAIN TO
EXISTING 600mm CSC MAIN
PRIOR TO TIE-IN, REMOVE
TWO 600mm 6.1m² STD. JT.
BETWEEN STA. 38+21.21 & 37+81.21
(SEE G.H.A. DWG. NO.78-254L, SHT.10)

600mm BELL X M.J. CSC ADAPTOR
600mm - 1/32 BEND, M.J.
600mm FLANGE X P.E. ADAPTER
600mm FLEX. COUPLING
2.7m- 600mm D.I. PIPE, CUT AS REQ.

QUANTITIES THIS SHEET
CSJ 2452-01-037

SCALE: 1:1000

## SHEET QUANTITIES

| ITEM | DESCRIPTION | EST. | UNITS |
|---|---|---|---|
| 5324-5006 | TRENCH EXCAVATION PROTECTION | 262 | M |
| 5324-5011 | PIPE WTR MAIN (DI) (600mm) | 262 | M |
| 5324-5019 | TIE-IN (MAIN) (600mm) | 1 | EA. |
| 5324-5020 | STD FIRE HYDRANTW/VALVE &BOXCOMPL | 1 | EA. |
| 5324-5038 | DUCTILE IRON FITTINGS | 1,395.2 | Kg. |
| 5324-5039 | HYDROSTATIC PRESSURE TEST | 1 | EA. |
| 5324-5074 | TEMP BLOW-OFF (100mm) | 1 | EA. |

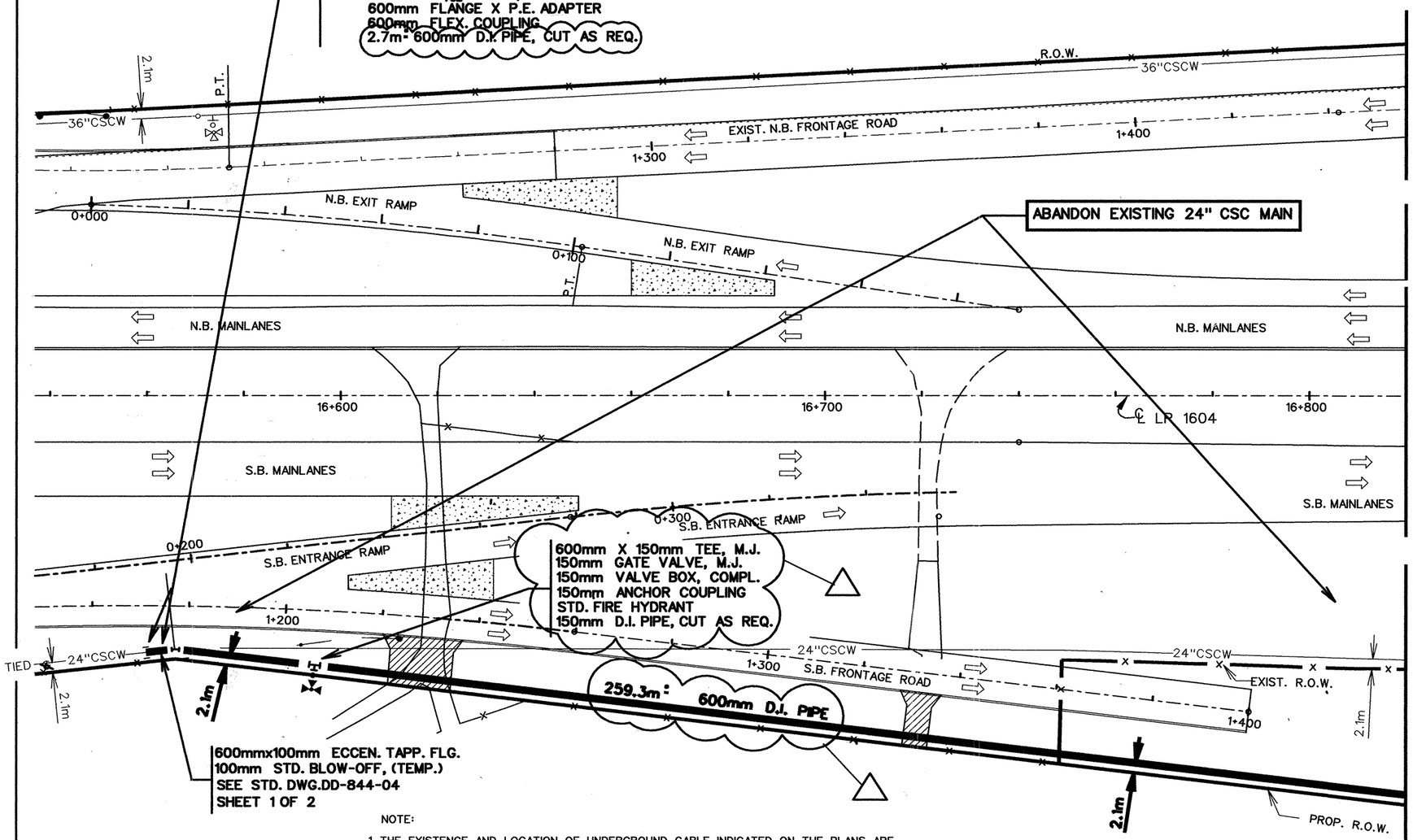


MATCH LINE STA. 16+820 (SEE SHEET 16 OF 22)

NOTE:

1. THE EXISTENCE AND LOCATION OF UNDERGROUND CABLE INDICATED ON THE PLANS ARE TAKEN FROM THE BEST RECORDS AVAILABLE AND ARE NOT GUARANTEED TO BE ACCURATE. CONTRACTOR TO CONTACT THE TELEPHONE COMPANY CABLE LOCATOR 48 HOURS PRIOR TO EXCAVATION AT 1-800-545-6005. CONTRACTOR HAS THE RESPONSIBILITY TO PROTECT AND SUPPORT TELEPHONE COMPANY PLANT DURING CONSTRUCTION.

2. DUE TO FEDERAL REGULATIONS TITLE 49, PART 192.181, CPS MUST MAINTAIN ACCESS TO GAS VALVES AT ALL TIMES. THE CONTRACTOR MUST PROTECT AND WORK AROUND ANY GAS VALVES THAT ARE IN THE PROJECT AREA. THE CONTRACTOR SHALL NOTIFY CPS LOCATOR AT 1-800-545-6005, 48 HOURS BEFORE BEGINNING ANY EXCAVATION.

3. CONTRACTOR AND/OR CONTRACTOR'S INDEPENDENTLY RETAINED EMPLOYEE OR STRUCTURAL DESIGN/CONTRACTOR AND GEOTECHNICAL/SAFETY/EQUIPMENT CONSULTANT, IF ANY, SHALL REVIEW THESE PLANS AND ANY AVAILABLE GEOTECHNICAL INFORMATION AND THE ANTICIPATED INSTALLATION SITES WITHIN THE PROJECT WORK AREA IN ORDER TO DEVELOP THE CONTRACTOR'S PLANS TO IMPLEMENT THE PROJECT DESCRIBED IN THE CONTRACT DOCUMENTS. THE CONTRACTOR'S PLANS SHALL PROVIDE FOR ADEQUATE TRENCH SAFETY SYSTEMS THAT COMPLY WITH AS A MINIMUM O.S.H.A. STANDARDS FOR TRENCH EXCAVATIONS. SPECIFICALLY, CONTRACTOR AND/OR CONTRACTOR'S INDEPENDENTLY RETAINED EMPLOYEE OR SAFETY CONSULTANT SHALL DEVELOP AND IMPLEMENT A TRENCH SAFETY PROGRAM IN ACCORDANCE WITH O.S.H.A. STANDARDS GOVERNING THE PRESENCE AND ACTIVITIES OF INDIVIDUALS WORKING IN AND AROUND TRENCH EXCAVATION.

NOTE:
THESE PLANS ARE FOR WATER WORKS CONSTRUCTION ONLY. PROPOSED DRAINAGE, ROADWAY, SIDEWALK, CURB AND DRIVEWAY CONSTRUCTION IS SHOWN FOR INFORMATION PURPOSES ONLY.

NOTE:

1. ALL 600mm and 925mm D.I. PIPE WILL BE 1.50m BURY UNLESS OTHERWISE NOTED
2. ALL DIMENSIONS ARE IN METERS UNLESS OTHERWISE NOTED

STATE OF TEXAS
MACK W. THOMAS III
85607
LICENSED
PROFESSIONAL ENGINEER
9/24/01

△ CHANGE ORDER REVISIONS #15

CHANGED TIE-IN (MAIN) (600mm) FROM 2 EA TO 1EA.

CHANGED TRENCH PROTECTION METERS FROM 265.2m TO 262m

CHANGED METERS OF 600mm DI PIPE FROM 265.2m TO 262m.

CHANGED DUCTILE IRON FITTINGS FROM 1995.8 Kg TO 1,395.2 Kg.

ADD (1) ONE FIRE HYDRANT

FM LOOP 1604

CULEBRA RD. TO U.S. HWY. 90

BLK. MAP NO. 092-600

S.A.W.S. JOB NO. 00-5023

Co#15

SHEET 7A OF 21

Texas Department of Transportation

| FED.RD. DIV.NO. | FEDERAL AID PROJECT NO. | | SHEET NO. |
|---|---|---|---|
| 6 | NH 2000(704),ETC. | | 888A |
| STATE | DIST. | COUNTY | |
| TEXAS | SAT | BEXAR | |
| CONT. | SECT. | JOB | HIGHWAY NO. |
| 2452 | 01 | 036,ETC | LP 1604 |

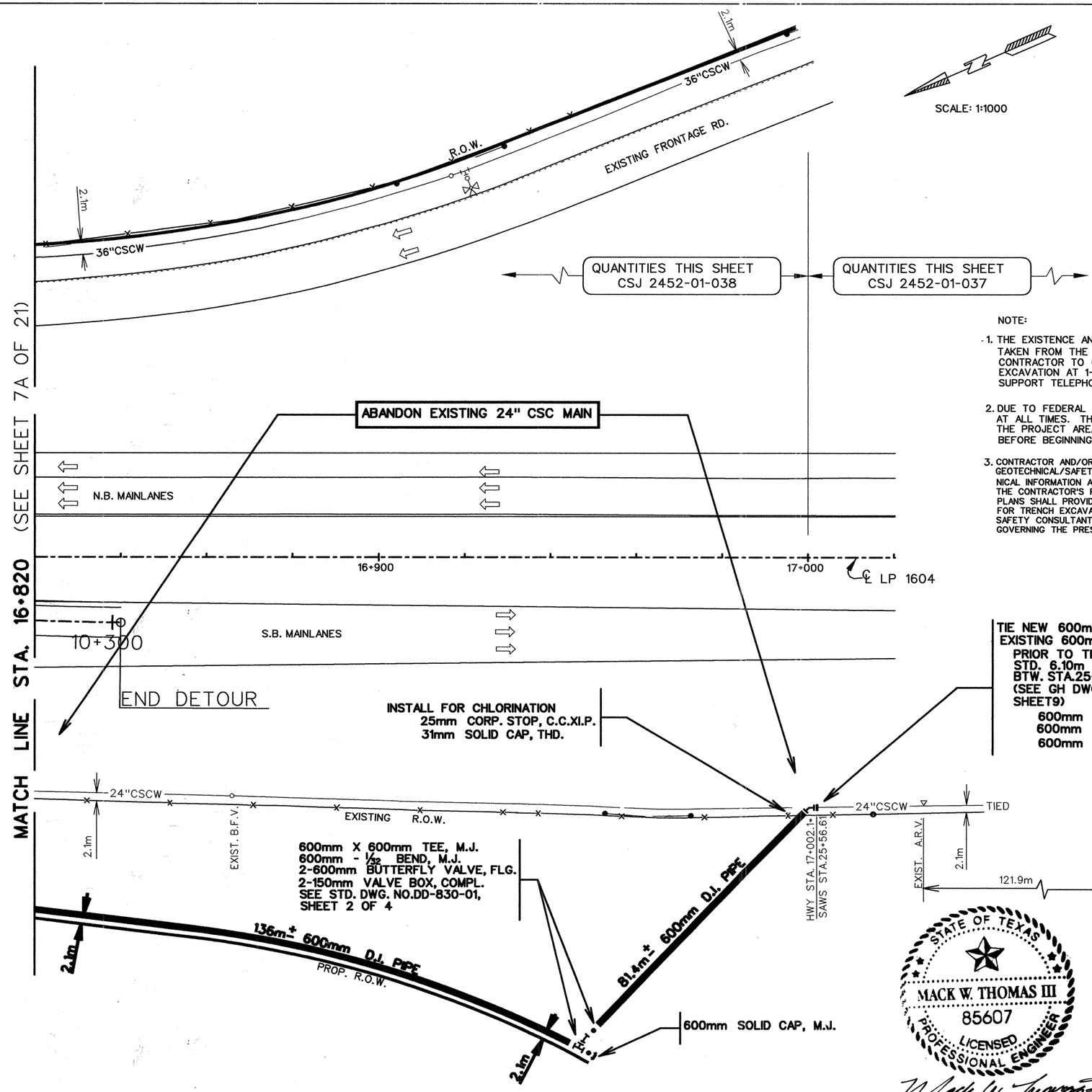


SCALE: 1:1000

## SHEET QUANTITIES

| ITEM | DESCRIPTION | EST. | UNITS |
|---|---|---|---|
| 5324-5006 | TRENCH EXCAVATION, PROTECTION | 217.4 | M |
| 5324-5011 | PIPE WTR MAIN (DI) (600mm) | 217.4 | M |
| 5324-5019 | TIE-IN (MAIN) (600mm) | 1 | EA. |
| 5324-5038 | DUCTILE IRON FITTINGS | 1,895.6 | Kg. |
| 5324-5083 | BUTTERFLY VALVE AND BOX | 2 | EA. |
| | | | |
| | | | |

NOTE:

1. THE EXISTENCE AND LOCATION OF UNDERGROUND CABLE INDICATED ON THE PLANS ARE TAKEN FROM THE BEST RECORDS AVAILABLE AND ARE NOT GUARANTEED TO BE ACCURATE. CONTRACTOR TO CONTACT THE TELEPHONE COMPANY CABLE LOCATOR 48 HOURS PRIOR TO EXCAVATION AT 1-800-545-6005. CONTRACTOR HAS THE RESPONSIBILITY TO PROTECT AND SUPPORT TELEPHONE COMPANY PLANT DURING CONSTRUCTION.

2. DUE TO FEDERAL REGULATIONS TITLE 49, PART 192.181, CPS MUST MAINTAIN ACCESS TO GAS VALVES AT ALL TIMES. THE CONTRACTOR MUST PROTECT AND WORK AROUND ANY GAS VALVES THAT ARE IN THE PROJECT AREA. THE CONTRACTOR SHALL NOTIFY CPS LOCATOR AT 1-800-545-6005, 48 HOURS BEFORE BEGINNING ANY EXCAVATION.

3. CONTRACTOR AND/OR CONTRACTOR'S INDEPENDENTLY RETAINED EMPLOYEE OR STRUCTURAL DESIGN/CONTRACTOR AND GEOTECHNICAL/SAFETY/EQUIPMENT CONSULTANT, IF ANY, SHALL REVIEW THESE PLANS AND ANY AVAILABLE GEOTECHNICAL INFORMATION AND THE ANTICIPATED INSTALLATION SITES WITHIN THE PROJECT WORK AREA IN ORDER TO DEVELOP THE CONTRACTOR'S PLANS TO IMPLEMENT THE PROJECT DESCRIBED IN THE CONTRACT DOCUMENTS. THE CONTRACTOR'S PLANS SHALL PROVIDE FOR ADEQUATE TRENCH SAFETY SYSTEMS THAT COMPLY WITH AS A MINIMUM O.S.H.A. STANDARDS FOR TRENCH EXCAVATIONS. SPECIFICALLY, CONTRACTOR AND/OR CONTRACTOR'S INDEPENDENTLY RETAINED EMPLOYEE OR SAFETY CONSULTANT SHALL DEVELOP AND IMPLEMENT A TRENCH SAFETY PROGRAM IN ACCORDANCE WITH O.S.H.A. STANDARDS GOVERNING THE PRESENCE AND ACTIVITIES OF INDIVIDUALS WORKING IN AND AROUND TRENCH EXCAVATION.

△ CHANGE ORDER NO. 15

NEW SHEET,
WATER ADDENDUM

STATE OF TEXAS
MACK W. THOMAS III
85607
LICENSED
PROFESSIONAL ENGINEER

Mack W. Thomas III
9/24/01

CO#15

SHEET 16 OF 22

FM LOOP 1604

CULEBRA RD. TO U.S. HWY. 90

BLK. MAP NO. 092-600

S.A.W.S. JOB NO. 00-5023

Texas Department of Transportation

| FED.RD. DIV.NO. | FEDERAL AID PROJECT NO. | | SHEET NO. |
|---|---|---|---|
| 6 | NH 2000(704),etc. | | 203 |
| STATE | DIST. | COUNTY | 888B |
| TEXAS | SAT | BEXAR | |
| CONT. | SECT. | JOB | HIGHWAY NO. |
| 2452 | 01 | 036,etc. | LP 1604 |

QUANTITIES THIS SHEET
CSJ 2452-01-037

SCALE: 1:1000

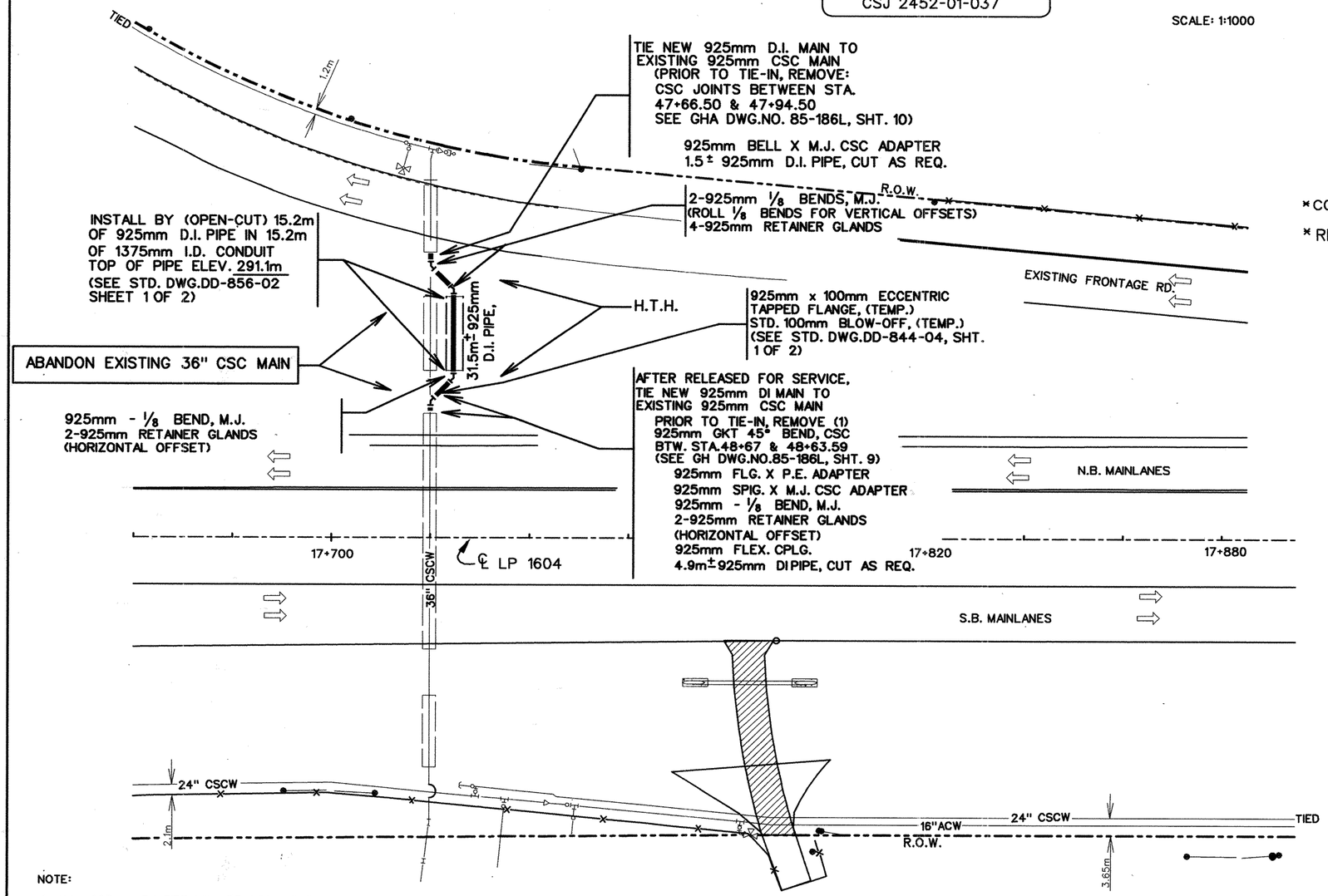


NOTE:

1. ALL 925mm D.I. PIPE WILL BE 1.50m BURY UNLESS OTHERWISE NOTED
2. ALL DIMENSIONS ARE IN METERS UNLESS OTHERWISE NOTED
3. SEE STANDARD DRAWINGS NO. DD-839-01 & DD-839-02 FOR THRUST BLOCKING
4. THE EXISTENCE AND LOCATION OF UNDERGROUND CABLE INDICATED ON THE PLANS ARE TAKEN FROM THE BEST RECORDS AVAILABLE AND ARE NOT GUARANTEED TO BE ACCURATE. CONTRACTOR TO CONTACT THE TELEPHONE COMPANY CABLE LOCATOR 48 HOURS PRIOR TO EXCAVATION AT 1-800-545-6005. CONTRACTOR HAS THE RESPONSIBILITY TO PROTECT AND SUPPORT TELEPHONE COMPANY PLANT DURING CONSTRUCTION.
5. DUE TO FEDERAL REGULATIONS TITLE 49, PART 192.181, CPS MUST MAINTAIN ACCESS TO GAS VALVES AT ALL TIMES. THE CONTRACTOR MUST PROTECT AND WORK AROUND ANY GAS VALVES THAT ARE IN THE PROJECT AREA. THE CONTRACTOR SHALL NOTIFY CPS LOCATOR AT 1-800-545-6005, 48 HOURS BEFORE BEGINNING ANY EXCAVATION.
6. CONTRACTOR AND/OR CONTRACTOR'S INDEPENDENTLY RETAINED EMPLOYEE OR STRUCTURAL DESIGN/CONTRACTOR AND GEOTECHNICAL/SAFETY/EQUIPMENT CONSULTANT, IF ANY, SHALL REVIEW THESE PLANS AND ANY AVAILABLE GEOTECHNICAL INFORMATION AND THE ANTICIPATED INSTALLATION SITES WITHIN THE PROJECT WORK AREA IN ORDER TO DEVELOP THE CONTRACTOR'S PLANS TO IMPLEMENT THE PROJECT DESCRIBED IN THE CONTRACT DOCUMENTS. THE CONTRACTOR'S PLANS SHALL PROVIDE FOR ADEQUATE TRENCH SAFETY SYSTEMS THAT COMPLY WITH AS A MINIMUM O.S.H.A. STANDARDS FOR TRENCH EXCAVATIONS. SPECIFICALLY, CONTRACTOR AND/OR CONTRACTOR'S INDEPENDENTLY RETAINED EMPLOYEE OR SAFETY CONSULTANT SHALL DEVELOP AND IMPLEMENT A TRENCH SAFETY PROGRAM IN ACCORDANCE WITH O.S.H.A. STANDARDS GOVERNING THE PRESENCE AND ACTIVITIES OF INDIVIDUALS WORKING IN AND AROUND TRENCH EXCAVATION.

NOTE:
THESE PLANS ARE FOR WATER WORKS CONSTRUCTION ONLY. PROPOSED DRAINAGE, ROADWAY, SIDEWALK, CURB AND DRIVEWAY CONSTRUCTION IS SHOWN FOR INFORMATION PURPOSES ONLY.

## ESTIMATED QUANTITIES

| ITEM | DESCRIPTION | EST. | UNITS |
|---|---|---|---|
| 5324-5006 | TRENCH EXCAVATION PROTECTION | 37.9 | M |
| 5324-5038 | DUCTILE IRON FITTINGS | 5,286.2 | KG |
| 5324-5039 | HYDROSTATIC PRESSURE TEST | 1 | EA. |
| 5324-5074 | TEMP BLOW-OFF (100mm) | 1 | EA. |
| 5324-5150 | TIE-IN (MAIN) (925mm) | 2 | EA. |
| 5324-5149 | PIPE WTR MAIN (DI) (925mm) | 37.9 | M |
| 5324-5148 | PIPE STL CASING (1375mm ID) (OPEN-CUT) | 15.2 | M |

*CONTRACTOR'S INFORMATION: 15.2m OF 925mm (DI) PIPE IN 1375mm CASING

*RETAINER GLANDS TO BE PAID ~~AS FITTINGS.~~

STATE OF TEXAS
MACK W. THOMAS III
85607
LICENSED
PROFESSIONAL ENGINEER
12-11-01

△ CHANGE ORDER NO.

NEW SHEET,
WATER ADDENDUM

FM LOOP 1604

CULEBRA RD. TO U.S. HWY. 90

BLK. MAP NO. 092-604

S.A.W.S. JOB NO. 00-5023

Texas Department of Transportation

888C

| FED.RD. DIV.NO. | FEDERAL AID PROJECT NO. | | SHEET NO. |
|---|---|---|---|
| 6 | NH 2000(704),etc. | | 206 |
| STATE | DIST. | COUNTY | |
| TEXAS | SAT | BEXAR | |
| CONT. | SECT. | JOB | HIGHWAY NO. |
| 2452 | 01 | 036,etc. | LP 1604 |

CO#15
SHEET 19

SCALE: 1:1000

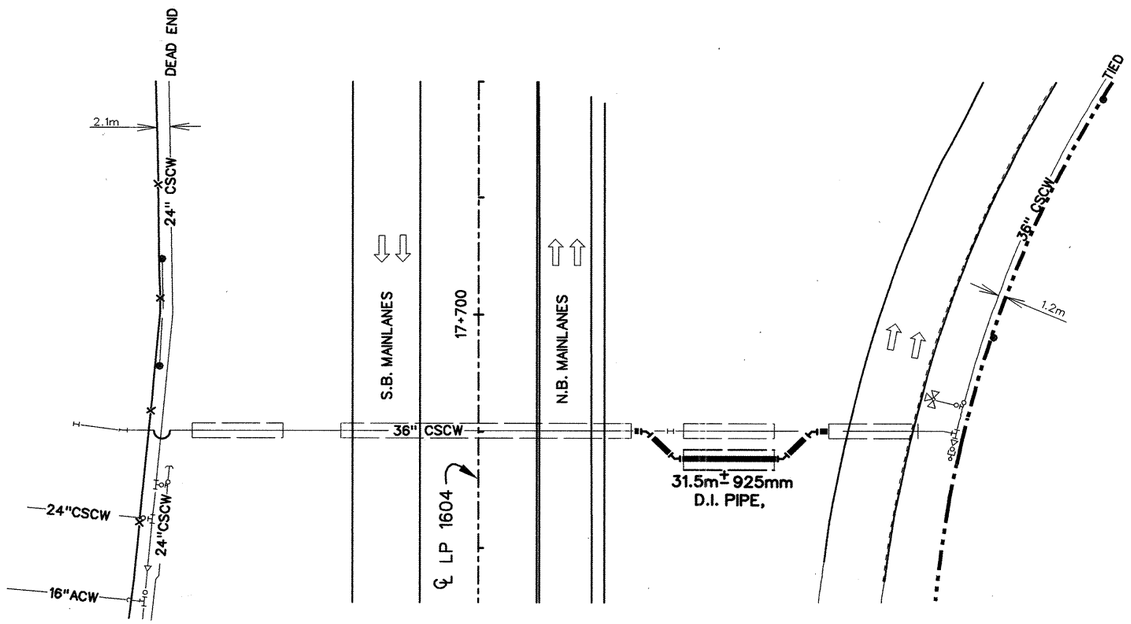


NOTE:

1. FOR CONTRACTOR'S INFORMATION, EXTRA DEPTH BEYOND 1.5m BURY SHALL BE DETERMINED BASED ON CURRENT FIELD ELEVATIONS.
2. PRIOR TO TIE-INS, CONTRACTOR TO VERIFY THE EXACT ELEVATION OF EXISTING 36" MAIN

NOTE: SEE SHEET 19 FOR PLAN VIEW DETAILS

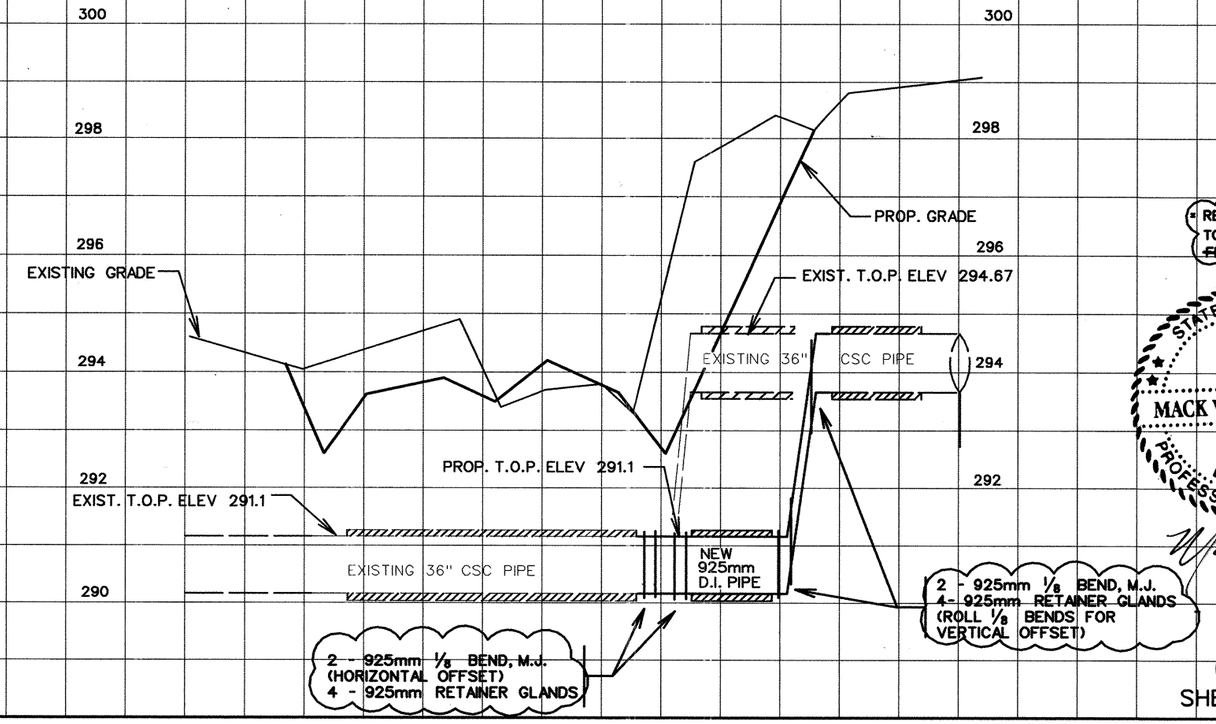


* RETAINER GLANDS TO BE PAID AS ~~FITTINGS~~ EA

STATE OF TEXAS
MACK W. THOMAS III
85607
LICENSED PROFESSIONAL ENGINEER
12-11-01

CO#15
SHEET 20

SCALE: 1:1000 HORIZ
1:100 VERT

FM LOOP 1604

CULEBRA RD. TO U.S. HWY. 90

BLK. MAP NO. 092-604

S.A.W.S. JOB NO. 00-5023

Texas Department of Transportation

~~808~~ D

| FED.RD. DIV.NO. | FEDERAL AID PROJECT NO. | | SHEET NO. |
|---|---|---|---|
| 6 | NH 2000(704),etc. | | ~~206~~ |
| STATE | DIST. | COUNTY | |
| TEXAS | SAT | BEXAR | |
| CONT. | SECT. | JOB | HIGHWAY NO. |
| 2452 | 01 | 036,etc. | LP 1604 |

## ESTIMATED QUANTITIES

| ITEM | DESCRIPTION | EST. | UNITS |
|---|---|---|---|
| 5324-5004 | ADJUST EXIST VALVE BOX | 5 | EA. |
| 5324-5006 | TRENCH EXCAVATION PROTECTION | 252 | M |
| 5324-5010 | PIPE WTR MAIN (DI) (400mm) | 252 | M |
| 5324-5054 | TIE-IN (MAIN) (400mm) | 1 | EA. |
| 5324-5038 | DUCTILE IRON FITTINGS | 1397 | Kg |
| 5324-5053 | AUTOMATIC AIR RELEASE VALVE (25mm) | 1 | EA. |
| | | | |

QUANTITIES THIS SHEET
CSJ 2452-01-037

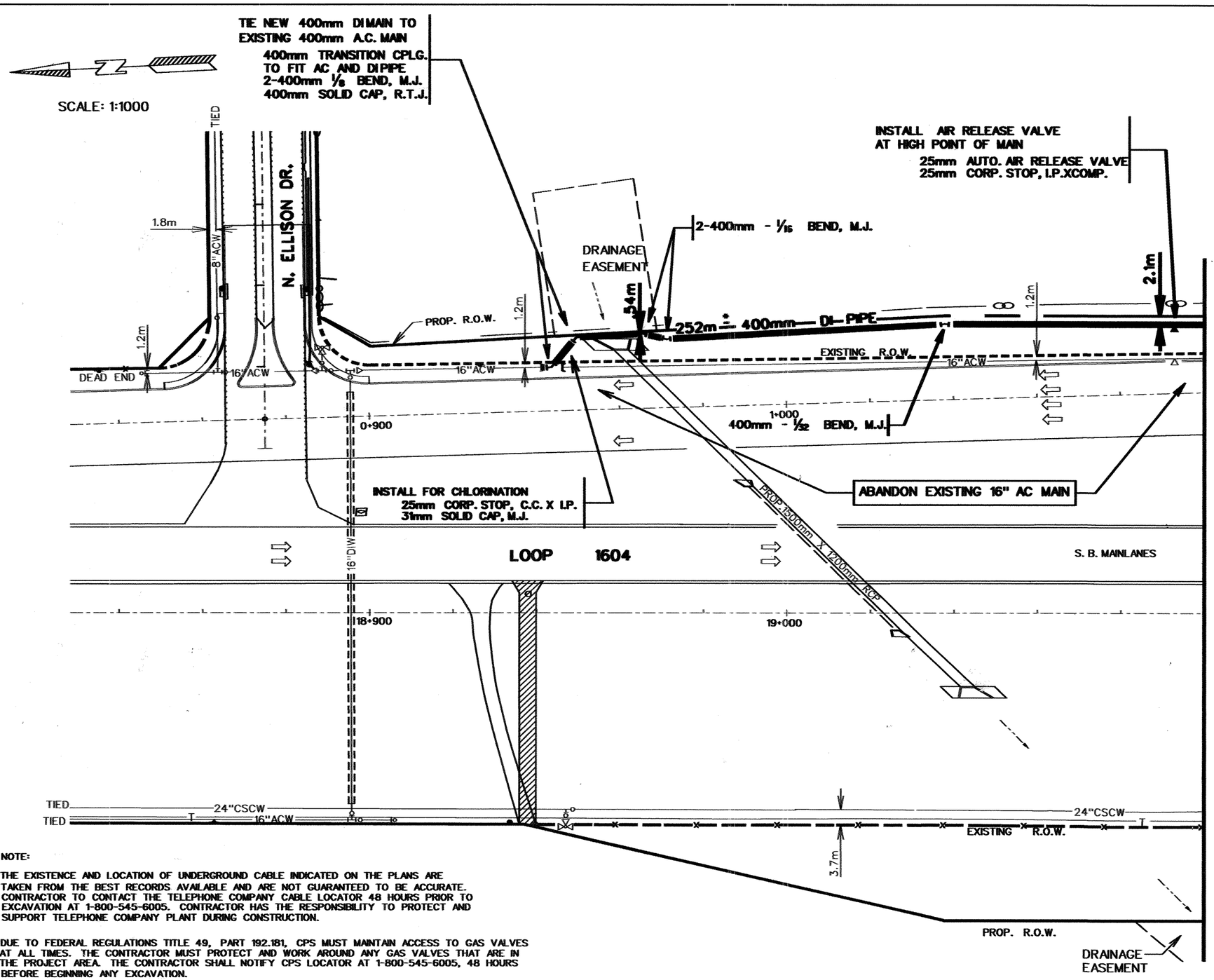


NOTE:

1. THE EXISTENCE AND LOCATION OF UNDERGROUND CABLE INDICATED ON THE PLANS ARE TAKEN FROM THE BEST RECORDS AVAILABLE AND ARE NOT GUARANTEED TO BE ACCURATE. CONTRACTOR TO CONTACT THE TELEPHONE COMPANY CABLE LOCATOR 48 HOURS PRIOR TO EXCAVATION AT 1-800-545-6005. CONTRACTOR HAS THE RESPONSIBILITY TO PROTECT AND SUPPORT TELEPHONE COMPANY PLANT DURING CONSTRUCTION.

2. DUE TO FEDERAL REGULATIONS TITLE 49, PART 192.181, CPS MUST MAINTAIN ACCESS TO GAS VALVES AT ALL TIMES. THE CONTRACTOR MUST PROTECT AND WORK AROUND ANY GAS VALVES THAT ARE IN THE PROJECT AREA. THE CONTRACTOR SHALL NOTIFY CPS LOCATOR AT 1-800-545-6005, 48 HOURS BEFORE BEGINNING ANY EXCAVATION.

3. CONTRACTOR AND/OR CONTRACTOR'S INDEPENDENTLY RETAINED EMPLOYEE OR STRUCTURAL DESIGN/CONTRACTOR AND GEOTECHNICAL/SAFETY/EQUIPMENT CONSULTANT, IF ANY, SHALL REVIEW THESE PLANS AND ANY AVAILABLE GEOTECHNICAL INFORMATION AND THE ANTICIPATED INSTALLATION SITES WITHIN THE PROJECT WORK AREA IN ORDER TO DEVELOP THE CONTRACTOR'S PLANS TO IMPLEMENT THE PROJECT DESCRIBED IN THE CONTRACT DOCUMENTS. THE CONTRACTOR'S PLANS SHALL PROVIDE FOR ADEQUATE TRENCH SAFETY SYSTEMS THAT COMPLY WITH AS A MINIMUM O.S.H.A. STANDARDS FOR TRENCH EXCAVATIONS. SPECIFICALLY, CONTRACTOR AND/OR CONTRACTOR'S INDEPENDENTLY RETAINED EMPLOYEE OR SAFETY CONSULTANT SHALL DEVELOP AND IMPLEMENT A TRENCH SAFETY PROGRAM IN ACCORDANCE WITH O.S.H.A. STANDARDS GOVERNING THE PRESENCE AND ACTIVITIES OF INDIVIDUALS WORKING IN AND AROUND TRENCH EXCAVATION.

NOTE:
THESE PLANS ARE FOR WATER WORKS CONSTRUCTION ONLY. PROPOSED DRAINAGE, ROADWAY, SIDEWALK, CURB AND DRIVEWAY CONSTRUCTION IS SHOWN FOR INFORMATION PURPOSES ONLY.

NOTE:
ALL DIMENSIONS ARE IN METERS UNLESS OTHERWISE NOTED.

STATE OF TEXAS
MACK W. THOMAS III
85607
LICENSED
PROFESSIONAL ENGINEER
9/25/00

SHEET 8 OF 19

FM LOOP 1604

CULEBRA RD. TO U.S. HWY. 90

BLK. MAP NO. 092-594

S.A.W.S. JOB NO. 00-5023

Texas Department of Transportation

| FED.RD. DIV.NO. | FEDERAL AID PROJECT NO. | | SHEET NO. |
|---|---|---|---|
| 6 | NH 2000(704),etc. | | 020 027 |
| STATE | DIST. | COUNTY | |
| TEXAS | SAT | BEXAR | |
| CONT. | SECT. | JOB | HIGHWAY NO. |
| 2452 | 01 | 036,etc | LP 1604 |

TIE NEW 400mm DI MAIN TO EXISTING 400mm A.C. MAIN
400mm TRANSITION CPLG. TO FIT AC AND DI PIPE
2-400mm 1/8 BEND, M.J.
400mm SOLID CAP, R.T.J.
2-400mm - 1/16 BEND, M.J. W/ RETAINER GLANDS

SCALE: 1:1000

## ESTIMATED QUANTITIES

| | DESCRIPTION | EST. | UNITS |
|---|---|---|---|
| | ADJUST EXIST VALVE BOX | 5 | EA. |
| △ | TRENCH EXCAVATION PROTECTION | 161.8 | M |
| △ | PIPE WTR MAIN (DI) (400mm) | 161.8 | M |
| | TIE-IN (MAIN) (400mm) | 1 | EA. |
| △ | DUCTILE IRON FITTINGS | 1,846.1 | KG |
| | AUTOMATIC AIR RELEASE VALVE (25mm) | 1 | EA. |
| △ | PIPE STL CASING(760mm ID)(OPEN CUT) | 11.3 | M |

QUANTITIES THIS SHEET
CSJ 2452-01-037

△ CHANGE ORDER NO.

CHANGE TRENCH EXCAVATION PROTECTION FROM 252m TO 161.8m

CHANGED PIPE WTR MAIN (D.I.) (400mm) FROM 252m TO 161.8m

RELOCATED 400mm WATER MAIN RELATIVE TO R.O.W.

REVISION OF SHEET 8

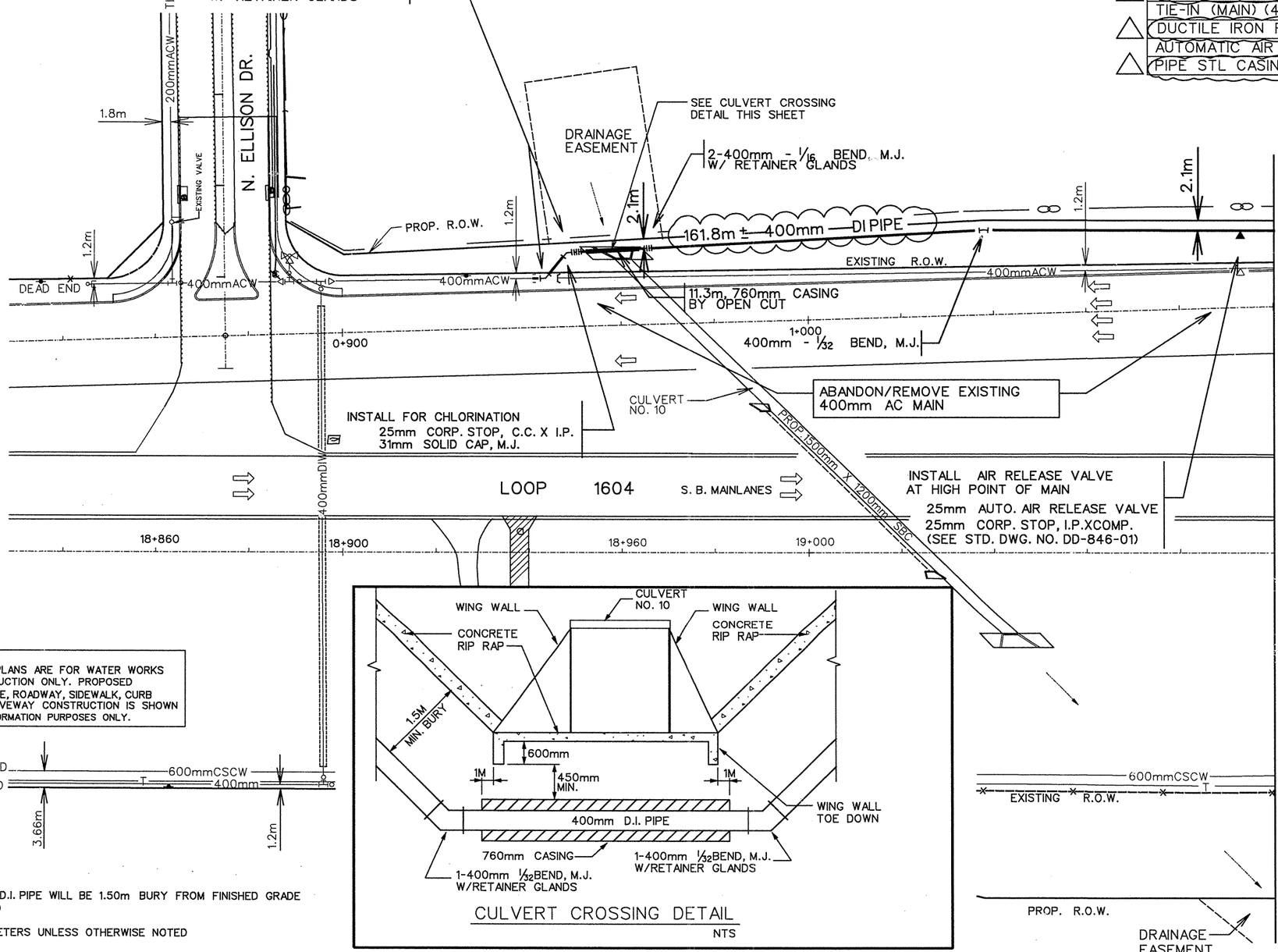


MATCH LINE STA. 19+100
(SEE SHEET 890)

NOTE:
THESE PLANS ARE FOR WATER WORKS CONSTRUCTION ONLY. PROPOSED DRAINAGE, ROADWAY, SIDEWALK, CURB AND DRIVEWAY CONSTRUCTION IS SHOWN FOR INFORMATION PURPOSES ONLY.







CULVERT CROSSING DETAIL
NTS

NOTE:

1. ALL 300mm and 400mm D.I. PIPE WILL BE 1.50m BURY FROM FINISHED GRADE UNLESS OTHERWISE NOTED
2. ALL DIMENSIONS ARE IN METERS UNLESS OTHERWISE NOTED
3. THE EXISTENCE AND LOCATION OF UNDERGROUND CABLE INDICATED ON THE PLANS ARE TAKEN FROM THE BEST RECORDS AVAILABLE AND ARE NOT GUARANTEED TO BE ACCURATE. CONTRACTOR TO CONTACT THE TELEPHONE COMPANY CABLE LOCATOR 48 HOURS PRIOR TO EXCAVATION AT 1-800-545-6005. CONTRACTOR HAS THE RESPONSIBILITY TO PROTECT AND SUPPORT TELEPHONE COMPANY PLANT DURING CONSTRUCTION.
4. DUE TO FEDERAL REGULATIONS TITLE 49, PART 192.181, CPS MUST MAINTAIN ACCESS TO GAS VALVES AT ALL TIMES. THE CONTRACTOR MUST PROTECT AND WORK AROUND ANY GAS VALVES THAT ARE IN THE PROJECT AREA. THE CONTRACTOR SHALL NOTIFY CPS LOCATOR AT 1-800-545-6005, 48 HOURS BEFORE BEGINNING ANY EXCAVATION.
5. CONTRACTOR AND/OR CONTRACTOR'S INDEPENDENTLY RETAINED EMPLOYEE OR STRUCTURAL DESIGN/CONTRACTOR AND GEOTECHNICAL/SAFETY/EQUIPMENT CONSULTANT, IF ANY, SHALL REVIEW THESE PLANS AND ANY AVAILABLE GEOTECHNICAL INFORMATION AND THE ANTICIPATED INSTALLATION SITES WITHIN THE PROJECT WORK AREA IN ORDER TO DEVELOP THE CONTRACTOR'S PLANS TO IMPLEMENT THE PROJECT DESCRIBED IN THE CONTRACT DOCUMENTS. THE CONTRACTOR'S PLANS SHALL PROVIDE FOR ADEQUATE TRENCH SAFETY SYSTEMS THAT COMPLY WITH AS A MINIMUM O.S.H.A. STANDARDS FOR TRENCH EXCAVATIONS. SPECIFICALLY, CONTRACTOR AND/OR CONTRACTOR'S INDEPENDENTLY RETAINED EMPLOYEE OR SAFETY CONSULTANT SHALL DEVELOP AND IMPLEMENT A TRENCH SAFETY PROGRAM IN ACCORDANCE WITH O.S.H.A. STANDARDS GOVERNING THE PRESENCE AND ACTIVITIES OF INDIVIDUALS WORKING IN AND AROUND TRENCH EXCAVATION.
6. CONTRACTOR SHALL REFER TO GENERAL NOTES FOR THIS CHANGE ORDER.

CO#51

SHEET 3-1 OF 14

STATE OF TEXAS
ROBERT J. SCHROEDER
50026
REGISTERED PROFESSIONAL ENGINEER
10/19/02


VICKREY & ASSOCIATES, INC.
CONSULTING ENGINEERS
7334 Blanco Road Suite 109 San Antonio, Texas 78216
Telephone: (210)349-3271


SAN ANTONIO WATER SYSTEM

FM LOOP 1604
CULEBRA RD.TO U.S.HWY.90
SAWS JOB NO. 00-5023

Texas Department of Transportation

| DESIGNED: | FED. RD. DIV. NO. | STATE | PROJECT NO. | | | HIGHWAY NO. |
|---|---|---|---|---|---|---|
| CHECKED: | 6 | TEXAS | NH 2000(704),etc. | | | LP1604 |
| DRAWN: | STATE DIST. | COUNTY | CONTROL NO. | SECTION NO. | JOB NO. | SHEET NO. |
| CHECKED: | SAT | BEXAR | 2452 | 01 | 036, etc. | 889A |

m:\1895-004-\dgn\1895-004-016 Change Orders\SH_WTR01.dgn 10/09/02 08:44:10 AM

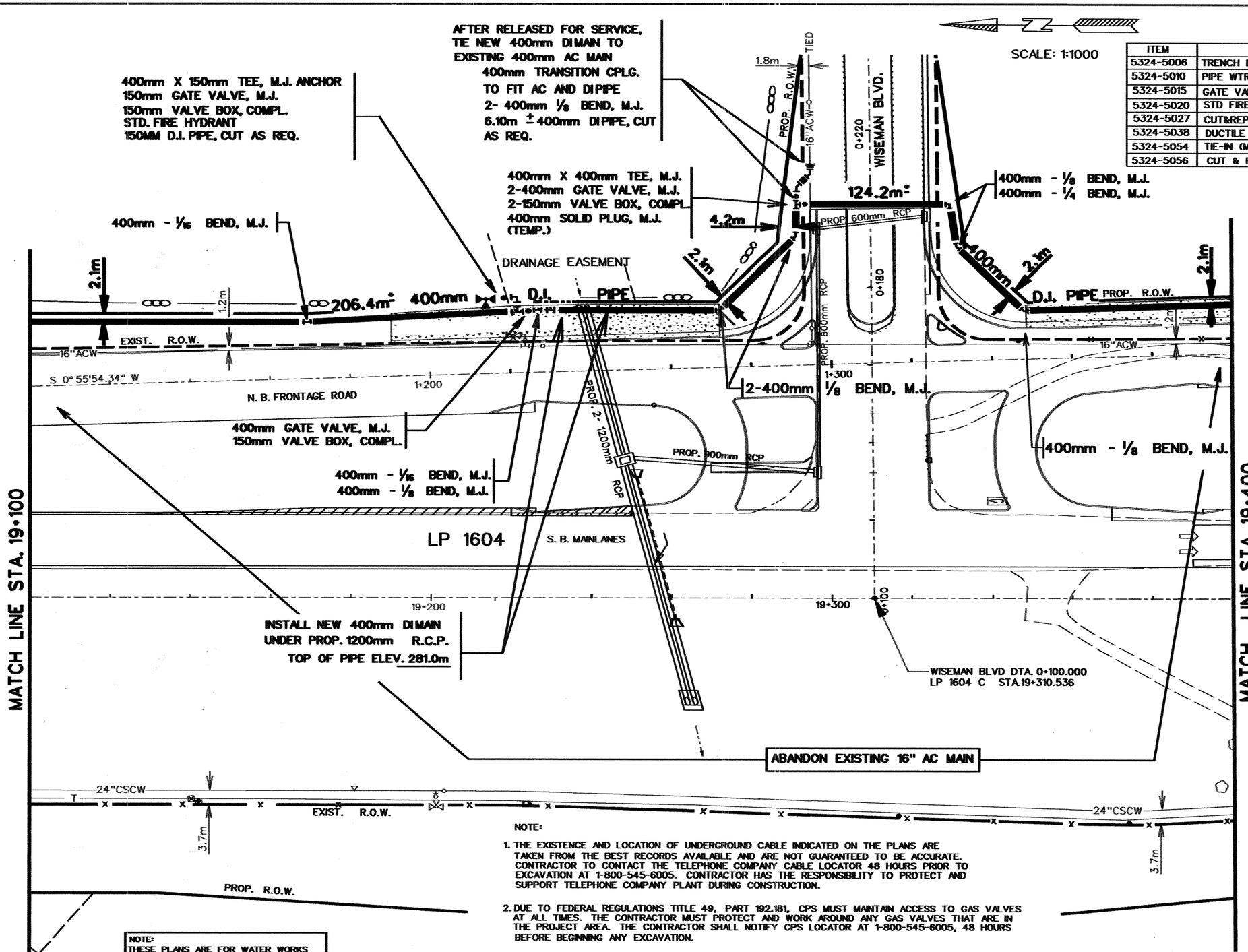


SCALE: 1:1000

## ESTIMATED QUANTITIES

| ITEM | DESCRIPTION | EST. | UNITS |
|---|---|---|---|
| 5324-5006 | TRENCH EXCAVATION PROTECTION | 336.7 | M |
| 5324-5010 | PIPE WTR MAIN (DI) (400mm) | 336.7 | M |
| 5324-5015 | GATE VALVE AND BOX (400mm) | 3 | EA |
| 5324-5020 | STD FIRE HYDRANT W/150mm VALVE & BOX | 1 | EA |
| 5324-5027 | CUT&REPL ASHP PAVW/150mm ASPH TRT B | 14.2 | m2 |
| 5324-5038 | DUCTILE IRON FITTINGS | 3,120.7 | Kg |
| 5324-5054 | TIE-IN (MAIN) (400mm) | 1 | EA |
| 5324-5056 | CUT & REPLACE CONC SDWLK, DRWY, ETC | .52 | m2 |

QUANTITIES THIS SHEET
CSJ 2452-01-037

NOTE:

ALL DIMENSIONS ARE IN METERS UNLESS OTHERWISE NOTED

NOTE:

1. THE EXISTENCE AND LOCATION OF UNDERGROUND CABLE INDICATED ON THE PLANS ARE TAKEN FROM THE BEST RECORDS AVAILABLE AND ARE NOT GUARANTEED TO BE ACCURATE. CONTRACTOR TO CONTACT THE TELEPHONE COMPANY CABLE LOCATOR 48 HOURS PRIOR TO EXCAVATION AT 1-800-545-6005. CONTRACTOR HAS THE RESPONSIBILITY TO PROTECT AND SUPPORT TELEPHONE COMPANY PLANT DURING CONSTRUCTION.

2. DUE TO FEDERAL REGULATIONS TITLE 49, PART 192.181, CPS MUST MAINTAIN ACCESS TO GAS VALVES AT ALL TIMES. THE CONTRACTOR MUST PROTECT AND WORK AROUND ANY GAS VALVES THAT ARE IN THE PROJECT AREA. THE CONTRACTOR SHALL NOTIFY CPS LOCATOR AT 1-800-545-6005, 48 HOURS BEFORE BEGINNING ANY EXCAVATION.

3. CONTRACTOR AND/OR CONTRACTOR'S INDEPENDENTLY RETAINED EMPLOYEE OR STRUCTURAL DESIGN/CONTRACTOR AND GEOTECHNICAL/SAFETY/EQUIPMENT CONSULTANT, IF ANY, SHALL REVIEW THESE PLANS AND ANY AVAILABLE GEOTECHNICAL INFORMATION AND THE ANTICIPATED INSTALLATION SITES WITHIN THE PROJECT WORK AREA IN ORDER TO DEVELOP THE CONTRACTOR'S PLANS TO IMPLEMENT THE PROJECT DESCRIBED IN THE CONTRACT DOCUMENTS. THE CONTRACTOR'S PLANS SHALL PROVIDE FOR ADEQUATE TRENCH SAFETY SYSTEMS THAT COMPLY WITH AS A MINIMUM O.S.H.A. STANDARDS FOR TRENCH EXCAVATIONS. SPECIFICALLY, CONTRACTOR AND/OR CONTRACTOR'S INDEPENDENTLY RETAINED EMPLOYEE OR SAFETY CONSULTANT SHALL DEVELOP AND IMPLEMENT A TRENCH SAFETY PROGRAM IN ACCORDANCE WITH O.S.H.A. STANDARDS GOVERNING THE PRESENCE AND ACTIVITIES OF INDIVIDUALS WORKING IN AND AROUND TRENCH EXCAVATION.

NOTE:
THESE PLANS ARE FOR WATER WORKS CONSTRUCTION ONLY. PROPOSED DRAINAGE, ROADWAY, SIDEWALK, CURB AND DRIVEWAY CONSTRUCTION IS SHOWN FOR INFORMATION PURPOSES ONLY.

STATE OF TEXAS
MACK W. THOMAS III
85607
LICENSED
PROFESSIONAL ENGINEER
9/25/00

FM LOOP 1604

CULEBRA RD. TO U.S. HWY. 90

BLK. MAP NO.092-592

S.A.W.S. JOB NO. 00-5023

Texas Department of Transportation

| FED.RD. DIV.NO. | FEDERAL AID PROJECT NO. | | SHEET NO. |
|---|---|---|---|
| 6 | NH 2000(704),etc. | | 290 |
| STATE | DIST. | COUNTY | |
| TEXAS | SAT | BEXAR | |
| CONT. | SECT. | JOB | HIGHWAY NO. |
| 2452 | 01 | 036,etc | LP 1604 |

SCALE: 1:1000

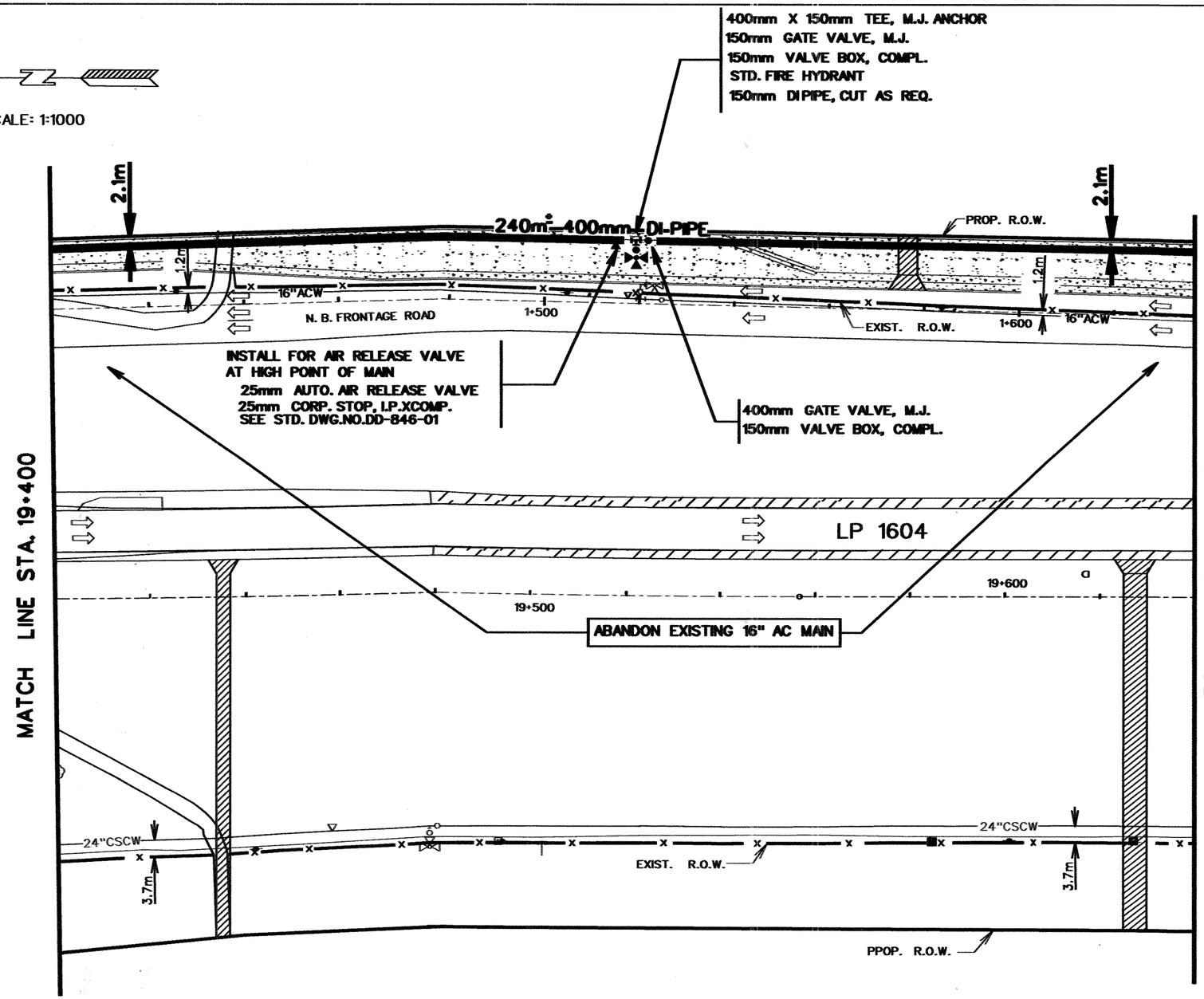


## ESTIMATED QUANTITIES

| ITEM | DESCRIPTION | EST. | UNITS |
|---|---|---|---|
| 5324-5006 | TRENCH EXCAVATION PROTECTION | 240 | M |
| 5324-5010 | PIPE WTR MAIN (DI) (400mm) | 240 | M |
| 5324-5015 | GATE VALVE AND BOX (400mm) | 1 | EA |
| 5324-5020 | STD FIRE HYDRANT W/150mm VALVE & BOX | 1 | EA |
| 5324-5027 | CUT & REPL ASPH PAVW/150mm ASPH TRT B | 3.3 | M2 |
| 5324-5038 | DUCTILE IRON FITTINGS | 336.1 | KG |
| 5324-5053 | AUTOMATIC AIR RELEASE VALVE (25mm) | 1 | EA |

NOTE:

ALL DIMENSIONS ARE IN METERS UNLESS OTHERWISE NOTED

QUANTITIES THIS SHEET
CSJ 2452-01-037

NOTE:

1. THE EXISTENCE AND LOCATION OF UNDERGROUND CABLE INDICATED ON THE PLANS ARE TAKEN FROM THE BEST RECORDS AVAILABLE AND ARE NOT GUARANTEED TO BE ACCURATE. CONTRACTOR TO CONTACT THE TELEPHONE COMPANY CABLE LOCATOR 48 HOURS PRIOR TO EXCAVATION AT 1-800-545-6005. CONTRACTOR HAS THE RESPONSIBILITY TO PROTECT AND SUPPORT TELEPHONE COMPANY PLANT DURING CONSTRUCTION.

2. DUE TO FEDERAL REGULATIONS TITLE 49, PART 192.181, CPS MUST MAINTAIN ACCESS TO GAS VALVES AT ALL TIMES. THE CONTRACTOR MUST PROTECT AND WORK AROUND ANY GAS VALVES THAT ARE IN THE PROJECT AREA. THE CONTRACTOR SHALL NOTIFY CPS LOCATOR AT 1-800-545-6005, 48 HOURS BEFORE BEGINNING ANY EXCAVATION.

3. CONTRACTOR AND/OR CONTRACTOR'S INDEPENDENTLY RETAINED EMPLOYEE OR STRUCTURAL DESIGN/CONTRACTOR AND GEOTECHNICAL/SAFETY/EQUIPMENT CONSULTANT, IF ANY, SHALL REVIEW THESE PLANS AND ANY AVAILABLE GEOTECHNICAL INFORMATION AND THE ANTICIPATED INSTALLATION SITES WITHIN THE PROJECT WORK AREA IN ORDER TO DEVELOP THE CONTRACTOR'S PLANS TO IMPLEMENT THE PROJECT DESCRIBED IN THE CONTRACT DOCUMENTS. THE CONTRACTOR'S PLANS SHALL PROVIDE FOR ADEQUATE TRENCH SAFETY SYSTEMS THAT COMPLY WITH AS A MINIMUM O.S.H.A. STANDARDS FOR TRENCH EXCAVATIONS. SPECIFICALLY, CONTRACTOR AND/OR CONTRACTOR'S INDEPENDENTLY RETAINED EMPLOYEE OR SAFETY CONSULTANT SHALL DEVELOP AND IMPLEMENT A TRENCH SAFETY PROGRAM IN ACCORDANCE WITH O.S.H.A. STANDARDS GOVERNING THE PRESENCE AND ACTIVITIES OF INDIVIDUALS WORKING IN AND AROUND TRENCH EXCAVATION.

NOTE:
THESE PLANS ARE FOR WATER WORKS CONSTRUCTION ONLY. PROPOSED DRAINAGE, ROADWAY, SIDEWALK, CURB AND DRIVEWAY CONSTRUCTION IS SHOWN FOR INFORMATION PURPOSES ONLY.

STATE OF TEXAS
MACK W. THOMAS III
85607
LICENSED
PROFESSIONAL ENGINEER
9/25/00

FM LOOP 1604

CULEBRA RD. TO U.S. HWY. 90

BLK. MAP NO.092-592

S.A.W.S. JOB NO. 00-5023

Texas Department of Transportation

| FED.RD. DIV.NO. | FEDERAL AID PROJECT NO. | | SHEET NO. |
|---|---|---|---|
| 6 | NH 2000(704),ETC. | | 891 |
| STATE | DIST. | COUNTY | |
| TEXAS | SAT | BEXAR | |
| CONT. | SECT. | JOB | HIGHWAY NO. |
| 2452 | 01 | 036,ETC | LP 1604 |

SHEET 10 OF 19

SCALE: 1:1000

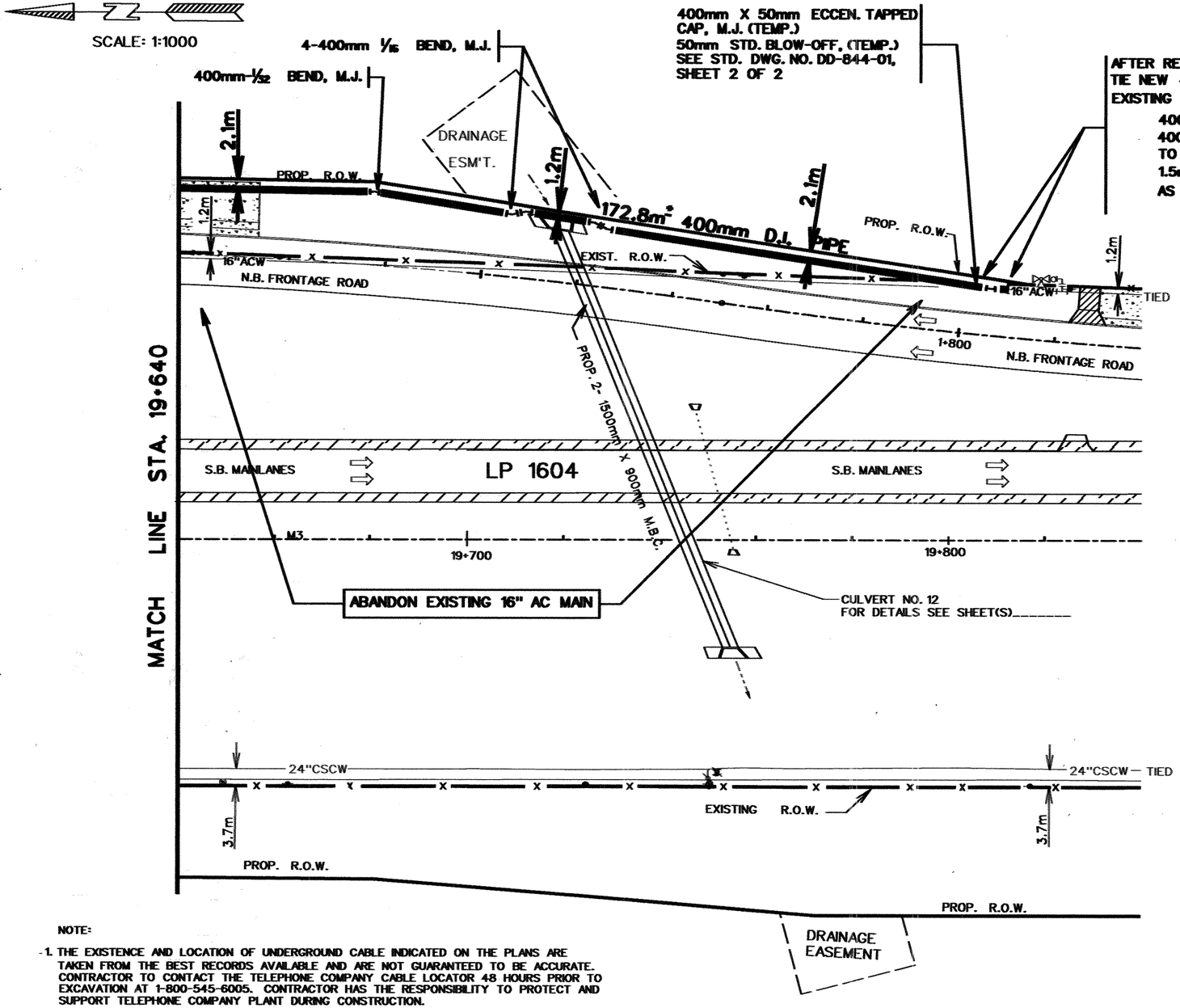


## ESTIMATED QUANTITIES

| ITEM | DESCRIPTION | EST. | UNITS |
|---|---|---|---|
| 5324-5006 | TRENCH EXCAVATION PROTECTION | 174.4 | M |
| 5324-5010 | PIPE WTR MAIN (DI) (400mm) | 174.4 | M |
| 5324-5023 | TEMP BLOW-OFF (50mm) | 1 | EA |
| 5324-5038 | DUCTILE IRON FITTINGS | 1,633 | KG |
| 5324-5039 | HYDROSTATIC PRESSURE TEST | 1 | EA |
| | | | |

QUANTITIES THIS SHEET
CSJ 2452-01-037

NOTE:

ALL DIMENSIONS ARE IN METERS UNLESS OTHERWISE NOTED

NOTE:

1. THE EXISTENCE AND LOCATION OF UNDERGROUND CABLE INDICATED ON THE PLANS ARE TAKEN FROM THE BEST RECORDS AVAILABLE AND ARE NOT GUARANTEED TO BE ACCURATE. CONTRACTOR TO CONTACT THE TELEPHONE COMPANY CABLE LOCATOR 48 HOURS PRIOR TO EXCAVATION AT 1-800-545-6005. CONTRACTOR HAS THE RESPONSIBILITY TO PROTECT AND SUPPORT TELEPHONE COMPANY PLANT DURING CONSTRUCTION.

2. DUE TO FEDERAL REGULATIONS TITLE 49, PART 192.181, CPS MUST MAINTAIN ACCESS TO GAS VALVES AT ALL TIMES. THE CONTRACTOR MUST PROTECT AND WORK AROUND ANY GAS VALVES THAT ARE IN THE PROJECT AREA. THE CONTRACTOR SHALL NOTIFY CPS LOCATOR AT 1-800-545-6005, 48 HOURS BEFORE BEGINNING ANY EXCAVATION.

3. CONTRACTOR AND/OR CONTRACTOR'S INDEPENDENTLY RETAINED EMPLOYEE OR STRUCTURAL DESIGN/CONTRACTOR AND GEOTECHNICAL/SAFETY/EQUIPMENT CONSULTANT, IF ANY, SHALL REVIEW THESE PLANS AND ANY AVAILABLE GEOTECHNICAL INFORMATION AND THE ANTICIPATED INSTALLATION SITES WITHIN THE PROJECT WORK AREA IN ORDER TO DEVELOP THE CONTRACTOR'S PLANS TO IMPLEMENT THE PROJECT DESCRIBED IN THE CONTRACT DOCUMENTS. THE CONTRACTOR'S PLANS SHALL PROVIDE FOR ADEQUATE TRENCH SAFETY SYSTEMS THAT COMPLY WITH AS A MINIMUM O.S.H.A. STANDARDS FOR TRENCH EXCAVATIONS. SPECIFICALLY, CONTRACTOR AND/OR CONTRACTOR'S INDEPENDENTLY RETAINED EMPLOYEE OR SAFETY CONSULTANT SHALL DEVELOP AND IMPLEMENT A TRENCH SAFETY PROGRAM IN ACCORDANCE WITH O.S.H.A. STANDARDS GOVERNING THE PRESENCE AND ACTIVITIES OF INDIVIDUALS WORKING IN AND AROUND TRENCH EXCAVATION.

NOTE:
THESE PLANS ARE FOR WATER WORKS CONSTRUCTION ONLY. PROPOSED DRAINAGE, ROADWAY, SIDEWALK, CURB AND DRIVEWAY CONSTRUCTION IS SHOWN FOR INFORMATION PURPOSES ONLY.

STATE OF TEXAS
MACK W. THOMAS III
85607
LICENSED
PROFESSIONAL ENGINEER
9/25/00

# FM LOOP 1604

## CULEBRA RD. TO U.S. HWY. 90

BLK. MAP NO.092-590

S.A.W.S. JOB NO. 00-5023

Texas Department of Transportation

| FED.RD. DIV.NO. | FEDERAL AID PROJECT NO. | | SHEET NO. |
|---|---|---|---|
| 6 | NH 2000(704),etc. | | 892 |
| STATE | DIST. | COUNTY | |
| TEXAS | SAT | BEXAR | |
| CONT. | SECT. | JOB | HIGHWAY NO. |
| 2452 | 01 | 036,etc | LP 1604 |

SHEET 11 OF 19

SCALE: 1:1000

QUANTITIES THIS SHEET
CSJ 2452-01-037

NOTE: A
CONTRACTOR WILL CREDIT SAN ANTONIO WATER SYSTEM FOR THE FOLLOWING QUANTITIES TO BE DELETED FROM SHEET 892 IN CONJUNCTION WITH THIS CHANGE ORDER:
1.) DELETE 1-400mm TIE-IN
2.) DELETE 1-400mm TRANSITION COUPLING (179.1 KG)
3.) DELETE 1-TEMP. BLOW OFF (50mm)
4.) DELETE 1-HYDROSTATIC PRESSURE TEST.

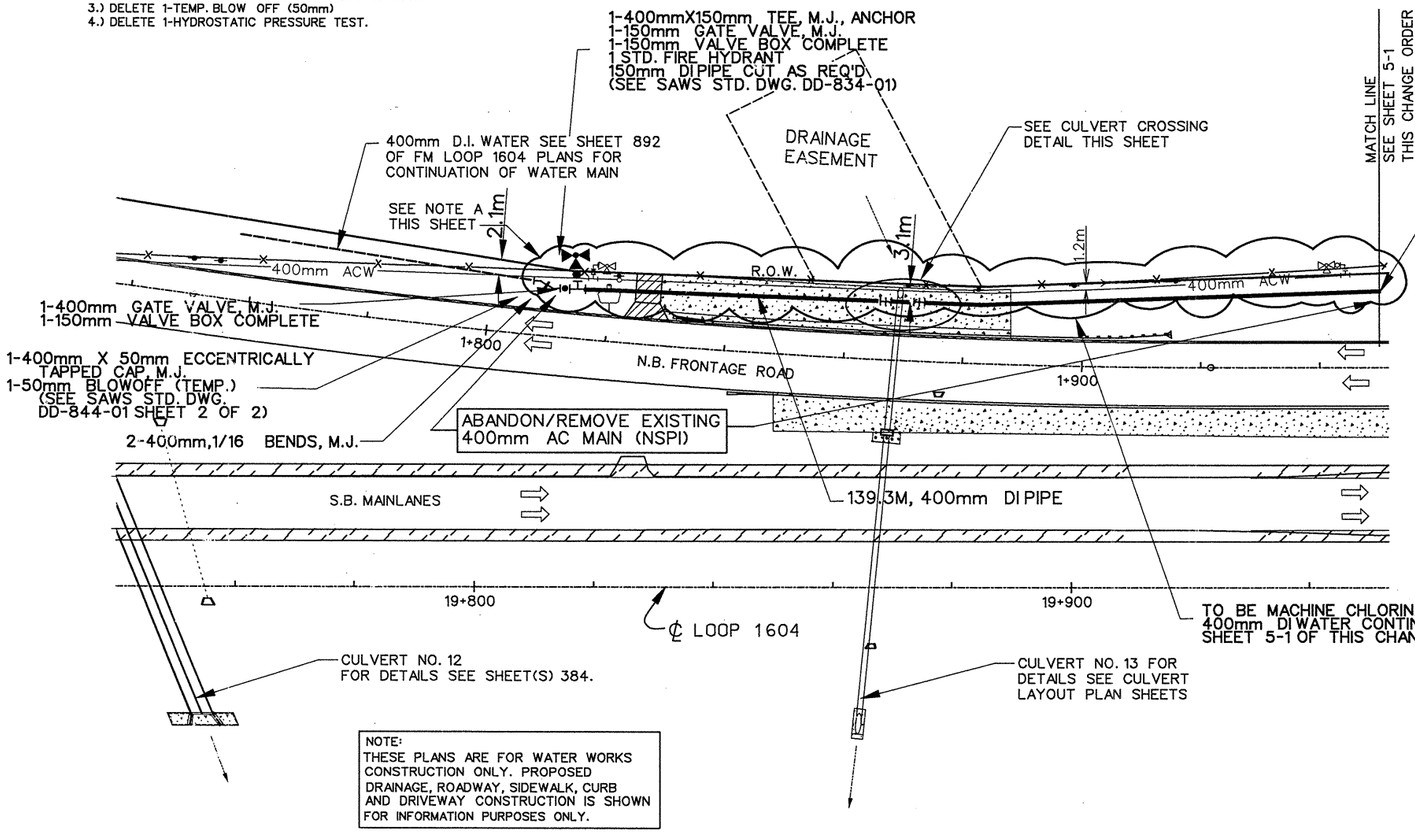


NOTE:
THESE PLANS ARE FOR WATER WORKS CONSTRUCTION ONLY. PROPOSED DRAINAGE, ROADWAY, SIDEWALK, CURB AND DRIVEWAY CONSTRUCTION IS SHOWN FOR INFORMATION PURPOSES ONLY.

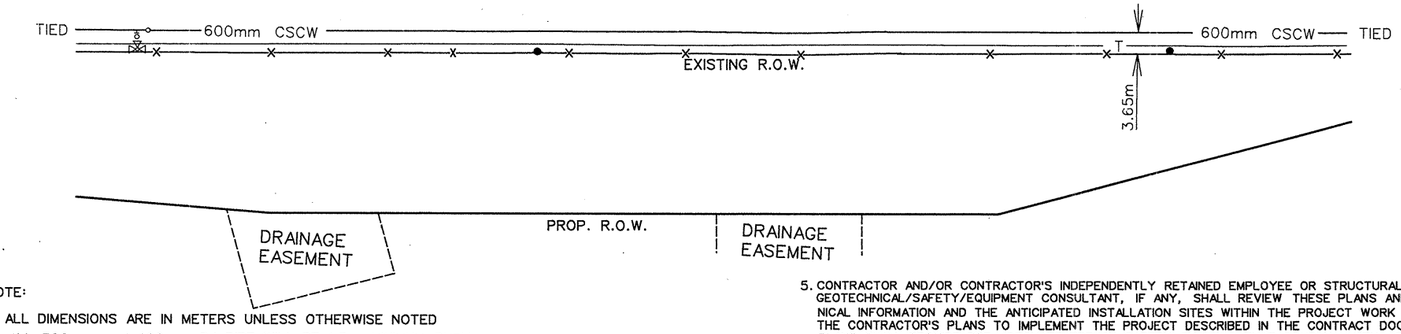


NOTE:

1. ALL DIMENSIONS ARE IN METERS UNLESS OTHERWISE NOTED
2. ALL 300mm and 400mm D.I. PIPE WILL BE 1.5m MINIMUM BURY UNLESS OTHERWISE NOTED. MINIMUM BURY WILL BE FROM FINISHED GRADE TO TOP OF PIPE UNLESS OTHERWISE NOTED.
3. THE EXISTENCE AND LOCATION OF UNDERGROUND CABLE INDICATED ON THE PLANS ARE TAKEN FROM THE BEST RECORDS AVAILABLE AND ARE NOT GUARANTEED TO BE ACCURATE. CONTRACTOR TO CONTACT THE TELEPHONE COMPANY CABLE LOCATOR 48 HOURS PRIOR TO EXCAVATION AT 1-800-545-6005. CONTRACTOR HAS THE RESPONSIBILITY TO PROTECT AND SUPPORT TELEPHONE COMPANY PLANT DURING CONSTRUCTION.
4. DUE TO FEDERAL REGULATIONS TITLE 49, PART 192.181, CPS MUST MAINTAIN ACCESS TO GAS VALVES AT ALL TIMES. THE CONTRACTOR MUST PROTECT AND WORK AROUND ANY GAS VALVES THAT ARE IN THE PROJECT AREA. THE CONTRACTOR SHALL NOTIFY CPS LOCATOR AT 1-800-545-6005, 48 HOURS BEFORE BEGINNING ANY EXCAVATION.
5. CONTRACTOR AND/OR CONTRACTOR'S INDEPENDENTLY RETAINED EMPLOYEE OR STRUCTURAL DESIGN/CONTRACTOR AND GEOTECHNICAL/SAFETY/EQUIPMENT CONSULTANT, IF ANY, SHALL REVIEW THESE PLANS AND ANY AVAILABLE GEOTECHNICAL INFORMATION AND THE ANTICIPATED INSTALLATION SITES WITHIN THE PROJECT WORK AREA IN ORDER TO DEVELOP THE CONTRACTOR'S PLANS TO IMPLEMENT THE PROJECT DESCRIBED IN THE CONTRACT DOCUMENTS. THE CONTRACTOR'S PLANS SHALL PROVIDE FOR ADEQUATE TRENCH SAFETY SYSTEMS THAT COMPLY WITH AS A MINIMUM O.S.H.A. STANDARDS FOR TRENCH EXCAVATIONS. SPECIFICALLY, CONTRACTOR AND/OR CONTRACTOR'S INDEPENDENTLY RETAINED EMPLOYEE OR SAFETY CONSULTANT SHALL DEVELOP AND IMPLEMENT A TRENCH SAFETY PROGRAM IN ACCORDANCE WITH O.S.H.A. STANDARDS GOVERNING THE PRESENCE AND ACTIVITIES OF INDIVIDUALS WORKING IN AND AROUND TRENCH EXCAVATION.
6. CONTRACTOR SHALL REFER TO GENERAL NOTES FOR THIS CHANGE ORDER.
7. CONTRACTOR SHALL BE RESPONSIBLE FOR OBTAINING ANY NECESSARY TEMPORARY CONSTRUCTION EASEMENTS.
8. CONTRACTOR SHALL BE RESPONSIBLE FOR REPLACING ANY TXDOT IMPROVEMENTS DAMAGED BY WATER MAIN CONSTRUCTION NO SEPARATE PAY ITEM.
9. CONTRACTOR SHALL BE RESPONSIBLE FOR MAINTAINING ACCESS AT ALL TIMES TO DRIVEWAYS AFFECTED BY WATER MAIN INSTALLATION.

## ESTIMATED QUANTITIES

| DESCRIPTION | EST. | UNITS |
|---|---|---|
| TRENCH EXCAVATION PROTECTION | 139.3 | M |
| PIPE WTR MAIN (DI) (400mm) | 139.3 | M |
| DUCTILE IRON FITTINGS | 1,787.7 | KG |
| TEMP BLOW OFF (50mm) | 1 | EA |
| PIPE (STL CASING)(760mm)(OPEN CUT) | 4.0 | M |
| STD FIRE HYDRANT W/150mm VALV&BOX | 1 | EA |

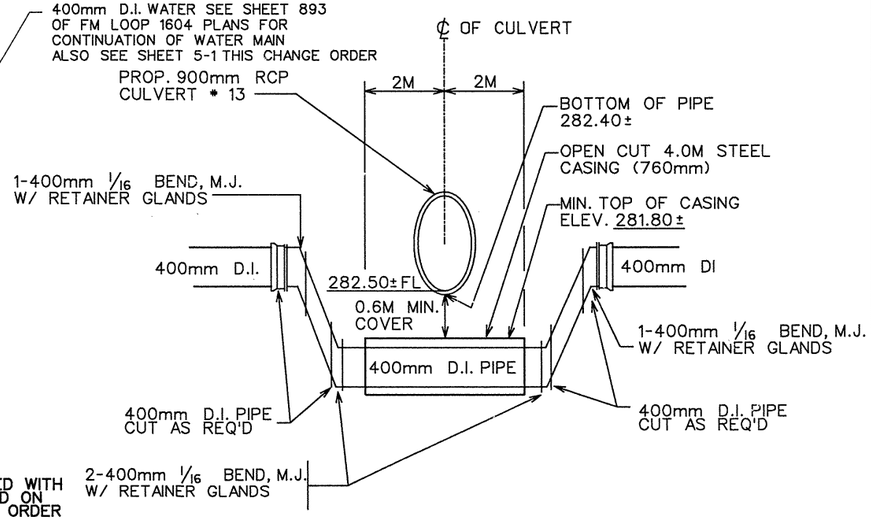


400mm D.I. WATER SEE SHEET 893 OF FM LOOP 1604 PLANS FOR CONTINUATION OF WATER MAIN ALSO SEE SHEET 5-1 THIS CHANGE ORDER

CULVERT CROSSING DETAIL
N.T.S.

△ CHANGE ORDER NO.

NEW SHEET,
WATER CHANGES

STATE OF TEXAS
ROBERT J. SCHROEDER
50026
REGISTERED PROFESSIONAL ENGINEER

10/9/02

VICKREY & ASSOCIATES, INC.
CONSULTING ENGINEERS
7334 Blanco Road Suite 109 San Antonio, Texas 78216
Telephone: (210)349-3271

SAN ANTONIO WATER SYSTEM

FM LOOP 1604
CULEBRA RD.TO U.S.HWY.90
SAWS JOB NO. 00-5023

© 2002 Texas Department of Transportation

| DESIGNED: | FED. RD. DIV. NO. | STATE | PROJECT NO. | | | HIGHWAY NO. |
|---|---|---|---|---|---|---|
| CHECKED: | 6 | TEXAS | NH 2000(704),etc. | | | LP1604 |
| DRAWN: | STATE DIST. | COUNTY | CONTROL NO. | SECTION NO. | JOB NO. | SHEET NO. |
| CHECKED: | SAT | BEXAR | 2452 | 01 | 036, etc. | 892A |

Cott51

SHEET 4-1 OF 14

m:\1895-004\dgn\1895-004-016 Change Orders\SH_WTR03.dgn 10/09/02 08:44:36 AM

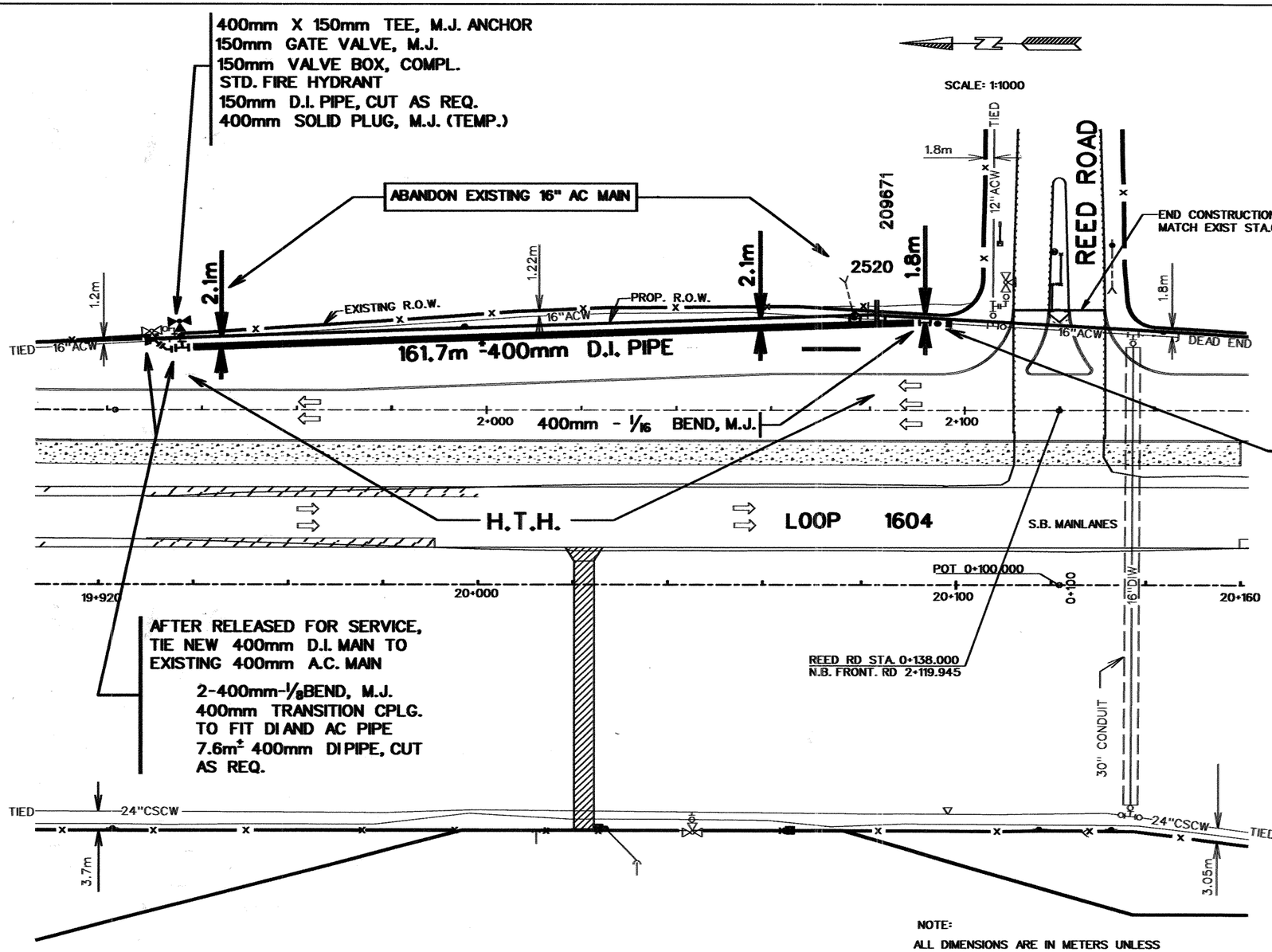


## ESTIMATED QUANTITIES

| ITEM | DESCRIPTION | EST. | UNITS |
|---|---|---|---|
| 5324-5006 | TRENCH EXCAVATION PROTECTION | 169.3 | M |
| 5324-5010 | PIPE WTR MAIN (DI)(400mm) | 169.3 | M |
| 5324-5015 | GATE VALVE AND BOX (400mm) | 1 | EA |
| 5324-5020 | STD FIRE HYDRANT W/150mm VALVE & BOX | 1 | EA |
| 5324-5028 | RELAY SHRT SERV (19mm) | 1 | EA |
| 5324-5038 | DUCTILE IRON FITTINGS | 1,560.8 | KG |
| 5324-5039 | HYDROSTATIC PRESSURE TEST | 1 | EA |
| 5324-5054 | TIE-IN (MAIN) (400mm) | 2 | EA |

QUANTITIES THIS SHEET
CSJ 2452-01-037

NOTE:

1. THE EXISTENCE AND LOCATION OF UNDERGROUND CABLE INDICATED ON THE PLANS ARE TAKEN FROM THE BEST RECORDS AVAILABLE AND ARE NOT GUARANTEED TO BE ACCURATE. CONTRACTOR TO CONTACT THE TELEPHONE COMPANY CABLE LOCATOR 48 HOURS PRIOR TO EXCAVATION AT 1-800-545-6005. CONTRACTOR HAS THE RESPONSIBILITY TO PROTECT AND SUPPORT TELEPHONE COMPANY PLANT DURING CONSTRUCTION.

2. DUE TO FEDERAL REGULATIONS TITLE 49, PART 192.181, CPS MUST MAINTAIN ACCESS TO GAS VALVES AT ALL TIMES. THE CONTRACTOR MUST PROTECT AND WORK AROUND ANY GAS VALVES THAT ARE IN THE PROJECT AREA. THE CONTRACTOR SHALL NOTIFY CPS LOCATOR AT 1-800-545-6005, 48 HOURS BEFORE BEGINNING ANY EXCAVATION.

3. CONTRACTOR AND/OR CONTRACTOR'S INDEPENDENTLY RETAINED EMPLOYEE OR STRUCTURAL DESIGN/CONTRACTOR AND GEOTECHNICAL/SAFETY/EQUIPMENT CONSULTANT, IF ANY, SHALL REVIEW THESE PLANS AND ANY AVAILABLE GEOTECHNICAL INFORMATION AND THE ANTICIPATED INSTALLATION SITES WITHIN THE PROJECT WORK AREA IN ORDER TO DEVELOP THE CONTRACTOR'S PLANS TO IMPLEMENT THE PROJECT DESCRIBED IN THE CONTRACT DOCUMENTS. THE CONTRACTOR'S PLANS SHALL PROVIDE FOR ADEQUATE TRENCH SAFETY SYSTEMS THAT COMPLY WITH AS A MINIMUM O.S.H.A. STANDARDS FOR TRENCH EXCAVATIONS. SPECIFICALLY, CONTRACTOR AND/OR CONTRACTOR'S INDEPENDENTLY RETAINED EMPLOYEE OR SAFETY CONSULTANT SHALL DEVELOP AND IMPLEMENT A TRENCH SAFETY PROGRAM IN ACCORDANCE WITH O.S.H.A. STANDARDS GOVERNING THE PRESENCE AND ACTIVITIES OF INDIVIDUALS WORKING IN AND AROUND TRENCH EXCAVATION.

NOTE:
THESE PLANS ARE FOR WATER WORKS CONSTRUCTION ONLY. PROPOSED DRAINAGE, ROADWAY, SIDEWALK, CURB AND DRIVEWAY CONSTRUCTION IS SHOWN FOR INFORMATION PURPOSES ONLY.

NOTE:
ALL DIMENSIONS ARE IN METERS UNLESS OTHERWISE NOTED

STATE OF TEXAS
MACK W. THOMAS III
85607
LICENSED
PROFESSIONAL ENGINEER
Mack W. Thomas III
9/25/00

FM LOOP 1604

CULEBRA RD. TO U.S. HWY. 90

BLK. MAP NO. 090-590 & 092-590

S.A.W.S. JOB NO. 00-5023

Texas Department of Transportation

| FED.RD. DIV.NO. | FEDERAL AID PROJECT NO. | | SHEET NO. |
|---|---|---|---|
| 6 | NH 2000(704),etc. | | 092 |
| STATE | DIST. | COUNTY | |
| TEXAS | SAT | BEXAR | |
| CONT. | SECT. | JOB | HIGHWAY NO. |
| 2452 | 01 | 036,etc | LP 1604 |

SCALE: 1:1000

QUANTITIES THIS SHEET
CSJ 2452-01-037

NOTE:
THESE PLANS ARE FOR WATER WORKS CONSTRUCTION ONLY. PROPOSED DRAINAGE, ROADWAY, SIDEWALK, CURB AND DRIVEWAY CONSTRUCTION IS SHOWN FOR INFORMATION PURPOSES ONLY.

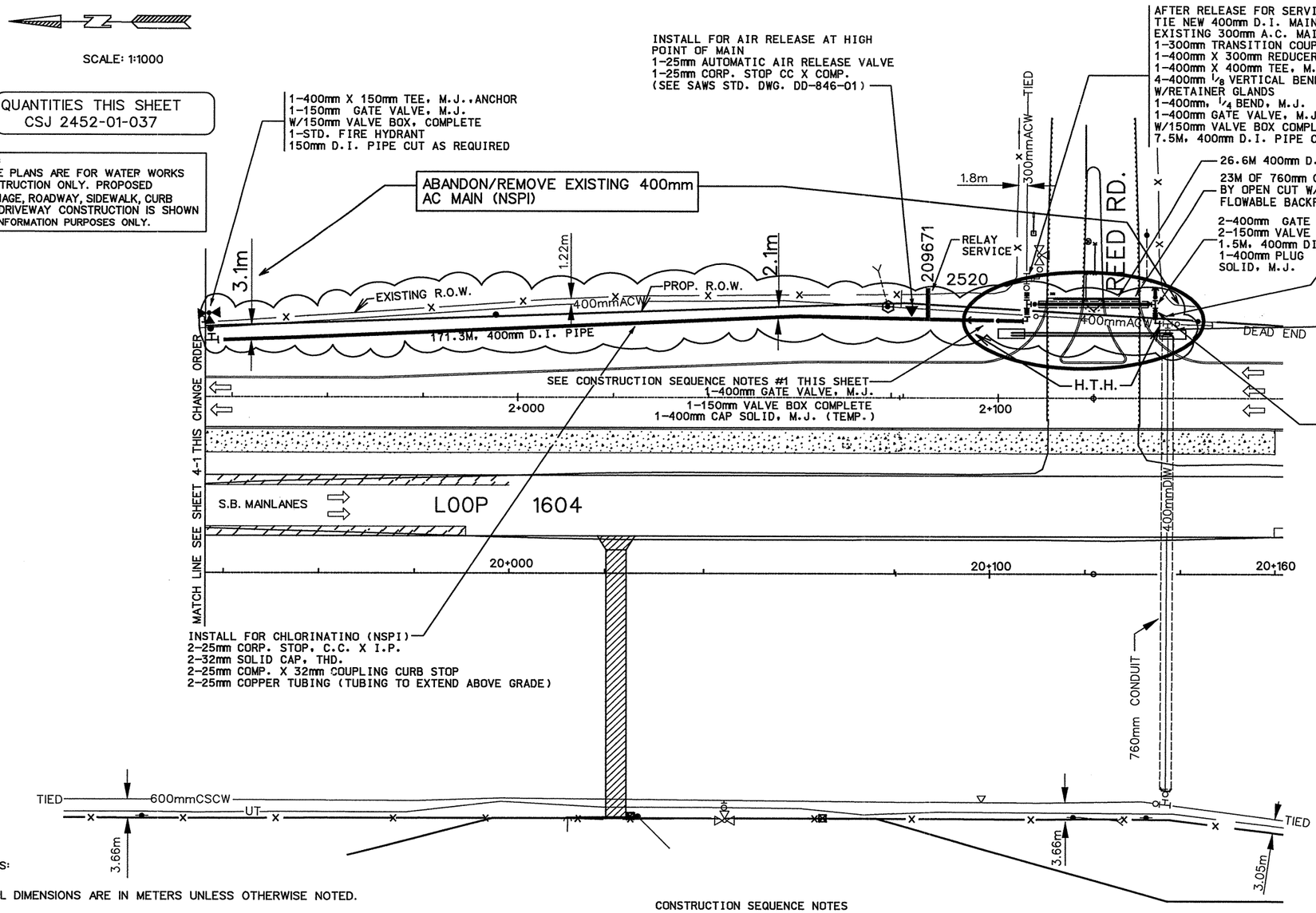


ESTIMATED QUANTITIES

| DESCRIPTION | EST. | UNITS |
|---|---|---|
| TRENCH EXCAVATION PROTECTION | 216.4 | M |
| PIPE WTR MAIN (DI)(400mm) | 216.4 | M |
| GATE VALVE AND BOX (400mm) | 5 | EA |
| TIE-IN (MAIN) (300mm) | 1 | EA |
| STD FIRE HYDRANT W/150mm VALVE & BOX | 1 | EA |
| CUT&REPL ASPH PAV W/150mm ASPH TRT BS | 30.0 | $M^2$ |
| RELAY SHRT SERV (19mm) | 1 | EA |
| DUCTILE IRON FITTINGS | 3,940.0 | KG |
| HYDROSTATIC PRESSURE TEST | 2 | EA |
| AUTOMATIC AIR RELEASE VALVE (25mm) | 1 | EA. |
| CUT AND REPL CONC SDWLK, DRWY, ETC. | 14.6 | $M^2$ |
| FLOWABLE FILL | 79.3 | $M^3$ |
| PIPE STL CASING (760mm I.D.) (OPEN-CUT) | 23.0 | M |
| TIE-IN (MAIN)(400mm) | 1 | EA |

CHANGE ORDER NO.

REVISION OF SHEET 12

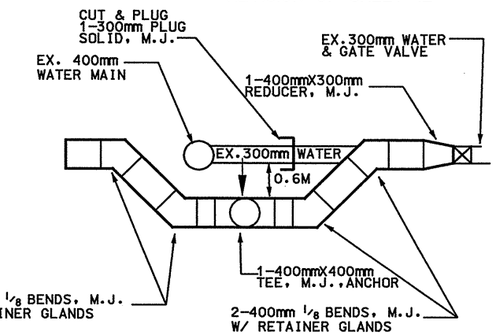


300mm WATER MAIN TIE-IN DETAIL
N.T.S.

TIE-IN NOTES:

1. TIE-IN TO BE DONE DURING OFF PEAK HOURS. CONTRACTOR TO COORDINATE TIE-IN WITH SAWS.
2. REMOVE EXISTING 300mm WATER MAIN AS NEEDED TO MAKE TIE-IN (NSPI)

NOTES:

1. ALL DIMENSIONS ARE IN METERS UNLESS OTHERWISE NOTED.
2. THE EXISTENCE AND LOCATION OF UNDERGROUND CABLE INDICATED ON THE PLANS ARE TAKEN FROM THE BEST RECORDS AVAILABLE AND ARE NOT GUARANTEED TO BE ACCURATE. CONTRACTOR TO CONTACT THE TELEPHONE COMPANY CABLE LOCATOR 48 HOURS PRIOR TO EXCAVATION AT 1-800-545-6005. CONTRACTOR HAS THE RESPONSIBILITY TO PROTECT AND SUPPORT TELEPHONE COMPANY PLANT DURING CONSTRUCTION.
3. DUE TO FEDERAL REGULATIONS TITLE 49, PART 192.181, CPS MUST MAINTAIN ACCESS TO GAS VALVES AT ALL TIMES. THE CONTRACTOR MUST PROTECT AND WORK AROUND ANY GAS VALVES THAT ARE IN THE PROJECT AREA. THE CONTRACTOR SHALL NOTIFY CPS LOCATOR AT 1-800-545-6005, 48 HOURS BEFORE BEGINNING ANY EXCAVATION.
4. CONTRACTOR AND/OR CONTRACTOR'S INDEPENDENTLY RETAINED EMPLOYEE OR STRUCTURAL DESIGN/CONTRACTOR AND GEOTECHNICAL/SAFETY/EQUIPMENT CONSULTANT, IF ANY, SHALL REVIEW THESE PLANS AND ANY AVAILABLE GEOTECHNICAL INFORMATION AND THE ANTICIPATED INSTALLATION SITES WITHIN THE PROJECT WORK AREA IN ORDER TO DEVELOP THE CONTRACTOR'S PLANS TO IMPLEMENT THE PROJECT DESCRIBED IN THE CONTRACT DOCUMENTS. THE CONTRACTOR'S PLANS SHALL PROVIDE FOR ADEQUATE TRENCH SAFETY SYSTEMS THAT COMPLY WITH AS A MINIMUM O.S.H.A. STANDARDS FOR TRENCH EXCAVATIONS. SPECIFICALLY, CONTRACTOR AND/OR CONTRACTOR'S INDEPENDENTLY RETAINED EMPLOYEE OR SAFETY CONSULTANT SHALL DEVELOP AND IMPLEMENT A TRENCH SAFETY PROGRAM IN ACCORDANCE WITH O.S.H.A. STANDARDS GOVERNING THE PRESENCE AND ACTIVITIES OF INDIVIDUALS WORKING IN AND AROUND TRENCH EXCAVATION.
5. ALL PIPE SHALL HAVE 1.5M MINIMUM BURY FROM FINISHED GRADE, UNLESS OTHERWISE NOTED.
6. CONTRACTOR SHALL PROVIDE ACCESS TO & FROM REED ROAD. TRAFFIC CONTROL REQUIRED BY TXDOT IS NO SEPARATE PAY ITEM. TRAFFIC CONTROL SHALL BE PROVIDED AS DIRECTED BY TXDOT.
7. CONTRACTOR SHALL REFER TO GENERAL NOTES FOR THIS CHANGE ORDER.

CONSTRUCTION SEQUENCE NOTES

#1) CONTRACTOR TO INSTALL REED ROAD CROSSING AND MAKE TIE-IN TO 300mm MAIN PARALLEL TO REED ROAD AND TIE-IN TO 400mm MAIN CROSSING FM LOOP 1604 PRIOR TO CONSTRUCTING 400mm MAIN PARALLEL TO FM LOOP 1604. CONTRACTOR TO PROVIDE GATE VALVE, TWO JOINTS OF 400mm DI PIPE, AND TEMPORARY CAP (400mm) FOR EXTENSION OF 400mm DI PIPE PARALLEL TO FM LOOP 1604. CONTRACTOR TO BRING REED ROAD CROSSING INTO SERVICE ONCE TIE-IN TO 300mm MAIN ON REED ROAD AND TIE-IN TO 400mm WATER MAIN CROSSING FM LOOP 1604 IS COMPLETE.

#2) CONTRACTOR TO REMOVE 400mm TEMPORARY CAP FROM JOINT OF 400mm DI PIPE PARALLEL TO FM LOOP 1604 (SEE CONSTRUCTION SEQUENCE NOTES #1). CONSTRUCT 400mm DI MAIN PARALLEL TO FM LOOP 1604. NO SEPARATE PAY ITEM FOR REMOVING TEMPORARY CAP. CONNECTING DI PIPE PARALLEL TO FM LOOP 1604 TO DI PIPE PARALLEL TO FM LOOP 1604 CITED IN CONSTRUCTION SEQUENCE NOTES #1 SHALL BE NO SEPARATE PAY ITEM.

STATE OF TEXAS
ROBERT J. SCHROEDER
50026
REGISTERED
PROFESSIONAL ENGINEER
10/9/02

CO#5 | SHEET 5-1 OF 14

VICKREY & ASSOCIATES, INC.
CONSULTING ENGINEERS
7334 Blanco Road Suite 109 San Antonio, Texas 78216
Telephone: (210)349-3271

SAN ANTONIO WATER SYSTEM

FM LOOP 1604
CULEBRA RD.TO U.S.HWY.90
SAWS JOB NO. 00-5023

Texas Department of Transportation

| DESIGNED: | FED. RD. DIV. NO. | STATE | PROJECT NO. | | | HIGHWAY NO. |
|---|---|---|---|---|---|---|
| CHECKED: | 6 | TEXAS | NH 2000(704),etc. | | | LP1604 |
| DRAWN: | STATE DIST. | COUNTY | CONTROL NO. | SECTION NO. | JOB NO. | SHEET NO. |
| CHECKED: | SAT | BEXAR | 2452 | 01 | 036, etc. | 893A |

M:\1895-004\dgn\1895-004-016 Change Orders\SH_WTR02.dgn 10/14/2002 01:37:13 PM

SCALE: 1:1000

QUANTITIES THIS SHEET
CSJ 2452-01-036

AFTER RELEASED FOR SERVICE, TIE NEW 300mm D.I. MAIN TO EXISTING 300mm A.C. MAIN

300mm TRANSITION CPLG. TO FIT DI AND AC PIPE
2-300mm ⅛ BEND, M.J.
6.10m± 300mm D.I. PIPE, CUT AS REQ.

400mm X 300mm TEE, M.J.
400mm GATE VALVE, M.J.
300mm GATE VALVE, M.J.
2-150mm VALVE BOX, COMPL.
300mm SOLID PLUG, M.J. (TEMP.)

400mm ⅛ BEND, M.J.

103.6m± 400mm D.I. PIPE

TIED

DRIVE

MILITARY

1.8m

2.1m

2.1m

2.1m

1.8m

12"ACW

16"DIW

PROP. R.O.W.

R.O.W.

R.O.W.

16"DIW

TIED

EXISTING 16' ESM'T

3+100

N.B. FRONTAGE RD.

3+200

3+300

EXISTING R.O.W.

EXISTING R.O.W.

DEAD END

16"ACW

400mm X 50mm ECCEN. TAPPED CAP, M.J. (PERM.)
50mm STD. BLOW-OFF, (PERM.)
SEE STD. DWG. NO. DD-844-02, SHEET 1 OF 3

LP 1604

2-400mm ⅛ BEND, M.J.

S.B. MAINLANES

TIE NEW 400mm D.I. MAIN TO EXISTING 400mm D.I. MAIN
400mm GATE VALVE, M.J.
150mm VALVE BOX, COMPL.
400mm ⅛ BEND, M.J.
400mm SOLID CAP, M.J.

ABANDON EXISTING 16",12"AC & DI MAINS

21+100

21+200

21+300

400mm X 150mm TEE, M.J. ANCHOR
150mm GATE VALVE, M.J.
150mm VALVE BOX, COMPL.
STD. FIRE HYDRANT
150mm D.I. PIPE, CUT AS REQ.

H.T.H.

NOTE:
THESE PLANS ARE FOR WATER WORKS CONSTRUCTION ONLY. PROPOSED DRAINAGE, ROADWAY, SIDEWALK, CURB AND DRIVEWAY CONSTRUCTION IS SHOWN FOR INFORMATION PURPOSES ONLY.

EXIST. R.O.W.

END CONSTRUCTION/MATCH EXIST.
STA. 0+080.000

PROP. R.O.W.

R.O.W.

NOTE:

1. THE EXISTENCE AND LOCATION OF UNDERGROUND CABLE INDICATED ON THE PLANS ARE TAKEN FROM THE BEST RECORDS AVAILABLE AND ARE NOT GUARANTEED TO BE ACCURATE. CONTRACTOR TO CONTACT THE TELEPHONE COMPANY CABLE LOCATOR 48 HOURS PRIOR TO EXCAVATION AT 1-800-545-6005. CONTRACTOR HAS THE RESPONSIBILITY TO PROTECT AND SUPPORT TELEPHONE COMPANY PLANT DURING CONSTRUCTION.

2. DUE TO FEDERAL REGULATIONS TITLE 49, PART 192.181, CPS MUST MAINTAIN ACCESS TO GAS VALVES AT ALL TIMES. THE CONTRACTOR MUST PROTECT AND WORK AROUND ANY GAS VALVES THAT ARE IN THE PROJECT AREA. THE CONTRACTOR SHALL NOTIFY CPS LOCATOR AT 1-800-545-6005, 48 HOURS BEFORE BEGINNING ANY EXCAVATION.

3. CONTRACTOR AND/OR CONTRACTOR'S INDEPENDENTLY RETAINED EMPLOYEE OR STRUCTURAL DESIGN/CONTRACTOR AND GEOTECHNICAL/SAFETY/EQUIPMENT CONSULTANT, IF ANY, SHALL REVIEW THESE PLANS AND ANY AVAILABLE GEOTECHNICAL INFORMATION AND THE ANTICIPATED INSTALLATION SITES WITHIN THE PROJECT WORK AREA IN ORDER TO DEVELOP THE CONTRACTOR'S PLANS TO IMPLEMENT THE PROJECT DESCRIBED IN THE CONTRACT DOCUMENTS. THE CONTRACTOR'S PLANS SHALL PROVIDE FOR ADEQUATE TRENCH SAFETY SYSTEMS THAT COMPLY WITH AS A MINIMUM O.S.H.A. STANDARDS FOR TRENCH EXCAVATIONS. SPECIFICALLY, CONTRACTOR AND/OR CONTRACTOR'S INDEPENDENTLY RETAINED EMPLOYEE OR SAFETY CONSULTANT SHALL DEVELOP AND IMPLEMENT A TRENCH SAFETY PROGRAM IN ACCORDANCE WITH O.S.H.A. STANDARDS GOVERNING THE PRESENCE AND ACTIVITIES OF INDIVIDUALS WORKING IN AND AROUND TRENCH EXCAVATION.

## ESTIMATED QUANTITIES

| ITEM | DESCRIPTION | EST. | UNITS |
|---|---|---|---|
| 5324-5006 | TRENCH EXCAVATION PROTECTION | 109.7 | M |
| 5324-5010 | PIPE WTR MAIN (DI)(400mm) | 103.6 | M |
| 5324-5015 | GATE VALVE AND BOX (400mm) | 2 | EA |
| 5324-5018 | TIE-IN (MAIN) (300mm) | 1 | EA |
| 5324-5020 | STD FIRE HYDRANT W/VALVE & BOX COMPL | 1 | EA |
| 5324-5024 | PERM BLOW-OFF (50mm) | 1 | EA |
| 5324-5027 | CUT&REPL ASPH PAV W/150mm ASPH TRT B | 18.7 | m2 |
| 5324-5038 | DUCTILE IRON FITTINGS | 2209.5 | KG |
| 5324-5039 | HYDROSTATIC PRESSURE TEST | 1 | EA |
| 5324-5051 | GATE VALVE AND BOX (300mm) | 1 | EA |
| 5324-5054 | TIE-IN (MAIN) (400mm) | 1 | EA |
| 5324-5056 | CUT & REPLACE CONC SDWLK, DRWY, ETC | .52 | m2 |
| 5324-5062 | FLOWABLE BACKFILL | 13.7 | m3 |
| 5324-5127 | PIPE WTR MAIN (DI) (300mm) | 6.1 | M |

NOTE:
ALL DIMENSIONS ARE IN METERS UNLESS OTHERWISE NOTED

STATE OF TEXAS
MACK W. THOMAS III
85607
LICENSED
PROFESSIONAL ENGINEER
9/25/00

FM LOOP 1604

CULEBRA RD. TO U.S. HWY. 90

BLK. MAP NO. 092-586 & 090-586

S.A.W.S. JOB NO. 00-5023

Texas Department of Transportation

| FED.RD. DIV.NO. | FEDERAL AID PROJECT NO. | | SHEET NO. |
|---|---|---|---|
| 6 | NH 2000(704),etc. | | 894 |
| STATE | DIST. | COUNTY | |
| TEXAS | SAT | BEXAR | |
| CONT. | SECT. | JOB | HIGHWAY NO. |
| 2452 | 01 | 036,etc | LP 1604 |

SHEET 13 OF 19

SCALE: 1:1000

NOTE:

1. THE EXISTENCE AND LOCATION OF UNDERGROUND CABLE INDICATED ON THE PLANS ARE TAKEN FROM THE BEST RECORDS AVAILABLE AND ARE NOT GUARANTEED TO BE ACCURATE. CONTRACTOR TO CONTACT THE TELEPHONE COMPANY CABLE LOCATOR 48 HOURS PRIOR TO EXCAVATION AT 1-800-545-6005. CONTRACTOR HAS THE RESPONSIBILITY TO PROTECT AND SUPPORT TELEPHONE COMPANY PLANT DURING CONSTRUCTION.

2. DUE TO FEDERAL REGULATIONS TITLE 49, PART 192.181, CPS MUST MAINTAIN ACCESS TO GAS VALVES AT ALL TIMES. THE CONTRACTOR MUST PROTECT AND WORK AROUND ANY GAS VALVES THAT ARE IN THE PROJECT AREA. THE CONTRACTOR SHALL NOTIFY CPS LOCATOR AT 1-800-545-6005, 48 HOURS BEFORE BEGINNING ANY EXCAVATION.

3. CONTRACTOR AND/OR CONTRACTOR'S INDEPENDENTLY RETAINED EMPLOYEE OR STRUCTURAL DESIGN/CONTRACTOR AND GEOTECHNICAL/SAFETY/EQUIPMENT CONSULTANT, IF ANY, SHALL REVIEW THESE PLANS AND ANY AVAILABLE GEOTECHNICAL INFORMATION AND THE ANTICIPATED INSTALLATION SITES WITHIN THE PROJECT WORK AREA IN ORDER TO DEVELOP THE CONTRACTOR'S PLANS TO IMPLEMENT THE PROJECT DESCRIBED IN THE CONTRACT DOCUMENTS. THE CONTRACTOR'S PLANS SHALL PROVIDE FOR ADEQUATE TRENCH SAFETY SYSTEMS THAT COMPLY WITH AS A MINIMUM O.S.H.A. STANDARDS FOR TRENCH EXCAVATIONS. SPECIFICALLY, CONTRACTOR AND/OR CONTRACTOR'S INDEPENDENTLY RETAINED EMPLOYEE OR SAFETY CONSULTANT SHALL DEVELOP AND IMPLEMENT A TRENCH SAFETY PROGRAM IN ACCORDANCE WITH O.S.H.A. STANDARDS GOVERNING THE PRESENCE AND ACTIVITIES OF INDIVIDUALS WORKING IN AND AROUND TRENCH EXCAVATION.

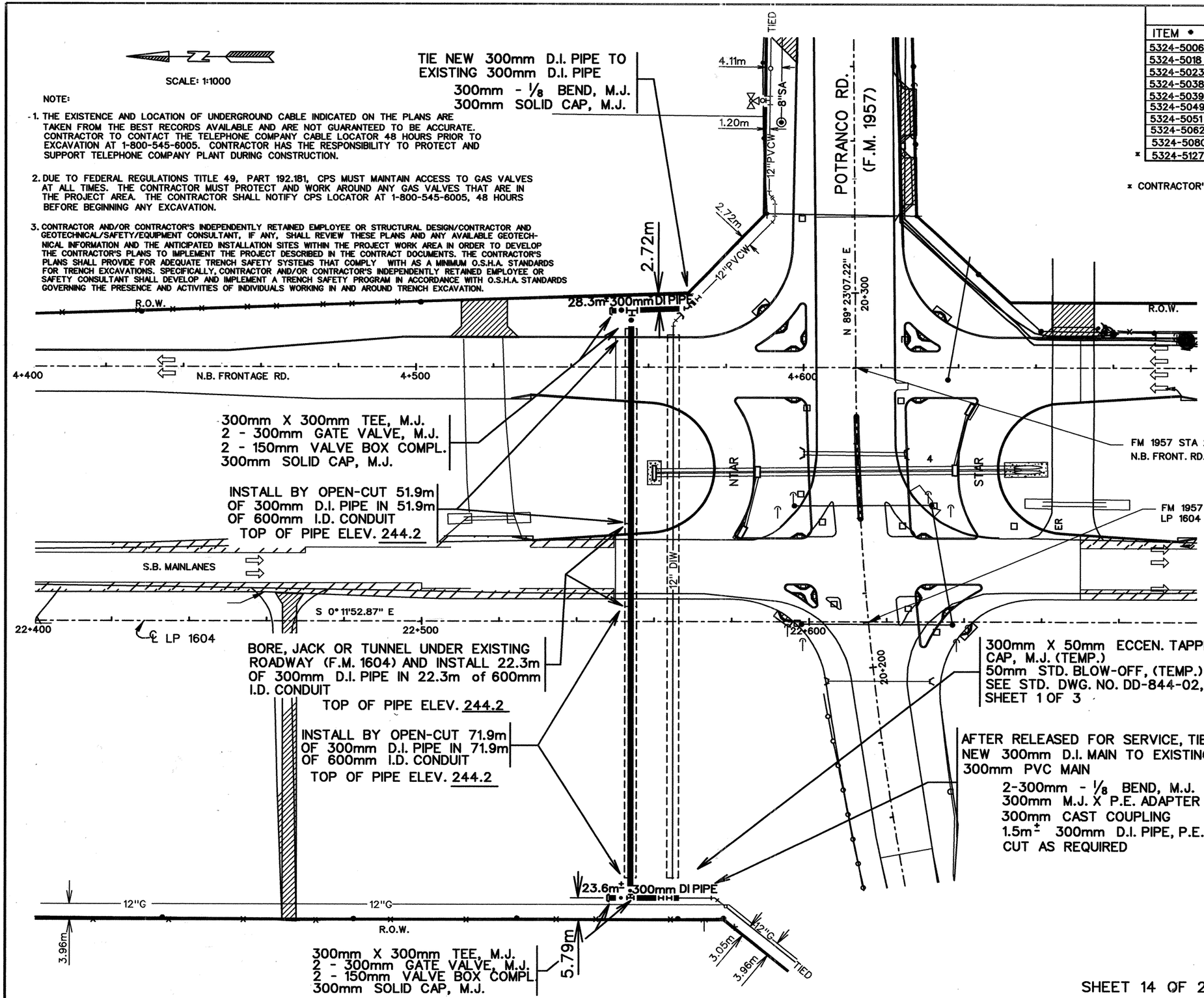


## ESTIMATED QUANTITIES

| | ITEM * | ITEM | EST. | UNIT |
|---|---|---|---|---|
| | 5324-5006 | TRENCH EXCAVATION PROTECTION | M | 177.2 |
| | 5324-5018 | TIE-IN (MAIN) (300mm) | EA | 2 |
| | 5324-5023 | TEMP BLOW-OFF (50mm) | EA | 1 |
| | 5324-5038 | DUCTILE IRON FITTINGS | Kg | 1,090.9 |
| | 5324-5039 | HYDROSTATIC PRESSURE TEST | EA | 1 |
| | 5324-5049 | JACK OR BOR CASING (STL) (600mm) | M | 22.3 |
| | 5324-5051 | GATE VALVE AND BOX (300mm) | EA | 4 |
| | 5324-5062 | FLOWABLE BACKFILL | $M^3$ | 8.7 |
| | 5324-5080 | PIPE STL CASING (600mm ID) (OPEN-CUT) | M | 123.8 |
| * | 5324-5127 | PIPE WTR MAIN (DI) (300mm) | M | 199.5 |

* CONTRACTOR'S INFORMATION: 146.1m of 300mm (DI) IN 600mm CASING

QUANTITIES THIS SHEET
CSJ 2452-01-036

STATE OF TEXAS
MACK W. THOMAS III
85607
LICENSED
PROFESSIONAL ENGINEER
7/26/01

FM LOOP 1604

CULEBRA RD. TO U.S. HWY. 90

BLK. MAP NO. 092-586 &
090-586
CO#7
S.A.W.S. JOB NO. 00-5023

Texas Department of Transportation

PLAN SHEET

SHEET 34 OF 57

| FED.RD. DIV.NO. | FEDERAL AID PROJECT NO. | | SHEET NO. |
|---|---|---|---|
| 6 | NH 2000(704),etc. | | 894A |
| STATE | DIST. | COUNTY | |
| TEXAS | SAT | BEXAR | |
| CONT. | SECT. | JOB | HIGHWAY NO. |
| 2452 | 01 | 036,etc. | LP 1604 |

SHEET 14 OF 20

SCALE: 1:1000

QUANTITIES THIS SHEET
CSJ 2452-01-036

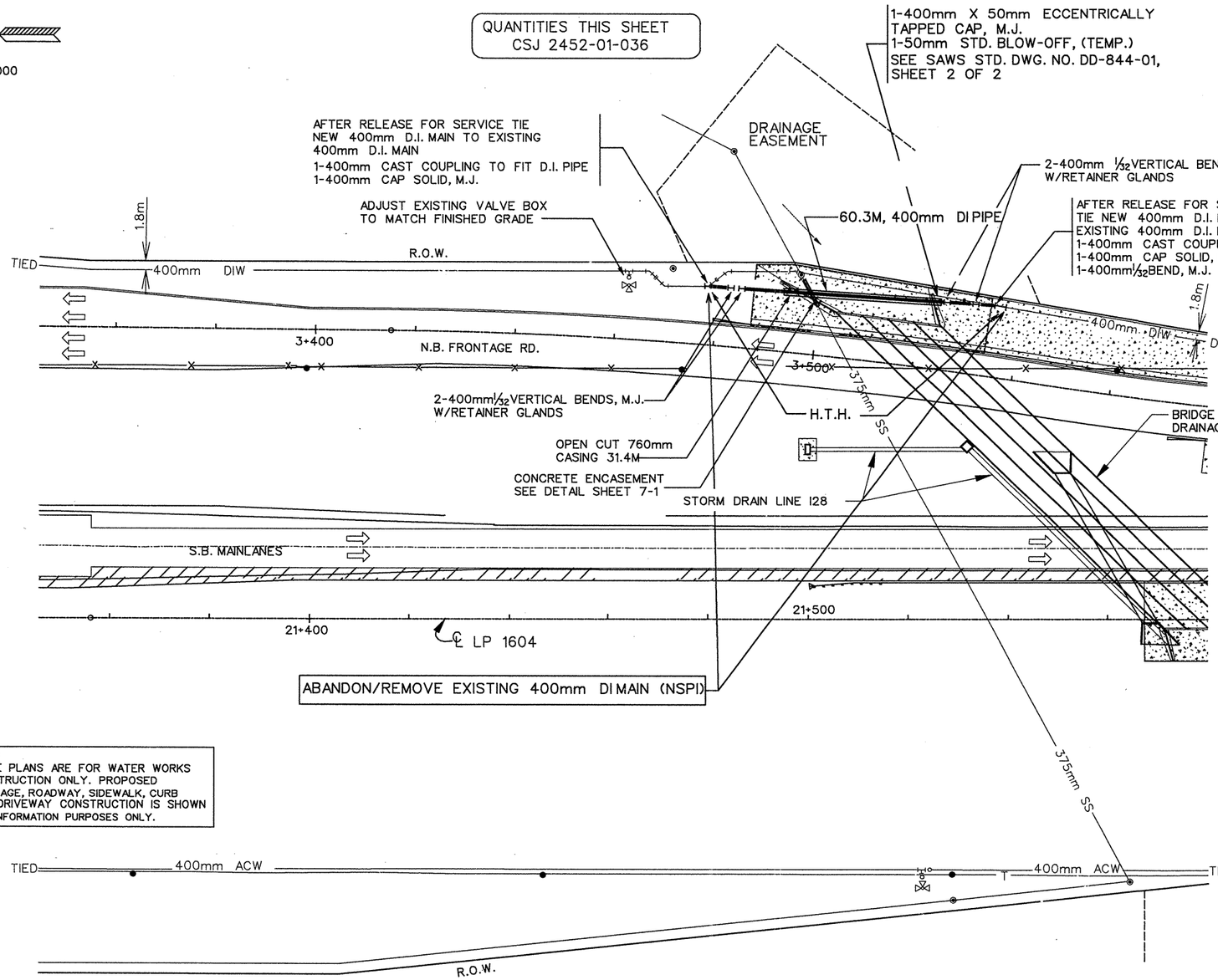


NOTE:
THESE PLANS ARE FOR WATER WORKS CONSTRUCTION ONLY. PROPOSED DRAINAGE, ROADWAY, SIDEWALK, CURB AND DRIVEWAY CONSTRUCTION IS SHOWN FOR INFORMATION PURPOSES ONLY.

## ESTIMATED QUANTITIES

| DESCRIPTION | EST. | UNITS |
|---|---|---|
| ADJUST EXIST VALVE BOX | 1 | EA. |
| TRENCH EXCAVATION PROTECTION | 60.3 | M |
| PIPE WTR MAIN (DI) (400mm) | 60.3 | M |
| TEMP BLOW-OFF (50mm) | 1 | EA. |
| TIE-IN (MAIN) (400mm) | 2 | EA. |
| DUCTILE IRON FITTINGS | 1794.0 | KG |
| HYDROSTATIC PRESSURE TEST | 1 | EA. |
| CONCRETE ENCASEMENT | 2.4 | M3 |
| PIPE (STL CASING) (760mm) (OPEN CUT) | 31.4 | M |

NOTE: SEE SHEET 7-1 FOR CULVERT CROSSING DETAIL & CONCRETE ENCASEMENT DETAIL

△ CHANGE ORDER NO.

NEW SHEET, WATER ADDENDUM

NOTES:

1. TIE-IN WILL BE DONE SIMULTANEOUSLY DURING OFF PEAK HOURS. CONTRACTOR SHALL COORDINATE TIE-INS WITH SAWS.
2. MINIMUM BURY SHALL BE 1.5M BELOW FINISHED GRADE UNLESS OTHERWISE NOTED.
3. RETAINER GLANDS SUBSIDIARY TO COST OF FITTINGS.
4. COST OF INSTALLING WRAPPING, CLEATS, BANDS ETC. AROUND WATER MAIN WITHIN CASING IS SUBSIDIARY TO THE COST OF THE WATER PIPE.
5. ALL DIMENSIONS ARE IN METERS UNLESS OTHERWISE NOTED
6. THE EXISTENCE AND LOCATION OF UNDERGROUND CABLE INDICATED ON THE PLANS ARE TAKEN FROM THE BEST RECORDS AVAILABLE AND ARE NOT GUARANTEED TO BE ACCURATE. CONTRACTOR TO CONTACT THE TELEPHONE COMPANY CABLE LOCATOR 48 HOURS PRIOR TO EXCAVATION AT 1-800-545-6005. CONTRACTOR HAS THE RESPONSIBILITY TO PROTECT AND SUPPORT TELEPHONE COMPANY PLANT DURING CONSTRUCTION.
7. DUE TO FEDERAL REGULATIONS TITLE 49, PART 192.181, CPS MUST MAINTAIN ACCESS TO GAS VALVES AT ALL TIMES. THE CONTRACTOR MUST PROTECT AND WORK AROUND ANY GAS VALVES THAT ARE IN THE PROJECT AREA. THE CONTRACTOR SHALL NOTIFY CPS LOCATOR AT 1-800-545-6005, 48 HOURS BEFORE BEGINNING ANY EXCAVATION.
8. CONTRACTOR AND/OR CONTRACTOR'S INDEPENDENTLY RETAINED EMPLOYEE OR STRUCTURAL DESIGN/CONTRACTOR AND GEOTECHNICAL/SAFETY/EQUIPMENT CONSULTANT, IF ANY, SHALL REVIEW THESE PLANS AND ANY AVAILABLE GEOTECHNICAL INFORMATION AND THE ANTICIPATED INSTALLATION SITES WITHIN THE PROJECT WORK AREA IN ORDER TO DEVELOP THE CONTRACTOR'S PLANS TO IMPLEMENT THE PROJECT DESCRIBED IN THE CONTRACT DOCUMENTS. THE CONTRACTOR'S PLANS SHALL PROVIDE FOR ADEQUATE TRENCH SAFETY SYSTEMS THAT COMPLY WITH AS A MINIMUM O.S.H.A. STANDARDS FOR TRENCH EXCAVATIONS. SPECIFICALLY, CONTRACTOR AND/OR CONTRACTOR'S INDEPENDENTLY RETAINED EMPLOYEE OR SAFETY CONSULTANT SHALL DEVELOP AND IMPLEMENT A TRENCH SAFETY PROGRAM IN ACCORDANCE WITH O.S.H.A. STANDARDS GOVERNING THE PRESENCE AND ACTIVITIES OF INDIVIDUALS WORKING IN AND AROUND TRENCH EXCAVATION.
9. CONTRACTOR SHALL REFER TO GENERAL NOTES FOR THIS CHANGE ORDER.

STATE OF TEXAS
ROBERT J. SCHROEDER
50026
REGISTERED PROFESSIONAL ENGINEER
10/9/02

CO#51
SHEET 6-1 OF 14


VICKREY & ASSOCIATES, INC.
CONSULTING ENGINEERS
7334 Blanco Road Suite 109 San Antonio, Texas 78216
Telephone: (210)349-3271


SAN ANTONIO WATER SYSTEM

FM LOOP 1604
CULEBRA RD. TO U.S. HWY. 90
SAWS JOB NO. 00-5023

Texas Department of Transportation

| DESIGNED: | FED. RD. DIV. NO. | STATE | PROJECT NO. | | | HIGHWAY NO. |
|---|---|---|---|---|---|---|
| CHECKED: | 6 | TEXAS | NH 2000(704),etc. | | | LP1604 |
| DRAWN: | STATE DIST. | COUNTY | CONTROL NO. | SECTION NO. | JOB NO. | SHEET NO. |
| CHECKED: | SAT | BEXAR | 2452 | 01 | 036, etc. | 894A |

m:\1895-004\dgn\1895-004-016 Change Orders\SH_WTR04.dgn 10/09/02 08:45:22 AM

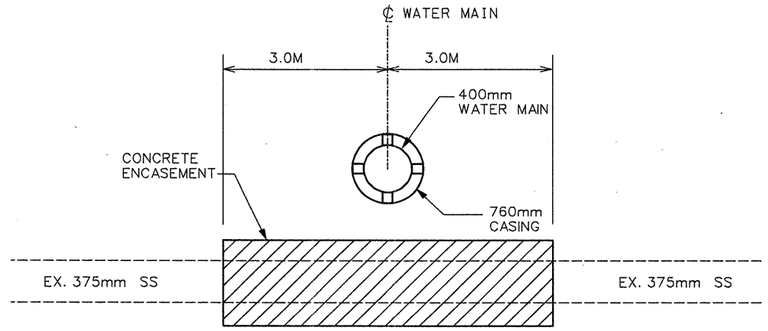


CONCRETE ENCASEMENT DETAIL

NTS

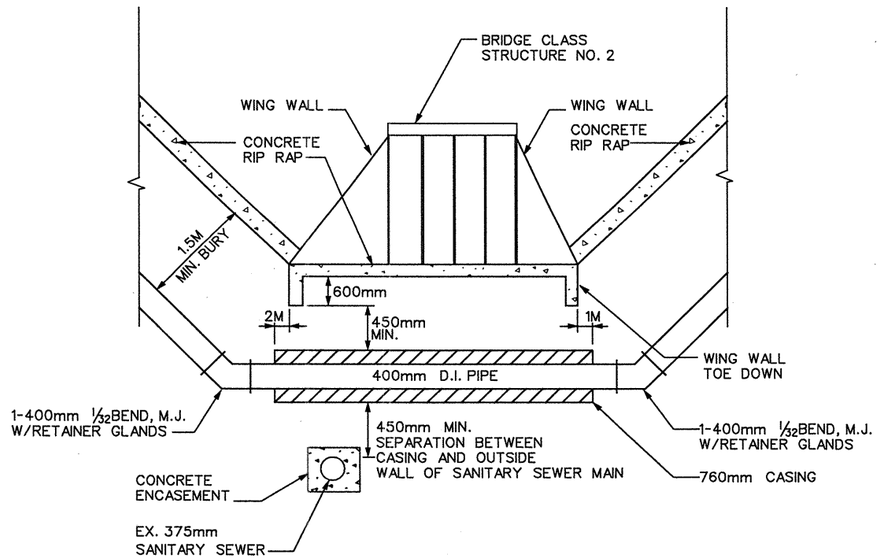


CULVERT CROSSING DETAIL

NTS

STATE OF TEXAS
ROBERT J. SCHROEDER
50026
REGISTERED
PROFESSIONAL ENGINEER
10/9/02

CO#51

SHEET 7-1 OF 14

VICKREY & ASSOCIATES, INC.
CONSULTING ENGINEERS
7334 Blanco Road Suite 109 San Antonio, Texas 78216
Telephone: (210)349-3271

SAN ANTONIO WATER SYSTEM

FM LOOP 1604
CULEBRA RD.TO U.S.HWY.90
SAWS JOB NO. 00-5023

© 2002 Texas Department of Transportation

| DESIGNED: | FED. RD. DIV. NO. | STATE | PROJECT NO. | | | HIGHWAY NO. |
|---|---|---|---|---|---|---|
| CHECKED: | 6 | TEXAS | NH 2000(704),etc. | | | LP1604 |
| DRAWN: | STATE DIST. | COUNTY | CONTROL NO. | SECTION NO. | JOB NO. | SHEET NO. |
| CHECKED: | SAT | BEXAR | 2452 | 01 | 036, etc. | 8948 |

m:\1895-004\dgn\1895-004-016 Change Orders\SH_P&P04.dgn 10/09/02 08:45:50 AM

#Shall be paid LS as per SAWS.

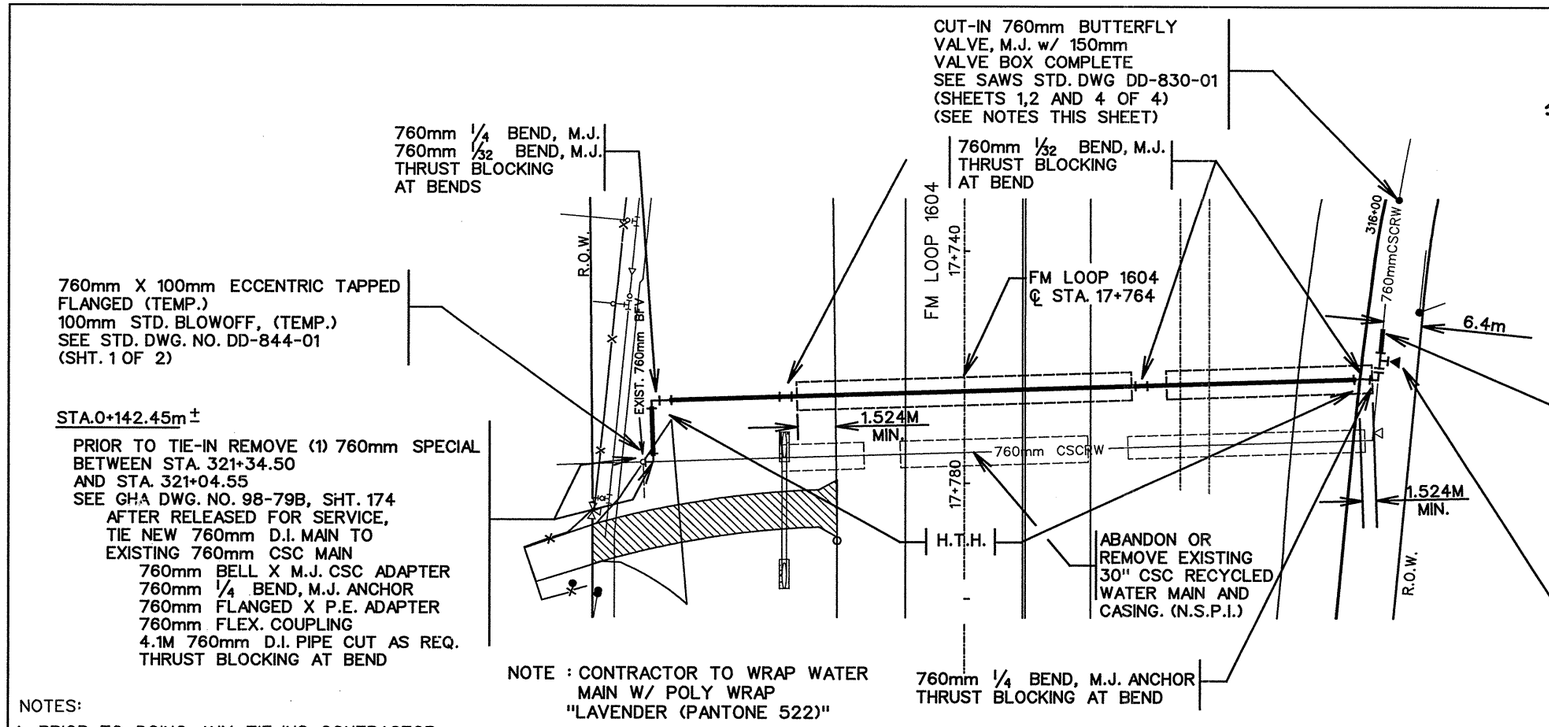


| ITEM | DESCRIPTION | EST. | UNITS |
|---|---|---|---|
| 5324-5006 | TRENCH EXCAVATION PROTECTION | 58.5 | M |
| * 5127-XXXX | PIPE WTR MAIN (D.I.) (760mm) | 142.45 | M |
| 5127-XXXX | TIE-IN (MAIN) (760mm) | 2 | EA. |
| 5127-XXXX | TEMP BLOW-OFF (100mm) | 1 | EA. |
| 5127-XXXX | DUCTILE IRON FITTINGS | 5730 | KG. |
| 5324-5026 | HYDROSTATIC PRESSURE TEST | 1 | EA. |
| 5127-XXXX | JACK OR BORE (STL CASING) (1220mm) | 71.0 | M |
| 5127-XXXX | CUT-IN BUTTERFLY VALVE AND BOX (760mm) | 1 | EA. |
| 5324-5062 | FLOWABLE BACKFILL | 87.5 | M3 |
| 5127-XXXX | PIPE STL CASING (OPEN CUT) (1220mm) | 20 | M |

* CONTRACTOR INFORMATION : 91M OF 760mm WTR MAIN IN 91M OF 1220mm STEEL CASING

SCALE: 1:1000

23 CHANGE ORDER NO.

NEW SHEET, WATER ADDENDUM

NOTES:

1. PRIOR TO DOING ANY TIE-INS, CONTRACTOR TO VERIFY THE EXACT ELEVATION OF EXISTING 760mm CSCRW
2. CONTRACTOR TO COORDINATE CUT-IN BUTTERFLY VALVE INSTALLATION WITH SAWS. CONTRACTOR SHALL CONTACT ROSS D. HARRIS PH* 210-704-1235 PAGER * 603-2984 AT LEAST 72 HOURS PRIOR TO CUTTING IN BUTTERFLY VALVE.
3. LOCATIONS OF THE BORE PIT AND RECEIVING PIT SHALL BE THE RESPONSIBILITY OF THE CONTRACTOR. THE BORE PIT SHALL BE CONTAINED WITHIN THE LIMITS OF THE RIGHT-OF-WAY. ANY REQUIREMENT FOR TEMPORARY CONSTRUCTION EASEMENTS SHALL BE THE CONTRACTORS RESPONSIBILITY.
4. ALL PIPE SHALL HAVE A MINIMUM BURY OF 1.524 METERS.

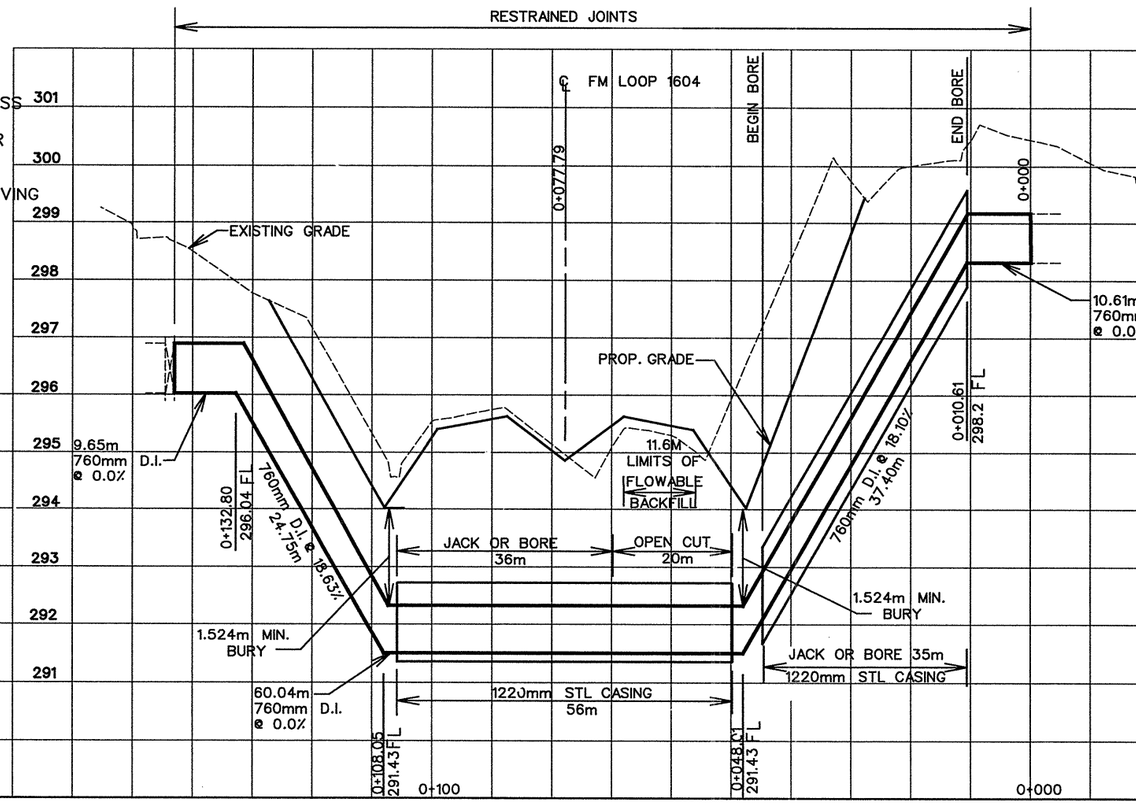


SEE SHEET 22 FOR DETAILS

SCALE: 1:1000 HORIZ
1:100 VERT

STATE OF TEXAS
ROBERT J. SCHROEDER
50026
REGISTERED PROFESSIONAL ENGINEER
8/2/02

FM LOOP 1604

CULEBRA RD. TO U.S. HWY. 90

BLK. MAP NO. 092-604

S.A.W.S. JOB NO. 00-5023

Texas Department of Transportation

| FED.RD. DIV.NO. | FEDERAL AID PROJECT NO. | | SHEET NO. |
|---|---|---|---|
| 6 | NH 2000(704),etc. | | 206 894B |
| STATE | DIST. | COUNTY | |
| TEXAS | SAT | BEXAR | |
| CONT. | SECT. | JOB | HIGHWAY NO. |
| 2452 | 01 | 036,etc. | LP 1604 |

CO#23

SHEET 21

08/02/2002 05:52 PM
m:\1856-00\dgn\01-sht-dgn

SCALE: 1:1000

## ESTIMATED QUANTITIES

| DESCRIPTION | EST. | UNITS |
|---|---|---|
| ADJUST EXIST VALVE BOX | 8 | EA. |
| TRENCH EXCAVATION PROTECTION | 133.2 | M |
| PIPE WTR MAIN (DI) (400mm) | 133.2 | M |
| TIE-IN (MAIN) (300mm) | 1 | EA. |
| TEMP BLOW-OFF (50mm) | 2 | EA. |
| DUCTILE IRON FITTINGS | 2,630.9 | Kg |
| HYDROSTATIC PRESSURE TEST | 2 | EA. |
| TIE-IN (MAIN) (400mm) | 3 | EA. |

AFTER RELEASED FOR SERVICE
TIE NEW 400mm D.I. MAIN
TO EXISTING 400mm D.I. MAIN
2-400mm, 1/8 BENDS, M.J.
2-400mm CAST COUPLING
TO FIT D.I. TO D.I.

ABANDON/REMOVE EXISTING 400mm D.I. MAIN (NSPI)

AFTER RELEASED FOR SERVICE
TIE NEW 400mm D.I. MAIN
TO EXISTING 300mm D.I. MAIN
1-300mm CAST COUPLING TO
FIT D.I. TO D.I. PIPE
1-400mmX300mm REDUCER, M.J.

340861-8"FL

H.T.H.

5.3m

8"SA 1120-Z

Exist. meter vault

Exist. SAN. M.H.

8"SA R.O.W.

1.8m

5.3m

R.O.W.

H.T.H.

2.1m

TIED 400mmDIW

1-400mm, 1/8 BEND, M.J.

400mmDIW

92.0m, 400mm D.I. PIPE

300mmDIW DEAD END

3+600

1-400mm, 1/8 BEND, M.J.

41.2m, 400mm D.I. PIPE

3+700

N.B. FRONTAGE RD.

3+800

400mm X 50mm ECCENTRIC
TAPPED CAP, M.J. (TEMP.)
50mm STD. BLOW-OFF, (TEMP.)
SEE SAWS STD. DWG. NO.
DD-844-01, SHEET 2 OF 2

AFTER RELEASED FOR SERVICE
TIE NEW 400mm D.I. MAIN
TO EXISTING 400mm D.I. MAIN
1-400mm CAST COUPLING TO
FIT D.I. TO D.I. PIPE

S.B. MAINLANES

0+100

WEST CREEK OAKS STA 0+121.219
LP 1604 CL STA 21+844.372

21+620 21+660 21+700 21+760 21+800 21+860

21+600

0+000

℄ LP 1604

4-400mm, 1/16 VERTICAL BENDS, M.J.
W/RETAINER GLANDS
FL OF 400mm DI WATER BETWEEN
LOW POINT VERTICAL BENDS - 258.33M (MIN.)

1-400mm X 50mm ECCENTRICALLY
TAPPED CAP, M.J.
1-50mm STD. BLOW OFF (TEMP)
(SEE SAWS STD. DWG.
DD-844-01 SHEET 2 OF 2)

WEST CREEK OAKS

300mmDIW

BRIDGE CL. STRUCT. NO. 2
FOR DETAILS SEE SHEET 374.

TIED 400mmACW

R.O.W.

3m

400mmACW

3m

0+200

300mmACW

1.8m

TIED

NOTE:
THESE PLANS ARE FOR WATER WORKS CONSTRUCTION ONLY. PROPOSED DRAINAGE, ROADWAY, SIDEWALK, CURB AND DRIVEWAY CONSTRUCTION IS SHOWN FOR INFORMATION PURPOSES ONLY.

QUANTITIES THIS SHEET
CSJ 2452-01-036

△ CHANGE ORDER NO.

NEW SHEET,
WATER ADDENDUM

NOTE:

1. ALL DIMENSIONS ARE IN METERS UNLESS OTHERWISE NOTED

2. THE EXISTENCE AND LOCATION OF UNDERGROUND CABLE INDICATED ON THE PLANS ARE TAKEN FROM THE BEST RECORDS AVAILABLE AND ARE NOT GUARANTEED TO BE ACCURATE. CONTRACTOR TO CONTACT THE TELEPHONE COMPANY CABLE LOCATOR 48 HOURS PRIOR TO EXCAVATION AT 1-800-545-6005. CONTRACTOR HAS THE RESPONSIBILITY TO PROTECT AND SUPPORT TELEPHONE COMPANY PLANT DURING CONSTRUCTION.

3. DUE TO FEDERAL REGULATIONS TITLE 49, PART 192.181, CPS MUST MAINTAIN ACCESS TO GAS VALVES AT ALL TIMES. THE CONTRACTOR MUST PROTECT AND WORK AROUND ANY GAS VALVES THAT ARE IN THE PROJECT AREA. THE CONTRACTOR SHALL NOTIFY CPS LOCATOR AT 1-800-545-6005, 48 HOURS BEFORE BEGINNING ANY EXCAVATION.

4. CONTRACTOR AND/OR CONTRACTOR'S INDEPENDENTLY RETAINED EMPLOYEE OR STRUCTURAL DESIGN/CONTRACTOR AND GEOTECHNICAL/SAFETY/EQUIPMENT CONSULTANT, IF ANY, SHALL REVIEW THESE PLANS AND ANY AVAILABLE GEOTECHNICAL INFORMATION AND THE ANTICIPATED INSTALLATION SITES WITHIN THE PROJECT WORK AREA IN ORDER TO DEVELOP THE CONTRACTOR'S PLANS TO IMPLEMENT THE PROJECT DESCRIBED IN THE CONTRACT DOCUMENTS. THE CONTRACTOR'S PLANS SHALL PROVIDE FOR ADEQUATE TRENCH SAFETY SYSTEMS THAT COMPLY WITH AS A MINIMUM O.S.H.A. STANDARDS FOR TRENCH EXCAVATIONS. SPECIFICALLY, CONTRACTOR AND/OR CONTRACTOR'S INDEPENDENTLY RETAINED EMPLOYEE OR SAFETY CONSULTANT SHALL DEVELOP AND IMPLEMENT A TRENCH SAFETY PROGRAM IN ACCORDANCE WITH O.S.H.A. STANDARDS GOVERNING THE PRESENCE AND ACTIVITIES OF INDIVIDUALS WORKING IN AND AROUND TRENCH EXCAVATION.

5. ALL PIPE SHALL BE 1.5m MINIMUM BURY FROM FINISHED GRADE UNLESS OTHERWISE NOTED.

6. CONTRACTOR SHALL REFER TO GENERAL NOTES FOR THIS CHANGE ORDER.

STATE OF TEXAS
ROBERT J. SCHROEDER
50026
REGISTERED
PROFESSIONAL ENGINEER
10/9/02


VICKREY & ASSOCIATES, INC.
CONSULTING ENGINEERS
7334 Blanco Road Suite 109 San Antonio, Texas 78216
Telephone: (210)349-3271


SAN ANTONIO WATER SYSTEM

FM LOOP 1604
CULEBRA RD. TO U.S. HWY. 90
SAWS JOB NO. 00-5023

Texas Department of Transportation

| DESIGNED: | FED. RD. DIV. NO. | STATE | PROJECT NO. | | | HIGHWAY NO. |
|---|---|---|---|---|---|---|
| CHECKED: | 6 | TEXAS | NH 2000(704), etc. | | | LP1604 |
| DRAWN: | STATE DIST. | COUNTY | CONTROL NO. | SECTION NO. | JOB NO. | SHEET NO. |
| CHECKED: | SAT | BEXAR | 2452 | 01 | 036, etc. | 314C |

CO#51
SHEET 8-1 OF 14

m:\1895-004\dgn\1895-004-016 Change Orders\SH_WTR05.dgn 10/09/02 08:46:15 AM

Notes:
1. Embed all exterior metal surfaces in silica sand

2. All reinforcing bars in the Reaction Block shall be #4

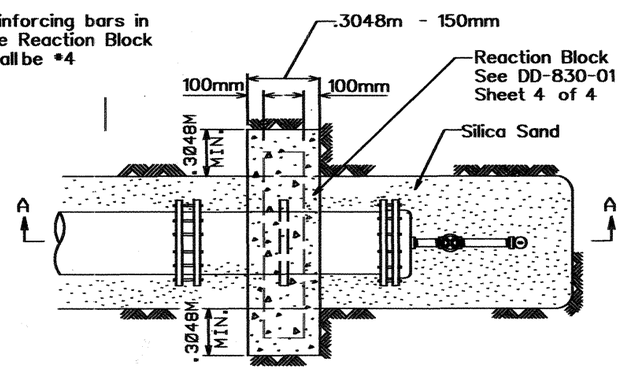


PLAN

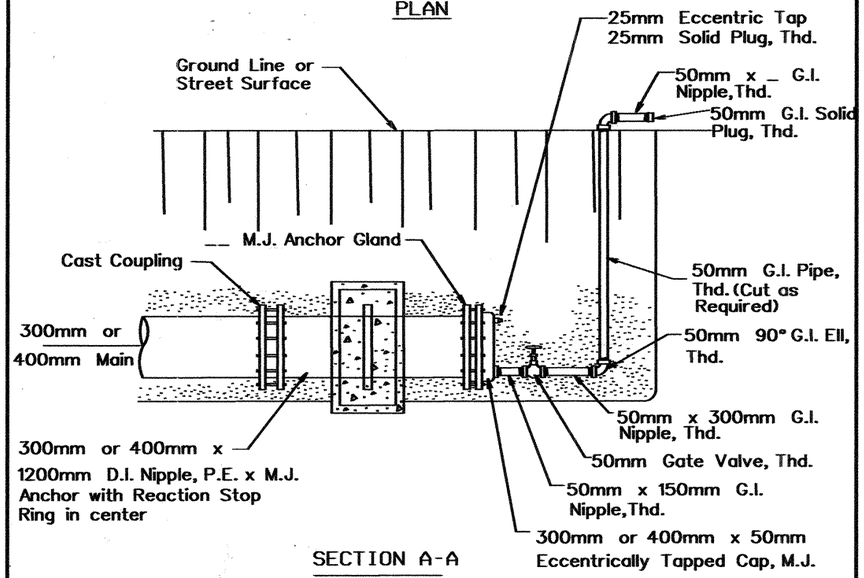


SECTION A-A

| | | |
|---|---|---|
| APPROVED | 50mm TEMPORARY BLOW-OFF ASSEMBLY ON 300mm & 400mm D.I. MAINS | SAN ANTONIO WATER SYSTEM SAN ANTONIO, TEXAS STD. DWG. DD-844-01 |
| DATE AUGUST 1998 | | SHEET 2 OF 2 |
| REVISION | | |

Notes:

1. Embed all exterior metal surfaces in silica sand

2. All reinforcing bars in the Reaction Block shall be #5

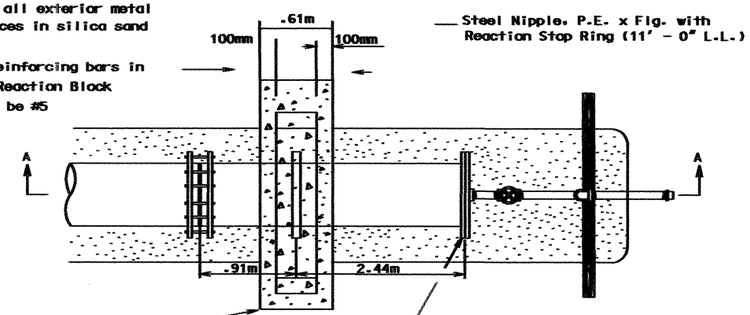


PLAN

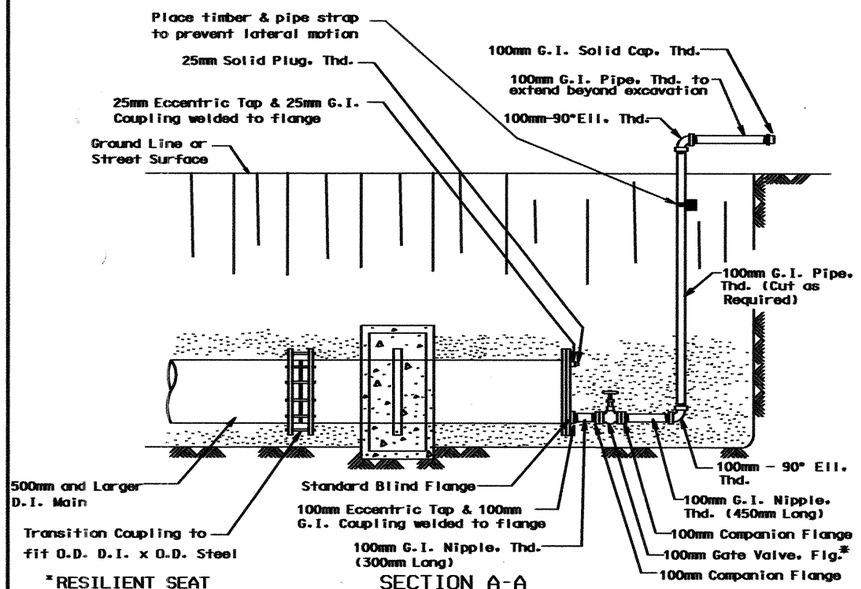


*RESILIENT SEAT

SECTION A-A

| | | | |
|---|---|---|---|
| PROPERTY OF SAN ANTONIO WATER SYSTEM SAN ANTONIO, TEXAS | 100MM TEMPORARY BLOW-OFF ASSEMBLY 500mm AND LARGER D.I. MAIN | APPROVED AUGUST 1998 | REVISED |
| | | DD-844-04 | SHEET 1 OF 2 |

STATE OF TEXAS
MACK W. THOMAS III
85607
LICENSED
PROFESSIONAL ENGINEER
Mack W. Thomas
9/25/00

FM LOOP 1604

CULEBRA RD. TO U.S. HWY. 90

S.A.W.S. JOB NO. 00-5023

Texas Department of Transportation

| FED.RD. DIV.NO. | FEDERAL AID PROJECT NO. | | SHEET NO. |
|---|---|---|---|
| 6 | NH 2000(704),ETC. | | 895 |
| STATE | DIST. | COUNTY | |
| TEXAS | SAT | BEXAR | |
| CONT. | SECT. | JOB | HIGHWAY NO. |
| 2452 | 01 | 036,ETC | LP 1604 |

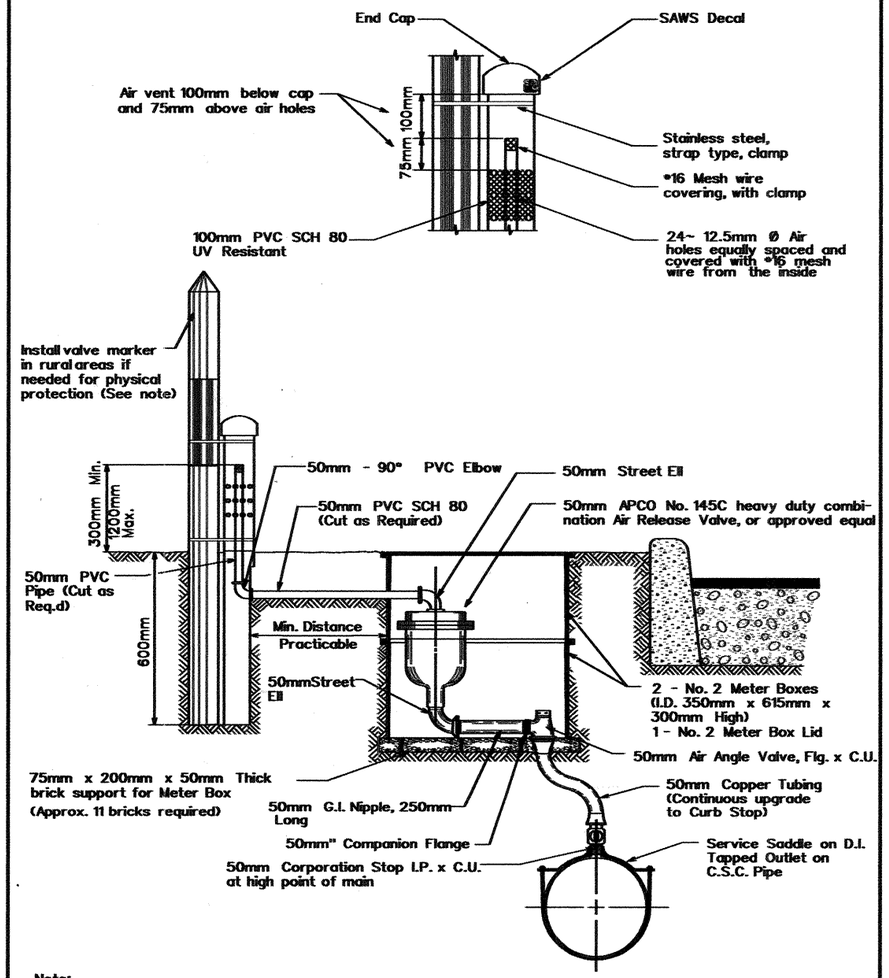


Note:
In rural areas, riser should be at Property Line and at maximum height.

| PROPERTY OF | INSTALLATION OF | APPROVED | REVISED |
|---|---|---|---|
| SAN ANTONIO WATER SYSTEM | 50mm AIR RELEASE VALVE | AUGUST 1998 | |
| SAN ANTONIO, TEXAS | | DD-846-02 | SHEET 1 OF 1 |

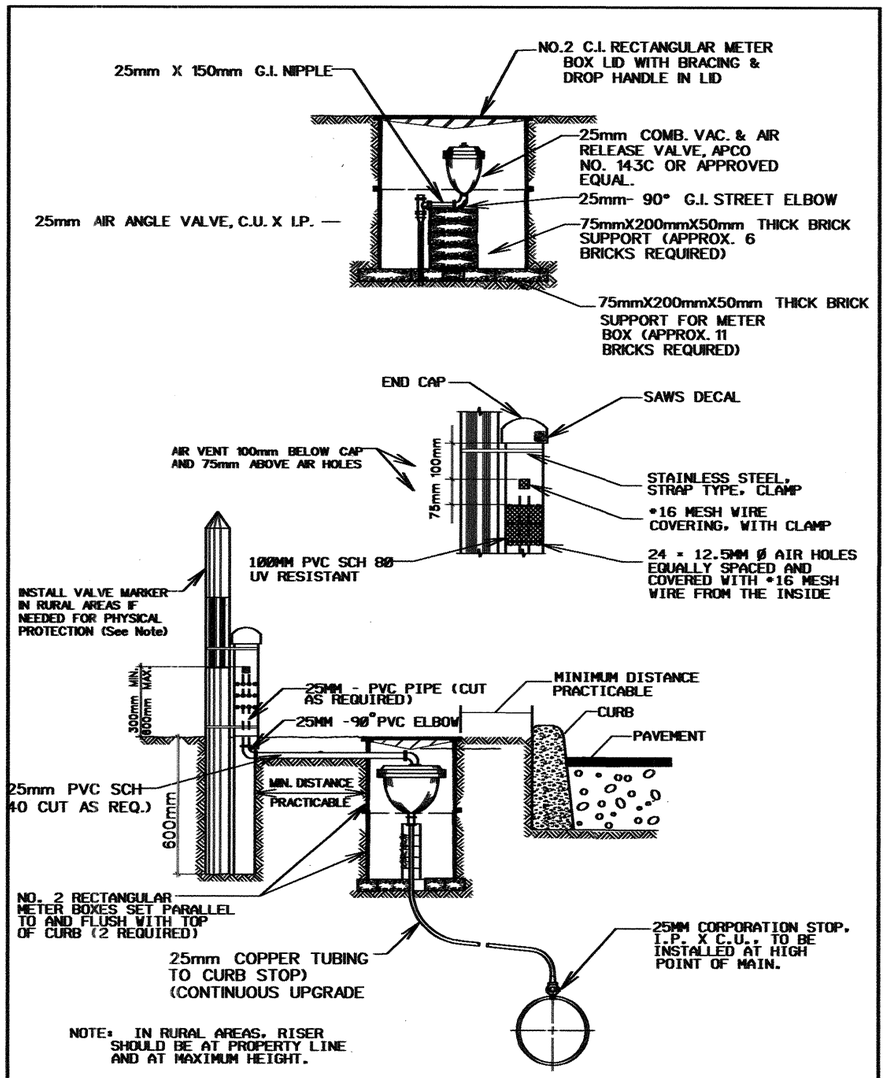


NOTE: IN RURAL AREAS, RISER SHOULD BE AT PROPERTY LINE AND AT MAXIMUM HEIGHT.

| APPROVED | INSTALLATION OF 25mm AIR RELEASE VALVE | SAN ANTONIO WATER SYSTEM |
|---|---|---|
| DATE | | SAN ANTONIO, TEXAS |
| REVISION | | STD. DWG. DD-846-01 |
| | | SHEET 1 OF 1 |

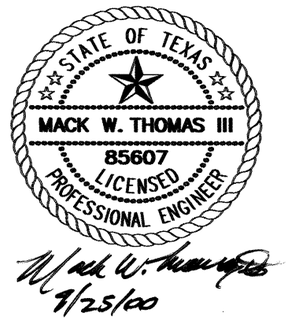


**FM LOOP 1604**

**CULEBRA RD. TO U.S. HWY. 90**

**S.A.W.S. JOB NO. 00-5023**

Texas Department of Transportation

| FED.RD. DIV.NO. | FEDERAL AID PROJECT NO. | | SHEET NO. |
|---|---|---|---|
| 6 | NH 2000(704),ETC. | | 896 |
| STATE | DIST. | COUNTY | |
| TEXAS | SAT | BEXAR | |
| CONT. | SECT. | JOB | HIGHWAY NO. |
| 2452 | 01 | 036,ETC | LP 1604 |

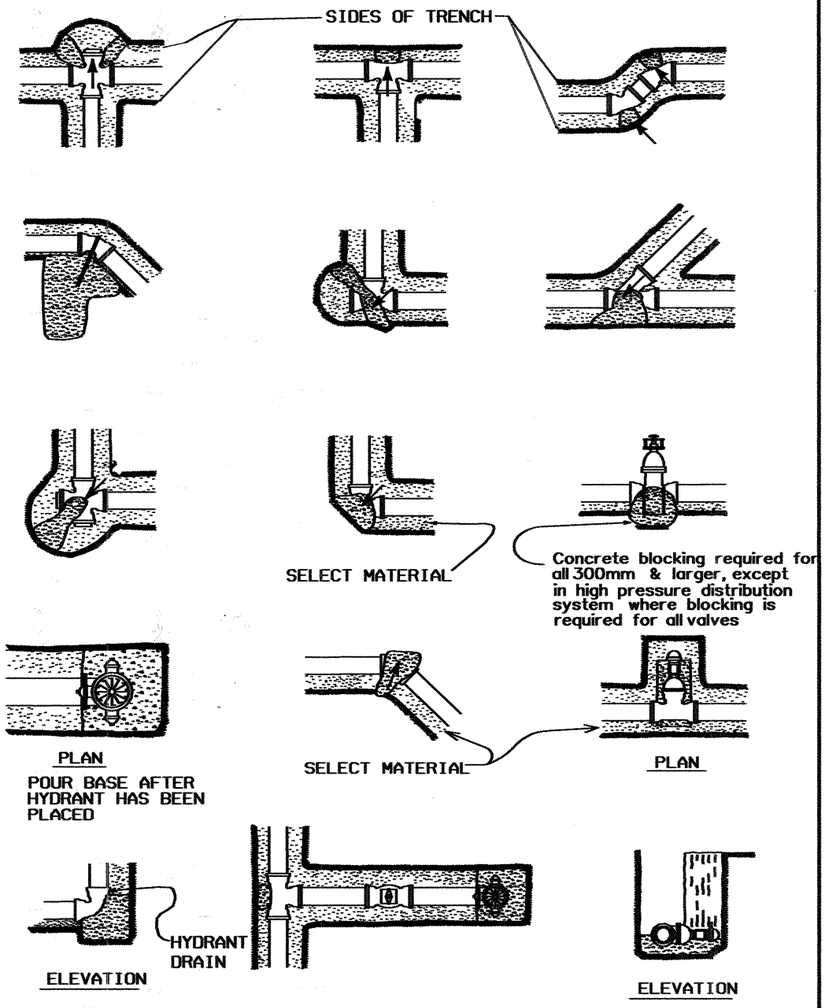


| PROPERTY OF SAN ANTONIO WATER SYSTEM SAN ANTONIO, TEXAS | THRUST BLOCKING FOR FITTINGS (WATER ONLY) | APPROVED AUGUST 1998 | REVISED | SHEET 1 OF 1 |
|---|---|---|---|---|
| | | DD-839-01 | | |

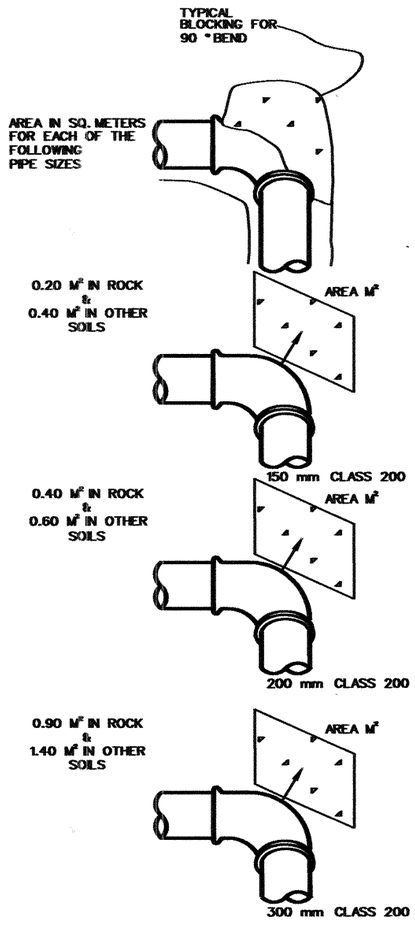


BLOCKING AREA FOR 1380 KPa TESTS & 1210 KPa WORKING PRESSURES

## THRUST BLOCKING DESIGN

ON BASIS OF 1380 KPa WATER PRESSURE USED FOR TESTS, THE BLOCKING REQUIRED FOR TWO TYPES OF SOILS AS NOTED BELOW IN ONE CASE, A SOIL PRESSURE OF 34475 KPa IS USED FOR ROCK EXCAVATION AND FOR SOILS OTHER THAN ROCK. A 20685 KPa BEARING SOIL PRESSURE IS USED. THE DISTRIBUTION ON SYSTEM IS DESIGNED TO OPERATE WITH A MAXIMUM WATER PRESSURE OF 1210 KPa AND CALCULATIONS APPLY TO A.C. PIPE CLASS 200 AND DUCTILE IRON PIPE CLASS 2. P.V.C. PIPE CLASS 200 (SDR 13.5)

SQUARE METERS OF BLOCKING REQUIRED FOR ROCK EXCAVATION

| SIZE PIPE | TEES & DEAD ENDS | 90° BEND | 45° BEND | 22½° BEND |
|---|---|---|---|---|
| 150 mm | 0.20 | 0.20 | 0.10 | 0.10 |
| 200 mm | 0.30 | 0.40 | 0.20 | 0.10 |
| 300 mm | 0.60 | 0.90 | 0.50 | 0.20 |
| 400 mm | 1.10 | 1.50 | 0.80 | 0.40 |

SQUARE METERS OF BLOCKING REQUIRED FOR OTHER THAN ROCK EXCAVATION

| SIZE PIPE | TEES & DEAD ENDS | 90° BEND | 45° BEND | 22½° BEND |
|---|---|---|---|---|
| 150 mm | 0.30 | 0.40 | 0.20 | 0.10 |
| 200 mm | 0.40 | 0.60 | 0.40 | 0.20 |
| 300 mm | 1.0 | 1.40 | 0.80 | 0.40 |
| 400 mm | 1.80 | 2.40 | 1.40 | 0.70 |

ANCHORAGE AND BLOCKING SHALL BE PROVIDED IN MANNER AS INDICATED BY STD. DWGS. DD-03-00 AND DD-03-01 IN ACCORDANCE WITH SECTION 5.4 ANCHORING BLOCKING STANDARD SPECIFICATIONS FOR WATER WORKS CONSTRUCTION EXCEPT THAT 13790 KPa CONCRETE SHALL BE USED IN LIEU OF 10345 KPa CONCRETE.
TRANSIT 13790 KPa CONCRETE MIX SHALL BE USED; HOWEVER FOR SMALL VOLUME REQUIREMENTS CONCRETE MIXED AT JOB SITE WILL BE ACCEPTABLE ONLY IF A CONCRETE MIXER IS USED. ALL AGGREGATE SHALL BE CLEAN AND THE FIELD MIX SHALL BE IN THE RATIO OF 1:3:4 AND CONTAIN NOT LESS THAN 6 SACKS OF CEMENT PER CU. METER.

| PROPERTY OF SAN ANTONIO WATER SYSTEM SAN ANTONIO, TEXAS | THRUST BLOCKING FOR HIGH PRESSURE SYSTEM | APPROVED AUGUST 1998 | REVISED | SHEET 1 OF 1 |
|---|---|---|---|---|
| | | DD-839-02 | | |

STATE OF TEXAS
MACK W. THOMAS III
85607
LICENSED
PROFESSIONAL ENGINEER
9/25/00

FM LOOP 1604

CULEBRA RD. TO U.S. HWY. 90

S.A.W.S. JOB NO. 00-5023

Texas Department of Transportation

| FED.RD. DIV.NO. | FEDERAL AID PROJECT NO. | | SHEET NO. |
|---|---|---|---|
| 6 | NH 2000(704),ETC. | | 997 |
| STATE | DIST. | COUNTY | |
| TEXAS | SAT | BEXAR | |
| CONT. | SECT. | JOB | HIGHWAY NO. |
| 2452 | 01 | 036,ETC | LP 1604 |

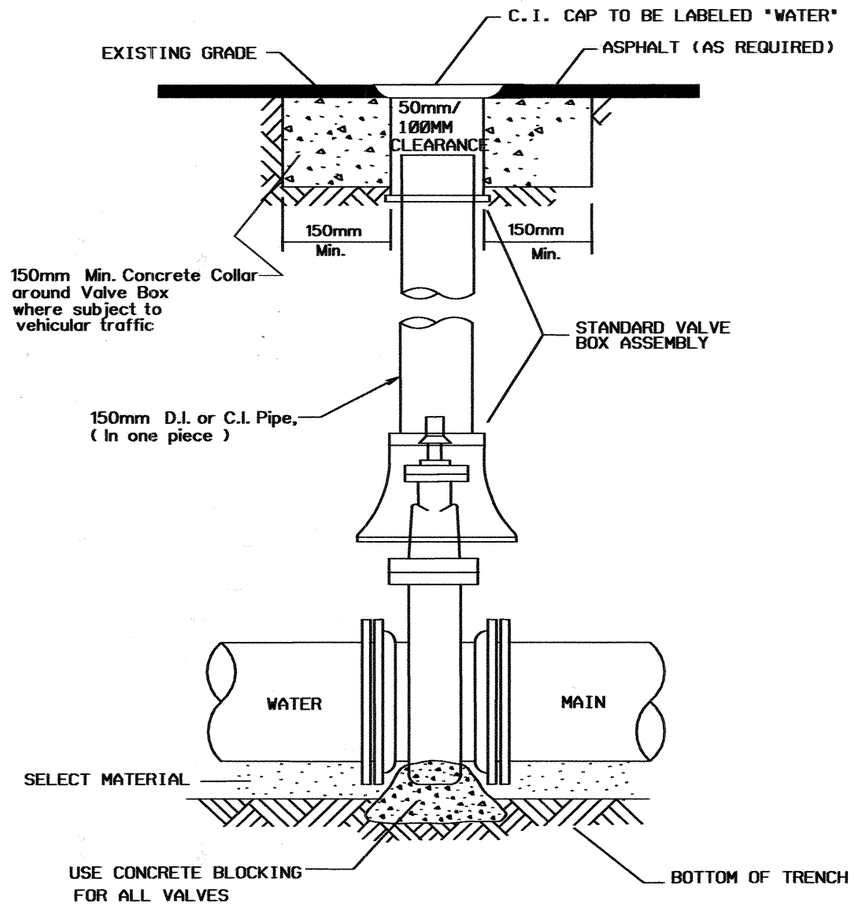


| PROPERTY OF SAN ANTONIO WATER SYSTEM SAN ANTONIO, TEXAS | INSTALLATION OF NON-GEARED GATE VALVE WITH VALVE BOX AND EXTENSION | APPROVED AUGUST 1998 | REVISED | SHEET 1 OF 1 |
|---|---|---|---|---|
| | | DD-828-01 | | |

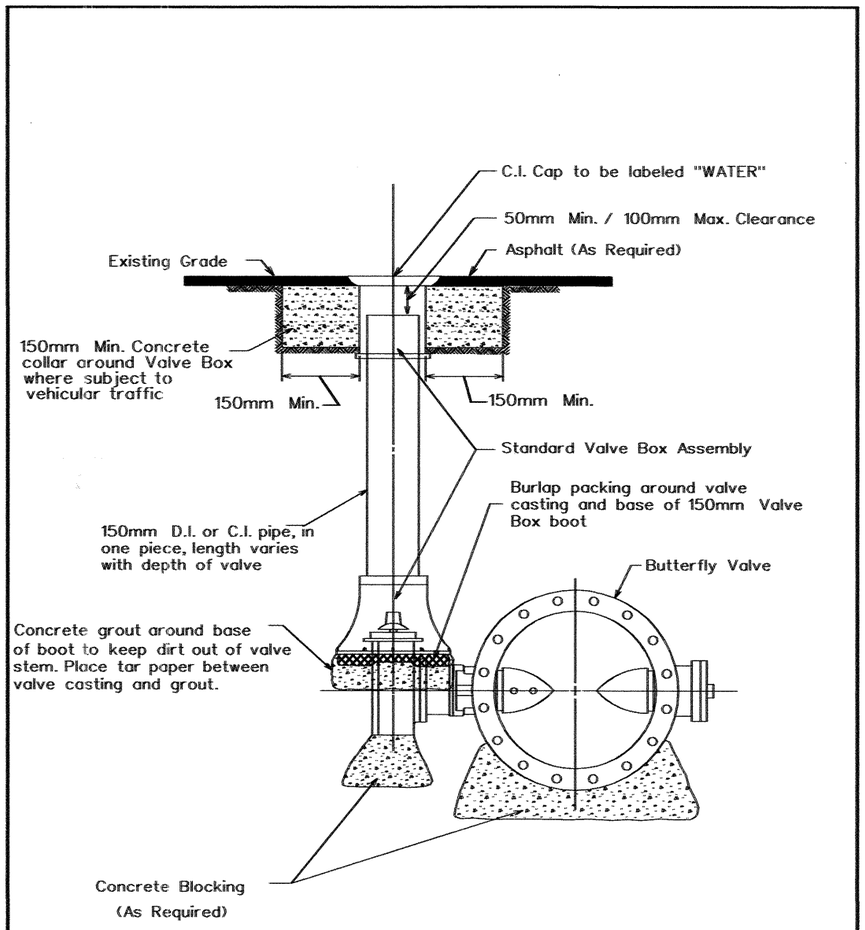


| PROPERTY OF SAN ANTONIO WATER SYSTEM SAN ANTONIO, TEXAS | INSTALLATION OF BURIED BUTTERFLY VALVE WITH VALVE BOX COMPLETE | APPROVED AUGUST 1998 | REVISED | SHEET 1 OF 4 |
|---|---|---|---|---|
| | | DD-830-01 | | |

STATE OF TEXAS
MACK W. THOMAS III
85607
LICENSED
PROFESSIONAL ENGINEER
9/25/00

**FM LOOP 1604**

**CULEBRA RD. TO U.S. HWY. 90**

**S.A.W.S. JOB NO. 00-5023**

Texas Department of Transportation

| FED.RD. DIV.NO. | FEDERAL AID PROJECT NO. | | SHEET NO. |
|---|---|---|---|
| 6 | NH 2000(704),ETC. | | 898 |
| STATE | DIST. | COUNTY | |
| TEXAS | SAT | BEXAR | |
| CONT. | SECT. | JOB | HIGHWAY NO. |
| 2452 | 01 | 036,ETC | LP 1604 |

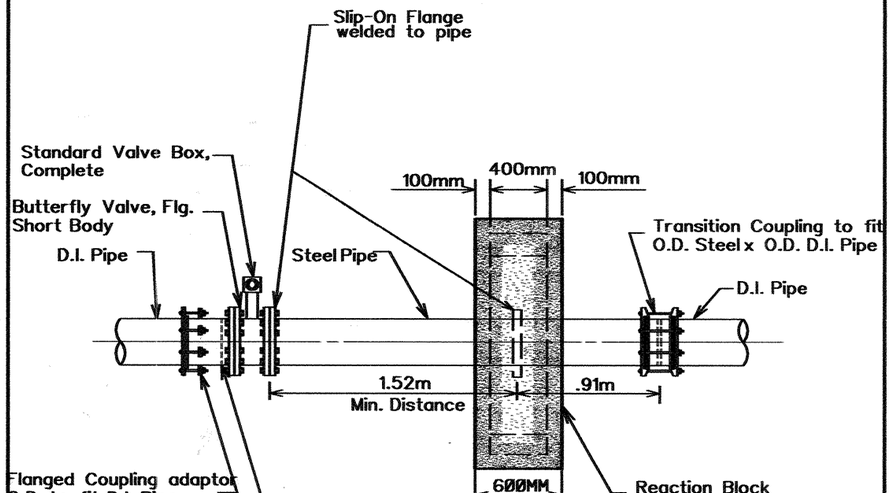


| PROPERTY OF SAN ANTONIO WATER SYSTEM SAN ANTONIO, TEXAS | TYPICAL BUTTERFLY VALVE ARRANGEMENT FOR 500mm AND LARGER D.I. MAIN | APPROVED AUGUST 1998 | REVISED | SHEET 2 OF 4 |
|---|---|---|---|---|
| | | DD-830-01 | | |

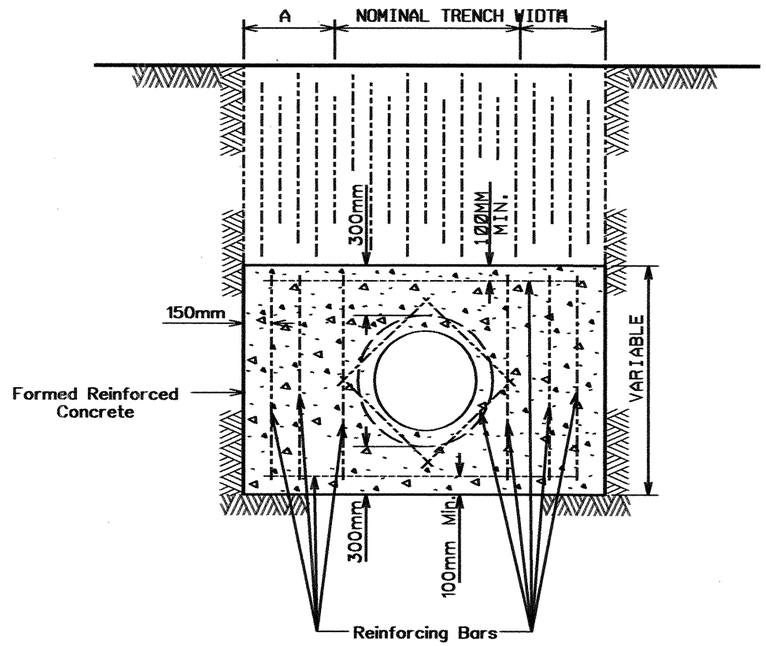


END VIEW OF REACTION BLOCK

| Main Size | A (Min.) | Reinforcing Bar Size | Bearing Surface Required (in m2.) |
|---|---|---|---|
| 150mm | 300mm | #4 | 3 |
| 200mm | 300mm | #4 | 5 |
| 300mm | 450mm | #4 | 8 |
| 400mm | 450mm | #4 | 12 |
| 500mm | 700mm | #5 | 16 |
| 600mm | 700mm | #5 | 23 |
| 760mm | 900mm | #5 | 35 |
| 900mm | 900mm | #5 | 50 |
| 1060mm | 900mm | #5 | 70 |

| PROPERTY OF SAN ANTONIO WATER SYSTEM SAN ANTONIO, TEXAS | CONCRETE REACTION BLOCK FOR BUTTERFLY VALVES & BLOW-OFF ASSEMBLIES ON D.I. & C.S.C. MAINS | APPROVED AUGUST 1998 | REVISED | SHEET 4 OF 4 |
|---|---|---|---|---|
| | | DD-830-01 | | |

STATE OF TEXAS
MACK W. THOMAS III
85607
LICENSED PROFESSIONAL ENGINEER
9/25/00

FM LOOP 1604

CULEBRA RD. TO U.S. HWY. 90

S.A.W.S. JOB NO. 00-5023

Texas Department of Transportation

| FED.RD. DIV.NO. | FEDERAL AID PROJECT NO. | | SHEET NO. |
|---|---|---|---|
| 6 | NH 2000(704),ETC. | | 899 |
| STATE | DIST. | COUNTY | |
| TEXAS | SAT | BEXAR | |
| CONT. | SECT. | JOB | HIGHWAY NO. |
| 2452 | 01 | 036,ETC | LP 1604 |

NOTE:
USE:
(A). ANCHORING TEE WITH M.J. FITTING OR M.J. VALVE.
(B). STD. M.J. TEE WITH ANCHORING COUPLING OR ANCHORING FITTING.

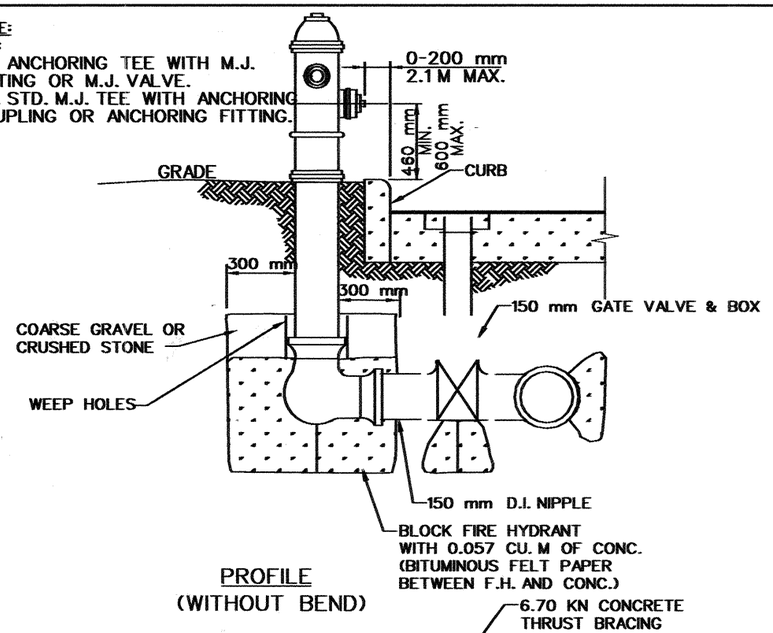


PROFILE
(WITHOUT BEND)

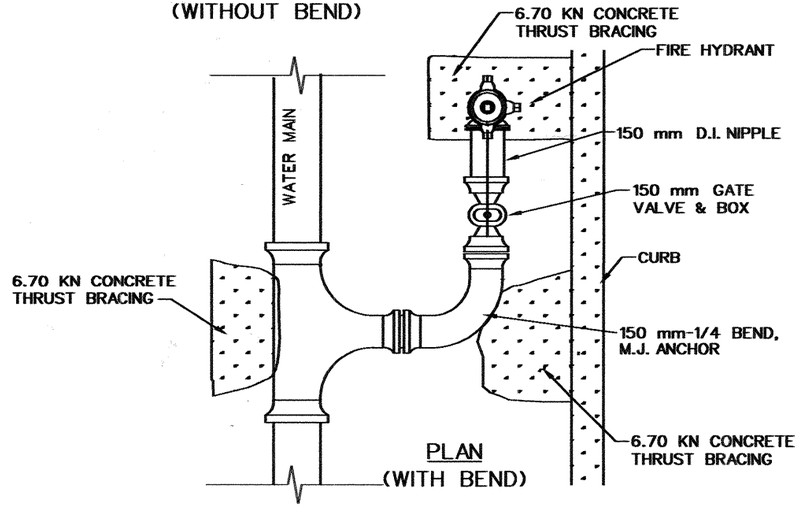


PLAN
(WITH BEND)

**FIRE HYDRANT INSTALLATION**
**STD. DWG. DD-834-01**
SHEET 1 OF 1

Note:
Alignment and grade of conduit will be specified on the construction plans

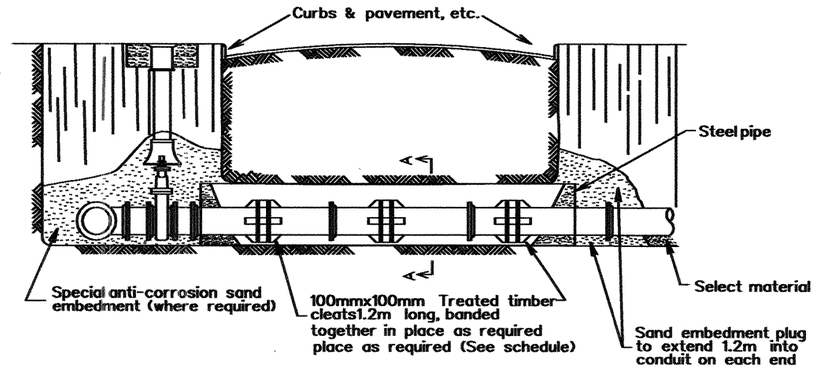


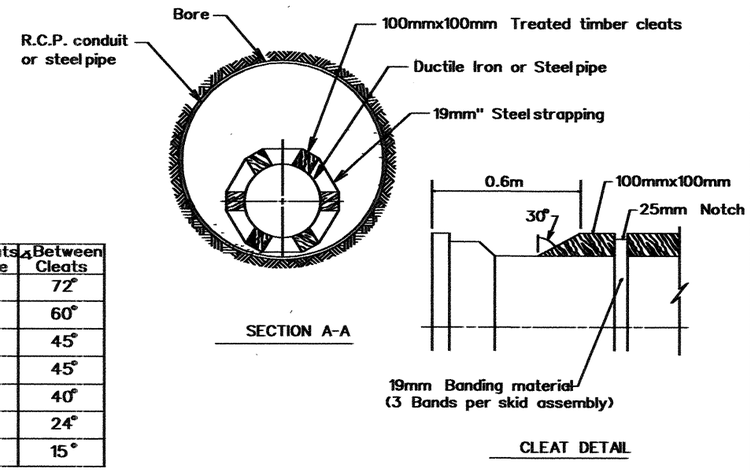


SECTION A-A

CLEAT DETAIL

| Size | No. Cleats Per Tie | Between Cleats |
|---|---|---|
| 200mm | 5 | 72° |
| 300mm | 6 | 60° |
| 400mm | 8 | 45° |
| 500mm | 8 | 45° |
| 600mm | 9 | 40° |
| 750mm | 15 | 24° |
| 925mm | 24 | 15° |

| STEEL PIPE CASING / WATER MAIN | | |
|---|---|---|
| Pipe Size (mm) | Pipe Thickness (mm) | Pipe Weight (kgs./m) |
| 150mm | 11mm | 37.2 |
| 200mm | 11mm | 49.2 |
| 300mm | 11mm | 67.8 |
| 400mm | 11mm | 93.1 |
| 500mm | 11mm | 117 |
| 600mm | 11mm | 140.8 |
| 750mm | 11mm | 176.5 |

| WATER MAINS IN CONDUIT | | | |
|---|---|---|---|
| Water Main Size (mm) | Nom. Dia. RCP* Or Steel (mm) | Steel Pipe Thickness (mm) | Pipe Weight (kgs./m) |
| 150mm | 450mm | 10mm | 105 |
| 200mm | 600mm | 10mm | 140.8 |
| 300mm | 600mm | 10mm | 140.8 |
| 400mm | 750mm | 10mm | 176.5 |
| 500mm | 925mm | 11mm | 247.3 |
| 600mm | 1075mm | 11mm | 288.7 |
| 750mm | 1225mm | 12mm | 385.4 |
| 925mm | 1375mm | 12mm | 433.10 |

| PROPERTY OF SAN ANTONIO WATER SYSTEM SAN ANTONIO, TEXAS | PAVEMENT INSTALLATION OF PIPE IN BORE | APPROVED AUGUST 1998 | REVISED | |
|---|---|---|---|---|
| | | DD-856-02 | SHEET 1 OF 2 | |

STATE OF TEXAS
MACK W. THOMAS III
85607
LICENSED
PROFESSIONAL ENGINEER
9/25/00

**FM LOOP 1604**

**CULEBRA RD. TO U.S. HWY. 90**

**S.A.W.S. JOB NO. 00-5023**

Texas Department of Transportation

| FED.RD. DIV.NO. | FEDERAL AID PROJECT NO. | | SHEET NO. |
|---|---|---|---|
| 6 | NH 2000(704),ETC. | | 900 |
| STATE | DIST. | COUNTY | |
| TEXAS | SAT | BEXAR | |
| CONT. | SECT. | JOB | HIGHWAY NO. |
| 2452 | 01 | 036,ETC | LP 1604 |

NOTES:
1. LOCATION MAY BE WITHIN PAVEMENT, DEPENDENT ON PIPELINE ALIGNMENT.
2. VENT SHOULD BE LOCATED NEXT TO AND PARALLEL TO PROPERTY LINE UNLESS PIPELINE IS WITHIN SAWS EASEMENTS.
3. VENT CAN BE INSTALLED PARALLEL TO RWL

THE AIR RELEASE VALVE VAULT AND THE PROPERTY/EASEMENT LINE.

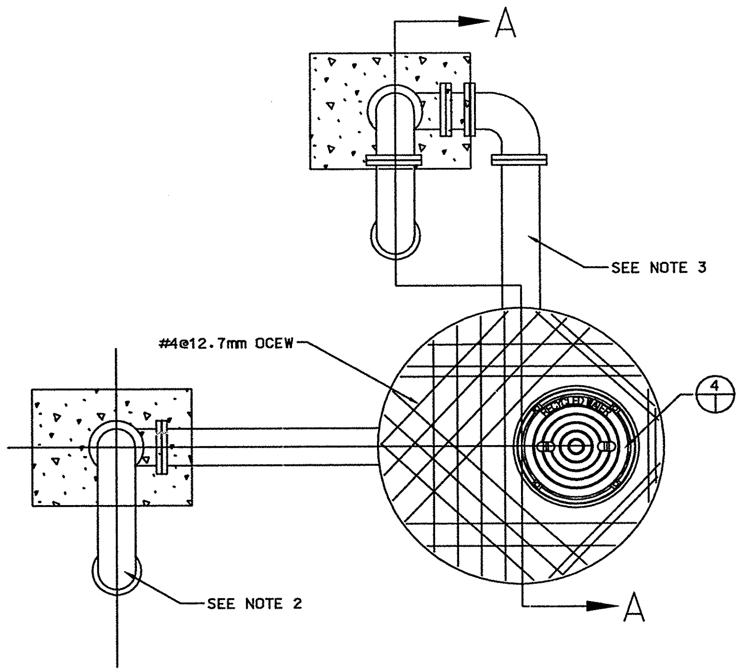


COMBINATION AIR VALVE PLAN VIEW

N.T.S.

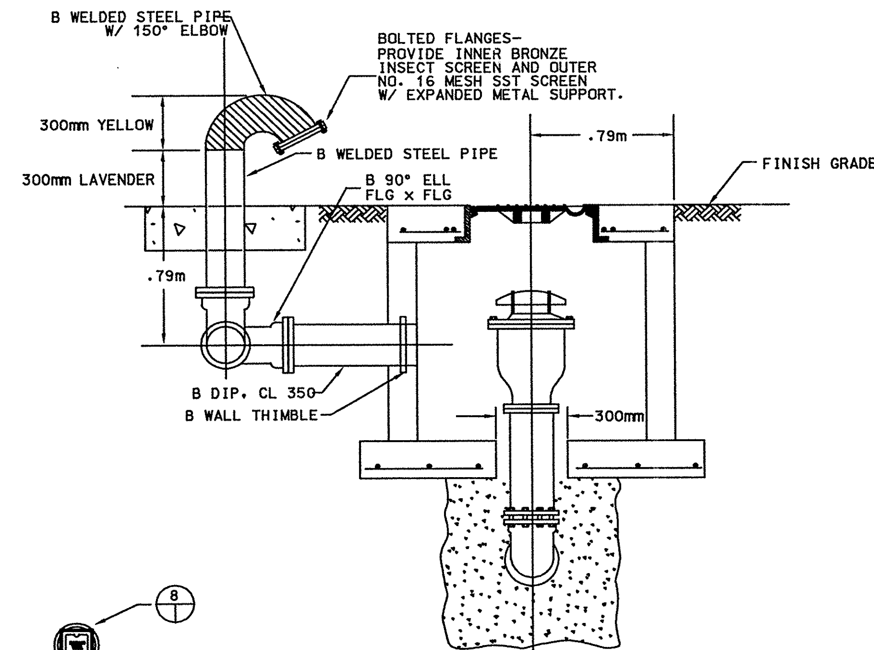


SECTION A-A

SCALE 19mm = 305mm

| TABLE OF DIMENSIONS | | |
|---|---|---|
| | A | B |
| AIR VALVE SIZE | | |
| 205mm | 965mm | 205mm |
| 150mm | 965mm | 150mm |
| 100mm | 813mm | 100mm |
| 75mm | 813mm | 75mm |
| 50mm | 813mm | 50mm |

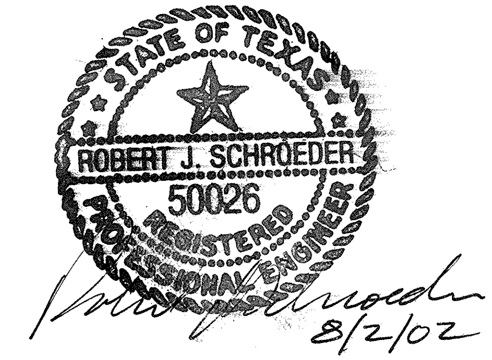


PROPERTY LINE

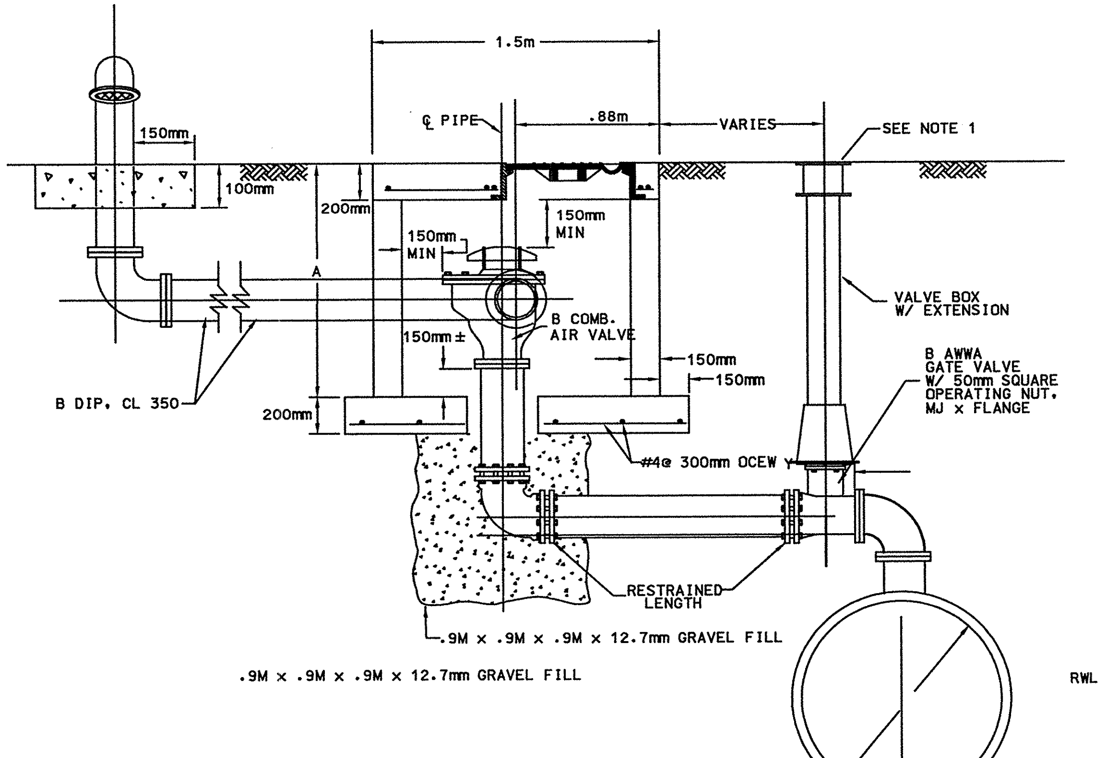


COMBINATION AIR VALVE ELEVATION VIEW

N.T.S.

WATERTIGHT MANHOLE RING AND COVER. TRANS-TEX-A-77 O.R., OR EQUAL, AS SHOWN. (SEE SECTION "A-A") AS PER ITEM NO. 471

NOTES:
1. STANDARD MANHOLE RING AND COVER: ALL APPLICABLE DIMENSIONS SHALL CONFORM TO THE DIMENSIONS SHOWN HERE.
2. THE BEARING SURFACES SHALL BE MACHINE GROUND.

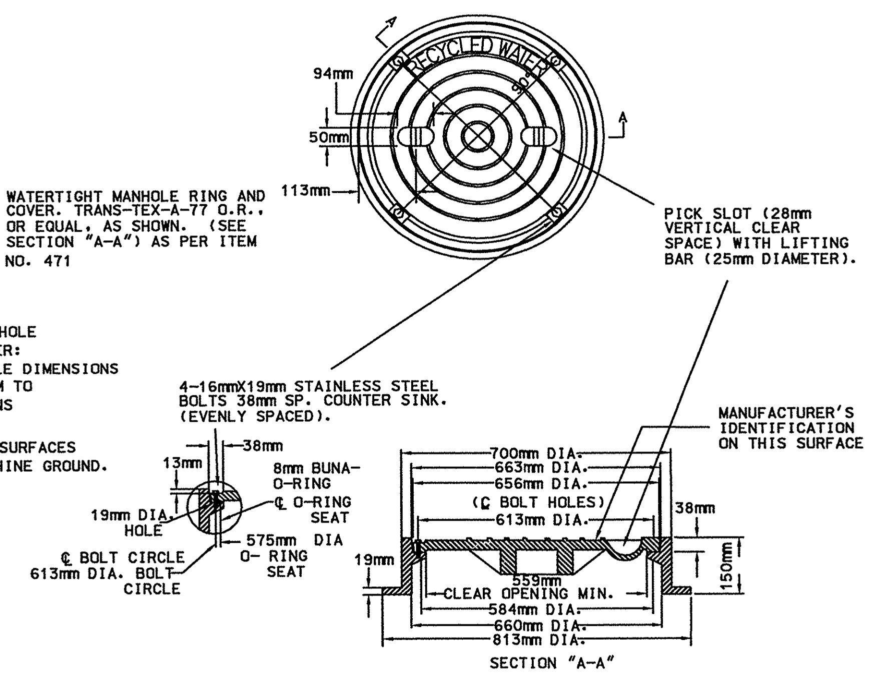


NOTE:
ALL DIMENSIONS MAY VARY EXCEPT THE DIAMETER OF THE LID, THE DIAMETER OF THE CENTER LINE OF THE BOLT HOLES, AND THE MINIMUM DIAMETER OF THE CLEAR OPENING. THE COMBINED WEIGHT OF THE MANHOLE RING AND COVER MUST BE AT LEAST 400 LBS.

MANHOLE RING AND COVER DETAIL

N.T.S.

△ CHANGE ORDER NO.

NEW SHEET, WATER ADDENDUM

FM LOOP 1604

CULEBRA RD. TO U.S. HWY. 90

S.A.W.S. JOB NO. 00-5023

CO#23

SHEET 22

©2000 Texas Department of Transportation

| FED.RD. DIV.NO. | FEDERAL AID PROJECT NO. | | SHEET NO. |
|---|---|---|---|
| 6 | NH 2000(704),etc. | | 206 900a |
| STATE | DIST. | COUNTY | |
| TEXAS | SAT | BEXAR | |
| CONT. | SECT. | JOB | HIGHWAY NO. |
| 2452 | 01 | 036,etc. | LP 1604 |

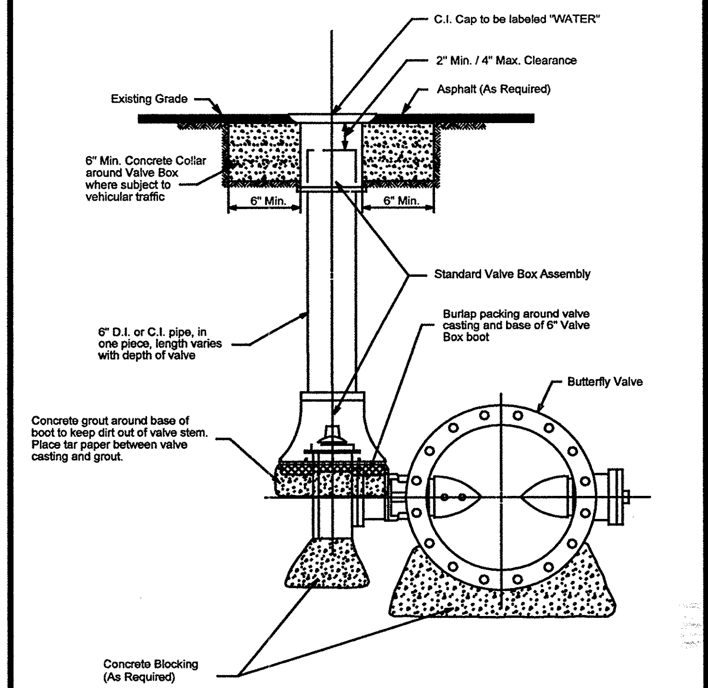


| PROPERTY OF SAN ANTONIO WATER SYSTEM SAN ANTONIO, TEXAS | INSTALLATION OF BURIED BUTTERFLY VALVE WITH VALVE BOX COMPLETE | APPROVED AUGUST 1998 | REVISED | DD-830-01 | SHEET 1 OF 4 |
|---|---|---|---|---|---|

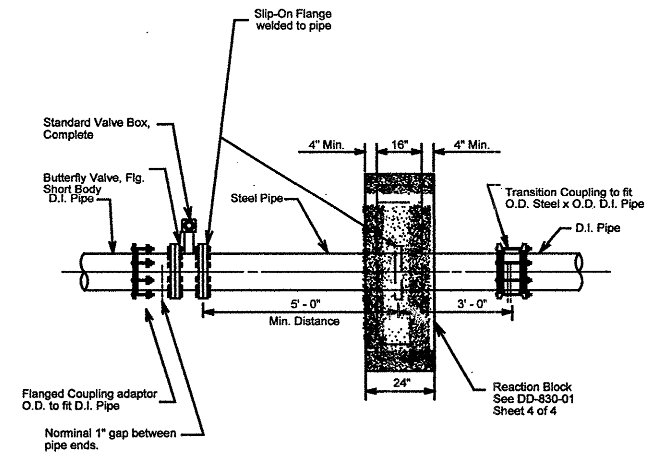


| PROPERTY OF SAN ANTONIO WATER SYSTEM SAN ANTONIO, TEXAS | TYPICAL BUTTERFLY VALVE ARRANGEMENT FOR 20" AND LARGER D.I. MAIN | APPROVED AUGUST 1998 | REVISED | DD-830-01 | SHEET 2 OF 4 |
|---|---|---|---|---|---|

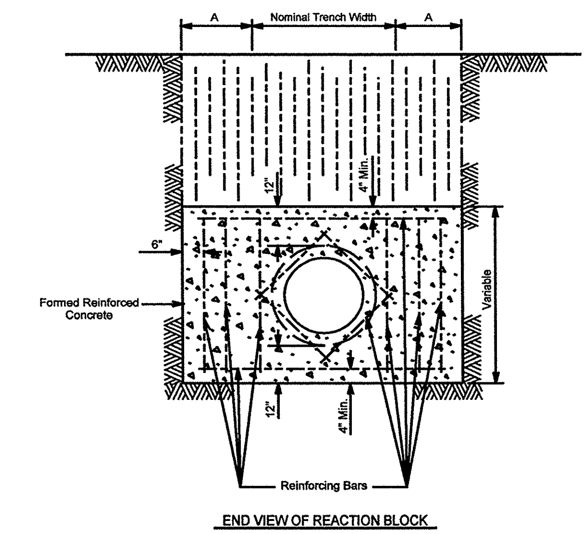


END VIEW OF REACTION BLOCK

| Main Size | A (Min.) | Reinforcing Bar Size | Bearing Surface Required (in Sq. Ft.) |
|---|---|---|---|
| 6" | 12" | #4 | 3 |
| 8" | 12" | #4 | 5 |
| 12" | 18" | #4 | 8 |
| 16" | 18" | #4 | 12 |
| 20" | 28" | #5 | 16 |
| 24" | 28" | #5 | 23 |
| 30" | 36" | #5 | 35 |
| 36" | 36" | #5 | 50 |
| 42" | 36" | #5 | 70 |

| PROPERTY OF SAN ANTONIO WATER SYSTEM SAN ANTONIO, TEXAS | CONCRETE REACTION BLOCK FOR BUTTERFLY VALVES & BLOW-OFF ASSEMBLIES ON D.I. & C.S.C. MAINS | APPROVED AUGUST 1998 | REVISED | DD-830-01 | SHEET 4 OF 4 |
|---|---|---|---|---|---|

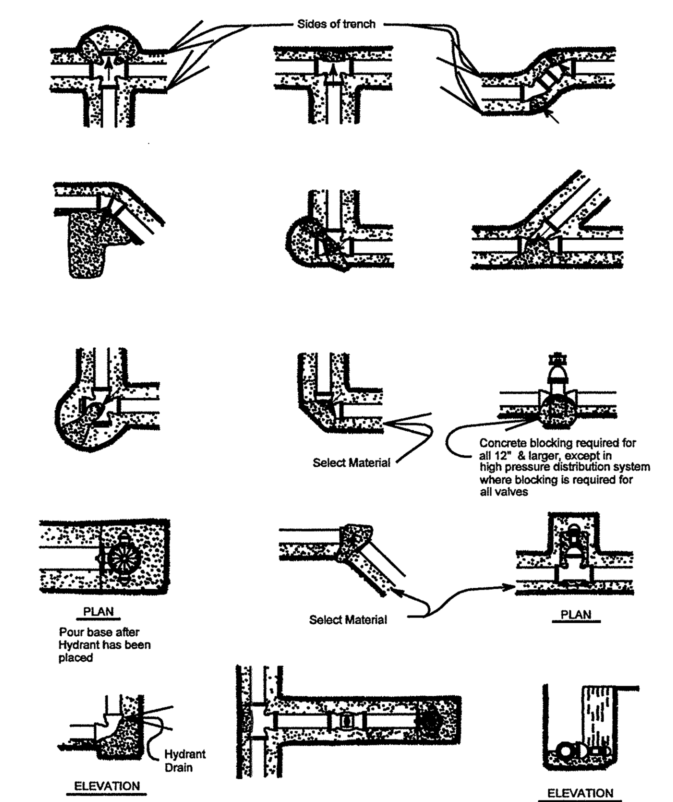


| PROPERTY OF SAN ANTONIO WATER SYSTEM SAN ANTONIO, TEXAS | THRUST BLOCKS FOR FITTINGS ( WATER ONLY ) | APPROVED AUGUST 1998 | REVISED | DD-839-01 | SHEET 1 OF 1 |
|---|---|---|---|---|---|

Notes:
1. Embed all exterior metal surfaces in silica sand
2. All reinforcing bars in the Reaction Block shall be #5

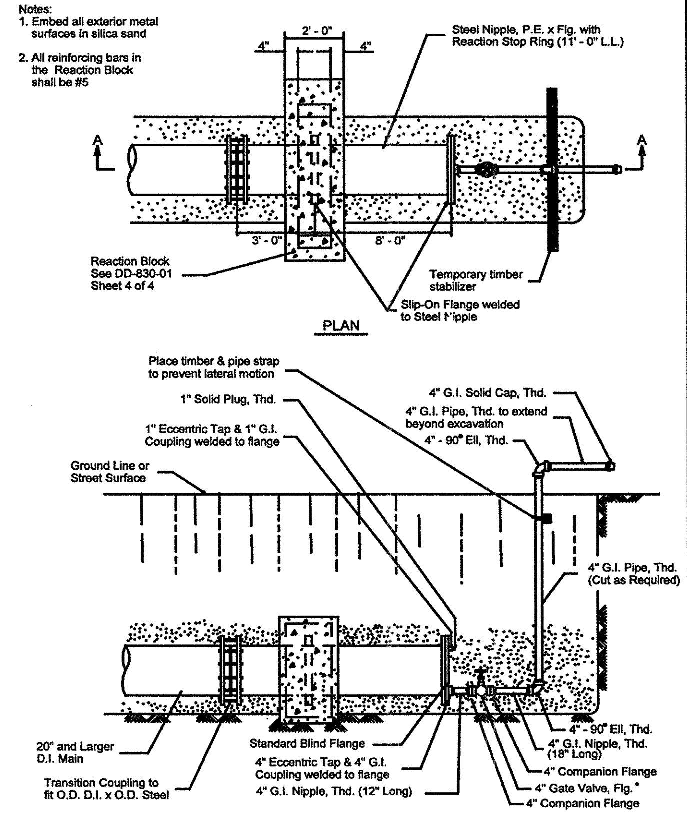


| PROPERTY OF SAN ANTONIO WATER SYSTEM SAN ANTONIO, TEXAS | 4" TEMPORARY BLOW-OFF ASSEMBLY 20" AND LARGER D.I. MAIN | APPROVED AUGUST 1998 | REVISED | DD-844-04 | SHEET 1 OF 2 |
|---|---|---|---|---|---|

STATE OF TEXAS
ROBERT J. SCHROEDER
50026
REGISTERED PROFESSIONAL ENGINEER
8/2/02

FM LOOP 1604

CULEBRA RD. TO U.S. HWY. 90

S.A.W.S. JOB NO. 00-5023

CO#23
SHEET 22A

©2000 Texas Department of Transportation

| FED.RD. DIV.NO. | FEDERAL AID PROJECT NO. | | SHEET NO. |
|---|---|---|---|
| 6 | NH 2000(704),etc. | | 206A 900B |
| STATE | DIST. | COUNTY | |
| TEXAS | SAT | BEXAR | |
| CONT. | SECT. | JOB | HIGHWAY NO. |
| 2452 | 01 | 036,etc. | LP 1604 |

# GENERAL NOTES

SANITARY SEWER SYSTEM

1. All materials and construction procedures within the scope of this contract shall be approved by the San Antonio Water System (SAWS) and comply with the following as applicable:

   A. Texas Natural Resource Conservation Commission's Design criteria for Sewerage Systems [31 TAC 317.1, 31 TAC 317.2, 31 TAC 317.3 and 31 TAC 317.13 and 31 TAC 317.13 and 213].

   B. Current TXDOT "Standard Specifications for Construction of Highways, Streets and Drainage." Construction inspection Division, at 704-7110, and involved home resident and/or property owners, 48 hours prior to excavation.

   C. Current "San Antonio Water System Standard Specifications for Construction."

   D. Current "City of San Antonio Standard Specifications for Public Works Construction".

2. The Contractor is to notify and make arrangements with the San Antonio Water System.

3. The locations and depths of existing utilities, to include service laterals, shown in these plans are approximate only. Actual locations and depths must be field verified by the contractor 48 hours prior to construction and it shall be the Contractor's responsibility to locate utility service lines as required for construction and to protect them during construction.

4. The contractor shall verify the exact location of underground utilities and drainage structures at least 48 hours prior to construction whether shown on plans or not, and to protect the same during construction.

| | |
|---|---|
| San Antonio Water System | 704-7107/7109 |
| COSA Drainage | 207-8048 |
| COSA Traffic Signal Operations | 207-7720 |
| Texas State Wide Signal One Call Locator | 1-800-545-6005 |

6. The Contractor shall avoid cutting roots larger than one inch in diameter when excavating near existing trees. Excavation in vicinity of trees shall proceed with caution. The Contractor shall contact the City Arborist at 207-8053 for guidance. SAWS Construction Inspector shall also be notified.

7. The Contractor shall not place any waste materials in the 100-year Flood Plain without first obtaining an approved Flood Plain Permit.

GENERAL SEWER NOTES

1. The Contractor is responsible to ensure that no overflows or spillage of sewage occurs. Should this occur, the Contractor shall:

   A. Identify the source of the spill and attempt to eliminate any additional spillage Notify Construction Inspections.

   B. Contain the spill in place and contamination of streams

   C. Clean up the spill and dispose of contaminated materials.

   D. Disinfect the area of the spill with a mixture of HTH chlorine and water.

   E. Identify and train personnel responsible for spillage prevention and control.

   No separate measurement or payment shall be made for this work. All work shall be done according to guidelines set by the Texas Natural Resource Conservation Commission (TNRCC) and the San Antonio Water System.

2. Service Lateral Connections:

   A. The exact location and elevation of all existing service laterals and manholes shall be field verified by the Contractor. (NSPI)

   B. A minimum of 3 feet of cover is to be maintained over the sanitary sewer laterals at subgrade.

   C. All sewer lateral services for future connections as identified on plan and profiles, shall be capped and sealed.

   D. The contractor shall reconnect existing service laterals into new main. (NSPI)

   E. Laterals shall be constructed to serve all existing houses and vacant lots.

## SUMMARY OF QUANTITIES

| | ITEM # | UNIT | DESCRIPTION | SHT. 2 | SHT. 3 | TOTAL |
|---|---|---|---|---|---|---|
| | 0500-0501 | LS | MOBILIZATION | — | — | 1 |
| | 5137-XXXX | M | SAN. SEW. (525mm) | 212 | | 212 |
| | 5137-5011 | M3 | SAN. SEW. (CONCRETE ENCASEMENT) | 1 | | 1 |
| | | | | | | |
| | 5137-5008 | EA. | SAN. SEW MANH (COMPL) | 3 | | 3 |
| | | | | | | |
| ** | 5137-5001 | EA. | SAN. SEW. (ADJUST MANHOLE) | | 1 | 1 |
| | | | | | | |
| | 5137-5012 | M3 | SAN. SEW. (CONCRETE CRADLES) | 1.6 | | 1.6 |
| | | | | | | |
| | 5137-5013 | M2 | SAN. SEW. (CUT & RESTORE PAVEMENT) | 17.6 | | 17.6 |
| | | | | | | |
| | 5137-5017 | M3 | SAN. SEW. (FLOWABLE BACKFILL) | 642 | | 642 |
| | | | | | | |
| | 5137-5002 | M | SAN. SEW. (TRENCH EXCAV. PROTECTION) | 212 | | 212 |
| | | | | | | |
| | 5137-XXXX | M | SAN. SEW. (ABANDON PIPE) (525mm) | 196 | | 196 |
| | 5137-5010 | M3 | SAN SEW (SELECT BEDDING) | 56 | | 56 |
| | 5137-5028 | EA. | SAN SEW (ABANDON MANHOLE) | 1 | | 1 |
| | 5137-XXXX | M | SAN. SEW. (CASING) (STL)(1075mm)(OPEN CUT) | 80 | | 80 |

** LOCATION TO BE FIELD DETERMINED

TXDOT CHJ - 2452-01-036

STATE OF TEXAS
MACK W. THOMAS III
85607
LICENSED
PROFESSIONAL ENGINEER

Mack W. Thomas III
9/25/00

© 2000 Texas Department of Transportation

GENERAL NOTES

| DN: | SHEET 1 OF 6 | | | | PROJECT NO. | | | |
|---|---|---|---|---|---|---|---|---|
| CK DN: | | | | | NH 2000 (704), etc. | | | |
| DW: | CONTROL | SECTION | JOB | DIST. | STATE | COUNTY | HIGHWAY NO. | SHEET NO. |
| CK DW: | 2452 | 01 | 036 | SAT | TX | BEXAR | LOOP 1604 | 901 |

# GENERAL NOTES

SANITARY SEWER SYSTEM

1. All materials and construction procedures within the scope of this contract shall be approved by the San Antonio Water System (SAWS) and comply with the following as applicable:

   A. Texas Natural Resource Conservation Commission's Design criteria for Sewerage Systems [31 TAC 317.1, 31 TAC 317.2, 31 TAC 317.3 and 31 TAC 317.13 and 31 TAC 317.13 and 213].

   B. Current TXDOT "Standard Specifications for Construction of Highways, Streets and Drainage." Construction Inspection Division, at 704-7110, and involved home resident and/or property owners, 48 hours prior to excavation.

   C. Current "San Antonio Water System Standard Specifications for Construction."

   D. Current "City of San Antonio Standard Specifications for Public Works Construction".

2. The Contractor is to notify and make arrangements with the San Antonio Water System.

3. The locations and depths of existing utilities, to include service laterals, shown in these plans are approximate only. Actual locations and depths must be field verified by the contractor 48 hours prior to construction and it shall be the Contractor's responsibility to locate utility service lines as required for construction and to protect them during construction.

4. The contractor shall verify the exact location of underground utilities and drainage structures at least 48 hours prior to construction whether shown on plans or not, and to protect the same during construction.

| | |
|---|---|
| San Antonio Water System | 704-7107/7109 |
| COSA Drainage | 207-8048 |
| COSA Traffic Signal Operations | 207-7720 |
| Texas State Wide Signal One Call Locator | 1-800-545-6005 |

6. The Contractor shall avoid cutting roots larger than one inch in diameter when excavating near existing trees. Excavation in vicinity of trees shall proceed with caution. The Contractor shall contact the City Arborist at 207-8053 for guidance. SAWS Construction Inspector shall also be notified.

7. The Contractor shall not place any waste materials in the 100-year Flood Plain without first obtaining an approved Flood Plain Permit.

GENERAL SEWER NOTES

1. The Contractor is responsible to ensure that no overflows or spillage of sewage occurs. Should this occur, the Contractor shall:

   A. Identify the source of the spill and attempt to eliminate any additional spillage Notify Construction Inspections.

   B. Contain the spill in place and contamination of streams

   C. Clean up the spill and dispose of contaminated materials.

   D. Disinfect the area of the spill with a mixture of HTH chlorine and water.

   E. Identify and train personnel responsible for spillage prevention and control.

   No separate measurement or payment shall be made for this work. All work shall be done according to guidelines set by the Texas Natural Resource Conservation Commission (TNRCC) and the San Antonio Water System.

2. Service Lateral Connections:

   A. The exact location and elevation of all existing service laterals and manholes shall be field verified by the Contractor. (NSPI)

   B. A minimum of 3 feet of cover is to be maintained over the sanitary sewer laterals at subgrade.

   C. All sewer lateral services for future connections as identified on plan and profiles, shall be capped and sealed.

   D. The contractor shall reconnect existing service laterals into new main. (NSPI)

   E. Laterals shall be constructed to serve all existing houses and vacant lots.

## SUMMARY OF CHANGES

REVISED

| | ITEM # | UNIT | DESCRIPTION | SHT. 2 | SHT. 2A | SHT.2B | SHT. 3 | TOTAL |
|---|---|---|---|---|---|---|---|---|
| | 0500-0501 | LS | MOBILIZATION | — | | | — | 1 |
| 4 | 5137-XXXX | M | SAN SEW (525mm) | ~~212~~ | | 206 | | 206 |
| | 5137-5011 | M3 | SAN SEW (CONCRETE ENCASEMENT) | | | 1 | | 1 |
| | 5137-5008 | EA. | SAN SEW MANH (COMPL) | | | 3 | | 3 |
| ** | 5137-5001 | EA. | SAN SEW (ADJUST MANHOLE) | | | | 1 | 1 |
| | 5137-5012 | M3 | SAN SEW (CONCRETE CRADLES) | | | 1.6 | | 1.6 |
| | 5137-5013 | M2 | SAN SEW (CUT & RESTORE PAVEMENT) | | | 17.6 | | 17.6 |
| | 5137-5017 | M3 | SAN SEW (FLOWABLE BACKFILL) | | | 642 | | 642 |
| 4 | 5137-5002 | M | SAN SEW (TRENCH EXCAV. PROTECTION) | ~~212~~ | | 206 | | 206 |
| | 5137-XXXX | M | SAN SEW (ABANDON PIPE) (525mm) | 196 | | 196 | | 196 |
| | 5137-5010 | M3 | SAN SEW (SELECT BEDDING) | 56 | | 56 | | 56 |
| | 5137-5028 | EA. | SAN SEW (ABANDON MANHOLE) | 1 | | 1 | | 1 |
| 4 | 5137-XXXX | M | SAN SEW (CASING) (STL)(1075mm)(OPEN CUT) | ~~30~~ | 61.712 | | | 61.712 |
| 4 | 9608-XXXX | M | SAN SEW JACK OR BORE CASING (STL) (1075mm) | | 18.288 | | | 18.288 |

** LOCATION TO BE FIELD DETERMINED

TXDOT CSJ - 2452-01-036

4 CHANGE ORDER #10 REVISIONS

- REVISED QUANTITIES ASSOCIATED WITH CHANGE ORDER

STATE OF TEXAS
PAUL M. MORAWSKI
46209
REGISTERED PROFESSIONAL ENGINEER

Paul M. Morawski
5/16/02

SHEET 1A

© 2000 Texas Department of Transportation

GENERAL NOTES

| | | | | | | | |
|---|---|---|---|---|---|---|---|
| DN: | SHEET 1 OF 6 | | | | PROJECT NO. | | |
| CK DN: | | | | | NH 2000 (704), etc. | | |
| DW: | CONTROL | SECTION | JOB | DIST. | STATE | COUNTY | HIGHWAY NO. | SHEET NO. |
| CK DW: | 2452 | 01 | 036 | SAT | TX | BEXAR | LOOP 1604 | 901A |

REVISED - 5/07/02 SAWS JOB NO. 99-5537

# GENERAL NOTES

SANITARY SEWER SYSTEM

1. All materials and construction procedures within the scope of this contract shall be approved by the San Antonio Water System (SAWS) and comply with the following as applicable:

   A. Texas Natural Resource Conservation Commission's Design criteria for Sewerage Systems [31 TAC 317.1, 31 TAC 317.2, 31 TAC 317.3 and 31 TAC 317.13 and 31 TAC 317.13 and 213].

   B. Current TXDOT 'Standard Specifications for Construction of Highways, Streets and Drainage.' Construction Inspection Division, at 704-7110, and involved home resident and/or property owners, 48 hours prior to excavation.

   C. Current 'San Antonio Water System Standard Specifications for Construction.'

   D. Current 'City of San Antonio Standard Specifications for Public Works Construction'.

2. The Contractor is to notify and make arrangements with the San Antonio Water System.

3. The locations and depths of existing utilities, to include service laterals, shown in these plans are approximate only. Actual locations and depths must be field verified by the contractor 48 hours prior to construction and it shall be the Contractor's responsibility to locate utility service lines as required for construction and to protect them during construction.

4. The contractor shall verify the exact location of underground utilities and drainage structures at least 48 hours prior to construction whether shown on plans or not, and to protect the same during construction.

| | |
|---|---|
| San Antonio Water System | 704-7107/7109 |
| COSA Drainage | 207-8048 |
| COSA Traffic Signal Operations | 207-7720 |
| Texas State Wide Signal One Call Locator | 1-800-545-6005 |

## SUMMARY OF QUANTITIES

| ITEM | UNIT | DESCRIPTION | SHT. 2 | SHT. 3 | SHT. 4 (18 NEW) | TOTAL |
|---|---|---|---|---|---|---|
| 0500-0501 | LS | MOBILIZATION | — | — | | 1 |
| 5137-XXXX | M | SAN. SEW. (525mm) | 212 | | | 212 |
| 5137-XXXX | M | SAN. SEW. (533mm) | | | 60.1 | 60.1 |
| 5137-5011 | M3 | SAN. SEW. (CONCRETE ENCASEMENT) | 1 | | 2 | 3 |
| 5137-5008 | EA. | SAN. SEW MANH (COMPL) | 3 | | 2 | 5 |
| | | | | | | |
| 5137-5001 | EA. | SAN. SEW. (ADJUST MANHOLE) | | 1 | 2 | 3 |
| | | | | | | |
| 5137-5012 | M3 | SAN. SEW. (CONCRETE CRADLES) | 1.6 | | 1 | 2.6 |
| | | | | | | |
| 5137-5013 | M2 | SAN. SEW. (CUT & RESTORE PAVEMENT) | 17.6 | | | 17.6 |
| | | | | | | |
| 5137-5017 | M3 | SAN. SEW. (FLOWABLE BACKFILL) | 642 | | 5 | 647 |
| | | | | | | |
| 5137-5002 | M | SAN. SEW. (TRENCH EXCAV PROTECTION) | 212 | | 60.10 | 272.10 |
| 5137-XXXX | M | SAN. SEW. (ABANDON PIPE) (533mm) | | | 62.55 | 62.55 |
| 5137-XXXX | M | SAN. SEW. (ABANDON PIPE) (525mm) | 196 | | | 196 |
| 5137-5010 | M3 | SAN. SEW. (SELECT BEDDING) | 56 | | | 56 |
| 5137-5028 | EA. | SAN SEW (ABANDON MANHOLE) | 1 | | 1 | 2 |
| 5137-XXXX | M | SAN. SEW. (CASING) (STL)(1075mm)(OPEN CUT) | 80 | | | 80 |

TXDOT CSJ - 2452-01-036

STATE OF TEXAS
MACK W. THOMAS III
85607
LICENSED
PROFESSIONAL ENGINEER

Mack W. Thomas
9/13/01

SHEET 1A

SAN ANTONIO WATER SYSTEM

GENERAL NOTES
SAWS JOB NO. 00-5523

© 1999 Texas Department of Transportation

| DESIGNED: | FED. RD. DIV. NO. | STATE | PROJECT NO. | | | HIGHWAY NO. |
|---|---|---|---|---|---|---|
| CHECKED: | 6 | TEXAS | IH 2000 (704), etc. | | | LOOP 1604 |
| DRAWN: | STATE DIST. | COUNTY | CONTROL NO. | SECTION NO. | JOB NO. | SHEET NO. |
| CHECKED: | SAT | BEXAR | 2452 | Ø1 | Ø36 | 101A |

CO#7

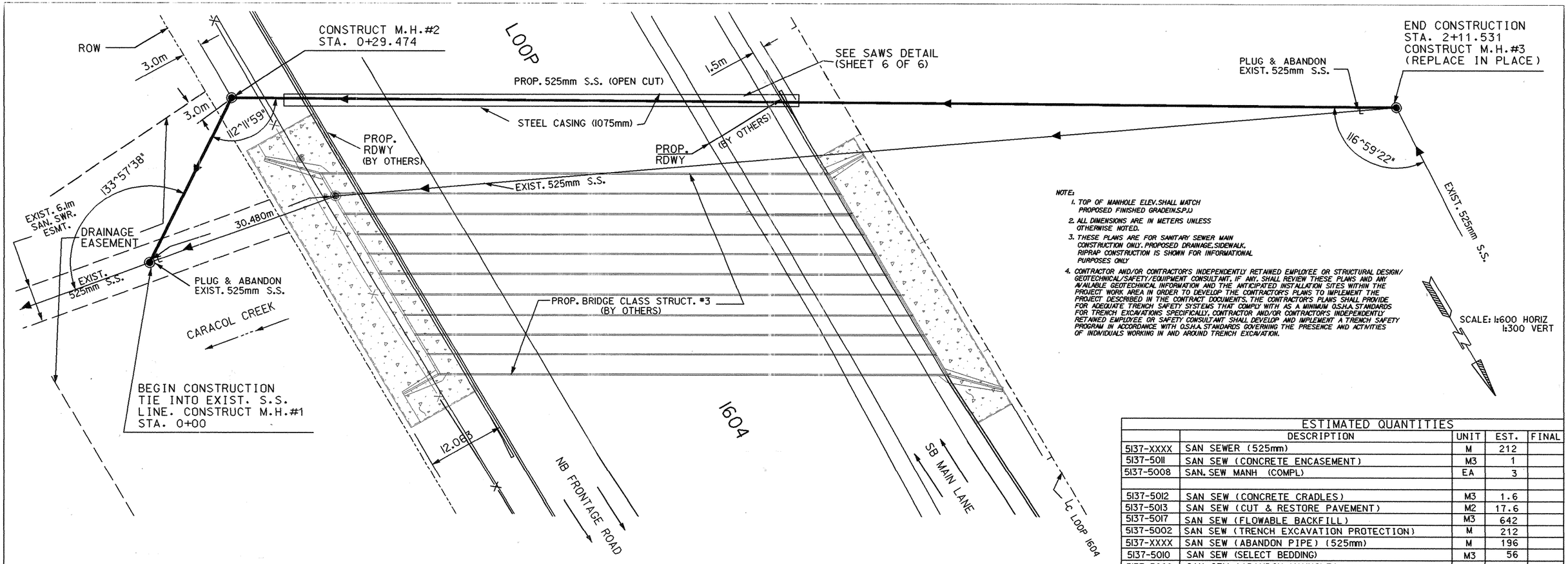


## ESTIMATED QUANTITIES

| | DESCRIPTION | UNIT | EST. | FINAL |
|---|---|---|---|---|
| 5137-XXXX | SAN SEWER (525mm) | M | 212 | |
| 5137-5011 | SAN SEW (CONCRETE ENCASEMENT) | M3 | 1 | |
| 5137-5008 | SAN. SEW MANH (COMPL) | EA | 3 | |
| | | | | |
| 5137-5012 | SAN SEW (CONCRETE CRADLES) | M3 | 1.6 | |
| 5137-5013 | SAN SEW (CUT & RESTORE PAVEMENT) | M2 | 17.6 | |
| 5137-5017 | SAN SEW (FLOWABLE BACKFILL) | M3 | 642 | |
| 5137-5002 | SAN SEW (TRENCH EXCAVATION PROTECTION) | M | 212 | |
| 5137-XXXX | SAN SEW (ABANDON PIPE) (525mm) | M | 196 | |
| 5137-5010 | SAN SEW (SELECT BEDDING) | M3 | 56 | |
| 5137-5028 | SAN SEW (ABANDON MANHOLE) | EA | 1 | |
| 5137-XXXX | SAN. SEW. (CASING) (STL)(1075mm)(OPEN CUT) | M | 80 | |

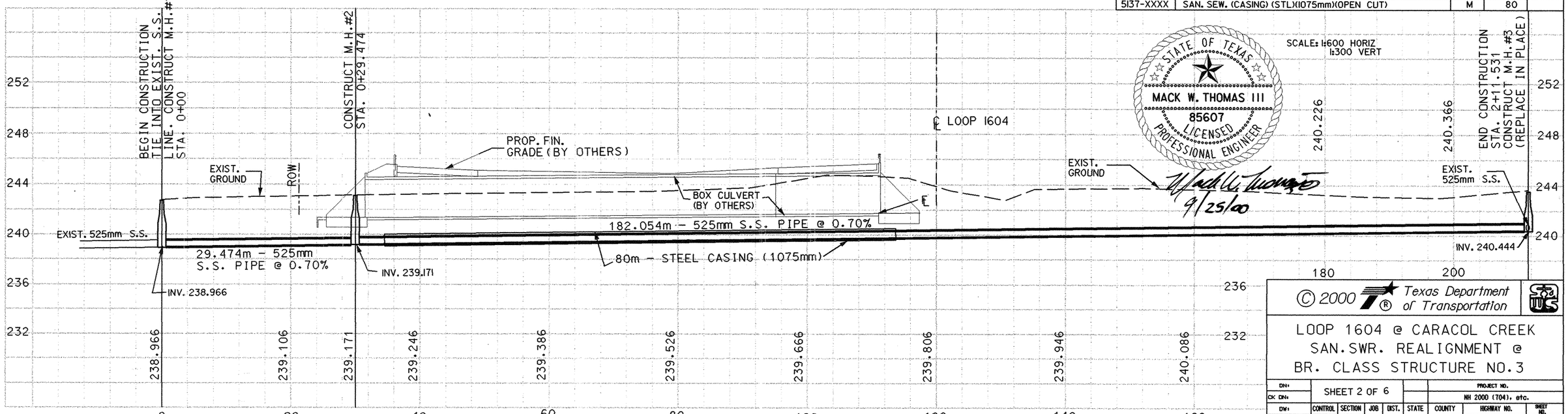


STATE OF TEXAS
MACK W. THOMAS III
85607
LICENSED PROFESSIONAL ENGINEER
9/25/00

SCALE: 1:600 HORIZ
1:300 VERT

© 2000 Texas Department of Transportation

# LOOP 1604 @ CARACOL CREEK SAN. SWR. REALIGNMENT @ BR. CLASS STRUCTURE NO.3

SHEET 2 OF 6

| DN: | CK DN: | DW: | CK DW: | CONTROL | SECTION | JOB | DIST. | STATE | COUNTY | PROJECT NO. / HIGHWAY NO. | SHEET NO. |
|---|---|---|---|---|---|---|---|---|---|---|---|
| | | | | 2452 | 01 | 036 | SAT | TX | BEXAR | NH 2000 (704), etc. / LOOP 1604 | 902 |

CONSTRUCT M.H.#2
STA. 0+27.711

PROP. STORM DRAIN
LINE I-37
BY OTHERS

LOOP

PROP. 525mm S.S.

STEEL CASING (1075mm)

PROP. RDWY (BY OTHERS)

1.4m (TYP.)

1.4m (TYP.)

ROW

1.52m

2.2m

59°35'14"

INSTALL BY (OPEN CUT) 61.712m OF 525mm PIPE IN 61.712m OF 1075mm I.D. CONDUIT.

0.85

7.839m

EXIST. 525mm S.S.

BORE, JACK OR TUNNEL UNDER EXISTING ROADWAY (F.M. 1604) AND INSTALL 18.288m OF 525mm PIPE IN 18.288m OF 1075mm I.D. CONDUIT.

EXIST. 6.1m SAN. SWR. ESMT.

DRAINAGE EASEMENT

EXIST. 525mm S.S.

22+800

EXIST. PVMT.

PROP. BRIDGE CLASS STRUCT. #3 (BY OTHERS)

BEGIN CONSTRUCTION
TIE INTO EXIST. S.S.
LINE. CONSTRUCT M.H.#1
STA. 0+06.379

PLUG & ABANDON EXIST. 525mm S.S.

CARACOL CREEK

12.063

PROP. RDWY (BY OTHERS)

NB FRONTAGE ROAD

1604

PROP. STORM DRAIN LINE I-35 BY OTHERS

SB MAIN LANE

℄ LOOP 1604

PLUG & ABANDON EXIST. 525mm S.S.

END CONSTRUCTION
STA. 2+11.531
CONSTRUCT M.H.#3
(REPLACE IN PLACE)

116°59'22"

SCALE: 1:600 HORIZ
1:300 VERT

EXIST. 525mm S.S.

△ CHANGE ORDER REVISIONS

CHANGED SAN SEW (525mm)
FROM 212m TO 206m

CHANGED SAN SEW (TRENCH EXCAVATION PROTECTION)
FROM 212m TO 206m

MOVED M.H.#1
FROM STA. 0+00 TO STA. 0+06.379

MOVED M.H.#2
FROM STA. 0+29.474 TO STA. 0+27.711

NOTE:

1. TOP OF MANHOLE ELEV. SHALL MATCH PROPOSED FINISHED GRADE(N.S.P.J.)
2. ALL DIMENSIONS ARE IN METERS UNLESS OTHERWISE NOTED.
3. THESE PLANS ARE FOR SANITARY SEWER MAIN CONSTRUCTION ONLY. PROPOSED DRAINAGE, SIDEWALK, RIPRAP CONSTRUCTION IS SHOWN FOR INFORMATIONAL PURPOSES ONLY
4. CONTRACTOR AND/OR CONTRACTOR'S INDEPENDENTLY RETAINED EMPLOYEE OR STRUCTURAL DESIGN/GEOTECHNICAL/SAFETY/EQUIPMENT CONSULTANT, IF ANY, SHALL REVIEW THESE PLANS AND ANY AVAILABLE GEOTECHNICAL INFORMATION AND THE ANTICIPATED INSTALLATION SITES WITHIN THE PROJECT WORK AREA IN ORDER TO DEVELOP THE CONTRACTOR'S PLANS TO IMPLEMENT THE PROJECT DESCRIBED IN THE CONTRACT DOCUMENTS. THE CONTRACTOR'S PLANS SHALL PROVIDE FOR ADEQUATE TRENCH SAFETY SYSTEMS THAT COMPLY WITH AS A MINIMUM O.S.H.A. STANDARDS FOR TRENCH EXCAVATIONS SPECIFICALLY, CONTRACTOR AND/OR CONTRACTOR'S INDEPENDENTLY RETAINED EMPLOYEE OR SAFETY CONSULTANT SHALL DEVELOP AND IMPLEMENT A TRENCH SAFETY PROGRAM IN ACCORDANCE WITH O.S.H.A. STANDARDS GOVERNING THE PRESENCE AND ACTIVITIES OF INDIVIDUALS WORKING IN AND AROUND TRENCH EXCAVATION.

ESTIMATED QUANTITIES

| | | DESCRIPTION | UNIT | EST. |
|---|---|---|---|---|
| △ | 5137-XXXX | SAN SEWER (525mm) | M | 206 |
| | 5137-5011 | SAN SEW (CONCRETE ENCASEMENT) | M3 | 1 |
| | 5137-5008 | SAN. SEW MANH (COMPL) | EA | 3 |
| | 5137-5012 | SAN SEW (CONCRETE CRADLES) | M3 | 1.6 |
| | 5137-5013 | SAN SEW (CUT & RESTORE PAVEMENT) | M2 | 17.6 |
| | 5137-5017 | SAN SEW (FLOWABLE BACKFILL) | M3 | 642 |
| △ | 5137-5002 | SAN SEW (TRENCH EXCAVATION PROTECTION) | M | 206 |
| | 5137-XXXX | SAN SEW (ABANDON PIPE) (525mm) | M | 196 |
| | 5137-5010 | SAN SEW (SELECT BEDDING) | M3 | 56 |
| | 5137-5028 | SAN SEW (ABANDON MANHOLE) | EA | 1 |
| △ | 5137-XXXX | SAN SEW (CASING) (STL)(1075mm)(OPEN CUT) | M | 61.712 |
| △ | 9608-XXXX | SAN SEW JACK OR BORE CASING (STL) (1075mm) | M | 18.288 |

BEGIN CONSTRUCTION TIE INTO EXIST. S.S. LINE. CONSTRUCT M.H.#1 STA. 0+06.379 TOP OF MH :241.3

CONSTRUCT M.H.#2 STA. 0+27.711 TOP OF MH :243.2

℄ LOOP 1604

END CONSTRUCTION STA. 2+11.531 CONSTRUCT M.H.#3 (REPLACE IN PLACE)

SCALE: 1:600 HORIZ
1:300 VERT

PROP. FIN. GRADE (BY OTHERS)

EXIST. GROUND

PROP. GRADE (BY OTHERS)

EXIST. GROUND

EXIST. 525mm S.S.

PROP. 750mm RCP BY OTHERS-LINE I-37

STEEL CASING (1075mm)

183.820m - 525mm S.S. PIPE @ 0.70%

EXIST. 525mm S.S.

21.332m - 525mm S.S. PIPE @ 0.20%

EXIST. INV. 239.103

INV. 239.159 (IN)
239.145 (OUT)

INSTALL BY (OPEN CUT) 61.712m OF 525mm PIPE IN 61.712m OF 1075mm I.D. CONDUIT.

BORE, JACK OR TUNNEL UNDER EXISTING ROADWAY (F.M. 1604) AND INSTALL 18.288m OF 525mm PIPE IN 18.288m OF 1075mm I.D. CONDUIT.

INV. 240.444

EXIST. 239.103 | 239.130 | 239.145 | 239.159 | 239.245 | 239.385 | 239.525 | 239.665 | 239.805 | 239.945 | 240.085 | 240.225 | 240.365

0 20 40 60 80 100 120 140 160 180 200

252 248 244 240 236 232

STATE OF TEXAS
PAUL M. MORAWSKI
46209
REGISTERED PROFESSIONAL ENGINEER
Paul M. Morawski
5/16/02

© 2000 Texas Department of Transportation

LOOP 1604 @ CARACOL CREEK
SAN.SWR. REALIGNMENT @
BR. CLASS STRUCTURE NO.3

| DN: | SHEET 2B | | | | | PROJECT NO. | | |
|---|---|---|---|---|---|---|---|---|
| CK DN: | | | | | | NH 2000 (704), etc. | | |
| DW: | CONTROL | SECTION | JOB | DIST. | STATE | COUNTY | HIGHWAY NO. | SHEET NO. |
| CK DW: | 2452 | Ø1 | Ø36 | SAT | TX | BEXAR | LOOP 1604 | 902 |

etc.

SAWS JOB NO. 00-5523

90+10 REVISED 5 (07/02) (ALIGNMENT)

ESTIMATED QUANTITIES

| | DESCRIPTION | UNIT | EST. | FINAL |
|---|---|---|---|---|
| 5137-5001 | SAN SEW (ADJUST MANHOLE) | EA | 1 | |
| | | | | |
| | | | | |
| | | | | |

SCALE: 1:600 HORIZ
1:300 VERT

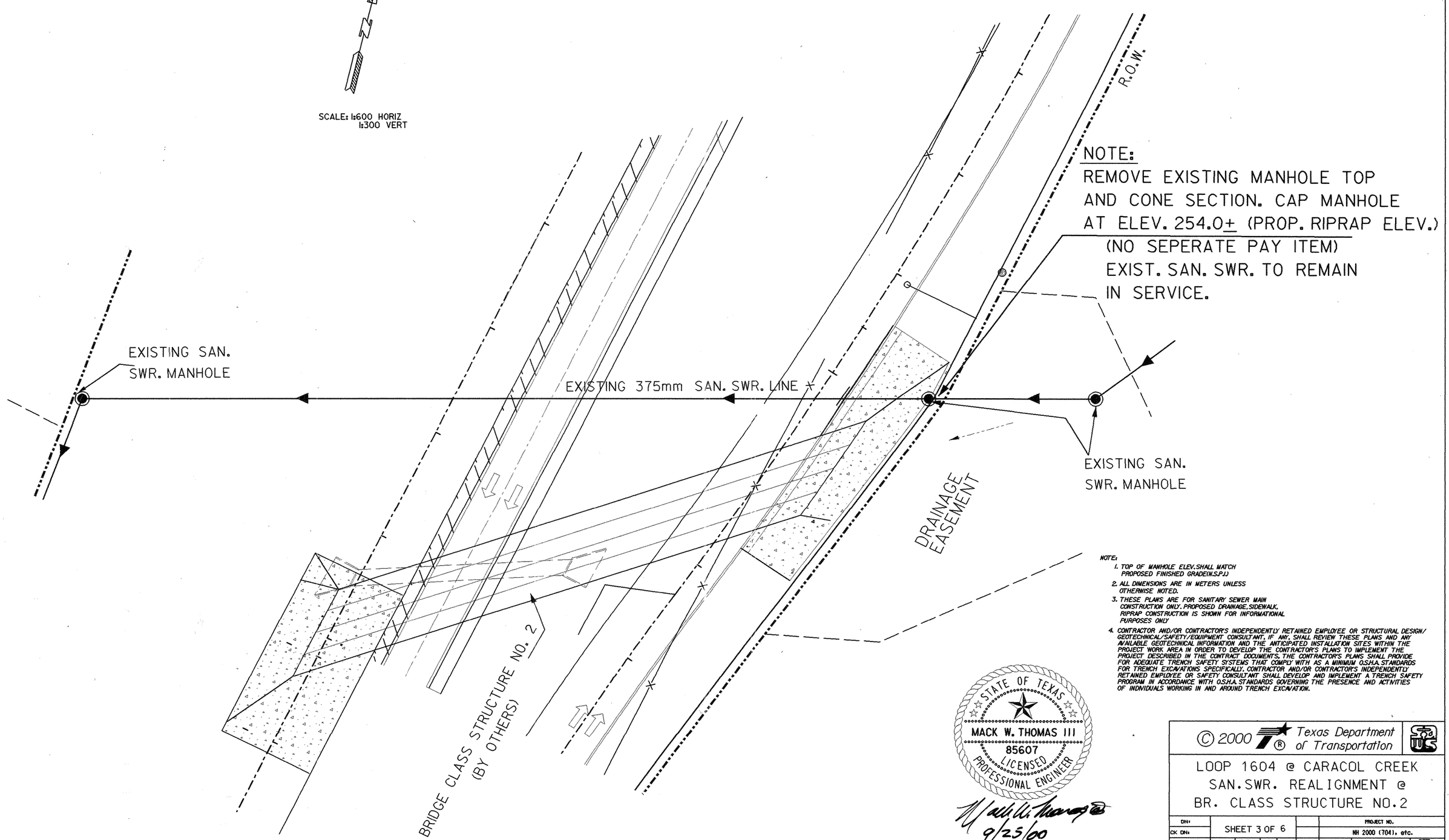


NOTE:
REMOVE EXISTING MANHOLE TOP AND CONE SECTION. CAP MANHOLE AT ELEV. 254.0± (PROP. RIPRAP ELEV.)
(NO SEPERATE PAY ITEM)
EXIST. SAN. SWR. TO REMAIN IN SERVICE.

NOTE:
1. TOP OF MANHOLE ELEV. SHALL MATCH PROPOSED FINISHED GRADE(W.S.P.J.)
2. ALL DIMENSIONS ARE IN METERS UNLESS OTHERWISE NOTED.
3. THESE PLANS ARE FOR SANITARY SEWER MAIN CONSTRUCTION ONLY. PROPOSED DRAINAGE, SIDEWALK, RIPRAP CONSTRUCTION IS SHOWN FOR INFORMATIONAL PURPOSES ONLY
4. CONTRACTOR AND/OR CONTRACTOR'S INDEPENDENTLY RETAINED EMPLOYEE OR STRUCTURAL DESIGN/GEOTECHNICAL/SAFETY/EQUIPMENT CONSULTANT, IF ANY, SHALL REVIEW THESE PLANS AND ANY AVAILABLE GEOTECHNICAL INFORMATION AND THE ANTICIPATED INSTALLATION SITES WITHIN THE PROJECT WORK AREA IN ORDER TO DEVELOP THE CONTRACTOR'S PLANS TO IMPLEMENT THE PROJECT DESCRIBED IN THE CONTRACT DOCUMENTS. THE CONTRACTOR'S PLANS SHALL PROVIDE FOR ADEQUATE TRENCH SAFETY SYSTEMS THAT COMPLY WITH AS A MINIMUM O.S.H.A. STANDARDS FOR TRENCH EXCAVATIONS SPECIFICALLY. CONTRACTOR AND/OR CONTRACTOR'S INDEPENDENTLY RETAINED EMPLOYEE OR SAFETY CONSULTANT SHALL DEVELOP AND IMPLEMENT A TRENCH SAFETY PROGRAM IN ACCORDANCE WITH O.S.H.A. STANDARDS GOVERNING THE PRESENCE AND ACTIVITIES OF INDIVIDUALS WORKING IN AND AROUND TRENCH EXCAVATION.

STATE OF TEXAS
MACK W. THOMAS III
85607
LICENSED
PROFESSIONAL ENGINEER
9/25/00

© 2000 Texas Department of Transportation

LOOP 1604 @ CARACOL CREEK
SAN. SWR. REALIGNMENT @
BR. CLASS STRUCTURE NO. 2

| DN: | SHEET 3 OF 6 | | | | | PROJECT NO. | | |
|---|---|---|---|---|---|---|---|---|
| CK DN: | | | | | | NH 2000 (704), etc. | | |
| DW: | CONTROL | SECTION | JOB | DIST. | STATE | COUNTY | HIGHWAY NO. | SHEET NO. |
| CK DW: | 2452 | 01 | 036 | SAT | TX | BEXAR | LOOP 1604 | 903 |

W. LOOP 1604 W

FM 1957 / POTRANCO RD

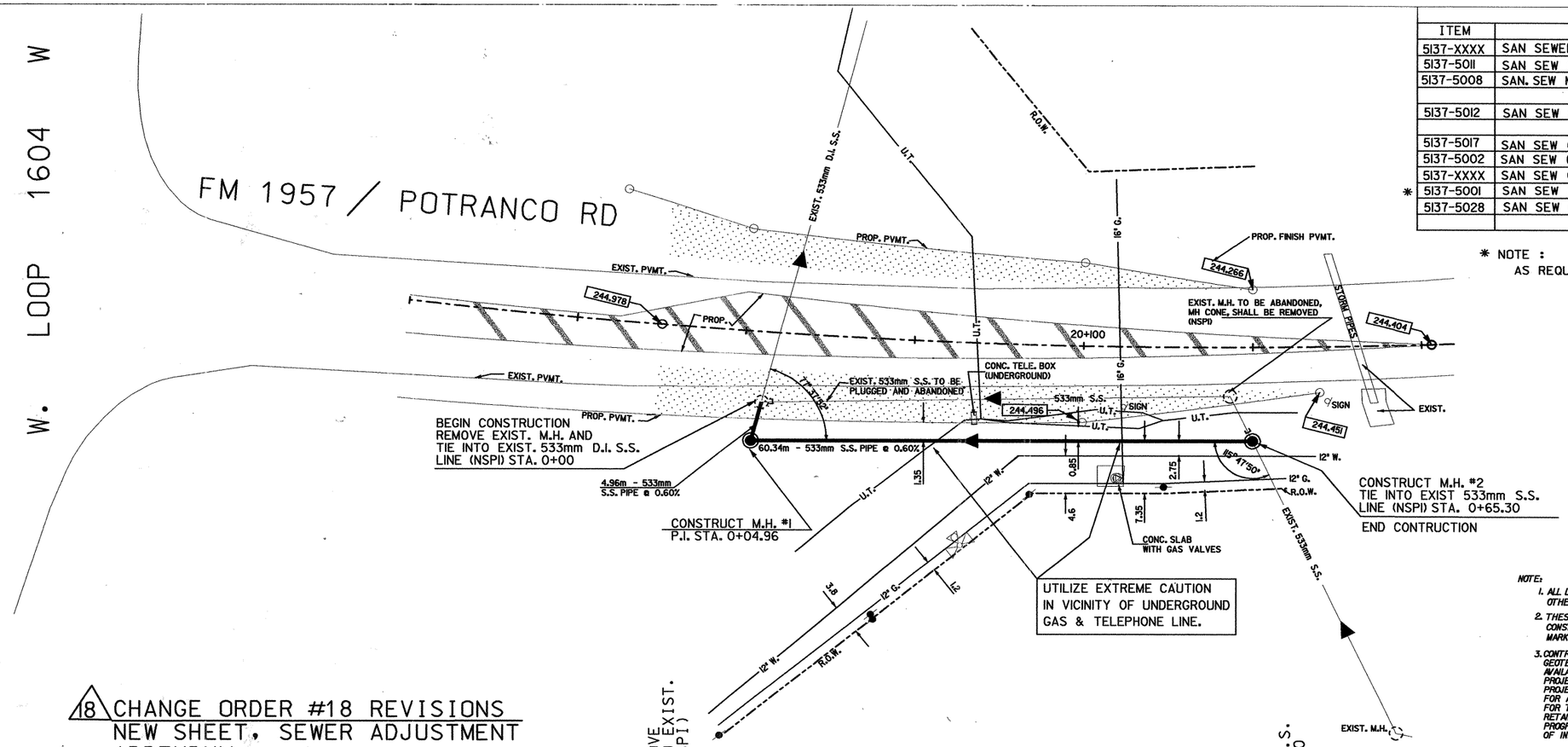


| ESTIMATED QUANTITIES | | | |
|---|---|---|---|
| ITEM | DESCRIPTION | EST. | UNIT |
| 5137-XXXX | SAN SEWER (533mm) | 65.30 | M |
| 5137-5011 | SAN SEW (CONCRETE ENCASEMENT) | 2 | M3 |
| 5137-5008 | SAN. SEW MANH (COMPL) | 2 | EA. |
| | | | |
| 5137-5012 | SAN SEW (CONCRETE CRADLES) | 1 | M3 |
| | | | |
| 5137-5017 | SAN SEW (FLOWABLE BACKFILL) | 5 | M3 |
| 5137-5002 | SAN SEW (TRENCH EXCAV PROTECTION) | 65.30 | M |
| 5137-XXXX | SAN SEW (ABANDON PIPE) (533mm) | 62.55 | M |
| * 5137-5001 | SAN SEW (ADJUST MANHOLE) | 2 | EA. |
| 5137-5028 | SAN SEW (ABANDON MANHOLE) | 1 | EA. |
| | | | |

* NOTE :
AS REQUIRED FOR TEMPORARY ROAD CONSTRUCTION

SCALE: h:600 HORIZ
h:300 VERT

*NOTE:*

1. *ALL DIMENSIONS ARE IN METERS UNLESS OTHERWISE NOTED.*
2. *THESE PLANS ARE FOR SANITARY SEWER MAIN CONSTRUCTION ONLY. PROPOSED PAVEMENT AND MARKINGS ARE SHOWN FOR INFORMATIONAL PURPOSES ONLY.*
3. *CONTRACTOR AND/OR CONTRACTOR'S INDEPENDENTLY RETAINED EMPLOYEE OR STRUCTURAL DESIGN/ GEOTECHNICAL/SAFETY/EQUIPMENT CONSULTANT, IF ANY, SHALL REVIEW THESE PLANS AND ANY AVAILABLE GEOTECHNICAL INFORMATION AND THE ANTICIPATED INSTALLATION SITES WITHIN THE PROJECT WORK AREA IN ORDER TO DEVELOP THE CONTRACTOR'S PLANS TO IMPLEMENT THE PROJECT DESCRIBED IN THE CONTRACT DOCUMENTS. THE CONTRACTOR'S PLANS SHALL PROVIDE FOR ADEQUATE TRENCH SAFETY SYSTEMS THAT COMPLY WITH AS A MINIMUM O.S.H.A. STANDARDS FOR TRENCH EXCAVATIONS SPECIFICALLY, CONTRACTOR AND/OR CONTRACTOR'S INDEPENDENTLY RETAINED EMPLOYEE OR SAFETY CONSULTANT SHALL DEVELOP AND IMPLEMENT A TRENCH SAFETY PROGRAM IN ACCORDANCE WITH O.S.H.A. STANDARDS GOVERNING THE PRESENCE AND ACTIVITIES OF INDIVIDUALS WORKING IN AND AROUND TRENCH EXCAVATION.*

18 CHANGE ORDER #18 REVISIONS
NEW SHEET, SEWER ADJUSTMENT ADDENDUM

NOTE:
BY-PASS PUMPING/DIVERSION SHALL BE UTILIZED AS REQUIRED TO COMPLETE CONSTRUCTION AND THE COST SHALL BE CONSIDERED AS INCIDENTAL TO THE PROJECT WORK.

Mack W. Thomas
9/13/01

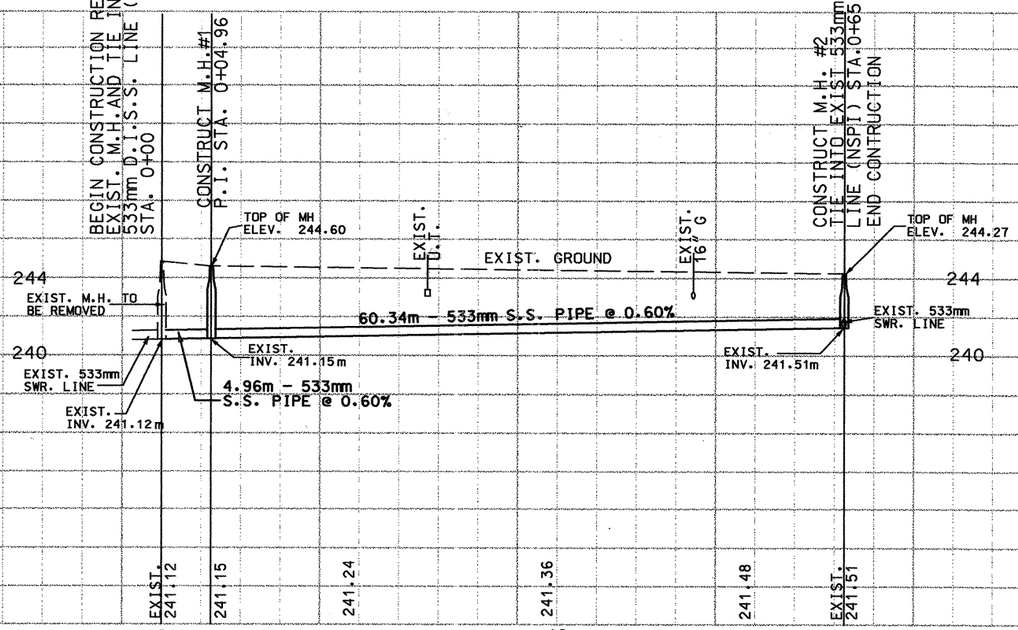


SCALE: h:600 HORIZ
h:300 VERT

SHEET 4

SAN ANTONIO WATER SYSTEM

FM LOOP 1604
CULEBRA RD. TO US HWY. 90
SAWS JOB NO. 00-5523

© 1999 Texas Department of Transportation

CO#7

| DESIGNED: | FED. RD. DIV. NO. | STATE | PROJECT NO. | | | HIGHWAY NO. |
|---|---|---|---|---|---|---|
| CHECKED: | 6 | TEXAS | NH 2000 (704), etc. | | | LOOP 1604 |
| DRAWN: | STATE DIST. | COUNTY | CONTROL NO. | SECTION NO. | JOB NO. | SHEET NO. |
| CHECKED: | SAT | BEXAR | 2452 | Ø1 | Ø36 | 4 |

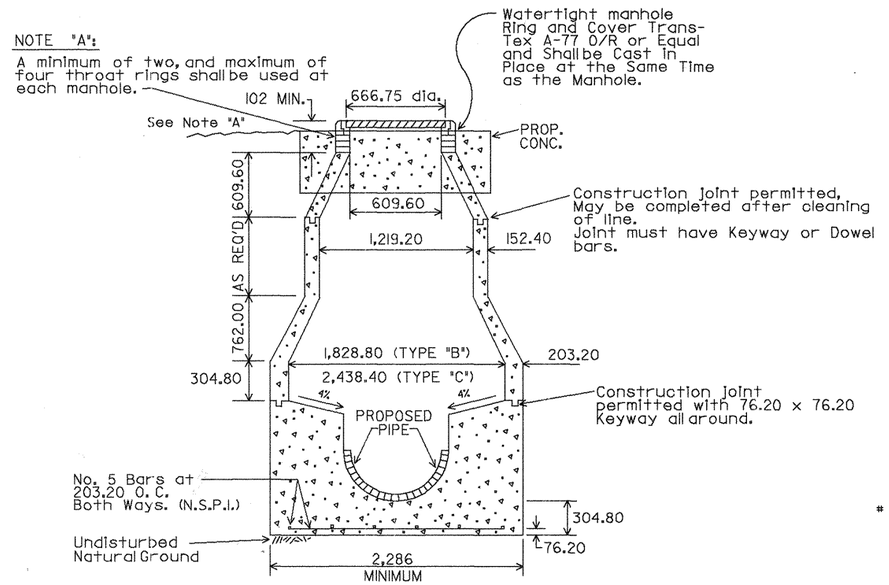


PROPOSED TYPICAL SANITARY SEWER STRUCTURE
1,828.80 & 2,438.40 MANHOLE (TYPE "B & C")

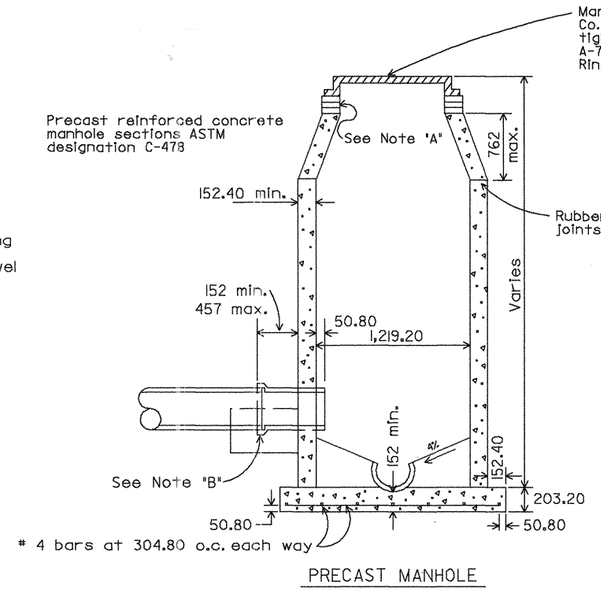


PRECAST MANHOLE

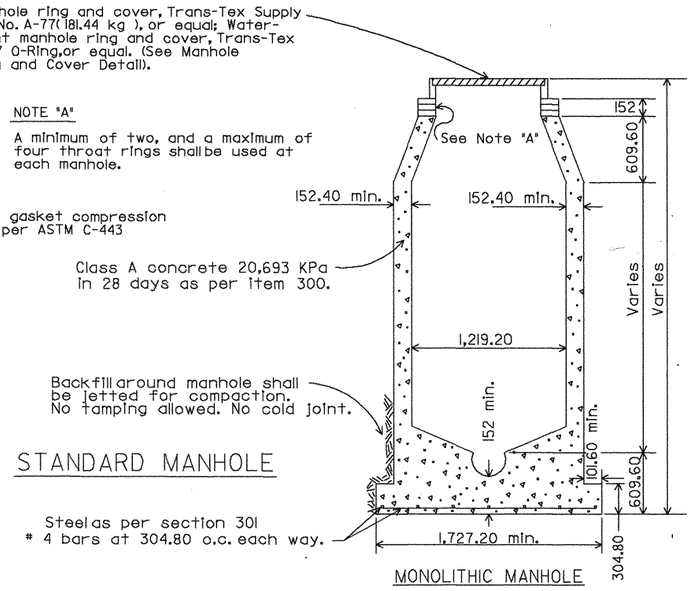


MONOLITHIC MANHOLE

PIPE LAID IN TRENCH

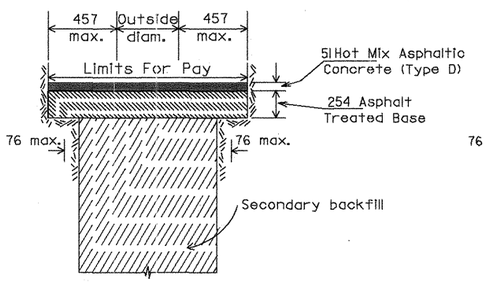


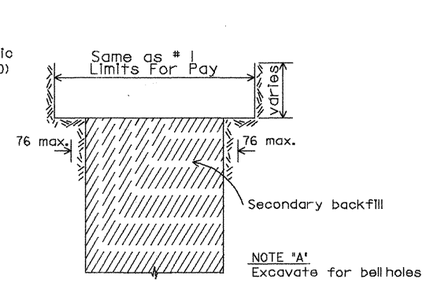


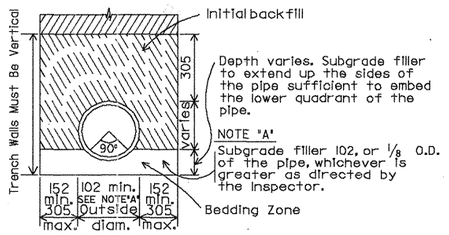


RIGID PIPE-UNSTABLE or UNACCEPTABLE CONDITIONS
FLEXIBLE PIPE-ALL CONDITIONS

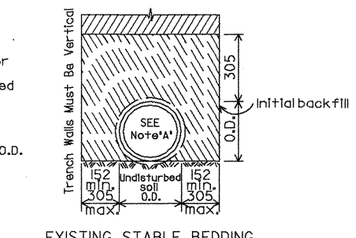


EXISTING STABLE BEDDING CONDITIONS (RIGID PIPE)

NOTE "B":
Sewer pipe connecting to manholes above the lowest sewer shall project 51 mm from the inside wall, and be installed with a joint a minimum of 152 mm and a maximun of 457 mm from outside manhole wall.

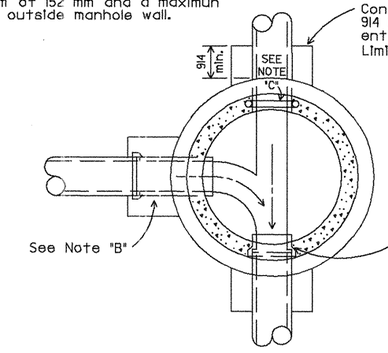


MANHOLE FLOOR PLAN

NOTE "C":
If P.V.C. pipe is used, provide rubber gaskets one size smaller than pipe at each wall crossing of manhole.

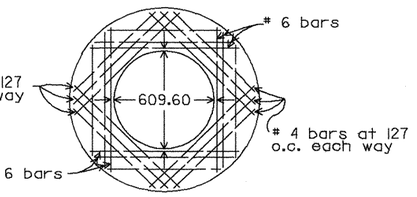


TOP SLAB

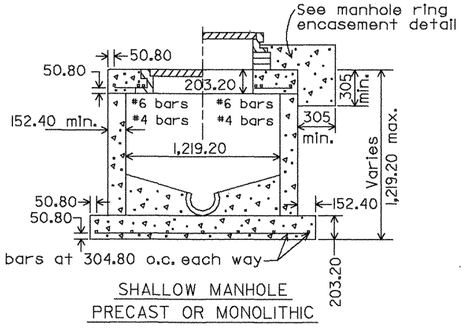


SHALLOW MANHOLE
PRECAST OR MONOLITHIC

STATE OF TEXAS
MACK W. THOMAS III
85607
LICENSED
PROFESSIONAL ENGINEER
9/25/00

NOTE: ALL DIMENSIONS ARE IN METRIC. ( mm )
NOTE: N.S.P.I. DENOTES NO SEPARATE PAY ITEMS

# TYPICAL SECTIONS SANITARY SEWER STANDARDS

PIPE SIZES THRU 609.60 mm

| FED. RD. DIV. NO. | STATE | FEDERAL AID PROJECT NO. | | | | SHEET NO. |
|---|---|---|---|---|---|---|
| 6 | TEXAS | NH 2000(704), etc. | | | | 904 |
| STATE DIST. NO. | COUNTY | | CONT. NO. | SECT. NO. | JOB NO. | HIGHWAY NO. |
| SAT | BEXAR | | 2452 | 01 | 036,ETC | LP 1604 |

## CONCRETE JOINTING COLLAR

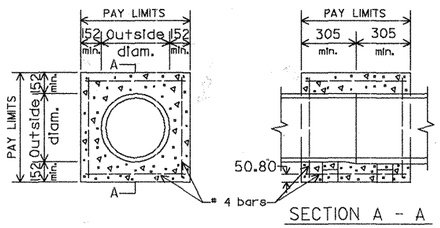


SECTION A - A

After centering pipe ends, wrap joints with 76.20 wide polyvinyl tape or rubber adapter, Can Tex. 1-70A or equal.

Pipe sections to be blocked & supported simliar to encasement detail below subject to approval.

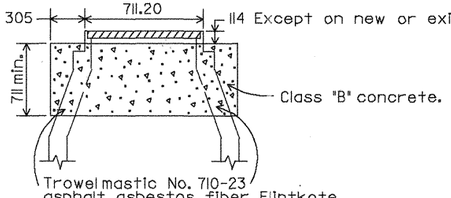


114 Except on new or existing streets.

NOTE : Manhole ring encasement is required on all manholes

## MANHOLE RING & COVER DETAIL

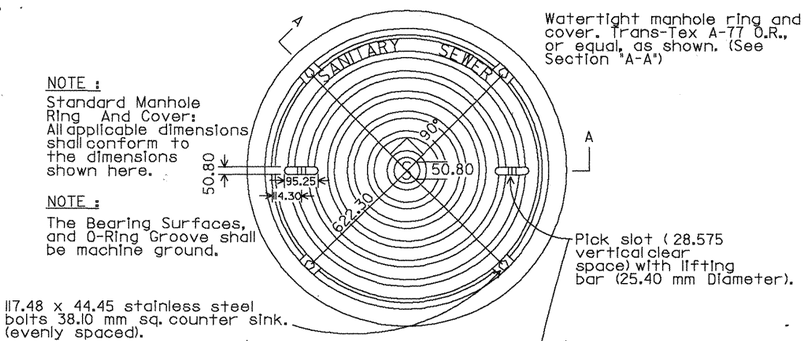


NOTE :
Standard Manhole Ring And Cover: All applicable dimensions shall conform to the dimensions shown here.

NOTE :
The Bearing Surfaces, and O-Ring Groove shall be machine ground.

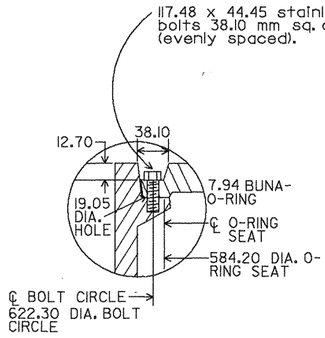


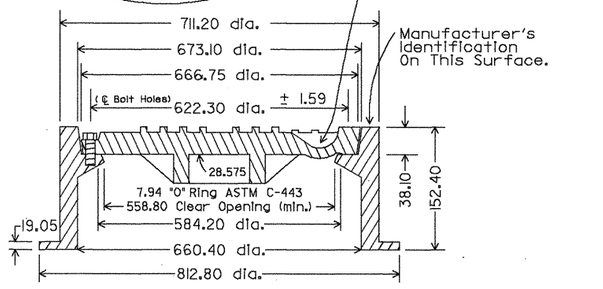


SECTION "A-A"

NOTE :
All dimensions may vary except the diameter or the lid, and the diameter of the center line of the bolt holes, and the minimum diameter of the clear opening. The combined weight of the manhole ring and cover must be at least 181.44 kg

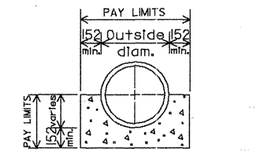


TYPICAL CONCRETE CRADLE

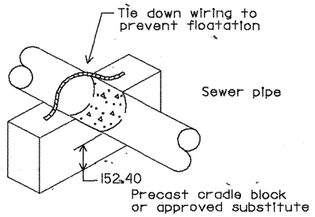


TYPICAL SUPPORT FOR ENCASEMENT OR CRADLE

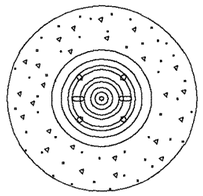

MANHOLE RING ENCASEMENT DETAIL
( ALL MANHOLES )

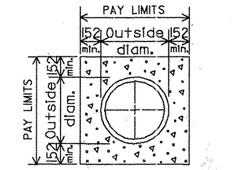


TYPICAL CONCRETE ENCASE.

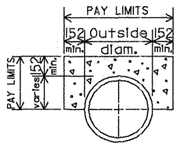


TYPICAL CONCRETE SADDLE

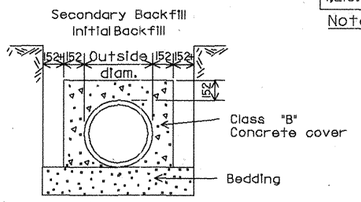


CONCRETE COVER FOR FLEXIBLE PIPE

To be used wherever trench width is greater than 609.60 mm plus O.D.

| SIZE | A | B | MANDREL O. D. PSM (SDR-41) | MANDREL O. D. PSM (SDR-35) | MANDREL O. D. PSM (SDR-26) | MANDREL O. D. LARGE DIA. RIBBED | RING O. D. PSM (SDR-41) | RING O. D. PSM (SDR-35) | RING O. D. PSM (SDR-26) | RING O. D. LARGE DIA. RIBBED |
|---|---|---|---|---|---|---|---|---|---|---|
| 152.40 | 101.60 | 101.60 | 142.75 | 141.22 | 137.92 | —— | 124.71 | 123.19 | 119.89 | —— |
| 203.20 | 134.62 | 152.40 | 191.01 | 189.23 | 184.91 | —— | 172.97 | 171.20 | 166.88 | —— |
| 254.00 | 170.18 | 152.40 | 239.01 | 236.73 | 231.14 | —— | 220.98 | 218.69 | 213.11 | —— |
| 304.80 | 203.20 | 203.20 | 284.48 | 281.43 | 275.08 | —— | 266.45 | 263.40 | 257.05 | —— |
| 381.00 | 254.00 | 228.60 | 348.23 | 344.68 | 336.80 | —— | 330.20 | 326.64 | 318.77 | —— |
| 457.20 | 304.80 | 279.40 | —— | 421.132 | —— | 424.69 | —— | 403.60 | —— | 406.65 |
| 533.40 | 355.60 | 304.80 | —— | 496.82 | —— | 499.36 | —— | 478.79 | —— | 481.33 |
| 609.60 | 406.40 | 381.00 | —— | 558.80 | —— | 565.40 | —— | 540.77 | —— | 547.37 |
| 685.80 | 457.20 | 406.40 | —— | 629.92 | —— | 637.54 | —— | 611.89 | —— | 619.51 |
| 762.00 | 508.00 | 457.20 | —— | —— | —— | 709.68 | —— | —— | —— | 691.64 |
| 914.40 | 609.60 | 533.40 | —— | —— | —— | 854.20 | —— | —— | —— | 836.17 |
| 1,016.00 | 680.72 | 609.60 | —— | —— | —— | 950.21 | —— | —— | —— | 932.18 |
| 1,219.20 | 812.80 | 736.60 | —— | —— | —— | 1,142.75 | —— | —— | —— | 1,124.71 |

Note: Standards For All PVC Pipe Shall Conform To Mimimum Of ASTM D3033.

CHART

## GO, NO GO DEFLECTION TESTING MANDREL

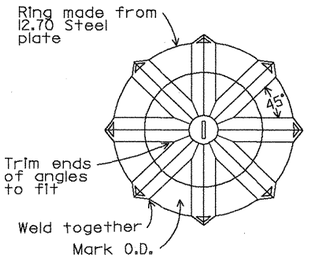


END VIEW

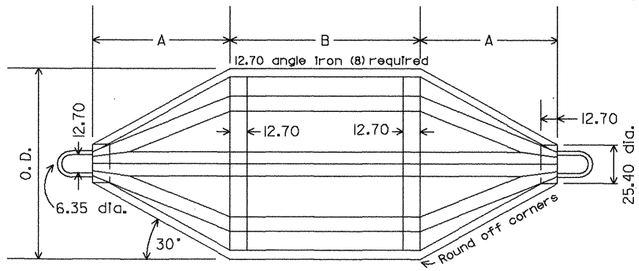


SIDE OR TOP VIEW

NOTE :
After construction is completed, true O. D. dimension for the full length of "B" to 0.254 mm by tool and lathe or grinding.

NOTE: ALL DIMENSIONS ARE IN METRIC. ( mm )
NOTE: N.S.P.I. DENOTES NO SEPARATE PAY ITEMS

STATE OF TEXAS
MACK W. THOMAS III
85607
LICENSED
PROFESSIONAL ENGINEER
9/25/00

# TYPICAL SECTIONS SANITARY SEWER STANDARDS

PIPE SIZES THRU 609.60 mm

| FED. RD. DIV. NO. | STATE | FEDERAL AID PROJECT NO. | | | SHEET NO. |
|---|---|---|---|---|---|
| 6 | TEXAS | NH 2000 (104), etc. | | | 905 |
| STATE DIST. NO. | COUNTY | CONT. NO. | SECT. NO. | JOB NO. | HIGHWAY NO. |
| SAT | BEXAR | 2452 | 01 | 036,ETC | LP 1604 |

Note:
Alignment and grade of conduit will be specified on the construction plans

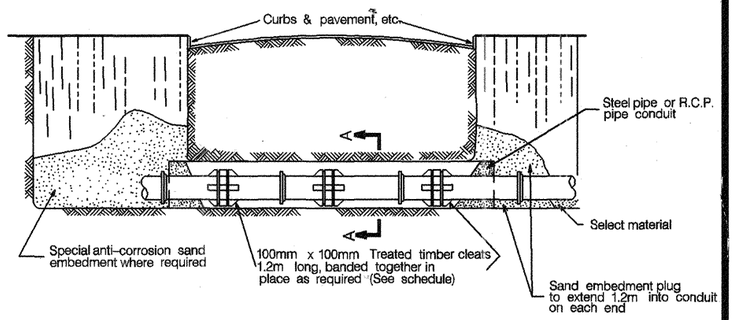


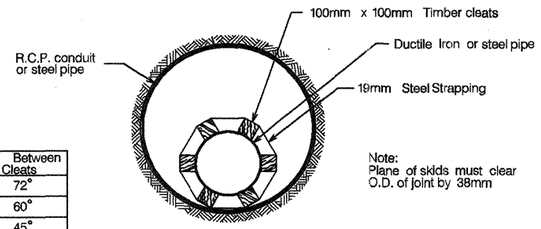


Note:
Plane of skids must clear O.D. of joint by 38mm

SECTION A–A

| Size | No. Cleats Per Tie | ∠ Between Cleats |
|---|---|---|
| 200 | 5 | 72° |
| 300 | 6 | 60° |
| 400 | 8 | 45° |
| 500 | 8 | 45° |
| 600 | 9 | 40° |
| 750 | 15 | 24° |
| 925 | 24 | 15° |

| | | | |
|---|---|---|---|
| PROPERTY OF SAN ANTONIO WATER SYSTEM SAN ANTONIO, TEXAS | PAVEMENT INSTALLATION OF PIPE IN CONDUIT | APPROVED AUGUST 1998 | REVISED |
| | | DD–856–02 | SHEET 1 OF 1 |

STATE OF TEXAS
MACK W. THOMAS III
85607
LICENSED
PROFESSIONAL ENGINEER
9/25/00

NOTE: ALL DIMENSIONS ARE IN METRIC. ( mm )
NOTE: N.S.P.I. DENOTES NO SEPARATE PAY ITEMS

TYPICAL SECTIONS
SANITARY SEWER STANDARDS

| FED. RD. DIV. NO. | STATE | FEDERAL AID PROJECT NO. | | | SHEET NO. |
|---|---|---|---|---|---|
| 6 | TEXAS | NH 2000(704), etc. | | | 906 |
| STATE DIST. NO. | COUNTY | CONT. NO. | SECT. NO. | JOB NO. | HIGHWAY NO. |
| SAT | BEXAR | 2452 | 01 | 036,ETC | LP 1604 |

# GENERAL NOTES

## GENERAL WATER NOTES

1. All materials and construction procedures within the scope of this project shall be approved by the San Antonio Water System (SAWS) and comply with the following as applicable:

A. Current "San Antonio Water System Standard Specifications for Construction"
B. Current "San Antonio Water System Utility Service Regulations"
C. Current City of San Antonio "Standard Specifications for Public Works Construction"
D. Current TxDOT "Standard Specifications for Construction of Highways, Streets, and Drainage"
E. Current City of San Antonio "Right-of-Way Ordinance and Criteria Manual"

2. The Contractor shall not proceed with any pipe installation work until they obtain a copy of the approved General Construction Permit from Consultant and notify SAWS Construction Inspection Division at 704-7110 with at least 3 working days (72 hours) notice.

3. The locations and depths of existing utilities, including service laterals, and drainage structures shown on the plans are approximate only. The Contractor shall verify the exact location and depths of underground utilities at least 48 hours prior to construction whether shown on plans or not, and to protect the same during construction.

| | |
|---|---|
| San Antonio Water System | 704-7107/7109 |
| COSA Drainage | 207-2800 |
| City Sidewalk and Trenching Division | 821-3240 |
| COSA Traffic Signal Operations | 207-7765 |
| Texas State Wide One Call Locator: | 1-800-545-6005 |
| City Public Service | " |
| Southwestern Bell | " |
| Time Warner Cable | " |
| Valero Energy Co. | " |
| Bexar Metropolitan Water District | 354-6536 |

4. No meter boxes to be set in driveways. Any meter boxes set in driveways will be relocated at Contractor's and/or developer's expense.

5. The Contractor shall be responsible for restoring to its original or better condition from damage done to existing fences, curbs, streets, driveways, landscaping and structures.

6. The Contractor shall avoid cutting roots larger than one inch in diameter when excavating near existing trees. Excavation in vicinity of trees shall proceed with caution. The Contractor shall contact the City Arborist at 207-8053 and the SAWS construction inspector for guidance.

SUPPLEMENTARY

7. No extra payment shall be allowed for work called for on the plans but not included on the bid schedule. This incidental work will be required and shall be included under the pay item to which it relates.

8. The Developer dedicates the water mains upon completion by the Developer and acceptance by the San Antonio Water System. The San Antonio Water System will own and maintain said water mains which are located within this particular subdivision. (As applicable.)

9. Contractor and/or Contractor's independently retained employee or structural design/geotechnical/safety/equipment consultant, if any, shall review these plans and available geotechnical information and the anticipated installation site(s) within the project work area in order to implement Contractor's trench excavation safety protection systems, programs and/or procedures. The Contractor's implementation of the systems, programs and/or procedures shall provide for adequate trench excavation safety protection that complies with as a minimum, OSHA Standards for trench excavations. Specifically, Contractor and/or Contractor's independently retained employee or safety consultant shall implement a trench safety program in accordance with OSHA Standards governing the presence and activities of individuals working in and around trench excavations.

10. WORK COMPLETED BY THE CONTRACTOR WHICH HAS NOT RECEIVED A WORK ORDER OR THE NOTICE TO PROCEED WITH THE SAN ANTONIO WATER SYSTEM CONSTRUCTION INSPECTION DIVISION WILL BE SUBJECT TO REMOVAL AND REPLACEMENT BY AND AT THE EXPENSE OF THE CONTRACTOR.

11. The contractor will keep the area on top of and around the water meter box free of all objects and debris.

## MISCELLANEOUS

CABLE LOCATOR
CONTRACTOR TO CONTACT TIME WARNER CABLE LOCATOR 48 HOURS PRIOR TO EXCAVATION AT 1-800-545-6005. CONTRACTOR HAS RESPONSIBILITY TO PROTECT AND SUPPORT CABLE TV PLANT DURING CONSTRUCTION.

C.P.S. LOCATOR
CONTRACTOR SHALL CALL THE TEXAS STATE WIDE ONE LOCATOR NUMBER 1-800-545-6005 FOR LOCATES, 48 HOURS BEFORE BEGINNING ANY EXCAVATION.
DUE TO FEDERAL REGULATIONS TITLE 49, PART 192.181, CPS MUST MAINTAIN ACCESS TO GAS VALVES AT ALL TIMES. THE CONTRACTOR MUST PROTECT AND WORK AROUND ANY GAS VALVES THAT ARE IN THE PROJECT AREA.

SAN ANTONIO WATER SYSTEM LOCATOR
CONTRACTOR TO NOTIFY THE SAN ANTONIO WATER SYSTEM MONITORING DIVISION AT 704-7109 48 HOURS PRIOR TO EXCAVATION.

TELEPHONE LOCATOR
CONTRACTOR TO CONTACT THE TELEPHONE COMPANY CABLE LOCATOR 48 HOURS PRIOR TO EXCAVATION AT 1-800-545-6005. CONTRACTOR HAS THE RESPONSIBILITY TO PROTECT AND SUPPORT TELEPHONE COMPANY PLANT DURING CONSTRUCTION.

CITY OF SAN ANTONIO TRAFFIC SIGNAL LOCATOR
CONTRACTOR TO CONTACT CITY OF SAN ANTONIO DEPARTMENT OF PUBLIC WORKS 48 HOURS PRIOR TO EXCAVATION AT 210-207-7765, CONTRACTOR HAS THE RESPONSIBILITY TO PROTECT AND SUPPORT CITY OF SAN ANTONIO SYSTEMS DURING CONSTRUCTION.

TXDOT TRAFFIC SIGNAL LOCATOR
CONTRACTOR TO CONTACT TXDOT TRAFFIC SIGNAL SHOP 48 HOURS PRIOR TO EXCAVATION AT 210-615-5975. CONTRACTOR HAS THE RESPONSIBILITY TO PROTECT AND SUPPORT TXDOT SYSTEMS DURING CONSTRUCTION.

TXDOT ELECTRICAL SYSTEMS LOCATOR
CONTRACTOR TO CONTACT TXDOT ELECTRICAL SYSTEMS SHOP 48 HOURS PRIOR TO EXCAVATION AT 210-615-5866. CONTRACTOR HAS THE RESPONSIBILITY TO PROTECT AND SUPPORT TXDOT SYSTEMS DURING CONSTRUCTION.

TXDOT TRANSGUIDE SYSTEMS LOCATOR
CONTRACTOR TO CONTACT TXDOT TRANSGUIDE SYSTEM SHOP 48 HOURS PRIOR TO EXCAVATION AT 210-731-5131. CONTRACTOR HAS THE RESPONSIBILITY TO PROTECT AND SUPPORT TXDOT SYSTEMS DURING CONSTRUCTION.



STATE OF TEXAS
ROBERT J. SCHROEDER
50026
REGISTERED
PROFESSIONAL ENGINEER
9/17/02

CO#50

VICKREY & ASSOCIATES, INC.
CONSULTING ENGINEERS
7334 Blanco Road Suite 109 San Antonio, Texas 78216
Telephone: (210)349-3271

SAN ANTONIO WATER SYSTEM

FM LOOP 1604
CULEBRA RD.TO U.S.HWY.90
SAWS JOB NO. 00-5023

© 2002 Texas Department of Transportation

| DESIGNED: | FED. RD. DIV. NO. | STATE | PROJECT NO. | | | HIGHWAY NO. |
|---|---|---|---|---|---|---|
| CHECKED: | 6 | TEXAS | NH 2000(704),etc. | | | LP1604 |
| DRAWN: | STATE DIST. | COUNTY | CONTROL NO. | SECTION NO. | JOB NO. | SHEET NO. |
| CHECKED: | SAT | BEXAR | 2452 | 01 | 036, etc. | 907 |

m:\1895-004\dgn\1895-004-016\sh_gennotes1.dgn
09/17/02

# GENERAL NOTES

## WATER

1. FIRE HYDRANTS SHALL BE MINIMUM 1.5 METER BURY.
2. ALL WORK SHALL CONFORM WITH CURRENT SAN ANTONIO WATER SYSTEM (SAWS) SPECIFICATIONS.
3. ALL 16" AND 12" DUCTILE IRON (D.I.) AND PVC PIPE SHALL BE CLASS 150.
4. ALL MAINS SHALL BE HYDROSTATICALLY TESTED BY THE CONTRACTOR AS PROVIDED FOR IN THE SPECIAL CONDITIONS. THE ENGINEER AND INSPECTOR SHALL BE PRESENT DURING THE TEST.
5. ALL THRUST BLOCKING SHALL BE INSTALLED IN ACCORDANCE WITH SAWS STANDARD DRAWINGS INCLUDED IN THE PLANS. THERE WILL BE NO SEPARATE PAYMENT MADE FOR THRUST BLOCKING.
6. IT IS THE CONTRACTOR'S RESPOSIBILITY TO SEE THAT ALL SIGNS AND BARRICADES ARE PROPERLY INSTALLED AND MAINTAINED. ALL LOCATIONS AND DISTANCES WILL BE DECIDED UPON IN THE FIELD BY THE CONTRACTOR USING THE TEXAS MANUAL ON UNIFORM TRAFFIC CONTROL DEVICES.
7. BARRICADES, SIGNS AND LIGHTS SHALL BE CONFORM TO THE "TYPICAL SIGN AND BARRICADE STANDARDS" SHEETS ANDTHE TEXAS MANUAL ON UNIFORM TRAFFIC CONTROL DEVICES.
8. TRENCH EXCAVATION PROTECTION SHALL BE ACCOMPLISHED AS REQUIRED BY THE PROVISIONS OF PART 1926, SUBPART "P", EXCAVATION, TRENCHING, AND SHORING OF THE OCCUPATIONAL SAFETY AND HEALTH STANDARDS AND INTERPRETATIONS.
9. THE CONTRACTOR SHALL INSTALL MECHANICAL JOINT (M.J.) FITTINGS ON DUCTILE IRON (D.I.) PIPE. SHOULD OTHER PIPE MATERIALS BE UTILIZED IN ACCORDANCE WITH SAWS STANDARDS SPECIFICATIONS APPROPRIATE "RING-TIGHT" JOINT FITTINGS SHALL BE USED.
10. ALL FACILITIES SHOWN TO ABANDONED SHALL BE REMOVED AS NECESSARY AS PART OF RIGHT-OF-WAY PREPARATION. CONTRACTOR SHALL PLUG ALL FACILITIES LEFT IN PLACE TO INSURE STRUCTURAL STABILITY OF FINAL ROADWAY CONSTRUCTION. (SUBSIDIARY TO RIGHT-OF-WAY PREPARATION)
11. SAWS SHALL MACHINE CHLORINATE NEW WATER MAINS GREATER THAN 750 FEET IN LENGTH. CONTRACTOR SHALL CHLORINATE NEW MAINS HAVING LENGTHS OF 750 FEET OR LESS WITH HTH.

## NOTES:

NSPI DENOTES NO SEPARATE PAY ITEM

ALL TIE-INS ARE TO BE DONE AT NIGHT OR AT A TIME WHICH IS LEAST INCONVENIENT TO THE CUSTOMERS.(NO SEPARATE PAY ITEM)

THE LOCATION AND EXISTENCE OF UNDERGROUND CABLE INDICATED ON THE PLANS ARE TAKEN FROM THE BEST RECORDS AVAILABLE AND ARE NOT GUARANTEED TO BE ACCURATE.

THE CONTRACTOR SHALL BE RESPONSIBLE FOR RESTORING TO ITS ORIGINAL OR BETTER CONDITION FROM DAMAGES DONE TO EXISITING FENCES, CURBS, STREETS, DRIVEWAYS, SIDEWALKS, LANDSCAPING AND STRUCTURES.

THE CONTRACTOR SHALL NOT PLACE ANY WASTE MATERIALS IN THE 100 YEAR FLOOD PLAIN WITHOUT FIRST OBTAINING AN APPROVED FLOOD PLAIN PERMIT.

ALL ELEVATIONS FOR SAN ANTONIO WATER SYSTEM FACILITY ADLUSTMENT SHALL BE REFERENCED FROM BENCHMARKS ESTABLISHED FOR THIS PROJECT BY TXDOT.

## TRAFFIC CONTROL NOTES:

1. CONTRACTOR SHALL MAINTAIN OPEN TRAFFIC LANES ON LOOP 1604 AS DIRECTED IN THE LOOP 1604 TRAFFIC CONTROL PLANS AND/OR AS DIRECTED BY THE TxDOT INSPECTOR(S).
2. CONTRACTOR WORK ON LOOP 1604 SHALL BE LIMITED TO THE TIME SPECIFIED IN THE LOOP 1604 TRAFFIC CONTROL PLANS AND/OR AS DIRECTED BY THE TxDOT INSPECTOR(S).
3. TRAFFIC CONTROL FOR WATER MAIN AND SANITARY SEWER MAIN CONSTRUCTION SHALL CONFORM TO TxDOT TRAFFIC CONTROL PLAN STANDARD SHEETS: TCP NOTES - 98, TCP (1-1)-98, TCP (1-2)-98, TCP (1-3)-98, TCP (1-4)-98, TCP (2-1)-98, TCP (2-2)-98, TCP (2-3)-98, TCP (2)-98, TCP (6-1)-98A, TCP (6-2)-98A, TCP (6-3)-98A, TCP (6-4)-98A, TCP (6-5)-98A, TCP (6-6)-98A, TCP (6-7)-98A, TCP (6-8)-98, AND TCP (7-1)-98.
   IF THESE TRAFFIC CONTROL PLAN STANDARD SHEETS ARE NOT CONTAINED WITH THE LOOP 1604 TRAFFIC CONTROL PLANS, THEY MAY BE OBTAINED ON THE TxDOT WEBSITE AT 'www.dot.state.tx.us' UNDER THE HEADINGS OF "Business" & "Plans - TxDOT CAD Standard Plan Files" & Traffic Engineering Standard Plan Sheets (English and Metric)".
   TxDOT BARRICADE STANDARDS BC (1 THRU 9C)-98 SHALL ALSO BE IMPLEMENTED BY THE CONTRACTOR. THESE STANDARDS MAY BE FOUND IN THE LOOP 1604 PLANS OR MAY BE OBTAINED AT THE WEBSITE IDENTIFIED IN THE PRECEDING PARAGRAPH.

## TRENCH EXCAVATION PROTECTION:

CONTRACTOR AND/OR CONTRACTOR'S INDEPENDENTLY RETAINED EMPLOYEE OR STRUCTURAL DESIGN/GEOTECHNICAL/SAFETY/EQUIPMENT CONSULTANT, IF ANY, SHALL REVIEW THESE PLANS AND AVAILABLE GEOTECHNICAL INFORMATION AND THE ANTICIPATED INSTALLATION SITE(S) WITHIN THE PROJECT WORK AREA IN ORDER TO IMPLEMENT CONTRACTOR'S TRENCH EXCAVATION SAFETY PROTECTION SYSTEMS, PROGRAMS, AND/OR PROCEDURES FOR THE PROJECT DESCRIBED IN THE CONTRACT DOCUMENTS. THE CONTRACTOR'S IMPLEMENTATION OF THESE SYSTEMS, PROGRAMS, AND/OR PROCEDURES SHALL PROVIDE FOR ADEQUATE TRENCH EXCAVATION SAFETY PROTECTION THAT COMPLY WITH AS A MINIMUM, OSHA STANDARDS FOR TRENCH EXCAVATIONS. SPECIFICALLY, CONTRACTOR AND/OR CONTRACTOR'S INDEPENDENTLY RETAINED EMPLOYEE OR SAFETY CONSULTANT SHALL IMPLEMENT A TRENCH SAFETY PROGRAM IN ACCORDANCE WITH OSHA STANDARDS GOVERNING THE PRESENCE AND ACTIVITIES OF INDIVIDUALS WORKING IN AND AROUND TRENCH EXCAVATION.

## UTILITIES STATEMENT

THE UNDERGROUND UTILITIES SHOWN HAVE BEEN LOCATED FROM FIELD SURVEY INFORMATION AND EXISTING DRAWINGS. THE ENGINEER MAKES NO GUARANTEE THAT THE UNDERGROUND UTILITIES COMPRISE ALL SUCH UTILITIES IN THE AREA, EITHER IN SERVICE OR ABANDON. THE ENGINEER FURTHER DOES NOT WARRANT THAT THE UNDERGROUND UTILITIES SHOWN ARE IN THE EXACT LOCATION INDICATED. THE ENGINEER HAS NOT PHYSICALLY LOCATED THE UNDERGROUND UTILITIES.

OTHER NOTES:

1) ALL WATER MAIN BEING INSTALLED IN LOOP 1604 RIGHT-OF-WAY SHALL BE INSTALLED IN ACCORDANCE WITH THE PHASING TRAFFIC CONTROL PLANS PREPARED BY THE TEXAS DEPARTMENT OF TRANSPORTATION FOR THE LOOP 1604 PROJECT.
2) CONTRACTOR SHALL VERIFY LOCATION OF ALL EXISTING UTILITIES PRIOR TO BEGINNING CONSTRUCTION.
3) ALL HORIZONTAL AND VERTICAL BENDS, PI's AND PVI's SHALL HAVE THRUST BLOCKING. THRUST BLOCKING SUBSIDIARY TO PIPE INSTALLATION.
4) PIPE WILL HAVE RESTRAINED JOINTS AS SHOWN ON PLANS RESTAINED JOINTS SUBSIDIARY TO PIPE INSTALLATION.
5) ABANDONMENT AND REMOVAL OF EXISTING WATER MAINS SHALL BE NO SEPARATE PAY ITEM (NSPI).
6) EXCESS EXCAVATED MATERIAL SHALL BE HAULED OFF SITE. THIS WORK SHALL BE SUBSIDIARY TO COST OF PIPE.
7) IF CONTRACTOR DAMAGES NEW VEGETATION, SEED, TOP SOIL OR OTHER IMPROVEMENTS INSTALLED BY TXDOT, CONTRACTOR SHALL REPAIR OR REPLACE DAMAGED GOODS TO SATISFACTION OF TXDOT AT CONTRACTOR'S EXPENSE.
8) EXISTING FIRE HYDRANTS ON MAINS TO BE ABANDONED WILL BE REMOVED AND RETURNED TO SAWS (NSPI).
9) 6" VALVE TO FIRE HYDRANT IS SUBSIDIARY TO FIRE HYDRANT INSTALLATION.

COH50

STATE OF TEXAS
ROBERT J. SCHROEDER
50026
REGISTERED PROFESSIONAL ENGINEER
9/17/02

SHEET 2 OF 8

VICKREY & ASSOCIATES, INC.
CONSULTING ENGINEERS
7334 Blanco Road Suite 109 San Antonio, Texas 78216
Telephone: (210)349-3271

SAN ANTONIO WATER SYSTEM

FM LOOP 1604
CULEBRA RD.TO U.S.HWY.90
SAWS JOB NO. 00-5023

Texas Department of Transportation

| DESIGNED: | FED. RD. DIV. NO. | STATE | PROJECT NO. | | | HIGHWAY NO. |
|---|---|---|---|---|---|---|
| CHECKED: | 6 | TEXAS | NH 2000(704),etc. | | | LP1604 |
| DRAWN: | STATE DIST. | COUNTY | CONTROL NO. | SECTION NO. | JOB NO. | SHEET NO. |
| CHECKED: | SAT | BEXAR | 2452 | 01 | 036, etc. | 908 |

| DESCRIPTION | EST. | UNITS |
|---|---|---|
| TRENCH EXCAVATION PROTECTION | 134 | M |
| PIPE WTR MAIN (D.I.) (925mm) | 134 | M |
| TEMP BLOW-OFF (100mm) | 1 | EA. |
| DUCTILE IRON FITTINGS | 3007.4 | KG. |
| | | |
| | | |
| | | |
| | | |

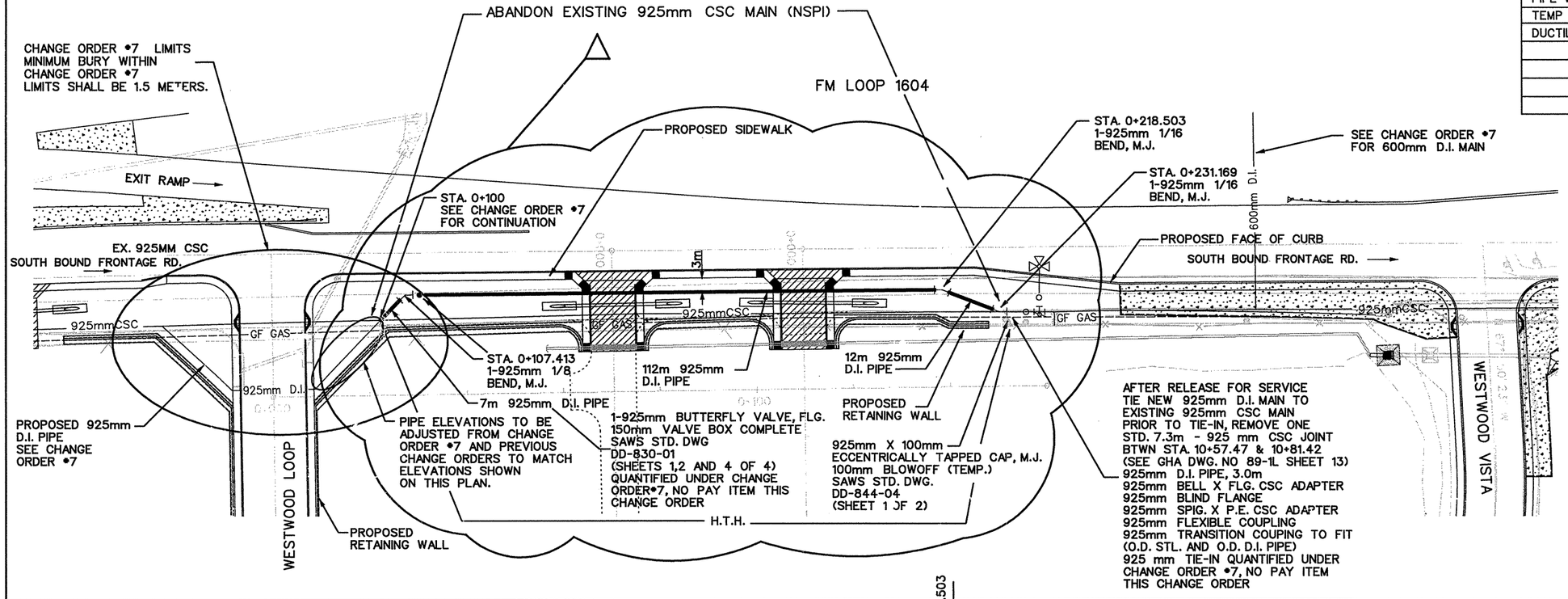


SCALE
1 = 1000 (Horz.)
1 = 100 (Vert.)

NOTES

1.) 925mm = 36 in

2.) PROPOSED TOP OF PIPE AND FLOW LINE ELEVATIONS SHOWN IN THIS CHANGE ORDER TAKE. PRECEDENCE OVER ANY PREVIOUS CHANGE ORDERS INCLUDING ORDER •7.

3.) MINIMUM BURY SHALL BE 1.5 METERS.

4.) STATIONING BASED ON CENTERLINE OF 925mm D.I. PIPE.

5.) CONTRACTOR SHALL BE RESPONSIBLE FOR OBTAINING ANY TEMPORARY CONSTRUCTION EASEMENTS THAT MAY BE REQUIRED.

6.) CONTRACTOR SHALL REFER TO GENERAL NOTES FOR THIS CHANGE ORDER FOR ADDITIONAL CONSTRUCTION REQUIREMENTS.

7.) NSPI = NO SEPARATE PAY ITEM

8.) SAWS = SAN ANTONIO WATER SYSTEM

9.) HYDROSTATIC PRESSURE TEST QUANTIFIED UNDER CHANGE ORDER •7, NO PAY ITEM THIS CHANGE ORDER

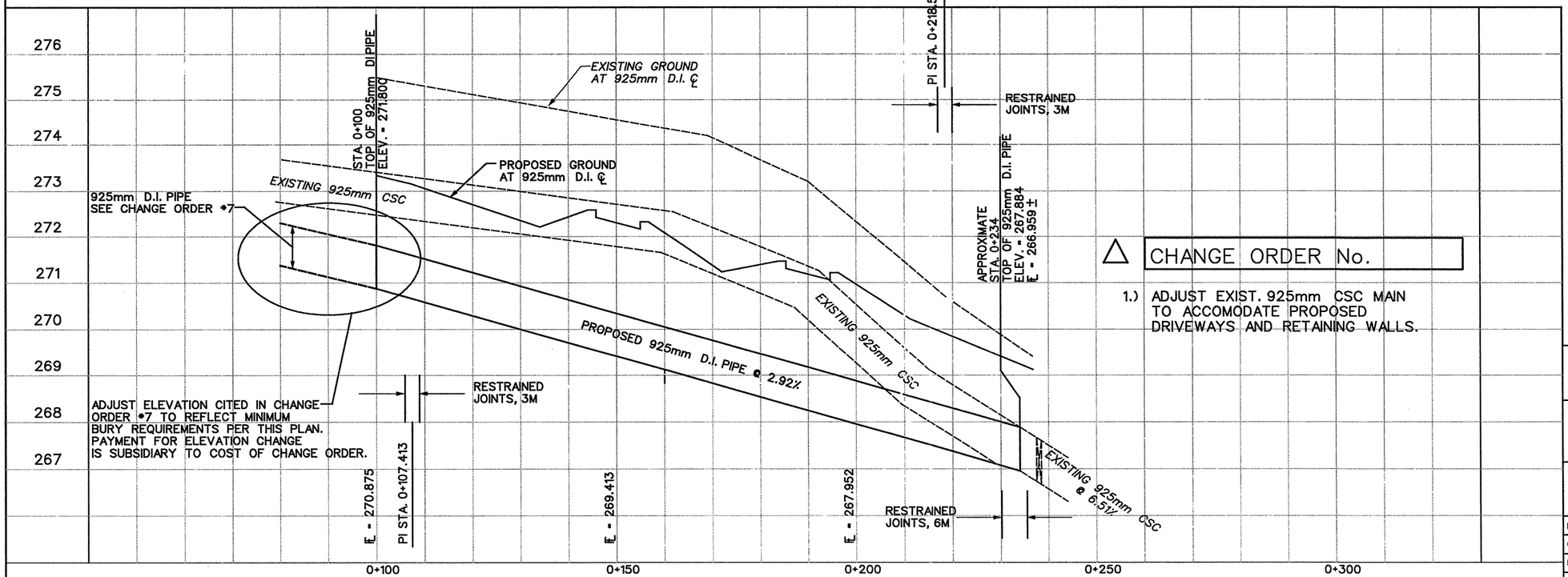


△ CHANGE ORDER No.

1.) ADJUST EXIST. 925mm CSC MAIN TO ACCOMODATE PROPOSED DRIVEWAYS AND RETAINING WALLS.

STATE OF TEXAS
ROBERT J. SCHROEDER
50026
REGISTERED
PROFESSIONAL ENGINEER
9/17/02

CO#50 SHEET 3 OF 8


VICKREY & ASSOCIATES, INC.
CONSULTING ENGINEERS
7334 Blanco Road Suite 109 San Antonio, Texas 78216
Telephone: (210)349-3271


SAN ANTONIO WATER SYSTEM

FM LOOP 1604
CULEBRA RD.TO U.S.HWY.90
SAWS JOB NO. 00-5023

Texas Department of Transportation

| DESIGNED: | FED. RD. DIV. NO. | STATE | PROJECT NO. | | | HIGHWAY NO. |
|---|---|---|---|---|---|---|
| CHECKED: | 6 | TEXAS | NH 2000(704),etc. | | | LP1604 |
| DRAWN: | STATE DIST. | COUNTY | CONTROL NO. | SECTION NO. | JOB NO. | SHEET NO. |
| CHECKED: | SAT | BEXAR | 2452 | 01 | 036, etc. | 909 |

90% SUBMITTAL
09/17/2002 12:07:25 PM
M:\1895-004\dgn\1895-004-016\SH_p&p01.dgn

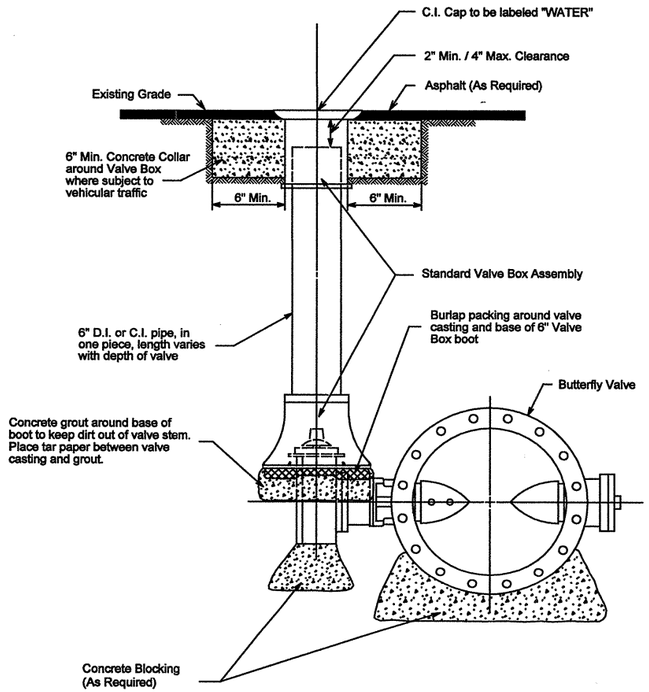


| PROPERTY OF SAN ANTONIO WATER SYSTEM SAN ANTONIO, TEXAS | INSTALLATION OF BURIED BUTTERFLY VALVE WITH VALVE BOX COMPLETE | APPROVED AUGUST 1998 | REVISED | SHEET 1 OF 4 |
|---|---|---|---|---|
| | | DD-830-01 | | |

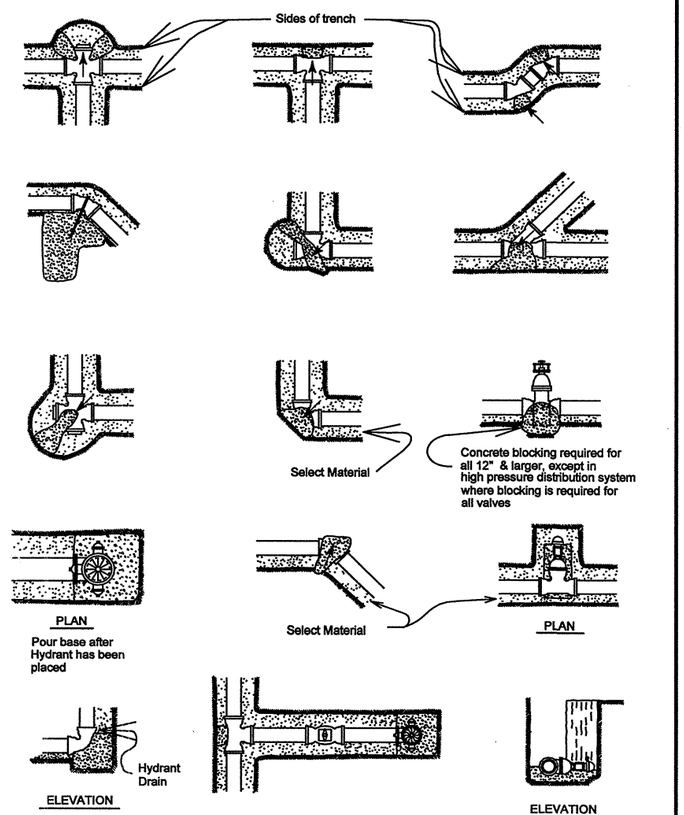


| PROPERTY OF SAN ANTONIO WATER SYSTEM SAN ANTONIO, TEXAS | THRUST BLOCKS FOR FITTINGS ( WATER ONLY ) | APPROVED AUGUST 1998 | REVISED | SHEET 1 OF 1 |
|---|---|---|---|---|
| | | DD-839-01 | | |

STATE OF TEXAS
ROBERT J. SCHROEDER
50026
REGISTERED PROFESSIONAL ENGINEER
5/17/02

CO#50 SHEET 4 OF 8

VICKREY & ASSOCIATES, INC.
CONSULTING ENGINEERS
7334 Blanco Road Suite 109 San Antonio, Texas 78216
Telephone: (210)349-3271

SAN ANTONIO WATER SYSTEM

FM LOOP 1604
CULEBRA RD.TO U.S.HWY.90
SAWS JOB NO. 00-5023

Texas Department of Transportation

| DESIGNED: | FED. RD. DIV. NO. | STATE | PROJECT NO. | | | HIGHWAY NO. |
|---|---|---|---|---|---|---|
| CHECKED: | 6 | TEXAS | NH 2000(704),etc. | | | LP1604 |
| DRAWN: | STATE DIST. | COUNTY | CONTROL NO. | SECTION NO. | JOB NO. | SHEET NO. |
| CHECKED: | SAT | BEXAR | 2452 | 01 | 036, etc. | 910 |

90% SUBMITTAL
09/17/02 11:40:49 AM
m:\1895-004\dgn\1895-004-016\SH_details1.dgn

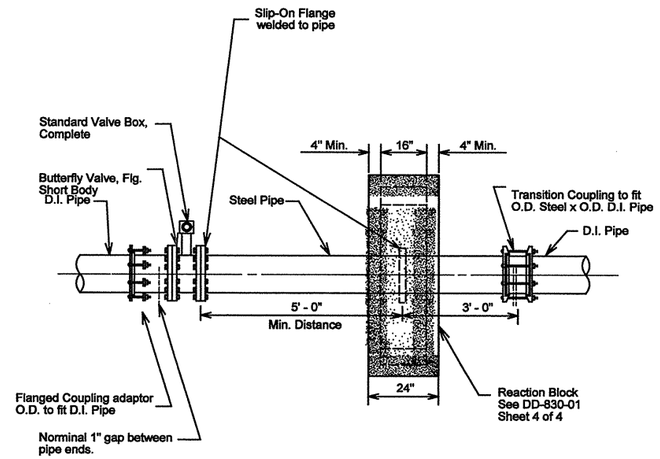


| PROPERTY OF SAN ANTONIO WATER SYSTEM SAN ANTONIO, TEXAS | TYPICAL BUTTERFLY VALVE ARRANGEMENT FOR 20" AND LARGER D.I. MAIN | APPROVED | REVISED |
|---|---|---|---|
| | | AUGUST 1998 | |
| | | DD-830-01 | SHEET 2 OF 4 |

Notes:
1. Embed all exterior metal surfaces in silica sand
2. All reinforcing bars in the Reaction Block shall be #5

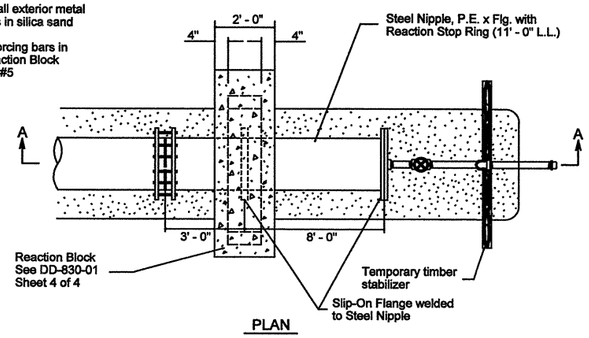


PLAN

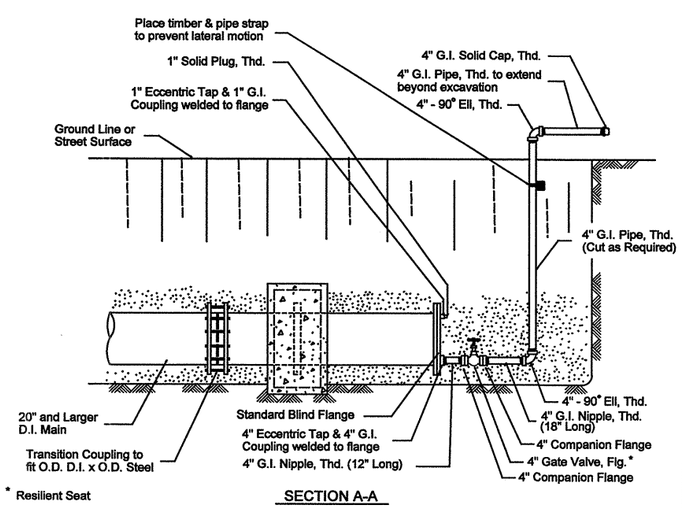


* Resilient Seat

SECTION A-A

| PROPERTY OF SAN ANTONIO WATER SYSTEM SAN ANTONIO, TEXAS | 4" TEMPORARY BLOW-OFF ASSEMBLY 20" AND LARGER D.I. MAIN | APPROVED | REVISED |
|---|---|---|---|
| | | AUGUST 1998 | |
| | | DD-844-04 | SHEET 1 OF 2 |

STATE OF TEXAS
ROBERT J. SCHROEDER
50026
REGISTERED
PROFESSIONAL ENGINEER
9/17/02

C0#50 SHEET 5 OF 8

VICKREY & ASSOCIATES, INC.
CONSULTING ENGINEERS
7334 Blanco Road Suite 109 San Antonio, Texas 78216
Telephone: (210)349-3271

SAN ANTONIO WATER SYSTEM

FM LOOP 1604
CULEBRA RD.TO U.S.HWY.90
SAWS JOB NO. 00-5023

Texas Department of Transportation

| DESIGNED: | FED. RD. DIV. NO. | STATE | PROJECT NO. | | | HIGHWAY NO. |
|---|---|---|---|---|---|---|
| CHECKED: | 6 | TEXAS | NH 2000(704),etc. | | | LP1604 |
| DRAWN: | STATE DIST. | COUNTY | CONTROL NO. | SECTION NO. | JOB NO. | SHEET NO. |
| CHECKED: | SAT | BEXAR | 2452 | 01 | 036, etc. | 411 |

90% SUBMITTAL
09/17/02 11:41:07 AM
m:\1895-004\dgn\1895-004-016\SH_details2.dgn

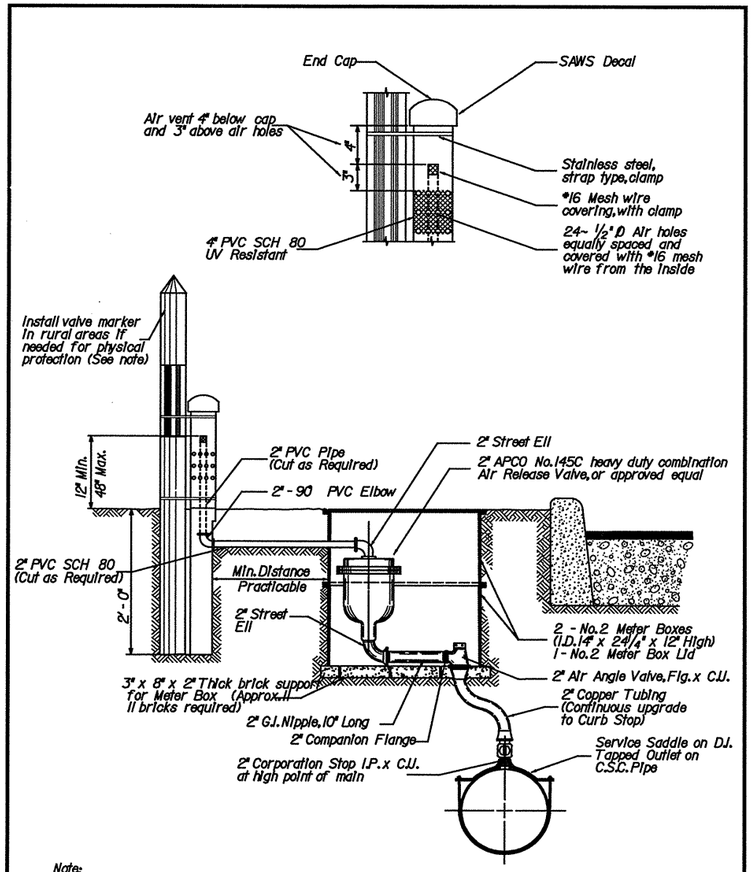


Note:
In rural areas, riser should be at Property Line and at maximum height.

| PROPERTY OF SAN ANTONIO WATER SYSTEM SAN ANTONIO, TEXAS | INSTALLATION OF 2" AIR RELEASE VALVE | APPROVED AUGUST 1998 | REVISED | SHEET 1 OF 1 |
|---|---|---|---|---|
| | | DD-846-02 | | |

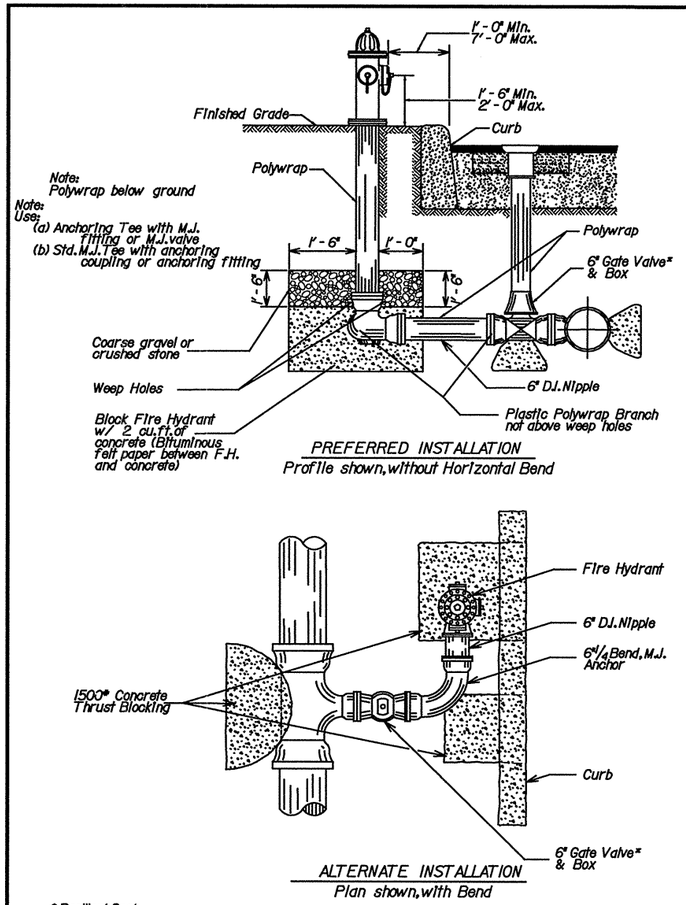


PREFERRED INSTALLATION
Profile shown, without Horizontal Bend




ALTERNATE INSTALLATION
Plan shown, with Bend

* Resilient Seat

| PROPERTY OF SAN ANTONIO WATER SYSTEM SAN ANTONIO, TEXAS | FIRE HYDRANT INSTALLATION | APPROVED AUGUST 1998 | REVISED | SHEET 1 OF 1 |
|---|---|---|---|---|
| | | DD-834-01 | | |

STATE OF TEXAS
ROBERT J. SCHROEDER
50026
REGISTERED PROFESSIONAL ENGINEER
9/17/02

C0450 SHEET 6 OF 8

**VICKREY & ASSOCIATES, INC.**
CONSULTING ENGINEERS
7334 Blanco Road Suite 109 San Antonio, Texas 78216
Telephone: (210)349-3271

SAN ANTONIO WATER SYSTEM

FM LOOP 1604
CULEBRA RD. TO U.S. HWY. 90
SAWS JOB NO. 00-5023

© 2000 Texas Department of Transportation

| DESIGNED: | FED. RD. DIV. NO. | STATE | PROJECT NO. | | | HIGHWAY NO. |
|---|---|---|---|---|---|---|
| CHECKED: | 6 | TEXAS | NH 2000(704), etc. | | | LP1604 |
| DRAWN: | STATE DIST. | COUNTY | CONTROL NO. | SECTION NO. | JOB NO. | SHEET NO. |
| CHECKED: | SAT | BEXAR | 2452 | 01 | 036, etc. | 912 |

90% SUBMITTAL
09/17/02 11:41:21 AM
m:\1895-004\dgn\1895-004-016\SH_details3.dgn

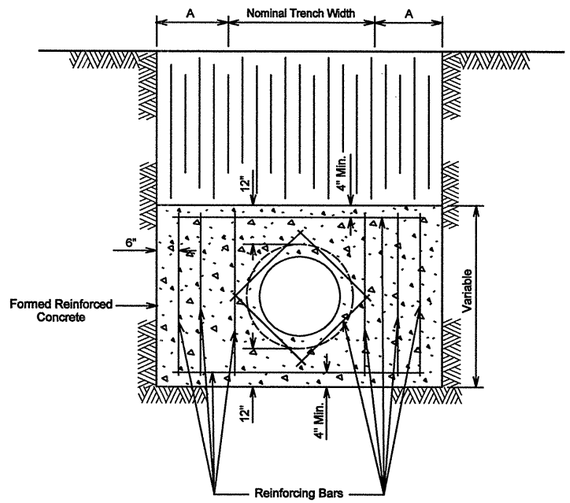


END VIEW OF REACTION BLOCK

| Main Size | A (Min.) | Reinforcing Bar Size | Bearing Surface Required (in Sq. Ft.) |
|---|---|---|---|
| 6" | 12" | #4 | 3 |
| 8" | 12" | #4 | 5 |
| 12" | 18" | #4 | 8 |
| 16" | 18" | #4 | 12 |
| 20" | 28" | #5 | 16 |
| 24" | 28" | #5 | 23 |
| 30" | 36" | #5 | 35 |
| 36" | 36" | #5 | 50 |
| 42" | 36" | #5 | 70 |

| PROPERTY OF | CONCRETE REACTION BLOCK FOR BUTTERFLY VALVES & BLOW-OFF ASSEMBLIES ON D.I. & C.S.C. MAINS | APPROVED | REVISED |
|---|---|---|---|
| SAN ANTONIO WATER SYSTEM<br>SAN ANTONIO, TEXAS | | AUGUST 1998 | |
| | | DD-830-01 | SHEET 4 OF 4 |

STATE OF TEXAS
ROBERT J. SCHROEDER
50026
REGISTERED
PROFESSIONAL ENGINEER
9/17/02

C0450 SHEET 7 OF 8

VICKREY & ASSOCIATES, INC.
CONSULTING ENGINEERS
7334 Blanco Road Suite 109 San Antonio, Texas 78216
Telephone: (210)349-3271

SAN ANTONIO WATER SYSTEM

FM LOOP 1604
CULEBRA RD.TO U.S.HWY.90
SAWS JOB NO. 00-5023

Texas Department of Transportation

| DESIGNED: | FED. RD. DIV. NO. | STATE | PROJECT NO. | | | HIGHWAY NO. |
|---|---|---|---|---|---|---|
| CHECKED: | 6 | TEXAS | NH 2000(704),etc. | | | LP1604 |
| DRAWN: | STATE DIST. | COUNTY | CONTROL NO. | SECTION NO. | JOB NO. | SHEET NO. |
| CHECKED: | SAT | BEXAR | 2452 | 01 | 036, etc. | 913 |

1604 & 90/: SUBMITTAL
09/17/02 11:41:41 AM
m:\1895-004\dgn\1895-004-016\SH_details4.dgn

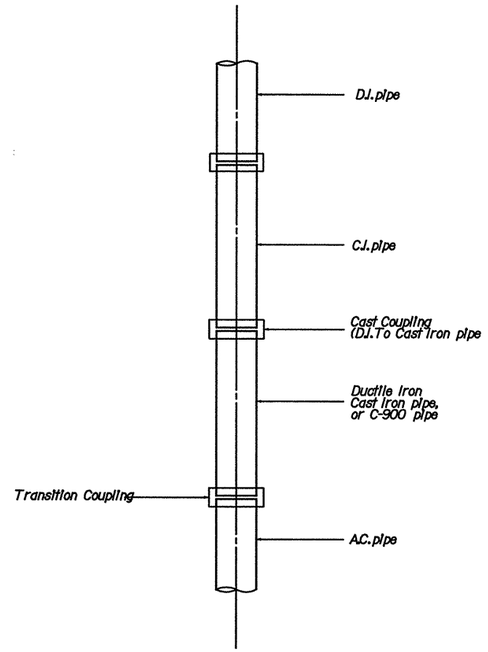


| PROPERTY OF SAN ANTONIO WATER SYSTEM SAN ANTONIO, TEXAS | PIPE COUPLINGS | APPROVED AUGUST 1998 | REVISED |
|---|---|---|---|
| | | DD-812-00 | SHEET 1 OF 1 |

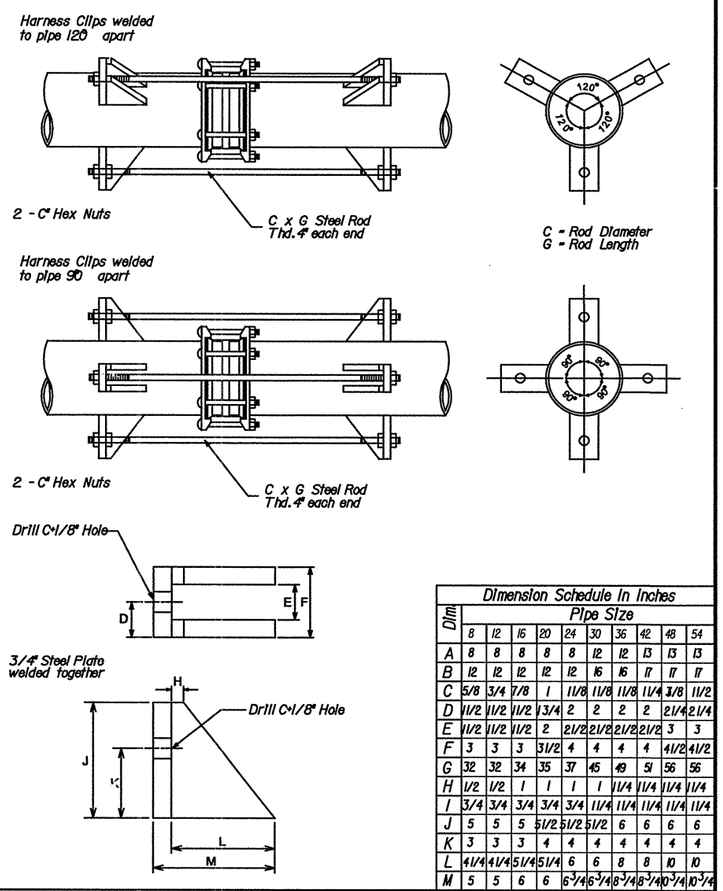


| Dim | Pipe Size 8 | 12 | 16 | 20 | 24 | 30 | 36 | 42 | 48 | 54 |
|---|---|---|---|---|---|---|---|---|---|---|
| A | 8 | 8 | 8 | 8 | 8 | 12 | 12 | 13 | 13 | 13 |
| B | 12 | 12 | 12 | 12 | 12 | 16 | 16 | 17 | 17 | 17 |
| C | 5/8 | 3/4 | 7/8 | 1 | 1 1/8 | 1 1/8 | 1 1/8 | 1 1/4 | 1 3/8 | 1 1/2 |
| D | 1 1/2 | 1 1/2 | 1 1/2 | 1 3/4 | 2 | 2 | 2 | 2 | 2 1/4 | 2 1/4 |
| E | 1 1/2 | 1 1/2 | 1 1/2 | 2 | 2 1/2 | 2 1/2 | 2 1/2 | 2 1/2 | 3 | 3 |
| F | 3 | 3 | 3 | 3 1/2 | 4 | 4 | 4 | 4 | 4 1/2 | 4 1/2 |
| G | 32 | 32 | 34 | 35 | 37 | 45 | 49 | 51 | 56 | 56 |
| H | 1/2 | 1/2 | 1 | 1 | 1 | 1 | 1 1/4 | 1 1/4 | 1 1/4 | 1 1/4 |
| I | 3/4 | 3/4 | 3/4 | 3/4 | 3/4 | 1 1/4 | 1 1/4 | 1 1/4 | 1 1/4 | 1 1/4 |
| J | 5 | 5 | 5 | 5 1/2 | 5 1/2 | 5 1/2 | 6 | 6 | 6 | 6 |
| K | 3 | 3 | 3 | 4 | 4 | 4 | 4 | 4 | 4 | 4 |
| L | 4 1/4 | 4 1/4 | 5 1/4 | 5 1/4 | 6 | 6 | 8 | 8 | 10 | 10 |
| M | 5 | 5 | 6 | 6 | 6-3/4 | 6-3/4 | 8-3/4 | 8-3/4 | 10-3/4 | 10-3/4 |

Dimension Schedule In Inches

| PROPERTY OF SAN ANTONIO WATER SYSTEM SAN ANTONIO, TEXAS | COUPLING HARNESS STEEL PIPE | APPROVED MAY 1998 | REVISED |
|---|---|---|---|
| | | DD-816-01 | SHEET 1 OF 1 |

STATE OF TEXAS
ROBERT J. SCHROEDER
50026
REGISTERED
PROFESSIONAL ENGINEER
9/17/02

COH50 SHEET 8 OF 8

VICKREY & ASSOCIATES, INC.
CONSULTING ENGINEERS
7334 Blanco Road Suite 109 San Antonio, Texas 78216
Telephone: (210)349-3271

SAN ANTONIO WATER SYSTEM

FM LOOP 1604
CULEBRA RD. TO U.S. HWY. 90
SAWS JOB NO. 00-5023

Texas Department of Transportation

| DESIGNED: | FED. RD. DIV. NO. | STATE | PROJECT NO. | | | HIGHWAY NO. |
|---|---|---|---|---|---|---|
| CHECKED: | 6 | TEXAS | NH 2000(704),etc. | | | LP1604 |
| DRAWN: | STATE DIST. | COUNTY | CONTROL NO. | SECTION NO. | JOB NO. | SHEET NO. |
| CHECKED: | SAT | BEXAR | 2452 | 01 | 036, etc. | 914 |

90%: SUBMITTAL
09/17/02 11:41:57 AM
m:\1895-004\dgn\1895-004-016\SH_details5.dgn

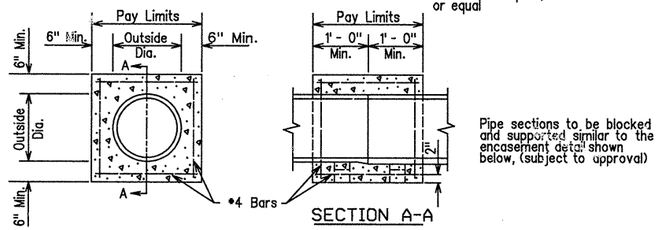


After centering pipe ends, wrap joints with 3" wide polyvinyl tape or rubber adapter, Can-Tex.1-70A or equal

Pipe sections to be blocked and supported similar to the encasement detail shown below, (subject to approval)

CONCRETE JOINTING COLLAR

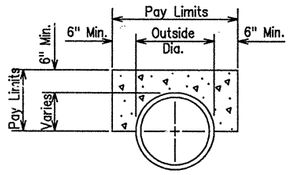


Note:
All concrete encasement shall be poured at a plane 6" above the pipe between excavated trench walls

TYPICAL CONCRETE SADDLE

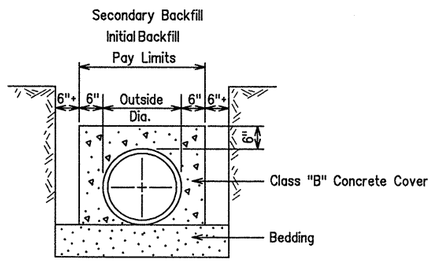


CONCRETE COVER FOR FLEXIBLE PIPE

To be used wherever trench width is greater than two feet (2') plus O.D.

| PROPERTY OF SAN ANTONIO WATER SYSTEM SAN ANTONIO, TEXAS | TYPICAL CONCRETE DETAILS | APPROVED AUGUST 1998 | REVISED |
|---|---|---|---|
| | | DD-858-02 | SHEET 1 OF 1 |

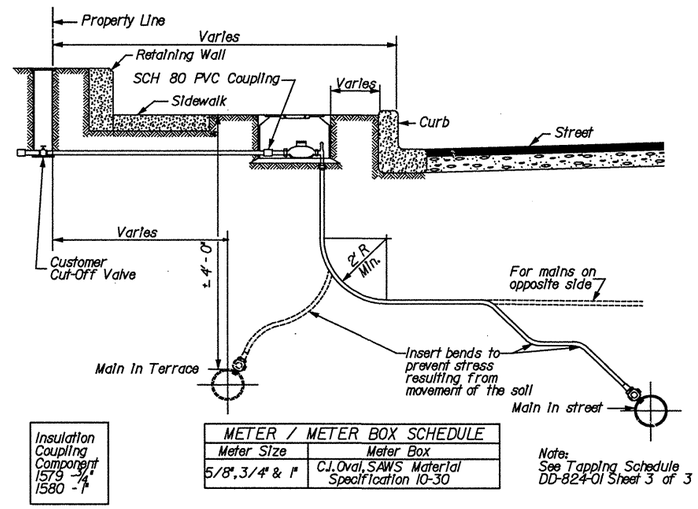


Insulation Coupling Component
1579 - ¾"
1580 - 1"

| METER / METER BOX SCHEDULE | |
|---|---|
| Meter Size | Meter Box |
| 5/8", 3/4" & 1" | CI. Oval, SAWS Material Specification 10-30 |

Note:
See Tapping Schedule DD-824-01 Sheet 3 of 3

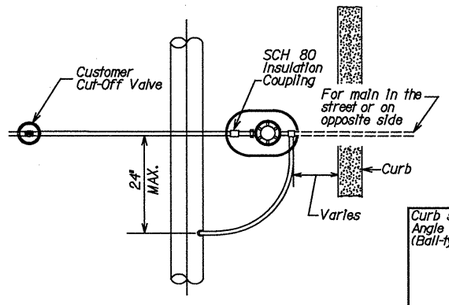


IMPROVED STREET
⅝" THRU 1" SERVICE

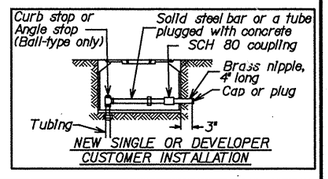


NEW SINGLE OR DEVELOPER CUSTOMER INSTALLATION

| PROPERTY OF SAN ANTONIO WATER SYSTEM SAN ANTONIO, TEXAS | COPPER SERVICE INSTALLATION MAIN IN TERRACE | APPROVED AUGUST 1998 | REVISED |
|---|---|---|---|
| | | DD-824-01 | SHEET 1 OF 3 |

CO#51

STATE OF TEXAS
ROBERT J. SCHROEDER
50026
PROFESSIONAL ENGINEER
REGISTERED
10/9/02

SHEET 9-1 OF 14

VICKREY & ASSOCIATES, INC.
CONSULTING ENGINEERS
7334 Blanco Road Suite 109 San Antonio, Texas 78216
Telephone: (210)349-3271

SAN ANTONIO WATER SYSTEM

FM LOOP 1604
CULEBRA RD. TO U.S. HWY. 90
SAWS JOB NO. 00-5023

Texas Department of Transportation

| DESIGNED: | FED. RD. DIV. NO. | STATE | PROJECT NO. | | | HIGHWAY NO. |
|---|---|---|---|---|---|---|
| CHECKED: | 6 | TEXAS | NH 2000(704), etc. | | | LP1604 |
| DRAWN: | STATE DIST. | COUNTY | CONTROL NO. | SECTION NO. | JOB NO. | SHEET NO. |
| CHECKED: | SAT | BEXAR | 2452 | 01 | 036, etc. | 915 |

m:\1895-004\dgn\1895-004-016 Change Orders\sh_wtrde101.dgn 10/09/02 08:46:41 AM

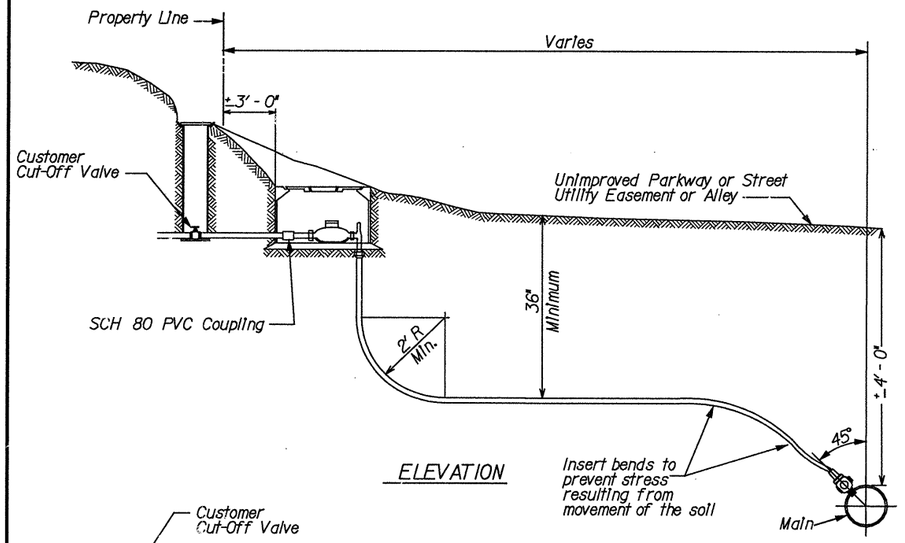


ELEVATION

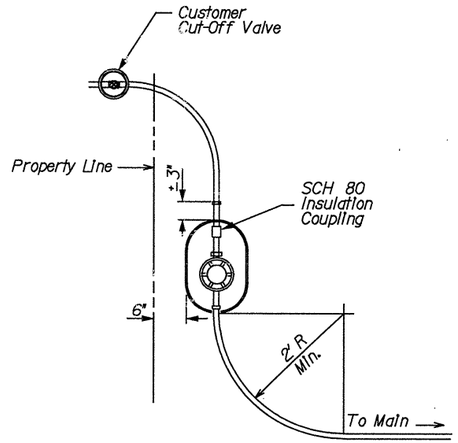


PARTIAL PLAN

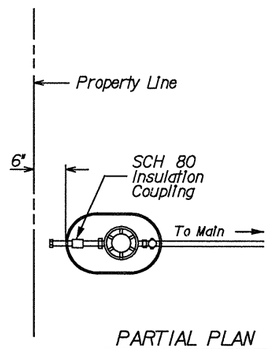


PARTIAL PLAN

UNIMPROVED STREET
5/8" THRU 1" SERVICE

| PROPERTY OF SAN ANTONIO WATER SYSTEM SAN ANTONIO, TEXAS | COPPER SERVICE INSTALLATION UNIMPROVED STREET | APPROVED AUGUST 1998 | REVISED |
|---|---|---|---|
| | | DD-824-01 | SHEET 2 OF 3 |

**PIPE TAPPING SCHEDULE**

| PIPE DIAMETER | SERVICE SIZE | | | |
|---|---|---|---|---|
| | 3/4" | 1" | 1 1/2" | 2" |
| 6" A.C. | Tap | Tap | Tap With Service Saddle | Tap With Service Saddle |
| 6" C.I. or D.I. | Tap | Tap | Tap With Service Saddle | Tap With Service Saddle |
| 8" A.C. | Tap | Tap | Tap With Service Saddle | Tap With Service Saddle |
| 8" C.I. or D.I. | Tap | Tap | Tap With Service Saddle | Tap With Service Saddle |
| 8" PVC | Tap With Service Saddle | Tap With Service Saddle | Tap With Service Saddle | Tap With Service Saddle |
| 10" A.C. | Tap | Tap | Tap With Service Saddle | Tap With Service Saddle |
| 10" C.I. or D.I. | Tap | Tap | Tap With Service Saddle | Tap With Service Saddle |
| 10" PVC | Tap With Service Saddle | Tap With Service Saddle | Tap With Service Saddle | Tap With Service Saddle |
| 12" A.C. | Tap | Tap | Tap With Service Saddle | Tap With Service Saddle |
| 12" C.I. or D.I. | Tap | Tap | Tap With Service Saddle | Tap With Service Saddle |
| 12" PVC | Tap With Service Saddle | Tap With Service Saddle | Tap With Service Saddle | Tap With Service Saddle |
| 16" A.C. | Tap | Tap | Tap With Service Saddle | Tap With Service Saddle |
| 16" C.I. or D.I. | Tap | Tap | Tap With Service Saddle | Tap With Service Saddle |

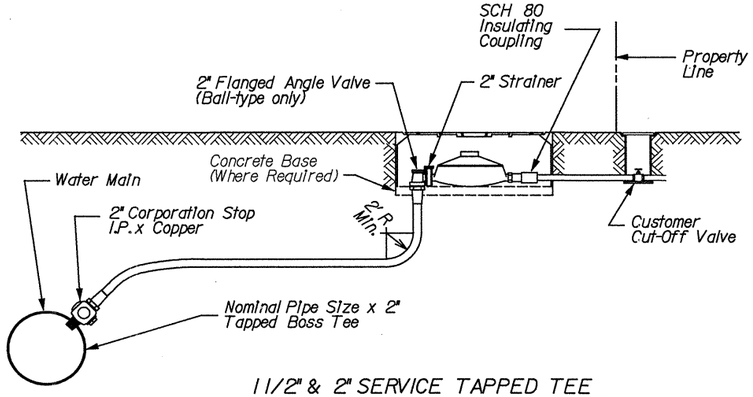


1 1/2" & 2" SERVICE TAPPED TEE

Note:
For direct tap to main, see Tapping Schedule

| PROPERTY OF SAN ANTONIO WATER SYSTEM SAN ANTONIO, TEXAS | COPPER SERVICE INSTALLATION TAPPING SCHEDULE | APPROVED AUGUST 1998 | REVISED |
|---|---|---|---|
| | | DD-824-01 | SHEET 3 OF 3 |

STATE OF TEXAS
ROBERT J. SCHROEDER
50026
REGISTERED
PROFESSIONAL ENGINEER
10/9/02

VICKREY & ASSOCIATES, INC.
CONSULTING ENGINEERS
7334 Blanco Road Suite 109 San Antonio, Texas 78216
Telephone: (210)349-3271

SAN ANTONIO WATER SYSTEM

FM LOOP 1604
CULEBRA RD. TO U.S. HWY. 90
SAWS JOB NO. 00-5023

Texas Department of Transportation

| DESIGNED: | FED. RD. DIV. NO. | STATE | PROJECT NO. | | | HIGHWAY NO. |
|---|---|---|---|---|---|---|
| CHECKED: | 6 | TEXAS | NH 2000(704),etc. | | | LP1604 |
| DRAWN: | STATE DIST. | COUNTY | CONTROL NO. | SECTION NO. | JOB NO. | SHEET NO. |
| CHECKED: | SAT | BEXAR | 2452 | 01 | 036, etc. | 916 |

CO#51
SHEET 10-1 OF 14

m:\1895-004\dgn\1895-004-016 Change Orders\sh_wtrdet02.dgn 10/09/02 08:46:55 AM

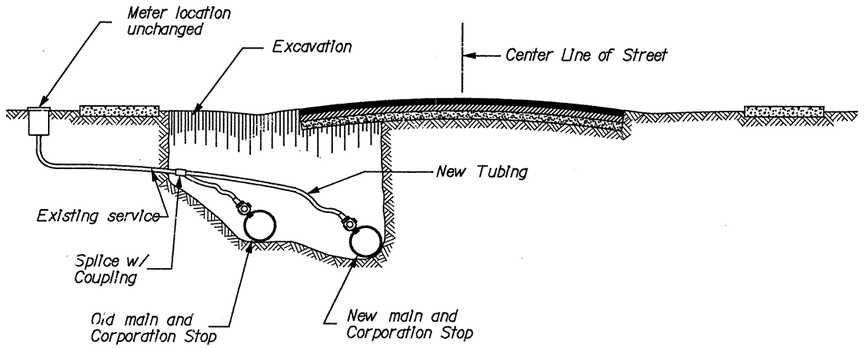


Note:
Sections are representative of curbed street also, except meter near curb.

## SHORT RECONNECTION
## OLD AND NEW MAINS SAME SIDE
## METER ON SAME SIDE

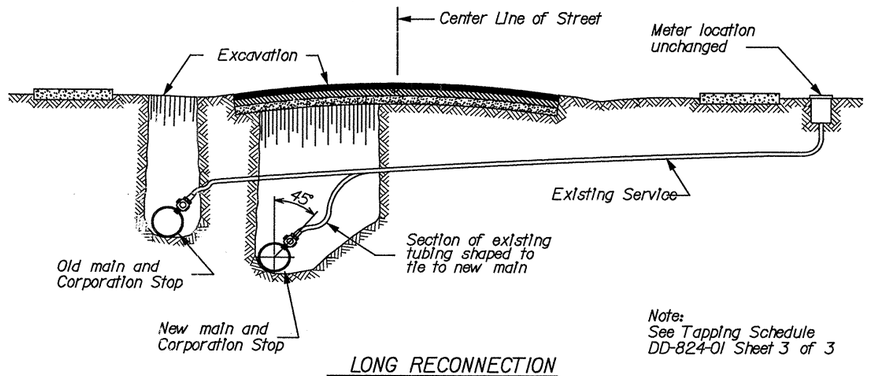


Note:
See Tapping Schedule DD-824-01 Sheet 3 of 3

## LONG RECONNECTION
## OLD AND NEW MAINS SAME SIDE
## METER ON OPPOSITE SIDE

| PROPERTY OF SAN ANTONIO WATER SYSTEM, SAN ANTONIO, TEXAS | SERVICE RECONNECTION 3/4" THRU 2" | APPROVED: AUGUST 1998 | REVISED | DD-824-03 | SHEET 1 OF 2 |
|---|---|---|---|---|---|

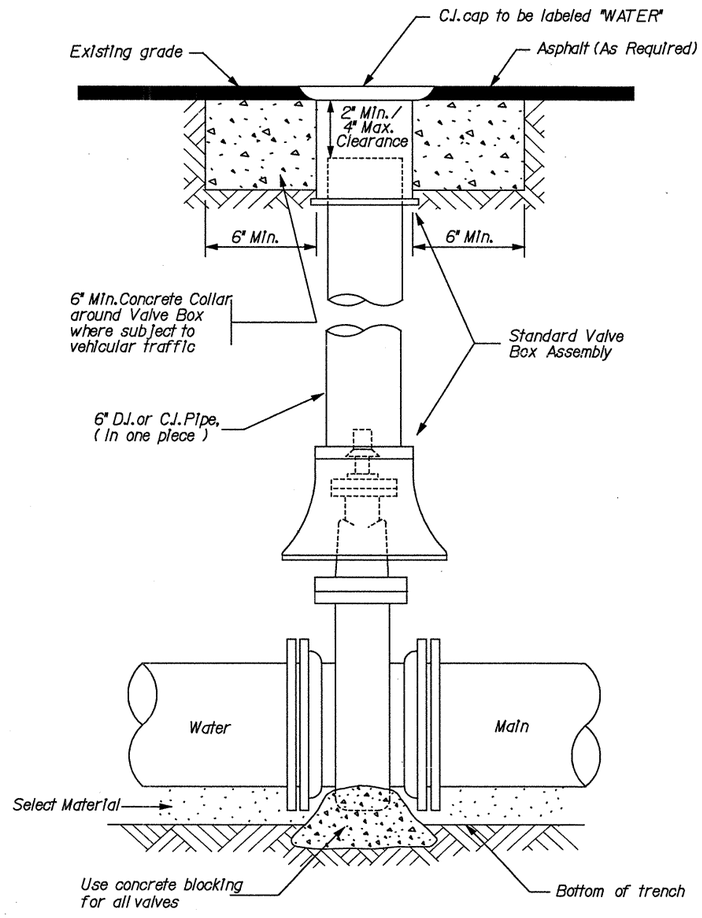


| PROPERTY OF SAN ANTONIO WATER SYSTEM, SAN ANTONIO, TEXAS | INSTALLATION OF NON-GEARED GATE VALVE WITH VALVE BOX AND EXTENSION | APPROVED: AUGUST 1998 | REVISED | DD-828-01 | SHEET 1 OF 1 |
|---|---|---|---|---|---|

STATE OF TEXAS
ROBERT J. SCHROEDER
50026
PROFESSIONAL ENGINEER
10/9/02

**VICKREY & ASSOCIATES, INC.**
CONSULTING ENGINEERS
7334 Blanco Road Suite 109 San Antonio, Texas 78216
Telephone: (210)349-3271

SAN ANTONIO WATER SYSTEM

FM LOOP 1604
CULEBRA RD. TO U.S. HWY. 90
SAWS JOB NO. 00-5023

Texas Department of Transportation

| DESIGNED: | FED. RD. DIV. NO. | STATE | PROJECT NO. | | | HIGHWAY NO. |
|---|---|---|---|---|---|---|
| CHECKED: | 6 | TEXAS | NH 2000(704), etc. | | | LP1604 |
| DRAWN: | STATE DIST. | COUNTY | CONTROL NO. | SECTION NO. | JOB NO. | SHEET NO. |
| CHECKED: | SAT | BEXAR | 2452 | 01 | 036, etc. | 917 |

C0#51
SHEET 11-1 OF 14

m:\1895-004\dgn\1895-004-016 Change Orders\sh_wtrdet03.dgn 10/09/02 08:47:11 AM

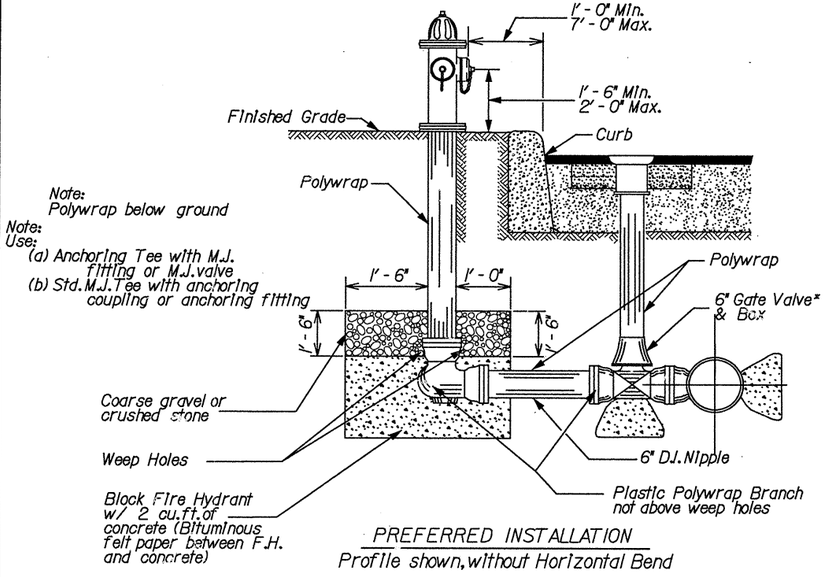


PREFERRED INSTALLATION
Profile shown, without Horizontal Bend

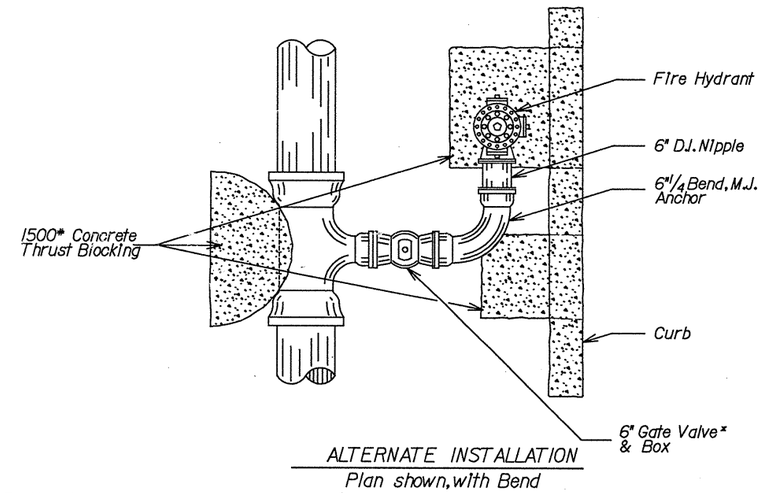


ALTERNATE INSTALLATION
Plan shown, with Bend

* Resilient Seat

| PROPERTY OF SAN ANTONIO WATER SYSTEM SAN ANTONIO, TEXAS | FIRE HYDRANT INSTALLATION | APPROVED AUGUST 1998 | REVISED |
|---|---|---|---|
| | | DD-834-01 | SHEET 1 OF 1 |

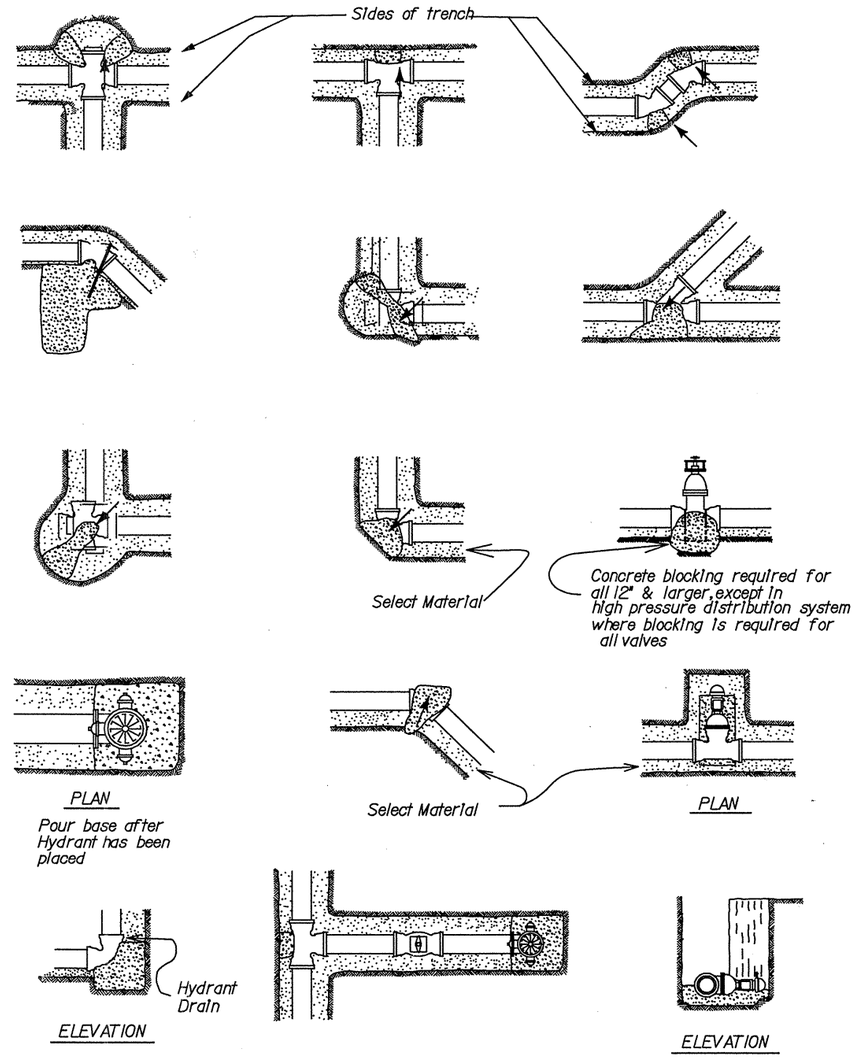


| PROPERTY OF SAN ANTONIO WATER SYSTEM SAN ANTONIO, TEXAS | THRUST BLOCKS FOR FITTINGS ( WATER ONLY ) | APPROVED AUGUST 1998 | REVISED |
|---|---|---|---|
| | | DD-839-01 | SHEET 1 OF 1 |

STATE OF TEXAS
ROBERT J. SCHROEDER
50026
REGISTERED
PROFESSIONAL ENGINEER
10/9/02

VICKREY & ASSOCIATES, INC.
CONSULTING ENGINEERS
7334 Blanco Road Suite 109 San Antonio, Texas 78216
Telephone: (210)349-5271

SAN ANTONIO WATER SYSTEM

FM LOOP 1604
CULEBRA RD.TO U.S.HWY.90
SAWS JOB NO. 00-5023

© 2002 Texas Department of Transportation

| DESIGNED: | FED. RD. DIV. NO. | STATE | PROJECT NO. | | | HIGHWAY NO. |
|---|---|---|---|---|---|---|
| CHECKED: | 6 | TEXAS | NH 2000(704),etc. | | | LP1604 |
| DRAWN: | STATE DIST. | COUNTY | CONTROL NO. | SECTION NO. | JOB NO. | SHEET NO. |
| CHECKED: | SAT | BEXAR | 2452 | 01 | 036, etc. | 918 |

C0#51
SHEET 12-1 OF 14

m:\1895-004\dgn\1895-004-016 Change Orders\sh_wtrdet04.dgn 10/09/02 08:47:39 AM

Notes:
1. Embed all exterior metal surfaces in silica sand

2. All reinforcing bars in the Reaction Block shall be #4

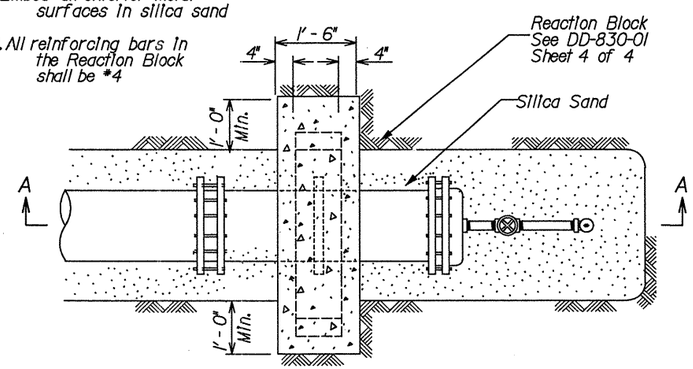


PLAN

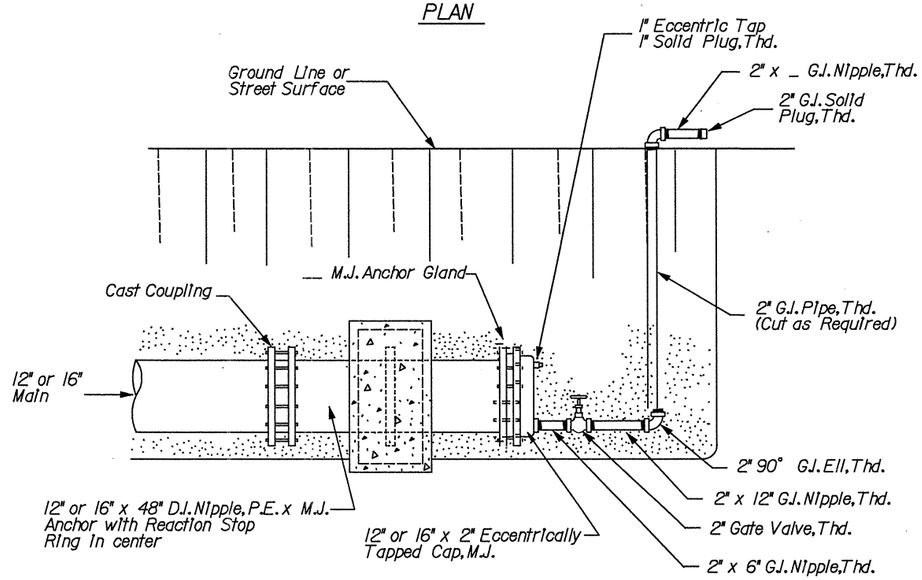


SECTION A-A

| PROPERTY OF | 2" TEMPORARY | APPROVED | REVISED |
|---|---|---|---|
| SAN ANTONIO WATER SYSTEM | BLOW-OFF ASSEMBLY | AUGUST 1998 | |
| SAN ANTONIO, TEXAS | ON 12" & 16" D.I. MAINS | DD-844-01 | SHEET 2 OF 2 |

CO#51

SHEET 13-1 OF 14

STATE OF TEXAS
ROBERT J. SCHROEDER
50026
REGISTERED PROFESSIONAL ENGINEER
10/9/02


VICKREY & ASSOCIATES, INC.
CONSULTING ENGINEERS
7334 Blanco Road Suite 109 San Antonio, Texas 78216
Telephone: (210)349-3271


SAN ANTONIO WATER SYSTEM

FM LOOP 1604
CULEBRA RD. TO U.S. HWY. 90
SAWS JOB NO. 00-5023

Texas Department of Transportation

| DESIGNED: | FED. RD. DIV. NO. | STATE | PROJECT NO. | | | HIGHWAY NO. |
|---|---|---|---|---|---|---|
| CHECKED: | 6 | TEXAS | NH 2000(704), etc. | | | LP1604 |
| DRAWN: | STATE DIST. | COUNTY | CONTROL NO. | SECTION NO. | JOB NO. | SHEET NO. |
| CHECKED: | SAT | BEXAR | 2452 | 01 | 036, etc. | 919 |


m:\1895-004\dgn\1895-004-016 Change Orders\sh_wtrdet05.dgn 10/09/02 08:47:56 AM

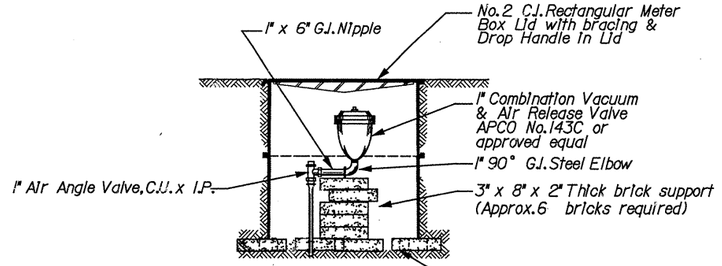


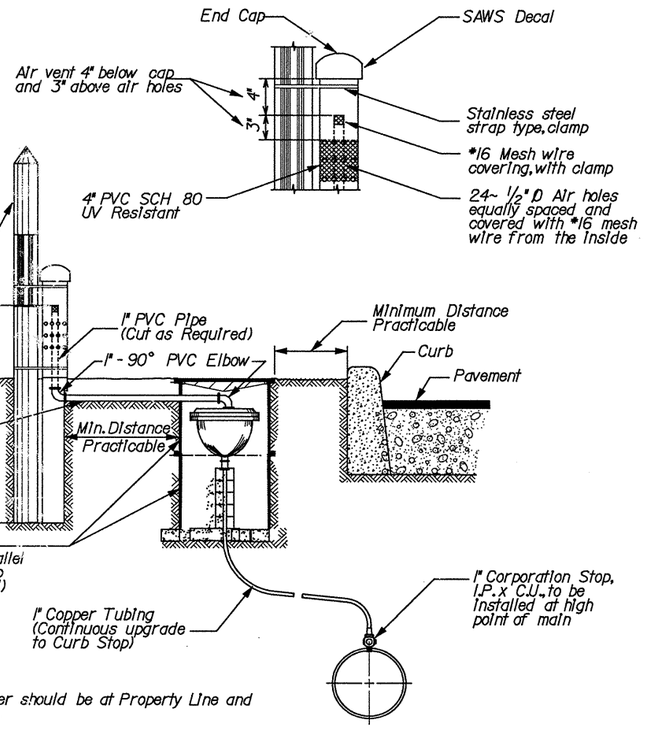


Note:
In rural areas, riser should be at Property Line and at maximum height.

| PROPERTY OF SAN ANTONIO WATER SYSTEM SAN ANTONIO, TEXAS | INSTALLATION OF 1" AIR RELEASE VALVE | APPROVED AUGUST 1998 | REVISED |
|---|---|---|---|
| | | DD-846-01 | SHEET 1 OF 1 |

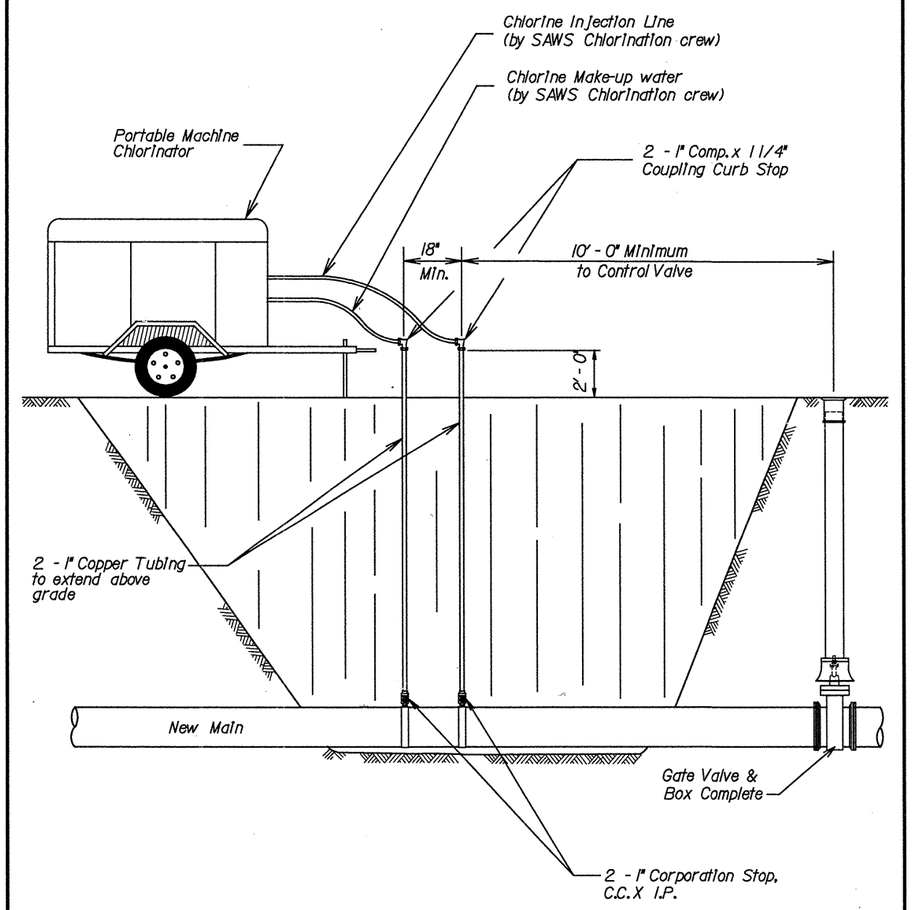


Note:
2 - 1 1/4" Solid Cap, Thd. to be Installed on Corportion Stop after chlorination

| PROPERTY OF SAN ANTONIO WATER SYSTEM SAN ANTONIO, TEXAS | STANDARD CHLORINATION INSTALLATION | APPROVED AUGUST 1998 | REVISED |
|---|---|---|---|
| | | DD-847-01 | SHEET 1 OF 1 |

ROBERT J. SCHROEDER
50026
REGISTERED PROFESSIONAL ENGINEER
STATE OF TEXAS
10/9/02

**VICKREY & ASSOCIATES, INC.**
CONSULTING ENGINEERS
7334 Blanco Road Suite 109 San Antonio, Texas 78216
Telephone: (210)349-3271

SAN ANTONIO WATER SYSTEM

FM LOOP 1604
CULEBRA RD. TO U.S. HWY. 90
SAWS JOB NO. 00-5023

Texas Department of Transportation

| DESIGNED: | FED. RD. DIV. NO. | STATE | PROJECT NO. | | | HIGHWAY NO. |
|---|---|---|---|---|---|---|
| CHECKED: | 6 | TEXAS | NH 2000(704), etc. | | | LP1604 |
| DRAWN: | STATE DIST. | COUNTY | CONTROL NO. | SECTION NO. | JOB NO. | SHEET NO. |
| CHECKED: | SAT | BEXAR | 2452 | 01 | 036, etc. | 920 |

CO#51



m:\1895-004\dgn\1895-004-016 Change Orders\sn_wtrdet06.dgn 10/09/02 08:48:11 AM