FED. RD. DIV. NO.	FEDERAL AID PROJECT NO.		SHEET NO.
6	NH2007(705),etc.		1
STATE	STATE DIST.	COUNTY	
TEXAS	SAT	BEXAR	
CONT.	SECT.	JOB	HIGHWAY NO.
2452	01	043, etc.	LP 1604

INDEX OF SHEETS

SEE SHEET 2

STATE OF TEXAS
DEPARTMENT OF TRANSPORTATION

PLANS OF PROPOSED
STATE HIGHWAY IMPROVEMENT

FEDERAL AID PROJECT
CSJ 2452-01-043, etc.

BEXAR COUNTY

LOOP 1604

PROJECT NO. : NH2007(705),etc.
LIMITS : AT SH 151
PROJECT LENGTH: 2150.00 FT = 0.407 MI
ROADWAY LENGTH: 1962.46 FT = 0.371 MI
BRIDGE LENGTHS: 187.54 FT = 0.036 MI

DESIGN SPEED

LP 1604	65 MPH
SH 151	55 MPH
RAMPS	45 MPH
FRONTAGE ROAD	45 MPH

AREA OF DISTURBED SOIL = 24 AC

"NO TDLR INSPECTION REQUIRED"

FOR WORK CONSISTING OF CONSTRUCT INTERCHANGE AT
LOOP 1604 AND SH 151 (PHASE 1A - SH 151 MAINLANES)

BEGIN PROJECT LP 1604
CSJ: 2542-01-043
STA: 557+75.00
MILE MARKER: 22.369
REFERENCE MARKER: 510+0.683

END CONSTRUCTION SH 151
STA: 549+94.00

END PROJECT LP 1604
CSJ: 2542-01-043
STA: 579+25.00
MILE MARKER: 21.926
REFERENCE MARKER: 510+0.240

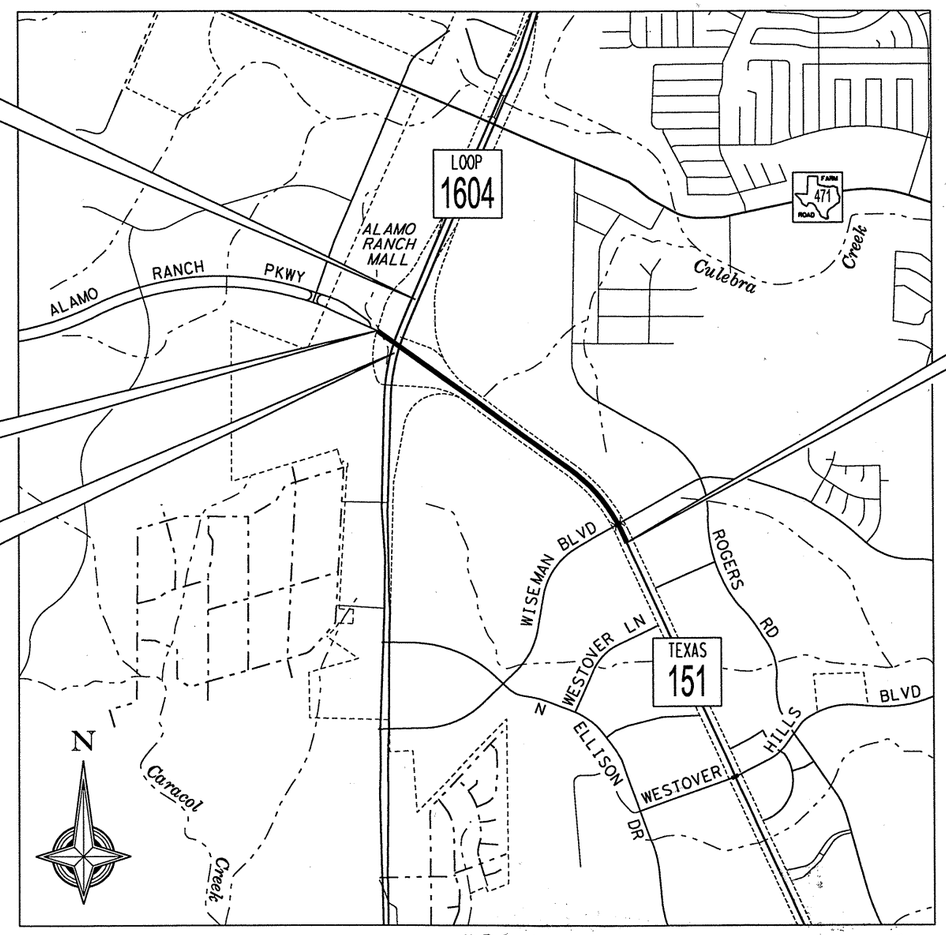

BEGIN CONSTRUCTION SH 151
STA: 484+30.00

N.T.S.

EXCEPTIONS: NONE
EQUATIONS : NONE
RR X-ING'S: NONE

FINAL PLANS

LETTING DATE: _____

DATE CONTRACTOR BEGAN WORK: _____

DATE WORK WAS ACCEPTED: _____

FINAL CONTRACT COST: $ _____

CONTRACTOR: _____

FINAL PLANS STATEMENT:

THE CONSTRUCTION WORK WAS PERFORMED
IN ACCORDANCE WITH THE PLANS AND CONTRACT.

P.E.

AREA ENGINEER DATE

MACTEC
3520 EXECUTIVE CENTER DRIVE
SUITE 200
AUSTIN, TEXAS 78731
(512) 795-0360

STATE OF TEXAS
SALVADOR A. MERCADO
52647
LICENSED
PROFESSIONAL ENGINEER

3-21-11

TEXAS DEPARTMENT OF TRANSPORTATION

SUBMITTED FOR LETTING 3/23/11
DISTRICT DESIGN ENGINEER

APPROVED FOR LETTING
DIRECTOR, TRAFFIC OPERATIONS DIVISION

RECOMMENDED FOR LETTING 3/23/11
FOR DISTRICT ENGINEER

APPROVED FOR LETTING 12/13/11
FOR DIRECTOR, DESIGN DIVISION

SPECIFICATIONS ADOPTED BY THE TEXAS DEPARTMENT OF TRANSPORTATION ON JUNE 1, 2004, AND SPECIFICATION ITEMS LISTED AND DATED AS FOLLOWS SHALL GOVERN ON THIS PROJECT: REQUIRED CONTRACT PROVISIONS FOR ALL FEDERAL-AID CONSTRUCTION CONTRACTS (FORM FHWA 1273, MARCH, 1994)

© 2011 by Texas Department of Transportation; all rights reserved

COUNTY _____ PROJ. NO. _____
HWY. NO. _____ LETTING DATE _____
DATE ACCEPTED _____

P:\4760\0-0129\cad\sheet\151ts01.dgn 3/22/2011 10:50:40 AM mwmldkiff

BEXAR NH 2007(705)

GENERAL

1	TITLE SHEET
2	INDEX OF SHEETS
3	PROJECT LAYOUT
4 - 8	TYPICAL SECTIONS
9,9A-9J	GENERAL NOTES & SPECIFICATION DATA SHEETS
10,10A-10D	ESTIMATE AND QUANTITIES

SUMMARIES

11 - 14	TRAFFIC CONTROL & SW3P SUMMARY
15	ROADWAY & RETAINING WALL SUMMARY
16	DRAINAGE SUMMARY
17	BRIDGE SUMMARY
18	TRAFFIC MANAGEMENT SUMMARY
19	TRAFFIC SIGNAL SUMMARY
20	ILLUMINATION SUMMARY
21	LARGE SIGNS SUMMARY
22	SMALL SIGNS SUMMARY
23	MISCELANEOUS SIGN SUMMARY
24	PAVEMENT MARKINGS SUMMARY

TRAFFIC CONTROL & SW3P PLANS

25	OVERALL TRAFFIC CONTROL PLAN
26	SEQUENCE OF WORK
27 - 33	PHASE 1A SH 151 PLAN SHEETS
34 - 41	PHASE 1A LP 1604 PLAN SHEETS
42 - 48	PHASE 1B SH 151 PLAN SHEETS
49 - 56	PHASE 1B LP 1604 PLAN SHEETS
57 - 63	PHASE 2A SH 151 PLAN SHEETS
64 - 71	PHASE 2A LP 1604 PLAN SHEETS
72 - 78	PHASE 2B SH 151 PLAN SHEETS
79 - 86	PHASE 2B LP 1604 PLAN SHEETS
87 - 88	PHASE 2B NB DETOUR PLAN & PROFILE SHEETS
89 - 95	PHASE 3 SH 151 PLAN SHEETS
96 - 103	PHASE 3 LP 1604 PLAN SHEETS
104	TRAFFIC CONTROL TYPICAL SECTIONS
105	TRAFFIC CONTROL TEMPORARY STAND PIPE DETAILS
106	ENVIRONMENTAL PERMITS, ISSUES AND COMMENTS (EPIC)
107	STORM WATER POLLUTION PREVENTION PLAN (SW3P)
108 - 119	*BC(1)-07 THRU BC(12)-07
120	*TCP(2-6)-98
121 - 122	*TCP(3-2)-98 & TCP(3-3)-98
123	*TCP(7-1)-98
124	*WZ(BRK)-03
125 - 126	*WZ(BTS-1)-03 & WZ(BTS-2)-03
127	*WZ(STPM)-03
128	*WZ(UL)-03
129	*WZ(TD)-03
130 - 130A	*SSCB(2)-10
131	*ABSORB-10
132	*EC(1)-09
133 - 134	*EC(2)-93 & EC(3)-93

ROADWAY PLANS

135 - 138	HORIZONTAL ALIGNMENT DATA
139 - 140	PRIMARY HORIZONTAL AND VERTICAL CONTROL
141	ROADWAY SHEET LAYOUT PLAN
142 - 148	SH 151 PLAN SHEETS
149 - 152	LP 1604 PLAN SHEETS
153 - 158	SH 151 PROFILE
159	INTERSECTION LAYOUT
160	ROADWAY DETAILS
161	*MBGF-09
162	*MBGF(TR)-09
163	*MBGF(MS)-10
164	*SGT(7)-10
165	*SGT(8)-09
166	*VIA (SFPM)-10
167	*TRF
168	*CRR
169	*BED-09
170	*CCCG-10A

STATE OF TEXAS
KURT ERIC KUNZE
85494
REGISTERED
PROFESSIONAL ENGINEER

THE STANDARD SHEETS SPECIFICALLY IDENTIFIED ABOVE (#) HAVE BEEN SELECTED BY ME OR UNDER MY RESPONSIBLE SUPERVISION AS BEING APPLICABLE TO THIS PROJECT.

Kurt Eric Kunze P.E. 12-7-11
DATE

RETAINING WALL PLANS

171 - 173	RETAINING WALL NO. 1 (SH151 WBML)
174 - 176	RETAINING WALL NO. 2 (SH151 EBML)
177 - 180	RETAINING WALL NO. 1 SOIL NAIL LAYOUT
181 - 184	RETAINING WALL NO. 2 SOIL NAIL LAYOUT
185	ROCK NAIL RETAINING WALL DETAILS
185A	#ROCK NAIL INSTALLATION IN FILL PORTION OF WALL
186	#RW (BTR)
187	#RW(TRF)

DRAINAGE PLANS

188	OVERALL DRAINAGE AREA MAP
189	DRAINAGE AREA MAP SH 151 OUTFALL 1 & 2
190	DRAINAGE AREA MAP LP 1604 OUTFALL 4, 6 & 7
191 - 192	DRAINAGE AREA MAP STORM SEWER SYSTEM 3, 4, 4A & 5
193	CULVERT HYDRAULIC DATA SUMMARY
194	CULVERT HYDRAULIC DATA OUTFALL 1
195	CULVERT HYDRAULIC DATA OUTFALL 2
196	CULVERT HYDRAULIC DATA OUTFALL 6
197 - 200	STORM SEWER HYDRAULIC DATA OUTFALL 4
201	DRAINAGE HORIZONTAL ALIGNMENT DATA
202 - 203	CULVERT LAYOUT OUTFALL 1
204 - 205	CULVERT LAYOUT OUTFALL 2
206 - 208	CULVERT LAYOUT OUTFALL 6
209 - 210	CULVERT LAYOUT OUTFALL 7
211 - 212	CHANNEL LAYOUT OUTFALL 7
213 - 215	STORM SEWER LAYOUT SYSTEM 3 OUTFALL 4
216 - 224	STORM SEWER LAYOUT SYSTEM 4 OUTFALL 4
225 - 228	STORM SEWER LAYOUT SYSTEM 4A OUTFALL 4
229 - 233	STORM SEWER LAYOUT SYSTEM 5 OUTFALL 4
234	DRAINAGE DETAILS
235	BCS
236	**DROP INLET TYPE Y-1
237	**DROP INLET TYPE Y-1A
238	**DROP INLET TYPE 3
239	**DROP INLET TYPE 3A
240	**TRAFFIC INLET TYPE W-1 THRU W-5
241	**TYPE 3 & TYPE 4 GRATE
242	**TYPE 6 TRAFFIC GRATE
243	**MANHOLE (TY 1 THRU 5)
244	**CAPPING INLETS & MANHOLES
245	*MH-M
246	*FW-S
247	*SETP-PD
248 - 249	*SETP-CD
250 - 252	*SCP-5 THRU SCP-7
253	*SCP-MD

BRIDGE PLANS

	LOOP 1604 SOUTHBOUND MAINLANES OVERPASS AT SH 151
254	BRIDGE LAYOUT
255	ESTIMATED QUANTITIES
256 - 259	ABUTMENT DETAILS NO. A1 AND A2
260 - 261	INTERIOR BENT NO. B1
262	BOX BEAM SPAN DETAILS DECK SPANS 1 AND 2
263	BEAM REPORT AND GRADING DATA
	LOOP 1604 NORTHBOUND MAINLANES OVERPASS AT SH 151
264	BRIDGE LAYOUT
265	ESTIMATED QUANTITIES
266 - 269	ABUTMENT DETAILS NO. A1 AND A2
270 - 271	INTERIOR BENT NO. B1
272	BOX BEAM SPAN DETAILS DECK SPANS 1 AND 2
273	BEAM REPORT AND GRADING DATA
274	COLUMN DETAILS INTERIOR BENT NO. B1
275 - 276	ARCHITECTURAL DETAILS INTERIOR BENT COLUMNS
277	ARCHITECTURAL DETAILS INTERIOR BENT COLUMNS AND BENT CAP EARWALLS
278	ARCHITECTURAL DETAILS RETAINING WALLS
279	#BBND
280 - 282	#BB-B34
283 - 284	#BBCD-S (MOD)
285	#BBEB
286	#BPA
287,287A	#BMCS
288	***W12-3 MOUNTING DETAILS
289	#BBRAS
290	#AJ
291 - 292	#TYPE SSTR
293 - 294	#FD
294A	#BAS-A

TMS PLANS

295 - 297	TMS PLAN LAYOUT
298 - 300	#WIRELESS CCTV SCHEMATIC
301	#ILLUMINATION POLE & CCTV CABINET DETAILS
302	#ILLUMINATION POLE FOUNDATION DETAILS
303	#CCTV & AIR TERMINAL MOUNTING DETAILS
304	#4" PVC MULTIDUCT CONDUIT (2-WAY SYSTEM)
305	TMS ELECTRICAL SERVICE DATA

SIGNAL PLANS

306	EXISTING SIGNAL LAYOUT
307	PROPOSED SIGNAL LAYOUT
308	CONDUIT AND CABLE, POLE AND CABLE SCHEDULES
309	PROPOSED SIGNAL ELEVATION LAYOUT
310	PROPOSED ROADSIDE FLASHING BEACON ASSEMBLY LAYOUT
311 - 317	*ED(1)-03 THRU ED(7)-03
318 - 322	*ED(9)-03 THRU ED(13)-03
323	*SPRFBA(1)-04
324	*SMA-80(1)-99
325	*SMA-80(2)-96
326	*MA-C-09
327	*MA-D-07
328	*TS-FD-99
329	*LUM-A-99
330	*CFA-99
331	**MISCELLANEOUS TRAFFIC SIGNAL DETAILS
332	***METRO STREET NAME SIGN
333	***TRAFFIC SIGNAL DETAILS UPS LAYOUT, CONDUIT & FOUNDATION

ILLUMINATION PLANS

334	ILLUMINATION CIRCUIT DIAGRAM
335 - 340	ILLUMINATION LAYOUT
341 - 342	*RID(LUM1)-07 & RID(LUM2)-07
343	*RID(FND)-11
344	*RID(UP)-07
345	*RID(IF)-07
346 - 349	*RIP(1)-11 THRU RIP(4)-11

PAVEMENT MARKING PLANS

350 - 356	PAVEMENT MARKING LAYOUT SH 151
357 - 363	PAVEMENT MARKING LAYOUT LP 1604
364	*PM(1)-03
365	*PM(2)-10
366	*PM(4)-10
367 - 368	*PM(5)-01 & PM(6)-01
369 - 372	*FMP(1)-10 THRU FMP(4)-10

SIGNING AND DELINEATION PLANS

373 - 386	SIGNING LAYOUT
387 - 388	SIGN STRUCTURE ELEVATIONS
389,389A , 390	SIGN DETAILS
391 - 394	OVERHEAD SIGN BRIDGE COLUMN DETAILS
395	**HILL COUNTRY REGION OVERHEAD SIGN COLUMN
396	**HILL COUNTRY REGION FORM LINER AND JOINT DETAILS
397 - 400	*OMITTED
401	**RIPRAP APRON DETAIL
402	*SMD(GEN)-08
403 - 405	*SMD(SLIP-1)-08 THRU SMD(SLIP-3)-08
406 - 407	OMITTED
408 - 411	*SMD(2-1)-08 THRU SMD(2-4)-08
412	*SMD(TY G)-08
413	*OSB-SE
414 - 415	*OSB-Z3
416 - 417	*OSBT
418	*OSBC
419	*WV & IZ-96
420 - 422	*OMITTED
423 - 427	*TSR(1)-08 THRU TSR(5)-08
428	*D&OM(1)-10
429 - 432	*D&OM(2)-04 THRU D&OM(5)-04
433	*D&OM(VIA)-04

UTILITY PLANS

434 - 440	UTILITY LAYOUT SH 151
441 - 444	UTILITY LAYOUT LP 1604
445 - 447	CPS GAS (JOINT BID)
448 - 450	SAWS EXISTING WATER (JOINT BID)

CAVE GATE DETAIL

451	CAVE GATE LAYOUT
452	CAVE GATE DETAILS

** TXDOT SAN ANTONIO DISTRICT STANDARD
*** CITY OF SAN ANTONIO STANDARD

STATE OF TEXAS
MICHAEL W. MIOKIFF
75435
REGISTERED
PROFESSIONAL ENGINEER

THE STANDARD SHEETS SPECIFICALLY IDENTIFIED ABOVE (*) HAVE BEEN SELECTED BY ME OR UNDER MY RESPONSIBLE (**) SUPERVISION AS BEING APPLICABLE TO THIS PROJECT. (***)

Michael W Miokiff P.E. 12/5/11
DATE

REV. 12-30-11

NO.	DATE	REVISION DESCRIPTION	APP. BY

© 2011

Texas Department of Transportation

MACTEC
3520 EXECUTIVE CENTER DRIVE
SUITE 200
AUSTIN, TEXAS 78731
(512) 795-0360

REGISTRATION NUMBER: F-1784

SH 151

INDEX OF SHEETS

(SHEET 1 OF 1)

FED. RD. DIV. NO.			SHEET NO.
			2
STATE	DIST.	COUNTY	
TEXAS	SA	BEXAR	
CONT.	SECT.	JOB	HIGHWAY NO.
2452	01	043	SH 151

p:\4760\0-0129\cad\sheet\5lfind01.dgn 12/4/2011 4:28:54 PM mwmiokiff

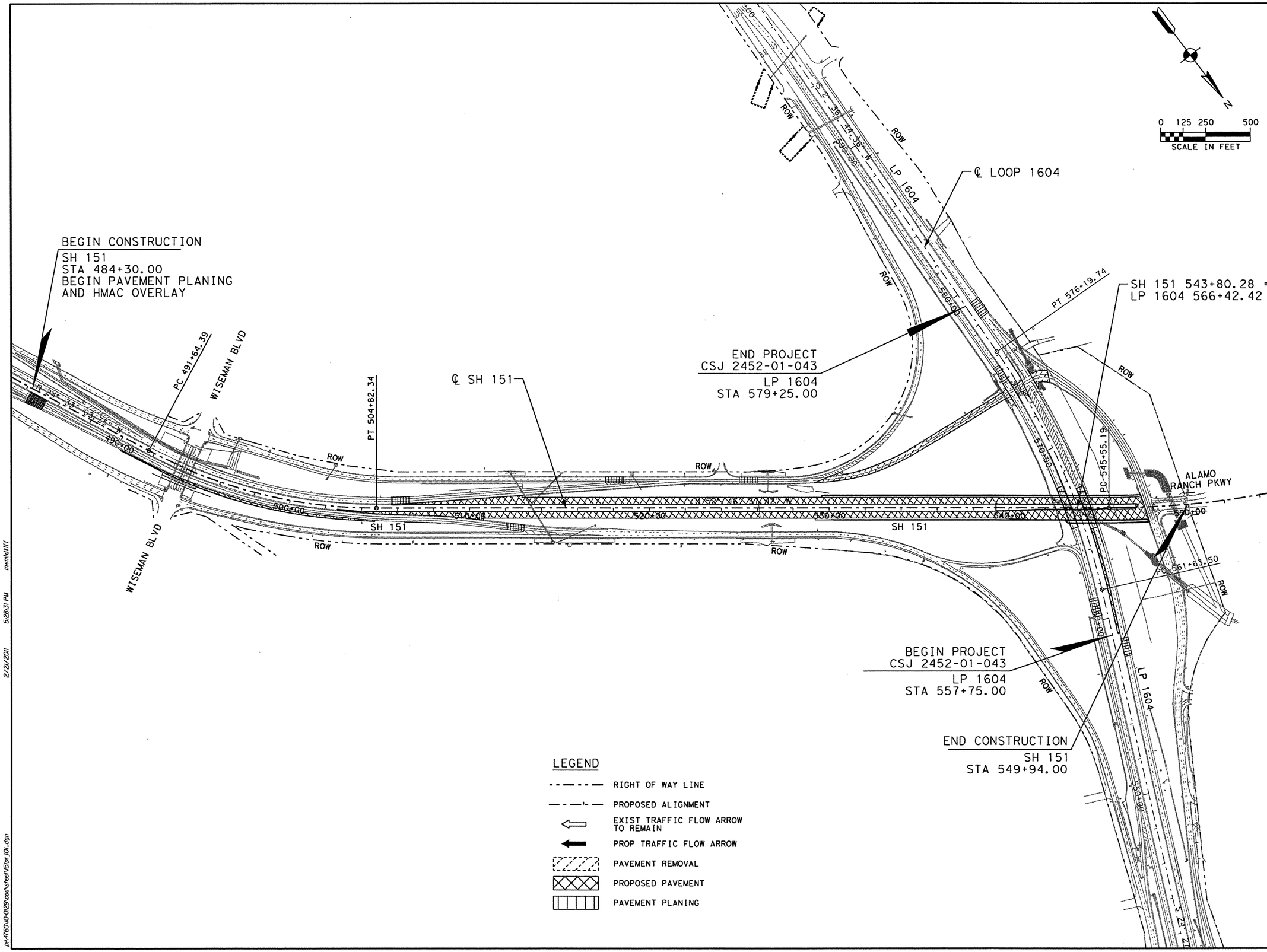

STATE OF TEXAS
MICHAEL W. MIDKIFF
75435
REGISTERED PROFESSIONAL ENGINEER
2/21/11

NO.	DATE	REVISION DESCRIPTION	APP. BY

© 2011

Texas Department of Transportation

MACTEC
3520 EXECUTIVE CENTER DRIVE
SUITE 200
AUSTIN, TEXAS 78731
(512) 795-0360

REGISTRATION NUMBER: F-1784

SH 151

PROJECT LAYOUT

(SHEET 1 OF 1)

FED. RD. DIV. NO.			SHEET NO.
			3
STATE	DIST.	COUNTY	
TEXAS	SA	BEXAR	
CONT.	SECT.	JOB	HIGHWAY NO.
2452	01	043	SH 151

2/21/2011 5:28:31 PM mwmidkiff

P:\4760\0-0129\cad\sheet\151pr101.dgn

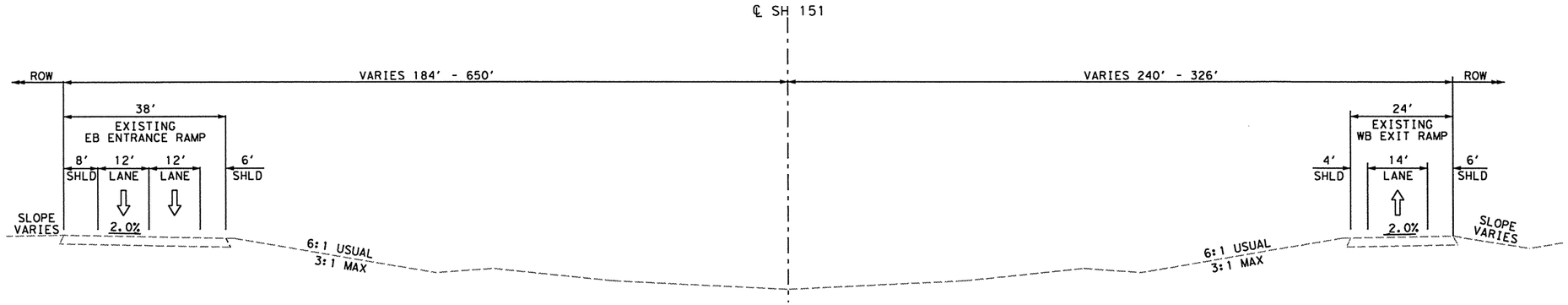

EXISTING SH 151 TYPICAL SECTION

STA 530+00.00 TO 547+53.63 EASTBOUND
STA 537+00.00 TO 547+53.63 WESTBOUND

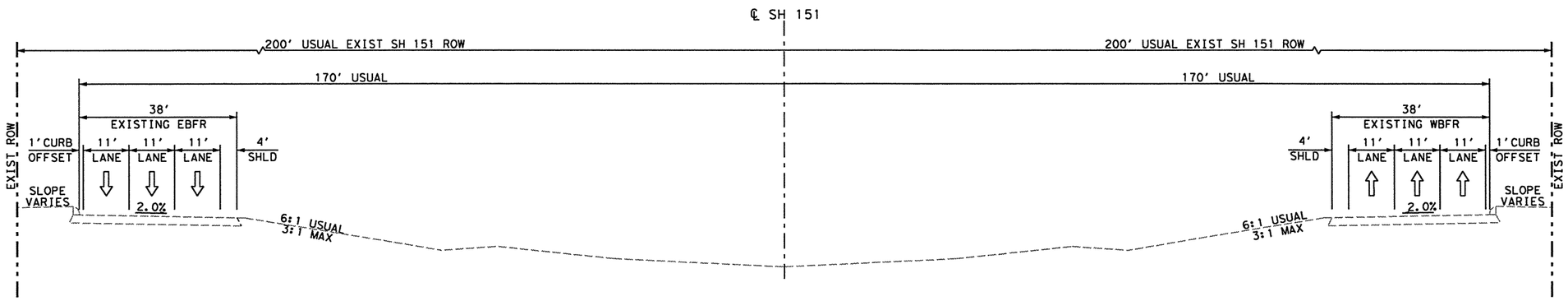

EXISTING SH 151 TYPICAL SECTION

STA 518+00.00 TO STA 530+00.00 EASTBOUND
STA 518+00.00 TO STA 537+00.00 WESTBOUND

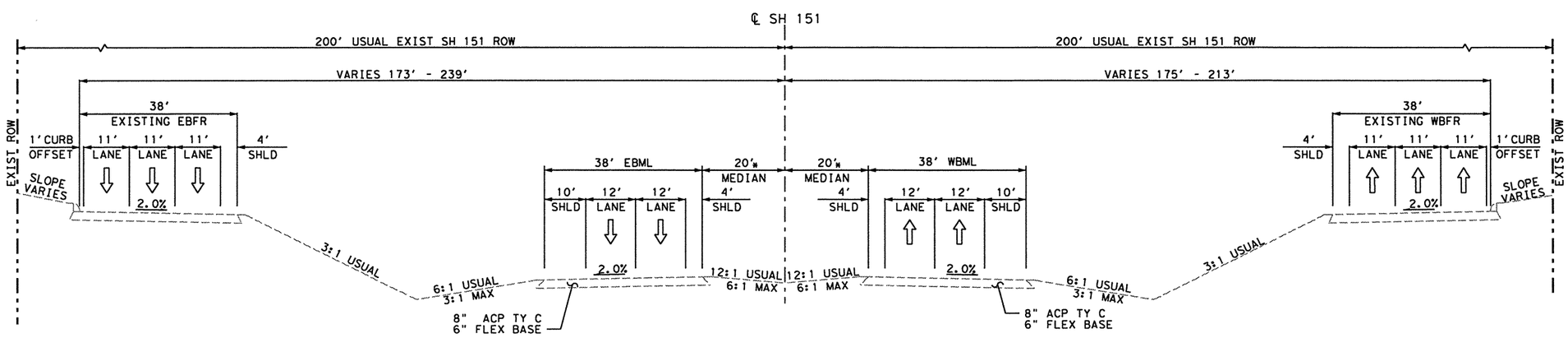

EXISTING SH 151 TYPICAL SECTION

STA 484+30.00 TO STA 518+00.00
* MEDIAN VARIES (20' - 115') FROM STA 505+00.00 TO 518+00.00

PLAN SHEET N.T.S.

STATE OF TEXAS
MICHAEL W. MIDKIFF
75435
REGISTERED PROFESSIONAL ENGINEER
2/21/11

NO.	DATE	REVISION DESCRIPTION	APP. BY

© 2011

Texas Department of Transportation

MACTEC
3520 EXECUTIVE CENTER DRIVE
SUITE 200
AUSTIN, TEXAS 78731
(512) 795-0360

REGISTRATION NUMBER: F-1784

SH 151

ROADWAY EXISTING TYPICAL SECTIONS SH 151

(SHEET 1 OF 5)

FED. RD. DIV. NO.			SHEET NO.
			4
STATE	DIST.	COUNTY	
TEXAS	SA	BEXAR	
CONT.	SECT.	JOB	HIGHWAY NO.
2452	01	043	SH 151

p:\4760\0-0129\cad\sheet\15typ04.dgn 2/21/2011 5:28:35 PM mwmidkiff

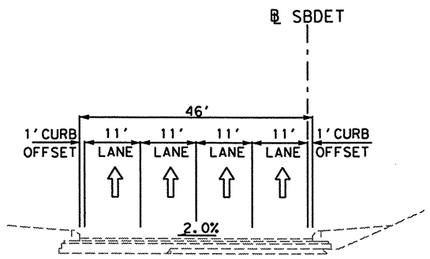

EXISTING LP 1604 SOUTHBOUND FRONTAGE RD TYPICAL SECTION

STA 135+00 TO STA 144+00

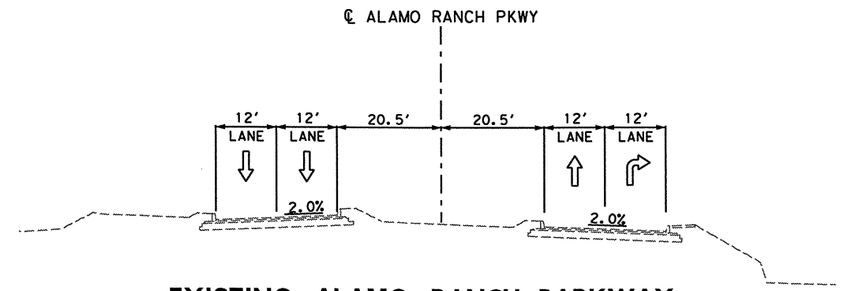

EXISTING ALAMO RANCH PARKWAY TYPICAL SECTION

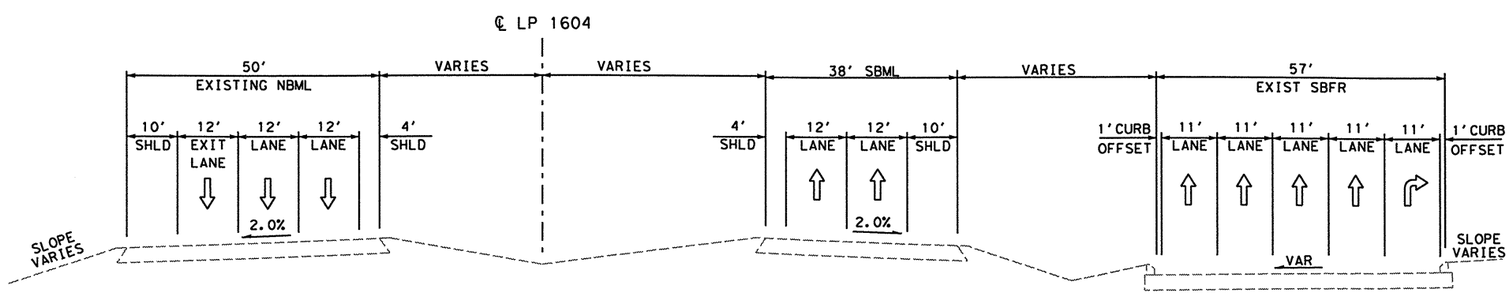

EXISTING LP 1604 TYPICAL SECTION

STA. 559+06.00 TO STA. 565+06.21

PLAN SHEET N.T.S.

STATE OF TEXAS
MICHAEL W. MIDKIFF
75435
REGISTERED
PROFESSIONAL ENGINEER
4/11/11

NO.	DATE	REVISION DESCRIPTION	APP. BY

© 2011

Texas Department of Transportation

MACTEC
3520 EXECUTIVE CENTER DRIVE
SUITE 200
AUSTIN, TEXAS 78731
(512) 795-0360

REGISTRATION NUMBER: F-1784

SH 151
ROADWAY
EXISTING
TYPICAL SECTIONS
LP 1604/
ALAMO RANCH
(SHEET 2 OF 5)

FED. RD. DIV. NO.			SHEET NO.
			5
STATE	DIST.	COUNTY	
TEXAS	SA	BEXAR	
CONT.	SECT.	JOB	HIGHWAY NO.
2452	01	043	SH 151

p:\4760\0-0129\cad\sheet\15ltyp05.dgn 4/12/2011 5:50:57 PM mwmidkiff

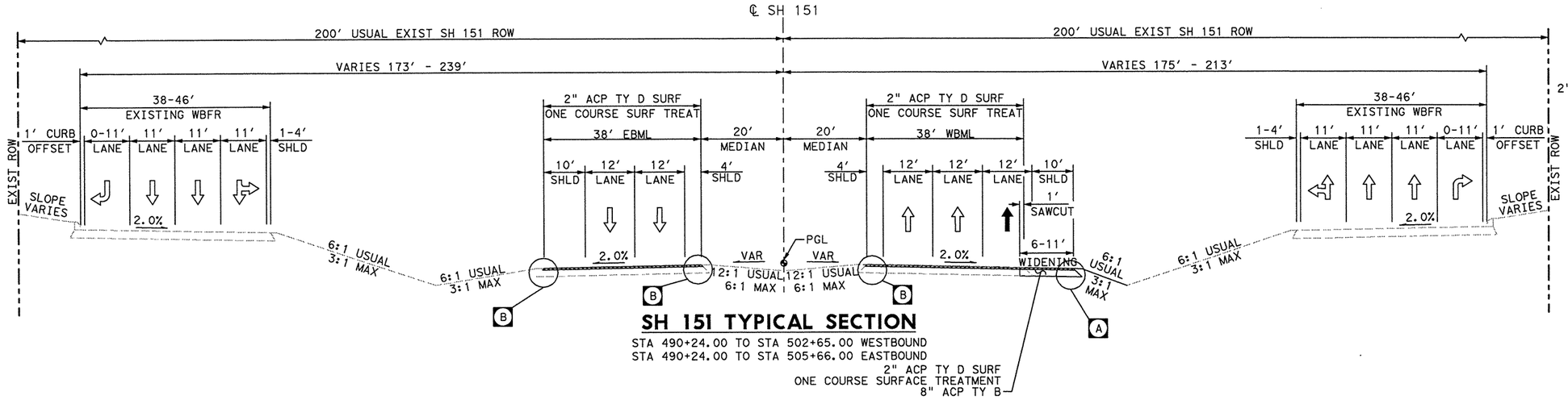

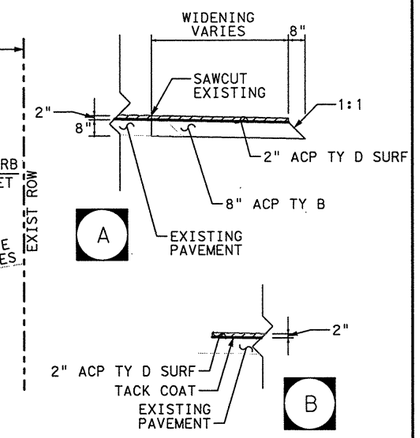

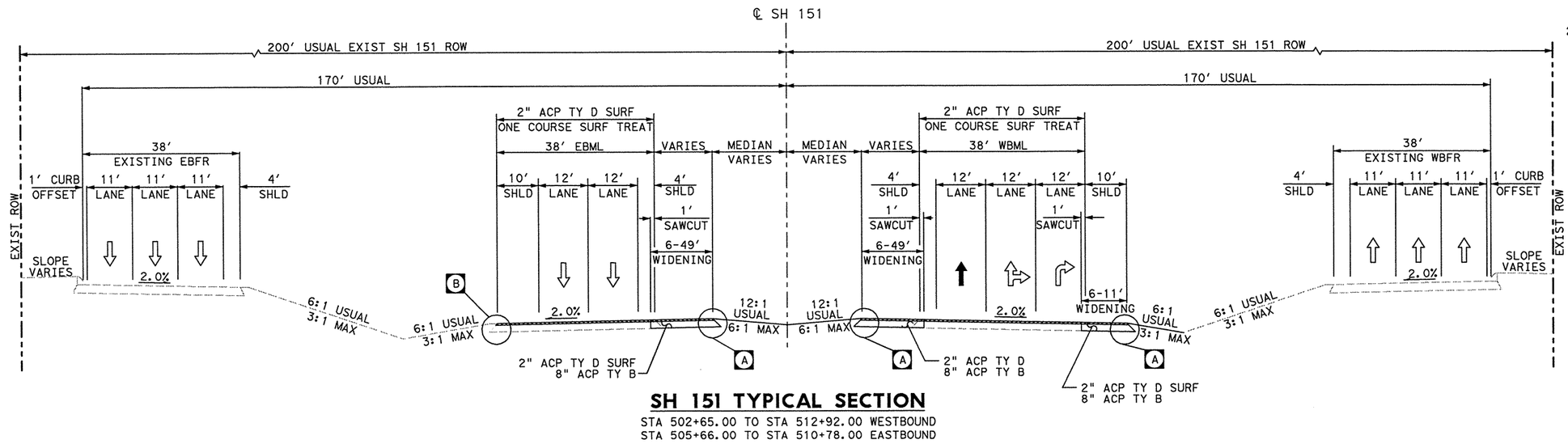

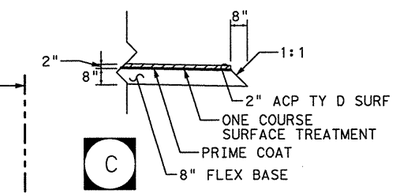

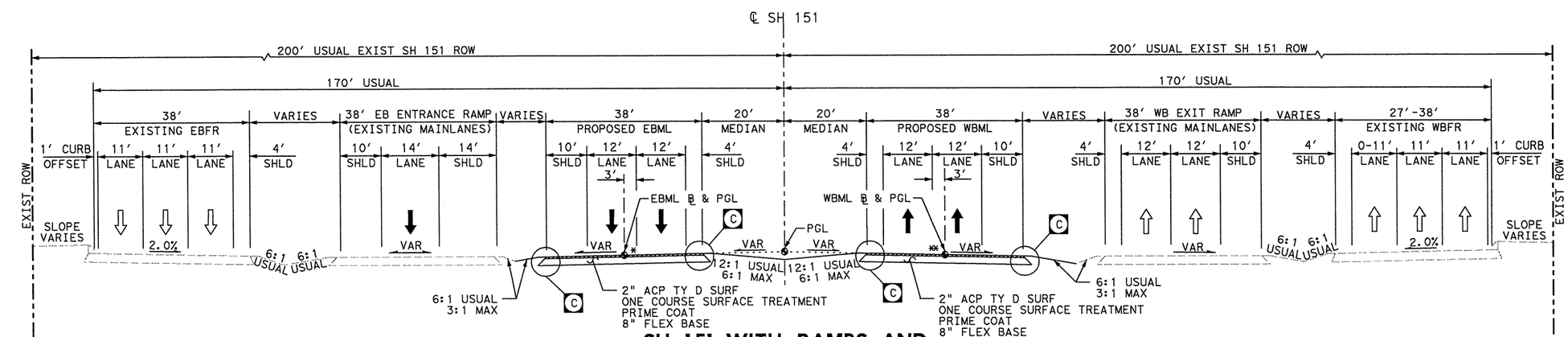

FOR OVERLAY, WIDENING, AND NEW CONSTRUCTION SURFACE COURSE, USE PAY ITEM 3224-2083 FOR ASPHALT COURSE. FOR WIDENING, USE PAY ITEM 3224-2008 FOR BASE COURSE.

PLAN SHEET N.T.S.

STATE OF TEXAS
MICHAEL W. MIDKIFF
75435
REGISTERED PROFESSIONAL ENGINEER
12/5/11

NO.	DATE	REVISION DESCRIPTION	APP. BY

© 2011

Texas Department of Transportation

MACTEC
3520 EXECUTIVE CENTER DRIVE
SUITE 200
AUSTIN, TEXAS 78731
(512) 795-0360
REGISTRATION NUMBER: F-1784

SH 151
ROADWAY PROPOSED TYPICAL SECTIONS SH 151

(SHEET 3 OF 5)

FED. RD. DIV. NO.			SHEET NO.
			6
STATE	DIST.	COUNTY	
TEXAS	SA	BEXAR	
CONT.	SECT.	JOB	HIGHWAY NO.
2452	01	043	SH 151

p:\4760\0-0129\cad\sheet\5\typ01.dgn 12/6/2011 8:56:19 AM mwmldk11f

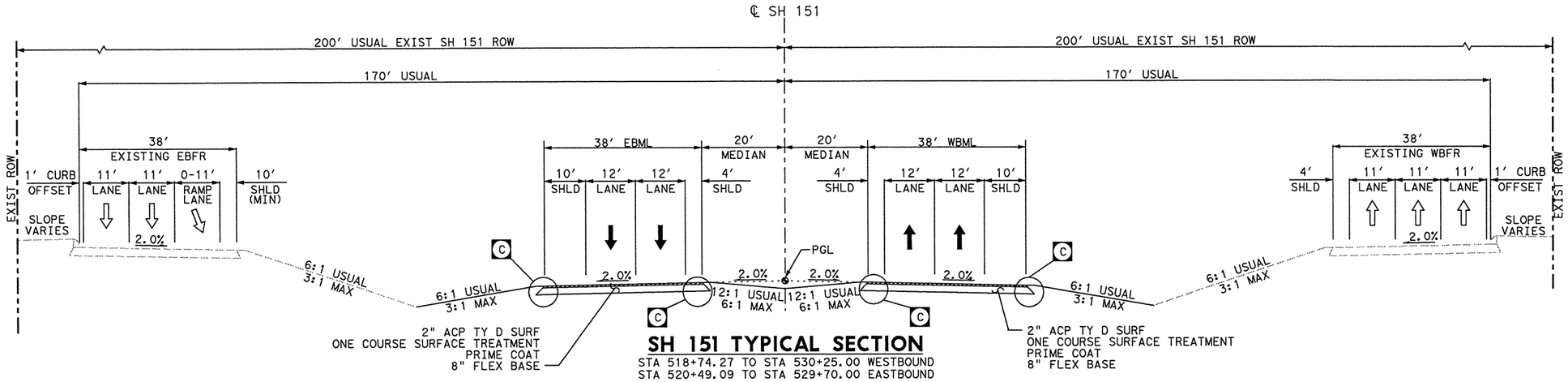

SH 151 TYPICAL SECTION

STA 518+74.27 TO STA 530+25.00 WESTBOUND
STA 520+49.09 TO STA 529+70.00 EASTBOUND

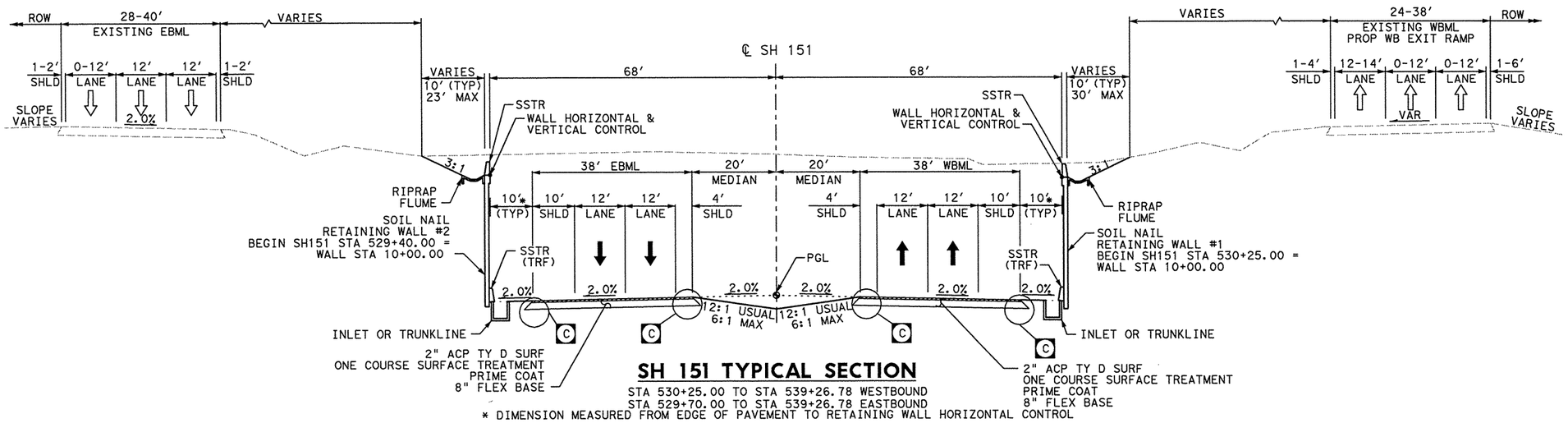

SH 151 TYPICAL SECTION

STA 530+25.00 TO STA 539+26.78 WESTBOUND
STA 529+70.00 TO STA 539+26.78 EASTBOUND

* DIMENSION MEASURED FROM EDGE OF PAVEMENT TO RETAINING WALL HORIZONTAL CONTROL

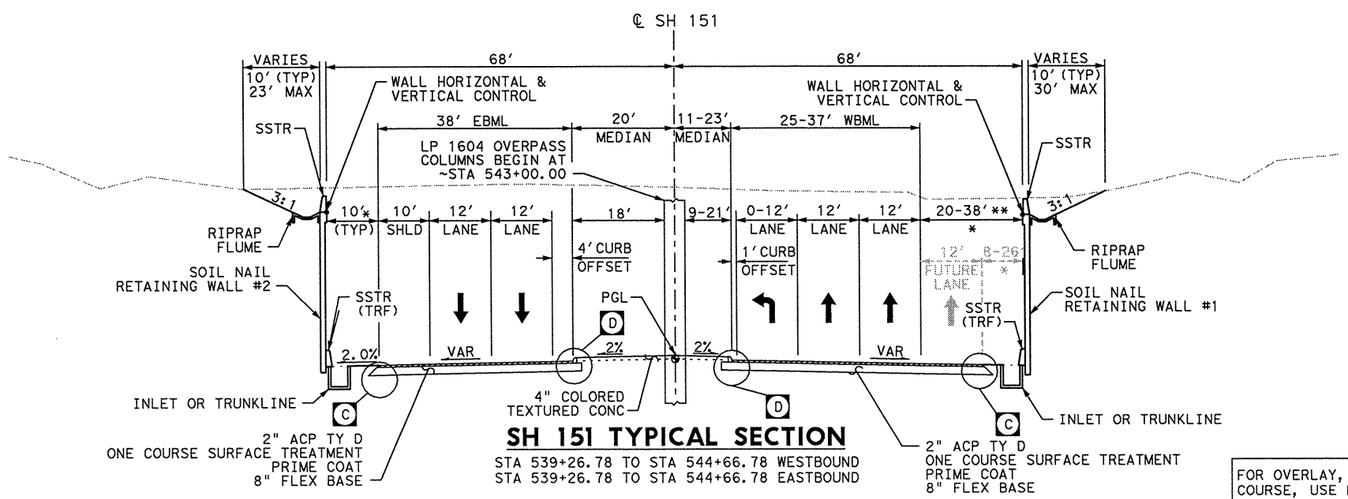

SH 151 TYPICAL SECTION

STA 539+26.78 TO STA 544+66.78 WESTBOUND
STA 539+26.78 TO STA 544+66.78 EASTBOUND

* DIMENSION MEASURED FROM EDGE OF PAVEMENT TO RETAINING WALL HORIZONTAL CONTROL
**38' OFFSET IN PROXIMITY TO LP 1604 BRIDGE STRUCTURE BEGINNING AT STA 543+26.80

FOR OVERLAY, WIDENING, AND NEW CONSTRUCTION SURFACE COURSE, USE PAY ITEM 3224-2083 FOR ASPHALT COURSE.
FOR WIDENING, USE PAY ITEM 3224-2008 FOR BASE COURSE.

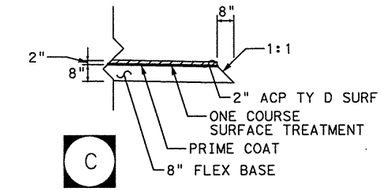

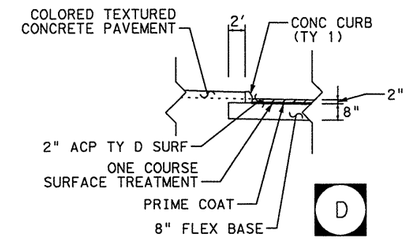

PLAN SHEET N.T.S.

STATE OF TEXAS
MICHAEL W. MIDKIFF
75435
REGISTERED PROFESSIONAL ENGINEER
12/5/11

NO.	DATE	REVISION DESCRIPTION	APP. BY

© 2011

Texas Department of Transportation

MACTEC
3520 EXECUTIVE CENTER DRIVE
SUITE 200
AUSTIN, TEXAS 78731
(512) 795-0360
REGISTRATION NUMBER: F-1784

SH 151

ROADWAY PROPOSED TYPICAL SECTIONS SH 151

(SHEET 4 OF 5)

FED. RD. DIV. NO.			SHEET NO.
			7

STATE	DIST.	COUNTY	
TEXAS	SA	BEXAR	
CONT.	SECT.	JOB	HIGHWAY NO.
2452	01	043	SH 151

p:\4160\0-0129\cad\sheet\5fhrp02.dgn 12/6/2011 8:56:22 AM mwmidkiff

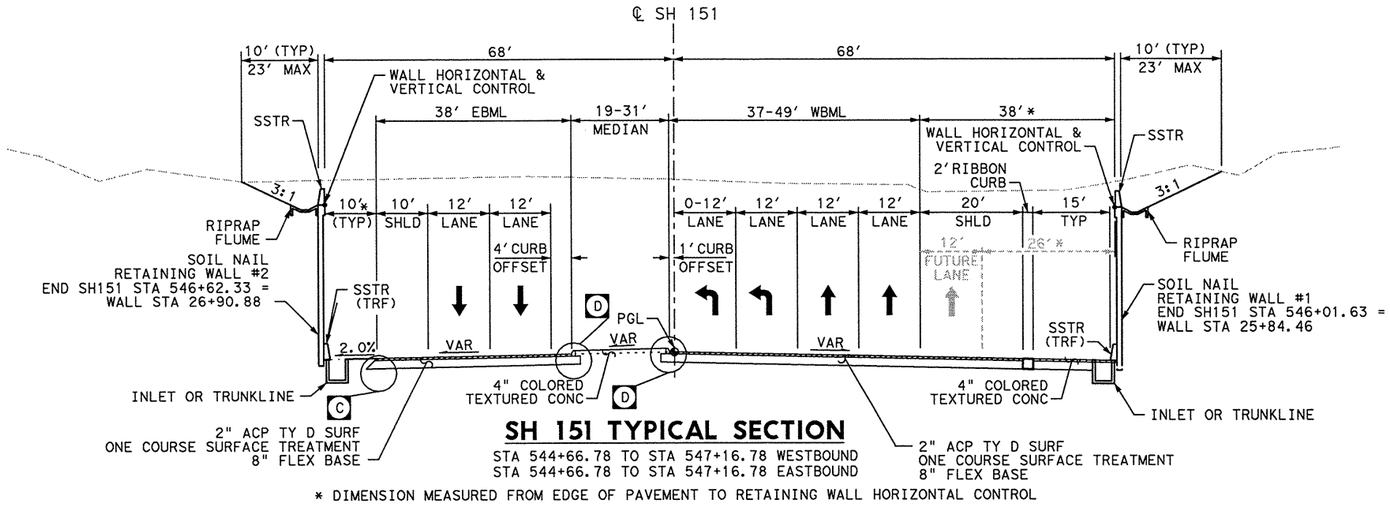

SH 151 TYPICAL SECTION

STA 544+66.78 TO STA 547+16.78 WESTBOUND
STA 544+66.78 TO STA 547+16.78 EASTBOUND

* DIMENSION MEASURED FROM EDGE OF PAVEMENT TO RETAINING WALL HORIZONTAL CONTROL

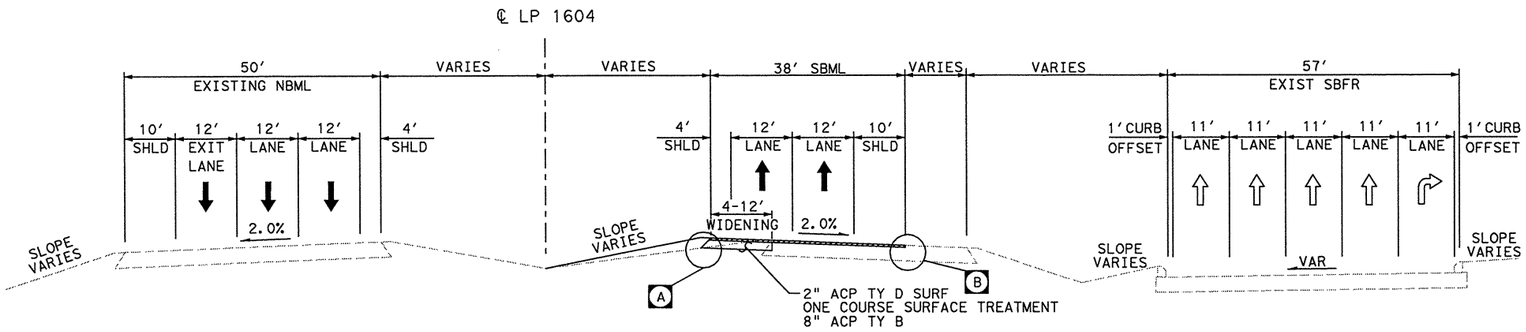

LP 1604 TYPICAL SECTION

STA. 559+06.00 TO STA. 565+06.25

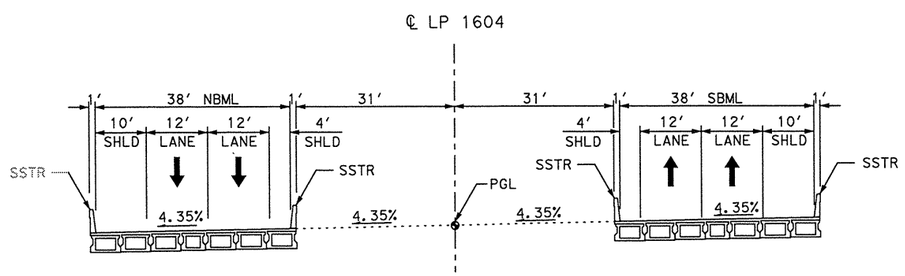

LP 1604 BRIDGE TYPICAL SECTION

STA 565+06.25 TO STA 567+44.29 SOUTHBOUND
STA 565+39.54 TO STA 567+84.83 NORTHBOUND

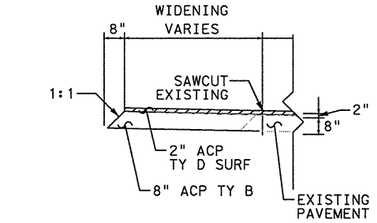

A

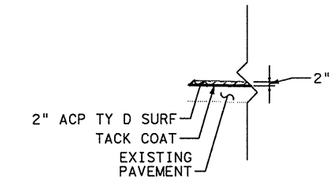

B

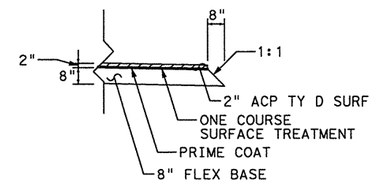

C

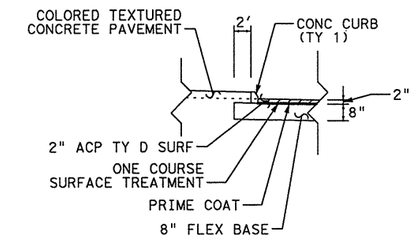

D

FOR OVERLAY, WIDENING, AND NEW CONSTRUCTION SURFACE COURSE, USE PAY ITEM 3224-2083 FOR ASPHALT COURSE. FOR WIDENING, USE PAY ITEM 3224-2008 FOR BASE COURSE.

PLAN SHEET N.T.S.

STATE OF TEXAS
MICHAEL W. MIDKIFF
75435
REGISTERED PROFESSIONAL ENGINEER
12/5/11

NO.	DATE	REVISION DESCRIPTION	APP. BY

© 2011

Texas Department of Transportation

MACTEC
3520 EXECUTIVE CENTER DRIVE
SUITE 200
AUSTIN, TEXAS 78731
(512) 795-0360

REGISTRATION NUMBER: F-1784

SH 151

ROADWAY PROPOSED TYPICAL SECTIONS LP 1604

(SHEET 5 OF 5)

FED. RD. DIV. NO.			SHEET NO.
			8
STATE	DIST.	COUNTY	
TEXAS	SA	BEXAR	
CONT.	SECT.	JOB	HIGHWAY NO.
2452	01	043	SH 151

p:\tf60ND01\29\cad\sheet\15typ03.dgn 12/6/2011 8:56:24 AM mwmidkiff

**********GENERAL NOTES**********
2004 Specification Book (Revised January 5, 2011)

Basis of Estimate

Item	Description	Rate/Area	Quant-Tons
168	Vegetative watering (Perm seeding)	15.6 Gal/42,975 SY	670 MG
168	Vegetative watering (Temp Warm seeding)	15.6 Gal/21,488 SY	335 MG
168	Vegetative watering (Temp Cool seeding)	15.6 Gal/21,488 SY	335 MG

Asphalt Concrete Pavement

Type	Location	Depth	Rate/Area	Quant-Unit
D-GR HMA TY-D	Widening/Overlay	2"	220 lbs/49,116 SY	5,397 Tons
D-GR HMA TY-D	Full Depth Construction	2"	220 lbs/35,206 SY	3,873 Tons
D-GR HMA TY-B	Widening	8"	880 lbs/ 6,583 SY	2,773 Tons
FL BS TY D GR 2	Full Depth Construction	8"	2/9 CY/35,733 SY	7,941 CY

Surface Treatment Data

Description	1st Course
Flex Base (Full Depth Construction) Roadway	35,206 SY

-----See Bid Item-----

Prime Coat (AE-P or MC-30)--Rate (Gal/SY).....0.30/1 = 10,563 Gal
Asphalt (AC-5 or AC-10)--Rate (Gal/SY)..... 0.34/1 = 11,970 Gal
Aggregate-- Ty PE/Gr 4--Rate (CY/SY).....1/130 = 272 CY

The following State, District, Local and/or Utility Standards have been modified:
BBCD-S (MOD)

Steel Wrapped or Asbestos Utility Lines:

Existing steel wrapped natural gas and/or asbestos cement (AC) water lines that will no longer be in service are usually abandoned in place (AIP). However, if any of these lines have to be removed for whatever reason (in the way of other construction, to make tie-ins, etc.), comply with all Federal, State and local laws, ordinances and regulations regarding the management of these materials. At a minimum:

1. Contact the Engineer.

2. Remove the minimum amount of pipe needed to perform the proposed work.

3. Cover and secure the ends of the pipe with a double layer of 6 mil plastic. If the pipe is damaged, cover the entire pipe.

4. Move the pipe to an approved temporary site within the project.

5. The Engineer will determine the owner (utility company) of the pipe and will coordinate removal from the project. The Contractor will load the pipe onto the removal vehicles but will NOT be responsible for removing the pipe from the project.

6. Removal of the pipe from the trench is subsidiary to the work that created the need for the removal (excavation for structures, roadway, a new line, tie-ins, etc.). The work performed in handling the pipe after it has been removed from the trench (covering with plastic, hauling to the temporary site and later loading on to the disposal vehicles) will be paid for through the Force Account procedure.

Contact the Engineer or the City when construction operations are within 400 feet of a signalized intersection to determine/verify the location of loop detectors, conduit, ground-boxes, etc. Repair or replace any signal equipment damaged by construction operations. The method of repair or replacement shall be pre-approved and inspected. Depending on the type and extent of the damage, the Engineer reserves the right to perform the repair or replacement work, and the Contractor will be billed for this work.

Saw cutting will be required at all pavement widening and or repair locations as specified. This work shall be subsidiary to the various bid items. Properly dispose of all materials removed.

Remove existing raised pavement markings as the work progresses or as approved. This work is subsidiary to the various bid items. Properly dispose materials removed.

To better fit field conditions, the cross sections may be varied when approved.

If there are waste areas or material source areas, follow the Texas Aggregate Quarry and Pit Safety Act requirements.

Any materials removed and not reused and determined to be salvageable shall be stored within the project limits at an approved location or delivered undamaged to the storage yard as directed. Properly dispose unsalvageable materials in accordance with local, State, and Federal regulations. Deface traffic signs so that they will not reappear in public as signs.

Any sign panels that are adjusted or removed and replaced shall be done the same workday unless otherwise approved.

Notify the Engineer at least two weeks prior to a proposed traffic pattern change(s) that will require a revision to traffic signals.

REV. 12-30-11

Hurricane Evacuation

Hurricane Season is from June 1 thru November 30. As the closest metropolitan city inland from the Texas Coast, the City of San Antonio is a major shelter destination during mandatory hurricane evacuations. As such, planned work zone lane or road closures may be restricted and/or suspended during mandatory hurricane evacuation operations. The District will coordinate these restrictions at a minimum H-120 from any projected impact to the Texas Coast.

No time charges will be made if the Engineer determines that work on the project was impacted by the hurricane.

The Engineer may order changes in the Traffic Control Plan to accommodate evacuation traffic and may suspend the work, all or in part, to ensure timely completion of this work. All work to implement changes in the Traffic Control Plan will be paid through existing bid prices or through Item 9.5, Force Account. However, the Department will not entertain any request for delay damages, loss of efficiency that may be attributed to the restriction or suspension of road or lane closures, or to changes in the Traffic Control Plan.

--Item 5--
Reference all existing striping and other pavement markings to allow these markings to be re-established. Ensure the markings (lane lines, edge lines, ramp gores, etc.) are in line with signs, TMS arrows, etc. located on overhead sign supports.

Taper ACP placed at curb inlets, traffic inlets and slotted drains.

Prior to letting, bidders may obtain a free computer diskette or a computerized transfer of files (from the Engineer's office) that contains the earthwork information. If copies of the cross-sections in addition to, or instead of, the CD are requested, they will be available at the Engineer's office for borrowing by copying companies at the bidder's expense.

When working near aerial electrical lines or utility poles, comply with Federal, State and local regulations. For electrical lines and poles shown in the plans, if the lines need to be de-energized or if poles need to be braced, contact the electrical company. Work pertaining to de-energizing lines, bracing poles and other protective measures will not be paid by TxDOT.

Prevention of Migratory Bird Nesting

It is anticipated that migratory birds, a protected group of species, may try to nest on bridges, culverts, vegetation, or gravel substrate, at any time of the year. The preferred nesting season for migratory birds is from February 15 through October 1. When practicable, schedule construction operations outside of the preferred nesting season. Otherwise, nests containing migratory birds must be avoided, and no work will be performed in the nesting areas until the young birds have fledged.

Structures

Bridge and culvert construction operations can not begin until swallow nesting prevention is implemented, until after October 1 if it's determined that swallow nesting is actively occurring, or until it's determined swallow nests have been abandoned. If the State installed nesting deterrent on the bridges and culverts, maintain the existing nesting deterrent to prevent swallow nesting until October 1 or completion of the bridge and culvert work, whichever occurs earlier. If new nests are built and occupied after the beginning of the work, do not perform work that can interfere with or discourage swallows from returning to their nests. Prevention of swallow nesting can be performed by one of the following methods:

1. By February 15, begin the removal of any existing mud nests and all other mud placed by swallows for the construction of nests on any portion of the bridge and culverts. The Engineer will inspect the bridges and culverts for nest building activity. If swallows begin nest building, scrape or wash down all nest sites. Perform these activities daily unless the Engineer determines the need to do this work more frequently. Remove nests and mud through October 1 or until bridge and culvert construction operations are completed.

2. By February 15, place a nesting deterrent (which prevents access to the bridge and culvert by swallows) on the entire bridge (except deck and railing) and culverts.

No extension of time or compensation payment will be granted for a delay or suspension of work caused by nesting swallows. This work is subsidiary to the various bid items.

--Item 6--
Show the stockpile lot and/or sub lot numbers on all tickets for all materials.

--Item 7--
The project's total disturbed area is 24.0 Ac. The disturbed area in all project locations and Contractor project specific locations (PSLs), within 1/4 mile of the project limits, will further establish the authorization requirements for storm water discharges. The Department will obtain an authorization to discharge storm water from the Texas Commission on Environmental Quality (TCEQ) for the construction activities shown on the plans. Obtain any required authorization from the TCEQ for any PSLs on or off the ROW. When the total area disturbed on the project and PSLs within 1/4 mile of the project exceeds 5 acres, provide a copy of the Contractor NOI for PSLs to the Engineer (to the appropriate MS4 operator when the project is on an off-state system route).

Notify the Engineer of the disturbed acreage within one (1) mile of the project limits. Obtain authorization from the TCEQ for Contractor PSLs for construction support activities on or off ROW.

--Item 8--
Working days will be computed and charged in accordance with Article 8.3.A.4, Standard work week.

The number of working days and interim milestones, if any, were calculated using a conceptual time determination schedule that assumes generic resources, production rates, sequences of construction and average weather conditions based on historic data. If requested, the Engineer will supply bidders a CD of the time determination schedule compatible with Primavera Project Planner software. The time determination schedule is provided for informational use only and is not intended for bidding or construction purposes. If the schedule is used for bidding or construction purposes, the bidder accepts the schedule and assumes the responsibility for verifying all aspects of the schedule. The Department will not adjust the number of working days and milestones, if any, due to differences in opinion regarding any assumptions made in the preparation of the schedule or for errors, omissions or discrepancies found in the schedule.

Locate and reference with station and offset all manholes and valves within the construction area. Each manhole and valve shall be identified by its owner (SAWS, CPS, etc.). No roadwork will begin until this list has been submitted. Gas valves have to be accessible at all times; therefore, temp. CTB, material stock piles, etc. can not be placed over these valves.

Construct all manholes and valves to final pavement elevations prior to the final mat of ACP. If, between the final elevation adjustment and the final mat of ACP, the manholes and valves are going to be exposed to traffic, place temporary asphalt around the manhole and valve to provide a +/- 50:1 taper. The cost of elevation adjustment will be part of the manhole and valve work, and asphalt tapers are part of the ACP work.

--Item 9--
When approved, provide uniformed, off-duty law enforcement officers with marked vehicles during work that requires a lane closure. The officer in marked vehicles shall be located as approved to monitor or direct traffic during the closure. The method used to direct traffic at signalized intersections shall be as approved. Additional officers and vehicles may be provided when approved or directed.

Complete the daily tracking form provided by the Department, and submit invoices that agree with the tracking form for payment at the end of each month approved services were provided.

Minimums, scheduling fees, etc. will not be paid; TxDOT will consider paying cancellation fees on a case by case basis.

--Item 100--
Begin clearing operations after trees and other areas of vegetation to be protected have been identified and approved. Install fencing around features to be protected as shown in the plans or directed. Coordinate all right of way clearing operations with the SW3P.

Trim and remove brush and trees as needed for construction operations. Obtain approval for proposed method of tree and brush trimming and removal. Vertical flailing equipment is not allowed. Treat damaged or cut branches, roots and/or stumps of all oak trees with a commercial tree wound dressing. Disinfect all pruning tools with a solution of 70% alcohol before moving from one tree to another. Unless otherwise approved, remove all resulting vegetative debris from the ROW within 24 hours. The Engineer can stop all construction operations if the dressing, cut and removal requirements are not followed.

--Item 110--
No Blasting will be allowed on this project.

--Item 164--
Drill seeding of permanent grasses requires the use of approved grass seeding equipment capable of properly storing and metering the release of small seeds (such as Bermuda grass) separately from fluffy type seeds (such as bluestems). Equipment manufactured for planting grain crops is acceptable for planting temporary cool season seeds but not for planting the permanent seed mix.

When drill seeding is required, cultivate the area to a depth of 4 in. after the fertilizer has been applied and before placing the seed.

If performing a permanent seeding in an area with established temporary grass cover and mowing is performed instead of tilling, seed and fertilizer may be distributed simultaneously during "Broadcast Seeding" operations, provided each component is applied at the specified rate.

--Item 166--
Use a fertilizer with an analysis of 13-13-13 (50% of the total N must be sulfur coated urea) to apply 60 lbs of actual N per acre. This requires 460 lbs of 13-13-13 per acre or .095 lbs per SY of area.

--Item 168--
Apply vegetative watering as needed to supplement natural rainfall during the vegetation establishment period. Plan quantity of irrigation water is based on the application of a total of 1.3 gal of water each week for each sq. yd. of area that is sodded or seeded. Establishment time is estimated to be 12 weeks for both sod and permanent seed mixes. Temporary seeding will require less time for establishment. Provide a schedule and coordinate watering cycles and rates per cycle with the Engineer. Obtain approval if the quantity of water to be applied is expected to exceed the plan quantity. Adjust the amount of water applied with each cycle and the number of cycles each wk. according to actual site conditions. Drought or other conditions, as determined by the Engineer, may require the application of supplemental irrigation during hours other than normal working hours.

--Item 302--
The asphalt binder used in the manufacture of the non-surface layers of hot mix asphalt concrete shall be PG 64-22.

Previously tested aggregates found to contain excessive quantities of dust (more than 0.5 percent passing the No. 40 sieve) during precoating, stockpiling or hauling operations, may be rejected. Use Test Method Tex-200-F, Part I for testing.

Precoated Aggregate Type PE shall consist of crushed slag, crushed stone or natural limestone rock asphalt.

The Engineer will utilize the Ignition Oven Method (Tex-236-F) for aggregate gradation, with the option of utilizing belt or vacuum extraction gradation in the event the ignition oven malfunctions.

--Item 305--
All reclaimable asphalt pavement (RAP) material will be retained by the Contractor.

--Item 316--
Asphalt season will be year around, but meet sections 316.4.D.1 through 3.

Ensure that the asphalt for precoating the aggregate and the asphalt used for the surface treatment will not result in a reaction that may adversely affect the bonding of the aggregate and asphalt during the surface treatment operation.

Do not add bag house fines in the production of precoated material.

Clean all concrete curbs, islands, medians, etc. that get coated with asphalt.

--Item 320--
Construct all longitudinal ACP joints adjacent to a travel lane with a joint maker device that will create a 3:1 to 6:1 taper. For placement of 2 inches or more, the device shall provide a maximum ½ inch vertical edge. Taper outside edges (next to the grass) or backfill (shoulder-up) the same day.

Provide a material transfer device capable of providing a continuous flow of material to the paver. The material transfer device will consist of a windrow elevator or better.

--Item 401--
A shrinkage compensator is not required for when used for backfilling pipes. Strength of the Flowable Backfill will be verified by the District Laboratory. Field testing is not required, unless deemed necessary.

--Item 420--
Mass concrete will be measured in place.

--Abutments and Bent Caps--
Design information provided in the plans is sufficient for the Contractor to calculate the top of cap elevations. TxDOT Engineers will be available to provide review if requested, provided three (3) week notice prior to beginning construction of caps.

--Item 421--
Use an automated ticket that contains the same information as TxDOT's ticket. Submit the ticket for approval prior to use. The concrete producer will contact the District Laboratory or the Engineer's Office (outside the San Antonio area) to inform TxDOT of scheduled structural concrete batching. Structural concrete includes bridge drill shafts, columns, caps, abutments, deck or top slabs of direct traffic culverts.

Air-entrained concrete is not required.

Poly-fiber reinforced concrete may be used as an option, with the approval by the Engineer, for riprap, sidewalk, curb/gutter, and mow strip. Use a TxDOT-approved manufacturer or producer for the poly-fiber. The poly-fibers shall be combined with the concrete in proportions as recommended by the manufacturer. A concrete mix design must be approved by the Engineer.

--Item 423--
The Class C concrete fascia must extend a minimum of one (1) foot below the finished grade at the face of wall. For buried portion of the rock nail walls, pneumatically placed concrete may be used in lieu of class C concrete for the permanent fascia wall from the top of leveling pad to one (1) foot below finished grade and shall be reinforced as shown on the "Rock Nail Retaining Wall Details" sheet.

--Item 432--
In all riprap slopes, provide 3-inch diameter weep holes at 10-foot maximum spacing and backed with loose graded gravel or crushed stone and galvanized hardware cloth.

In areas where guard fence posts are to be placed in riprap, the riprap shall have an 18-inch +/- blocked out area (round or square).

Match the slope of the Riprap (Mow Strip) to the slope of the adjacent roadway.

--Item 454--
The list of approved Header Type Expansion Joints can be found at:
http://www.txdot.gov/business/contractors_consultants/bridge/default.htm, title is "Bridge Expansion Joints".

--Item 462--
Use concrete aggregate with two sacks of Portland cement per cubic yard for fill between pre-cast boxes.

The following structures shall be pre-cast: Culvert Outfalls 1, 2, 6, & 7.

--Item 465--
Concrete Class B invert shaping is required at all inlets, manholes and junction boxes in order to insure positive flow. The material and work performed for the placement of the inverts shall be considered subsidiary to this item.

--Item 500--
"Materials on Hand" payments will not be considered in determining percentages for mobilization payments.

--Item 502--
Place standard markings no later than 14 days after surface treatment operations are completed.

When advanced warning flashing arrow panels and/or changeable message sign are specified, have two standby units in good condition at the job site.

Treat the pavement drop-offs as shown in the TCP.

After written notification, the time frame to provide properly maintained signs and barricades before considered in non-compliance is 48 hours from receipt of the notification.

There are existing traffic signals located at the intersection of LP 1604 and the SH 151 eastbound connector. Keep the signals in operation except when necessary for specific installation operations.

Moving an existing sign to a temporary location is subsidiary to this Item. Installations with permanent supports at permanent locations will be paid for under the applicable bid item(s).

Mount temporary mailboxes on plastic drums in accordance with Compliant Work Zone Traffic Control Devices, Section K. Mounting and moving the mailboxes as needed for the various construction phases are subsidiary to this Item.

Notify the Engineer 5 business days in advance of any temporary or permanent lane, ramp, connector, etc. closures/detours, restrictions to lane widths, alterations to vertical clearances, or modifications to radii. Any other modifications to the roadway that may adversely affect the mobility of oversized/overweight trucks also require 5 business days advance notice to the Engineer. Unless shown in the TCP, no lane, ramp, connector, etc. closures are allowed during special events. At least one lane has to remain open at all times. For all lane closures, provide

written closure information by 1:00 PM on the business day prior to the closure. For closures on a Monday or following a Holiday, furnish the information the workday prior to the closure. Lane closures will not be allowed if this reporting requirement is not met.

Avoid placing stockpiles within the roadway's horizontal clear zone. If a stockpile is placed within the clear zone, address in accordance with the TMUTCD.

Do not place barricades, signs, or any other traffic control devices where they interfere with sight distance at driveways or side streets.

In addition to providing a Contractor's Responsible Person and a phone number for emergency contact, have an employee available to respond on the project for emergencies and for taking corrective measures within 2 hours or within a reasonable time frame as specified by the Engineer.

--Item 529--
Class "C" concrete is required for machine extruded curb.

Curb inlets and extensions are based on an exposed curb height of 7 inches. The roadway curb height and shape will be transitioned to the inlet's curb with a 40: 1 taper.

--Item 540--
MBGF posts shall be round with domed tops and not painted. If 10 or less timber posts are needed, they may be purchased locally and will be accepted by visual inspection.

Guard fence posts placed in proposed and/or existing areas of riprap, sidewalks or other concrete shall have an 18-inch +/- (square or round) block out in the concrete. After the posts are installed, the blocked out area shall be topped off with 4 inches of low strength grout/mortar consisting of about 1 sack of cement per cubic yard of mix.

When connecting a Thrie-Beam to a concrete wingwall, bridge rail, CTB, etc., drill the holes for bolt placement using rotary or core type equipment. Use a core type drill when reinforcing steel is encountered. Do not use percussion or impact drilling. Repair damage to the concrete and spalls exceeding ½" from the edge of the hole.

The top height shown on SGT(7)-10 and SGT(8)-09 may be adjusted to a maximum of 28" (22" center) but not less than 27-3/4" (21-5/8" center).

--Item 542--
Salvage all undamaged/acceptable radius guardrail, and deliver to the TxDOT maintenance section yard.

--Item 585--
Use Surface Test Type B, pay adjustment schedule 2 to evaluate ride quality of travel lanes.

--Item 610--
Fabricate steel roadway illumination poles in accordance with TxDOT standards RIP-11 (Roadway Illumination Poles -2011). Poles fabricated according to RIP-11 require no shop drawings.
Alternate designs to RIP-11 or the use of aluminum to fabricate poles will require the submission of shop drawings electronically.

For instructions on submitting shop drawings electronically, go to:
http://www.dot.state.tx.us/business/contractors_consultants/bridge/shop_drawings/default.htm.
File is titled: Electronic Submission of Shop Drawings.

Provide lamps from the pre-qualified Materials Producers List. Category is "Roadway Illumination and Electrical Supplies" located on the Construction Division's (CST) web site.

Ballast/capacitors removed from the light assembly will remain the property of the State. Assume all ballast/capacitors contain Polychlorinated Biphenyl (PCB), unless a notation appears on the outside of the unit that specifies it does not contain PCB's. All ballast/capacitors with PCB's shall be placed in 55 gallon open top drum in accordance with Department of Transportation (DOT) specifications. Place six (6) inches of sawdust or other absorbent material in the bottom of the drum. Furnish and place a DOT approved PCB warning label on the outside of the drum. Do not fill a drum more than ¾ of capacity. Avoid rupturing the ballast/capacitor(s). If a ballast/capacitor is ruptured, use proper procedures, specialist trained staff and personal protective equipment for the clean-up operations.

The lamps in light fixtures may contain hazardous levels of mercury, halide, and sodium vapors. Observe and comply with all Federal, State and local laws, ordinances and regulations regarding the management of these lamps. Prevent the breakage of the lamps. At a minimum, package all lamps removed from the light fixture(s) in a container that minimizes the breakage of the lamps. Broken lamps shall be collected in a sealed plastic bag (i.e. Ziploc). Broken lamps shall be stored in separate containers from unbroken lamps. Furnish a suitable container, and attach a label stating "Universal Waste Lamps" on the container. Write the date the first lamp was placed in the container on the "Universal Waste Lamp" label. Within one (1) week after the first lamp is placed in a container, notify the Engineer. The lamps and PCB containing ballast/capacitors, placed in properly labeled containers, will remain the property of the State. Place the container in an area where it is protected from damage and the elements. The Engineer will make arrangements to collect, transport, and dispose/recycle the container. The ballast/capacitor and lamp's removal and storage is subsidiary to this item.

Stencil each illumination assembly with the circuit, light and relay numbers in black paint on the roadway side of the pole at a 45 degree angle. The numbers shall be in 3" tall and begin 6' from the top of the foundation. This work will be considered subsidiary to this item.

--Item 618--
It might be necessary to cut concrete for placement of conduit. Saw cut existing concrete, remove the concrete from the steel reinforcement (bars or fabric) and bend the steel to install the conduit. After the conduit has been placed, bend the steel back to its original position, and back-fill the trench with an approved concrete. This work is subsidiary to this Item.

The conduit depth for illumination under the City of San Antonio streets is 36 inches.

Do not use cast iron junction boxes in single slope traffic barriers.

Use materials from Material Producers list as shown on the Construction Division's (CST) web site. Category is "Roadway Illumination and Electrical Supplies."

The polymer concrete barrier box will not be paid for separately but will be considered subsidiary to ITEM 618, "CONDUIT".

Make all TMS underground conduit bends of 45 degrees or more in PVC systems, including bends into ground boxes, with rigid metal conduit, subsidiary to the various bid items with no direct payment. Ensure that grounding is in accordance with the ED sheets.

Install a permanent pull cord in all new TMS conduit and innderducts which do not contain cables. Provide pull cords that have a minimum tensile strength of 1250 lbs. and are flat with footage markings for determining length installed. Provide pull cords that are water-resistant and resistant to environmental conditions within conduit. Pull cords installed will be considered incidental to the various bid items with no direct payment made for labor and materials.

Install a single 1/C #14 AWG insulated wire (tracer wire) in TMS conduit that does not contain copper cables or contains fiber optic cable only and no copper cables, for the purpose of locating that conduit after installation, subsidiary to the item "Conduit".

When installing TMS conduit in areas where riprap presently exists, use care and do not break out more riprap than is necessary for placement of conduit. Replace riprap with concrete to the exact slope, pattern and thickness of the existing riprap, subsidiary to the various bid items with no direct payment.

--Item 620--
For both transformer and shoe-base type illumination poles, provide double-pole breakaway fuse holder as shown on the Construction Division's (CST) materials producers list. Category is

"Roadway Illumination and Electrical Supplies." Fuse holder is shown on list under Items 610 & 620.

Provide 10-amp time delay fuses.

Wire nuts for TMS installations are not be permitted.

In locations where TMS service conductors are routed through ground boxes with other cables, install a section of flexible PVC conduit in the ground box. Route the service conductors through this conduit to keep it separated from other cables. Isolate all other cables in the ground box in the same manner. Furnishing and installing the flexible PVC conduit is subsidiary to the various bid items with no direct payment.

To ensure immediate identification, consistently color code and permanently identify all TMS power conductors, twisted wire pair cables, shielded cables, control cables, and fiber optic cables in all manholes, ground boxes, and at all termination points and splices. Submit a chart or list identifying all cables and conductors in a logical and sequential manner.

Install all TMS conductors and cables continuous and without splices from terminal point to terminal point unless otherwise shown on the plans.

The TMS plans show the conduits numbered and specified cables in specific conduits. The purpose of these notes is to instruct the Contractor on how to group the cables in the conduits and not to specify the exact conduit to carry the cables. Except for the main trunklines (4- 3" PVC or 4" PVC Multiduct [2-way] or [4-way, etc]), the numbering system is arbitrary and may be set by the Contractor.

Provide an electrical conductor insulated ground in accordance with the National Electrical Code for any TMS conduit containing electrical conductors (insulated).

Test all TMS circuits to be clear of faults, grounds or open circuits.

--Item 624--
Legibly imprint the ground box cover with the words "Danger High Voltage" as required by the "Electrical Details" State Standard Sheet(s). In addition, imprint "Traffic Signal", "TMS", "Illumination", or whatever other system will be housed in the ground box. The ground box locations shown on the plans are approximate and can be adjusted to better fit field conditions when approved.

Place concrete aprons around all TMS ground boxes installed in sodded areas or as directed/approved by the Engineer.

Complete construction of TMS ground boxes within 48 hours after beginning construction for that ground box.

Provide TMS ground boxes as shown on state standard sheet ED (3)-03. Construct the cover of polymer concrete. Legibly imprint the cover with the letters "Danger High Voltage Traffic Management" in minimum 1 inch letters.

--Item 628--
Make all arrangements for electrical service and compliance with local standards and practices for proper installations.

--Item 644--
The wedge anchor system shown on State Standard Sheet SMD (TWT) is not allowed.

--Item 650--
Field survey all locations of overhead sign supports and confirm all sign structure elevations, details and dimensions shown in plans prior to fabrication. The work to construct overhead sign support concrete footings and concrete columns will be considered subsidiary to this item.

The cost to construct the concrete footing including furnishing all equipment, materials, labor, tools, incidentals and any temporary special shoring necessary will not be paid for directly but shall be considered incidental to the unit bid price for Item 650, for each concrete sign bridge, complete in place.

--Item 658--
CTB reflectors will not be paid for directly but will be considered subsidiary to the barrier.

--Item 666--
If TY II material is used (vs. an acrylic or epoxy) as the sealer for the TY I markings, place the TY II a minimum of 14 calendar days (to provide adequate curing) before placing the TY I markings.

--Item 672--
Place all adhesive material directly from the heated dispenser to the pavement. Do not use portable or non-heated containers. Use adhesive of sufficient thickness so that when the marker is pressed into the adhesive, 1/8" or more adhesive will remain under 100% of the marker. The adhesive should extend not less than 1/2" but not more than 1 1/2" beyond the perimeter of the marker.

--Item 677--
Obtain approval before using the mechanical method for the elimination of existing thermoplastic pavement markings.

--Item 680--
The Contractor shall be required to maintain the existing signal system located at the intersection of Loop 1604 and the eastbound SH 151 access road in good working order. In addition, the Contractor will be required to coordinate signal phasing and timings with TxDOT and the City of San Antonio traffic offices. This work will be considered subsidiary to this item.

Furnish and install all required materials and equipment necessary for the complete and operating traffic signal installation at the following intersections:
LP 1604 and the SH 151 eastbound connector.

The locations shown on the plans for signal pole foundations, controller foundations, conduit and other items may be adjusted to better fit field conditions as approved.

High pressure sodium lamps shall meet ANSI C78 requirements and shall be the type that extinguishes at the end of usable lamp life and remains extinguished without cycling. 400 watt lamps shall contain less that 4.0 MG of mercury. 250 watt lamps shall contain less than 3.0 MG of mercury. Lamps shall be lead free. Lamps shall pass the Federal Toxic Characteristic Leachate Producure (TCLP). Lamp examples: OSRAM-Sylvania LU400/ECO Plus.
Demonstrate that the field wiring is properly installed, install the controller assembly, connect the wiring and turn on the controller.

--Item 682--
Provide all signal heads from the same manufacturer. Pedestrian signals may be by a different manufacturer than the vehicle signal heads.

Cover all signal faces until placed in operation.

All pedestrian signal faces shall be single section LED Type. Die cast polycarbonate is acceptable in lieu of die cast aluminum. All mounting attachments shall be constructed of steel pipe and mounted as shown on the plans.

For all proposed mast arm pole assemblies, use mounting bracket assembly Option "C" as shown on the State Standard Sheet(s) "Single Mast Arm Assemblies".

--Item 684--
Provide an extra 10' for each cable terminating in the controller cabinet. All cables shall be continuous without splices from terminal point to terminal point. All proposed signal cable shall be #12 AWG stranded copper.

--Item 686--
Provide all signal poles from the same manufacturer. Pedestrian poles may be from a different manufacturer.

--Item 730--
Spot Mow and hand trim the right of way, including newly seeded or sodded areas, when vegetation reaches a height of 16" or when directed. Removal of brush sprouts growing within guardrail, concrete barriers or at other locations where mowing or hand trimming is done within the limits of construction is required and subsidiary to this item. Mowing may be required more often in newly sodded or seeded areas than in other parts of the project because of the supplemental irrigation these areas receive and the resulting weed growth. Coordinate mowing to avoid rutting or compaction of the soil when mowing where supplemental irrigation is being used. Use mowing equipment that will not adversely affect soil retention blankets or mulches that have been applied. Work performed under this item does not replace the mowing required when placing permanent seeding in an area that has established temporary seeding as described in Article 164.3, Construction.

--Item 3224--
Table 6, in Item 340, Table 8 in Item 344 and Table 10 in Item 3224, Hamburg Wheel Test Requirements tested in accordance with Tex-242-F are changed for PG 64-22 or lower and PG 70-22. Minimum number of passes at 0.5" rut depth, tested at 122 degrees F will be 5,000 and 10,000, respectively.
Design all mixture types using a target laboratory-molded density of 96.5%.

The asphalt plant shall have truck scales as defined in Item 520. Give three weight tickets bearing the date, the truck number, and the gross, net and tare weights to the truck driver for the State inspector at the spreading and finishing operation. Trucks may be required to weigh on public scales or portable platform scales to verify the weight of the ticket.

Submit a copy of the Tex-233-F production charts on a weekly basis. At the end of the ACP work, provide all originals.

Crushing of aggregate for hot mix and immediate use for production of the mix is not allowed. Stockpile the aggregate until enough material is available for five days of production unless prior approval is provided. Hold a pre-placement meeting one month prior to the placement of the hot mix.

The main purpose of hot mix cores taken by the State are for payment calculations. If (for quality control purposes) the core information is needed sooner, take additional cores.

Do not use diesel or solvents as asphalt release agents in production, transportation, or construction. A list of approved asphalt release agents is available from the District Laboratory.

No more than one hot mix lot will be open for any specific type of hot mix, unless authorized. After a lot is open and the Contractor gets approval to change plants, the previous lot will be closed, and a new lot will be opened. The numbering for the lots produced at the new plant will

start with No. 1. If allowed to switch back to the original or previous plant, the next lot from that plant will resume numbering sequentially from the last lot produced by that plant.

Schedule lay-down placement where uneven travel lanes are minimized and eliminated weekly.

If asphalt material is obtained from other than a commercial source presently inspected by TxDOT, furnish a Type D structure for the asphalt mix control laboratory for the Engineer's use. Provide a minimum height of 8 feet and a minimum of 400 square feet of gross floor area for permanently located asphalt plants or 200 square feet for a temporary plant. The floor area will be partitioned into a minimum of two rooms, with a minimum of two windows per room. The floor shall have an impervious cover and sufficient strength to support the testing equipment. Portable structures shall be support blocked for stability and shall be tied down.

--Item 6007--
All existing signal equipment with the exception of the signal controller and equipment become the property of the Contractor and disposed of in accordance with the specifications. Deliver the controller and related equipment to the Signal shop, located at 4615 NW Loop 410 (corner of IH 410 and Callaghan Road) in San Antonio, Texas, or to the Area Office as directed.

--Item 6010--COMMUNICATION CABLE
Splices of communication cable are not allowed on this project. Test all pairs to ensure they are good before installation.

If any existing TMS communication cable that is shown to remain is damaged, it will be replaced in its entirety (terminal point to terminal point – no splices allowed) at no cost to the Department. Replace and make fully operational any cable damaged within 48 hours after damage is detected.

Provide cable of size and gauge as shown on plans.

Rack TMS communication cables to side of any manhole it passes thru. Provide 1 1/2 turns of cable in each ground box or manhole it passes thru.

--Item 6834--PORTABLE CHANGEABLE MESSAGE SIGN
It is anticipated that three (3) individual units will be required for the project, with the number of days per phase indicated below:

Phase 2A - total of 84 days
Phase 2B - total of 109 days

--Item 6981--MULTI-DUCT CONDUIT SYSTEM
Lengths of Multi-duct conduit system (trenched, bored, trenched in roadway, hung on bridge) are measured by length of system, not total of lengths of conduits installed. For example, a 20-ft. length of conduit system is measured as 20 feet, regardless of whether it is a 2-way system, 4-way system or any other number of conduits system.

Install a pull rope in each Innerduct, and plug any unused Innerduct. Provide plugs with eyes for attaching the pull rope.

Submit to the Engineer for approval attachment details for Fiberglass Multi-duct system hung on bridges (if applicable). Use Omni duct (Opti-com Mfg.) or equivalent hanging system or as approved by the Engineer. Use manufacturer's recommended spacing of hangers and expansion joints.

--Item 6985--FINAL ACCEPTANCE PLAN
The 60 day test will begin only when all TMS equipment installation, cabling, wiring, testing, field work, TRANSGUIDE operations center work, etc. for the entire project is completed and acceptable to TxDOT. Partial testing is not allowed.

--Item 8760--SIGNAL WIRELESS COMMUNICATION
The Contractor shall provide strain relief for all network pathcords and network communications cables in the cabinet.

The Contractor shall demonstrate possession and knowledge of use of network termination tools and process. The Contractor shall prepare network terminations and connections and notify City/Engineer for testing of communications. The Contractor is responsible for providing fully functioning wireless communication system in a timely manner.

The Contractor shall install and orient bridge communication device as specified by the City of San Antonio Information Technology Services Department (ITSD). The Contractor shall relocate/modify bridge communication device position and orientation as directed by ITSD to provide communication. Bridge device has a signal strength aiming system consisting of LED strength meter. LED strength meter must reach at least four (4) bars of signal strength for proper operation. The bridge device is to be connected to Port 2 on the Ethernet switch.

The Contractor shall install and orient wireless Access Point (AP) communication device as specified by ITSD. The Contractor shall relocate/modify AP position and orientation as required to provide suitable signal strength for reliable communications. AP device should be oriented with antennas in a plane that is nominally 45 degrees to the center line of the roadway. The AP device is to be connected to Port 1 on the Ethernet switch.

All existing wireless communication devices including wireless Access Points, Ethernet switches and bridges to be removed shall be returned to the City of San Antonio signal shop.

TMS General Notes

"TMS" is abbreviation for Traffic Management System.

Coordinate the installation of permanent TMS equipment, conduit, ground boxes, etc. with the roadway construction phasing so as to prohibit any open cuts across new construction.

REV. 12-30-11

All references to the TRANSGUIDE mainframe are references to the TRANSGUIDE computer network.

Provide a submittal compliance matrix with all TMS submittals.

Perform all TMS Prototype approval, Design approval, and Demonstration tests within the State of Texas.

Not previously used TMS equipment:
Test any TMS Equipment (including but not limited to Wireless Ethernet Radios), which has not previously been proven to be fully operational and fully compatible with the existing TRANSGUIDE software and hardware in the following manner:

Conduct tests for each type of TMS equipment, as directed by the Engineer, to determine compatibility of the equipment with the existing TRANSGUIDE software and hardware. Prior to field installation, test one complete unit with all components to ensure that it is fully compatible with the existing TRANSGUIDE system. Mount the equipment to a trailer and connect in the field to an existing Fiber Hub. Make all hardware connections and configuration (in the operations center and in the field) and provide all incidentals (cable, connectors, etc.) to make the unit operational. Test all aspects of the system to show full functionality of the equipment and to show full compatibility with the TRANSGUIDE software and hardware. Failure to perform to the requirements of any test will be considered as a defect, and the equipment will be subject to rejection by the Engineer. Rejected equipment may be offered again for retest provided all noncompliances have been corrected and retested by the Contractor, and evidence thereof submitted to the Engineer. Testing is considered subsidiary to the particular bid item, with no direct payment made.

Partial Payments:
The Contractor will receive partial payments for the following TMS items unless otherwise approved by the Engineer:

Wireless Ethernet Radio (Local) Link, CCTV Field Equipment, T-1 Ethernet Extender Equipment.

Partial Payments Consist Of The Following:

Materials On Hand: the Contractor's paid amount is based on the invoices for the material received and stored in his/her yard.

Field Installation: When the Contractor has completed installation of the Wireless Ethernet Radio (Local) Link and CCTV cameras, the Department will pay 35% of the bid item.

Stand-Alone Test: When the TMS equipment has passed the stand-alone test, the Department will pay 60% of the bid item.

Final Acceptance Test: When the TMS equipment has passed the test portion of the Final Acceptance Test, the Department will pay the final 5% of the bid item.

The above percentages do not include the deduction for standard Retainage.

TMS Submittals:
Include in all TMS submittals the respective bid item (specification number and descriptive code). Indicate compliance on a paragraph by paragraph basis. Ensure that the statements claiming compliance reference the appropriate documentation, and the referenced documentation supporting this claim is included with the submittal. Provide referenced documentation that contains the same numbering system as referenced in the submittal. For example, submittal item XXXX-XXXX, Section 2.3, Paragraph 3, Meets Requirements (See Attachment "B"). The supporting documentation for Item XXXX-XXXX, Section 2.3, Paragraph 3, would be titled as Attachment "B". Provide submittals with the same numbering system as stated in the specification. Failure to submit accordingly will result in rejection by the Engineer.

A TMS submittal will be considered as incomplete and therefore rejected, if it contains items listed as "being furnished by others". It is the responsibility of the Contractor to make sure the submittal addresses all items of the specification.

Provide the following TMS submittals (to be received by TxDOT San Antonio Traffic Management office) within the designated time. The time frame is in calendar days.

Item Description	Submitted By Contractor W/I Days After Authorization To Begin Work	Returned By State W/I Days
Wireless Ethernet Radio (Local) Link	30	15
CCTV Field Equipment	30	15
T-1 Ethernet Extender Equipment	30	15
Multi-Duct Conduit System	30	15
Communication Cable	30	15
Final Acceptance Plan	30	30

Submit those items designated with the (*), if any, together as a Package.

Submit the Final Acceptance Plan in electronic form.

The Contractor may submit items sooner if needed for construction but no later than the dates stated above.

REV. 12-30-11

Provide, to the Engineer, as-built plans in MicroStation format (.dgn files) of the TMS portion of this project when the project is complete. TxDOT will provide the .dgn files of the TMS plan sheets. Update these files with all TMS items as ACTUALLY CONSTRUCTED in the field. Cost to provide as-built plans as described above is subsidiary to the various bid items with no direct payment.

Customize all training specifically for the TRANSGUIDE system; generic training will not be accepted on this project. Training materials and labor are subsidiary to the various Bid Items with no direct payment.

TMS equipment and conduit locations are approximate; the precise location is to be determined in the field, therefore, the Contractor should not scale equipment off of plan sheets. Plan sheets are to be used for visual location (vicinity). Equipment locations may have to be adjusted due to conflicts with utilities or other structures, as approved by the Engineer. Do not obstruct the natural flow of water with Traffic Management equipment. In low water areas, place Traffic Management equipment on high side of ditch.

Replace or repair any existing to remain Traffic Management Equipment, conduit, cables, etc. damaged during construction, subsidiary to the various bid items with no direct payment. Replace all pavement, sidewalk, curb, rip-rap or any item damaged during construction, subsidiary to the various bid items with no direct payment.

Stencil structure numbers on all new TMS structures for permanent identification as directed by the Engineer.

Ensure that all TMS equipment furnished and installed is completely compatible with the existing hardware and software located within the TRANSGUIDE operations center (i.e. TRANSGUIDE central software). TRANSGUIDE is unique and complicated. The Contractor should contact the Traffic Management Engineer for details on the system network architecture.

All new TMS equipment and any existing TMS equipment that is relocated will be incorporated into the existing Network Management System, subsidiary to the various bid items.

Security against theft and vandalism of all Traffic Management equipment is the full responsibility of the Contractor until the date of final acceptance of the project by the Engineer.

Maintenance of all Traffic Management equipment furnished and installed on this project is the full responsibility of the Contractor until date of final acceptance of this project by the Engineer. All required documentation must be turned in before TxDOT will accept project for maintenance.

Consider all interconnect wiring within the TRANSGUIDE Control Center and all interconnect wiring for all equipment in the plans and described within the specifications as subsidiary to the various Bid Items with no direct payment.

Perform all TMS electrical work and provide all TMS electrical materials in accordance with the National Electrical Code.

The location of utilities (including TMS), either underground or overhead, if shown within the right of way, are approximate and must be verified by the Contractor before beginning construction operations. TRANSGUIDE will provide the approximate location of TMS equipment; however, it is the responsibility of the Contractor to determine the depth of the Traffic Management conduit.

In accordance with the Underground Facility Damage Prevention Act (One Call Bill), the phone number for a utility locator is 1-800-545-6005. It is the Contractor's responsibility to make arrangements for utility locators as needed.

TxDOT (Traffic Management)	(210)731-5109
TxDOT (Sign Lighting)	(210)615-5995
TxDOT (Traffic Signal)	(210)615-5975

In preparing holes for TMS posts and/or foundations, use care so as not to rupture existing drainage structures, sprinkler systems, electrical conduits and public utilities.

When installing TMS cabinet foundations or drill shaft foundations where rip-rap presently exists, use care in breaking out existing rip-rap. Do not break out area greater than is required for placement of the foundations. Replace broken out rip-rap with class "B" concrete to the exact slope, pattern and thickness of the existing rip-rap, in accordance with Item 432, subsidiary to the various bid items with no direct payment.

Work on TMS equipment that integrates into the operational system only between the hours of 12:00 am (midnight) and 4:00 am when the work requires an interface with the TRANSGUIDE operational system. Notify the TransGuide operations manager (731-5242) 48 hrs prior to this work. The Contractor is responsible for all cross connects in the TRANSGUIDE computer room.

ESTIMATE SUMMARY

		2452-01-048		2452-01-043		2452-01-043		2452-01-043		ALT	ITEM-CODE			DESCRIPTION	UNIT	TOTAL	
		LP 1604 JOINT BID UTILITIES		LP 1604 FEDERAL NON-PART.		LP 1604 BRIDGES		LP 1604 ROADWAY									
EST.	FINAL	EST.	FINAL	EST.	FINAL	EST.	FINAL	EST.	FINAL		ITEM NO	DESC CODE	SP NO			EST.	FINAL
								83.000			100	2002	002	PREPARING ROW	STA	83.000	
								820.000			104	2009		REMOVING CONC (RIPRAP)	SY	820.000	
								6013.000			106	2002		OBLITERATING ABANDONED ROAD	SY	6013.000	
								318319.000			110	2001		EXCAVATION (ROADWAY)	CY	318319.000	
								15059.000			132	2003		EMBANKMENT (FINAL) (ORD COMP) (TY B)	CY	15059.000	
								42975.000			161	2002	006	COMPOST MANUF TOPSOIL (BOS) (4")	SY	42975.000	
								42975.000			164	2039	002	DRILL SEEDING (PERM) (URBAN) (CLAY)	SY	42975.000	
								21488.000			164	2041	002	DRILL SEEDING (TEMP) (WARM)	SY	21488.000	
								21488.000			164	2043	002	DRILL SEEDING (TEMP) (COOL)	SY	21488.000	
								1340.000			168	2001		VEGETATIVE WATERING	MG	1340.000	
								7941.000			247	2054	033	FL BS (CMP IN PLC) (TY D GR 2) (FNAL POS)	CY	7941.000	
								10563.000			310	2005		PRIME COAT (MC-30 OR AE-P)	GAL	10563.000	
								11970.000			316	2020	016	ASPH (AC-5 OR AC-10)	GAL	11970.000	
								272.000			316	2248	016	AGGR (TY-PE GR-4 SAC-B)	CY	272.000	
								4380.000			354	2021		PLANE ASPH CONC PAV (0" TO 2")	SY	4380.000	
		739.000						309.000			402	2001		TRENCH EXCAVATION PROTECTION	LF	1048.000	
								11880.000			403	2001		TEMPORARY SPL SHORING	SF	11880.000	
						508.000					416	2003	001	DRILL SHAFT (30 IN)	LF	508.000	
						69.000					416	2006	001	DRILL SHAFT (48 IN)	LF	69.000	
								32.000			416	2015	001	DRILL SHAFT (NON-REINFORCED) (12 IN)	LF	32.000	
								144.000			416	2020	001	DRILL SHAFT (SIGN MTS) (36 IN)	LF	144.000	
								132.000			416	2029	001	DRILL SHAFT (RDWY ILL POLE) (30 IN)	LF	132.000	
								6.000			416	2030	001	DRILL SHAFT (TRF SIG POLE) (24 IN)	LF	6.000	
								42.000			416	2056	001	DRILL SHAFT (TRF SIG POLE) (36 IN) (ROCK)	LF	42.000	
						90.900					420	2003	002	CL C CONC (ABUT)	CY	90.900	
						121.800					420	2004	002	CL C CONC (BENT)	CY	121.800	
						253.700					420	2029	002	CL S CONC (SLAB)	CY	253.700	
						154.800					420	2031	002	CL S CONC (SHEAR KEY)	CY	154.800	
								160.000			420	2033	002	CL S CONC (APPR SLAB)	CY	160.000	
								103317.000			423	2010		RETAINING WALL (ROCK NAILED) (FACIA)	SF	103317.000	
						727.900					425	2010	001	PRESTR CONC BOX BEAM (4B34)	LF	727.900	
						2183.800					425	2011	001	PRESTR CONC BOX BEAM (5B34)	LF	2183.800	
						1580.000					428	2001	001	CONC SURF TREAT (CLASS I)	SY	1580.000	
								60.000			432	2015		RIPRAP (STONE COMMON) (DRY) (6 IN)	CY	60.000	
								99.000			432	2039		RIPRAP (MOW STRIP) (4 IN)	CY	99.000	
								610.600			432	2084		RIPRAP (CONC) (CL B) (4")	CY	610.600	
		45.000									432	2085		RIPRAP (CONC) (CL B) (6")	CY	45.000	
						828.100		6569.000			450	2013	001	RAIL (TY SSTR)	LF	7397.100	
						153.290					454	2005		ARMOR JOINT (WITH SEAL)	LF	153.290	
								1835.000			462	2006		CONC BOX CULV (5 FT X 2 FT)	LF	1835.000	
								188.000			462	2011		CONC BOX CULV (6 FT X 4 FT)	LF	188.000	
								555.000			464	2003	003	RC PIPE (CL III) (18 IN)	LF	555.000	
								1805.000			464	2022	003	RC PIPE (CL IV) (24 IN)	LF	1805.000	
								1.000			465	2005	001	MANH (COMPL) (TY M)	EA	1.000	
								2.000			465	2187	001	INLET (COMPL) (DROP) (TY 3A)	EA	2.000	
								1.000			465	2188	001	INLET (COMPL) (DROP) (TY Y-1)	EA	1.000	
								5.000			465	2189	001	INLET (COMPL) (DROP) (TY Y-1A)	EA	5.000	
								18.000			465	2190	001	INLET (COMPL) (DROP) (TY W-1)	EA	18.000	
								1.000			465	2422	001	INLET (COMP) (DROP) (TY W-4)	EA	1.000	
								1.000			465	2477	001	INLET (COMP) (DROP) (TY W-2)	EA	1.000	

ESTIMATE & QUANTITY SHEET

REV. 12-30-11

STATE DIST. NO.	COUNTY	PROJECT NO.	SHEET NO.
15	BEXAR	CSJ 2452-01-043, ETC.	10

ESTIMATE SUMMARY

		2452-01-048		2452-01-043		2452-01-043		2452-01-043		ALT	ITEM-CODE			DESCRIPTION	UNIT	TOTAL	
		LP 1604 JOINT BID UTILITIES		LP 1604 FEDERAL NON-PART.		LP 1604 BRIDGES		LP 1604 ROADWAY									
EST.	FINAL	EST.	FINAL	EST.	FINAL	EST.	FINAL	EST.	FINAL		ITEM NO	DESC CODE	SP NO			EST.	FINAL
								1.000			466	2035		WINGWALL (FW-S) (HW=5 FT)	EA	1.000	
								1.000			467	2225		SET (TY II) (30 IN) (RCP) (4: 1) (C)	EA	1.000	
								1.000			471	2001		GRATE	EA	1.000	
								326.000			476	2013	003	JACK BOR OR TUN PIPE (30 IN) (RC) (CL IV)	LF	326.000	
								25.000			476	2022	003	JACK BOR OR TUN PIPE (24 IN) (RC) (CL V)	LF	25.000	
								434.000			476	2053	003	JACK OR TUN BOX CULV (7 FT X 4 FT)	LF	434.000	
								290.000			476	2092	003	JACK OR TUN BOX CULV (5 FT X 2 FT)	LF	290.000	
								1.000			479	2002		ADJ INLETS	EA	1.000	
								1.000			496	2001		REMOV STR (BOX CULVERT)	EA	1.000	
								6.000			496	2004		REMOV STR (SET)	EA	6.000	
								2.000			496	2005		REMOV STR (WINGWALL)	EA	2.000	
								2.000			496	2006		REMOV STR (HEADWALL)	EA	2.000	
								3.000			496	2016		REMOV STR (PIPE)	EA	3.000	
		0.001						0.999			500	2001	005	MOBILIZATION	LS	1.000	
								18.000			502	2001	033	BARRICADES, SIGNS AND TRAFFIC HANDLING	MO	18.000	
								435.000			506	2002	011	ROCK FILTER DAMS (INSTALL) (TY 2)	LF	435.000	
								435.000			506	2009	011	ROCK FILTER DAMS (REMOVE)	LF	435.000	
								834.000			506	2016	011	CONSTRUCTION EXITS (INSTALL) (TY 1)	SY	834.000	
								834.000			506	2019	011	CONSTRUCTION EXITS (REMOVE)	SY	834.000	
								200.000			506	2024	011	BACKHOE WORK (EROSION & SEDM CONT)	HR	200.000	
								200.000			506	2026	011	FRNT END LOADER WORK (ERSN & SEDM CONT)	HR	200.000	
								538.000			506	2033	011	SANDBAGS FOR EROSION CONTROL (2')	LF	538.000	
								3195.000			506	2034	011	TEMPORARY SEDIMENT CONTROL FENCE	LF	3195.000	
								200.000			506	2043	011	ROCK FILTER DAMS (REMOVE & REPLACE)	LF	200.000	
								10.000			508	2001		CONSTRUCTING DETOURS	STA	10.000	
								3960.000			512	2004	002	PORT CTB (FUR & INST) (SNGL SLP) (TY 1)	LF	3960.000	
								1050.000			512	2022	002	PORT CTB (MOVE) (SNGL SLP) (TY 1)	LF	1050.000	
								3960.000			512	2040	002	PORT CTB (REMOVE) (SNGL SLP) (TY 1)	LF	3960.000	
								3188.000			528	2001		COLORED TEXTURED CONC (4")	SY	3188.000	
								1590.000			529	2001		CONC CURB (TY I)	LF	1590.000	
								660.000			529	2076		CONC GUTTER (2')	LF	660.000	
								1525.000			540	2001	023	MTL W-BEAM GD FEN (TIM POST)	LF	1525.000	
								4.000			540	2005	023	TERMINAL ANCHOR SECTION	EA	4.000	
								6.000			540	2011	023	MTL BEAM GD FEN TRANS (THRIE-BEAM)	EA	6.000	
								10.000			544	2001		GUARDRAIL END TREATMENT (INSTALL)	EA	10.000	
								7.000			545	2049		CRASH CUSH ATTEN (INSTL) (WORK ZONE)	EA	7.000	
								2.000			545	2050		CRASH CUSH ATTEN (MOV&RESET) (WORK ZONE)	EA	2.000	
								7.000			545	2051		CRASH CUSH ATTEN (REMOVE) (WORK ZONE)	EA	7.000	
								14.000			610	2043	010	INS RD IL AM (TY SA) 50T-8-8 (.4 KW) S	EA	14.000	
								8.000			610	2059	010	INS RD IL AM (U/P) (TY IF) (.15KW)	EA	8.000	
								3.000			610	2068	010	REMOVE RD IL ASM (TRANS-BASE)	EA	3.000	
								2.000			610	2099	010	INS RD IL AM (INSTALL ONLY)	EA	2.000	
								4460.000			618	2018		CONDT (PVC) (SCHD 40) (2")	LF	4460.000	
								50.000			618	2019		CONDT (PVC) (SCHD 40) (2") (BORE)	LF	50.000	
								80.000			618	2034		CONDT (PVC) (SCHD 80) (2")	LF	80.000	
								380.000			618	2044		CONDT (RM) (3/4")	LF	380.000	
								45.000			618	2086		CONDT (PVC) (SCHD 80) (2") (TRENCH) (ROCK)	LF	45.000	
								100.000			618	2088		CONDT (PVC) (SCHD 80) (3") (TRENCH) (ROCK)	LF	100.000	
								750.000			618	2089		CONDT (PVC) (SCHD 80) (3") (BORE) (ROCK)	LF	750.000	
								1500.000			620	2009	001	ELEC CONDR (NO. 6) BARE	LF	1500.000	

ESTIMATE SUMMARY

		2452-01-048		2452-01-043		2452-01-043		2452-01-043		ALT	ITEM-CODE			DESCRIPTION	UNIT	TOTAL	
		LP 1604 JOINT BID UTILITIES		LP 1604 FEDERAL NON-PART.		LP 1604 BRIDGES		LP 1604 ROADWAY									
EST.	FINAL	EST.	FINAL	EST.	FINAL	EST.	FINAL	EST.	FINAL		ITEM NO	DESC CODE	SP NO			EST.	FINAL
								1330.000			620	2010	001	ELEC CONDR (NO. 6) INSULATED	LF	1330.000	
								3940.000			620	2011	001	ELEC CONDR (NO. 8) BARE	LF	3940.000	
								10070.000			620	2012	001	ELEC CONDR (NO. 8) INSULATED	LF	10070.000	
								380.000			620	2015	001	ELEC CONDR (NO.12) BARE	LF	380.000	
								760.000			620	2016	001	ELEC CONDR (NO.12) INSULATED	LF	760.000	
								705.000			621	2002		TRAY CABLE (3 CONDR) (12 AWG)	LF	705.000	
								13.000			624	2008	014	GROUND BOX TY A (122311) W/APRON	EA	13.000	
								8.000			624	2014	014	GROUND BOX TY D (162922) W/APRON	EA	8.000	
								1.000			628	2038	003	ELC SRV TY A 240/480 100 (SS) SS (E) GC (O)	EA	1.000	
								2.000			628	2065	003	ELC SRV TY D 120/240 060 (NS) GS (N) TP (O)	EA	2.000	
								1.000			628	2122	003	ELC SRV TY D 120/240 100 (NS) SS (E) SP (O)	EA	1.000	
								152.250			636	2001	014	ALUMINUM SIGNS (TY A)	SF	152.250	
								303.250			636	2002	014	ALUMINUM SIGNS (TY G)	SF	303.250	
								580.500			636	2003	014	ALUMINUM SIGNS (TY O)	SF	580.500	
								12.000			644	2001		IN SM RD SN SUP&AM TY10BWG (1) SA (P)	EA	12.000	
								8.000			644	2004		IN SM RD SN SUP&AM TY10BWG (1) SA (T)	EA	8.000	
								3.000			644	2006		IN SM RD SN SUP&AM TY10BWG (1) SA (U)	EA	3.000	
								17.000			644	2025		IN SM RD SN SUP&AM TYS80 (1) SA (T)	EA	17.000	
								1.000			644	2031		IN SM RD SN SUP&AM TYS80 (1) SA (U-WC)	EA	1.000	
								54.000			644	2060		REMOVE SM RD SN SUP & AM	EA	54.000	
								1312.000			647	2001		INSTALL LRSS (STRUCT STEEL)	LB	1312.000	
								1.000			647	2003		REMOVE LRSA	EA	1.000	
								1.000			650	2083		INS OH SN SUP (80 FT BRDG)	EA	1.000	
								1.000			650	2229		INS OH SN SUP (92 FT BRDG)	EA	1.000	
								13.000			658	2263		INSTL DEL ASSM (D-SY) SZ 1 (FLX) GND	EA	13.000	
								18.000			658	2316		INSTL OM ASSM (OM-2Z) (FLX) GND	EA	18.000	
								8.000			658	2318		INSTL OM ASSM (OM-2Z) (FLX) SRF	EA	8.000	
								16.000			658	2329		INSTL DEL ASSM (D-SW) SZ 1 (FLX) GND	EA	16.000	
								2000.000			662	2001		WK ZN PAV MRK NON-REMOV (W) 4" (BRK)	LF	2000.000	
								7445.000			662	2004		WK ZN PAV MRK NON-REMOV (W) 4" (SLD)	LF	7445.000	
								4083.000			662	2032		WK ZN PAV MRK NON-REMOV (Y) 4" (SLD)	LF	4083.000	
								49.000			662	2052		WK ZN PAV MRK REMOV (REFL) TY I-C	EA	49.000	
								19885.000			666	2003		REFL PAV MRK TY I (W) 4" (BRK) (100MIL)	LF	19885.000	
								269.000			666	2006		REFL PAV MRK TY I (W) 4" (DOT) (100MIL)	LF	269.000	
								19976.000			666	2012		REFL PAV MRK TY I (W) 4" (SLD) (100MIL)	LF	19976.000	
								6570.000			666	2036		REFL PAV MRK TY I (W) 8" (SLD) (100MIL)	LF	6570.000	
								1902.000			666	2039		REFL PAV MRK TY I (W) 12" (LNDP) (100MIL)	LF	1902.000	
								1105.000			666	2042		REFL PAV MRK TY I (W) 12" (SLD) (100MIL)	LF	1105.000	
								171.000			666	2048		REFL PAV MRK TY I (W) 24" (SLD) (100MIL)	LF	171.000	
								26.000			666	2054		REFL PAV MRK TY I (W) (ARROW) (100MIL)	EA	26.000	
								26.000			666	2096		REFL PAV MRK TY I (W) (WORD) (100MIL)	EA	26.000	
								21617.000			666	2111		REFL PAV MRK TY I (Y) 4" (SLD) (100MIL)	LF	21617.000	
								1020.000			666	2132		REFL PAV MRK TY I (Y) 24" (SLD) (100MIL)	LF	1020.000	
								19885.000			666	2142		REF PAV MRK TY II (W) 4" (BRK)	LF	19885.000	
								269.000			666	2143		REF PAV MRK TY II (W) 4" (DOT)	LF	269.000	
								19976.000			666	2145		REF PAV MRK TY II (W) 4" (SLD)	LF	19976.000	
								6570.000			666	2153		REF PAV MRK TY II (W) 8" (SLD)	LF	6570.000	
								1902.000			666	2154		REF PAV MRK TY II (W) 12" (LNDP)	LF	1902.000	
								1105.000			666	2155		REF PAV MRK TY II (W) 12" (SLD)	LF	1105.000	
								171.000			666	2157		REF PAV MRK TY II (W) 24" (SLD)	LF	171.000	

ESTIMATE & QUANTITY SHEET

REV. 12-30-11

STATE DIST. NO.	COUNTY	PROJECT NO.	SHEET NO.
15	BEXAR	CSJ 2452-01-043, ETC.	10B

ESTIMATE SUMMARY

		2452-01-048		2452-01-043		2452-01-043		2452-01-043		ALT	ITEM-CODE			DESCRIPTION	UNIT	TOTAL	
		LP 1604 JOINT BID UTILITIES		LP 1604 FEDERAL NON-PART.		LP 1604 BRIDGES		LP 1604 ROADWAY									
EST.	FINAL	EST.	FINAL	EST.	FINAL	EST.	FINAL	EST.	FINAL		ITEM NO	DESC CODE	SP NO			EST.	FINAL
								26.000			666	2160		REF PAV MRK TY II (W) (ARROW)	EA	26.000	
								26.000			666	2173		REF PAV MRK TY II (W) (WORD)	EA	26.000	
								21617.000			666	2178		REF PAV MRK TY II (Y) 4" (SLD)	LF	21617.000	
								1020.000			666	2185		REF PAV MRK TY II (Y) 24" (SLD)	LF	1020.000	
								697.000			672	2017	034	REFL PAV MRKR TY II-C-R	EA	697.000	
								48501.000			677	2001		ELIM EXT PAV MRK & MRKS (4")	LF	48501.000	
								1530.000			677	2007		ELIM EXT PAV MRK & MRKS (24")	LF	1530.000	
								10.000			677	2008		ELIM EXT PAV MRK & MRKS (ARROW)	EA	10.000	
								5.000			677	2018		ELIM EXT PAV MRK & MRKS (WORD)	EA	5.000	
								1.000			680	2002		INSTALL HWY TRF SIG (ISOLATED)	EA	1.000	
								1.000			681	2001		TEMP TRAF SIGNALS	EA	1.000	
								11.000			682	2001	001	BACK PLATE (12 IN) (3 SEC)	EA	11.000	
								2.000			682	2022	001	VEH SIG SEC (12 IN) LED (GRN ARW)	EA	2.000	
								9.000			682	2023	001	VEH SIG SEC (12 IN) LED (GRN)	EA	9.000	
								2.000			682	2024	001	VEH SIG SEC (12 IN) LED (YEL ARW)	EA	2.000	
								13.000			682	2025	001	VEH SIG SEC (12 IN) LED (YEL)	EA	13.000	
								2.000			682	2026	001	VEH SIG SEC (12 IN) LED (RED ARW)	EA	2.000	
								9.000			682	2027	001	VEH SIG SEC (12 IN) LED (RED)	EA	9.000	
								2.000			682	2028	001	BACK PLATE (12 IN) (1 SEC)	EA	2.000	
								1025.000			684	2035		TRF SIG CBL (TY A) (14 AWG) (9 CONDR)	LF	1025.000	
								1.000			685	2004	014	INSTL RDSD FLSH BEACON ASSM(SOLAR PWRD)	EA	1.000	
								1.000			686	2045		INS TRF SIG PL AM(S) 1 ARM (44') LUM	EA	1.000	
								2.000			686	2049		INS TRF SIG PL AM(S) 1 ARM (48') LUM	EA	2.000	
								1.000			687	2001	004	PED POLE ASSEMBLY	EA	1.000	
				50.000							730	2003		SPOT MOWING	AC	50.000	
				18.000							734	2002		LITTER REMOVAL	CYC	18.000	
								4.000			1018	2002		TREE PROTECTION	AC	4.000	
								2773.000			3224	2008		D-GR HMA(QCQA) TY-B PG64-22	TON	2773.000	
								9270.000			3224	2083		D-GR HMA(QCQA) TY-D SAC-A PG76-22	TON	9270.000	
								304108.000			4118	2001		ROCK NAIL ANCHORS	LF	304108.000	
		1.000									5950	2001		NGP MOBILIZATION	LS	1.000	
		601.000									5950	2002		NGP (MAIN)PLAS W/TRC WR(4")JT TR W/12"	LF	601.000	
		126.000									5950	2003		NGP (MAIN) (PLAS W/TRAC WIRE) (4") (BORE)	LF	126.000	
		126.000									5950	2004		NGP (MAIN) (STEEL) (12") (BORE)	LF	126.000	
		16.000									5950	2005		NGP (MAIN) (PLASTIC W/TRACER WIRE) (4")	LF	16.000	
		122.000									5950	2006		NGP (MAIN) (STEEL) (12")	LF	122.000	
								2.000			6007	2001		REMOVING TRAFFIC SIGNALS	EA	2.000	
								30.000			6010	2031		COMM CABLE (22 AWG) (6 PAIR)	LF	30.000	
								579.000			6834	2001		PORTABLE CHANGEABLE MESSAGE SIGN	DAY	579.000	
								190.000			6981	2001		MULT-D CON SYS (4" PVC) (2-WAY) (BORED)	LF	190.000	
								230.000			6981	2002		MULT-D CON SYS(4" PVC) (2-WAY) (CONC ENC)	LF	230.000	
								1.000			6985	2001		FINAL ACCEPTANCE PLAN	LS	1.000	
								3.000			8615	2001		RADAR ADVANCE DETECTION DEVICE	EA	3.000	
								1.000			8667	2001		BBU SYSTEM (EXTERNAL BATT CABINET)	EA	1.000	
								2.000			8758	2001		CCTV FIELD EQUIPMENT	EA	2.000	
								1.000			8759	2001		T-1 ETHERNET EXTENDER EQUIPMENT	EA	1.000	
								1.000			8760	2001		WIRELESS ETHERNET RADIO (LOCAL) LINK	EA	1.000	
								3.000			8836	2001		RADAR PRESENCE DETECTION DEVICE (RPDD)	EA	3.000	

ESTIMATE & QUANTITY SHEET

REV. 12-30-11

STATE DIST. NO	COUNTY	PROJECT NO.	SHEET NO.
15	BEXAR	CSJ 2452-01-043, ETC.	10C

ESTIMATE SUMMARY

		2452-01-048		2452-01-043		2452-01-043		2452-01-043		ALT.	ITEM-CODE			DESCRIPTION	UNIT	TOTAL	
		LP 1604 JOINT BID UTILITIES		LP 1604 FEDERAL NON-PART.		LP 1604 BRIDGES		LP 1604 ROADWAY									
EST.	FINAL	EST.	FINAL	EST.	FINAL	EST.	FINAL	EST.	FINAL		ITEM NO	DESC CODE	SP NO			EST.	FINAL
														MATERIAL FURNISHED BY THE STATE (PART)			
														FURNISH ETHERNET VIDEO AND SWITCHING EQ	LS	1.000	
														MATERIALS FURNISHED BY CITY - PARTICIPATING			
														CITY OF SAN ANTONIO TRAFFIC SIGNAL INST	LS	1.000	
														CITY FORCE ACCOUNT WORK (PART)			
														CITY OF SAN ANTONIO TRAFFIC SIGNAL INST	LS	1.000	

ESTIMATE & QUANTITY SHEET

REV. 12-30-11

STATE DIST. NO.	COUNTY	PROJECT NO.	SHEET NO.
15	BEXAR	CSJ 2452-01-043, ETC.	10D

PLAN SHEET NO.	STATION TO STATION	0403 2001 TEMPORARY SPL SHORING	0464 2003 RC PIPE (CL III) (18 IN)	0476 2013 JACK BOR OR TUN PIPE (30 IN) (RC) (CL IV)	0476 2053 JACK OR TUN BOX CULV (7 FT X 4 FT)	0476 2092 JACK OR TUN BOX CULV (5 FT X 2 FT)	0476 2022 JACK BOR OR TUN PIPE (24 IN) (RC) (CL V)	0506 2002 ROCK FILTER DAMS (INSTALL) (TY 2)	0506 2009 ROCK FILTER DAMS (REMOVE)	0506 2016 CONSTRUCTION EXITS (INSTALL) (TY 1)	0506 2019 CONSTRUCTION EXITS (REMOVE)	0506 2033 SANDBAGS FOR EROSION CONTROL (2')	0506 2034 TEMPORARY SEDIMENT CONTROL FENCE	0506 2043 ROCK FILTER DAMS (REMOVE & REPLACE)	0508 2001 CONSTRUCTING DETOURS
		SF	LF	LF	LF	LF	LF	LF	LF	SY	SY	LF	LF	LF	STA
TRAFFIC CONTROL															
PHASE IA															
27	484+30 TO 491+00														
28	491+00 TO 501+00														
29	501+00 TO 511+00														
30	511+00 TO 521+00														
31	521+00 TO 531+00														
32	531+00 TO 541+00														
33	541+00 TO 547+56							25					325	50	
34	513+00 TO 523+00														
35	523+00 TO 533+00														
36	533+00 TO 543+00														
37	543+00 TO 553+00														
38	553+00 TO 563+00							60		278		13	100	100	
39	563+00 TO 571+00			326	434							75	540		
40	571+00 TO 581+00							25		139				50	
41	581+00 TO 591+00														
TOTAL PHASE IA		0	0	326	434	0	0	110	0	417	0	88	965	200	0
PHASE IB															
42	484+30 TO 491+00							80					60		
43	491+00 TO 501+00							60							
44	501+00 TO 511+00														
45	511+00 TO 521+00							25					240		
46	521+00 TO 531+00							100		278			240		
47	531+00 TO 541+00														
48	541+00 TO 547+56	7920				290	25						565		
49	513+00 TO 523+00														
50	523+00 TO 533+00														
51	533+00 TO 543+00														
52	543+00 TO 553+00														
53	553+00 TO 563+00										139				
54	563+00 TO 571+00														
55	571+00 TO 581+00							20		139	139				
56	581+00 TO 591+00														
TOTAL PHASE IB		7920	0	0	0	290	25	285	0	417	278	0	1105	0	0
SHEET TOTAL		7920	0	326	434	290	25	395	0	834	278	88	2070	200	0

NO.	DATE	REVISION DESCRIPTION	APP. BY
	12/22/12	QUANTITY CHANGE	MWM

© 2011

Texas Department of Transportation

MACTEC
3520 EXECUTIVE CENTER DRIVE
SUITE 200
AUSTIN, TEXAS 78731
(512) 795-0360

REGISTRATION NUMBER: F-1784

SH 151

TRAFFIC CONTROL AND SW3P SUMMARY

(SHEET 1 OF 4)

FED. RD. DIV. NO.			SHEET NO.
			11
STATE	DIST.	COUNTY	
TEXAS	SA	BEXAR	
CONT.	SECT.	JOB	HIGHWAY NO.
2452	01	043	SH 151

REV. 12-30-11

12/28/2011 2:11:45 PM PRIHAN
p:\4760\0-0129\cad\sheet\151\sum_tcp01.dgn

PLAN SHEET NO.	STATION TO STATION	0512 2004 PORT CTB (FUR & INST) (SNGL SLP) (TY 1)	0512 2022 PORT CTB (MOVE) (SNGL SLP) (TY 1)	0512 2040 PORT CTB (REMOVE) (SNGL SLP) (TY 1)	0545 2049 CRASH CUSH ATTEN (INSTL) (WORK ZONE)	0545 2050 CRASH CUSH ATTEN (MOV&RESET) (WORK ZONE)	0545 2051 CRASH CUSH ATTEN (REMOVE) (WORK ZONE)	0662 2001 WK ZN PAV MRK NON-REMOV (W) 4" (BRK)	0662 2004 WK ZN PAV MRK NON-REMOV (W) 4" (SLD)	0662 2032 WK ZN PAV MRK NON-REMOV (Y) 4" (SLD)	0662 2052 WK ZN PAV MRK REMOV (REFL) TY I-C	0677 2001 ELIM EXT PAV MRK & MRKS (4")	0677 2007 ELIM EXT PAV MRK & MRKS (24")	0677 2008 ELIM EXT PAV MRK & MRKS (ARROW)	0677 2018 ELIM EXT PAV MRK & MRKS (WORD)	0681 2001 TEMP TRAF SIGNALS
		LF	LF	LF	EA	EA	EA	LF	LF	LF	EA	LF	LF	EA	EA	EA
TRAFFIC CONTROL																
PHASE IA																
27	484+30 TO 491+00															
28	491+00 TO 501+00															
29	501+00 TO 511+00															
30	511+00 TO 521+00															
31	521+00 TO 531+00															
32	531+00 TO 541+00															
33	541+00 TO 547+56															
34	513+00 TO 523+00															
35	523+00 TO 533+00															
36	533+00 TO 543+00															
37	543+00 TO 553+00															
38	553+00 TO 563+00															
39	563+00 TO 571+00	1080			2											
40	571+00 TO 581+00															
41	581+00 TO 591+00															
TOTAL PHASE IA		1080	0	0	2	0	0	0	0	0	0	0	0	0	0	0
PHASE IB																
42	484+30 TO 491+00															
43	491+00 TO 501+00	360			1											
44	501+00 TO 511+00	1525			1											
45	511+00 TO 521+00	485			1											
46	521+00 TO 531+00	240			1											
47	531+00 TO 541+00															
48	541+00 TO 547+56															
49	513+00 TO 523+00															
50	523+00 TO 533+00															
51	533+00 TO 543+00															
52	543+00 TO 553+00															
53	553+00 TO 563+00															
54	563+00 TO 571+00	270			1											
55	571+00 TO 581+00															
56	581+00 TO 591+00															
TOTAL PHASE IB		2880	0	0	5	0	0	0	0	0	0	0	0	0	0	0
SHEET TOTAL		3960	0	0	7	0	0	0	0	0	0	0	0	0	0	0

REV. 12-30-11

NO.	DATE	REVISION DESCRIPTION	APP. BY

© 2011

Texas Department of Transportation

MACTEC
3520 EXECUTIVE CENTER DRIVE
SUITE 200
AUSTIN, TEXAS 78731
(512) 795-0360

REGISTRATION NUMBER: F-1784

SH 151

TRAFFIC CONTROL AND SW3P SUMMARY

(SHEET 2 OF 4)

FED. RD. DIV. NO.			SHEET NO.
			12
STATE	DIST.	COUNTY	
TEXAS	SA	BEXAR	
CONT.	SECT.	JOB	HIGHWAY NO.
2452	01	043	SH 151

p:\4760\0-0129\cad\sheet\151sum_tcp02.dgn 12/3/2011 6:24:19 PM mwmldkiff

PLAN SHEET NO.	STATION TO STATION	0403 2001 TEMPORARY SPL SHORING	0464 2003 RC PIPE (CL III) (18 IN)	0476 2013 JACK BOR OR TUN PIPE (30 IN) (RC) (CL IV)	0476 2053 JACK OR TUN BOX CULV (7 FT X 4 FT)	0476 2092 JACK OR TUN BOX CULV (5 FT X 2 FT)	0476 2022 JACK BOR OR TUN PIPE (24 IN) (RC) (CL V)	0506 2002 ROCK FILTER DAMS (INSTALL) (TY 2)	0506 2009 ROCK FILTER DAMS (REMOVE)	0506 2016 CONSTRUCTION EXITS (INSTALL) (TY 1)	0506 2019 CONSTRUCTION EXITS (REMOVE)	0506 2033 SANDBAGS FOR EROSION CONTROL (2')	0506 2034 TEMPORARY SEDIMENT CONTROL FENCE	0506 2043 ROCK FILTER DAMS (REMOVE & REPLACE)	0508 2001 CONSTRUCTING DETOURS
		SF	LF	LF	LF	LF	LF	LF	LF	SY	SY	LF	LF	LF	STA
TRAFFIC CONTROL															
PHASE IIA															
57	484+30 TO 491+00														
58	491+00 TO 501+00														
59	501+00 TO 511+00														
60	511+00 TO 521+00														
61	521+00 TO 531+00														
62	531+00 TO 541+00														
63	541+00 TO 547+56	3960											435		
64	513+00 TO 523+00														
65	523+00 TO 533+00														
66	533+00 TO 543+00														
67	543+00 TO 553+00														
68	553+00 TO 563+00		300					40					65		6
69	563+00 TO 571+00		175												2
70	571+00 TO 581+00		80										40		2
71	581+00 TO 591+00														
TOTAL PHASE IIA		3960	555	0	0	0	0	40	0	0	0	0	540	0	10
PHASE IIB															
72	484+30 TO 491+00														
73	491+00 TO 501+00														
74	501+00 TO 511+00														
75	511+00 TO 521+00														
76	521+00 TO 531+00														
77	531+00 TO 541+00												385		
78	541+00 TO 547+56												200		
79	513+00 TO 523+00														
80	523+00 TO 533+00														
81	533+00 TO 543+00														
82	543+00 TO 553+00														
83	553+00 TO 563+00										139				
84	563+00 TO 571+00														
85	571+00 TO 581+00										139				
86	581+00 TO 591+00														
TOTAL PHASE IIB		0	0	0	0	0	0	0	0	0	278	0	585	0	0
PHASE III															
89	484+30 TO 491+00								80						
90	491+00 TO 501+00								60						
91	501+00 TO 511+00														
92	511+00 TO 521+00								25						
93	521+00 TO 531+00								100		278				
94	531+00 TO 541+00											200			
95	541+00 TO 547+56								25			250			
96	513+00 TO 523+00														
97	523+00 TO 533+00														
98	533+00 TO 543+00														
99	543+00 TO 553+00														
100	553+00 TO 563+00								100						
101	563+00 TO 571+00														
102	571+00 TO 581+00								45						
103	581+00 TO 591+00														
TOTAL PHASE III		0	0	0	0	0	0	0	435	0	277.8	450	0	0	0
SHEET TOTAL		3960	555	0	0	0	0	40	435	0	555.8	450	1125	0	10
PROJECT TOTALS		11880	555	326	434	290	25	435	435	834	834	538	3195	200	10

REV. 12-30-11

NO.	DATE	REVISION DESCRIPTION	APP. BY
	12/22/12	QUANTITY CHANGE	MWM

© 2011

Texas Department of Transportation

MACTEC
3520 EXECUTIVE CENTER DRIVE
SUITE 200
AUSTIN, TEXAS 78731
(512) 795-0360
REGISTRATION NUMBER: F-1784

SH 151

TRAFFIC CONTROL AND SW3P SUMMARY

(SHEET 3 OF 4)

FED. RD. DIV. NO.			SHEET NO.
			13

STATE	DIST.	COUNTY	
TEXAS	SA	BEXAR	
CONT.	SECT.	JOB	HIGHWAY NO.
2452	01	043	SH 151

p:\4760\0-0129\cad\sheet\15\sum_tcp03.dgn 12/28/2011 2:11:51 PM PRHAHN

PLAN SHEET NO.	STATION TO STATION	0512 2004	0512 2022	0512 2040	0545 2049	0545 2050	0545 2051	0662 2001	0662 2004	0662 2032	0662 2052	0677 2001	0677 2007	0677 2008	0677 2018	0681 2001
		PORT CTB (FUR & INSTL) (SNGL SLP) (TY 1)	PORT CTB (MOVE) (SNGL SLP) (TY 1)	PORT CTB (REMOVE) (SNGL SLP) (TY 1)	CRASH CUSH ATTEN (INSTL) (WORK ZONE)	CRASH CUSH ATTEN (MOV&RESET) (WORK ZONE)	CRASH CUSH ATTEN (REMOVE) (WORK ZONE)	WK ZN PAV MRK NON-REMOV (W) 4" (BRK)	WK ZN PAV MRK NON-REMOV (W) 4" (SLD)	WK ZN PAV MRK NON-REMOV (Y) 4" (SLD)	WK ZN PAV MRK REMOV (REFL) TY I-C	ELIM EXT PAV MRK & MRKS (4")	ELIM EXT PAV MRK & MRKS (24")	ELIM EXT PAV MRK & MRKS (ARROW)	ELIM EXT PAV MRK & MRKS (WORD)	TEMP TRAF SIGNALS
		LF	LF	LF	EA	EA	EA	LF	LF	LF	EA	LF	LF	EA	EA	EA
TRAFFIC CONTROL																
PHASE IIA																
57	484+30 TO 491+00															
58	491+00 TO 501+00															
59	501+00 TO 511+00															
60	511+00 TO 521+00															
61	521+00 TO 531+00			240			1									
62	531+00 TO 541+00															
63	541+00 TO 547+56															
64	513+00 TO 523+00															
65	523+00 TO 533+00								628	563		870				
66	533+00 TO 543+00								2432	697		2700				
67	543+00 TO 553+00								897			685				
68	553+00 TO 563+00			0												
69	563+00 TO 571+00		510	30		1										1
70	571+00 TO 581+00			0					1491	769		2055				
71	581+00 TO 591+00			0						50						
TOTAL PHASE IIA		0	510	270	0	1	1	0	5448.1	2079	0	6310	0	0	0	1
PHASE IIB																
72	484+30 TO 491+00											3135				
73	491+00 TO 501+00											2825				
74	501+00 TO 511+00			20								5111				
75	511+00 TO 521+00											4566	198		1	
76	521+00 TO 531+00											2767	230			
77	531+00 TO 541+00											1050				
78	541+00 TO 547+56											532	265			
79	513+00 TO 523+00															
80	523+00 TO 533+00											950				
81	533+00 TO 543+00											2100				
82	543+00 TO 553+00											550				
83	553+00 TO 563+00							912	911	912	23	5374		8	4	
84	563+00 TO 571+00		375	510			1	816	814	819	20	8030	601			
85	571+00 TO 581+00		165			1		272	271	273	6	5050	236	2		
86	581+00 TO 591+00											151				
TOTAL PHASE IIB		0	540	530	0	1	1	2000	1996.4	2004	49	42191	1530	10	5	0
PHASE III																
89	484+30 TO 491+00															
90	491+00 TO 501+00			360			1									
91	501+00 TO 511+00			1505			1									
92	511+00 TO 521+00			485			1									
93	521+00 TO 531+00															
94	531+00 TO 541+00															
95	541+00 TO 547+56															
96	513+00 TO 523+00															
97	523+00 TO 533+00															
98	533+00 TO 543+00															
99	543+00 TO 553+00															
100	553+00 TO 563+00															
101	563+00 TO 571+00			645			1									
102	571+00 TO 581+00			165			1									
103	581+00 TO 591+00															
TOTAL PHASE III		0	0	3160	0	0	5	0	0	0	0	0	0	0	0	0
SHEET TOTAL		0	1050	3960	0	2	7	2000	7444.5	4082.6	49	48501	1530	10	5	1
PROJECT TOTALS		3960	1050	3960	7	2	7	2000	7445	4083	49	48501	1530	10	5	1

REV. 12-30-11

NO.	DATE	REVISION DESCRIPTION	APP. BY

© 2011

Texas Department of Transportation

MACTEC
3520 EXECUTIVE CENTER DRIVE
SUITE 200
AUSTIN, TEXAS 78731
(512) 795-0360

REGISTRATION NUMBER: F-1784

SH 151

TRAFFIC CONTROL AND SW3P SUMMARY

(SHEET 4 OF 4)

FED. RD. DIV. NO.			SHEET NO.
			14
STATE	DIST.	COUNTY	
TEXAS	SA	BEXAR	
CONT.	SECT.	JOB	HIGHWAY NO.
2452	01	043	SH 151

p:\4760\0-0129\cad\sheet\5\sum_tcp04.dgn 12/30/2011 5:39:28 AM PRHAHN

PLAN SHEET NO.	STATION TO STATION	0100 2002 PREPARING ROW	0104 2009 REMOVING CONC (RIPRAP)	0106 2002 OBLITERATING ABANDONED ROAD	0110 2001 EXCAVATION (ROADWAY)	0132 2003 EMBANKMENT (FINAL) (ORD COMP) (TY B)	0161 2002 COMPOST MANUF TOPSOIL (BOS) (4")	0164 2039 DRILL SEEDING (PERM) (URBAN) (CLAY)	0247 2054 FL BS (CMP IN PLC) (TY D GR 2) (FNAL POS)	0310 2005 PRIME COAT (MC-30 OR AE-P)	0316 2020 ASPH (AC-5 OR AC-10)	0316 2248 AGGR (TY-PE GR-4 SAC-B)	0354 2021 PLANE ASPH CONC PAV (0" TO 2")	0432 2015 RIPRAP (STONE COMMON) (DRY) (6 IN)
		STA	SY	SY	CY	CY	SY	SY	CY	GAL	GAL	CY	SY	CY
	RDWY													
142	484+30 TO 491+00	7			7	21	134	134					729	
143	491+00 TO 501+00	10			164	774	1594	1594						
144	501+00 TO 511+00	10			367	3775	4610	4610	21	28	32	1	425	
145	511+00 TO 521+00	10			22409	3834	11296	11296	1726	2290	2596	59	805	40
146	521+00 TO 531+00	10		529	56418	6254	15741	15741	1960	2602	2948	67	382	
147	531+00 TO 541+00	10		2293	173888	177	5958	5958	2420	3223	3652	83		
148	541+00 TO 547+56	7			65066	224	2833	2833	1813	2420	2742	62		
149	543+00 TO 553+00													
150	553+00 TO 563+00	4	333				528	528					1012	
151	563+00 TO 571+00	8	220				282	282						20
152	571+00 TO 581+00	8	267	3191									1027	
PROJECT TOTALS		83	820	6013	318319	15059	42975	42975	7941	10563	11970	272	4380	60

PLAN SHEET NO.	STATION TO STATION	0432 2039 RIPRAP (MOW STRIP) (4 IN)	0432 2084 RIPRAP (CONC) (CL B) (4")	0450 2013 RAIL (TY SSTR)	0496 2001 REMOV STR (BOX CULVERT)	0496 2004 REMOV STR (SET)	0496 2005 REMOV STR (WINGWALL)	0496 2006 REMOV STR (HEADWALL)	0496 2016 REMOV STR (PIPE)	0528 2001 COLORED TEXTURED CONC (4")	0529 2001 CONC CURB (TY I)	0529 2076 CONC GUTTER (2')	0540 2001 MTL W-BEAM GD FEN (TIM POST)	0540 2005 TERMINAL ANCHOR SECTION	0540 2011 MTL BEAM GD FEN TRANS (THRIE-B EAM)	0544 2001 GUARDRAIL END TREATMENT (INSTALL)	1018 2002 TREE PROTECTION	3224 2008 D-GR HMA (QCQA) TY-B PG64-22	3224 2083 D-GR HMA (QCQA) TY-D SAC-A PG76-22
		CY	CY	LF	EA	EA	EA	EA	EA	SY	LF	LF	LF	EA	EA	EA	AC	TON	TON
	RDWY																		
142	484+30 TO 491+00																	24	469
143	491+00 TO 501+00	26	51										500	1		1		580	636
144	501+00 TO 511+00	35											525	3		3		1413	1142
145	511+00 TO 521+00		115															399	1596
146	521+00 TO 531+00	4	97	230				2							1	1			1184
147	531+00 TO 541+00		188	2000						676	347								1180
148	541+00 TO 547+56	3	127	1064	1		2			2512	1243	660			1	1			886
149	543+00 TO 553+00																		
150	553+00 TO 563+00		14															232	476
151	563+00 TO 571+00	31	5										500		4	4	2	126	913
152	571+00 TO 581+00					6			3								2		787
PROJECT TOTALS		99	597	3294	1	6	2	2	3	3188	1590	660	1525	4	6	10	4	2773	9270

PLAN SHEET NO.	STATION TO STATION	0420 2005 CL C CONC (FOOTING) *	0423 2010 RETAINING WALL (ROCK NAILED) (FAC IA)	0450 2013 RAIL (TY SSTR)	4118 2001 ROCK NAIL ANCHORS
		CY	SF	LF	LF
RDWY					
RETAINING WALL NO 1					
171	10+00 TO 14+25	17	10113	425	
172	14+25 TO 20+25	24	27562	600	
173	20+25 TO 25+84	22	13036	559	
RETAINING WALL NO 1 TOTAL		64	50710	1584	153703
RETAINING WALL NO 2					
174	10+00 TO 15+00	20	12486	500	
175	15+00 TO 21+00	24	26241	600	
176	21+00 TO 26+91	19	13880	591	
RETAINING WALL NO 2 TOTAL		64	52607	1691	150405
PROJECT TOTALS		127	103317	3275	304108

* FOR CONTRACTORS' INFORMATION ONLY

REV. 12-30-11

NO.	DATE	REVISION DESCRIPTION	APP. BY
	12/21/11	QUANTITY TYPE	MWM

© 2011

Texas Department of Transportation

MACTEC
3520 EXECUTIVE CENTER DRIVE
SUITE 200
AUSTIN, TEXAS 78731
(512) 795-0360
REGISTRATION NUMBER: F-1784

SH 151

ROADWAY & RETAINING WALL SUMMARY

(SHEET 1 OF 1)

FED. RD. DIV. NO.			SHEET NO.
			15
STATE	DIST.	COUNTY	
TEXAS	SA	BEXAR	
CONT.	SECT.	JOB	HIGHWAY NO.
2452	01	043	SH 151

p:\4760\10-01\29\cad\sheet\15\sum_rdwy01.dgn 12/30/2011 5:39:33 AM PRIAHN

PLAN SHEET NO.	STATION TO STATION	0402 2001 TRENCH EXCAVATION PROTECTION	0462 2006 CONC BOX CULV (5 FT X 2 FT)	0462 2011 CONC BOX CULV (6 FT X 4 FT)	0464 2022 RC PIPE (CL IV) (24 IN)
		LF	LF	LF	LF
DRAINAGE					
202	CULVERT 1				
203	CULVERT 1				
204	CULVERT 2			107	
205	CULVERT 2			81	
206	CULVERT 6				
207	CULVERT 6				
208	OUTFALL 6				
209	CULVERT 7				
210	CULVERT 7				
211	CULVERT 7				
212	CULVERT 7				
213	STORM SEWER SYSTEM 3				180
214	STORM SEWER SYSTEM 3		143		66
215	STORM SEWER SYSTEM 3		177		
216	STORM SEWER SYSTEM 4				182
217	STORM SEWER SYSTEM 4				224
218	STORM SEWER SYSTEM 4				224
219	STORM SEWER SYSTEM 4		182		42
220	STORM SEWER SYSTEM 4		224		
221	STORM SEWER SYSTEM 4				
222	STORM SEWER SYSTEM 4	141	159		
223	STORM SEWER SYSTEM 4	168	173		
224	STORM SEWER SYSTEM 4				
225	STORM SEWER SYSTEM 4A				182
226	STORM SEWER SYSTEM 4A				224
227	STORM SEWER SYSTEM 4A				224
228	STORM SEWER SYSTEM 4A		122		42
229	STORM SEWER SYSTEM 5				169
230	STORM SEWER SYSTEM 5		174		46
231	STORM SEWER SYSTEM 5		194		
232	STORM SEWER SYSTEM 5		180		
233	STORM SEWER SYSTEM 5		107		
PROJECT TOTALS		309	1835	188	1805

PLAN SHEET NO.	STATION TO STATION	0465 2005 MANH (COMPL) (TY M)	0465 2187 INLET (COMPL) (DROP) (TY 3A)	0465 2188 INLET (COMPL) (DROP) (TY Y-1)	0465 2189 INLET (COMPL) (DROP) (TY Y-1A)	0465 2190 INLET (COMPL) (DROP) (TY W-1)	0465 2422 INLET (COMPL) (DROP) (TY W-4)	0465 2477 INLET (COMPL) (DROP) (TY W-2)	0466 2035 WINGWALL (FW-S) (HW=5 FT)	0467 2225 SET (TY II) (30 IN) (RCP) (4:1) (C)	0479 2002 ADJ INLETS
		EA	EA	EA	EA	EA	EA	EA	EA	EA	EA
DRAINAGE											
202	CULVERT 1										
203	CULVERT 1										1
204	CULVERT 2		1		2						
205	CULVERT 2				1						
206	CULVERT 6				2			1			
207	CULVERT 6										
208	OUTFALL 6								1		
209	CULVERT 7			1							
210	CULVERT 7									1	
211	CULVERT 7										
212	CULVERT 7										
213	STORM SEWER SYSTEM 3					3					
214	STORM SEWER SYSTEM 3					1					
215	STORM SEWER SYSTEM 3										
216	STORM SEWER SYSTEM 4					1					
217	STORM SEWER SYSTEM 4					1					
218	STORM SEWER SYSTEM 4					1					
219	STORM SEWER SYSTEM 4					1					
220	STORM SEWER SYSTEM 4					1					
221	STORM SEWER SYSTEM 4										
222	STORM SEWER SYSTEM 4	1									
223	STORM SEWER SYSTEM 4						1				
224	STORM SEWER SYSTEM 4										
225	STORM SEWER SYSTEM 4A					1					
226	STORM SEWER SYSTEM 4A					1					
227	STORM SEWER SYSTEM 4A					1					
228	STORM SEWER SYSTEM 4A		1			1					
229	STORM SEWER SYSTEM 5					2					
230	STORM SEWER SYSTEM 5					2					
231	STORM SEWER SYSTEM 5					1					
232	STORM SEWER SYSTEM 5										
233	STORM SEWER SYSTEM 5										
PROJECT TOTALS		1	2	1	5	18	1	1	1	1	1

REV. 12-30-11

NO.	DATE	REVISION DESCRIPTION	APP. BY
	12/22/12	QUANTITY CHANGE	MMM

© 2011

Texas Department of Transportation

MACTEC
3520 EXECUTIVE CENTER DRIVE
SUITE 200
AUSTIN, TEXAS 78731
(512) 795-0360
REGISTRATION NUMBER: F-1784

SH 151

DRAINAGE SUMMARY

(SHEET 1 OF 1)

FED. RD. DIV. NO.			SHEET NO.
			16
STATE	DIST.	COUNTY	
TEXAS	SA	BEXAR	
CONT.	SECT.	JOB	HIGHWAY NO.
2452	01	043	SH 151

P:\FEDVO\0-0\25\cad\sheet\5\sum_drn01.dgn 12/22/2011 4:46:48 PM dbennett

ITEM / DESCRIPTION	0416 2003	0416 2006	0420 2003	0420 2004	0420 2029	0420 2031	0425 2010	0425 2011	0428 2001	0450 2013	0454 2005	
	DRILL SHAFT (30 IN)	DRILL SHAFT (48 IN)	CL C CONC (ABUT)	CL C CONC (BENT)	CL S CONC (SLAB)	CL S CONC (SHEAR KEY)	PRESTR CONC BOX BEAM (4B34)	PRESTR CONC BOX BEAM (5B34)	CONC SURF TREAT (CLASS I)	RAIL (TY SSTR)	ARMOR JOINT (WITH SEAL)	SIGN & BRACKET *
	LF	LF	CY	CY	CY	CY	LF	LF	SY	LF	LF	EA
SOUTHBOUND BRIDGE												
ABUTMENT NO A1	134.0		22.6							20.0	37.91	
ABUTMENT NO A2	120.0		22.9							20.0	38.61	
BENT NO B1		36.0		62.3								
SPANS 1 & 2					126.7	76.1	363.4	1090.2	790.0	373.4		1
SOUTHBOUND BRIDGE TOTAL	**254.0**	**36.0**	**45.5**	**62.3**	**126.7**	**76.1**	**363.4**	**1090.2**	**790.0**	**413.4**	**76.52**	**1**
NORTHBOUND BRIDGE												
ABUTMENT NO A1	120.0		22.6							20.0	38.03	
ABUTMENT NO A2	134.0		22.8							20.0	38.74	
BENT NO B1		33.0		59.5								
SPANS 1 & 2					127.0	78.7	364.5	1093.6	790.0	374.7		1
NORTHBOUND BRIDGE TOTAL	**254.0**	**33.0**	**45.4**	**59.5**	**127.0**	**78.7**	**364.5**	**1093.6**	**790.0**	**414.7**	**76.77**	**1**
PROJECT TOTALS	**508.0**	**69.0**	**90.9**	**121.8**	**253.7**	**154.8**	**727.9**	**2183.8**	**1580.0**	**828.1**	**153.29**	**2**

* FOR CONTRACTORS' INFORMATION ONLY

REV. 12-30-11

NO.	DATE	REVISION DESCRIPTION	APP. BY

©2011

Texas Department of Transportation

MACTEC
3520 EXECUTIVE CENTER DRIVE
SUITE 200
AUSTIN, TEXAS 78731
(512) 795-0360

REGISTRATION NUMBER: F-1784

SH 151

BRIDGE SUMMARY

(SHEET 1 OF 1)

FED. RD. DIV. NO.			SHEET NO.
			17
STATE	DIST.	COUNTY	
TEXAS	SA	BEXAR	
CONT.	SECT.	JOB	HIGHWAY NO.
2452	01	043	SH 151

p:\4760\0-0125\cad\sheet\151sum_brg01.dgn 12/27/2011 2:39:31 PM prbtln

TRAFFIC MANAGEMENT SUMMARY
LP 1604 (CSJ 2452-01-043)

SHEET NO	STATION TO STATION OR DESCRIPTION	ITEM NO.►	416-2029	432-2084	610-2099	618-2034	620-2010	624-2008	624-2014	628-2065	6010-2031	6981-2001	6982-2002	8758-2001	8760-2001	8759-2001	6985-2001		
			DRILL SHAFT (RDWY ILL POLE) (30 IN)	RIPRAP (CONC) (CL B)	INS RD IL AM (INSTALL ONLY)	CONDT PVC (SCHD 80) (2 IN)	ELEC CONDR (NO. 6) INSULATED	GROUND BOX (TY - A) WITH APRON	GROUND BOX (TY - D) WITH APRON	ELC SRV TY D 120/240 O60 (NS)GS(N) TY(0)	COMM CABLE (22 AWG) (6 PAIR)	CONDT MULTIDUCT PVC (4 IN) [2 - WAY]	CONDT MULTIDUCT PVC (4 IN) CONC. ENC. [2 - WAY]	CCTV FIELD EQUIPMENT	WIRELESS ETHERNET RADIO (LOCAL) LINK	T-1 ETHERNET EXTENDER EQUIPMENT	FINAL ACCEPTANCE PLAN		
			EST LF	EST CY	EST EA	EST LF	EST LF	EST EA	EST EA	EST EA	EST LF	EST LF	EST LF	EST EA	EST EA	EST EA	EST LS		
	TMS LAYOUTS																		
	494+00 - 505+00	1 OF 3	10	1.25	1	40	80	1	1	1	30	-	-	1	1	1	-		
	529+00 - 541+00	2 OF 3	10	1.25	1	40	80	1	1	1	-	-	-	1	-	-	-		
	541+00 - 553+00	3 OF 3	-	-	-	-	-	-	-	-	-	190	230	-	-	-	-		
		TOTAL	20	2.50	2	80	160	2	2	2	30	190	230	2	1	1	1		

©2010 Texas Department of Transportation

TRAFFIC MANAGEMENT SUMMARY

SHEET 1 OF 1 SHEETS

FED. RD. DIV. NO.	FEDERAL AID PROJECT NO.		SHEET NO.
6	NH 2007(705)		18
STATE	DIST.	COUNTY	
TEXAS	SAT	BEXAR	
CONT.	SECT.	JOB	HIGHWAY
2452	01	043	LP 1604

T:\TMS\1604=2452-01-043 (LP1604 @ SH151)\DECEMBER 2010\SUMMARY\TMSSUMMARY 2452-01-043.xls
3/17/2011
11:50 AM

NOTIFY THE OFFICE OF TRAFFIC MANAGEMENT AT TRANSGUIDE, 3500 N.W. LOOP 410, (210) 731-5247, PRIOR TO BEGINNING ANY WORK ON THE ABOVE LISTED ITEMS

MATERIALS TO BE FURNISHED AND INSTALLED BY THE CONTRACTOR			
ITEM NO.	DESCRIPTION	UNIT	QUANTITY
416-2030	DRILL SHAFT (TRF SIG POLE) (24 IN)	LF	6
416-2056	DRILL SHAFT (TRF SIG POLE) (36 IN) (ROCK)	LF	42
618-2086	CONDT (PVC) (SCHD 80) (2") (TRENCH) (ROCK)	LF	45
618-2088	CONDT (PVC) (SCHD 80) (3") (TRENCH) (ROCK)	LF	100
618-2089	CONDT (PVC) (SCHD 80) (3") (BORE) (ROCK)	LF	750
620-2009	ELEC CONDR (NO. 6) BARE	LF	930
620-2010	ELEC CONDR (NO. 6) INSULATED	LF	30
621-2002	TRAY CABLE (3 CONDR) (12 AWG)	LF	705
624-2014	GROUND BOX TY D (162922) W/APRON	EA	6
628-2122	ELC SRV TY D 120/240 100 (NS)SS(E)SP(O)	EA	1
636-2001	ALUMINUM SIGNS (TY A)	SF	16
644-2001	INS SM RD SN SUP & AM TY 10BWG(1)SA(P)	EA	2
680-2002	INSTALL HWY TRF SIG (ISOLATED)	EA	1
8643 *	MODEL 2070L SIGNAL CONTROLLER WITH NEXTPHASE SOFTWARE	EA	1
*	TRAFFIC SIGNAL CONTROLLER ASSEMBLY (TYPE 332 CABINET)	EA	1
*	TYPE 332 CONTROLLER FOUNDATION WITH BBU BOX	EA	1
*	ROD, 5/8" X 10' COPPER GROUND (FOR CONTROLLER)	EA	1
*	POWER SUPPLY	EA	1
*	CONTROL, PHOTOELECTRIC	EA	1
*	SIGN, R6-1R (ONE WAY RIGHT) (36" X 12")	EA	1
*	SIGN, R6-1L (ONE WAY LEFT) (36" X 12")	EA	1
*	SIGN, R9-3a (NO PEDESTRIANS) (24" X 24")	EA	8

*SUBSIDIARY TO ITEM 680

MATERIALS TO BE FURNISHED AND INSTALLED BY THE CONTRACTOR			
ITEM NO.	DESCRIPTION	UNIT	QUANTITY
*	SIGN, R3-8 LL (LANE DESIGNATION) (36" X 30")	EA	2
*	METRO STREET NAME SIGN	EA	3
*	ROADWAY LIGHT ON TRAF SIGNAL POLE (250 WATT HPS)	EA	3
*	MAST ARM, 10' LUMINAIRE	EA	3
*	6/C #20/22 TWISTED PAIR RS-485 SMARTSENSOR CABLE	LF	1065
682-2001	BACK PLATE (12 IN) (3 SEC)	EA	11
682-2022	VEH SIG SEC (12 IN) LED (GRN ARW)	EA	2
682-2023	VEH SIG SEC (12 IN) LED (GRN)	EA	9
682-2024	VEH SIG SEC (12 IN) LED (YEL ARW)	EA	2
682-2025	VEH SIG SEC (12 IN) LED (YEL)	EA	11
682-2026	VEH SIG SEC (12 IN) LED (RED ARW)	EA	2
682-2027	VEH SIG SEC (12 IN) LED (RED)	EA	9
682-2028	BACK PLATE (12 IN) (1 SEC)	EA	2
684-2035	TRF SIG CBL (TY A) (14 AWG) (9 CONDR)	LF	1025
685-2004	INSTL RDSD FLSH BEACON ASSM(SOLAR PWRD)	EA	1
686-2045	INS TRF SIG PL AM(S) 1 ARM (44') LUM	EA	1
686-2049	INS TRF SIG PL AM(S) 1 ARM (48') LUM	EA	2
687-2001	PED POLE ASSEMBLY	EA	1
8615-2001	RADAR ADVANCE DETECTION DEVICES	EA	3
8836-2001	RADAR PRESENCE DETECTION DEVICE	EA	3
8667-2001	BATTERY BACK-UP SYSTEM FOR SIGNAL CABINETS	EA	1

*SUBSIDIARY TO ITEM 680

QUANTITIES OF WIRELESS MESH COMMUNICATION EQUIPMENT (NON-PAY ITEMS FOR CONTRACTOR'S INFORMATION ONLY)					
COMPONENT	PART NO.		ITEM DESCRIPTION	UNIT	QUANTITY
WIRELESS ACCESS POINT	AIR-LAP1522AG-AK9	*	802.11a, b/g Outdoor Mesh AP, FCC Cfg	EA	1
	AIR-ANT2480V-N	*	2400-2483.5 MHz, 8.0 dBi Omni Ant, with N Connect	EA	3
	AIR-CORD-R3P-40NA	*	Aironet 1520 Series AC Power Cord, 40 ft, N. Amer Plug	EA	1
	AIR-ANT5180V-N	*	4900-5850 MHz, 8.0Dbi OMNI with N Connect	EA	1
	AIR-ACCPMK1520	*	1520 Series Pole Mount Kit	EA	1
	SMARTNET 8X5XNBD	*	802.11a, b/g Outdoor Mesh AP, FCC Cfg	EA	1
	VNTC 16-3-R10K-BED	**	27331A 01010000 BELDEN (Power Cable)	LF	135
	7919A 01001000	**	IND ETH 5E4P24 HLD (Ethernet Cable)	LF	135
	UK 6-FSI/C	*	Fuse Holder	EA	1
	TCP 3, OA	*	3 Amp Fuse Breaker	EA	1
	TCP 5, OA	*	5 Amp Fuse Breaker	EA	1
ETHERNET SWITCH	WS-C2955S-12	*	2955 12 TX W/SM UPLINKS	EA	1
	CISCO STK-RACKMNT-2955	*	19 IN RACK MOUNT KIT	EA	1
	PWR-2955-AC	*	CISCO, AC TO 24 V DC DIN RAIL PW	EA	1
	CON-SNTWSC2955S	*	SMARTNET 8X5XNBD 2955 12 TX w/Single Mode Uplinks	EA	1
	UK 6-FSI/C	*	Fuse Holder	EA	1
	TCP 3, OA	*	3 Amp Fuse Breaker	EA	1
	TCP 5, OA	*	5 Amp Fuse Breaker	EA	1
WIRELESS BRUDGE BACKHAUL	ALV-853197	*	Su-a-5.3-6-bd-vl	EA	1
	AB-3004-29	*	ASTRO BRACKET	EA	1
	AB-2003-23	*	ALUMINUM TUBE	EA	1
	7919A 01001000	**	IND ETH 5E4P24 HLD (Ethernet Cable)	LF	135
	UK 6-FSI/C	*	Fuse Holder	EA	1
	TCP 3, OA	*	3 Amp Fuse Breaker	EA	1
	TCP 5, OA	*	5 Amp Fuse Breaker	EA	1

ITEMS AND INSTALLATION FOR ALL WIRELESS MESH COMMUNICATION EQUIPMENT SHALL BE SUBSIDIARY TO ITEM 680.
* THESE ITEMS ARE TO BE PROVIDED BY THE CITY OF SAN ANTONIO AND INSTALLED BY THE CONTRACTOR.
** THESE ITEMS ARE TO BE PROVIDED AND INSTALLED BY THE CONTRACTOR.

NO.	DATE	REVISION DESCRIPTION	APP. BY

© 2009

Texas Department of Transportation

MACTEC
3520 EXECUTIVE CENTER DRIVE
SUITE 200
AUSTIN, TEXAS 78731
(512) 795-0360
REGISTRATION NUMBER: F-1784

BROWN & GAY ENGINEERS, INC.
Brown & Gay Engineers, Inc.
Houston • Fort Worth • Austin • Frisco
TBPE FIRM REGISTRATION NO. 1046

SH 151

TRAFFIC SIGNAL SUMMARY

(SHEET 1 OF 1)

FED. RD. DIV. NO.			SHEET NO.
			19
STATE	DIST.	COUNTY	
TEXAS	SA	BEXAR	
CONT.	SECT.	JOB	HIGHWAY NO.
2452	01	043	SH 151

I:\projects\Vxd64_pharr_sub\Vxd64-01_sh151\03_cadd\2452-01-043\summaries\151sum_sig01.dgn\19/2011 12:08:13 PM TxDOT-01

SUMMARY OF ILLUMINATION QUANTITIES								
DESCRIPTION	416-2029	610-2043	610-2059	610-2068	618-2018	618-2019	618-2044	620-2009
	DRILL SHAFT (RDWY ILL POLE) (30 IN)	INS RD IL AM (TY SA) 50T - 8 - 8 (.4 KW) S	INS RD IL AM (U / P) (TY IF) (.15KW)	REMOVE RD IL ASM (TRANS - BASE)	CONDT (PVC) (SCHD 40) (2")	CONDT (PVC) (SCHD 40) (2") (BORE)	CONDT (RM) (3 / 4")	ELEC CONDR (NO. 6) BARE
	LF	EA	EA	EA	LF	LF	LF	LF
SHEET 1 OF 6	8	1		2	200			
SHEET 2 OF 6	32	4		1	1185			
SHEET 3 OF 6	32	4			1170	50		570
SHEET 4 OF 6	24	3			1010			
SHEET 5 OF 6	16	2			895			
SHEET 6 OF 6			8				380	
TOTAL	112	14	8	3	4460	50	380	570

SUMMARY OF ILLUMINATION QUANTITIES							
DESCRIPTION	620-2010	620-2011	620-2012	620-2015	620-2016	624-2008	628-2038
	ELEC CONDR (NO. 6) INSULATED	ELEC CONDR (NO. 8) BARE	ELEC CONDR (NO. 8) INSULATED	ELEC CONDR (NO. 12) BARE	ELEC CONDR (NO. 12) INSULATED	GROUND BOX TY A (122311) W/ APRON	ELC SRV TY A 240/480 100 (SS)SS(E)GC(O)
	LF	LF	LF	LF	LF	EA	EA
SHEET 1 OF 6		200	400				
SHEET 2 OF 6		1185	2370			3	
SHEET 3 OF 6	1140	650	2160			2	1
SHEET 4 OF 6		1010	3030				
SHEET 5 OF 6		895	2110			6	
SHEET 6 OF 6				380	760		
TOTAL	1140	3940	10070	380	760	11	1

ELECTRICAL SERVICE DATA										
ELEC. SERVICE NO.	STATION	ELECTRICAL SERVICE DESCRIPTION (SEE ED (4 & 5) - 03)	SERVICE CONDUIT SIZE	SERVICE CONDUCTORS NO./SIZE	MAIN CKT BKR POLE/AMP	TWO-POLE CONTACTOR AMPS	CIRCUIT NO.	BRANCH CKT BKR POLE/AMPS	BRANCH CIRCUIT AMPS	KVA LOAD
SP-1	819+24	ELC SRV TY A 240/480 100 (SS)SS(E)GC(O)	1 1/4"	3/#2	2P/100	100	A	2P/40	25.2	12.1
							B	2P/30	20.1	9.6

NO.	DATE	REVISION DESCRIPTION	APP. BY

© 2009

Texas Department of Transportation

MACTEC
3520 EXECUTIVE CENTER DRIVE
SUITE 200
AUSTIN, TEXAS 78731
(512) 795-0360
REGISTRATION NUMBER: F-1784

BROWN & GAY ENGINEERS, INC.
Brown & Gay Engineers, Inc.
Houston • Fort Worth • Austin • Frisco
TBPE FIRM REGISTRATION NO. 1046

SH 151

ILLUMINATION SUMMARY

(SHEET 1 OF 1)

FED. RD. DIV. NO.			SHEET NO.
			20
STATE	DIST.	COUNTY	
TEXAS	SA	BEXAR	
CONT.	SECT.	JOB	HIGHWAY NO.
2452	01	043	SH 151

t:\projects\txd64_pharr_sub\txd64-01_sh151\03_cadd\2452-01-043\summaries\151sum_ilm01.dgn 11/5/2011 4:12:19 PM TxD64-01

SUMMARY OF LARGE SIGNS

PLAN SHEET NO.	SIGN NO.	SIGN BACK-GROUND COLOR	SIGN TEXT	SIGN DIMENSIONS	ROUTE SHIELDS, EXIT ONLY PANELS, & OTHER ATTACHMENTS	BACKGROUND SUBSTRATE (SQ FT)			TYPE OF MOUNT	"X" DIMENSION ◒			GALVANIZED STRUCTURAL STEEL					DRILLED SHAFT			
						GROUND MOUNT		OVERHEAD						LINEAR FEET					LINEAR FEET REINFORCED		
					ALUMINUM (TYPE A)	PLYWOOD (TYPE A)	ALUMINUM (TYPE G)	ALUMINUM (TYPE O)		post ①	post ②	post ③	SIZE	post ①	post ②	post ③	TOTAL WEIGHT LBS.	NON-REINF 12"ϕ	24"ϕ	30"ϕ	36"ϕ
3	1	GREEN	JCT LOOP 1604 (SHIELD) 1 MILE	8'6"x9'0"	15.25			76.50	OVHD												36
	2	GREEN	NORTH LOOP 1604 (SHIELD) ↓EXIT ↓ONLY	22'6"x9'6"	15.25 30.00			213.75	OVHD												36
4	1	GREEN	SOUTH LOOP 1604 (SHIELD) 3/4 MILE	8'6"x9'0"	15.25			76.50	OVHD												36
	2	GREEN	NORTH LOOP 1604 (SHIELD) ↗ EXIT ↗ ONLY	22'6"x9'6"	15.25 30.00			213.75	OVHD												36
	3	GREEN	EXIT ↗	6'0"x5'0"			30.00		321	2.3	3.2		S3x5.7	14.01	14.91		222.64	7			
6	1	GREEN	WESTOVER HILLS BLVD EXIT 3/4 MILE	18'6"x8'0"			148.00		331	1.5	2.5	2.8	W6x9	16.25	17.25	17.55	435.85	11			
7	1	GREEN	NORTH LOOP 1604 (SHIELD) ↖	8'6"x10'6"	15.25		89.25		321	1.7	2.7		S4x7.7	18.91	19.91		369.31	7			
11	1	GREEN	↑ JCT FM 1957 ↑ SEA WORLD ALAMO RANCH PKWY →	8'0"x4'6"			36.0		321	2.0	3.3		S4x7.7	13.21	14.51		283.84	7			
				PAGE TOTALS	136.25	-	303.25	580.50						PAGE TOTALS			1311.64	32	-	-	144

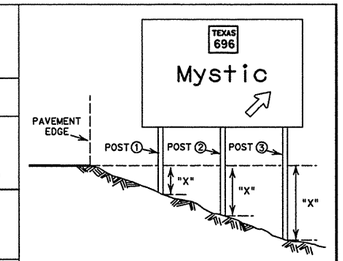

◒ The "X" dimension is the elevation difference at the post between the ground and the edge of pavement or top of curb.

Sign supports shall be located as shown on the plans, except that the Engineer may shift the sign supports, within design guidelines, where necessary to secure a more desirable location or to avoid conflict with utilities. Unless otherwise shown on the plans, the Contractor shall stake and the Engineer will verify all sign support locations.

The post lengths listed here are approximations, The corrected post lengths will be furnished by the Contractor after the stud posts are placed.

Tower heights shall be verified with the Engineer before fabrication.

✳ This column is for aluminum Type A and not direct apply. Direct apply is subsidiary to the sign.

SIGN TYPE

SIGN TYPE 1 3 0

- Wind Design Zone
- Series No.
  - 0 Aluminum/Fiberglass
  - 1 Aluminum
  - 2 Fiberglass
- No. of Posts

See sheet SMD(8W1)

STATE OF TEXAS
MICHAEL W. MIDKIFF
75435
REGISTERED PROFESSIONAL ENGINEER
12/5/11

NO.	DATE	REVISION DESCRIPTION	APP. BY

© 2011

Texas Department of Transportation

MACTEC
3520 EXECUTIVE CENTER DRIVE
SUITE 200
AUSTIN, TEXAS 78731
(512) 795-0360
REGISTRATION NUMBER: F-1784

SH 151

LARGE SIGN SUMMARY

(SHEET 1 OF 1)

FED. RD. DIV. NO.			SHEET NO.
			21
STATE	DIST.	COUNTY	
TEXAS	SA	BEXAR	
CONT.	SECT.	JOB	HIGHWAY NO.
2452	01	043	SH 151

P:\4760\0-0129\cad\sheet\151sum_sgn01.dgn 12/6/2011 6:56:28 AM mwmidk11

SUMMARY OF SMALL SIGNS

SM RD SGN ASSM TY XXXXX(X)XX(X-XXXX)

Post Type: FRP = Fiberglass, TWT = Thin-Wall, 10BWG = 10 BWG, S80 = Sch 80

Anchor Type: UA = Univer-Conc, UB = Univer-Bolt, WA = Wedge-Conc, SA = Slip-Conc, SB = Slip-Bolt

Mounting Designation: P = Prefab. "Plain", T = Prefab. "T", U = Prefab. "U"

PLAN SHEET NO.	SIGN NO.	SIGN NOMENCLATURE	SIGN TEXT	SIGN DIMENSIONS	ALUMINUM TYPE A	ALUMINUM TYPE G	Post Type	Posts (1 or 2)	Anchor Type	Mounting Designation	1EXT or 2EXT = # of Ext. BM = Extruded Wind Beam WC = 1.12 #/ft Wing Chan. EXAL = Extruded Alum. signs
3	1	W6-4a	END FREEWAY 1 MI	48X48	√		S80	1	SA	T	
	2	W6-4a	END FREEWAY 1 MI	48X48	√		S80	1	SA	T	
	3	D9-2	[H] MOUNT ON EXISTING LARGE SIGN	36X36	√						
4	1	W13-2	EXIT 40 MPH	48X60	√		S80	1	SA	T	
	2	W4-1R	↑ MOUNT ON EXISTING WRONG WAY SIGN	48X48	√						
5	1	W3-5	↑ SPEED LIMIT 50	48X48	√		S80	1	SA	T	
	2	W3-5	↑ SPEED LIMIT 50	48X48	√		S80	1	SA	T	
	3	W4-1R	↑	48X48	√		S80	1	SA	T	
6	1	W6-4a	END FREEWAY 1/2 MI	48X48	√		S80	1	SA	T	
	2	W6-4a	END FREEWAY 1/2 MI	48X48	√		S80	1	SA	T	
	3	R2-1	SPEED LIMIT 50	48X60	√		S80	1	SA	T	
	4	R2-1	SPEED LIMIT 50	48X60	√		S80	1	SA	T	
	5	D9-2	[H] MOUNT ON PROP LARGE SIGN 6-1	36X36	√						
	6	R2-1	SPEED LIMIT 65	48X60	√		S80	1	SA	T	
	7	R2-1	SPEED LIMIT 65	48X60	√		S80	1	SA	T	
7	1	D1-1	FRONTAGE RD ↗	96X18	√		S80	1	SA	T	
	2	W3-3	▩ MNT ON SOLAR POWERED FLASHING BEACON	48X48	√		-	-	-	-	
	3	M3-3	NORTH	24X12	√		10BWG	1	SA	P	
		M1-6L	LOOP 1604	24X24	√						
		M6-2L	↖	21X15	√						
8	1	R3-8 LSS	↰ ONLY ↑ ONLY ↑ ONLY	48X30	√		10BWG	1	SA	T	
	2	W12-3T	CLEARANCE - MOUNT ON BRIDGE FACE	84x24							
	3	W12-3T	CLEARANCE - MOUNT ON BRIDGE FACE	84x24			-	-	-	-	
	4	R3-8	↰ ONLY ↰ ONLY ↑ ONLY	48X30	√		10BWG	1	SA	T	
B-B		R4-7	KEEP RIGHT SYMBOL	24X30	√				B-B		
	5	M3-3	SOUTH	24X12	√		10BWG	1	SA	P	
		M1-6L	LOOP 1604	24X24	√						
		M6-1	←	21X15	√						
	6	R6-1L	ONE WAY	36X12	√		10BWG	1	SA	T	
B-B		R6-1R	ONE WAY	36X12	√				B-B		
	7	R4-7	KEEP RIGHT SYMBOL	24X30	√		10BWG	1	SA	P	
	8	D1-2	↑ ALAMO RANCH PKWY	96X30	√		S80	1	SA	U	WC
	9	M3-2	EAST	24X12	√		10BWG	1	SA	U	
		M1-6T	151 TEXAS	24X24	√						
		M6-3	↑	21X15	√						
		M3-3	SOUTH	24X12	√						
		M1-6L	LOOP 1604	24X24	√						
		M6-1	→	21X15	√						
11	1	M2-1	JCT	30X24	√		10BWG	1	SA	P	
		M1-6T	151 TEXAS	24X24	√						
	2	D9-2	[H]	36X36	√		10BWG	1	SA	P	
		M5-1BL	↰	21X15	√						
	3	D9-2	[H]	36X36	√		10BWG	1	SA	P	
		M5-1BL	↰	21X15	√						
	4	R3-8 LLS	↰ ONLY ↰ ONLY ↑ ONLY	48X30	√		10BWG	1	SA	T	
	5	R3-8 SR	↑ ONLY ↗ ONLY	30X30	√		10BWG	1	SA	P	
	6	W19-2	WATCH FOR ICE ON BRIDGE(FOLDING SIGN)	48X48	√		S80	1	SA	T	
12	1	M3-2	EAST	24X12	√		S80	1	SA	U	
		M1-6T	151 TEXAS	24X24	√						
		M6-1	←	21X15	√						
		M3-3	SOUTH	24X12	√						
		M1-6L	LOOP 1604	24X24	√						
		M6-3	↑	21X15	√						
	2	M3-2	EAST	24X12	√		S80	1	SA	U	
		M1-6T	151 TEXAS	24X24	√						
		M6-1	←	21X15	√						
		M3-3	SOUTH	24X12	√						
		M1-6L	LOOP 1604	24X24	√						
		M6-3	↑	21X15	√						
	3	R3-8 LLS	↰ ONLY ↰ ONLY ↑ ONLY	48X30	√		10BWG	1	SA	T	
	4	R5-1	DO NOT ENTER	36X36	√		10BWG	1	SA	T	
	5	R3-7R	RIGHT LANE MUST TURN RIGHT	30X30	√		10BWG	1	SA	P	
	6	R5-1	DO NOT ENTER	36X36	√		10BWG	1	SA	T	
	7	W4-1R	↑	48X48	√		S80	1	SA	T	
	8	W9-2R	LANE ENDS MERGE RIGHT	48X48	√		S80	1	SA	T	
	9	R1-2	YIELD	60X60X60	√		S80	1	SA	T	
	10	R6-1L	ONE WAY - MOUNT ON EXISTING POST	36X12	√						
13	1	W19-2	WATCH FOR ICE ON BRIDGE(FOLDING SIGN)	48X48	√		S80	1	SA	T	
14	1	R5-1	DO NOT ENTER	36X36	√		10BWG	1	SA	P	
	2	R5-1	DO NOT ENTER	36X36	√		10BWG	1	SA	P	
	3	D9-2	[H] MOUNT ON EXISTING LARGE SIGN	36X36	√						

ALUMINUM SIGN BLANKS (TYPE A)

Square Ft.	Min. Thickness
Less than 7.5	0.080"
7.5 to 15	0.100"
Greater than 15	0.125"

Sign supports shall be located as shown on the plans, except that the Engineer may shift the sign supports, within design guidelines, where necessary to secure a more desirable location or to avoid conflict with utilities. Unless otherwise shown on the plans, the Contractor shall stake and the Engineer will verify all sign support locations.

STATE OF TEXAS
MICHAEL W. MIDKIFF
75435
PROFESSIONAL ENGINEER
REGISTERED
12/5/11

NO.	DATE	REVISION DESCRIPTION	APP. BY

© 2011

Texas Department of Transportation

MACTEC
3520 EXECUTIVE CENTER DRIVE
SUITE 200
AUSTIN, TEXAS 78731
(512) 795-0360
REGISTRATION NUMBER: F-1784

SH 151

SMALL SIGN SUMMARY

(SHEET 1 OF 1)

FED. RD. DIV. NO.	SHEET NO.
	22

STATE	DIST.	COUNTY
TEXAS	SA	BEXAR

CONT.	SECT.	JOB	HIGHWAY NO.
2452	01	043	SH 151

PLAN SHEET NO.	STATION TO STATION	0416 2015	0416 2020	0432 2084	0636 2001	0636 2002	0636 2003	0644 2001	0644 2004	0644 2006	0644 2025
		DRILL SHAFT (NON-REINFORCED) (12 IN)	DRILL SHAFT (SIGN MTS) (36 IN)	RIPRAP (CONC) (CL B) (4")	ALUMINUM SIGNS (TY A)	ALUMINUM SIGNS (TY G)	ALUMINUM SIGNS (TY O)	INS SM RD SN SUP&AM TY 10BWG(1) SA(P)	INS SM RD SN SUP&AM TY 10BWG(1) SA(T)	INS SM RD SN SUP&AM TY 10BWG(1) SA(U)	INS SM RD SN SUP&AM TY S80(1) SA(T)
		LF	LF	CY	SF	SF	SF	EA	EA	EA	EA
SIGNING											
1 373	471+00 TO 481+00										
2 374	481+00 TO 491+00										
3 375	491+00 TO 501+00		72.0	3.0	60.50		290.25				2
4 376	501+00 TO 511+00	7.0	72.0	6.0	60.50	30.00	290.25				1
5 377	511+00 TO 521+00										3
6 378	521+00 TO 531+00	11.0		4.5		148.00					6
7 379	531+00 TO 541+00	7.0		3.8	15.25	89.25		1	1		
8 380	523+00 TO 547+56			0.8		0.00		2	3	1	
9 381	533+00 TO 543+00										
10 382	543+00 TO 553+00										
11 383	553+00 TO 563+00	7.0		3.0		36.00		4	1		1
12 384	563+00 TO 571+00							1	3	2	3
13 385	571+00 TO 581+00										1
14 386	581+00 TO 591+00							2			
PROJECT TOTALS		32	144	21.1	136	303.25	581	10	8	3	17

PLAN SHEET NO.	STATION TO STATION	0644 2031	0644 2060	0647 2001	0650 2083	0650 2229	0658 2263	0658 2316	0658 2318	0658 2329	0682 2025	0685 2004	6007 2001
		INS SM RD SN SUP&AM TY S80(1) SA(U-WC)	REMOVE SM RD SN SUP & AM	INSTALL LRSS (STRUCT STEEL)	INS OH SN SUP(80 FT BRDG)	INS OH SN SUP(92 FT BRDG)	INSTL DEL ASSM (D-SY)SZ 1(FLX)GND	INSTL OM ASSM (OM-2Z) (FLX)GND	INSTL OM ASSM (OM-2Z) (FLX)SRF	INSTL DEL ASSM (D-SW)SZ 1(FLX)GND	VEH SIG SEC (12 IN) LED (YEL)	INSTL RDSD FLSH BEACON ASSM(SOLAR PWRD)	REMOVING TRAFFIC SIGNALS
		EA	EA	LB	EA	EA	EA	EA	EA	EA	EA	EA	EA
SIGNING													
1 373	471+00 TO 481+00		2										
2 374	481+00 TO 491+00												
3 375	491+00 TO 501+00		2		1					4			
4 376	501+00 TO 511+00		1	223		1	7	1		4			
5 377	511+00 TO 521+00							2					
6 378	521+00 TO 531+00		3	436				6	1	2			
7 379	531+00 TO 541+00		3	369				2			2	1	
8 380	523+00 TO 547+56	1	4				6		3	6			
9 381	533+00 TO 543+00		1										
10 382	543+00 TO 553+00												
11 383	553+00 TO 563+00		1	284				1					
12 384	563+00 TO 571+00		11					6	4				
13 385	571+00 TO 581+00		24										2
14 386	581+00 TO 591+00		2										
PROJECT TOTALS		1	54	1312	1	1	13	18	8	16	2	1	2

NO.	DATE	REVISION DESCRIPTION	APP. BY

© 2011

Texas Department of Transportation

MACTEC
3520 EXECUTIVE CENTER DRIVE
SUITE 200
AUSTIN, TEXAS 78731
(512) 795-0360

REGISTRATION NUMBER: F-1784

SH 151

MISCELANEOUS SIGN SUMMARY

(SHEET 1 OF 1)

FED. RD. DIV. NO.			SHEET NO.
			23
STATE	DIST.	COUNTY	
TEXAS	SA	BEXAR	
CONT.	SECT.	JOB	HIGHWAY NO.
2452	01	043	SH 151

p:\4760\0-0129\cad\sheet\51\sum_del01.dgn 12/6/2011 8:56:33 AM mwmldkltt

PLAN SHEET NO.		STATION TO STATION	0666 2003	0666 2006	0666 2012	0666 2036	0666 2039	0666 2042	0666 2048	0666 2054	0666 2096	0666 2111	0666 2132
			REFL PAV MRK TY I (W) 4" (BRK) (100MIL)	REFL PAV MRK TY I (W) 4" (DOT) (100MIL)	REFL PAV MRK TY I (W) 4" (SLD) (100MIL)	REFL PAV MRK TY I (W) 8" (SLD) (100MIL)	REFL PAV MRK TY I (W) 12" (LNDP) (100MIL)	REFL PAV MRK TY I (W) 12" (SLD) (100MIL)	REFL PAV MRK TY I (W) 24" (SLD) (100MIL)	REFL PAV MRK TY I (W) (ARROW) (100MIL)	REFL PAV MRK TY I (W) (WORD) (100MIL)	REFL PAV MRK TY I (Y) 4" (SLD) (100MIL)	REFL PAV MRK TY I (Y) 24" (SLD) (100MIL)
			LF	LF	LF	LF	LF	LF	LF	EA	EA	LF	LF
PAVEMENT MARKINGS													
1	350	484+30 TO 491+00	670		670	1120		112				670	
2	351	491+00 TO 501+00	1083		1303		825	192		1	1	1290	
3	352	501+00 TO 511+00	1780		2024	1243	407	500		1	1	2026	
4	353	511+00 TO 521+00	2549		3015	969						3016	
5	354	521+00 TO 531+00	2989		2984							2994	
6	355	531+00 TO 541+00	2527		2519							2536	
7	356	541+00 TO 547+56	1566	269	1267	702			96	12	12	1249	
8	357	523+00 TO 533+00	600		600							600	
9	358	533+00 TO 543+00	795		796	1129						1223	
10	359	543+00 TO 553+00	476			464						356	
11	360	553+00 TO 563+00	1425		1425	105	670	228		7	7	1425	
12	361	563+00 TO 571+00	1929		1661	409		73	75	5	5	2180	460
13	362	571+00 TO 581+00	1446		1663	429						2002	560
14	363	581+00 TO 591+00	50		50							50	
PROJECT TOTALS			19885	269	19976	6570	1902	1105	171	26	26	21617	1020

PLAN SHEET NO.		STATION TO STATION	0666 2142	0666 2143	0666 2145	0666 2153	0666 2154	0666 2155	0666 2157	0666 2160	0666 2173	0666 2178	0666 2185	0672 2017
			REF PAV MRK TY II (W) 4" (BRK)	REF PAV MRK TY II (W) 4" (DOT)	REF PAV MRK TY II (W) 4" (SLD)	REF PAV MRK TY II (W) 8" (SLD)	REF PAV MRK TY II (W) 12" (LNDP)	REF PAV MRK TY II (W) 12" (SLD)	REF PAV MRK TY II (W) 24" (SLD)	REF PAV MRK TY II (W) (ARROW)	REF PAV MRK TY II (W) (WORD)	REF PAV MRK TY II (Y) 4" (SLD)	REF PAV MRK TY II (Y) 24" (SLD)	REFL PAV MRKR TY II-C-R
			LF	LF	LF	LF	LF	LF	LF	EA	EA	LF	LF	EA
PAVEMENT MARKINGS														
1	350	484+30 TO 491+00	670		670	1120		112				670		69
2	351	491+00 TO 501+00	1083		1303		825	192		1	1	1290		64
3	352	501+00 TO 511+00	1780		2024	1243	407	500		1	1	2026		132
4	353	511+00 TO 521+00	2549		3015	969						3016		60
5	354	521+00 TO 531+00	2989		2984							2994		36
6	355	531+00 TO 541+00	2527		2519							2536		32
7	356	541+00 TO 547+56	1566	269	1267	702			96	12	12	1249		55
8	357	523+00 TO 533+00	600		600							600		8
9	358	533+00 TO 543+00	795		796	1129						1223		65
10	359	543+00 TO 553+00	476			464						356		28
11	360	553+00 TO 563+00	1425		1425	105	670	228		7	7	1425		62
12	361	563+00 TO 571+00	1929		1661	409		73	75	5	5	2180	460	48
13	362	571+00 TO 581+00	1446		1663	429						2002	560	37
14	363	581+00 TO 591+00	50		50							50		1
PROJECT TOTALS			19885	269	19976	6570	1902	1105	171	26	26	21617	1020	697

NO.	DATE	REVISION DESCRIPTION	APP. BY

© 2011

Texas Department of Transportation

MACTEC
3520 EXECUTIVE CENTER DRIVE
SUITE 200
AUSTIN, TEXAS 78731
(512) 795-0360
REGISTRATION NUMBER: F-1784

SH 151

PAVEMENT MARKING SUMMARY

(SHEET 1 OF 1)

FED. RD. DIV. NO.			SHEET NO.
			24
STATE	DIST.	COUNTY	
TEXAS	SA	BEXAR	
CONT.	SECT.	JOB	HIGHWAY NO.
2452	01	043	SH 151

p:\4760\0-0129\cad\sheet\51\sum_pm01.dgn 12/6/2011 9:06:40 AM mwmldkl1T

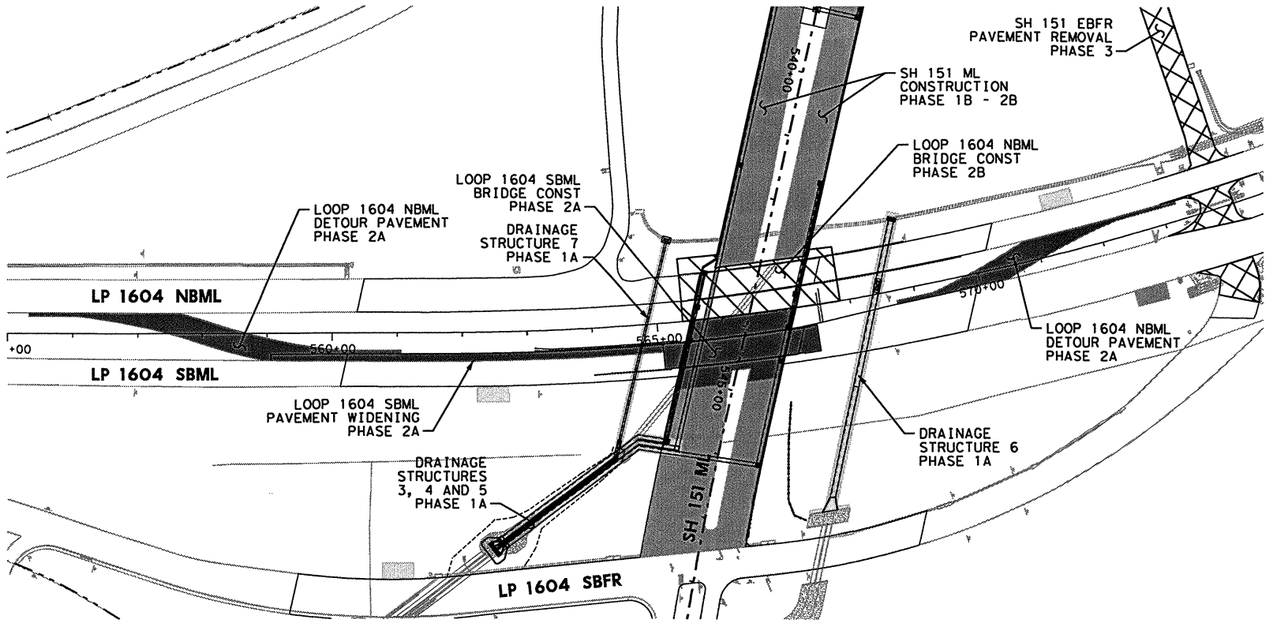

DETAIL A

PHASE	MAJOR CONSTRUCTION ACTIVITIES	MAJOR TRAFFIC SHIFTS
1A	*BEGIN CONSTRUCTION OF DRAINAGE STRUCTURES 3, 4 AND 5 *JACK AND BORE DRAINAGE STRUCTURES 6 AND 7	MAINTAIN EXISTING TRAFFIC PATTERNS
1B	*CONSTRUCT DRAINAGE STRUCTURES 1, 2 AND STAND PIPE *BEGIN CONSTRUCTION AND WIDENING OF SH 151 MAIN LANES BETWEEN WISEMAN BLVD AND LOOP 1604 NB MAIN LANES *BEGIN CONSTRUCTION OF SH 151 MAIN LANES BETWEEN LOOP 1604 SB MAIN LANES AND LOOP 1604 SB FRONTAGE ROAD *JACK AND BORE DRAINAGE STRUCTURE 4	MAINTAIN EXISTING TRAFFIC PATTERNS
2A	*CONSTRUCT LOOP 1604 SB MAIN LANE BRIDGE, LOOP 1604 SB MAIN LANE WIDENING AND PAVEMENT FOR DETOUR MEDIAN CROSSINGS *CONTINUE CONSTRUCTION OF SH 151 MAIN LANES BETWEEN WISEMAN BLVD AND LOOP 1604 NB MAIN LANES *CONTINUE CONSTRUCTION OF SH 151 MAIN LANES BETWEEN LOOP 1604 SB MAIN LANES AND LOOP 1604 SB FRONTAGE ROAD	*SHIFT LOOP 1604 SB MAIN LANE TRAFFIC ONTO LOOP 1604 SB FRONTAGE ROAD *MAINTAIN ALL OTHER EXISTING TRAFFIC PATTERNS
2B	*CONSTRUCT LOOP 1604 NB MAIN LANE BRIDGE *CONTINUE CONSTRUCTION OF SH 151 MAIN LANES BETWEEN WISEMAN BLVD AND LOOP 1604 NB MAIN LANES *CONTINUE CONSTRUCTION OF SH 151 MAIN LANES BETWEEN LOOP 1604 SB MAIN LANES AND LOOP 1604 SB FRONTAGE ROAD	*SHIFT LOOP 1604 NB MAIN LANE TRAFFIC ONTO SB MAIN LANES USING DETOUR MEDIAN CROSSINGS *CONTINUE TO DIRECT LOOP 1604 SB MAIN LANE TRAFFIC ONTO LOOP 1604 SB FRONTAGE ROAD *MAINTAIN ALL OTHER EXISTING TRAFFIC PATTERNS
3	*COMPLETE SH 151 MAIN LANE CONSTRUCTION *REMOVE DETOUR MEDIAN CROSSINGS *REMOVE EXISTING SH 151 EB FRONTAGE ROAD CROSSING AT LOOP 1604 *FINAL CLEANUP AND PROJECT ACCEPTANCE	OPEN FACILITY BY SHIFTING TRAFFIC INTO PERMANENT POSITION

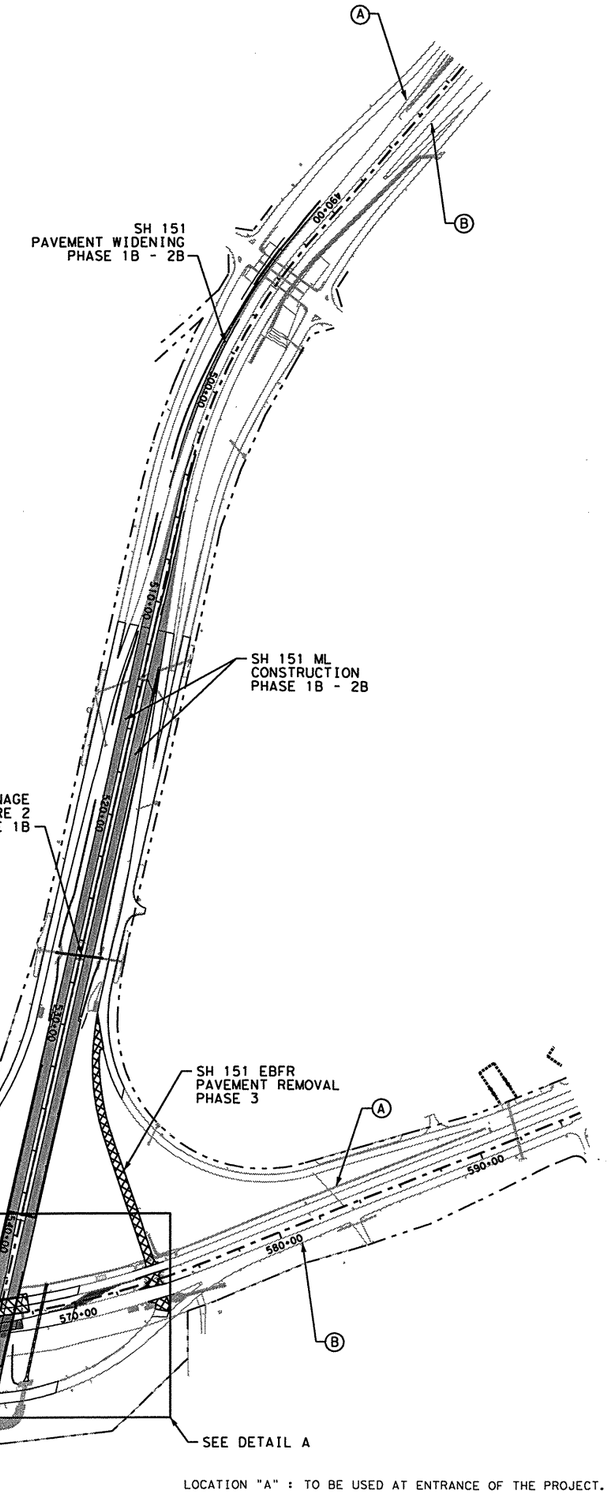

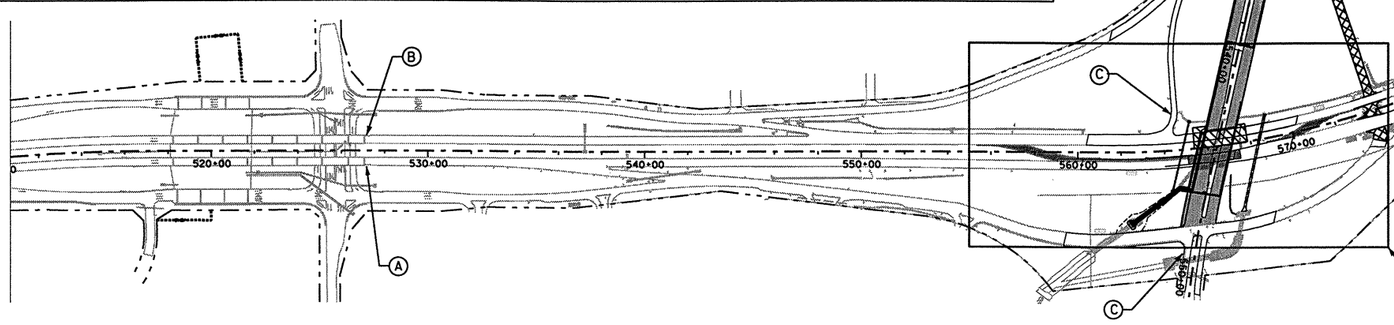

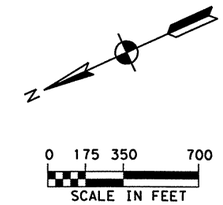

LEGEND

- PHASE 1A
- PHASE 1B
- PHASE 2A
- PHASE 2B
- PHASE 3

LOCATION "A" : TO BE USED AT ENTRANCE OF THE PROJECT.
LOCATION "B" : TO BE USED AT EXIT OF THE PROJECT.
LOCATION "C" : TO BE USED AT SIDE STREETS.
LOCATION "D" : TO BE USED AS DIRECTED BY THE ENGINEER.

SEE "TCP SEQUENCE OF WORK" PLAN SHEET FOR SCHEDULE OF TRAFFIC CONTROL & WARNING DEVICES

STATE OF TEXAS
MICHAEL W. MIDKIFF
75435
REGISTERED PROFESSIONAL ENGINEER
4/11/11

NO.	DATE	REVISION DESCRIPTION	APP. BY

© 2011

Texas Department of Transportation

MACTEC
3520 EXECUTIVE CENTER DRIVE
SUITE 200
AUSTIN, TEXAS 78731
(512) 795-0360

REGISTRATION NUMBER: F-1784

SH 151

OVERALL TRAFFIC CONTROL PLAN

(SHEET 1 OF 1)

FED. RD. DIV. NO.			SHEET NO.
			25
STATE	DIST.	COUNTY	
TEXAS	SA	BEXAR	
CONT.	SECT.	JOB	HIGHWAY NO.
2452	01	043	SH 151

P:\4760\0-0129\cad\sheet\15tcp_pr101.dgn 4/12/2011 5:51:43 PM mwmidkiff

SCHEDULE OF TRAFFIC CONTROL & WARNING DEVICES

LOCATION	SG20-6	R20-3	SG20-5T	EG20-7	EG20-9T ER20-5	SCW13-1	CW20-1D		ECW8-7	CW8-11	ECW4-3R	CW20RP-3D	E5-2		CW21-10	E5-1A	CW25-1	R11-2R	TY III BARR
A	✓	✓	✓	✓	✓		✓												
B																			
C							✓												
D						✓	✓	✓	✓	✓	✓	✓	✓		✓	✓	✓	✓	✓

LOCATION	SG20-6	R20-3	SG20-5T	EG20-9T ER20-5	ER20-5 PLAQUE	CW20-1D	G20-2a	CW21-10	CW21-2	R4-1	R4-2	ECW8-7	CW1-6A	CW8-12
A	✓	✓	✓	✓	✓	✓								
B							✓							
C						✓	✓							
D								✓	✓	✓	✓	✓	✓	✓

LOCATION	CW26-1T	G20-2a			CW8-1	CW20-8	ER20-5 PLAQUE	ECW8-8	CW8-12	CW21-16	CW20-7a	M4-8	M4-8a	M4-8b	M4-9R	M4-9AR	M4-9N	M4-10R	CW8-9A
A							✓												
B		✓																	
C																			
D	✓		✓	✓	✓	✓		✓	✓	✓	✓	✓	✓	✓	✓	✓	✓	✓	✓

LOCATION	CW20-7a	LIGHT FLASH ARROW	STATIC MESSAGE BOARD	CW20-5R/L w/ PLAQUE	CW20-5R/L w/ PLAQUE	CW20-5R/L w/ PLAQUE	BARREL	R4-1	R4-2	CW9-2L(R)	CW1-8	VP(F) R/L
A												
B												
C												
D	✓	✓	✓	✓	✓	✓	✓	✓	✓	✓	✓	✓

LOCATION "A" : TO BE USED AT ENTRANCE OF THE PROJECT.
LOCATION "B" : TO BE USED AT EXIT OF THE PROJECT.
LOCATION "C" : TO BE USED AT SIDE STREETS.
LOCATION "D" : TO BE USED AS DIRECTED BY THE ENGINEER.

GENERAL

1. COOPERATE IN THE USE OF RIGHT-OF-WAY WITH THE STATE OF TEXAS, THE CITY OF SAN ANTONIO AND VARIOUS PUBLIC UTILITY COMPANIES AS REQUIRED TO ALLOW FOR UTILITY ADJUSTMENTS.

2. PROVIDE AND MAINTAIN ACCESS TO PROPERTIES AND BUSINESSES ADJACENT TO THE RIGHT-OF-WAY AT ALL TIMES UNLESS DIRECTED OTHERWISE BY THE PROJECT ENGINEER.

3. ENSURE ADEQUATE DRAINAGE DURING ALL PHASES OF CONSTRUCTION.

4. NO EQUIPMENT SHALL BE PERMITTED TO REMAIN IN A POSITION THAT WILL ENDANGER THE TRAVELING PUBLIC AFTER WORKING HOURS.

5. NO LANE CLOSURES OF THROUGH LANES ON LOOP 1604 WILL BE PERMITTED BETWEEN THE HOURS OF 5:30 AM TO 9:00 PM UNLESS OTHERWISE APPROVED IN WRITING.

6. NO LANE CLOSURES OF TURN LANES ON LOOP 1604 WILL BE PERMITTED BETWEEN THE HOURS OF 5:30 AM TO 9:00 AM OR BETWEEN 4:00 PM AND 9:00 PM UNLESS OTHERWISE APPROVED IN WRITING.

7. A MINIMUM 3:1 (H:V) TEMPORARY SAFETY SLOPE OF STABLE COMPACTED MATERIAL WILL BE REQUIRED DURING NON-WORKING HOURS TO PROTECT ALL ELEVATION DIFFERENCES GREATER THAN TWO (2) INCHES.

8. ENGINEER MUST BE NOTIFIED IN WRITING OF ALL LANE CLOSURES A MINIMUM OF TWO (2) WORKING DAYS IN ADVANCE OF ALL SINGLE LANE CLOSURES AND A MINIMUM OF SEVEN (7) WORKING DAYS IN ADVANCE OF ALL MULTIPLE LANE CLOSURES.

9. INSTALL CHANGEABLE MESSAGE BOARDS TO NOTIFY THE TRAVELING PUBLIC OF UPCOMING LANE CLOSURES AND DETOURS AS DIRECTED.

10. UNDERGROUND UTILITIES, INCLUDING ILLUMINATION AND TRAFFIC SIGNAL CONDUIT AND FOUNDATIONS, ARE TO BE PLACED UPON COMPLETION OF EXCAVATION AND PRIOR TO PAVEMENT CONSTRUCTION

11. ASPHALT SURFACE COURSE, TOPSOIL AND SEEDING IS NOT TO BE PLACED UNTIL PHASE 3 OF CONSTRUCTION.

SEQUENCE OF CONSTRUCTION

PHASE 1A

1. REMOVE ALL CONFLICTING EXISTING PAVEMENT MARKINGS AND SIGNS.

2. INSTALL WORK ZONE PAVEMENT MARKINGS, BARRICADES, CHANNELIZING DEVICES, BARRIERS AND SIGNS FOR PHASE 1A CONSTRUCTION.

3. INSTALL SW3P AND CAVE ENTRANCE GATE.

4. MAINTAIN EXISTING TRAFFIC PATTERNS.

5. JACK AND BORE DRAINAGE STRUCTURE 6.

6. JACK AND BORE DRAINAGE STRUCTURE 7.

PHASE 1A (CONTINUED)

7. GRADE TEMPORARY DIVERSION DITCHES TO MINIMIZE RUNOFF FLOW INTO EXISTING DUAL 5'x 3' CULVERT CROSSING BENEATH LP 1604.

8. CONSTRUCT THE DOWNSTREAM PORTION OF DRAINAGE STRUCTURE 4 FROM JUNCTION BOX 4-1 TO INLET 3-3.
CONSTRUCT THE DOWNSTREAM PORTION OF DRAINAGE STRUCTURE 3 FROM JUNCTION BOX 4-1 TO JUNCTION BOX 4-3.
CONSTRUCT THE DOWNSTREAM PORTION OF DRAINAGE STRUCTURE 5 FROM JUNCTION BOX 4-1 TO 60 FT UPSTREAM OF BEND 5-2.
*EXISTING DUAL 5'x 3' CULVERTS ARE TO BE REMOVED, AS PROPOSED STRUCTURES ENCROACH UPON IT, IN A MANNER WHICH ALLOWS OUTFALL FROM THESE CULVERTS TO FLOW INTO THE PARTIALLY CONSTRUCTED PROPOSED CULVERTS.

PHASE 1B

1. REMOVE ALL CONFLICTING EXISTING PAVEMENT MARKINGS AND SIGNS.

2. INSTALL WORK ZONE PAVEMENT MARKINGS, BARRICADES, CHANNELIZING DEVICES, BARRIERS AND SIGNS FOR PHASE 2A CONSTRUCTION.

3. INSTALL SW3P.

4. EXCAVATE PROPOSED SH 151 ML BETWEEN LP 1604 SBML AND LP 1604 SB FRONTAGE ROAD.
*CONSTRUCTION OF THE RETAINING WALLS IS TO BE CONCURRENT WITH SH 151 MAINLANE EXCAVATION.

5. CONSTRUCT DRAINAGE STRUCTURE 1.

6. CONSTRUCT ENTIRE LENGTH OF DRAINAGE STRUCTURE 2.

7. BORE 60" DIAMETER PIT FOR TEMPORARY VERTICAL 24" RCP STAND PIPE AT APPROXIMATELY STA 543+15, OFFSET 63.

8. JACK AND BORE DRAINAGE STRUCTURE 4, FROM JUNCTION BOX 4-3 TO TEMPORARY VERTICAL STAND PIPE BORE PIT, AND CONNECT TO JUNCTION BOX 4-3.

9. PLACE VERTICAL STAND PIPE AND BACKFILL BORE PIT TO STABILIZE. SEE TEMPORARY STAND PIPE DETAIL.

10. CONSTRUCT PROPOSED SH 151 ML BETWEEN LP 1604 SBML AND LP 1604 SB FRONTAGE ROAD.
THIS WORK MAY CONTINUE INTO AND BE CONCURRENT WITH PHASES 2A AND 2B.

11. WIDEN AND CONSTRUCT SH 151 MAINLANES FROM STA 490+00 (BEGINNING OF PROJECT) TO STA 542+00
THIS WORK MAY CONTINUE INTO AND BE CONCURRENT WITH PHASES 2A AND 2B.
*CONSTRUCTION OF THE RETAINING WALLS IS TO BE CONCURRENT WITH SH 151 MAINLANE EXCAVATION.
**ANY RUNOFF WITHIN THE EXCAVATION AREA OF SH 151 MAINLANES DOWNSTREAM OF INLET 2-5 IS TO BE DIRECTED INTO THE TEMPORARY STAND PIPE CONSTRUCTED IN STEP 9.
SEE TEMPORARY STAND PIPE DETAIL.

PHASE 2A

1. REMOVE ALL CONFLICTING EXISTING PAVEMENT MARKINGS AND SIGNS.

2. INSTALL WORK ZONE PAVEMENT MARKINGS, BARRICADES, CHANNELIZING DEVICES, BARRIERS AND SIGNS FOR PHASE 2A CONSTRUCTION.

3. INSTALL SW3P.

4. CLOSE EXISTING LOOP 1604 SOUTHBOUND MAINLANES FROM STA 533+00 TO STA 580+00, DIVERTING ALL LOOP 1604 SOUTHBOUND TRAFFIC ONTO THE LOOP 1604 SOUTHBOUND FRONTAGE ROAD VIA THE EXISTING EXIT AND ENTRANCE RAMPS.

5. CONSTRUCT LOOP 1604 SOUTHBOUND MAINLANE BRIDGE.

6. CONSTRUCT DRAINAGE STRUCTURES 3 AND 5 BENEATH LOOP 1604 SOUTHBOUND MAINLANE BRIDGE.

7. CONSTRUCT SH 151 MAINLANES FROM STA 544+00 TO STA 545+00.
(BENEATH LOOP 1604 SOUTHBOUND MAINLANE BRIDGE)

8. WIDEN LOOP 1604 SOUTHBOUND MAINLANES FROM STA 559+00 TO STA 565+00.

9. CONSTRUCT TEMPORARY DETOUR RAMPS BETWEEN LOOP 1604 NORTHBOUND AND LOOP 1604 SOUTHBOUND MAINLANES, FROM STA 555+30 TO STA 561+00 AND FROM STA 568+70 TO STA 573+25. SEE LOOP 1604 PHASE 2B NORTHBOUND DETOUR SHEETS FOR DETAILS.

PHASE 2B

1. REMOVE ALL CONFLICTING EXISTING PAVEMENT MARKINGS AND SIGNS.

2. INSTALL WORK ZONE PAVEMENT MARKINGS, BARRICADES, CHANNELIZING DEVICES, BARRIERS AND SIGNS FOR PHASE 2B CONSTRUCTION.

3. INSTALL SW3P.

4. CONTINUE CLOSURE OF LOOP 1604 SOUTHBOUND MAINLANES TO SOUTHBOUND LOOP 1604 TRAFFIC FROM STA 533+00 TO STA 580+00.

5. CLOSE EXISTING LOOP 1604 NORTHBOUND MAINLANES FROM STA 555+30 TO STA 573+25, DIVERTING ALL LOOP 1604 NORTHBOUND TRAFFIC ONTO THE LOOP 1604 SOUTHBOUND MAINLANES VIA THE TEMPORARY DETOUR RAMPS CONSTRUCTED IN PHASE 2A.

6. CONSTRUCT LOOP 1604 NORTHBOUND MAINLANE BRIDGE.

7. CONSTRUCT SH 151 MAINLANES FROM STA 542+00 TO STA 544+00.
(BENEATH LOOP 1604 NORTHBOUND MAINLANE BRIDGE)

8. INSTALL CURB AND BRICK MEDIAN FROM SH 151 STA 539+26 TO STA 547+05. (BEGINNING TO END)

9. COMPLETE DRAINAGE STRUCTURES 3, 4 AND 5 AND ALL REMAINING CONSTRUCTION BETWEEN SH 151 STA 490+00 AND STA 547+50. (BEGINNING TO END)

PHASE 3

1. INSTALL ILLUMINATION.

2. INSTALL TRAFFIC SIGNAL SYSTEM AT ALAMO RANCH PARKWAY AND TRAFFIC MANAGEMENT SYSTEM.

3. INSTALL ASPHALT FINAL SURFACE COURSE.

4. INSTALL TOPSOIL AND SEEDING.

5. INSTALL PERMANENT SIGNING AND PAVEMENT MARKINGS. (OSB 5/32 S)

6. SHIFT TRAFFIC TO FINAL CONFIGURATION. OPEN LOOP 1604 NORTHBOUND MAINLANES AND SOUTHBOUND MAINLANES AND SH 151 MAINLANES.

7. REMOVE LOOP 1604 SOUTHBOUND TEMPORARY DETOURS, EXISTING SIGNAL AND SH 151 WESTBOUND CONNECTOR RAMP.

8. PERFORM FINAL CLEANUP, DEMOBILIZE.

TEMPORARY SW3P ALL PHASES

1. ALL SW3P CONTROL MEASURES SHALL BE PLACED WITHIN TXDOT RIGHT-OF-WAY DURING CONSTRUCTION.

2. SHALL MAINTAIN SW3P CONTROL MEASURES THROUGHOUT CONSTRUCTION.

3. CONSTRUCTION ENTRANCE/EXIT AND CONCRETE WASH-OUT AREA TO BE DETERMINED BY ENGINEER OUT IN THE FIELD.

4. ALL SW3P CONTROL MEASURES INSTALLED DURING CONSTRUCTION ARE TO REMAIN IN PLACE UNTIL 70% VEGETATIVE COVER IS ACHIEVED OR AS APPROVED BY THE ENGINEER.

5. LOCATION OF SW3P CONTROL MEASURES TO BE DETERMINED BY ENGINEER IN THE FIELD.

6. ANTICIPATE ONE REPLACEMENT CYCLE FOR SW3P CONTROL MEASURES.

7. APPLY VEGETATIVE WATERING AS NEEDED TO SUPPLEMENT NATURAL RAINFALL DURING THE VEGETATION ESTABLISHMENT PERIOD. DROUGHT OR OTHER ENVIRONMENTAL CONDITIONS, AS DETERMINED BY THE ENGINEER, MAY REQUIRE THE APPLICATION OF SUPPLEMENTAL IRRIGATION TO BE BETWEEN THE HOURS OF 6PM AND 8AM.

8. SW3P CONTROL MEASURE SYMBOLS ARE NOT TO SCALE.

STATE OF TEXAS
MICHAEL W. MIDKIFF
75435
REGISTERED PROFESSIONAL ENGINEER
12/5/11

NO.	DATE	REVISION DESCRIPTION	APP. BY

© 2011

Texas Department of Transportation

MACTEC
3520 EXECUTIVE CENTER DRIVE
SUITE 200
AUSTIN, TEXAS 78731
(512) 795-0360
REGISTRATION NUMBER: F-1784

SH 151

TRAFFIC CONTROL SEQUENCE OF WORK

(SHEET 1 OF 1)

FED. RD. DIV. NO.			SHEET NO.
			26
STATE	DIST.	COUNTY	
TEXAS	SA	BEXAR	
CONT.	SECT.	JOB	HIGHWAY NO.
2452	01	043	SH 151

p:\47600-01\29\cad\sheet\v5\seq01.dgn 12/4/2011 2:34:50 PM mwmidkiff

SHEET SUMMARY OF ESTIMATED QUANTITIES			
ITEM#	DESCRIPTION	UNIT	QTY

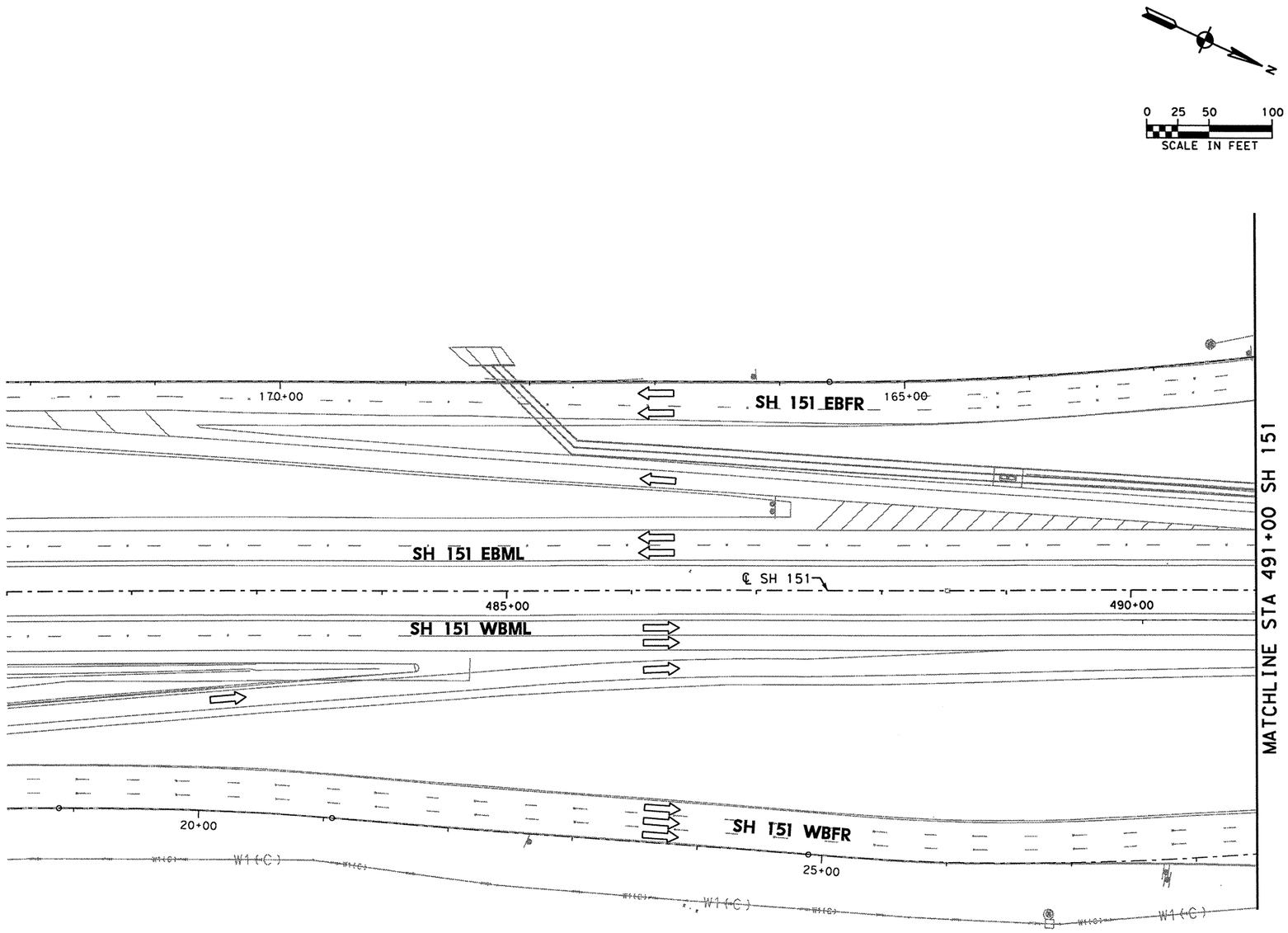

TEMPORARY SW3P ALL PHASES

1. ALL SW3P CONTROL MEASURES SHALL BE PLACED WITHIN TXDOT RIGHT-OF-WAY DURING CONSTRUCTION.
2. SHALL MAINTAIN SW3P CONTROL MEASURES THROUGHOUT CONSTRUCTION.
3. CONSTRUCTION ENTRANCE/EXIT AND CONCRETE WASH-OUT AREA TO BE DETERMINED BY ENGINEER OUT IN THE FIELD.
4. ALL SW3P CONTROL MEASURES INSTALLED DURING CONSTRUCTION ARE TO REMAIN IN PLACE UNTIL 70% VEGETATIVE COVER IS ACHIEVED OR AS APPROVED BY THE ENGINEER.
5. LOCATION OF SW3P CONTROL MEASURES TO BE DETERMINED BY ENGINEER IN THE FIELD.
6. ANTICIPATE ONE REPLACEMENT CYCLE FOR SW3P CONTROL MEASURES.
7. APPLY VEGETATIVE WATERING AS NEEDED TO SUPPLEMENT NATURAL RAINFALL DURING THE VEGETATION ESTABLISHMENT PERIOD. DROUGHT OR OTHER ENVIRONMENTAL CONDITIONS, AS DETERMINED BY THE ENGINEER, MAY REQUIRE THE APPLICATION OF SUPPLEMENTAL IRRIGATION TO BE BETWEEN THE HOURS OF 6PM AND 8AM.
8. SW3P CONTROL MEASURE SYMBOLS ARE NOT TO SCALE.

LEGEND

- PROPOSED CONSTRUCTION IN CURRENT PHASE
- TEMPORARY CONSTRUCTION IN CURRENT PHASE
- PROPOSED CONSTRUCTION IN PREVIOUS PHASE
- PAVEMENT REMOVAL IN CURRENT PHASE
- EXISTING TRAFFIC FLOW ARROW
- PROPOSED TRAFFIC FLOW ARROW
- CHANGEABLE MESSAGE SIGN
- ARROW BOARD
- PLASTIC DRUM
- PLASTIC DRUM WITH CHEVRON
- TYPE III BARRICADE
- TEMPORARY SILT FENCE
- RFD TEMPORARY ROCK FILTER DAM
- SANDBAGS FOR INLET PROTECTION
- DITCH

STATE OF TEXAS
MICHAEL W. MIDKIFF
75435
REGISTERED PROFESSIONAL ENGINEER

Michael W. Midkiff
3/18/11

NO.	DATE	REVISION DESCRIPTION	APP. BY

© 2011

Texas Department of Transportation

MACTEC
3520 EXECUTIVE CENTER DRIVE
SUITE 200
AUSTIN, TEXAS 78731
(512) 795-0360

REGISTRATION NUMBER: F-1784

SH 151
TRAFFIC CONTROL & SW3P PHASE IA
SH 151
BEGIN PROJECT TO STA 491+00
(SHEET 1 OF 7)

FED. RD. DIV. NO.			SHEET NO.
			27
STATE	DIST.	COUNTY	
TEXAS	SA	BEXAR	
CONT.	SECT.	JOB	HIGHWAY NO.
2452	01	043	SH 151

p:\4760\0-0129\cad\sheet\151tcp101.dgn 3/18/2011 11:17:30 AM mwmidkiff

SHEET SUMMARY OF ESTIMATED QUANTITIES			
ITEM#	DESCRIPTION	UNIT	QTY

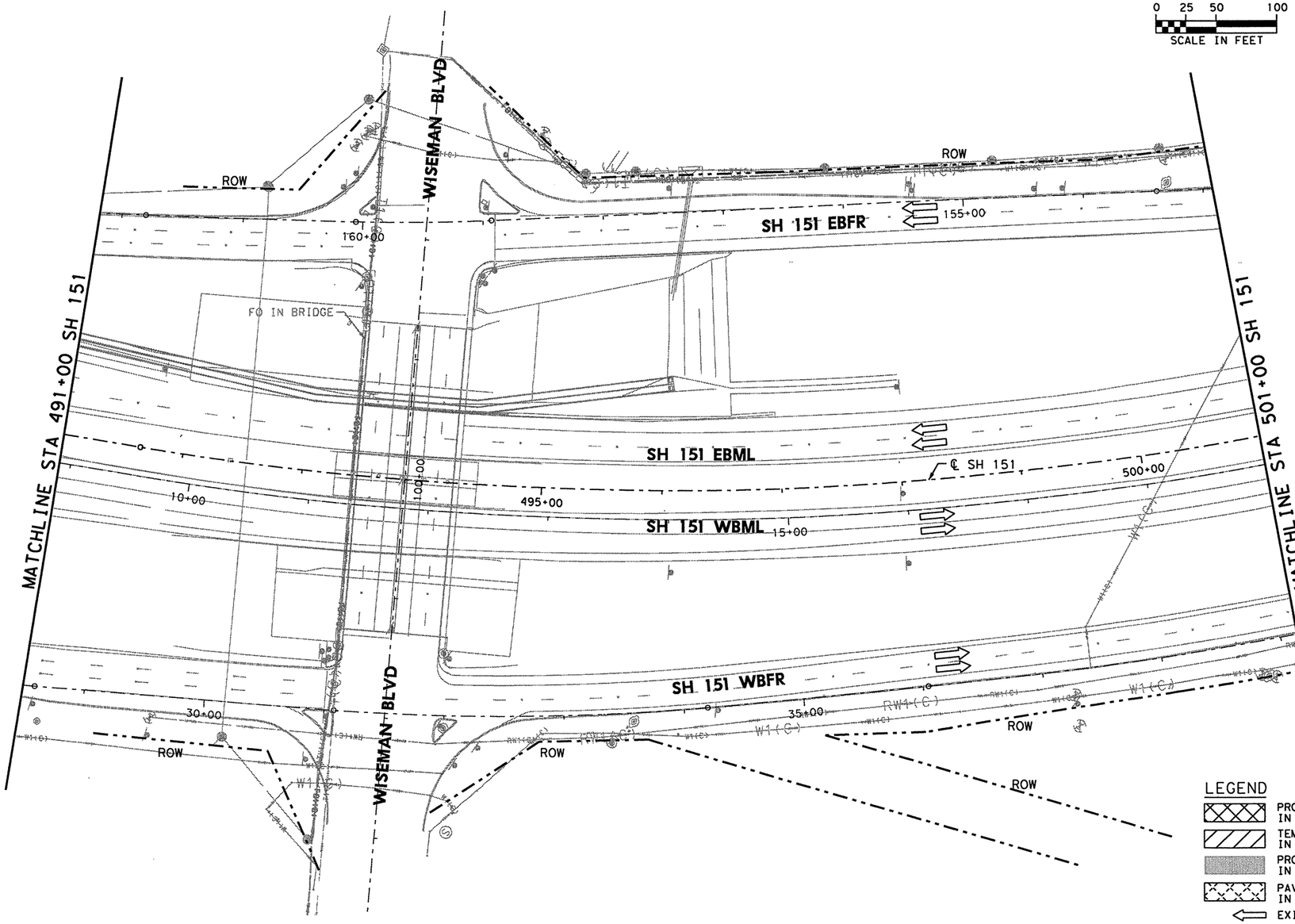

TEMPORARY SW3P ALL PHASES

1. ALL SW3P CONTROL MEASURES SHALL BE PLACED WITHIN TXDOT RIGHT-OF-WAY DURING CONSTRUCTION.
2. SHALL MAINTAIN SW3P CONTROL MEASURES THROUGHOUT CONSTRUCTION.
3. CONSTRUCTION ENTRANCE/EXIT AND CONCRETE WASH-OUT AREA TO BE DETERMINED BY ENGINEER OUT IN THE FIELD.
4. ALL SW3P CONTROL MEASURES INSTALLED DURING CONSTRUCTION ARE TO REMAIN IN PLACE UNTIL 70% VEGETATIVE COVER IS ACHIEVED OR AS APPROVED BY THE ENGINEER.
5. LOCATION OF SW3P CONTROL MEASURES TO BE DETERMINED BY ENGINEER IN THE FIELD.
6. ANTICIPATE ONE REPLACEMENT CYCLE FOR SW3P CONTROL MEASURES.
7. APPLY VEGETATIVE WATERING AS NEEDED TO SUPPLEMENT NATURAL RAINFALL DURING THE VEGETATION ESTABLISHMENT PERIOD. DROUGHT OR OTHER ENVIRONMENTAL CONDITIONS, AS DETERMINED BY THE ENGINEER, MAY REQUIRE THE APPLICATION OF SUPPLEMENTAL IRRIGATION TO BE BETWEEN THE HOURS OF 6PM AND 8AM.
8. SW3P CONTROL MEASURE SYMBOLS ARE NOT TO SCALE.

LEGEND

- PROPOSED CONSTRUCTION IN CURRENT PHASE
- TEMPORARY CONSTRUCTION IN CURRENT PHASE
- PROPOSED CONSTRUCTION IN PREVIOUS PHASE
- PAVEMENT REMOVAL IN CURRENT PHASE
- EXISTING TRAFFIC FLOW ARROW
- PROPOSED TRAFFIC FLOW ARROW
- CHANGEABLE MESSAGE SIGN
- ARROW BOARD
- PLASTIC DRUM
- PLASTIC DRUM WITH CHEVRON
- TYPE III BARRICADE
- TEMPORARY SILT FENCE
- RFD TEMPORARY ROCK FILTER DAM
- SANDBAGS FOR INLET PROTECTION
- DITCH

STATE OF TEXAS
MICHAEL W. MIDKIFF
75435
REGISTERED PROFESSIONAL ENGINEER
3/18/11

NO.	DATE	REVISION DESCRIPTION	APP. BY

© 2011

Texas Department of Transportation

MACTEC
3520 EXECUTIVE CENTER DRIVE
SUITE 200
AUSTIN, TEXAS 78731
(512) 795-0360

REGISTRATION NUMBER: F-1784

SH 151
TRAFFIC CONTROL & SW3P PHASE IA SH 151 STA 491+00 TO STA 501+00
(SHEET 2 OF 7)

FED. RD. DIV. NO.			SHEET NO.
			28
STATE	DIST.	COUNTY	
TEXAS	SA	BEXAR	
CONT.	SECT.	JOB	HIGHWAY NO.
2452	01	043	SH 151

p:\4760\0-0129\cad\sheet\151cp\102.dgn 3/18/2011 11:17:35 AM mwmidkiff

SHEET SUMMARY OF ESTIMATED QUANTITIES			
ITEM#	DESCRIPTION	UNIT	QTY

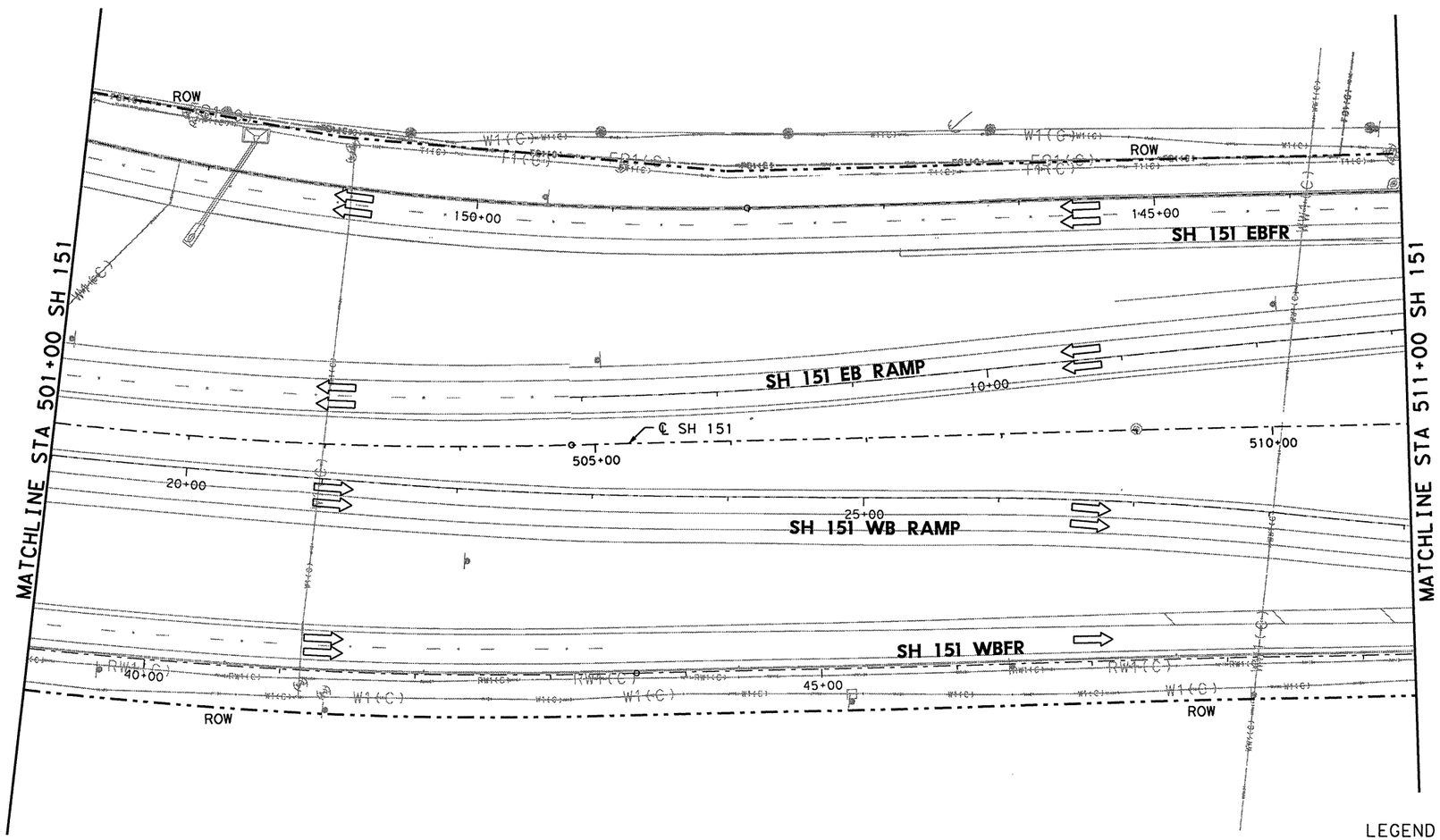

0 25 50 100
SCALE IN FEET

TEMPORARY SW3P ALL PHASES

1. ALL SW3P CONTROL MEASURES SHALL BE PLACED WITHIN TXDOT RIGHT-OF-WAY DURING CONSTRUCTION.
2. SHALL MAINTAIN SW3P CONTROL MEASURES THROUGHOUT CONSTRUCTION.
3. CONSTRUCTION ENTRANCE/EXIT AND CONCRETE WASH-OUT AREA TO BE DETERMINED BY ENGINEER OUT IN THE FIELD.
4. ALL SW3P CONTROL MEASURES INSTALLED DURING CONSTRUCTION ARE TO REMAIN IN PLACE UNTIL 70% VEGETATIVE COVER IS ACHIEVED OR AS APPROVED BY THE ENGINEER.
5. LOCATION OF SW3P CONTROL MEASURES TO BE DETERMINED BY ENGINEER IN THE FIELD.
6. ANTICIPATE ONE REPLACEMENT CYCLE FOR SW3P CONTROL MEASURES.
7. APPLY VEGETATIVE WATERING AS NEEDED TO SUPPLEMENT NATURAL RAINFALL DURING THE VEGETATION ESTABLISHMENT PERIOD. DROUGHT OR OTHER ENVIRONMENTAL CONDITIONS, AS DETERMINED BY THE ENGINEER, MAY REQUIRE THE APPLICATION OF SUPPLEMENTAL IRRIGATION TO BE BETWEEN THE HOURS OF 6PM AND 8AM.
8. SW3P CONTROL MEASURE SYMBOLS ARE NOT TO SCALE.

LEGEND

- PROPOSED CONSTRUCTION IN CURRENT PHASE
- TEMPORARY CONSTRUCTION IN CURRENT PHASE
- PROPOSED CONSTRUCTION IN PREVIOUS PHASE
- PAVEMENT REMOVAL IN CURRENT PHASE
- EXISTING TRAFFIC FLOW ARROW
- PROPOSED TRAFFIC FLOW ARROW
- CHANGEABLE MESSAGE SIGN
- ARROW BOARD
- PLASTIC DRUM
- PLASTIC DRUM WITH CHEVRON
- TYPE III BARRICADE
- TEMPORARY SILT FENCE
- TEMPORARY ROCK FILTER DAM
- SANDBAGS FOR INLET PROTECTION
- DITCH

STATE OF TEXAS
MICHAEL W. MIDKIFF
75435
REGISTERED PROFESSIONAL ENGINEER

Michael W. Midkiff
3/18/11

NO.	DATE	REVISION DESCRIPTION	APP. BY

© 2011

Texas Department of Transportation

MACTEC
3520 EXECUTIVE CENTER DRIVE
SUITE 200
AUSTIN, TEXAS 78731
(512) 795-0360

REGISTRATION NUMBER: F-1784

SH 151
TRAFFIC CONTROL & SW3P PHASE IA
SH 151
STA 501+00 TO STA 511+00
(SHEET 3 OF 7)

FED. RD. DIV. NO.			SHEET NO.
			29
STATE	DIST.	COUNTY	
TEXAS	SA	BEXAR	
CONT.	SECT.	JOB	HIGHWAY NO.
2452	01	043	SH 151

p:\4760\0-0129\cad\sheet\151tcp1103.dgn 3/18/2011 11:17:43 AM mwmidkiff

SHEET SUMMARY OF ESTIMATED QUANTITIES			
ITEM#	DESCRIPTION	UNIT	QTY

N

0 25 50 100
SCALE IN FEET

TEMPORARY SW3P ALL PHASES

1. ALL SW3P CONTROL MEASURES SHALL BE PLACED WITHIN TXDOT RIGHT-OF-WAY DURING CONSTRUCTION.
2. SHALL MAINTAIN SW3P CONTROL MEASURES THROUGHOUT CONSTRUCTION.
3. CONSTRUCTION ENTRANCE/EXIT AND CONCRETE WASH-OUT AREA TO BE DETERMINED BY ENGINEER OUT IN THE FIELD.
4. ALL SW3P CONTROL MEASURES INSTALLED DURING CONSTRUCTION ARE TO REMAIN IN PLACE UNTIL 70% VEGETATIVE COVER IS ACHIEVED OR AS APPROVED BY THE ENGINEER.
5. LOCATION OF SW3P CONTROL MEASURES TO BE DETERMINED BY ENGINEER IN THE FIELD.
6. ANTICIPATE ONE REPLACEMENT CYCLE FOR SW3P CONTROL MEASURES.
7. APPLY VEGETATIVE WATERING AS NEEDED TO SUPPLEMENT NATURAL RAINFALL DURING THE VEGETATION ESTABLISHMENT PERIOD. DROUGHT OR OTHER ENVIRONMENTAL CONDITIONS, AS DETERMINED BY THE ENGINEER, MAY REQUIRE THE APPLICATION OF SUPPLEMENTAL IRRIGATION TO BE BETWEEN THE HOURS OF 6PM AND 8AM.
8. SW3P CONTROL MEASURE SYMBOLS ARE NOT TO SCALE.

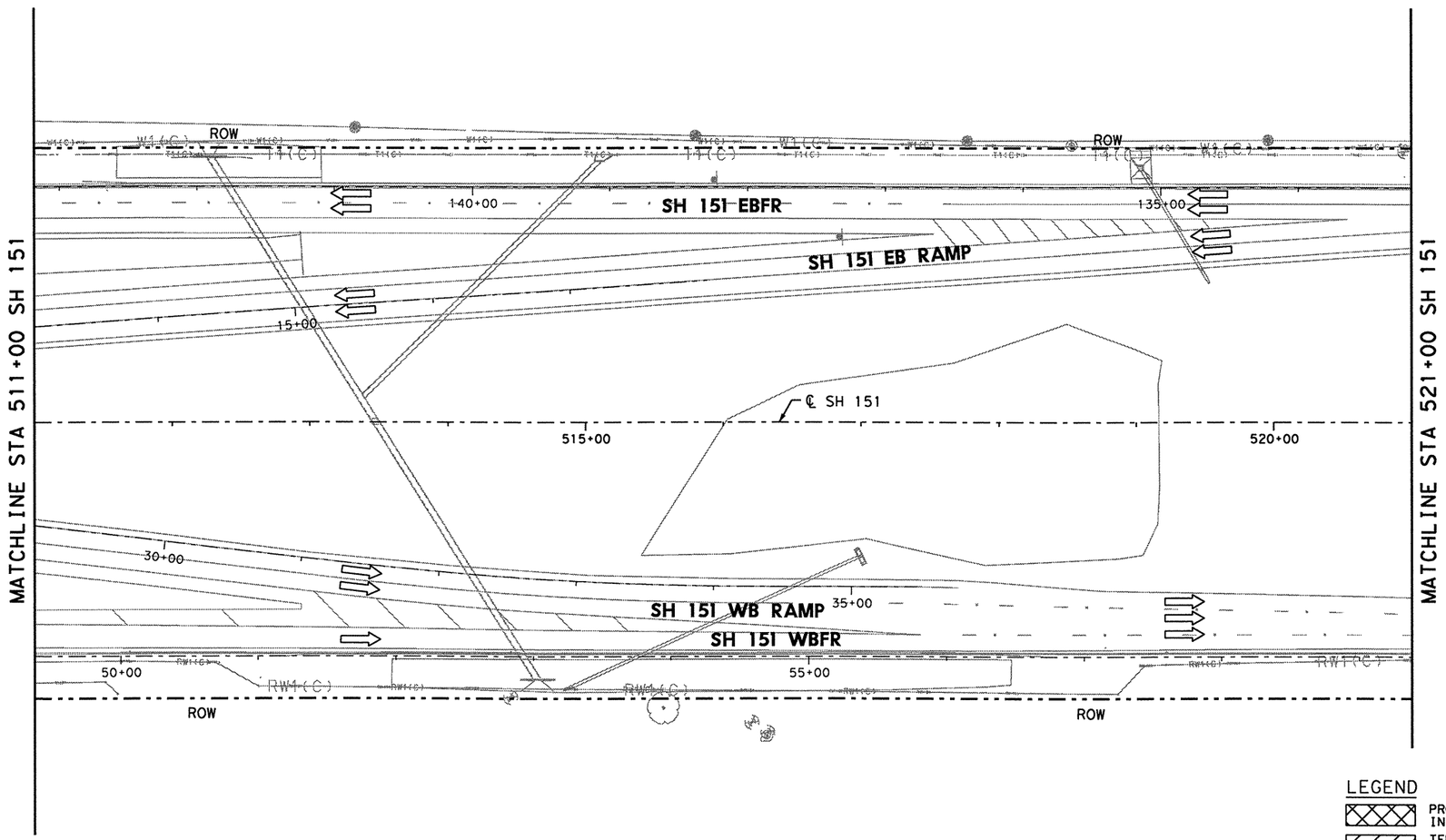

LEGEND

- PROPOSED CONSTRUCTION IN CURRENT PHASE
- TEMPORARY CONSTRUCTION IN CURRENT PHASE
- PROPOSED CONSTRUCTION IN PREVIOUS PHASE
- PAVEMENT REMOVAL IN CURRENT PHASE
- EXISTING TRAFFIC FLOW ARROW
- PROPOSED TRAFFIC FLOW ARROW
- CHANGEABLE MESSAGE SIGN
- ARROW BOARD
- PLASTIC DRUM
- PLASTIC DRUM WITH CHEVRON
- TYPE III BARRICADE
- TEMPORARY SILT FENCE
- RFD TEMPORARY ROCK FILTER DAM
- SANDBAGS FOR INLET PROTECTION
- DITCH

STATE OF TEXAS
MICHAEL W. MIDKIFF
75435
REGISTERED PROFESSIONAL ENGINEER
3/18/11

NO.	DATE	REVISION DESCRIPTION	APP. BY

©2011

Texas Department of Transportation

MACTEC
3520 EXECUTIVE CENTER DRIVE
SUITE 200
AUSTIN, TEXAS 78731
(512) 795-0360
REGISTRATION NUMBER: F-1784

SH 151
TRAFFIC CONTROL & SW3P PHASE IA SH 151 STA 511+00 TO STA 521+00
(SHEET 4 OF 7)

FED. RD. DIV. NO.			SHEET NO.
			30
STATE	DIST.	COUNTY	
TEXAS	SA	BEXAR	
CONT.	SECT.	JOB	HIGHWAY NO.
2452	01	043	SH 151

P:\PTG\ND-01\29\cad\sheet\151tcp01C4.dgn 3/18/2011 11:17:50 AM mwmidkiff

SHEET SUMMARY OF ESTIMATED QUANTITIES			
ITEM#	DESCRIPTION	UNIT	QTY

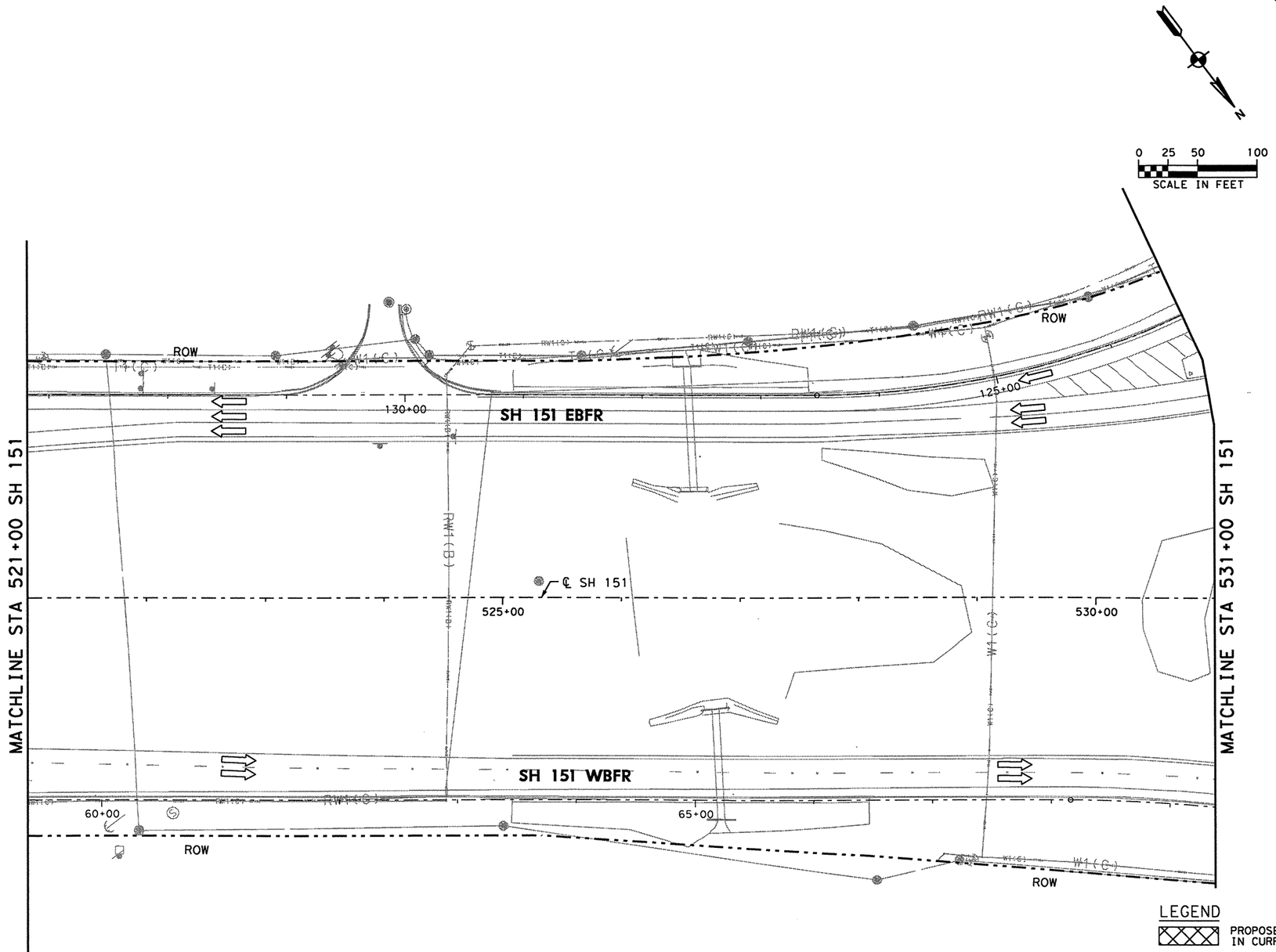

TEMPORARY SW3P ALL PHASES

1. ALL SW3P CONTROL MEASURES SHALL BE PLACED WITHIN TXDOT RIGHT-OF-WAY DURING CONSTRUCTION.
2. SHALL MAINTAIN SW3P CONTROL MEASURES THROUGHOUT CONSTRUCTION.
3. CONSTRUCTION ENTRANCE/EXIT AND CONCRETE WASH-OUT AREA TO BE DETERMINED BY ENGINEER OUT IN THE FIELD.
4. ALL SW3P CONTROL MEASURES INSTALLED DURING CONSTRUCTION ARE TO REMAIN IN PLACE UNTIL 70% VEGETATIVE COVER IS ACHIEVED OR AS APPROVED BY THE ENGINEER.
5. LOCATION OF SW3P CONTROL MEASURES TO BE DETERMINED BY ENGINEER IN THE FIELD.
6. ANTICIPATE ONE REPLACEMENT CYCLE FOR SW3P CONTROL MEASURES.
7. APPLY VEGETATIVE WATERING AS NEEDED TO SUPPLEMENT NATURAL RAINFALL DURING THE VEGETATION ESTABLISHMENT PERIOD. DROUGHT OR OTHER ENVIRONMENTAL CONDITIONS, AS DETERMINED BY THE ENGINEER, MAY REQUIRE THE APPLICATION OF SUPPLEMENTAL IRRIGATION TO BE BETWEEN THE HOURS OF 6PM AND 8AM.
8. SW3P CONTROL MEASURE SYMBOLS ARE NOT TO SCALE.

LEGEND

- PROPOSED CONSTRUCTION IN CURRENT PHASE
- TEMPORARY CONSTRUCTION IN CURRENT PHASE
- PROPOSED CONSTRUCTION IN PREVIOUS PHASE
- PAVEMENT REMOVAL IN CURRENT PHASE
- EXISTING TRAFFIC FLOW ARROW
- PROPOSED TRAFFIC FLOW ARROW
- CHANGEABLE MESSAGE SIGN
- ARROW BOARD
- PLASTIC DRUM
- PLASTIC DRUM WITH CHEVRON
- TYPE III BARRICADE
- TEMPORARY SILT FENCE
- TEMPORARY ROCK FILTER DAM
- SANDBAGS FOR INLET PROTECTION
- DITCH

STATE OF TEXAS
MICHAEL W. MIDKIFF
75435
REGISTERED PROFESSIONAL ENGINEER

Michael W. Midkiff
3/18/11

NO.	DATE	REVISION DESCRIPTION	APP. BY

© 2011

Texas Department of Transportation

MACTEC
3520 EXECUTIVE CENTER DRIVE
SUITE 200
AUSTIN, TEXAS 78731
(512) 795-0360

REGISTRATION NUMBER: F-1784

SH 151
TRAFFIC CONTROL & SW3P PHASE IA
SH 151
STA 521+00 TO STA 531+00
(SHEET 5 OF 7)

FED. RD. DIV. NO.			SHEET NO.
			31
STATE	DIST.	COUNTY	
TEXAS	SA	BEXAR	
CONT.	SECT.	JOB	HIGHWAY NO.
2452	01	043	SH 151

p:\4760\0-0129\cad\sheet\51tcp105.dgn 3/18/2011 11:17:56 AM mwmidkiff

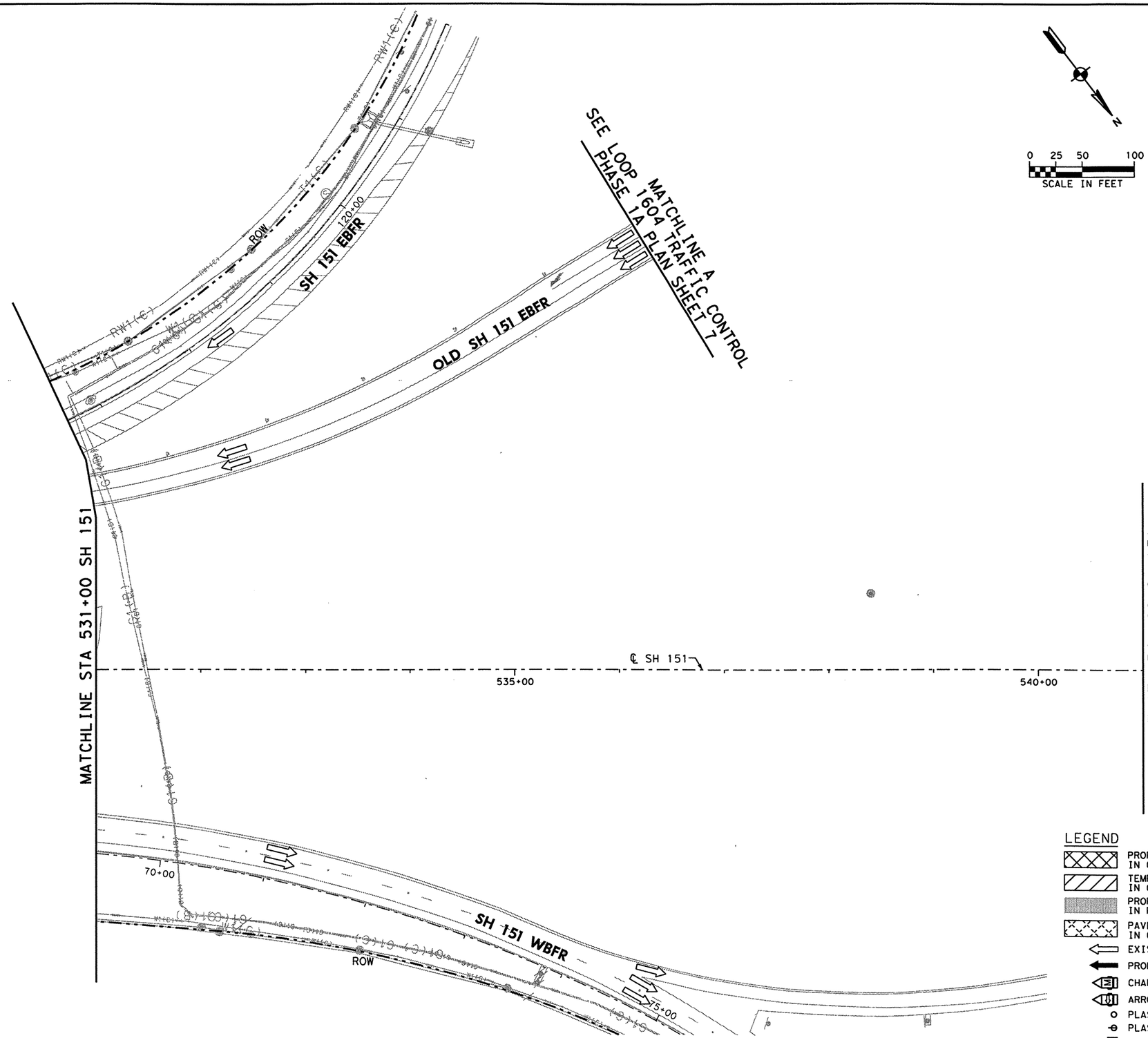

SHEET SUMMARY OF ESTIMATED QUANTITIES

ITEM#	DESCRIPTION	UNIT	QTY

TEMPORARY SW3P ALL PHASES

1. ALL SW3P CONTROL MEASURES SHALL BE PLACED WITHIN TXDOT RIGHT-OF-WAY DURING CONSTRUCTION.
2. SHALL MAINTAIN SW3P CONTROL MEASURES THROUGHOUT CONSTRUCTION.
3. CONSTRUCTION ENTRANCE/EXIT AND CONCRETE WASH-OUT AREA TO BE DETERMINED BY ENGINEER OUT IN THE FIELD.
4. ALL SW3P CONTROL MEASURES INSTALLED DURING CONSTRUCTION ARE TO REMAIN IN PLACE UNTIL 70% VEGETATIVE COVER IS ACHIEVED OR AS APPROVED BY THE ENGINEER.
5. LOCATION OF SW3P CONTROL MEASURES TO BE DETERMINED BY ENGINEER IN THE FIELD.
6. ANTICIPATE ONE REPLACEMENT CYCLE FOR SW3P CONTROL MEASURES.
7. APPLY VEGETATIVE WATERING AS NEEDED TO SUPPLEMENT NATURAL RAINFALL DURING THE VEGETATION ESTABLISHMENT PERIOD. DROUGHT OR OTHER ENVIRONMENTAL CONDITIONS, AS DETERMINED BY THE ENGINEER, MAY REQUIRE THE APPLICATION OF SUPPLEMENTAL IRRIGATION TO BE BETWEEN THE HOURS OF 6PM AND 8AM.
8. SW3P CONTROL MEASURE SYMBOLS ARE NOT TO SCALE.

LEGEND

- PROPOSED CONSTRUCTION IN CURRENT PHASE
- TEMPORARY CONSTRUCTION IN CURRENT PHASE
- PROPOSED CONSTRUCTION IN PREVIOUS PHASE
- PAVEMENT REMOVAL IN CURRENT PHASE
- EXISTING TRAFFIC FLOW ARROW
- PROPOSED TRAFFIC FLOW ARROW
- CHANGEABLE MESSAGE SIGN
- ARROW BOARD
- PLASTIC DRUM
- PLASTIC DRUM WITH CHEVRON
- TYPE III BARRICADE
- TEMPORARY SILT FENCE
- RFD TEMPORARY ROCK FILTER DAM
- SANDBAGS FOR INLET PROTECTION
- DITCH

STATE OF TEXAS
MICHAEL W. MIDKIFF
75435
REGISTERED PROFESSIONAL ENGINEER
3/18/11

NO.	DATE	REVISION DESCRIPTION	APP. BY

© 2011

Texas Department of Transportation

MACTEC
3520 EXECUTIVE CENTER DRIVE
SUITE 200
AUSTIN, TEXAS 78731
(512) 795-0360

REGISTRATION NUMBER: F-1784

SH 151
TRAFFIC CONTROL & SW3P PHASE IA
SH 151
STA 531+00 TO STA 541+00
(SHEET 6 OF 7)

FED. RD. DIV. NO.			SHEET NO.
			32
STATE	DIST.	COUNTY	
TEXAS	SA	BEXAR	
CONT.	SECT.	JOB	HIGHWAY NO.
2452	01	043	SH 151

p:\4760\0-0129\cad\sheet\151tcpl106.dgn 3/18/2011 11:18:03 AM mwmidkiff

SHEET SUMMARY OF ESTIMATED QUANTITIES			
ITEM#	DESCRIPTION	UNIT	QTY
0506	ROCK FILTER DAMS (INSTALL) (TY 2)	LF	25
0506	TEMPORARY SEDIMENT CONTROL FENCE	LF	325
0506	ROCK FILTER DAMS (REMOVE & REPLACE)	LF	50

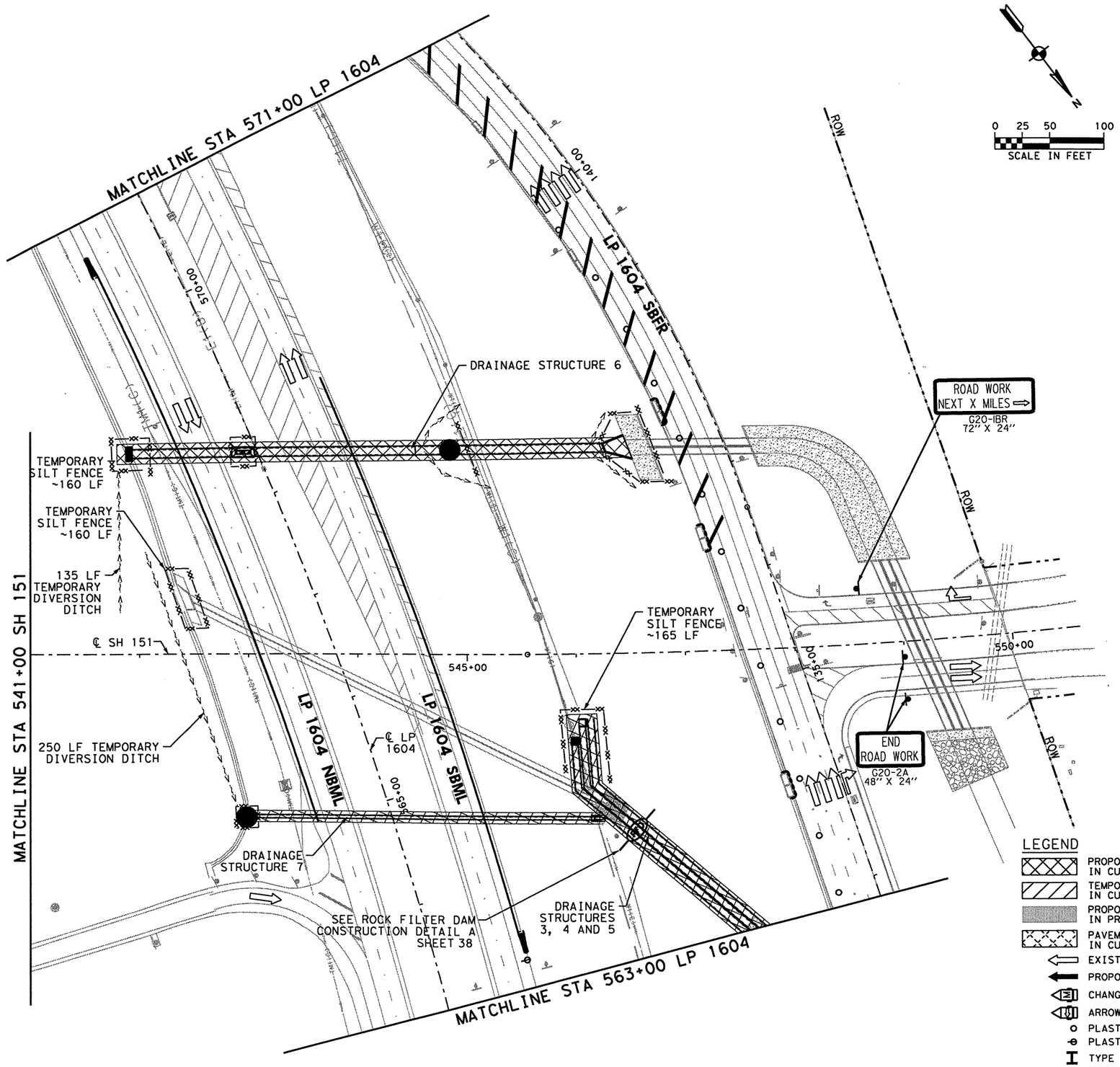

TEMPORARY SW3P ALL PHASES

1. ALL SW3P CONTROL MEASURES SHALL BE PLACED WITHIN TXDOT RIGHT-OF-WAY DURING CONSTRUCTION.
2. SHALL MAINTAIN SW3P CONTROL MEASURES THROUGHOUT CONSTRUCTION.
3. CONSTRUCTION ENTRANCE/EXIT AND CONCRETE WASH-OUT AREA TO BE DETERMINED BY ENGINEER OUT IN THE FIELD.
4. ALL SW3P CONTROL MEASURES INSTALLED DURING CONSTRUCTION ARE TO REMAIN IN PLACE UNTIL 70% VEGETATIVE COVER IS ACHIEVED OR AS APPROVED BY THE ENGINEER.
5. LOCATION OF SW3P CONTROL MEASURES TO BE DETERMINED BY ENGINEER IN THE FIELD.
6. ANTICIPATE ONE REPLACEMENT CYCLE FOR SW3P CONTROL MEASURES.
7. APPLY VEGETATIVE WATERING AS NEEDED TO SUPPLEMENT NATURAL RAINFALL DURING THE VEGETATION ESTABLISHMENT PERIOD. DROUGHT OR OTHER ENVIRONMENTAL CONDITIONS, AS DETERMINED BY THE ENGINEER, MAY REQUIRE THE APPLICATION OF SUPPLEMENTAL IRRIGATION TO BE BETWEEN THE HOURS OF 6PM AND 8AM.
8. SW3P CONTROL MEASURE SYMBOLS ARE NOT TO SCALE.

LEGEND

- PROPOSED CONSTRUCTION IN CURRENT PHASE
- TEMPORARY CONSTRUCTION IN CURRENT PHASE
- PROPOSED CONSTRUCTION IN PREVIOUS PHASE
- PAVEMENT REMOVAL IN CURRENT PHASE
- EXISTING TRAFFIC FLOW ARROW
- PROPOSED TRAFFIC FLOW ARROW
- CHANGEABLE MESSAGE SIGN
- ARROW BOARD
- PLASTIC DRUM
- PLASTIC DRUM WITH CHEVRON
- TYPE III BARRICADE
- TEMPORARY SILT FENCE
- RFD TEMPORARY ROCK FILTER DAM
- SANDBAGS FOR INLET PROTECTION
- DITCH

STATE OF TEXAS
MICHAEL W. MIDKIFF
75435
REGISTERED PROFESSIONAL ENGINEER
3/18/11

NO.	DATE	REVISION DESCRIPTION	APP. BY

© 2011

Texas Department of Transportation

MACTEC
3520 EXECUTIVE CENTER DRIVE
SUITE 200
AUSTIN, TEXAS 78731
(512) 795-0360

REGISTRATION NUMBER: F-1784

SH 151
TRAFFIC CONTROL & SW3P PHASE IA
SH 151
STA 541+00 TO END PROJECT
(SHEET 7 OF 7)

FED. RD. DIV. NO.			SHEET NO.
			33
STATE	DIST.	COUNTY	
TEXAS	SA	BEXAR	
CONT.	SECT.	JOB	HIGHWAY NO.
2452	01	043	SH 151

p:\4760\0-0129\cad\sheet\151tcp1107.dgn 3/18/2011 11:18:11 AM mwmidkiff

SHEET SUMMARY OF ESTIMATED QUANTITIES			
ITEM#	DESCRIPTION	UNIT	QTY

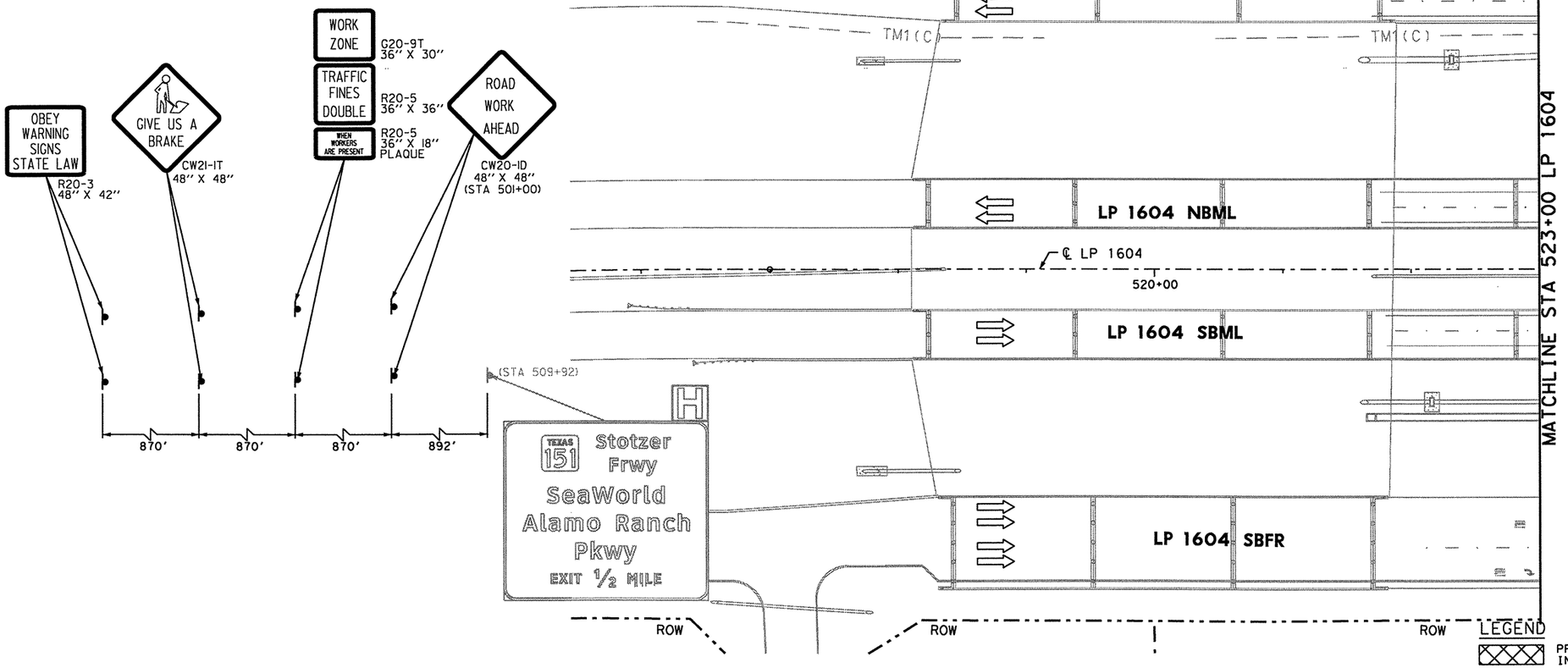

TEMPORARY SW3P ALL PHASES

1. ALL SW3P CONTROL MEASURES SHALL BE PLACED WITHIN TXDOT RIGHT-OF-WAY DURING CONSTRUCTION.
2. SHALL MAINTAIN SW3P CONTROL MEASURES THROUGHOUT CONSTRUCTION.
3. CONSTRUCTION ENTRANCE/EXIT AND CONCRETE WASH-OUT AREA TO BE DETERMINED BY ENGINEER OUT IN THE FIELD.
4. ALL SW3P CONTROL MEASURES INSTALLED DURING CONSTRUCTION ARE TO REMAIN IN PLACE UNTIL 70% VEGETATIVE COVER IS ACHIEVED OR AS APPROVED BY THE ENGINEER.
5. LOCATION OF SW3P CONTROL MEASURES TO BE DETERMINED BY ENGINEER IN THE FIELD.
6. ANTICIPATE ONE REPLACEMENT CYCLE FOR SW3P CONTROL MEASURES.
7. APPLY VEGETATIVE WATERING AS NEEDED TO SUPPLEMENT NATURAL RAINFALL DURING THE VEGETATION ESTABLISHMENT PERIOD. DROUGHT OR OTHER ENVIRONMENTAL CONDITIONS, AS DETERMINED BY THE ENGINEER, MAY REQUIRE THE APPLICATION OF SUPPLEMENTAL IRRIGATION TO BE BETWEEN THE HOURS OF 6PM AND 8AM.
8. SW3P CONTROL MEASURE SYMBOLS ARE NOT TO SCALE.

LEGEND

- PROPOSED CONSTRUCTION IN CURRENT PHASE
- TEMPORARY CONSTRUCTION IN CURRENT PHASE
- PROPOSED CONSTRUCTION IN PREVIOUS PHASE
- PAVEMENT REMOVAL IN CURRENT PHASE
- EXISTING TRAFFIC FLOW ARROW
- PROPOSED TRAFFIC FLOW ARROW
- CHANGEABLE MESSAGE SIGN
- ARROW BOARD
- PLASTIC DRUM
- PLASTIC DRUM WITH CHEVRON
- TYPE III BARRICADE
- TEMPORARY SILT FENCE
- RFD TEMPORARY ROCK FILTER DAM
- SANDBAGS FOR INLET PROTECTION
- DITCH

STATE OF TEXAS
MICHAEL W. MIDKIFF
75435
REGISTERED PROFESSIONAL ENGINEER
3/18/11

NO.	DATE	REVISION DESCRIPTION	APP. BY

©2011

Texas Department of Transportation

MACTEC
3520 EXECUTIVE CENTER DRIVE
SUITE 200
AUSTIN, TEXAS 78731
(512) 795-0360
REGISTRATION NUMBER: F-1784

SH 151
TRAFFIC CONTROL & SW3P PHASE 1A LP 1604 BEGIN PROJECT TO STA 523+00
(SHEET 1 OF 8)

FED. RD. DIV. NO.			SHEET NO.
			34
STATE	DIST.	COUNTY	
TEXAS	SA	BEXAR	
CONT.	SECT.	JOB	HIGHWAY NO.
2452	01	043	SH 151

p:\4760\0-0129\cad\sheet\151tcp108.dgn 3/18/2011 11:18:18 AM mwmidkiff

SHEET SUMMARY OF ESTIMATED QUANTITIES

ITEM#	DESCRIPTION	UNIT	QTY

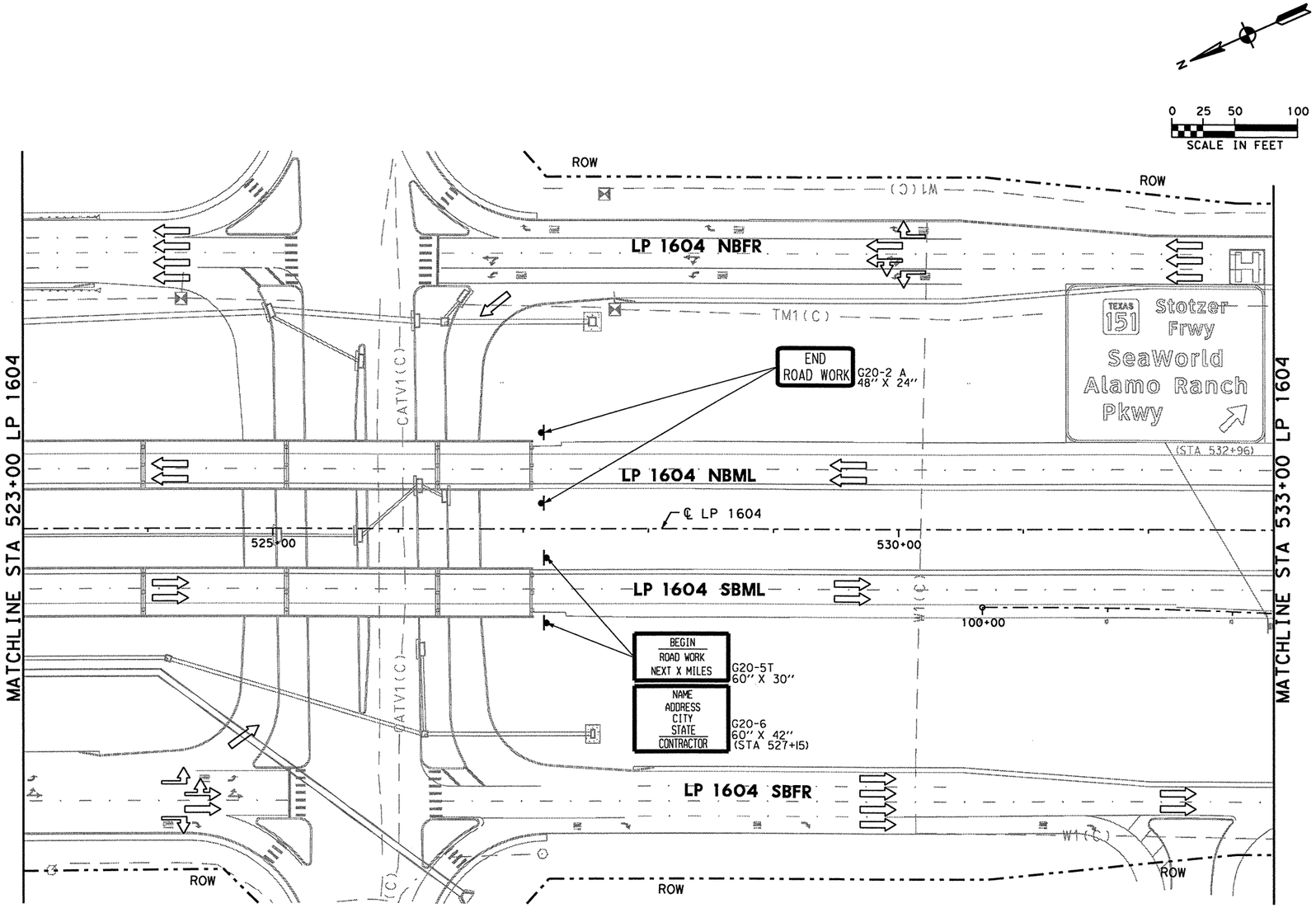

TEMPORARY SW3P ALL PHASES

1. ALL SW3P CONTROL MEASURES SHALL BE PLACED WITHIN TXDOT RIGHT-OF-WAY DURING CONSTRUCTION.
2. SHALL MAINTAIN SW3P CONTROL MEASURES THROUGHOUT CONSTRUCTION.
3. CONSTRUCTION ENTRANCE/EXIT AND CONCRETE WASH-OUT AREA TO BE DETERMINED BY ENGINEER OUT IN THE FIELD.
4. ALL SW3P CONTROL MEASURES INSTALLED DURING CONSTRUCTION ARE TO REMAIN IN PLACE UNTIL 70% VEGETATIVE COVER IS ACHIEVED OR AS APPROVED BY THE ENGINEER.
5. LOCATION OF SW3P CONTROL MEASURES TO BE DETERMINED BY ENGINEER IN THE FIELD.
6. ANTICIPATE ONE REPLACEMENT CYCLE FOR SW3P CONTROL MEASURES.
7. APPLY VEGETATIVE WATERING AS NEEDED TO SUPPLEMENT NATURAL RAINFALL DURING THE VEGETATION ESTABLISHMENT PERIOD. DROUGHT OR OTHER ENVIRONMENTAL CONDITIONS, AS DETERMINED BY THE ENGINEER, MAY REQUIRE THE APPLICATION OF SUPPLEMENTAL IRRIGATION TO BE BETWEEN THE HOURS OF 6PM AND 8AM.
8. SW3P CONTROL MEASURE SYMBOLS ARE NOT TO SCALE.

LEGEND

- PROPOSED CONSTRUCTION IN CURRENT PHASE
- TEMPORARY CONSTRUCTION IN CURRENT PHASE
- PROPOSED CONSTRUCTION IN PREVIOUS PHASE
- PAVEMENT REMOVAL IN CURRENT PHASE
- EXISTING TRAFFIC FLOW ARROW
- PROPOSED TRAFFIC FLOW ARROW
- CHANGEABLE MESSAGE SIGN
- ARROW BOARD
- PLASTIC DRUM
- PLASTIC DRUM WITH CHEVRON
- TYPE III BARRICADE
- TEMPORARY SILT FENCE
- RFD TEMPORARY ROCK FILTER DAM
- SANDBAGS FOR INLET PROTECTION
- DITCH

STATE OF TEXAS
MICHAEL W. MIDKIFF
75435
REGISTERED PROFESSIONAL ENGINEER

Michael W. Midkiff
3/18/11

NO.	DATE	REVISION DESCRIPTION	APP. BY

© 2011

Texas Department of Transportation

MACTEC
3520 EXECUTIVE CENTER DRIVE
SUITE 200
AUSTIN, TEXAS 78731
(512) 795-0360

REGISTRATION NUMBER: F-1784

SH 151
TRAFFIC CONTROL & SW3P PHASE IA
LP 1604
STA 523+00 TO STA 533+00
(SHEET 2 OF 8)

FED. RD. DIV. NO.			SHEET NO.
			35
STATE	DIST.	COUNTY	
TEXAS	SA	BEXAR	
CONT.	SECT.	JOB	HIGHWAY NO.
2452	01	043	SH 151

p:\4760\0-0129\cad\sheet\51tcp1109.dgn 3/18/2011 11:18:25 AM mwmidkiff

SHEET SUMMARY OF ESTIMATED QUANTITIES			
ITEM#	DESCRIPTION	UNIT	QTY

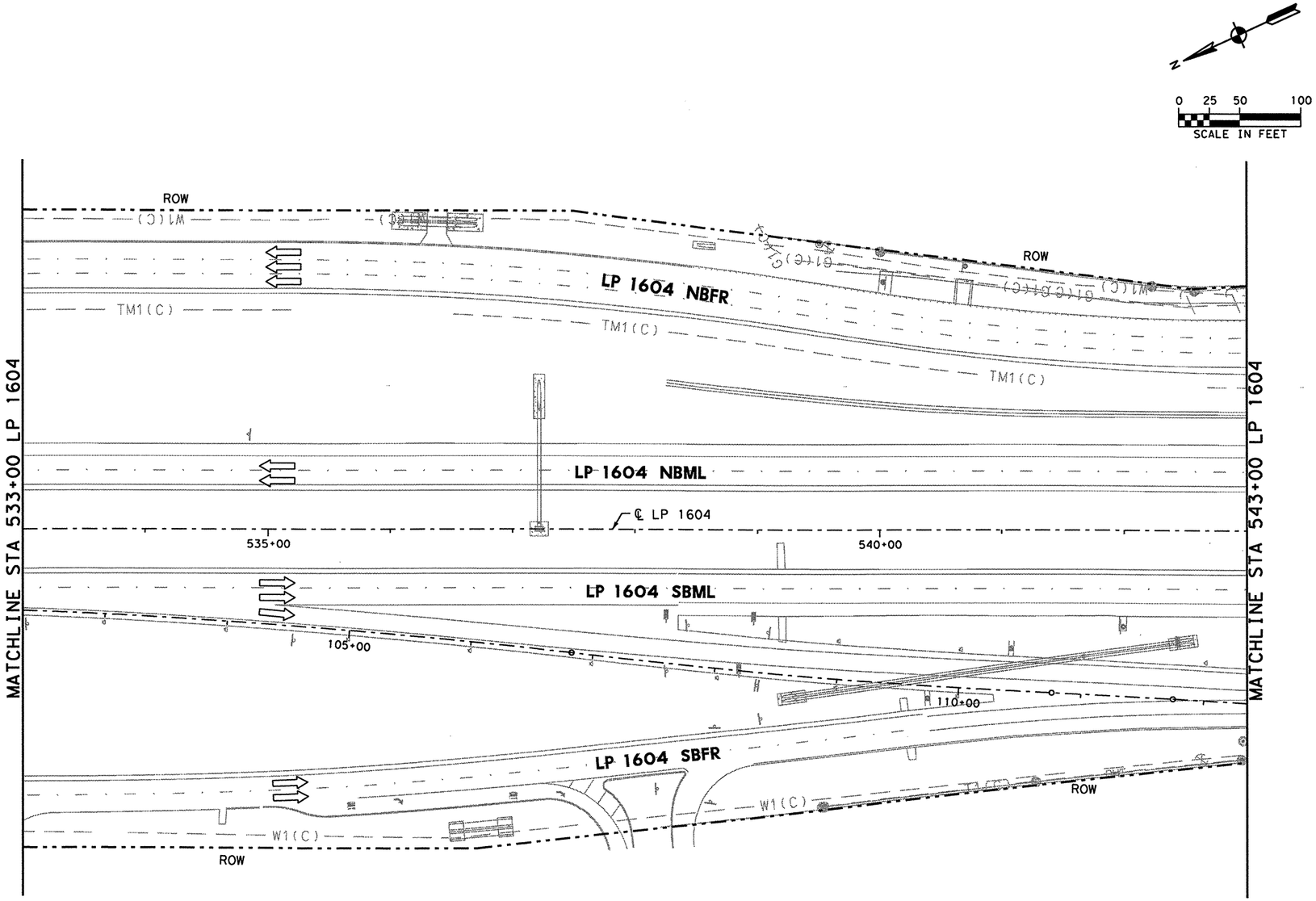

TEMPORARY SW3P ALL PHASES

1. ALL SW3P CONTROL MEASURES SHALL BE PLACED WITHIN TXDOT RIGHT-OF-WAY DURING CONSTRUCTION.
2. SHALL MAINTAIN SW3P CONTROL MEASURES THROUGHOUT CONSTRUCTION.
3. CONSTRUCTION ENTRANCE/EXIT AND CONCRETE WASH-OUT AREA TO BE DETERMINED BY ENGINEER OUT IN THE FIELD.
4. ALL SW3P CONTROL MEASURES INSTALLED DURING CONSTRUCTION ARE TO REMAIN IN PLACE UNTIL 70% VEGETATIVE COVER IS ACHIEVED OR AS APPROVED BY THE ENGINEER.
5. LOCATION OF SW3P CONTROL MEASURES TO BE DETERMINED BY ENGINEER IN THE FIELD.
6. ANTICIPATE ONE REPLACEMENT CYCLE FOR SW3P CONTROL MEASURES.
7. APPLY VEGETATIVE WATERING AS NEEDED TO SUPPLEMENT NATURAL RAINFALL DURING THE VEGETATION ESTABLISHMENT PERIOD. DROUGHT OR OTHER ENVIRONMENTAL CONDITIONS, AS DETERMINED BY THE ENGINEER, MAY REQUIRE THE APPLICATION OF SUPPLEMENTAL IRRIGATION TO BE BETWEEN THE HOURS OF 6PM AND 8AM.
8. SW3P CONTROL MEASURE SYMBOLS ARE NOT TO SCALE.

LEGEND

- PROPOSED CONSTRUCTION IN CURRENT PHASE
- TEMPORARY CONSTRUCTION IN CURRENT PHASE
- PROPOSED CONSTRUCTION IN PREVIOUS PHASE
- PAVEMENT REMOVAL IN CURRENT PHASE
- EXISTING TRAFFIC FLOW ARROW
- PROPOSED TRAFFIC FLOW ARROW
- CHANGEABLE MESSAGE SIGN
- ARROW BOARD
- PLASTIC DRUM
- PLASTIC DRUM WITH CHEVRON
- TYPE III BARRICADE
- TEMPORARY SILT FENCE
- RFD TEMPORARY ROCK FILTER DAM
- SANDBAGS FOR INLET PROTECTION
- DITCH

STATE OF TEXAS
MICHAEL W. MIDKIFF
75435
REGISTERED PROFESSIONAL ENGINEER

Michael W. Midkiff
3/18/11

NO.	DATE	REVISION DESCRIPTION	APP. BY

© 2011

Texas Department of Transportation

MACTEC
3520 EXECUTIVE CENTER DRIVE
SUITE 200
AUSTIN, TEXAS 78731
(512) 795-0360

REGISTRATION NUMBER: F-1784

SH 151
TRAFFIC CONTROL & SW3P PHASE IA
LP 1604
STA 533+00 TO STA 543+00
(SHEET 3 OF 8)

FED. RD. DIV. NO.			SHEET NO.
			36
STATE	DIST.	COUNTY	
TEXAS	SA	BEXAR	
CONT.	SECT.	JOB	HIGHWAY NO.
2452	01	043	SH 151

p:\4760\0-0129\cad\sheet\151tcp110.dgn 3/18/2011 11:18:32 AM mwmidkiff

SHEET SUMMARY OF ESTIMATED QUANTITIES			
ITEM#	DESCRIPTION	UNIT	QTY

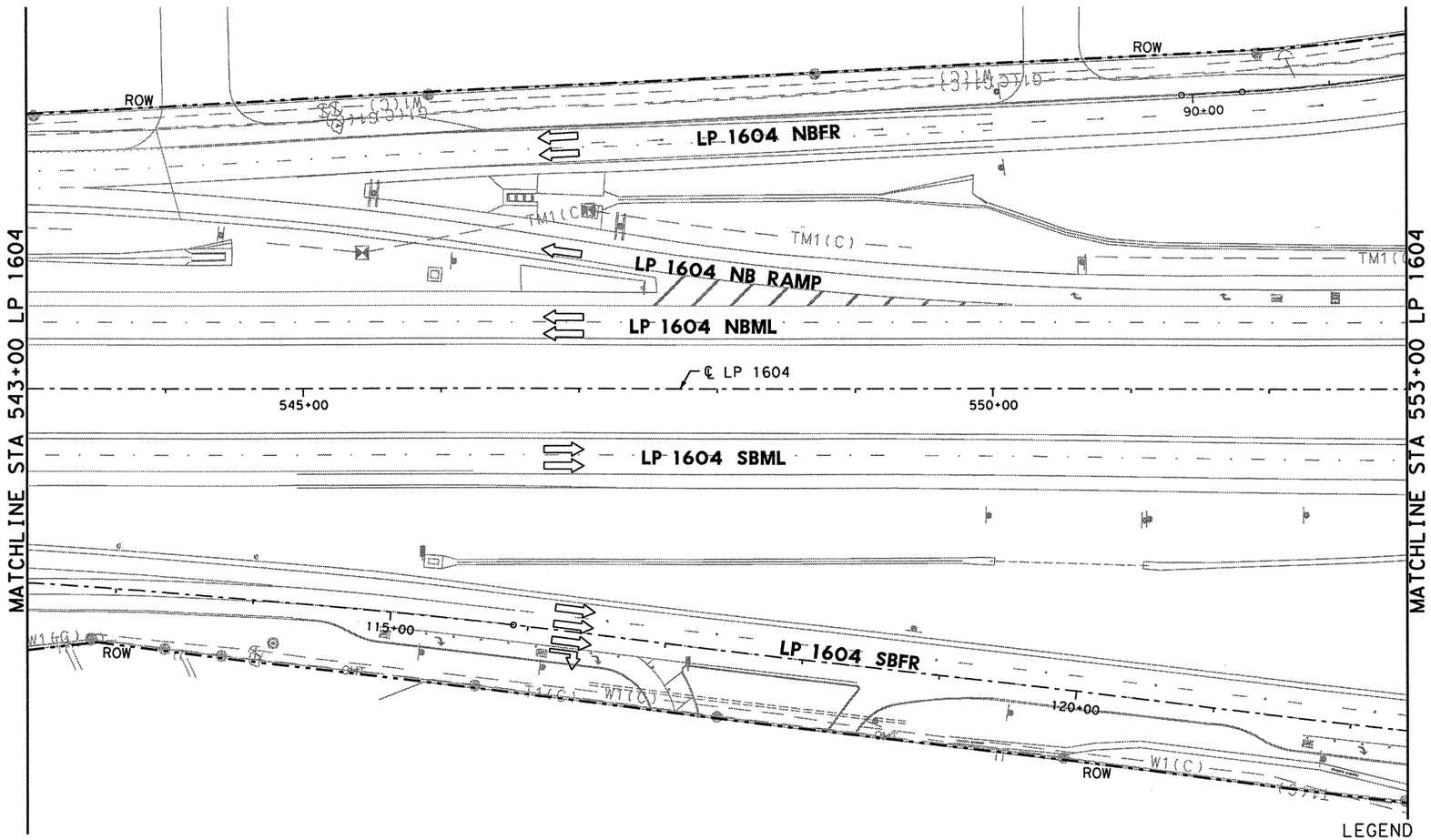

0 25 50 100
SCALE IN FEET

TEMPORARY SW3P ALL PHASES

1. ALL SW3P CONTROL MEASURES SHALL BE PLACED WITHIN TXDOT RIGHT-OF-WAY DURING CONSTRUCTION.
2. SHALL MAINTAIN SW3P CONTROL MEASURES THROUGHOUT CONSTRUCTION.
3. CONSTRUCTION ENTRANCE/EXIT AND CONCRETE WASH-OUT AREA TO BE DETERMINED BY ENGINEER OUT IN THE FIELD.
4. ALL SW3P CONTROL MEASURES INSTALLED DURING CONSTRUCTION ARE TO REMAIN IN PLACE UNTIL 70% VEGETATIVE COVER IS ACHIEVED OR AS APPROVED BY THE ENGINEER.
5. LOCATION OF SW3P CONTROL MEASURES TO BE DETERMINED BY ENGINEER IN THE FIELD.
6. ANTICIPATE ONE REPLACEMENT CYCLE FOR SW3P CONTROL MEASURES.
7. APPLY VEGETATIVE WATERING AS NEEDED TO SUPPLEMENT NATURAL RAINFALL DURING THE VEGETATION ESTABLISHMENT PERIOD. DROUGHT OR OTHER ENVIRONMENTAL CONDITIONS, AS DETERMINED BY THE ENGINEER, MAY REQUIRE THE APPLICATION OF SUPPLEMENTAL IRRIGATION TO BE BETWEEN THE HOURS OF 6PM AND 8AM.
8. SW3P CONTROL MEASURE SYMBOLS ARE NOT TO SCALE.

LEGEND

- PROPOSED CONSTRUCTION IN CURRENT PHASE
- TEMPORARY CONSTRUCTION IN CURRENT PHASE
- PROPOSED CONSTRUCTION IN PREVIOUS PHASE
- PAVEMENT REMOVAL IN CURRENT PHASE
- EXISTING TRAFFIC FLOW ARROW
- PROPOSED TRAFFIC FLOW ARROW
- CHANGEABLE MESSAGE SIGN
- ARROW BOARD
- PLASTIC DRUM
- PLASTIC DRUM WITH CHEVRON
- TYPE III BARRICADE
- TEMPORARY SILT FENCE
- RFD TEMPORARY ROCK FILTER DAM
- SANDBAGS FOR INLET PROTECTION
- DITCH

STATE OF TEXAS
MICHAEL W. MIDKIFF
75435
REGISTERED PROFESSIONAL ENGINEER
3/18/11

NO.	DATE	REVISION DESCRIPTION	APP. BY

© 2011

Texas Department of Transportation

MACTEC
3520 EXECUTIVE CENTER DRIVE
SUITE 200
AUSTIN, TEXAS 78731
(512) 795-0360

REGISTRATION NUMBER: F-1784

SH 151
TRAFFIC CONTROL & SW3P PHASE IA LP 1604 STA 543+00 TO STA 553+00
(SHEET 4 OF 8)

FED. RD. DIV. NO.			SHEET NO.
			37
STATE	DIST.	COUNTY	
TEXAS	SA	BEXAR	
CONT.	SECT.	JOB	HIGHWAY NO.
2452	01	043	SH 151

pw:\FTBO\D-0129\cad\sheet\SHtrafIII.dgn 3/18/2011 11:18:40 AM mwmidkiff

SHEET SUMMARY OF ESTIMATED QUANTITIES			
ITEM#	DESCRIPTION	UNIT	QTY
0506	ROCK FILTER DAMS (INSTALL) (TY 2)	LF	60
0506	CONSTRUCTION EXITS (INSTALL) (TY	SY	278
0506	SANDBAGS FOR EROSION CONTROL (2')	LF	13
0506	TEMPORARY SEDIMENT CONTROL FENCE	LF	100
0506	ROCK FILTER DAMS (REMOVE & REPLACE)	LF	100

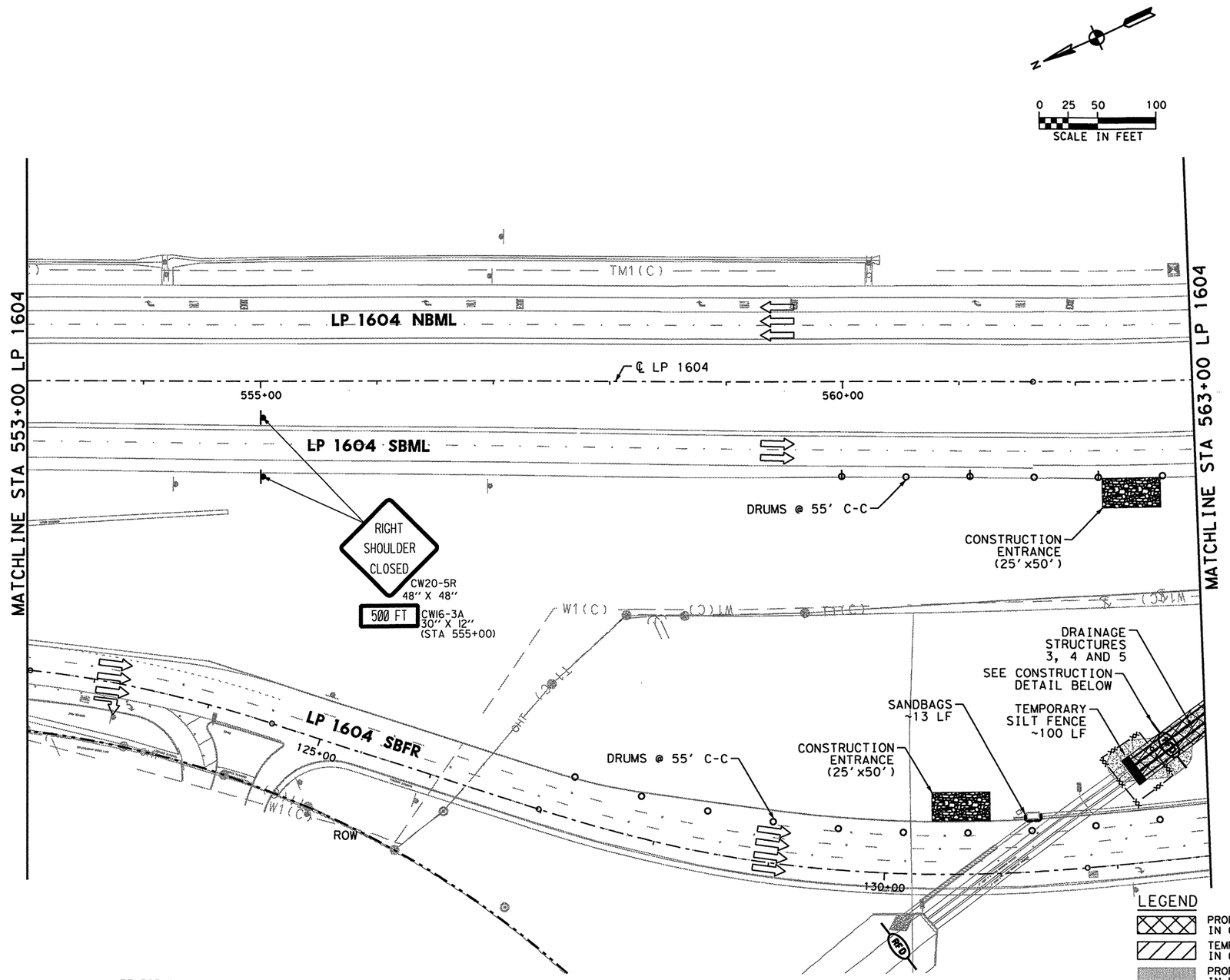

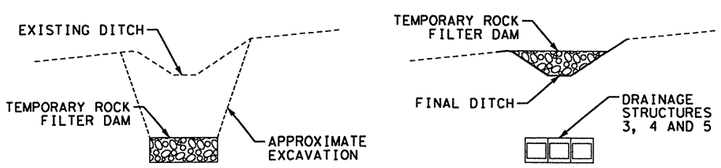

ROCK FILTER DAM
CONSTRUCTION DETAIL A

NOTE: ROCK FILTER DAM MAY BE REMOVED AND REPLACED UP TO 4 TIMES DURING CONSTRUCTION.

LEGEND

- PROPOSED CONSTRUCTION IN CURRENT PHASE
- TEMPORARY CONSTRUCTION IN CURRENT PHASE
- PROPOSED CONSTRUCTION IN PREVIOUS PHASE
- PAVEMENT REMOVAL IN CURRENT PHASE
- EXISTING TRAFFIC FLOW ARROW
- PROPOSED TRAFFIC FLOW ARROW
- CHANGEABLE MESSAGE SIGN
- ARROW BOARD
- PLASTIC DRUM
- PLASTIC DRUM WITH CHEVRON
- TYPE III BARRICADE
- TEMPORARY SILT FENCE
- RFD TEMPORARY ROCK FILTER DAM
- SANDBAGS FOR INLET PROTECTION
- DITCH

TEMPORARY SW3P ALL PHASES

1. ALL SW3P CONTROL MEASURES SHALL BE PLACED WITHIN TXDOT RIGHT-OF-WAY DURING CONSTRUCTION.
2. SHALL MAINTAIN SW3P CONTROL MEASURES THROUGHOUT CONSTRUCTION.
3. CONSTRUCTION ENTRANCE/EXIT AND CONCRETE WASH-OUT AREA TO BE DETERMINED BY ENGINEER OUT IN THE FIELD.
4. ALL SW3P CONTROL MEASURES INSTALLED DURING CONSTRUCTION ARE TO REMAIN IN PLACE UNTIL 70% VEGETATIVE COVER IS ACHIEVED OR AS APPROVED BY THE ENGINEER.
5. LOCATION OF SW3P CONTROL MEASURES TO BE DETERMINED BY ENGINEER IN THE FIELD.
6. ANTICIPATE ONE REPLACEMENT CYCLE FOR SW3P CONTROL MEASURES.
7. APPLY VEGETATIVE WATERING AS NEEDED TO SUPPLEMENT NATURAL RAINFALL DURING THE VEGETATION ESTABLISHMENT PERIOD. DROUGHT OR OTHER ENVIRONMENTAL CONDITIONS, AS DETERMINED BY THE ENGINEER, MAY REQUIRE THE APPLICATION OF SUPPLEMENTAL IRRIGATION TO BE BETWEEN THE HOURS OF 6PM AND 8AM.
8. SW3P CONTROL MEASURE SYMBOLS ARE NOT TO SCALE.

STATE OF TEXAS
MICHAEL W. MIDKIFF
75435
REGISTERED PROFESSIONAL ENGINEER
Michael W. Midkiff
4/11/11

NO.	DATE	REVISION DESCRIPTION	APP. BY

© 2011

Texas Department of Transportation

MACTEC
3520 EXECUTIVE CENTER DRIVE
SUITE 200
AUSTIN, TEXAS 78731
(512) 795-0360

REGISTRATION NUMBER: F-1784

SH 151
TRAFFIC CONTROL & SW3P PHASE IA LP 1604 STA 553+00 TO STA 563+00
(SHEET 5 OF 8)

FED. RD. DIV. NO.			SHEET NO.
			38
STATE	DIST.	COUNTY	
TEXAS	SA	BEXAR	
CONT.	SECT.	JOB	HIGHWAY NO.
2452	01	043	SH 151

p:\4760\0-0129\cad\sheet\51tcp111l2.dgn 4/12/2011 5:51:27 PM mwmidkiff

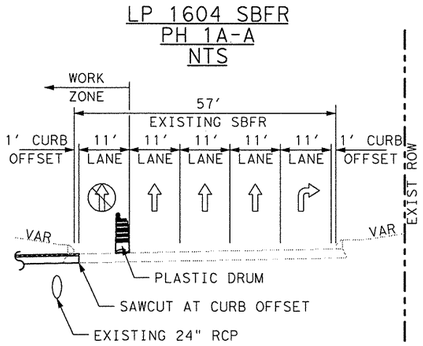

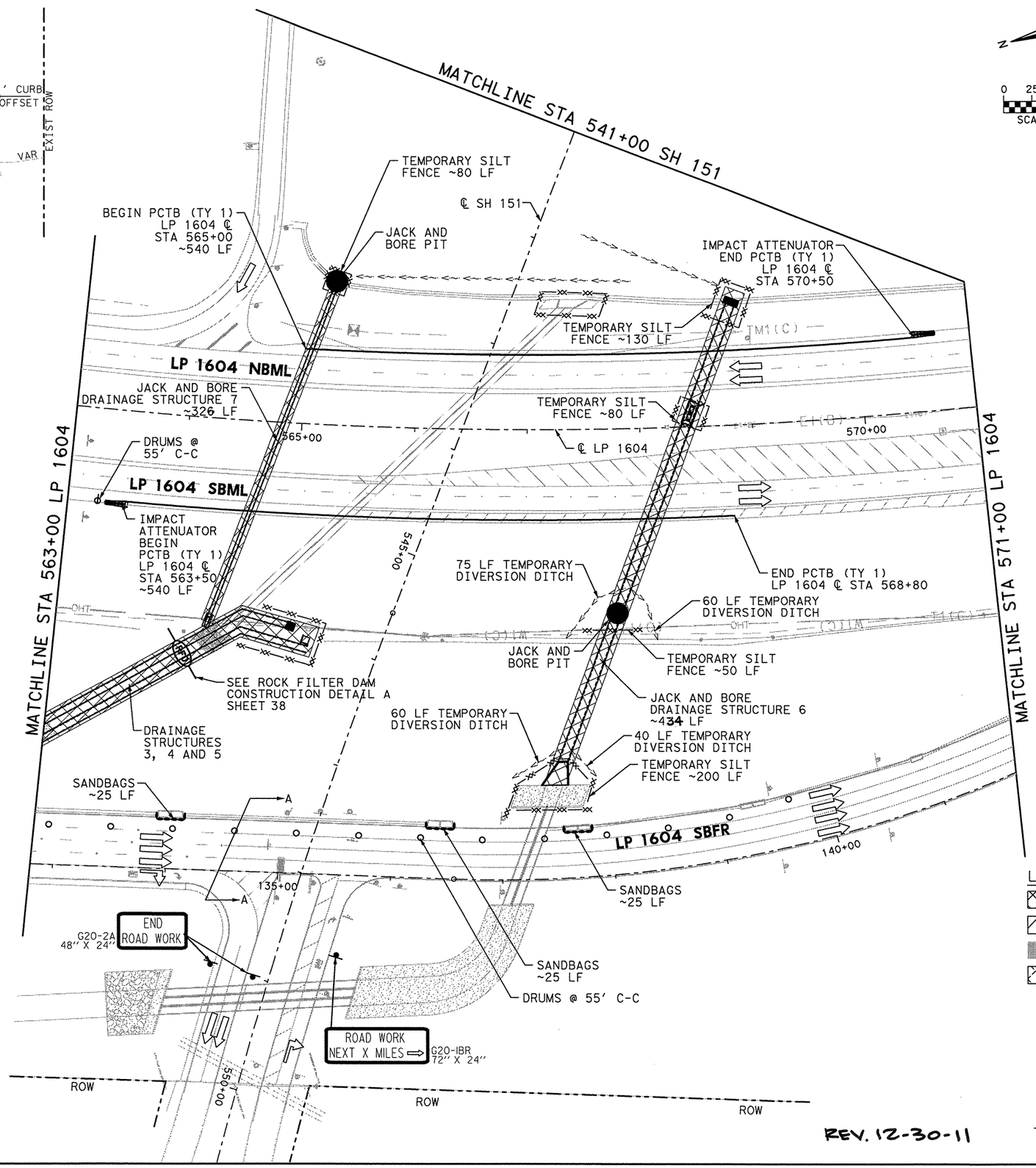

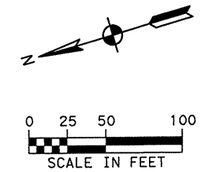

SHEET SUMMARY OF ESTIMATED QUANTITIES

ITEM#	DESCRIPTION	UNIT	QTY
0476	JACK BOR OR TUN PIPE (30 IN) (RC)	LF	326
0476	JACK OR TUN BOX CULV (7 FT X 4	LF	434
0506	SANDBAGS FOR EROSION CONTROL (2')	LF	75
0506	TEMPORARY SEDIMENT CONTROL FENCE	LF	540
0512	PORT CTB (FUR & INST) (SNGL SLP) (TY	LF	1080
0545	CRASH CUSH ATTEN (INSTL) (WORK ZONE)	EA	2

TEMPORARY SW3P ALL PHASES

1. ALL SW3P CONTROL MEASURES SHALL BE PLACED WITHIN TXDOT RIGHT-OF-WAY DURING CONSTRUCTION.
2. SHALL MAINTAIN SW3P CONTROL MEASURES THROUGHOUT CONSTRUCTION.
3. CONSTRUCTION ENTRANCE/EXIT AND CONCRETE WASH-OUT AREA TO BE DETERMINED BY ENGINEER OUT IN THE FIELD.
4. ALL SW3P CONTROL MEASURES INSTALLED DURING CONSTRUCTION ARE TO REMAIN IN PLACE UNTIL 70% VEGETATIVE COVER IS ACHIEVED OR AS APPROVED BY THE ENGINEER.
5. LOCATION OF SW3P CONTROL MEASURES TO BE DETERMINED BY ENGINEER IN THE FIELD.
6. ANTICIPATE ONE REPLACEMENT CYCLE FOR SW3P CONTROL MEASURES.
7. APPLY VEGETATIVE WATERING AS NEEDED TO SUPPLEMENT NATURAL RAINFALL DURING THE VEGETATION ESTABLISHMENT PERIOD. DROUGHT OR OTHER ENVIRONMENTAL CONDITIONS, AS DETERMINED BY THE ENGINEER, MAY REQUIRE THE APPLICATION OF SUPPLEMENTAL IRRIGATION TO BE BETWEEN THE HOURS OF 6PM AND 8AM.
8. SW3P CONTROL MEASURE SYMBOLS ARE NOT TO SCALE.

LEGEND

- PROPOSED CONSTRUCTION IN CURRENT PHASE
- TEMPORARY CONSTRUCTION IN CURRENT PHASE
- PROPOSED CONSTRUCTION IN PREVIOUS PHASE
- PAVEMENT REMOVAL IN CURRENT PHASE
- EXISTING TRAFFIC FLOW ARROW
- PROPOSED TRAFFIC FLOW ARROW
- CHANGEABLE MESSAGE SIGN
- ARROW BOARD
- PLASTIC DRUM
- PLASTIC DRUM WITH CHEVRON
- TYPE III BARRICADE
- TEMPORARY SILT FENCE
- TEMPORARY ROCK FILTER DAM
- SANDBAGS FOR INLET PROTECTION
- DITCH

STATE OF TEXAS
MICHAEL W. MIDKIFF
75435
REGISTERED PROFESSIONAL ENGINEER
12/5/11

NO.	DATE	REVISION DESCRIPTION	APP. BY

© 2011

Texas Department of Transportation

MACTEC
3520 EXECUTIVE CENTER DRIVE
SUITE 200
AUSTIN, TEXAS 78731
(512) 795-0360
REGISTRATION NUMBER: F-1784

SH 151
TRAFFIC CONTROL & SW3P PHASE 1A
LP 1604
STA 563+00 TO STA 571+00
(SHEET 6 OF 8)

FED. RD. DIV. NO.			SHEET NO.
			39

STATE	DIST.	COUNTY	
TEXAS	SA	BEXAR	
CONT.	SECT.	JOB	HIGHWAY NO.
2452	01	043	SH 151

12/3/2011 7:00:10 PM mwmidkiff
P:\4760\0-0129\cad\sheet\5\traplh13.dgn

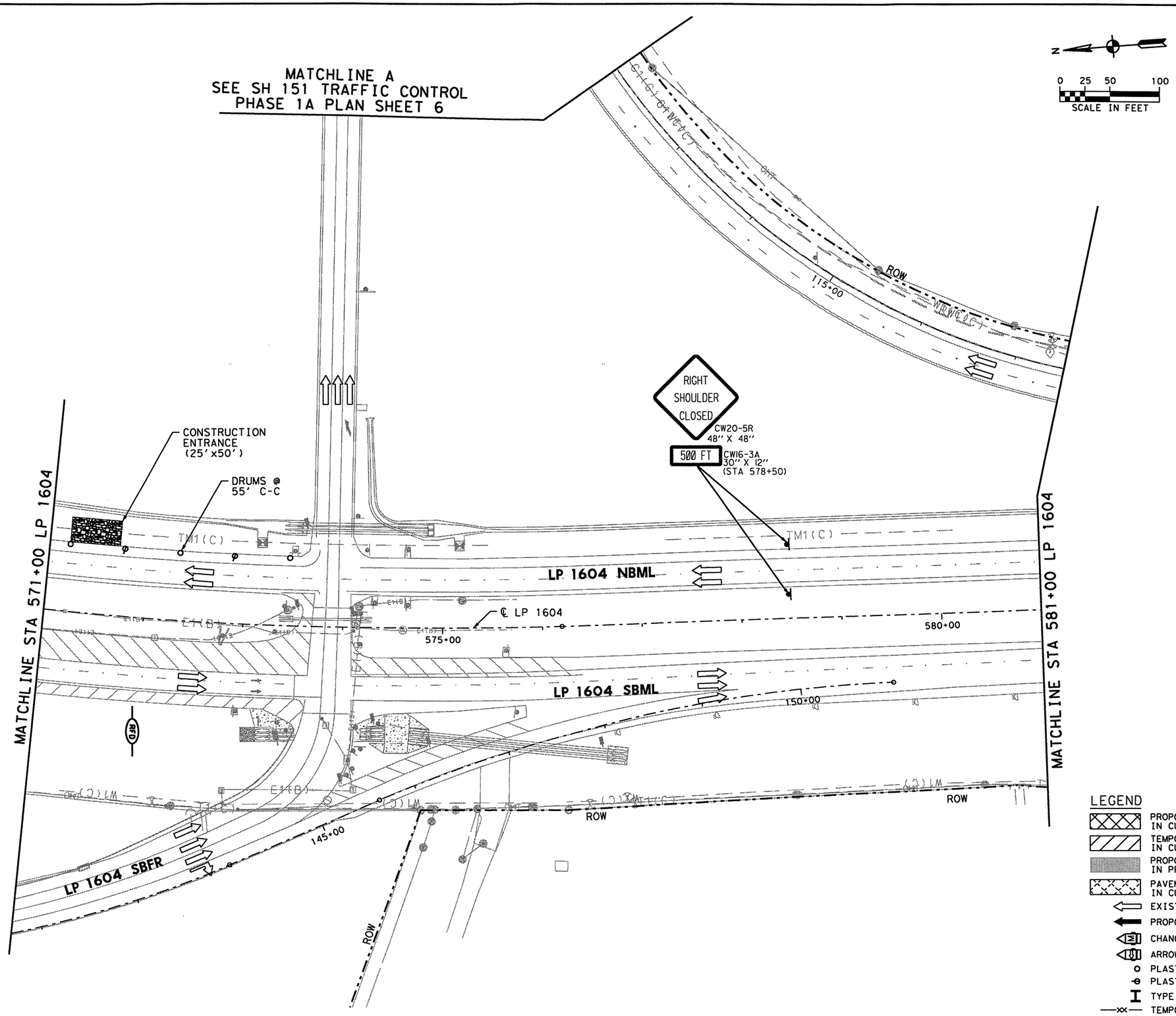

SHEET SUMMARY OF ESTIMATED QUANTITIES			
ITEM#	DESCRIPTION	UNIT	QTY
0506	ROCK FILTER DAMS (INSTALL) (TY 2)	LF	25
0506	CONSTRUCTION EXITS (INSTALL) (TY	SY	139
0506	ROCK FILTER DAMS (REMOVE & REPLACE)	LF	50

0 25 50 100
SCALE IN FEET

TEMPORARY SW3P ALL PHASES

1. ALL SW3P CONTROL MEASURES SHALL BE PLACED WITHIN TXDOT RIGHT-OF-WAY DURING CONSTRUCTION.
2. SHALL MAINTAIN SW3P CONTROL MEASURES THROUGHOUT CONSTRUCTION.
3. CONSTRUCTION ENTRANCE/EXIT AND CONCRETE WASH-OUT AREA TO BE DETERMINED BY ENGINEER OUT IN THE FIELD.
4. ALL SW3P CONTROL MEASURES INSTALLED DURING CONSTRUCTION ARE TO REMAIN IN PLACE UNTIL 70% VEGETATIVE COVER IS ACHIEVED OR AS APPROVED BY THE ENGINEER.
5. LOCATION OF SW3P CONTROL MEASURES TO BE DETERMINED BY ENGINEER IN THE FIELD.
6. ANTICIPATE ONE REPLACEMENT CYCLE FOR SW3P CONTROL MEASURES.
7. APPLY VEGETATIVE WATERING AS NEEDED TO SUPPLEMENT NATURAL RAINFALL DURING THE VEGETATION ESTABLISHMENT PERIOD. DROUGHT OR OTHER ENVIRONMENTAL CONDITIONS, AS DETERMINED BY THE ENGINEER, MAY REQUIRE THE APPLICATION OF SUPPLEMENTAL IRRIGATION TO BE BETWEEN THE HOURS OF 6PM AND 8AM.
8. SW3P CONTROL MEASURE SYMBOLS ARE NOT TO SCALE.

LEGEND

- PROPOSED CONSTRUCTION IN CURRENT PHASE
- TEMPORARY CONSTRUCTION IN CURRENT PHASE
- PROPOSED CONSTRUCTION IN PREVIOUS PHASE
- PAVEMENT REMOVAL IN CURRENT PHASE
- EXISTING TRAFFIC FLOW ARROW
- PROPOSED TRAFFIC FLOW ARROW
- CHANGEABLE MESSAGE SIGN
- ARROW BOARD
- PLASTIC DRUM
- PLASTIC DRUM WITH CHEVRON
- TYPE III BARRICADE
- TEMPORARY SILT FENCE
- TEMPORARY ROCK FILTER DAM
- SANDBAGS FOR INLET PROTECTION
- DITCH

STATE OF TEXAS
MICHAEL W. MIDKIFF
75435
REGISTERED PROFESSIONAL ENGINEER
3/18/11

NO.	DATE	REVISION DESCRIPTION	APP. BY

© 2011

Texas Department of Transportation

MACTEC
3520 EXECUTIVE CENTER DRIVE
SUITE 200
AUSTIN, TEXAS 78731
(512) 795-0360

REGISTRATION NUMBER: F-1784

SH 151
TRAFFIC CONTROL & SW3P PHASE IA
LP 1604
STA 571+00 TO STA 581+00
(SHEET 7 OF 8)

FED. RD. DIV. NO.			SHEET NO.
			40
STATE	DIST.	COUNTY	
TEXAS	SA	BEXAR	
CONT.	SECT.	JOB	HIGHWAY NO.
2452	01	043	SH 151

p:\4760\0-0129\cad\sheet\151tcp114.dgn 3/18/2011 11:19:04 AM mwmidkiff

SHEET SUMMARY OF ESTIMATED QUANTITIES			
ITEM#	DESCRIPTION	UNIT	QTY

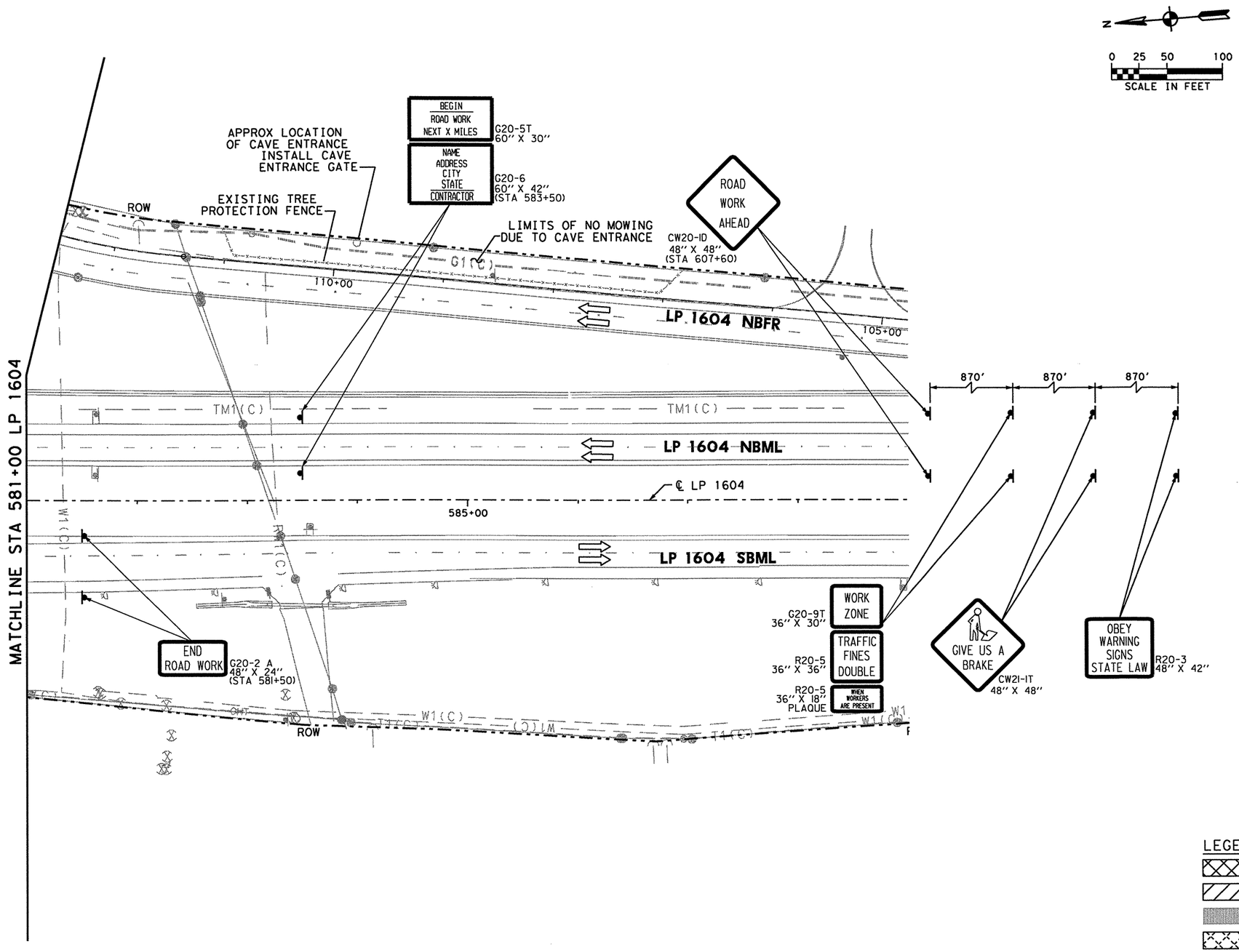

TEMPORARY SW3P ALL PHASES

1. ALL SW3P CONTROL MEASURES SHALL BE PLACED WITHIN TXDOT RIGHT-OF-WAY DURING CONSTRUCTION.
2. SHALL MAINTAIN SW3P CONTROL MEASURES THROUGHOUT CONSTRUCTION.
3. CONSTRUCTION ENTRANCE/EXIT AND CONCRETE WASH-OUT AREA TO BE DETERMINED BY ENGINEER OUT IN THE FIELD.
4. ALL SW3P CONTROL MEASURES INSTALLED DURING CONSTRUCTION ARE TO REMAIN IN PLACE UNTIL 70% VEGETATIVE COVER IS ACHIEVED OR AS APPROVED BY THE ENGINEER.
5. LOCATION OF SW3P CONTROL MEASURES TO BE DETERMINED BY ENGINEER IN THE FIELD.
6. ANTICIPATE ONE REPLACEMENT CYCLE FOR SW3P CONTROL MEASURES.
7. APPLY VEGETATIVE WATERING AS NEEDED TO SUPPLEMENT NATURAL RAINFALL DURING THE VEGETATION ESTABLISHMENT PERIOD. DROUGHT OR OTHER ENVIRONMENTAL CONDITIONS, AS DETERMINED BY THE ENGINEER, MAY REQUIRE THE APPLICATION OF SUPPLEMENTAL IRRIGATION TO BE BETWEEN THE HOURS OF 6PM AND 8AM.
8. SW3P CONTROL MEASURE SYMBOLS ARE NOT TO SCALE.

NOTE: REFER TO EPIC PLAN SHEET IN REGARD TO WORK IN VICINITY OF CAVE ENTRANCE.

LEGEND

- PROPOSED CONSTRUCTION IN CURRENT PHASE
- TEMPORARY CONSTRUCTION IN CURRENT PHASE
- PROPOSED CONSTRUCTION IN PREVIOUS PHASE
- PAVEMENT REMOVAL IN CURRENT PHASE
- EXISTING TRAFFIC FLOW ARROW
- PROPOSED TRAFFIC FLOW ARROW
- CHANGEABLE MESSAGE SIGN
- ARROW BOARD
- PLASTIC DRUM
- PLASTIC DRUM WITH CHEVRON
- TYPE III BARRICADE
- TEMPORARY SILT FENCE
- RFD TEMPORARY ROCK FILTER DAM
- SANDBAGS FOR INLET PROTECTION
- DITCH

STATE OF TEXAS
MICHAEL W. MIDKIFF
75435
REGISTERED PROFESSIONAL ENGINEER
Michael W. Midkiff
4/11/11

NO.	DATE	REVISION DESCRIPTION	APP. BY

© 2011

Texas Department of Transportation

MACTEC
3520 EXECUTIVE CENTER DRIVE
SUITE 200
AUSTIN, TEXAS 78731
(512) 795-0360

REGISTRATION NUMBER: F-1784

SH 151
TRAFFIC CONTROL & SW3P PHASE IA
LP 1604
STA 581+00 TO END PROJECT
(SHEET 8 OF 8)

FED. RD. DIV. NO.			SHEET NO.
			41
STATE	DIST.	COUNTY	
TEXAS	SA	BEXAR	
CONT.	SECT.	JOB	HIGHWAY NO.
2452	01	043	SH 151

p:\4760\0-0129\cad\sheet\151tcp111s.dgn 4/12/2011 7:03:47 PM mwmidkiff

SHEET SUMMARY OF ESTIMATED QUANTITIES			
ITEM#	DESCRIPTION	UNIT	QTY
0506	ROCK FILTER DAMS (INSTALL) (TY 2)	LF	80
0506	TEMPORARY SEDIMENT CONTROL FENCE	LF	60

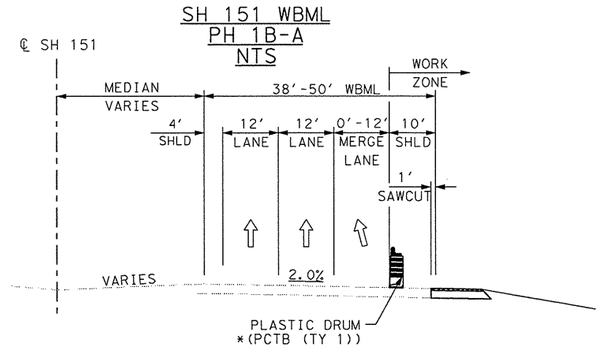

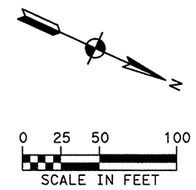

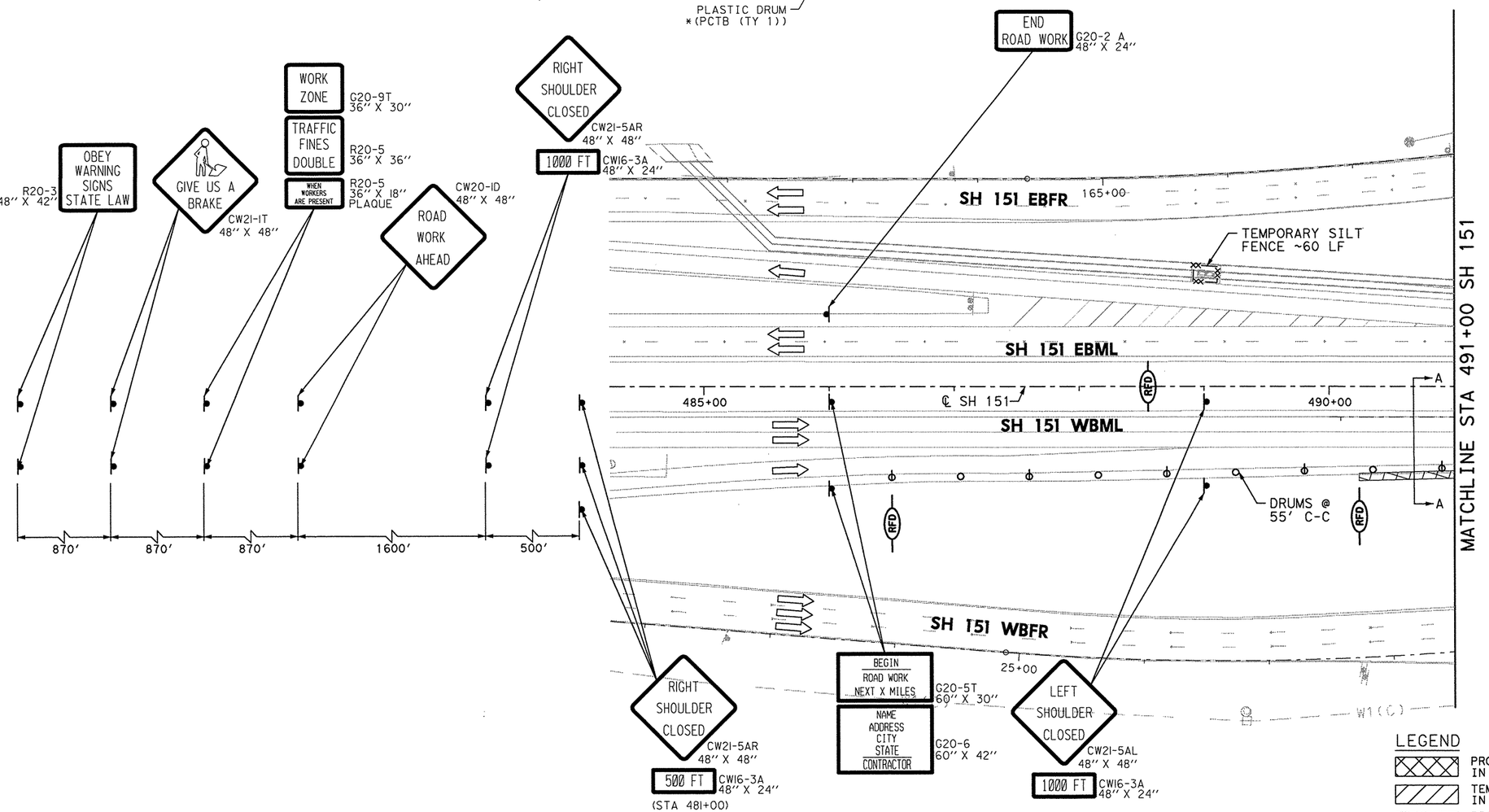

TEMPORARY SW3P ALL PHASES

1. ALL SW3P CONTROL MEASURES SHALL BE PLACED WITHIN TXDOT RIGHT-OF-WAY DURING CONSTRUCTION.
2. SHALL MAINTAIN SW3P CONTROL MEASURES THROUGHOUT CONSTRUCTION.
3. CONSTRUCTION ENTRANCE/EXIT AND CONCRETE WASH-OUT AREA TO BE DETERMINED BY ENGINEER OUT IN THE FIELD.
4. ALL SW3P CONTROL MEASURES INSTALLED DURING CONSTRUCTION ARE TO REMAIN IN PLACE UNTIL 70% VEGETATIVE COVER IS ACHIEVED OR AS APPROVED BY THE ENGINEER.
5. LOCATION OF SW3P CONTROL MEASURES TO BE DETERMINED BY ENGINEER IN THE FIELD.
6. ANTICIPATE ONE REPLACEMENT CYCLE FOR SW3P CONTROL MEASURES.
7. APPLY VEGETATIVE WATERING AS NEEDED TO SUPPLEMENT NATURAL RAINFALL DURING THE VEGETATION ESTABLISHMENT PERIOD. DROUGHT OR OTHER ENVIRONMENTAL CONDITIONS, AS DETERMINED BY THE ENGINEER, MAY REQUIRE THE APPLICATION OF SUPPLEMENTAL IRRIGATION TO BE BETWEEN THE HOURS OF 6PM AND 8AM.
8. SW3P CONTROL MEASURE SYMBOLS ARE NOT TO SCALE.

LEGEND

- PROPOSED CONSTRUCTION IN CURRENT PHASE
- TEMPORARY CONSTRUCTION IN CURRENT PHASE
- PROPOSED CONSTRUCTION IN PREVIOUS PHASE
- PAVEMENT REMOVAL IN CURRENT PHASE
- EXISTING TRAFFIC FLOW ARROW
- PROPOSED TRAFFIC FLOW ARROW
- CHANGEABLE MESSAGE SIGN
- ARROW BOARD
- PLASTIC DRUM
- PLASTIC DRUM WITH CHEVRON
- TYPE III BARRICADE
- TEMPORARY SILT FENCE
- TEMPORARY ROCK FILTER DAM
- SANDBAGS FOR INLET PROTECTION
- DITCH

STATE OF TEXAS
MICHAEL W. MIDKIFF
75435
REGISTERED PROFESSIONAL ENGINEER
12/5/11

NO.	DATE	REVISION DESCRIPTION	APP. BY

© 2011

Texas Department of Transportation

MACTEC
3520 EXECUTIVE CENTER DRIVE
SUITE 200
AUSTIN, TEXAS 78731
(512) 795-0360
REGISTRATION NUMBER: F-1784

SH 151
TRAFFIC CONTROL & SW3P PHASE IB SH 151 BEGIN PROJECT TO STA 491+00
(SHEET 1 OF 7)

FED. RD. DIV. NO.			SHEET NO.
			42

STATE	DIST.	COUNTY	
TEXAS	SA	BEXAR	
CONT.	SECT.	JOB	HIGHWAY NO.
2452	01	043	SH 151

P:\4760\0-0129\cad\sheet\151tcp\201.dgn 12/3/2011 7:00:38 PM mwmidkiff

SHEET SUMMARY OF ESTIMATED QUANTITIES			
ITEM#	DESCRIPTION	UNIT	QTY
0506	ROCK FILTER DAMS (INSTALL) (TY 2)	LF	60
0512	PORT CTB (FUR & INST) (SNGL SLP) (TY	LF	360
0545	CRASH CUSH ATTEN (INSTL) (WORK ZONE)	EA	1

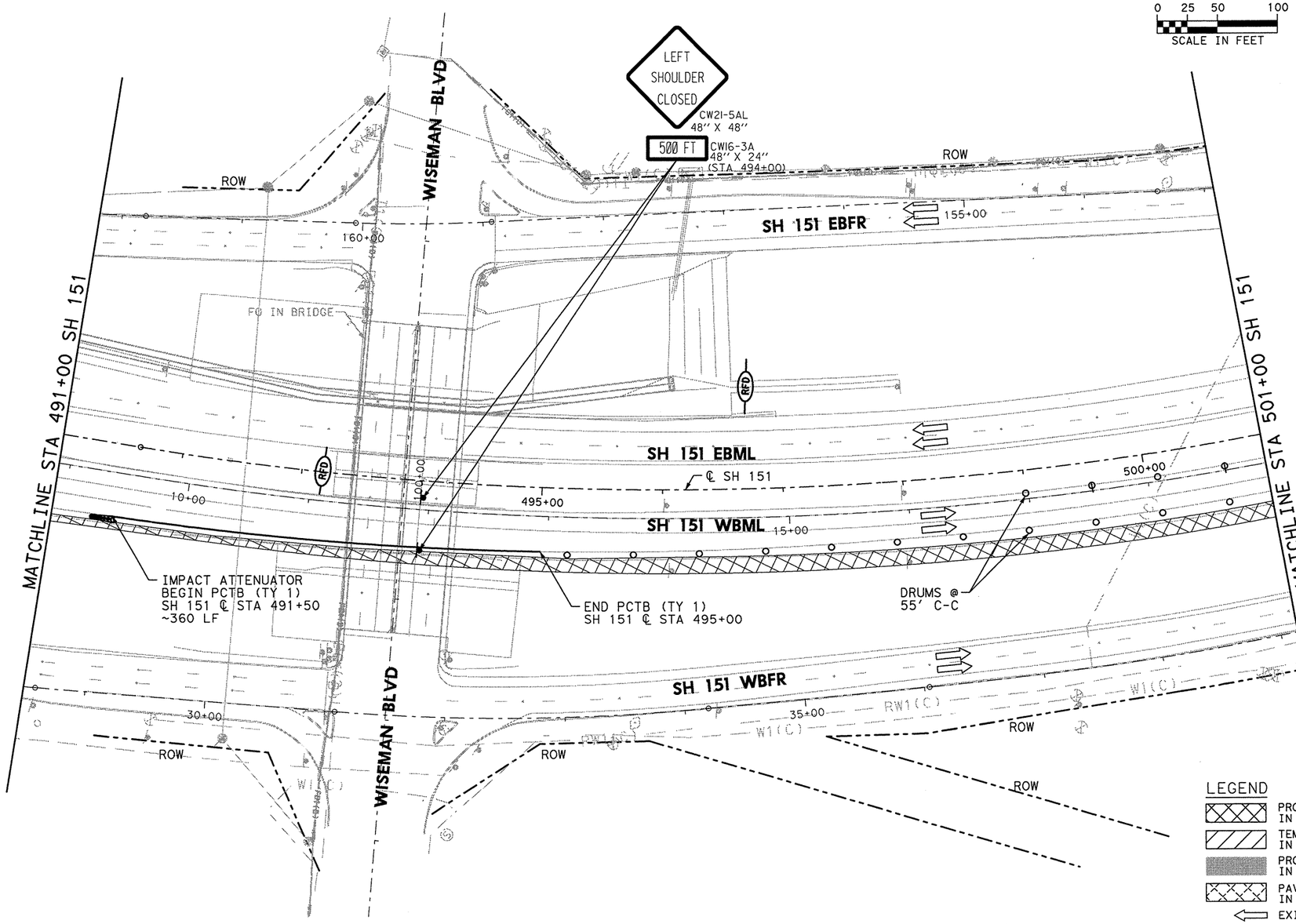

0 25 50 100
SCALE IN FEET

TEMPORARY SW3P ALL PHASES

1. ALL SW3P CONTROL MEASURES SHALL BE PLACED WITHIN TXDOT RIGHT-OF-WAY DURING CONSTRUCTION.
2. SHALL MAINTAIN SW3P CONTROL MEASURES THROUGHOUT CONSTRUCTION.
3. CONSTRUCTION ENTRANCE/EXIT AND CONCRETE WASH-OUT AREA TO BE DETERMINED BY ENGINEER OUT IN THE FIELD.
4. ALL SW3P CONTROL MEASURES INSTALLED DURING CONSTRUCTION ARE TO REMAIN IN PLACE UNTIL 70% VEGETATIVE COVER IS ACHIEVED OR AS APPROVED BY THE ENGINEER.
5. LOCATION OF SW3P CONTROL MEASURES TO BE DETERMINED BY ENGINEER IN THE FIELD.
6. ANTICIPATE ONE REPLACEMENT CYCLE FOR SW3P CONTROL MEASURES.
7. APPLY VEGETATIVE WATERING AS NEEDED TO SUPPLEMENT NATURAL RAINFALL DURING THE VEGETATION ESTABLISHMENT PERIOD. DROUGHT OR OTHER ENVIRONMENTAL CONDITIONS, AS DETERMINED BY THE ENGINEER, MAY REQUIRE THE APPLICATION OF SUPPLEMENTAL IRRIGATION TO BE BETWEEN THE HOURS OF 6PM AND 8AM.
8. SW3P CONTROL MEASURE SYMBOLS ARE NOT TO SCALE.

LEGEND

- PROPOSED CONSTRUCTION IN CURRENT PHASE
- TEMPORARY CONSTRUCTION IN CURRENT PHASE
- PROPOSED CONSTRUCTION IN PREVIOUS PHASE
- PAVEMENT REMOVAL IN CURRENT PHASE
- EXISTING TRAFFIC FLOW ARROW
- PROPOSED TRAFFIC FLOW ARROW
- CHANGEABLE MESSAGE SIGN
- ARROW BOARD
- PLASTIC DRUM
- PLASTIC DRUM WITH CHEVRON
- TYPE III BARRICADE
- TEMPORARY SILT FENCE
- TEMPORARY ROCK FILTER DAM
- SANDBAGS FOR INLET PROTECTION
- DITCH

REV. 12-30-11

STATE OF TEXAS
MICHAEL W. MIDKIFF
75435
REGISTERED PROFESSIONAL ENGINEER
12/5/11

NO.	DATE	REVISION DESCRIPTION	APP. BY

© 2011

Texas Department of Transportation

MACTEC
3520 EXECUTIVE CENTER DRIVE
SUITE 200
AUSTIN, TEXAS 78731
(512) 795-0360
REGISTRATION NUMBER: F-1784

SH 151
TRAFFIC CONTROL & SW3P PHASE IB
SH 151
STA 491+00 TO STA 501+00
(SHEET 2 OF 7)

FED. RD. DIV. NO.			SHEET NO.
			43
STATE	DIST.	COUNTY	
TEXAS	SA	BEXAR	
CONT.	SECT.	JOB	HIGHWAY NO.
2452	01	043	SH 151

p:\4760\0-0129\cad\sheet\151tcp\202.dgn 12/3/2011 7:00:48 PM mwmidkiff

SHEET SUMMARY OF ESTIMATED QUANTITIES

ITEM#	DESCRIPTION	UNIT	QTY
0512	PORT CTB (FUR & INST) (SNGL SLP) (TY	LF	1525
0545	CRASH CUSH ATTEN (INSTL) (WORK ZONE)	EA	1

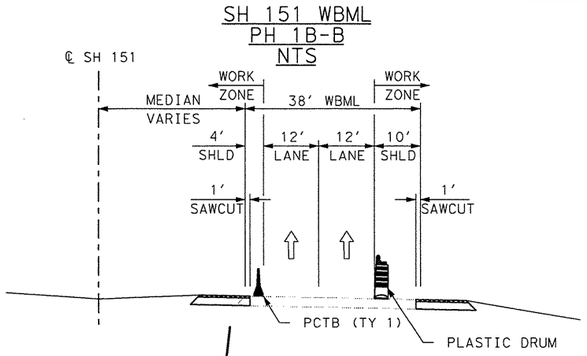

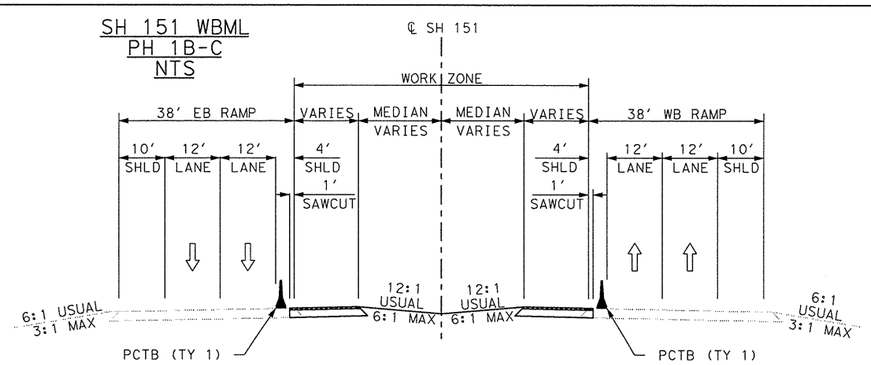

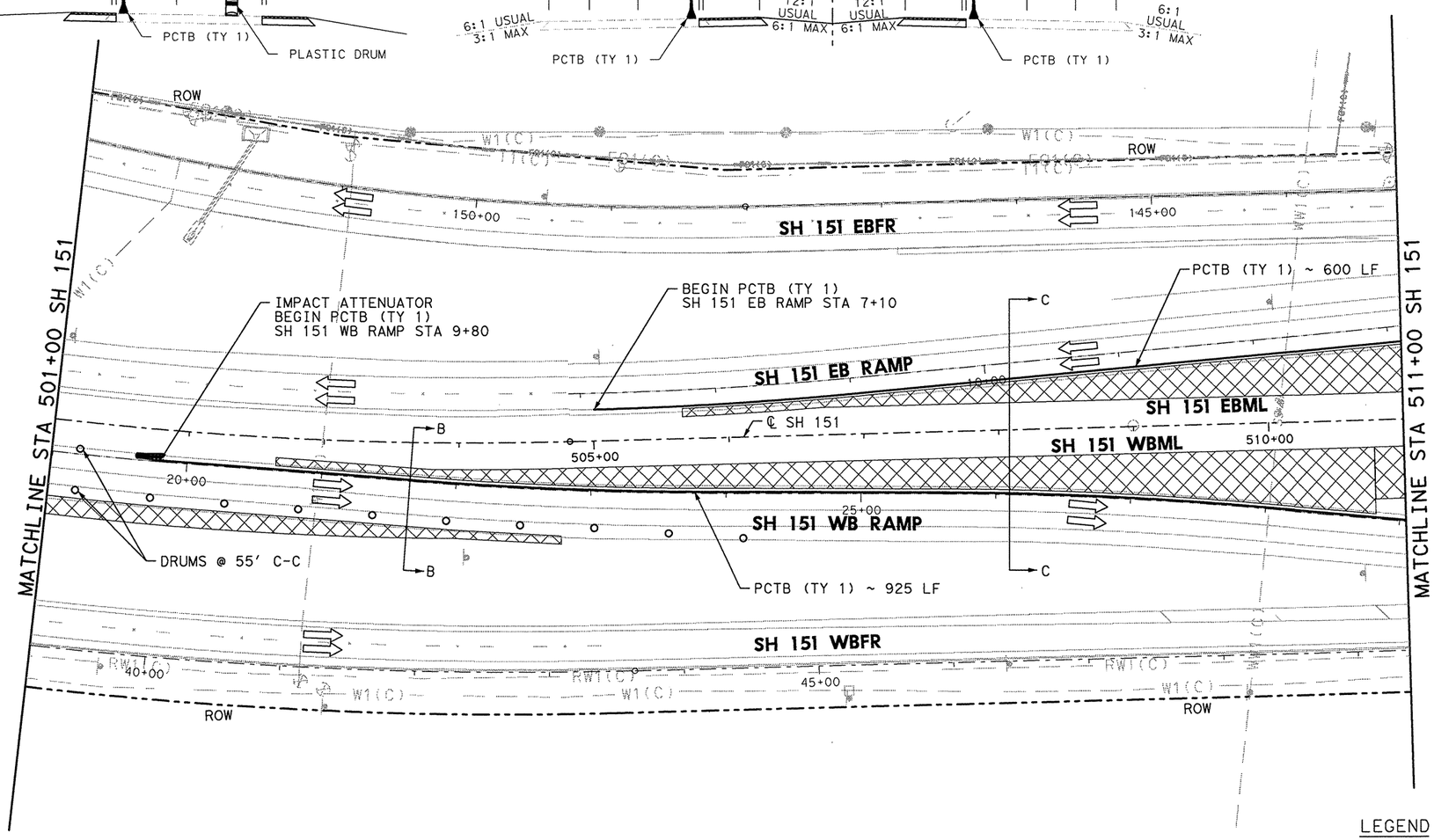

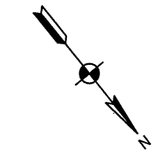

0 25 50 100
SCALE IN FEET

TEMPORARY SW3P ALL PHASES

1. ALL SW3P CONTROL MEASURES SHALL BE PLACED WITHIN TXDOT RIGHT-OF-WAY DURING CONSTRUCTION.
2. SHALL MAINTAIN SW3P CONTROL MEASURES THROUGHOUT CONSTRUCTION.
3. CONSTRUCTION ENTRANCE/EXIT AND CONCRETE WASH-OUT AREA TO BE DETERMINED BY ENGINEER OUT IN THE FIELD.
4. ALL SW3P CONTROL MEASURES INSTALLED DURING CONSTRUCTION ARE TO REMAIN IN PLACE UNTIL 70% VEGETATIVE COVER IS ACHIEVED OR AS APPROVED BY THE ENGINEER.
5. LOCATION OF SW3P CONTROL MEASURES TO BE DETERMINED BY ENGINEER IN THE FIELD.
6. ANTICIPATE ONE REPLACEMENT CYCLE FOR SW3P CONTROL MEASURES.
7. APPLY VEGETATIVE WATERING AS NEEDED TO SUPPLEMENT NATURAL RAINFALL DURING THE VEGETATION ESTABLISHMENT PERIOD. DROUGHT OR OTHER ENVIRONMENTAL CONDITIONS, AS DETERMINED BY THE ENGINEER, MAY REQUIRE THE APPLICATION OF SUPPLEMENTAL IRRIGATION TO BE BETWEEN THE HOURS OF 6PM AND 8AM.
8. SW3P CONTROL MEASURE SYMBOLS ARE NOT TO SCALE.

LEGEND

- PROPOSED CONSTRUCTION IN CURRENT PHASE
- TEMPORARY CONSTRUCTION IN CURRENT PHASE
- PROPOSED CONSTRUCTION IN PREVIOUS PHASE
- PAVEMENT REMOVAL IN CURRENT PHASE
- EXISTING TRAFFIC FLOW ARROW
- PROPOSED TRAFFIC FLOW ARROW
- CHANGEABLE MESSAGE SIGN
- ARROW BOARD
- PLASTIC DRUM
- PLASTIC DRUM WITH CHEVRON
- TYPE III BARRICADE
- TEMPORARY SILT FENCE
- TEMPORARY ROCK FILTER DAM
- SANDBAGS FOR INLET PROTECTION
- DITCH

REV. 12-30-11

STATE OF TEXAS
MICHAEL W. MIDKIFF
75435
REGISTERED PROFESSIONAL ENGINEER
12/5/11

NO.	DATE	REVISION DESCRIPTION	APP. BY

© 2011

Texas Department of Transportation

MACTEC
3520 EXECUTIVE CENTER DRIVE
SUITE 200
AUSTIN, TEXAS 78731
(512) 795-0360
REGISTRATION NUMBER: F-1784

SH 151
TRAFFIC CONTROL & SW3P PHASE IB SH 151 STA 501+00 TO STA 511+00
(SHEET 3 OF 7)

FED. RD. DIV. NO.			SHEET NO.
			44

STATE	DIST.	COUNTY	
TEXAS	SA	BEXAR	
CONT.	SECT.	JOB	HIGHWAY NO.
2452	01	043	SH 151

p:\47160\0-0\29\cad\sheet\15ftcp\203.dgn 12/3/2011 7:00:58 PM mwmidkiff

SHEET SUMMARY OF ESTIMATED QUANTITIES			
ITEM#	DESCRIPTION	UNIT	QTY
0506	ROCK FILTER DAMS (INSTALL) (TY 2)	LF	25
0506	TEMPORARY SEDIMENT CONTROL FENCE	LF	240
0512	PORT CTB (FUR & INST) (SNGL SLP) (TY	LF	485
0545	CRASH CUSH ATTEN (INSTL) (WORK ZONE)	EA	1

N

0 25 50 100
SCALE IN FEET

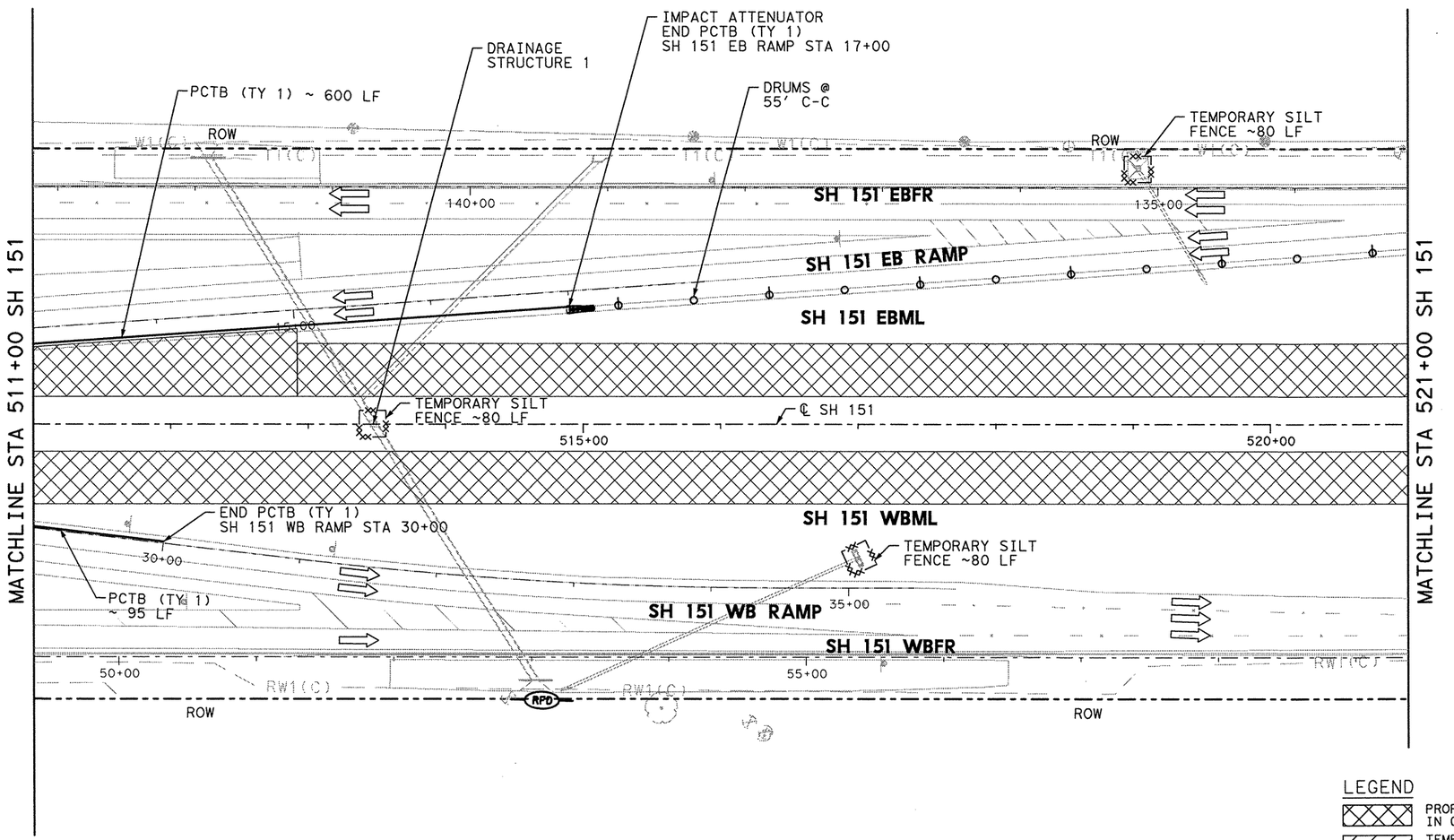

TEMPORARY SW3P ALL PHASES

1. ALL SW3P CONTROL MEASURES SHALL BE PLACED WITHIN TXDOT RIGHT-OF-WAY DURING CONSTRUCTION.
2. SHALL MAINTAIN SW3P CONTROL MEASURES THROUGHOUT CONSTRUCTION.
3. CONSTRUCTION ENTRANCE/EXIT AND CONCRETE WASH-OUT AREA TO BE DETERMINED BY ENGINEER OUT IN THE FIELD.
4. ALL SW3P CONTROL MEASURES INSTALLED DURING CONSTRUCTION ARE TO REMAIN IN PLACE UNTIL 70% VEGETATIVE COVER IS ACHIEVED OR AS APPROVED BY THE ENGINEER.
5. LOCATION OF SW3P CONTROL MEASURES TO BE DETERMINED BY ENGINEER IN THE FIELD.
6. ANTICIPATE ONE REPLACEMENT CYCLE FOR SW3P CONTROL MEASURES.
7. APPLY VEGETATIVE WATERING AS NEEDED TO SUPPLEMENT NATURAL RAINFALL DURING THE VEGETATION ESTABLISHMENT PERIOD. DROUGHT OR OTHER ENVIRONMENTAL CONDITIONS, AS DETERMINED BY THE ENGINEER, MAY REQUIRE THE APPLICATION OF SUPPLEMENTAL IRRIGATION TO BE BETWEEN THE HOURS OF 6PM AND 8AM.
8. SW3P CONTROL MEASURE SYMBOLS ARE NOT TO SCALE.

LEGEND

- PROPOSED CONSTRUCTION IN CURRENT PHASE
- TEMPORARY CONSTRUCTION IN CURRENT PHASE
- PROPOSED CONSTRUCTION IN PREVIOUS PHASE
- PAVEMENT REMOVAL IN CURRENT PHASE
- EXISTING TRAFFIC FLOW ARROW
- PROPOSED TRAFFIC FLOW ARROW
- CHANGEABLE MESSAGE SIGN
- ARROW BOARD
- PLASTIC DRUM
- PLASTIC DRUM WITH CHEVRON
- TYPE III BARRICADE
- TEMPORARY SILT FENCE
- TEMPORARY ROCK FILTER DAM
- SANDBAGS FOR INLET PROTECTION
- DITCH

REV. 12-30-11

STATE OF TEXAS
MICHAEL W. MIDKIFF
75435
REGISTERED PROFESSIONAL ENGINEER
12/5/11

NO.	DATE	REVISION DESCRIPTION	APP. BY

© 2011

Texas Department of Transportation

MACTEC
3520 EXECUTIVE CENTER DRIVE
SUITE 200
AUSTIN, TEXAS 78731
(512) 795-0360
REGISTRATION NUMBER: F-1784

SH 151
TRAFFIC CONTROL & SW3P PHASE IB
SH 151
STA 511+00 TO STA 521+00
(SHEET 4 OF 7)

FED. RD. DIV. NO.			SHEET NO.
			45
STATE	DIST.	COUNTY	
TEXAS	SA	BEXAR	
CONT.	SECT.	JOB	HIGHWAY NO.
2452	01	043	SH 151

p:\4760\0-0129\cad\sheet\151tcp\204.dgn 12/3/2011 7:01dT PM mwmidkiff

SHEET SUMMARY OF ESTIMATED QUANTITIES			
ITEM#	DESCRIPTION	UNIT	QTY
0506	ROCK FILTER DAMS (INSTALL) (TY 2)	LF	100
0506	CONSTRUCTION EXITS (INSTALL) (TY	SY	278
0506	TEMPORARY SEDIMENT CONTROL FENCE	LF	240
0512	PORT CTB (FUR & INST) (SNGL SLP) (TY	LF	240
0545	CRASH CUSH ATTEN (INSTL) (WORK ZONE)	EA	1

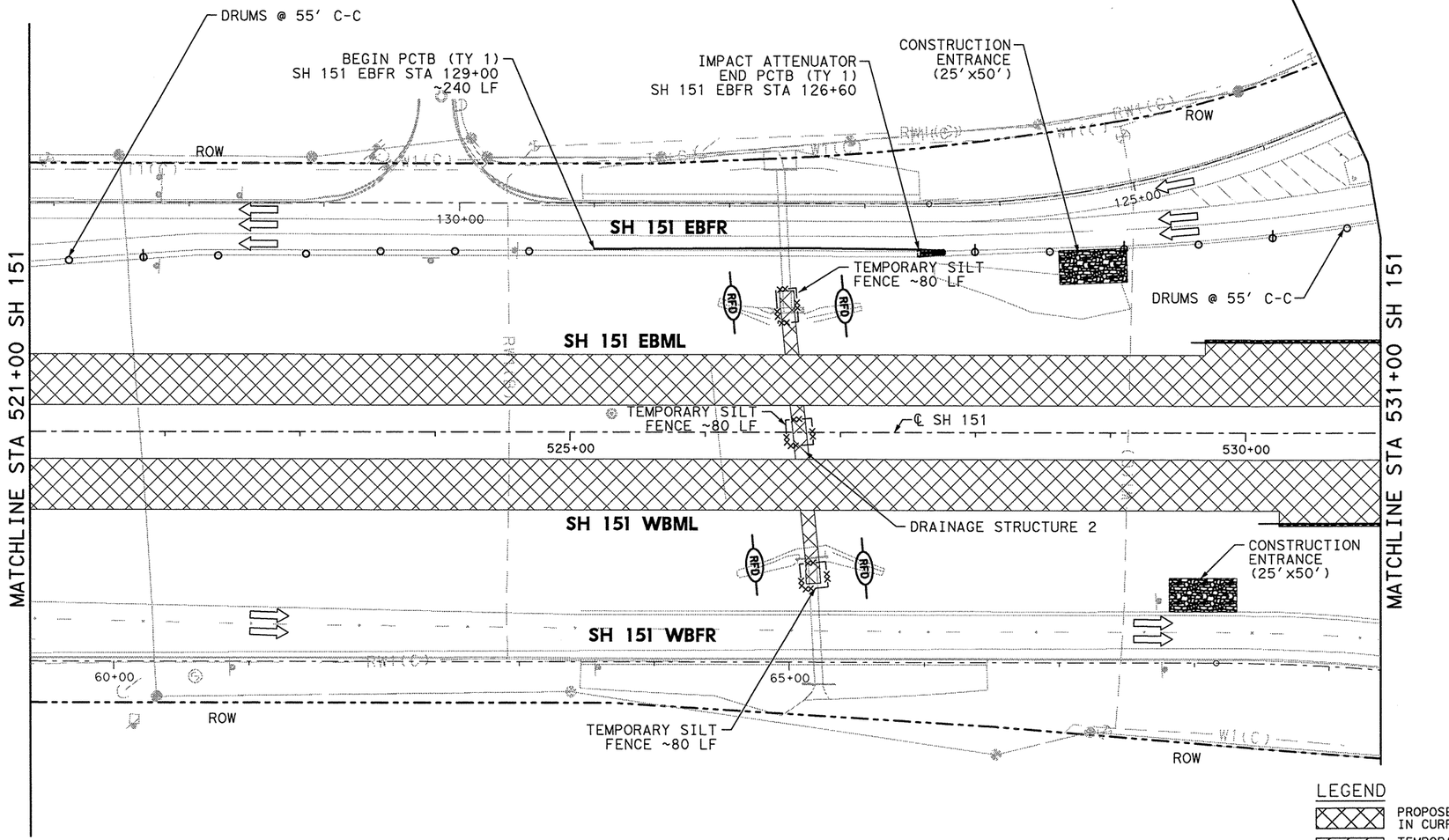

TEMPORARY SW3P ALL PHASES

1. ALL SW3P CONTROL MEASURES SHALL BE PLACED WITHIN TXDOT RIGHT-OF-WAY DURING CONSTRUCTION.
2. SHALL MAINTAIN SW3P CONTROL MEASURES THROUGHOUT CONSTRUCTION.
3. CONSTRUCTION ENTRANCE/EXIT AND CONCRETE WASH-OUT AREA TO BE DETERMINED BY ENGINEER OUT IN THE FIELD.
4. ALL SW3P CONTROL MEASURES INSTALLED DURING CONSTRUCTION ARE TO REMAIN IN PLACE UNTIL 70% VEGETATIVE COVER IS ACHIEVED OR AS APPROVED BY THE ENGINEER.
5. LOCATION OF SW3P CONTROL MEASURES TO BE DETERMINED BY ENGINEER IN THE FIELD.
6. ANTICIPATE ONE REPLACEMENT CYCLE FOR SW3P CONTROL MEASURES.
7. APPLY VEGETATIVE WATERING AS NEEDED TO SUPPLEMENT NATURAL RAINFALL DURING THE VEGETATION ESTABLISHMENT PERIOD. DROUGHT OR OTHER ENVIRONMENTAL CONDITIONS, AS DETERMINED BY THE ENGINEER, MAY REQUIRE THE APPLICATION OF SUPPLEMENTAL IRRIGATION TO BE BETWEEN THE HOURS OF 6PM AND 8AM.
8. SW3P CONTROL MEASURE SYMBOLS ARE NOT TO SCALE.

LEGEND

- PROPOSED CONSTRUCTION IN CURRENT PHASE
- TEMPORARY CONSTRUCTION IN CURRENT PHASE
- PROPOSED CONSTRUCTION IN PREVIOUS PHASE
- PAVEMENT REMOVAL IN CURRENT PHASE
- EXISTING TRAFFIC FLOW ARROW
- PROPOSED TRAFFIC FLOW ARROW
- CHANGEABLE MESSAGE SIGN
- ARROW BOARD
- PLASTIC DRUM
- PLASTIC DRUM WITH CHEVRON
- TYPE III BARRICADE
- TEMPORARY SILT FENCE
- TEMPORARY ROCK FILTER DAM
- SANDBAGS FOR INLET PROTECTION
- DITCH

REV. 12-30-11

STATE OF TEXAS
MICHAEL W. MIDKIFF
75435
REGISTERED PROFESSIONAL ENGINEER
12/5/11

NO.	DATE	REVISION DESCRIPTION	APP. BY

© 2011

Texas Department of Transportation

MACTEC
3520 EXECUTIVE CENTER DRIVE
SUITE 200
AUSTIN, TEXAS 78731
(512) 795-0360
REGISTRATION NUMBER: F-1784

SH 151
TRAFFIC CONTROL & SW3P PHASE IB SH 151 STA 521+00 TO STA 531+00
(SHEET 5 OF 7)

FED. RD. DIV. NO.			SHEET NO.
			46
STATE	DIST.	COUNTY	
TEXAS	SA	BEXAR	
CONT.	SECT.	JOB	HIGHWAY NO.
2452	01	043	SH 151

12/3/2011 7:01:16 PM mwmidkiff
p:\4760\10-01\29\cad\sheet\151tcp\205.dgn

SHEET SUMMARY OF ESTIMATED QUANTITIES			
ITEM#	DESCRIPTION	UNIT	QTY

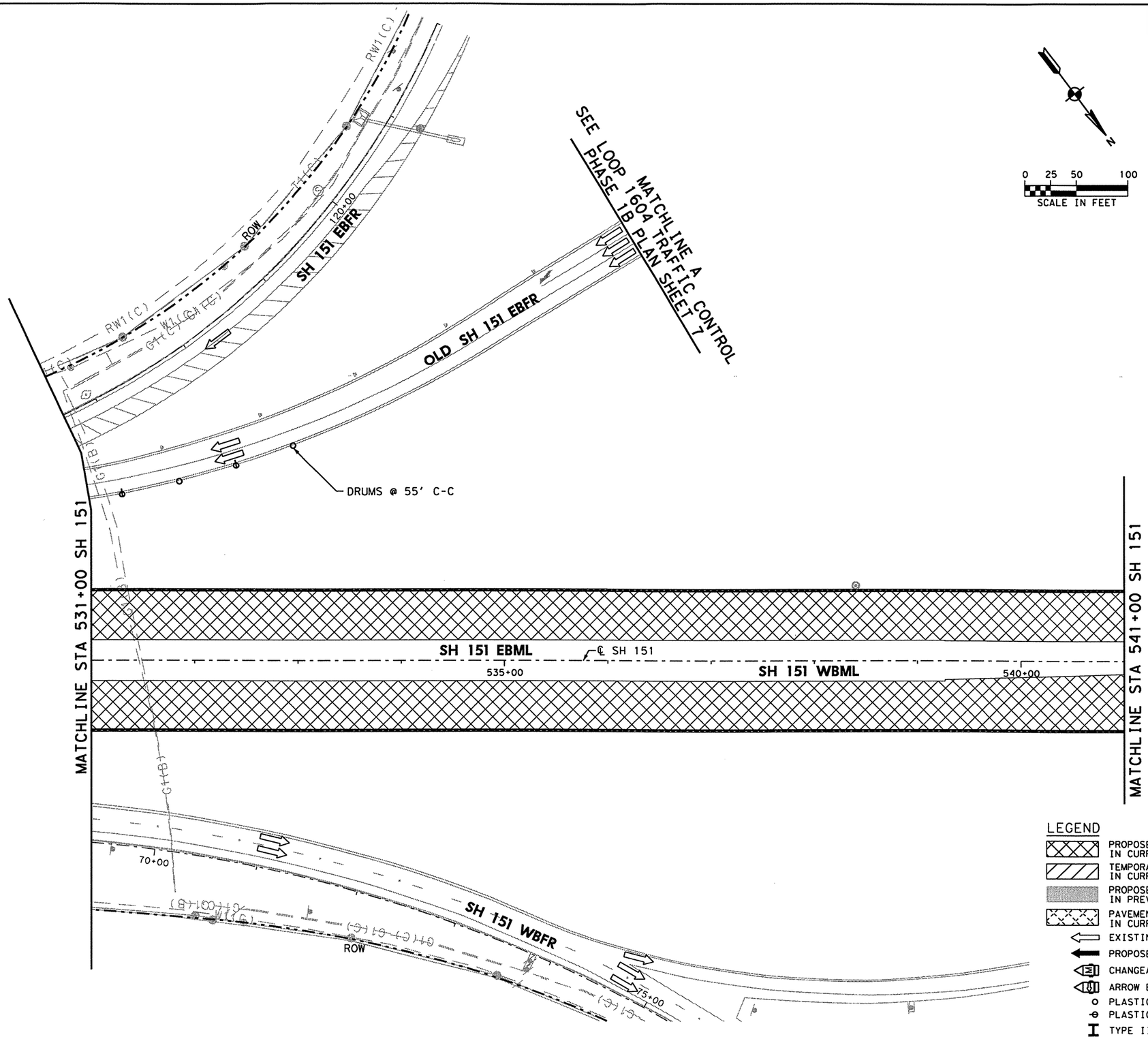

TEMPORARY SW3P ALL PHASES

1. ALL SW3P CONTROL MEASURES SHALL BE PLACED WITHIN TXDOT RIGHT-OF-WAY DURING CONSTRUCTION.
2. SHALL MAINTAIN SW3P CONTROL MEASURES THROUGHOUT CONSTRUCTION.
3. CONSTRUCTION ENTRANCE/EXIT AND CONCRETE WASH-OUT AREA TO BE DETERMINED BY ENGINEER OUT IN THE FIELD.
4. ALL SW3P CONTROL MEASURES INSTALLED DURING CONSTRUCTION ARE TO REMAIN IN PLACE UNTIL 70% VEGETATIVE COVER IS ACHIEVED OR AS APPROVED BY THE ENGINEER.
5. LOCATION OF SW3P CONTROL MEASURES TO BE DETERMINED BY ENGINEER IN THE FIELD.
6. ANTICIPATE ONE REPLACEMENT CYCLE FOR SW3P CONTROL MEASURES.
7. APPLY VEGETATIVE WATERING AS NEEDED TO SUPPLEMENT NATURAL RAINFALL DURING THE VEGETATION ESTABLISHMENT PERIOD. DROUGHT OR OTHER ENVIRONMENTAL CONDITIONS, AS DETERMINED BY THE ENGINEER, MAY REQUIRE THE APPLICATION OF SUPPLEMENTAL IRRIGATION TO BE BETWEEN THE HOURS OF 6PM AND 8AM.
8. SW3P CONTROL MEASURE SYMBOLS ARE NOT TO SCALE.

LEGEND

- PROPOSED CONSTRUCTION IN CURRENT PHASE
- TEMPORARY CONSTRUCTION IN CURRENT PHASE
- PROPOSED CONSTRUCTION IN PREVIOUS PHASE
- PAVEMENT REMOVAL IN CURRENT PHASE
- EXISTING TRAFFIC FLOW ARROW
- PROPOSED TRAFFIC FLOW ARROW
- CHANGEABLE MESSAGE SIGN
- ARROW BOARD
- PLASTIC DRUM
- PLASTIC DRUM WITH CHEVRON
- TYPE III BARRICADE
- TEMPORARY SILT FENCE
- TEMPORARY ROCK FILTER DAM
- SANDBAGS FOR INLET PROTECTION
- DITCH

STATE OF TEXAS
MICHAEL W. MIDKIFF
75435
REGISTERED PROFESSIONAL ENGINEER

Michael W. Midkiff
3/18/11

NO.	DATE	REVISION DESCRIPTION	APP. BY

© 2011

Texas Department of Transportation

MACTEC
3520 EXECUTIVE CENTER DRIVE
SUITE 200
AUSTIN, TEXAS 78731
(512) 795-0360

REGISTRATION NUMBER: F-1784

SH 151
TRAFFIC CONTROL & SW3P PHASE IB
SH 151
STA 531+00 TO STA 541+00
(SHEET 6 OF 7)

FED. RD. DIV. NO.			SHEET NO.
			47
STATE	DIST.	COUNTY	
TEXAS	SA	BEXAR	
CONT.	SECT.	JOB	HIGHWAY NO.
2452	01	043	SH 151

p:\4760\0-0129\cad\sheet\151tcp1206.dgn 3/18/2011 11:20:07 AM mwmidkiff

SHEET SUMMARY OF ESTIMATED QUANTITIES			
ITEM#	DESCRIPTION	UNIT	QTY
0403	TEMPORARY SPL SHORING	SF	7920
0476	JACK OR TUN BOX CULV (5 FT X 2	LF	290
0476	TEMP DRN STR VERTICAL BORE (60")	LF	25
0506	TEMPORARY SEDIMENT CONTROL FENCE	LF	565

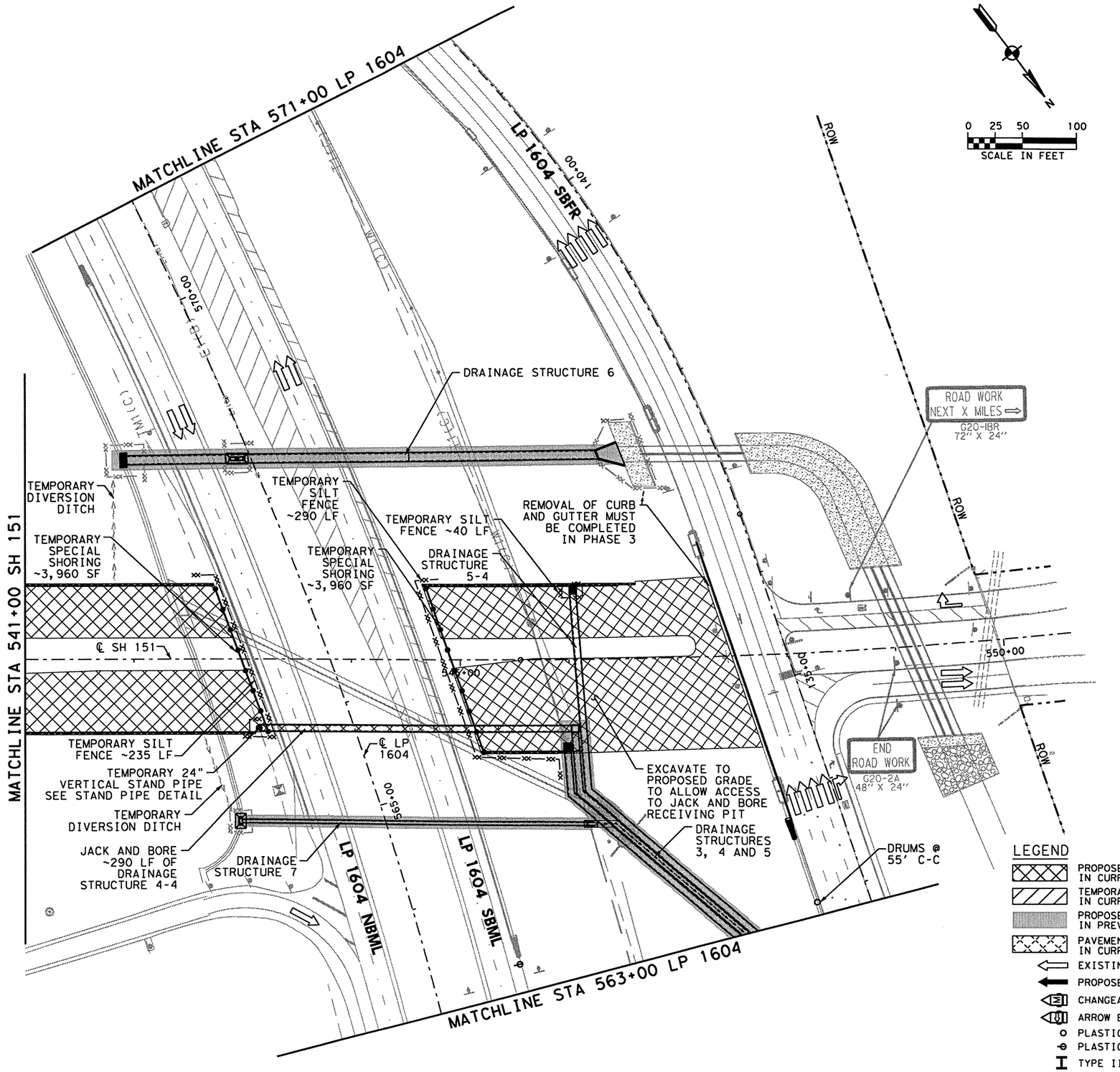

TEMPORARY SW3P ALL PHASES

1. ALL SW3P CONTROL MEASURES SHALL BE PLACED WITHIN TXDOT RIGHT-OF-WAY DURING CONSTRUCTION.
2. SHALL MAINTAIN SW3P CONTROL MEASURES THROUGHOUT CONSTRUCTION.
3. CONSTRUCTION ENTRANCE/EXIT AND CONCRETE WASH-OUT AREA TO BE DETERMINED BY ENGINEER OUT IN THE FIELD.
4. ALL SW3P CONTROL MEASURES INSTALLED DURING CONSTRUCTION ARE TO REMAIN IN PLACE UNTIL 70% VEGETATIVE COVER IS ACHIEVED OR AS APPROVED BY THE ENGINEER.
5. LOCATION OF SW3P CONTROL MEASURES TO BE DETERMINED BY ENGINEER IN THE FIELD.
6. ANTICIPATE ONE REPLACEMENT CYCLE FOR SW3P CONTROL MEASURES.
7. APPLY VEGETATIVE WATERING AS NEEDED TO SUPPLEMENT NATURAL RAINFALL DURING THE VEGETATION ESTABLISHMENT PERIOD. DROUGHT OR OTHER ENVIRONMENTAL CONDITIONS, AS DETERMINED BY THE ENGINEER, MAY REQUIRE THE APPLICATION OF SUPPLEMENTAL IRRIGATION TO BE BETWEEN THE HOURS OF 6PM AND 8AM.
8. SW3P CONTROL MEASURE SYMBOLS ARE NOT TO SCALE.

STATE OF TEXAS
MICHAEL W. MIDKIFF
75435
REGISTERED PROFESSIONAL ENGINEER
3/18/11

NO.	DATE	REVISION DESCRIPTION	APP. BY

© 2011

Texas Department of Transportation

MACTEC
3520 EXECUTIVE CENTER DRIVE
SUITE 200
AUSTIN, TEXAS 78731
(512) 795-0360
REGISTRATION NUMBER: F-1784

SH 151
TRAFFIC CONTROL &SW3P PHASE IB SH 151 STA 541+00 TO END PROJECT
(SHEET 7 OF 7)

FED. RD. DIV. NO.			SHEET NO.
			48
STATE	DIST.	COUNTY	
TEXAS	SA	BEXAR	
CONT.	SECT.	JOB	HIGHWAY NO.
2452	01	043	SH 151

p:\4760\0-01\29\conf\sheet\151tcp\207.dgn 3/18/2011 11:20:45 AM mwmidkiff

SHEET SUMMARY OF ESTIMATED QUANTITIES			
ITEM#	DESCRIPTION	UNIT	QTY

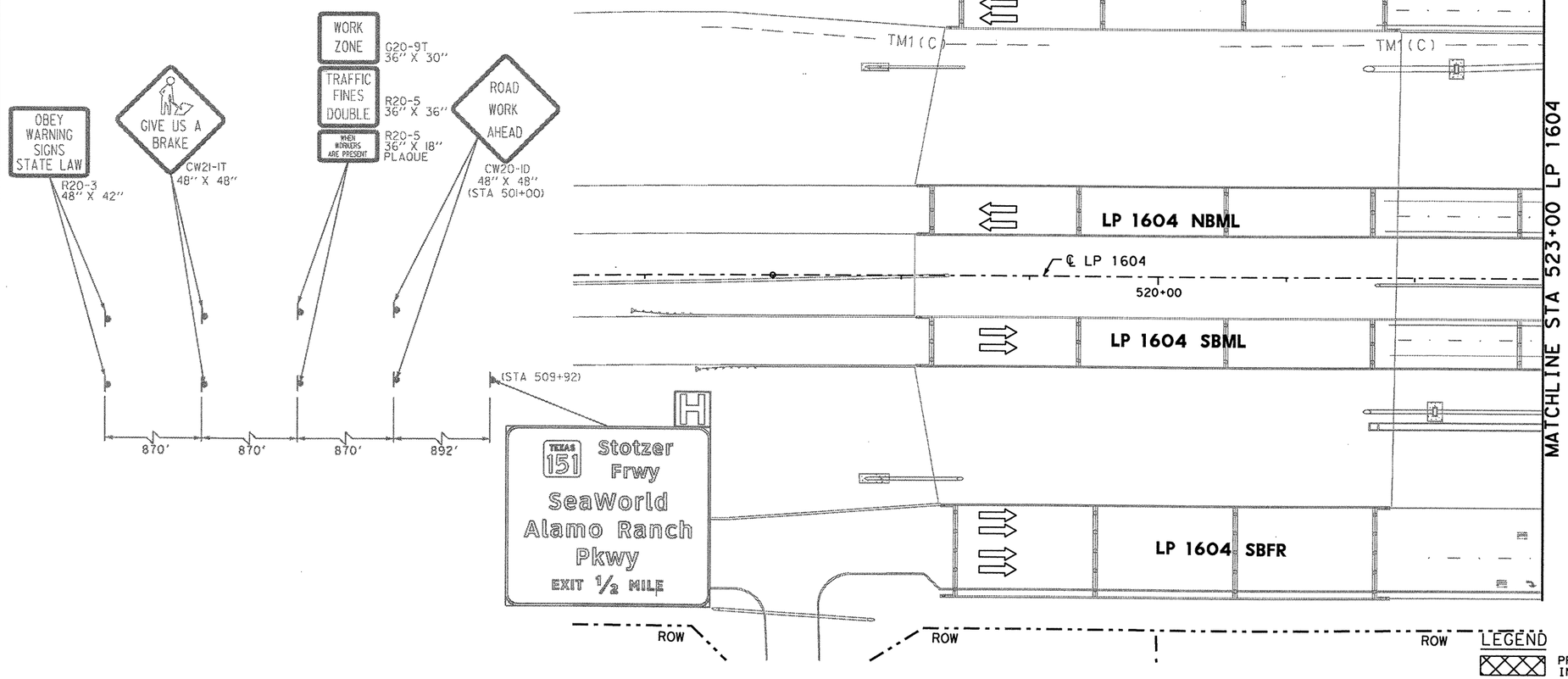

TEMPORARY SW3P ALL PHASES

1. ALL SW3P CONTROL MEASURES SHALL BE PLACED WITHIN TXDOT RIGHT-OF-WAY DURING CONSTRUCTION.
2. SHALL MAINTAIN SW3P CONTROL MEASURES THROUGHOUT CONSTRUCTION.
3. CONSTRUCTION ENTRANCE/EXIT AND CONCRETE WASH-OUT AREA TO BE DETERMINED BY ENGINEER OUT IN THE FIELD.
4. ALL SW3P CONTROL MEASURES INSTALLED DURING CONSTRUCTION ARE TO REMAIN IN PLACE UNTIL 70% VEGETATIVE COVER IS ACHIEVED OR AS APPROVED BY THE ENGINEER.
5. LOCATION OF SW3P CONTROL MEASURES TO BE DETERMINED BY ENGINEER IN THE FIELD.
6. ANTICIPATE ONE REPLACEMENT CYCLE FOR SW3P CONTROL MEASURES.
7. APPLY VEGETATIVE WATERING AS NEEDED TO SUPPLEMENT NATURAL RAINFALL DURING THE VEGETATION ESTABLISHMENT PERIOD. DROUGHT OR OTHER ENVIRONMENTAL CONDITIONS, AS DETERMINED BY THE ENGINEER, MAY REQUIRE THE APPLICATION OF SUPPLEMENTAL IRRIGATION TO BE BETWEEN THE HOURS OF 6PM AND 8AM.
8. SW3P CONTROL MEASURE SYMBOLS ARE NOT TO SCALE.

LEGEND

- PROPOSED CONSTRUCTION IN CURRENT PHASE
- TEMPORARY CONSTRUCTION IN CURRENT PHASE
- PROPOSED CONSTRUCTION IN PREVIOUS PHASE
- PAVEMENT REMOVAL IN CURRENT PHASE
- EXISTING TRAFFIC FLOW ARROW
- PROPOSED TRAFFIC FLOW ARROW
- CHANGEABLE MESSAGE SIGN
- ARROW BOARD
- PLASTIC DRUM
- PLASTIC DRUM WITH CHEVRON
- TYPE III BARRICADE
- TEMPORARY SILT FENCE
- RFD TEMPORARY ROCK FILTER DAM
- SANDBAGS FOR INLET PROTECTION
- DITCH

STATE OF TEXAS
MICHAEL W. MIDKIFF
75435
REGISTERED PROFESSIONAL ENGINEER
3/18/11

NO.	DATE	REVISION DESCRIPTION	APP. BY

© 2011

Texas Department of Transportation

MACTEC
3520 EXECUTIVE CENTER DRIVE
SUITE 200
AUSTIN, TEXAS 78731
(512) 795-0360
REGISTRATION NUMBER: F-1784

SH 151
TRAFFIC CONTROL & SW3P PHASE IB
LP 1604
BEGIN PROJECT TO STA 523+00
(SHEET 1 OF 8)

FED. RD. DIV. NO.			SHEET NO.
			49
STATE	DIST.	COUNTY	
TEXAS	SA	BEXAR	
CONT.	SECT.	JOB	HIGHWAY NO.
2452	01	043	SH 151

p:\4760\0-0129\cad\sheet\sitcpl208.dgn 3/18/2011 11:20:25 AM mwmidkiff

SHEET SUMMARY OF ESTIMATED QUANTITIES			
ITEM#	DESCRIPTION	UNIT	QTY

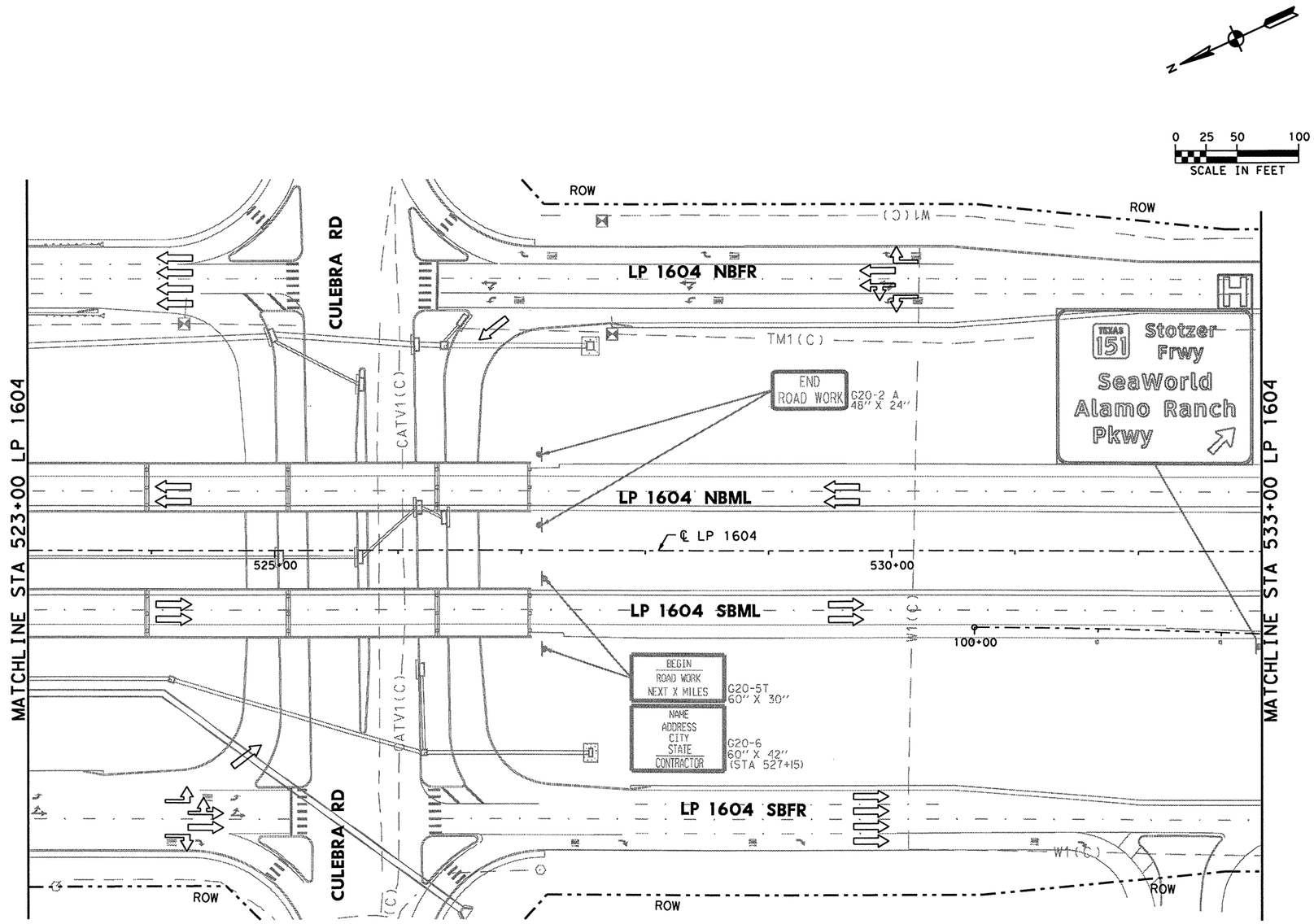

LEGEND

- PROPOSED CONSTRUCTION IN CURRENT PHASE
- TEMPORARY CONSTRUCTION IN CURRENT PHASE
- PROPOSED CONSTRUCTION IN PREVIOUS PHASE
- PAVEMENT REMOVAL IN CURRENT PHASE
- EXISTING TRAFFIC FLOW ARROW
- PROPOSED TRAFFIC FLOW ARROW
- CHANGEABLE MESSAGE SIGN
- ARROW BOARD
- PLASTIC DRUM
- PLASTIC DRUM WITH CHEVRON
- TYPE III BARRICADE
- TEMPORARY SILT FENCE
- TEMPORARY ROCK FILTER DAM
- SANDBAGS FOR INLET PROTECTION
- DITCH

STATE OF TEXAS
MICHAEL W. MIDKIFF
75435
REGISTERED PROFESSIONAL ENGINEER

Michael W. Midkiff
3/18/11

NO.	DATE	REVISION DESCRIPTION	APP. BY

© 2011

Texas Department of Transportation

MACTEC
3520 EXECUTIVE CENTER DRIVE
SUITE 200
AUSTIN, TEXAS 78731
(512) 795-0360

REGISTRATION NUMBER: F-1784

SH 151
TRAFFIC CONTROL & SW3P PHASE IB LP 1604 STA 523+00 TO STA 533+00
(SHEET 2 OF 8)

FED. RD. DIV. NO.			SHEET NO.
			50
STATE	DIST.	COUNTY	
TEXAS	SA	BEXAR	
CONT.	SECT.	JOB	HIGHWAY NO.
2452	01	043	SH 151

p:\4760\0-0129\cad\sheet\151tcp1209.dgn 3/18/2011 11:20:34 AM mwmidkiff

SHEET SUMMARY OF ESTIMATED QUANTITIES			
ITEM#	DESCRIPTION	UNIT	QTY

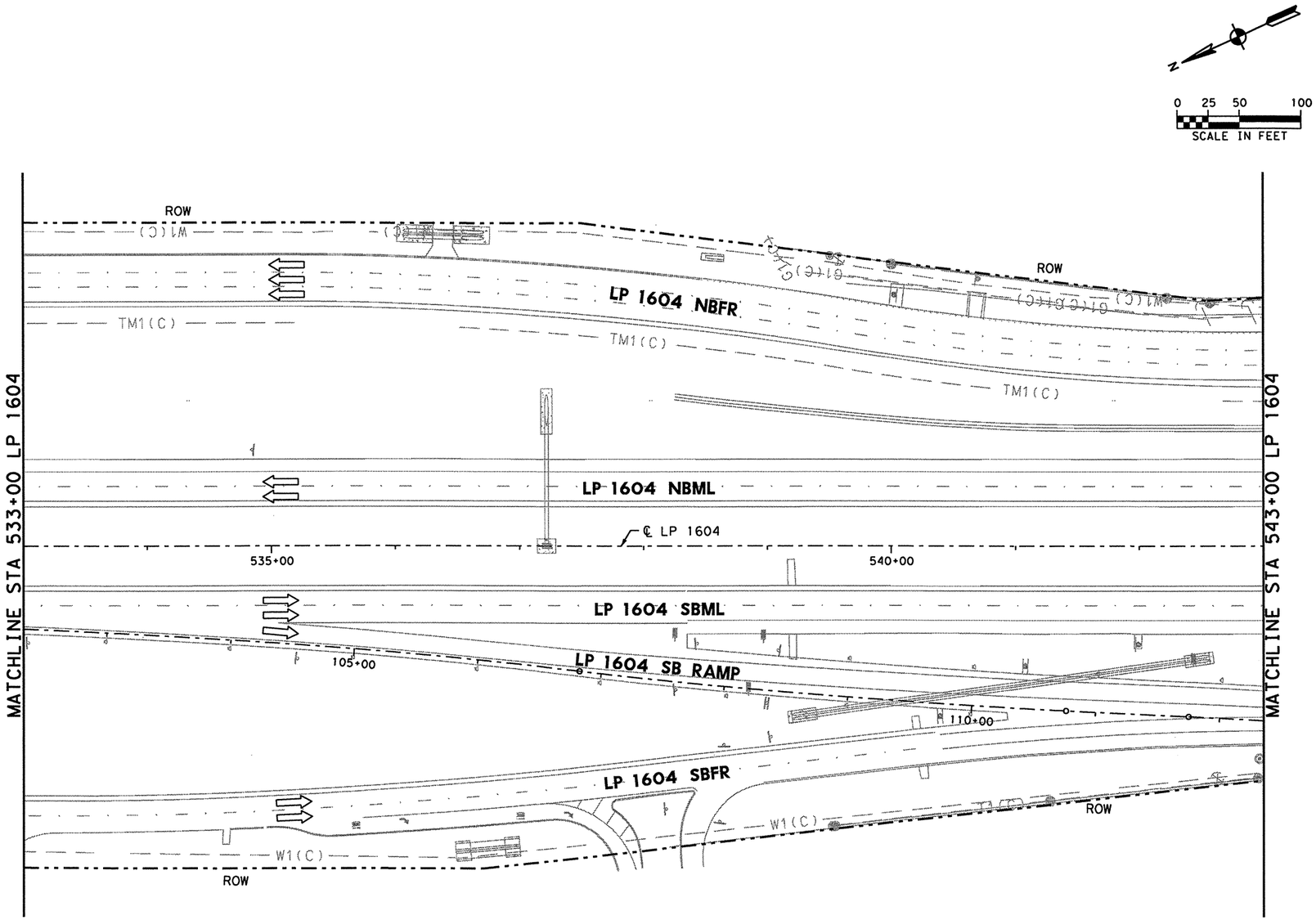

TEMPORARY SW3P ALL PHASES

1. ALL SW3P CONTROL MEASURES SHALL BE PLACED WITHIN TXDOT RIGHT-OF-WAY DURING CONSTRUCTION.
2. SHALL MAINTAIN SW3P CONTROL MEASURES THROUGHOUT CONSTRUCTION.
3. CONSTRUCTION ENTRANCE/EXIT AND CONCRETE WASH-OUT AREA TO BE DETERMINED BY ENGINEER OUT IN THE FIELD.
4. ALL SW3P CONTROL MEASURES INSTALLED DURING CONSTRUCTION ARE TO REMAIN IN PLACE UNTIL 70% VEGETATIVE COVER IS ACHIEVED OR AS APPROVED BY THE ENGINEER.
5. LOCATION OF SW3P CONTROL MEASURES TO BE DETERMINED BY ENGINEER IN THE FIELD.
6. ANTICIPATE ONE REPLACEMENT CYCLE FOR SW3P CONTROL MEASURES.
7. APPLY VEGETATIVE WATERING AS NEEDED TO SUPPLEMENT NATURAL RAINFALL DURING THE VEGETATION ESTABLISHMENT PERIOD. DROUGHT OR OTHER ENVIRONMENTAL CONDITIONS, AS DETERMINED BY THE ENGINEER, MAY REQUIRE THE APPLICATION OF SUPPLEMENTAL IRRIGATION TO BE BETWEEN THE HOURS OF 6PM AND 8AM.
8. SW3P CONTROL MEASURE SYMBOLS ARE NOT TO SCALE.

LEGEND

- PROPOSED CONSTRUCTION IN CURRENT PHASE
- TEMPORARY CONSTRUCTION IN CURRENT PHASE
- PROPOSED CONSTRUCTION IN PREVIOUS PHASE
- PAVEMENT REMOVAL IN CURRENT PHASE
- EXISTING TRAFFIC FLOW ARROW
- PROPOSED TRAFFIC FLOW ARROW
- CHANGEABLE MESSAGE SIGN
- ARROW BOARD
- PLASTIC DRUM
- PLASTIC DRUM WITH CHEVRON
- TYPE III BARRICADE
- TEMPORARY SILT FENCE
- RFD TEMPORARY ROCK FILTER DAM
- SANDBAGS FOR INLET PROTECTION
- DITCH

STATE OF TEXAS
MICHAEL W. MIDKIFF
75435
REGISTERED PROFESSIONAL ENGINEER

Michael W. Midkiff
3/18/11

NO.	DATE	REVISION DESCRIPTION	APP. BY

© 2011

Texas Department of Transportation

MACTEC
3520 EXECUTIVE CENTER DRIVE
SUITE 200
AUSTIN, TEXAS 78731
(512) 795-0360

REGISTRATION NUMBER: F-1784

SH 151
TRAFFIC CONTROL & SW3P PHASE IB
LP 1604
STA 533+00 TO STA 543+00
(SHEET 3 OF 8)

FED. RD. DIV. NO.			SHEET NO.
			51
STATE	DIST.	COUNTY	
TEXAS	SA	BEXAR	
CONT.	SECT.	JOB	HIGHWAY NO.
2452	01	043	SH 151

p:\4760\0-0129\cad\sheet\51tcp120.dgn 3/18/2011 11:20:46 AM mwmidkiff

SHEET SUMMARY OF ESTIMATED QUANTITIES			
ITEM#	DESCRIPTION	UNIT	QTY

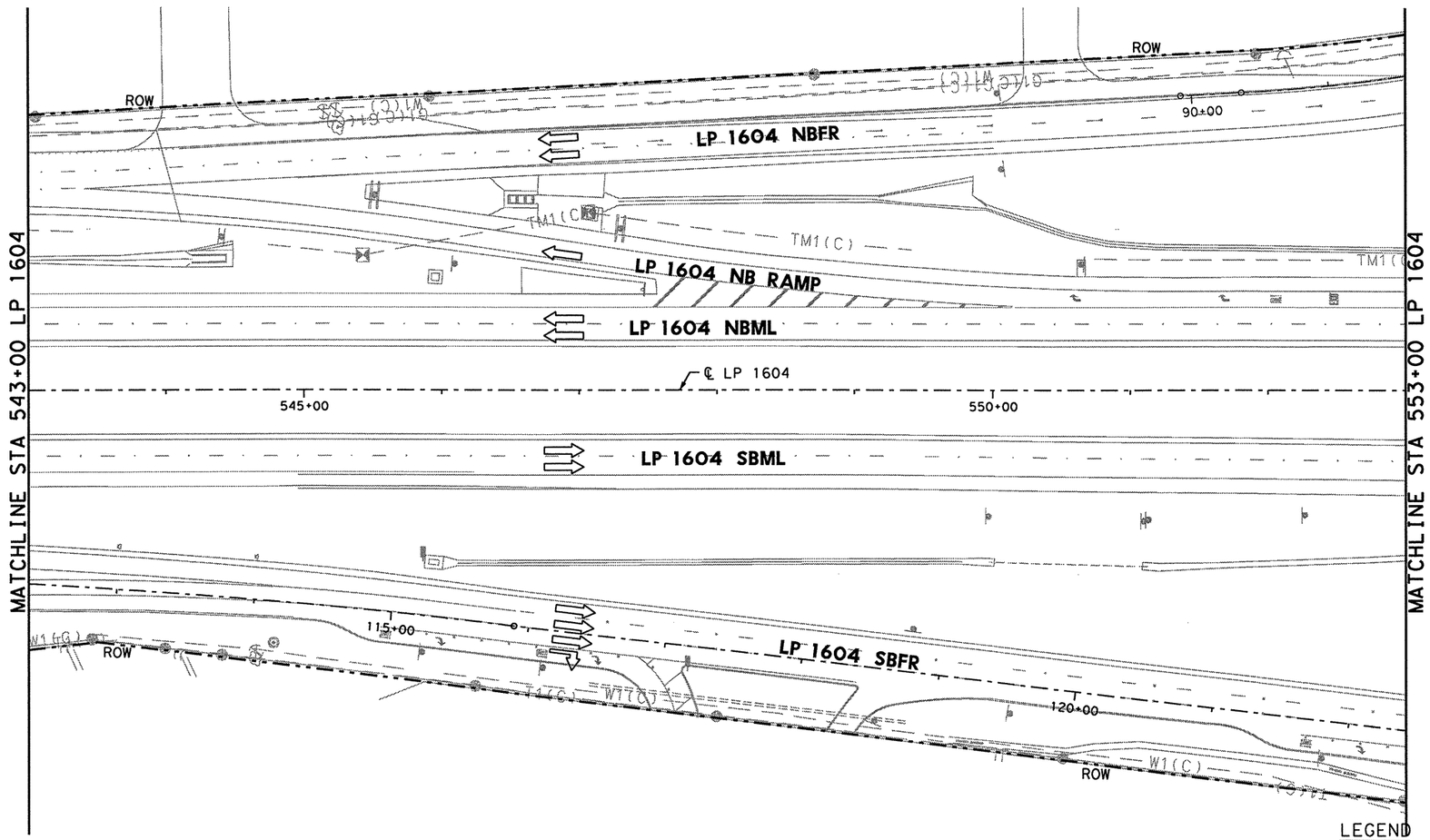

0 25 50 100
SCALE IN FEET

TEMPORARY SW3P ALL PHASES

1. ALL SW3P CONTROL MEASURES SHALL BE PLACED WITHIN TXDOT RIGHT-OF-WAY DURING CONSTRUCTION.
2. SHALL MAINTAIN SW3P CONTROL MEASURES THROUGHOUT CONSTRUCTION.
3. CONSTRUCTION ENTRANCE/EXIT AND CONCRETE WASH-OUT AREA TO BE DETERMINED BY ENGINEER OUT IN THE FIELD.
4. ALL SW3P CONTROL MEASURES INSTALLED DURING CONSTRUCTION ARE TO REMAIN IN PLACE UNTIL 70% VEGETATIVE COVER IS ACHIEVED OR AS APPROVED BY THE ENGINEER.
5. LOCATION OF SW3P CONTROL MEASURES TO BE DETERMINED BY ENGINEER IN THE FIELD.
6. ANTICIPATE ONE REPLACEMENT CYCLE FOR SW3P CONTROL MEASURES.
7. APPLY VEGETATIVE WATERING AS NEEDED TO SUPPLEMENT NATURAL RAINFALL DURING THE VEGETATION ESTABLISHMENT PERIOD. DROUGHT OR OTHER ENVIRONMENTAL CONDITIONS, AS DETERMINED BY THE ENGINEER, MAY REQUIRE THE APPLICATION OF SUPPLEMENTAL IRRIGATION TO BE BETWEEN THE HOURS OF 6PM AND 8AM.
8. SW3P CONTROL MEASURE SYMBOLS ARE NOT TO SCALE.

LEGEND

- PROPOSED CONSTRUCTION IN CURRENT PHASE
- TEMPORARY CONSTRUCTION IN CURRENT PHASE
- PROPOSED CONSTRUCTION IN PREVIOUS PHASE
- PAVEMENT REMOVAL IN CURRENT PHASE
- EXISTING TRAFFIC FLOW ARROW
- PROPOSED TRAFFIC FLOW ARROW
- CHANGEABLE MESSAGE SIGN
- ARROW BOARD
- PLASTIC DRUM
- PLASTIC DRUM WITH CHEVRON
- TYPE III BARRICADE
- TEMPORARY SILT FENCE
- RFD TEMPORARY ROCK FILTER DAM
- SANDBAGS FOR INLET PROTECTION
- DITCH

STATE OF TEXAS
MICHAEL W. WIDKIFF
75435
REGISTERED
PROFESSIONAL ENGINEER
3/18/11

NO.	DATE	REVISION DESCRIPTION	APP. BY

© 2011

Texas Department of Transportation

MACTEC
3520 EXECUTIVE CENTER DRIVE
SUITE 200
AUSTIN, TEXAS 78731
(512) 795-0360
REGISTRATION NUMBER: F-1784

SH 151
TRAFFIC CONTROL & SW3P PHASE IB LP 1604 STA 543+00 TO STA 553+00
(SHEET 4 OF 8)

FED. RD. DIV. NO.			SHEET NO.
			52
STATE	DIST.	COUNTY	
TEXAS	SA	BEXAR	
CONT.	SECT.	JOB	HIGHWAY NO.
2452	01	043	SH 151

p:\4780\0-0129\cad\sheet\Sitcp121.dgn 3/18/2011 11:20:55 AM mwintdkfff

SHEET SUMMARY OF ESTIMATED QUANTITIES			
ITEM#	DESCRIPTION	UNIT	QTY
0506	CONSTRUCTION EXITS (REMOVE)	SY	139

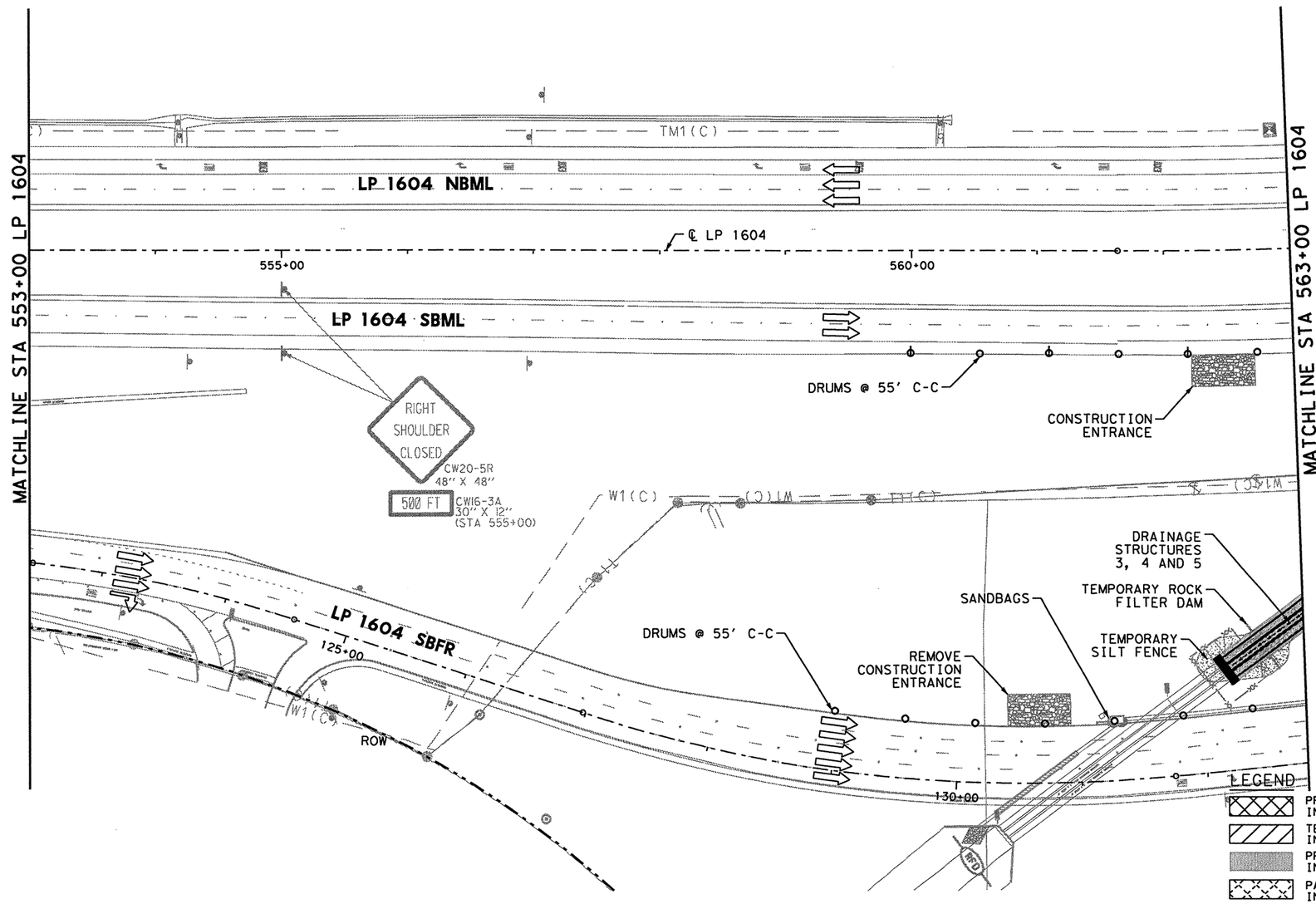

LEGEND

- PROPOSED CONSTRUCTION IN CURRENT PHASE
- TEMPORARY CONSTRUCTION IN CURRENT PHASE
- PROPOSED CONSTRUCTION IN PREVIOUS PHASE
- PAVEMENT REMOVAL IN CURRENT PHASE
- EXISTING TRAFFIC FLOW ARROW
- PROPOSED TRAFFIC FLOW ARROW
- CHANGEABLE MESSAGE SIGN
- ARROW BOARD
- PLASTIC DRUM
- PLASTIC DRUM WITH CHEVRON
- TYPE III BARRICADE
- TEMPORARY SILT FENCE
- TEMPORARY ROCK FILTER DAM
- SANDBAGS FOR INLET PROTECTION
- DITCH

TEMPORARY SW3P ALL PHASES

1. ALL SW3P CONTROL MEASURES SHALL BE PLACED WITHIN TXDOT RIGHT-OF-WAY DURING CONSTRUCTION.
2. SHALL MAINTAIN SW3P CONTROL MEASURES THROUGHOUT CONSTRUCTION.
3. CONSTRUCTION ENTRANCE/EXIT AND CONCRETE WASH-OUT AREA TO BE DETERMINED BY ENGINEER OUT IN THE FIELD.
4. ALL SW3P CONTROL MEASURES INSTALLED DURING CONSTRUCTION ARE TO REMAIN IN PLACE UNTIL 70% VEGETATIVE COVER IS ACHIEVED OR AS APPROVED BY THE ENGINEER.
5. LOCATION OF SW3P CONTROL MEASURES TO BE DETERMINED BY ENGINEER IN THE FIELD.
6. ANTICIPATE ONE REPLACEMENT CYCLE FOR SW3P CONTROL MEASURES.
7. APPLY VEGETATIVE WATERING AS NEEDED TO SUPPLEMENT NATURAL RAINFALL DURING THE VEGETATION ESTABLISHMENT PERIOD. DROUGHT OR OTHER ENVIRONMENTAL CONDITIONS, AS DETERMINED BY THE ENGINEER, MAY REQUIRE THE APPLICATION OF SUPPLEMENTAL IRRIGATION TO BE BETWEEN THE HOURS OF 6PM AND 8AM.
8. SW3P CONTROL MEASURE SYMBOLS ARE NOT TO SCALE.

STATE OF TEXAS
MICHAEL W. MIDKIFF
75435
REGISTERED PROFESSIONAL ENGINEER
3/18/11

NO.	DATE	REVISION DESCRIPTION	APP. BY

© 2011

Texas Department of Transportation

MACTEC
3520 EXECUTIVE CENTER DRIVE
SUITE 200
AUSTIN, TEXAS 78731
(512) 795-0360
REGISTRATION NUMBER: F-1784

SH 151
TRAFFIC CONTROL & SW3P PHASE IB
LP 1604
STA 553+00 TO STA 563+00
(SHEET 5 OF 8)

FED. RD. DIV. NO.			SHEET NO.
			53
STATE	DIST.	COUNTY	
TEXAS	SA	BEXAR	
CONT.	SECT.	JOB	HIGHWAY NO.
2452	01	043	SH 151

p:\rfbo\ND-0129\cad\sheet\15tcp1212.dgn 3/18/2011 11:21:05 AM mwmidkiff

LP 1604 SBFR
PH 1B-D
NTS

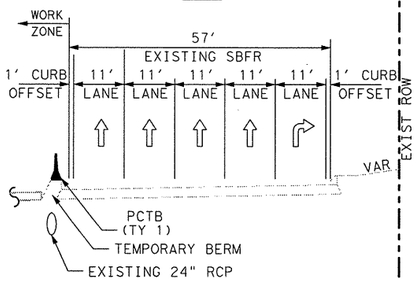

LP 1604 MAIN LANE
SECTION E
SEE TCP DETAIL 1

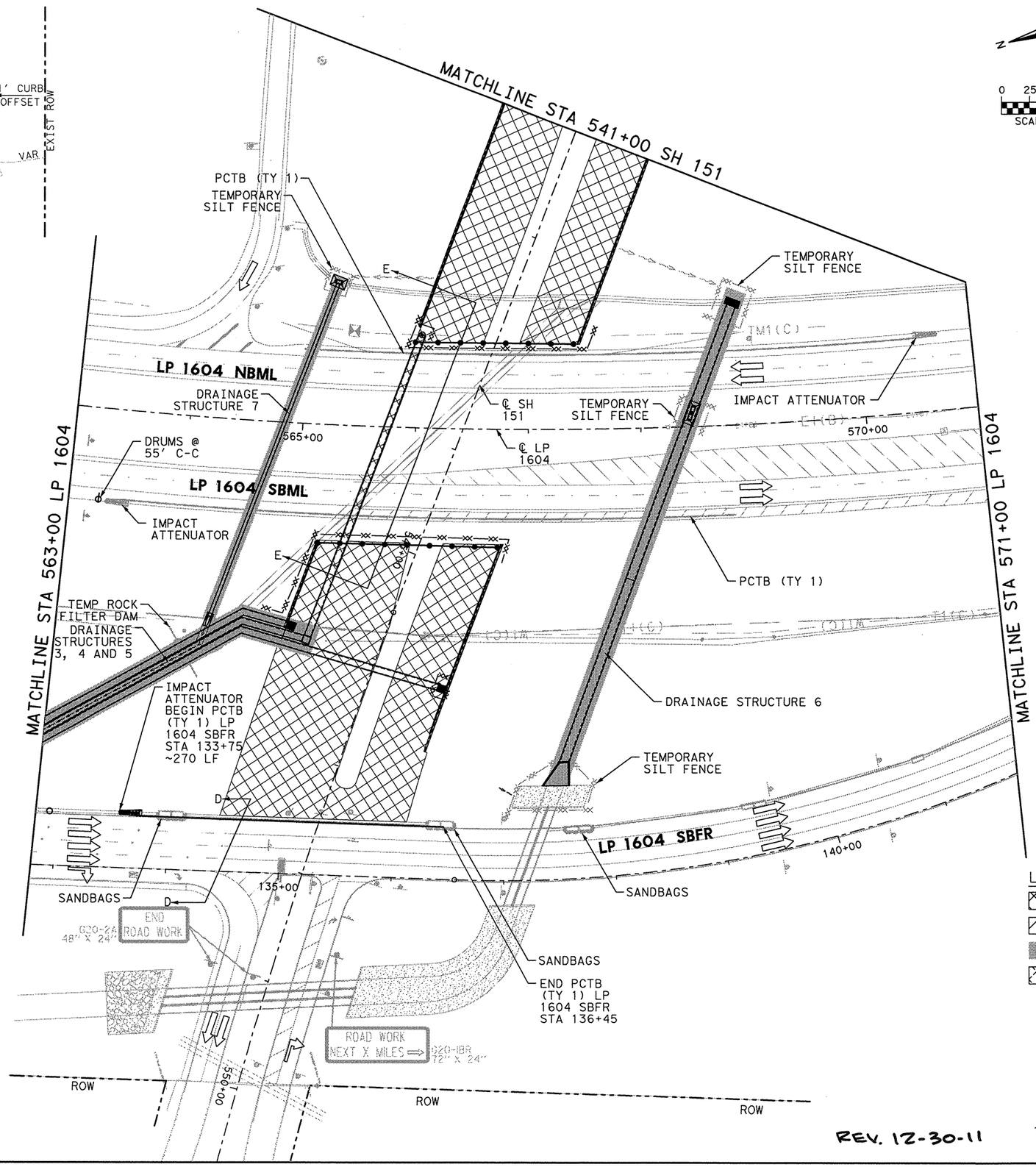

REV. 12-30-11

0 25 50 100
SCALE IN FEET

SHEET SUMMARY OF ESTIMATED QUANTITIES			
ITEM#	DESCRIPTION	UNIT	QTY
0512	PORT CTB (FUR & INST) (SNGL SLP) (TY	LF	270
0545	CRASH CUSH ATTEN (INSTL) (WORK ZONE)	EA	1

TEMPORARY SW3P ALL PHASES

1. ALL SW3P CONTROL MEASURES SHALL BE PLACED WITHIN TXDOT RIGHT-OF-WAY DURING CONSTRUCTION.
2. SHALL MAINTAIN SW3P CONTROL MEASURES THROUGHOUT CONSTRUCTION.
3. CONSTRUCTION ENTRANCE/EXIT AND CONCRETE WASH-OUT AREA TO BE DETERMINED BY ENGINEER OUT IN THE FIELD.
4. ALL SW3P CONTROL MEASURES INSTALLED DURING CONSTRUCTION ARE TO REMAIN IN PLACE UNTIL 70% VEGETATIVE COVER IS ACHIEVED OR AS APPROVED BY THE ENGINEER.
5. LOCATION OF SW3P CONTROL MEASURES TO BE DETERMINED BY ENGINEER IN THE FIELD.
6. ANTICIPATE ONE REPLACEMENT CYCLE FOR SW3P CONTROL MEASURES.
7. APPLY VEGETATIVE WATERING AS NEEDED TO SUPPLEMENT NATURAL RAINFALL DURING THE VEGETATION ESTABLISHMENT PERIOD. DROUGHT OR OTHER ENVIRONMENTAL CONDITIONS, AS DETERMINED BY THE ENGINEER, MAY REQUIRE THE APPLICATION OF SUPPLEMENTAL IRRIGATION TO BE BETWEEN THE HOURS OF 6PM AND 8AM.
8. SW3P CONTROL MEASURE SYMBOLS ARE NOT TO SCALE.

LEGEND

- PROPOSED CONSTRUCTION IN CURRENT PHASE
- TEMPORARY CONSTRUCTION IN CURRENT PHASE
- PROPOSED CONSTRUCTION IN PREVIOUS PHASE
- PAVEMENT REMOVAL IN CURRENT PHASE
- EXISTING TRAFFIC FLOW ARROW
- PROPOSED TRAFFIC FLOW ARROW
- CHANGEABLE MESSAGE SIGN
- ARROW BOARD
- PLASTIC DRUM
- PLASTIC DRUM WITH CHEVRON
- TYPE III BARRICADE
- TEMPORARY SILT FENCE
- RFD TEMPORARY ROCK FILTER DAM
- SANDBAGS FOR INLET PROTECTION
- DITCH

STATE OF TEXAS
MICHAEL W. MIDKIFF
75435
REGISTERED PROFESSIONAL ENGINEER
12/5/11

NO.	DATE	REVISION DESCRIPTION	APP. BY

© 2011

Texas Department of Transportation

MACTEC
3520 EXECUTIVE CENTER DRIVE
SUITE 200
AUSTIN, TEXAS 78731
(512) 795-0360

REGISTRATION NUMBER: F-1784

SH 151
TRAFFIC CONTROL & SW3P PHASE IB
LP 1604
STA 563+00 TO STA 571+00
(SHEET 6 OF 8)

FED. RD. DIV. NO.			SHEET NO.
			54
STATE	DIST.	COUNTY	
TEXAS	SA	BEXAR	
CONT.	SECT.	JOB	HIGHWAY NO.
2452	01	043	SH 151

p:\4760\0-0129\cad\sheet\51tcp123.dgn 12/3/2011 7:02:34 PM mwmidkiff

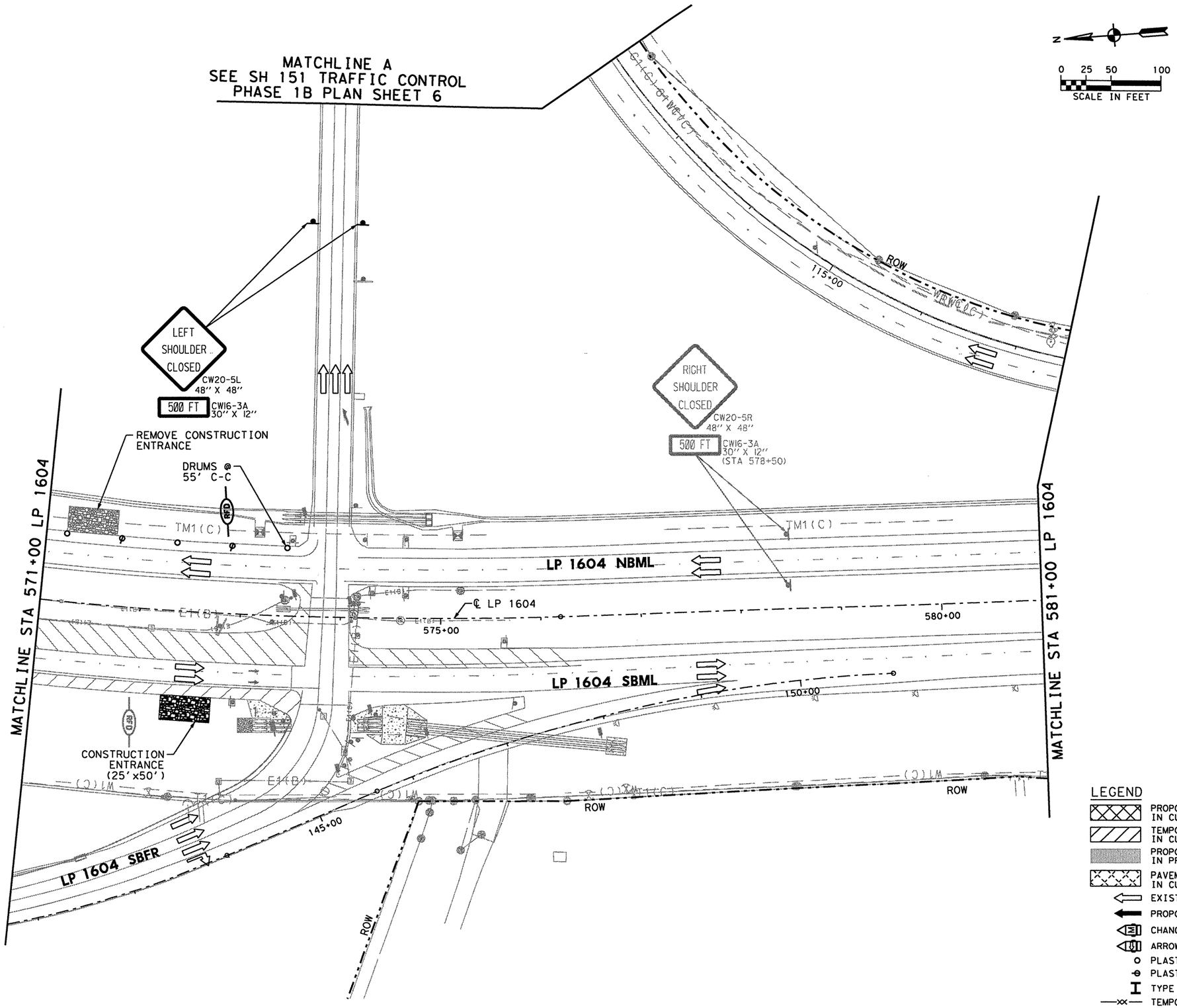

SHEET SUMMARY OF ESTIMATED QUANTITIES			
ITEM#	DESCRIPTION	UNIT	QTY
0506	ROCK FILTER DAMS (INSTALL) (TY 2)	LF	20
0506	CONSTRUCTION EXITS (INSTALL) (TY	SY	139
0506	CONSTRUCTION EXITS (REMOVE)	SY	139

TEMPORARY SW3P ALL PHASES

1. ALL SW3P CONTROL MEASURES SHALL BE PLACED WITHIN TXDOT RIGHT-OF-WAY DURING CONSTRUCTION.
2. SHALL MAINTAIN SW3P CONTROL MEASURES THROUGHOUT CONSTRUCTION.
3. CONSTRUCTION ENTRANCE/EXIT AND CONCRETE WASH-OUT AREA TO BE DETERMINED BY ENGINEER OUT IN THE FIELD.
4. ALL SW3P CONTROL MEASURES INSTALLED DURING CONSTRUCTION ARE TO REMAIN IN PLACE UNTIL 70% VEGETATIVE COVER IS ACHIEVED OR AS APPROVED BY THE ENGINEER.
5. LOCATION OF SW3P CONTROL MEASURES TO BE DETERMINED BY ENGINEER IN THE FIELD.
6. ANTICIPATE ONE REPLACEMENT CYCLE FOR SW3P CONTROL MEASURES.
7. APPLY VEGETATIVE WATERING AS NEEDED TO SUPPLEMENT NATURAL RAINFALL DURING THE VEGETATION ESTABLISHMENT PERIOD. DROUGHT OR OTHER ENVIRONMENTAL CONDITIONS, AS DETERMINED BY THE ENGINEER, MAY REQUIRE THE APPLICATION OF SUPPLEMENTAL IRRIGATION TO BE BETWEEN THE HOURS OF 6PM AND 8AM.
8. SW3P CONTROL MEASURE SYMBOLS ARE NOT TO SCALE.

LEGEND

- PROPOSED CONSTRUCTION IN CURRENT PHASE
- TEMPORARY CONSTRUCTION IN CURRENT PHASE
- PROPOSED CONSTRUCTION IN PREVIOUS PHASE
- PAVEMENT REMOVAL IN CURRENT PHASE
- EXISTING TRAFFIC FLOW ARROW
- PROPOSED TRAFFIC FLOW ARROW
- CHANGEABLE MESSAGE SIGN
- ARROW BOARD
- PLASTIC DRUM
- PLASTIC DRUM WITH CHEVRON
- TYPE III BARRICADE
- TEMPORARY SILT FENCE
- TEMPORARY ROCK FILTER DAM
- SANDBAGS FOR INLET PROTECTION
- DITCH

STATE OF TEXAS
MICHAEL W. MIDKIFF
75435
REGISTERED PROFESSIONAL ENGINEER
3/16/11

NO.	DATE	REVISION DESCRIPTION	APP. BY

© 2011

Texas Department of Transportation

MACTEC
3520 EXECUTIVE CENTER DRIVE
SUITE 200
AUSTIN, TEXAS 78731
(512) 795-0360

REGISTRATION NUMBER: F-1784

SH 151
TRAFFIC CONTROL & SW3P PHASE IB
LP 1604
STA 571+00 TO STA 581+00
(SHEET 7 OF 8)

FED. RD. DIV. NO.			SHEET NO.
			55
STATE	DIST.	COUNTY	
TEXAS	SA	BEXAR	
CONT.	SECT.	JOB	HIGHWAY NO.
2452	01	043	SH 151

p:\4760\0-0129\cad\sheet\51tcp1214.dgn 3/18/2011 11:21:23 AM mwmidkiff

SHEET SUMMARY OF ESTIMATED QUANTITIES			
ITEM#	DESCRIPTION	UNIT	QTY

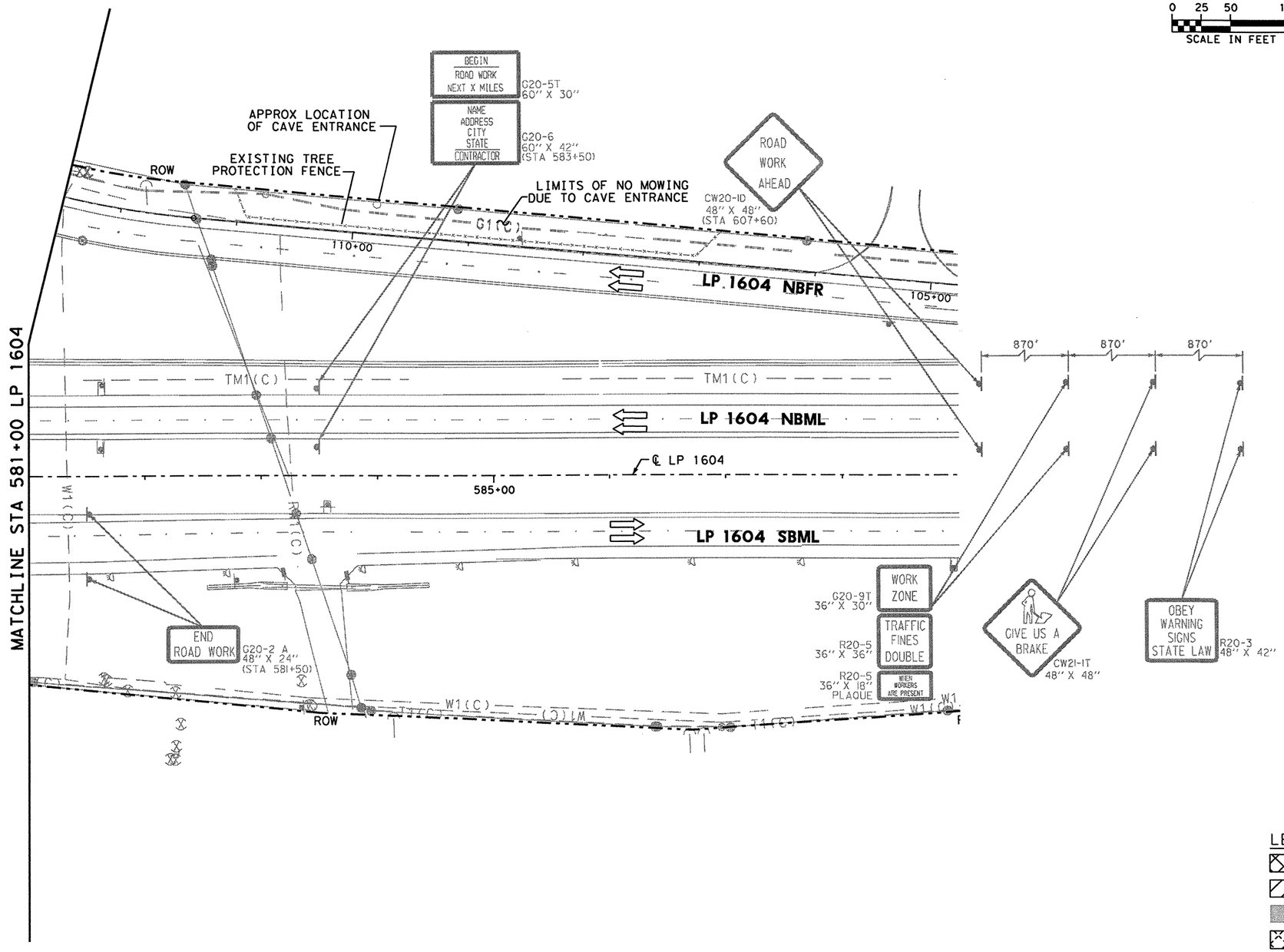

TEMPORARY SW3P ALL PHASES

1. ALL SW3P CONTROL MEASURES SHALL BE PLACED WITHIN TXDOT RIGHT-OF-WAY DURING CONSTRUCTION.
2. SHALL MAINTAIN SW3P CONTROL MEASURES THROUGHOUT CONSTRUCTION.
3. CONSTRUCTION ENTRANCE/EXIT AND CONCRETE WASH-OUT AREA TO BE DETERMINED BY ENGINEER OUT IN THE FIELD.
4. ALL SW3P CONTROL MEASURES INSTALLED DURING CONSTRUCTION ARE TO REMAIN IN PLACE UNTIL 70% VEGETATIVE COVER IS ACHIEVED OR AS APPROVED BY THE ENGINEER.
5. LOCATION OF SW3P CONTROL MEASURES TO BE DETERMINED BY ENGINEER IN THE FIELD.
6. ANTICIPATE ONE REPLACEMENT CYCLE FOR SW3P CONTROL MEASURES.
7. APPLY VEGETATIVE WATERING AS NEEDED TO SUPPLEMENT NATURAL RAINFALL DURING THE VEGETATION ESTABLISHMENT PERIOD. DROUGHT OR OTHER ENVIRONMENTAL CONDITIONS, AS DETERMINED BY THE ENGINEER, MAY REQUIRE THE APPLICATION OF SUPPLEMENTAL IRRIGATION TO BE BETWEEN THE HOURS OF 6PM AND 8AM.
8. SW3P CONTROL MEASURE SYMBOLS ARE NOT TO SCALE.

NOTE: REFER TO EPIC PLAN SHEET IN REGARD TO WORK IN VICINITY OF CAVE ENTRANCE.

LEGEND

- PROPOSED CONSTRUCTION IN CURRENT PHASE
- TEMPORARY CONSTRUCTION IN CURRENT PHASE
- PROPOSED CONSTRUCTION IN PREVIOUS PHASE
- PAVEMENT REMOVAL IN CURRENT PHASE
- EXISTING TRAFFIC FLOW ARROW
- PROPOSED TRAFFIC FLOW ARROW
- CHANGEABLE MESSAGE SIGN
- ARROW BOARD
- PLASTIC DRUM
- PLASTIC DRUM WITH CHEVRON
- TYPE III BARRICADE
- TEMPORARY SILT FENCE
- RFD TEMPORARY ROCK FILTER DAM
- SANDBAGS FOR INLET PROTECTION
- DITCH

STATE OF TEXAS
MICHAEL W. MIDKIFF
75435
REGISTERED PROFESSIONAL ENGINEER
Michael W. Midkiff
4/11/11

NO.	DATE	REVISION DESCRIPTION	APP. BY

© 2011

Texas Department of Transportation

MACTEC
3520 EXECUTIVE CENTER DRIVE
SUITE 200
AUSTIN, TEXAS 78731
(512) 795-0360

REGISTRATION NUMBER: F-1784

SH 151
TRAFFIC CONTROL & SW3P PHASE IB
LP 1604
STA 581+00 TO END PROJECT
(SHEET 8 OF 8)

FED. RD. DIV. NO.			SHEET NO.
			56
STATE	DIST.	COUNTY	
TEXAS	SA	BEXAR	
CONT.	SECT.	JOB	HIGHWAY NO.
2452	01	043	SH 151

p:\4760\0-0129\cad\sheet\151tcpl215.dgn 4/12/2011 7:03:56 PM mwmidkiff

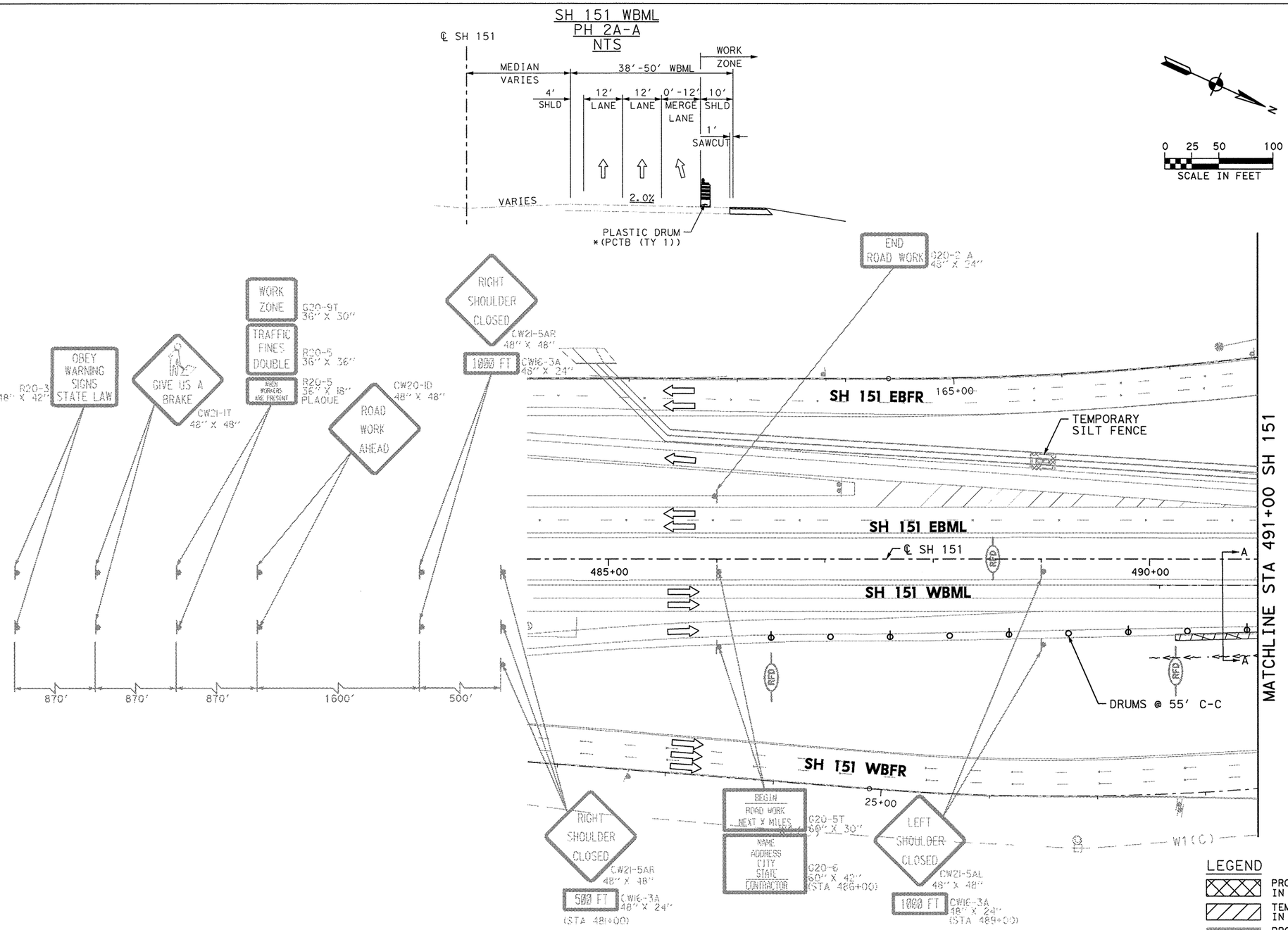

SHEET SUMMARY OF ESTIMATED QUANTITIES			
ITEM#	DESCRIPTION	UNIT	QTY

TEMPORARY SW3P ALL PHASES

1. ALL SW3P CONTROL MEASURES SHALL BE PLACED WITHIN TXDOT RIGHT-OF-WAY DURING CONSTRUCTION.
2. SHALL MAINTAIN SW3P CONTROL MEASURES THROUGHOUT CONSTRUCTION.
3. CONSTRUCTION ENTRANCE/EXIT AND CONCRETE WASH-OUT AREA TO BE DETERMINED BY ENGINEER OUT IN THE FIELD.
4. ALL SW3P CONTROL MEASURES INSTALLED DURING CONSTRUCTION ARE TO REMAIN IN PLACE UNTIL 70% VEGETATIVE COVER IS ACHIEVED OR AS APPROVED BY THE ENGINEER.
5. LOCATION OF SW3P CONTROL MEASURES TO BE DETERMINED BY ENGINEER IN THE FIELD.
6. ANTICIPATE ONE REPLACEMENT CYCLE FOR SW3P CONTROL MEASURES.
7. APPLY VEGETATIVE WATERING AS NEEDED TO SUPPLEMENT NATURAL RAINFALL DURING THE VEGETATION ESTABLISHMENT PERIOD. DROUGHT OR OTHER ENVIRONMENTAL CONDITIONS, AS DETERMINED BY THE ENGINEER, MAY REQUIRE THE APPLICATION OF SUPPLEMENTAL IRRIGATION TO BE BETWEEN THE HOURS OF 6PM AND 8AM.
8. SW3P CONTROL MEASURE SYMBOLS ARE NOT TO SCALE.

LEGEND

- PROPOSED CONSTRUCTION IN CURRENT PHASE
- TEMPORARY CONSTRUCTION IN CURRENT PHASE
- PROPOSED CONSTRUCTION IN PREVIOUS PHASE
- PAVEMENT REMOVAL IN CURRENT PHASE
- EXISTING TRAFFIC FLOW ARROW
- PROPOSED TRAFFIC FLOW ARROW
- CHANGEABLE MESSAGE SIGN
- ARROW BOARD
- PLASTIC DRUM
- PLASTIC DRUM WITH CHEVRON
- TYPE III BARRICADE
- TEMPORARY SILT FENCE
- TEMPORARY ROCK FILTER DAM
- SANDBAGS FOR INLET PROTECTION
- DITCH

STATE OF TEXAS
MICHAEL W. MIDKIFF
75435
REGISTERED PROFESSIONAL ENGINEER
12/5/11

NO.	DATE	REVISION DESCRIPTION	APP. BY

© 2011

Texas Department of Transportation

MACTEC
3520 EXECUTIVE CENTER DRIVE
SUITE 200
AUSTIN, TEXAS 78731
(512) 795-0360
REGISTRATION NUMBER: F-1784

SH 151
TRAFFIC CONTROL & SW3P PHASE IIA SH 151 BEGIN PROJECT TO STA 491+00
(SHEET 1 OF 7)

FED. RD. DIV. NO.			SHEET NO.
			57

STATE	DIST.	COUNTY	
TEXAS	SA	BEXAR	
CONT.	SECT.	JOB	HIGHWAY NO.
2452	01	043	SH 151

p:\4760\03-01259\cad\sheet\151tcp201.dgn 12/3/2011 7:03:02 PM mwmidkiff

SHEET SUMMARY OF ESTIMATED QUANTITIES			
ITEM#	DESCRIPTION	UNIT	QTY

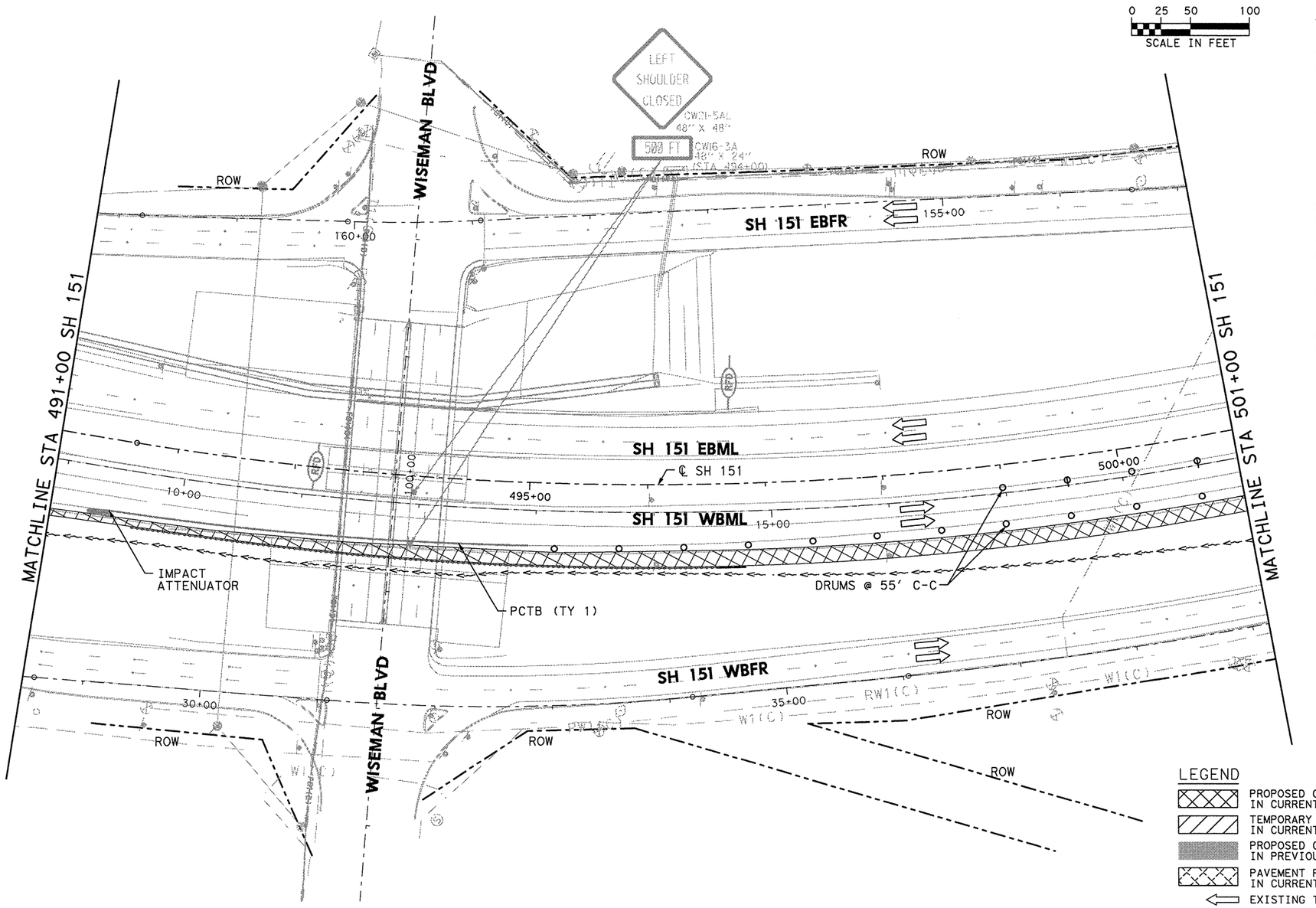

TEMPORARY SW3P ALL PHASES

1. ALL SW3P CONTROL MEASURES SHALL BE PLACED WITHIN TXDOT RIGHT-OF-WAY DURING CONSTRUCTION.
2. SHALL MAINTAIN SW3P CONTROL MEASURES THROUGHOUT CONSTRUCTION.
3. CONSTRUCTION ENTRANCE/EXIT AND CONCRETE WASH-OUT AREA TO BE DETERMINED BY ENGINEER OUT IN THE FIELD.
4. ALL SW3P CONTROL MEASURES INSTALLED DURING CONSTRUCTION ARE TO REMAIN IN PLACE UNTIL 70% VEGETATIVE COVER IS ACHIEVED OR AS APPROVED BY THE ENGINEER.
5. LOCATION OF SW3P CONTROL MEASURES TO BE DETERMINED BY ENGINEER IN THE FIELD.
6. ANTICIPATE ONE REPLACEMENT CYCLE FOR SW3P CONTROL MEASURES.
7. APPLY VEGETATIVE WATERING AS NEEDED TO SUPPLEMENT NATURAL RAINFALL DURING THE VEGETATION ESTABLISHMENT PERIOD. DROUGHT OR OTHER ENVIRONMENTAL CONDITIONS, AS DETERMINED BY THE ENGINEER, MAY REQUIRE THE APPLICATION OF SUPPLEMENTAL IRRIGATION TO BE BETWEEN THE HOURS OF 6PM AND 8AM.
8. SW3P CONTROL MEASURE SYMBOLS ARE NOT TO SCALE.

LEGEND

- PROPOSED CONSTRUCTION IN CURRENT PHASE
- TEMPORARY CONSTRUCTION IN CURRENT PHASE
- PROPOSED CONSTRUCTION IN PREVIOUS PHASE
- PAVEMENT REMOVAL IN CURRENT PHASE
- EXISTING TRAFFIC FLOW ARROW
- PROPOSED TRAFFIC FLOW ARROW
- CHANGEABLE MESSAGE SIGN
- ARROW BOARD
- PLASTIC DRUM
- PLASTIC DRUM WITH CHEVRON
- TYPE III BARRICADE
- TEMPORARY SILT FENCE
- TEMPORARY ROCK FILTER DAM
- SANDBAGS FOR INLET PROTECTION
- DITCH

STATE OF TEXAS
MICHAEL W. MIDKIFF
75435
REGISTERED PROFESSIONAL ENGINEER
12/5/11

NO.	DATE	REVISION DESCRIPTION	APP. BY

© 2011

Texas Department of Transportation

MACTEC
3520 EXECUTIVE CENTER DRIVE
SUITE 200
AUSTIN, TEXAS 78731
(512) 795-0360
REGISTRATION NUMBER: F-1784

SH 151
TRAFFIC CONTROL & SW3P PHASE IIA SH 151 STA 491+00 TO STA 501+00
(SHEET 2 OF 7)

FED. RD. DIV. NO.			SHEET NO.
			58

STATE	DIST.	COUNTY	
TEXAS	SA	BEXAR	
CONT.	SECT.	JOB	HIGHWAY NO.
2452	01	043	SH 151

p:\4760\0-0129\cad\sheet\15ltcp2102.dgn 12/3/2011 7:03:10 PM mwmidkiff

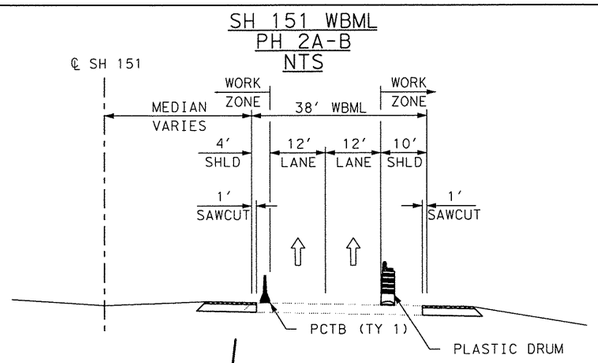

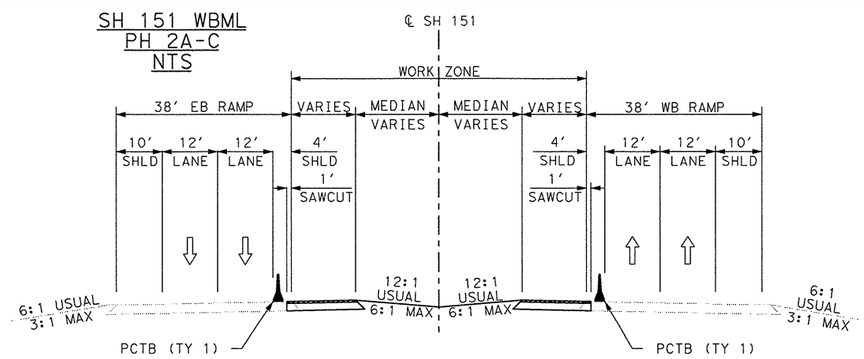

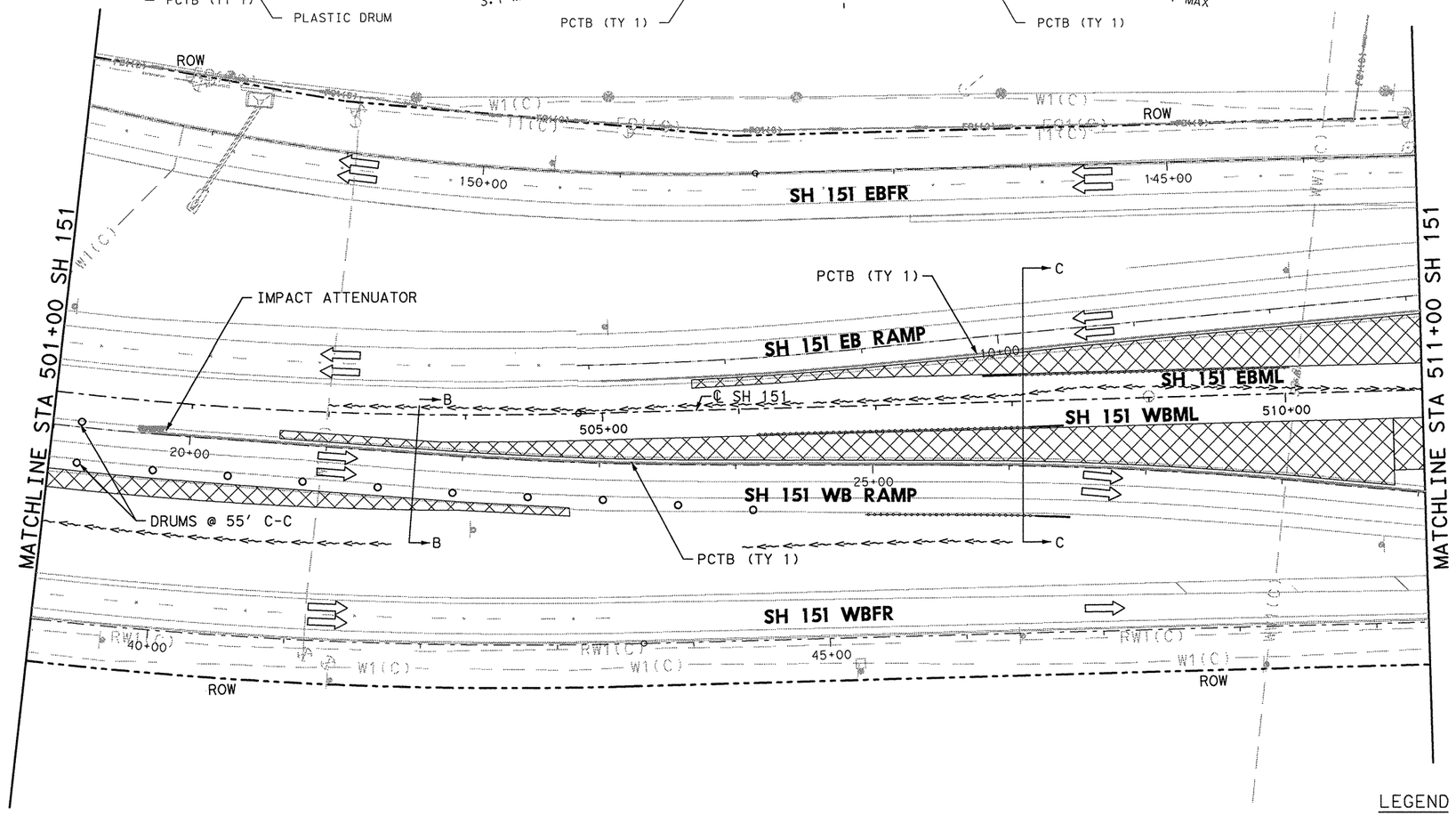

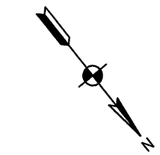

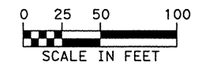

SHEET SUMMARY OF ESTIMATED QUANTITIES			
ITEM#	DESCRIPTION	UNIT	QTY

TEMPORARY SW3P ALL PHASES

1. ALL SW3P CONTROL MEASURES SHALL BE PLACED WITHIN TXDOT RIGHT-OF-WAY DURING CONSTRUCTION.
2. SHALL MAINTAIN SW3P CONTROL MEASURES THROUGHOUT CONSTRUCTION.
3. CONSTRUCTION ENTRANCE/EXIT AND CONCRETE WASH-OUT AREA TO BE DETERMINED BY ENGINEER OUT IN THE FIELD.
4. ALL SW3P CONTROL MEASURES INSTALLED DURING CONSTRUCTION ARE TO REMAIN IN PLACE UNTIL 70% VEGETATIVE COVER IS ACHIEVED OR AS APPROVED BY THE ENGINEER.
5. LOCATION OF SW3P CONTROL MEASURES TO BE DETERMINED BY ENGINEER IN THE FIELD.
6. ANTICIPATE ONE REPLACEMENT CYCLE FOR SW3P CONTROL MEASURES.
7. APPLY VEGETATIVE WATERING AS NEEDED TO SUPPLEMENT NATURAL RAINFALL DURING THE VEGETATION ESTABLISHMENT PERIOD. DROUGHT OR OTHER ENVIRONMENTAL CONDITIONS, AS DETERMINED BY THE ENGINEER, MAY REQUIRE THE APPLICATION OF SUPPLEMENTAL IRRIGATION TO BE BETWEEN THE HOURS OF 6PM AND 8AM.
8. SW3P CONTROL MEASURE SYMBOLS ARE NOT TO SCALE.

LEGEND

- PROPOSED CONSTRUCTION IN CURRENT PHASE
- TEMPORARY CONSTRUCTION IN CURRENT PHASE
- PROPOSED CONSTRUCTION IN PREVIOUS PHASE
- PAVEMENT REMOVAL IN CURRENT PHASE
- EXISTING TRAFFIC FLOW ARROW
- PROPOSED TRAFFIC FLOW ARROW
- CHANGEABLE MESSAGE SIGN
- ARROW BOARD
- PLASTIC DRUM
- PLASTIC DRUM WITH CHEVRON
- TYPE III BARRICADE
- TEMPORARY SILT FENCE
- RFD TEMPORARY ROCK FILTER DAM
- SANDBAGS FOR INLET PROTECTION
- DITCH

STATE OF TEXAS
MICHAEL W. MIDKIFF
75435
REGISTERED PROFESSIONAL ENGINEER
Michael W. Midkiff
12/5/11

NO.	DATE	REVISION DESCRIPTION	APP. BY

© 2011

Texas Department of Transportation

MACTEC
3520 EXECUTIVE CENTER DRIVE
SUITE 200
AUSTIN, TEXAS 78731
(512) 795-0360

REGISTRATION NUMBER: F-1784

SH 151
TRAFFIC CONTROL & SW3P PHASE IIA
SH 151
STA 501+00 TO STA 511+00
(SHEET 3 OF 7)

FED. RD. DIV. NO.			SHEET NO.
			59
STATE	DIST.	COUNTY	
TEXAS	SA	BEXAR	
CONT.	SECT.	JOB	HIGHWAY NO.
2452	01	043	SH 151

p:\4760\0-0129\cad\sheet\151tcp2103.dgn 12/3/2011 7:03:19 PM mwmidkiff

SHEET SUMMARY OF ESTIMATED QUANTITIES			
ITEM#	DESCRIPTION	UNIT	QTY

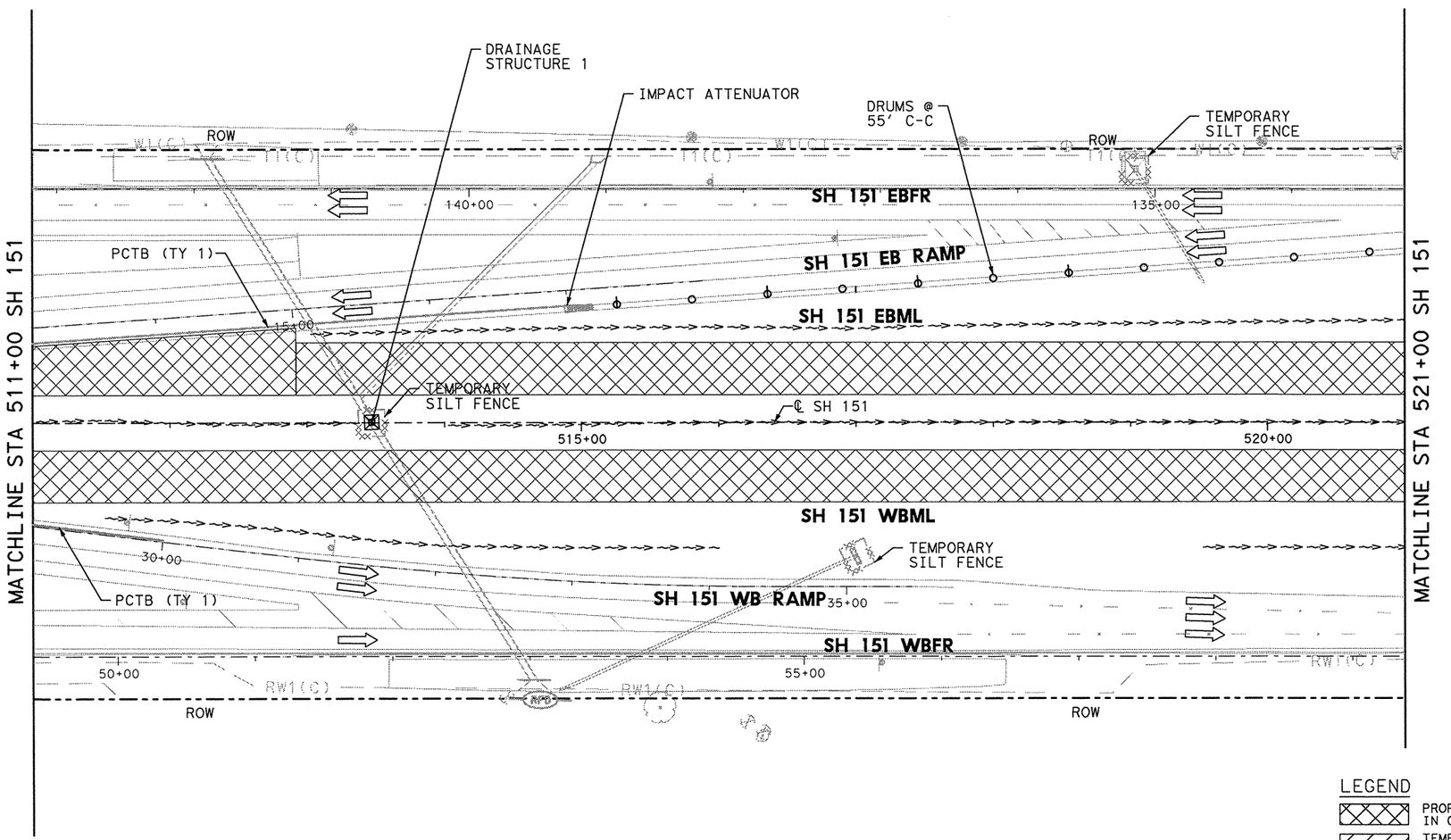

TEMPORARY SW3P ALL PHASES

1. ALL SW3P CONTROL MEASURES SHALL BE PLACED WITHIN TXDOT RIGHT-OF-WAY DURING CONSTRUCTION.
2. SHALL MAINTAIN SW3P CONTROL MEASURES THROUGHOUT CONSTRUCTION.
3. CONSTRUCTION ENTRANCE/EXIT AND CONCRETE WASH-OUT AREA TO BE DETERMINED BY ENGINEER OUT IN THE FIELD.
4. ALL SW3P CONTROL MEASURES INSTALLED DURING CONSTRUCTION ARE TO REMAIN IN PLACE UNTIL 70% VEGETATIVE COVER IS ACHIEVED OR AS APPROVED BY THE ENGINEER.
5. LOCATION OF SW3P CONTROL MEASURES TO BE DETERMINED BY ENGINEER IN THE FIELD.
6. ANTICIPATE ONE REPLACEMENT CYCLE FOR SW3P CONTROL MEASURES.
7. APPLY VEGETATIVE WATERING AS NEEDED TO SUPPLEMENT NATURAL RAINFALL DURING THE VEGETATION ESTABLISHMENT PERIOD. DROUGHT OR OTHER ENVIRONMENTAL CONDITIONS, AS DETERMINED BY THE ENGINEER, MAY REQUIRE THE APPLICATION OF SUPPLEMENTAL IRRIGATION TO BE BETWEEN THE HOURS OF 6PM AND 8AM.
8. SW3P CONTROL MEASURE SYMBOLS ARE NOT TO SCALE.

LEGEND

- PROPOSED CONSTRUCTION IN CURRENT PHASE
- TEMPORARY CONSTRUCTION IN CURRENT PHASE
- PROPOSED CONSTRUCTION IN PREVIOUS PHASE
- PAVEMENT REMOVAL IN CURRENT PHASE
- EXISTING TRAFFIC FLOW ARROW
- PROPOSED TRAFFIC FLOW ARROW
- CHANGEABLE MESSAGE SIGN
- ARROW BOARD
- PLASTIC DRUM
- PLASTIC DRUM WITH CHEVRON
- TYPE III BARRICADE
- TEMPORARY SILT FENCE
- TEMPORARY ROCK FILTER DAM
- SANDBAGS FOR INLET PROTECTION
- DITCH

STATE OF TEXAS
MICHAEL W. MIDKIFF
75435
REGISTERED PROFESSIONAL ENGINEER
12/5/11

NO.	DATE	REVISION DESCRIPTION	APP. BY

© 2011

Texas Department of Transportation

MACTEC
3520 EXECUTIVE CENTER DRIVE
SUITE 200
AUSTIN, TEXAS 78731
(512) 795-0360
REGISTRATION NUMBER: F-1784

SH 151
TRAFFIC CONTROL & SW3P PHASE IIA SH 151 STA 511+00 TO STA 521+00
(SHEET 4 OF 7)

FED. RD. DIV. NO.			SHEET NO.
			60
STATE	DIST.	COUNTY	
TEXAS	SA	BEXAR	
CONT.	SECT.	JOB	HIGHWAY NO.
2452	01	043	SH 151

p:\FRBONDO\29\cad\sheet\151tp2104.dgn 12/3/2011 7:03:29 PM mwmidkiff

SHEET SUMMARY OF ESTIMATED QUANTITIES			
ITEM#	DESCRIPTION	UNIT	QTY
0512	PORT CTB (REMOVE) (SNGL SLP) (TY 1)	LF	240
0545	CRASH CUSH ATTEN (REMOVE) (WORK	EA	1

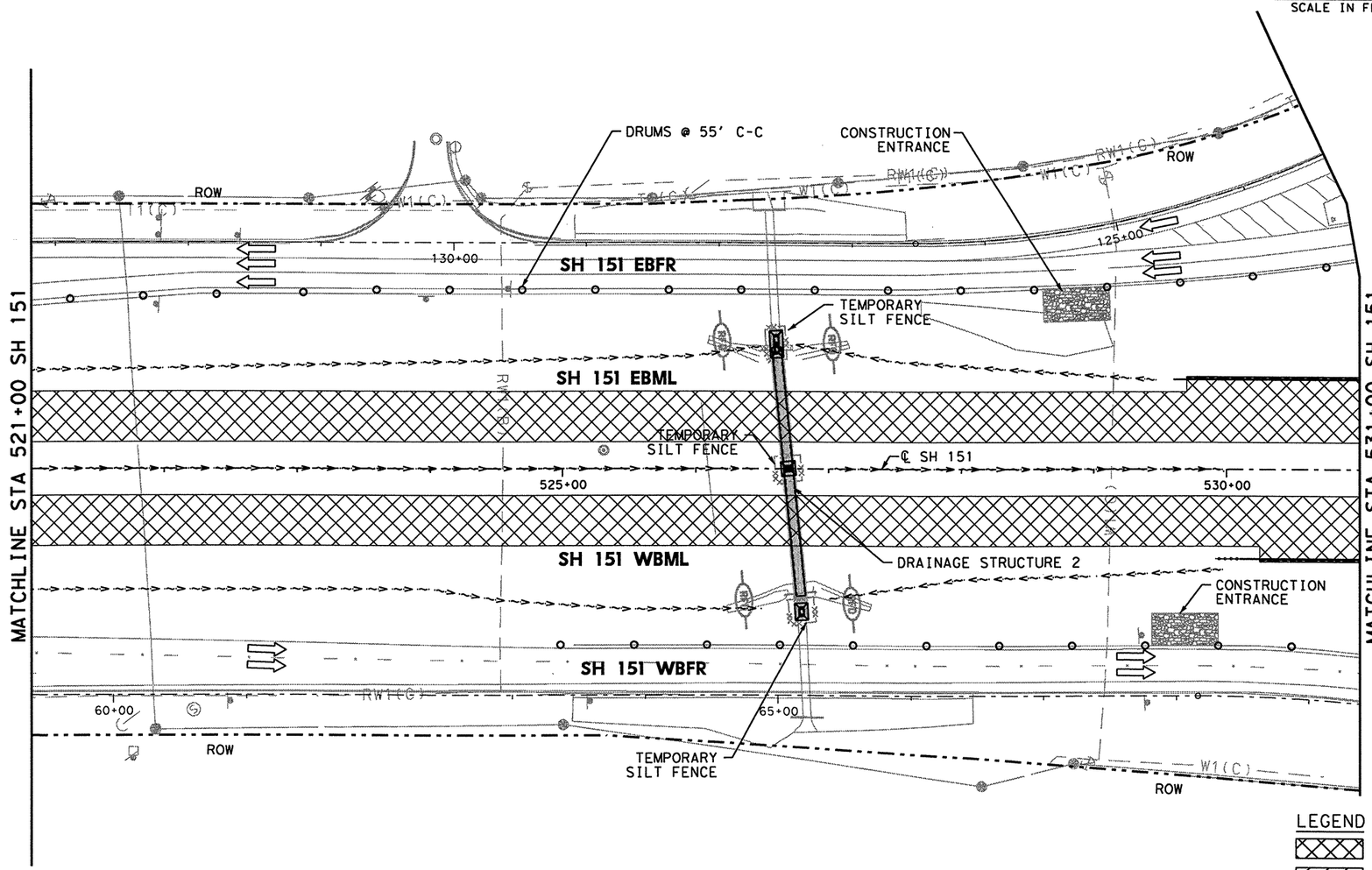

TEMPORARY SW3P ALL PHASES

1. ALL SW3P CONTROL MEASURES SHALL BE PLACED WITHIN TXDOT RIGHT-OF-WAY DURING CONSTRUCTION.
2. SHALL MAINTAIN SW3P CONTROL MEASURES THROUGHOUT CONSTRUCTION.
3. CONSTRUCTION ENTRANCE/EXIT AND CONCRETE WASH-OUT AREA TO BE DETERMINED BY ENGINEER OUT IN THE FIELD.
4. ALL SW3P CONTROL MEASURES INSTALLED DURING CONSTRUCTION ARE TO REMAIN IN PLACE UNTIL 70% VEGETATIVE COVER IS ACHIEVED OR AS APPROVED BY THE ENGINEER.
5. LOCATION OF SW3P CONTROL MEASURES TO BE DETERMINED BY ENGINEER IN THE FIELD.
6. ANTICIPATE ONE REPLACEMENT CYCLE FOR SW3P CONTROL MEASURES.
7. APPLY VEGETATIVE WATERING AS NEEDED TO SUPPLEMENT NATURAL RAINFALL DURING THE VEGETATION ESTABLISHMENT PERIOD. DROUGHT OR OTHER ENVIRONMENTAL CONDITIONS, AS DETERMINED BY THE ENGINEER, MAY REQUIRE THE APPLICATION OF SUPPLEMENTAL IRRIGATION TO BE BETWEEN THE HOURS OF 6PM AND 8AM.
8. SW3P CONTROL MEASURE SYMBOLS ARE NOT TO SCALE.

LEGEND

- PROPOSED CONSTRUCTION IN CURRENT PHASE
- TEMPORARY CONSTRUCTION IN CURRENT PHASE
- PROPOSED CONSTRUCTION IN PREVIOUS PHASE
- PAVEMENT REMOVAL IN CURRENT PHASE
- EXISTING TRAFFIC FLOW ARROW
- PROPOSED TRAFFIC FLOW ARROW
- CHANGEABLE MESSAGE SIGN
- ARROW BOARD
- PLASTIC DRUM
- PLASTIC DRUM WITH CHEVRON
- TYPE III BARRICADE
- TEMPORARY SILT FENCE
- TEMPORARY ROCK FILTER DAM
- SANDBAGS FOR INLET PROTECTION
- DITCH

STATE OF TEXAS
MICHAEL W. MIDKIFF
75435
REGISTERED PROFESSIONAL ENGINEER
4/11/11

NO.	DATE	REVISION DESCRIPTION	APP. BY

© 2011

Texas Department of Transportation

MACTEC
3520 EXECUTIVE CENTER DRIVE
SUITE 200
AUSTIN, TEXAS 78731
(512) 795-0360
REGISTRATION NUMBER: F-1784

SH 151
TRAFFIC CONTROL & SW3P PHASE IIA SH 151 STA 521+00 TO STA 531+00
(SHEET 5 OF 7)

FED. RD. DIV. NO.			SHEET NO.
			61
STATE	DIST.	COUNTY	
TEXAS	SA	BEXAR	
CONT.	SECT.	JOB	HIGHWAY NO.
2452	01	043	SH 151

p:\4760\0-0129\cad\sheet\151tcp2105.dgn 4/12/2011 5:52:45 PM mwmidkiff

SHEET SUMMARY OF ESTIMATED QUANTITIES			
ITEM#	DESCRIPTION	UNIT	QTY

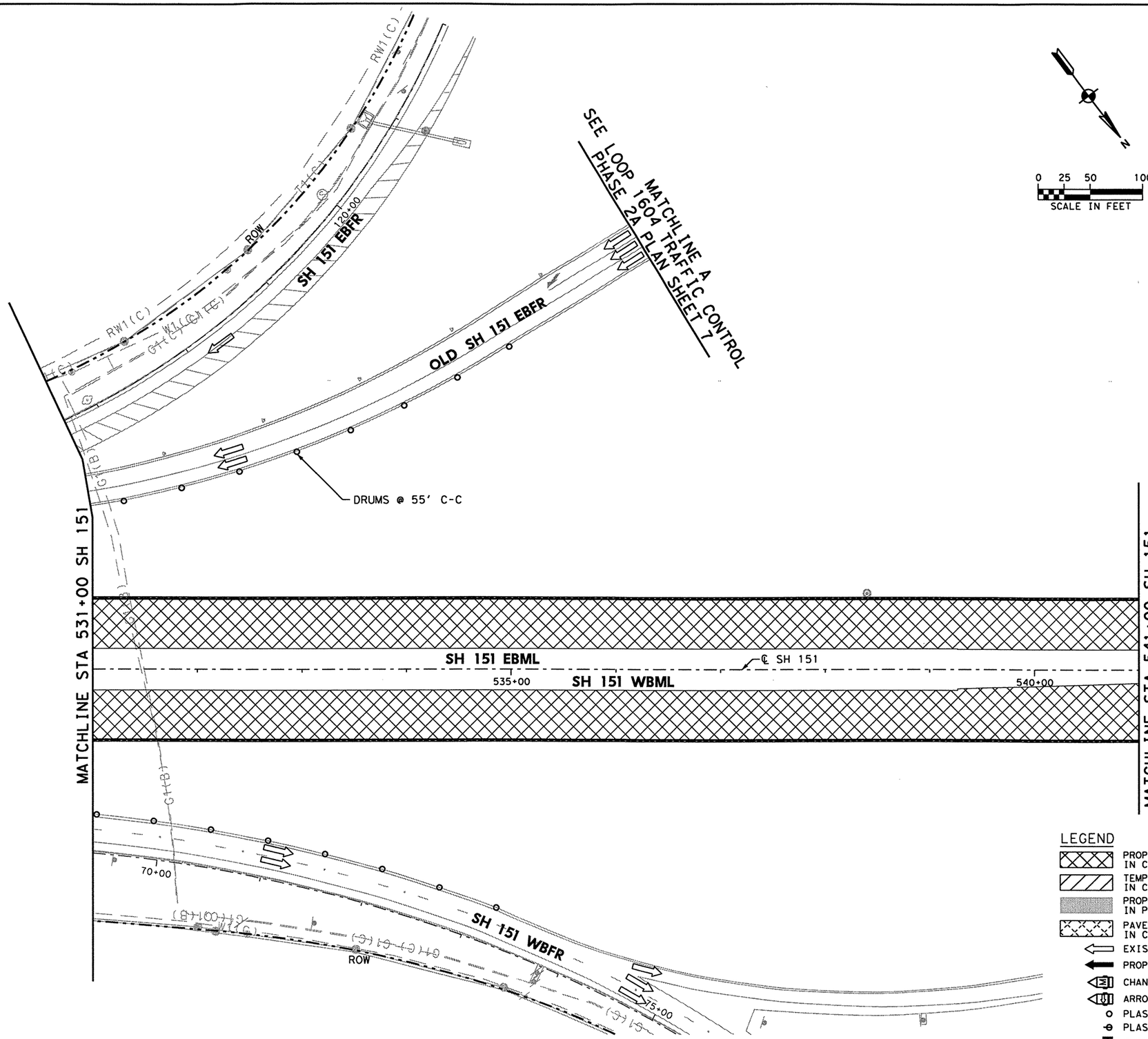

0 25 50 100
SCALE IN FEET

TEMPORARY SW3P ALL PHASES

1. ALL SW3P CONTROL MEASURES SHALL BE PLACED WITHIN TXDOT RIGHT-OF-WAY DURING CONSTRUCTION.
2. SHALL MAINTAIN SW3P CONTROL MEASURES THROUGHOUT CONSTRUCTION.
3. CONSTRUCTION ENTRANCE/EXIT AND CONCRETE WASH-OUT AREA TO BE DETERMINED BY ENGINEER OUT IN THE FIELD.
4. ALL SW3P CONTROL MEASURES INSTALLED DURING CONSTRUCTION ARE TO REMAIN IN PLACE UNTIL 70% VEGETATIVE COVER IS ACHIEVED OR AS APPROVED BY THE ENGINEER.
5. LOCATION OF SW3P CONTROL MEASURES TO BE DETERMINED BY ENGINEER IN THE FIELD.
6. ANTICIPATE ONE REPLACEMENT CYCLE FOR SW3P CONTROL MEASURES.
7. APPLY VEGETATIVE WATERING AS NEEDED TO SUPPLEMENT NATURAL RAINFALL DURING THE VEGETATION ESTABLISHMENT PERIOD. DROUGHT OR OTHER ENVIRONMENTAL CONDITIONS, AS DETERMINED BY THE ENGINEER, MAY REQUIRE THE APPLICATION OF SUPPLEMENTAL IRRIGATION TO BE BETWEEN THE HOURS OF 6PM AND 8AM.
8. SW3P CONTROL MEASURE SYMBOLS ARE NOT TO SCALE.

LEGEND

- PROPOSED CONSTRUCTION IN CURRENT PHASE
- TEMPORARY CONSTRUCTION IN CURRENT PHASE
- PROPOSED CONSTRUCTION IN PREVIOUS PHASE
- PAVEMENT REMOVAL IN CURRENT PHASE
- EXISTING TRAFFIC FLOW ARROW
- PROPOSED TRAFFIC FLOW ARROW
- CHANGEABLE MESSAGE SIGN
- ARROW BOARD
- PLASTIC DRUM
- PLASTIC DRUM WITH CHEVRON
- TYPE III BARRICADE
- TEMPORARY SILT FENCE
- TEMPORARY ROCK FILTER DAM
- SANDBAGS FOR INLET PROTECTION
- DITCH

STATE OF TEXAS
MICHAEL W. MIDKIFF
75435
REGISTERED PROFESSIONAL ENGINEER
3/18/11

NO.	DATE	REVISION DESCRIPTION	APP. BY

© 2011

Texas Department of Transportation

MACTEC
3520 EXECUTIVE CENTER DRIVE
SUITE 200
AUSTIN, TEXAS 78731
(512) 795-0360

REGISTRATION NUMBER: F-1784

SH 151
TRAFFIC CONTROL & SW3P PHASE IIA
SH 151
STA 531+00 TO STA 541+00
(SHEET 6 OF 7)

FED. RD. DIV. NO.			SHEET NO.
			62
STATE	DIST.	COUNTY	
TEXAS	SA	BEXAR	
CONT.	SECT.	JOB	HIGHWAY NO.
2452	01	043	SH 151

p:\4780\0-0129\cad\Sheet\Sitio\0106.dgn 3/18/2011 11:22:27 AM mwmidkiff

SHEET SUMMARY OF ESTIMATED QUANTITIES			
ITEM#	DESCRIPTION	UNIT	QTY
0403	TEMPORARY SPL SHORING	SF	3960
0506	TEMPORARY SEDIMENT CONTROL FENCE	LF	435

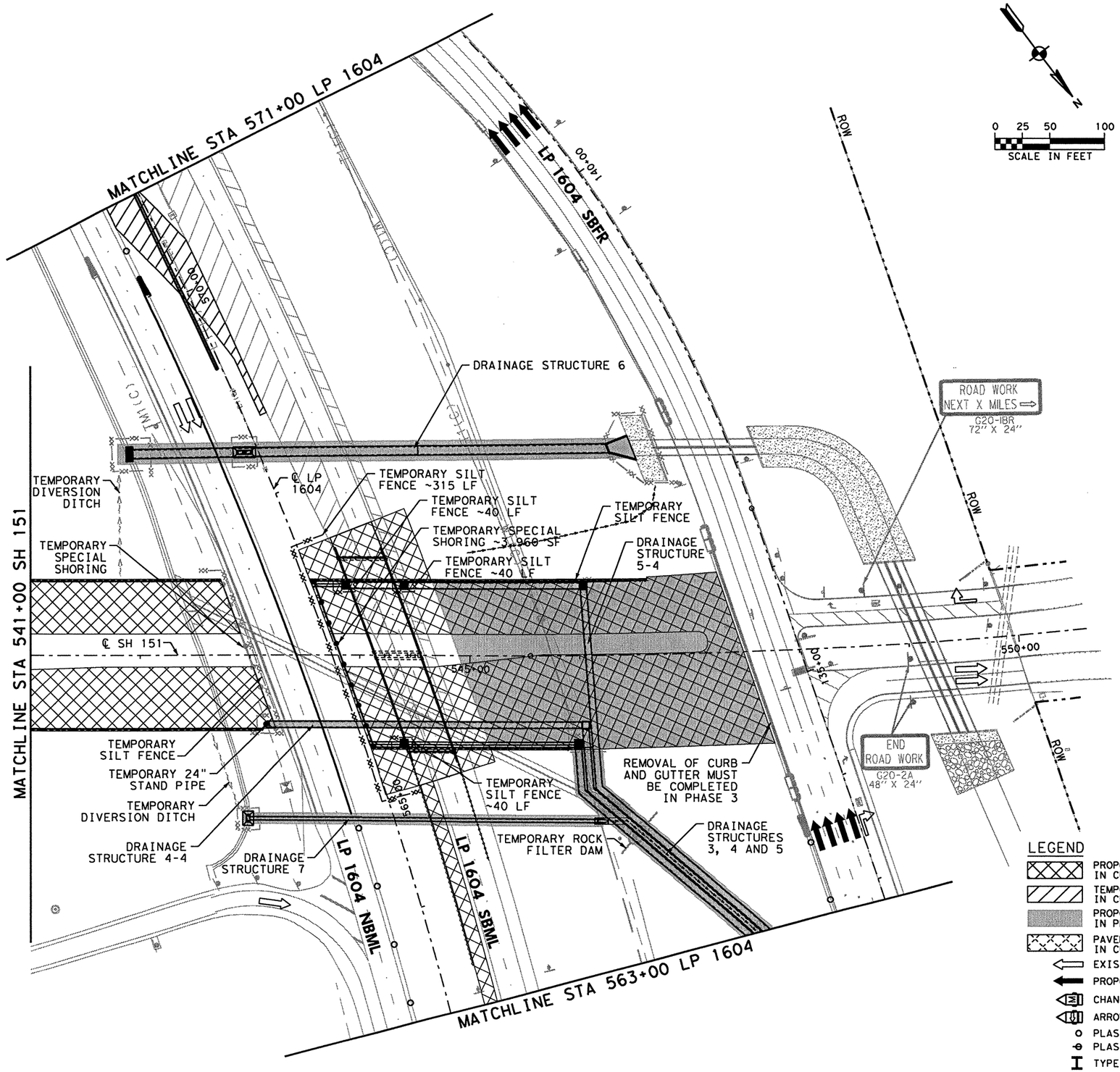

0 25 50 100
SCALE IN FEET

TEMPORARY SW3P ALL PHASES

1. ALL SW3P CONTROL MEASURES SHALL BE PLACED WITHIN TXDOT RIGHT-OF-WAY DURING CONSTRUCTION.
2. SHALL MAINTAIN SW3P CONTROL MEASURES THROUGHOUT CONSTRUCTION.
3. CONSTRUCTION ENTRANCE/EXIT AND CONCRETE WASH-OUT AREA TO BE DETERMINED BY ENGINEER OUT IN THE FIELD.
4. ALL SW3P CONTROL MEASURES INSTALLED DURING CONSTRUCTION ARE TO REMAIN IN PLACE UNTIL 70% VEGETATIVE COVER IS ACHIEVED OR AS APPROVED BY THE ENGINEER.
5. LOCATION OF SW3P CONTROL MEASURES TO BE DETERMINED BY ENGINEER IN THE FIELD.
6. ANTICIPATE ONE REPLACEMENT CYCLE FOR SW3P CONTROL MEASURES.
7. APPLY VEGETATIVE WATERING AS NEEDED TO SUPPLEMENT NATURAL RAINFALL DURING THE VEGETATION ESTABLISHMENT PERIOD. DROUGHT OR OTHER ENVIRONMENTAL CONDITIONS, AS DETERMINED BY THE ENGINEER, MAY REQUIRE THE APPLICATION OF SUPPLEMENTAL IRRIGATION TO BE BETWEEN THE HOURS OF 6PM AND 8AM.
8. SW3P CONTROL MEASURE SYMBOLS ARE NOT TO SCALE.

LEGEND

- PROPOSED CONSTRUCTION IN CURRENT PHASE
- TEMPORARY CONSTRUCTION IN CURRENT PHASE
- PROPOSED CONSTRUCTION IN PREVIOUS PHASE
- PAVEMENT REMOVAL IN CURRENT PHASE
- EXISTING TRAFFIC FLOW ARROW
- PROPOSED TRAFFIC FLOW ARROW
- CHANGEABLE MESSAGE SIGN
- ARROW BOARD
- PLASTIC DRUM
- PLASTIC DRUM WITH CHEVRON
- TYPE III BARRICADE
- TEMPORARY SILT FENCE
- TEMPORARY ROCK FILTER DAM
- SANDBAGS FOR INLET PROTECTION
- DITCH

STATE OF TEXAS
MICHAEL W. MIDKIFF
75435
REGISTERED PROFESSIONAL ENGINEER
3/18/11

NO.	DATE	REVISION DESCRIPTION	APP. BY

© 2011

Texas Department of Transportation

MACTEC
3520 EXECUTIVE CENTER DRIVE
SUITE 200
AUSTIN, TEXAS 78731
(512) 795-0360
REGISTRATION NUMBER: F-1784

SH 151
TRAFFIC CONTROL & SW3P PHASE IIA SH 151 STA 541+00 TO END PROJECT
(SHEET 7 OF 7)

FED. RD. DIV. NO.			SHEET NO.
			63
STATE	DIST.	COUNTY	
TEXAS	SA	BEXAR	
CONT.	SECT.	JOB	HIGHWAY NO.
2452	01	043	SH 151

p:\4760\ND-0129\cad\Street\Sh1\p2\07.dgn 3/18/2011 11:22:36 AM mwmidkiff

SHEET SUMMARY OF ESTIMATED QUANTITIES			
ITEM#	DESCRIPTION	UNIT	QTY

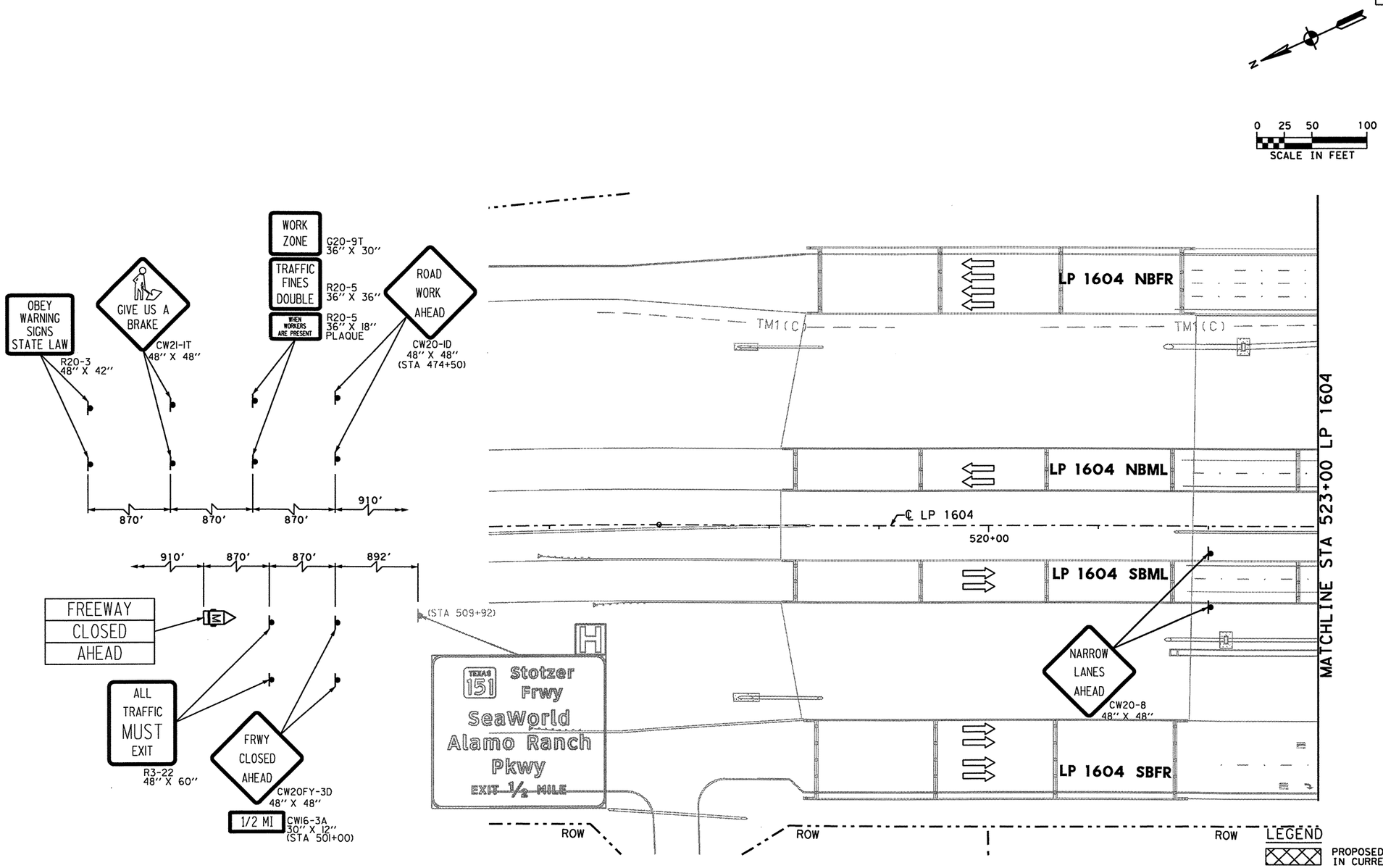

TEMPORARY SW3P ALL PHASES

1. ALL SW3P CONTROL MEASURES SHALL BE PLACED WITHIN TXDOT RIGHT-OF-WAY DURING CONSTRUCTION.
2. SHALL MAINTAIN SW3P CONTROL MEASURES THROUGHOUT CONSTRUCTION.
3. CONSTRUCTION ENTRANCE/EXIT AND CONCRETE WASH-OUT AREA TO BE DETERMINED BY ENGINEER OUT IN THE FIELD.
4. ALL SW3P CONTROL MEASURES INSTALLED DURING CONSTRUCTION ARE TO REMAIN IN PLACE UNTIL 70% VEGETATIVE COVER IS ACHIEVED OR AS APPROVED BY THE ENGINEER.
5. LOCATION OF SW3P CONTROL MEASURES TO BE DETERMINED BY ENGINEER IN THE FIELD.
6. ANTICIPATE ONE REPLACEMENT CYCLE FOR SW3P CONTROL MEASURES.
7. APPLY VEGETATIVE WATERING AS NEEDED TO SUPPLEMENT NATURAL RAINFALL DURING THE VEGETATION ESTABLISHMENT PERIOD. DROUGHT OR OTHER ENVIRONMENTAL CONDITIONS, AS DETERMINED BY THE ENGINEER, MAY REQUIRE THE APPLICATION OF SUPPLEMENTAL IRRIGATION TO BE BETWEEN THE HOURS OF 6PM AND 8AM.
8. SW3P CONTROL MEASURE SYMBOLS ARE NOT TO SCALE.

LEGEND

- PROPOSED CONSTRUCTION IN CURRENT PHASE
- TEMPORARY CONSTRUCTION IN CURRENT PHASE
- PROPOSED CONSTRUCTION IN PREVIOUS PHASE
- PAVEMENT REMOVAL IN CURRENT PHASE
- EXISTING TRAFFIC FLOW ARROW
- PROPOSED TRAFFIC FLOW ARROW
- CHANGEABLE MESSAGE SIGN
- ARROW BOARD
- PLASTIC DRUM
- PLASTIC DRUM WITH CHEVRON
- TYPE III BARRICADE
- TEMPORARY SILT FENCE
- RFD TEMPORARY ROCK FILTER DAM
- SANDBAGS FOR INLET PROTECTION
- DITCH

STATE OF TEXAS
MICHAEL W. MIDKIFF
75435
REGISTERED PROFESSIONAL ENGINEER
4/11/11

NO.	DATE	REVISION DESCRIPTION	APP. BY

© 2011

Texas Department of Transportation

MACTEC
3520 EXECUTIVE CENTER DRIVE
SUITE 200
AUSTIN, TEXAS 78731
(512) 795-0360

REGISTRATION NUMBER: F-1784

SH 151
TRAFFIC CONTROL & SW3P PHASE IIA
LP 1604
BEGIN PROJECT TO STA 523+00
(SHEET 1 OF 8)

FED. RD. DIV. NO.			SHEET NO.
			64
STATE	DIST.	COUNTY	
TEXAS	SA	BEXAR	
CONT.	SECT.	JOB	HIGHWAY NO.
2452	01	043	SH 151

p:\4760\0-0129\cad\sheet\151tcp2108.dgn 4/12/2011 5:52:54 PM mwmidkiff

SHEET SUMMARY OF ESTIMATED QUANTITIES			
ITEM#	DESCRIPTION	UNIT	QTY
0662	WK ZN PAV MRK NON-REMOV (W) 4" (SLD)	LF	628
0662	WK ZN PAV MRK NON-REMOV (Y) 4" (SLD)	LF	563
0677	ELIM EXT PAV MRK & MRKS (4")	LF	870

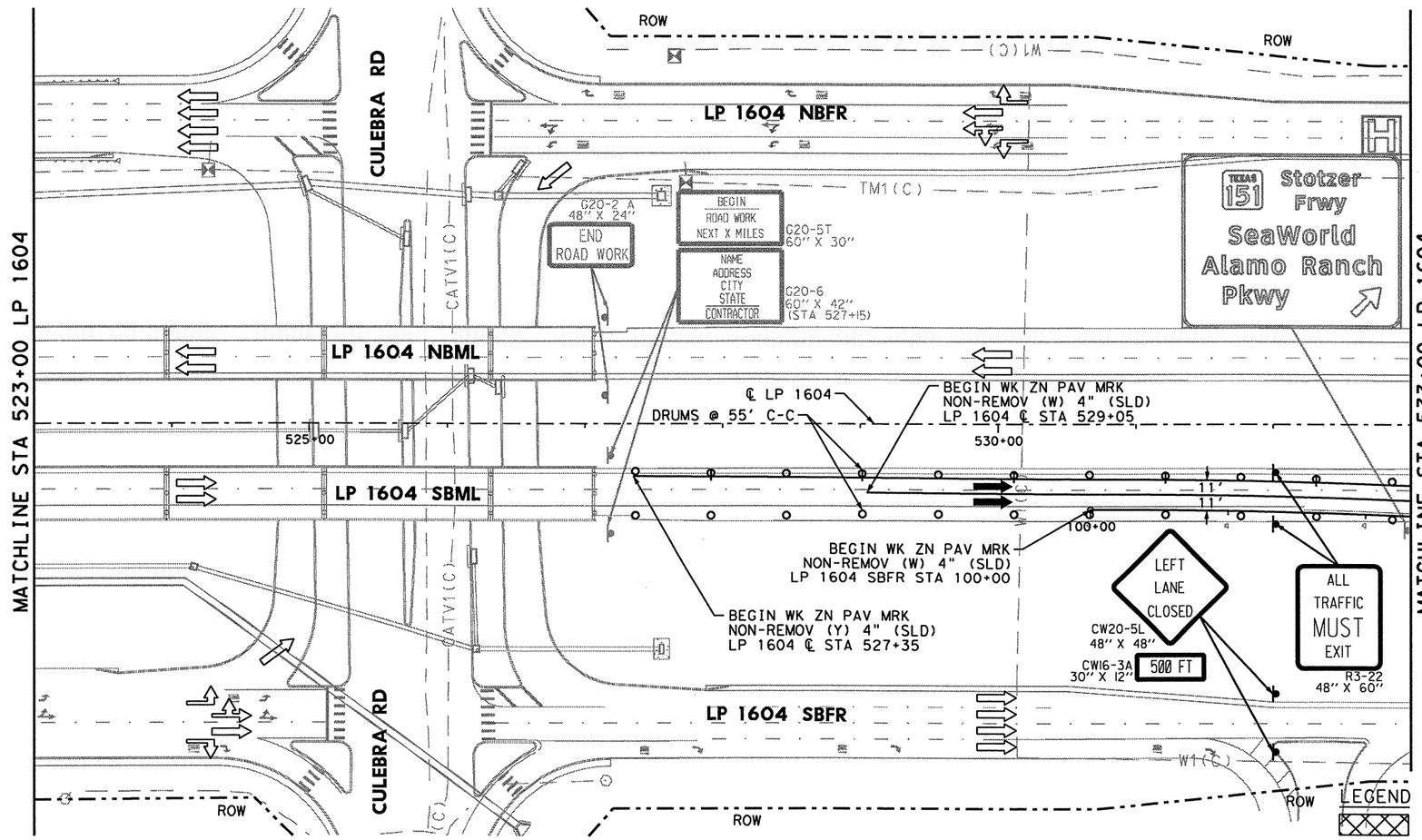

0 25 50 100
SCALE IN FEET

TEMPORARY SW3P ALL PHASES

1. ALL SW3P CONTROL MEASURES SHALL BE PLACED WITHIN TXDOT RIGHT-OF-WAY DURING CONSTRUCTION.
2. SHALL MAINTAIN SW3P CONTROL MEASURES THROUGHOUT CONSTRUCTION.
3. CONSTRUCTION ENTRANCE/EXIT AND CONCRETE WASH-OUT AREA TO BE DETERMINED BY ENGINEER OUT IN THE FIELD.
4. ALL SW3P CONTROL MEASURES INSTALLED DURING CONSTRUCTION ARE TO REMAIN IN PLACE UNTIL 70% VEGETATIVE COVER IS ACHIEVED OR AS APPROVED BY THE ENGINEER.
5. LOCATION OF SW3P CONTROL MEASURES TO BE DETERMINED BY ENGINEER IN THE FIELD.
6. ANTICIPATE ONE REPLACEMENT CYCLE FOR SW3P CONTROL MEASURES.
7. APPLY VEGETATIVE WATERING AS NEEDED TO SUPPLEMENT NATURAL RAINFALL DURING THE VEGETATION ESTABLISHMENT PERIOD. DROUGHT OR OTHER ENVIRONMENTAL CONDITIONS, AS DETERMINED BY THE ENGINEER, MAY REQUIRE THE APPLICATION OF SUPPLEMENTAL IRRIGATION TO BE BETWEEN THE HOURS OF 6PM AND 8AM.
8. SW3P CONTROL MEASURE SYMBOLS ARE NOT TO SCALE.

LEGEND

- PROPOSED CONSTRUCTION IN CURRENT PHASE
- TEMPORARY CONSTRUCTION IN CURRENT PHASE
- PROPOSED CONSTRUCTION IN PREVIOUS PHASE
- PAVEMENT REMOVAL IN CURRENT PHASE
- EXISTING TRAFFIC FLOW ARROW
- PROPOSED TRAFFIC FLOW ARROW
- CHANGEABLE MESSAGE SIGN
- ARROW BOARD
- PLASTIC DRUM
- PLASTIC DRUM WITH CHEVRON
- TYPE III BARRICADE
- TEMPORARY SILT FENCE
- TEMPORARY ROCK FILTER DAM
- SANDBAGS FOR INLET PROTECTION
- DITCH

STATE OF TEXAS
MICHAEL W. MIDKIFF
75435
REGISTERED PROFESSIONAL ENGINEER
3/18/11

NO.	DATE	REVISION DESCRIPTION	APP. BY

©2011

Texas Department of Transportation

MACTEC
3520 EXECUTIVE CENTER DRIVE
SUITE 200
AUSTIN, TEXAS 78731
(512) 795-0360

REGISTRATION NUMBER: F-1784

SH 151
TRAFFIC CONTROL & SW3P PHASE IIA
LP 1604
STA 523+00 TO STA 533+00
(SHEET 2 OF 8)

FED. RD. DIV. NO.			SHEET NO.
			65
STATE	DIST.	COUNTY	
TEXAS	SA	BEXAR	
CONT.	SECT.	JOB	HIGHWAY NO.
2452	01	043	SH 151

p:\4760\0-0129\cad\sheet\151tcp2109.dgn 3/18/2011 11:22:53 AM mwmidkiff

SHEET SUMMARY OF ESTIMATED QUANTITIES			
ITEM#	DESCRIPTION	UNIT	QTY
0662	WK ZN PAV MRK NON-REMOV (W) 4" (SLD)	LF	2432
0662	WK ZN PAV MRK NON-REMOV (Y) 4" (SLD)	LF	697
0677	ELIM EXT PAV MRK & MRKS (4")	LF	2700

0 25 50 100
SCALE IN FEET

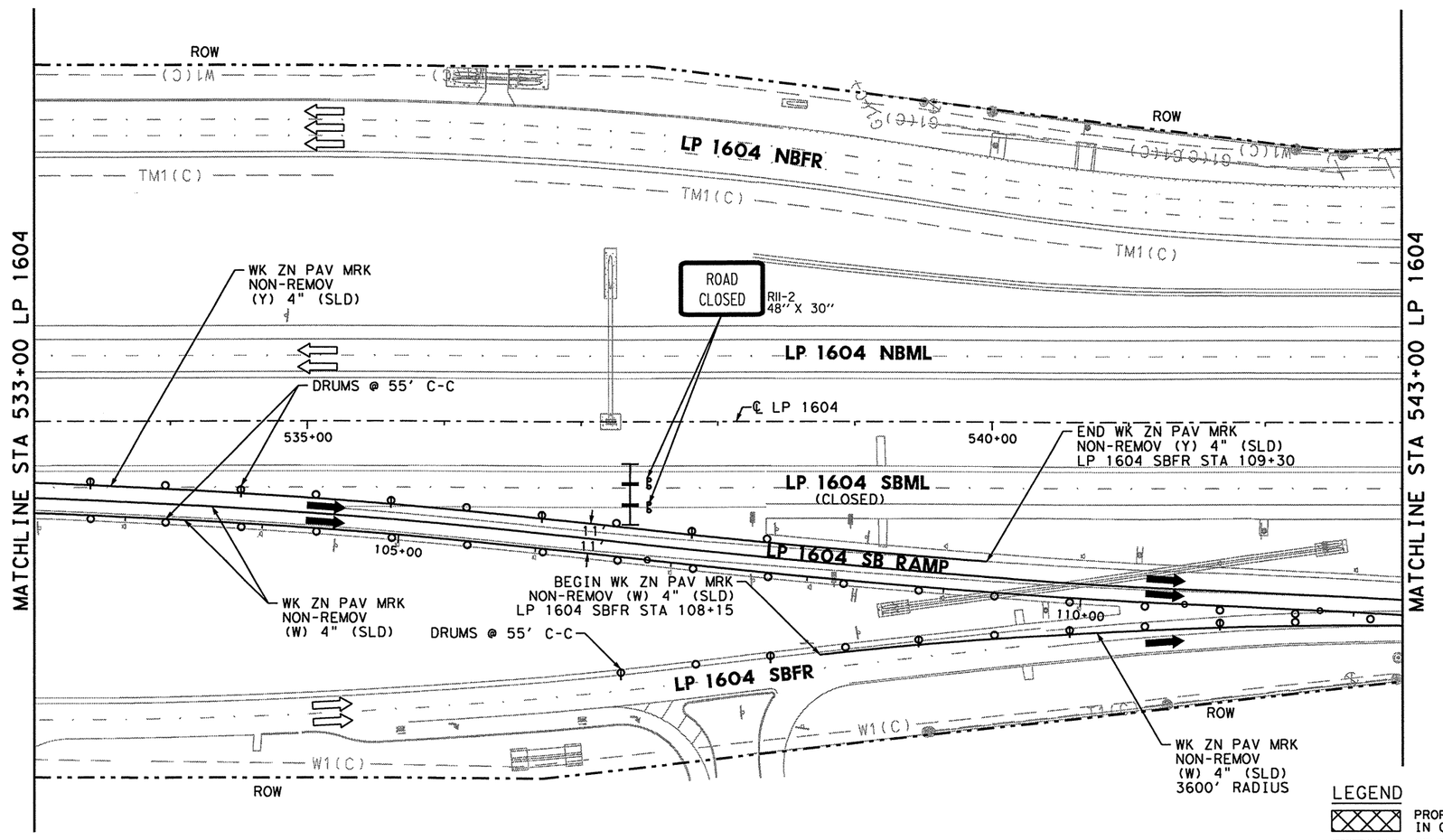

TEMPORARY SW3P ALL PHASES

1. ALL SW3P CONTROL MEASURES SHALL BE PLACED WITHIN TXDOT RIGHT-OF-WAY DURING CONSTRUCTION.
2. SHALL MAINTAIN SW3P CONTROL MEASURES THROUGHOUT CONSTRUCTION.
3. CONSTRUCTION ENTRANCE/EXIT AND CONCRETE WASH-OUT AREA TO BE DETERMINED BY ENGINEER OUT IN THE FIELD.
4. ALL SW3P CONTROL MEASURES INSTALLED DURING CONSTRUCTION ARE TO REMAIN IN PLACE UNTIL 70% VEGETATIVE COVER IS ACHIEVED OR AS APPROVED BY THE ENGINEER.
5. LOCATION OF SW3P CONTROL MEASURES TO BE DETERMINED BY ENGINEER IN THE FIELD.
6. ANTICIPATE ONE REPLACEMENT CYCLE FOR SW3P CONTROL MEASURES.
7. APPLY VEGETATIVE WATERING AS NEEDED TO SUPPLEMENT NATURAL RAINFALL DURING THE VEGETATION ESTABLISHMENT PERIOD. DROUGHT OR OTHER ENVIRONMENTAL CONDITIONS, AS DETERMINED BY THE ENGINEER, MAY REQUIRE THE APPLICATION OF SUPPLEMENTAL IRRIGATION TO BE BETWEEN THE HOURS OF 6PM AND 8AM.
8. SW3P CONTROL MEASURE SYMBOLS ARE NOT TO SCALE.

LEGEND

- PROPOSED CONSTRUCTION IN CURRENT PHASE
- TEMPORARY CONSTRUCTION IN CURRENT PHASE
- PROPOSED CONSTRUCTION IN PREVIOUS PHASE
- PAVEMENT REMOVAL IN CURRENT PHASE
- EXISTING TRAFFIC FLOW ARROW
- PROPOSED TRAFFIC FLOW ARROW
- CHANGEABLE MESSAGE SIGN
- ARROW BOARD
- PLASTIC DRUM
- PLASTIC DRUM WITH CHEVRON
- TYPE III BARRICADE
- TEMPORARY SILT FENCE
- RFD — TEMPORARY ROCK FILTER DAM
- SANDBAGS FOR INLET PROTECTION
- DITCH

STATE OF TEXAS
MICHAEL W. MIDKIFF
75435
REGISTERED PROFESSIONAL ENGINEER
4/11/11

NO.	DATE	REVISION DESCRIPTION	APP. BY

© 2011

Texas Department of Transportation

MACTEC
3520 EXECUTIVE CENTER DRIVE
SUITE 200
AUSTIN, TEXAS 78731
(512) 795-0360
REGISTRATION NUMBER: F-1784

SH 151
TRAFFIC CONTROL & SW3P PHASE IIA
LP 1604
STA 533+00 TO STA 543+00
(SHEET 3 OF 8)

FED. RD. DIV. NO.			SHEET NO.
			66
STATE	DIST.	COUNTY	
TEXAS	SA	BEXAR	
CONT.	SECT.	JOB	HIGHWAY NO.
2452	01	043	SH 151

p:\4760\0-0129\cad\sheet\151tcp2ii0.dgn 4/12/2011 5:53:02 PM mwmidkiff

SHEET SUMMARY OF ESTIMATED QUANTITIES			
ITEM#	DESCRIPTION	UNIT	QTY
0662	WK ZN PAV MRK NON-REMOV (W) 4" (SLD)	LF	897
0677	ELIM EXT PAV MRK & MRKS (4")	LF	685

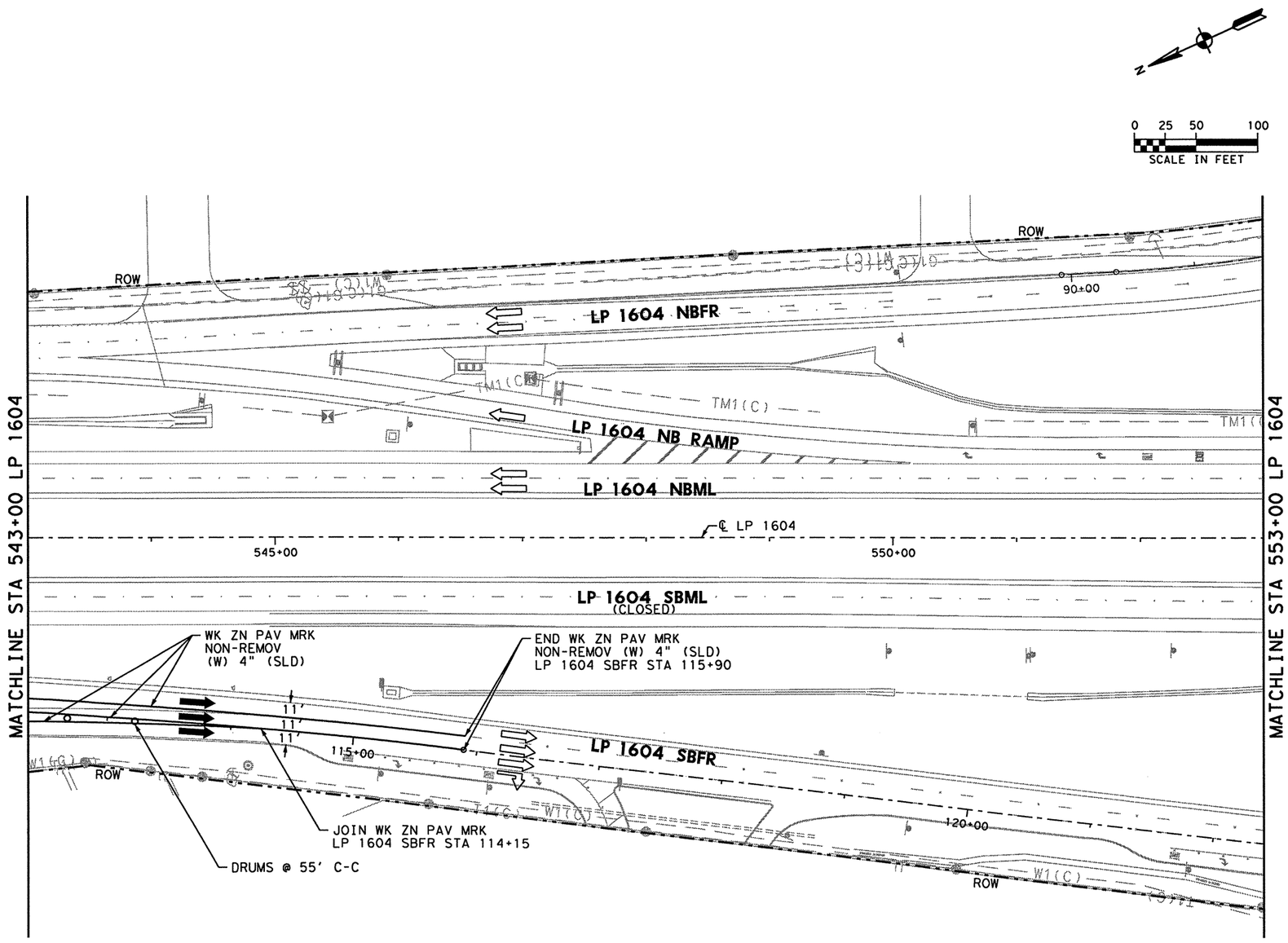

TEMPORARY SW3P ALL PHASES

1. ALL SW3P CONTROL MEASURES SHALL BE PLACED WITHIN TXDOT RIGHT-OF-WAY DURING CONSTRUCTION.
2. SHALL MAINTAIN SW3P CONTROL MEASURES THROUGHOUT CONSTRUCTION.
3. CONSTRUCTION ENTRANCE/EXIT AND CONCRETE WASH-OUT AREA TO BE DETERMINED BY ENGINEER OUT IN THE FIELD.
4. ALL SW3P CONTROL MEASURES INSTALLED DURING CONSTRUCTION ARE TO REMAIN IN PLACE UNTIL 70% VEGETATIVE COVER IS ACHIEVED OR AS APPROVED BY THE ENGINEER.
5. LOCATION OF SW3P CONTROL MEASURES TO BE DETERMINED BY ENGINEER IN THE FIELD.
6. ANTICIPATE ONE REPLACEMENT CYCLE FOR SW3P CONTROL MEASURES.
7. APPLY VEGETATIVE WATERING AS NEEDED TO SUPPLEMENT NATURAL RAINFALL DURING THE VEGETATION ESTABLISHMENT PERIOD. DROUGHT OR OTHER ENVIRONMENTAL CONDITIONS, AS DETERMINED BY THE ENGINEER, MAY REQUIRE THE APPLICATION OF SUPPLEMENTAL IRRIGATION TO BE BETWEEN THE HOURS OF 6PM AND 8AM.
8. SW3P CONTROL MEASURE SYMBOLS ARE NOT TO SCALE.

LEGEND

- PROPOSED CONSTRUCTION IN CURRENT PHASE
- TEMPORARY CONSTRUCTION IN CURRENT PHASE
- PROPOSED CONSTRUCTION IN PREVIOUS PHASE
- PAVEMENT REMOVAL IN CURRENT PHASE
- EXISTING TRAFFIC FLOW ARROW
- PROPOSED TRAFFIC FLOW ARROW
- CHANGEABLE MESSAGE SIGN
- ARROW BOARD
- PLASTIC DRUM
- PLASTIC DRUM WITH CHEVRON
- TYPE III BARRICADE
- TEMPORARY SILT FENCE
- RFD TEMPORARY ROCK FILTER DAM
- SANDBAGS FOR INLET PROTECTION
- DITCH

STATE OF TEXAS
MICHAEL W. MIDKIFF
75435
REGISTERED PROFESSIONAL ENGINEER

Michael W. Midkiff
3/18/11

NO.	DATE	REVISION DESCRIPTION	APP. BY

© 2011

Texas Department of Transportation

MACTEC
3520 EXECUTIVE CENTER DRIVE
SUITE 200
AUSTIN, TEXAS 78731
(512) 795-0360

REGISTRATION NUMBER: F-1784

SH 151
TRAFFIC CONTROL & SW3P PHASE IIA
LP 1604
STA 543+00 TO STA 553+00
(SHEET 4 OF 8)

FED. RD. DIV. NO.			SHEET NO.
			67
STATE	DIST.	COUNTY	
TEXAS	SA	BEXAR	
CONT.	SECT.	JOB	HIGHWAY NO.
2452	01	043	SH 151

p:\4760\0-0129\cad\sheet\51tcp2111.dgn 3/18/2011 11:23:11 AM mwmidkiff

SHEET SUMMARY OF ESTIMATED QUANTITIES			
ITEM#	DESCRIPTION	UNIT	QTY
0464	RC PIPE (CL III) (18 IN)	LF	300
0506	ROCK FILTER DAMS (INSTALL) (TY 2)	LF	40
0506	TEMPORARY SEDIMENT CONTROL FENCE	LF	65
0508	CONSTRUCTING DETOURS	STA	5.75

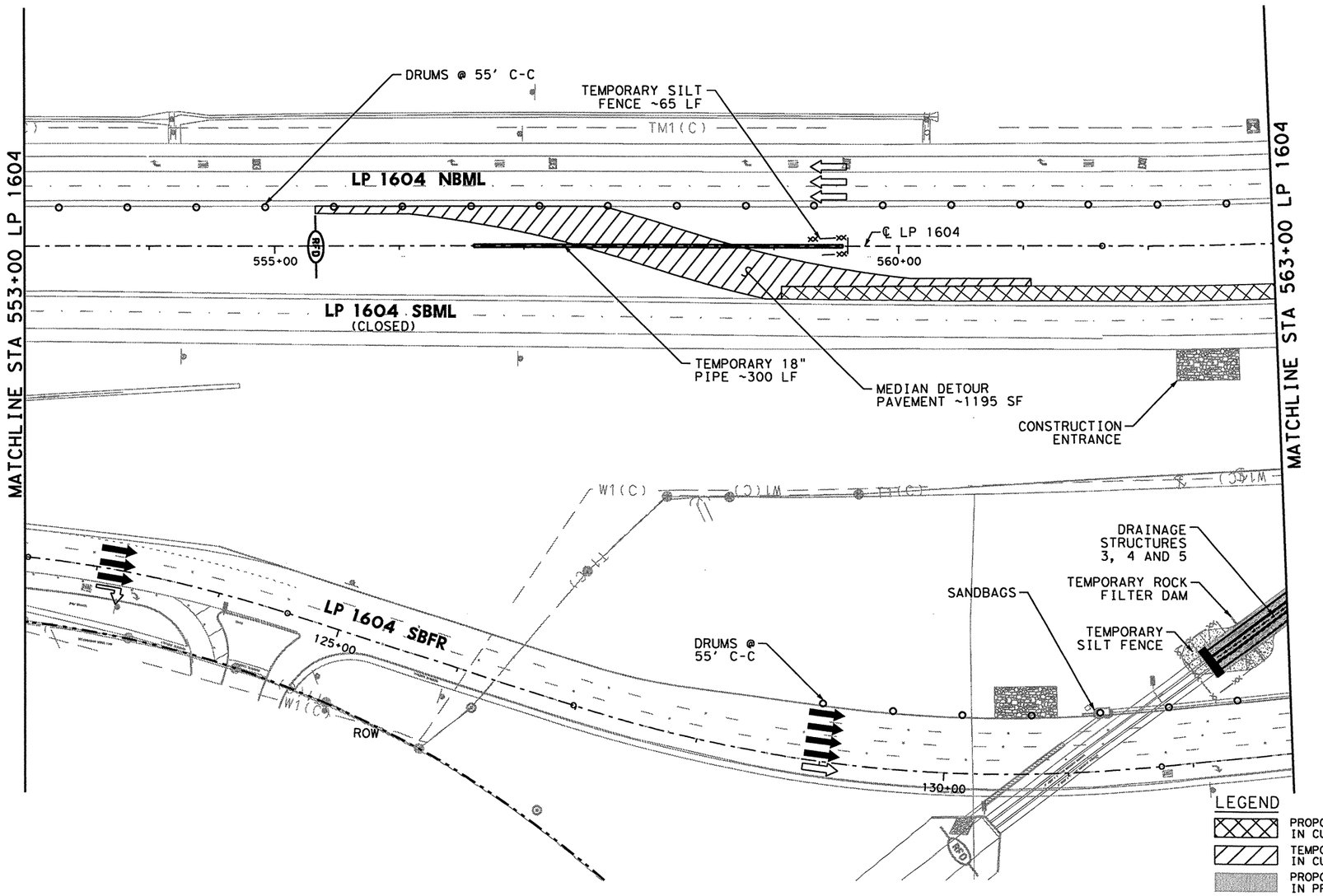

TEMPORARY SW3P ALL PHASES

1. ALL SW3P CONTROL MEASURES SHALL BE PLACED WITHIN TXDOT RIGHT-OF-WAY DURING CONSTRUCTION.
2. SHALL MAINTAIN SW3P CONTROL MEASURES THROUGHOUT CONSTRUCTION.
3. CONSTRUCTION ENTRANCE/EXIT AND CONCRETE WASH-OUT AREA TO BE DETERMINED BY ENGINEER OUT IN THE FIELD.
4. ALL SW3P CONTROL MEASURES INSTALLED DURING CONSTRUCTION ARE TO REMAIN IN PLACE UNTIL 70% VEGETATIVE COVER IS ACHIEVED OR AS APPROVED BY THE ENGINEER.
5. LOCATION OF SW3P CONTROL MEASURES TO BE DETERMINED BY ENGINEER IN THE FIELD.
6. ANTICIPATE ONE REPLACEMENT CYCLE FOR SW3P CONTROL MEASURES.
7. APPLY VEGETATIVE WATERING AS NEEDED TO SUPPLEMENT NATURAL RAINFALL DURING THE VEGETATION ESTABLISHMENT PERIOD. DROUGHT OR OTHER ENVIRONMENTAL CONDITIONS, AS DETERMINED BY THE ENGINEER, MAY REQUIRE THE APPLICATION OF SUPPLEMENTAL IRRIGATION TO BE BETWEEN THE HOURS OF 6PM AND 8AM.
8. SW3P CONTROL MEASURE SYMBOLS ARE NOT TO SCALE.

LEGEND

- PROPOSED CONSTRUCTION IN CURRENT PHASE
- TEMPORARY CONSTRUCTION IN CURRENT PHASE
- PROPOSED CONSTRUCTION IN PREVIOUS PHASE
- PAVEMENT REMOVAL IN CURRENT PHASE
- EXISTING TRAFFIC FLOW ARROW
- PROPOSED TRAFFIC FLOW ARROW
- CHANGEABLE MESSAGE SIGN
- ARROW BOARD
- PLASTIC DRUM
- PLASTIC DRUM WITH CHEVRON
- TYPE III BARRICADE
- TEMPORARY SILT FENCE
- TEMPORARY ROCK FILTER DAM
- SANDBAGS FOR INLET PROTECTION
- DITCH

STATE OF TEXAS
MICHAEL W. MIDKIFF
75435
REGISTERED PROFESSIONAL ENGINEER
3/18/11

NO.	DATE	REVISION DESCRIPTION	APP. BY

© 2011

Texas Department of Transportation

MACTEC
3520 EXECUTIVE CENTER DRIVE
SUITE 200
AUSTIN, TEXAS 78731
(512) 795-0360

REGISTRATION NUMBER: F-1784

SH 151
TRAFFIC CONTROL & SW3P PHASE IIA
LP 1604
STA 553+00 TO STA 563+00
(SHEET 5 OF 8)

FED. RD. DIV. NO.			SHEET NO.
			68
STATE	DIST.	COUNTY	
TEXAS	SA	BEXAR	
CONT.	SECT.	JOB	HIGHWAY NO.
2452	01	043	SH 151

pw:\FTSO\ND-0129\cad\Sheet\Sh1ap2112.dgn 3/18/2011 11:23:20 AM mwmidkiff

LP 1604 SBFR
PH 2A-D
NTS

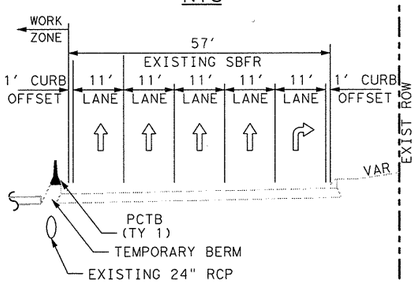

LP 1604 MAIN LANES SECTION E

SEE TCP TYPICAL SECTIONS SHEET

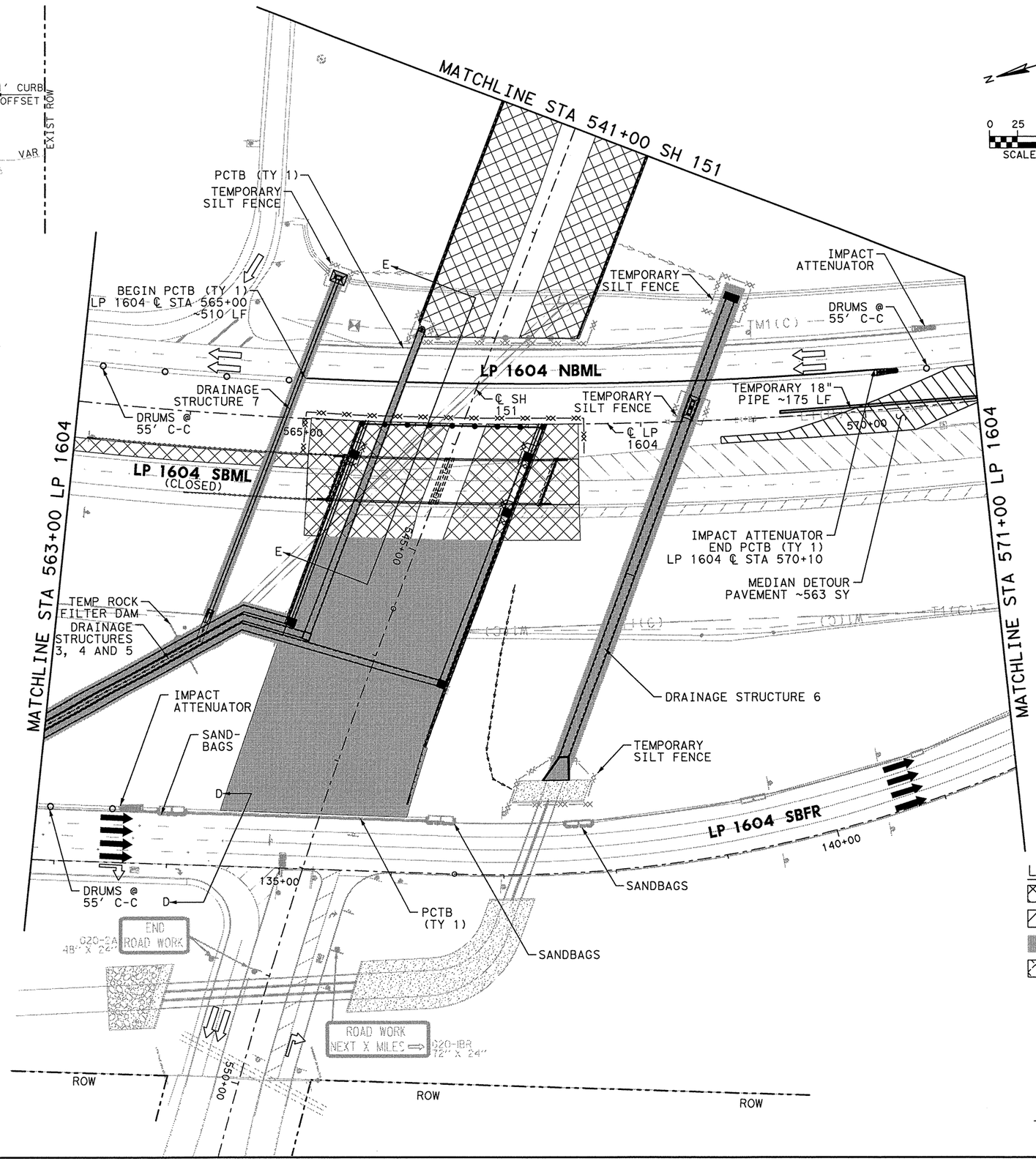

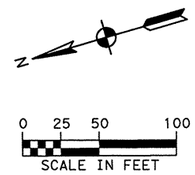

SHEET SUMMARY OF ESTIMATED QUANTITIES			
ITEM#	DESCRIPTION	UNIT	QTY
0464	RC PIPE (CL III) (18 IN)	LF	175
0508	CONSTRUCTING DETOURS	STA	2
0512	PORT CTB (MOVE)(SNGL SLP) (TY 1)	LF	510
0512	PORT CTB (REMOVE)(SNGL SLP) (TY 1)	LF	30
0545	CRASH CUSH ATTEN (INSTL) (WORK ZONE)	EA	0
0545	CRASH CUSH ATTEN (MOV&RESET) (WORK	EA	1
0681	TEMP TRAF SIGNALS	EA	1

TEMPORARY SW3P ALL PHASES

1. ALL SW3P CONTROL MEASURES SHALL BE PLACED WITHIN TXDOT RIGHT-OF-WAY DURING CONSTRUCTION.
2. SHALL MAINTAIN SW3P CONTROL MEASURES THROUGHOUT CONSTRUCTION.
3. CONSTRUCTION ENTRANCE/EXIT AND CONCRETE WASH-OUT AREA TO BE DETERMINED BY ENGINEER OUT IN THE FIELD.
4. ALL SW3P CONTROL MEASURES INSTALLED DURING CONSTRUCTION ARE TO REMAIN IN PLACE UNTIL 70% VEGETATIVE COVER IS ACHIEVED OR AS APPROVED BY THE ENGINEER.
5. LOCATION OF SW3P CONTROL MEASURES TO BE DETERMINED BY ENGINEER IN THE FIELD.
6. ANTICIPATE ONE REPLACEMENT CYCLE FOR SW3P CONTROL MEASURES.
7. APPLY VEGETATIVE WATERING AS NEEDED TO SUPPLEMENT NATURAL RAINFALL DURING THE VEGETATION ESTABLISHMENT PERIOD. DROUGHT OR OTHER ENVIRONMENTAL CONDITIONS, AS DETERMINED BY THE ENGINEER, MAY REQUIRE THE APPLICATION OF SUPPLEMENTAL IRRIGATION TO BE BETWEEN THE HOURS OF 6PM AND 8AM.
8. SW3P CONTROL MEASURE SYMBOLS ARE NOT TO SCALE.

LEGEND

- PROPOSED CONSTRUCTION IN CURRENT PHASE
- TEMPORARY CONSTRUCTION IN CURRENT PHASE
- PROPOSED CONSTRUCTION IN PREVIOUS PHASE
- PAVEMENT REMOVAL IN CURRENT PHASE
- EXISTING TRAFFIC FLOW ARROW
- PROPOSED TRAFFIC FLOW ARROW
- CHANGEABLE MESSAGE SIGN
- ARROW BOARD
- PLASTIC DRUM
- PLASTIC DRUM WITH CHEVRON
- TYPE III BARRICADE
- TEMPORARY SILT FENCE
- TEMPORARY ROCK FILTER DAM
- SANDBAGS FOR INLET PROTECTION
- DITCH

STATE OF TEXAS
MICHAEL W. MIDKIFF
75435
REGISTERED PROFESSIONAL ENGINEER
12/5/11

NO.	DATE	REVISION DESCRIPTION	APP. BY

© 2011

Texas Department of Transportation

MACTEC
3520 EXECUTIVE CENTER DRIVE
SUITE 200
AUSTIN, TEXAS 78731
(512) 795-0360
REGISTRATION NUMBER: F-1784

SH 151
TRAFFIC CONTROL & SW3P PHASE IIA LP 1604 STA 563+00 TO STA 571+00
(SHEET 6 OF 8)

FED. RD. DIV. NO.			SHEET NO.
			69
STATE	DIST.	COUNTY	
TEXAS	SA	BEXAR	
CONT.	SECT.	JOB	HIGHWAY NO.
2452	01	043	SH 151

p:\47600-01\25\cad\sheet\151tcp2113.dgn 12/3/2011 7:04:54 PM mwmidkiff

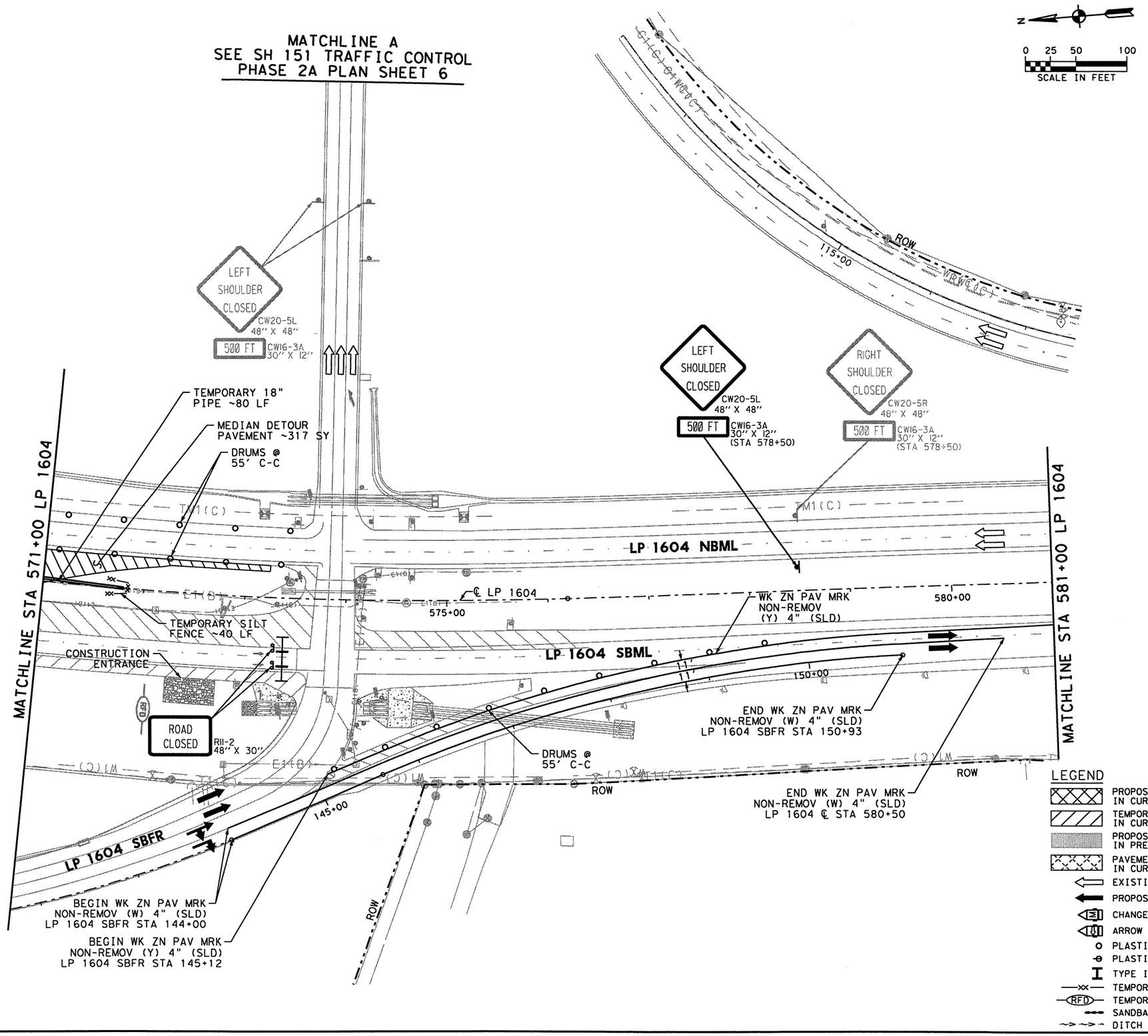

SHEET SUMMARY OF ESTIMATED QUANTITIES			
ITEM#	DESCRIPTION	UNIT	QTY
0464	RC PIPE (CL III) (18 IN)	LF	80
0506	TEMP SDMT CONT FENCE (INLET	LF	40
0508	CONSTRUCTING DETOURS	STA	2.25
0662	WK ZN PAV MRK NON-REMOV (W) 4" (SLD)	LF	1491
0662	WK ZN PAV MRK NON-REMOV (Y) 4" (SLD)	LF	769
0677	ELIM EXT PAV MRK & MRKS (4")	LF	2055

TEMPORARY SW3P ALL PHASES

1. ALL SW3P CONTROL MEASURES SHALL BE PLACED WITHIN TXDOT RIGHT-OF-WAY DURING CONSTRUCTION.
2. SHALL MAINTAIN SW3P CONTROL MEASURES THROUGHOUT CONSTRUCTION.
3. CONSTRUCTION ENTRANCE/EXIT AND CONCRETE WASH-OUT AREA TO BE DETERMINED BY ENGINEER OUT IN THE FIELD.
4. ALL SW3P CONTROL MEASURES INSTALLED DURING CONSTRUCTION ARE TO REMAIN IN PLACE UNTIL 70% VEGETATIVE COVER IS ACHIEVED OR AS APPROVED BY THE ENGINEER.
5. LOCATION OF SW3P CONTROL MEASURES TO BE DETERMINED BY ENGINEER IN THE FIELD.
6. ANTICIPATE ONE REPLACEMENT CYCLE FOR SW3P CONTROL MEASURES.
7. APPLY VEGETATIVE WATERING AS NEEDED TO SUPPLEMENT NATURAL RAINFALL DURING THE VEGETATION ESTABLISHMENT PERIOD. DROUGHT OR OTHER ENVIRONMENTAL CONDITIONS, AS DETERMINED BY THE ENGINEER, MAY REQUIRE THE APPLICATION OF SUPPLEMENTAL IRRIGATION TO BE BETWEEN THE HOURS OF 6PM AND 8AM.
8. SW3P CONTROL MEASURE SYMBOLS ARE NOT TO SCALE.

LEGEND

- PROPOSED CONSTRUCTION IN CURRENT PHASE
- TEMPORARY CONSTRUCTION IN CURRENT PHASE
- PROPOSED CONSTRUCTION IN PREVIOUS PHASE
- PAVEMENT REMOVAL IN CURRENT PHASE
- EXISTING TRAFFIC FLOW ARROW
- PROPOSED TRAFFIC FLOW ARROW
- CHANGEABLE MESSAGE SIGN
- ARROW BOARD
- PLASTIC DRUM
- PLASTIC DRUM WITH CHEVRON
- TYPE III BARRICADE
- TEMPORARY SILT FENCE
- TEMPORARY ROCK FILTER DAM
- SANDBAGS FOR INLET PROTECTION
- DITCH

STATE OF TEXAS
MICHAEL W. MIDKIFF
75435
REGISTERED PROFESSIONAL ENGINEER
3/18/11

NO.	DATE	REVISION DESCRIPTION	APP. BY

© 2011

Texas Department of Transportation

MACTEC
3520 EXECUTIVE CENTER DRIVE
SUITE 200
AUSTIN, TEXAS 78731
(512) 795-0360

REGISTRATION NUMBER: F-1784

SH 151
TRAFFIC CONTROL & SW3P PHASE IIA
LP 1604
STA 571+00 TO STA 581+00
(SHEET 7 OF 8)

FED. RD. DIV. NO.			SHEET NO.
			70
STATE	DIST.	COUNTY	
TEXAS	SA	BEXAR	
CONT.	SECT.	JOB	HIGHWAY NO.
2452	01	043	SH 151

p:\4760\0-0129\cad\sheet\151tcp2114.dgn 3/18/2011 11:23:38 AM mwmidkiff

SHEET SUMMARY OF ESTIMATED QUANTITIES			
ITEM#	DESCRIPTION	UNIT	QTY
0662	WK ZN PAV MRK NON-REMOV (Y) 4" (SLD)	LF	50

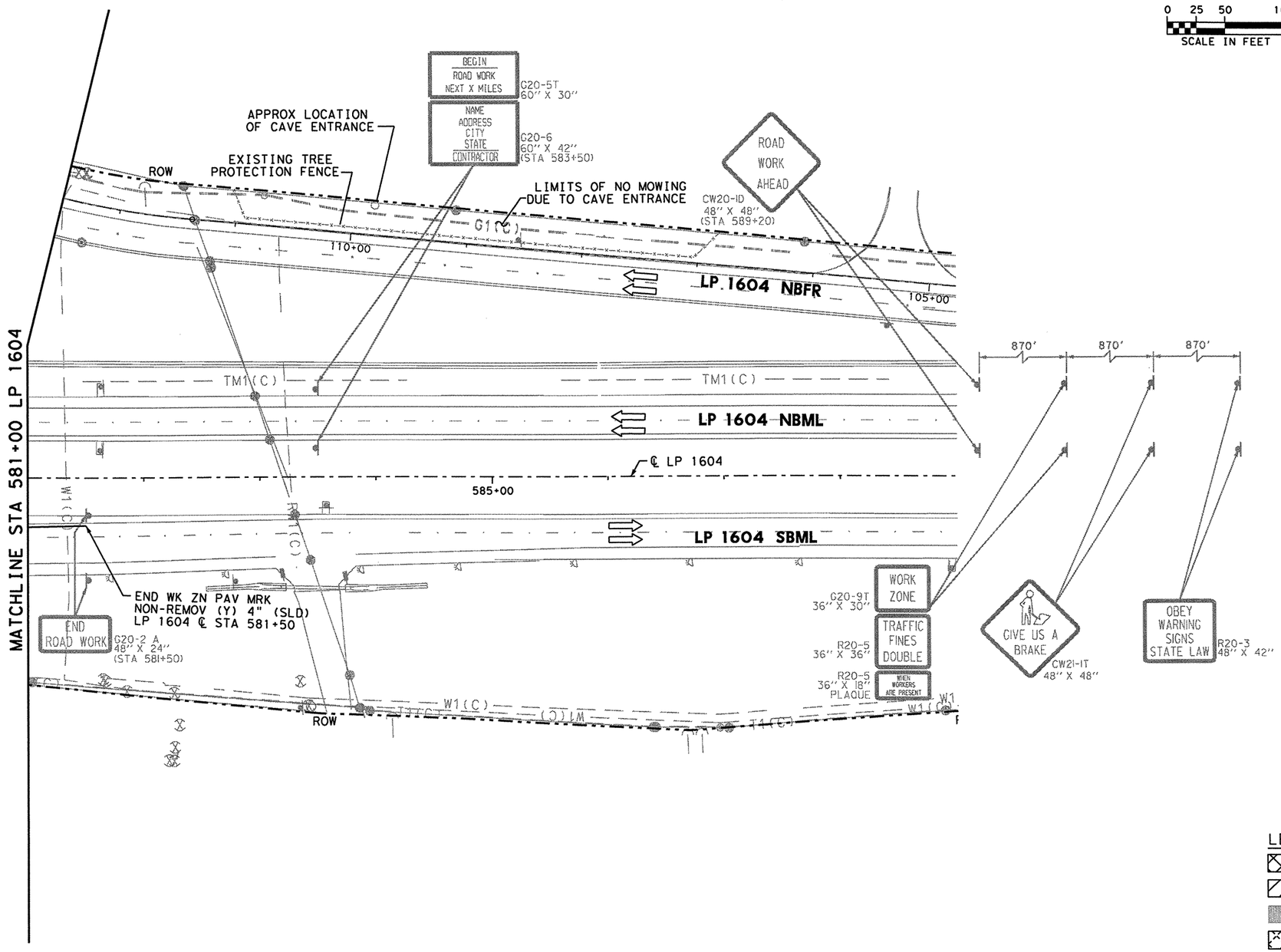

N

0 25 50 100
SCALE IN FEET

TEMPORARY SW3P ALL PHASES

1. ALL SW3P CONTROL MEASURES SHALL BE PLACED WITHIN TXDOT RIGHT-OF-WAY DURING CONSTRUCTION.
2. SHALL MAINTAIN SW3P CONTROL MEASURES THROUGHOUT CONSTRUCTION.
3. CONSTRUCTION ENTRANCE/EXIT AND CONCRETE WASH-OUT AREA TO BE DETERMINED BY ENGINEER OUT IN THE FIELD.
4. ALL SW3P CONTROL MEASURES INSTALLED DURING CONSTRUCTION ARE TO REMAIN IN PLACE UNTIL 70% VEGETATIVE COVER IS ACHIEVED OR AS APPROVED BY THE ENGINEER.
5. LOCATION OF SW3P CONTROL MEASURES TO BE DETERMINED BY ENGINEER IN THE FIELD.
6. ANTICIPATE ONE REPLACEMENT CYCLE FOR SW3P CONTROL MEASURES.
7. APPLY VEGETATIVE WATERING AS NEEDED TO SUPPLEMENT NATURAL RAINFALL DURING THE VEGETATION ESTABLISHMENT PERIOD. DROUGHT OR OTHER ENVIRONMENTAL CONDITIONS, AS DETERMINED BY THE ENGINEER, MAY REQUIRE THE APPLICATION OF SUPPLEMENTAL IRRIGATION TO BE BETWEEN THE HOURS OF 6PM AND 8AM.
8. SW3P CONTROL MEASURE SYMBOLS ARE NOT TO SCALE.

NOTE: REFER TO EPIC PLAN SHEET IN REGARD TO WORK IN VICINITY OF CAVE ENTRANCE.

LEGEND

- PROPOSED CONSTRUCTION IN CURRENT PHASE
- TEMPORARY CONSTRUCTION IN CURRENT PHASE
- PROPOSED CONSTRUCTION IN PREVIOUS PHASE
- PAVEMENT REMOVAL IN CURRENT PHASE
- EXISTING TRAFFIC FLOW ARROW
- PROPOSED TRAFFIC FLOW ARROW
- CHANGEABLE MESSAGE SIGN
- ARROW BOARD
- PLASTIC DRUM
- PLASTIC DRUM WITH CHEVRON
- TYPE III BARRICADE
- TEMPORARY SILT FENCE
- RFD TEMPORARY ROCK FILTER DAM
- SANDBAGS FOR INLET PROTECTION
- DITCH

STATE OF TEXAS
MICHAEL W. MIDKIFF
75435
REGISTERED PROFESSIONAL ENGINEER
4/11/11

NO.	DATE	REVISION DESCRIPTION	APP. BY

© 2011

Texas Department of Transportation

MACTEC
3520 EXECUTIVE CENTER DRIVE
SUITE 200
AUSTIN, TEXAS 78731
(512) 795-0360

REGISTRATION NUMBER: F-1784

SH 151
TRAFFIC CONTROL & SW3P PHASE IIA
LP 1604
STA 581+00 TO END PROJECT
(SHEET 8 OF 8)

FED. RD. DIV. NO.			SHEET NO.
			71
STATE	DIST.	COUNTY	
TEXAS	SA	BEXAR	
CONT.	SECT.	JOB	HIGHWAY NO.
2452	01	043	SH 151

p:\47600-0125cad\sheet\151tcp2l15.dgn 4/12/2011 7:04:05 PM mwmidkiff

ITEM#	DESCRIPTION	UNIT	QTY
0677	ELIM EXT PAV MRK & MRKS (4")	LF	3135

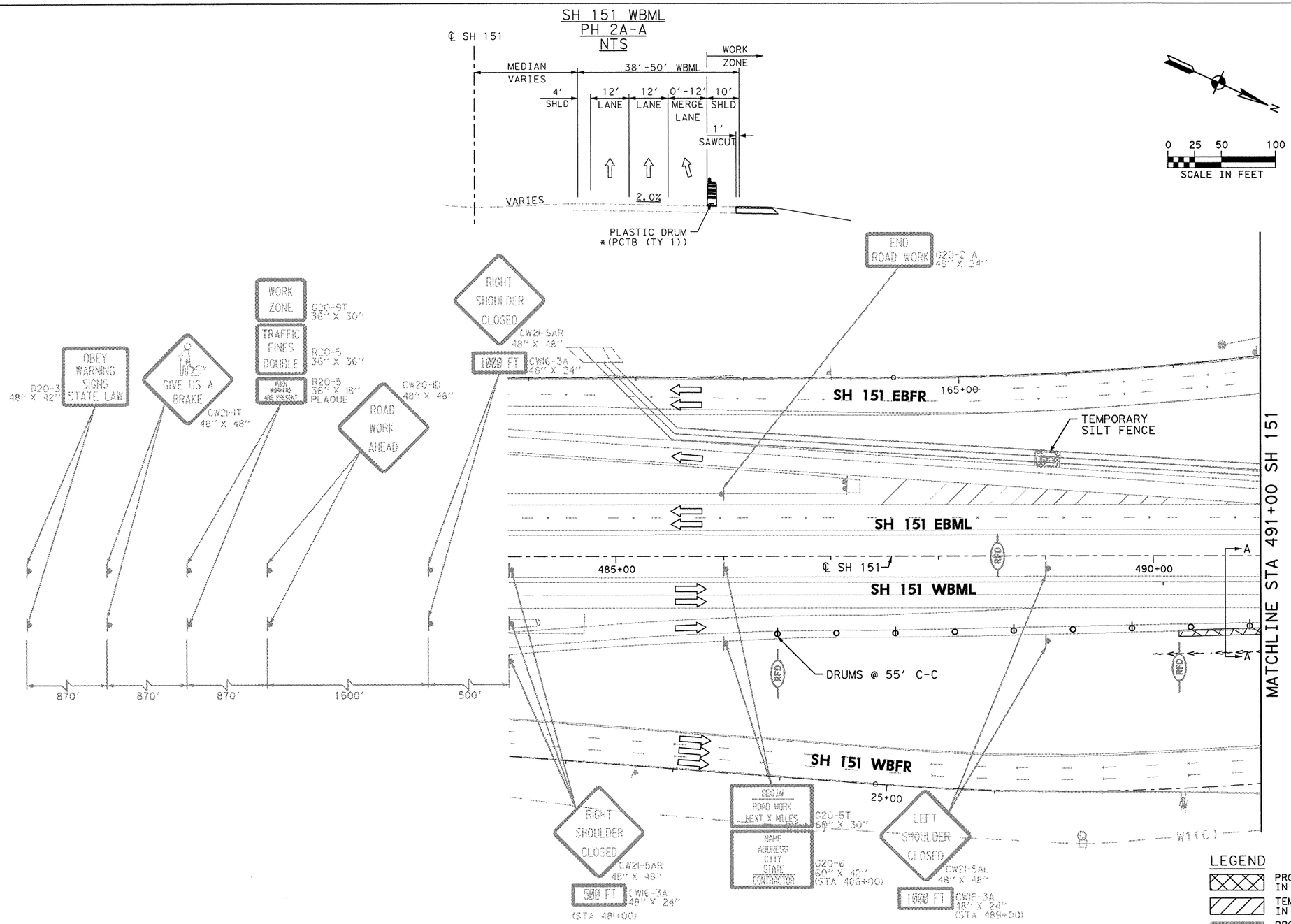

TEMPORARY SW3P ALL PHASES

1. ALL SW3P CONTROL MEASURES SHALL BE PLACED WITHIN TXDOT RIGHT-OF-WAY DURING CONSTRUCTION.
2. SHALL MAINTAIN SW3P CONTROL MEASURES THROUGHOUT CONSTRUCTION.
3. CONSTRUCTION ENTRANCE/EXIT AND CONCRETE WASH-OUT AREA TO BE DETERMINED BY ENGINEER OUT IN THE FIELD.
4. ALL SW3P CONTROL MEASURES INSTALLED DURING CONSTRUCTION ARE TO REMAIN IN PLACE UNTIL 70% VEGETATIVE COVER IS ACHIEVED OR AS APPROVED BY THE ENGINEER.
5. LOCATION OF SW3P CONTROL MEASURES TO BE DETERMINED BY ENGINEER IN THE FIELD.
6. ANTICIPATE ONE REPLACEMENT CYCLE FOR SW3P CONTROL MEASURES.
7. APPLY VEGETATIVE WATERING AS NEEDED TO SUPPLEMENT NATURAL RAINFALL DURING THE VEGETATION ESTABLISHMENT PERIOD. DROUGHT OR OTHER ENVIRONMENTAL CONDITIONS, AS DETERMINED BY THE ENGINEER, MAY REQUIRE THE APPLICATION OF SUPPLEMENTAL IRRIGATION TO BE BETWEEN THE HOURS OF 6PM AND 8AM.
8. SW3P CONTROL MEASURE SYMBOLS ARE NOT TO SCALE.

LEGEND

- PROPOSED CONSTRUCTION IN CURRENT PHASE
- TEMPORARY CONSTRUCTION IN CURRENT PHASE
- PROPOSED CONSTRUCTION IN PREVIOUS PHASE
- PAVEMENT REMOVAL IN CURRENT PHASE
- EXISTING TRAFFIC FLOW ARROW
- PROPOSED TRAFFIC FLOW ARROW
- CHANGEABLE MESSAGE SIGN
- ARROW BOARD
- PLASTIC DRUM
- PLASTIC DRUM WITH CHEVRON
- TYPE III BARRICADE
- TEMPORARY SILT FENCE
- RFD TEMPORARY ROCK FILTER DAM
- SANDBAGS FOR INLET PROTECTION
- DITCH

STATE OF TEXAS
MICHAEL W. MIDKIFF
75435
REGISTERED PROFESSIONAL ENGINEER
Michael W. Midkiff
12/5/11

NO.	DATE	REVISION DESCRIPTION	APP. BY

© 2011

Texas Department of Transportation

MACTEC
3520 EXECUTIVE CENTER DRIVE
SUITE 200
AUSTIN, TEXAS 78731
(512) 795-0360

REGISTRATION NUMBER: F-1784

SH 151
TRAFFIC CONTROL & SW3P PHASE IIB SH 151 BEGIN PROJECT TO STA 491+00
(SHEET 1 OF 7)

FED. RD. DIV. NO.			SHEET NO.
			72
STATE	DIST.	COUNTY	
TEXAS	SA	BEXAR	
CONT.	SECT.	JOB	HIGHWAY NO.
2452	01	043	SH 151

p:\4760\0-0129\cad\sheet\151tcp2201.dgn 12/3/2011 7:05:22 PM mwmidkiff

SHEET SUMMARY OF ESTIMATED QUANTITIES			
ITEM#	DESCRIPTION	UNIT	QTY
0677	ELIM EXT PAV MRK & MRKS (4")	LF	2825

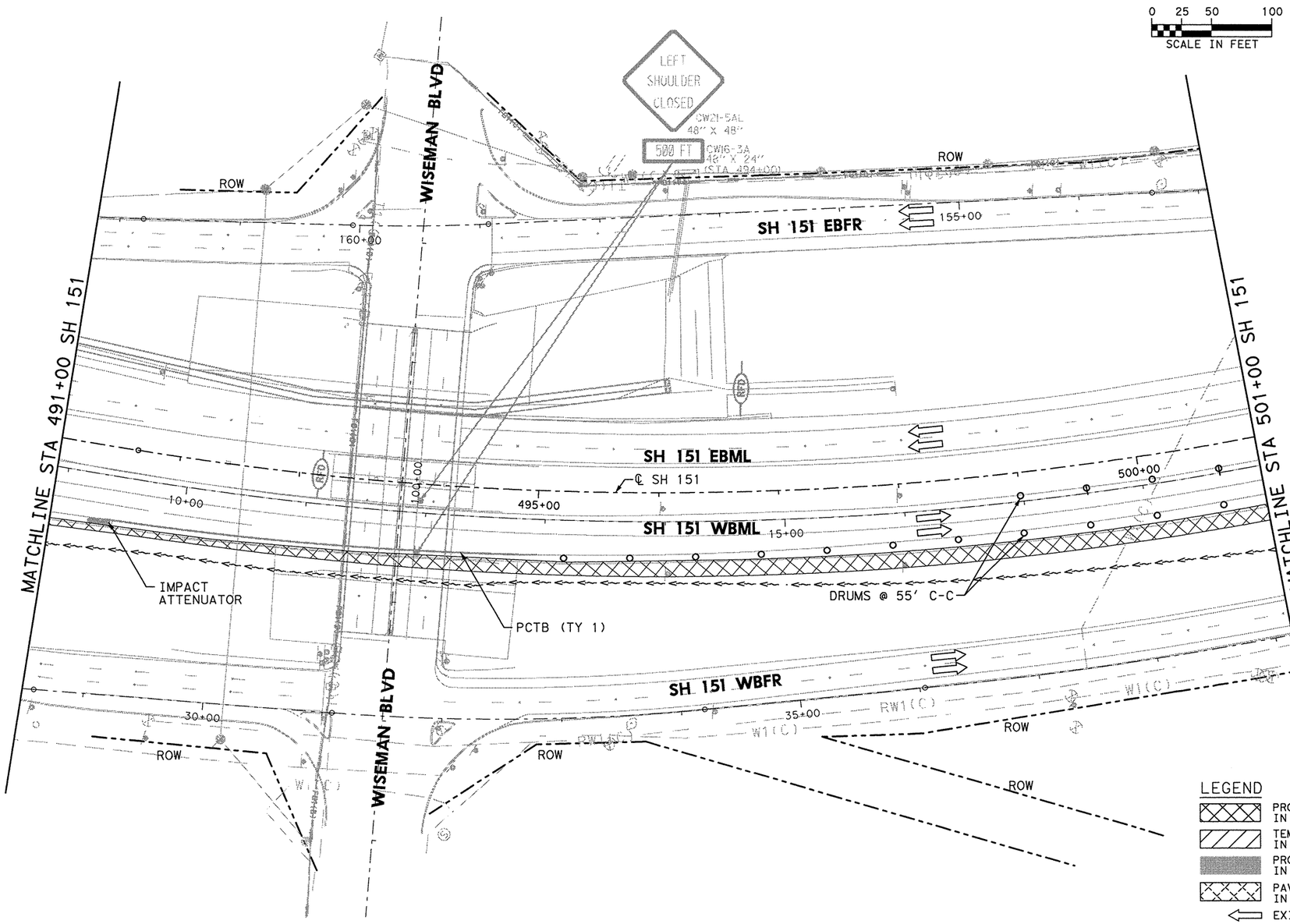

TEMPORARY SW3P ALL PHASES

1. ALL SW3P CONTROL MEASURES SHALL BE PLACED WITHIN TXDOT RIGHT-OF-WAY DURING CONSTRUCTION.
2. SHALL MAINTAIN SW3P CONTROL MEASURES THROUGHOUT CONSTRUCTION.
3. CONSTRUCTION ENTRANCE/EXIT AND CONCRETE WASH-OUT AREA TO BE DETERMINED BY ENGINEER OUT IN THE FIELD.
4. ALL SW3P CONTROL MEASURES INSTALLED DURING CONSTRUCTION ARE TO REMAIN IN PLACE UNTIL 70% VEGETATIVE COVER IS ACHIEVED OR AS APPROVED BY THE ENGINEER.
5. LOCATION OF SW3P CONTROL MEASURES TO BE DETERMINED BY ENGINEER IN THE FIELD.
6. ANTICIPATE ONE REPLACEMENT CYCLE FOR SW3P CONTROL MEASURES.
7. APPLY VEGETATIVE WATERING AS NEEDED TO SUPPLEMENT NATURAL RAINFALL DURING THE VEGETATION ESTABLISHMENT PERIOD. DROUGHT OR OTHER ENVIRONMENTAL CONDITIONS, AS DETERMINED BY THE ENGINEER, MAY REQUIRE THE APPLICATION OF SUPPLEMENTAL IRRIGATION TO BE BETWEEN THE HOURS OF 6PM AND 8AM.
8. SW3P CONTROL MEASURE SYMBOLS ARE NOT TO SCALE.

LEGEND

- PROPOSED CONSTRUCTION IN CURRENT PHASE
- TEMPORARY CONSTRUCTION IN CURRENT PHASE
- PROPOSED CONSTRUCTION IN PREVIOUS PHASE
- PAVEMENT REMOVAL IN CURRENT PHASE
- EXISTING TRAFFIC FLOW ARROW
- PROPOSED TRAFFIC FLOW ARROW
- CHANGEABLE MESSAGE SIGN
- ARROW BOARD
- PLASTIC DRUM
- PLASTIC DRUM WITH CHEVRON
- TYPE III BARRICADE
- TEMPORARY SILT FENCE
- TEMPORARY ROCK FILTER DAM
- SANDBAGS FOR INLET PROTECTION
- DITCH

STATE OF TEXAS
MICHAEL W. MIDKIFF
75435
REGISTERED PROFESSIONAL ENGINEER
12/5/11

NO.	DATE	REVISION DESCRIPTION	APP. BY

© 2011

Texas Department of Transportation

MACTEC
3520 EXECUTIVE CENTER DRIVE
SUITE 200
AUSTIN, TEXAS 78731
(512) 795-0360
REGISTRATION NUMBER: F-1784

SH 151
BEGIN PROJECT & SW3P PHASE IIB SH 151 STA 491+00 TO STA 501+00
(SHEET 2 OF 7)

FED. RD. DIV. NO.			SHEET NO.
			73

STATE	DIST.	COUNTY	
TEXAS	SA	BEXAR	
CONT.	SECT.	JOB	HIGHWAY NO.
2452	01	043	SH 151

p:\4760\0-0129\cad\sheet\51tcp2202.dgn 12/13/2011 7:05:32 PM mwmidkiff

SHEET SUMMARY OF ESTIMATED QUANTITIES			
ITEM#	DESCRIPTION	UNIT	QTY
0677	ELIM EXT PAV MRK & MRKS (4")	LF	5111
0512	PORT CTB (REMOVE)(SNGL SLP)(TY 1)	LF	20

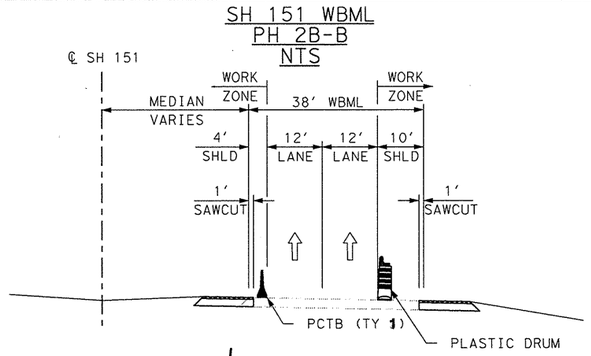

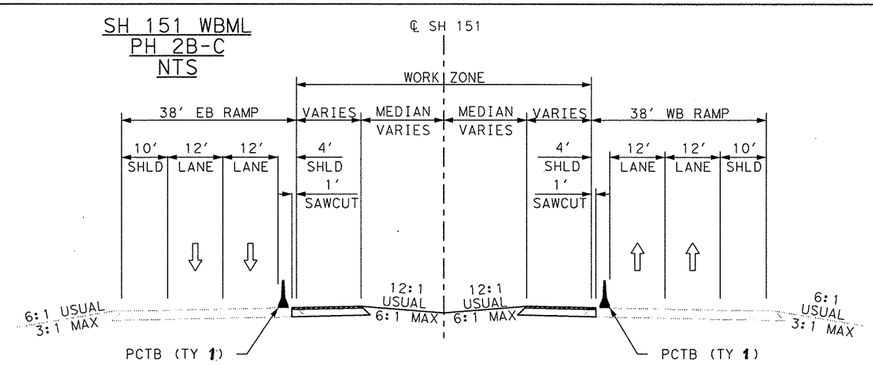

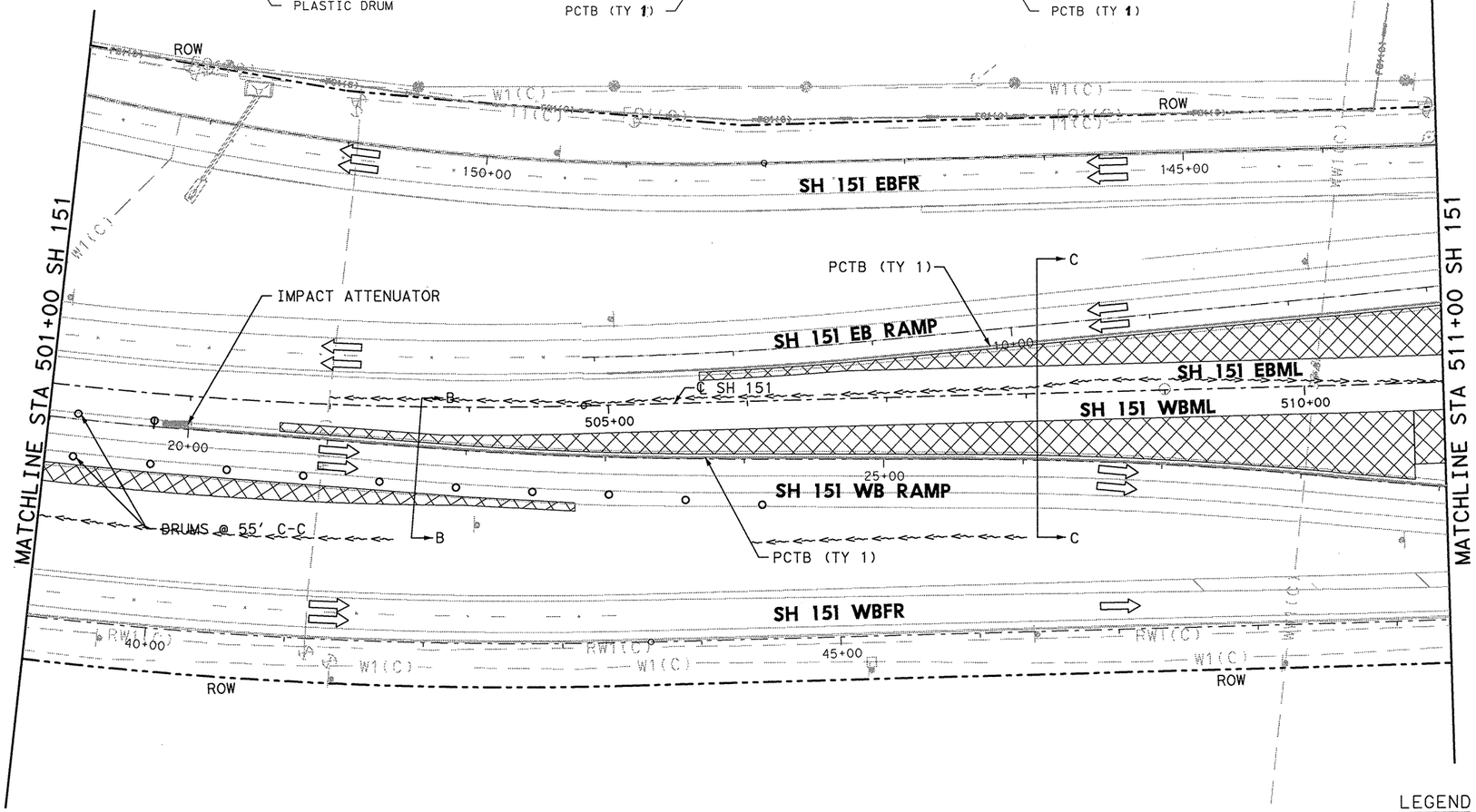

0 25 50 100
SCALE IN FEET

TEMPORARY SW3P ALL PHASES

1. ALL SW3P CONTROL MEASURES SHALL BE PLACED WITHIN TXDOT RIGHT-OF-WAY DURING CONSTRUCTION.
2. SHALL MAINTAIN SW3P CONTROL MEASURES THROUGHOUT CONSTRUCTION.
3. CONSTRUCTION ENTRANCE/EXIT AND CONCRETE WASH-OUT AREA TO BE DETERMINED BY ENGINEER OUT IN THE FIELD.
4. ALL SW3P CONTROL MEASURES INSTALLED DURING CONSTRUCTION ARE TO REMAIN IN PLACE UNTIL 70% VEGETATIVE COVER IS ACHIEVED OR AS APPROVED BY THE ENGINEER.
5. LOCATION OF SW3P CONTROL MEASURES TO BE DETERMINED BY ENGINEER IN THE FIELD.
6. ANTICIPATE ONE REPLACEMENT CYCLE FOR SW3P CONTROL MEASURES.
7. APPLY VEGETATIVE WATERING AS NEEDED TO SUPPLEMENT NATURAL RAINFALL DURING THE VEGETATION ESTABLISHMENT PERIOD. DROUGHT OR OTHER ENVIRONMENTAL CONDITIONS, AS DETERMINED BY THE ENGINEER, MAY REQUIRE THE APPLICATION OF SUPPLEMENTAL IRRIGATION TO BE BETWEEN THE HOURS OF 6PM AND 8AM.
8. SW3P CONTROL MEASURE SYMBOLS ARE NOT TO SCALE.

LEGEND

- PROPOSED CONSTRUCTION IN CURRENT PHASE
- TEMPORARY CONSTRUCTION IN CURRENT PHASE
- PROPOSED CONSTRUCTION IN PREVIOUS PHASE
- PAVEMENT REMOVAL IN CURRENT PHASE
- EXISTING TRAFFIC FLOW ARROW
- PROPOSED TRAFFIC FLOW ARROW
- CHANGEABLE MESSAGE SIGN
- ARROW BOARD
- PLASTIC DRUM
- PLASTIC DRUM WITH CHEVRON
- TYPE III BARRICADE
- TEMPORARY SILT FENCE
- RFD TEMPORARY ROCK FILTER DAM
- SANDBAGS FOR INLET PROTECTION
- DITCH

REV. 12-30-11

STATE OF TEXAS
MICHAEL W. MIDKIFF
75435
REGISTERED PROFESSIONAL ENGINEER
12/5/11

NO.	DATE	REVISION DESCRIPTION	APP. BY

© 2011

Texas Department of Transportation

MACTEC
3520 EXECUTIVE CENTER DRIVE
SUITE 200
AUSTIN, TEXAS 78731
(512) 795-0360

REGISTRATION NUMBER: F-1784

SH 151
TRAFFIC CONTROL & SW3P PHASE IIB
SH 151
STA 501+00 TO STA 511+00
(SHEET 3 OF 7)

FED. RD. DIV. NO.			SHEET NO.
			74
STATE	DIST.	COUNTY	
TEXAS	SA	BEXAR	
CONT.	SECT.	JOB	HIGHWAY NO.
2452	01	043	SH 151

p:\4716D\0-01\29cad\sheet\15tcp2203.dgn 12/3/2011 7:05:41 PM mwmidkiff

SHEET SUMMARY OF ESTIMATED QUANTITIES			
ITEM#	DESCRIPTION	UNIT	QTY
0677	ELIM EXT PAV MRK & MRKS (4")	LF	4566
0677	ELIM EXT PAV MRK & MRKS (24")	LF	198
0677	ELIM EXT PAV MRK & MRKS (WORD)	EA	1

N

0 25 50 100
SCALE IN FEET

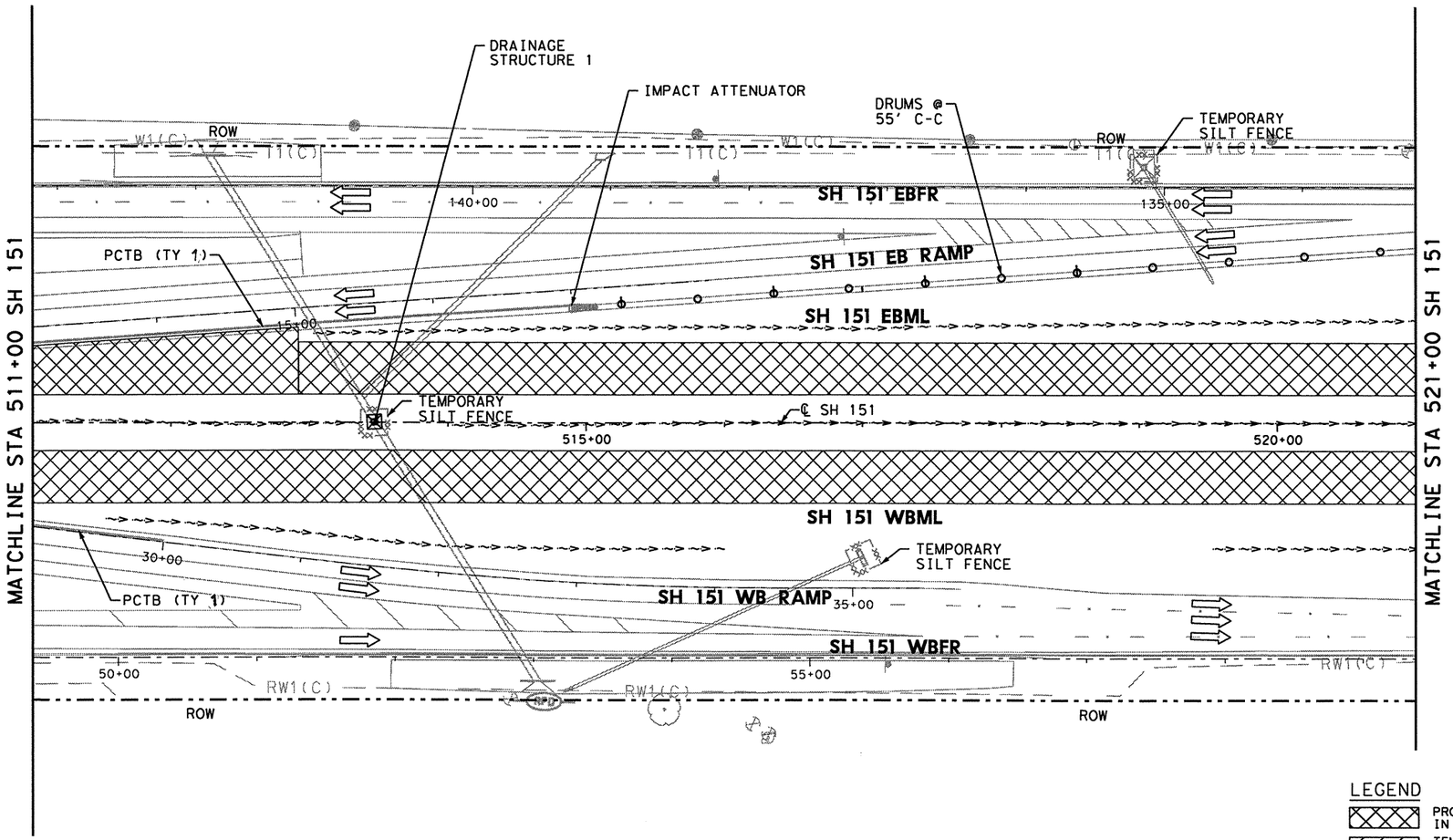

LEGEND

- PROPOSED CONSTRUCTION IN CURRENT PHASE
- TEMPORARY CONSTRUCTION IN CURRENT PHASE
- PROPOSED CONSTRUCTION IN PREVIOUS PHASE
- PAVEMENT REMOVAL IN CURRENT PHASE
- EXISTING TRAFFIC FLOW ARROW
- PROPOSED TRAFFIC FLOW ARROW
- CHANGEABLE MESSAGE SIGN
- ARROW BOARD
- PLASTIC DRUM
- PLASTIC DRUM WITH CHEVRON
- TYPE III BARRICADE
- TEMPORARY SILT FENCE
- TEMPORARY ROCK FILTER DAM
- SANDBAGS FOR INLET PROTECTION
- DITCH

TEMPORARY SW3P ALL PHASES

1. ALL SW3P CONTROL MEASURES SHALL BE PLACED WITHIN TXDOT RIGHT-OF-WAY DURING CONSTRUCTION.
2. SHALL MAINTAIN SW3P CONTROL MEASURES THROUGHOUT CONSTRUCTION.
3. CONSTRUCTION ENTRANCE/EXIT AND CONCRETE WASH-OUT AREA TO BE DETERMINED BY ENGINEER OUT IN THE FIELD.
4. ALL SW3P CONTROL MEASURES INSTALLED DURING CONSTRUCTION ARE TO REMAIN IN PLACE UNTIL 70% VEGETATIVE COVER IS ACHIEVED OR AS APPROVED BY THE ENGINEER.
5. LOCATION OF SW3P CONTROL MEASURES TO BE DETERMINED BY ENGINEER IN THE FIELD.
6. ANTICIPATE ONE REPLACEMENT CYCLE FOR SW3P CONTROL MEASURES.
7. APPLY VEGETATIVE WATERING AS NEEDED TO SUPPLEMENT NATURAL RAINFALL DURING THE VEGETATION ESTABLISHMENT PERIOD. DROUGHT OR OTHER ENVIRONMENTAL CONDITIONS, AS DETERMINED BY THE ENGINEER, MAY REQUIRE THE APPLICATION OF SUPPLEMENTAL IRRIGATION TO BE BETWEEN THE HOURS OF 6PM AND 8AM.
8. SW3P CONTROL MEASURE SYMBOLS ARE NOT TO SCALE.

STATE OF TEXAS
MICHAEL W. MIDKIFF
75435
REGISTERED PROFESSIONAL ENGINEER
3/18/11

NO.	DATE	REVISION DESCRIPTION	APP. BY

© 2011

Texas Department of Transportation

MACTEC
3520 EXECUTIVE CENTER DRIVE
SUITE 200
AUSTIN, TEXAS 78731
(512) 795-0360
REGISTRATION NUMBER: F-1784

SH 151
TRAFFIC CONTROL & SW3P PHASE IIB SH 151 STA 511+00 TO STA 521+00
(SHEET 4 OF 7)

FED. RD. DIV. NO.			SHEET NO.
			75
STATE	DIST.	COUNTY	
TEXAS	SA	BEXAR	
CONT.	SECT.	JOB	HIGHWAY NO.
2452	01	043	SH 151

p:\4760\0-0129\cad\sheet\151tcp2204.dgn 3/18/2011 11:24:22 AM mwmidkiff

SHEET SUMMARY OF ESTIMATED QUANTITIES			
ITEM#	DESCRIPTION	UNIT	QTY
0677	ELIM EXT PAV MRK & MRKS (4")	LF	2767
0677	ELIM EXT PAV MRK & MRKS (24")	LF	230

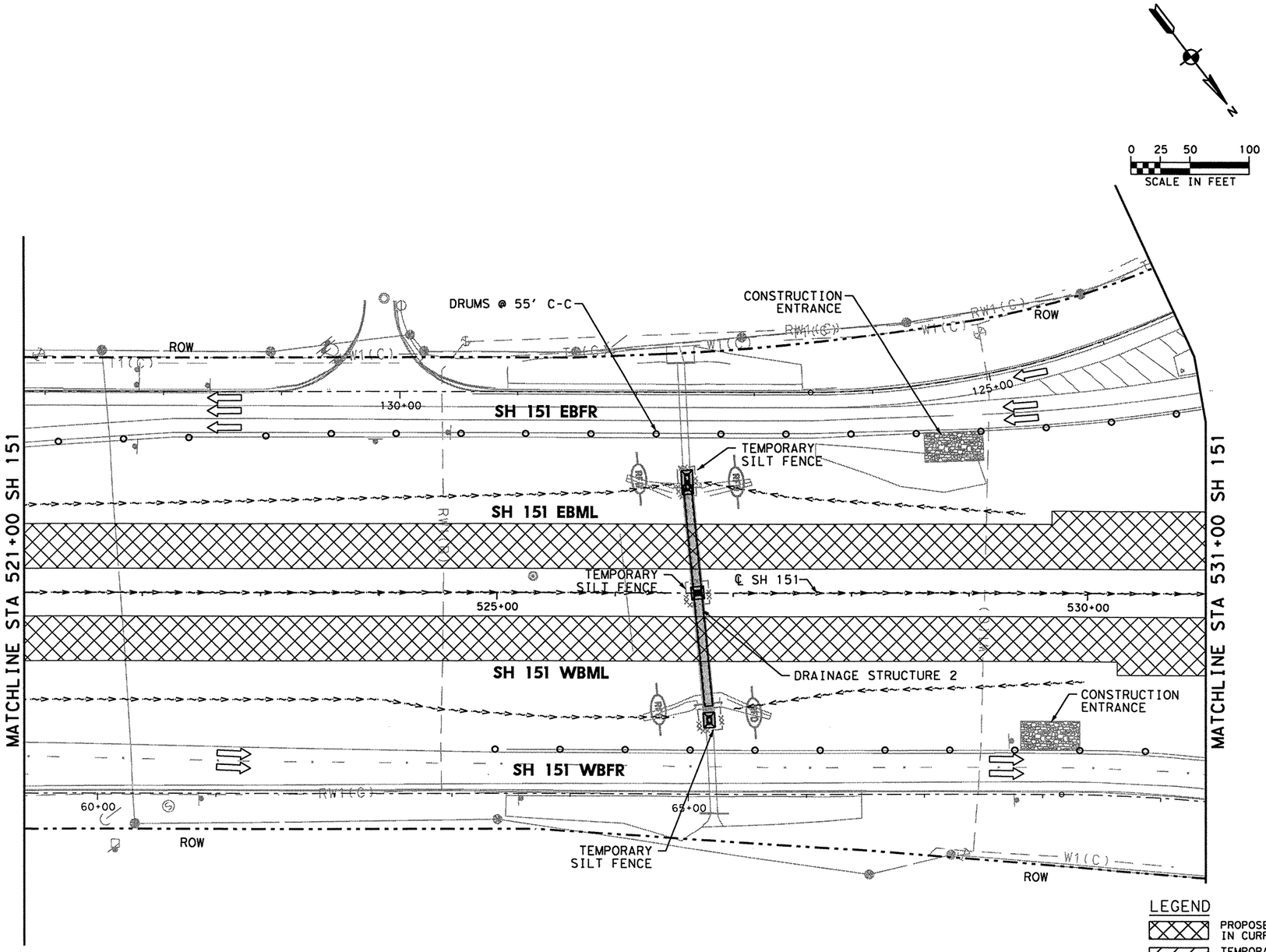

TEMPORARY SW3P ALL PHASES

1. ALL SW3P CONTROL MEASURES SHALL BE PLACED WITHIN TXDOT RIGHT-OF-WAY DURING CONSTRUCTION.
2. SHALL MAINTAIN SW3P CONTROL MEASURES THROUGHOUT CONSTRUCTION.
3. CONSTRUCTION ENTRANCE/EXIT AND CONCRETE WASH-OUT AREA TO BE DETERMINED BY ENGINEER OUT IN THE FIELD.
4. ALL SW3P CONTROL MEASURES INSTALLED DURING CONSTRUCTION ARE TO REMAIN IN PLACE UNTIL 70% VEGETATIVE COVER IS ACHIEVED OR AS APPROVED BY THE ENGINEER.
5. LOCATION OF SW3P CONTROL MEASURES TO BE DETERMINED BY ENGINEER IN THE FIELD.
6. ANTICIPATE ONE REPLACEMENT CYCLE FOR SW3P CONTROL MEASURES.
7. APPLY VEGETATIVE WATERING AS NEEDED TO SUPPLEMENT NATURAL RAINFALL DURING THE VEGETATION ESTABLISHMENT PERIOD. DROUGHT OR OTHER ENVIRONMENTAL CONDITIONS, AS DETERMINED BY THE ENGINEER, MAY REQUIRE THE APPLICATION OF SUPPLEMENTAL IRRIGATION TO BE BETWEEN THE HOURS OF 6PM AND 8AM.
8. SW3P CONTROL MEASURE SYMBOLS ARE NOT TO SCALE.

LEGEND

- PROPOSED CONSTRUCTION IN CURRENT PHASE
- TEMPORARY CONSTRUCTION IN CURRENT PHASE
- PROPOSED CONSTRUCTION IN PREVIOUS PHASE
- PAVEMENT REMOVAL IN CURRENT PHASE
- EXISTING TRAFFIC FLOW ARROW
- PROPOSED TRAFFIC FLOW ARROW
- CHANGEABLE MESSAGE SIGN
- ARROW BOARD
- PLASTIC DRUM
- PLASTIC DRUM WITH CHEVRON
- TYPE III BARRICADE
- TEMPORARY SILT FENCE
- TEMPORARY ROCK FILTER DAM
- SANDBAGS FOR INLET PROTECTION
- DITCH

STATE OF TEXAS
MICHAEL W. MIDKIFF
75435
REGISTERED PROFESSIONAL ENGINEER

Michael W. Midkiff
3/18/11

NO.	DATE	REVISION DESCRIPTION	APP. BY

© 2011

Texas Department of Transportation

MACTEC
3520 EXECUTIVE CENTER DRIVE
SUITE 200
AUSTIN, TEXAS 78731
(512) 795-0360

REGISTRATION NUMBER: F-1784

SH 151
TRAFFIC CONTROL & SW3P PHASE IIB
SH 151
STA 521+00 TO STA 531+00
(SHEET 5 OF 7)

FED. RD. DIV. NO.			SHEET NO.
			76
STATE	DIST.	COUNTY	
TEXAS	SA	BEXAR	
CONT.	SECT.	JOB	HIGHWAY NO.
2452	01	043	SH 151

p:\4760\0-0129\cad\sheet\151tcp2205.dgn 3/18/2011 11:24:31 AM mwmidkiff

SHEET SUMMARY OF ESTIMATED QUANTITIES			
ITEM#	DESCRIPTION	UNIT	QTY
0506	TEMPORARY SEDIMENT CONTROL FENCE	LF	385
0677	ELIM EXT PAV MRK & MRKS (4")	LF	1050

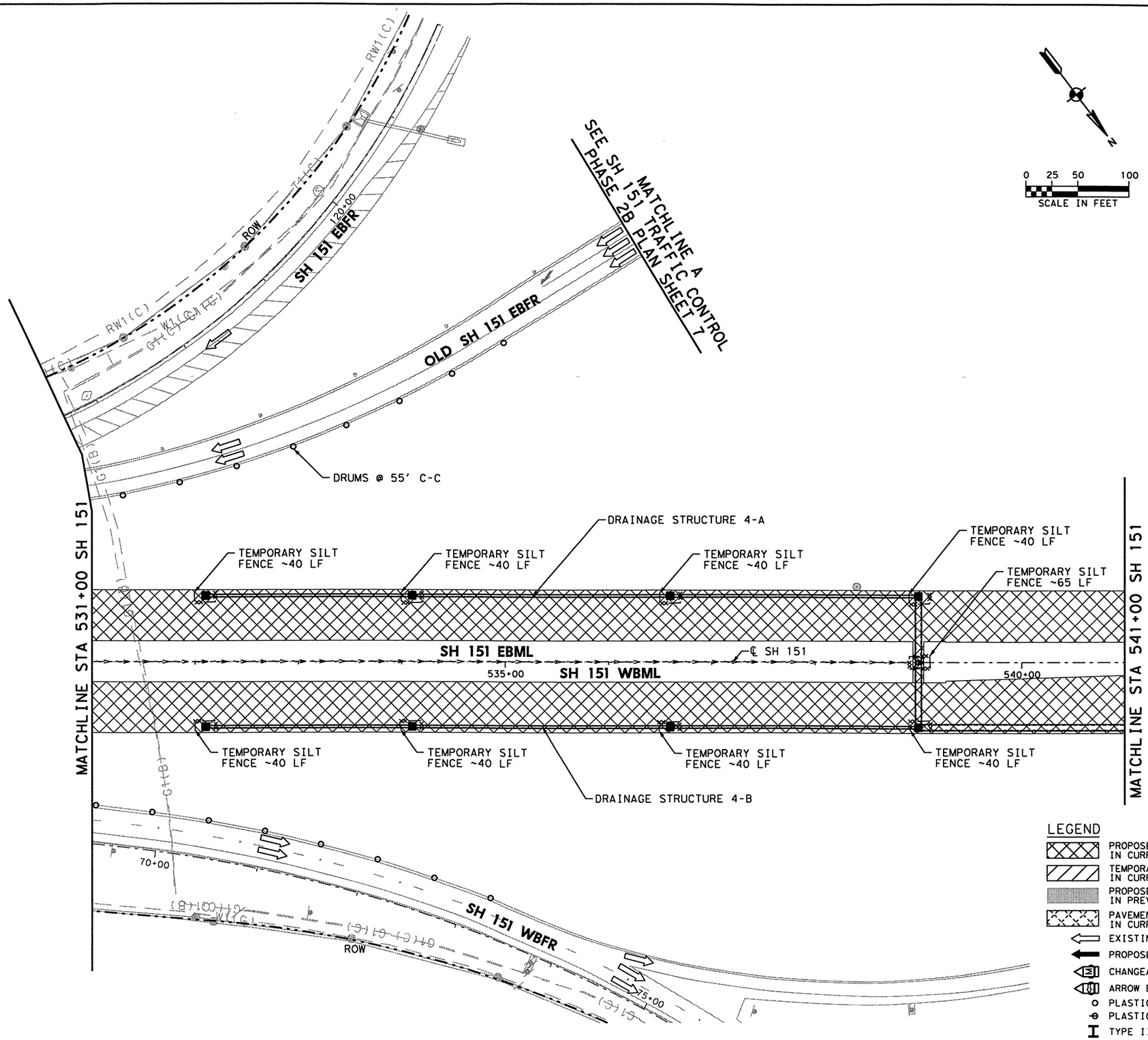

TEMPORARY SW3P ALL PHASES

1. ALL SW3P CONTROL MEASURES SHALL BE PLACED WITHIN TXDOT RIGHT-OF-WAY DURING CONSTRUCTION.
2. SHALL MAINTAIN SW3P CONTROL MEASURES THROUGHOUT CONSTRUCTION.
3. CONSTRUCTION ENTRANCE/EXIT AND CONCRETE WASH-OUT AREA TO BE DETERMINED BY ENGINEER OUT IN THE FIELD.
4. ALL SW3P CONTROL MEASURES INSTALLED DURING CONSTRUCTION ARE TO REMAIN IN PLACE UNTIL 70% VEGETATIVE COVER IS ACHIEVED OR AS APPROVED BY THE ENGINEER.
5. LOCATION OF SW3P CONTROL MEASURES TO BE DETERMINED BY ENGINEER IN THE FIELD.
6. ANTICIPATE ONE REPLACEMENT CYCLE FOR SW3P CONTROL MEASURES.
7. APPLY VEGETATIVE WATERING AS NEEDED TO SUPPLEMENT NATURAL RAINFALL DURING THE VEGETATION ESTABLISHMENT PERIOD. DROUGHT OR OTHER ENVIRONMENTAL CONDITIONS, AS DETERMINED BY THE ENGINEER, MAY REQUIRE THE APPLICATION OF SUPPLEMENTAL IRRIGATION TO BE BETWEEN THE HOURS OF 6PM AND 8AM.
8. SW3P CONTROL MEASURE SYMBOLS ARE NOT TO SCALE.

LEGEND

- PROPOSED CONSTRUCTION IN CURRENT PHASE
- TEMPORARY CONSTRUCTION IN CURRENT PHASE
- PROPOSED CONSTRUCTION IN PREVIOUS PHASE
- PAVEMENT REMOVAL IN CURRENT PHASE
- EXISTING TRAFFIC FLOW ARROW
- PROPOSED TRAFFIC FLOW ARROW
- CHANGEABLE MESSAGE SIGN
- ARROW BOARD
- PLASTIC DRUM
- PLASTIC DRUM WITH CHEVRON
- TYPE III BARRICADE
- TEMPORARY SILT FENCE
- RFD TEMPORARY ROCK FILTER DAM
- SANDBAGS FOR INLET PROTECTION
- DITCH

STATE OF TEXAS
MICHAEL W. MIDKIFF
75435
REGISTERED PROFESSIONAL ENGINEER
3/18/11

NO.	DATE	REVISION DESCRIPTION	APP. BY

© 2011

Texas Department of Transportation

MACTEC
3520 EXECUTIVE CENTER DRIVE
SUITE 200
AUSTIN, TEXAS 78731
(512) 795-0360

REGISTRATION NUMBER: F-1784

SH 151
TRAFFIC CONTROL & SW3P PHASE IIB
SH 151
STA 531+00 TO STA 541+00
(SHEET 6 OF 7)

FED. RD. DIV. NO.			SHEET NO.
			77
STATE	DIST.	COUNTY	
TEXAS	SA	BEXAR	
CONT.	SECT.	JOB	HIGHWAY NO.
2452	01	043	SH 151

p:\4760\0-0129\cad\sheet\151tcp2206.dgn 3/18/2011 11:24:39 AM mwmidkiff

SHEET SUMMARY OF ESTIMATED QUANTITIES			
ITEM#	DESCRIPTION	UNIT	QTY
0506	TEMPORARY SEDIMENT CONTROL FENCE	LF	200
0677	ELIM EXT PAV MRK & MRKS (4")	LF	532
0677	ELIM EXT PAV MRK & MRKS (24")	LF	265

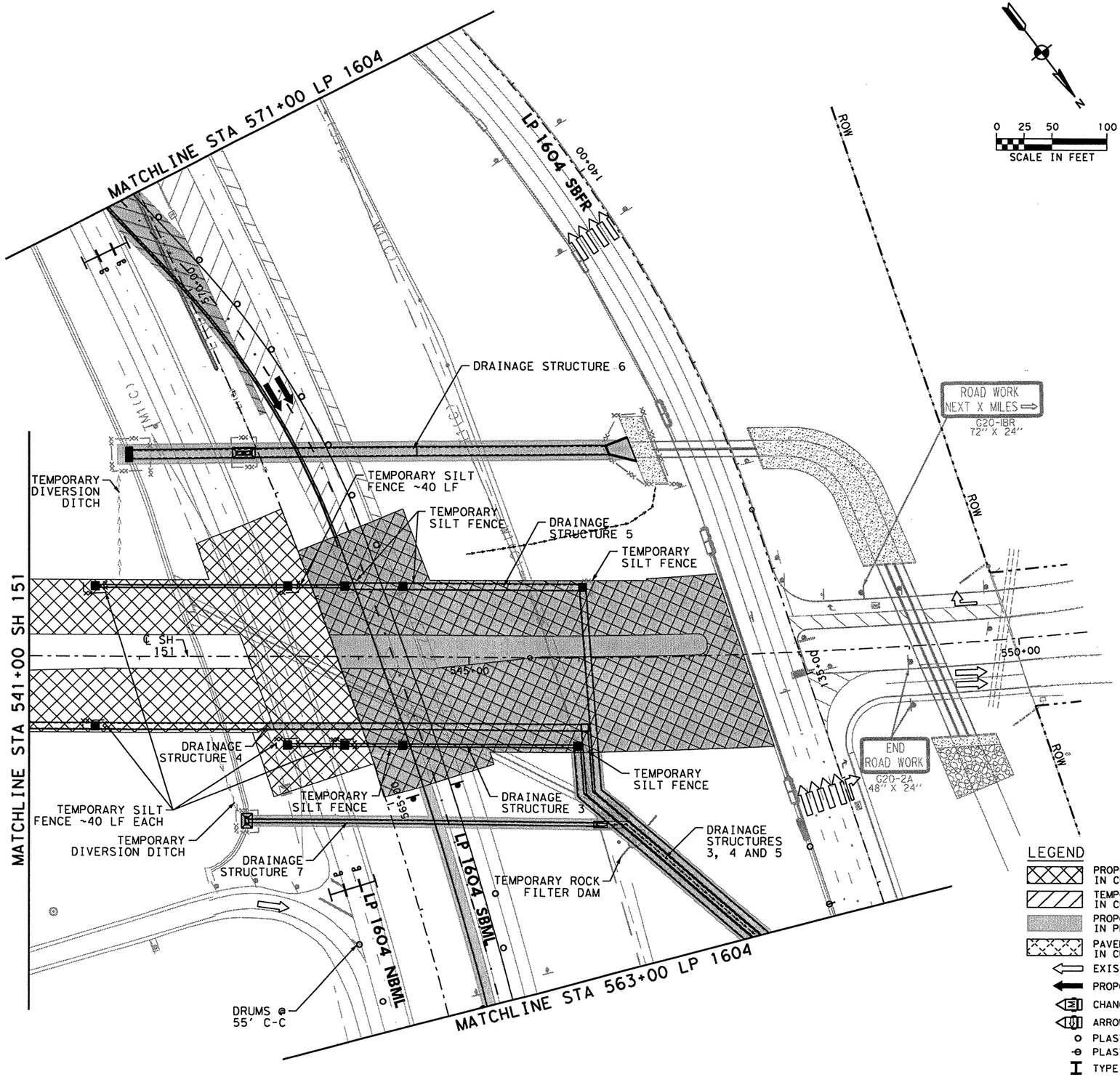

TEMPORARY SW3P ALL PHASES

1. ALL SW3P CONTROL MEASURES SHALL BE PLACED WITHIN TXDOT RIGHT-OF-WAY DURING CONSTRUCTION.
2. SHALL MAINTAIN SW3P CONTROL MEASURES THROUGHOUT CONSTRUCTION.
3. CONSTRUCTION ENTRANCE/EXIT AND CONCRETE WASH-OUT AREA TO BE DETERMINED BY ENGINEER OUT IN THE FIELD.
4. ALL SW3P CONTROL MEASURES INSTALLED DURING CONSTRUCTION ARE TO REMAIN IN PLACE UNTIL 70% VEGETATIVE COVER IS ACHIEVED OR AS APPROVED BY THE ENGINEER.
5. LOCATION OF SW3P CONTROL MEASURES TO BE DETERMINED BY ENGINEER IN THE FIELD.
6. ANTICIPATE ONE REPLACEMENT CYCLE FOR SW3P CONTROL MEASURES.
7. APPLY VEGETATIVE WATERING AS NEEDED TO SUPPLEMENT NATURAL RAINFALL DURING THE VEGETATION ESTABLISHMENT PERIOD. DROUGHT OR OTHER ENVIRONMENTAL CONDITIONS, AS DETERMINED BY THE ENGINEER, MAY REQUIRE THE APPLICATION OF SUPPLEMENTAL IRRIGATION TO BE BETWEEN THE HOURS OF 6PM AND 8AM.
8. SW3P CONTROL MEASURE SYMBOLS ARE NOT TO SCALE.

LEGEND

- PROPOSED CONSTRUCTION IN CURRENT PHASE
- TEMPORARY CONSTRUCTION IN CURRENT PHASE
- PROPOSED CONSTRUCTION IN PREVIOUS PHASE
- PAVEMENT REMOVAL IN CURRENT PHASE
- EXISTING TRAFFIC FLOW ARROW
- PROPOSED TRAFFIC FLOW ARROW
- CHANGEABLE MESSAGE SIGN
- ARROW BOARD
- PLASTIC DRUM
- PLASTIC DRUM WITH CHEVRON
- TYPE III BARRICADE
- TEMPORARY SILT FENCE
- TEMPORARY ROCK FILTER DAM
- SANDBAGS FOR INLET PROTECTION
- DITCH

STATE OF TEXAS
MICHAEL W. MIDKIFF
75435
REGISTERED PROFESSIONAL ENGINEER
3/18/11

NO.	DATE	REVISION DESCRIPTION	APP. BY

© 2011

Texas Department of Transportation

MACTEC
3520 EXECUTIVE CENTER DRIVE
SUITE 200
AUSTIN, TEXAS 78731
(512) 795-0360
REGISTRATION NUMBER: F-1784

SH 151
TRAFFIC CONTROL & SW3P PHASE IIB SH 151 STA 541+00 TO END PROJECT
(SHEET 7 OF 7)

FED. RD. DIV. NO.			SHEET NO.
			78
STATE	DIST.	COUNTY	
TEXAS	SA	BEXAR	
CONT.	SECT.	JOB	HIGHWAY NO.
2452	01	043	SH 151

p:\4760\0-0129\cad\sheet\15tcp220T.dgn 3/18/2011 11:24:48 AM mwmidkiff

SHEET SUMMARY OF ESTIMATED QUANTITIES			
ITEM#	DESCRIPTION	UNIT	QTY

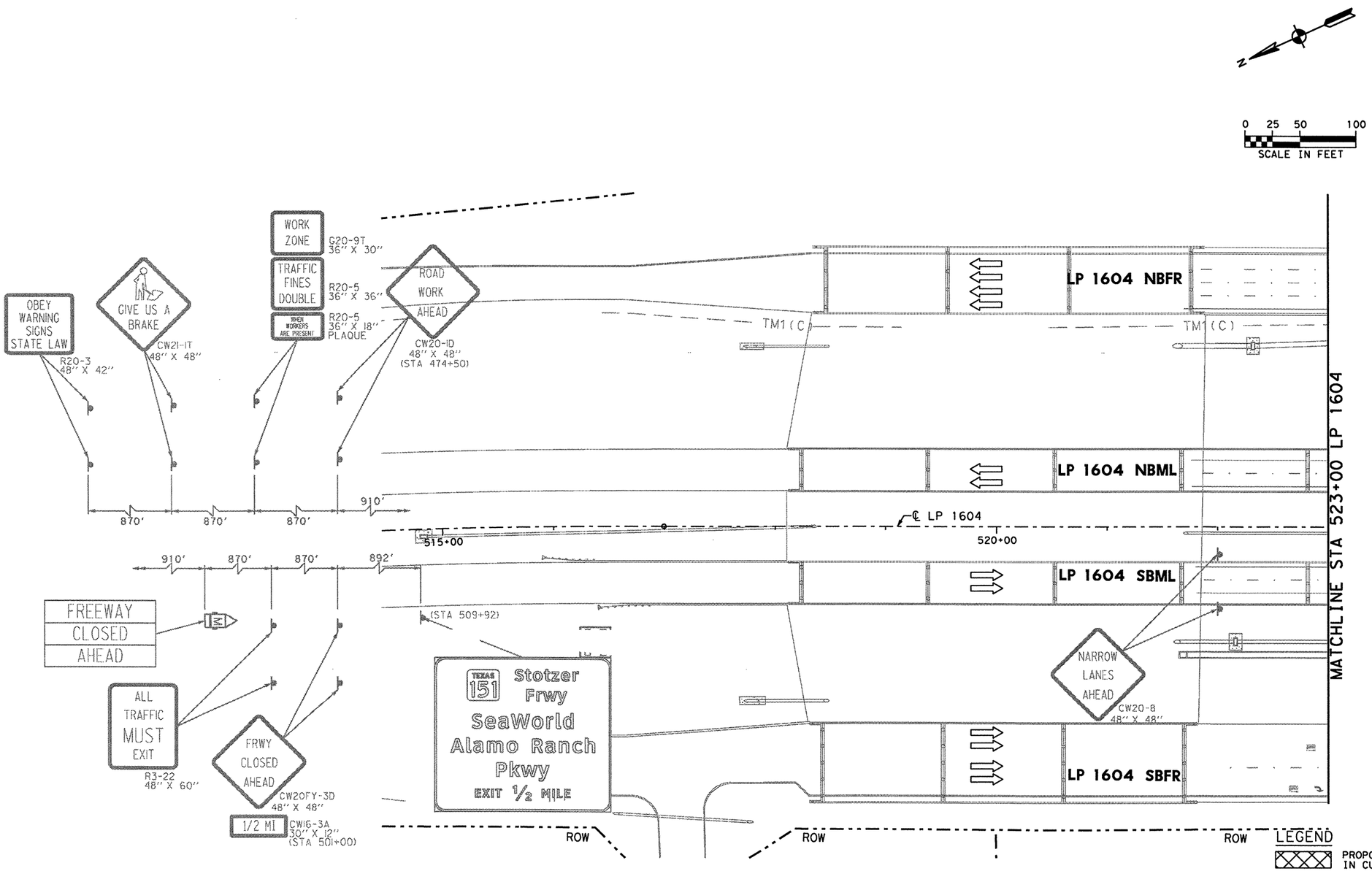

TEMPORARY SW3P ALL PHASES

1. ALL SW3P CONTROL MEASURES SHALL BE PLACED WITHIN TXDOT RIGHT-OF-WAY DURING CONSTRUCTION.
2. SHALL MAINTAIN SW3P CONTROL MEASURES THROUGHOUT CONSTRUCTION.
3. CONSTRUCTION ENTRANCE/EXIT AND CONCRETE WASH-OUT AREA TO BE DETERMINED BY ENGINEER OUT IN THE FIELD.
4. ALL SW3P CONTROL MEASURES INSTALLED DURING CONSTRUCTION ARE TO REMAIN IN PLACE UNTIL 70% VEGETATIVE COVER IS ACHIEVED OR AS APPROVED BY THE ENGINEER.
5. LOCATION OF SW3P CONTROL MEASURES TO BE DETERMINED BY ENGINEER IN THE FIELD.
6. ANTICIPATE ONE REPLACEMENT CYCLE FOR SW3P CONTROL MEASURES.
7. APPLY VEGETATIVE WATERING AS NEEDED TO SUPPLEMENT NATURAL RAINFALL DURING THE VEGETATION ESTABLISHMENT PERIOD. DROUGHT OR OTHER ENVIRONMENTAL CONDITIONS, AS DETERMINED BY THE ENGINEER, MAY REQUIRE THE APPLICATION OF SUPPLEMENTAL IRRIGATION TO BE BETWEEN THE HOURS OF 6PM AND 8AM.
8. SW3P CONTROL MEASURE SYMBOLS ARE NOT TO SCALE.

LEGEND

- PROPOSED CONSTRUCTION IN CURRENT PHASE
- TEMPORARY CONSTRUCTION IN CURRENT PHASE
- PROPOSED CONSTRUCTION IN PREVIOUS PHASE
- PAVEMENT REMOVAL IN CURRENT PHASE
- EXISTING TRAFFIC FLOW ARROW
- PROPOSED TRAFFIC FLOW ARROW
- CHANGEABLE MESSAGE SIGN
- ARROW BOARD
- PLASTIC DRUM
- PLASTIC DRUM WITH CHEVRON
- TYPE III BARRICADE
- TEMPORARY SILT FENCE
- RFD TEMPORARY ROCK FILTER DAM
- SANDBAGS FOR INLET PROTECTION
- DITCH

STATE OF TEXAS
MICHAEL W. MIDKIFF
75435
REGISTERED PROFESSIONAL ENGINEER
Michael W. Midkiff
3/18/11

NO.	DATE	REVISION DESCRIPTION	APP. BY

© 2011

Texas Department of Transportation

MACTEC
3520 EXECUTIVE CENTER DRIVE
SUITE 200
AUSTIN, TEXAS 78731
(512) 795-0360

REGISTRATION NUMBER: F-1784

SH 151
TRAFFIC CONTROL & SW3P PHASE IIB
LP 1604
BEGIN PROJECT TO STA 523+00
(SHEET 1 OF 8)

FED. RD. DIV. NO.			SHEET NO.
			79
STATE	DIST.	COUNTY	
TEXAS	SA	BEXAR	
CONT.	SECT.	JOB	HIGHWAY NO.
2452	01	043	SH 151

p:\4760\0-0129\cad\sheet\151tcp2208.dgn 3/18/2011 11:24:55 AM mwmidkiff

SHEET SUMMARY OF ESTIMATED QUANTITIES			
ITEM#	DESCRIPTION	UNIT	QTY
0677	ELIM EXT PAV MRK & MRKS (4")	LF	950

0 25 50 100
SCALE IN FEET

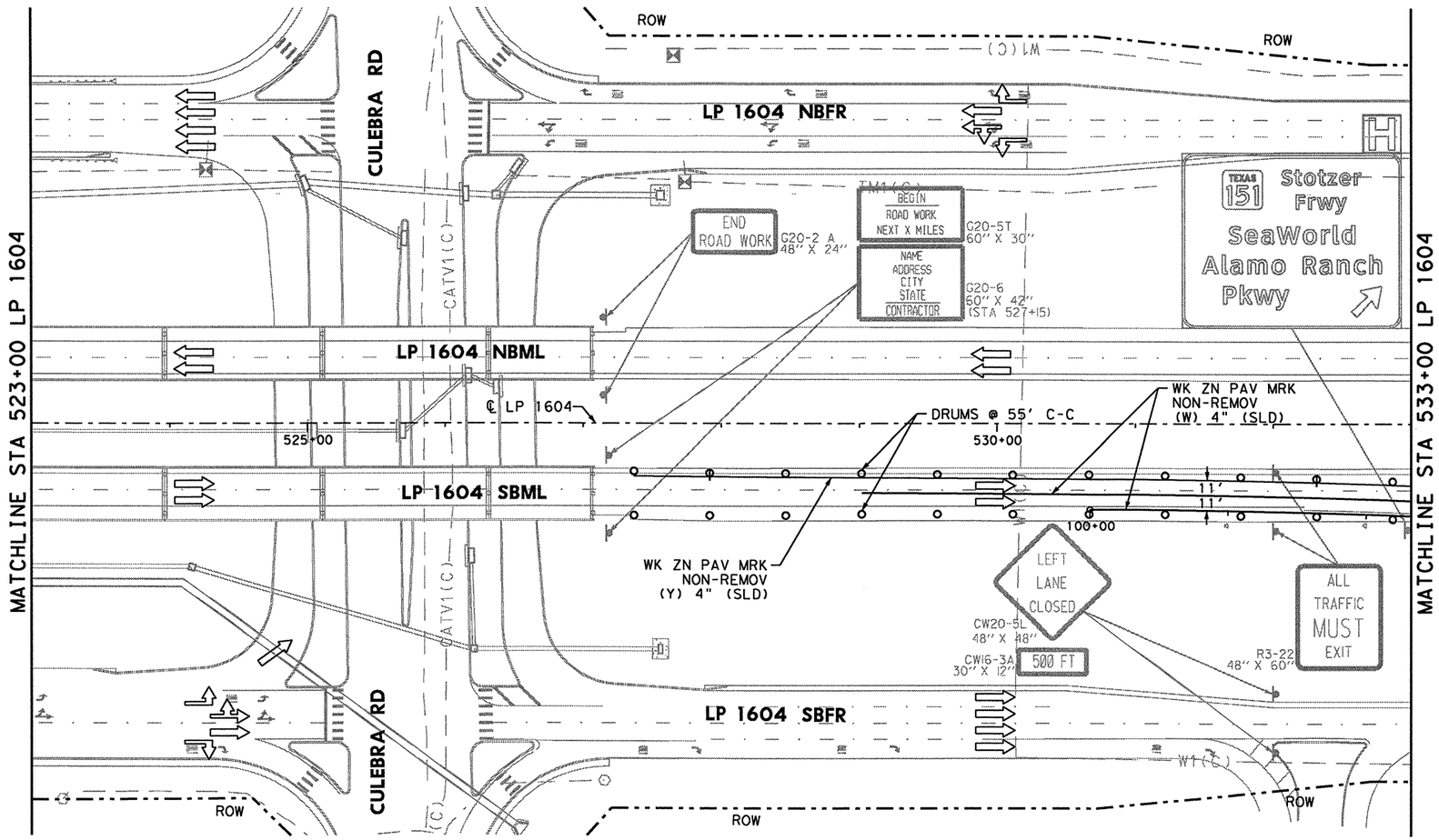

TEMPORARY SW3P ALL PHASES

1. ALL SW3P CONTROL MEASURES SHALL BE PLACED WITHIN TXDOT RIGHT-OF-WAY DURING CONSTRUCTION.
2. SHALL MAINTAIN SW3P CONTROL MEASURES THROUGHOUT CONSTRUCTION.
3. CONSTRUCTION ENTRANCE/EXIT AND CONCRETE WASH-OUT AREA TO BE DETERMINED BY ENGINEER OUT IN THE FIELD.
4. ALL SW3P CONTROL MEASURES INSTALLED DURING CONSTRUCTION ARE TO REMAIN IN PLACE UNTIL 70% VEGETATIVE COVER IS ACHIEVED OR AS APPROVED BY THE ENGINEER.
5. LOCATION OF SW3P CONTROL MEASURES TO BE DETERMINED BY ENGINEER IN THE FIELD.
6. ANTICIPATE ONE REPLACEMENT CYCLE FOR SW3P CONTROL MEASURES.
7. APPLY VEGETATIVE WATERING AS NEEDED TO SUPPLEMENT NATURAL RAINFALL DURING THE VEGETATION ESTABLISHMENT PERIOD. DROUGHT OR OTHER ENVIRONMENTAL CONDITIONS, AS DETERMINED BY THE ENGINEER, MAY REQUIRE THE APPLICATION OF SUPPLEMENTAL IRRIGATION TO BE BETWEEN THE HOURS OF 6PM AND 8AM.
8. SW3P CONTROL MEASURE SYMBOLS ARE NOT TO SCALE.

LEGEND

- PROPOSED CONSTRUCTION IN CURRENT PHASE
- TEMPORARY CONSTRUCTION IN CURRENT PHASE
- PROPOSED CONSTRUCTION IN PREVIOUS PHASE
- PAVEMENT REMOVAL IN CURRENT PHASE
- EXISTING TRAFFIC FLOW ARROW
- PROPOSED TRAFFIC FLOW ARROW
- CHANGEABLE MESSAGE SIGN
- ARROW BOARD
- PLASTIC DRUM
- PLASTIC DRUM WITH CHEVRON
- TYPE III BARRICADE
- TEMPORARY SILT FENCE
- RFD TEMPORARY ROCK FILTER DAM
- SANDBAGS FOR INLET PROTECTION
- DITCH

STATE OF TEXAS
MICHAEL W. MIDKIFF
75435
REGISTERED PROFESSIONAL ENGINEER
3/18/11

NO.	DATE	REVISION DESCRIPTION	APP. BY

©2011

Texas Department of Transportation

MACTEC
3520 EXECUTIVE CENTER DRIVE
SUITE 200
AUSTIN, TEXAS 78731
(512) 795-0360

REGISTRATION NUMBER: F-1784

SH 151
TRAFFIC CONTROL
& SW3P PHASE IIB
LP 1604
STA 523+00 TO
STA 533+00
(SHEET 2 OF 8)

FED. RD. DIV. NO.			SHEET NO.
			80
STATE	DIST.	COUNTY	
TEXAS	SA	BEXAR	
CONT.	SECT.	JOB	HIGHWAY NO.
2452	01	043	SH 151

P:\47600\0-0129\cad\sheet\151tcp2209.dgn 3/18/2011 11:25:02 AM mwmidkiff

SHEET SUMMARY OF ESTIMATED QUANTITIES			
ITEM#	DESCRIPTION	UNIT	QTY
0677	ELIM EXT PAV MRK & MRKS (4")	LF	2100

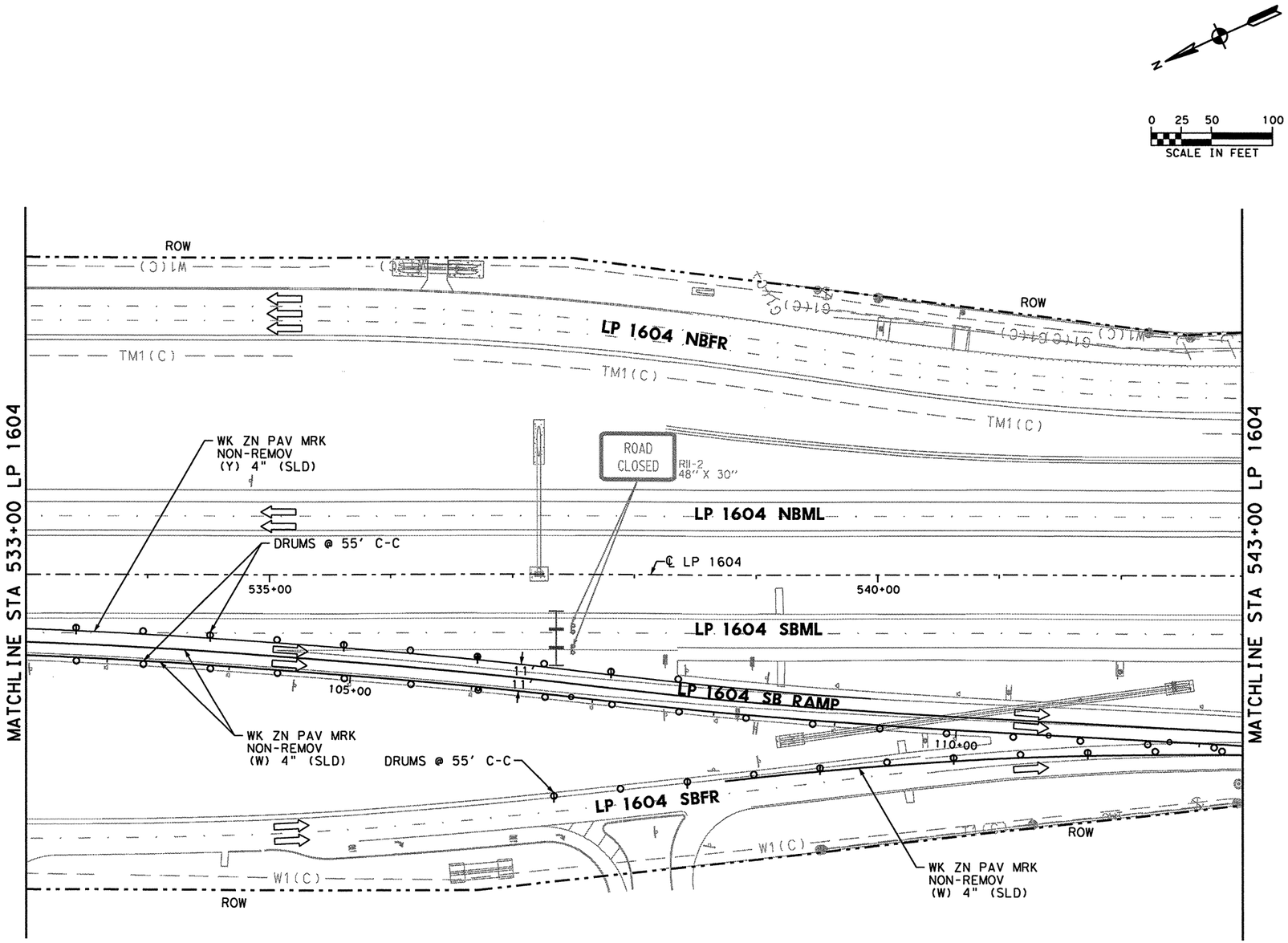

TEMPORARY SW3P ALL PHASES

1. ALL SW3P CONTROL MEASURES SHALL BE PLACED WITHIN TXDOT RIGHT-OF-WAY DURING CONSTRUCTION.
2. SHALL MAINTAIN SW3P CONTROL MEASURES THROUGHOUT CONSTRUCTION.
3. CONSTRUCTION ENTRANCE/EXIT AND CONCRETE WASH-OUT AREA TO BE DETERMINED BY ENGINEER OUT IN THE FIELD.
4. ALL SW3P CONTROL MEASURES INSTALLED DURING CONSTRUCTION ARE TO REMAIN IN PLACE UNTIL 70% VEGETATIVE COVER IS ACHIEVED OR AS APPROVED BY THE ENGINEER.
5. LOCATION OF SW3P CONTROL MEASURES TO BE DETERMINED BY ENGINEER IN THE FIELD.
6. ANTICIPATE ONE REPLACEMENT CYCLE FOR SW3P CONTROL MEASURES.
7. APPLY VEGETATIVE WATERING AS NEEDED TO SUPPLEMENT NATURAL RAINFALL DURING THE VEGETATION ESTABLISHMENT PERIOD. DROUGHT OR OTHER ENVIRONMENTAL CONDITIONS, AS DETERMINED BY THE ENGINEER, MAY REQUIRE THE APPLICATION OF SUPPLEMENTAL IRRIGATION TO BE BETWEEN THE HOURS OF 6PM AND 8AM.
8. SW3P CONTROL MEASURE SYMBOLS ARE NOT TO SCALE.

LEGEND

- PROPOSED CONSTRUCTION IN CURRENT PHASE
- TEMPORARY CONSTRUCTION IN CURRENT PHASE
- PROPOSED CONSTRUCTION IN PREVIOUS PHASE
- PAVEMENT REMOVAL IN CURRENT PHASE
- EXISTING TRAFFIC FLOW ARROW
- PROPOSED TRAFFIC FLOW ARROW
- CHANGEABLE MESSAGE SIGN
- ARROW BOARD
- PLASTIC DRUM
- PLASTIC DRUM WITH CHEVRON
- TYPE III BARRICADE
- TEMPORARY SILT FENCE
- RFD TEMPORARY ROCK FILTER DAM
- SANDBAGS FOR INLET PROTECTION
- DITCH

STATE OF TEXAS
MICHAEL W. MIDKIFF
75435
REGISTERED PROFESSIONAL ENGINEER

Michael W. Midkiff
4/11/11

NO.	DATE	REVISION DESCRIPTION	APP. BY

© 2011

Texas Department of Transportation

MACTEC
3520 EXECUTIVE CENTER DRIVE
SUITE 200
AUSTIN, TEXAS 78731
(512) 795-0360

REGISTRATION NUMBER: F-1784

SH 151
TRAFFIC CONTROL & SW3P PHASE IIB
LP 1604
STA 533+00 TO STA 543+00
(SHEET 3 OF 8)

FED. RD. DIV. NO.			SHEET NO.
			81
STATE	DIST.	COUNTY	
TEXAS	SA	BEXAR	
CONT.	SECT.	JOB	HIGHWAY NO.
2452	01	043	SH 151

p:\4760\0-0129\cad\sheet\151tcp2210.dgn 4/12/2011 5:53:29 PM mwmidkiff

SHEET SUMMARY OF ESTIMATED QUANTITIES			
ITEM#	DESCRIPTION	UNIT	QTY
0677	ELIM EXT PAV MRK & MRKS (4")	LF	550

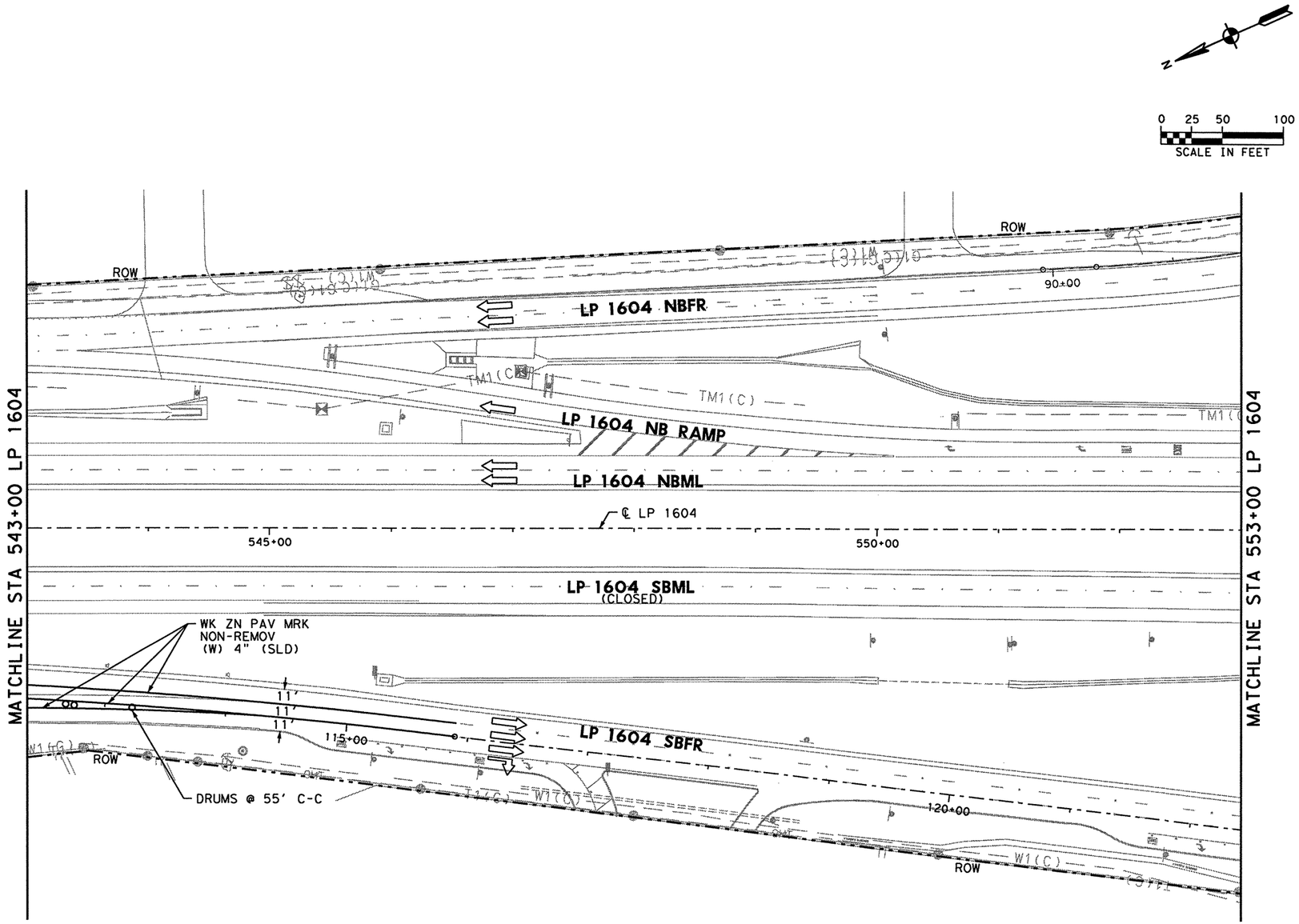

TEMPORARY SW3P ALL PHASES

1. ALL SW3P CONTROL MEASURES SHALL BE PLACED WITHIN TXDOT RIGHT-OF-WAY DURING CONSTRUCTION.
2. SHALL MAINTAIN SW3P CONTROL MEASURES THROUGHOUT CONSTRUCTION.
3. CONSTRUCTION ENTRANCE/EXIT AND CONCRETE WASH-OUT AREA TO BE DETERMINED BY ENGINEER OUT IN THE FIELD.
4. ALL SW3P CONTROL MEASURES INSTALLED DURING CONSTRUCTION ARE TO REMAIN IN PLACE UNTIL 70% VEGETATIVE COVER IS ACHIEVED OR AS APPROVED BY THE ENGINEER.
5. LOCATION OF SW3P CONTROL MEASURES TO BE DETERMINED BY ENGINEER IN THE FIELD.
6. ANTICIPATE ONE REPLACEMENT CYCLE FOR SW3P CONTROL MEASURES.
7. APPLY VEGETATIVE WATERING AS NEEDED TO SUPPLEMENT NATURAL RAINFALL DURING THE VEGETATION ESTABLISHMENT PERIOD. DROUGHT OR OTHER ENVIRONMENTAL CONDITIONS, AS DETERMINED BY THE ENGINEER, MAY REQUIRE THE APPLICATION OF SUPPLEMENTAL IRRIGATION TO BE BETWEEN THE HOURS OF 6PM AND 8AM.
8. SW3P CONTROL MEASURE SYMBOLS ARE NOT TO SCALE.

LEGEND

- PROPOSED CONSTRUCTION IN CURRENT PHASE
- TEMPORARY CONSTRUCTION IN CURRENT PHASE
- PROPOSED CONSTRUCTION IN PREVIOUS PHASE
- PAVEMENT REMOVAL IN CURRENT PHASE
- EXISTING TRAFFIC FLOW ARROW
- PROPOSED TRAFFIC FLOW ARROW
- CHANGEABLE MESSAGE SIGN
- ARROW BOARD
- PLASTIC DRUM
- PLASTIC DRUM WITH CHEVRON
- TYPE III BARRICADE
- TEMPORARY SILT FENCE
- RFD TEMPORARY ROCK FILTER DAM
- SANDBAGS FOR INLET PROTECTION
- DITCH

STATE OF TEXAS
MICHAEL W. MIDKIFF
75435
REGISTERED PROFESSIONAL ENGINEER

Michael W. Midkiff
3/18/11

NO.	DATE	REVISION DESCRIPTION	APP. BY

©2011

Texas Department of Transportation

MACTEC
3520 EXECUTIVE CENTER DRIVE
SUITE 200
AUSTIN, TEXAS 78731
(512) 795-0360

REGISTRATION NUMBER: F-1784

SH 151
TRAFFIC CONTROL & SW3P PHASE IIB
LP 1604
STA 543+00 TO STA 553+00
(SHEET 4 OF 8)

FED. RD. DIV. NO.			SHEET NO.
			82
STATE	DIST.	COUNTY	
TEXAS	SA	BEXAR	
CONT.	SECT.	JOB	HIGHWAY NO.
2452	01	043	SH 151

p:\4760\0-0129\cad\sheet\151tcp2211.dgn 3/18/2011 11:25:16 AM mwmidkiff

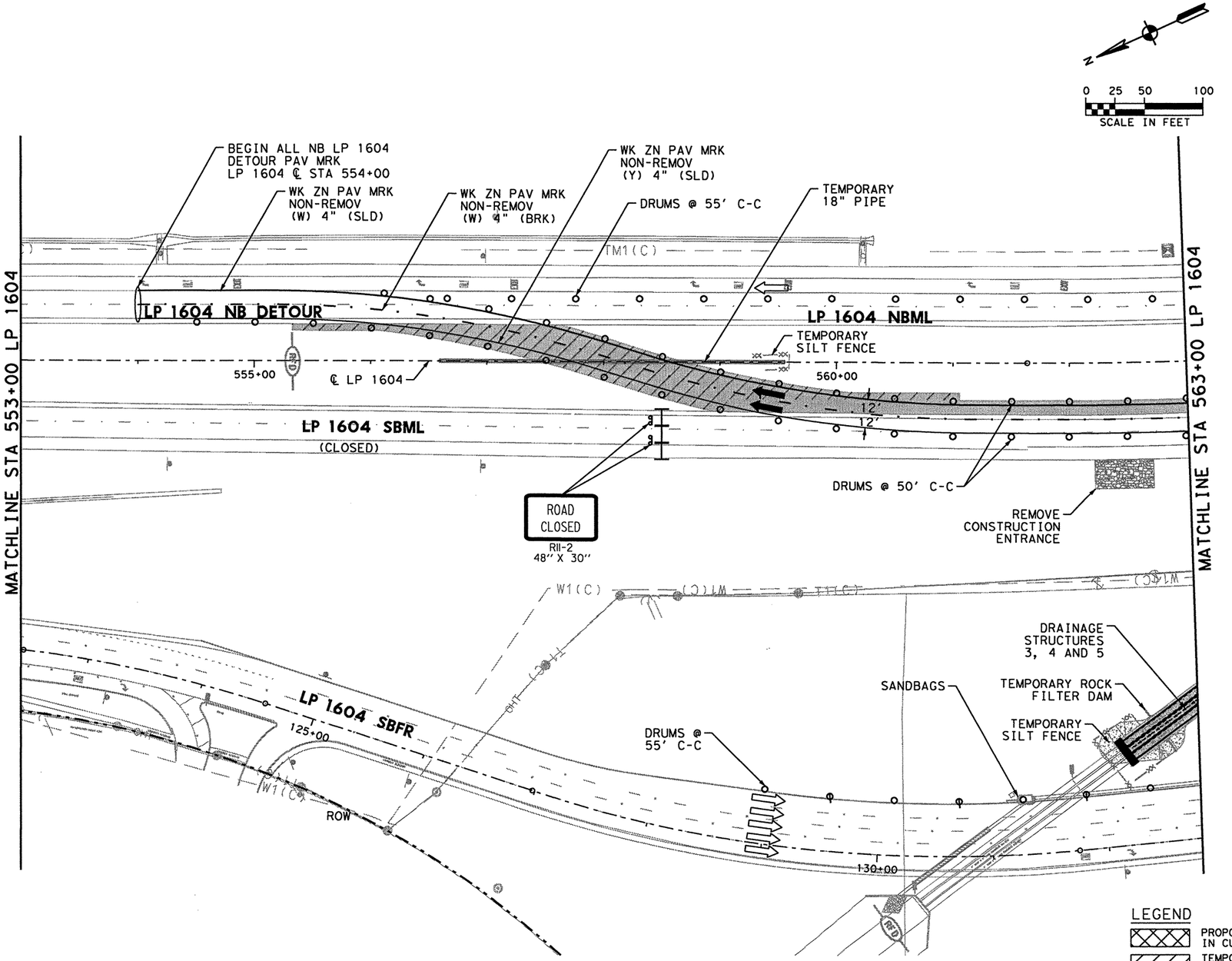

SHEET SUMMARY OF ESTIMATED QUANTITIES			
ITEM#	DESCRIPTION	UNIT	QTY
0506	CONSTRUCTION EXITS (REMOVE)	SY	139
0662	WK ZN PAV MRK NON-REMOV (W) 4" (BRK)	LF	912
0662	WK ZN PAV MRK NON-REMOV (W) 4" (SLD)	LF	911
0662	WK ZN PAV MRK NON-REMOV (Y) 4" (SLD)	LF	912
0662	WK ZN PAV MRK REMOV (REFL) TY I-C	EA	23
0677	ELIM EXT PAV MRK & MRKS (4")	LF	5374
0677	ELIM EXT PAV MRK & MRKS (ARROW)	EA	8
0677	ELIM EXT PAV MRK & MRKS (WORD)	EA	4

TEMPORARY SW3P ALL PHASES

1. ALL SW3P CONTROL MEASURES SHALL BE PLACED WITHIN TXDOT RIGHT-OF-WAY DURING CONSTRUCTION.
2. SHALL MAINTAIN SW3P CONTROL MEASURES THROUGHOUT CONSTRUCTION.
3. CONSTRUCTION ENTRANCE/EXIT AND CONCRETE WASH-OUT AREA TO BE DETERMINED BY ENGINEER OUT IN THE FIELD.
4. ALL SW3P CONTROL MEASURES INSTALLED DURING CONSTRUCTION ARE TO REMAIN IN PLACE UNTIL 70% VEGETATIVE COVER IS ACHIEVED OR AS APPROVED BY THE ENGINEER.
5. LOCATION OF SW3P CONTROL MEASURES TO BE DETERMINED BY ENGINEER IN THE FIELD.
6. ANTICIPATE ONE REPLACEMENT CYCLE FOR SW3P CONTROL MEASURES.
7. APPLY VEGETATIVE WATERING AS NEEDED TO SUPPLEMENT NATURAL RAINFALL DURING THE VEGETATION ESTABLISHMENT PERIOD. DROUGHT OR OTHER ENVIRONMENTAL CONDITIONS, AS DETERMINED BY THE ENGINEER, MAY REQUIRE THE APPLICATION OF SUPPLEMENTAL IRRIGATION TO BE BETWEEN THE HOURS OF 6PM AND 8AM.
8. SW3P CONTROL MEASURE SYMBOLS ARE NOT TO SCALE.

LEGEND

- PROPOSED CONSTRUCTION IN CURRENT PHASE
- TEMPORARY CONSTRUCTION IN CURRENT PHASE
- PROPOSED CONSTRUCTION IN PREVIOUS PHASE
- PAVEMENT REMOVAL IN CURRENT PHASE
- EXISTING TRAFFIC FLOW ARROW
- PROPOSED TRAFFIC FLOW ARROW
- CHANGEABLE MESSAGE SIGN
- ARROW BOARD
- PLASTIC DRUM
- PLASTIC DRUM WITH CHEVRON
- TYPE III BARRICADE
- TEMPORARY SILT FENCE
- TEMPORARY ROCK FILTER DAM
- SANDBAGS FOR INLET PROTECTION
- DITCH

STATE OF TEXAS
MICHAEL W. MIDKIFF
75435
REGISTERED PROFESSIONAL ENGINEER
3/18/11

NO.	DATE	REVISION DESCRIPTION	APP. BY

©2011

Texas Department of Transportation

MACTEC
3520 EXECUTIVE CENTER DRIVE
SUITE 200
AUSTIN, TEXAS 78731
(512) 795-0360

REGISTRATION NUMBER: F-1784

SH 151
TRAFFIC CONTROL & SW3P PHASE IIB
LP 1604
STA 553+00 TO STA 563+00
(SHEET 5 OF 8)

FED. RD. DIV. NO.			SHEET NO.
			83
STATE	DIST.	COUNTY	
TEXAS	SA	BEXAR	
CONT.	SECT.	JOB	HIGHWAY NO.
2452	01	043	SH 151

p:\4760\0-0129\cad\sheet\151tcp2212.dgn 3/18/2011 11:25:24 AM mwmidkiff

LP 1604 SBFR
PH 2B-D
NTS

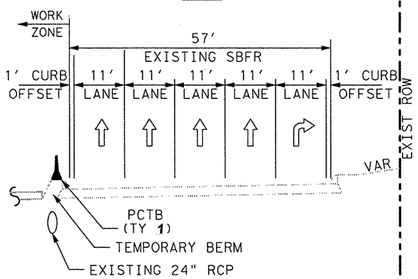

LP 1604 MAIN LANE
SECTION E
SEE TCP DETAIL 1

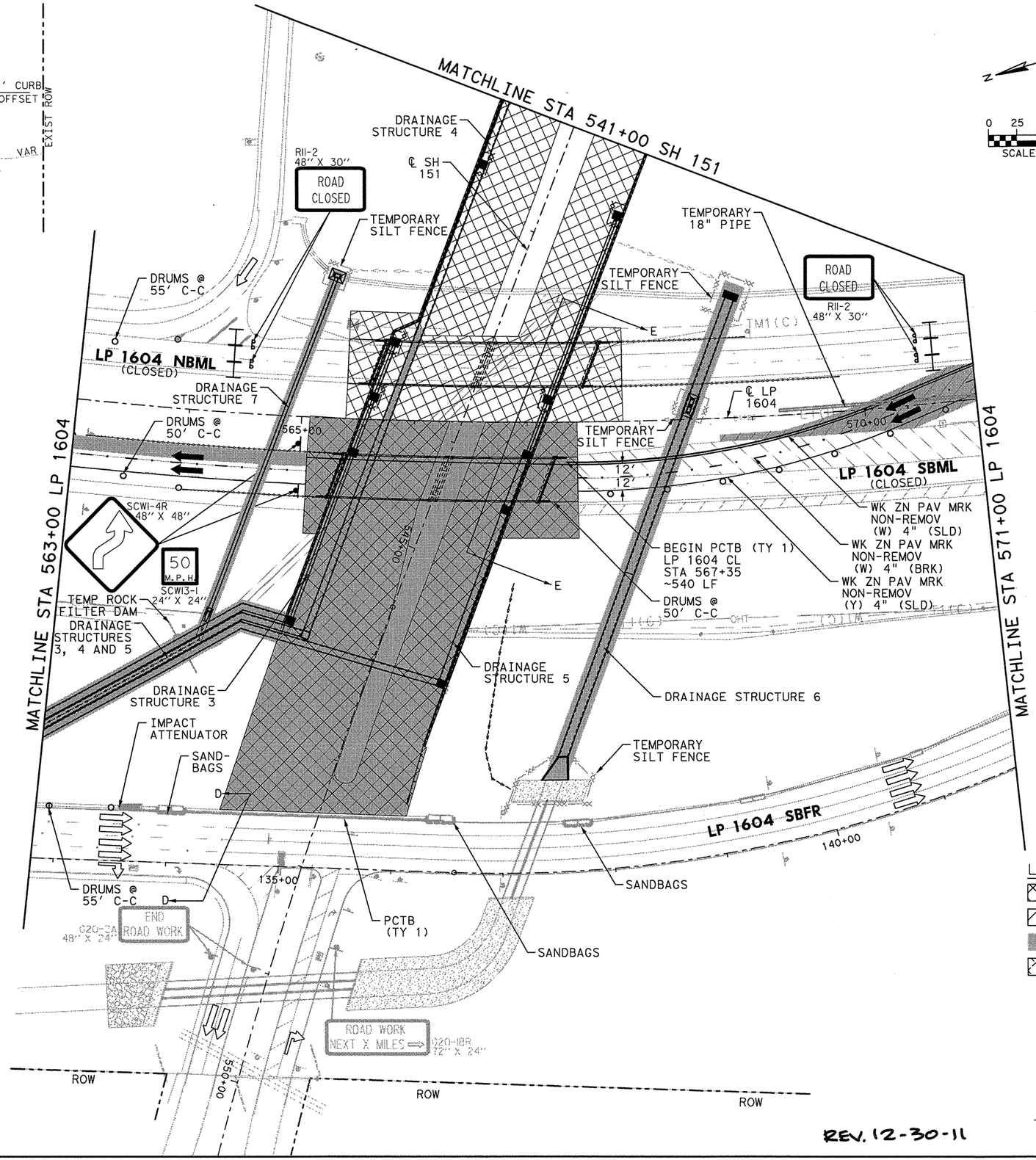

SHEET SUMMARY OF ESTIMATED QUANTITIES			
ITEM#	DESCRIPTION	UNIT	QTY
0512	PORT CTB (MOVE)(SNGL SLP) (TY 1)	LF	375
0512	PORT CTB (REMOVE)(SNGL SLP) (TY 1)	LF	510
0545	CRASH CUSH ATTEN (REMOVE) (WORK	EA	1
0662	WK ZN PAV MRK NON-REMOV (W) 4" (BRK)	LF	816
0662	WK ZN PAV MRK NON-REMOV (W) 4" (SLD)	LF	814
0662	WK ZN PAV MRK NON-REMOV (Y) 4" (SLD)	LF	819
0662	WK ZN PAV MRK REMOV (REFL) TY I-C	EA	20
0677	ELIM EXT PAV MRK & MRKS (4")	LF	8030
0677	ELIM EXT PAV MRK & MRKS (24")	LF	601

TEMPORARY SW3P ALL PHASES

1. ALL SW3P CONTROL MEASURES SHALL BE PLACED WITHIN TXDOT RIGHT-OF-WAY DURING CONSTRUCTION.
2. SHALL MAINTAIN SW3P CONTROL MEASURES THROUGHOUT CONSTRUCTION.
3. CONSTRUCTION ENTRANCE/EXIT AND CONCRETE WASH-OUT AREA TO BE DETERMINED BY ENGINEER OUT IN THE FIELD.
4. ALL SW3P CONTROL MEASURES INSTALLED DURING CONSTRUCTION ARE TO REMAIN IN PLACE UNTIL 70% VEGETATIVE COVER IS ACHIEVED OR AS APPROVED BY THE ENGINEER.
5. LOCATION OF SW3P CONTROL MEASURES TO BE DETERMINED BY ENGINEER IN THE FIELD.
6. ANTICIPATE ONE REPLACEMENT CYCLE FOR SW3P CONTROL MEASURES.
7. APPLY VEGETATIVE WATERING AS NEEDED TO SUPPLEMENT NATURAL RAINFALL DURING THE VEGETATION ESTABLISHMENT PERIOD. DROUGHT OR OTHER ENVIRONMENTAL CONDITIONS, AS DETERMINED BY THE ENGINEER, MAY REQUIRE THE APPLICATION OF SUPPLEMENTAL IRRIGATION TO BE BETWEEN THE HOURS OF 6PM AND 8AM.
8. SW3P CONTROL MEASURE SYMBOLS ARE NOT TO SCALE.

LEGEND

- PROPOSED CONSTRUCTION IN CURRENT PHASE
- TEMPORARY CONSTRUCTION IN CURRENT PHASE
- PROPOSED CONSTRUCTION IN PREVIOUS PHASE
- PAVEMENT REMOVAL IN CURRENT PHASE
- EXISTING TRAFFIC FLOW ARROW
- PROPOSED TRAFFIC FLOW ARROW
- CHANGEABLE MESSAGE SIGN
- ARROW BOARD
- PLASTIC DRUM
- PLASTIC DRUM WITH CHEVRON
- TYPE III BARRICADE
- TEMPORARY SILT FENCE
- TEMPORARY ROCK FILTER DAM
- SANDBAGS FOR INLET PROTECTION
- DITCH

STATE OF TEXAS
MICHAEL W. MIDKIFF
75435
REGISTERED
PROFESSIONAL ENGINEER
12/5/11

NO.	DATE	REVISION DESCRIPTION	APP. BY

© 2011

Texas Department of Transportation

MACTEC
3520 EXECUTIVE CENTER DRIVE
SUITE 200
AUSTIN, TEXAS 78731
(512) 795-0360
REGISTRATION NUMBER: F-1784

SH 151
TRAFFIC CONTROL & SW3P PHASE IIB
LP 1604
STA 563+00 TO STA 571+00
(SHEET 6 OF 8)

FED. RD. DIV. NO.			SHEET NO.
			84

STATE	DIST.	COUNTY	
TEXAS	SA	BEXAR	
CONT.	SECT.	JOB	HIGHWAY NO.
2452	01	043	SH 151

REV. 12-30-11

p:\4760\0-0129\cad\sheet\15ltcp2213.dgn 12/3/2011 7:07:09 PM mwmidkiff

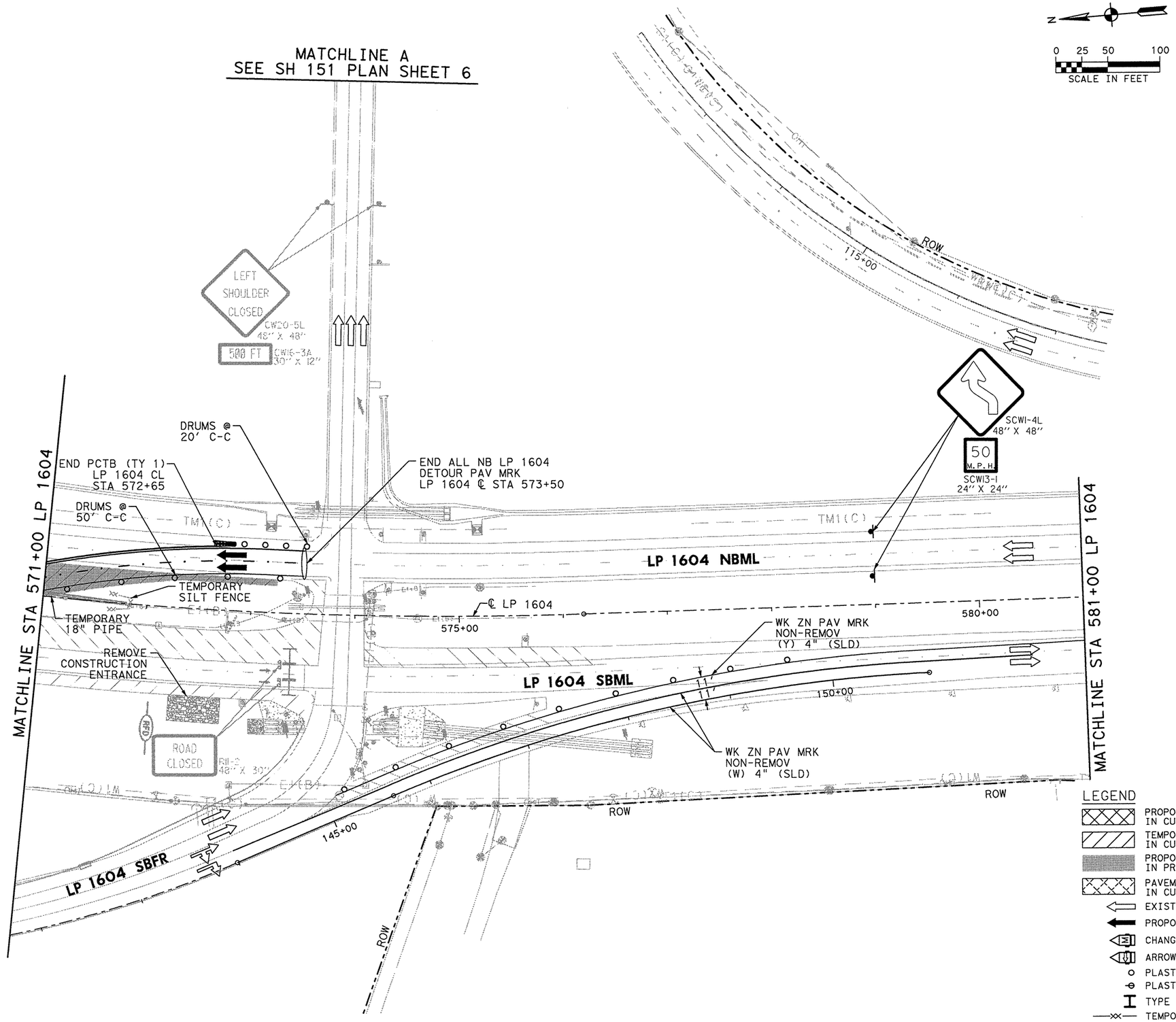

SHEET SUMMARY OF ESTIMATED QUANTITIES			
ITEM#	DESCRIPTION	UNIT	QTY
0506	CONSTRUCTION EXITS (REMOVE)	SY	139
0512	PORT CTB (MOVE)(SNGL SLP) (TY 1)	LF	165
0545	CRASH CUSH ATTEN (MOV&RESET) (WORK	EA	1
0662	WK ZN PAV MRK NON-REMOV (W) 4" (BRK)	LF	272
0662	WK ZN PAV MRK NON-REMOV (W) 4" (SLD)	LF	271
0662	WK ZN PAV MRK NON-REMOV (Y) 4" (SLD)	LF	273
0662	WK ZN PAV MRK REMOV (REFL) TY I-C	EA	6
0677	ELIM EXT PAV MRK & MRKS (4")	LF	5050
0677	ELIM EXT PAV MRK & MRKS (24")	LF	236
0677	ELIM EXT PAV MRK & MRKS (ARROW)	EA	2

TEMPORARY SW3P ALL PHASES

1. ALL SW3P CONTROL MEASURES SHALL BE PLACED WITHIN TXDOT RIGHT-OF-WAY DURING CONSTRUCTION.
2. SHALL MAINTAIN SW3P CONTROL MEASURES THROUGHOUT CONSTRUCTION.
3. CONSTRUCTION ENTRANCE/EXIT AND CONCRETE WASH-OUT AREA TO BE DETERMINED BY ENGINEER OUT IN THE FIELD.
4. ALL SW3P CONTROL MEASURES INSTALLED DURING CONSTRUCTION ARE TO REMAIN IN PLACE UNTIL 70% VEGETATIVE COVER IS ACHIEVED OR AS APPROVED BY THE ENGINEER.
5. LOCATION OF SW3P CONTROL MEASURES TO BE DETERMINED BY ENGINEER IN THE FIELD.
6. ANTICIPATE ONE REPLACEMENT CYCLE FOR SW3P CONTROL MEASURES.
7. APPLY VEGETATIVE WATERING AS NEEDED TO SUPPLEMENT NATURAL RAINFALL DURING THE VEGETATION ESTABLISHMENT PERIOD. DROUGHT OR OTHER ENVIRONMENTAL CONDITIONS, AS DETERMINED BY THE ENGINEER, MAY REQUIRE THE APPLICATION OF SUPPLEMENTAL IRRIGATION TO BE BETWEEN THE HOURS OF 6PM AND 8AM.
8. SW3P CONTROL MEASURE SYMBOLS ARE NOT TO SCALE.

LEGEND

- PROPOSED CONSTRUCTION IN CURRENT PHASE
- TEMPORARY CONSTRUCTION IN CURRENT PHASE
- PROPOSED CONSTRUCTION IN PREVIOUS PHASE
- PAVEMENT REMOVAL IN CURRENT PHASE
- EXISTING TRAFFIC FLOW ARROW
- PROPOSED TRAFFIC FLOW ARROW
- CHANGEABLE MESSAGE SIGN
- ARROW BOARD
- PLASTIC DRUM
- PLASTIC DRUM WITH CHEVRON
- TYPE III BARRICADE
- TEMPORARY SILT FENCE
- TEMPORARY ROCK FILTER DAM
- SANDBAGS FOR INLET PROTECTION
- DITCH

STATE OF TEXAS
MICHAEL W. MIDKIFF
75435
REGISTERED PROFESSIONAL ENGINEER
12/5/11

NO.	DATE	REVISION DESCRIPTION	APP. BY

© 2011

Texas Department of Transportation

MACTEC
3520 EXECUTIVE CENTER DRIVE
SUITE 200
AUSTIN, TEXAS 78731
(512) 795-0360

REGISTRATION NUMBER: F-1784

SH 151
TRAFFIC CONTROL & SW3P PHASE IIB
LP 1604
STA 571+00 TO STA 581+00
(SHEET 7 OF 8)

FED. RD. DIV. NO.			SHEET NO.
			85
STATE	DIST.	COUNTY	
TEXAS	SA	BEXAR	
CONT.	SECT.	JOB	HIGHWAY NO.
2452	01	043	SH 151

REV. 12-30-11

p:\4760\0-0129\cad\sheet\151tp2214.dgn 12/3/2011 7:07:17 PM mwmidkiff

SHEET SUMMARY OF ESTIMATED QUANTITIES			
ITEM#	DESCRIPTION	UNIT	QTY
0677	ELIM EXT PAV MRK & MRKS (4")	LF	151

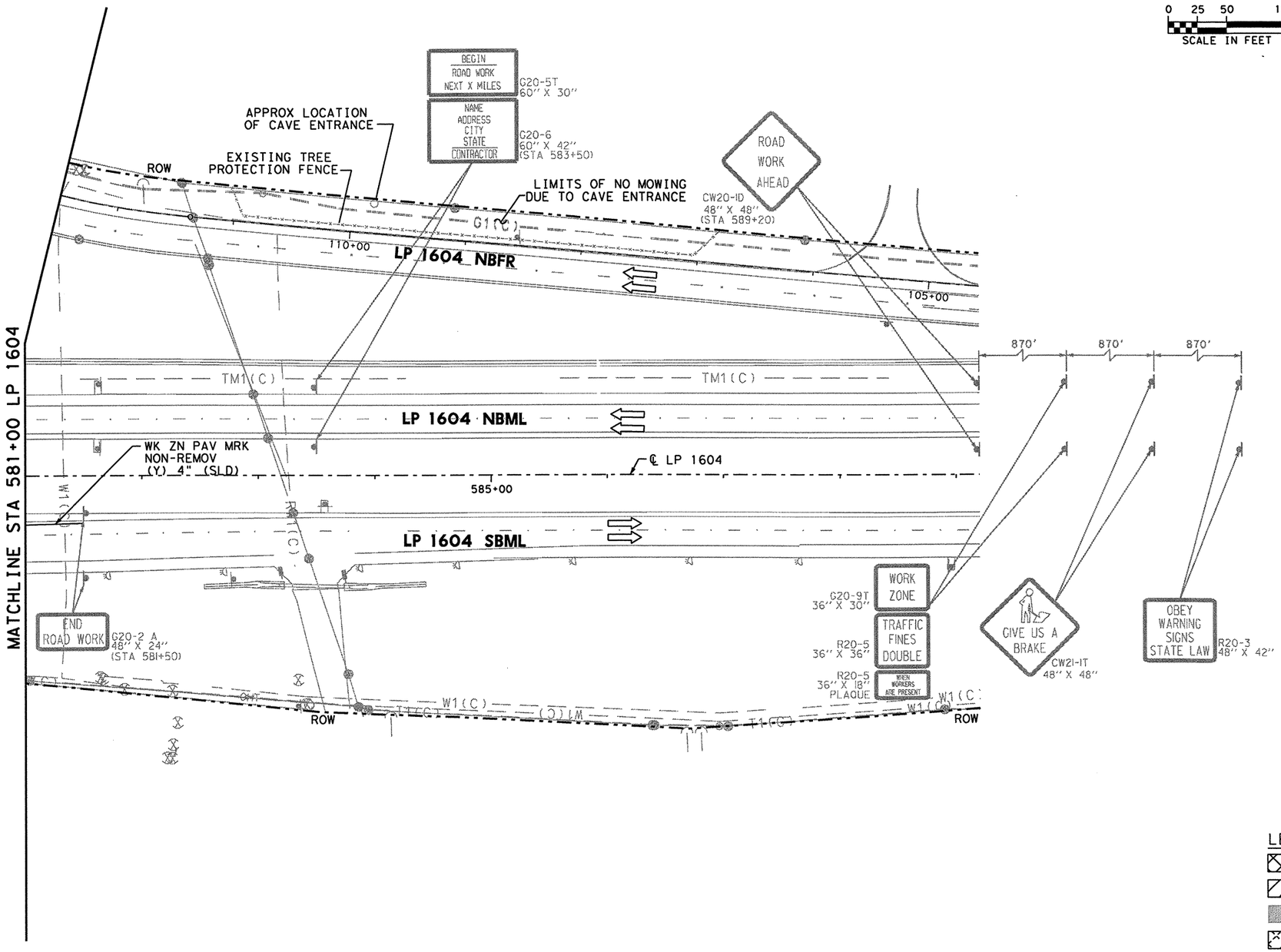

TEMPORARY SW3P ALL PHASES

1. ALL SW3P CONTROL MEASURES SHALL BE PLACED WITHIN TXDOT RIGHT-OF-WAY DURING CONSTRUCTION.
2. SHALL MAINTAIN SW3P CONTROL MEASURES THROUGHOUT CONSTRUCTION.
3. CONSTRUCTION ENTRANCE/EXIT AND CONCRETE WASH-OUT AREA TO BE DETERMINED BY ENGINEER OUT IN THE FIELD.
4. ALL SW3P CONTROL MEASURES INSTALLED DURING CONSTRUCTION ARE TO REMAIN IN PLACE UNTIL 70% VEGETATIVE COVER IS ACHIEVED OR AS APPROVED BY THE ENGINEER.
5. LOCATION OF SW3P CONTROL MEASURES TO BE DETERMINED BY ENGINEER IN THE FIELD.
6. ANTICIPATE ONE REPLACEMENT CYCLE FOR SW3P CONTROL MEASURES.
7. APPLY VEGETATIVE WATERING AS NEEDED TO SUPPLEMENT NATURAL RAINFALL DURING THE VEGETATION ESTABLISHMENT PERIOD. DROUGHT OR OTHER ENVIRONMENTAL CONDITIONS, AS DETERMINED BY THE ENGINEER, MAY REQUIRE THE APPLICATION OF SUPPLEMENTAL IRRIGATION TO BE BETWEEN THE HOURS OF 6PM AND 8AM.
8. SW3P CONTROL MEASURE SYMBOLS ARE NOT TO SCALE.

NOTE: REFER TO EPIC PLAN SHEET IN REGARD TO WORK IN VICINITY OF CAVE ENTRANCE.

LEGEND

- PROPOSED CONSTRUCTION IN CURRENT PHASE
- TEMPORARY CONSTRUCTION IN CURRENT PHASE
- PROPOSED CONSTRUCTION IN PREVIOUS PHASE
- PAVEMENT REMOVAL IN CURRENT PHASE
- EXISTING TRAFFIC FLOW ARROW
- PROPOSED TRAFFIC FLOW ARROW
- CHANGEABLE MESSAGE SIGN
- ARROW BOARD
- PLASTIC DRUM
- PLASTIC DRUM WITH CHEVRON
- TYPE III BARRICADE
- TEMPORARY SILT FENCE
- RFD TEMPORARY ROCK FILTER DAM
- SANDBAGS FOR INLET PROTECTION
- DITCH

STATE OF TEXAS
MICHAEL W. MIDKIFF
75435
REGISTERED PROFESSIONAL ENGINEER
4/11/11

NO.	DATE	REVISION DESCRIPTION	APP. BY

© 2011

Texas Department of Transportation

MACTEC
3520 EXECUTIVE CENTER DRIVE
SUITE 200
AUSTIN, TEXAS 78731
(512) 795-0360

REGISTRATION NUMBER: F-1784

SH 151
TRAFFIC CONTROL & SW3P PHASE IIB
LP 1604
STA 581+00 TO END PROJECT
(SHEET 8 OF 8)

FED. RD. DIV. NO.			SHEET NO.
			86
STATE	DIST.	COUNTY	
TEXAS	SA	BEXAR	
CONT.	SECT.	JOB	HIGHWAY NO.
2452	01	043	SH 151

p:\4760\0-0129\cad\sheet\151tcp2215.dgn 4/12/2011 7:04:12 PM mwmidkiff

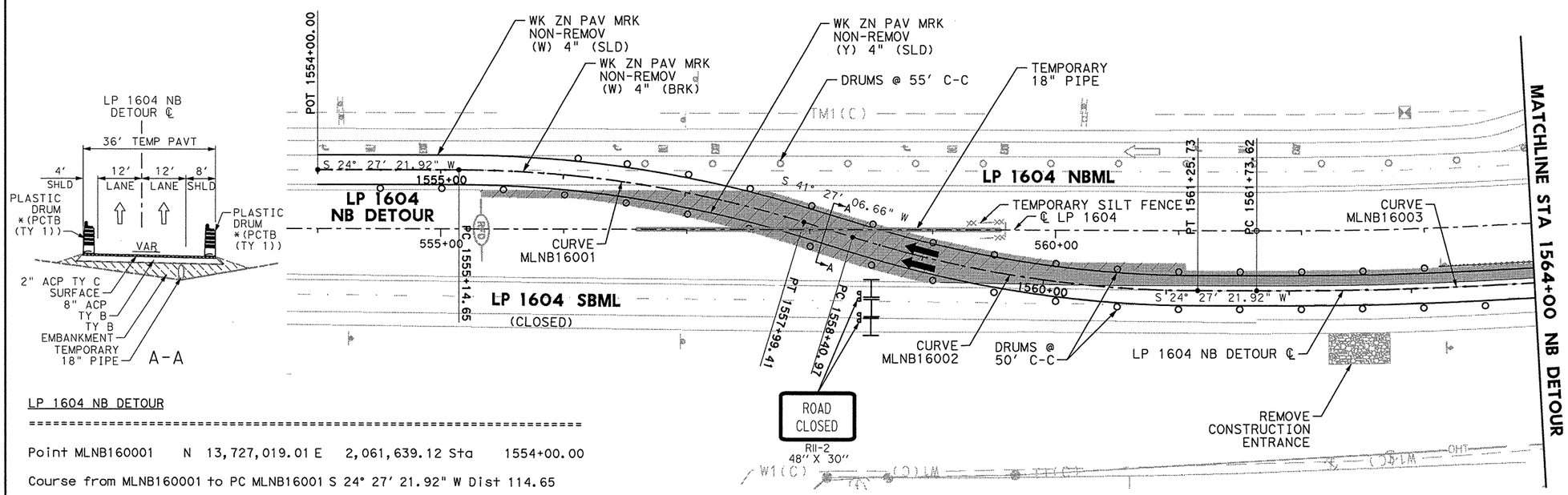

TEMPORARY SW3P ALL PHASES

1. ALL SW3P CONTROL MEASURES SHALL BE PLACED WITHIN TXDOT RIGHT-OF-WAY DURING CONSTRUCTION.
2. SHALL MAINTAIN SW3P CONTROL MEASURES THROUGHOUT CONSTRUCTION.
3. CONSTRUCTION ENTRANCE/EXIT AND CONCRETE WASH-OUT AREA TO BE DETERMINED BY ENGINEER OUT IN THE FIELD.
4. ALL SW3P CONTROL MEASURES INSTALLED DURING CONSTRUCTION ARE TO REMAIN IN PLACE UNTIL 70% VEGETATIVE COVER IS ACHIEVED OR AS APPROVED BY THE ENGINEER.
5. LOCATION OF SW3P CONTROL MEASURES TO BE DETERMINED BY ENGINEER IN THE FIELD.
6. ANTICIPATE ONE REPLACEMENT CYCLE FOR SW3P CONTROL MEASURES.
7. APPLY VEGETATIVE WATERING AS NEEDED TO SUPPLEMENT NATURAL RAINFALL DURING THE VEGETATION ESTABLISHMENT PERIOD. DROUGHT OR OTHER ENVIRONMENTAL CONDITIONS, AS DETERMINED BY THE ENGINEER, MAY REQUIRE THE APPLICATION OF SUPPLEMENTAL IRRIGATION TO BE BETWEEN THE HOURS OF 6PM AND 8AM.
8. SW3P CONTROL MEASURE SYMBOLS ARE NOT TO SCALE.

0 25 50 100
SCALE IN FEET

LP 1604 NB DETOUR

==========

Point MLNB160001 N 13,727,019.01 E 2,061,639.12 Sta 1554+00.00

Course from MLNB160001 to PC MLNB16001 S 24° 27' 21.92" W Dist 114.65

Curve Data

Curve MLNB16001
P.I. StatioN 1556+58.08 N 13,726,784.09 E 2,061,532.28
Delta = 16° 59' 44.74" (RT)
DegreE = 5° 58' 05.92"
Tangent = 143.44
Length = 284.77
Radius = 960.00
External = 10.66
Long Chord = 283.72
Mid. Ord. = 10.54
P.C. StatioN 1555+14.65 N 13,726,914.65 E 2,061,591.66
P.T. StatioN 1557+99.41 N 13,726,676.58 E 2,061,437.32
C.C. N 13,727,312.09 E 2,060,717.79
Back = S 24° 27' 21.92" W
Ahead = S 41° 27' 06.66" W
Chord Bear = S 32° 57' 14.29" W

Course from PT MLNB16001 to PC MLNB16002 S 41° 27' 06.66" W Dist 41.56

Curve Data

Curve MLNB16002
P.I. StatioN 1559+84.40 N 13,726,537.93 E 2,061,314.86
Delta = 16° 59' 44.74" (LT)
DegreE = 5° 58' 05.92"
Tangent = 143.44
Length = 284.77
Radius = 960.00
External = 10.66
Long Chord = 283.72
Mid. Ord. = 10.54
P.C. StatioN 1558+40.97 N 13,726,645.43 E 2,061,409.82
P.T. StatioN 1561+25.73 N 13,726,407.36 E 2,061,255.48
C.C. N 13,726,009.92 E 2,062,129.35
Back = S 41° 27' 06.66" W
Ahead = S 24° 27' 21.92" W
Chord Bear = S 32° 57' 14.29" W

Course from PT MLNB16002 to PC MLNB16003 S 24° 27' 21.92" W Dist 47.89

Curve Data

Curve MLNB16003
P.I. StatioN 1564+06.80 N 13,726,151.51 E 2,061,139.12
Delta = 6° 54' 00.73" (LT)
DegreE = 1° 28' 52.99"
Tangent = 233.18
Length = 465.79
Radius = 3,867.72
External = 7.02
Long Chord = 465.52
Mid. Ord. = 7.01
P.C. StatioN 1561+73.62 N 13,726,363.77 E 2,061,235.65
P.T. StatioN 1566+39.42 N 13,725,929.19 E 2,061,068.78
C.C. N 13,724,762.55 E 2,064,756.36
Back = S 24° 27' 21.92" W
Ahead = S 17° 33' 21.19" W
Chord Bear = S 21° 00' 21.55" W

Course from PT MLNB16003 to PC MLNB16004 S 17° 33' 21.19" W Dist 104.51

STATE OF TEXAS
MICHAEL W. MIDKIFF
75435
REGISTERED PROFESSIONAL ENGINEER
12/23/11

NO.	DATE	REVISION DESCRIPTION	APP. BY
	12/21/11	DETOUR TYP SECTION	MWM

© 2011

Texas Department of Transportation

MACTEC
3520 EXECUTIVE CENTER DRIVE
SUITE 200
AUSTIN, TEXAS 78731
(512) 795-0360
REGISTRATION NUMBER: F-1784

SH 151
TRAFFIC CONTROL & SW3P PHASE IIB NB DETOUR BEGIN DETOUR TO STA 1564+00
(SHEET 1 OF 2)

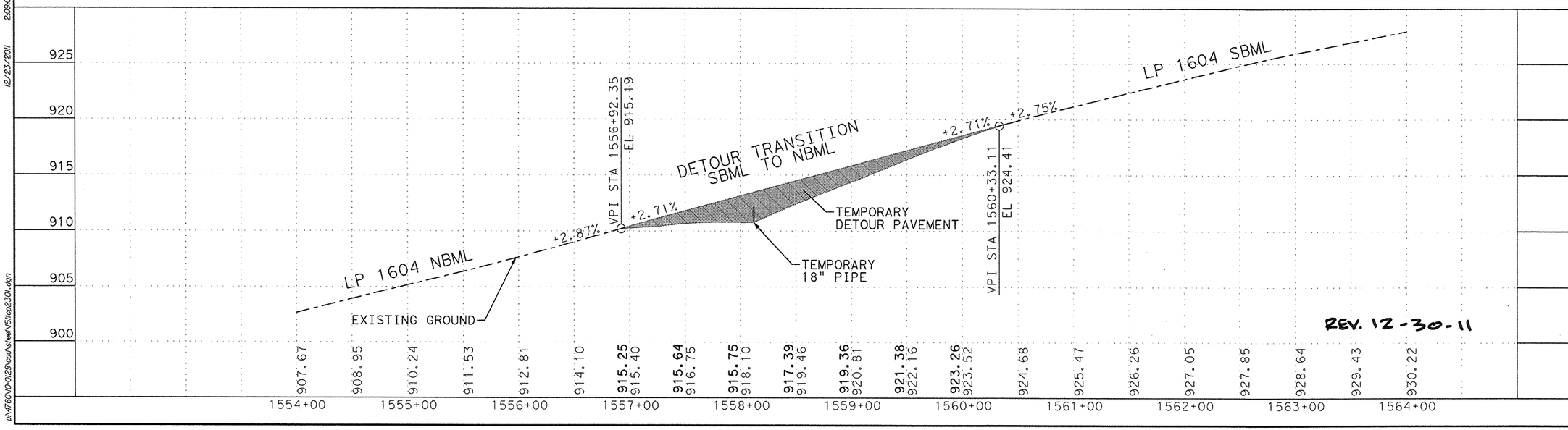

REV. 12-30-11

FED. RD. DIV. NO.			SHEET NO.
			87
STATE	DIST.	COUNTY	
TEXAS	SA	BEXAR	
CONT.	SECT.	JOB	HIGHWAY NO.
2452	01	043	SH 151

12/23/2011 2:09:04 PM mwmidkiff
p:\4760\0-0129\cad\sheet\51fcp2301.dgn

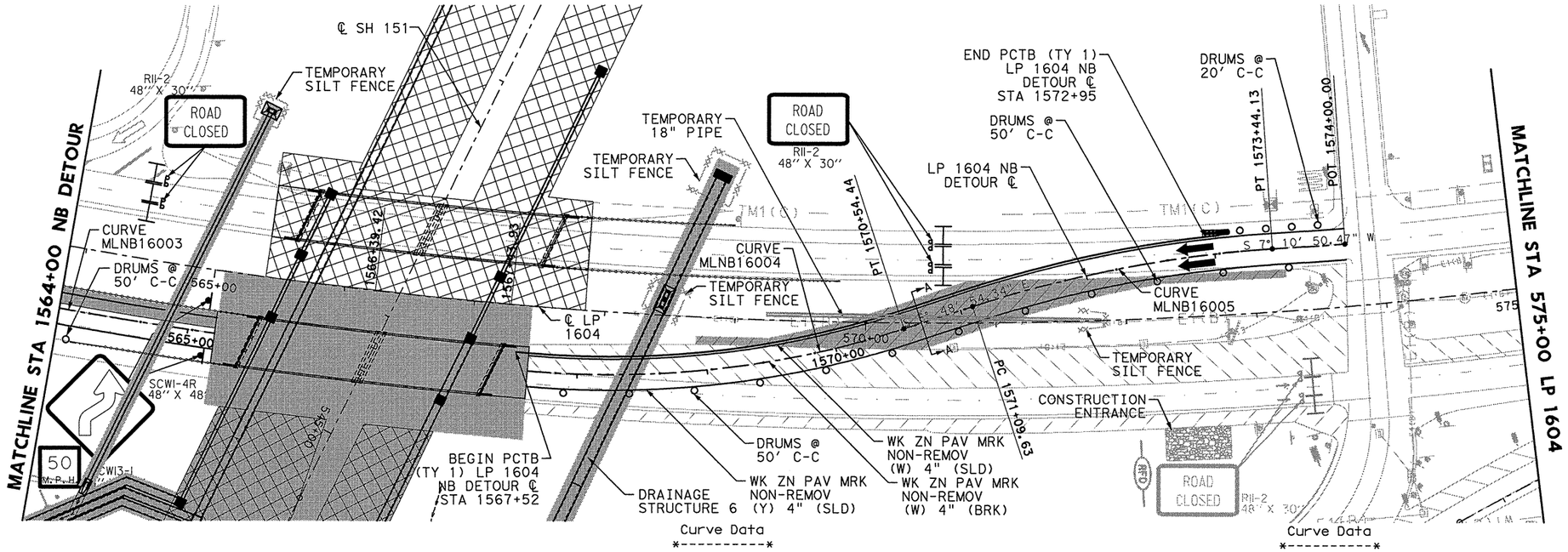

Curve Data

Curve MLNB16004
P.I. StatioN 1569+01.57 N 13,725,679.25 E 2,060,989.71
Delta = 24° 22' 15.53" (LT)
DegreE = 7° 50' 55.45"
Tangent = 157.64
Length = 310.51
Radius = 730.00
External = 16.83
Long Chord = 308.17
Mid. Ord. = 16.45
P.C. StatioN 1567+43.93 N 13,725,829.55 E 2,061,037.26
P.T. StatioN 1570+54.44 N 13,725,522.73 E 2,061,008.42
C.C. N 13,725,609.35 E 2,061,733.26
Back = S 17° 33' 21.19" W
Ahead = S 6° 48' 54.34" E
Chord Bear = S 5° 22' 13.43" W

Course from PT MLNB16004 to PC MLNB16005 S 6° 48' 54.34" E Dist 55.19

Curve Data

Curve MLNB16005
P.I. StatioN 1572+27.47 N 13,725,350.92 E 2,061,028.95
Delta = 13° 59' 44.81" (RT)
DegreE = 5° 58' 05.92"
Tangent = 117.84
Length = 234.50
Radius = 960.00
External = 7.21
Long Chord = 233.92
Mid. Ord. = 7.15
P.C. StatioN 1571+09.63 N 13,725,467.92 E 2,061,014.97
P.T. StatioN 1573+44.13 N 13,725,234.01 E 2,061,014.22
C.C. N 13,725,354.01 E 2,060,061.75
Back = S 6° 48' 54.34" E
Ahead = S 7° 10' 50.47" W
Chord Bear = S 0° 10' 58.06" W

Course from PT MLNB16005 to MLNB160002 S 7° 10' 50.47" W Dist 55.87

Point MLNB160002 N 13,725,178.5752 E 2,061,007.2355 Sta 1574+00.00

==========

Ending chain T_MLNB160 descriptioN

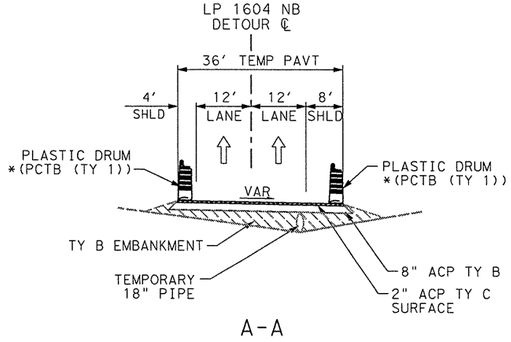

A-A

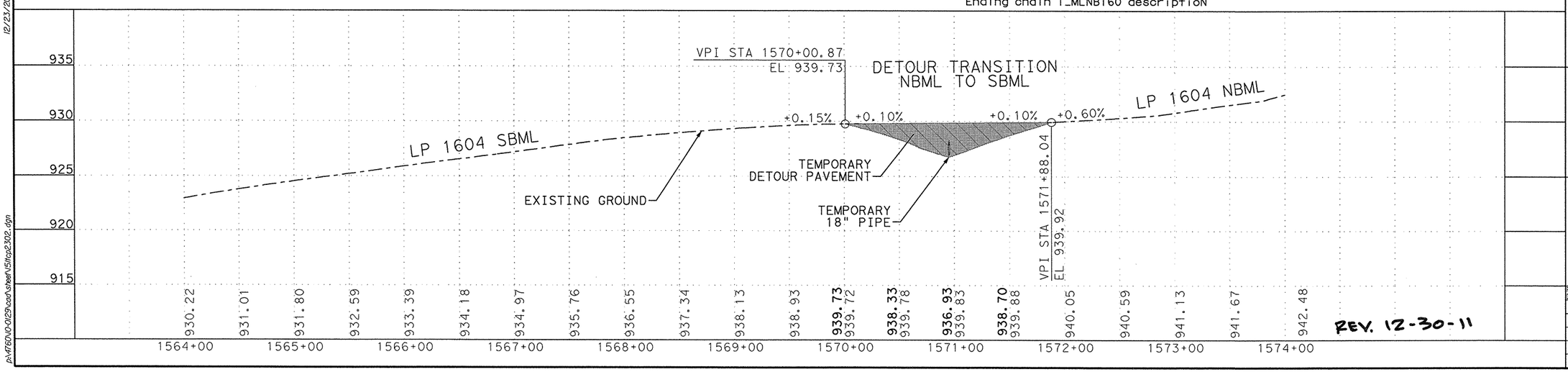

TEMPORARY SW3P ALL PHASES

1. ALL SW3P CONTROL MEASURES SHALL BE PLACED WITHIN TXDOT RIGHT-OF-WAY DURING CONSTRUCTION.
2. SHALL MAINTAIN SW3P CONTROL MEASURES THROUGHOUT CONSTRUCTION.
3. CONSTRUCTION ENTRANCE/EXIT AND CONCRETE WASH-OUT AREA TO BE DETERMINED BY ENGINEER OUT IN THE FIELD.
4. ALL SW3P CONTROL MEASURES INSTALLED DURING CONSTRUCTION ARE TO REMAIN IN PLACE UNTIL 70% VEGETATIVE COVER IS ACHIEVED OR AS APPROVED BY THE ENGINEER.
5. LOCATION OF SW3P CONTROL MEASURES TO BE DETERMINED BY ENGINEER IN THE FIELD.
6. ANTICIPATE ONE REPLACEMENT CYCLE FOR SW3P CONTROL MEASURES.
7. APPLY VEGETATIVE WATERING AS NEEDED TO SUPPLEMENT NATURAL RAINFALL DURING THE VEGETATION ESTABLISHMENT PERIOD. DROUGHT OR OTHER ENVIRONMENTAL CONDITIONS, AS DETERMINED BY THE ENGINEER, MAY REQUIRE THE APPLICATION OF SUPPLEMENTAL IRRIGATION TO BE BETWEEN THE HOURS OF 6PM AND 8AM.
8. SW3P CONTROL MEASURE SYMBOLS ARE NOT TO SCALE.

0 25 50 100
SCALE IN FEET

STATE OF TEXAS
MICHAEL W. MIDKIFF
75435
REGISTERED PROFESSIONAL ENGINEER
12/23/11

NO.	DATE	REVISION DESCRIPTION	APP. BY
	12/21/11	DETOUR TYP SECTION	MWM

© 2011

Texas Department of Transportation

MACTEC
3520 EXECUTIVE CENTER DRIVE
SUITE 200
AUSTIN, TEXAS 78731
(512) 795-0360
REGISTRATION NUMBER: F-1784

SH 151
TRAFFIC CONTROL & SW3P PHASE IIB NB DETOUR STA 1564+00 TO END DETOUR
(SHEET 2 OF 2)

FED. RD. DIV. NO.			SHEET NO.
			88
STATE	DIST.	COUNTY	
TEXAS	SA	BEXAR	
CONT.	SECT.	JOB	HIGHWAY NO.
2452	01	043	SH 151

12/23/2011 2:09:12 PM mwmidkiff
p:\4f60\0-0129\cad\sheet\5ltcp2302.dgn

SHEET SUMMARY OF ESTIMATED QUANTITIES			
ITEM#	DESCRIPTION	UNIT	QTY
0506	ROCK FILTER DAMS (REMOVE)	LF	80

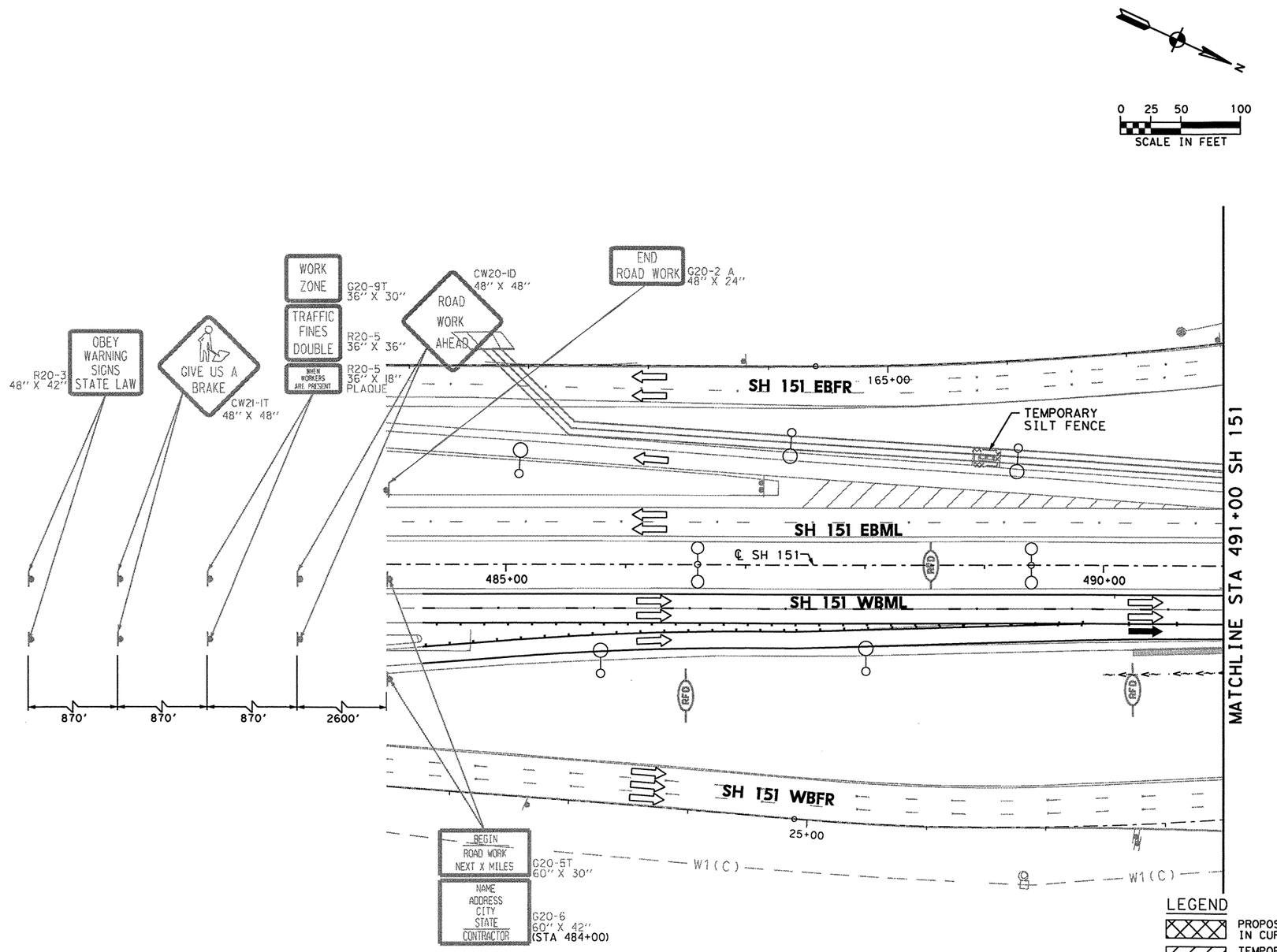

TEMPORARY SW3P ALL PHASES

1. ALL SW3P CONTROL MEASURES SHALL BE PLACED WITHIN TXDOT RIGHT-OF-WAY DURING CONSTRUCTION.
2. SHALL MAINTAIN SW3P CONTROL MEASURES THROUGHOUT CONSTRUCTION.
3. CONSTRUCTION ENTRANCE/EXIT AND CONCRETE WASH-OUT AREA TO BE DETERMINED BY ENGINEER OUT IN THE FIELD.
4. ALL SW3P CONTROL MEASURES INSTALLED DURING CONSTRUCTION ARE TO REMAIN IN PLACE UNTIL 70% VEGETATIVE COVER IS ACHIEVED OR AS APPROVED BY THE ENGINEER.
5. LOCATION OF SW3P CONTROL MEASURES TO BE DETERMINED BY ENGINEER IN THE FIELD.
6. ANTICIPATE ONE REPLACEMENT CYCLE FOR SW3P CONTROL MEASURES.
7. APPLY VEGETATIVE WATERING AS NEEDED TO SUPPLEMENT NATURAL RAINFALL DURING THE VEGETATION ESTABLISHMENT PERIOD. DROUGHT OR OTHER ENVIRONMENTAL CONDITIONS, AS DETERMINED BY THE ENGINEER, MAY REQUIRE THE APPLICATION OF SUPPLEMENTAL IRRIGATION TO BE BETWEEN THE HOURS OF 6PM AND 8AM.
8. SW3P CONTROL MEASURE SYMBOLS ARE NOT TO SCALE.

LEGEND

- PROPOSED CONSTRUCTION IN CURRENT PHASE
- TEMPORARY CONSTRUCTION IN CURRENT PHASE
- PROPOSED CONSTRUCTION IN PREVIOUS PHASE
- PAVEMENT REMOVAL IN CURRENT PHASE
- EXISTING TRAFFIC FLOW ARROW
- PROPOSED TRAFFIC FLOW ARROW
- CHANGEABLE MESSAGE SIGN
- ARROW BOARD
- PLASTIC DRUM
- PLASTIC DRUM WITH CHEVRON
- TYPE III BARRICADE
- TEMPORARY SILT FENCE
- TEMPORARY ROCK FILTER DAM
- SANDBAGS FOR INLET PROTECTION
- DITCH

STATE OF TEXAS
MICHAEL W. MIDKIFF
75435
REGISTERED PROFESSIONAL ENGINEER

Michael W. Midkiff
3/18/11

NO.	DATE	REVISION DESCRIPTION	APP. BY

© 2011

Texas Department of Transportation

MACTEC
3520 EXECUTIVE CENTER DRIVE
SUITE 200
AUSTIN, TEXAS 78731
(512) 795-0360

REGISTRATION NUMBER: F-1784

SH 151
TRAFFIC CONTROL & SW3P PHASE III
SH 151
BEGIN PROJECT TO STA 491+00
(SHEET 1 OF 7)

FED. RD. DIV. NO.			SHEET NO.
			89
STATE	DIST.	COUNTY	
TEXAS	SA	BEXAR	
CONT.	SECT.	JOB	HIGHWAY NO.
2452	01	043	SH 151

p:\4760\0-0129\cad\sheet\151tcp3101.dgn 3/18/2011 11:26:14 AM mwmidkiff

SHEET SUMMARY OF ESTIMATED QUANTITIES			
ITEM#	DESCRIPTION	UNIT	QTY
0506	ROCK FILTER DAMS (REMOVE)	LF	60
0512	PORT CTB (REMOVE) (SNGL SLP) (TY 1)	LF	360
0545	CRASH CUSH ATTEN (REMOVE) (WORK	EA	1

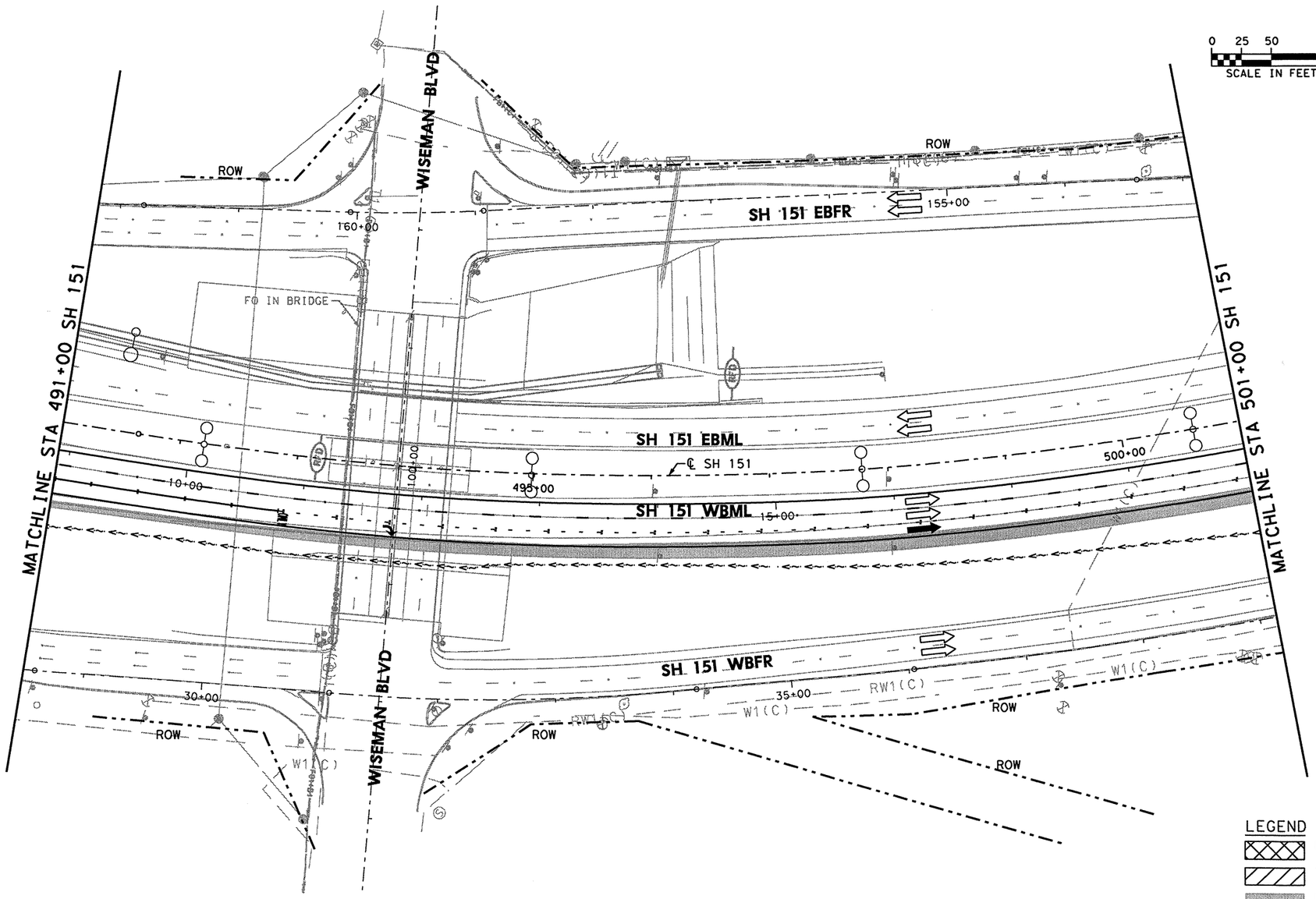

TEMPORARY SW3P ALL PHASES

1. ALL SW3P CONTROL MEASURES SHALL BE PLACED WITHIN TXDOT RIGHT-OF-WAY DURING CONSTRUCTION.
2. SHALL MAINTAIN SW3P CONTROL MEASURES THROUGHOUT CONSTRUCTION.
3. CONSTRUCTION ENTRANCE/EXIT AND CONCRETE WASH-OUT AREA TO BE DETERMINED BY ENGINEER OUT IN THE FIELD.
4. ALL SW3P CONTROL MEASURES INSTALLED DURING CONSTRUCTION ARE TO REMAIN IN PLACE UNTIL 70% VEGETATIVE COVER IS ACHIEVED OR AS APPROVED BY THE ENGINEER.
5. LOCATION OF SW3P CONTROL MEASURES TO BE DETERMINED BY ENGINEER IN THE FIELD.
6. ANTICIPATE ONE REPLACEMENT CYCLE FOR SW3P CONTROL MEASURES.
7. APPLY VEGETATIVE WATERING AS NEEDED TO SUPPLEMENT NATURAL RAINFALL DURING THE VEGETATION ESTABLISHMENT PERIOD. DROUGHT OR OTHER ENVIRONMENTAL CONDITIONS, AS DETERMINED BY THE ENGINEER, MAY REQUIRE THE APPLICATION OF SUPPLEMENTAL IRRIGATION TO BE BETWEEN THE HOURS OF 6PM AND 8AM.
8. SW3P CONTROL MEASURE SYMBOLS ARE NOT TO SCALE.

LEGEND

- PROPOSED CONSTRUCTION IN CURRENT PHASE
- TEMPORARY CONSTRUCTION IN CURRENT PHASE
- PROPOSED CONSTRUCTION IN PREVIOUS PHASE
- PAVEMENT REMOVAL IN CURRENT PHASE
- EXISTING TRAFFIC FLOW ARROW
- PROPOSED TRAFFIC FLOW ARROW
- CHANGEABLE MESSAGE SIGN
- ARROW BOARD
- PLASTIC DRUM
- PLASTIC DRUM WITH CHEVRON
- TYPE III BARRICADE
- TEMPORARY SILT FENCE
- RFD — TEMPORARY ROCK FILTER DAM
- SANDBAGS FOR INLET PROTECTION
- DITCH

STATE OF TEXAS
MICHAEL W. MIDKIFF
75435
REGISTERED PROFESSIONAL ENGINEER
4/11/11

NO.	DATE	REVISION DESCRIPTION	APP. BY

© 2011

Texas Department of Transportation

MACTEC
3520 EXECUTIVE CENTER DRIVE
SUITE 200
AUSTIN, TEXAS 78731
(512) 795-0360

REGISTRATION NUMBER: F-1784

SH 151
TRAFFIC CONTROL & SW3P PHASE III SH 151 STA 491+00 TO STA 501+00
(SHEET 2 OF 7)

FED. RD. DIV. NO.			SHEET NO.
			90
STATE	DIST.	COUNTY	
TEXAS	SA	BEXAR	
CONT.	SECT.	JOB	HIGHWAY NO.
2452	01	043	SH 151

pl:\RFBO\0-0129\cad\Sheet\15fep3102.dgn 4/12/2011 5:54:00 PM mwmidkiff

SHEET SUMMARY OF ESTIMATED QUANTITIES			
ITEM#	DESCRIPTION	UNIT	QTY
0512	PORT CTB (REMOVE) (SNGL SLP) (TY 1)	LF	1505
0545	CRASH CUSH ATTEN (REMOVE) (WORK	EA	1

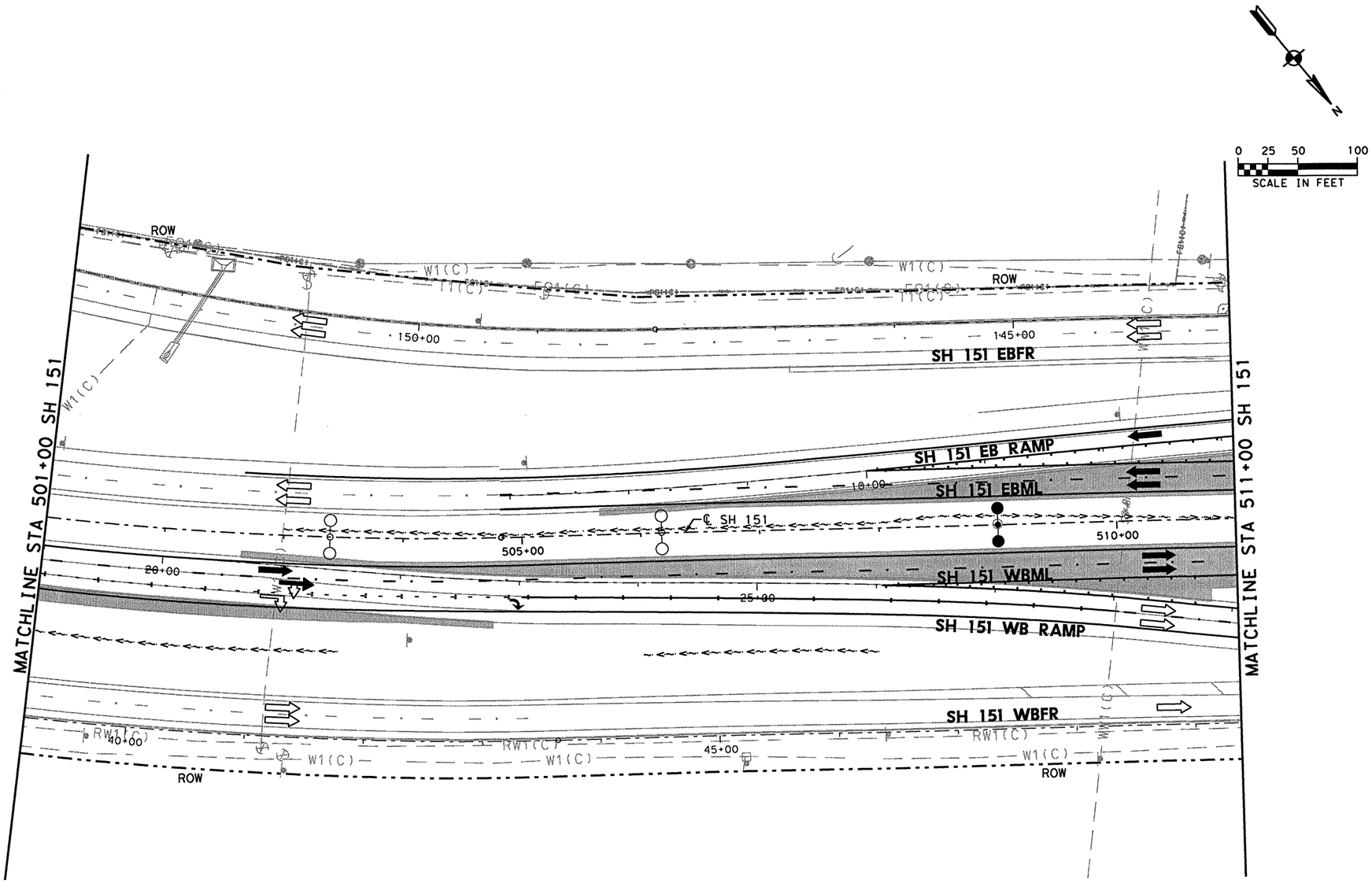

TEMPORARY SW3P ALL PHASES

1. ALL SW3P CONTROL MEASURES SHALL BE PLACED WITHIN TXDOT RIGHT-OF-WAY DURING CONSTRUCTION.
2. SHALL MAINTAIN SW3P CONTROL MEASURES THROUGHOUT CONSTRUCTION.
3. CONSTRUCTION ENTRANCE/EXIT AND CONCRETE WASH-OUT AREA TO BE DETERMINED BY ENGINEER OUT IN THE FIELD.
4. ALL SW3P CONTROL MEASURES INSTALLED DURING CONSTRUCTION ARE TO REMAIN IN PLACE UNTIL 70% VEGETATIVE COVER IS ACHIEVED OR AS APPROVED BY THE ENGINEER.
5. LOCATION OF SW3P CONTROL MEASURES TO BE DETERMINED BY ENGINEER IN THE FIELD.
6. ANTICIPATE ONE REPLACEMENT CYCLE FOR SW3P CONTROL MEASURES.
7. APPLY VEGETATIVE WATERING AS NEEDED TO SUPPLEMENT NATURAL RAINFALL DURING THE VEGETATION ESTABLISHMENT PERIOD. DROUGHT OR OTHER ENVIRONMENTAL CONDITIONS, AS DETERMINED BY THE ENGINEER, MAY REQUIRE THE APPLICATION OF SUPPLEMENTAL IRRIGATION TO BE BETWEEN THE HOURS OF 6PM AND 8AM.
8. SW3P CONTROL MEASURE SYMBOLS ARE NOT TO SCALE.

LEGEND

- PROPOSED CONSTRUCTION IN CURRENT PHASE
- TEMPORARY CONSTRUCTION IN CURRENT PHASE
- PROPOSED CONSTRUCTION IN PREVIOUS PHASE
- PAVEMENT REMOVAL IN CURRENT PHASE
- EXISTING TRAFFIC FLOW ARROW
- PROPOSED TRAFFIC FLOW ARROW
- CHANGEABLE MESSAGE SIGN
- ARROW BOARD
- PLASTIC DRUM
- PLASTIC DRUM WITH CHEVRON
- TYPE III BARRICADE
- TEMPORARY SILT FENCE
- RFD TEMPORARY ROCK FILTER DAM
- SANDBAGS FOR INLET PROTECTION
- DITCH

REV. 12-30-11

STATE OF TEXAS
MICHAEL W. MIDKIFF
75435
REGISTERED PROFESSIONAL ENGINEER
4/11/11

NO.	DATE	REVISION DESCRIPTION	APP. BY

©2011

Texas Department of Transportation

MACTEC
3520 EXECUTIVE CENTER DRIVE
SUITE 200
AUSTIN, TEXAS 78731
(512) 795-0360

REGISTRATION NUMBER: F-1784

SH 151
TRAFFIC CONTROL & SW3P PHASE III
SH 151
STA 501+00 TO STA 511+00
(SHEET 3 OF 7)

FED. RD. DIV. NO.			SHEET NO.
			91
STATE	DIST.	COUNTY	
TEXAS	SA	BEXAR	
CONT.	SECT.	JOB	HIGHWAY NO.
2452	01	043	SH 151

p:\4760\0-0129\cad\sheet\5ltcp3103.dgn 4/12/2011 5:54:08 PM mwmidkiff

SHEET SUMMARY OF ESTIMATED QUANTITIES			
ITEM#	DESCRIPTION	UNIT	QTY
0506	ROCK FILTER DAMS (REMOVE)	LF	25
0512	PORT CTB (REMOVE) (SNGL SLP) (TY 1)	LF	485
0545	CRASH CUSH ATTEN (REMOVE) (WORK	EA	1

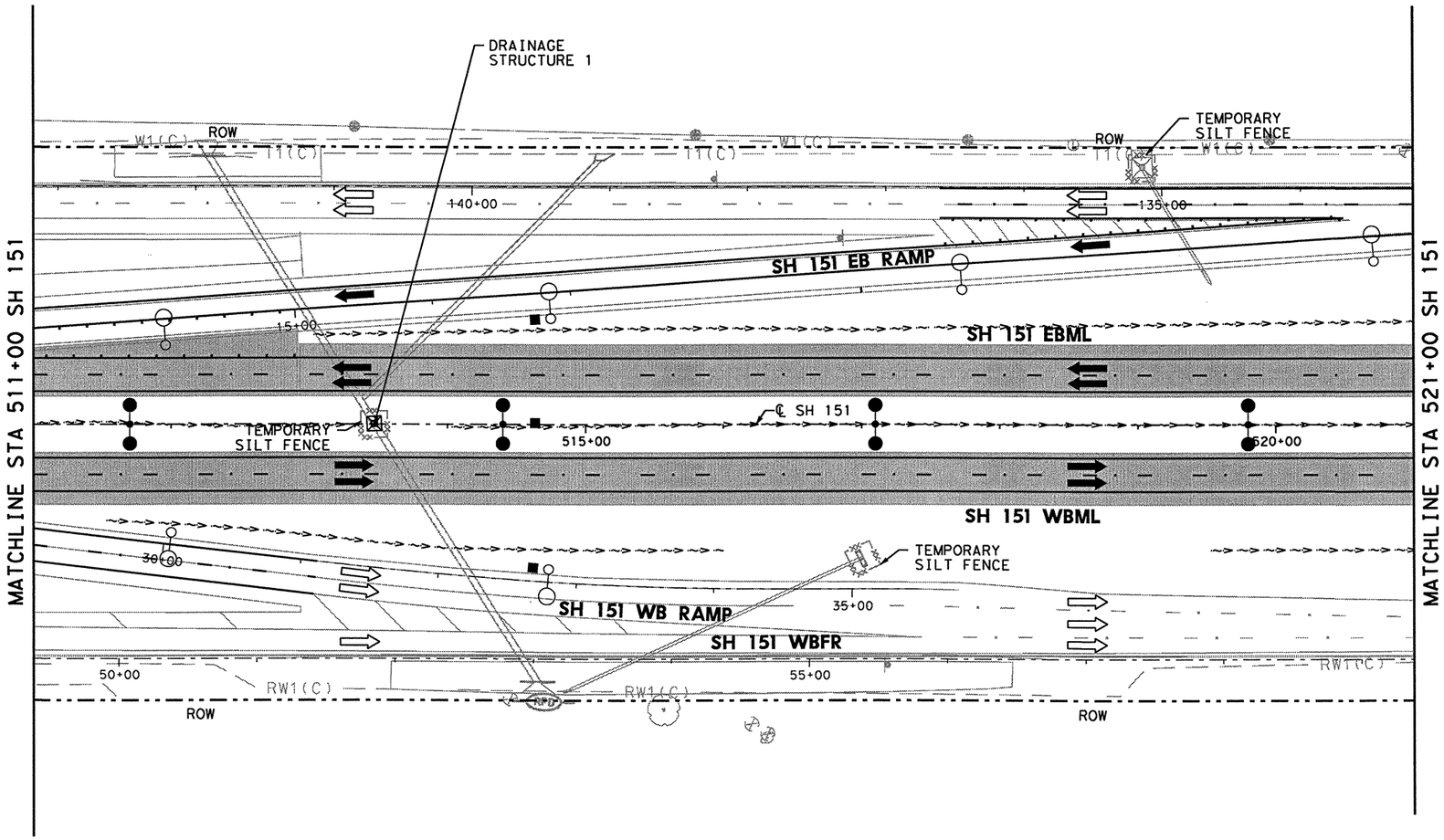

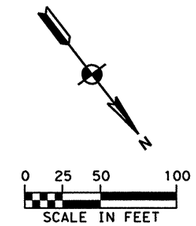

TEMPORARY SW3P ALL PHASES

1. ALL SW3P CONTROL MEASURES SHALL BE PLACED WITHIN TXDOT RIGHT-OF-WAY DURING CONSTRUCTION.
2. SHALL MAINTAIN SW3P CONTROL MEASURES THROUGHOUT CONSTRUCTION.
3. CONSTRUCTION ENTRANCE/EXIT AND CONCRETE WASH-OUT AREA TO BE DETERMINED BY ENGINEER OUT IN THE FIELD.
4. ALL SW3P CONTROL MEASURES INSTALLED DURING CONSTRUCTION ARE TO REMAIN IN PLACE UNTIL 70% VEGETATIVE COVER IS ACHIEVED OR AS APPROVED BY THE ENGINEER.
5. LOCATION OF SW3P CONTROL MEASURES TO BE DETERMINED BY ENGINEER IN THE FIELD.
6. ANTICIPATE ONE REPLACEMENT CYCLE FOR SW3P CONTROL MEASURES.
7. APPLY VEGETATIVE WATERING AS NEEDED TO SUPPLEMENT NATURAL RAINFALL DURING THE VEGETATION ESTABLISHMENT PERIOD. DROUGHT OR OTHER ENVIRONMENTAL CONDITIONS, AS DETERMINED BY THE ENGINEER, MAY REQUIRE THE APPLICATION OF SUPPLEMENTAL IRRIGATION TO BE BETWEEN THE HOURS OF 6PM AND 8AM.
8. SW3P CONTROL MEASURE SYMBOLS ARE NOT TO SCALE.

LEGEND

- PROPOSED CONSTRUCTION IN CURRENT PHASE
- TEMPORARY CONSTRUCTION IN CURRENT PHASE
- PROPOSED CONSTRUCTION IN PREVIOUS PHASE
- PAVEMENT REMOVAL IN CURRENT PHASE
- EXISTING TRAFFIC FLOW ARROW
- PROPOSED TRAFFIC FLOW ARROW
- CHANGEABLE MESSAGE SIGN
- ARROW BOARD
- PLASTIC DRUM
- PLASTIC DRUM WITH CHEVRON
- TYPE III BARRICADE
- TEMPORARY SILT FENCE
- TEMPORARY ROCK FILTER DAM
- SANDBAGS FOR INLET PROTECTION
- DITCH

REV. 12-30-11

STATE OF TEXAS
MICHAEL W. MIDKIFF
75435
REGISTERED PROFESSIONAL ENGINEER

Michael W. Midkiff
4/11/11

NO.	DATE	REVISION DESCRIPTION	APP. BY

©2011

Texas Department of Transportation

MACTEC
3520 EXECUTIVE CENTER DRIVE
SUITE 200
AUSTIN, TEXAS 78731
(512) 795-0360

REGISTRATION NUMBER: F-1784

SH 151
TRAFFIC CONTROL & SW3P PHASE III
SH 151
STA 511+00 TO STA 521+00
(SHEET 4 OF 7)

FED. RD. DIV. NO.			SHEET NO.
			92
STATE	DIST.	COUNTY	
TEXAS	SA	BEXAR	
CONT.	SECT.	JOB	HIGHWAY NO.
2452	01	043	SH 151

p:\4760\0-0129\cad\sheet\151tcp3104.dgn 4/12/2011 5:54:15 PM mwmidkiff

SHEET SUMMARY OF ESTIMATED QUANTITIES			
ITEM#	DESCRIPTION	UNIT	QTY
0506	ROCK FILTER DAMS (REMOVE)	LF	100
0506	CONSTRUCTION EXITS (REMOVE)	SY	278

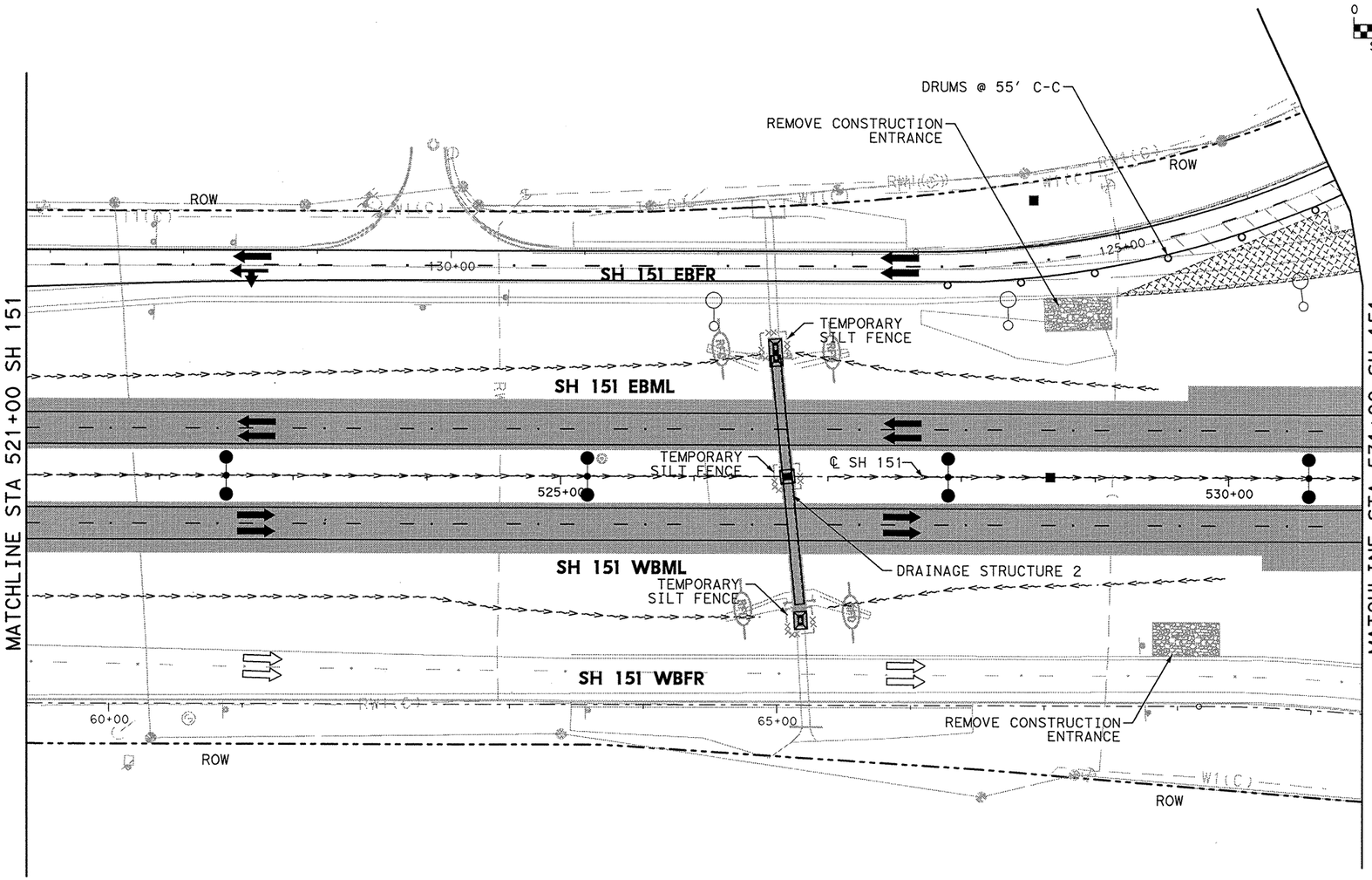

TEMPORARY SW3P ALL PHASES

1. ALL SW3P CONTROL MEASURES SHALL BE PLACED WITHIN TXDOT RIGHT-OF-WAY DURING CONSTRUCTION.
2. SHALL MAINTAIN SW3P CONTROL MEASURES THROUGHOUT CONSTRUCTION.
3. CONSTRUCTION ENTRANCE/EXIT AND CONCRETE WASH-OUT AREA TO BE DETERMINED BY ENGINEER OUT IN THE FIELD.
4. ALL SW3P CONTROL MEASURES INSTALLED DURING CONSTRUCTION ARE TO REMAIN IN PLACE UNTIL 70% VEGETATIVE COVER IS ACHIEVED OR AS APPROVED BY THE ENGINEER.
5. LOCATION OF SW3P CONTROL MEASURES TO BE DETERMINED BY ENGINEER IN THE FIELD.
6. ANTICIPATE ONE REPLACEMENT CYCLE FOR SW3P CONTROL MEASURES.
7. APPLY VEGETATIVE WATERING AS NEEDED TO SUPPLEMENT NATURAL RAINFALL DURING THE VEGETATION ESTABLISHMENT PERIOD. DROUGHT OR OTHER ENVIRONMENTAL CONDITIONS, AS DETERMINED BY THE ENGINEER, MAY REQUIRE THE APPLICATION OF SUPPLEMENTAL IRRIGATION TO BE BETWEEN THE HOURS OF 6PM AND 8AM.
8. SW3P CONTROL MEASURE SYMBOLS ARE NOT TO SCALE.

LEGEND

- PROPOSED CONSTRUCTION IN CURRENT PHASE
- TEMPORARY CONSTRUCTION IN CURRENT PHASE
- PROPOSED CONSTRUCTION IN PREVIOUS PHASE
- PAVEMENT REMOVAL IN CURRENT PHASE
- EXISTING TRAFFIC FLOW ARROW
- PROPOSED TRAFFIC FLOW ARROW
- CHANGEABLE MESSAGE SIGN
- ARROW BOARD
- PLASTIC DRUM
- PLASTIC DRUM WITH CHEVRON
- TYPE III BARRICADE
- TEMPORARY SILT FENCE
- RFD — TEMPORARY ROCK FILTER DAM
- SANDBAGS FOR INLET PROTECTION
- DITCH

STATE OF TEXAS
MICHAEL W. MIDKIFF
75435
REGISTERED PROFESSIONAL ENGINEER
12/21/11

NO.	DATE	REVISION DESCRIPTION	APP. BY
	12/21/12	QUANTITY	MWM

© 2011

Texas Department of Transportation

MACTEC
3520 EXECUTIVE CENTER DRIVE
SUITE 200
AUSTIN, TEXAS 78731
(512) 795-0360

REGISTRATION NUMBER: F-1784

SH 151
TRAFFIC CONTROL & SW3P PHASE III SH 151 STA 521+00 TO STA 531+00
(SHEET 5 OF 7)

FED. RD. DIV. NO.			SHEET NO.
			93
STATE	DIST.	COUNTY	
TEXAS	SA	BEXAR	
CONT.	SECT.	JOB	HIGHWAY NO.
2452	01	043	SH 151

REV. 12-30-11

p:\4760\0-0129\cad\sheet\151tcp3105.dgn 12/21/2011 5:14:30 PM albennett

SHEET SUMMARY OF ESTIMATED QUANTITIES			
ITEM#	DESCRIPTION	UNIT	QTY
0506	SANDBAGS FOR EROSION CONTROL (2')	LF	200

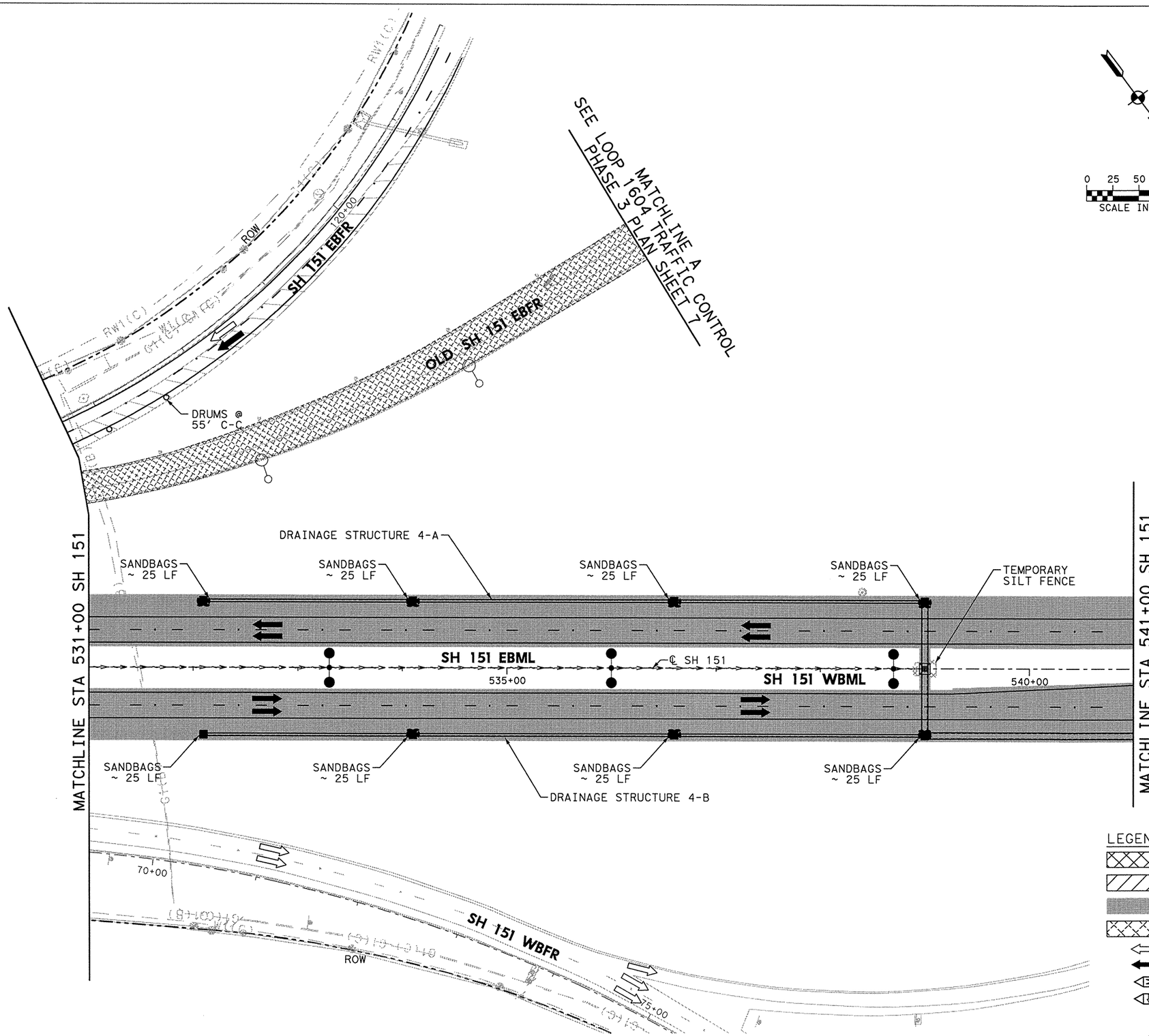

REV. 12-30-11

0 25 50 100
SCALE IN FEET

TEMPORARY SW3P ALL PHASES

1. ALL SW3P CONTROL MEASURES SHALL BE PLACED WITHIN TXDOT RIGHT-OF-WAY DURING CONSTRUCTION.
2. SHALL MAINTAIN SW3P CONTROL MEASURES THROUGHOUT CONSTRUCTION.
3. CONSTRUCTION ENTRANCE/EXIT AND CONCRETE WASH-OUT AREA TO BE DETERMINED BY ENGINEER OUT IN THE FIELD.
4. ALL SW3P CONTROL MEASURES INSTALLED DURING CONSTRUCTION ARE TO REMAIN IN PLACE UNTIL 70% VEGETATIVE COVER IS ACHIEVED OR AS APPROVED BY THE ENGINEER.
5. LOCATION OF SW3P CONTROL MEASURES TO BE DETERMINED BY ENGINEER IN THE FIELD.
6. ANTICIPATE ONE REPLACEMENT CYCLE FOR SW3P CONTROL MEASURES.
7. APPLY VEGETATIVE WATERING AS NEEDED TO SUPPLEMENT NATURAL RAINFALL DURING THE VEGETATION ESTABLISHMENT PERIOD. DROUGHT OR OTHER ENVIRONMENTAL CONDITIONS, AS DETERMINED BY THE ENGINEER, MAY REQUIRE THE APPLICATION OF SUPPLEMENTAL IRRIGATION TO BE BETWEEN THE HOURS OF 6PM AND 8AM.
8. SW3P CONTROL MEASURE SYMBOLS ARE NOT TO SCALE.

LEGEND

- PROPOSED CONSTRUCTION IN CURRENT PHASE
- TEMPORARY CONSTRUCTION IN CURRENT PHASE
- PROPOSED CONSTRUCTION IN PREVIOUS PHASE
- PAVEMENT REMOVAL IN CURRENT PHASE
- EXISTING TRAFFIC FLOW ARROW
- PROPOSED TRAFFIC FLOW ARROW
- CHANGEABLE MESSAGE SIGN
- ARROW BOARD
- PLASTIC DRUM
- PLASTIC DRUM WITH CHEVRON
- TYPE III BARRICADE
- TEMPORARY SILT FENCE
- TEMPORARY ROCK FILTER DAM
- SANDBAGS FOR INLET PROTECTION
- DITCH

STATE OF TEXAS
MICHAEL W. MIOKIFF
75435
REGISTERED PROFESSIONAL ENGINEER
12/21/11

NO.	DATE	REVISION DESCRIPTION	APP. BY
	12/21/12	QUANTITY	MRM

© 2011

Texas Department of Transportation

MACTEC
3520 EXECUTIVE CENTER DRIVE
SUITE 200
AUSTIN, TEXAS 78731
(512) 795-0360

REGISTRATION NUMBER: F-1784

SH 151
TRAFFIC CONTROL & SW3P PHASE III
SH 151
STA 531+00 TO STA 541+00
(SHEET 6 OF 7)

FED. RD. DIV. NO.			SHEET NO.
			94
STATE	DIST.	COUNTY	
TEXAS	SA	BEXAR	
CONT.	SECT.	JOB	HIGHWAY NO.
2452	01	043	SH 151

P:\47560\0-0129\cad\sheet\151\cp3105.dgn 12/21/2011 5:44:38 PM albennett

SHEET SUMMARY OF ESTIMATED QUANTITIES			
ITEM#	DESCRIPTION	UNIT	QTY
0506	ROCK FILTER DAMS (REMOVE)	LF	25
0506	SANDBAGS FOR EROSION CONTROL (2')	LF	250

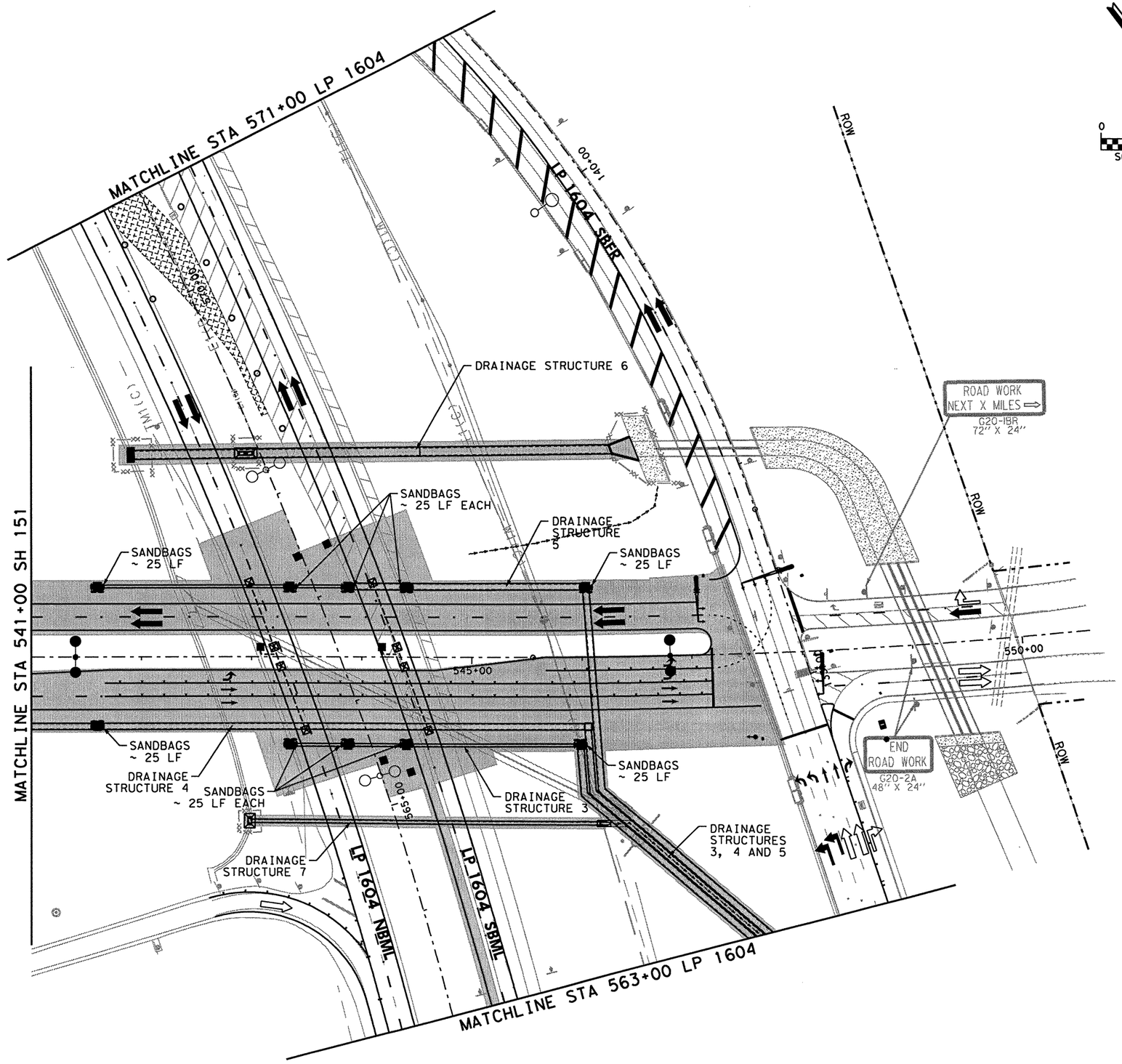

0 25 50 100
SCALE IN FEET

TEMPORARY SW3P ALL PHASES

1. ALL SW3P CONTROL MEASURES SHALL BE PLACED WITHIN TXDOT RIGHT-OF-WAY DURING CONSTRUCTION.
2. SHALL MAINTAIN SW3P CONTROL MEASURES THROUGHOUT CONSTRUCTION.
3. CONSTRUCTION ENTRANCE/EXIT AND CONCRETE WASH-OUT AREA TO BE DETERMINED BY ENGINEER OUT IN THE FIELD.
4. ALL SW3P CONTROL MEASURES INSTALLED DURING CONSTRUCTION ARE TO REMAIN IN PLACE UNTIL 70% VEGETATIVE COVER IS ACHIEVED OR AS APPROVED BY THE ENGINEER.
5. LOCATION OF SW3P CONTROL MEASURES TO BE DETERMINED BY ENGINEER IN THE FIELD.
6. ANTICIPATE ONE REPLACEMENT CYCLE FOR SW3P CONTROL MEASURES.
7. APPLY VEGETATIVE WATERING AS NEEDED TO SUPPLEMENT NATURAL RAINFALL DURING THE VEGETATION ESTABLISHMENT PERIOD. DROUGHT OR OTHER ENVIRONMENTAL CONDITIONS, AS DETERMINED BY THE ENGINEER, MAY REQUIRE THE APPLICATION OF SUPPLEMENTAL IRRIGATION TO BE BETWEEN THE HOURS OF 6PM AND 8AM.
8. SW3P CONTROL MEASURE SYMBOLS ARE NOT TO SCALE.

LEGEND

- PROPOSED CONSTRUCTION IN CURRENT PHASE
- TEMPORARY CONSTRUCTION IN CURRENT PHASE
- PROPOSED CONSTRUCTION IN PREVIOUS PHASE
- PAVEMENT REMOVAL IN CURRENT PHASE
- EXISTING TRAFFIC FLOW ARROW
- PROPOSED TRAFFIC FLOW ARROW
- CHANGEABLE MESSAGE SIGN
- ARROW BOARD
- PLASTIC DRUM
- PLASTIC DRUM WITH CHEVRON
- TYPE III BARRICADE
- TEMPORARY SILT FENCE
- RFD TEMPORARY ROCK FILTER DAM
- SANDBAGS FOR INLET PROTECTION
- DITCH

STATE OF TEXAS
MICHAEL W. MIDKIFF
75435
REGISTERED PROFESSIONAL ENGINEER
3/18/11

NO.	DATE	REVISION DESCRIPTION	APP. BY

©2011

Texas Department of Transportation

MACTEC
3520 EXECUTIVE CENTER DRIVE
SUITE 200
AUSTIN, TEXAS 78731
(512) 795-0360
REGISTRATION NUMBER: F-1784

SH 151
TRAFFIC CONTROL & SW3P PHASE III
SH 151
STA 541+00 TO END PROJECT
(SHEET 7 OF 7)

FED. RD. DIV. NO.			SHEET NO.
			95
STATE	DIST.	COUNTY	
TEXAS	SA	BEXAR	
CONT.	SECT.	JOB	HIGHWAY NO.
2452	01	043	SH 151

p:\4760\0-0125\cad\sheet\15tcp3107.dgn 3/18/2011 11:26:57 AM mwmidkiff

SHEET SUMMARY OF ESTIMATED QUANTITIES			
ITEM#	DESCRIPTION	UNIT	QTY

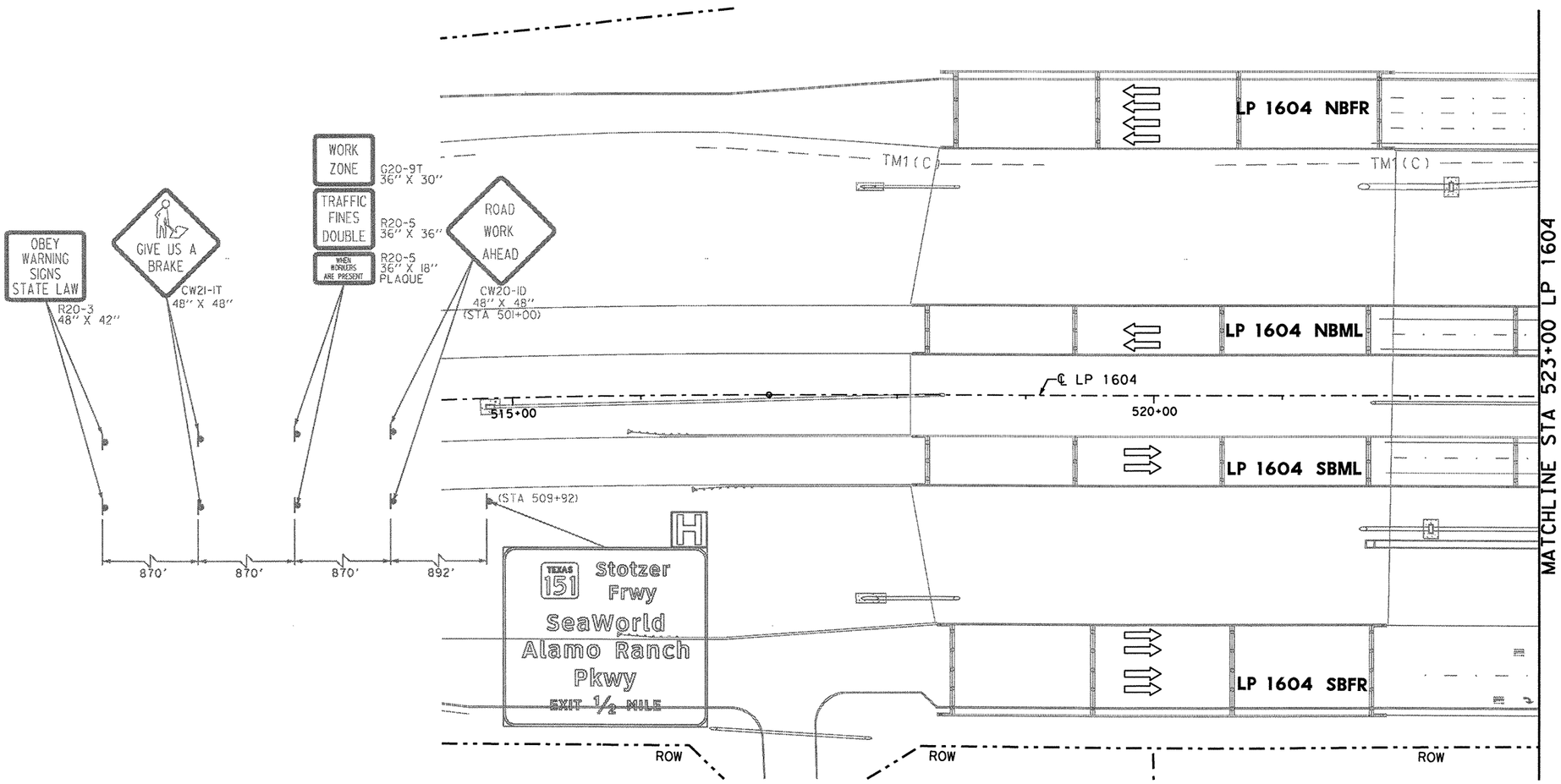

TEMPORARY SW3P ALL PHASES

1. ALL SW3P CONTROL MEASURES SHALL BE PLACED WITHIN TXDOT RIGHT-OF-WAY DURING CONSTRUCTION.
2. SHALL MAINTAIN SW3P CONTROL MEASURES THROUGHOUT CONSTRUCTION.
3. CONSTRUCTION ENTRANCE/EXIT AND CONCRETE WASH-OUT AREA TO BE DETERMINED BY ENGINEER OUT IN THE FIELD.
4. ALL SW3P CONTROL MEASURES INSTALLED DURING CONSTRUCTION ARE TO REMAIN IN PLACE UNTIL 70% VEGETATIVE COVER IS ACHIEVED OR AS APPROVED BY THE ENGINEER.
5. LOCATION OF SW3P CONTROL MEASURES TO BE DETERMINED BY ENGINEER IN THE FIELD.
6. ANTICIPATE ONE REPLACEMENT CYCLE FOR SW3P CONTROL MEASURES.
7. APPLY VEGETATIVE WATERING AS NEEDED TO SUPPLEMENT NATURAL RAINFALL DURING THE VEGETATION ESTABLISHMENT PERIOD. DROUGHT OR OTHER ENVIRONMENTAL CONDITIONS, AS DETERMINED BY THE ENGINEER, MAY REQUIRE THE APPLICATION OF SUPPLEMENTAL IRRIGATION TO BE BETWEEN THE HOURS OF 6PM AND 8AM.
8. SW3P CONTROL MEASURE SYMBOLS ARE NOT TO SCALE.

LEGEND

- PROPOSED CONSTRUCTION IN CURRENT PHASE
- TEMPORARY CONSTRUCTION IN CURRENT PHASE
- PROPOSED CONSTRUCTION IN PREVIOUS PHASE
- PAVEMENT REMOVAL IN CURRENT PHASE
- EXISTING TRAFFIC FLOW ARROW
- PROPOSED TRAFFIC FLOW ARROW
- CHANGEABLE MESSAGE SIGN
- ARROW BOARD
- PLASTIC DRUM
- PLASTIC DRUM WITH CHEVRON
- TYPE III BARRICADE
- TEMPORARY SILT FENCE
- TEMPORARY ROCK FILTER DAM
- SANDBAGS FOR INLET PROTECTION
- DITCH

STATE OF TEXAS
MICHAEL W. MIDKIFF
75435
REGISTERED PROFESSIONAL ENGINEER
3/18/11

NO.	DATE	REVISION DESCRIPTION	APP. BY

© 2011

Texas Department of Transportation

MACTEC
3520 EXECUTIVE CENTER DRIVE
SUITE 200
AUSTIN, TEXAS 78731
(512) 795-0360
REGISTRATION NUMBER: F-1784

SH 151
TRAFFIC CONTROL & SW3P PHASE III
LP 1604
BEGIN PROJECT TO STA 523+00
(SHEET 1 OF 8)

FED. RD. DIV. NO.			SHEET NO.
			96
STATE	DIST.	COUNTY	
TEXAS	SA	BEXAR	
CONT.	SECT.	JOB	HIGHWAY NO.
2452	01	043	SH 151

3/18/2011 11:27:04 AM mwmidkiff
p:\4760\00-01\25\cad\sheet\15tcp3108.dgn

SHEET SUMMARY OF ESTIMATED QUANTITIES			
ITEM#	DESCRIPTION	UNIT	QTY

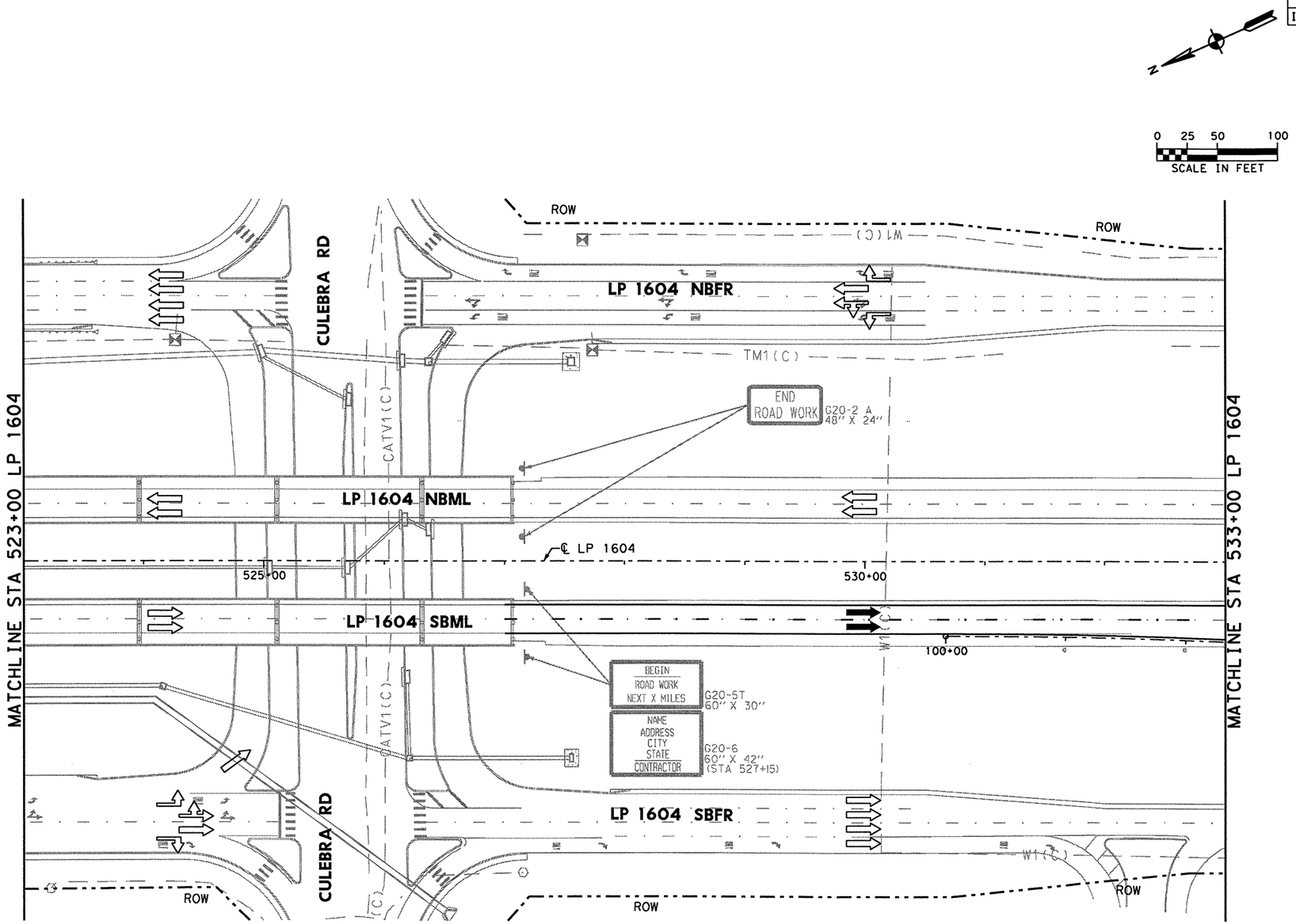

TEMPORARY SW3P ALL PHASES

1. ALL SW3P CONTROL MEASURES SHALL BE PLACED WITHIN TXDOT RIGHT-OF-WAY DURING CONSTRUCTION.
2. SHALL MAINTAIN SW3P CONTROL MEASURES THROUGHOUT CONSTRUCTION.
3. CONSTRUCTION ENTRANCE/EXIT AND CONCRETE WASH-OUT AREA TO BE DETERMINED BY ENGINEER OUT IN THE FIELD.
4. ALL SW3P CONTROL MEASURES INSTALLED DURING CONSTRUCTION ARE TO REMAIN IN PLACE UNTIL 70% VEGETATIVE COVER IS ACHIEVED OR AS APPROVED BY THE ENGINEER.
5. LOCATION OF SW3P CONTROL MEASURES TO BE DETERMINED BY ENGINEER IN THE FIELD.
6. ANTICIPATE ONE REPLACEMENT CYCLE FOR SW3P CONTROL MEASURES.
7. APPLY VEGETATIVE WATERING AS NEEDED TO SUPPLEMENT NATURAL RAINFALL DURING THE VEGETATION ESTABLISHMENT PERIOD. DROUGHT OR OTHER ENVIRONMENTAL CONDITIONS, AS DETERMINED BY THE ENGINEER, MAY REQUIRE THE APPLICATION OF SUPPLEMENTAL IRRIGATION TO BE BETWEEN THE HOURS OF 6PM AND 8AM.
8. SW3P CONTROL MEASURE SYMBOLS ARE NOT TO SCALE.

LEGEND

- PROPOSED CONSTRUCTION IN CURRENT PHASE
- TEMPORARY CONSTRUCTION IN CURRENT PHASE
- PROPOSED CONSTRUCTION IN PREVIOUS PHASE
- PAVEMENT REMOVAL IN CURRENT PHASE
- EXISTING TRAFFIC FLOW ARROW
- PROPOSED TRAFFIC FLOW ARROW
- CHANGEABLE MESSAGE SIGN
- ARROW BOARD
- PLASTIC DRUM
- PLASTIC DRUM WITH CHEVRON
- TYPE III BARRICADE
- TEMPORARY SILT FENCE
- RFD TEMPORARY ROCK FILTER DAM
- SANDBAGS FOR INLET PROTECTION
- DITCH

STATE OF TEXAS
MICHAEL W. MIDKIFF
75435
REGISTERED PROFESSIONAL ENGINEER
Michael W. Midkiff
3/18/11

NO.	DATE	REVISION DESCRIPTION	APP. BY

©2011

Texas Department of Transportation

MACTEC
3520 EXECUTIVE CENTER DRIVE
SUITE 200
AUSTIN, TEXAS 78731
(512) 795-0360

REGISTRATION NUMBER: F-1784

SH 151
TRAFFIC CONTROL & SW3P PHASE III
LP 1604
STA 523+00 TO STA 533+00
(SHEET 2 OF 8)

FED. RD. DIV. NO.			SHEET NO.
			97
STATE	DIST.	COUNTY	
TEXAS	SA	BEXAR	
CONT.	SECT.	JOB	HIGHWAY NO.
2452	01	043	SH 151

p:\4760\0-0129\cad\sheet\5ltcp3109.dgn 3/18/2011 11:27:11 AM mwmidkiff

SHEET SUMMARY OF ESTIMATED QUANTITIES			
ITEM#	DESCRIPTION	UNIT	QTY

0 25 50 100
SCALE IN FEET

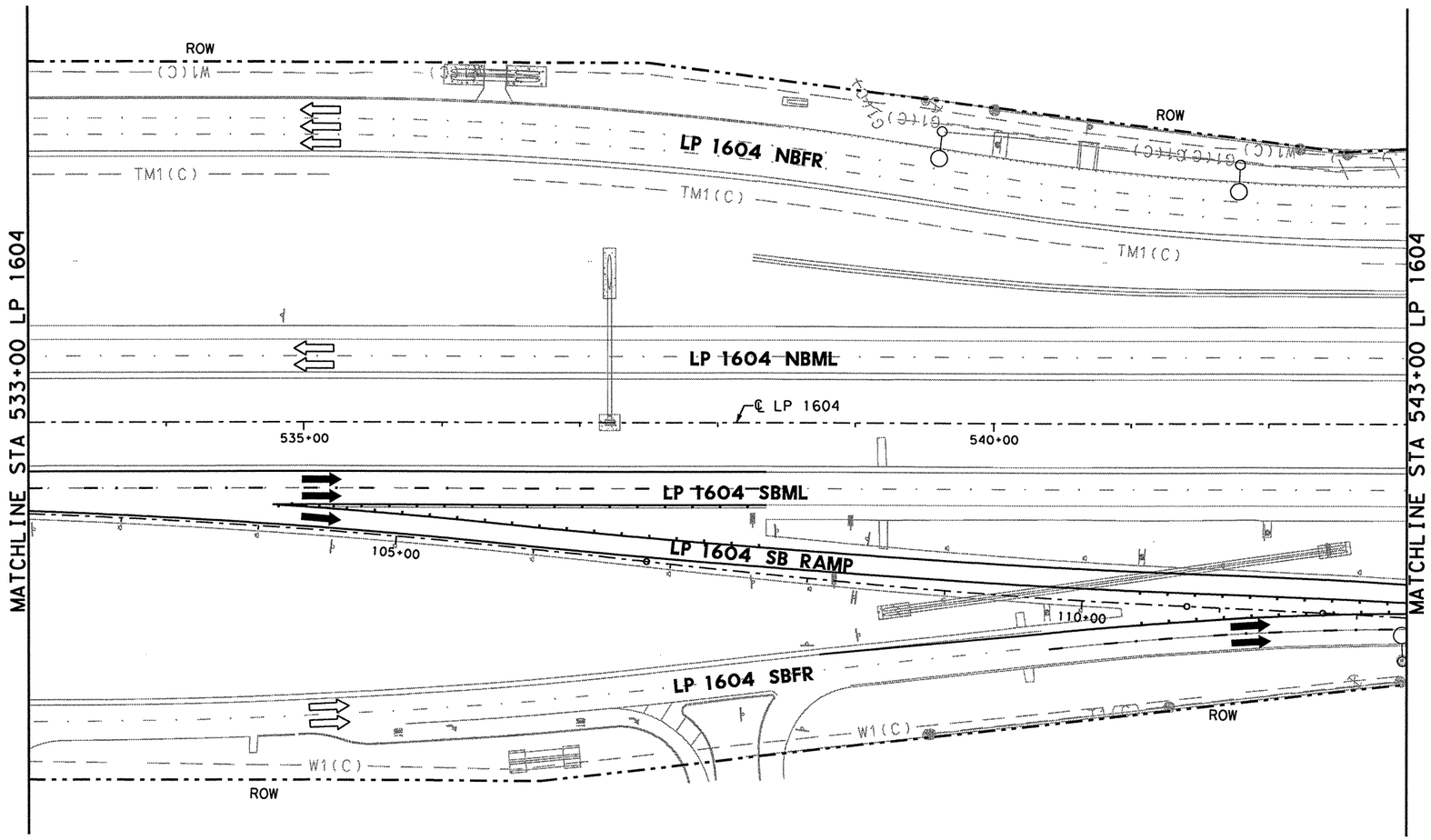

TEMPORARY SW3P ALL PHASES

1. ALL SW3P CONTROL MEASURES SHALL BE PLACED WITHIN TXDOT RIGHT-OF-WAY DURING CONSTRUCTION.
2. SHALL MAINTAIN SW3P CONTROL MEASURES THROUGHOUT CONSTRUCTION.
3. CONSTRUCTION ENTRANCE/EXIT AND CONCRETE WASH-OUT AREA TO BE DETERMINED BY ENGINEER OUT IN THE FIELD.
4. ALL SW3P CONTROL MEASURES INSTALLED DURING CONSTRUCTION ARE TO REMAIN IN PLACE UNTIL 70% VEGETATIVE COVER IS ACHIEVED OR AS APPROVED BY THE ENGINEER.
5. LOCATION OF SW3P CONTROL MEASURES TO BE DETERMINED BY ENGINEER IN THE FIELD.
6. ANTICIPATE ONE REPLACEMENT CYCLE FOR SW3P CONTROL MEASURES.
7. APPLY VEGETATIVE WATERING AS NEEDED TO SUPPLEMENT NATURAL RAINFALL DURING THE VEGETATION ESTABLISHMENT PERIOD. DROUGHT OR OTHER ENVIRONMENTAL CONDITIONS, AS DETERMINED BY THE ENGINEER, MAY REQUIRE THE APPLICATION OF SUPPLEMENTAL IRRIGATION TO BE BETWEEN THE HOURS OF 6PM AND 8AM.
8. SW3P CONTROL MEASURE SYMBOLS ARE NOT TO SCALE.

LEGEND

- PROPOSED CONSTRUCTION IN CURRENT PHASE
- TEMPORARY CONSTRUCTION IN CURRENT PHASE
- PROPOSED CONSTRUCTION IN PREVIOUS PHASE
- PAVEMENT REMOVAL IN CURRENT PHASE
- EXISTING TRAFFIC FLOW ARROW
- PROPOSED TRAFFIC FLOW ARROW
- CHANGEABLE MESSAGE SIGN
- ARROW BOARD
- PLASTIC DRUM
- PLASTIC DRUM WITH CHEVRON
- TYPE III BARRICADE
- TEMPORARY SILT FENCE
- RFD TEMPORARY ROCK FILTER DAM
- SANDBAGS FOR INLET PROTECTION
- DITCH

STATE OF TEXAS
MICHAEL W. MIDKIFF
75435
REGISTERED PROFESSIONAL ENGINEER
Michael W. Midkiff 3/18/11

NO.	DATE	REVISION DESCRIPTION	APP. BY

©2011

Texas Department of Transportation

MACTEC
3520 EXECUTIVE CENTER DRIVE
SUITE 200
AUSTIN, TEXAS 78731
(512) 795-0360
REGISTRATION NUMBER: F-1784

SH 151
TRAFFIC CONTROL & SW3P PHASE III
LP 1604
STA 533+00 TO STA 543+00
(SHEET 3 OF 8)

FED. RD. DIV. NO.			SHEET NO.
			98
STATE	DIST.	COUNTY	
TEXAS	SA	BEXAR	
CONT.	SECT.	JOB	HIGHWAY NO.
2452	01	043	SH 151

p:\4760\0-0129\cad\sheet\15tcp3110.dgn 3/18/2011 11:27:18 AM mwmidkiff

SHEET SUMMARY OF ESTIMATED QUANTITIES			
ITEM#	DESCRIPTION	UNIT	QTY

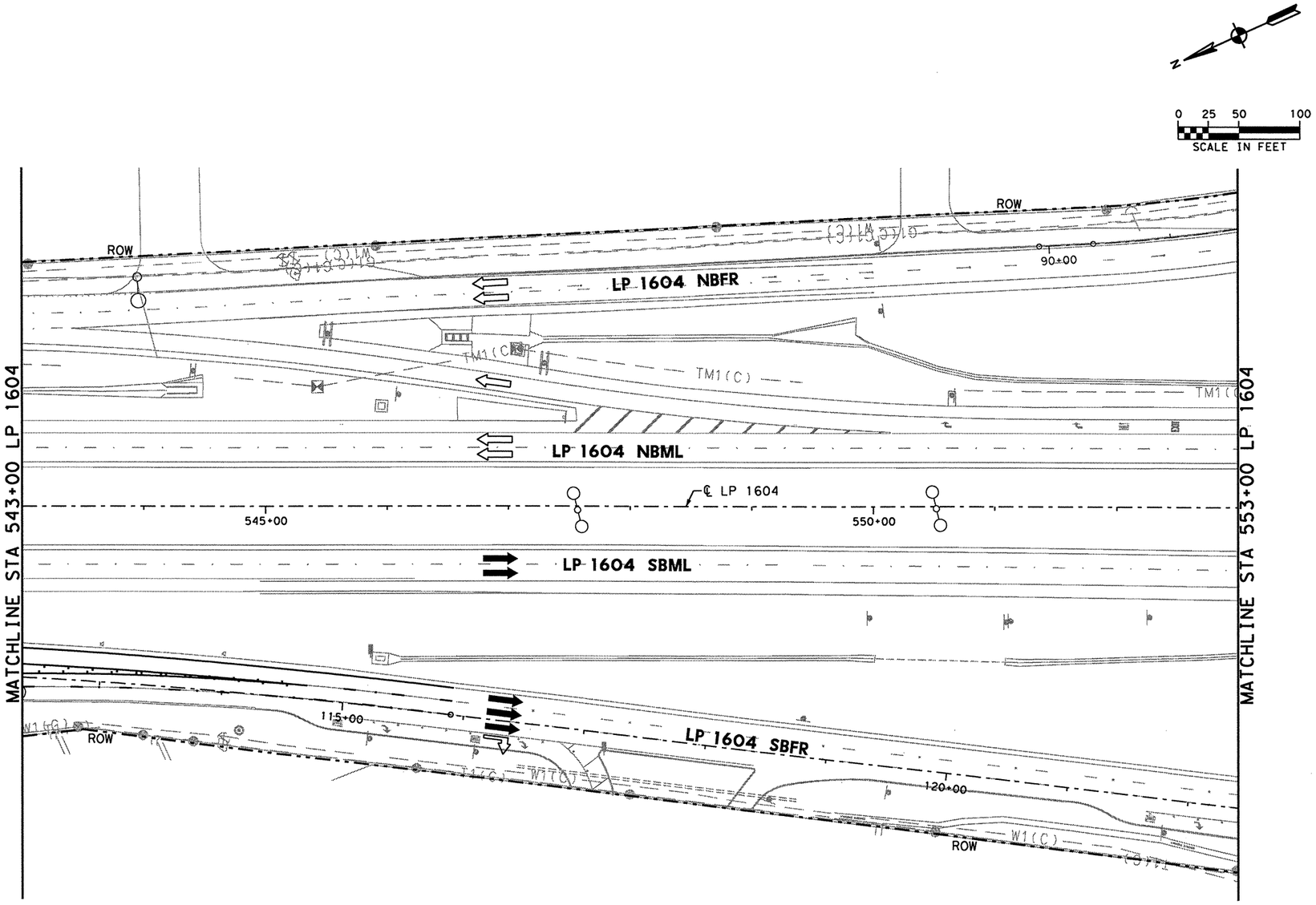

TEMPORARY SW3P ALL PHASES

1. ALL SW3P CONTROL MEASURES SHALL BE PLACED WITHIN TXDOT RIGHT-OF-WAY DURING CONSTRUCTION.
2. SHALL MAINTAIN SW3P CONTROL MEASURES THROUGHOUT CONSTRUCTION.
3. CONSTRUCTION ENTRANCE/EXIT AND CONCRETE WASH-OUT AREA TO BE DETERMINED BY ENGINEER OUT IN THE FIELD.
4. ALL SW3P CONTROL MEASURES INSTALLED DURING CONSTRUCTION ARE TO REMAIN IN PLACE UNTIL 70% VEGETATIVE COVER IS ACHIEVED OR AS APPROVED BY THE ENGINEER.
5. LOCATION OF SW3P CONTROL MEASURES TO BE DETERMINED BY ENGINEER IN THE FIELD.
6. ANTICIPATE ONE REPLACEMENT CYCLE FOR SW3P CONTROL MEASURES.
7. APPLY VEGETATIVE WATERING AS NEEDED TO SUPPLEMENT NATURAL RAINFALL DURING THE VEGETATION ESTABLISHMENT PERIOD. DROUGHT OR OTHER ENVIRONMENTAL CONDITIONS, AS DETERMINED BY THE ENGINEER, MAY REQUIRE THE APPLICATION OF SUPPLEMENTAL IRRIGATION TO BE BETWEEN THE HOURS OF 6PM AND 8AM.
8. SW3P CONTROL MEASURE SYMBOLS ARE NOT TO SCALE.

LEGEND

- PROPOSED CONSTRUCTION IN CURRENT PHASE
- TEMPORARY CONSTRUCTION IN CURRENT PHASE
- PROPOSED CONSTRUCTION IN PREVIOUS PHASE
- PAVEMENT REMOVAL IN CURRENT PHASE
- EXISTING TRAFFIC FLOW ARROW
- PROPOSED TRAFFIC FLOW ARROW
- CHANGEABLE MESSAGE SIGN
- ARROW BOARD
- PLASTIC DRUM
- PLASTIC DRUM WITH CHEVRON
- TYPE III BARRICADE
- TEMPORARY SILT FENCE
- RFD TEMPORARY ROCK FILTER DAM
- SANDBAGS FOR INLET PROTECTION
- DITCH

STATE OF TEXAS
MICHAEL W. MIDKIFF
75435
REGISTERED PROFESSIONAL ENGINEER

Michael W. Midkiff
3/18/11

NO.	DATE	REVISION DESCRIPTION	APP. BY

© 2011

Texas Department of Transportation

MACTEC
3520 EXECUTIVE CENTER DRIVE
SUITE 200
AUSTIN, TEXAS 78731
(512) 795-0360

REGISTRATION NUMBER: F-1784

SH 151
TRAFFIC CONTROL & SW3P PHASE III
LP 1604
STA 543+00 TO STA 553+00
(SHEET 4 OF 8)

FED. RD. DIV. NO.			SHEET NO.
			99
STATE	DIST.	COUNTY	
TEXAS	SA	BEXAR	
CONT.	SECT.	JOB	HIGHWAY NO.
2452	01	043	SH 151

p:\4760\0-0129\cad\sheet\51tcp3111.dgn 3/18/2011 11:27:25 AM mwmidkiff

SHEET SUMMARY OF ESTIMATED QUANTITIES			
ITEM#	DESCRIPTION	UNIT	QTY
0403	TEMPORARY SPL SHORING	SF	0
0506	ROCK FILTER DAMS (REMOVE)	LF	100

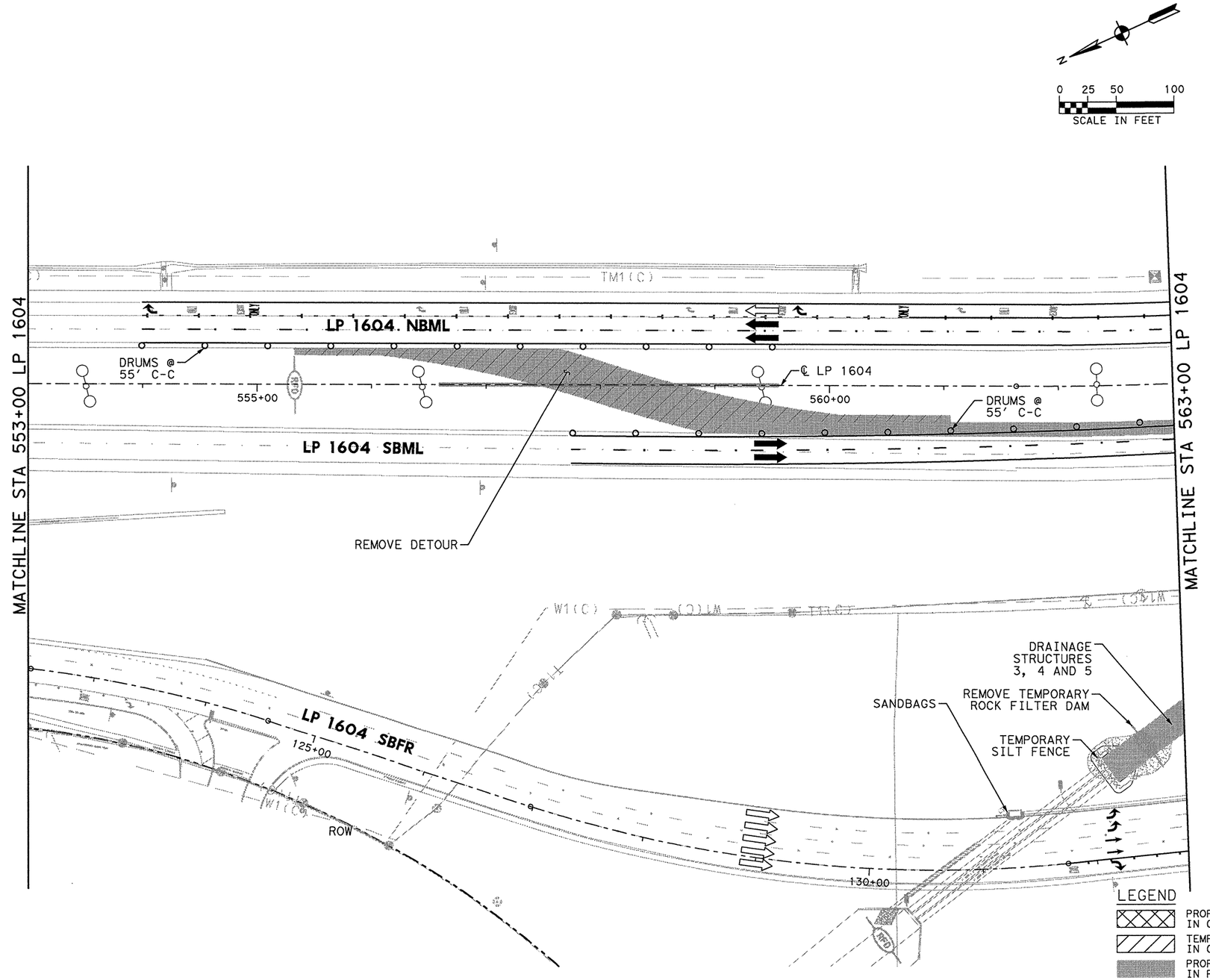

TEMPORARY SW3P ALL PHASES

1. ALL SW3P CONTROL MEASURES SHALL BE PLACED WITHIN TXDOT RIGHT-OF-WAY DURING CONSTRUCTION.
2. SHALL MAINTAIN SW3P CONTROL MEASURES THROUGHOUT CONSTRUCTION.
3. CONSTRUCTION ENTRANCE/EXIT AND CONCRETE WASH-OUT AREA TO BE DETERMINED BY ENGINEER OUT IN THE FIELD.
4. ALL SW3P CONTROL MEASURES INSTALLED DURING CONSTRUCTION ARE TO REMAIN IN PLACE UNTIL 70% VEGETATIVE COVER IS ACHIEVED OR AS APPROVED BY THE ENGINEER.
5. LOCATION OF SW3P CONTROL MEASURES TO BE DETERMINED BY ENGINEER IN THE FIELD.
6. ANTICIPATE ONE REPLACEMENT CYCLE FOR SW3P CONTROL MEASURES.
7. APPLY VEGETATIVE WATERING AS NEEDED TO SUPPLEMENT NATURAL RAINFALL DURING THE VEGETATION ESTABLISHMENT PERIOD. DROUGHT OR OTHER ENVIRONMENTAL CONDITIONS, AS DETERMINED BY THE ENGINEER, MAY REQUIRE THE APPLICATION OF SUPPLEMENTAL IRRIGATION TO BE BETWEEN THE HOURS OF 6PM AND 8AM.
8. SW3P CONTROL MEASURE SYMBOLS ARE NOT TO SCALE.

LEGEND

- PROPOSED CONSTRUCTION IN CURRENT PHASE
- TEMPORARY CONSTRUCTION IN CURRENT PHASE
- PROPOSED CONSTRUCTION IN PREVIOUS PHASE
- PAVEMENT REMOVAL IN CURRENT PHASE
- EXISTING TRAFFIC FLOW ARROW
- PROPOSED TRAFFIC FLOW ARROW
- CHANGEABLE MESSAGE SIGN
- ARROW BOARD
- PLASTIC DRUM
- PLASTIC DRUM WITH CHEVRON
- TYPE III BARRICADE
- TEMPORARY SILT FENCE
- RFD TEMPORARY ROCK FILTER DAM
- SANDBAGS FOR INLET PROTECTION
- DITCH

REV. 12-30-11

STATE OF TEXAS
MICHAEL W. MIDKIFF
75435
REGISTERED PROFESSIONAL ENGINEER
12/23/11

NO.	DATE	REVISION DESCRIPTION	APP. BY
	12/21/12	QUANTITY	MWM

© 2011

Texas Department of Transportation

MACTEC
3520 EXECUTIVE CENTER DRIVE
SUITE 200
AUSTIN, TEXAS 78731
(512) 795-0360

REGISTRATION NUMBER: F-1784

SH 151
TRAFFIC CONTROL & SW3P PHASE III
LP 1604
STA 553+00 TO STA 563+00
(SHEET 5 OF 8)

FED. RD. DIV. NO.			SHEET NO.
			100
STATE	DIST.	COUNTY	
TEXAS	SA	BEXAR	
CONT.	SECT.	JOB	HIGHWAY NO.
2452	01	043	SH 151

p:\4760\0-0129\cad\sheet\151tcp3112.dgn 12/23/2011 2:09:40 PM mwmidkiff

SHEET SUMMARY OF ESTIMATED QUANTITIES			
ITEM#	DESCRIPTION	UNIT	QTY
0403	TEMPORARY SPL SHORING	SF	0
0512	PORT CTB (REMOVE) (SNGL SLP) (TY 1)	LF	645
0545	CRASH CUSH ATTEN (REMOVE) (WORK	EA	1

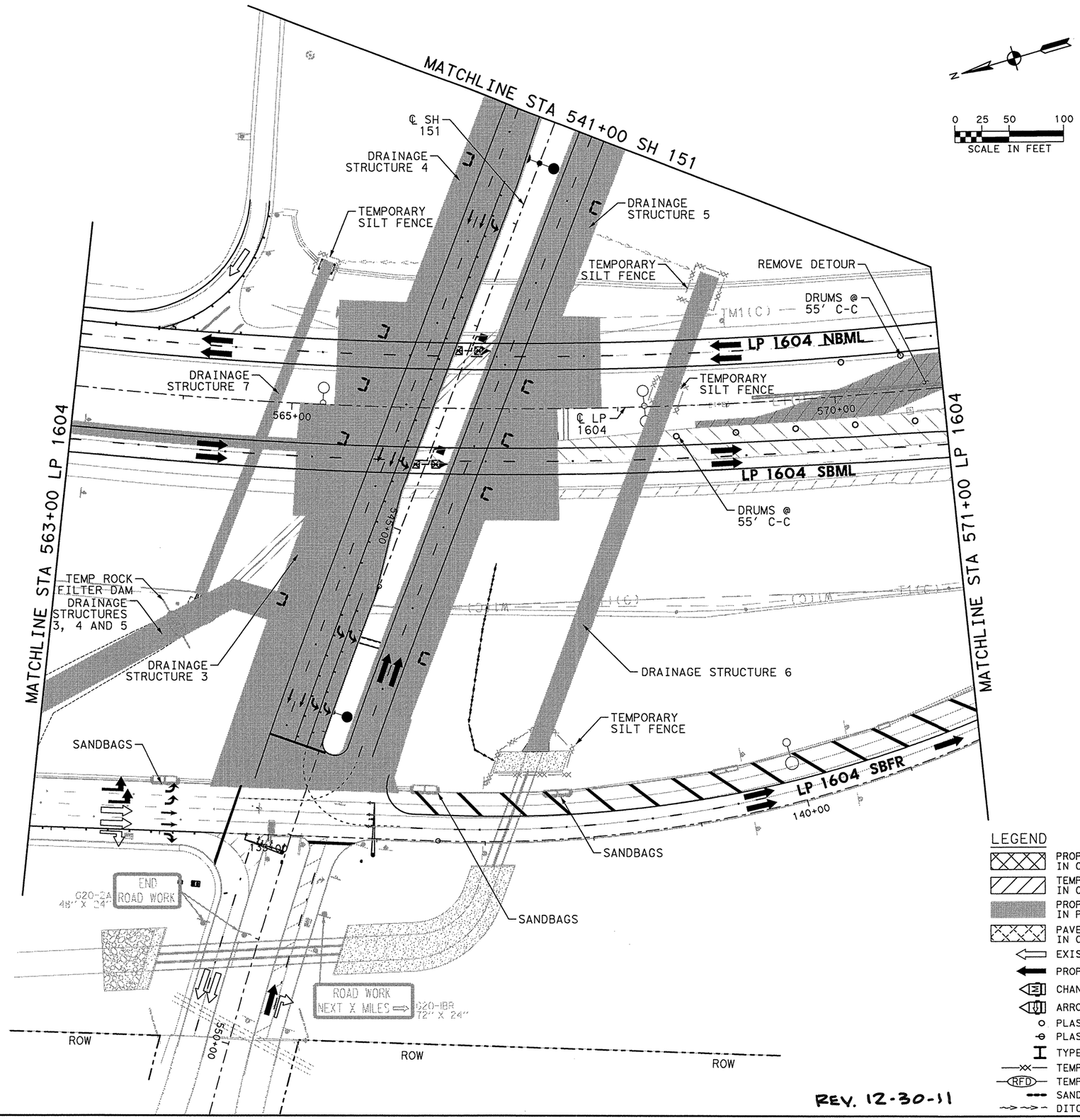

0 25 50 100
SCALE IN FEET

TEMPORARY SW3P ALL PHASES

1. ALL SW3P CONTROL MEASURES SHALL BE PLACED WITHIN TXDOT RIGHT-OF-WAY DURING CONSTRUCTION.
2. SHALL MAINTAIN SW3P CONTROL MEASURES THROUGHOUT CONSTRUCTION.
3. CONSTRUCTION ENTRANCE/EXIT AND CONCRETE WASH-OUT AREA TO BE DETERMINED BY ENGINEER OUT IN THE FIELD.
4. ALL SW3P CONTROL MEASURES INSTALLED DURING CONSTRUCTION ARE TO REMAIN IN PLACE UNTIL 70% VEGETATIVE COVER IS ACHIEVED OR AS APPROVED BY THE ENGINEER.
5. LOCATION OF SW3P CONTROL MEASURES TO BE DETERMINED BY ENGINEER IN THE FIELD.
6. ANTICIPATE ONE REPLACEMENT CYCLE FOR SW3P CONTROL MEASURES.
7. APPLY VEGETATIVE WATERING AS NEEDED TO SUPPLEMENT NATURAL RAINFALL DURING THE VEGETATION ESTABLISHMENT PERIOD. DROUGHT OR OTHER ENVIRONMENTAL CONDITIONS, AS DETERMINED BY THE ENGINEER, MAY REQUIRE THE APPLICATION OF SUPPLEMENTAL IRRIGATION TO BE BETWEEN THE HOURS OF 6PM AND 8AM.
8. SW3P CONTROL MEASURE SYMBOLS ARE NOT TO SCALE.

LEGEND

- PROPOSED CONSTRUCTION IN CURRENT PHASE
- TEMPORARY CONSTRUCTION IN CURRENT PHASE
- PROPOSED CONSTRUCTION IN PREVIOUS PHASE
- PAVEMENT REMOVAL IN CURRENT PHASE
- EXISTING TRAFFIC FLOW ARROW
- PROPOSED TRAFFIC FLOW ARROW
- CHANGEABLE MESSAGE SIGN
- ARROW BOARD
- PLASTIC DRUM
- PLASTIC DRUM WITH CHEVRON
- TYPE III BARRICADE
- TEMPORARY SILT FENCE
- RFD TEMPORARY ROCK FILTER DAM
- SANDBAGS FOR INLET PROTECTION
- DITCH

REV. 12-30-11

STATE OF TEXAS
MICHAEL W. MIDKIFF
75435
REGISTERED PROFESSIONAL ENGINEER
12/23/11

NO.	DATE	REVISION DESCRIPTION	APP. BY
	12/21/12	QUANTITY	MWM

© 2011

Texas Department of Transportation

MACTEC
3520 EXECUTIVE CENTER DRIVE
SUITE 200
AUSTIN, TEXAS 78731
(512) 795-0360

REGISTRATION NUMBER: F-1784

SH 151
TRAFFIC CONTROL & SW3P PHASE III
LP 1604
STA 563+00 TO STA 571+00
(SHEET 6 OF 8)

FED. RD. DIV. NO.			SHEET NO.
			101
STATE	DIST.	COUNTY	
TEXAS	SA	BEXAR	
CONT.	SECT.	JOB	HIGHWAY NO.
2452	01	043	SH 151

p:\4760\0-0129\cad\sheet\151tcp3113.dgn 12/23/2011 2:09:50 PM mwmidkiff

SHEET SUMMARY OF ESTIMATED QUANTITIES			
ITEM#	DESCRIPTION	UNIT	QTY
0403	TEMPORARY SPL SHORING	SF	0
0506	ROCK FILTER DAMS (REMOVE)	LF	45
0512	PORT CTB (REMOVE)(SNGL SLP) (TY 1)	LF	165
0545	CRASH CUSH ATTEN (REMOVE) (WORK	EA	1

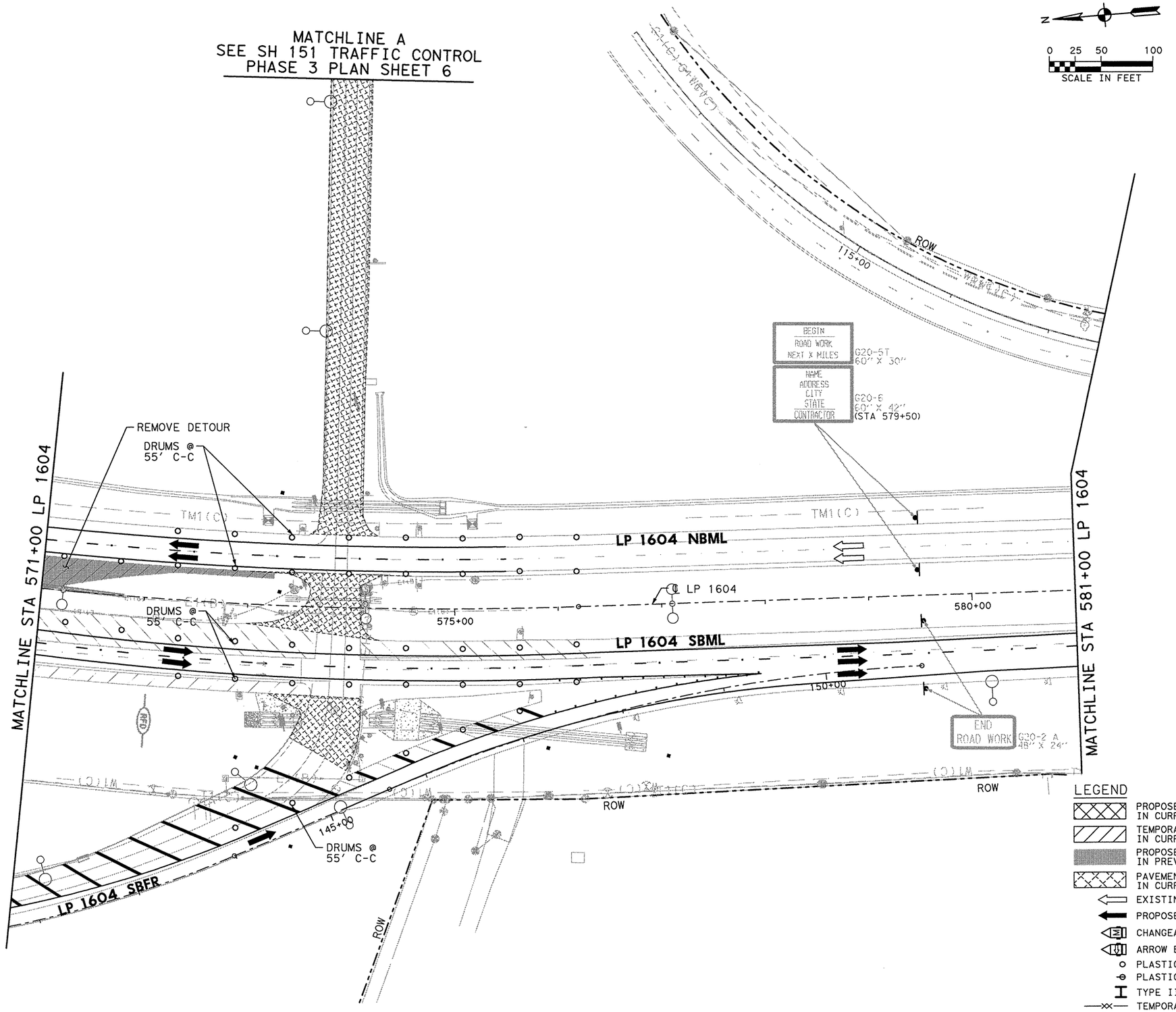

TEMPORARY SW3P ALL PHASES

1. ALL SW3P CONTROL MEASURES SHALL BE PLACED WITHIN TXDOT RIGHT-OF-WAY DURING CONSTRUCTION.
2. SHALL MAINTAIN SW3P CONTROL MEASURES THROUGHOUT CONSTRUCTION.
3. CONSTRUCTION ENTRANCE/EXIT AND CONCRETE WASH-OUT AREA TO BE DETERMINED BY ENGINEER OUT IN THE FIELD.
4. ALL SW3P CONTROL MEASURES INSTALLED DURING CONSTRUCTION ARE TO REMAIN IN PLACE UNTIL 70% VEGETATIVE COVER IS ACHIEVED OR AS APPROVED BY THE ENGINEER.
5. LOCATION OF SW3P CONTROL MEASURES TO BE DETERMINED BY ENGINEER IN THE FIELD.
6. ANTICIPATE ONE REPLACEMENT CYCLE FOR SW3P CONTROL MEASURES.
7. APPLY VEGETATIVE WATERING AS NEEDED TO SUPPLEMENT NATURAL RAINFALL DURING THE VEGETATION ESTABLISHMENT PERIOD. DROUGHT OR OTHER ENVIRONMENTAL CONDITIONS, AS DETERMINED BY THE ENGINEER, MAY REQUIRE THE APPLICATION OF SUPPLEMENTAL IRRIGATION TO BE BETWEEN THE HOURS OF 6PM AND 8AM.
8. SW3P CONTROL MEASURE SYMBOLS ARE NOT TO SCALE.

LEGEND

- PROPOSED CONSTRUCTION IN CURRENT PHASE
- TEMPORARY CONSTRUCTION IN CURRENT PHASE
- PROPOSED CONSTRUCTION IN PREVIOUS PHASE
- PAVEMENT REMOVAL IN CURRENT PHASE
- EXISTING TRAFFIC FLOW ARROW
- PROPOSED TRAFFIC FLOW ARROW
- CHANGEABLE MESSAGE SIGN
- ARROW BOARD
- PLASTIC DRUM
- PLASTIC DRUM WITH CHEVRON
- TYPE III BARRICADE
- TEMPORARY SILT FENCE
- TEMPORARY ROCK FILTER DAM
- SANDBAGS FOR INLET PROTECTION
- DITCH

REV. 12-30-11

STATE OF TEXAS
MICHAEL W. MIDKIFF
75435
REGISTERED PROFESSIONAL ENGINEER
12/23/11

NO.	DATE	REVISION DESCRIPTION	APP. BY
	12/21/12	QUANTITY	MWM

© 2011

Texas Department of Transportation

MACTEC
3520 EXECUTIVE CENTER DRIVE
SUITE 200
AUSTIN, TEXAS 78731
(512) 795-0360

REGISTRATION NUMBER: F-1784

SH 151
TRAFFIC CONTROL & SW3P PHASE III
LP 1604
STA 571+00 TO STA 581+00
(SHEET 7 OF 8)

FED. RD. DIV. NO.			SHEET NO.
			102
STATE	DIST.	COUNTY	
TEXAS	SA	BEXAR	
CONT.	SECT.	JOB	HIGHWAY NO.
2452	01	043	SH 151

12/23/2011 2:10:00 PM mwmidkiff
p:\4760\10-01\29\cad\sheet\151tcp3\14.dgn

SHEET SUMMARY OF ESTIMATED QUANTITIES			
ITEM#	DESCRIPTION	UNIT	QTY

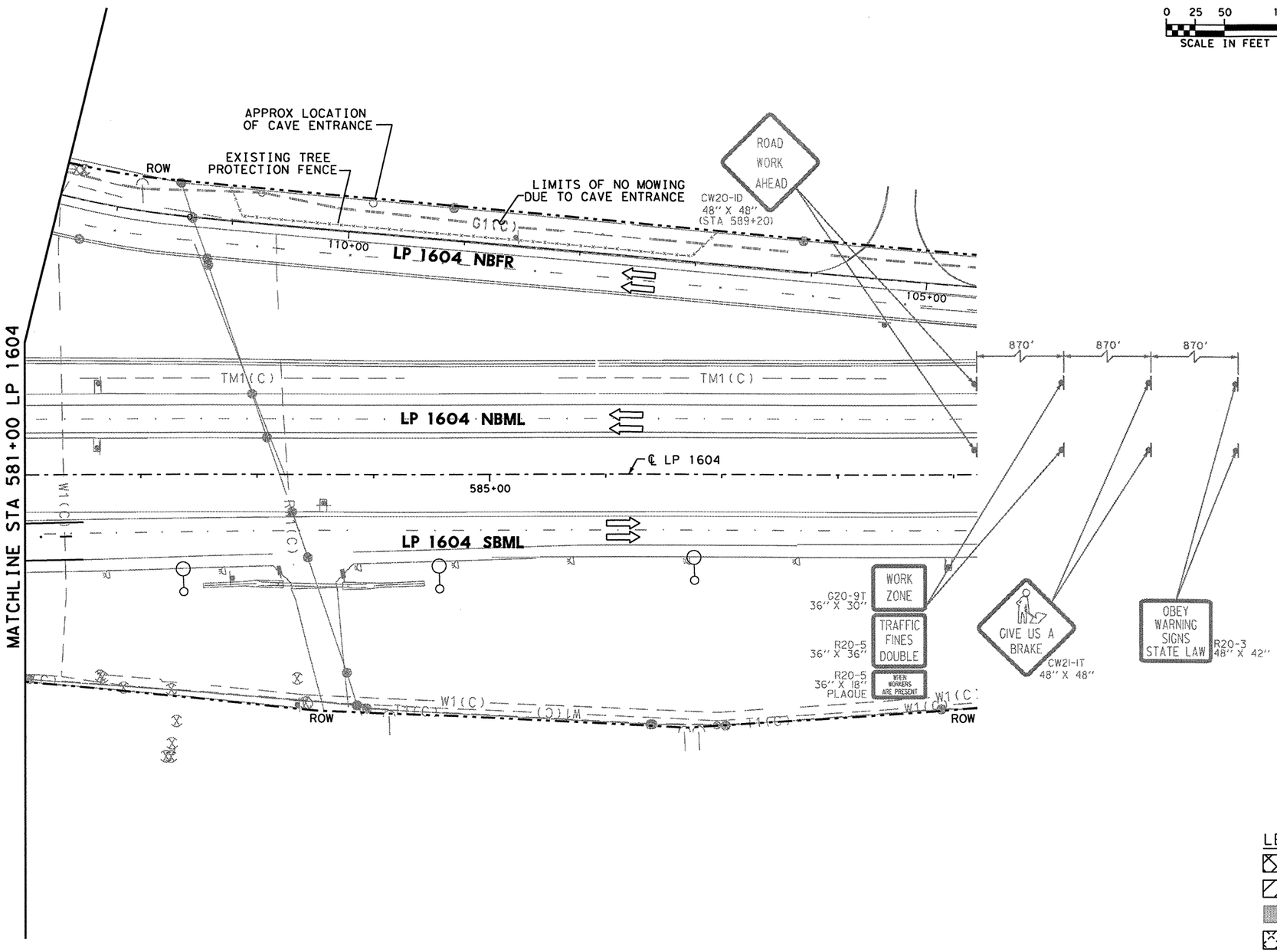

TEMPORARY SW3P ALL PHASES

1. ALL SW3P CONTROL MEASURES SHALL BE PLACED WITHIN TXDOT RIGHT-OF-WAY DURING CONSTRUCTION.
2. SHALL MAINTAIN SW3P CONTROL MEASURES THROUGHOUT CONSTRUCTION.
3. CONSTRUCTION ENTRANCE/EXIT AND CONCRETE WASH-OUT AREA TO BE DETERMINED BY ENGINEER OUT IN THE FIELD.
4. ALL SW3P CONTROL MEASURES INSTALLED DURING CONSTRUCTION ARE TO REMAIN IN PLACE UNTIL 70% VEGETATIVE COVER IS ACHIEVED OR AS APPROVED BY THE ENGINEER.
5. LOCATION OF SW3P CONTROL MEASURES TO BE DETERMINED BY ENGINEER IN THE FIELD.
6. ANTICIPATE ONE REPLACEMENT CYCLE FOR SW3P CONTROL MEASURES.
7. APPLY VEGETATIVE WATERING AS NEEDED TO SUPPLEMENT NATURAL RAINFALL DURING THE VEGETATION ESTABLISHMENT PERIOD. DROUGHT OR OTHER ENVIRONMENTAL CONDITIONS, AS DETERMINED BY THE ENGINEER, MAY REQUIRE THE APPLICATION OF SUPPLEMENTAL IRRIGATION TO BE BETWEEN THE HOURS OF 6PM AND 8AM.
8. SW3P CONTROL MEASURE SYMBOLS ARE NOT TO SCALE.

NOTE: REFER TO EPIC PLAN SHEET IN REGARD TO WORK IN VICINITY OF CAVE ENTRANCE.

LEGEND

- PROPOSED CONSTRUCTION IN CURRENT PHASE
- TEMPORARY CONSTRUCTION IN CURRENT PHASE
- PROPOSED CONSTRUCTION IN PREVIOUS PHASE
- PAVEMENT REMOVAL IN CURRENT PHASE
- EXISTING TRAFFIC FLOW ARROW
- PROPOSED TRAFFIC FLOW ARROW
- CHANGEABLE MESSAGE SIGN
- ARROW BOARD
- PLASTIC DRUM
- PLASTIC DRUM WITH CHEVRON
- TYPE III BARRICADE
- TEMPORARY SILT FENCE
- TEMPORARY ROCK FILTER DAM
- SANDBAGS FOR INLET PROTECTION
- DITCH

STATE OF TEXAS
MICHAEL W. MIDKIFF
75435
REGISTERED PROFESSIONAL ENGINEER
4/11/11

NO.	DATE	REVISION DESCRIPTION	APP. BY

© 2011

Texas Department of Transportation

MACTEC
3520 EXECUTIVE CENTER DRIVE
SUITE 200
AUSTIN, TEXAS 78731
(512) 795-0360

REGISTRATION NUMBER: F-1784

SH 151
TRAFFIC CONTROL & SW3P PHASE III
LP 1604
STA 581+00 TO END PROJECT
(SHEET 8 OF 8)

FED. RD. DIV. NO.			SHEET NO.
			103
STATE	DIST.	COUNTY	
TEXAS	SA	BEXAR	
CONT.	SECT.	JOB	HIGHWAY NO.
2452	01	043	SH 151

p:\4760\0-0129\cad\sheet\51tcp3115.dgn 4/12/2011 7:04:19 PM mwmidkiff

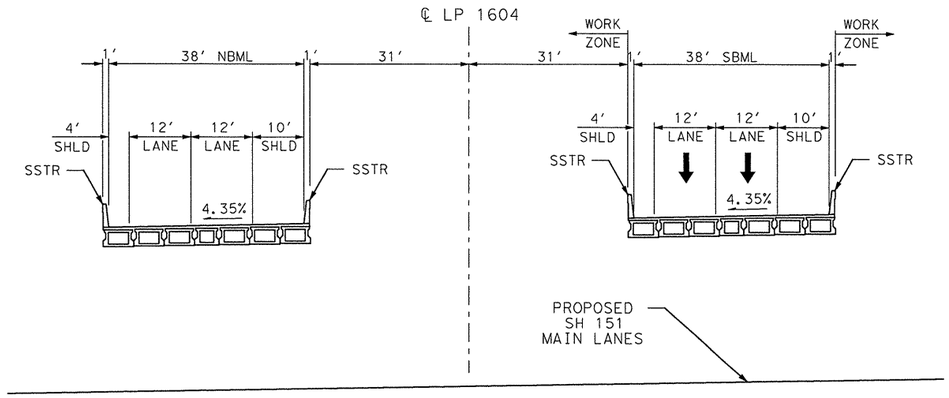

LP 1604 MAINLANES
PHASE 2B
SECTION E

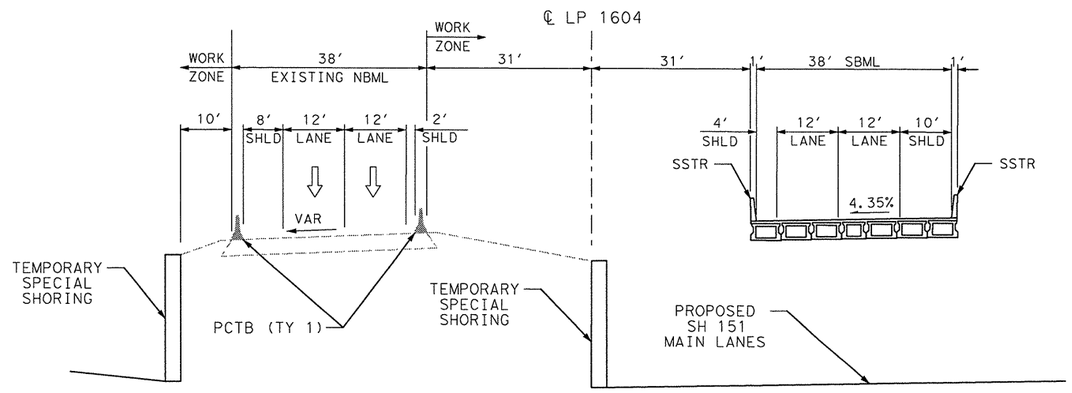

LP 1604 MAINLANES
PHASE 2A
SECTION E

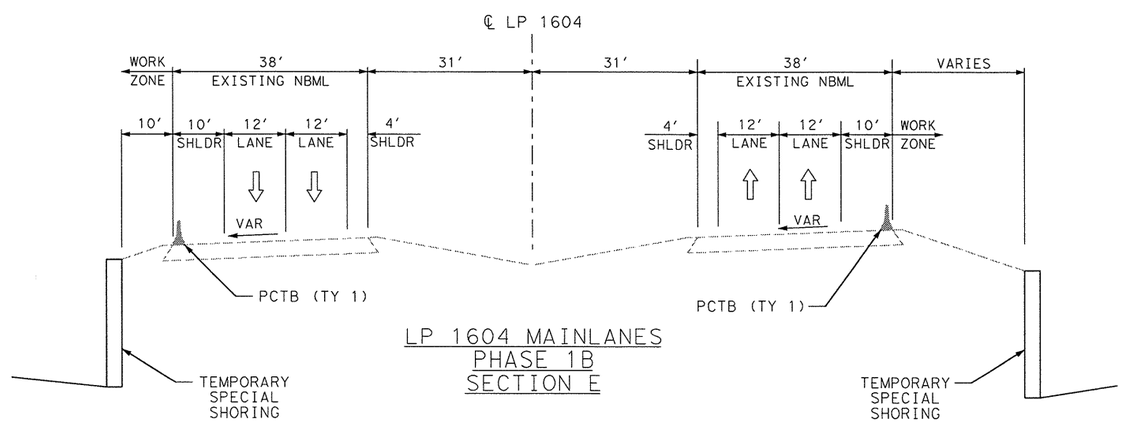

LP 1604 MAINLANES
PHASE 1B
SECTION E

STATE OF TEXAS
MICHAEL W. MIDKIFF
75435
REGISTERED PROFESSIONAL ENGINEER
12/5/11

NO.	DATE	REVISION DESCRIPTION	APP. BY

© 2011

Texas Department of Transportation

MACTEC
3520 EXECUTIVE CENTER DRIVE
SUITE 200
AUSTIN, TEXAS 78731
(512) 795-0360

REGISTRATION NUMBER: F-1784

SH 151

TRAFFIC CONTROL TYPICAL SECTIONS

(SHEET 1 OF 1)

FED. RD. DIV. NO.			SHEET NO.
			104
STATE	DIST.	COUNTY	
TEXAS	SA	BEXAR	
CONT.	SECT.	JOB	HIGHWAY NO.
2452	01	043	SH 151

12/4/2011 3:34:38 PM mwmidkiff
p:\4760\0-0129\cad\sheet\5idet_tcp01.dgn

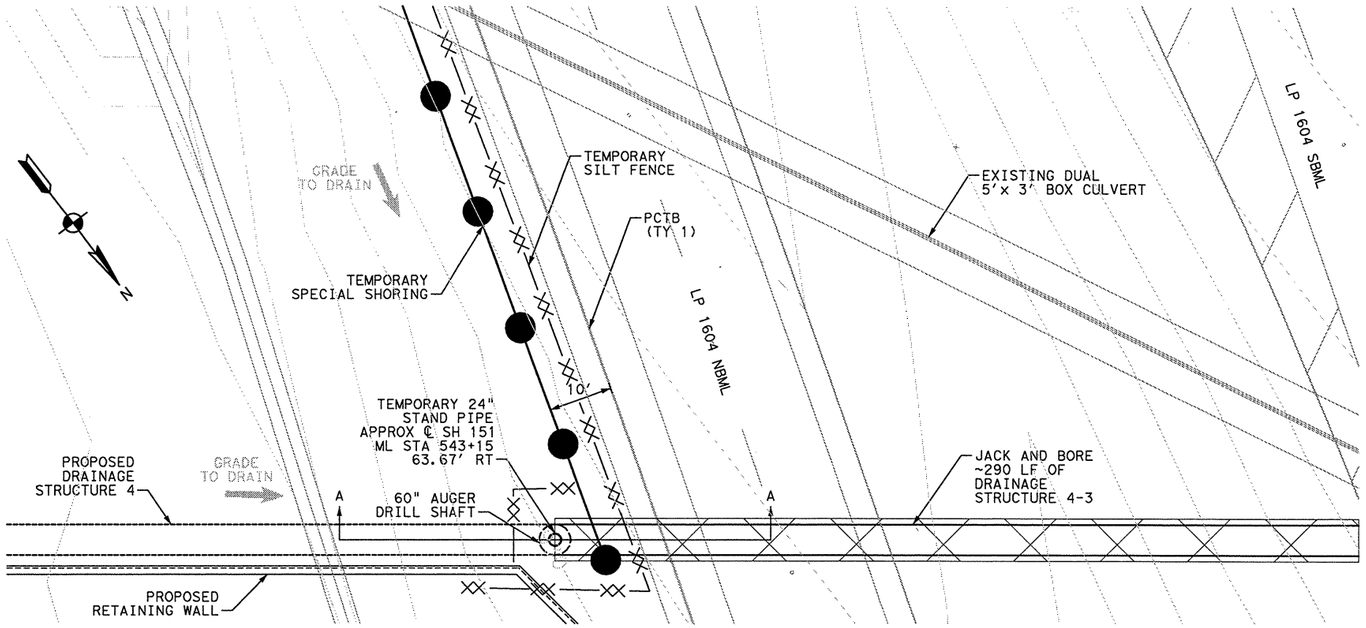

1. STAND PIPE ASSEMBLY SHOULD BE IN PLACE WITHOUT BACKFILL PRIOR TO THE FINAL STEP OF JACK AND BORING DRAINAGE STRUCTURE 4.
2. FINAL JACK AND BORE STEP SHOULD BE PERFORMED IN A MANNER TO ALLOW THE STAND PIPE ELBOW TO REST WITHIN THE OPEN END OF DRAINAGE STRUCTURE 4.
2. PIPE CUT ELEVATION MUST BE ADJUSTED AT THE END OF EACH WORKING DAY.
3. STABILIZING BACKFILL IS REQUIRED TO SUPPORT THE STAND PIPE. THE DEPTH OF THIS FILL WILL CHANGE AS EXCAVATION PROCEEDS FOR SH 151 MAINLANES.
4. EXCAVATION FOR SH 151, EAST OF LP 1604, MUST BE EXECUTED IN A MANNER TO ALLOW ALL RUNOFF WITHIN THE LIMITS OF THIS EXCAVATION TO FLOW INTO THIS STAND PIPE AND DRAINAGE STRUCTURE 4.
5. THE COST TO CONSTRUCT THE 24" RCP (CL V) STAND PIPE ASSEMBLY, 60" DIAMETER VERTICAL SHAFT, STABILIZING BACKFILL, ELBOW CONNECTION ETC., INCLUDING FURNISHING ALL EQUIPMENT, MATERIALS, LABOR, TOOLS, INCIDENTALS AND ANY TEMPORARY SHORING OR TEMPORARY EROSION CONTROL NECESSARY, WILL NOT BE PAID FOR DIRECTLY BUT SHALL BE CONSIDERED SUBSIDIARY TO ITEM 476-2022 "JACK BORE OR TUNNEL (24 IN)(RC)(CL V)", COMPLETE IN PLACE.

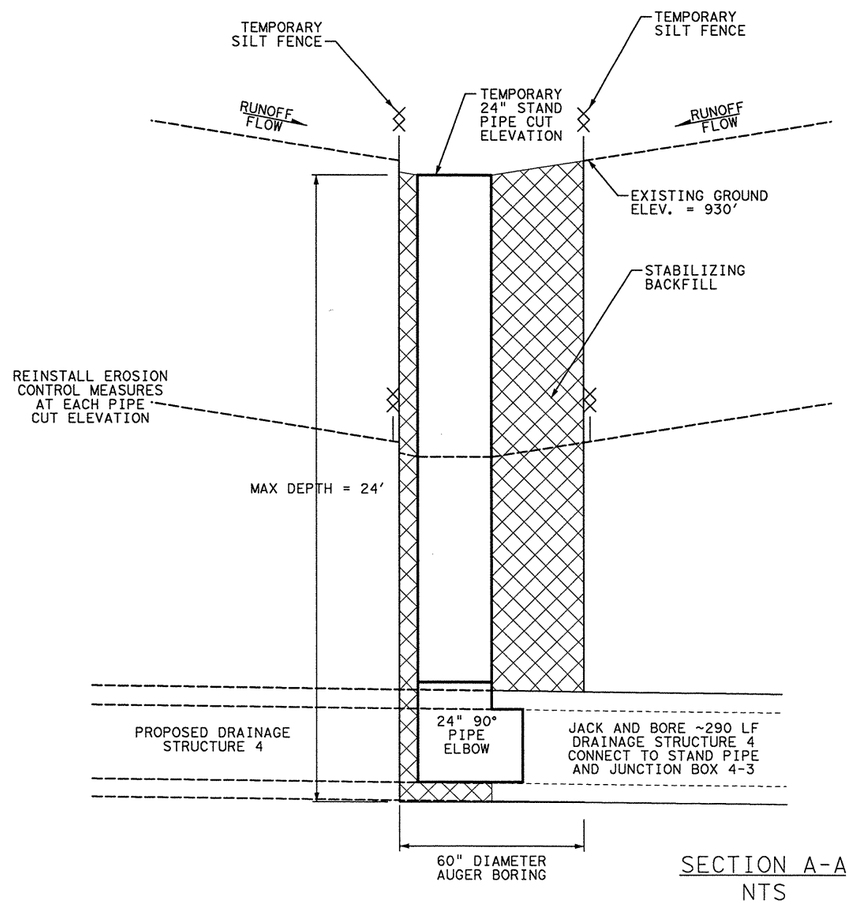

SECTION A-A
NTS

STATE OF TEXAS
MICHAEL W. MIDKIFF
75435
REGISTERED PROFESSIONAL ENGINEER

Michael W. Midkiff
12/5/11

NO.	DATE	REVISION DESCRIPTION	APP. BY

© 2011

Texas Department of Transportation

MACTEC
3520 EXECUTIVE CENTER DRIVE
SUITE 200
AUSTIN, TEXAS 78731
(512) 795-0360

REGISTRATION NUMBER: F-1784

SH 151

TRAFFIC CONTROL TEMPORARY STAND PIPE DETAIL

(SHEET 1 OF 1)

FED. RD. DIV. NO.			SHEET NO.
			105
STATE	DIST.	COUNTY	
TEXAS	SA	BEXAR	
CONT.	SECT.	JOB	HIGHWAY NO.
2452	01	043	SH 151

p:\4760\0-0129\cad\sheet\15\det_tcp02.dgn 12/4/2011 3:34:41 PM mwmidkiff

pw:\\tfpw-wp129\cad\sheet\15epc01.dgn 4/12/2011 6:05:18 PM mwildd117

Note To Designer:
1. Do not alter Sheet Design or Font style, size or weight - match text attributes.
2. If additional space is needed for a numbered section, fence and adjust sections up or down as needed for proportioning and readability but do not relocate from it's relative position.

I. Stormwater Pollution Prevention - Clean Water Act Section 402

TPDES TXR 150000: Stormwater Discharge Permit or Construction General Permit required for projects with 1 or more acres distrubed soil. Projects with any disturbed soil must protect for erosion and sedimentation in accordance with Item 506.

☐ No Action Required ☒ Required Action

Action No.

1. Prevent stormwater pollution by controlling erosion and sedimentation in accordance with TPDES Permit TXR 150000
2. Comply with the SW3P and revise when necessary to control pollution or required by the Engineer.
3. Post Construction Site Notice, (CSN) with SW3P information on or near the site, accessible to the public and TCEQ, EPA or other inspectors.
4. When Contractor project specific locations (PSL's) increase disturbed soil area to 5 acres or more, submit NOI to TCEQ and the Engineer.

II. Work in or near Streams, Waterbodies and Wetlands Clean Water Act Sections 401 & 404

USACE Permit required for filling, dredging, excavating or other work in any water bodies, rivers, creeks, streams, wetlands or wet areas.

The Contractor must adhere to all of the terms and conditions associated with the following permit(s):

☒ No Permit Required
☐ Nationwide Permit 14 - PCN not Required (less than 1/10th acre waters or wetlands affected)
☐ Nationwide Permit 14 - PCN Required (1/10 to <1/2 acre, 1/3 in tidal waters)
☐ Individual 404 Permit Required
☐ Other Nationwide Permit Required: NWP# _____

Required Actions: List waters of the US permit applies to, location in project and check Best Management Practices planned to control erosion, sedimentation and post-project TSS.

1.

2.

3.

4.

Best Management Practices:

Erosion	*Sedimentation*	*Post-Construction TSS*
☒ Temporary Vegetation	☒ Silt Fence	☐ Vegetative Filter Strips
☒ Blankets/Matting	☒ Rock Berm	☐ Retention/Irrigation Systems
☐ Mulch	☐ Triangular Filter Dike	☐ Extended Detention Basin
☐ Sodding	☐ Sand Bag Berm	☐ Constructed Wetlands
☐ Interceptor Swale	☐ Straw Bale Dike	☐ Wet Basin
☐ Diversion Dike	☐ Brush Berms	☐ Erosion Control Compost
☐ Erosion Control Compost	☐ Erosion Control Compost	☐ Mulch Filter Berm and Socks
☐ Mulch Filter Berm and Socks	☐ Mulch Filter Berm and Socks	☐ Compost Filter Berm and Socks
☐ Compost Filter Berm and Socks	☐ Compost Filter Berm and Socks	☐ Vegetation Lined Ditches
	☐ Stone Outlet Sediment Traps	☐ Sand Filter Systems
	☐ Sediment Basins	

III. Cultural Resources

Refer to TxDOT Standard Specifications in the event historical issues or archeological artifacts are found during construction. Upon discovery of archeological artifacts (bones, burnt rock, flint, pottery, etc.) cease work in the immediate area and contact the Engineer immediately.

☒ No Action Required ☐ Required Action

Action No.

1.

2.

3.

4.

5.

IV. Vegetation Resources

Preserve native vegetation to the extent practical.

☐ No Action Required ☒ Required Action

Action No.

1. INSTALL TREE PROTECTION PRIOR TO COMMENCEMENT OF CONSTRUCTION

2.

3.

4.

V. Federal Listed, and Proposed Threatened and Endangered Species, Critical Habitat, State Listed Species, Candidate Species and Migratory Birds.

☐ No Action Required ☒ Required Action

Action No.

1. MIGRATORY BIRD NESTS: Schedule construction acitivites as needed to meet the following requirements:
   A. Do not removeor destroy any active migratory bird nests (nests containing eggs and/or flightless birds) at any time of year. Inactive nests may be removed except on/in structures wehre special requirements apply.

   B. On/in structures, if there are any active nests, they shall not be removed until all nests become inactive. After inactive nests are removed and/or before nest activity begins, deterrent materials may be applied to the structures to prevent future nest building.
2. Contractor shall be prepared to prevent migratory birds from building nests between Feb 15 and Oct 1.
3. Work will cease in the immediate area if a karst feature is encountered. An individual possessing a Section 10 (a) (1) (A) permit will be used to assess the feature. If a federally protected species is documented, formal consultation with the USFWS will be initiated.
4. Monitoring for Karst features - The Contractor shall contact the TxDOT San Antonio District Environmental Quality Coordinator (DEQC) 72 hours prior to commencing any construction excavation activities pertaining to:
   A. Roadway cuts
   B. Retaining walls
   C. Drill shafts
   D. Culvert and storm sewer
   E. Construction of cave gate
5. If any karst features are identified during monitoring, construction activities shall stop in the immediate vicinity of the feature until initial assessment of the feature is complete. If the feature is determined to be non-habitat for listed karst invertebrates, then construction may resume. If the feature is determined to be habitat for listed karst invertebrates, then work shall be suspended in the vicinity of the feature (as determined in the field) until further notice, and the Contractor shall contact the Engineer.
6. The Contractor shall not enter the cave at any time.
7. Cave is inhabited by soft-bodied ticks known to carry relapsing fever infection. Contractor shall follow the Site Health and Safety Plan (SHSP) for work occuring in the vicinity of the cave entrance as per Special Provision 007-834.
8. Contractor shall not use pesticides in or near cave entrance.
9. A gate is to be constructed over the cave entrance. See cave gate details.

If any of the listed species are observed, cease work in the immediate area, do not disturb species or habitat and contact the Engineer immediately. The work may not remove active nests from bridges and other structures during nesting season of the birds associated with the nests. If caves or sinkholes are discovered, cease work in the immediated area, and contact the Engineer immediately.

VI. Hazardous Materials or Contamination Issues

General (applies to all projects):

Comply with the Hazard Communication Act (the Act) for personnel who will be working with hazardous materials by conducting safety meetings prior to beginning construction and making workers aware of potential hazards in the workplace. Ensure that all workers are provided with personal protective equipment appropiate for any hazardous materials used.

Obtain and keep on-site Material Safety Data Sheets, (MSDS) for all hazardous products used on the project, which may include, but are not limited to the following categories: Paints, acids, solvents, asphalt products, chemical additives, fuels and concrete curing compounds or additives. Provide protected storage, off bare ground and covered, for products which may be hazardous. Maintain product labelling as required by the Act.

Maintain an adequate supply of on-site spill response materials, as indicated in the MSDS. In the event of a spill, take actions to mitigate the spill as indicated in the MSDS, in accordance with safe work practices, and contact the District Spill Coordinator immediately. The Contractor shall be responsible for the proper containment and cleanup of all product spills.

Contact the Engineer if any of the follwing are detected:

- *Dead or distressed vegetation (not identified as normal)*
- *Trash piles, drums, canister, barrels, etc.*
- *Undesirable smells or odors*
- *Evidence of leaching or seepage of substances*

Any other evidence indicating possible hazardous materials or contamination discoverd on site.

Hazardous Materials or Contamination Issues Specific to this Project:

☒ No Action Required ☐ Required Action

Action No.

1.

2.

3.

4.

VII. Other Environmental Issues

(includes regional issues such as Edwards Aquifer District, etc.)

☐ No Action Required ☒ Required Action

Action No.

1. Minimize particulate matter emissions through use of fugitive dust control measures such as covering or treating disturbed areas with dust suppression techniques, sprinkling, covering loaded trucks, and other dust abatement controls, as appropriate.

2.

3.

STATE OF TEXAS
MICHAEL W. MIDKIFF
75435
REGISTERED PROFESSIONAL ENGINEER
4/11/11

Texas Department of Transportation
Design Division (Roadway)

Environmental Permits, Issues and Commitments

EPIC

FILE: epic.dgn	DN: TxDOT	CK: CL	DW: VP	CK: CL	
© TxDOT May 2010	DIST	FEDERAL AID PROJECT			SHEET
REVISIONS	SA				106
	COUNTY		CONTROL	SECT	JOB	HIGHWAY
	BEXAR		2452	01	043	SH 15

Revised 9-08-03

P:\4760\0-0129\cad\sheet\151sw3p01.dgn
4/12/2011
6:14:36 PM
mwmidkiff

Note To Designer:
1. Do not alter Sheet Design o… …ont style, size or weight - match text attributes.
2. If additional space is needed for a numbered section, fence and adjust sections up or down as needed for proportioning and readability but do not relocate from it's relative position.

A. GENERAL SITE DATA

1. PROJECT LIMITS: *Loop 1604 at SH 151*

2. PROJECT SITE MAPS:

* *Project Latitude 29°29'1.3" Project Longitude 98°42'34.5"*
* *Project Location Map: Shown on Title Sheet*
* *Drainage Patterns: Shown on Drainage Area Maps (Sheets 189-200)*
* *Approx. Slopes Anticipated After Major Gradings and Areas of Soil Disturbance: Shown on Typical Sections (Sheets 4-8)*
* *Major Controls and Locations of Stabilization Practices: Shown on SW3P Sheets (TCP Sheets 28-104)*
* *Project Specific Locations: Off-site waste, borrow, or storage areas are not part of this SW3P.*
* *Surface Waters and Discharge Locations: Shown on Drainage and Culvert Layout Sheets (Sheets 201-208)*

3. PROJECT DESCRIPTION: *For work consisting of construct Interchange at Loop 1604 and SH 151 (Phase 3B - SH 151 Mainlanes)*

* *Joint-bid utilities are covered by this SW3P CPS Gas (Sheets 439-441)*
  Non-Joint Bid Utilities are not part of this SW3P.

4. FOR MAJOR SOIL DISTURBING ACTIVITIES SEQUENCE OF EVENTS:

1. *Install controls down-slope of work area and initiate inspection and maintenance activities.*
2. *Begin phased construction with interim stabilization practices. Adjust erosion and sedimentation controls during construction to meet requirements and changing conditions and as directed/approved by the Engineer.*
3. *Major soil disturbing activities may include but are not limited to: right-of-way preparation, cut and/or fill to improve roadway profile, final grading and placement of topsoil and the following (if marked):*

_X_ *Placement of road base*
_X_ *Exstensive ditch grading*
_X_ *Upgrading or replacing culverts or bridges*
_X_ *Temporary detour road(s)*
_X_ *Other: Storm Sewer*

Non-Joint Bid Utilities are not part of this SW3P.

5. EXISTING AND PROPOSED CONDITIONS:

Description of existing vegetative cover: The existing vegetation is primarily weeds and some grass
Percentage of existing vegetative cover: 75%
Existing vegetative cover: (mark one)
_X_ *Thick or uniformly established*
___ *Thin and Patchy*
___ *None or minimal cover*

Description of soils: The existing soil is primarily Lewisville Silty Clay, Patrick Soils, and Tarrant Assoc Soils 5% to 15% slopes

Site Acreage: 113.0 Ac. *Acreage disturbed: 24.0 Ac.*
Site runoff coefficient (pre-construction): 0.50 *Site runoff coefficient (post-construction): 0.53*

6. RECEIVING WATERS:

_X_ *A classified stream does not pass through project.*
___ *A classified stream passes through project. Name ________ Segment Number ________*

Name of receiving waters that will receive discharges from disturbed areas of the project: Tributaries of Culebra Creek

Site is in a Municipal Separate Storm Sewer System (MS4).
MS4 Operator (name): ________

B. BEST MANAGEMENT PRACTICES

General timing or sequence for implementation of BMPs shall be as required and/or as directed/approved by the Engineer to provide adequate controls. BMPs shown on plan sheets are to be considered "proposed" unless/until install date is shown. BMPs are to reduce sediments from road construction activities.

1. SOIL STABILIZATION PRACTICES: (Select T = Temporary or P = Permanent, as applicable)

P/T SEEDING
___ MULCHING (Hay or Straw)
___ BUFFER ZONES
___ PLANTING
___ COMPOST/MULCH FILTER BERM
___ SODDING
P PRESERVATION OF NATURAL RESOURCES
___ FLEXIBLE CHANNEL LINER
___ RIGID CHANNEL LINER
___ SOIL RETENTION BLANKET
P COMPOST MANUFACTURED TOPSOIL
___ OTHER:

2. STRUCTURAL PRACTICES: (Select T = Temporary or P = Permanent, as applicable)

T SILT FENCES
___ HAY BALES
T ROCK FILTER DAMS
___ DIVERSION, INTERCEPTOR, OR PERIMETER DIKES
___ DIVERSION, INTERCEPTOR, OR PERIMETER SWALES
___ DIVERSION DIKE AND SWALE COMBINATIONS
___ PIPE SLOPE DRAINS
___ PAVED FLUMES
T ROCK BEDDING AT CONSTRUCTION EXIT
___ TIMBER MATTING AT CONSTRUCTION EXIT
___ CHANNEL LINERS
___ SEDIMENT TRAPS
___ SEDIMENT BASINS
___ STORM INLET SEDIMENT TRAP
___ STONE OUTLET STRUCTURES
P CURBS AND GUTTERS
P STORM SEWERS
___ VELOCITY CONTROL DEVICES
___ OTHER:

3. STORM WATER MANAGEMENT:

The proposed facility was designed in consideration of hydraulic design standards to convey stormwater in a manner that is protective of public safety and property. The control of erosion from the facility is inherent to the design. Additional factors affecting post-construction stormwater at the project location include: (mark all that apply)

_X_ *Existing or new vegetation provides natural filtration.*
_X_ *The design includes provisions for permanent erosion controls provided by strategically placed pervious and impervious surfaces.*
___ *Project includes permanent sedimentation controls (other than grass).*
___ *Velocities do not require dissipation devices.*
___ *Velocity-dissipation devices included in the design.*
___ *Other : ________*

4. NON-STORM WATER DISCHARGES:

Off-site discharges are prohibited except as follows:

1. *Discharges from fire fighting activities and/or fire hydrant flushings.*
2. *Vehicle, external building, and pavement wash water where detergents and soaps are not used and where spills or leaks of toxic or hazardous materials have not occurred (unless all spilled material has been removed).*
3. *Plain water used to control dust.*
4. *Plain water originating from potable water sources.*
5. *Uncontaminated groundwater, spring water or accumulated stormwater.*
6. *Foundation or footing drains where flows are not contaminated with process materials such as solvents.*
7. *Other: ________*

Concrete truck wash water discharges on the site should be prohibited or minimized. If allowed by the Engineer, they must be managed in a manner so as not to contaminate surface water. They must not be located in areas of concentrated flow. Concrete truck wash-out locations must be shown on the SW3P Layout and included in the inspections.

Hazardous material spill/leak shall be prevented or minimized. At a minimum, this includes asphalt products, fuels, oils, lubricants, solvents, paints, acids, concrete curing compounds and chemical additives for soil stabilization. BMPs shall be implemented to the storage areas of these products. All spills must be cleaned and disposed properly and reported to the Engineer. Report any release at or above the reportable quantity during a 24 hour period to the National Response Center at 1-800-424-8802.

C. OTHER REQUIREMENTS & PRACTICES

1. MAINTENANCE:

All erosion and sediment controls shall be maintained in good working order. If a repair is necessary, it shall be performed before the next anticipated storm event but no later than 7 calendar days after the surrounding exposed ground has dried sufficiently to prevent further damage from equipment. If maintenance prior to the next anticipated storm event is impracticable, maintenance must be scheduled and accomplished as soon as practicable. Disturbed areas on which construction activities have ceased, temporarily or permanently, shall be stabilized within 14 calendar days unless they are scheduled to and do resume within 21 calendar days. The areas adjacent to creeks and drainageways shall have priority followed by protecting storm sewer inlets.

2. INSPECTION:

For areas of the construction site that have not been finally stabilized, areas used for storage of materials, structural control measures, and locations where vehicles enter or exit the site, personnel provided by the permittee and familiar with the SW3P must inspect disturbed areas at least once every fourteen (14) calendar days and within twenty four (24) hours of the end of a storm of 0.5 inches or greater As an alternative to the above-described inspection schedule of once every fourteen (14) calendar days and within twenty four (24) hours of a storm of 0.5 inches or greater, the SW3P may be developed to require that these inspections will occur at least once every seven (7) calendar days. If this alternative schedule is developed, the inspection must occur on a specifically defined day, regardless of whether or not there has been rainfall since the previous inspectionAn inspection and Maintenance Report shall be prepared for each inspection and the controls shall be revised on the SW3P within seven (7) calendar days following the inspection.

3. WASTE MATERIALS:

All non-hazardous municipal waste materials such as litter, rubbish, trash and garbage located on or originating from the project shall be collected and stored in a securely lidded metal dumpster, provided by the Contractor. The dumpster shall be emptied as necessary or as required by local regulation and the trash shall be hauled to a permitted disposal facility. The burying of non-hazardous municipal waste on the project shall not be permitted. Construction material waste sites, stockpiles and haul roads shall be constructed to minimize and control the amount of sediment that may enter receiving waters. Construction material waste sites shall not be located in any wetland, water body or stream bed. Construction staging areas and vehicle maintenance areas shall be constructed in a manner to minimize the runoff of pollutants.

4. OFFSITE VEHICLE TRACKING:

Off-site vehicle tracking of sediments and the generation of dust must be minimized. Excess sediments on road shall be removed on a regular basis as directed/approved by the Engineer.

5. OTHER:

See the EPIC sheet for additional environmental information.

MACTEC
REGISTRATION NUMBER: F-1784

STATE OF TEXAS
MICHAEL W. MIDKIFF
75435
REGISTERED PROFESSIONAL ENGINEER

Michael W. Midkiff, P.E. 4/11/11
Signature of Registrant & Date

REVISION DATE: 08/04

© 2011 Texas Department of Transportation

STORM WATER POLLUTION PREVENTION PLAN (SW3P)

FED. RD. DIV. NO.	FEDERAL AID PROJECT NO.		HIGHWAY NO.
6			SH 151
STATE	DISTRICT	COUNTY	
TEXAS	SAT	BEXAR	SHEET NO.
CONTROL	SECTION	JOB	
2452	01	043	107

DISCLAIMER: The use of this standard is governed by the "Texas Engineering Practice Act". No warranty of any kind is made by TxDOT for any purpose whatsoever. TxDOT assumes no responsibility for the conversion of this standard to other formats or for incorrect results or damages resulting from its use.

p:\4760\0-0129\cad\-`standard\Sfetd_tcp01.dgn 2/21/2011 5:39:59 PM mwmldell1

Barricade and Construction (BC) Standard Sheets General Notes:

1. The Barricade and Construction Standard Sheets (BC sheets) are intended to show typical examples for placement of temporary traffic control devices, construction pavement markings, and typical work zone signs. The information contained in these sheets meet or exceed the requirements shown in the "Texas Manual on Uniform Traffic Control Devices" (TMUTCD).
2. The development and design of the Traffic Control Plan (TCP) is the responsibility of the Engineer.
3. The Contractor may propose changes to the TCP that are signed and sealed by a licensed professional engineer for approval. The Engineer may develop, sign and seal Contractor proposed changes.
4. The Contractor is responsible for installing and maintaining the traffic control devices as shown in the plans. The Contractor may not move or change the approximate location of any device without the approval of the Engineer.
5. Geometric design of lane shifts and detours should, when possible, meet the applicable design criteria contained in manuals such as the American Association of State Highway and Transportation Officials (AASHTO), "A Policy on Geometric Design of Highways and Streets", the TxDOT "Roadway Design Manual" or engineering judgment.
6. When projects abut, the Engineer(s) may omit the END ROAD WORK, TRAFFIC FINES DOUBLE, and other advance warning signs if the signing would be redundant and the work areas appear continuous to the motorists. If the adjacent project is completed first, the Contractor shall erect the necessary warning signs as shown on these sheets, the TCP sheets or as directed by the Engineer. The BEGIN ROAD WORK NEXT X MILES sign shall be revised to show appropriate work zone distance.
7. The Engineer may require duplicate warning signs on the median side of divided highways where median width will permit and traffic volumes justify the signing.
8. All signs shall be constructed in accordance with the details found in the "Standard Highway Sign Designs for Texas," latest edition. Sign details not shown in this manual shall be shown in the plans or the Engineer shall provide a detail to the Contractor before the sign is manufactured.
9. The temporary traffic control devices shown in the illustrations of the BC sheets are examples. As necessary, the Engineer will determine the most appropriate traffic control devices to be used.
10. As shown on BC(2), the OBEY WARNING SIGNS STATE LAW sign and the WORK ZONE TRAFFIC FINES DOUBLE sign with plaque shall be erected in advance of the CSJ limits. The BEGIN ROAD WORK NEXT X MILES, CONTRACTOR and END ROAD WORK signs shall be erected at or near the CSJ limits.
11. Except for devices required by Note 10, traffic control devices should be in place only while work is actually in progress or a definite need exists.
12. The Engineer has the final decision on the location of all traffic control devices.
13. Inactive equipment and work vehicles, including workers' private vehicles must be parked away from travel lanes. They should be as close to the right-of-way line as possible, or located behind a barrier or guardrail, or as approved by the Engineer.

Worker Safety Apparel Notes:

1. Workers on foot who are exposed to traffic or to construction equipment within the right-of-way shall wear high-visibility safety apparel meeting the requirements of ISEA "American National Standard for High-Visibility Apparel" labeled as ANSI 107-2004 standard performance for Class 2 or 3 risk exposure. Class 3 garments should be considered for high traffic volume work areas or night time work.

Only pre-qualified products shall be used. The "Compliant Work Zone Traffic Control Devices List" (CWZTCD) describes prequalified products and their sources and may be found on-line at the web address given below or by contacting:

Texas Department of Transportation
Traffic Operations Division - TE
Phone (512) 416-3134

WEB ADDRESSES FOR REFERENCED DOCUMENTS

Compliant Work Zone Traffic Control Devices List (CWZTCD)
http://www.txdot.gov/publications/traffic.htm

Texas Manual on Uniform Traffic Control Devices (TMUTCD)
http://www.txdot.gov/publications/traffic.htm

Standard Highway Sign Designs for Texas (SHSD)
http://www.txdot.gov/publications/traffic.htm

Traffic Engineering Standard Sheets
http://www.txdot.gov/business/disclaim.htm

Material Producer List
http://www.txdot.gov/business/producer*list.htm

Departmental Material Specifications (DMS)
http://www.txdot.gov/services/construction/material*specifications/

Roadway Design Manual
http://www.txdot.gov/services/general*services/manuals.htm

Texas Department of Transportation
Traffic Operations Division

BARRICADE AND CONSTRUCTION
GENERAL NOTES
AND REQUIREMENTS

1 of 12 BC(1)-07

© TxDOT 11-4-02

DN: TXDOT	CK: TXDOT	DW: TXDOT	CK: TXDOT

REVISIONS
4-03
9-07

CONT	SECT	JOB	HIGHWAY
2452	01	043	SH 151
DIST		COUNTY	SHEET NO.
SA		BEXAR	108

pw:\\TXDOT-01\29\bc(2)-07 "<standard\bc(2)-07.dgn 2/21/2011 5:40:00 PM mwmlakit1

DISCLAIMER: The use of this standard is governed by the "Texas Engineering Practice Act". No warranty of any kind is made by TxDOT for any purpose whatsoever. TxDOT assumes no responsibility for the conversion of this standard to other formats or for incorrect results or damages resulting from its use.

TYPICAL LOCATION OF CROSSROAD SIGNS

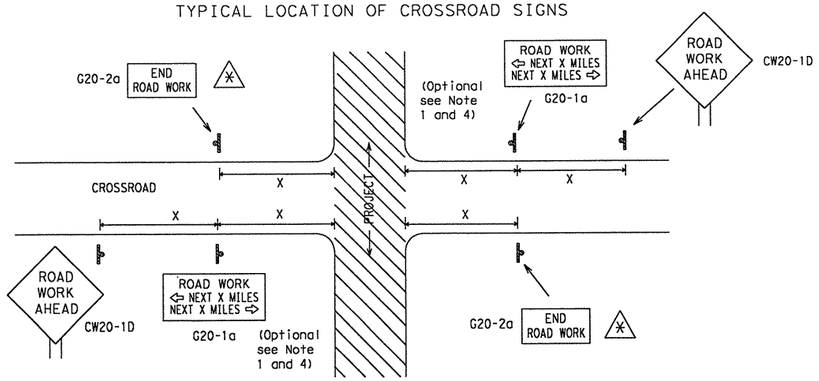

✱ May be mounted on back of CW20-1D sign with approval of engineer. (See note 2 below)

1. The typical minimum signing on a crossroad approach should be a CW20-1D ROAD WORK AHEAD sign and a G20-2a END ROAD WORK sign, unless noted otherwise in plans.
2. The Engineer may use the reduced size 36" x 36" ROAD WORK AHEAD (CW20-1D) sign mounted back to back with the reduced size 36" x 18" END ROAD WORK (G20-2a) sign on low volume crossroads (see Note 4 under "Typical Construction Warning Sign Size and Spacing"). See the "Standard Highway Sign Designs for Texas" manual for sign details. The Engineer may omit the advance warning signs on low volume crossroads. The Engineer will determine whether a road is low volume. This information shall be shown in the plans.
3. Based on existing field conditions, the Engineer/Inspector may require additional signs such as FLAGGER AHEAD, LOOSE GRAVEL, or other appropriate signs. When additional signs are required, these signs will be considered part of the minimum requirements. The Engineer/Inspector will determine the proper location and spacing of any sign not shown on the BC sheets, Traffic Control Plan sheets or the Work Zone Standard Sheets.
4. The G20-1a sign shall be required at high volume crossroads to advise motorists of the length of construction in either direction from the intersection. The Engineer will determine whether a roadway is considered high volume.
5. Additional traffic control devices may be shown elsewhere in the plans for higher volume crossroads.
6. When work occurs in the intersection area, appropriate traffic control devices, as shown elsewhere in the plans or as determined by the Engineer/Inspector, shall be in place.

T-INTERSECTION

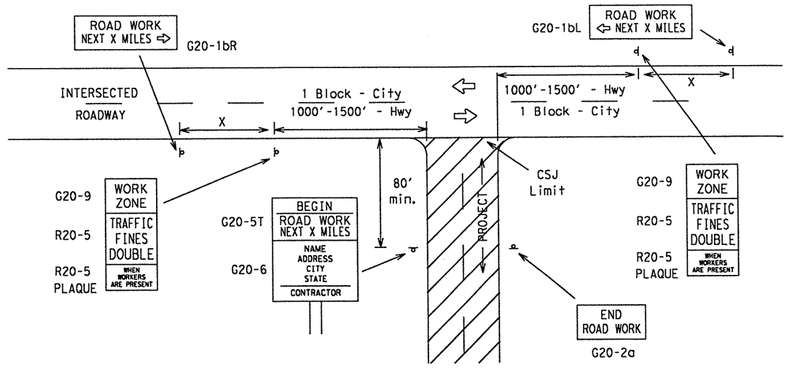

CSJ LIMITS AT T-INTERSECTION

1. The Engineer will determine the types and location of any additional traffic control devices, such as a flagger and accompanying signs, or other signs, that should be used when work is being performed at or near an intersection.
2. If construction closes the road at a T-intersection the Contractor shall place the G20-6 "Contractor Name" sign behind the Type III Barricades for the road closure (see BC(10) also). The G20-1bL and G20-1bR signs shall be replaced by the detour signing called for in the plans.

TYPICAL CONSTRUCTION WARNING SIGN SIZE AND SPACING [1,5,6]

SIZE

Sign Number or Series	Conventional Road	Expressway/ Freeway
CW20 [4], CW21, CW22, CW23, CW25	48" x 48"	48" x 48"
CW1, CW2, CW7, CW8, CW9, CW11, CW14	36" x 36"	48" x 48"
CW3, CW4, CW5, CW6, CW8-3, CW10, CW12	48" x 48"	48" x 48"

SPACING

Posted Speed	Sign Spacing "X" Δ
MPH	Feet (Apprx.)
30	120
35	160
40	240
45	320
50	400
55	500 [2]
60	600 [2]
65	700 [2]
70	800 [2]
75	900 [2]
80	1000 [2]
✱	✱ [3]

✱ For typical sign spacings on divided highways, expressways and freeways, see Part 6 of the "Texas Manual on Uniform Traffic Control Devices" (TMUTCD) typical application diagrams or TCP Standard Sheets.

Δ Minimum distance from work area to first Advance Warning sign nearest the work area and/or distance between each additional sign.

General Notes:

1. Special or larger size signs may be used as necessary.
2. Distance between signs should be increased as required to have 1500 feet advance warning.
3. Distance between signs should be increased as required to have ½ mile or more advance warning.
4. 36" x 36" ROAD WORK AHEAD (CW20-1D) signs may be used on low volume crossroads at the discretion of the Engineer. See Note 2 under "Typical Location of Crossroad Signs".
5. Only diamond shaped warning sign sizes are indicated.
6. See sign size listing in "TMUTCD", Sign Appendix or the "Standard Highway Sign Designs for Texas" manual for complete list of available sign design sizes.

WORK AREAS IN MULTIPLE LOCATIONS WITHIN CSJ LIMITS

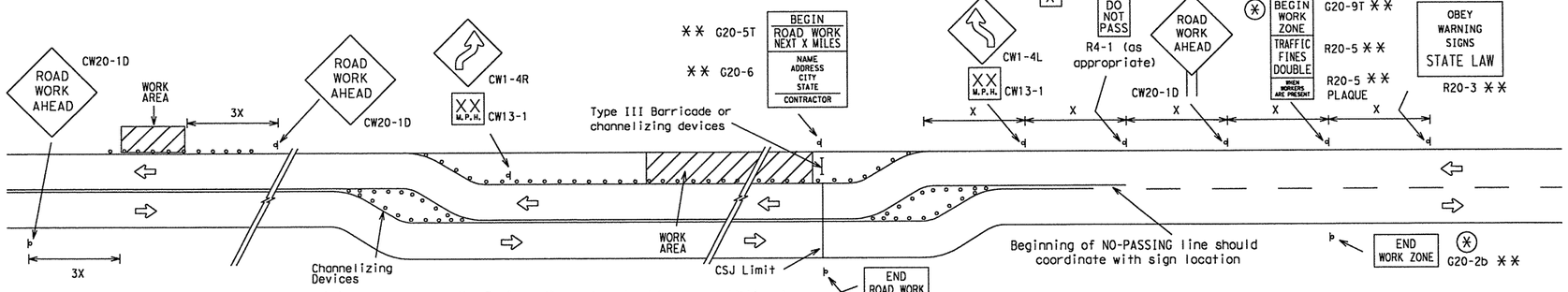

When extended distances occur between minimal work areas, the Engineer/Inspector should ensure additional Road Work Ahead (CW20-1D) signs are placed in advance of these work areas to remind drivers they are still within the project limits. See the applicable TCP sheets for exact location and spacing of signs and channelizing devices.

SAMPLE LAYOUT OF SIGNING FOR WORK BEGINNING DOWNSTREAM OF THE CSJ LIMITS

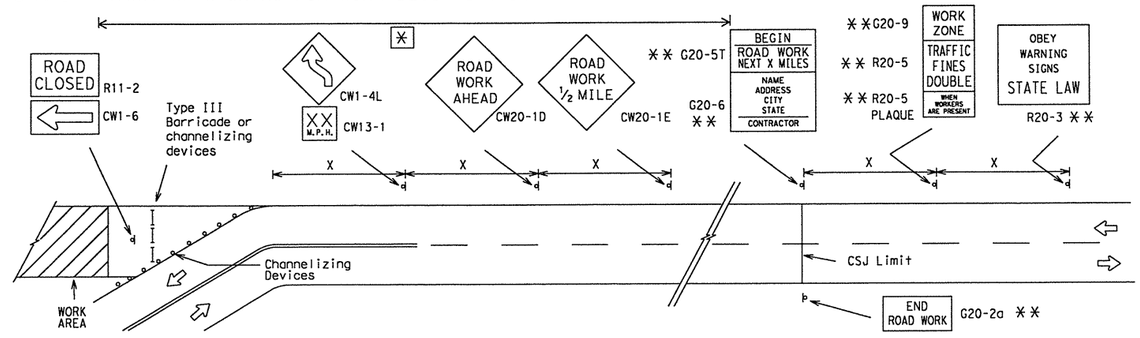

NOTES

The Contractor shall determine the appropriate distance to be placed on the G20-1 series signs and G20-5T sign for each specific project. This distance shall replace the "X" and shall be rounded to the nearest whole mile with the approval of the Engineer. No decimals shall be used.

(✱) The G20-9T and G20-2b shall be used when advance signs are required outside the CSJ Limits. They inform the motorist of entering or leaving a work zone where traffic fines may double if workers are present.

✱✱ Required CSJ Limit signing. See Note 10 on BC(1).

[✱] Area for placement of "ROAD WORK AHEAD" sign and other signs or devices as called for on the Traffic Control Plan.

LEGEND

Sign

Channelizing Devices

Type III Barricade

X See Typical Construction Warning Sign Size and Spacing chart or the TMUTCD for sign spacing requirements.

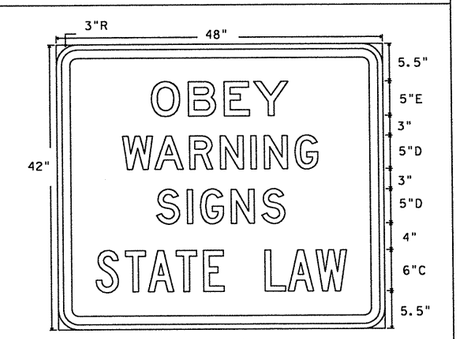

R20-3
Legend/Border - Black
Background - White

Texas Department of Transportation
Traffic Operations Division

BARRICADE AND CONSTRUCTION PROJECT LIMIT STANDARD

2 of 12 BC(2)-07

© TxDOT 11-4-02

REVISIONS	DN: TXDOT	CK: TXDOT	DW: TXDOT	CK: TXDOT
9-07	CONT	SECT	JOB	HIGHWAY
	2452	01	043	SH 151
	DIST		COUNTY	SHEET NO.
	SA		BEXAR	109

DISCLAIMER: The use of this standard is governed by the "Texas Engineering Practice Act". No warranty of any kind is made by TxDOT for any purpose whatsoever. TxDOT assumes no responsibility for the conversion of this standard to other formats or for incorrect results or damages resulting from its use.

pw:\\TxDOT-DI29cad\... standards\bc\bc03.dgn 2/21/2011 5:40:00 PM mwmldkt11

TYPICAL APPLICATION OF WORK ZONE SPEED LIMIT SIGNS

Work zone speed limits shall be regulatory, established in accordance with the "Procedures for Establishing Speed Zones," and approved by the Texas Transportation Commission, or by City Ordinance when within Incorporated City Limits.

Reduced speeds should only be posted in the vicinity of work activity and not throughout the entire project.

Regulatory work zone speed signs (R2-1) shall be removed or covered during periods when they are not needed.

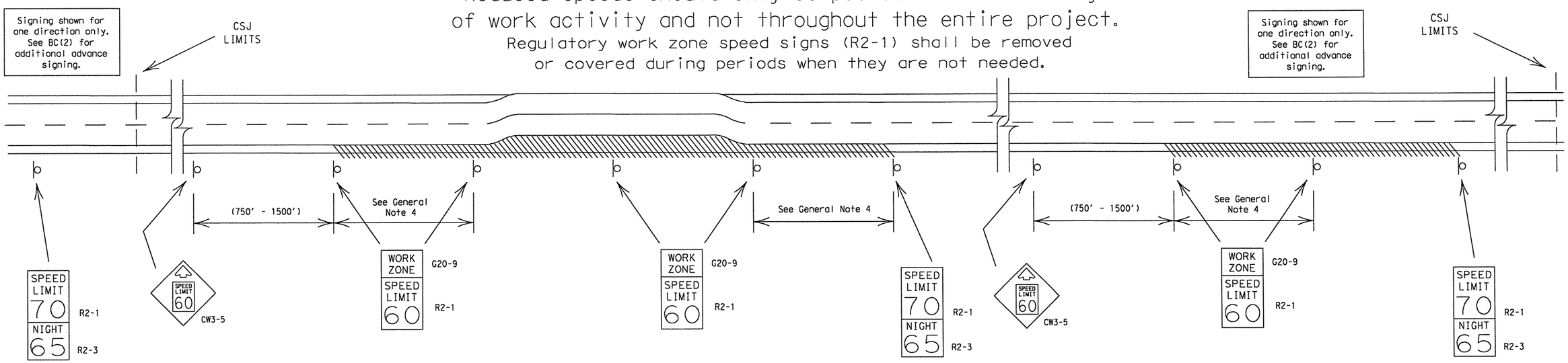

GUIDANCE FOR USE:

LONG/INTERMEDIATE TERM WORK ZONE SPEED LIMITS
This type of work zone speed limit should be included on the design of the traffic control plans when restricted geometrics with a lower design speed are present in the work zone and modification of the geometrics to a higher design speed is not feasible.

Long/Intermediate Term Work Zone Speed Limit signs, when approved as described above, should be posted and visible to the motorist when work activity is present. Work activity may also be defined as a change in the roadway that requires a reduced speed for motorists to safely negotiate the work area, including:

a) rough road or damaged pavement surface
b) substantial alteration of roadway geometrics (diversions)
c) construction detours
d) grade
e) width
f) other conditions readily apparent to the driver

As long as any of these conditions exist, the work zone speed limit signs should remain in place.

SHORT TERM WORK ZONE SPEED LIMITS
This type of work zone speed limit should be included on the design of the traffic control plans when workers or equipment are not behind concrete barrier, when work activity is within 15 feet of pavement edge or actually on the pavement.

Short Term Work Zone Speed Limit signs should be posted and visible to the motorists only when work activity is present. When work activity is not present, signs shall be removed or covered.
(See Removing or Covering on BC(4)).

GENERAL NOTES:

1. Regulatory work zone speed limits should be used only for sections of construction projects where speed control is of major importance.
2. Regulatory work zone speed limit signs shall be placed on supports at a 7 foot minimum mounting height.
3. Speed zone signs are illustrated for one direction of travel and are normally posted for each direction of travel.
4. Frequency of work zone speed limit signs should be:
   40 mph and greater 0.2 to 2 miles
   35 mph and less 0.2 to 1 mile
5. Regulatory speed limit signs shall have black legend and border on a white reflective background (See "Reflective Sheeting" on BC(4)).
6. Fabrication, errection and maintenance of the CW3-5 sign, G20-9 plaque and the R2-1 and R2-3 signs shall not be paid for directly, but shall be considered subsidiary to Item 502.
7. Turning signs from view, laying signs over or down will not be allowed, unless otherwise noted.
8. Techniques that may help reduce traffic speeds include but are not limited to:
   A. Law enforcement.
   B. Flagger stationed next to sign.
   C. Portable changeable message sign (PCMS).
   D. Low-power (drone) radar transmitter.
   E. Speed monitor trailers or signs.
9. Speeds shown on details above are for illustration only.
   Work Zone Speed Limits should only be posted as approved for each project.

Texas Department of Transportation
Traffic Operations Division

BARRICADE AND CONSTRUCTION WORK ZONE SPEED LIMIT STANDARD

BC(3)-07

© TxDOT 11-4-02

DN: TXDOT	CK: TXDOT	DW: TXDOT	CK: TXDOT
CONT	SECT	JOB	HIGHWAY
2452	01	043	SH 151
DIST		COUNTY	SHEET NO.
SA		BEXAR	110

9-07 REVISIONS

DISCLAIMER: The use of this standard is governed by the "Texas Engineering Practice Act". No warranty of any kind is made by TxDOT for any purpose whatsoever. TxDOT assumes no responsibility for the conversion of this standard to other formats or for incorrect results or damages resulting from its use.

p:\4760\0-0129\cad\sheet\standard\I5\std_tcp04.dgn 2/21/2011 5:40:01 PM mwmldkiff

TYPICAL MINIMUM CLEARANCES FOR LONG TERM AND INTERMEDIATE TERM SIGNS

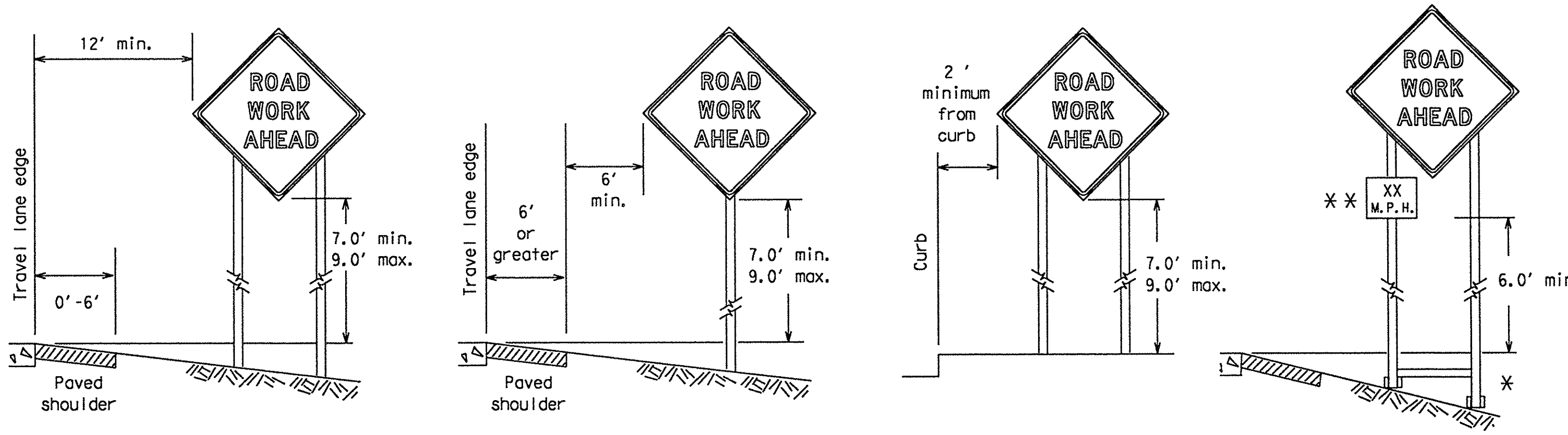

✱ When placing skid supports on unlevel ground, the leg post lengths must be adjusted so the sign appears straight and plumb. Objects shall NOT be placed under skids as a means of leveling.

✱✱ When plaques are placed on dual-leg supports, they should be attached to the upright nearest the travel lane. Supplemental plaques (advisory or distance) should not cover the surface of the parent sign.

ATTACHMENT FOR SIGN SUPPORTS

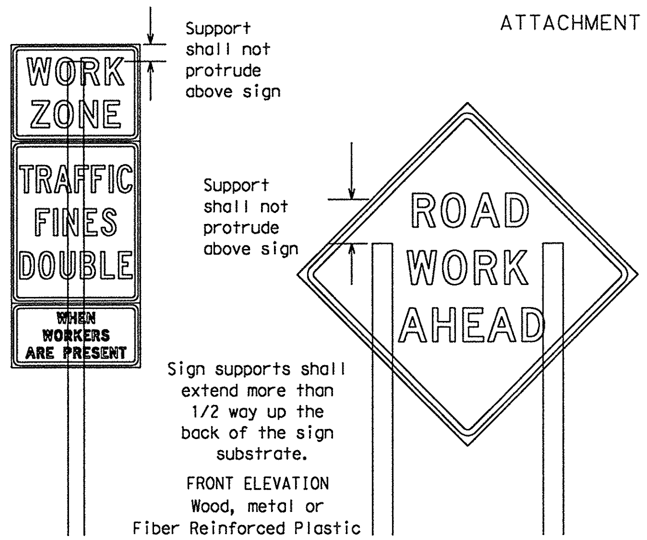

FRONT ELEVATION
Wood, metal or
Fiber Reinforced Plastic

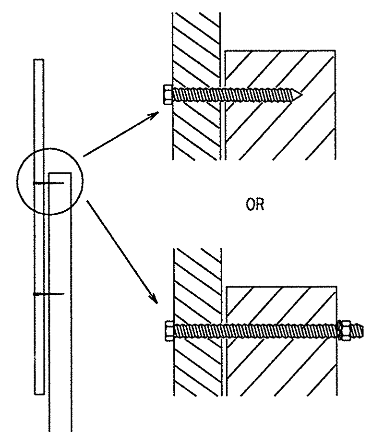

SIDE ELEVATION
Wood

Attachment to wooden supports will be by bolts and nuts or screws. Use TxDOT's or manufacturer's recommended procedures for attaching sign substrates to other types of sign supports

Nails will NOT be allowed.

Each sign shall be attached directly to the sign support. Multiple signs shall not be joined or spliced by any means. Wood supports shall not be extended or repaired by splicing or other means.

Splicing embedded perforated square metal tubing in order to extend post height will only be allowed when the splice is made using four bolts, two above and two below the spice point. Splice must be located entirely behind the sign substrate, not near the base of the support. Splice insert lengths should be at least 5 times nominal post size, centered on the splice and of at least the same guage material.

STOP/SLOW PADDLES

1. STOP/SLOW paddles are the primary method to control traffic by flaggers. The STOP/SLOW paddle size should be 24" x 24" as detailed below.
2. When used at night, the STOP/SLOW paddle shall be retroreflectorized.
3. STOP/SLOW paddles may be attached to a staff with a minimum length of 6′ to the bottom of the sign.
4. Any lights incorporated into the STOP or SLOW paddle faces shall only be as specifically described in Section 6E.03 Hand Signaling Devices in the TMUTCD.

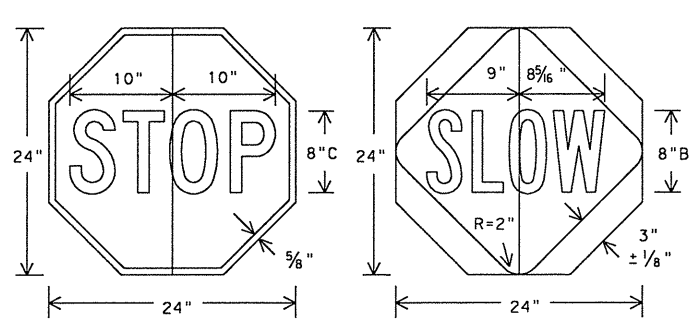

Background - Red
Legend & Border - White

Background - Orange
Legend & Border - Black

CONTRACTOR REQUIREMENTS FOR MAINTAINING PERMANENT SIGNS WITHIN THE PROJECT LIMITS

1. Permanent signs are used to give notice of traffic laws or regulations, call attention to conditions that are potentially hazardous to traffic operations, show route designations, destinations, directions, distances, services, points of interest, and other geographical, recreational, or cultural information. Drivers proceeding through a work zone need the same, if not better route guidance as normally installed on a roadway without construction.
2. When permanent regulatory or warning signs conflict with work zone conditions, remove or cover the permanent signs until the permanent sign message matches the roadway condition.
3. When existing permanent signs are moved and relocated due to construction purposes, they shall be visible to motorists at all times.
4. If existing signs are to be relocated on their original supports, they shall be installed on crashworthy bases as shown on the SMD Standard sheets. The signs shall meet the required mounting heights shown on the BC Sheets or the SMD Standards. This work should be paid for under the appropriate pay item for relocating existing signs.
5. If permanent signs are to be removed and relocated using temporary supports, the Contractor shall use crashworthy supports as shown on the BC sheets or the CWZTCD. The signs shall meet the required mounting heights shown on the BC Sheets or the SMD Standards during construction. This work should be paid for under the appropriate pay item for relocating existing signs.
6. Any sign or traffic control device that is struck or damaged by the Contractor or his/her construction equipment shall be replaced as soon as possible by the Contractor to ensure proper guidance for the motorists. This will be subsidiary to Item 502.

GENERAL NOTES FOR WORK ZONE SIGNS
1. Contractor shall install and maintain signs in a straight and plumb condition and/or as directed by the Engineer.
2. Wooden sign posts shall be painted white.
3. Barricades shall NOT be used as sign supports.
4. Nails shall NOT be used to attach signs to any support.
5. All signs shall be installed in accordance with the plans or as directed by the Engineer. Signs shall be used to regulate, warn, and guide the traveling public safely through the work zone.
6. The Contractor may furnish either the sign design shown in the plans or in the "Standard Highway Sign Designs for Texas" (SHSD). The Engineer/Inspector may require the Contractor to furnish other work zone signs that are shown in the TMUTCD but may have been omitted from the plans. Any variation in the plans shall be documented by written agreement between the Engineer and the Contractor's Responsible Person. All changes must be documented in writing before being implemented. This can include documenting the changes in the Inspector's TxDOT diary and having both the Inspector and Contractor initial and date the agreed upon changes.
7. The Contractor shall furnish sign supports listed in the "Compliant Work Zone Traffic Control Device List" (CWZTCD). The Contractor shall install the sign support in accordance with the manufacturer's recommendations. If there is a question regarding installation procedures, the Contractor shall furnish the Engineer a copy of the manufacturer's installation recommendations so the Engineer can verify the correct procedures are being followed.
8. The Contractor is responsible for installing signs on approved supports and replacing signs with damaged or cracked substrates and/or damaged or marred reflective sheeting as directed by the Engineer/Inspector.
9. Identification markings may be shown only on the back of the sign substrate. The maximum height of letters and/or company logos used for identification shall be 1 inch.
10. The Contractor shall replace damaged wood posts. New or damaged wood sign posts shall not be spliced.

DURATION OF WORK (as defined by the "Texas Manual on Uniform Traffic Control Devices" Part 6)
1. The types of sign supports, sign mounting height, the size of signs, and the type of sign substrates can vary based on the type of work being performed. The Engineer is responsible for selecting the appropriate size sign for the type of work being performed. The Contractor is responsible for ensuring the sign support, sign mounting height and substrate meets manufacturer's recommendations in regard to crashworthiness and duration of work requirements.
   a. Long-term stationary - work that occupies a location more than 3 days.
   b. Intermediate-term stationary - work that occupies a location more than one daylight period up to 3 days, or nighttime work lasting more than one hour.
   c. Short-term stationary - daytime work that occupies a location for more than 1 hour in a single daylight period.
   d. Short, duration - work that occupies a location up to 1 hour.
   e. Mobile - work that moves continuously or intermittently (stopping for up to approximately 15 minutes.)

SIGN MOUNTING HEIGHT
1. The bottom of Long-term/Intermediate-term signs shall be at least 7 feet, but not more than 9 feet, above the paved surface, except as shown for supplemental plaques mounted below other signs.
2. The bottom of Short-term/Short Duration signs shall be a minimum of 1 foot above the pavement surface but no more than 2 feet above the ground.
3. Long-term/Intermediate-term Signs may be used in lieu of Short-term/Short Duration signing.
4. Short-term/Short Duration signs shall be used only during daylight and shall be removed at the end of the workday. or raised to appropriate Long-term/Intermediate sign height.
5. Regulatory signs shall be mounted at least 7 feet, but not more than 9 feet, above the paved surface regardless of work duration.

SIZE OF SIGNS
1. The Engineer may allow the use of smaller size construction warning signs on secondary roads or city streets where speeds are low if the sign size is listed as an option on the "Typical Construction Warning Sign Size and Spacing" chart shown on BC(2).
2. The Contractor shall furnish the sign sizes shown in plans, the BC Sheets, the TCP sheets or as directed by the Engineer.

SIGN SUBSTRATES
1. The Contractor shall ensure the sign substrate is installed in accordance with the manufacturer's recommendations for the type of sign support that is being used. The CWZTCD lists each substrate that can be used on the different types and models of sign supports.
2. "Mesh" type materials are NOT an approved sign substrate, regardless of the tightness of the weave.
3. All wooden individual sign panels fabricated from 2 or more pieces shall have one or more plywood cleat, 1/2" thick by 6" wide, fastened to the back of the sign and extending fully across the sign. The cleat shall be attached to the back of the sign using wood screws that do not penetrate the face of the sign panel. The screws shall be placed on both sides of the splice and spaced at 6" centers. The Engineer may approve other methods of splicing the sign face.

REFLECTIVE SHEETING
1. All signs shall be retroreflective and constructed of sheeting meeting the color and retro-reflectivity requirements of DMS-8300 for rigid signs or DMS-8310 for roll-up signs. The web address for DMS specifications is shown on BC(1).
2. White sheeting, meeting the requirements of DMS-8300 Type C (High Specific Intensity), shall be used for signs with a white background.
3. Orange sheeting, meeting the requirements of DMS-8300 Type E (Fluorescent Prismatic), shall be used for rigid signs with orange backgrounds.

SIGN LETTERS
1. All sign letters and numbers shall be clear, and open rounded type uppercase alphabet letters as approved by the Federal Highway Administration (FHWA) and as published in the "Standard Highway Sign Design for Texas" manual. Signs, letters and numbers shall be of first class workmanship in accordance with Department Standards and Specifications.

REMOVING OR COVERING
1. When sign messages may be confusing or do not apply, the signs shall be removed or completely covered.
2. Long-term stationary or intermediate stationary signs installed on square metal tubing may be turned away from traffic 90 degrees when the sign message is not applicable. This type of sign support meets the crashworthiness standards regardless of the direction of impact. This technique may not be used for signs installed in the median of divided highways or near any intersections where the sign may be seen from approaching traffic.
3. Signs installed on wooden skids shall not be turned at 90 degree angles to the roadway. These signs should be removed or completely covered when not required.
4. When signs are covered, the material used shall be opaque, such as heavy mil black plastic, or other materials which will cover the entire sign face and maintain their opaque properties under automobile headlights at night, without damaging the sign sheeting.
5. Burlap shall NOT be used to cover signs.
6. Duct tape or other adhesive material shall NOT be affixed to a sign face. These materials can damage the retroreflectivity of sheeting.
7. Signs and anchor stubs shall be removed and holes backfilled upon completion of work.

SIGN SUPPORT WEIGHTS
1. Where sign supports require the use of weights to keep from turning over, the use of sandbags with dry, cohesionless sand is recommended.
2. The sandbags will be tied shut to keep the sand from spilling and to maintain a constant weight.
3. Rock, concrete, iron, steel or other solid objects shall not be permitted for use as sign support weights.
4. Sandbags should weigh a minimum of 35 lbs and a maximum of 50 lbs.
5. Sandbags shall be made of a durable material that tears upon vehicular impact.
6. Rubber (such as tire inner tubes) shall NOT be used for sandbags.
7. Rubber ballasts designed for channelizing devices should not be used for ballast on portable sign supports. Sign supports designed and manufactured with rubber bases may be used when shown on the CWZTCD list.
8. Sandbags shall only be placed along or laid over the base supports of the traffic control device and shall not be suspended above ground level or hung with rope, wire, chains or other fasteners. Sandbags shall be placed along the length of the skids to weigh down the sign support.
9. Sandbags shall NOT be placed under the skid and shall not be used to level sign supports placed on slopes.

Texas Department of Transportation
Traffic Operations Division

BARRICADE AND CONSTRUCTION TEMPORARY SIGN NOTES STANDARD

 BC(4)-07

©TxDOT 11-4-02		DN: TXDOT		CK: TXDOT	DW: TXDOT	CK: TXDOT
9-07	REVISIONS	CONT	SECT	JOB	HIGHWAY	
		2452	01	043	SH 151	
		DIST	COUNTY		SHEET NO.	
		SA	BEXAR		111	

DISCLAIMER: The use of this standard is governed by the "Texas Engineering Practice Act". No warranty of any kind is made by TxDOT for any purpose whatsoever. TxDOT assumes no responsibility for the conversion of this standard to other formats or for incorrect results or damages resulting from its use.

p:\4760\0-0129\cad\~ "standard\5std_tcp05.dgn 2/21/2011 5:40:02 PM mwmldkft

SKID MOUNTED WOOD SIGN SUPPORTS

LONG/INTERMEDIATE TERM STATIONARY - PORTABLE SKID MOUNTED SIGN SUPPORTS □

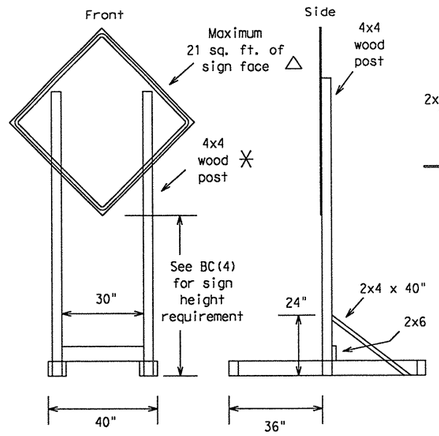

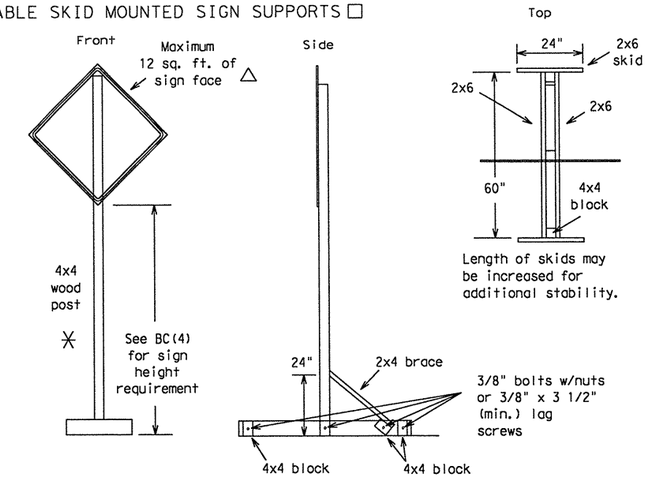

SKID MOUNTED PERFORATED SQUARE STEEL TUBING SIGN SUPPORTS

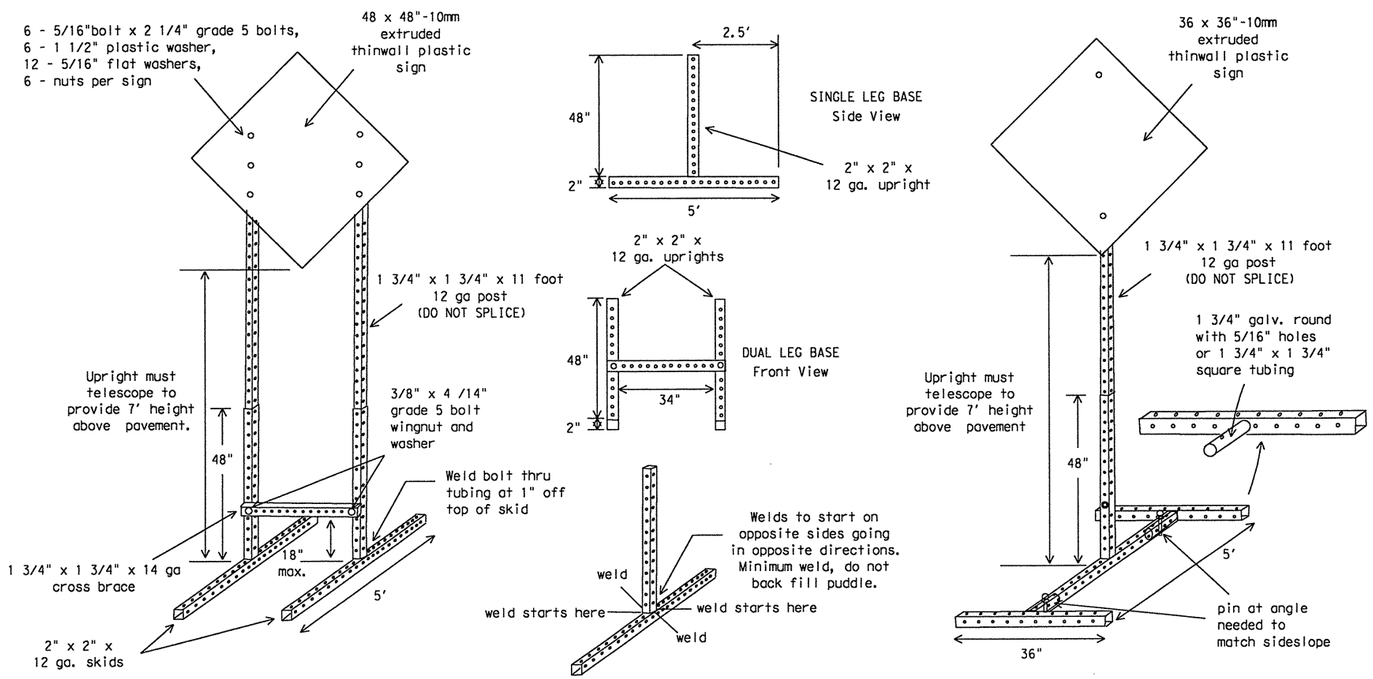

GROUND MOUNTED SIGN SUPPORTS

Refer to the CWZTCD and the manufacturer's installation procedure for each type sign support.
The maximum sign square footage shall adhere to the manufacturer's recommendation.
Two post installations can be used for larger signs.

PERFORATED SQUARE METAL TUBING

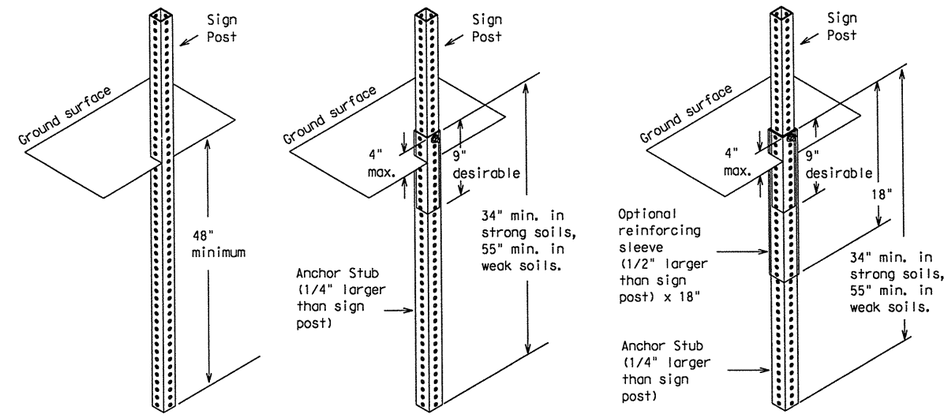

OPTION 1
(Direct Embedment)

OPTION 2
(Anchor Stub)

OPTION 3
(Anchor Stub and Reinforcing Sleeve))

WING CHANNEL

Lap-splice/base bolted anchor

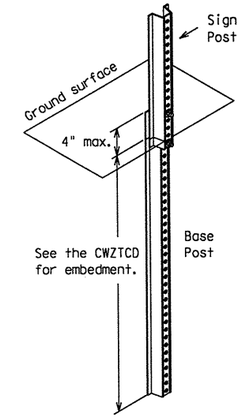

GENERAL NOTES

1. Nails may be used in the assembly of wooden sign supports, but 3/8" bolts with nuts or 3/8" x 3 1/2" lag screws must be used on every joint for final connection.
2. More details of approved Long/Intermediate and Short Term supports can be found on the CWZTCD list. See BC(1) for website location.
3. No more than 2 sign posts shall be placed within a 7 ft. circle, except for specific materials noted on the CWZTCD List.
4. When project is completed, all sign supports and foundations shall be removed from the project site. This will be considered subsidiary to Item 502.

□ See BC(4) for definition of "Work Duration."

✳ Wood sign posts MUST be one piece. Splicing will NOT be allowed. Posts shall be painted white.

△ See the CWZTCD for the type of sign substrate that can be used for each approved sign support.

WEDGE ANCHORS

Both steel and plastic Wedge Anchor Systems as shown on the SMD Standard Sheets may be used as temporary sign supports for signs up to 10 square feet of sign face. They may be set in concrete or in sturdy soils if approved by the Engineer. (See web address for "Traffic Engineering Standard Sheets" on BC(1)).

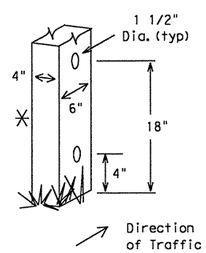

WOOD POST SYSTEM FOR GROUND MOUNTED SIGN SUPPORTS

Nominal Post Size	No. of Posts	Maximum Sq. feet of Sign Face	Minimum Soil Embedment	Drilled Hole(s) Required
4 x 4	1	12	36"	NO
4 x 4	2	21	36"	NO
4 x 6	1	21	36"	YES
4 x 6	2	36	36"	YES

Texas Department of Transportation
Traffic Operations Division

BARRICADE AND CONSTRUCTION TYPICAL SIGN SUPPORT STANDARD

BC(5)-07

© TxDOT 11-4-02

9-07 REVISIONS

DN: TXDOT	CK: TXDOT	DW: TXDOT	CK: TXDOT
CONT	SECT	JOB	HIGHWAY
2452	01	043	SH 151
DIST		COUNTY	SHEET NO.
SA		BEXAR	112

p:\4760\0-0129\cad\...\standard\5\std_tcp06.dgn 2/21/2011 5:40:02 PM mwmldkff

DISCLAIMER: The use of this standard is governed by the "Texas Engineering Practice Act". No warranty of any kind is made by TxDOT for any purpose whatsoever. TxDOT assumes no responsibility for the conversion of this standard to other formats or for incorrect results or damages resulting from its use.

PORTABLE CHANGEABLE MESSAGE SIGNS

1. The Engineer/Inspector shall approve all messages used on portable changeable message signs (PCMS).
2. Messages on PCMS should contain no more than 8 words (about four to eight characters per word), not including simple words such as "TO," "FOR," "AT," etc.
3. Messages should consist of a single phase, or two phases that alternate. Three-phase messages are not allowed. Each phase of the message should convey a single thought, and must be understood by itself.
4. Use the word "EXIT" to refer to an exit ramp on a freeway; i.e., "EXIT CLOSED." Do not use the term "RAMP."
5. Always use the route or interstate designation (IH, US, SH, FM) along with the number when referring to a roadway.
6. When in use the bottom of a stationary PCMS message panel should be a minimum 7 feet above the roadway, where possible.
7. The message term "WEEKEND" should be used only if the work is to start on Saturday morning and end by Sunday evening at midnight. Actual days and hours of work should be displayed on the PCMS if work is to begin on Friday evening and/or continue into Monday morning.
8. The Engineer/Inspector may select one of two options which are available for displaying a two-phase message on a PCMS. Each phase may be displayed for either four seconds each or for three seconds each.
9. Do not "flash" messages or words included in a message. The message should be steady burn or continuous while displayed.
10. Do not present redundant information on a two-phase message; i.e., keeping two lines of the message the same and changing the third line.
11. Do not use the word "Danger" in message.
12. Do not display the message "LANES SHIFT LEFT" or "LANES SHIFT RIGHT" on a PCMS. Drivers do not understand the message.
13. Do not display messages that scroll horizontally or vertically across the face of the sign.
14. The following table lists abbreviated words and two-word phrases that are acceptable for use on a PCMS. Both words in a phrase must be displayed together. Words or phrases not on this list should not be abbreviated.
15. PCMS character height should be at least 18 inches for trailer mounted units. They should be visible from at least 1/2 (.5) mile and the text should be legible from at least 720 feet. Truck mounted units must have a character height of 10 inches and must be legible from at least 400 feet.
16. Each line of text should be centered on the message board rather than left or right justified.
17. If disabled, the PCMS should default to an illegible display that will not alarm motorists and will only be used to alert workers that the PCMS has malfunctioned. A pattern such as a series of horizontal solid bars is appropriate.

Word or Phrase	Abb.	Word or Phrase	Abb.
Access Road	ACCS RD	Major	MAJ
Air Quality	AIR QLTY	Miles	MI
Alternate	ALT	Miles Per Hour	MPH
Avenue	AVE	Minor	MNR
Best Route	BEST RTE	Monday	MON
Boulevard	BLVD	Normal	NORM
Bridge	BRDG	North	N
Cannot	CANT	Northbound	(route) N
Center	CNTR	Parking	PKING
Construction Ahead	CONST AHEAD	Parking Lot	PRK LOT
Detour Route	DETOUR RTE	Road	RD
Do Not	DONT	Right Lane	RGT LN
East	E	Saturday	SAT
Eastbound	(route) E	Service Road	SERV RD
Emergency	EMER	Shoulder	SHLDR
Emergency Vehicle	EMER VEH	Slippery	SLIP
Entrance, Enter	ENT	South	S
Express Lanes	EXP LANE	Southbound	(route) S
Expressway	EXPWY	Speed	SPD
XXXX Feet	XXXX FT	Street	ST
Fog Ahead	FOG AHD	Sunday	SUN
Freeway	FRWY, FWY	Telephone	PHONE
Freeway Blocked	FWY BLKD	Temporary	TEMP
Friday	FRI	Thursday	THURS
Hazardous Driving	HAZ DRIVING	To Downtown	TO DWNTN
Hazardous Material	HAZMAT	Traffic	TRAF
High-Occupancy Vehicle	HOV	Travelers	TRVLRS
Highway	HWY	Tuesday	TUES
Hours	HR	Time Minutes	TIME MIN
Information	INFO	Upper Level	UPPR LVL
It Is	ITS	Vehicle	VEH
Junction	JCT	Warning	WARN
Left	LFT	Wednesday	WED
Left Lane	LFT LN	Weight Limit	WT LIMIT
Lane Closed	LN CLSD	West	W
Lower Level	LOWR LVL	Westbound	(route) W
Maintenance	MAINT	Wet Pavement	WET PVMT
		Will Not	WONT

Roadway designation # IH-number, US-number, SH-number, FM-number

WHEN NOT IN USE, REMOVE THE PCMS FROM THE RIGHT-OF-WAY OR PLACE THE PCMS BEHIND BARRIER OR GUARDRAIL WITH SIGN PANEL TURNED PARALLEL TO TRAFFIC

RECOMMENDED PHASES AND FORMATS FOR PCMS MESSAGES DURING ROADWORK ACTIVITIES

(The Engineer may approve other messages not specifically covered here.)

Phase 1: Condition Lists

Road/Lane/Ramp Closure List

FREEWAY CLOSED X MILE	FRONTAGE ROAD CLOSED
ROAD CLOSED AT SH XXX	SHOULDER CLOSED XXX FT
ROAD CLSD AT FM XXXX	RIGHT LN CLOSED XXX FT
RIGHT X LANES CLOSED	RIGHT X LANES OPEN
CENTER LANE CLOSED	DAYTIME LANE CLOSURES
NIGHT LANE CLOSURES	I-XX SOUTH EXIT CLOSED
VARIOUS LANES CLOSED	EXIT XXX CLOSED X MILE
EXIT CLOSED	RIGHT LN TO BE CLOSED
MALL DRIVEWAY CLOSED	X LANES CLOSED TUE - FRI
XXXXXXXX BLVD CLOSED	

Other Condition List

ROADWORK XXX FT	ROAD REPAIRS XXXX FT
FLAGGER XXXX FT	LANE NARROWS XXXX FT
RIGHT LN NARROWS XXXX FT	TWO-WAY TRAFFIC XX MILE
MERGING TRAFFIC XXXX FT	CONST TRAFFIC XXX FT
LOOSE GRAVEL XXXX FT	UNEVEN LANES XXXX FT
DETOUR X MILE	ROUGH ROAD XXXX FT
ROADWORK PAST SH XXXX	ROADWORK NEXT FRI-SUN
BUMP XXXX FT	US XXX EXIT X MILES
TRAFFIC SIGNAL XXXX FT	LANES SHIFT *

* LANES SHIFT in Phase 1 must be used with STAY IN LANE in Phase 2.

Phase 2: Possible Component Lists

Action to Take/Effect on Travel List

MERGE RIGHT	FORM X LINES RIGHT
DETOUR NEXT X EXITS	USE XXXXX RD EXIT
USE EXIT XXX	USE EXIT I-XX NORTH
STAY ON US XXX SOUTH	USE I-XX E TO I-XX N
TRUCKS USE US XXX N	WATCH FOR TRUCKS
WATCH FOR TRUCKS	EXPECT DELAYS
EXPECT DELAYS	PREPARE TO STOP
REDUCE SPEED XXX FT	END SHOULDER USE
USE OTHER ROUTES	WATCH FOR WORKERS
STAY IN LANE *	

Location List

AT FM XXXX
BEFORE RAILROAD CROSSING
NEXT X MILES
PAST US XXX EXIT
XXXXXXX TO XXXXXXX
US XXX TO FM XXXX

Warning List

SPEED LIMIT XX MPH
MAXIMUM SPEED XX MPH
MINIMUM SPEED XX MPH
ADVISORY SPEED XX MPH
RIGHT LANE EXIT
USE CAUTION
DRIVE SAFELY
DRIVE WITH CARE

** Advance Notice List

TUE-FRI XX AM- X PM
APR XX- XX X PM-X AM
BEGINS MONDAY
BEGINS MAY XX
MAY X-X XX PM - XX AM
NEXT FRI-SUN
XX AM TO XX PM
NEXT TUE AUG XX
TONIGHT XX PM- XX AM

** See Application Guidelines Note 6.

Application Guidelines

1. Only 1 or 2 phases are to be used on a PCMS.
2. The 1st phase (or both) should be selected from the "Road/Lane/Ramp Closure List" and the "Other Condition List".
3. A 2nd phase can be selected from the "Action to Take/Effect on Travel, Location, General Warning, or Advance Notice Phase Lists".
4. A Location Phase is necessary only if a distance or location is not included in the first phase selected.
5. If two PCMS are used in sequence, they must be separated by a minimum of 1000 ft. Each PCMS shall be limted to two phases, and should be understandable by themselves.
6. For advance notice, when the current date is within seven days of the actual work date, calendar days should be replaced with days of the week. Advance notification should typically be for no more than one week prior to the work

Wording Alternatives

1. The words RIGHT, LEFT and ALL can be interchanged as appropriate.
2. Roadway designations IH, US, SH, FM and LP can be interchanged as appropriate.
3. EAST, WEST, NORTH and SOUTH (or abbreviations E, W, N and S) can be interchanged as appropriate.
4. Highway names and numbers replaced as appropriate.
5. ROAD, HIGHWAY and FREEWAY can be interchanged as needed.
6. AHEAD may be used instead of distances if necessary.
7. FT and MI, MILE and MILES interchanged as appropriate.
8. AT, BEFORE and PAST interchanged as needed.
9. Distances or AHEAD can be eliminated from the message if a location phase is used.

PCMS SIGNS WITHIN THE R.O.W. SHALL BE BEHIND GUARDRAIL OR CONCRETE BARRIER OR SHALL HAVE A MINIMUM OF FOUR (4) PLASTIC DRUMS PLACED PERPENDICULAR TO TRAFFIC ON THE UPSTREAM SIDE OF THE PCMS.

FULL MATRIX PCMS SIGNS

1. When Full Matrix PCMS signs are used, the character height and legibility/visibility requirements shall be maintained as listed in Note 15 under "PORTABLE CHANGEABLE MESSAGE SIGNS" above.
2. When symbol signs, such as the CW20-7a Flagger Symbol, are represented graphically on the Full Matrix PCMS sign and, with the approval of the Engineer, it shall maintain the legibility/visibility requirement listed above.
3. When symbol signs are represented graphically on the Full Matrix PCMS, they shall only supplement the use of the static sign represented, and shall not substitute for, or replace that sign.
4. A full matrix PCMS may be used to simulate a flashing arrow panel provided it meets the visibility, flash rate and dimming requirements on BC(7), for the same size arrow.

Texas Department of Transportation
Traffic Operations Division

BARRICADE AND CONSTRUCTION PORTABLE CHANGEABLE MESSAGE SIGN (PCMS) STANDARD

6 of 12 BC(6)-07

©TxDOT 11-4-02	DN: TXDOT	CK: TXDOT	DW: TXDOT	CK: TXDOT
REVISIONS	CONT	SECT	JOB	HIGHWAY
9-07	2452	01	043	SH 151
	DIST	COUNTY		SHEET NO.
	SA	BEXAR		113

p:\4760\0-0129\cad\...\standard\5\std_tcp07.dgn 2/21/2011 5:40:03 PM mwmldkiff

DISCLAIMER: The use of this standard is governed by the "Texas Engineering Practice Act". No warranty of any kind is made by TxDOT for any purpose whatsoever. TxDOT assumes no responsibility for the conversion of this standard to other formats or for incorrect results or damages resulting from its use.

BARRIER REFLECTORS FOR CONCRETE TRAFFIC BARRIER AND ATTENUATORS

1. Barrier Reflectors shall be prequalified, and conform to the color and reflectivity requirements of DMS-8600. A list of prequalified Barrier Reflectors (Type C Delineators) can be found at the Material Producer List web address shown on BC(1).
2. Color of Barrier Reflectors shall be as specified in the TMUTCD. The cost of the reflectors shall be considered subsidiary to Item 502.

CONCRETE TRAFFIC BARRIER (CTB)

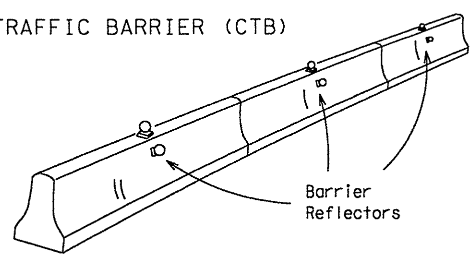

3. Where traffic is on one side of the CTB, two (2) Barrier Reflectors shall be mounted in approximately the midsection of each section of CTB. An alternate mounting location is uniformly spaced at one end of each CTB. This will allow for attachment of a barrier grapple without damaging the reflector. The Barrier Reflector mounted on the side of the CTB shall be located directly below the reflector mounted on top of the barrier, as shown in the detail above.
4. Where CTB separates two-way traffic, three barrier reflectors shall be mounted on each section of CTB. The reflector unit on top shall have two yellow reflective faces (Bi-Directional)while the reflectors on each side of the barrier shall have one yellow reflective face, as shown in the detail above.
5. When CTB separates traffic traveling in the same direction, no barrier reflectors will be required on top of the CTB.
6. Barrier Reflector units shall be yellow or white in color to match the edgeline being supplemented. Yellow Barrier Reflectors shall be made with Type E Fluorescent Prismatic Yellow Retroreflective Sheeting. White reflectors shall be made with Type D White Prismatic sheeting.
7. Maximum spacing of Barrier Reflectors is forty (40) feet.
8. Pavement markers or temporary flexible-reflective roadway marker tabs shall NOT be used as CTB delineation.
9. Attachment of Barrier Reflectors to CTB shall be per manufacturer's recommendations.
10. Missing or damaged Barrier Reflectors shall be replaced as directed by the Engineer.
11. Single slope barriers shall be delineated as shown on the above detail.

LOW PROFILE CONCRETE BARRIER (LPCB)

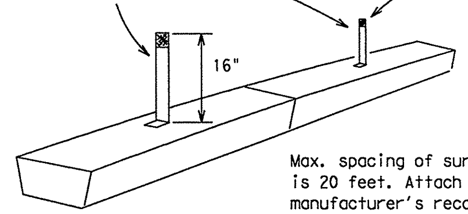

Max. spacing of surface mount flexible delineators is 20 feet. Attach the delineators as per manufacturer's recommendations.

DELINEATION OF END TREATMENTS

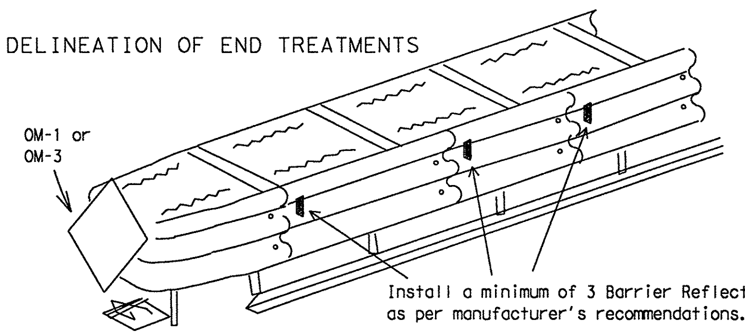

	APPROACHING TRAFFIC	
	BOTH SIDES	ONE SIDE
DELINEATION	OM-1	OM-3 or Vertical Panel

END TREATMENTS FOR CTB'S USED IN WORK ZONES

End treatments used on CTB's in work zones shall meet crashworthy standards as defined in the National Cooperative Highway Research Report 350. Refer to the CWZTCD List for approved end treatments and manufacturers.

TYPICAL FLASHING ARROW PANEL

Arrow Panels may be located behind channelizing devices in place for a shoulder taper or merging taper, otherwise they shall be delineated with four (4) channelizing devices placed perpendicular to traffic on the upstream side of traffic.

1. The Flashing Arrow Panel should be used for all lane closures on multi-lane roadways, or slow moving maintenance or construction activities on the travel lanes.
2. Flashing Arrow Panels should not be used on two-lane, two-way roadways, detours, diversions or work on shoulders unless the "CAUTION" display (see detail below) is used.
3. The Engineer/Inspector shall choose all appropriate signs, barricades and/or other traffic control devices that should be used in conjunction with the Flashing Arrow Panel.
4. The Flashing Arrow Panel should be able to display the following symbols:

Flashing RIGHT (LEFT) ARROW

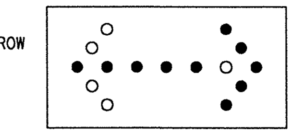

Flashing DOUBLE ARROW

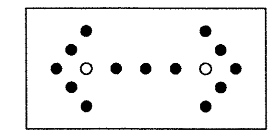

Flashing CAUTION

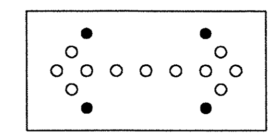

5. The "CAUTION" display consists of four corner lamps flashing simultaneously.
6. The straight line caution display is NOT ALLOWED.
7. The Flashing Arrow Panel shall be capable of minimum 50 percent dimming from rated lamp voltage. The flashing rate of the lamps shall not be less than 25 nor more than 40 flashes per minute.
8. Minimum lamp "on time" shall be approximately 50 percent for the flashing arrow and equal intervals of 25 percent for each sequential phase of the flashing chevron.
9. The sequential arrow display is NOT ALLOWED.
10. The flashing arrow display is the TxDOT standard; however, the sequential Chevron display may be used during daylight operations.

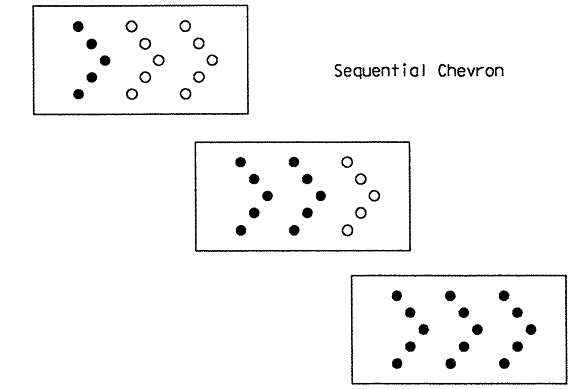

Sequential Chevron

REQUIREMENTS

TYPE	MINIMUM SIZE	MINIMUM NUMBER OF PANEL LAMPS	MINIMUM VISIBILITY DISTANCE
B	30 x 60	13	3/4 mile
C	48 x 96	15	1 mile

ATTENTION: Flashing Arrow Panels shall be equipped with automatic dimming devices.

WHEN NOT IN USE, REMOVE THE ARROW PANEL FROM THE RIGHT-OF-WAY OR PLACE THE ARROW PANEL BEHIND CONCRETE TRAFFIC BARRIER OR GUARDRAIL.

11. The Flashing Arrow Panel shall be mounted on a vehicle, trailer or other suitable support.
12. A Flashing Arrow Panel SHALL NOT BE USED to laterally shift traffic.
13. A full matrix PCMS may be used to simulate a Flashing Arrow Panel provided it meets visibility, flash rate and dimming requirements on this sheet for the same size arrow.
14. Minimum mounting height of trailer mounted arrow panels should be 7 feet from roadway to bottom of panel.

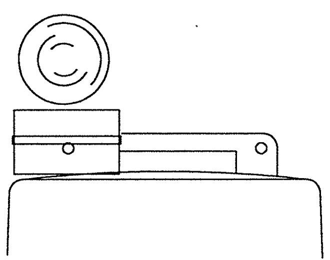

Type C Warning Light or approved substitute mounted adjacent to the travel way.

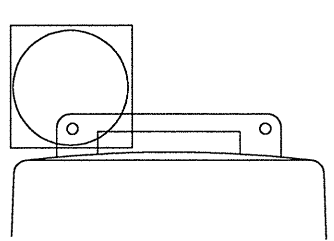

Warning reflector may be round or square. Must have a reflective surface area of at least 30 square inches

WARNING LIGHTS

1. Warning lights shall meet the requirements of the TMUTCD.
2. Warning lights shall NOT be installed on barricades.
3. Type A-Low Intensity Flashing Warning Lights are commonly used with drums. They are intended to warn of or mark a potentially hazardous area. Their use shall be as indicated on this sheet and/or other sheets of the plans by the designation "FL". The Type A Warning Lights shall not be used with signs manufactured with Type E Sheeting (Fluorescent Prismatic) meeting the requirements of Departmental Material Specification DMS-8300.
4. Type-C and Type D 360 degree Steady Burn Lights are intended to be used in a series for delineation to supplement other traffic control devices. Their use shall be as indicated on this sheet and/or other sheets of the plans by the designation "SB".
5. The Engineer/Inspector or the plans shall specify the location and type of warning lights to be installed on the traffic control devices.
6. When required by the Engineer, the Contractor shall furnish a copy of the warning lights certification. The warning light manufacturer will certify the warning lights meet the requirements of the latest ITE Purchase Specifications for Flashing and Steady-Burn Warning Lights.
7. When used to delineate curves, Type-C and Type D Steady Burn Lights should only be placed on the outside of the curve, not the inside.

WARNING LIGHTS MOUNTED ON PLASTIC DRUMS

1. Type A flashing warning lights are intended to warn drivers that they are approaching or are in a potentially hazardous area.
2. Type A random flashing warning lights are not intended for delineation and shall not be used in a series.
3. A series of sequential flashing warning lights placed on channelizing devices to form a merging taper may be used for delineation. If used, the successive flashing of the sequential warning lights should occur from the beginning of the taper to the end of the merging taper in order to identify the desired vehicle path. The rate of flashing for each light shall be 65 flashes per minute, plus or minus 10 flashes.
4. Type C and D steady-burn warning lights are intended to be used in a series to delineate the edge of the travel lane on detours, on lane changes, on lane closures, and on other similar conditions.
5. Type A, Type C and Type D warning lights shall be installed at locations as detailed on other sheets in the plans.
6. Warning lights shall not be installed on a drum that has a sign, chevron or vertical panel.
7. The maximum spacing for warning lights on drums should be identical to the channelizing device spacing.

WARNING REFLECTORS MOUNTED ON PLASTIC DRUMS AS A SUBSTITUTE FOR TYPE C (STEADY BURN) WARNING LIGHTS

1. A warning reflector or approved substitute may be mounted on a plastic drum as a substitute for a Type C, steady burn warning light at the discretion of the Contractor unless otherwise noted in the plans.
2. The warning reflector shall be yellow in color and shall be manufactured using a sign substrate approved for use with plastic drums listed on the CWZTCD.
3. The warning reflector shall have a minimum retroreflective surface area (one-side) of 30 square inches.
4. Round reflectors shall be fully reflectorized, including the area where attached to the drum.
5. Square substrates must have a minimum of 30 square inches of reflectorized sheeting. They do not have to be reflectorized where it attaches to the drum.
6. The side of the warning reflector facing approaching traffic shall have sheeting meeting the color and retroreflectivity requirements for DMS 8300-Type D (Non-fluorescent Prismatic).
7. When used near two-way traffic, both sides of the warning reflector shall be reflectorized.
8. The warning reflector should be mounted on the side of the handle nearest approaching traffic.
9. The maximum spacing for warning reflectors should be identical to the channelizing device spacing requirements.

TRUCK-MOUNTED ATTENUATORS

1. Truck-mounted attenuators (TMA) used on TxDOT facilities must meet the requirements outlined in the National Cooperative Highway Research Report No. 350 (NCHRP 350).
2. Refer to the CWZTCD for the requirements of Level 2 or Level 3 TMAs.
3. Refer to the dates shown in the CWZTCD to ensure that the TMA meets the age requirements and the crashworthiness criteria established by the Federal Highway Administration (FHWA) for TMAs.
4. Refer to the CWZTCD for a list of approved TMAs.
5. TMAs are required on freeways unless otherwise noted in the plans.
6. A TMA should be used anytime that it can be positioned approximately 30 to 100 feet in advance of the area of crew exposure without adversely affecting the work performance.
7. The only reason a TMA should not be required is when a work area is spread down the roadway and the work crew is an extended distance from the TMA.

Texas Department of Transportation
Traffic Operations Division

BARRICADE AND CONSTRUCTION ARROW PANEL, REFLECTORS, WARNING LIGHTS & ATTENUATOR STANDARD

7 of 12 BC(7)-07

©TxDOT 11-4-02

DN: TXDOT	CK: TXDOT	DW: TXDOT	CK: TXDOT
CONT	SECT	JOB	HIGHWAY
2452	01	043	SH 151
DIST	COUNTY		SHEET NO.
SA	BEXAR		114

REVISIONS
9-07

DISCLAIMER: The use of this standard is governed by the "Texas Engineering Practice Act". No warranty of any kind is made by TxDOT for any purpose whatsoever. TxDOT assumes no responsibility for the conversion of this standard to other formats or for incorrect results or damages resulting from its use.

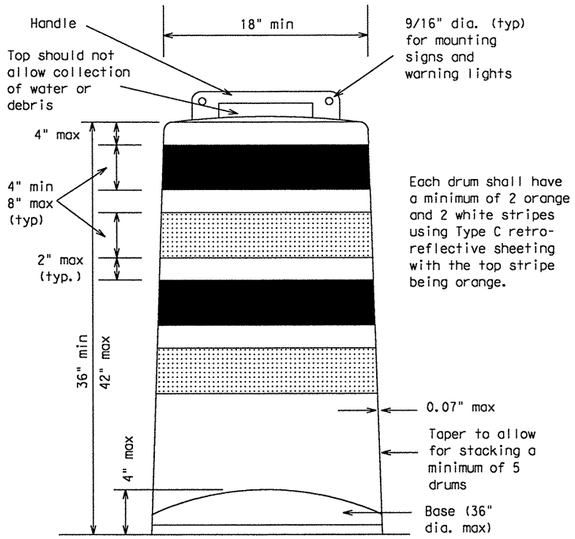

GENERAL NOTES

1. For long term stationary work zones on freeways, drums shall be used as the primary channelizing device.
2. For intermediate term stationary work zones on freeways, drums should be used as the primary channelizing device but may be replaced in tangent sections by vertical panels, or 42" two-piece cones. In tangent sections one-piece cones may be used with the approval of the Engineer but only if personnel are present on the project at all times to maintain the cones in proper position and location.
3. For short term stationary work zones on freeways, drums are the preferred channelizing device but may be replaced in tapers, transitions and tangent sections by vertical panels, two-piece cones ar one-piece cones as approved by the Engineer.
4. Drums and all related items shall comply with the requirements of the current version of the "Texas Manual on Uniform Traffic Control Devices" (TMUTCD) and the "Compliant Work Zone Traffic Control Devices List" (CWZTCD).
5. Drums, bases, and related materials shall exhibit good workmanship and shall be free from objectionable marks or defects that would adversely affect their appearance or serviceability.
6. The Contractor shall have a maximum of 24 hours to replace any plastic drums identified for replacement by the Engineer/Inspector. The replacement device must be an approved device.

GENERAL DESIGN REQUIREMENTS

Prequalified plastic drums shall meet the following requirements:

1. Plastic drums shall be a two-piece design; the "body" of the drum shall be the top portion and the "base" shall be the bottom.
2. The body and base shall lock together in such a manner that the body separates from the base when impacted by a vehicle traveling at a speed of 20 MPH or greater but prevents accidental separation due to normal handling and/or air turbulence created by passing vehicles.
3. Plastic drums shall be constructed of lightweight flexible, and deformable materials. The Contractor shall NOT use metal drums or single piece plastic drums as channelization devices or sign supports.
4. Drums shall present a profile that is a minimum of 18 inches in width at the 36 inch height when viewed from any direction. The height of drum unit (body installed on base) shall be a minimum of 36 inches and a maximum of 42 inches.
5. The top of the drum shall have a built-in handle for easy pickup and shall be designed to drain water and not collect debris. The handle shall have a minimum of two widely spaced 9/16 inch diameter holes to allow attachment of a warning light, warning reflector unit or approved compliant sign.
6. The exterior of the drum body shall have a minimum of four alternating orange and white retroreflective circumferential stripes not less than 4 inches nor greater than 8 inches in width. Any non-reflectorized space between any two adjacent stripes shall not exceed 2 inches in width.
7. Bases shall have a maximum width of 36 inches, a maximum height of 4 inches, and a minimum of two footholds of sufficient size to allow base to be held down while separating the drum body from the base.
8. Plastic drums shall be constructed of ultra-violet stabilized, orange, high-density polyethylene (HDPE) or other approved material.
9. Drum body shall have a minimum unballasted weight of 7.7 lbs. and maximum unballasted weight of 11 lbs. The wall of the drum body shall be a minimum of 0.07 inch in thickness. Weight of any drum supplied shall not vary more than 0.5 lb. from that of the prequalified sample.
10. Drum and base shall be marked with manufacturer's name and model number.

RETROREFLECTIVE SHEETING

1. The stripes used on drums shall be constructed of sheeting meeting the color and retroreflectivity requirements of Departmental Materials Specification DMS-8300, "Flat Surface Reflective Sheeting." High Specific Intensity (Type C) retroreflective sheeting shall be supplied unless otherwise specified in the plans.
2. The sheeting shall be suitable for use on and shall adhere to the drum surface such that, upon vehicular impact, the sheeting shall remain adhered in-place and exhibit no delaminating, cracking, or loss of retroreflectivity other than that loss due to abrasion of the sheeting surface.

BALLAST

1. Unballasted bases shall be large enough to hold up to 50 lbs. of sand. This base, when filled with the ballast material, should weigh between 35 lbs (minimum) and 50 lbs (maximum). The ballast may be sand in one to three sandbags separate from the base, sand in a sand-filled plastic base, or other ballasting devices as approved by the Engineer. Stacking of sandbags will be allowed, however height of sandbags above pavement surface may not exceed 12 inches.
2. Bases with built-in ballast shall weigh between 40 lbs. and 50 lbs. Built-in ballast can be constructed of an integral crumb rubber base or a solid rubber base.
3. The ballast shall not be heavy objects, water, or any material that would become hazardous to motorists, pedestrians, or workers when the drum is struck by a vehicle.
4. When used in regions susceptible to freezing, drums shall have drainage holes in the bottoms so that water will not collect and freeze becoming a hazard when struck by a vehicle.
5. Ballast shall not be placed on top of drums.
6. Adhesives may be used to secure base of drums to pavement.

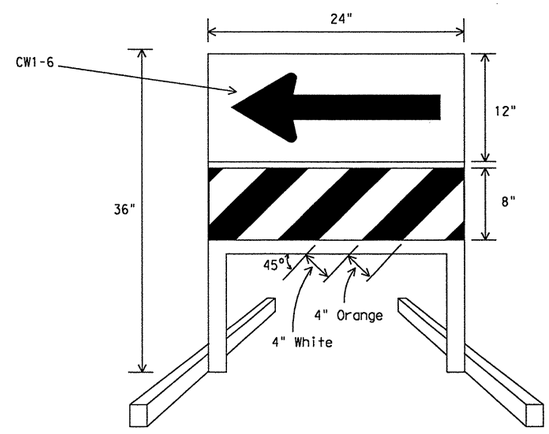

DIRECTION INDICATOR BARRICADE

1. The Direction Indicator Barricade may be used in tapers, transitions, and other areas where specific directional guidance to drivers is necessary.
2. If used, the Direction Indicator Barricade should be used in series to direct the driver through the transition and into the intended travel lane.
3. The Direction Indicator Barricade shall consist of One-Direction Large Arrow (CW1-6) sign in the size shown with a black arrow on a background of Type E Fluoprescent Prismatic Orange above a rail with Type C High Specific Intensity retroreflective sheeting in alternation 4" white and orange stripes sloping downward at an angle of 45 degrees in the direction road users are to pass.
4. Double arrows on the Direction Indicator Barricade will not be allowed.
5. Approved manufacturers are shown on the CWZTCD List. Ballast shall be as approved by the manufacturers instructions.

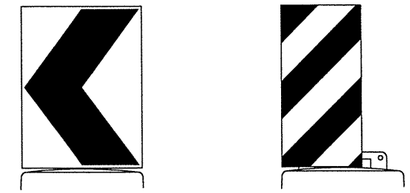

18" x 24" Sign
(Maximum Sign Dimension)
Chevron CW1-8, Opposing Traffic Lane Divider, Driveway sign D70a, Keep Right R4 series or other signs as approved by Engineer

12" x 24"
Vertical Panel
mount with diagonals sloping down towards travel way

Plywood, Aluminum or Metal sign substrates shall NOT be used on plastic drums

SIGNS, CHEVRONS, AND VERTICAL PANELS MOUNTED ON PLASTIC DRUMS

1. Signs used on plastic drums shall be manufactured using substrates listed on the CWZTCD.
2. Chevrons and other work zone signs with an orange background shall be manufactured with Type E (Fluorescent Prismatic) sheeting meeting the color and retroreflectivity requirements of DMS-8300, "Sign Face Material," unless otherwise specified in the plans.
3. Vertical Panels shall be manufactured with orange and white sheeting meeting the requirements of DMS-8300 Type C (High Specific Intensity). Diagonal stripes on Vertical Panels shall slope down toward the intended traveled lane.
4. Other sign messages (text or symbolic) may be used as approved by the Engineer. Sign dimensions shall not exceed 18 inches in width or 24 inches in height.
5. Signs shall be installed using a 1/2 inch bolt (nominal) and nut, two washers, and one locking washer for each connection.
6. Mounting bolts and nuts shall be fully engaged and adequately torqued. Bolts should not extend more than 1/2 inch beyond nuts.
7. Chevrons may be placed on drums on the outside of curves, on merging tapers or on shifting tapers. When used in these locations they may be placed on every drum or spaced not more than on every third drum. A minimum of three (3) should be used at each location called for in the plans.
8. R9-9, R9-10, R9-11 and R9-11a Sidewalk Closed signs which are 24 inches wide may be mounted on plastic drums, with approval of the Engineer.

Texas Department of Transportation
Traffic Operations Division

BARRICADE AND CONSTRUCTION CHANNELIZING DEVICES STANDARD

BC(8)-07

© TxDOT 11-4-02

REVISIONS	DN: TXDOT	CK: TXDOT	DW: TXDOT	CK: TXDOT
4-03	CONT	SECT	JOB	HIGHWAY
9-07	2452	01	043	SH 151
	DIST		COUNTY	SHEET NO.
	SA		BEXAR	115

p:\4760\0-0129\cad\...\standard\5\std_tcp09.dgn 2/21/2011 5:40:04 PM mwmldkiff

DISCLAIMER: The use of this standard is governed by the "Texas Engineering Practice Act". No warranty of any kind is made by TxDOT for any purpose whatsoever. TxDOT assumes no responsibility for the conversion of this standard to other formats or for incorrect results or damages resulting from its use.

CHANNELIZING DEVICES

VERTICAL PANELS (VPs)

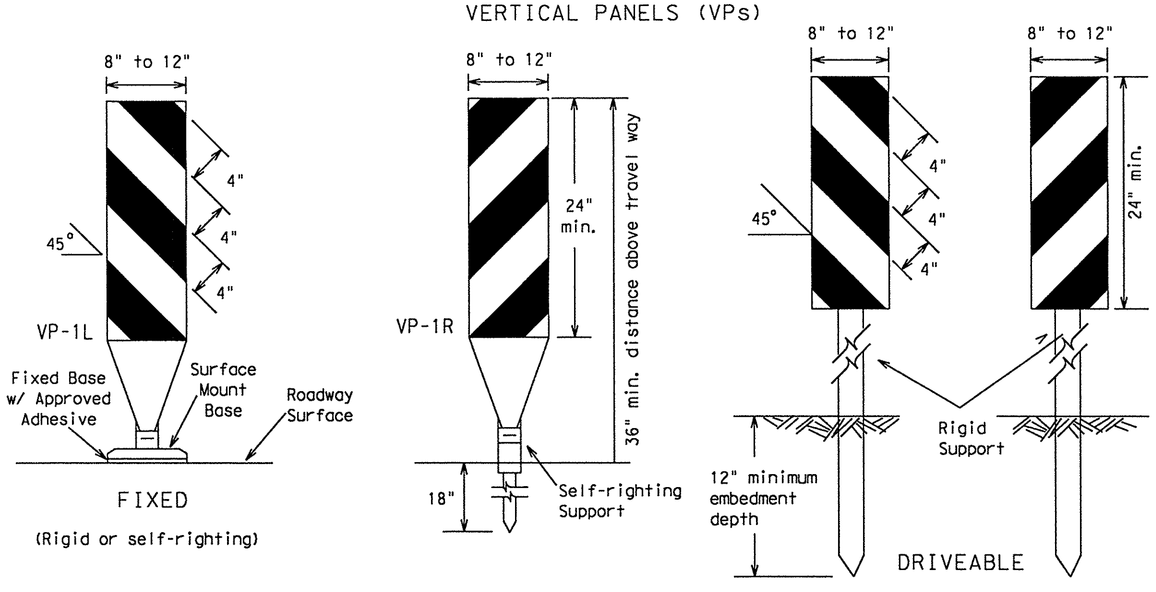

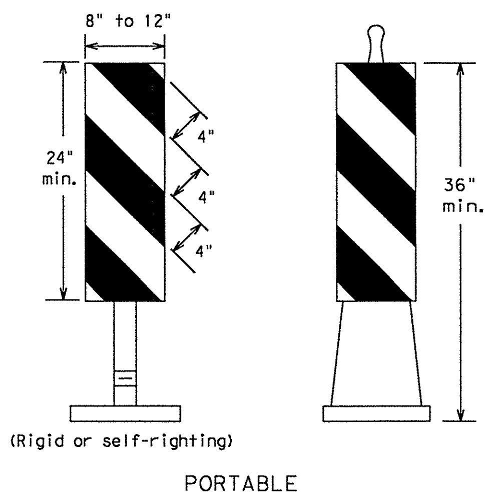

1. Vertical Panels (VP's) are normally used to channelize traffic or divide opposing lanes of traffic.
2. VP's may be used in daytime or nighttime situations. They may be used at the edge of shoulder drop-offs and other areas such as lane transitions where positive daytime and nighttime delineation is required. The Engineer/Inspector shall refer to the Roadway Design Manual Appendix B "Treatment of Pavement Drop-offs in Work Zones" for additional guidelines on the use of VP's for drop-offs.
3. VP's should be mounted back to back if used at the edge of cuts adjacent to two-way two lane roadways. Stripes are to be reflective orange and reflective white and should always slope downward toward the travel lane.
4. VP's used on expressways and freeways or other high speed roadways, shall have a minimum of 270 square inches of retroreflective area facing traffic.
5. Self-righting supports are available with portable base. See "Compliant Work Zone Traffic Control Devices List" (CWZTCD).
6. Sheeting for the VP's shall be retroreflective Type C (High Specific Intensity) conforming to Departmental Material Specification DMS-8300, unless noted otherwise.
7. Where the height of reflective material on the vertical panel is greater than 36 inches, a panel stripe of 6 inches shall be used.

CHEVRONS

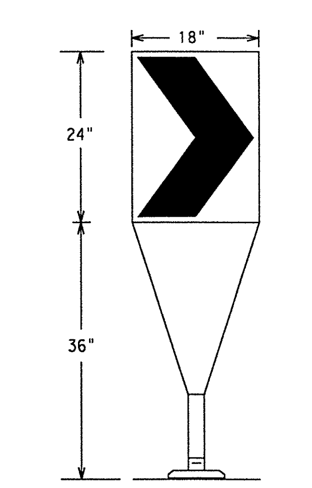

Fixed Base w/ Approved Adhesive (Driveable Base, or Flexible Support can be used)

1. The chevron shall be a vertical rectangle with a minimum size of 12 by 18 inches.
2. Chevrons are intended to give notice of a sharp change of alignment with the direction of travel and provide additional emphasis and guidance for vehicle operators with regard to changes in horizontal alignment of the roadway.
3. Chevrons, when used, shall be erected on the outside of a sharp curve or turn, or on the far side of an intersection. They shall be in line with and at right angles to approaching traffic. Spacing should be such that the motorist always has three in view, until the change in alignment eliminates its need.
4. To be effective, the chevron should be visible for at least 500 feet.
5. Chevrons shall be orange with a black nonreflective legend. Sheeting for the chevron shall be retroreflective Type E (Fluorescent Prismatic) conforming to Departmental Material Specification DMS-8300, unless noted otherwise. The legend shall be black vinyl non-reflective decal sheeting meeting the requirements of DMS-8300.
6. For Long Term Stationary use on tapers or transitions on freeways and divided highways self-righting chevrons may be used to supplement plastic drums but not to replace plastic drums.

GENERAL NOTES:

1. Work Zone channelizing devices illustrated on this sheet may be installed in close proximity to traffic and are suitable for use on high or low speed roadways. The Engineer/Inspector shall ensure that spacing and placement is uniform and in accordance with the "Texas Manual on Uniform Traffic Control Devices" (TMUTCD).
2. Channelizing devices shown on this sheet may have a driveable, fixed or portable base. The requirement for self-righting channelizing devices must be specified in the General Notes or other plan sheets.
3. Channelizing devices on self-righting supports should be used in work zone areas where channelizing devices are frequently impacted by errant vehicles or vehicle related wind gusts making alignment of the channelizing devices difficult to maintain. Locations of these devices shall be detailed elsewhere in the plans. These devices shall conform to the TMUTCD and the "Compliant Work Zone Traffic Control Devices List" (CWZTCD).
4. The Contractor shall maintain devices in a clean condition and replace damaged, nonreflective, faded, or broken devices and bases as required by the Engineer/Inspector. The Contractor shall be required to maintain proper device spacing and alignment.
5. Portable bases shall be fabricated from virgin and/or recycled rubber. The portable bases shall weigh approximately 35 lbs.
6. Pavement surfaces shall be prepared in a manner that ensures proper bonding between the adhesives, the fixed mount bases and the pavement surface. Adhesives shall be prepared and applied according to the manufacturer's recommendations.
7. The installation and removal of channelizing devices shall not cause detrimental effects to the final pavement surfaces, including pavement surface discoloration or surface integrity. Driveable bases shall not be permitted on final pavement surfaces. The Engineer/Inspector shall approve all application and removal procedures of fixed bases.
8. Examples on this sheet are commonly used channelizing devices in work zones. For other devices, refer to the CWZTCD.

OPPOSING TRAFFIC LANE DIVIDERS (OTLD)

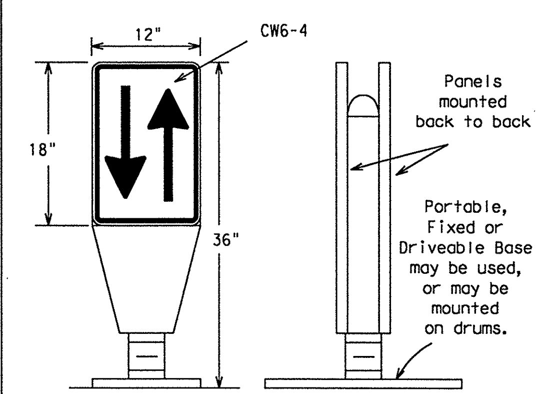

1. Opposing Traffic Lane Dividers (OTLD) are delineation devices designed to convert a normal one-way roadway section to two-way operation. OTLD's are used on temporary centerlines. The upward and downward arrows on the sign's face indicate the direction of traffic on either side of the divider. The base is secured to the pavement with an adhesive or rubber weight to minimize movement caused by a vehicle impact or wind gust.
2. The OTLD may be used in combination with simple tubular markers or VPs.
3. Spacing between the OTLD shall not exceed 500 feet. Tubular markers or VPs placed between the OTLD's should not exceed 100 foot spacing.
4. The OTLD shall be orange with a black non-reflective legend. Sheeting for the OTLD shall be retroreflective Type E (Fluorescent Prismatic) conforming to Departmental Material Specification DMS-8300, unless noted otherwise. The legend shall be black vinyl non-reflective decal sheeting meeting the requirements of DMS-8300.

Posted Speed	Formula	Minimum Desirable Taper Lengths ✻✻ 10' Offset	11' Offset	12' Offset	Suggested Maximum Spacing of Channelizing Devices On a Taper	On a Tangent
30	$L = \frac{WS^2}{60}$	150'	165'	180'	30'	60'-75'
35		205'	225'	245'	35'	70'-90'
40		265'	295'	320'	40'	80'-100'
45	L=WS	450'	495'	540'	45'	90'-110'
50		500'	550'	600'	50'	100'-125'
55		550'	605'	660'	55'	110'-140'
60		600'	660'	720'	60'	120'-150'
65		650'	715'	780'	65'	130'-165'
70		700'	770'	840'	70'	140'-175'
75		750'	825'	900'	75'	150'-185'
80		800'	880'	960'	80'	160'-195'

✻✻ Taper lengths have been rounded off.
L=Length of Taper (FT.) W=Width of Offset (FT.)
S=Posted Speed (MPH)

HOLLOW OR WATER BALLASTED SYSTEMS USED AS LONGITUDINAL CHANNELIZING DEVICES OR BARRIERS

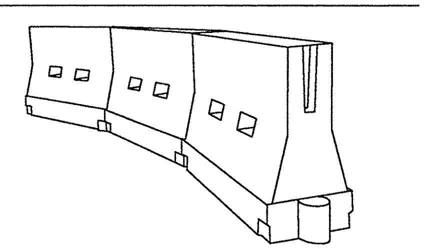

LONGITUDINAL CHANNELIZING DEVICES
1. Longitudinal channelizing devices are crashworthy, lightweight, deformable devices that are highly visible, have good target value and can be connected together. They are not designed to contain or redirect a vehicle on impact.
2. Longitudinal channelizing devices may be used instead of a line of cones or drums.
3. Longitudinal channelizing devices shall be placed in accordance to application and installation requirements specific to the device, and used only when shown on the CWZTCD list.
4. Longitudinal channelizing devices should not be used to provide positive protection for obstacles, pedestrians or workers.
5. Longitudinal channelizing devices shall be retroreflective, or supplemented with retroreflective delineation as required for temporary barriers on BC(7)-07.

WATER BALLASTED SYSTEMS USED AS BARRIERS
1. Water ballasted systems used as barriers shall not be used solely to channelize road users, but also to protect the work space per the appropriate NCHRP 350 crashworthiness requirements based on roadway speed and barrier application.
2. Water ballasted systems used to channelize vehicular traffic shall be supplemented with retroreflective delineation or channelizing devices to improve daytime/nighttime visibility. They may also be supplemented with pavement markings.
3. Water ballasted systems used as barriers shall be placed in accordance to application and installation requirements specific to the device, and used only when shown on the CWZTCD list.
4. Water ballasted systems used as barriers should not be used for a merging taper except in low speed (less than 45 MPH) urban areas. When used on a taper in a low speed urban area, the taper shall be delineated and the taper length should be designed to optimize road user operations considering the available geometric conditions.
5. When water ballasted systems used as barriers have blunt ends exposed to traffic, they should be attenuated as per manufacturer recommendations or flared to point outside the clear zone.

If used to channelize pedestrians, longitudinal channelizing devices or water ballasted systems must have a continuous detectable bottom for users of long canes and the top of the unit shall be not less than 32 inches in height.

VERTICAL PANELS & OPPOSING TRAFFIC LANE DIVIDERS SEPARATING TWO-WAY TRAFFIC (Typical application)

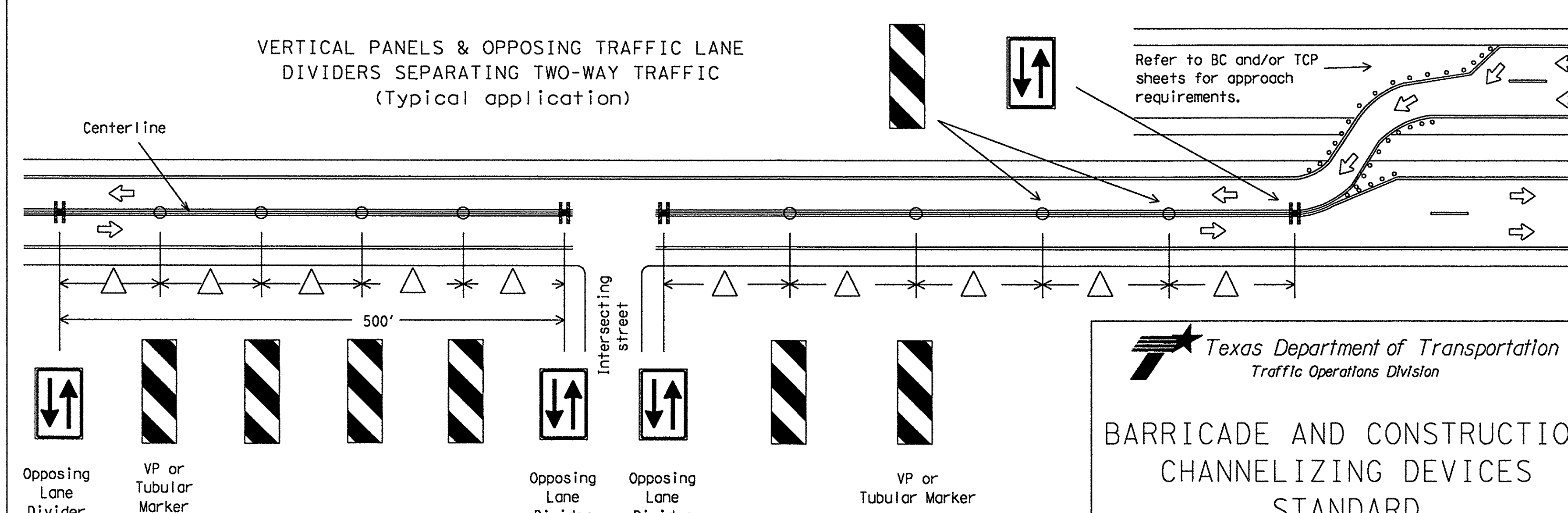

△ Spacing between the VP's or tubular markers shall not exceed 100 feet. On roadways with speeds less than 45 MPH, spacing between the tubular markers or VP's shall be as shown on the channelizing spacing table shown on this page. If the table shows spacing greater than 100 feet based on the roadway speed, then use a maximum of 100 feet spacing between the tubular markers or VP's. Every fifth channelizing device shall be an OTLD, except when the OLTD must be spaced closer to accomodate an intersection. Spacing between the OTLD shall not exceed 500 feet.

Texas Department of Transportation
Traffic Operations Division

BARRICADE AND CONSTRUCTION CHANNELIZING DEVICES STANDARD

9 of 12 BC(9)-07

©TxDOT 11-4-02

DN: TXDOT	CK: TXDOT	DW: TXDOT	CK: TXDOT

REVISIONS: 9-07

CONT	SECT	JOB	HIGHWAY
2452	01	043	SH 151

DIST	COUNTY	SHEET NO.
SA	BEXAR	116

DISCLAIMER: The use of this standard is governed by the "Texas Engineering Practice Act". No warranty of any kind is made by TxDOT for any purpose whatsoever. TxDOT assumes no responsibility for the conversion of this standard to other formats or for incorrect results or damages resulting from its use.

p:\4760\0-0129\cad\ \standard\5\std_tcp10.dgn 2/21/2011 5:40:05 PM mwmldkiff

TYPE III BARRICADES

1. Refer to the Compliant Work Zone Traffic Control Devices List (CWZTCD) for details of the Type III Barricades and a list of all materials used in the construction of Type III Baricades.
2. Type III Barricades shall be used at each end of construction projects closed to all traffic.
3. Barricades extending across a roadway should have stripes that slope downward in the direction toward which traffic must turn in detouring. When both right and left turns are provided, the chevron striping may slope downward in both directions from the center of the barricade. Where no turns are provided at a closed road striping should slope downward in both directions toward the center of roadway.
4. Striping of rails, for the right side of the roadway, should slope downward to the left. For the left side of the roadway, striping should slope downward to the right.
5. Identification markings may be shown only on the back of the barricade rails. The maximum height of letters and/or company logos used for identification shall be 1".
6. Barricades shall not be placed parallel to traffic unless an adequate clear zone is provided.
7. Warning lights shall NOT be installed on barricades.
8. Where barricades require the use of weights to keep from turning over, the use of sandbags with dry, cohesionless sand is recommended. The sandbags will be tied shut to keep the sand from spilling and to maintain a constant weight. Sand bags shall not be stacked in a manner that covers any portion of a barricade rails reflective sheeting. Rock, concrete, iron, steel or other solid objects will NOT be permitted. Sandbags should weigh a minimum of 35 lbs and a maximum of 50 lbs. Sandbags shall be made of a durable material that tears upon vehicular impact. Rubber (such as tire inner tubes) shall not be used for sandbags. Sandbags shall only be placed along or upon the base supports of the device and shall not be suspended above ground level or hung with rope, wire, chains or other fasteners.
9. Sheeting for barricades shall be retroreflective Type C (High Specific Intensity) conforming to Departmental Material Specfication DMS-8300 unless otherwise noted.

Barricades shall NOT be used as a sign support.

TYPICAL STRIPING DETAIL FOR BARRICADE RAIL

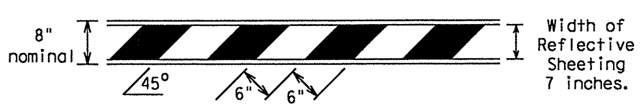

TYPICAL PANEL DETAIL FOR SKID OR POST TYPE BARRICADES

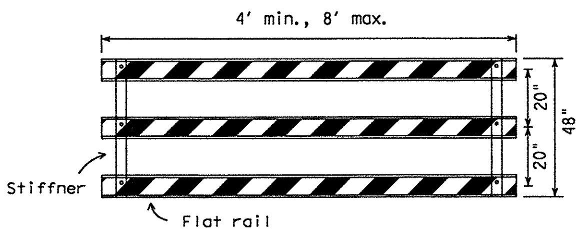

Stiffner may be inside or outside of support, but no more than 2 stiffeners shall be allowed on one barricade.

TYPE III BARRICADE (POST AND SKID) TYPICAL APPLICATION

Each roadway of a divided highway shall be barricaded in the same manner.

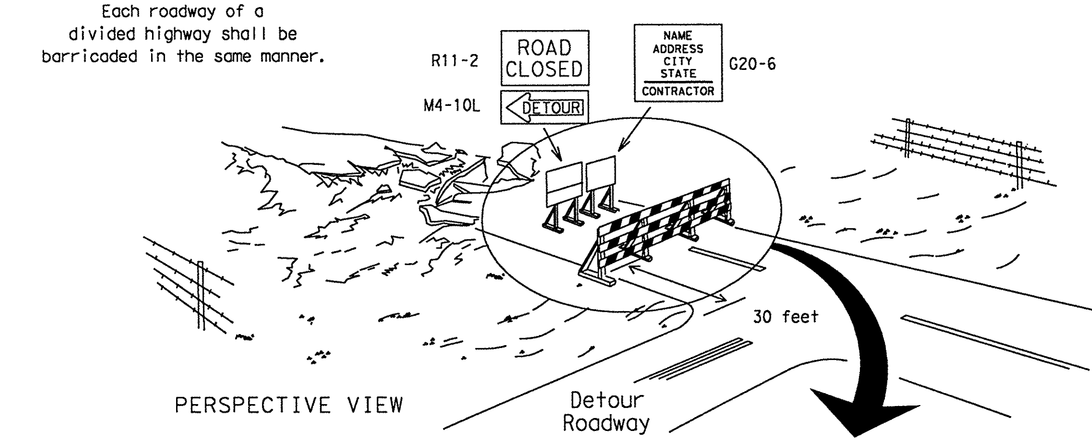

PERSPECTIVE VIEW

The three rails on Type III barricades shall be reflectorized orange and reflective white stripes on one side facing one-way traffic and both sides for two-way traffic.
Barricade striping should slant downward in the direction of detour.

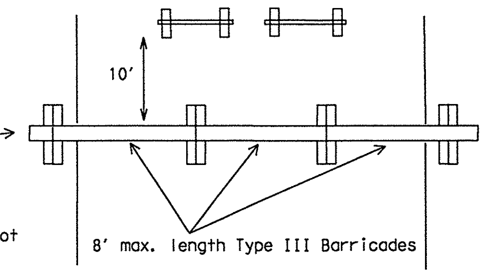

PLAN VIEW

1. Signs should be mounted on independent supports at a 7 foot mounting height in center of roadway. The signs should be a minimum of 10 feet behind Type III Barricades.
2. Advance signing shall be as specified elsewhere in the plans.

CULVERT WIDENING OR OTHER ISOLATED WORK WITHIN THE PROJECT LIMITS

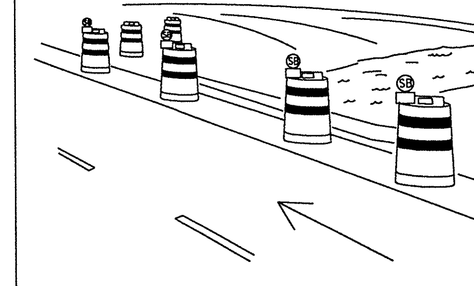

PERSPECTIVE VIEW

1. Where positive redirectional capability is provided, drums may be omitted.
2. Plastic construction fencing may be used with drums for safety as required in the plans.
3. Vertical Panels on flexible support may be substituted for drums when the shoulder width is less than 4 feet.
4. When the shoulder width is greater than 12 feet, steady-burn lights may be omitted if drums are used.
5. Drums must extend the length of the culvert widening.

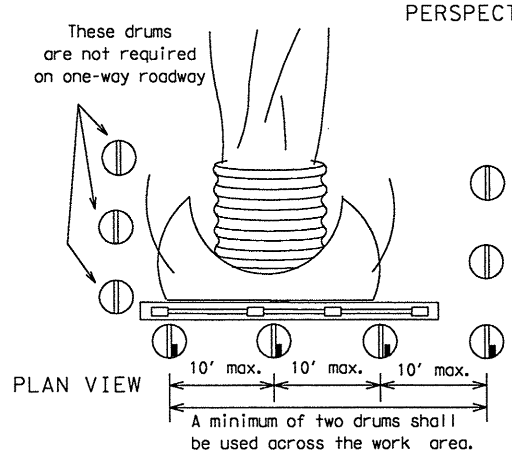

PLAN VIEW

Increase number of plastic drums on the side of approaching traffic if the crown width makes it necessary. (minimum of 2 and maximum of 4 drums)

Legend

- Plastic drum
- Plastic drum with steady burn light or yellow warning reflector
- (SB) Steady burn warning light or yellow warning reflector

CONES

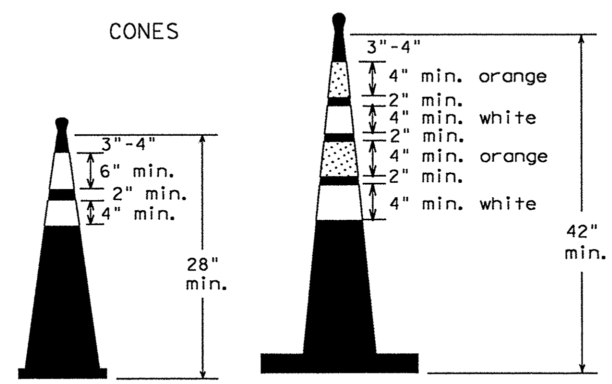

Two-Piece cones

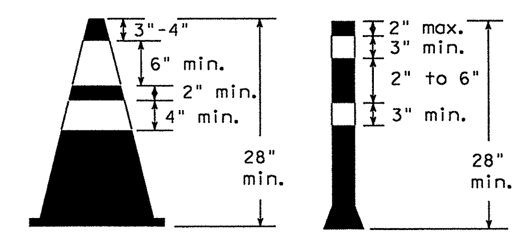

One-Piece cones   Tubular Marker

28" Cones shall have a minimum weight of 9 1/2 lbs.

42" 2-piece cones shall have a minimum weight of 30 lbs. including base.

1. Traffic cones and tubular markers shall be a minimum of 28 inches in height when used either on freeways or at nighttime.
2. Cones or tubular markers shall be predominantly orange, fluorescent red-orange, or fluorescent yellow-orange. They should be kept clean and bright for maximum visibility.
3. Cones used only for daytime operations do not require the reflectorized bands.
4. Cones and tubular markers used for nighttime operations shall be reflectorized. Reflectorized material shall have a smooth, sealed outer surface that displays the same approximate color during the day and night. The reflectorized bands shall be retroreflective Type C (High Specific Intensity) conforming to Departmental Material Specification DMS-8300, unless otherwise noted.
5. When used at night, appropriate personnel shall ensure that cones and tubular markers remain in their proper location and in an upright position.
6. Reflectorization of 28"cones shall consist of a minimum 6 inch band placed at least 3 inches but not more than 4 inches from the top, supplemented by a minimum 4 inch band spaced a minimum of 2 inches below the 6 inch band.
7. Reflectorization of 42" cones shall be provided by alternating 4 to 6" orange and white stripes with orange on top.
8. Reflectorization of tubular markers shall be a minimum of two 3 inch bands placed a maximum of 2 inches from the top with a maximum of 6 inches between bands.
9. One-piece cones or tubular markers are generally suitable for temporary usage (up to 8 hours) with other channelization devices such as vertical panels, drums or two-piece cones for long term usage. Care should be taken to ensure they remain in their proper location and in an upright position.
10. Cones or tubular markers used on each project shall be of the same size and shape.
11. The handle may be designed as a hook or other shape, fabricated from non-rigid materials similar to the cone material, and may extend up to a maximum of 8 inches above the top of cone. Length of the handle shall not be considered with regard to the overall height of the cone.

EDGELINE CHANNELIZER

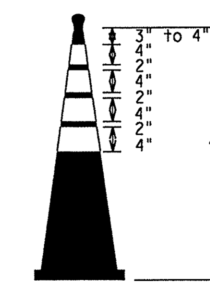

1. This device is intended only for use in place of a vertical panel to channelize traffic by indicating the edge of the travel lane. It is not intended to be used in transitions or tapers.
2. This device shall not be used to separate lanes of traffic (opposing or otherwise) or warn of objects.
3. This device is based on a 42 inch, two-piece cone with an alternate striping pattern: four 4 inch retroreflective bands, with an approximate 2 inch gap between bands. The color of the band should correspond to the color of the edgeline (yellow for left edgeline, white for right edgeline) for which the device is substituted or for which it supplements. The reflectorized bands shall be retroreflective Type C encapsulated bead (High Specific Intensity) conforming to Departmental Material Specification DMS-8300, unless otherwise noted.
4. The base must weigh a minimum of 30 lbs.

TRAFFIC CONTROL FOR MATERIAL STOCKPILES

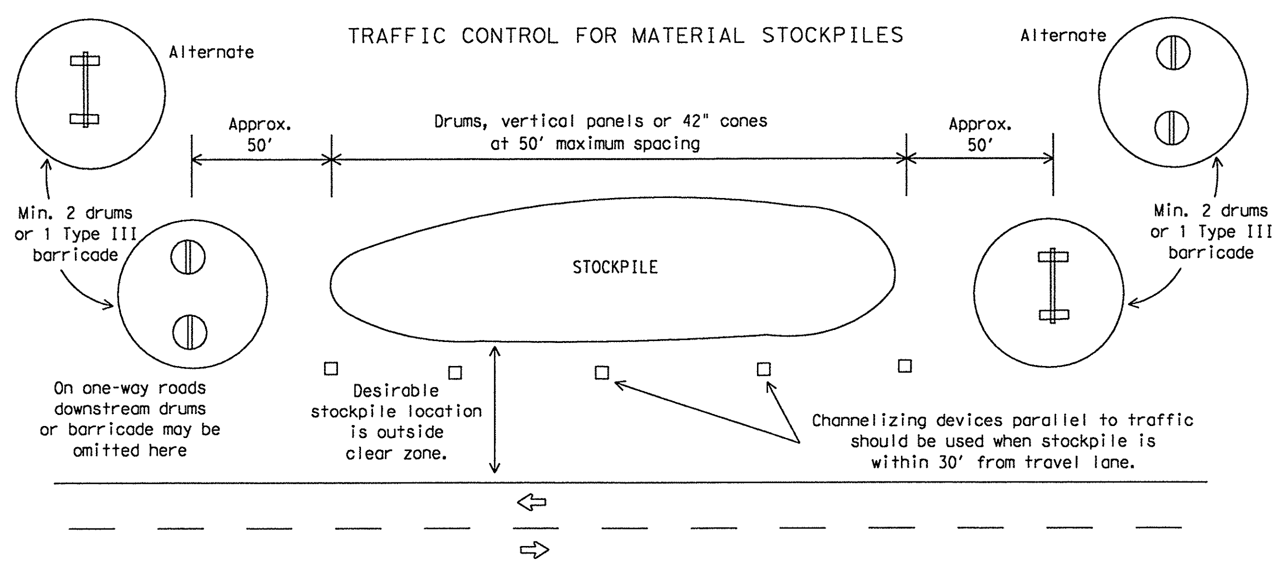

Texas Department of Transportation
Traffic Operations Division

BARRICADE AND CONSTRUCTION CHANNELIZING DEVICES STANDARD

BC(10)-07

© TxDOT 11-4-02

DN: TXDOT	CK: TXDOT	DW: TXDOT	CK: TXDOT

9-07 REVISIONS

CONT	SECT	JOB	HIGHWAY
2452	01	043	SH 151
DIST	COUNTY		SHEET NO.
SA	BEXAR		117

DISCLAIMER: The use of this standard is governed by the "Texas Engineering Practice Act". No warranty of any kind is made by TxDOT for any purpose whatsoever. TxDOT assumes no responsibility for the conversion of this standard to other formats or for incorrect results or damages resulting from its use.

pw:\\FTSDNO01129cor\ \standard\US1sld_tcp11.dgn 2/21/2011 5:40:05 PM mwmldk11

WORK ZONE PAVEMENT MARKINGS

GENERAL

1. The Contractor shall be responsible for maintaining work zone and existing pavement markings, in accordance with the standard specifications and special provisions, on all roadways open to traffic within the CSJ limits unless otherwise stated in the plans.
2. Color, patterns and dimensions shall be in conformance with the "Texas Manual on Uniform Traffic Control Devices" (TMUTCD).
3. Additional supplemental pavement marking details may be found in the plans or specifications.
4. Pavement markings shall be installed in accordance with the TMUTCD and as shown on the plans.
5. When short term markings are required on the plans, short term markings shall conform with the TMUTCD, the plans and details as shown on the Standard Plan Sheet WZ(STPM).
6. When standard pavement markings are not in place and the roadway is opened to traffic, DO NOT PASS signs shall be erected to mark the beginning of the sections where passing is prohibited and PASS WITH CARE signs at the beginning of sections where passing is permitted.
7. All work zone pavement markings shall be installed in accordance with Item 662, "Work Zone Pavement Markings."

RAISED PAVEMENT MARKERS

1. Raised pavement markers are to be placed according to the patterns on BC(12).
2. All raised pavement markers used for work zone markings shall meet the requirements of Item 672, "RAISED PAVEMENT MARKERS" and Departmental Material Specification DMS-4200 or DMS-4300.

PREFABRICATED PAVEMENT MARKINGS

1. Removable prefabricated pavement markings shall meet the requirements of DMS-8241.
2. Non-removable prefabricated pavement markings (foil back) shall meet the requirements of DMS-8240.

MAINTAINING WORK ZONE PAVEMENT MARKINGS

1. The Contractor will be responsible for maintaining work zone pavement markings within the work limits.
2. Work zone pavement markings shall be inspected in accordance with the frequency and reporting requirements of work zone traffic control device inspections as required by Form 599.
3. The markings should provide a visible reference for a minimum distance of 300 feet during normal daylight hours and 160 feet when illuminated by automobile low-beam headlights at night, unless sight distance is restricted by roadway geometrics.
4. Markings failing to meet this criteria within the first 30 days after placement shall be replaced at the expense of the Contractor as per Specification Item 662.

REMOVAL OF PAVEMENT MARKINGS

1. Pavement markings that are no longer applicable, could create confusion or direct a motorist toward or into the closed portion of the roadway, shall be removed or obliterated before the roadway is opened to traffic.
2. The above shall not apply to detours in place for less than two weeks, where flaggers and/or sufficient channelizing devices are used in lieu of markings to outline the detour route.
3. Pavement markings shall be removed to the fullest extent possible, so as not to leave a discernable marking. This shall be by any method approved by TxDOT Specification Item 677 for "Eliminating Existing Pavement Markings and Markers".
4. The removal of pavement markings may require resurfacing or seal coating portions of the roadway.
5. Subject to the approval of the Engineer, any method that proves to be successful on a particular type pavement may be used.
6. Blast cleaning may be used but will not be required unless specifically shown in the plans.
7. Over-painting of the markings SHALL NOT BE permitted.
8. Removal of raised pavement markers shall be as directed by the Engineer.
9. Removal of existing pavement markings and markers will be paid for directly in accordance with Item 677, "ELIMINATING EXISTING PAVEMENT MARKINGS AND MARKERS," unless otherwise stated in the plans.
10. Black-out marking tape may be used to cover conflicting existing markings for periods less than two weeks when approved by the Engineer.

Temporary Flexible-Reflective Roadway Marker Tabs

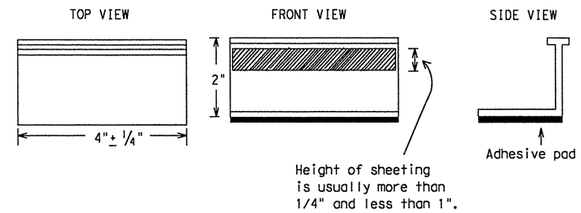

STAPLES OR NAILS SHALL NOT BE USED TO SECURE TEMPORARY FLEXIBLE-REFLECTIVE ROADWAY MARKER TABS TO THE PAVEMENT SURFACE

1. Temporary flexible-reflective roadway marker tabs used as guidemarks shall meet the requirements of DMS-8242.
2. Tabs detailed on this sheet are to be inspected and accepted by the Engineer or designated representative. Sampling and testing is not normally required, however at the option of the Engineer, either "A" or "B" below may be imposed to assure quality before placement on the roadway.
   A. Select five (5) or more tabs at random from each lot or shipment and submit to the Construction Division, Materials and Pavement Section to determine specification compliance.
   B. Select five (5) tabs and perform the following test. Affix five (5) tabs at 24 inch intervals on an asphaltic pavement in a straight line. Using a medium size passenger vehicle or pickup, run over the markers with the front and rear tires at a speed of 35 to 40 miles per hour, four (4) times in each direction. No more than one (1) out of the five (5) reflective surfaces shall be lost or displaced as a result of this test.
3. Small design variances may be noted between tab manufacturers.
4. See Standard Sheet WZ(STPM) for tab placement on new pavements. See Standard Sheet TCP(7-1) for tab placement on seal coat work.

Raised Pavement Markers used as Guidemarks

1. Raised pavement markers used as guidemarks shall be from the approved product list, and meet the requirements of DMS-4200.
2. All temporary construction raised pavement markers provided on a project shall be of the same manufacturer.
3. Adhesive for guidemarks shall be bituminous material hot applied or butyl rubber pad for all surfaces, or thermoplastic for concrete surfaces.

Guidemarks shall be designated as:
YELLOW - (two amber reflective surfaces with yellow body).
WHITE - (one silver reflective surface with white body).

DEPARTMENTAL MATERIAL SPECIFICATIONS

PAVEMENT MARKERS (REFLECTORIZED)	DMS-4200
TRAFFIC BUTTONS	DMS-4300
EPOXY AND ADHESIVES	DMS-6100
BITUMINOUS ADHESIVE FOR PAVEMENT MARKERS	DMS-6130
PREFABRICATED PAVEMENT MARKINGS-PERMANENT	DMS-8240
PREFABRICATED PAVEMENT MARKINGS-REMOVABLE	DMS-8241
TEMPORARY FLEXIBLE-REFLECTIVE ROADWAY MARKER TABS	DMS-8242

A list of prequalified reflective raised pavement markers, non-reflective traffic buttons, roadway marker tabs and other pavement markings can be found at the Material Producer List web address shown on BC(1).

Texas Department of Transportation
Traffic Operations Division

BARRICADE AND CONSTRUCTION PAVEMENT MARKINGS STANDARD

BC(11)-07

© TxDOT February 1998

REVISIONS	DN: TXDOT	CK: TXDOT	DW: TXDOT	CK: TXDOT
2-98	CONT	SECT	JOB	HIGHWAY
1-02	2452	01	043	SH 151
11-02	DIST		COUNTY	SHEET NO.
9-07	SA		BEXAR	118

pw:\\FBGNJO-0129:coor\ \standard\15std_tcp12.dgn 2/21/2011 5:40:06 PM mwmldkt1

DISCLAIMER: The use of this standard is governed by the "Texas Engineering Practice Act". No warranty of any kind is made by TxDOT for any purpose whatsoever. TxDOT assumes no responsibility for the conversion of this standard to other formats or for incorrect results or damages resulting from its use.

PAVEMENT MARKING PATTERNS

CENTER LINE & NO-PASSING ZONE BARRIER LINES FOR TWO-LANE, TWO-WAY HIGHWAYS

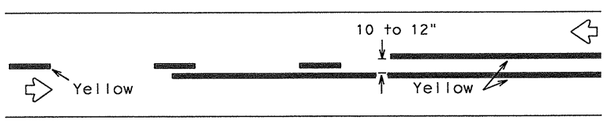

REFLECTORIZED PAVEMENT MARKINGS - PATTERN A

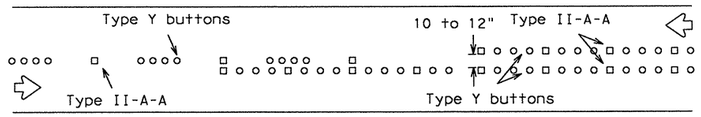

RAISED PAVEMENT MARKERS - PATTERN A

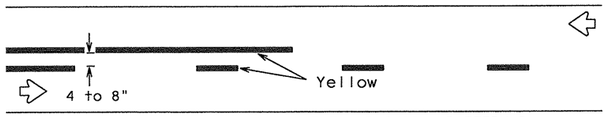

REFLECTORIZED PAVEMENT MARKINGS - PATTERN B

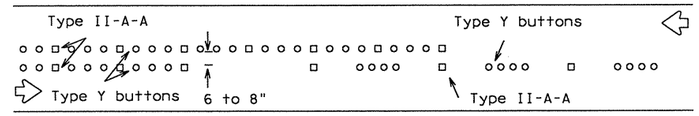

RAISED PAVEMENT MARKERS - PATTERN B

Pattern A is the TXDOT Standard, however Pattern B may be used if approved by the Engineer.
Prefabricated markings may be substituted for reflectorized pavement markings.

EDGE & LANE LINES FOR DIVIDED HIGHWAY

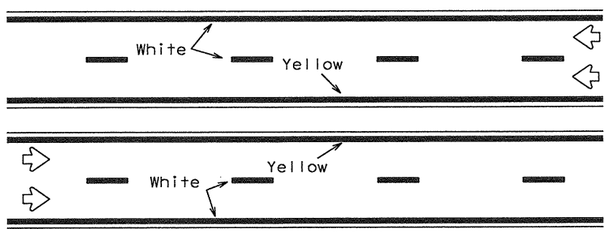

REFLECTORIZED PAVEMENT MARKINGS

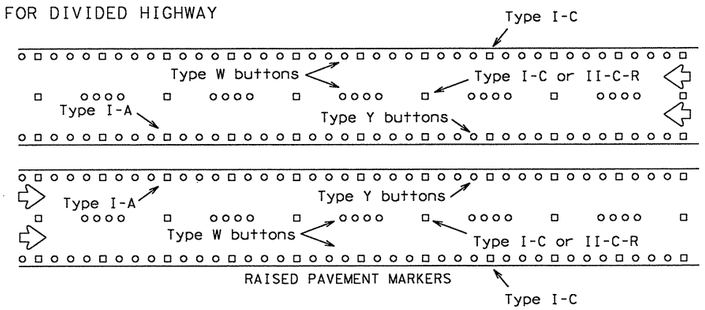

RAISED PAVEMENT MARKERS

Prefabricated markings may be substituted for reflectorized pavement markings.

LANE & CENTER LINES FOR MULTILANE UNDIVIDED HIGHWAYS

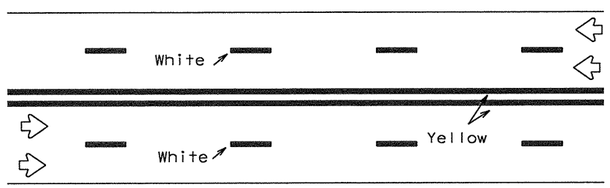

REFLECTORIZED PAVEMENT MARKINGS

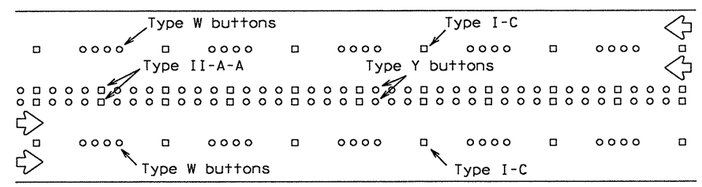

RAISED PAVEMENT MARKERS

Prefabricated markings may be substituted for reflectorized pavement markings.

TWO-WAY LEFT TURN LANE

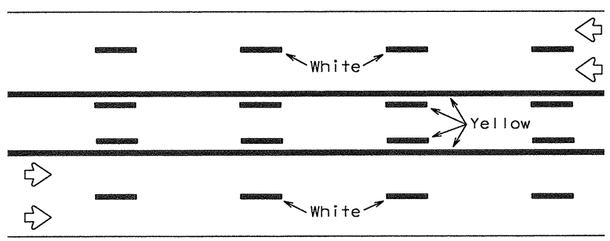

REFLECTORIZED PAVEMENT MARKINGS

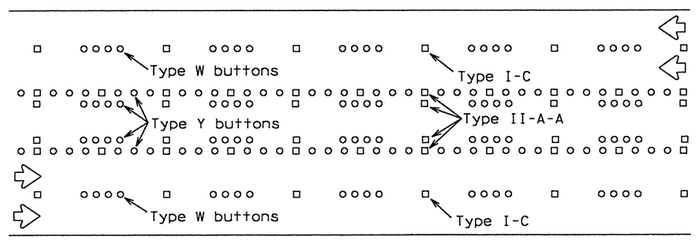

RAISED PAVEMENT MARKERS

Prefabricated markings may be substituted for reflectorized pavement markings.

STANDARD WORK ZONE PAVEMENT MARKINGS DETAILS

SOLID LINES

DOUBLE NO-PASSING LINE

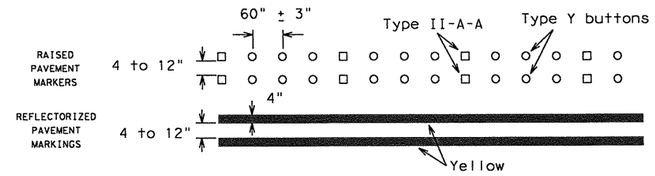

EDGE LINE OR SINGLE NO-PASSING LINE

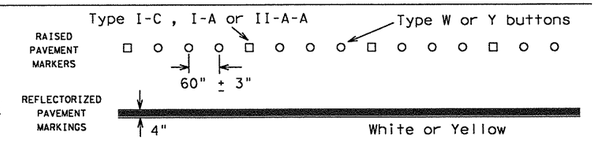

WIDE LINE

(FOR LEFT TURN CHANNELIZING LINE OR CHANNELIZING LINE USED TO DISCOURAGE LANE CHANGING.)

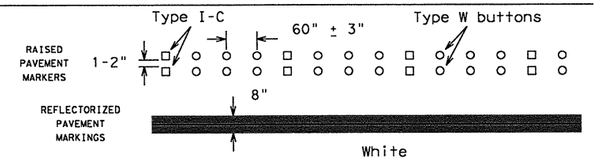

BROKEN LINE

(FOR CENTER LINE OR LANE LINE.)

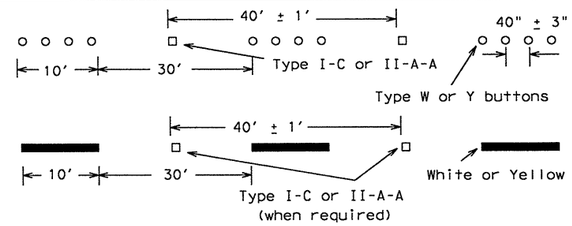

REMOVABLE MARKINGS WITH RAISED PAVEMENT MARKERS

If raised pavement markers are used to supplement REMOVABLE markings, the markers shall be applied to the top of the tape at the approximate mid length of tape used for broken lines or at 20 foot spacing for solid lines. This allows an easier removal of raised pavement markers and tape.

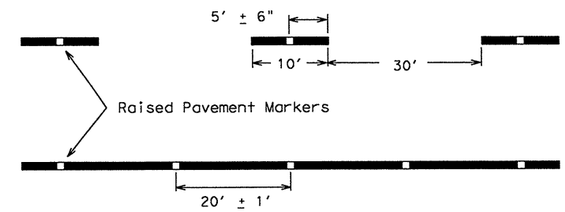

Centerline only - not to be used on edge lines

Raised pavement markers used as standard pavement markings shall be from the approved products list and meet the requirements of Item 672 "RAISED PAVEMENT MARKERS."

Texas Department of Transportation
Traffic Operations Division

BARRICADE AND CONSTRUCTION PAVEMENT MARKING PATTERNS STANDARD

12 of 12 BC(12)-07

© TxDOT February 1998

DN: TXDOT	CK: TXDOT	DW: TXDOT	CK: TXDOT

REVISIONS: 1-97, 2-98, 11-02, 9-07

CONT	SECT	JOB	HIGHWAY
2452	01	043	SH 151

DIST	COUNTY	SHEET NO.
SA	BEXAR	119

DISCLAIMER: The use of this standard is governed by the "Texas Engineering Practice Act". No warranty of any kind is made by TxDOT for any purpose whatsoever. TxDOT assumes no responsibility for the conversion of this standard to other formats or for incorrect results or damages resulting from its use.

p:\4760\0-0129\acad\~standard\05std_tcp22.dgn 2/21/2011 5:40:07 PM mwmldkt1f

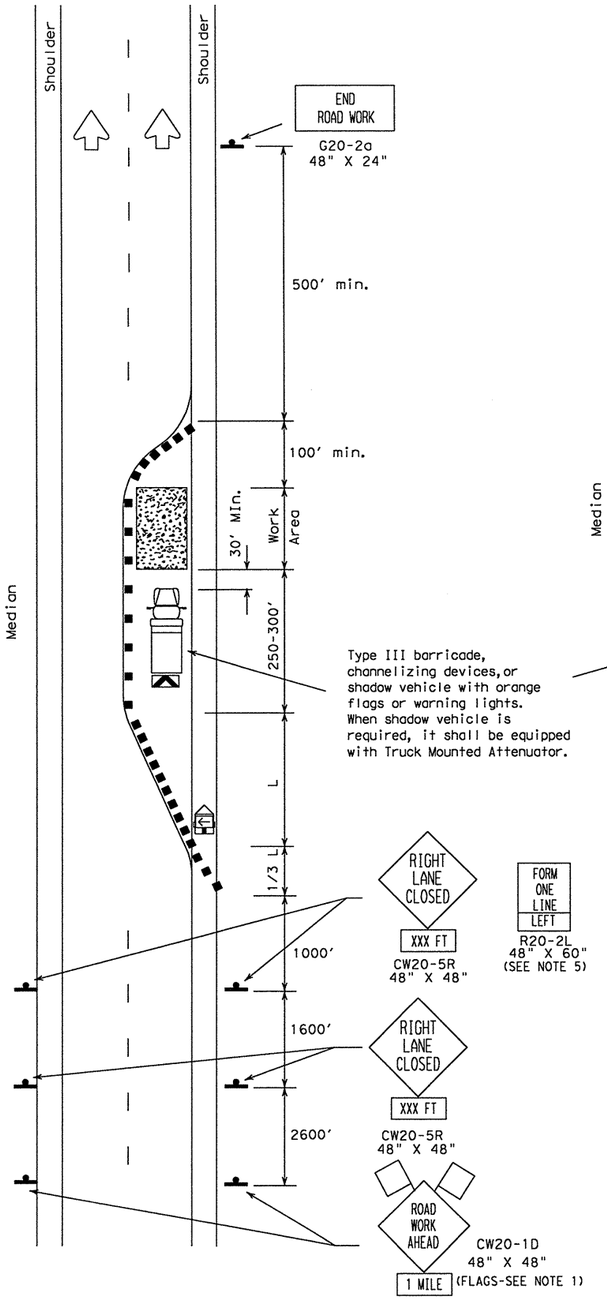

TCP (2-6a)
One Lane Closure

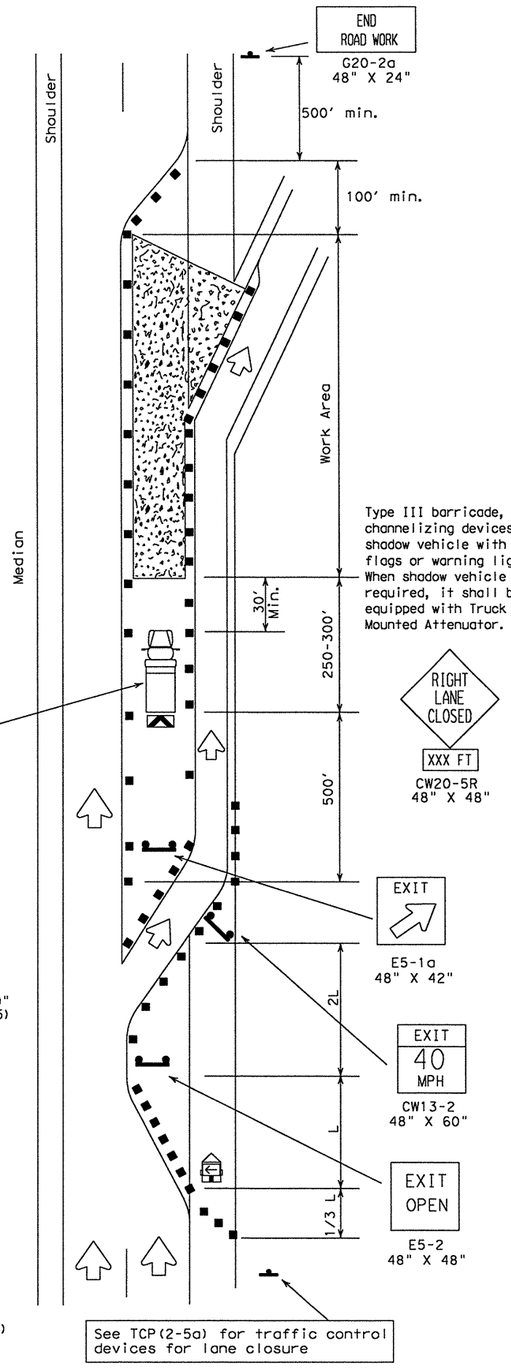

TCP (2-6b)
Lane Closure Near Exit Ramps

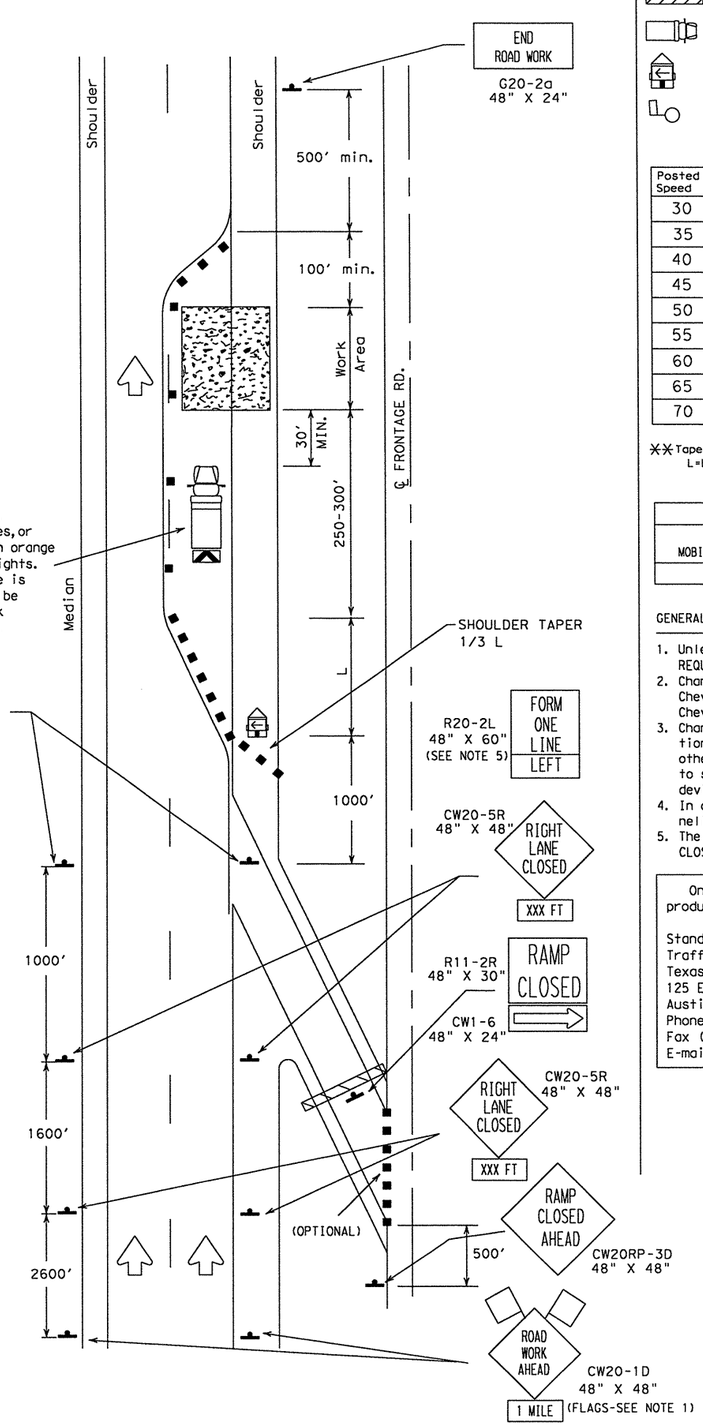

TCP (2-6c)
Lane Closure Near Entrance Ramps

Posted Speed	Formula	Minimum Desirable Taper Lengths ✱✱ 10' Offset	11' Offset	12' Offset	Suggested Maximum Spacing of Device On a Taper	On a Tangent
30	$L = \frac{WS^2}{60}$	150'	165'	180'	30'	60'-75'
35		205'	225'	245'	35'	70'-90'
40		265'	295'	320'	40'	80'-100'
45	L=WS	450'	495'	540'	45'	90'-110'
50		500'	550'	600'	50'	100'-125'
55		550'	605'	660'	55'	110'-140'
60		600'	660'	720'	60'	120'-150'
65		650'	715'	780'	65'	130'-165'
70		700'	770'	840'	70'	140'-175'

✱✱Taper lengths have been rounded off.
L=Length of Taper (FT.) W=Width of Offset (FT.) S=Posted Speed (MPH)

TYPICAL USAGE:				
MOBILE	SHORT DURATION	SHORT TERM STATIONARY	INTERMEDIATE TERM STATIONARY	LONG TERM STATIONARY
			✓	✓

GENERAL NOTES:

1. Unless otherwise stated in the plans, flags attached to signs are REQUIRED.
2. Channelizing devices used to close lanes may be supplemented with the Chevron Alignment Sign placed on every other channelizing device. Chevrons may be attached to plastic drums as per BC Standards.
3. Channelizing devices used along the work area or along tangent sections may be supplemented with vertical panels (VP) placed on every other channelizing device. If night time conditions make it difficult to see at least two VP's, the VP's may be placed on each channelizing device.
4. In areas with safety lighting or continuous illumination the channelizing devices can be supplemented with delineators.
5. The FORM ONE LINE LEFT sign may be used following the RIGHT LANE CLOSED sign.

Only pre-qualified products shall be used. A list of compliant products and their sources may be obtained by writing or faxing:

Standards Engineer
Traffic Operations Division - TE
Texas Department of Transportation
125 East 11th Street
Austin, Texas 78701-2483
Phone (512) 416-3335
Fax (512) 416-3161
E-mail TRF-STANDARD@mailgw.dot.state.tx.us

The requirement for shadow vehicles will be listed in the project GENERAL NOTES, Item 502, Barricades, Signs and Traffic Handling.

Texas Department of Transportation
Traffic Operations Division

TRAFFIC CONTROL PLAN

TCP(2-6)-98

© TxDOT December 1985

DN: TXDOT	CK: TXDOT	DW: TXDOT	CK: TXDOT

REVISIONS
2-94
8-95
1-97
4-98

CONT	SECT	JOB	HIGHWAY
2452	01	043	SH 151
DIST		COUNTY	SHEET NO.
SA		BEXAR	120

FILE:

DISCLAIMER: The use of this standard is governed by the "Texas Engineering Practice Act". No warranty of any kind is made by TxDOT for any purpose whatsoever. TxDOT assumes no responsibility for the conversion of this standard to other formats or for incorrect results or damages resulting from its use.

p:\4716DN0129.dgn 2/21/2011 5:40:07 PM mwmldkt11

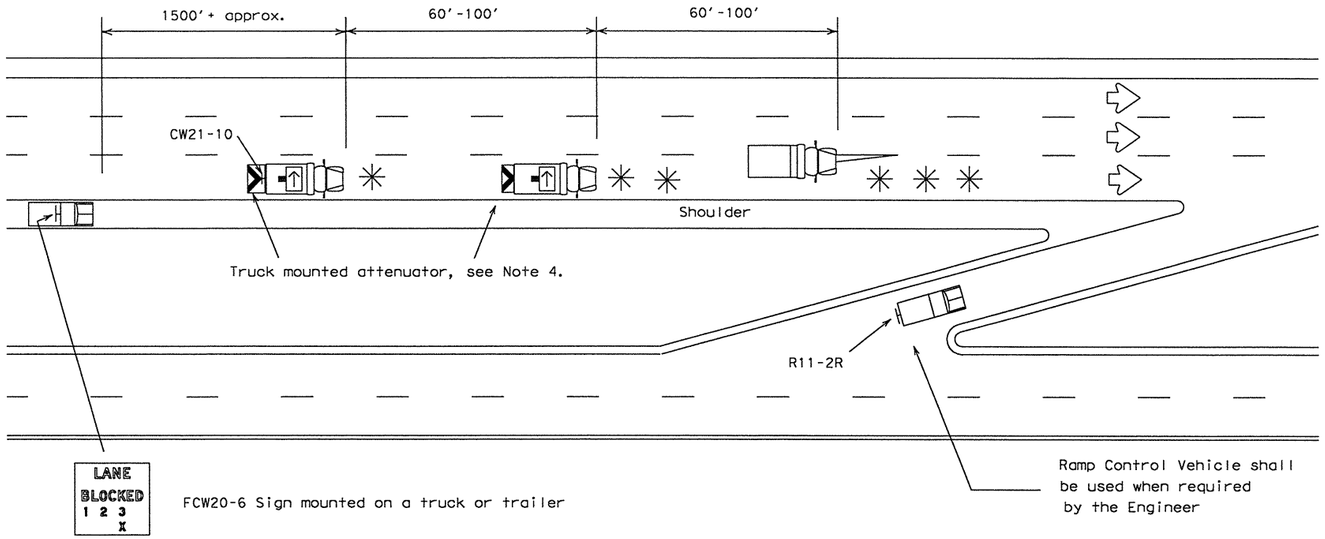

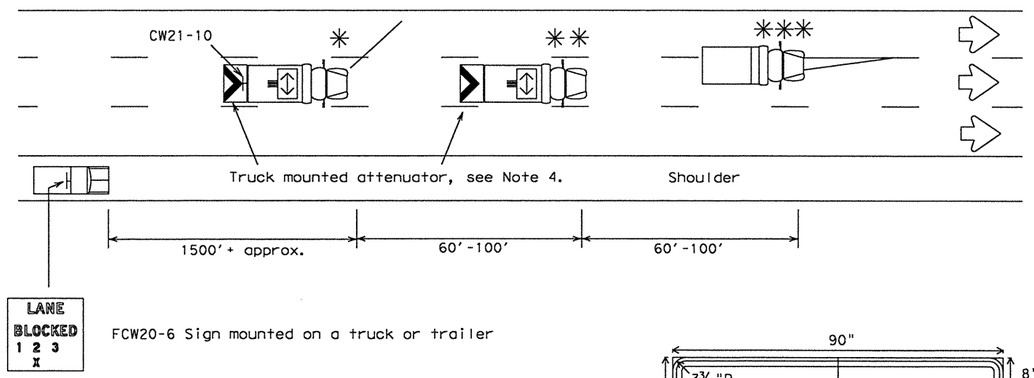

Shadow and trail vehicle shall be equipped with Truck Mounted Attenuator.

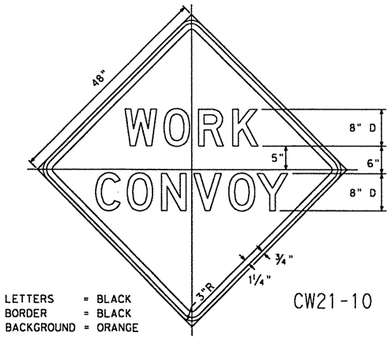

Legend:

- ✱ TRAIL VEHICLE
- ✱✱ SHADOW VEHICLE
- ✱✱✱ WORK VEHICLE
- Truck mounted attenuator
- HEAVY WORK VEHICLE

Arrow Panel Displays

- RIGHT Directional
- LEFT Directional
- RIGHT or LEFT Directional
- CAUTION mode

GENERAL NOTES:

1. TRAIL, SHADOW, LEAD, and work vehicles shall be equipped with arrow panels as illustrated. The Engineer will determine if the LEAD VEHICLE and/or TRAIL VEHICLE are required based on prevailing roadway conditions, traffic volume, and sight distance restrictions.
2. All traffic control devices shall be in accordance with the "Texas Manual on Uniform Traffic Control Devices" (TMUTCD), latest edition.
3. The use of yellow rotating beacons or strobe lights on vehicles are required unless otherwise stated elsewhere in the plans.
4. The use of truck mounted attenuators (TMA) on the SHADOW VEHICLE and the TRAIL VEHICLE are required.
5. Optional striping on the back panel of all truck mounted attenuators shall be 8" red and white reflective sheeting placed in an inverted "V" design. Reflective sheeting shall meet or exceed the reflectivity and color requirements of DEPARTMENTAL MATERIAL SPECIFICATION D-9-8300, TYPE C.
6. Flashing Arrow Panels shall be Type B or Type C as per BC Standards. The panel operation shall be controlled from inside the vehicle.
7. Each vehicle shall have two-way radio communication capability.
8. When work convoys must change lanes, the TRAIL VEHICLE should change lanes first to shadow the other convoy vehicles.
9. Vehicle spacing between TRAIL VEHICLE and SHADOW VEHICLE will vary depending on sight distance restrictions. Motorists approaching the work convoy should be able to see the TRAIL VEHICLE in time to slow down and/or change lanes as they approach the TRAIL VEHICLE.
10. The LANE BLOCKED sign (FCW20-6) shall be used on divided highways and may be mounted on a truck or trailer. For divided highways with two lanes in each direction, the RIGHT or LEFT LANE CLOSED sign (CW20-5, 48" x 48") may be substituted for the LANE BLOCKED sign (FCW20-6).

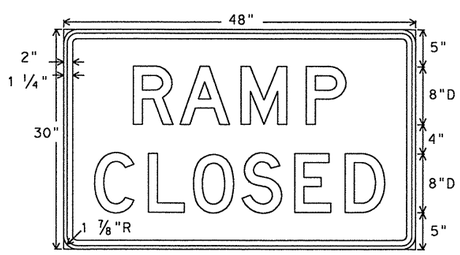

R11-2R

LETTERS = BLACK
BORDER = BLACK
BACKGROUND = WHITE

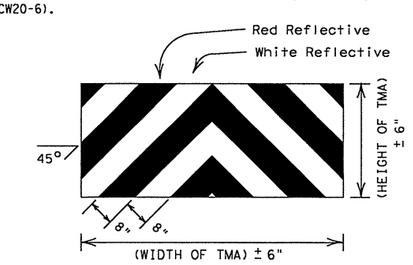

OPTIONAL STRIPING FOR TMA

STRIPING FOR TMA WILL BE REQUIRED ON ALL PROJECTS AWARDED AFTER JANUARY 1, 2000

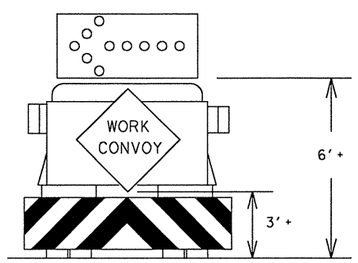

Typical Trail Vehicle with LEFT Directional display Flashing Arrow Panel

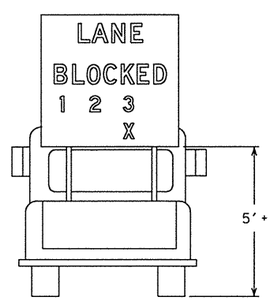

Typical Advance Warning Vehicle

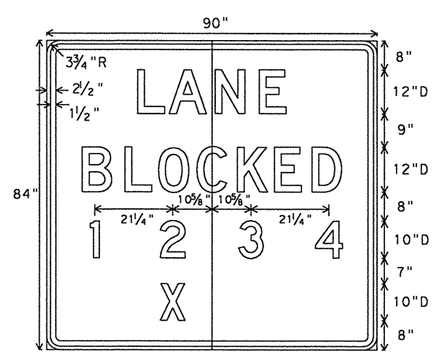

FCW20-6

LETTERS = BLACK
BORDER = BLACK
BACKGROUND = ORANGE

Only pre-qualified products shall be used. A list of compliant products and their sources may be obtained by writing or faxing:

Standards Engineer
Traffic Operations Division - TE
Texas Department of Transportation
125 East 11th Street
Austin, Texas 78701-2483
Phone (512) 416-3335
Fax (512) 416-3161
E-mail TRF-STANDARD@mailgw.dot.state.tx.us

Texas Department of Transportation
Traffic Operations Division

TRAFFIC CONTROL PLAN MOBILE OPERATIONS DIVIDED HIGHWAYS

TCP(3-2)-98

© TxDOT December 1985

REVISIONS
2-94
8-95
1-97
4-98

DN: TXDOT	CK: TXDOT	DW: TXDOT	CK: TXDOT

CONT	SECT	JOB	HIGHWAY
2452	01	043	SH 151
DIST		COUNTY	SHEET NO.
SA		BEXAR	121

p:\4760\0-0129.cad^ ^standard\5list_tcp14.dgn 2/21/2011 5:40:08 PM mwmldktt

DISCLAIMER: The use of this standard is governed by the "Texas Engineering Practice Act". No warranty of any kind is made by TxDOT for any purpose whatsoever. TxDOT assumes no responsibility for the conversion of this standard to other formats or for incorrect results or damages resulting from its use.

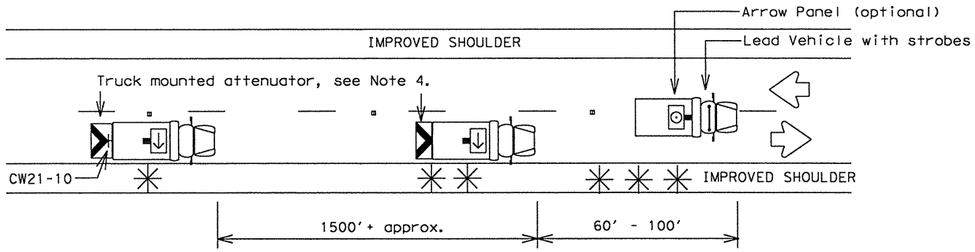

Two Lane Highway With Paved Shoulders (work on travel lane)

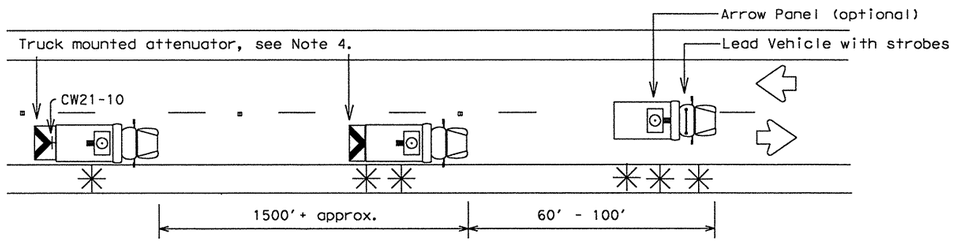

Two Lane Highway Without Paved Shoulders (work on travel lane)

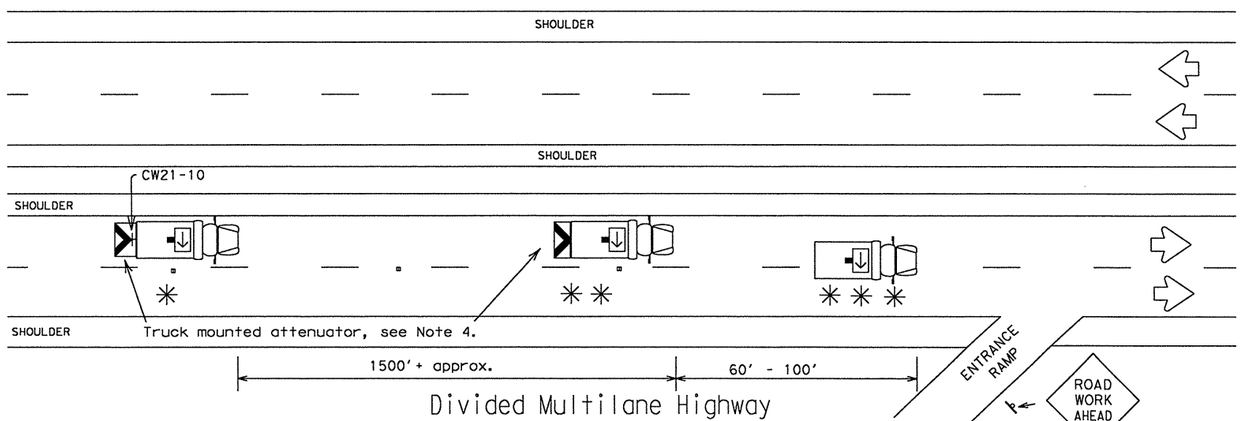

Divided Multilane Highway

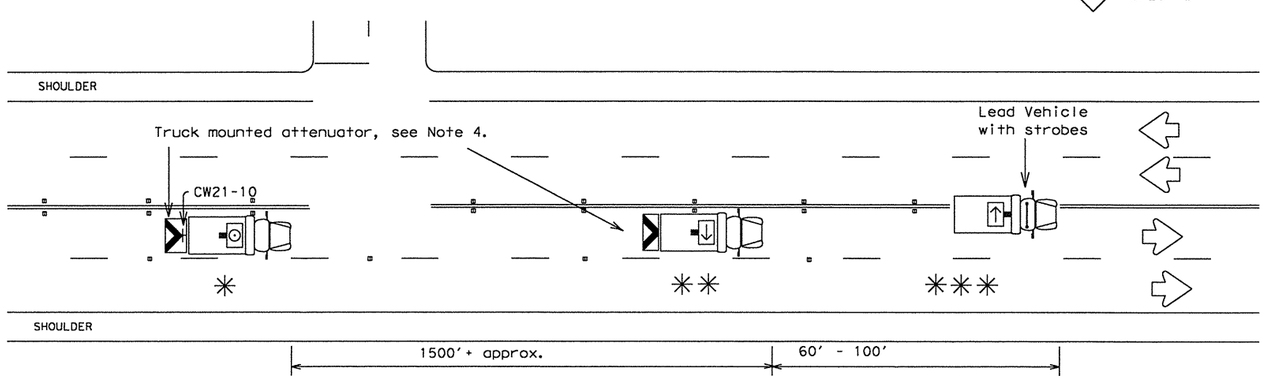

Undivided Multilane Highway

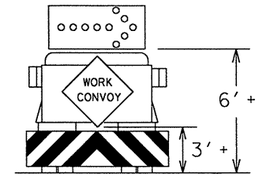

TYPICAL TRAIL VEHICLE
RIGHT Directional display
Flashing Arrow Panel

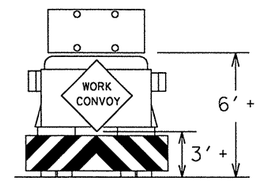

TYPICAL TRAIL VEHICLE
with (four corner flash)
CAUTION display
Flashing Arrow Panel

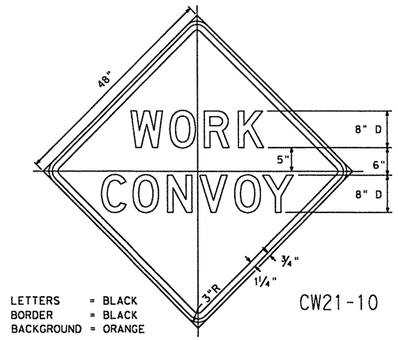

Legend:

- ✱ TRAIL VEHICLE
- ✱✱ SHADOW VEHICLE
- ✱✱✱ WORK VEHICLE
- Truck mounted attenuator
- HEAVY WORK VEHICLE

Arrow Panel Displays

- RIGHT Directional
- LEFT Directional
- RIGHT or LEFT Directional
- CAUTION mode

GENERAL NOTES:

1. TRAIL, SHADOW, LEAD, and work vehicles shall be equipped with arrow panels as illustrated. The Engineer will determine if the LEAD VEHICLE and/or TRAIL VEHICLE are required based on prevailing roadway conditions, traffic volume, and sight distance restrictions.
2. All traffic control devices shall be in accordance with the "Texas Manual on Uniform Traffic Control Devices" (TMUTCD), latest edition.
3. The use of yellow rotating beacons or strobe lights on vehicles are required unless otherwise stated elsewhere in the plans.
4. The use of truck mounted attenuators (TMA) on the SHADOW VEHICLE and the TRAIL VEHICLE are required.
5. Optional striping on the back panel of all truck mounted attenuators shall be 8" red and white reflective sheeting placed in an inverted "V" design. Reflective sheeting shall meet or exceed the reflectivity and color requirements of DEPARTMENTAL MATERIAL SPECIFICATION D-9-8300, TYPE C.
6. Flashing Arrow Panels shall be Type B or Type C as per BC Standards. The panel operation shall be controlled from inside the vehicle.
7. Each vehicle shall have two-way radio communication capability.
8. When work convoys must change lanes, the TRAIL VEHICLE should change lanes first to shadow the other convoy vehicles.
9. Vehicle spacing between TRAIL VEHICLE and SHADOW VEHICLE will vary depending on sight distance restrictions. Motorists approaching the work convoy should be able to see the TRAIL VEHICLE in time to slow down and/or change lanes as they approach the TRAIL VEHICLE.

Only pre-qualified products shall be used. A list of compliant products and their sources may be obtained by writing or faxing:

Standards Engineer
Traffic Operations Division - TE
Texas Department of Transportation
125 East 11th Street
Austin, Texas 78701-2483
Phone (512) 416-3335
Fax (512) 416-3161
E-mail TRF-STANDARD@mailgw.dot.state.tx.us

Shadow and trail vehicle shall be equipped with Truck Mounted Attenuator.

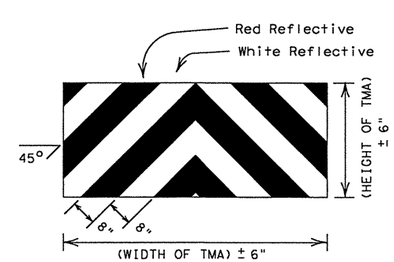

OPTIONAL STRIPING FOR TMA

STRIPING FOR TMA WILL BE REQUIRED ON ALL PROJECTS AWARDED AFTER JANUARY 1, 2000

Texas Department of Transportation
Traffic Operations Division

TRAFFIC CONTROL PLAN MOBILE OPERATIONS RAISED PAVEMENT MARKER INSTALLATION

TCP(3-3)-98

© TxDOT September 1987

DN: TXDOT	CK: TXDOT	DW: TXDOT	CK: TXDOT

REVISIONS: 2-94, 8-95, 1-97, 4-98

CONT	SECT	JOB	HIGHWAY
2452	01	043	SH 151
DIST		COUNTY	SHEET NO.
SA		BEXAR	122

DISCLAIMER: The use of this standard is governed by the "Texas Engineering Practice Act". No warranty of any kind is made by TxDOT for any purpose whatsoever. TxDOT assumes no responsibility for the conversion of this standard to other formats or for incorrect results or damages resulting from its use.

p:\4760\0\0129.cad \standard\5field_top23.dgn 2/21/2011 5:40:09 PM mwmldd11

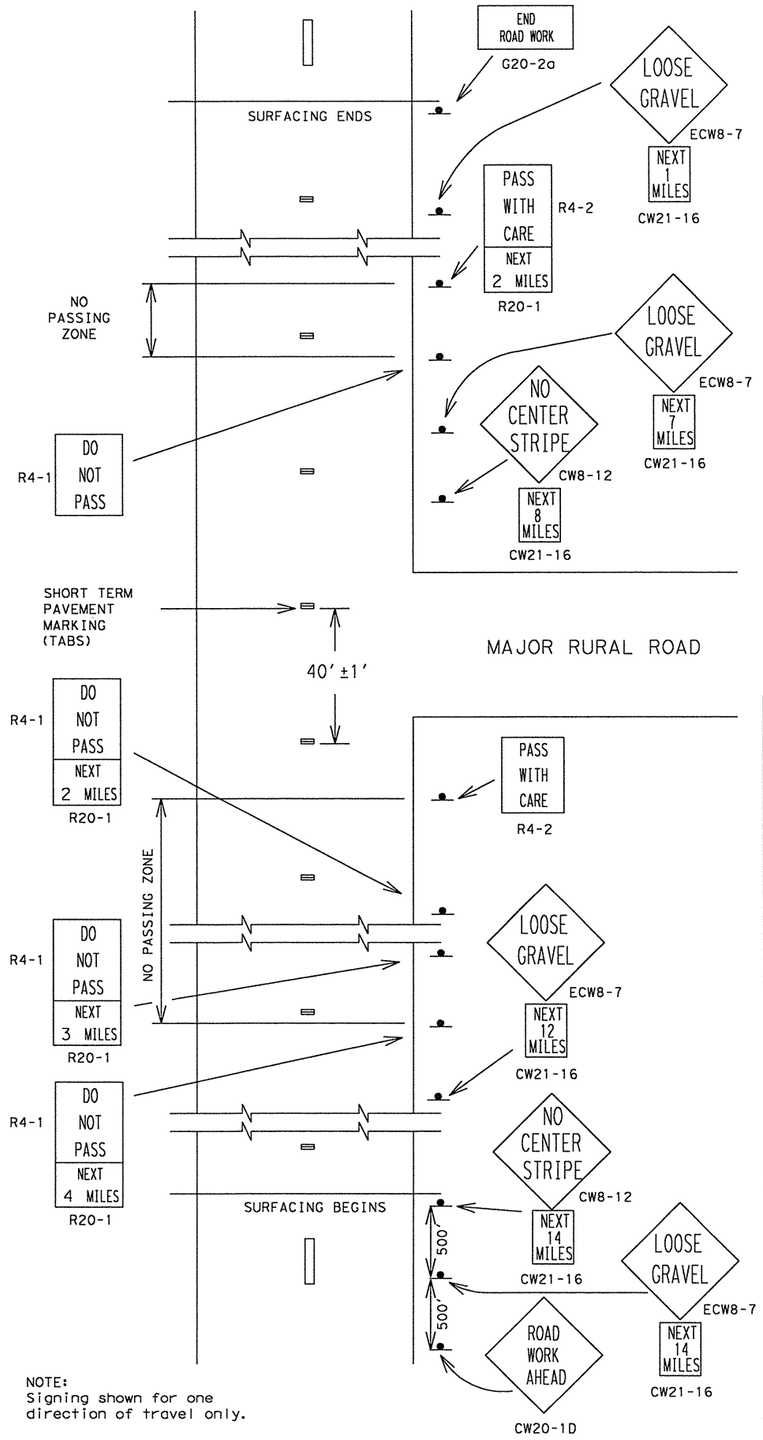

NOTE:
Signing shown for one direction of travel only.

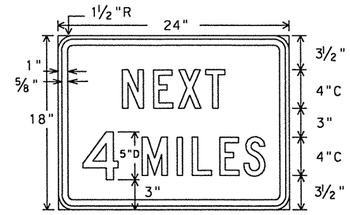

R20-1
24"x18"

Legend - Black
Border - Black
Background - White Refl.

FOR USE WITH REGULATORY SIGNS ONLY

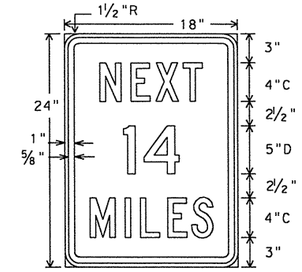

CW21-16
18"x24"

Legend - Black
Border - Black
Background - Orange Refl.

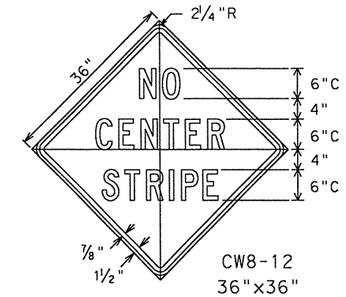

CW8-12
36"x36"

Legend - Black
Border - Black
Background - Orange Refl.

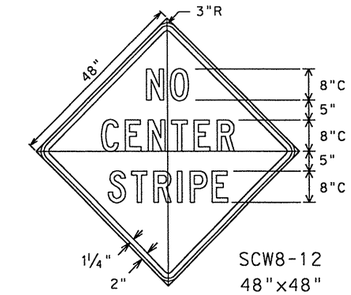

SCW8-12
48"x48"

Legend - Black
Border - Black
Background - Orange Refl.

FOR USE WITH CONSTRUCTION WARNING SIGNS ONLY

TEMPORARY FLEXIBLE-REFLECTIVE ROADWAY MARKER TABS

for surfacing projects only

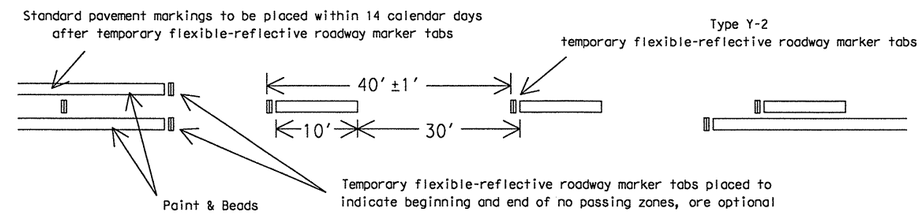

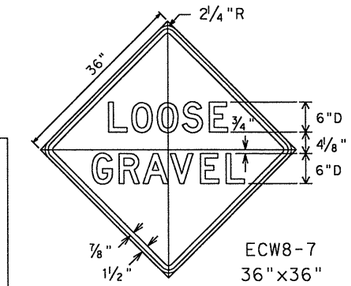

ECW8-7
36"x36"

Legend - Black
Border - Black
Background - Orange Refl.

GENERAL NOTES

The traffic control devices detailed on this sheet will be furnished and erected as directed by the Engineer on sections of roadway where the surfacing operation has covered or obliterated existing pavement markings. These traffic control devices are to be used to supplement those required by BC Standards.

"DO NOT PASS" SIGN (R4-1) and NO-PASSING ZONES

Prior to the beginning of construction, all currently striped no-passing zones should be signed with the DO NOT PASS sign (R4-1) and PASS WITH CARE sign (R4-2) placed at the beginning and end of each zone for each direction of travel except as otherwise provided herein. Signs marking these individual no-passing zones need not be covered prior to construction if the signs supplement the existing pavement markings.

At the discretion of the Engineer, in areas of numerous no-passing zones, several zones may be combined and signed as a single zone. If passing is to be prohibited over one or more lengthy sections, a DO NOT PASS sign and a NEXT XX MILES sign (R20-1) may be used at the beginning of such zones. The DO NOT PASS and NEXT XX MILES signs should be repeated every mile to the end of the no-passing zone. In areas where there is considerable distance between no-passing zones, the end of a no-passing zone may be signed with a PASS WITH CARE and NEXT XX MILES sign.

Depending on traffic volumes and length of sections, it may be desirable to prohibit passing throughout the project to prevent damage to windshields and lights. The DO NOT PASS and NEXT XX MILES sign should be used and repeated as often as necessary for this purpose. Where several existing zones are to be combined into one individual no-passing zone, the sign at the beginning of the zone should be covered until the surfacing operation has passed this location so as not to have the DO NOT PASS sign conflict with existing pavement markings. Also, unless one days operation completes the entire length of such combined zones, care must be taken to place DO NOT PASS and PASS WITH CARE signs in order to sign the beginning and end of the no-passing zones in the area where the surfacing operation has stopped for the day.

R4-1 and R4-2 signs should be mounted on fixed supports as detailed on BC Standards. These signs are to remain in place until standard pavement markings are placed.

"NO CENTER STRIPE" SIGN (CW21-15)

At the time construction activity obliterates the existing centerline (low volume roads may not have an existing centerline), a NO CENTER STRIPE sign (CW8-12) should be erected at each end of the work area and just beyond major rural intersections and other location deemed necessary by the Engineer. Where possible, the signs erected at each end of the work area should be located in such a manner that drivers can read the sign and immediately see the change to no centerline. The NO CENTER STRIPE sign should be supplemented with the NEXT XX MILES sign (CW21-16) mounted below it.

The NO CENTER STRIPE sign should be erected as detailed on BC Standards. These signs are to remain in place until standard pavement markings are placed.

"LOOSE GRAVEL" SIGN (ECW8-7)

When construction begins, a LOOSE GRAVEL sign (ECW8-7) should be erected at each end of the work area and repeated at intervals of approximately two (2) miles in rural areas and closer in urban areas. The LOOSE GRAVEL sign should be supplemented with the NEXT XX MILES sign (CW21-16) mounted below it.

The LOOSE GRAVEL sign should be erected as detailed on BC Standards. They should remain in place until the loose gravel condition no longer exists.

PAVEMENT MARKINGS

Short term pavement markings for surfacing projects shall use Temporary Flexible-Reflective Roadway Marker Tabs. Tabs are to be installed to provide true alignment for striping crews or as directed by the Engineer. Tabs will be placed at the spacing indicated. Tabs should be applied to the pavement no more than two (2) days before the surfacing is applied. After the surfacing is rolled and swept the cover over the reflective strip shall be removed. Tabs shall NOT be used to simulate edge lines.

Only pre-qualified products shall be used. A list of compliant products and their sources may be obtained by writing or faxing:

Standards Engineer
Traffic Operations Division - TE
Texas Department of Transportation
125 East 11th Street
Austin, Texas 78701-2483
Phone (512) 416-3335
Fax (512) 416-3161
E-mail TRF-STANDARD@mailgw.dot.state.tx.us

TYPICAL USAGE:				
MOBILE	SHORT DURATION	SHORT TERM STATIONARY	INTERMEDIATE TERM STATIONARY	LONG TERM STATIONARY
	✓	✓	✓	✓

Texas Department of Transportation
Traffic Operations Division

TRAFFIC CONTROL DETAILS for SURFACING OPERATIONS

TCP(7-1)-98

©TxDOT March 1991

REVISIONS	DN: TXDOT	CK: TXDOT	DW: TXDOT	CK: TXDOT
4-92	CONT	SECT	JOB	HIGHWAY
1-97	2452	01	043	SH 151
4-98	DIST		COUNTY	SHEET NO.
	SA		BEXAR	123

DISCLAIMER: The use of this standard is governed by the "Texas Engineering Practice Act". No warranty of any kind is made by TxDOT for any purpose whatsoever. TxDOT assumes no responsibility for the conversion of this standard to other formats or for incorrect results or damages resulting from its use.

dn:416DVD-0129cad ~standardV5field_tcp15.dgn 2/21/2011 5:40:09 PM mwmldk11

Divided Highway

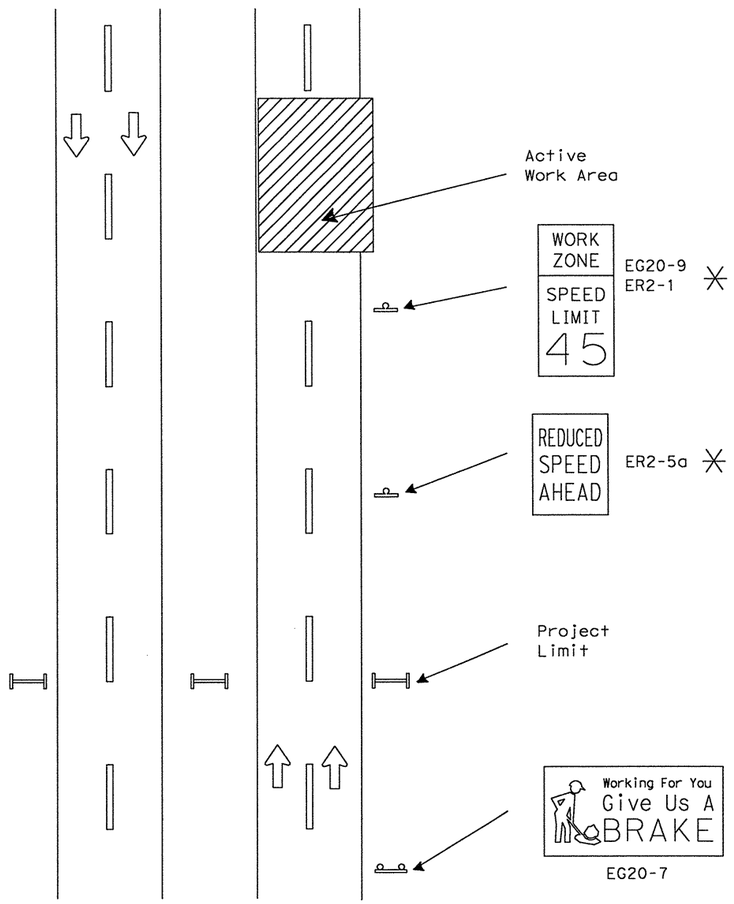

Undivided Highway

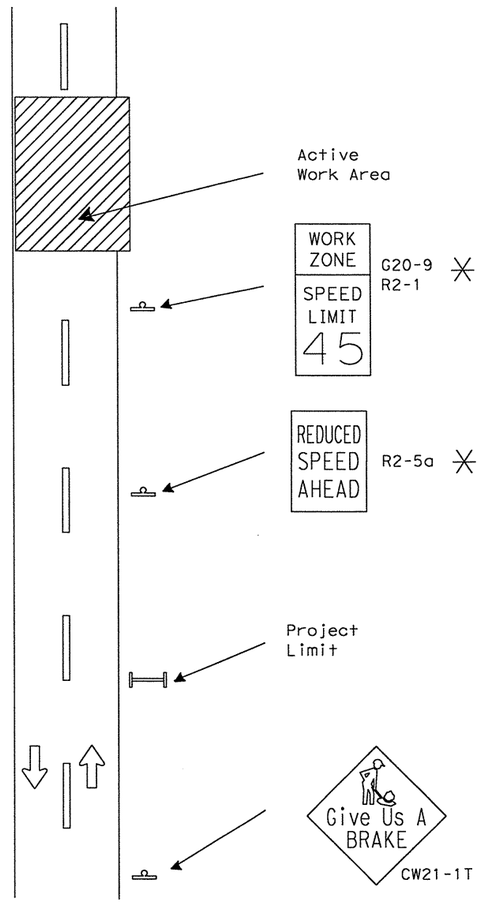

SIGNS ARE SHOWN FOR ONE DIRECTION OF TRAVEL

✳ Posted only when reduced speed is directed by the Engineer

SUMMARY OF LARGE SIGNS

BACKGROUND COLOR	SIGN DESIGNATION	SIGN TEXT	SIGN DIMENSIONS	REFLECTIVE SHEETING	PLY TY A (SQ FT)	GALVANIZED STRUCT STEEL Size	(LF) ①	(LF) ②	DRILLED SHAFT 24" DIA. (LF)
Orange	EG20-7	Give Us A BRAKE	16' x 8'	Type E	128	W8x18	16	17	12
Orange	G20-7	Give Us A BRAKE	8' x 4'	Type E	32	S4x7.7	12	13	7✳

✳ 12" Non-reinforced Concrete Footing (LF)

SUMMARY OF SMALL SIGNS

BACKGROUND COLOR	SIGN DESIGNATION	SIGN TEXT	SIGN DIMENSIONS	REFLECTIVE SHEETING	PLY TY A (SQ FT)
Orange	EG20-9	WORK ZONE	36" x 24"	Type E	6
Orange	G20-9	WORK ZONE	24" x 18"	Type E	3
White	ER2-1	SPEED LIMIT	36" x 48"	Type C	12
White	ER2-5a	REDUCED SPEED AHEAD	36" x 48"	Type C	12
Orange	CW21-1T	GIVE US A BRAKE	48" x 48"	Type E	16

DEPARTMENTAL MATERIAL SPECIFICATIONS

PLYWOOD SIGN BLANKS	DMS-7100
ALUMINUM SIGN BLANKS	DMS-7110
FLAT SURFACE REFLECTIVE SHEETING	DMS-8300
VINYL NON-REFLECTIVE SHEETING	DMS-8320

COLOR	USAGE	SHEETING MATERIAL
WHITE	BACKBROUND	TYPE C (HIGH SPECIFIC INTENSITY)
ORANGE	BACKGROUND	TYPE E (FLUORESCENT PRISMATIC)
BLACK	LEGEND & BORDERS	VINYL NON-REFLECTIVE SHEETING

GENERAL NOTES:

1. See BC and SMD sheets for additional sign support details.
2. Sign locations shall be approved by the Engineer.
3. For projects more than two miles in length, Give Us a BRAKE and WORK ZONE SPEED LIMIT signs should be repeated halfway through the project.
4. The WORK ZONE (G20-9) sign is to be installed in combination with a SPEED LIMIT (R2-1) sign.
5. Speed limits shall be regulatory and approved by the Transportation Commission.
6. EG20-9, G20-9, ER2-1, R2-1, ER2-5a, R2-5a and CW21-1T signs and supports shall be considered subsidiary to Item 502, "Barricades, Signs and Traffic Handling."
7. G20-7 and EG20-7 signs shall be paid for under the following bid items:
   - Item 634 Plywood Signs Type A
   - Item 647 Large Roadside Sign Supports
   - Item 656 Foundations for Signs, Traffic Signals and Roadway Ill. Assem.
8. All signs shall be constructed in accordance with the details found in the "Standard Highway Sign Designs for Texas," latest edition. Sign details not shown in this manual shall be shown in the plans or the Engineer shall provide a detail to the Contractor before the sign is manufactured.

Texas Department of Transportation
Traffic Operations Division

WORK ZONE "GIVE US A BRAKE" SIGNS

WZ(BRK)-03

© TxDOT August 1995

DN: TXDOT	CK: TXDOT	DW: TXDOT	CK: TXDOT

REVISIONS: 6-96, 8-96, 5-98, 3-03

CONT	SECT	JOB	HIGHWAY
2452	01	043	SH 151

DIST	COUNTY	SHEET NO.
SA	BEXAR	124

DISCLAIMER: The use of this standard is governed by the "Texas Engineering Practice Act". No warranty of any kind is made by TxDOT for any purpose whatsoever. TxDOT assumes no responsibility for the conversion of this standard to other formats or for incorrect results or damages resulting from its use.

pk4f160\0-0129.cae \\standard\US1std_tpl6.dgn 2/21/2011 5:40:10 PM mwmldlff1

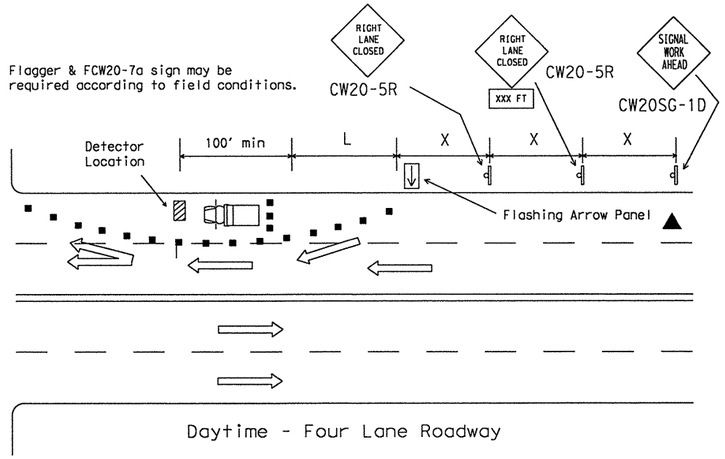

Daytime - Four Lane Roadway

Posted Speed	Formula	Minimum Desirable Taper Lengths ** 10' Offset	11' Offset	12' Offset	Suggested Maximum Spacing of Device On a Taper	On a Tangent	Minimum Sign Spacing X Distance
30	$L = \frac{WS^2}{60}$	150'	165'	180'	30'	60'-75'	120'
35		205'	225'	245'	35'	70'-90'	160'
40		265'	295'	320'	40'	80'-100'	240'
45	L=WS	450'	495'	540'	45'	90'-110'	320'
50		500'	550'	600'	50'	100'-125'	400'
55		550'	605'	660'	55'	110'-140'	500'
60		600'	660'	720'	60'	120'-150'	600'
65		650'	715'	780'	65'	130'-165'	700'
70		700'	770'	840'	70'	140'-175'	800'
75		750'	825'	900'	75'	150'-185'	900'

** Taper lengths have been rounded off.
L=Length of Taper (FT.) W=Width of Offset (FT.) S=Posted Speed (MPH)

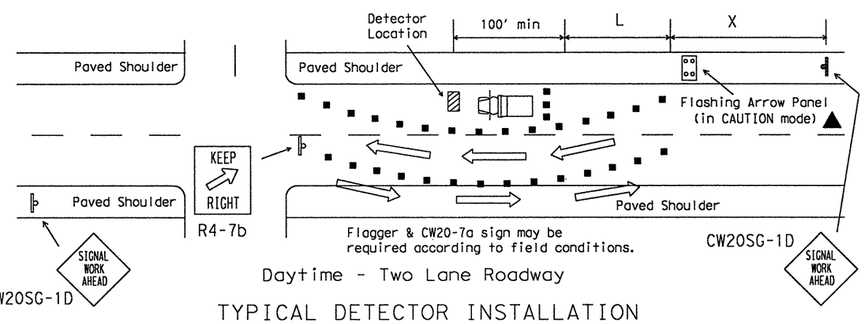

Daytime - Two Lane Roadway

TYPICAL DETECTOR INSTALLATION

OR OTHER WORK OPERATIONS THAT ARE SHORT TERM OR SHORT DURATION

Nighttime Channelizing Devices shall be reflectorized.

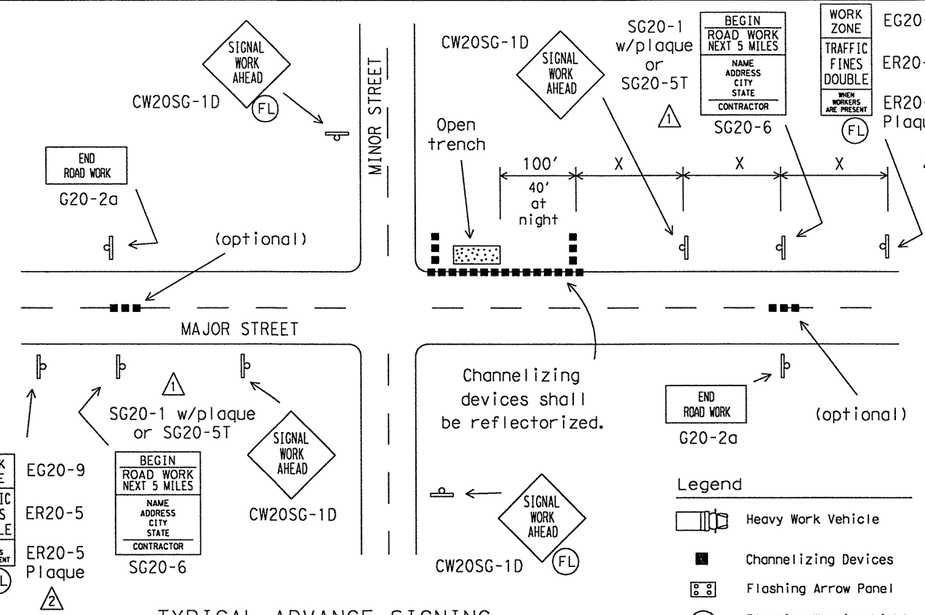

TYPICAL ADVANCE SIGNING

FOR LONG TERM and INTERMEDIATE-TERM STATIONARY WORK OPERATIONS

Observe Warning Signs State Law (R20-3) shall be required.
See BC(2).
Location will be as directed by the Engineer.

▲ The arrow panel may be omitted when stated elsewhere in the plans.

1. Typical channelizing device is the 28" cone.
2. Plastic drums or vertical panels may be used if approved by the Engineer.
3. For several closely adjoining projects, advance signing may not be required in advance of each intersection, but only in advance of the intersections at the project limits.
4. See details elsewhere in the plans for advance signing requirements.
5. Advance signs shall be in place when signal construction operations are in progress.
6. The contractor shall remove advance signs when no construction operations are underway.
7. Obstructions or hazards at the work area shall be clearly marked and delineated at all times.
8. All holes, trenches or other hazardous areas shall be adequately protected by lights or other protective devices.
9. Trenches shall be covered or surrounded with orange plastic construction fence as directed by the Engineer.
10. Flagger and FCW20-7a sign may be required according to field conditions.
11. Vehicles parked in roadway shall be equipped with two strobes.
12. High level flags at corners of vehicle may also be used.
13. Work operations that require work vehicle in traveled way 20 minutes or less may use cones, high level flags and strobes as advance warning devices.
14. Cones should only be placed around vehicle.
15. Flaggers may be used on high speed rural intersections.

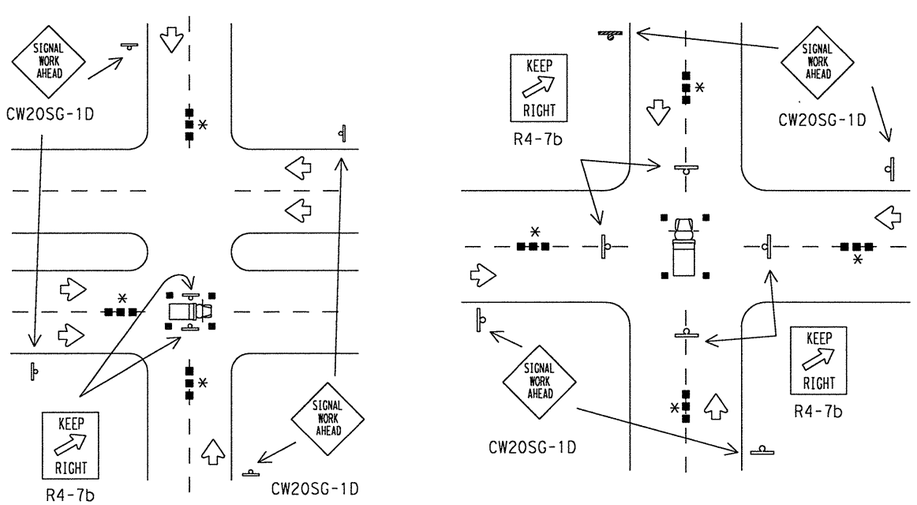

TYPICAL HANGING SIGNAL INSTALLATIONS

OR OTHER WORK OPERATIONS THAT ARE SHORT TERM OR SHORT DURATION

* Advance warning channelizing devices are optional.

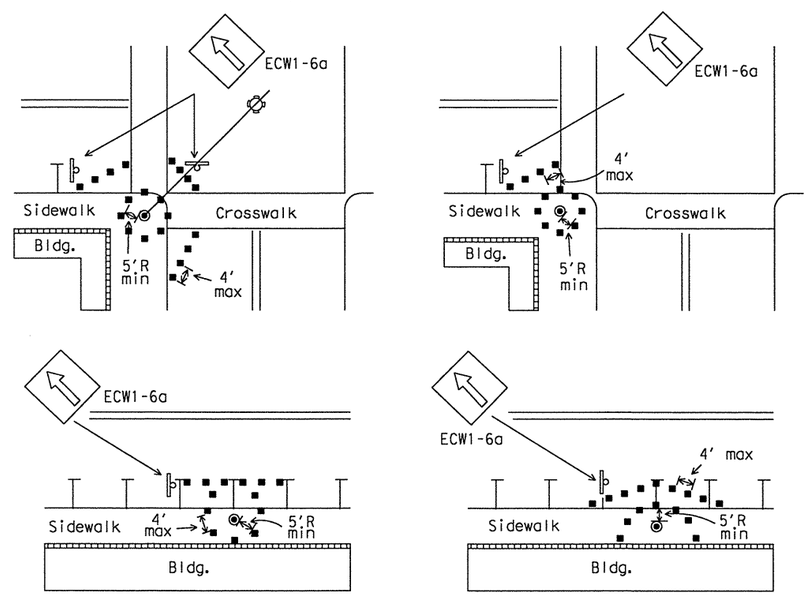

Channelizing devices should not be placed closer than 5 foot radius (minimum) to signal poles.
Parking may be eliminated by placing channelizing devices in spaces.
If pedestrian walkways are blocked, refer to the Texas Manual on Uniform Traffic Control Devices (TMUTCD) Part 6.

TYPICAL RESTRICTED PEDESTRIAN MOVEMENTS

FOR ALL WORK OPERATIONS REGARDLESS OF WORK DURATION

Texas Department of Transportation
Traffic Operations Division

TRAFFIC SIGNAL INSTALLATION TYPICAL DETAILS

SHEET 1 OF 2 WZ(BTS-1)-03

©TxDOT April 1992

DN: TXDOT	CK: TXDOT	DW: TXDOT	CK: TXDOT

REVISIONS
2-98
4-98
10-99
3-03

CONT	SECT	JOB	HIGHWAY
2452	01	043	SH 151
DIST		COUNTY	SHEET NO.
SA		BEXAR	125

DISCLAIMER: The use of this standard is governed by the "Texas Engineering Practice Act". No warranty of any kind is made by TxDOT for any purpose whatsoever. TxDOT assumes no responsibility for the conversion of this standard to other formats or for incorrect results or damages resulting from its use.

"ABOVE LANE" WORK PERFORMED BY BUCKET TRUCK

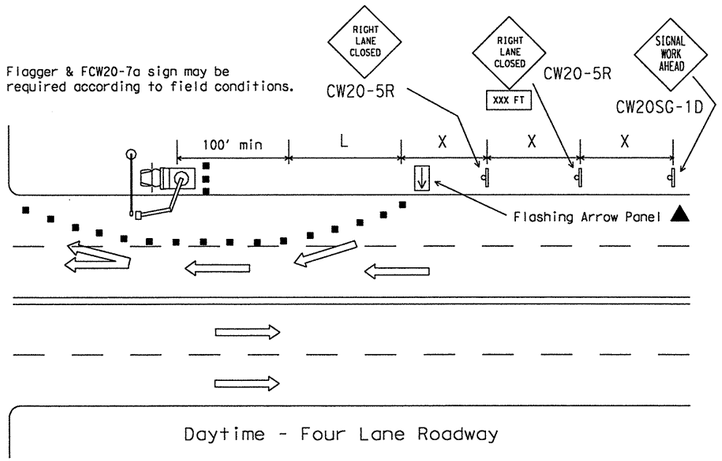

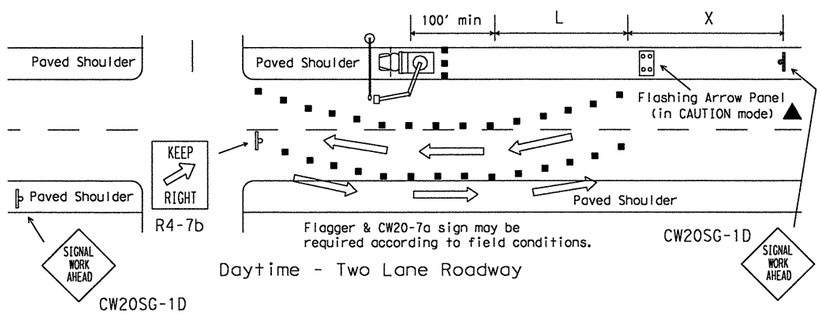

▲ The arrow panel may be omitted when stated elsewhere in the plans.

"ABOVE TRUCK" WORK PERFORMED BY BUCKET TRUCK

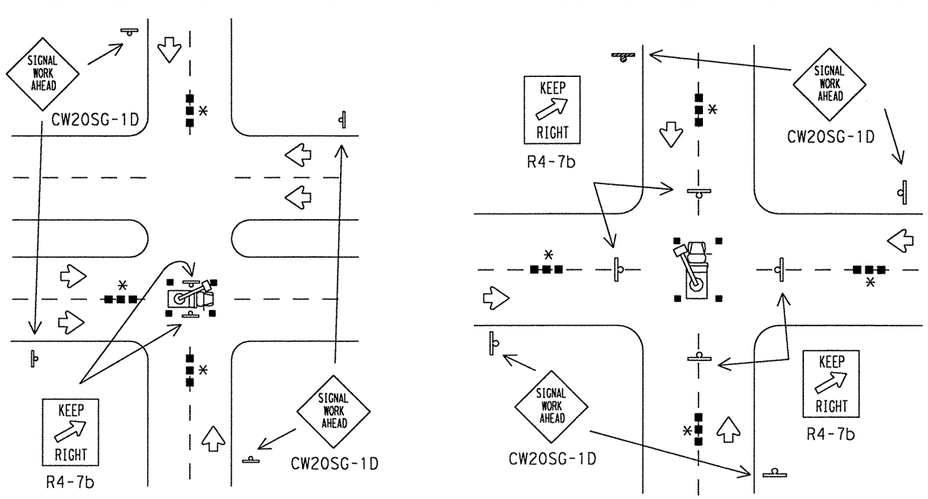

GENERAL NOTES FOR WORK ZONE SIGNS

1. Contractor shall install and maintain signs in a straight and plumb condition and/or as directed by the Engineer.
2. Wooden sign posts shall be painted white.
3. Barricades shall NOT be used as sign supports.
4. Nails shall NOT be used to attach signs to any support.
5. All signs shall be installed in accordance with the plans or as directed by the Engineer. Signs shall be used to regulate, warn, and guide the traveling public safely through the work zone.
6. The Contractor may furnish either the sign design shown in the plans or in the "Standard Highway Sign Designs for Texas" (SHSD). The Engineer/Inspector may require the Contractor to furnish other work zone signs that are shown in the "Texas Manual on Uniform Traffic Control Devices" (TMUTCD) but may have been omitted from the plans. Any variation in the plans shall be documented by written agreement between the Engineer and the Contractor's Responsible Person. All changes must be documented in writing before being implemented. This can include documenting the changes in the Inspector's TxDOT diary and having both the Inspector and Contractor initial and date the agreed upon changes. The additional signs requested by the Engineer/Inspector shall not be subsidiary.
7. The Contractor shall furnish sign supports listed in the "Compliant Work Zone Traffic Control Device List" (CWZTCD). The Contractor shall install the sign support in accordance with the manufacturer's recommendations. If there is a question regarding installation procedures, the Contractor shall furnish the Engineer a copy of the manufacturer's installation recommendations so that the Engineer can verify the correct procedures are being followed.
8. The contractor is responsible for sign installations and replacing signs with damaged or cracked substrates and/or damaged or marred reflective sheeting as directed by the Engineer/Inspector.
9. Identification markings may be shown only on the back of the sign substrate. The maximum height of letters and/or company logos used for identification shall be 1".
10. The Contractor shall replace damaged wood posts. New or damaged wood sign posts shall not be spliced.

Duration of Work (as defined by the TMUTCD Part 6)

The types of sign supports, the size of signs, and the type of sign substrates can vary based on the type of work being performed. The Engineer is responsible for selecting the appropriate size sign for the type of work being performed. The Contractor is responsible for ensuring that the sign support and substrate meets crashworthiness and length of work requirements.

a. Long-term stationary is work that occupies a location more than 3 days.
b. Intermediate-term stationary is work that occupies a location more than one daylight period up to 3 days, or nighttime work lasting more than 1 hour.
c. Short-term stationary is daytime work that occupies a location for more than 1 hour, but less than 12 hours.
d. Short duration is work that occupies a location up to 1 hour.
e. Mobile is work that moves intermittently or continuously.

SIGN MOUNTING HEIGHT

1. The bottom of Long-term/Intermediate-term signs shall be at least 7 feet, but not more than 9 feet, above the paved surface.
2. The bottom of Short-term/Short Duration signs shall be a minimum of 1 foot above the pavement surface but no more than 2 feet above the ground.
3. Long-term/Intermediate-term Signs may be used in lieu of Short-term/Short Duration signing.
4. Short-term/Short Duration signs shall be used only during daylight and shall be removed at the end of the workday.
5. Regulatory signs shall be mounted at least 7 feet, but not more than 9 feet, above the paved surface regardless of work duration.

REMOVING OR COVERING

1. When sign messages may be confusing or do not apply, the signs shall be removed or completely covered.
2. Long-term stationary or intermediate stationary signs installed on square metal tubing may be turned away from traffic 90 degrees when the sign message is not applicable. This type of sign support meets the crashworthiness standards regardless of the direction of impact. This technique may not be used for signs installed in the median of divided highways or near any intersections where the sign may be seen from approaching traffic.
3. Signs installed on skids shall not be turned at 90 degree angles to the roadway. These signs should be removed or completely covered when not required.
4. When signs are covered, the material used shall be opaque, such as heavy mil black plastic.
5. Burlap shall NOT be used to cover signs.
6. Duct tape or other adhesive material shall NOT be affixed to a sign face. These materials can damage the retroreflectivity of sign sheeting.
7. Signs shall be removed upon completion of the work.

SIGN SUPPORT WEIGHTS

1. Where sign supports require the use of weights to keep from turning over, the use of sandbags with dry, cohesionless sand is recommended.
2. The sandbags will be tied shut to keep the sand from spilling and to maintain a constant weight.
3. Rock, concrete, iron, steel or other solid objects will not be permitted for use as sign support weights.
4. Sandbags should weigh a minimum of 35 lbs and a maximum of 50 lbs.
5. Sandbags shall be made of a durable material that tears upon vehicular impact.
6. Rubber (such as tire inner tubes) shall NOT be used for sandbags.
7. Rubber ballasts (such as those used with cones or edgeline channelizers) shall NOT be used as sign support weights.
8. Sandbags shall only be placed along or laid over the base supports of the traffic control device and shall not be suspended above ground level or hung with rope, wire, chains or other fasteners. Sandbags shall be placed along the length of the skids to weigh down the sign support.
9. Sandbags shall NOT be placed under the skid and shall not be used to level sign supports placed on slopes.

Only pre-qualified products shall be used. A copy of the "Compliant Work Zone Traffic Control Devices List" (CWZTCD) describes pre-qualified products and their sources and may be obtained by contacting:

Standards Engineer
Traffic Operations Division - TE
Texas Department of Transportation
125 East 11th Street
Austin, Texas 78701-2483
Phone (512) 416-3120
Fax (512) 416-3299

Instructions to locate the "CWZTCD" on TxDOT website are:

Start at website - www.dot.state.tx.us
Click on "About TxDOT",
Click on "Organizational Chart",
Click on Traffic Operations Box,
Click on "Compliant Work Zone Traffic Control Devices",
Click on "View PDF".
This site is printable.

DEPARTMENTAL MATERIAL SPECIFICATIONS

PLYWOOD SIGN BLANKS	DMS-7100
ALUMINUM SIGN BLANKS	DMS-7110
FLAT SURFACE REFLECTIVE SHEETING	DMS-8300
FLEXIBLE ROLL-UP REFLECTIVE SIGNS	DMS-8310
VINYL NON-REFLECTIVE SHEETING	DMS-8320

COLOR	USAGE	SHEETING MATERIAL
ORANGE	BACKGROUND	TYPE E (FLUORESCENT PRISMATIC)
WHITE	BACKGROUND	TYPE C (HIGH SPECIFIC INTENSITY)
WHITE	LEGEND & BORDERS	TYPE C (HIGH SPECIFIC INTENSITY)
BLACK	LEGEND & BORDERS	VINYL NON-REFLECTIVE SHEETING

Texas Department of Transportation
Traffic Operations Division

TRAFFIC SIGNAL INSTALLATION BARRICADES AND SIGNS

SHEET 2 OF 2 WZ(BTS-2)-03

© TxDOT April 1992

REVISIONS: 2-98, 4-98, 10-99, 3-03

DN: TXDOT	CK: TXDOT	DW: TXDOT	CK: TXDOT
CONT	SECT	JOB	HIGHWAY
2452	01	043	SH 151
DIST		COUNTY	SHEET NO.
SA		BEXAR	126

pw:\\FTW0\Ftw0129\cor \\standards\listd_tpoff.dgn 2/21/2011 5:40:41 PM mwmldiff

pw:\\TXDOT-DI29cor^ ^n:\standard\Sistd_topl8.dgn 2/21/2011 5:40:11 PM mwmldtt11

DISCLAIMER: The use of this standard is governed by the "Texas Engineering Practice Act". No warranty of any kind is made by TxDOT for any purpose whatsoever. TxDOT assumes no responsibility for the conversion of this standard to other formats or for incorrect results or damages resulting from its use.

WORK ZONE SHORT TERM PAVEMENT MARKINGS DETAILS

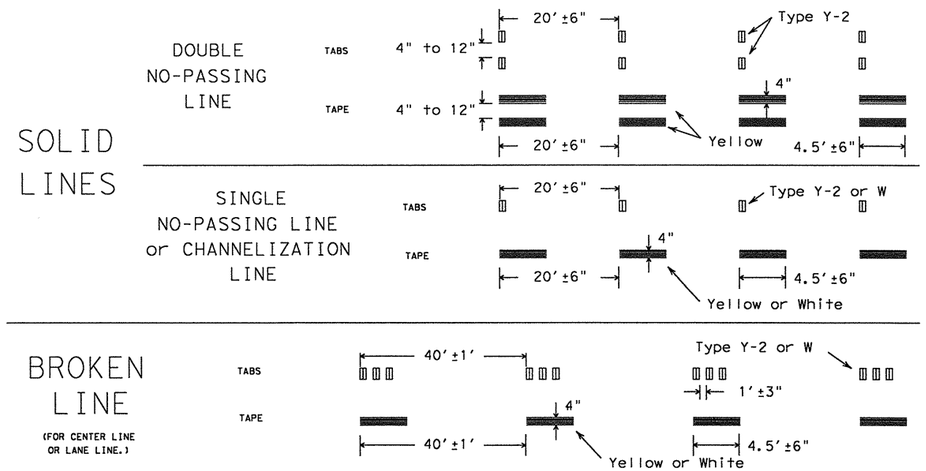

NOTES:

1. Short term pavement markings may be prefabricated markings (stick down tape) or temporary flexible-reflective roadway marker tabs unless otherwise specified elsewhere in plans.
2. Short term pavement markings shall NOT be used to simulate edge lines.
3. Dimensions indicated on this sheet are typical and approximate. Variations in size and height may occur between markers or devices made by manufacturers, by as much as 1/4 inch, unless otherwise noted.
4. Temporary flexible-reflective roadway marker tabs will require normal maintenance replacement when used on roadways with an ADT per lane of up to 7500 vehicles with no more than 10% truck mix. When roadways exceed these values, additional maintenance replacement of devices should be planned.
5. No segment of roadway open to traffic shall remain without permanent pavement markings for a period greater than 14 calendar days. The Contractor will be responsible for maintaining short term pavement markings until permanent pavement markings are in place. When the Contractor is responsible for placement of permanent pavement markings, no segment of roadway shall remain without permanent pavement markings for a period greater than 14 calendar days unless weather conditions prohibit placement. Permanent pavement markings shall be placed as soon as weather permits.
6. For two lane, two-way roadways, DO NOT PASS signs shall be erected to mark the beginning of sections where passing is prohibited and PASS WITH CARE signs shall be erected to mark the beginning of sections where passing is permitted. Signs shall be in accordance with the "Texas Manual on Uniform Traffic Control Devices" (TMUTCD) and may be used to indicate the limits of no-passing zones for up to 14 calendar days. Permanent pavement markings should then be placed.
7. For low volume two lane, two-way roadways of 4000 ADT or less, no-passing lines may be omitted when approved by the Engineer. DO NOT PASS and PASS WITH CARE signs shall be erected (see note 6).

TEMPORARY FLEXIBLE-REFLECTIVE ROADWAY MARKER TABS (TABS)

1. Temporary flexible-reflective roadway marker tabs detailed on this sheet will be designated Type Y-2 (two amber reflective surfaces with yellow body); Type Y (one amber reflective surface with yellow body); and Type W (one white or silver reflective surface with white body). Additional details may be found on BC(10).
2. Tabs shall meet requirements of Departmental Material Specification DMS-8242.
3. When dry, tabs shall be visible for a minimum distance of 200 feet during normal daylight hours and when illuminated by automobile low-beam head light at night, unless sight distance is restricted by roadway geometrics.
4. No two consecutive tabs nor four tabs per 1000 feet of line shall be missing or fail to meet the visual performance requirements of Note 3.

REMOVABLE - PREFABRICATED PAVEMENT MARKINGS

1. Removable prefabricated pavement markings shall meet the requirements of DMS-8241. A list of prequalified products can be found at the following web site:
ftp://ftp.dot.state.tx.us/pub/txdot-info/gsd/pdf/pavemark.pdf

NON REMOVABLE - PREFABRICATED PAVEMENT MARKINGS

1. Non-removable prefabricated pavement markings (foil back) shall meet the requirements of DMS-8240 or the TXDOT Purchase Specification No. 550-74-89. A list of prequalified products and a copy of the TXDOT Purchase Specifications can be found at web sites:
ftp://ftp.dot.state.tx.us/pub/txdot-info/gsd/pdf/pavement.pdf
ftp://ftp.dot.state.tx.us/pub/txdot-info/gsd/pdf/tss/tss377.pdf

RAISED PAVEMENT MARKERS

1. All raised pavement markers used for work zone markings shall meet the requirements of Item 672, "RAISED PAVEMENT MARKERS" and Departmental Material Specification DMS-4200.
2. A list of prequalified reflective raised pavement markers can be found at the following web site:
ftp://ftp.dot.state.tx.us/pub/txdot-info/gsd/pdf/dms4200preq.pdf

WORK ZONE SHORT TERM PAVEMENT MARKINGS PATTERNS

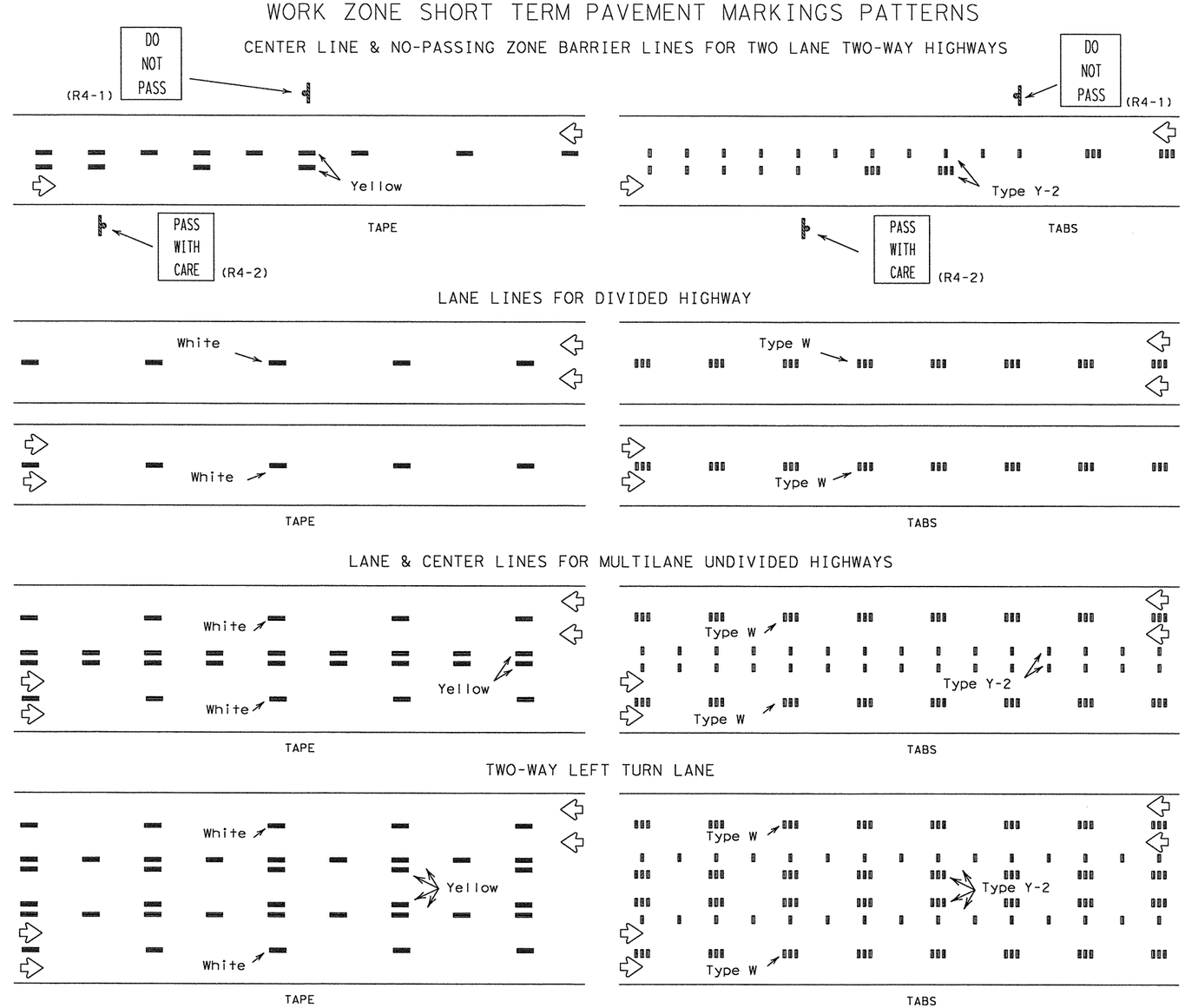

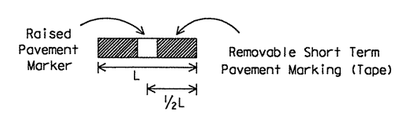

If raised pavement markers are used to supplement REMOVABLE short term markings, the markers shall be applied to the top of the tape at the approximate mid length of the tape. This allows an easier removal of raised markers and tape.

DEPARTMENT MATERIAL SPECIFICATIONS	
PREFABRICATED PAVEMENT MARKINGS-PERMANENT	DMS-8240
PREFABRICATED PAVEMENT MARKINGS-REMOVABLE	DMS-8241
TEMPORARY FLEXIBLE-REFLECTIVE ROADWAY MARKER TABS	DMS-8242
PAVEMENT MARKERS (REFLECTORIZED)	DMS-4200

Texas Department of Transportation
Traffic Operations Division

WORK ZONE SHORT TERM PAVEMENT MARKINGS

WZ(STPM)-03

© TxDOT April 1992

REVISIONS	DN: TXDOT	CK: TXDOT	DW: TXDOT	CK: TXDOT
1-97	CONT	SECT	JOB	HIGHWAY
3-03	2452	01	043	SH 151
	DIST		COUNTY	SHEET NO.
	SA		BEXAR	127

DISCLAIMER: The use of this standard is governed by the "Texas Engineering Practice Act". No warranty of any kind is made by TxDOT for any purpose whatsoever. TxDOT assumes no responsibility for the conversion of this standard to other formats or for incorrect results or damages resulting from its use.

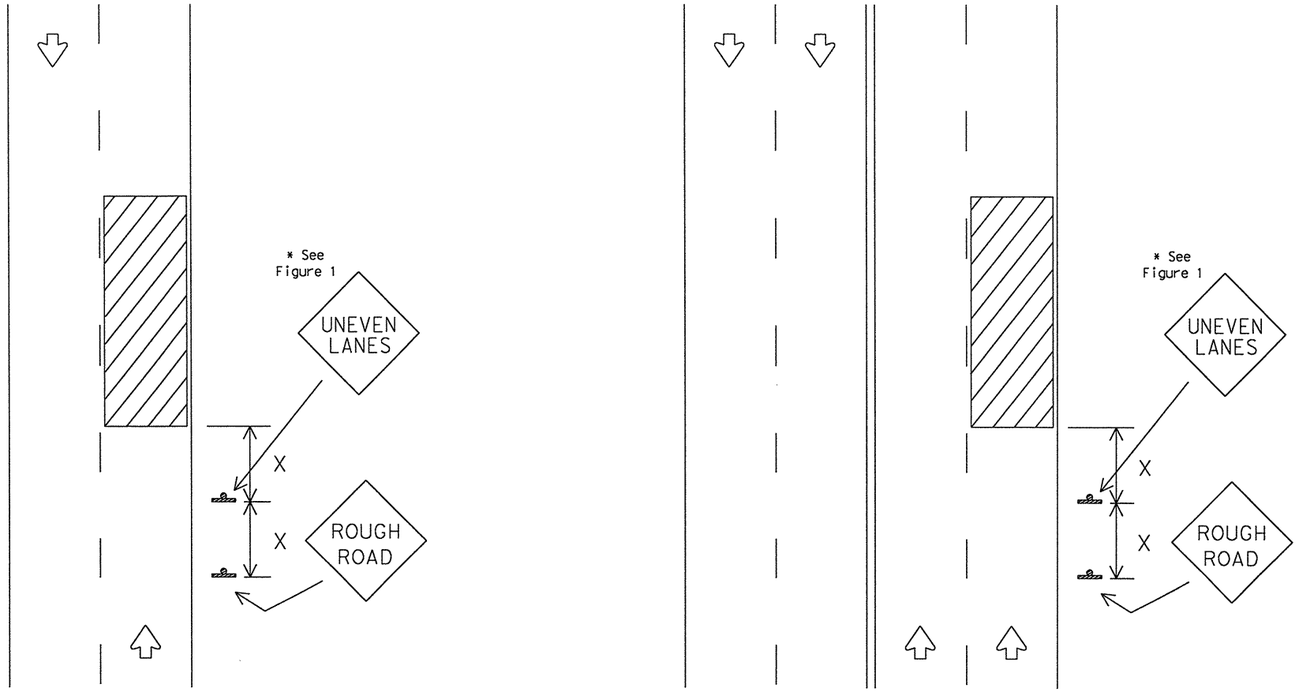

Signing shown for one direction.

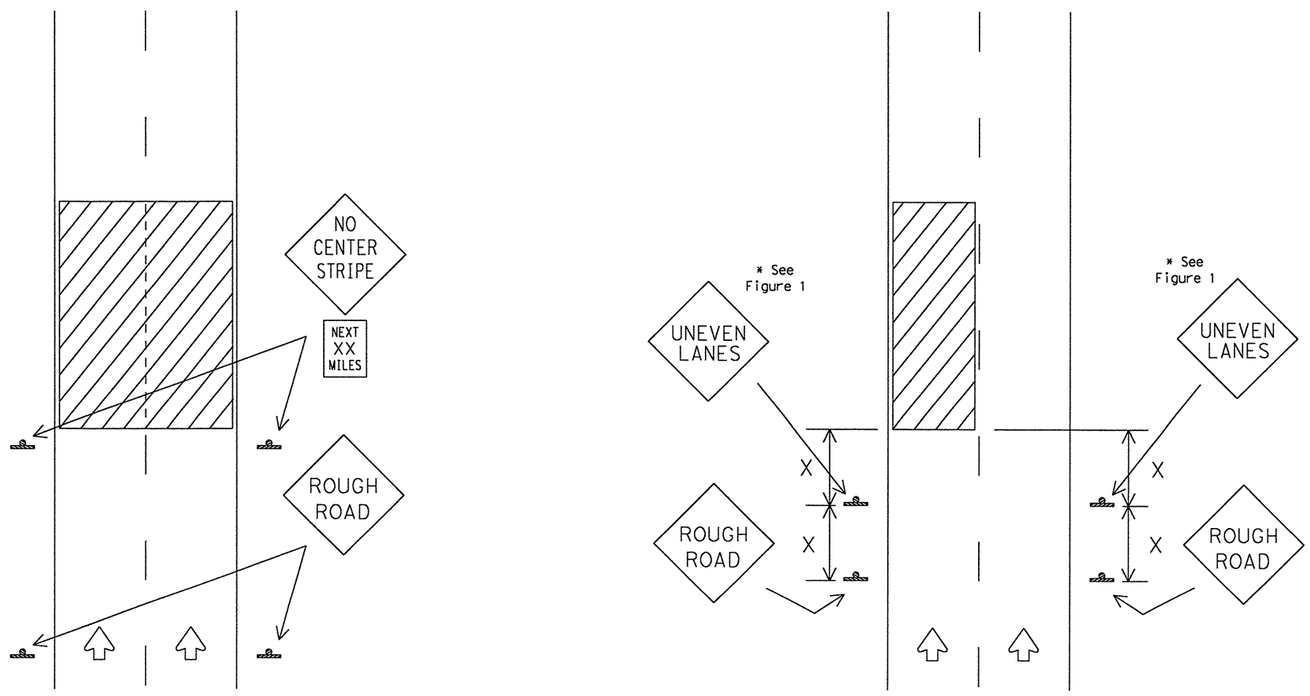

"X" distance - See Note 4 on this page.

DEPARTMENTAL MATERIAL SPECIFICATIONS

PLYWOOD SIGN BLANKS	DMS-7100
ALUMINUM SIGN BLANKS	DMS-7110
SIGN HARDWARE	DMS-7120
PREFABRICATED PAVEMENT MARKINGS-PERMANENT	DMS-8240
PREFABRICATED PAVEMENT MARKINGS-REMOVABLE	DMS-8241
FLAT SURFACE REFLECTIVE SHEETING	DMS-8300
VINYL NON-REFLECTIVE DECAL SHEETING	DMS-8320

COLOR	USAGE	SHEETING MATERIAL
ORANGE	BACKGROUND	TYPE E (FLUORESCENT PRISMATIC)
BLACK	LEGEND & BORDERS	VINYL NON-REFLECTIVE DECAL SHEETING

GENERAL NOTES:

1. If spalling or holes occur, ROUGH ROAD signs should be placed in advance of the condition and may be repeated throughout the project.
2. UNEVEN LANES sign (CW8-11) should be installed in advance of the condition and repeated every mile. Signs installed along the uneven lane condition may be supplemented with the NEXT XX MILES sign (CW21-16) or Advisory Speed sign (CW13-1).
3. NO CENTER STRIPE signs (CW8-12) should be installed if centerlines or lane lines are obscured or obliterated. The signs should remain in place until permanent pavement markings are installed.
4. Signs shall be spaced at the distances recommended as per BC standards.
5. When operations are completed and final surface treatment will not be applied as part of this project, advance signs shall be left in place and become the property of the State. These signs shall be installed on approved permanent sign supports as per TxDOT standards. Additional signs may be required as directed by the Engineer. Minimum mounting height of signs is 7 feet. Signs shall remain in place until final surface is applied. Signs shall be considered subsidiary to the Item "BARRICADES, SIGNS AND TRAFFIC HANDLING."
6. Pavement markings shall be replaced as operations proceed.
7. Short term markings shall not be used to simulate edge lines.
8. All signs shall be constructed in accordance with the details found in the "Standard Highway Sign Designs for Texas," latest edition. Sign details not shown in this manual shall be shown in the plans or the Engineer shall provide a detail to the Contractor before the sign is manufactured.

TRAFFIC CONTROL DURING PLANING, OVERLAY AND LEVELING OPERATIONS ARE SHOWN ELSEWHERE IN THE PLANS.

FIGURE 1

Edge Condition	Edge Height (D)	Warning Devices
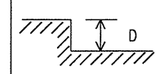	less than or equal to 1" greater than 1" to: 1¼" (maximum-planing) 1½" (typical-overlay)	Signs: ECW8-8 Signs: CW8-11, ECW8-8

Distance "D" may be a maximum of 1¼" for planing operations and 2" for overlay operations if uneven lanes are open to traffic after work operations cease.

Texas Department of Transportation
Traffic Operations Division

SIGNING FOR UNEVEN LANES

WZ(UL)-03

©TxDOT April 1992

REVISIONS	DN: TXDOT	CK: TXDOT	DW: TXDOT	CK: TXDOT
8-95	CONT	SECT	JOB	HIGHWAY
1-97	2452	01	043	SH 151
2-98	DIST		COUNTY	SHEET NO.
3-03	SA		BEXAR	128

p:\4760\0-0129.cor \\standard\51std_tcp19.dgn 2/21/2011 5:40:13 PM mwmldstt1

DISCLAIMER: The use of this standard is governed by the "Texas Engineering Practice Act". No warranty of any kind is made by TxDOT for any purpose whatsoever. TxDOT assumes no responsibility for the conversion of this standard to other formats or for incorrect results or damages resulting from its use.

CHANNELIZING DEVICES FOR URBAN ROADWAY TYPE PROJECT

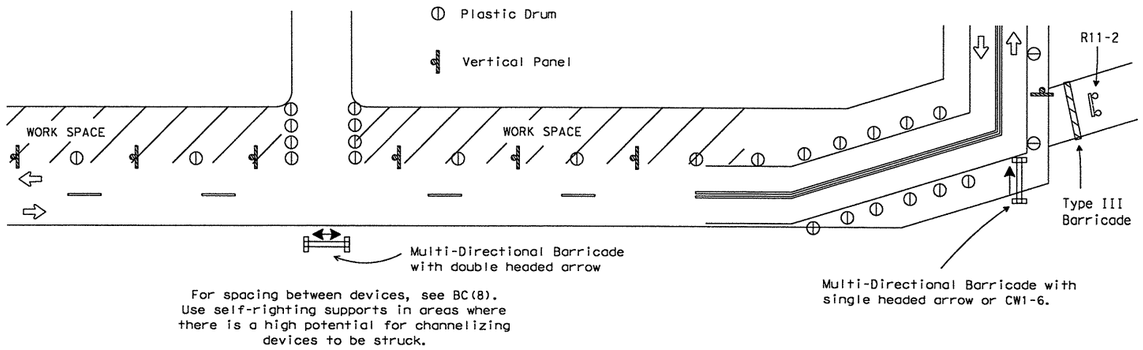

For spacing between devices, see BC(8). Use self-righting supports in areas where there is a high potential for channelizing devices to be struck.

MULTI-DIRECTIONAL BARRICADE

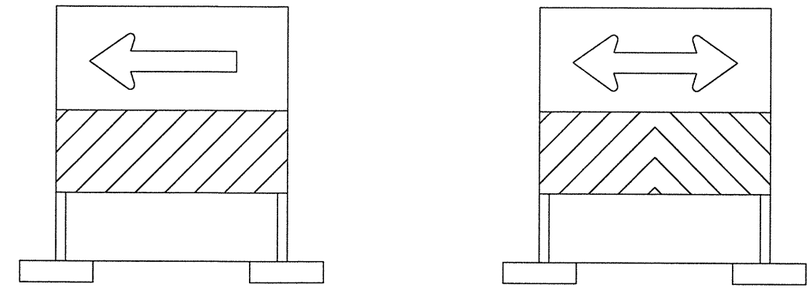

1. Multi-directional barricade shall not be used for lane closures.
2. May be used for sharp changes in alignment, or across roadway from stem of "T" intersection.
3. Typically used for Intermediate Term Stationary, Short Term Stationary or Short Duration work zone operations.
4. See the CWZTCD List for approved designs.

BARRIER DELINEATION WITH SAFETY GLARE FENCE

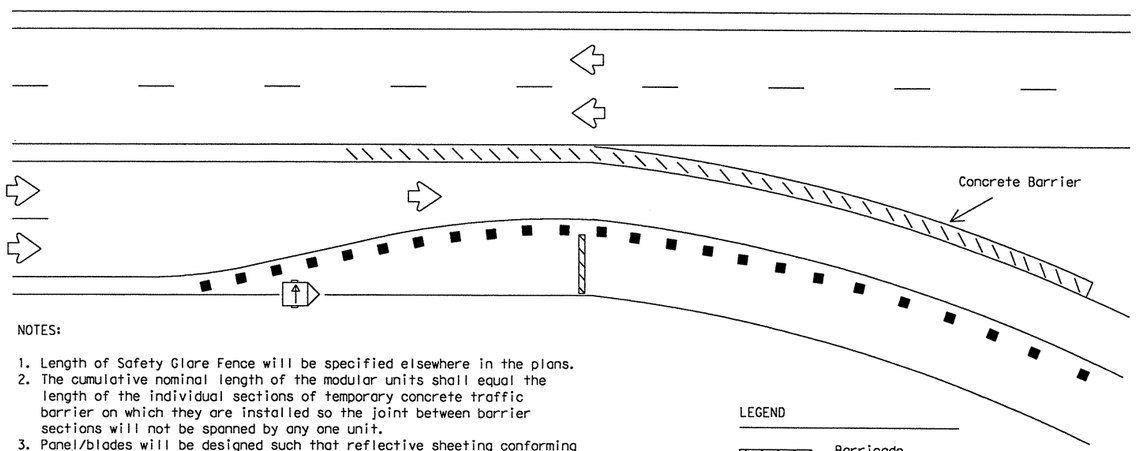

NOTES:

1. Length of Safety Glare Fence will be specified elsewhere in the plans.
2. The cumulative nominal length of the modular units shall equal the length of the individual sections of temporary concrete traffic barrier on which they are installed so the joint between barrier sections will not be spanned by any one unit.
3. Panel/blades will be designed such that reflective sheeting conforming with Departmental Material Specification DMS-8300, Flat Surface Reflective Sheeting, Type C (High Specific Intensity), minimum size of 2 inches by 12 inches can be attached to the edge of the panel/blade. The sheeting shall be attached to one panel/blade per section of concrete barrier not to exceed a spacing of 30 feet. Barrier reflectors are not necessary when panel/blades are installed.
4. Moduler Glare Screens for head light barrier shall meet the requirements of DMS-8610.

USAGE OF CW1-6, ECW1-6a AND CW1-8 SIGNS

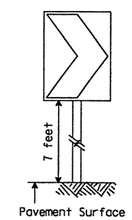

CW1-8

The CHEVRON sign (CW1-8) may be used to replace roadside delineation on curves or used in transitions or tapers.

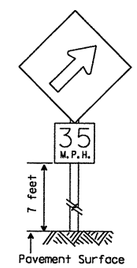

ECW1-6a

An UPWARD SLOPING ARROW sign (ECW1-6a) is intended to be used to indicate the beginning of a curve or transition. It should be preceded with an appropriate curve sign when needed, and should not be used throughout the curve or transition. Advisory speed plaque is optional.

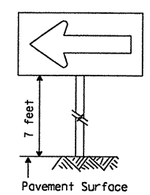

CW1-6

A LARGE ARROW sign (CW1-6) is intended to be used to give notice of a sharp change in alignment (turn) in the direction of travel. It should be preceded with an appropriate advance construction warning turn sign.

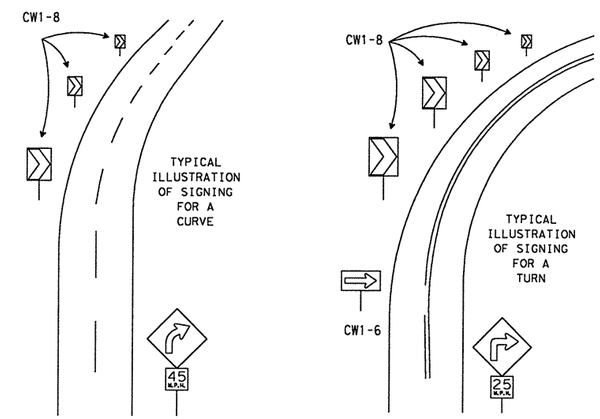

NOTES:

1. CW1-6, ECW1-6a & CW1-8 signs shall be mounted on fixed supports.
2. Chevrons, when used, shall be erected on the outside of a sharp curve or turn, or on the far side of an intersection. They shall be in line with and at right angles to approaching traffic. Spacing should be such that the motorist always has three in view, until the change in alignment eliminates its need.
3. For two-way traffic, use same arrangement of signs on outside of curve for each direction of travel.
4. Appropriate advance warning CURVE or TURN sign with Advisory Speed plaque should be used when needed.

Only pre-qualified products shall be used. A copy of the "Compliant Work Zone Traffic Control Devices List" (CWZTCD) describes pre-qualified products and their sources and may be obtained by contacting:

Standards Engineer
Traffic Operations Division - TE
Texas Department of Transportation
125 East 11th Street
Austin, Texas 78701-2483
Phone (512) 416-3120
Fax (512) 416-3299

Instructions to locate the "CWZTCD" on TxDOT website are:

Start at website - www.dot.state.tx.us
Click on "About TxDOT",
Click on "Organizational Chart",
Click on Traffic Operations Box,
Click on "Compliant Work Zone Traffic Control Devices",
Click on "View PDF".
This site is printable.

PREQUALIFICATION PROCEDURES ARE OBTAINED FROM:

CONSTRUCTION DIVISION-MATERIALS AND TESTS SECTION
TEXAS DEPARTMENT OF TRANSPORTATION (TxDOT)
125 EAST 11th STREET
AUSTIN, TX 78701-2483

DEPARTMENTAL MATERIAL SPECIFICATIONS

FLAT SURFACE REFLECTIVE SHEETING	DMS-8300
DELINEATORS AND OBJECT MARKERS	DMS-8600
MODULER GLARE SCREENS	DMS-8610

COLOR	USAGE	SIGN SHEETING
ORANGE	BACKGROUND	TYPE E (FLUORESCENT PRISMATIC)
WHITE	BACKGROUND	TYPE C (HIGH SPECIFIC INTENSITY)
BLACK	LEGEND & BORDERS	VINYL NON-REFLECTIVE SHEETING

REFER TO THE BC SHEETS FOR SHEETING REQUIREMENT ON CHANNELIZING DEVICES.

The five categories of work duration and their time at a location shall be:

A. Long-term stationary is work that occupies a location more than 3 days.

B. Intermediate-term stationary is work that occupies a location more than one daylight period up to 3 days, or nighttime work lasting more than 1 hour.

C. Short-term stationary is daytime work that occupies a location for more than 1 hour, but less than 12 hours.

D. Short duration is work that occupies a location up to 1 hour.

E. Mobile is work that moves intermittently or continuously.

Texas Department of Transportation
Traffic Operations Division

TRAFFIC CONTROL PLAN TYPICAL DETAILS

WZ(TD)-03

© TxDOT February 1998

REVISIONS
4-98
3-03

DN: TXDOT	CK: TXDOT	DW: TXDOT	CK: TXDOT
CONT	SECT	JOB	HIGHWAY
2452	01	043	SH 151
DIST		COUNTY	SHEET NO.
SA		BEXAR	129

DISCLAIMER:
The use of this standard is governed by the "Texas Engineering Practice Act". No warranty of any kind is made by TxDOT for any purpose whatsoever. TxDOT assumes no responsibility for the conversion of this standard to other formats or for incorrect results or damages resulting from its use.

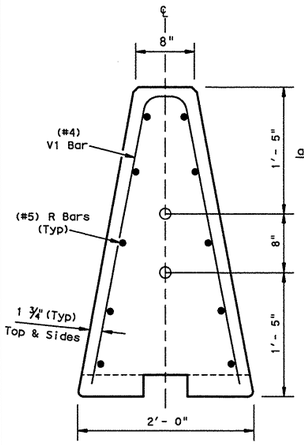

End View
Precast Barrier

Pipe locations for Joint Type X connection

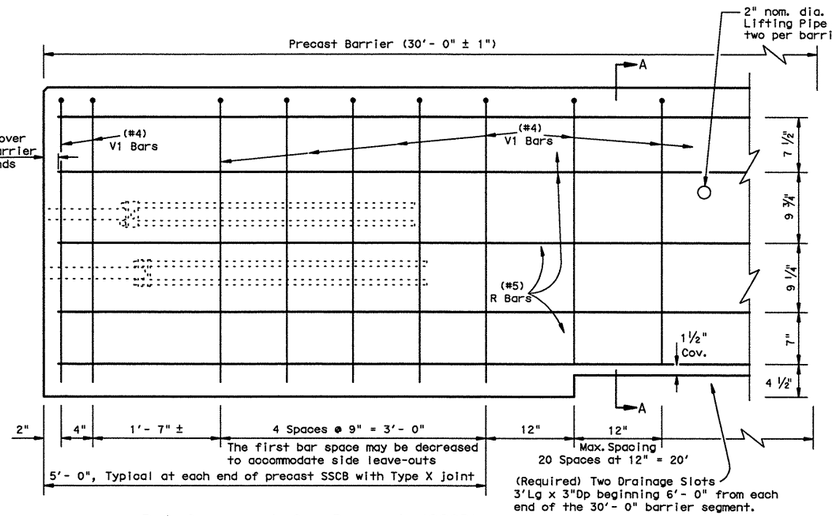

Reinforcement for Precast (SSCB) Single Slope Concrete Barrier (Type 1)

Showing reinforcement for Joint Connection (Type X)

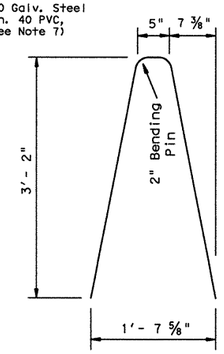

V1 Bar

#4 Rebar

Note:
V1 Bars above the drainage slots may bent to accomadate 1 ½" clear cover as directed by the Engineer.

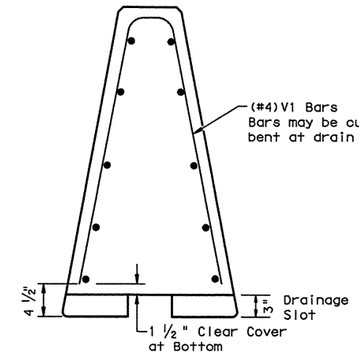

Section A-A

Steel Placement at (Required) Drainage Slots

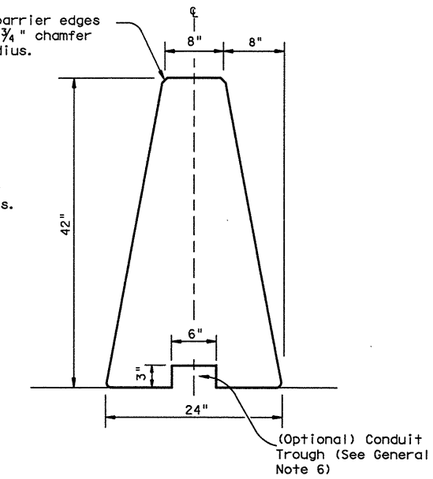

Single Slope Concrete Traffic Barrier

Precast SSCB barrier may be connected to cast-in-place SSBC. The joint connection "Types" may be used in the cast-in-place barrier, to match the precast barrier connection.

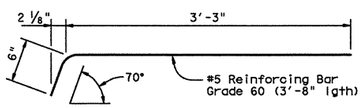

DEFORMED BAR ANCHOR DETAILS

Two (2) Bars required per assembly.
Eight (8) required per Joint.

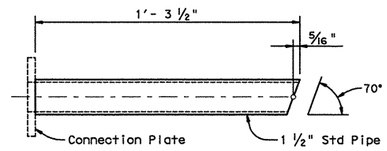

UPPER CONNECTION PIPE DETAILS

One (1) Steel Pipe required per Upper Assembly.
Two (2) required per Joint.

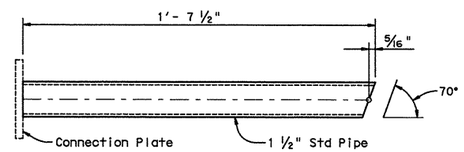

LOWER CONNECTION PIPE DETAILS

One (1) Steel Pipe required per Lower Assembly.
Two (2) required per Joint.

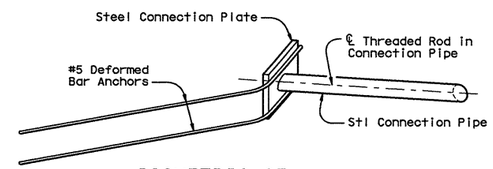

ISOMETRIC OF TYPICAL WELDED ASSEMBLY

Four (4) [2 Upper & 2 Lower] Assemblies required per Joint.

General Notes

1. Concrete shall be Class H with a minimum compressive strength of 3,600 psi.
2. Where used, rebar reinforcement shall be Grade 60 and conform to ASTM A615.
3. Precast barrier length shall be 30 ft. unless otherwise specified on the plans.
4. All precast barrier edges shall have a ¾" chamfer or a tooled radius.
5. All concrete, reinforcement, joint connection systems, grout etc. as shown, are considered as part of the barrier payment.
6. Conduit trough when required shall be shown elsewhere on the plans, or as directed by the Engineer.
7. Regardless of the method of handling, barrier lifting points shall be approx. 7.5 feet from the ends of the barrier. Lifting devices and attachments to barrier sections shall be approved by the Engineer.
8. Surface finishing and grouting (where required) shall be two parts sand one part cement with enough water to make the mixture plastic. Grouting shall be done in a manner that will assure a smooth surface. Surface finishing shall be considered subsidiary to the various bid items.
9. All steel assemblies shall be galvanized after fabrication in accordance with Item 445, "Galvanizing."

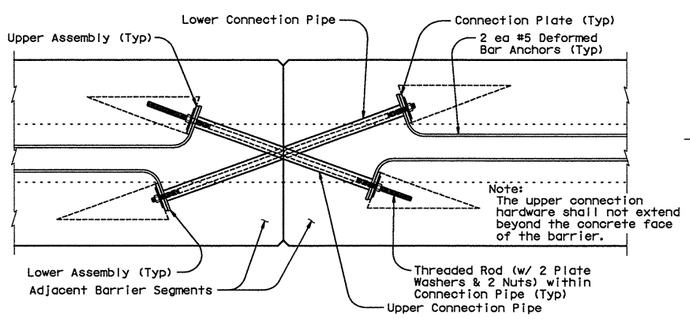

TYPE X JOINT INSTALLATION DETAIL

Barrier reinforcing and Type X Joint Leave-Out dimensions not shown for clarity.

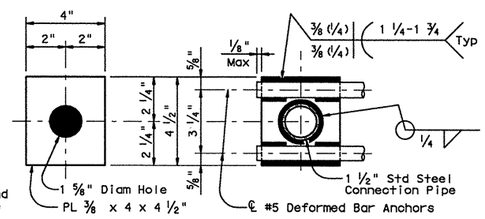

PLATE DIMENSIONS

WELDING DETAILS

CONNECTION PLATE DETAILS

One (1) Plate required per assembly.
Four (4) required per Joint. All steel fittings for joint Type X shall be galvanized after fabrication in accordance with Item 445.

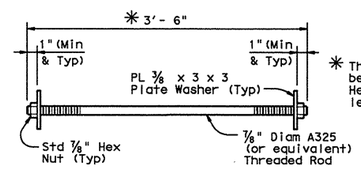

✳ The connection hardware shall not extend beyond the concrete face of the barrier. Hex head bolts may be provided. The proper length of all hardware should be verified.

CONNECTION BOLT OR THREADED ROD DETAIL

Two (2) Threaded Rods (Or Equivalent Hex Hd. Bolts)
(w/ Two (2) PL ⅜ x 3 x 3 Plate Washers & Two (2) Std Hex Nuts)
required per Joint.

Weight of one precast 30 ft. (SSCB) segment = Approx. 10.5 Tons or 717 lbs per ft.

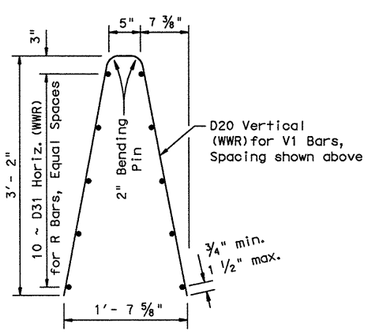

Welded Wire Reinforcement (WWR) Option for Bars R and V1

(WWR) General Notes

1. Deformed Welded Wire Reinforcement (WWR) shall conform to ASTM A497.
2. Welded wire cage may be cut or bent to accommodate the Type X joint connection and drainage slots, as directed by the Engineer.
3. All reinforcement shall comply with Item 440, "Reinforcing Steel."
4. Combinations of reinforcing steel and WWR will be permitted, as directed by the Engineer. The dimension from the end of the barrier section to the first wire shall not exceed 3".

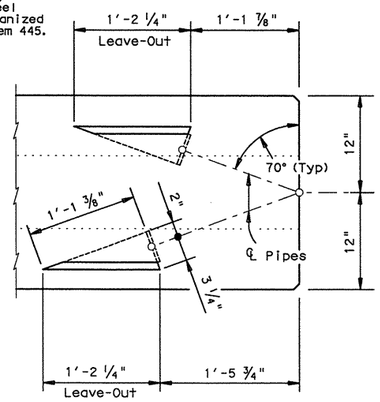

BARRIER PLAN AT JOINT

SHEET 1 OF 2

Texas Department of Transportation
Design Division Standard

SINGLE SLOPE CONCRETE BARRIER

PRECAST BARRIER (TYPE 1)

SSCB(2)-10

FILE: sscb210.dgn	DN: TxDOT	CK: AM	DW: BD	CK:	
© TxDOT December 2010	CONT	SECT	JOB	HIGHWAY	
REVISIONS	2452	01	043	SH 151	
	DIST		COUNTY		SHEET NO.
	SA		BEXAR		130

DATE:
FILE:

DISCLAIMER:
The use of this standard is governed by the "Texas Engineering Practice Act". No warranty of any kind is made by TxDOT for any purpose whatsoever. TxDOT assumes no responsibility for the conversion of this standard to other formats or for incorrect results or damages resulting from its use.

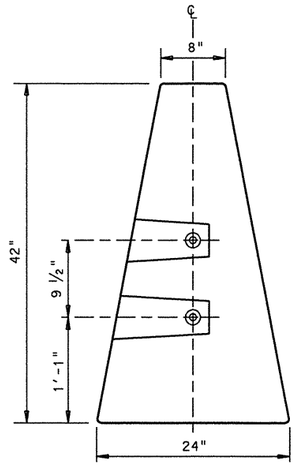

END VIEW
"QUICK-BOLT" POCKET LOCATIONS

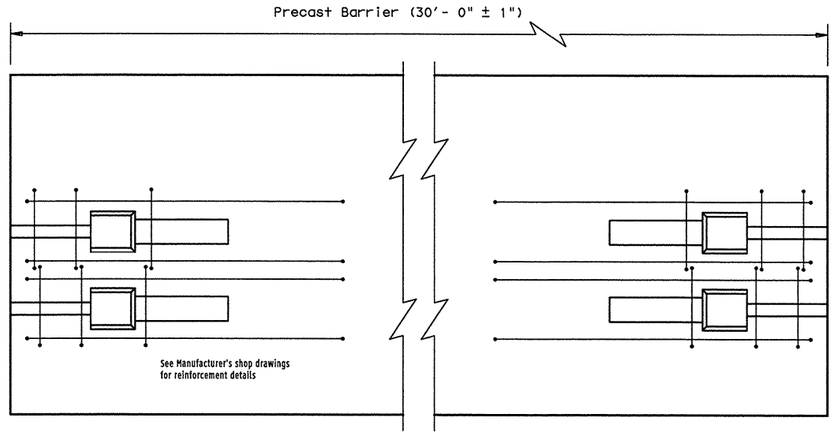

ELEVATION VIEW
"QUICK-BOLT" (SSCB)
See Manufacturer's shop drawing for additional details

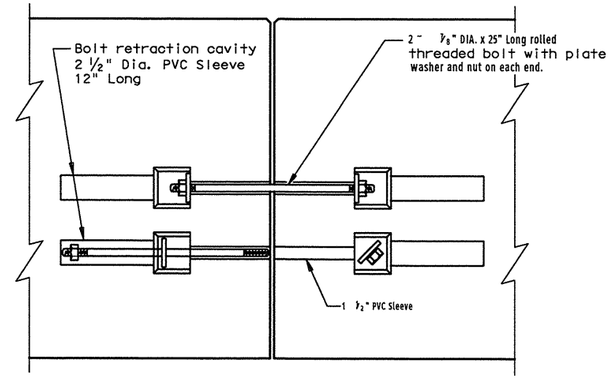

ELEVATION VIEW SHOWING JOINT CONNECTION
"QUICK-BOLT"

Joint Connection (Type Q)

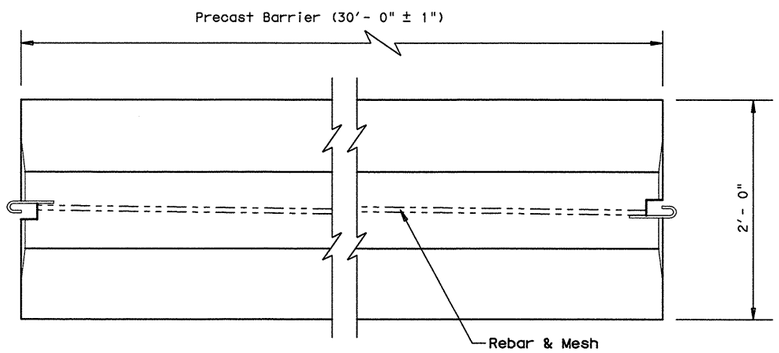

TOP VIEW
PRECAST (SSCB) WITH J-J HOOKS
See Manufacturer's shop drawing for additional details

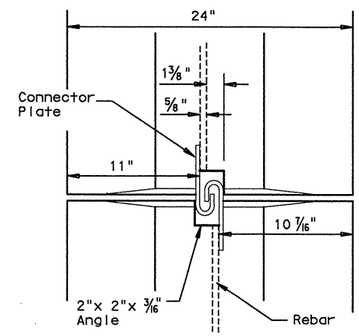

VIEW FROM ABOVE
J-J HOOK CONNECTION

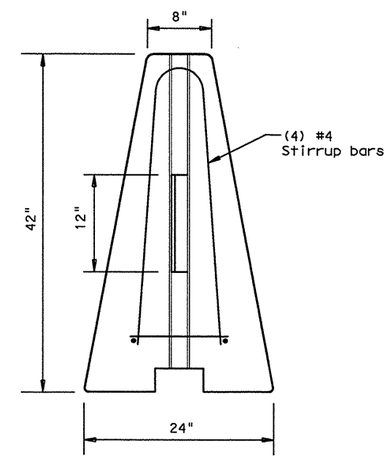

END VIEW

Proprietary Joint Connections (SSCB)

Two proprietary joint connections are acceptable as alternates to the (Type X) connection shown, here on. These joint connections types are:

J-J Hooks by Easi-Set Industries, (800)547-4045
Quick-Bolt by Bexar Concrete, (210)497-3773

If one of these connection systems are exclusively specified in the plans, prior approval for sole source use must be obtained. Details of the connection components and barrier reinforcement for these systems, will be shown on the manufacturer's shop drawing(s) furnished to the Engineer.

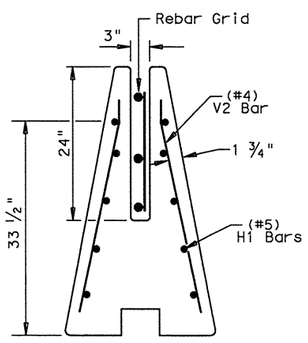

SECTION A-A
Showing (Type R) Rebar Grid

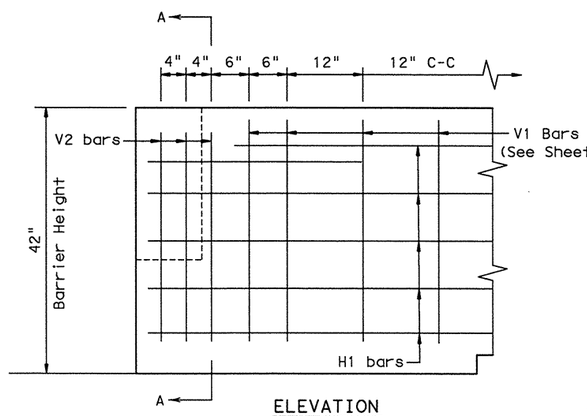

ELEVATION
V1 Bars (See Sheet 1)

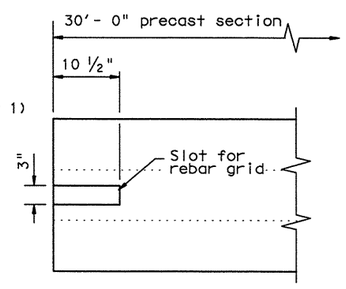

TOP VIEW
JOINT CONNECTION
Typical at both ends of barrier segment

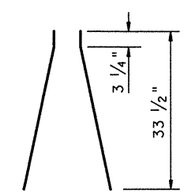

(#4) V2 BARS
6 ~ two piece bars per barrier segment

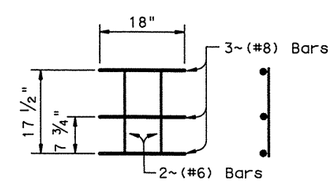

WELDED REBAR GRID

Joint Connection (Type R)

SHEET 2 OF 2

Texas Department of Transportation
Design Division Standard

SINGLE SLOPE CONCRETE BARRIER

PRECAST BARRIER
(TYPE 1)

SSCB(2)-10

FILE: sscb210.dgn	DN: TxDOT	CK: AM	DW: BD	CK:
© TxDOT December 2010	CONT	SECT	JOB	HIGHWAY
REVISIONS	2452	01	043	SH 151
	DIST		COUNTY	SHEET NO.
	SA		BEXAR	130A

DATE:
FILE:

DISCLAIMER:
The use of this standard is governed by the "Texas Engineering Practice Act". No warranty of any kind is made by TxDOT for any purpose whatsoever. TxDOT assumes no responsibility for the conversion of this standard to other formats or for incorrect results or damages resulting from its use.

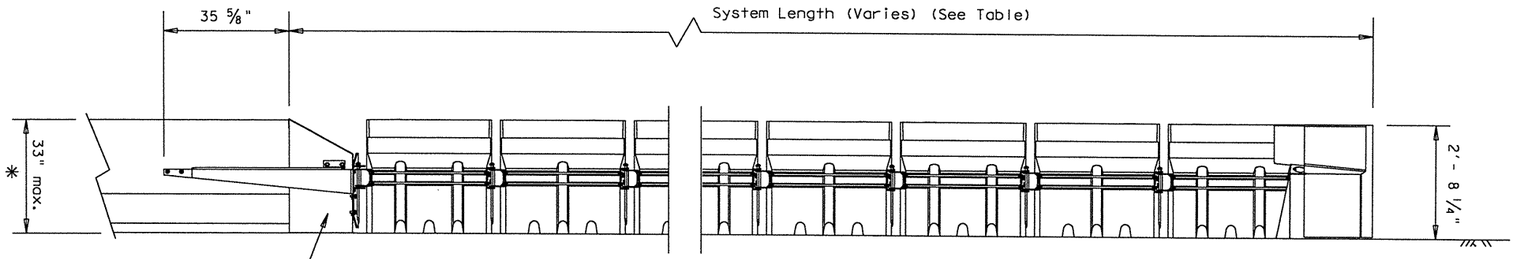

ELEVATION

See Manufacturer's Product Manual for Additional Details

* The ABSORB 350 is design be applied to barrier up to 33" tall. To accommodate taller barriers, a transitional barrier must be used. (See Manufacturer's requirments)

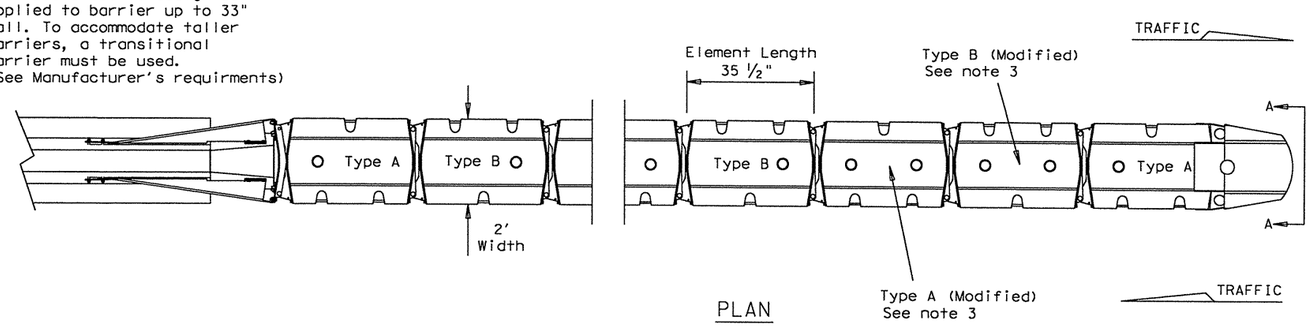

PLAN

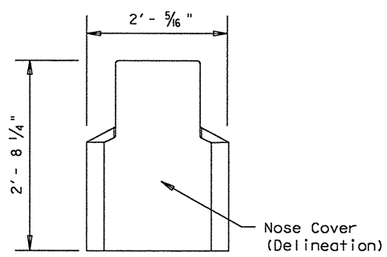

SECTION A-A

Nose Piece delineation orientation, is shown elsewhere on the plans.

DESIGN SPEED (mph)	NUMBER OF ELEMENTS	SYSTEM LENGTH (approx.)
45 OR LESS	5	20'- 0"
50	6	23'- 0"
55	7	26'- 0"
60	9	32'- 0"
65	10	35'- 0"
70	12	42'- 0"

The ABSORB 350 is only to be used in temporary (Work Zone) locations.

BACKUP SUPPORT
Steel Backup (Attach to Concrete Barriers, Precast or Cast-in-Place)

TRANSITION OPTIONS
Steel Backup to Vertical Wall
Steel Backup to Concrete Traffic Barriers

Backup and Transition types are shown elsewhere on the plans (i.e. Attenuator location details or in the general notes).

GENERAL NOTES

1. Refer to Installation manual and configuration chart for specific system assembly and element orientation. For additional information. Contact Interstate Steel Inc. at (432)263-3725.
2. The ABSORB 350 system is approved for use in temporary (Work Zone) locations. The ABSORB 350 is a water filled non-redirective, gating crash cushion that does not need to be attached to a foundation and can be installed on top of concrete, asphalt, or any surface capable of bearing the weight of the system.
3. Modified Type A and Type B elements require drilling of an additional 3" Dia. hole (as shown). See Manufacturers installation manual for details.
4. Maximum permissible cross-slope is 8%.
5. The installation area should be free from curbs, elevated objects, or depressions.
6. The ABSORB 350 should be approximately parallel with the barrier or ℄ of merging barrier.

BILL OF MATERIAL

PRODUCT CODE	QTY	DESCRIPTION
B010825	1	Replacement Nose Assembly
B010830	1	Nose Piece Cover
B000303	TBD	Type A Element Assembly
B000708	TBD	Type B Element Assembly
B000706	TBD	Replacement Element Type A
B000708	TBD	Replacement Element Type B
B000520	1	Replacement Transition to PCB
A010420	TBD	Pin Link Hinge Locking
B000520	1	Transition Adapter Assembly
B000209	TBD	Strap Left Adapter
B000207	TBD	Strap Right Adapter
B000611	TBD	Adapter Hinge Plate
A000521	TBD	Anchor Bolt (U-Bolt)
B000518	1	Tapered Adapter
B020421	TBD	I Beam Adapter Female
B020420	TBD	I Beam Adapter Male
C021212	1	Transition to Link

(TBD) = To Be Determined, depending on System Length. (See manufacturer's product manual)

Required Information
The use of the ABSORB 350 is restricted to a maximum barrier height of 33 inches.

Texas Department of Transportation
Design Division Standard

BARRIER SYSTEMS ABSORB 350 CRASH CUSHION (TEMPORARY, WORK ZONE)

ABSORB-10

FILE: absorb10.dgn	DN: TxDOT	CK: AM	DW: BD	CK:
©TxDOT September 2005	CONT	SECT	JOB	HIGHWAY
REVISIONS	2452	01	043	SH 151
	DIST		COUNTY	SHEET NO.
	SA		BEXAR	131

DATE:
FILE:
pw:\\TX6DV0-0129cor:"...\standardV5\std_top21.dgn" 2/21/2011 5:40:14 PM mwm0kt11

pw:\\FTGOVD-01259\ecl\standard\15ld_ec01.dgn
2/21/2011 5:40:15 PM
mwmldell1

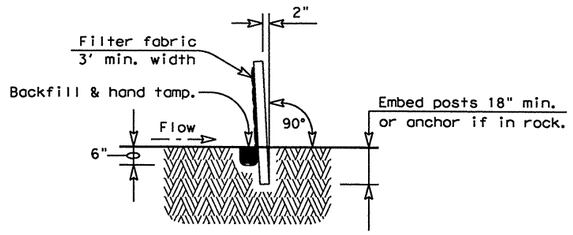

SECTION A-A

GENERAL NOTES

1. The guidelines shown hereon are suggestions only and may be modified by the Engineer.

PLAN SHEET LEGEND

Sediment Control Fence —— SCF ——

SEDIMENT CONTROL FENCE USAGE GUIDELINES

A sediment control fence may be constructed near the downstream perimeter of a disturbed area along a contour to intercept sediment from overland runoff. A 2 year storm frequency may be used to calculate the flow rate to be filtered.

Sediment control fence should be sized to filter a max. flow through rate of 100 GPM/FT^2. Sediment control fence is not recommended to control erosion from a drainage area larger than 2 acres.

Galv. Hinge joint knot woven mesh (12.5 Ga. Min.) requires a minimum of five horizontal wires spaced at a max. 12 inches apart and all vertical wires spaced at a max. 12 inches apart.

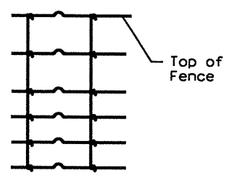

Hinge Joint Knot Woven Mesh (Option)

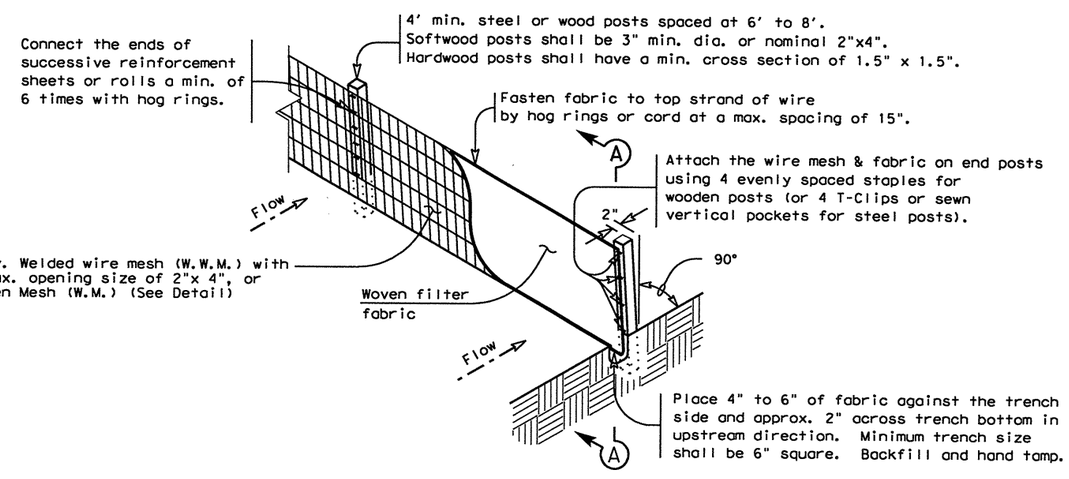

TEMPORARY SEDIMENT CONTROL FENCE

—— SCF ——

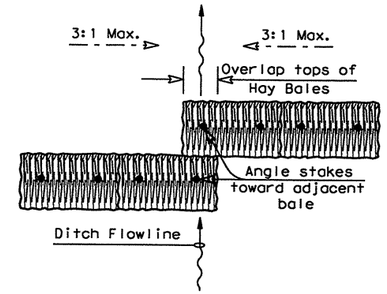

PLAN VIEW

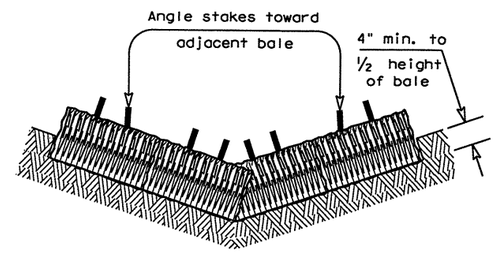

PROFILE VIEW

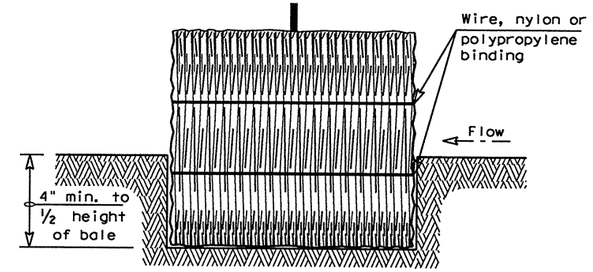

SECTION B-B

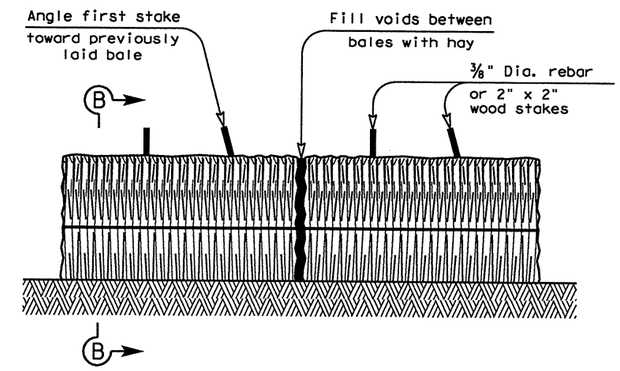

BALED HAY FOR EROSION CONTROL

—— BH ——

PLANS SHEET LEGEND

Baled Hay —— BH ——

BALED HAY USAGE GUIDELINES

A Baled Hay installation may be constructed near the downstream perimeter of a disturbed area along a contour to intercept sediment from overland runoff. A two year storm frequency may be used to calculate the flow rate to be filtered. The installation should be sized to filter a maximum flow thru rate of 5 GPM/FT^2 of cross sectional area. Baled hay may be used at the following locations:

1. Where the runoff approaching the baled hay flows over disturbed soil for less than 100'. If the slope of the disturbed soil exceeds 10%, the length of slope upstream the baled hay should be less than 50'.
2. Where the installation will be required for less than 3 months.
3. Where the contributing drainage area is less than ½ acre.

For Baled Hay installations in small ditches, the additional following considerations apply:

1. The ditch sideslopes should be graded as flat as possible to maximize the drainage flowrate thru the hay.
2. The ditch should be graded large enough to contain the overtopping drainage when sediment has filled to the top of the baled hay.

Bales should be replaced usually every 2 months or more often during wet weather when loss of structural integrity is accelerated.

GENERAL NOTES

1. Hay bales shall be a minimum of 30" in length and weigh a minimum of 50 Lbs.
2. Hay bales shall be bound by either wire or nylon or polypropylene string. The bales shall be composed entirely of vegetative matter.
3. Hay bales shall be embedded in the soil a minimum of 4" and where possible ½ the height of the bale.
4. Hay bales shall be placed in a row with ends tightly abutting the adjacent bales. The bales shall be placed with bindings parallel to the ground.
5. Hay bales shall be securely anchored in place with ⅜" Dia. rebar or 2" x 2" wood stakes, driven through the bales. The first stake shall be angled towards the previously laid bale to force the bales together.
6. The guidelines shown hereon are suggestions only and may be modified by the Engineer.

REVISION HISTORY

Texas Department of Transportation
Design Division (Roadway)

TEMPORARY EROSION, SEDIMENT AND WATER POLLUTION CONTROL MEASURES

FENCE & BALED HAY

EC(1)-09

FILE: ec109.dgn	DN: HEJ	CK: HEJ	DW: BGD / TV	CK:		
© TxDOT JUNE 1993	DISTRICT	FEDERAL AID PROJECT				SHEET
REVISIONS	SA					132
Language added to the end of the standard sheet note for silt fence to allow for the use of the new backing.	COUNTY		CONTROL	SECT	JOB	HIGHWAY
	BEXAR		2452	01	043	SH 151

DISCLAIMER:
The use of this standard is governed by the "Texas Engineering Practice Act". No warranty of any kind is made by TxDOT for any purpose whatsoever. TxDOT assumes no responsibility for the conversion of this standard to other formats or for incorrect results or damages resulting from its use.

LEVELS DISPLAYED
1 2 3 | 5 6 7 8 9 10 11 12 13 14 15 16
17 18 19 20 21 22 23 24 25 26 27 28 29 30 31 32
33 34 35 36 37 38 39 40 41 42 43 44 45 46 47 48
49 50 51 52 53 54 55 56 57 58 59 60 61 | 63

p:\4760\0-0129cr ~e\standard\v5std_ec02.dgn 2/21/2011 5:40:46 PM mwmldell1

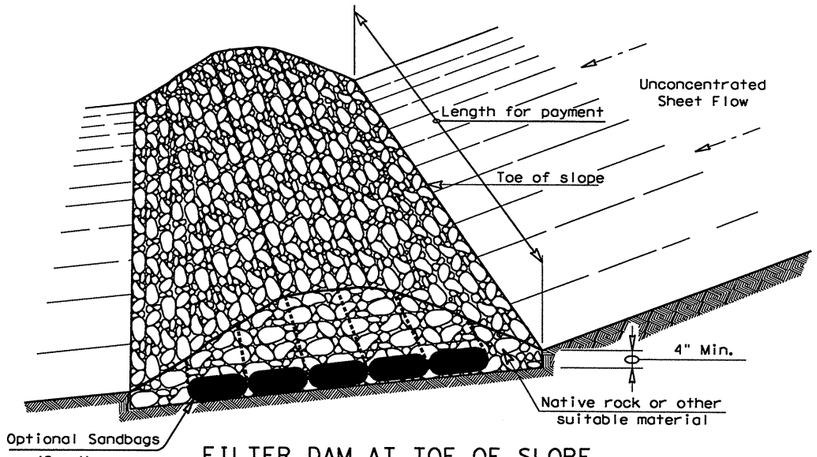

FILTER DAM AT TOE OF SLOPE

RFD1

TYPE 1

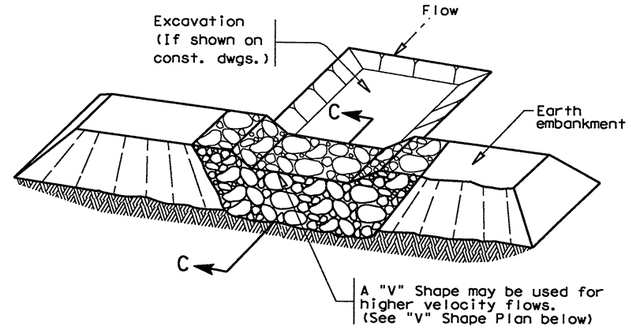

FILTER DAM AT SEDIMENT TRAP

RFD1 — OR — RFD2

TYPE 1 OR TYPE 2

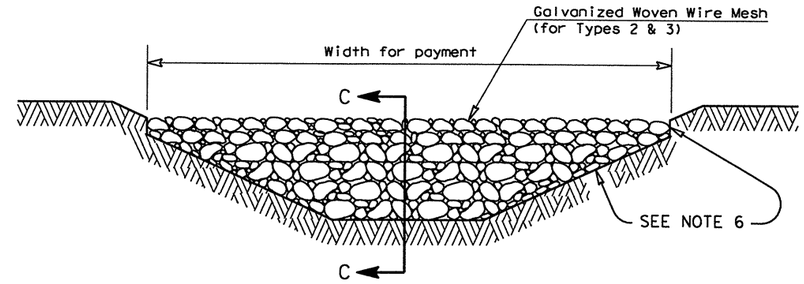

FILTER DAM AT CHANNEL SECTIONS

RFD1 — OR — RFD2 — OR — RFD3

TYPE 1 OR TYPE 2

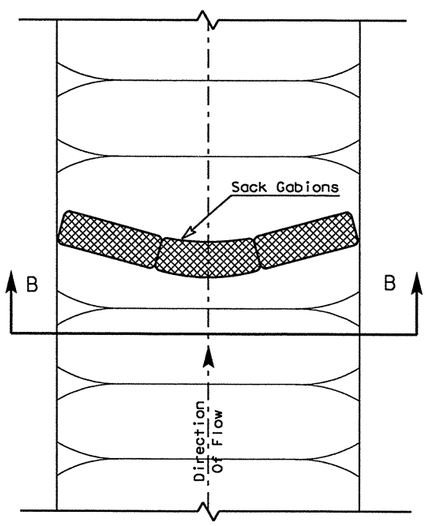

PLAN VIEW

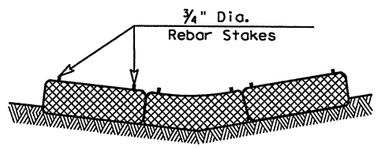

SECTION B-B

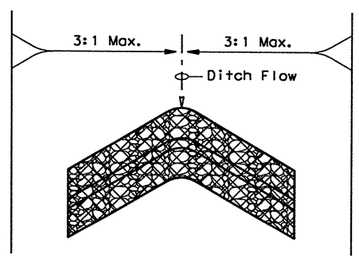

"V" SHAPE

(Plan View)

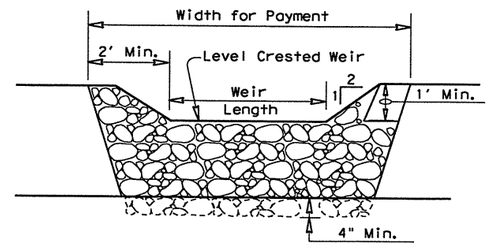

PROFILE

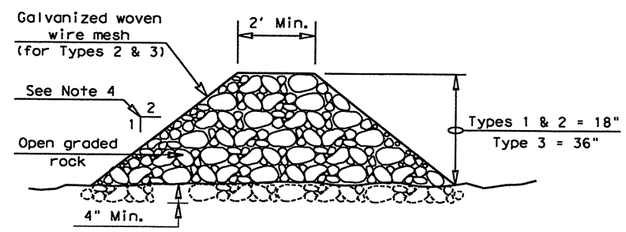

SECTION C-C

PLANS SHEET LEGEND

Type 1 Rock Filter Dam — RFD1

Type 2 Rock Filter Dam — RFD2

Type 3 Rock Filter Dam — RFD3

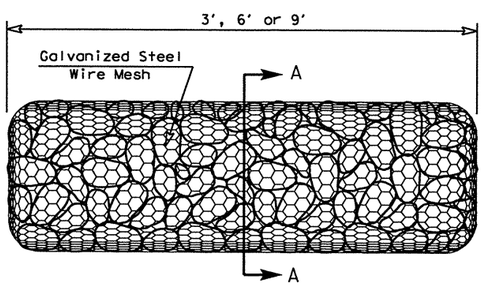

TYPE 4 (SACK GABIONS)

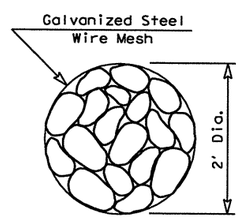

SECTION A-A

ROCK FILTER DAM USAGE GUIDELINES

Rock Filter Dams should be constructed downstream from disturbed areas to intercept sediment from overland runoff and/or concentrated flow. The dams should be sized to filter a maximum flow through rate of 60 GPM/FT^2 of cross sectional area. A 2 year storm frequency may be used to calculate the flow rate.

Type 1 (18" high with no wire mesh): Type 1 may be used at the toe of slopes, around inlets, in small ditches, and at dike or swale outlets. This type of dam is recommended to control erosion from a drainage area of 5 acres or less. Type 1 may not be used in concentrated high velocity flows (approx. 8 Ft/Sec or more) in which aggregate wash out may occur. Sandbags may be used at the embedded foundation (4" deep min.) for better filtering efficiency of low flows if called for on the plans or directed by the Engineer.

Type 2 (18" high with wire mesh): Type 2 may be used in ditches and at dike or swale outlets.

Type 3 (36" high with wire mesh): Type 3 may be used in stream flow and should be secured to the stream bed.

Type 4 (Sack gabions): Type 4 May be used in ditches and smaller channels to form an erosion control dam.

GENERAL NOTES

1. If shown on the plans or directed by the Engineer, filter dams should be placed near the toe of slopes where erosion is anticipated, upstream and/or downstream at drainage structures, and in roadway ditches and channels to collect sediment.
2. Materials (aggregate, wire mesh, sandbags, etc.) shall be as indicated by the specification for "Rock Filter Dams for Erosion and Sedimentation Control".
3. The rock filter dam dimensions shall be as indicated on the SW3P plans.
4. Side slopes should be 2:1 or flatter. Dams within the safety zone shall have sideslopes of 6:1 or flatter.
5. Maintain a minimum of 1' between top of rock filter dam weir and top of embankment for filter dams at sediment traps.
6. Filter dams should be embedded a minimum of 4" into existing ground.
7. The sediment trap for ponding of sediment laden runoff shall be of the dimensions shown on the plans.
8. Rock filter dam types 2 & 3 shall be secured with 20 gauge galvanized woven wire mesh with 1" diameter hexagonal openings. The aggregate shall be placed on the mesh to the height & slopes specified. The mesh shall be folded at the upstream side over the aggregate and tightly secured to itself on the downstream side using wire ties or hog rings. In stream use the mesh should be secured or staked to the stream bed prior to aggregate placement.
9. Sack Gabions should be staked down with ¾" dia. rebar stakes.
10. Flow outlet should be onto a stabilized area (vegetation, rock, etc.).
11. The guidelines shown hereon are suggestions only and may be modified by the Engineer.

DISCLAIMER:
The use of this standard is governed by the "Texas Engineering Practice Act". No warranty of any kind is made by TxDOT for any purpose whatsoever. TxDOT assumes no responsibility for the conversion of this standard to other formats or for incorrect results or damages resulting from its use.

LEVELS Displayed

1	2	3	5	6	7	8	9	10	11	12	13	14	15	16			
17	18	19	20	21	22	23	24	25	26	27	28	29	30	31	32		
33	34	35	36	37	38	39	40	41	42	43	44	45	46	47	48		
49	50	51	52	53	54	55	56	57	58	59	60	61		63			

REVISION HISTORY

Texas Department of Transportation
Design Division (Roadway)

TEMPORARY EROSION, SEDIMENT AND WATER POLLUTION CONTROL MEASURES

ROCK FILTER DAMS

EC(2)-93

FILE: EC293.DGN	DN: HEJ	CK: HEJ	DW: BGD	CK:	
© TxDOT JUNE 1993	DISTRICT	FEDERAL AID PROJECT			SHEET
REVISIONS	SA				133
	COUNTY		CONTROL	SECT	JOB	HIGHWAY
	BEXAR		2452	01	043	SH 151

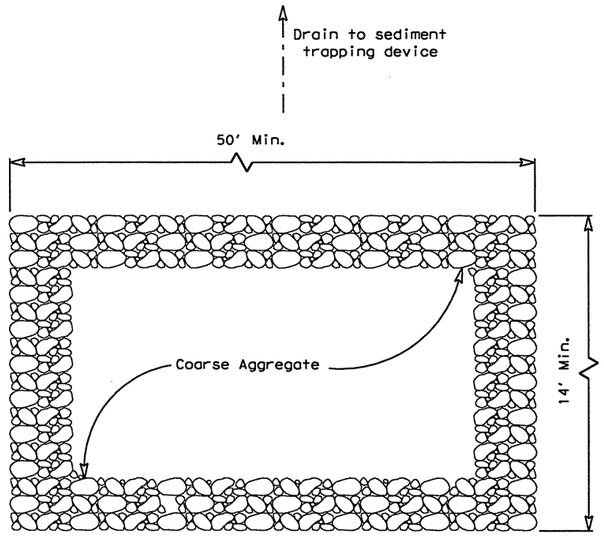

PLAN

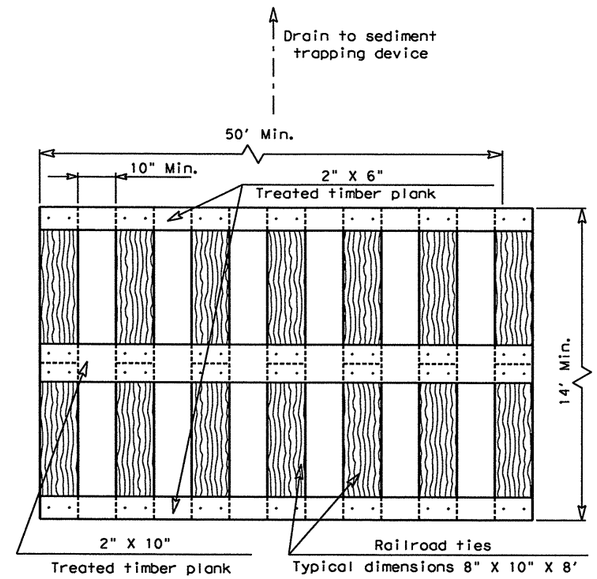

PLAN

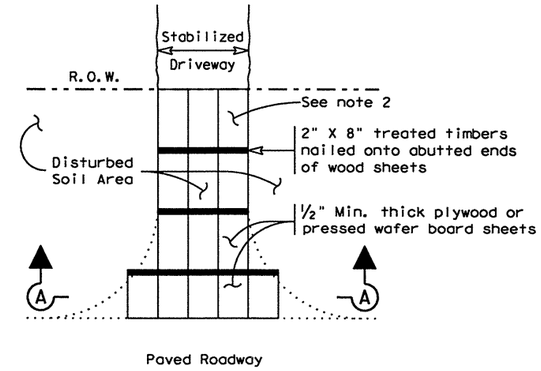

PLAN

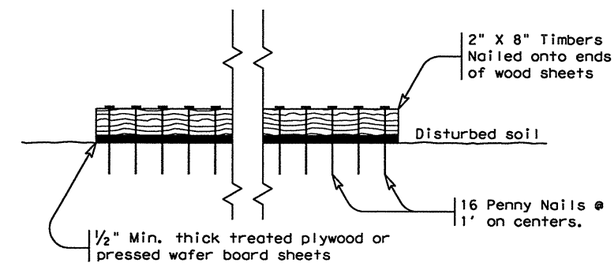

SECTION A-A

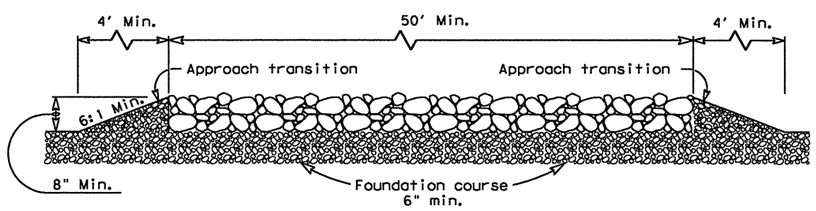

PROFILE

CONSTRUCTION EXIT (TYPE 1)

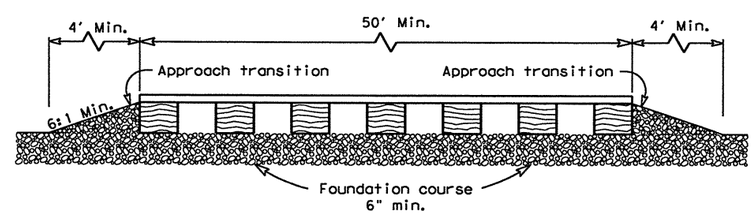

PROFILE

CONSTRUCTION EXIT (TYPE 2)

CONSTRUCTION EXIT (TYPE 3)

GENERAL NOTES

1. The length of the type 1 construction exit shall be as indicated on the plans, but not less than 50'.
2. The coarse aggregate should be open graded with a size of 4" to 8".
3. The approach transitions should be no steeper than 6:1 and constructed as directed by the Engineer.
4. The construction exit foundation course shall be flexible base, bituminous concrete, portland cement concrete or other material as approved by the Engineer.
5. The construction exit shall be graded to allow drainage to a sediment trapping device.
6. The guidelines shown hereon are suggestions only and may be modified by the Engineer.

GENERAL NOTES

1. The length of the type 2 construction exit shall be as indicated on the plans, but not less than 50'.
2. The treated timber planks shall be attached to the railroad ties with ½"x 6" min. lag bolts. Other fasteners may be used as approved by the Engineer.
3. The treated timber planks shall be #2 grade min., and should be free from large and loose knots.
4. The approach transitions shall be no steeper than 6:1 and constructed as directed by the Engineer.
5. The construction exit foundation course shall be flexible base, bituminous concrete, portland cement concrete or other material as approved by the Engineer.
6. The construction exit should be graded to allow drainage to a sediment trapping device.
7. The guidelines shown hereon are suggestions only and may be modified by the Engineer.

GENERAL NOTES

1. The length of the type 3 construction exit shall be as shown on the plans, or as directed by the Engineer.
2. The type 3 construction exit may be constructed from open graded crushed stone with a size of two to four inches spread a min. of 4" thick to the limits shown on the plans.
3. The treated timber planks shall be #2 grade min., and should be free from large and loose knots.
4. The guidelines shown hereon are suggestions only and may be modified by the Engineer.

REVISION HISTORY

Texas Department of Transportation
Design Division (Roadway)

TEMPORARY EROSION, SEDIMENT AND WATER POLLUTION CONTROL MEASURES

CONSTRUCTION EXITS

EC(3)-93

FILE: EC393.DGN	DN: HEJ	CK: HEJ	DW: BGD	CK:
© TxDOT JUNE 1993	DISTRICT	FEDERAL AID PROJECT		SHEET
REVISIONS	SA			134

COUNTY	CONTROL	SECT	JOB	HIGHWAY
BEXAR	2452	01	043	SH 151

DISCLAIMER:
The use of this standard is governed by the "Texas Engineering Practice Act". No warranty of any kind is made by TxDOT for any purpose whatsoever. TxDOT assumes no responsibility for the conversion of this standard to other formats or for incorrect results or damages resulting from its use.

d:\47160\0-0129\ ...\standard\15ield_ec03.dgn 2/21/2011 5:40:17 PM mwmldell1

SH 151 CENTERLINE

POINT BL151001 N 13,720,781.44 E 2,065,822.05 STA 472+53.00

COURSE FROM BL151001 TO PC BL15101 N 24° 33′ 03.35" W DIST 1,911.39

CURVE DATA

CURVE BL15101

P.I. STATION		498+37.03	N	13,723,131.85	E	2,064,748.38
DELTA	=	28° 13′ 34.07" (LT)				
DEGREE	=	2° 08′ 30.00"				
TANGENT	=	672.63				
LENGTH	=	1,317.95				
RADIUS	=	2,675.29				
EXTERNAL	=	83.26				
LONG CHORD	=	1,304.66				
MID. ORD.	=	80.75				
P.C. STATION		491+64.39	N	13,722,520.02	E	2,065,027.86
P.T. STATION		504+82.34	N	13,723,538.74	E	2,064,212.77
C.C.			N	13,721,408.44	E	2,062,594.44
BACK	= N	24° 33′ 03.35" W				
AHEAD	= N	52° 46′ 37.42" W				
CHORD BEAR	= N	38° 39′ 50.38" W				

COURSE FROM PT BL15101 TO PC BL15102 N 52° 46′ 37.42" W DIST 4,072.85

CURVE DATA

CURVE BL15102

P.I. STATION		574+01.87	N	13,727,724.48	E	2,058,702.83
DELTA	=	59° 18′ 31.96" (LT)				
DEGREE	=	1° 08′ 45.30"				
TANGENT	=	2,846.68				
LENGTH	=	5,175.68				
RADIUS	=	5,000.00				
EXTERNAL	=	753.57				
LONG CHORD	=	4,947.68				
MID. ORD.	=	654.87				
P.C. STATION		545+55.19	N	13,726,002.47	E	2,060,969.61
P.T. STATION		597+30.86	N	13,726,654.14	E	2,056,065.04
C.C.			N	13,722,021.03	E	2,057,945.02
BACK	= N	52° 46′ 37.42" W				
AHEAD	= S	67° 54′ 50.63" W				
CHORD BEAR	= N	82° 25′ 53.39" W				

COURSE FROM PT BL15102 TO BL151002 S 67° 54′ 50.63" W DIST 42.94

POINT BL151002 N 13,726,638.00 E 2,056,025.25 STA 597+73.80

ENDING CHAIN A_BL__151 DESCRIPTION

SH 151 EBML BASELINE

POINT MLEB151001 N 13,720,765.23 E 2,065,786.57 STA 472+53.00

COURSE FROM MLEB151001 TO PC MLEB15101 N 24° 33′ 03.35" W DIST 1,911.39

CURVE DATA

CURVE MLEB15101

P.I. STATION		498+27.22	N	13,723,106.72	E	2,064,716.98
DELTA	=	28° 13′ 34.07" (LT)				
DEGREE	=	2° 10′ 24.06"				
TANGENT	=	662.83				
LENGTH	=	1,298.74				
RADIUS	=	2,636.29				
EXTERNAL	=	82.05				
LONG CHORD	=	1,285.65				
MID. ORD.	=	79.57				
P.C. STATION		491+64.39	N	13,722,503.82	E	2,064,992.39
P.T. STATION		504+63.13	N	13,723,507.68	E	2,064,189.18
C.C.			N	13,721,408.44	E	2,062,594.44
BACK	= N	24° 33′ 03.35" W				
AHEAD	= N	52° 46′ 37.42" W				
CHORD BEAR	= N	38° 39′ 50.38" W				

COURSE FROM PT MLEB15101 TO PC MLEB15102 N 52° 46′ 37.42" W DIST 4,072.85

CURVE DATA

CURVE MLEB15102

P.I. STATION		573+60.45	N	13,727,680.00	E	2,058,696.92
DELTA	=	59° 18′ 31.96" (LT)				
DEGREE	=	1° 09′ 17.73"				
TANGENT	=	2,824.48				
LENGTH	=	5,135.31				
RADIUS	=	4,961.00				
EXTERNAL	=	747.70				
LONG CHORD	=	4,909.09				
MID. ORD.	=	649.77				
P.C. STATION		545+35.98	N	13,725,971.42	E	2,060,946.02
P.T. STATION		596+71.28	N	13,726,618.00	E	2,056,079.70
C.C.			N	13,722,021.03	E	2,057,945.02
BACK	= N	52° 46′ 37.42" W				
AHEAD	= S	67° 54′ 50.63" W				
CHORD BEAR	= N	82° 25′ 53.39" W				

COURSE FROM PT MLEB15102 TO MLEB151002 S 67° 54′ 50.63" W DIST 42.94

POINT MLEB151002 N 13,726,601.86 E 2,056,039.91 STA 597+14.22

ENDING CHAIN A_MLEB151 DESCRIPTION

STATE OF TEXAS
MICHAEL W. MIDKIFF
75435
REGISTERED PROFESSIONAL ENGINEER
2/21/11

NO.	DATE	REVISION DESCRIPTION	APP. BY

© 2011

Texas Department of Transportation

MACTEC
3520 EXECUTIVE CENTER DRIVE
SUITE 200
AUSTIN, TEXAS 78731
(512) 795-0360
REGISTRATION NUMBER: F-1784

SH 151

ROADWAY HORIZONTAL ALIGNMENT DATA

(SHEET 1 OF 4)

FED. RD. DIV. NO.			SHEET NO.
			135
STATE	DIST.	COUNTY	
TEXAS	SA	BEXAR	
CONT.	SECT.	JOB	HIGHWAY NO.
2452	01	043	SH 151

p:\4760\0-0129\cad\sheet\15lhc01.dgn 2/21/2011 6:00:05 PM mwmidkiff

SH 151 WBML BASELINE

POINT MLWB151001 N 13,720,797.64 E 2,065,857.52 STA 472+53.00

COURSE FROM MLWB151001 TO PC MLWB15101 N 24° 33′ 03.35" W DIST 1,911.39

CURVE DATA

CURVE MLWB15101

P.I. STATION		498+46.83	N	13,723,156.97	E	2,064,779.78
DELTA	=	28° 13′ 34.07" (LT)				
DEGREE	=	2° 06′ 39.22"				
TANGENT	=	682.44				
LENGTH	=	1,337.16				
RADIUS	=	2,714.29				
EXTERNAL	=	84.48				
LONG CHORD	=	1,323.68				
MID. ORD.	=	81.93				
P.C. STATION		491+64.39	N	13,722,536.23	E	2,065,063.33
P.T. STATION		505+01.56	N	13,723,569.79	E	2,064,236.36
C.C.			N	13,721,408.44	E	2,062,594.44
BACK	= N	24° 33′ 03.35" W				
AHEAD	= N	52° 46′ 37.42" W				
CHORD BEAR	= N	38° 39′ 50.38" W				

COURSE FROM PT MLWB15101 TO PC MLWB15102 N 52° 46′ 37.42" W DIST 4,072.85

CURVE DATA

CURVE MLWB15102

P.I. STATION		574+43.29	N	13,727,768.97	E	2,058,708.74
DELTA	=	59° 18′ 31.96" (LT)				
DEGREE	=	1° 08′ 13.37"				
TANGENT	=	2,868.89				
LENGTH	=	5,216.05				
RADIUS	=	5,039.00				
EXTERNAL	=	759.45				
LONG CHORD	=	4,986.27				
MID. ORD.	=	659.98				
P.C. STATION		545+74.40	N	13,726,033.53	E	2,060,993.20
P.T. STATION		597+90.45	N	13,726,690.28	E	2,056,050.37
C.C.			N	13,722,021.03	E	2,057,945.02
BACK	= N	52° 46′ 37.42" W				
AHEAD	= S	67° 54′ 50.63" W				
CHORD BEAR	= N	82° 25′ 53.39" W				

COURSE FROM PT MLWB15102 TO MLWB151002 S 67° 54′ 50.63" W DIST 42.94

POINT MLWB151002 N 13,726,674.13 E 2,056,010.59 STA 598+33.38

ENDING CHAIN A_MLWB151 DESCRIPTION

LP 1604 CENTERLINE

BEGINNING CHAIN A_BL__160 DESCRIPTION

POINT BL160001 N 13,754,257.86 E 2,077,574.04 STA 234+21.50

COURSE FROM BL160001 TO PC BL16001 S 45° 07′ 02.85" W DIST 3,390.82

CURVE DATA

CURVE BL16001

P.I. STATION		273+92.67	N	13,751,455.58	E	2,074,760.25
DELTA	=	5° 47′ 54.65" (LT)				
DEGREE	=	0° 30′ 00.00"				
TANGENT	=	580.35				
LENGTH	=	1,159.70				
RADIUS	=	11,459.16				
EXTERNAL	=	14.69				
LONG CHORD	=	1,159.21				
MID. ORD.	=	14.67				
P.C. STATION		268+12.33	N	13,751,865.11	E	2,075,171.46
P.T. STATION		279+72.03	N	13,751,006.61	E	2,074,392.52
C.C.			N	13,743,745.67	E	2,083,257.68
BACK	= S	45° 07′ 02.85" W				
AHEAD	= S	39° 19′ 08.20" W				
CHORD BEAR	= S	42° 13′ 05.52" W				

COURSE FROM PT BL16001 TO PC BL16002 S 39° 19′ 08.20" W DIST 5,824.40

CURVE DATA

CURVE BL16002

P.I. STATION		344+77.14	N	13,745,974.06	E	2,070,270.65
DELTA	=	20° 12′ 32.23" (LT)				
DEGREE	=	1° 30′ 00.00"				
TANGENT	=	680.70				
LENGTH	=	1,347.26				
RADIUS	=	3,819.72				
EXTERNAL	=	60.18				
LONG CHORD	=	1,340.29				
MID. ORD.	=	59.25				
P.C. STATION		337+96.43	N	13,746,500.67	E	2,070,701.97
P.T. STATION		351+43.70	N	13,745,330.87	E	2,070,047.80
C.C.			N	13,744,080.36	E	2,073,657.02
BACK	= S	39° 19′ 08.20" W				
AHEAD	= S	19° 06′ 35.97" W				
CHORD BEAR	= S	29° 12′ 52.08" W				

COURSE FROM PT BL16002 TO PC BL16003 S 19° 06′ 35.97" W DIST 2,493.97

STATE OF TEXAS
MICHAEL W. MIDKIFF
75435
REGISTERED PROFESSIONAL ENGINEER
2/21/11

NO.	DATE	REVISION DESCRIPTION	APP. BY

© 2011

Texas Department of Transportation

MACTEC
3520 EXECUTIVE CENTER DRIVE
SUITE 200
AUSTIN, TEXAS 78731
(512) 795-0360

REGISTRATION NUMBER: F-1784

SH 151

ROADWAY HORIZONTAL ALIGNMENT DATA

(SHEET 2 OF 4)

FED. RD. DIV. NO.			SHEET NO.
			136
STATE	DIST.	COUNTY	
TEXAS	SA	BEXAR	
CONT.	SECT.	JOB	HIGHWAY NO.
2452	01	043	SH 151

P:\4760\0-0129\cad\sheet\151hc02.dgn 2/21/2011 6:00:06 PM mwmidkiff

LP 1604 CENTERLINE CONT.

CURVE DATA

CURVE BL16003

P.I. STATION		382+13.01	N	13,742,430.70	E	2,069,042.96
DELTA	=	22° 42′ 41.51" (RT)				
DEGREE	=	2° 00′ 00.00"				
TANGENT	=	575.34				
LENGTH	=	1,135.58				
RADIUS	=	2,864.79				
EXTERNAL	=	57.20				
LONG CHORD	=	1,128.16				
MID. ORD.	=	56.08				
P.C. STATION		376+37.67	N	13,742,974.34	E	2,069,231.31
P.T. STATION		387+73.24	N	13,742,001.94	E	2,068,659.31
C.C.			N	13,743,912.22	E	2,066,524.40
BACK	= S	19° 06′ 35.97" W				
AHEAD	= S	41° 49′ 17.48" W				
CHORD BEAR	= S	30° 27′ 56.73" W				

COURSE FROM PT BL16003 TO PC BL16004 S 41° 49′ 17.48" W DIST 1,241.64

CURVE DATA

CURVE BL16004

P.I. STATION		406+49.04	N	13,740,604.05	E	2,067,408.51
DELTA	=	18° 51′ 09.99" (LT)				
DEGREE	=	1° 30′ 00.00"				
TANGENT	=	634.16				
LENGTH	=	1,256.85				
RADIUS	=	3,819.72				
EXTERNAL	=	52.28				
LONG CHORD	=	1,251.19				
MID. ORD.	=	51.58				
P.C. STATION		400+14.88	N	13,741,076.64	E	2,067,831.37
P.T. STATION		412+71.74	N	13,740,020.17	E	2,067,161.04
C.C.			N	13,738,529.60	E	2,070,677.92
BACK	= S	41° 49′ 17.48" W				
AHEAD	= S	22° 58′ 07.50" W				
CHORD BEAR	= S	32° 23′ 42.49" W				

COURSE FROM PT BL16004 TO PC BL16005 S 22° 58′ 07.50" W DIST 4,860.69

CURVE DATA

CURVE BL16005

P.I. STATION		462+99.74	N	13,735,390.79	E	2,065,198.97
DELTA	=	0° 50′ 11.42" (RT)				
DEGREE	=	0° 14′ 59.93"				
TANGENT	=	167.32				
LENGTH	=	334.63				
RADIUS	=	22,920.00				
EXTERNAL	=	0.61				
LONG CHORD	=	334.62				
MID. ORD.	=	0.61				
P.C. STATION		461+32.42	N	13,735,544.84	E	2,065,264.26
P.T. STATION		464+67.05	N	13,735,237.71	E	2,065,131.43
C.C.			N	13,744,488.89	E	2,044,161.41
BACK	= S	22° 58′ 07.50" W				
AHEAD	= S	23° 48′ 18.92" W				
CHORD BEAR	= S	23° 23′ 13.21" W				

COURSE FROM PT BL16005 TO BL160002 S 23° 48′ 18.92" W DIST 879.02

POINT BL160002 N 13,734,433.48 E 2,064,776.63 STA 473+46.07

LP 1604 CENTERLINE CONT.

CURVE DATA

CURVE BL16006

P.I. STATION		502+08.42	N	13,731,810.24	E	2,063,631.36
DELTA	=	5° 49′ 53.13" (LT)				
DEGREE	=	0° 45′ 00.00"				
TANGENT	=	389.10				
LENGTH	=	777.52				
RADIUS	=	7,639.44				
EXTERNAL	=	9.90				
LONG CHORD	=	777.19				
MID. ORD.	=	9.89				
P.C. STATION		498+19.32	N	13,732,166.83	E	2,063,787.04
P.T. STATION		505+96.85	N	13,731,439.67	E	2,063,512.71
C.C.			N	13,729,110.15	E	2,070,788.31
BACK	= S	23° 35′ 08.06" W				
AHEAD	= S	17° 45′ 14.94" W				
CHORD BEAR	= S	20° 40′ 11.50" W				

COURSE FROM PT BL16006 TO PC BL16007 S 17° 45′ 14.94" W DIST 209.48

CURVE DATA

CURVE BL16007

P.I. STATION		512+53.63	N	13,730,814.16	E	2,063,312.43
DELTA	=	6° 42′ 06.98" (RT)				
DEGREE	=	0° 45′ 00.00"				
TANGENT	=	447.31				
LENGTH	=	893.59				
RADIUS	=	7,639.44				
EXTERNAL	=	13.08				
LONG CHORD	=	893.08				
MID. ORD.	=	13.06				
P.C. STATION		508+06.33	N	13,731,240.17	E	2,063,448.83
P.T. STATION		516+99.92	N	13,730,406.99	E	2,063,127.25
C.C.			N	13,733,569.68	E	2,056,173.23
BACK	= S	17° 45′ 14.94" W				
AHEAD	= S	24° 27′ 21.92" W				
CHORD BEAR	= S	21° 06′ 18.43" W				

COURSE FROM PT BL16007 TO PC BL16008 S 24° 27′ 21.92" W DIST 4,463.58

CURVE DATA

CURVE BL16008

P.I. STATION		569+00.57	N	13,725,672.95	E	2,060,974.20
DELTA	=	21° 50′ 37.43" (LT)				
DEGREE	=	1° 30′ 00.00"				
TANGENT	=	737.07				
LENGTH	=	1,456.25				
RADIUS	=	3,819.72				
EXTERNAL	=	70.46				
LONG CHORD	=	1,447.44				
MID. ORD.	=	69.19				
P.C. STATION		561+63.50	N	13,726,343.89	E	2,061,279.35
P.T. STATION		576+19.74	N	13,724,936.64	E	2,060,940.61
C.C.			N	13,724,762.55	E	2,064,756.35
BACK	= S	24° 27′ 21.84" W				
AHEAD	= S	2° 36′ 44.41" W				
CHORD BEAR	= S	13° 32′ 03.13" W				

STATE OF TEXAS
MICHAEL W. MIDKIFF
75435
REGISTERED
PROFESSIONAL ENGINEER
2/21/11

NO.	DATE	REVISION DESCRIPTION	APP. BY

© 2011

Texas Department of Transportation

MACTEC
3520 EXECUTIVE CENTER DRIVE
SUITE 200
AUSTIN, TEXAS 78731
(512) 795-0360

REGISTRATION NUMBER: F-1784

SH 151

ROADWAY HORIZONTAL ALIGNMENT DATA

(SHEET 3 OF 4)

FED. RD. DIV. NO.			SHEET NO.
			137
STATE	DIST.	COUNTY	
TEXAS	SA	BEXAR	
CONT.	SECT.	JOB	HIGHWAY NO.
2452	01	043	SH 151

p:\4760\0-0129\cad\sheet\15lnc03.dgn 2/21/2011 6:00:07 PM mwmidkiff

LP 1604 CONT.

CURVE DATA

```
CURVE BL16009
P.I.  STATION          638+60.94  N       13,718,701.93  E        2,060,656.15
DELTA        =       2° 58' 47.94" (LT)
DEGREE       =       0° 30' 00.00"
TANGENT      =              298.07
LENGTH       =              596.00
RADIUS       =           11,459.16
EXTERNAL     =                3.88
LONG CHORD   =              595.93
MID. ORD.    =                3.87
P.C.  STATION          635+62.88  N       13,718,999.68  E        2,060,669.73
P.T.  STATION          641+58.88  N       13,718,403.87  E        2,060,658.06
C.C.                              N       13,718,477.40  E        2,072,116.98
BACK         = S   2° 36' 44.36" W
AHEAD        = S   0° 22' 03.59" E
CHORD BEAR   = S   1° 07' 20.39" W

COURSE FROM PT BL16009 TO PC BL16010 S 0° 22' 03.59" E DIST 5,717.62
```

CURVE DATA

```
CURVE BL16010
P.I.  STATION          699+78.66  N       13,712,584.20  E        2,060,695.40
DELTA        =       0° 30' 38.98" (LT)
DEGREE       =       0° 15' 00.00"
TANGENT      =              102.17
LENGTH       =              204.33
RADIUS       =           22,918.31
EXTERNAL     =                0.23
LONG CHORD   =              204.33
MID. ORD.    =                0.23
P.C.  STATION          698+76.49  N       13,712,686.37  E        2,060,694.75
P.T.  STATION          700+80.82  N       13,712,482.05  E        2,060,696.97
C.C.                              N       13,712,833.43  E        2,083,612.59
BACK         = S   0° 22' 03.59" E
AHEAD        = S   0° 52' 42.56" E
CHORD BEAR   = S   0° 37' 23.07" E

==========================================================================
ENDING CHAIN A_BL__160 DESCRIPTION
```

STATE OF TEXAS
MICHAEL W. MIDKIFF
75435
REGISTERED PROFESSIONAL ENGINEER
2/21/11

NO.	DATE	REVISION DESCRIPTION	APP. BY

© 2011

Texas Department of Transportation

MACTEC
3520 EXECUTIVE CENTER DRIVE
SUITE 200
AUSTIN, TEXAS 78731
(512) 795-0360

REGISTRATION NUMBER: F-1784

SH 151

ROADWAY HORIZONTAL ALIGNMENT DATA

(SHEET 4 OF 4)

FED. RD. DIV. NO.			SHEET NO.
			138
STATE	DIST.	COUNTY	
TEXAS	SA	BEXAR	
CONT.	SECT.	JOB	HIGHWAY NO.
2452	01	043	SH 151

p:\4160\0-0129\cad\sheet\151hc04.dgn 2/21/2011 6:00:08 PM mwmidkiff

NOTES:

1. COORDINATES AND DISTANCES SHOWN ARE U.S. SURVEY FEET, DISPLAYED IN SURFACE VALUES USING THE RECIPROCAL COMBINED SCALE FACTOR OF 1.00017.

2. HORIZONTAL COORDINATE VALUES FOR CONTROL POINTS 14 THROUGH 17 WERE DERIVED USING RTK SURVEY METHODS HOLDING THE NAD83(1986) HORIZONTAL SURFACE VALUES FOR THE FOLLOWING CONTROL POINTS PREVIOUSLY ESTABLISHED BY SURVCON INC.

SURVCON CONTROL POINT 30
NAD83 (1986)
N 13726088.8490
E 2061074.4540

SURVCON CONTROL POINT 5002
NAD 83 (1986)
N 13725766.2130
E 2061827.2760

3. VERTICAL VALUES FOR CONTROL POINTS 14 THROUGH 17 WERE DERIVED USING A DOUBLE RUN LEVEL LOOP HOLDING THE NAVD 88 VERTICAL VALUE FOR THE FOLLOWING CONTROL POINT PREVIOUSLY ESTABLISHED BY SURVCON INC.

SURVCON CONTROL POINT 30
NAVD88
ELEVATION = 935.30'

4. VALUES ARE AS SHOWN ON TEXAS DEPARTMENT OF TRANSPORTATION COPYWRITEN SURVEY PREPARED BY PAPE DAWSON ENGINEERS AND SIGNED BY ANGELA CARLIN, R.P.L.S. 5981, DATED JUNE 30, 2010.
HORIZONTAL VALUES HAVE BEEN CONFIRMED TO BE WITHIN SURVEY TOLERANCE BY INDEPENDENT VRS RTK SURVEY BASED ON TxDOT PRIMARY CONTROL STATIONS Z0151074, Z0151044 & Z0151155.
VERTICAL VALUES HAVE BEEN CONFIRMED TO BE WITHIN SURVEY TOLERANCE BY INDEPENDENT 3 WIRE LEVELING CIRCUITS.

STATE OF TEXAS
REGISTERED
ROBERT J. RILEY
5157
PROFESSIONAL
LAND SURVEYOR

NO.	DATE	REVISION DESCRIPTION	APP. BY

© 2011

Texas Department of Transportation

MACTEC
3520 EXECUTIVE CENTER DRIVE
SUITE 200
AUSTIN, TEXAS 78731
(512) 795-0360
REGISTRATION NUMBER: F-1784

RODS Surveying, Inc.
6810 LEE ROAD
SPRING, TEXAS 77379
TEL (281) 379-6388
FAX (281) 379-1602

SH 151

PRIMARY HORIZONTAL AND VERTICAL CONTROL

(SHEET 1 OF 2)

FED. RD. DIV. NO.			SHEET NO.
			139

STATE	DIST.	COUNTY	
TEXAS	SA	BEXAR	
CONT.	SECT.	JOB	HIGHWAY NO.
2452	01	043	SH 151

P:\4160\10-01\29\cad\sheet\5lvc01.dgn 3/11/2011 11:40:22 AM albennett

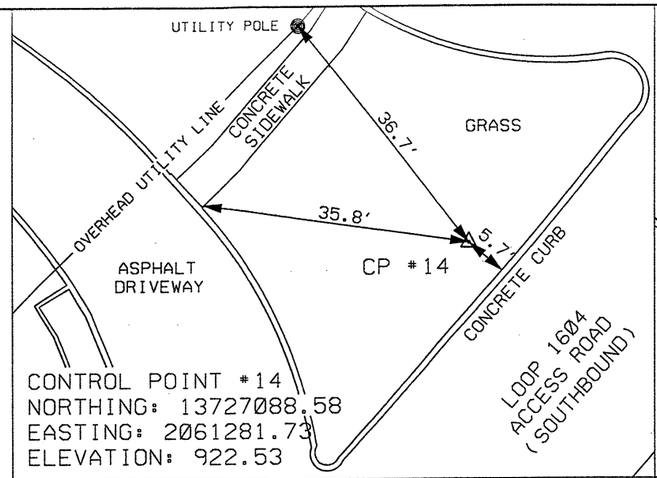

BERNTSEN ROD WITH ALUMINUM CAP STAMPED "PD-14" LOCATED ALONG LOOP 1604 SOUTHBOUND ACCESS ROAD APPROXIMATELY 1100 FEET NORTHEASTERLY FROM THE INTERSECTION OF ALAMO RANCH PARKWAY AND LOOP 1604 SOUTHBOUND ACCESS ROAD.

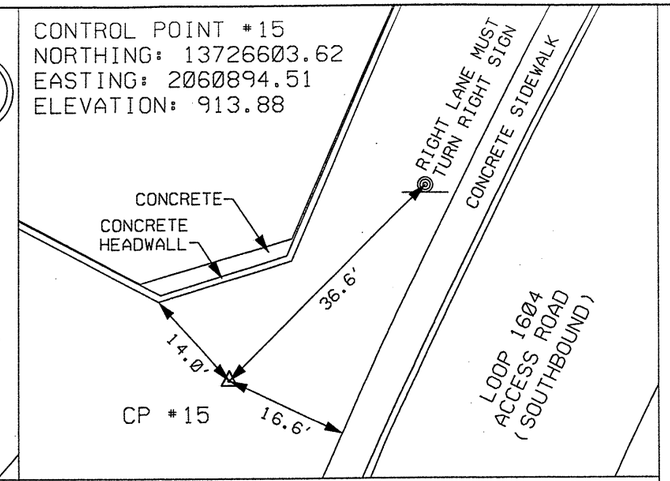

BERNTSEN ROD WITH ALUMINUM CAP STAMPED "PD-15" LOCATED ALONG LOOP 1604 SOUTHBOUND ACCESS ROAD APPROXIMATELY 500 FEET NORTHEASTERLY FROM THE INTERSECTION OF ALAMO RANCH PARKWAY AND LOOP 1604 SOUTHBOUND ACCESS ROAD.

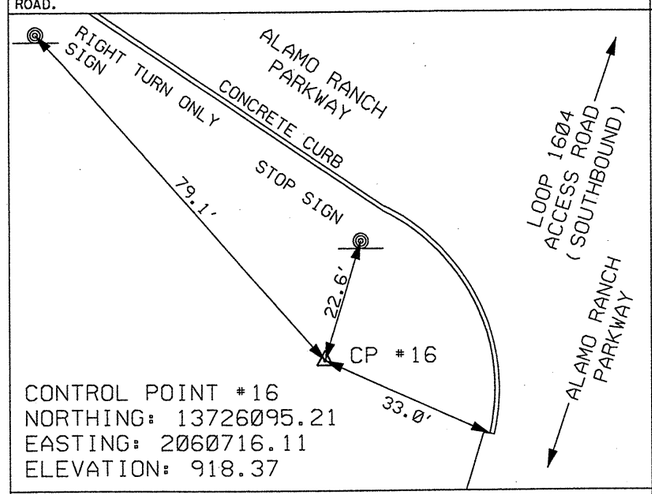

BERNTSEN ROD WITH ALUMINUM CAP STAMPED "PD-16" LOCATED ALONG ALAMO RANCH PARKWAY AT THE INTERSECTION OF ALAMO RANCH PARKWAY AND THE SOUTHBOUND LOOP 1604 ACCESS ROAD.

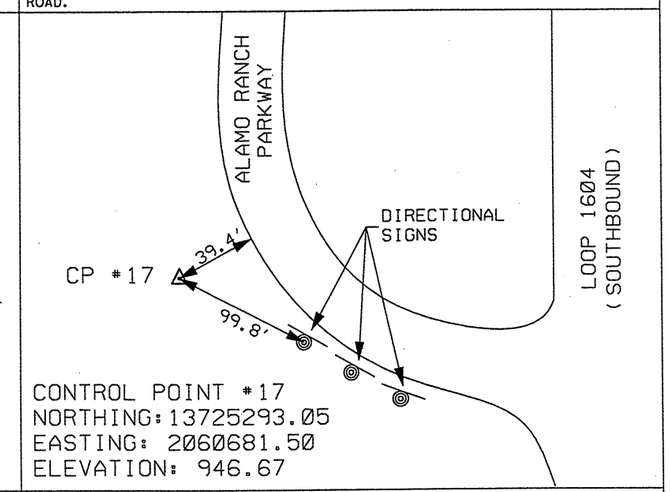

MAG NAIL WITH SHINER IN ROCK LOCATED ALONG ALAMO RANCH PARKWAY APPROXIMATELY 0.10 MILES NORTHWEST OF INTERSECTION OF ALAMO RANCH PARKWAY AND HIGHWAY 1604 SOUTHBOUND.

N

nts

NOTES:

1. COORDINATES AND DISTANCES SHOWN ARE U.S. SURVEY FEET, DISPLAYED IN SURFACE VALUES USING THE RECIPROCAL COMBINED SCALE FACTOR OF 1.00017.

2. HORIZONTAL COORDINATE VALUES FOR CONTROL POINTS 14 THROUGH 17 WERE DERIVED USING RTK SURVEY METHODS HOLDING THE NAD83(1986) HORIZONTAL SURFACE VALUES FOR THE FOLLOWING CONTROL POINTS PREVIOUSLY ESTABLISHED BY SURVCON INC.

SURVCON CONTROL POINT 30
NAD83 (1986)
N 13726088.8490
E 2061074.4540

SURVCON CONTROL POINT 5002
NAD 83 (1986)
N 13725766.2130
E 2061827.2760

3. VERTICAL VALUES FOR CONTROL POINTS 14 THROUGH 17 WERE DERIVED USING A DOUBLE RUN LEVEL LOOP HOLDING THE NAVD 88 VERTICAL VALUE FOR THE FOLLOWING CONTROL POINT PREVIOUSLY ESTABLISHED BY SURVCON INC.

SURVCON CONTROL POINT 30
NAVD88
ELEVATION = 935.30'

4. VALUES ARE AS SHOWN ON TEXAS DEPARTMENT OF TRANSPORTATION COPYWRITEN SURVEY PREPARED BY PAPE DAWSON ENGINEERS AND SIGNED BY ANGELA CARLIN, R.P.L.S. 5981, DATED JUNE 30, 2010. HORIZONTAL VALUES HAVE BEEN CONFIRMED TO BE WITHIN SURVEY TOLERANCE BY INDEPENDENT VRS RTK SURVEY BASED ON TxDOT PRIMARY CONTROL STATIONS Z0151074, Z0151044 & Z0151155. VERTICAL VALUES HAVE BEEN CONFIRMED TO BE WITHIN SURVEY TOLERANCE BY INDEPENDENT 3 WIRE LEVELING CIRCUITS.

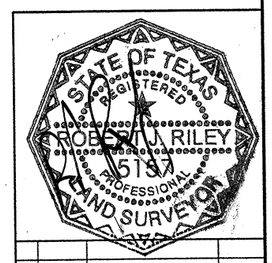

NO.	DATE	REVISION DESCRIPTION	APP. BY

©2011

Texas Department of Transportation

MACTEC
3520 EXECUTIVE CENTER DRIVE
SUITE 200
AUSTIN, TEXAS 78731
(512) 795-0360
REGISTRATION NUMBER: F-1784

RODS Surveying, Inc.
6810 LEE ROAD
SPRING, TEXAS 77379
TEL (281) 379-6388
FAX (281) 379-1602

SH 151

PRIMARY HORIZONTAL AND VERTICAL CONTROL

(SHEET 2 OF 2)

FED. RD. DIV. NO.			SHEET NO.
			140

STATE	DIST.	COUNTY	
TEXAS	SA	BEXAR	
CONT.	SECT.	JOB	HIGHWAY NO.
2452	01	043	SH 151

P:\47600-0129-cad\sheet\5\rc02.dgn 3/11/2011 11:40:24 AM albennett

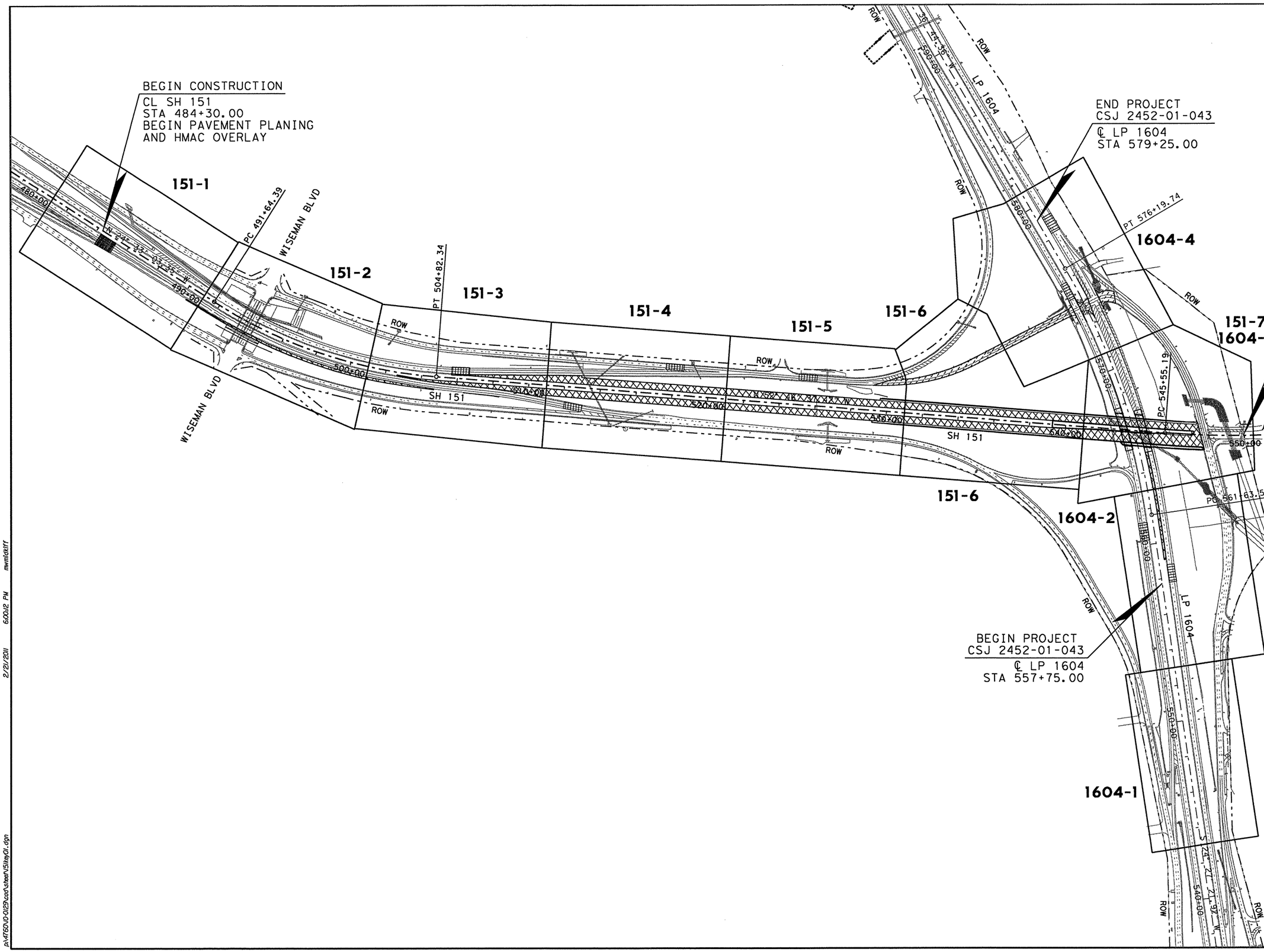

STATE OF TEXAS
MICHAEL W. MIDKIFF
75435
REGISTERED PROFESSIONAL ENGINEER

Michael W. Midkiff
2/21/11

NO.	DATE	REVISION DESCRIPTION	APP. BY

© 2011

Texas Department of Transportation

MACTEC
3520 EXECUTIVE CENTER DRIVE
SUITE 200
AUSTIN, TEXAS 78731
(512) 795-0360

REGISTRATION NUMBER: F-1784

SH 151

ROADWAY SHEET LAYOUT PLAN

(SHEET 1 OF 1)

FED. RD. DIV. NO.			SHEET NO.
			141
STATE	DIST.	COUNTY	
TEXAS	SA	BEXAR	
CONT.	SECT.	JOB	HIGHWAY NO.
2452	01	043	SH 151

p:\4760\0-0129\cad\sheet\51key01.dgn 2/21/2011 6:00:12 PM mwmidkiff

SHEET SUMMARY OF ESTIMATED QUANTITIES			
ITEM#	DESCRIPTION	UNIT	QTY
0100	PREPARING ROW	STA	6.70
0110	EXCAVATION (ROADWAY)	CY	7
0132	EMBANKMENT (FINAL) (ORD COMP) (TY	CY	21
0161	COMPOST MANUF TOPSOIL (BOS) (4")	SY	134
0164	DRILL SEEDING (PERM) (URBAN) (CLAY)	SY	134
0354	PLANE ASPH CONC PAV (0" TO 2")	SY	729
3224	D-GR HMA (QCQA) TY-B PG64-22	TON	24
3224	D-GR HMA (QCQA) TY-D SAC-A PG76-22	TON	469

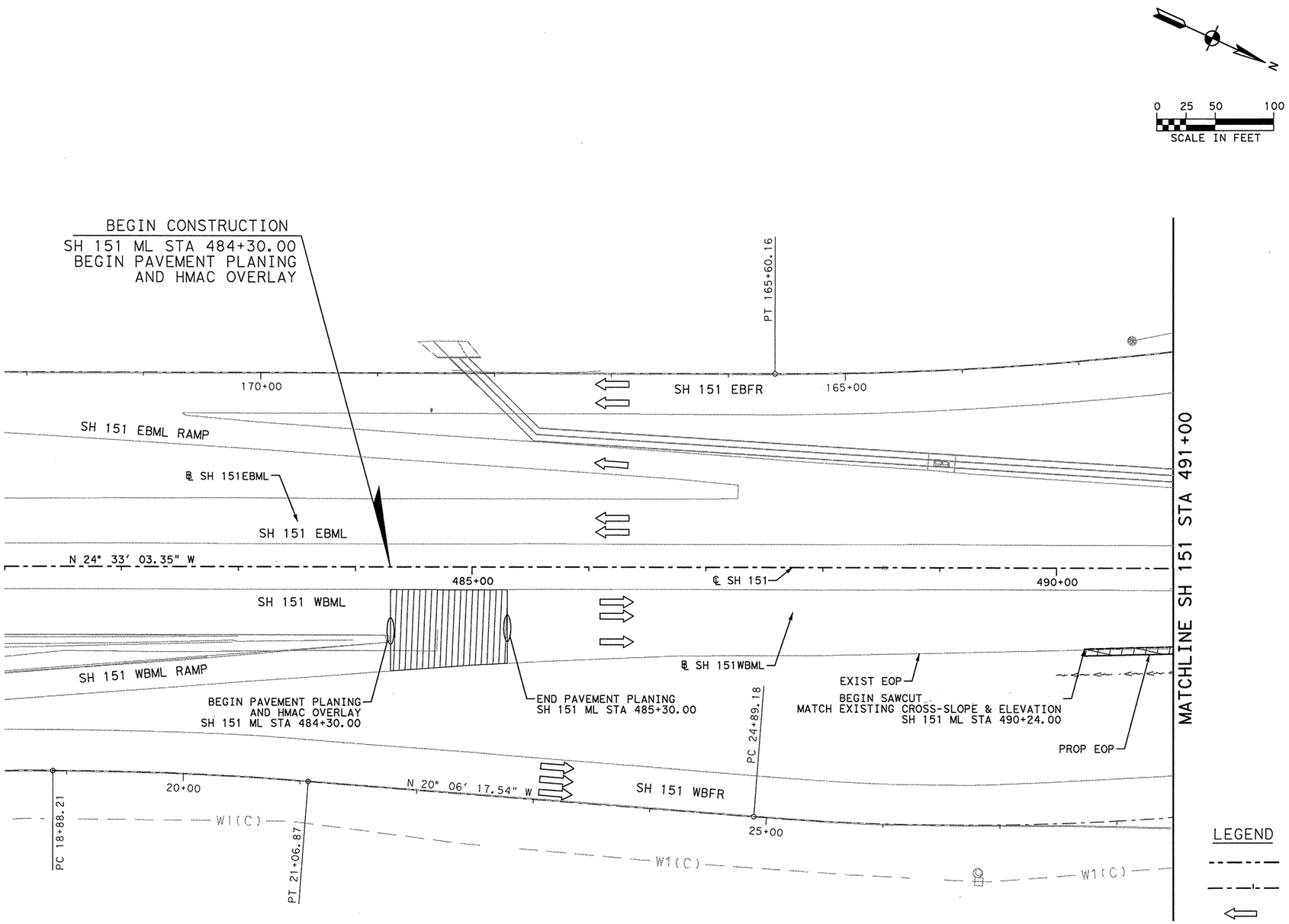

LEGEND

- RIGHT OF WAY LINE
- PROPOSED ALIGNMENT
- EXIST TRAFFIC FLOW ARROW TO REMAIN
- PROP TRAFFIC FLOW ARROW
- PAVEMENT REMOVAL
- PROPOSED PAVEMENT WIDENING
- PAVEMENT PLANING
- METAL BEAM GUARD FENCE
- SINGLE GUARDRAIL TERMINAL
- TERMINAL ANCHOR SECTION

REV. 12-30-11

STATE OF TEXAS
MICHAEL W. MIDKIFF
75435
REGISTERED PROFESSIONAL ENGINEER
Michael W. Midkiff
12/23/11

NO.	DATE	REVISION DESCRIPTION	APP. BY

© 2011

Texas Department of Transportation

MACTEC
3520 EXECUTIVE CENTER DRIVE
SUITE 200
AUSTIN, TEXAS 78731
(512) 795-0360

REGISTRATION NUMBER: F-1784

SH 151
ROADWAY PLAN
SH 151
BEGIN PROJECT TO STA 491+00
(SHEET 1 OF 7)

FED. RD. DIV. NO.			SHEET NO.
			142
STATE	DIST.	COUNTY	
TEXAS	SA	BEXAR	
CONT.	SECT.	JOB	HIGHWAY NO.
2452	01	043	SH 151

p:\4760\0-0129\cad\sheet\151pln01.dgn 12/25/2011 5:40:16 PM mwmidkiff

SHEET SUMMARY OF ESTIMATED QUANTITIES			
ITEM#	DESCRIPTION	UNIT	QTY
0100	PREPARING ROW	STA	10.00
0110	EXCAVATION (ROADWAY)	CY	164
0132	EMBANKMENT (FINAL) (ORD COMP) (TY	CY	774
0161	COMPOST MANUF TOPSOIL (BOS) (4")	SY	1594
0164	DRILL SEEDING (PERM) (URBAN) (CLAY)	SY	1594
0432	RIPRAP (MOW STRIP) (4 IN)	CY	26
0432	RIPRAP (CONC) (CL B) (4")	CY	51
0540	MTL W-BEAM GD FEN (TIM	LF	500
0540	TERMINAL ANCHOR SECTION	EA	1
0544	GUARDRAIL END TREATMENT (INSTALL)	EA	1
3224	D-GR HMA (QCQA) TY-B PG64-22	TON	580
3224	D-GR HMA (QCQA) TY-D SAC-A PG76-22	TON	636

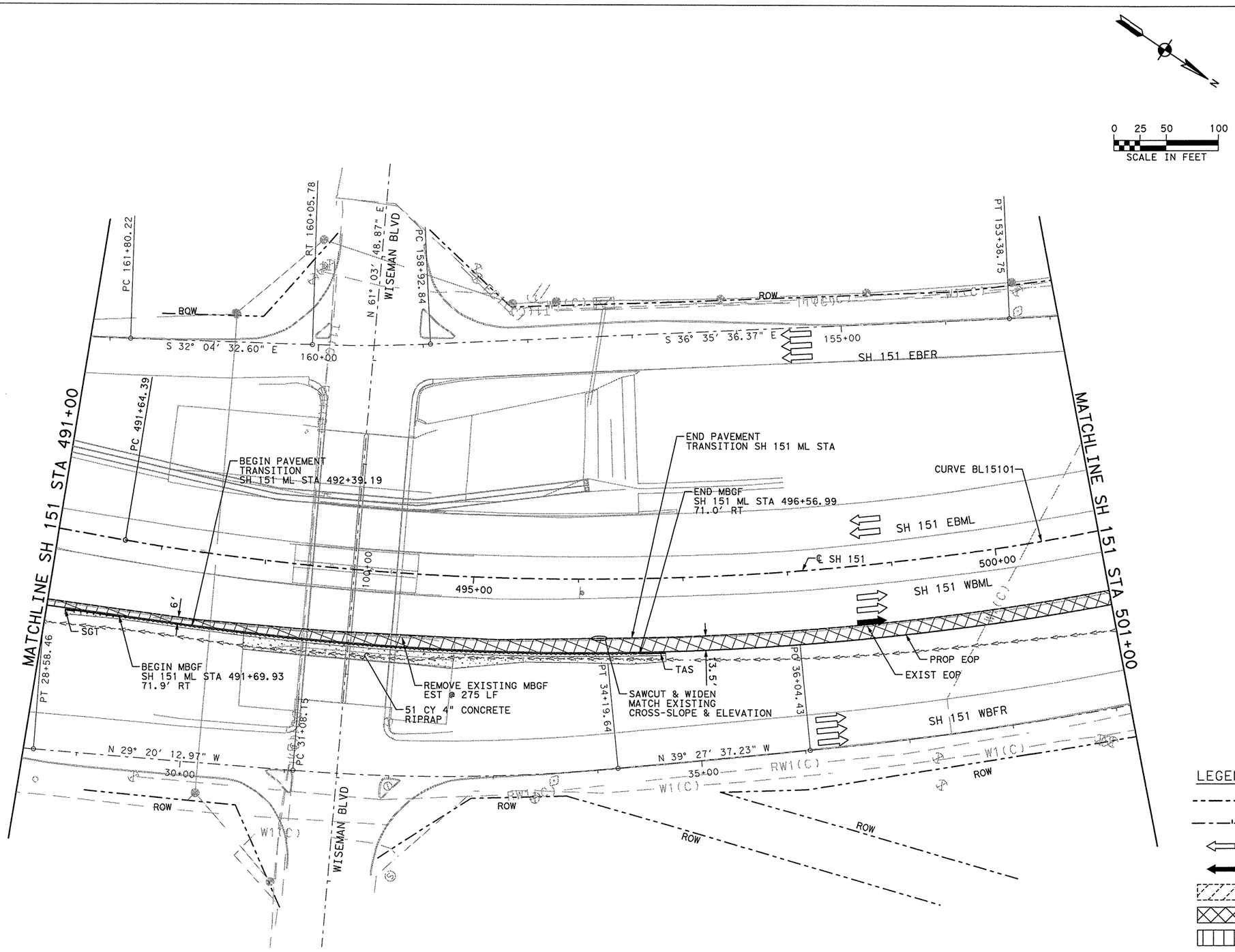

LEGEND

- RIGHT OF WAY LINE
- PROPOSED ALIGNMENT
- EXIST TRAFFIC FLOW ARROW TO REMAIN
- PROP TRAFFIC FLOW ARROW
- PAVEMENT REMOVAL
- PROPOSED PAVEMENT WIDENING
- PAVEMENT PLANING
- METAL BEAM GUARD FENCE
- SINGLE GUARDRAIL TERMINAL
- TERMINAL ANCHOR SECTION

REV. 12-30-11

STATE OF TEXAS
MICHAEL W. MIDKIFF
75435
REGISTERED PROFESSIONAL ENGINEER

Michael W. Midkiff
12/23/11

NO.	DATE	REVISION DESCRIPTION	APP. BY

© 2011

Texas Department of Transportation

MACTEC
3520 EXECUTIVE CENTER DRIVE
SUITE 200
AUSTIN, TEXAS 78731
(512) 795-0360

REGISTRATION NUMBER: F-1784

SH 151
ROADWAY PLAN
SH 151
STA 491+00 TO STA 501+00
(SHEET 2 OF 7)

FED. RD. DIV. NO.			SHEET NO.
			143
STATE	DIST.	COUNTY	
TEXAS	SA	BEXAR	
CONT.	SECT.	JOB	HIGHWAY NO.
2452	01	043	SH 151

p:\4760\0-0129\cad\sheet\5lpln02.dgn 12/23/2011 3:44:30 PM mwmidkiff

SHEET SUMMARY OF ESTIMATED QUANTITIES			
ITEM#	DESCRIPTION	UNIT	QTY
0100	PREPARING ROW	STA	10.00
0110	EXCAVATION (ROADWAY)	CY	367
0132	EMBANKMENT (FINAL) (ORD COMP) (TY	CY	3775
0161	COMPOST MANUF TOPSOIL (BOS) (4")	SY	4610
0164	DRILL SEEDING (PERM) (URBAN) (CLAY)	SY	4610
0247	FL BS (CMP IN PLC) (TY D GR 2	CY	21
0310	PRIME COAT (MC-30 OR AE-P)	GAL	28
0316	ASPH (AC-5 OR AC-10)	GAL	32
0316	AGGR(TY-PE GR-4 SAC-B)	CY	1
0354	PLANE ASPH CONC PAV (0" TO 2")	SY	425
0432	RIPRAP (MOW STRIP) (4 IN)	CY	35
0540	MTL W-BEAM GD FEN (TIM	LF	525
0540	TERMINAL ANCHOR SECTION	EA	3
0544	GUARDRAIL END TREATMENT (INSTALL)	EA	3
3224	D-GR HMA (QCQA) TY-B PG64-22	TON	1413
3224	D-GR HMA (QCQA) TY-D SAC-A PG76-22	TON	1142

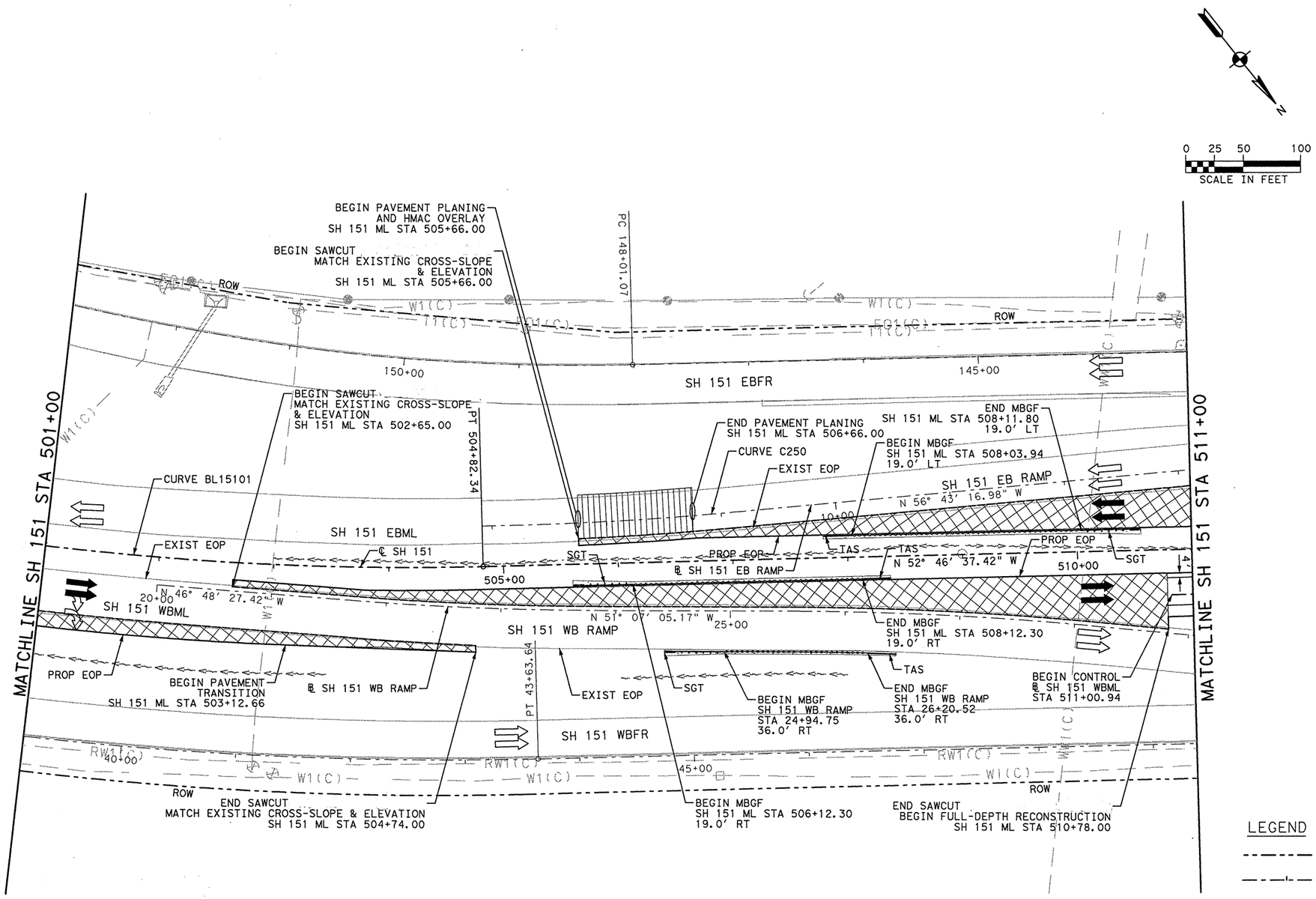

LEGEND

- RIGHT OF WAY LINE
- PROPOSED ALIGNMENT
- EXIST TRAFFIC FLOW ARROW TO REMAIN
- PROP TRAFFIC FLOW ARROW
- PAVEMENT REMOVAL
- PROPOSED PAVEMENT WIDENING
- PAVEMENT PLANING
- METAL BEAM GUARD FENCE
- SINGLE GUARDRAIL TERMINAL
- TERMINAL ANCHOR SECTION

REV. 12-30-11

STATE OF TEXAS
MICHAEL W. MIDKIFF
75435
REGISTERED PROFESSIONAL ENGINEER

Michael W. Midkiff
12/23/11

NO.	DATE	REVISION DESCRIPTION	APP. BY

© 2011

Texas Department of Transportation

MACTEC
3520 EXECUTIVE CENTER DRIVE
SUITE 200
AUSTIN, TEXAS 78731
(512) 795-0360

REGISTRATION NUMBER: F-1784

SH 151
ROADWAY PLAN
SH 151
STA 501+00 TO STA 511+00
(SHEET 3 OF 7)

FED. RD. DIV. NO.			SHEET NO.
			144
STATE	DIST.	COUNTY	
TEXAS	SA	BEXAR	
CONT.	SECT.	JOB	HIGHWAY NO.
2452	01	043	SH 151

p:\4760\0-0129\cad\sheet\151pln03.dgn 12/23/2011 3:44:41 PM mwmidkiff

SHEET SUMMARY OF ESTIMATED QUANTITIES			
ITEM#	DESCRIPTION	UNIT	QTY
0100	PREPARING ROW	STA	10.00
0110	EXCAVATION (ROADWAY)	CY	22409
0132	EMBANKMENT (FINAL) (ORD COMP) (TY	CY	3834
0161	COMPOST MANUF TOPSOIL (BOS) (4")	SY	11296
0164	DRILL SEEDING (PERM) (URBAN) (CLAY)	SY	11296
0247	FL BS (CMP IN PLC) (TY D GR 2	CY	1726
0310	PRIME COAT (MC-30 OR AE-P)	GAL	2290
0316	ASPH (AC-5 OR AC-10)	GAL	2596
0316	AGGR(TY-PE GR-4 SAC-B)	CY	59
0354	PLANE ASPH CONC PAV (0" TO 2")	SY	805
0432	RIPRAP (STONE COMMON) (DRY) (6 IN)	CY	40
0432	RIPRAP (CONC) (CL B) (4")	CY	115
3224	D-GR HMA (QCQA) TY-B PG64-22	TON	399
3224	D-GR HMA (QCQA) TY-D SAC-A PG76-22	TON	1596

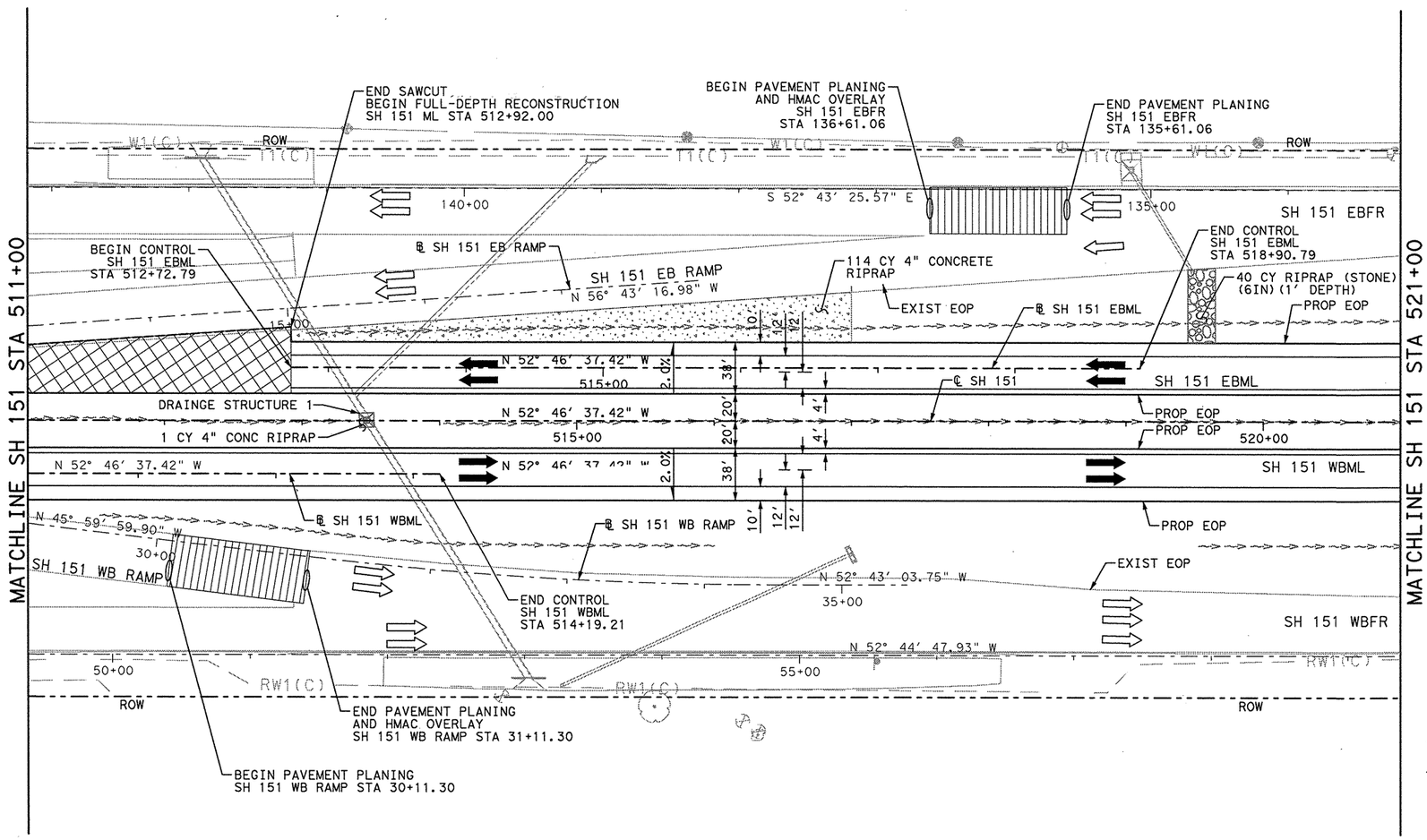

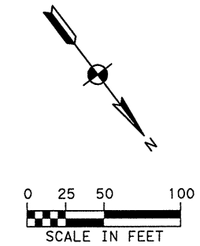

LEGEND

- RIGHT OF WAY LINE
- PROPOSED ALIGNMENT
- EXIST TRAFFIC FLOW ARROW TO REMAIN
- PROP TRAFFIC FLOW ARROW
- PAVEMENT REMOVAL
- PROPOSED PAVEMENT WIDENING
- PAVEMENT PLANING
- METAL BEAM GUARD FENCE
- SINGLE GUARDRAIL TERMINAL
- TERMINAL ANCHOR SECTION

REV. 12-30-11

STATE OF TEXAS
MICHAEL W. MIDKIFF
75435
REGISTERED PROFESSIONAL ENGINEER
12/23/11

NO.	DATE	REVISION DESCRIPTION	APP. BY

© 2011

Texas Department of Transportation

MACTEC
3520 EXECUTIVE CENTER DRIVE
SUITE 200
AUSTIN, TEXAS 78731
(512) 795-0360

REGISTRATION NUMBER: F-1784

SH 151
ROADWAY PLAN
SH 151
STA 511+00 TO STA 521+00
(SHEET 4 OF 7)

FED. RD. DIV. NO.			SHEET NO.
			145
STATE	DIST.	COUNTY	
TEXAS	SA	BEXAR	
CONT.	SECT.	JOB	HIGHWAY NO.
2452	01	043	SH 151

p:\4760\0-0129\cad\sheet\151pln04.dgn 12/23/2011 3:44:52 PM mwmidkiff

SHEET SUMMARY OF ESTIMATED QUANTITIES			
ITEM#	DESCRIPTION	UNIT	QTY
0100	PREPARING ROW	STA	10.00
0106	OBLITERATING ABANDONED ROAD	SY	529
0110	EXCAVATION (ROADWAY)	CY	5641~~8~~
0132	EMBANKMENT (FINAL) (ORD COMP) (TY	CY	62~~5~~4
0161	COMPOST MANUF TOPSOIL (BOS) (4")	SY	15741
0164	DRILL SEEDING (PERM) (URBAN) (CLAY)	SY	15741
0247	FL BS (CMP IN PLC) (TY D GR 2	CY	1960
0310	PRIME COAT (MC-30 OR AE-P)	GAL	2602
0316	ASPH (AC-5 OR AC-10)	GAL	2948
0316	AGGR(TY-PE GR-4 SAC-B)	CY	67
0354	PLANE ASPH CONC PAV (0" TO 2")	SY	382
~~0420~~	~~CL C CONC (RAIL FOUNDATION)~~	~~CY~~	~~23~~
0432	RIPRAP (MOW STRIP) (4 IN)	CY	4
0432	RIPRAP (CONC) (CL B) (4")	CY	97
0496	REMOV STR (HEADWALL)	EA	2
0540	MTL BEAM GD FEN TRANS (THRIE-BEAM)	EA	1
0544	GUARDRAIL END TREATMENT (INSTALL)	EA	1
3224	D-GR HMA (QCQA) TY-D SAC-A PG76-22	TON	1184

N

0 25 50 100
SCALE IN FEET

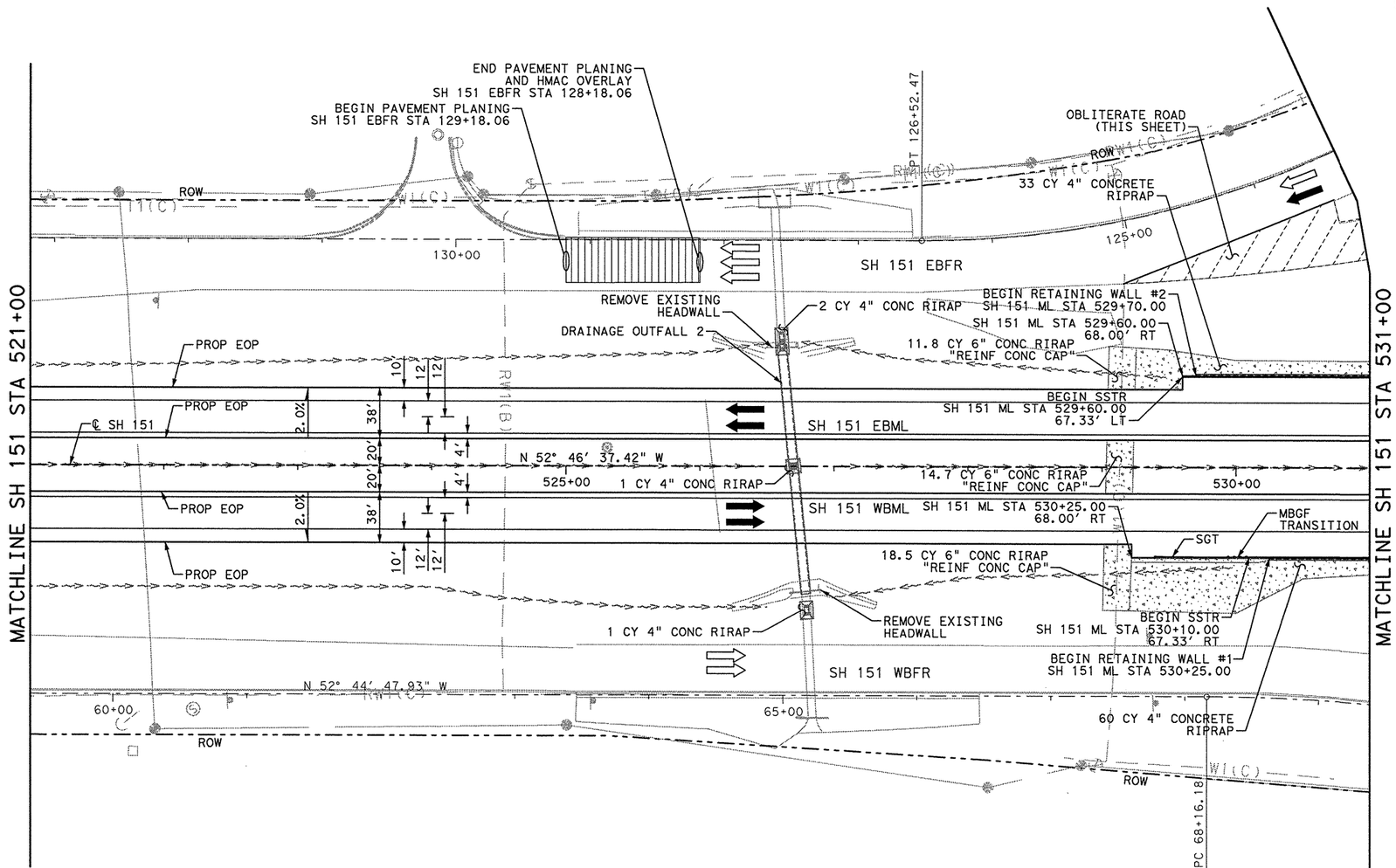

LEGEND

- RIGHT OF WAY LINE
- PROPOSED ALIGNMENT
- EXIST TRAFFIC FLOW ARROW TO REMAIN
- PROP TRAFFIC FLOW ARROW
- PAVEMENT REMOVAL
- PROPOSED PAVEMENT WIDENING
- PAVEMENT PLANING
- METAL BEAM GUARD FENCE
- SINGLE GUARDRAIL TERMINAL
- TERMINAL ANCHOR SECTION

REV. 12-30-11

STATE OF TEXAS
MICHAEL W. MIDKIFF
75435
REGISTERED PROFESSIONAL ENGINEER
12/23/11

NO.	DATE	REVISION DESCRIPTION	APP. BY

© 2011

Texas Department of Transportation

MACTEC
3520 EXECUTIVE CENTER DRIVE
SUITE 200
AUSTIN, TEXAS 78731
(512) 795-0360
REGISTRATION NUMBER: F-1784

SH 151
ROADWAY PLAN
SH 151
STA 521+00 TO STA 531+00
(SHEET 5 OF 7)

FED. RD. DIV. NO.			SHEET NO.
			146
STATE	DIST.	COUNTY	
TEXAS	SA	BEXAR	
CONT.	SECT.	JOB	HIGHWAY NO.
2452	01	043	SH 151

p:\4760\10-01\29\cad\sheet\15pln05.dgn 12/23/2011 3:45:03 PM mwmidkiff

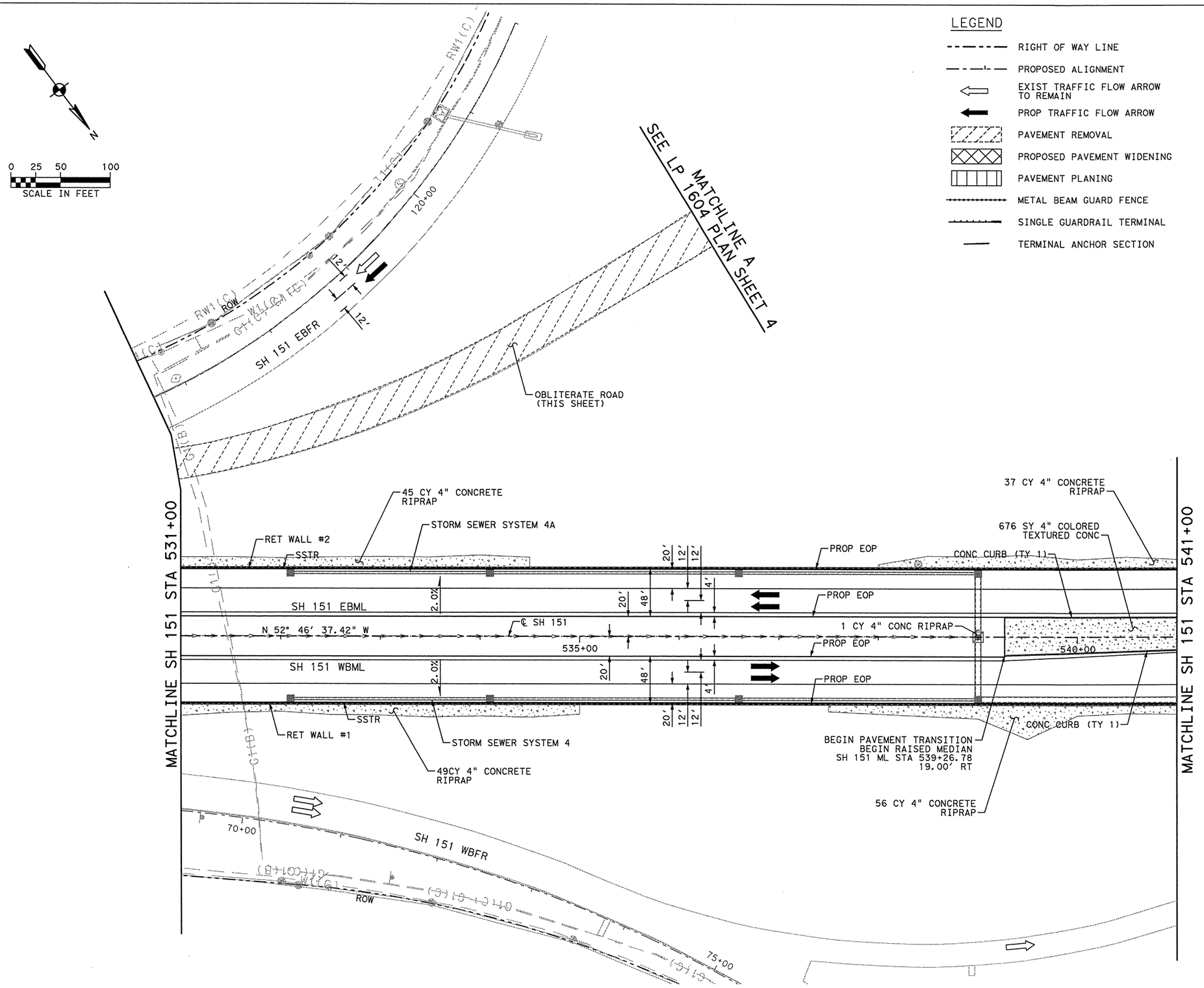

LEGEND

- RIGHT OF WAY LINE
- PROPOSED ALIGNMENT
- EXIST TRAFFIC FLOW ARROW TO REMAIN
- PROP TRAFFIC FLOW ARROW
- PAVEMENT REMOVAL
- PROPOSED PAVEMENT WIDENING
- PAVEMENT PLANING
- METAL BEAM GUARD FENCE
- SINGLE GUARDRAIL TERMINAL
- TERMINAL ANCHOR SECTION

SHEET SUMMARY OF ESTIMATED QUANTITIES

ITEM#	DESCRIPTION	UNIT	QTY
0100	PREPARING ROW	STA	10.00
0106	OBLITERATING ABANDONED ROAD	SY	2293
0110	EXCAVATION (ROADWAY)	CY	173888
0132	EMBANKMENT (FINAL) (ORD COMP) (TY	CY	177
0161	COMPOST MANUF TOPSOIL (BOS) (4")	SY	5958
0164	DRILL SEEDING (PERM) (URBAN) (CLAY)	SY	5958
0247	FL BS (CMP IN PLC) (TY D GR 2	CY	2420
0310	PRIME COAT (MC-30 OR AE-P)	GAL	3223
0316	ASPH (AC-5 OR AC-10)	GAL	3652
0316	AGGR(TY-PE GR-4 SAC-B)	CY	83
~~0420~~	~~CL C CONC (RAIL FOUNDATION)~~	~~CY~~	~~200~~
0432	RIPRAP (CONC) (CL B) (4")	CY	188
0528	COLORED TEXTURED CONC (4")	SY	676
0529	CONC CURB (TY I)	LF	347
3224	D-GR HMA (QCQA) TY-D SAC-A PG76-22	TON	1180

STATE OF TEXAS
MICHAEL W. MIDKIFF
75435
REGISTERED PROFESSIONAL ENGINEER
12/23/11

NO.	DATE	REVISION DESCRIPTION	APP. BY

© 2011

Texas Department of Transportation

MACTEC
3520 EXECUTIVE CENTER DRIVE
SUITE 200
AUSTIN, TEXAS 78731
(512) 795-0360

REGISTRATION NUMBER: F-1784

SH 151
ROADWAY PLAN
SH 151
STA 531+00 TO STA 541+00
(SHEET 6 OF 7)

FED. RD. DIV. NO.			SHEET NO.
			147
STATE	DIST.	COUNTY	
TEXAS	SA	BEXAR	
CONT.	SECT.	JOB	HIGHWAY NO.
2452	01	043	SH 151

REV. 12-30-11

p:\4760\0-0129\cad\sheet\151pln06.dgn 12/23/2011 3:45:13 PM mwmidkiff

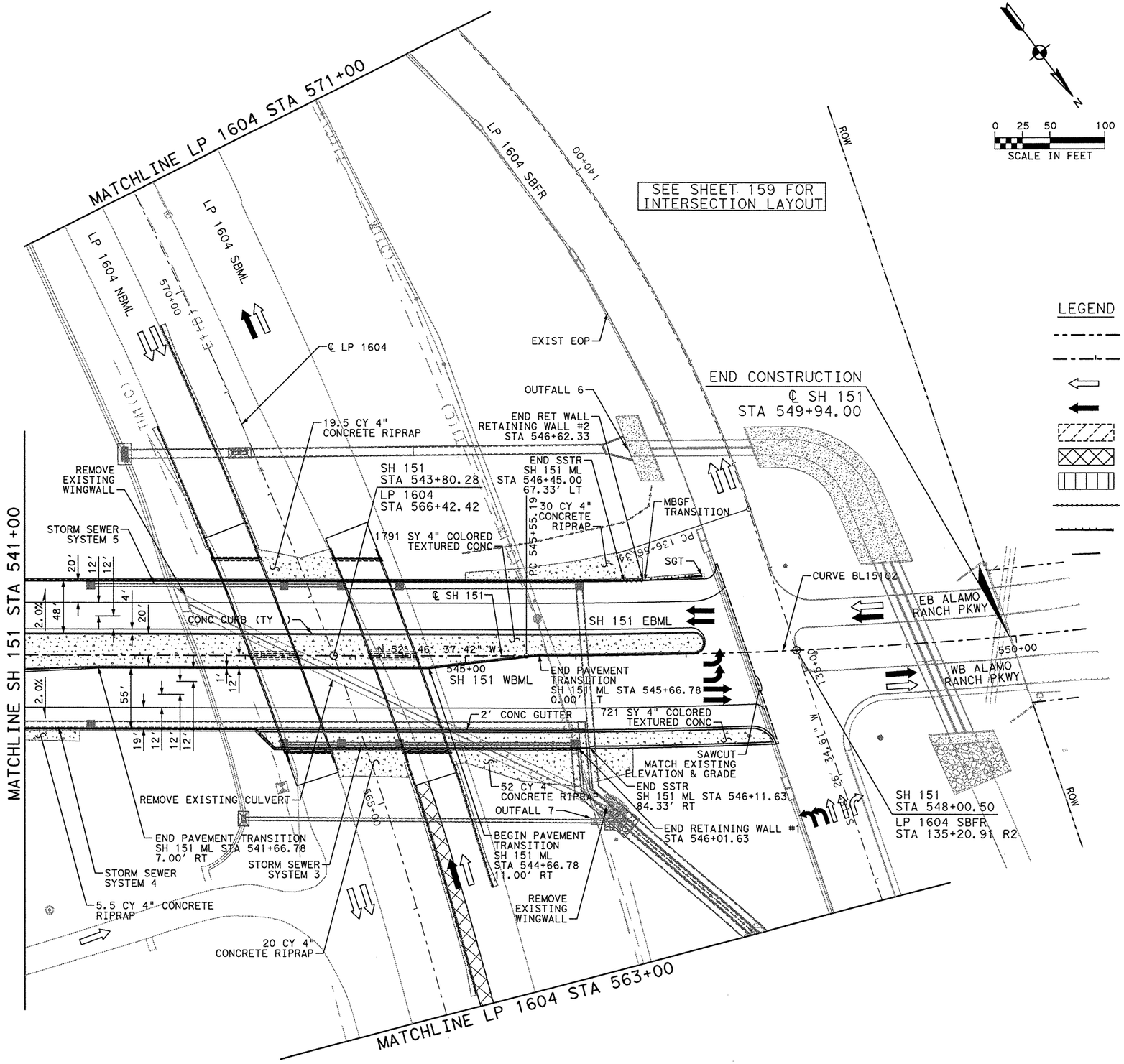

0 25 50 100
SCALE IN FEET

N

SHEET SUMMARY OF ESTIMATED QUANTITIES

ITEM#	DESCRIPTION	UNIT	QTY
0100	PREPARING ROW	STA	6.56
0110	EXCAVATION (ROADWAY)	CY	65066
0132	EMBANKMENT (FINAL) (ORD COMP) (TY	CY	224
0161	COMPOST MANUF TOPSOIL (BOS) (4")	SY	2833
0164	DRILL SEEDING (PERM) (URBAN) (CLAY)	SY	2833
0247	FL BS (CMP IN PLC) (TY D GR 2	CY	1813
0310	PRIME COAT (MC-30 OR AE-P)	GAL	2420
0316	ASPH (AC-5 OR AC-10)	GAL	2742
0316	AGGR(TY-PE GR-4 SAC-B)	CY	62
~~0420~~	~~CL C CONC (RAIL FOUNDATION)~~	~~CY~~	~~106~~
0432	RIPRAP (MOW STRIP) (4 IN)	CY	3
0432	RIPRAP (CONC) (CL B) (4")	CY	127
0496	REMOV STR (BOX CULVERT)	EA	1
0496	REMOV STR (WINGWALL)	EA	2
0528	COLORED TEXTURED CONC (4")	SY	2512
0529	CONC CURB (TY I)	LF	1243
0529	CONC GUTTER (2')	LF	660
0540	MTL BEAM GD FEN TRANS (THRIE-BEAM)	EA	1
0544	GUARDRAIL END TREATMENT (INSTALL)	EA	1
3224	D-GR HMA (QCQA) TY-D SAC-A PG76-22	TON	886

LEGEND

- RIGHT OF WAY LINE
- PROPOSED ALIGNMENT
- EXIST TRAFFIC FLOW ARROW TO REMAIN
- PROP TRAFFIC FLOW ARROW
- PAVEMENT REMOVAL
- PROPOSED PAVEMENT WIDENING
- PAVEMENT PLANING
- METAL BEAM GUARD FENCE
- SINGLE GUARDRAIL TERMINAL
- TERMINAL ANCHOR SECTION

STATE OF TEXAS
MICHAEL W. MIDKIFF
75435
REGISTERED PROFESSIONAL ENGINEER
Michael W. Midkiff
12/23/11

NO.	DATE	REVISION DESCRIPTION	APP. BY

© 2011

Texas Department of Transportation

MACTEC
3520 EXECUTIVE CENTER DRIVE
SUITE 200
AUSTIN, TEXAS 78731
(512) 795-0360

REGISTRATION NUMBER: F-1784

SH 151
ROADWAY PLAN
SH 151
STA 541+00 TO END PROJECT
(SHEET 7 OF 7)

FED. RD. DIV. NO.			SHEET NO.
			148
STATE	DIST.	COUNTY	
TEXAS	SA	BEXAR	
CONT.	SECT.	JOB	HIGHWAY NO.
2452	01	043	SH 151

REV. 12-30-11

p:\4760\0-0129\cad\sheet\151pln07.dgn 12/23/2011 3:45:23 PM mwmidkiff

SHEET SUMMARY OF ESTIMATED QUANTITIES			
ITEM#	DESCRIPTION	UNIT	QTY

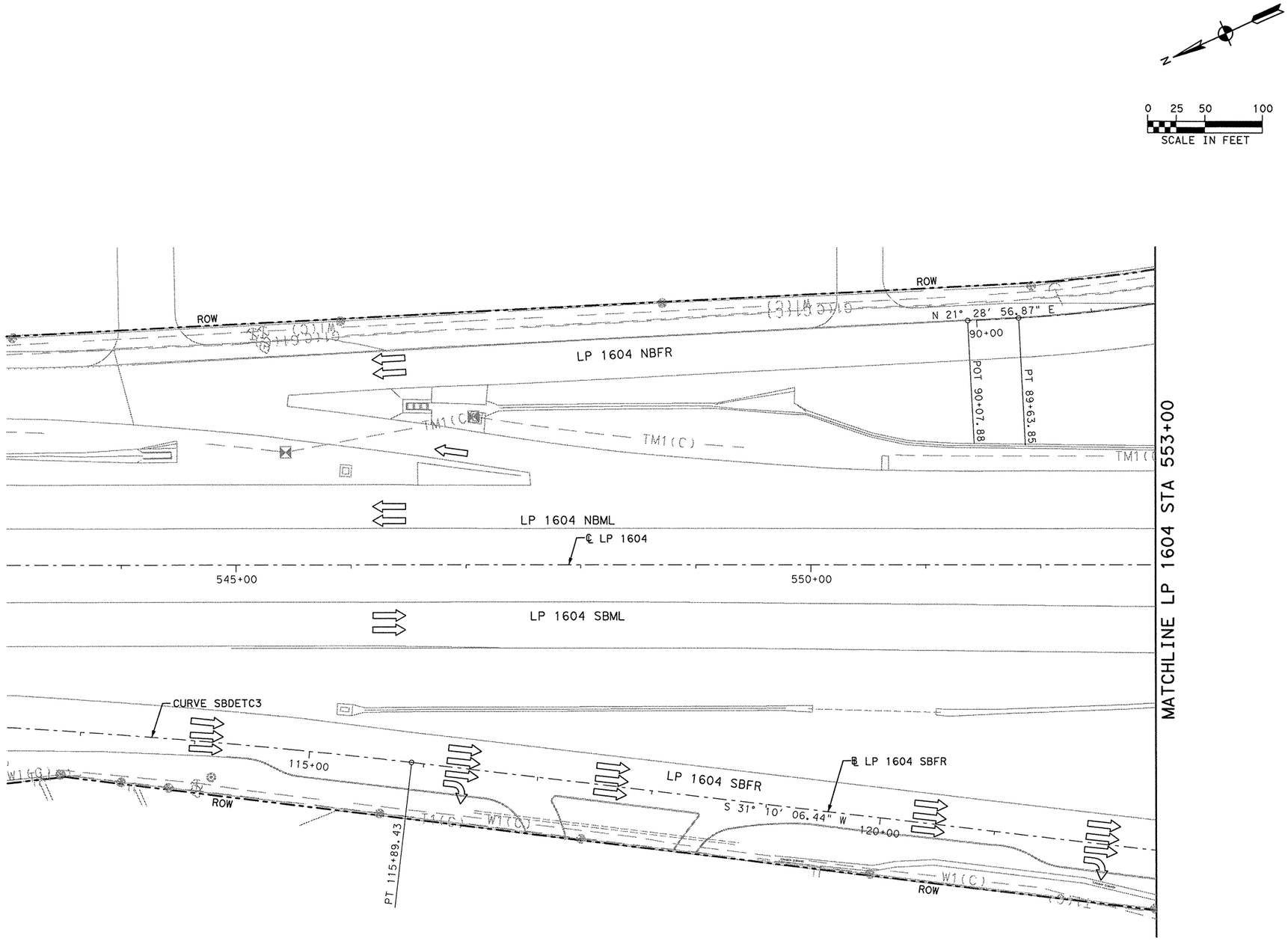

LEGEND

- RIGHT OF WAY LINE
- PROPOSED ALIGNMENT
- EXIST TRAFFIC FLOW ARROW TO REMAIN
- PROP TRAFFIC FLOW ARROW
- PAVEMENT REMOVAL
- PROPOSED PAVEMENT WIDENING
- PAVEMENT PLANING
- METAL BEAM GUARD FENCE
- SINGLE GUARDRAIL TERMINAL
- TERMINAL ANCHOR SECTION

STATE OF TEXAS
MICHAEL W. MIDKIFF
75435
REGISTERED PROFESSIONAL ENGINEER
12/5/11

NO.	DATE	REVISION DESCRIPTION	APP. BY

© 2011

Texas Department of Transportation

MACTEC
3520 EXECUTIVE CENTER DRIVE
SUITE 200
AUSTIN, TEXAS 78731
(512) 795-0360

REGISTRATION NUMBER: F-1784

SH 151
ROADWAY PLAN
LP 1604 BEGIN CONSTRUCTION TO STA 553+00
(SHEET 1 OF 4)

FED. RD. DIV. NO.			SHEET NO.
			149
STATE	DIST.	COUNTY	
TEXAS	SA	BEXAR	
CONT.	SECT.	JOB	HIGHWAY NO.
2452	01	043	SH 151

p:\4760\0-0129\cad\sheet\151pln08.dgn 12/6/2011 8:57:58 AM mwmidkiff

SHEET SUMMARY OF ESTIMATED QUANTITIES			
ITEM#	DESCRIPTION	UNIT	QTY
0100	PREPARING ROW	STA	3.94
0104	REMOVING CONC (RIPRAP)	SY	333
0161	COMPOST MANUF TOPSOIL (BOS) (4")	SY	528
0164	DRILL SEEDING (PERM) (URBAN) (CLAY)	SY	528
0354	PLANE ASPH CONC PAV (0" TO 2")	SY	1012
0432	RIPRAP (CONC) (CL B) (4")	CY	14
3224	D-GR HMA (QCQA) TY-B PG64-22	TON	232
3224	D-GR HMA (QCQA) TY-D SAC-A PG76-22	TON	476

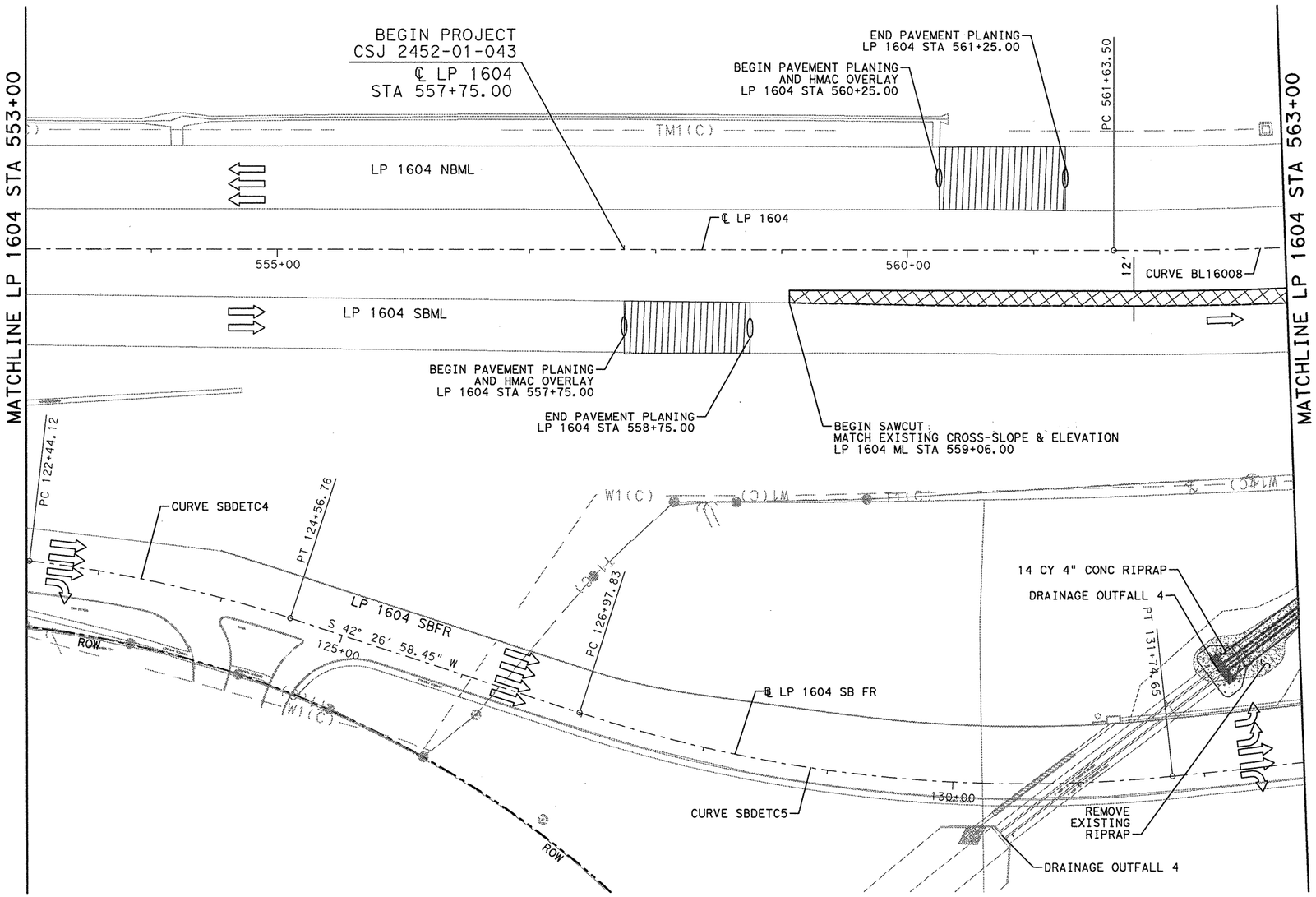

LEGEND

- RIGHT OF WAY LINE
- PROPOSED ALIGNMENT
- EXIST TRAFFIC FLOW ARROW TO REMAIN
- PROP TRAFFIC FLOW ARROW
- PAVEMENT REMOVAL
- PROPOSED PAVEMENT WIDENING
- PAVEMENT PLANING
- METAL BEAM GUARD FENCE
- SINGLE GUARDRAIL TERMINAL
- TERMINAL ANCHOR SECTION

STATE OF TEXAS
MICHAEL W. MIDKIFF
75435
REGISTERED
PROFESSIONAL ENGINEER

Michael W. Midkiff
12/5/11

NO.	DATE	REVISION DESCRIPTION	APP. BY

© 2011

Texas Department of Transportation

MACTEC
3520 EXECUTIVE CENTER DRIVE
SUITE 200
AUSTIN, TEXAS 78731
(512) 795-0360

REGISTRATION NUMBER: F-1784

SH 151
ROADWAY PLAN
LP 1604
STA 553+00 TO STA 563+00
(SHEET 2 OF 4)

FED. RD. DIV. NO.			SHEET NO.
			150
STATE	DIST.	COUNTY	
TEXAS	SA	BEXAR	
CONT.	SECT.	JOB	HIGHWAY NO.
2452	01	043	SH 151

REV. 12-30-11

p:\4760\00-0129\cad\sheet\151pln09.dgn 12/6/2011 9:27:10 AM mwmidkiff

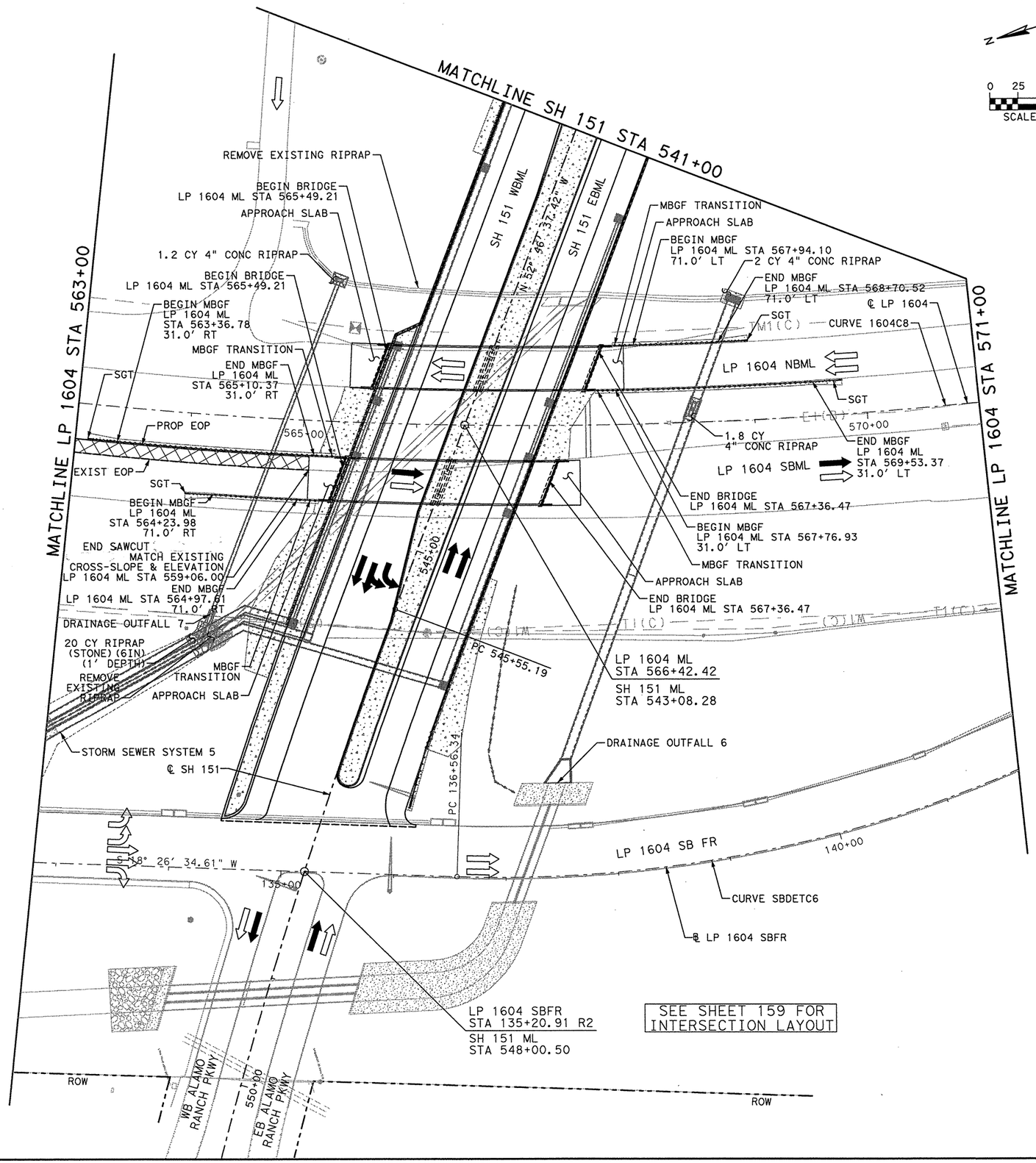

SHEET SUMMARY OF ESTIMATED QUANTITIES			
ITEM#	DESCRIPTION	UNIT	QTY
0100	PREPARING ROW	STA	8.00
0104	REMOVING CONC (RIPRAP)	SY	220
0161	COMPOST MANUF TOPSOIL (BOS) (4")	SY	282
0164	DRILL SEEDING (PERM) (URBAN) (CLAY)	SY	282
0432	RIPRAP (STONE COMMON) (DRY) (6 IN)	CY	20
0432	RIPRAP (MOW STRIP) (4 IN)	CY	31
0432	RIPRAP (CONC) (CL B) (4")	CY	5
0540	MTL W-BEAM GD FEN (TIM	LF	500
0540	MTL BEAM GD FEN TRANS (THRIE-BEAM)	EA	4
0544	GUARDRAIL END TREATMENT (INSTALL)	EA	4
1018	TREE PROTECTION	AC	2
3224	D-GR HMA (QCQA) TY-B PG64-22	TON	126
3224	D-GR HMA (QCQA) TY-D SAC-A PG76-22	TON	913

LEGEND

- RIGHT OF WAY LINE
- PROPOSED ALIGNMENT
- EXIST TRAFFIC FLOW ARROW TO REMAIN
- PROP TRAFFIC FLOW ARROW
- PAVEMENT REMOVAL
- PROPOSED PAVEMENT WIDENING
- PAVEMENT PLANING
- METAL BEAM GUARD FENCE
- SINGLE GUARDRAIL TERMINAL
- TERMINAL ANCHOR SECTION

STATE OF TEXAS
MICHAEL W. MIDKIFF
75435
REGISTERED PROFESSIONAL ENGINEER

Michael W. Midkiff
12/5/11

NO.	DATE	REVISION DESCRIPTION	APP. BY

© 2011

Texas Department of Transportation

MACTEC
3520 EXECUTIVE CENTER DRIVE
SUITE 200
AUSTIN, TEXAS 78731
(512) 795-0360

REGISTRATION NUMBER: F-1784

SH 151
ROADWAY PLAN
LP 1604
STA 563+00 TO STA 571+00
(SHEET 3 OF 4)

FED. RD. DIV. NO.			SHEET NO.
			151
STATE	DIST.	COUNTY	
TEXAS	SA	BEXAR	
CONT.	SECT.	JOB	HIGHWAY NO.
2452	01	043	SH 151

REV. 12-30-11

p:\4760\0-0129\cad\sheet\151pln10.dgn 12/6/2011 8:58:05 AM mwmidkiff

SHEET SUMMARY OF ESTIMATED QUANTITIES			
ITEM#	DESCRIPTION	UNIT	QTY
0100	PREPARING ROW	STA	8.25
0104	REMOVING CONC (RIPRAP)	SY	267
0106	OBLITERATING ABANDONED ROAD	SY	3191
0354	PLANE ASPH CONC PAV (0" TO 2")	SY	1027
0496	REMOV STR (SET)	EA	6
0496	REMOV STR (PIPE)	EA	3
1018	TREE PROTECTION	AC	2
3224	D-GR HMA (QCQA) TY-D SAC-A PG76-22	TON	787

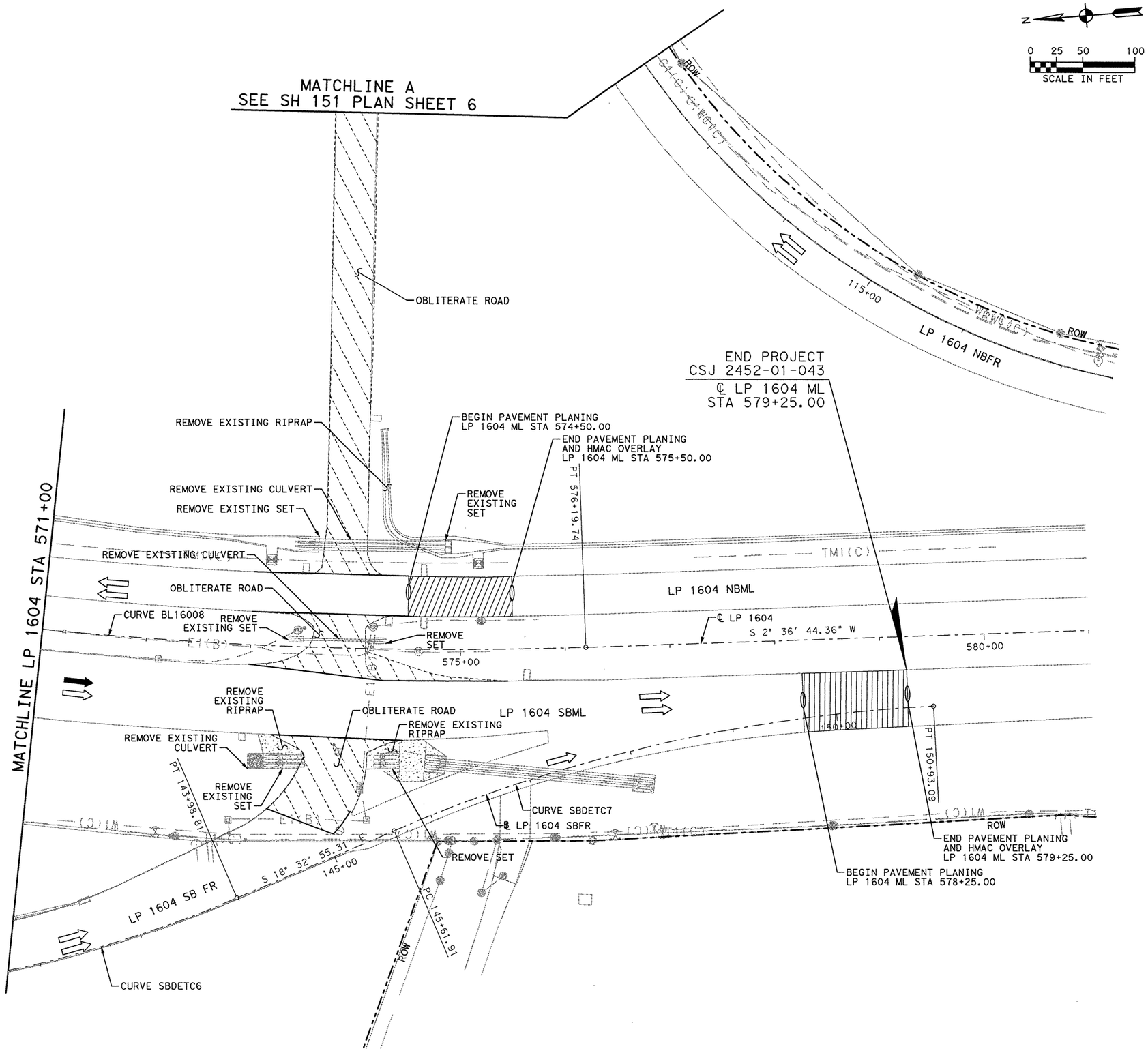

LEGEND

- RIGHT OF WAY LINE
- PROPOSED ALIGNMENT
- EXIST TRAFFIC FLOW ARROW TO REMAIN
- PROP TRAFFIC FLOW ARROW
- PAVEMENT REMOVAL
- PROPOSED PAVEMENT WIDENING
- PAVEMENT PLANING
- METAL BEAM GUARD FENCE
- SINGLE GUARDRAIL TERMINAL
- TERMINAL ANCHOR SECTION

STATE OF TEXAS
MICHAEL W. MIDKIFF
75435
REGISTERED PROFESSIONAL ENGINEER
12/5/11

NO.	DATE	REVISION DESCRIPTION	APP. BY

© 2011

Texas Department of Transportation

MACTEC
3520 EXECUTIVE CENTER DRIVE
SUITE 200
AUSTIN, TEXAS 78731
(512) 795-0360

REGISTRATION NUMBER: F-1784

SH 151
ROADWAY PLAN
LP 1604
STA 571+00 TO END CONSTRUCTION
(SHEET 4 OF 4)

FED. RD. DIV. NO.			SHEET NO.
			152
STATE	DIST.	COUNTY	
TEXAS	SA	BEXAR	
CONT.	SECT.	JOB	HIGHWAY NO.
2452	01	043	SH 151

p:\4760\0-0129\cad\sheet\151pln11.dgn 12/6/2011 9:27:17 AM mwmidkiff

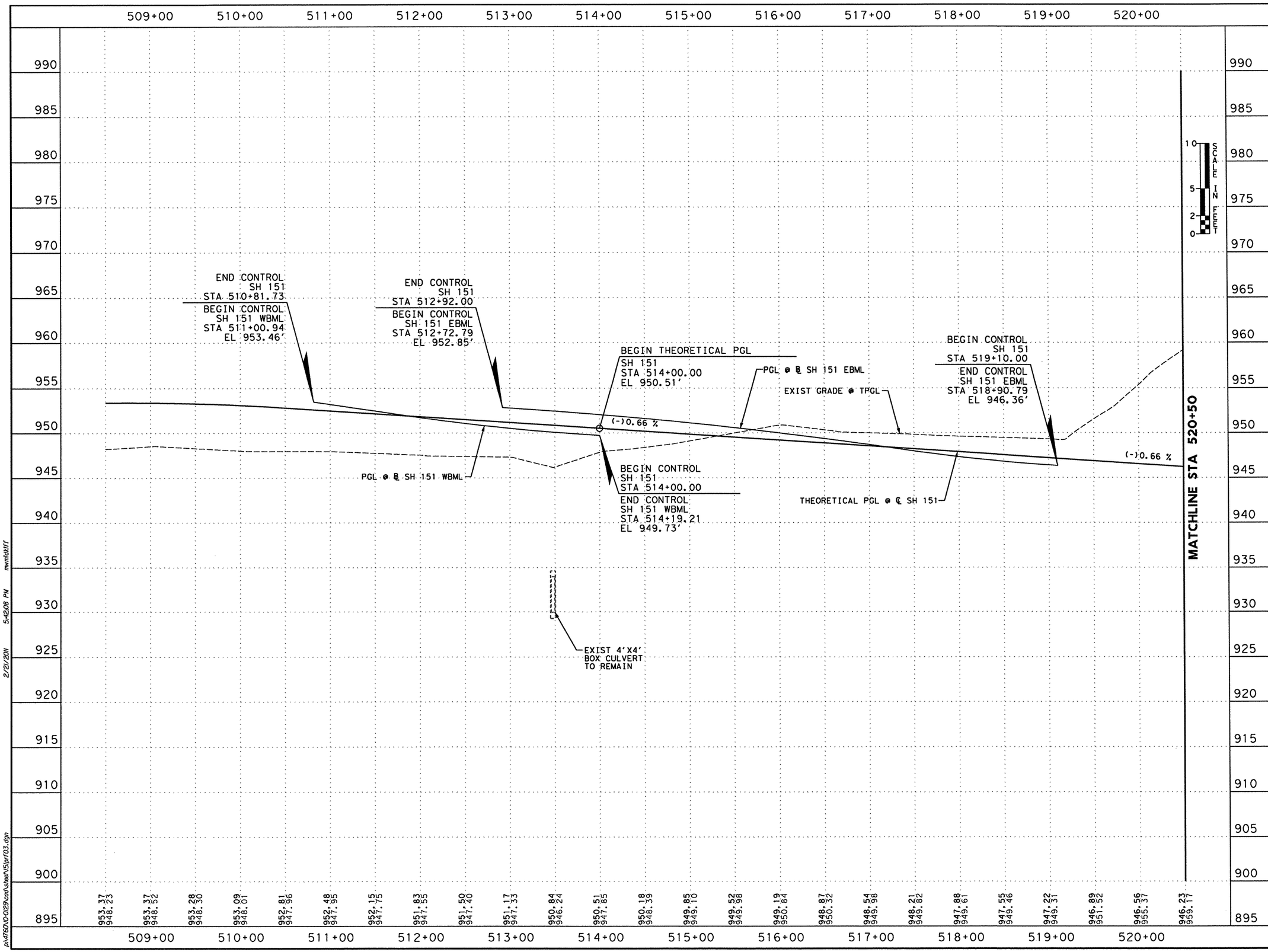

SCALE: H 1" = 100'
V 1" = 10'

STATE OF TEXAS
MICHAEL W. MIDKIFF
75435
REGISTERED PROFESSIONAL ENGINEER

Michael W. Midkiff
2/21/11

NO.	DATE	REVISION DESCRIPTION	APP. BY

© 2011

Texas Department of Transportation

MACTEC
3520 EXECUTIVE CENTER DRIVE
SUITE 200
AUSTIN, TEXAS 78731
(512) 795-0360

REGISTRATION NUMBER: F-1784

SH 151
ROADWAY PROFILE
SH 151
STA 508+50 TO STA 520+50
(SHEET 1 OF 6)

FED. RD. DIV. NO.			SHEET NO.
			153
STATE	DIST.	COUNTY	
TEXAS	SA	BEXAR	
CONT.	SECT.	JOB	HIGHWAY NO.
2452	01	043	SH 151

p:\4760\0-0129\cad\sheet\151prf03.dgn 2/21/2011 5:42:08 PM mwmidkiff

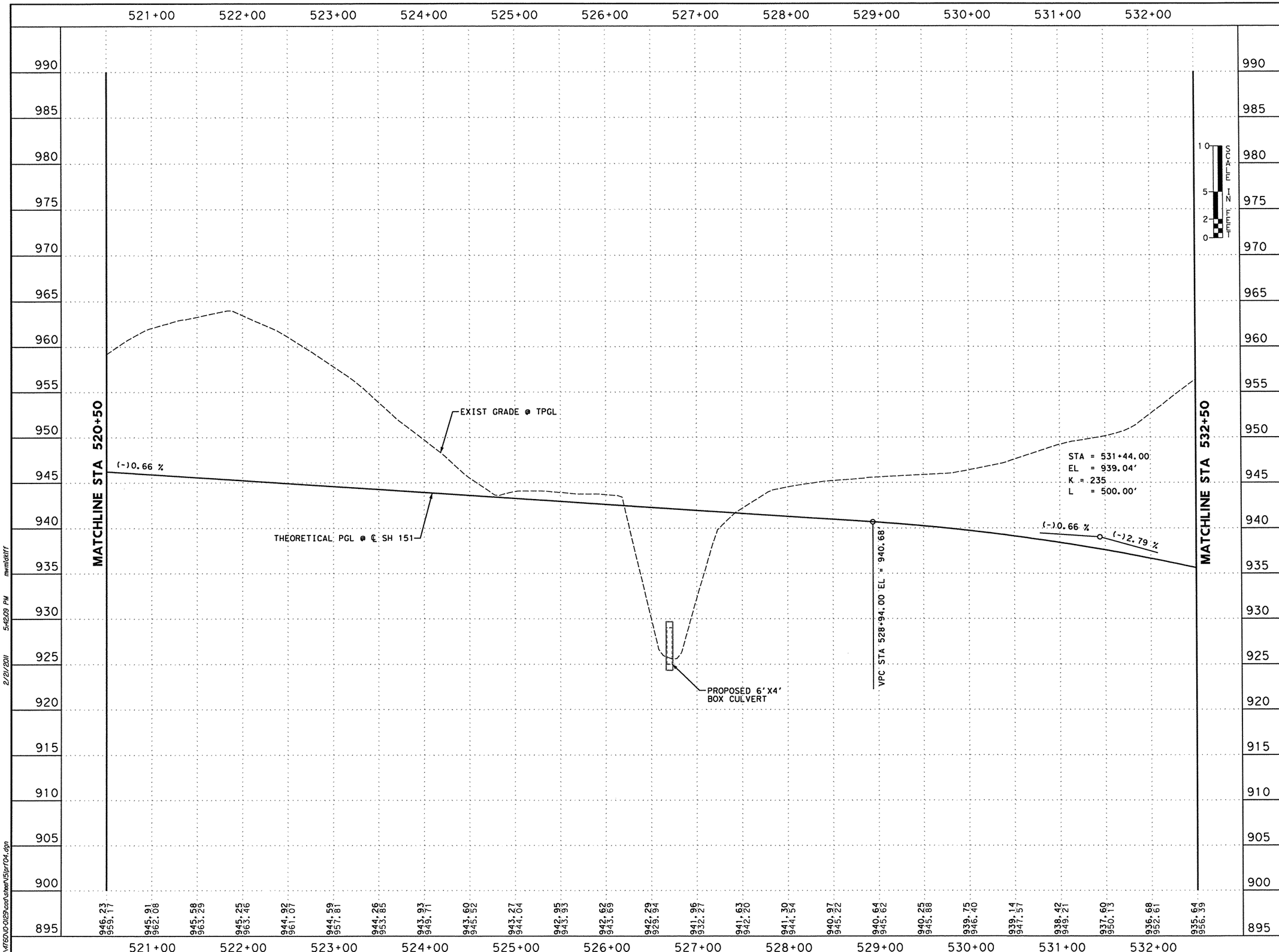

SCALE: H 1" = 100'
V 1" = 10'

STATE OF TEXAS
MICHAEL W. MIDKIFF
75435
REGISTERED PROFESSIONAL ENGINEER

Michael W. Midkiff 2/21/11

NO.	DATE	REVISION DESCRIPTION	APP. BY

© 2011

Texas Department of Transportation

MACTEC
3520 EXECUTIVE CENTER DRIVE
SUITE 200
AUSTIN, TEXAS 78731
(512) 795-0360
REGISTRATION NUMBER: F-1784

SH 151
ROADWAY PROFILE
SH 151
STA 520+50 TO STA 532+50
(SHEET 2 OF 6)

FED. RD. DIV. NO.			SHEET NO.
			154
STATE	DIST.	COUNTY	
TEXAS	SA	BEXAR	
CONT.	SECT.	JOB	HIGHWAY NO.
2452	01	043	SH 151

2/21/2011 5:42:09 PM mwmidkiff
p:\4760\0-0129\cad\sheet\15prf04.dgn

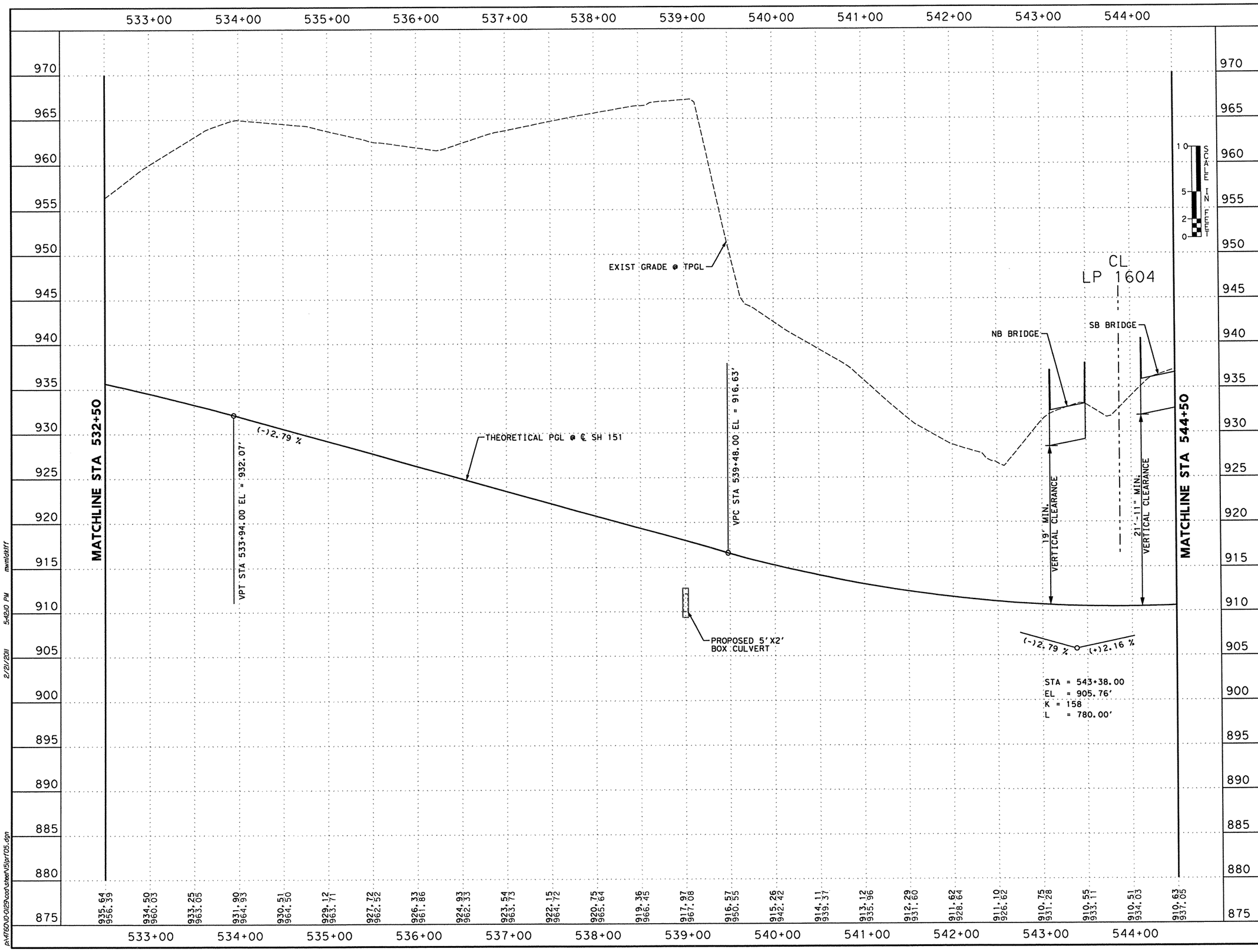

SCALE: H 1" = 100'
V 1" = 10'

STATE OF TEXAS
MICHAEL W. MIDKIFF
75435
REGISTERED PROFESSIONAL ENGINEER

2/21/11

NO.	DATE	REVISION DESCRIPTION	APP. BY

© 2011

Texas Department of Transportation

MACTEC
3520 EXECUTIVE CENTER DRIVE
SUITE 200
AUSTIN, TEXAS 78731
(512) 795-0360

REGISTRATION NUMBER: F-1784

SH 151
ROADWAY PROFILE
SH 151
STA 532+50 TO STA 544+50
(SHEET 3 OF 6)

FED. RD. DIV. NO.			SHEET NO.
			155
STATE	DIST.	COUNTY	
TEXAS	SA	BEXAR	
CONT.	SECT.	JOB	HIGHWAY NO.
2452	01	043	SH 151

2/21/2011 5:42:10 PM mwmidkiff

p:\4760\0-0129\cad\sheet\151prf05.dgn

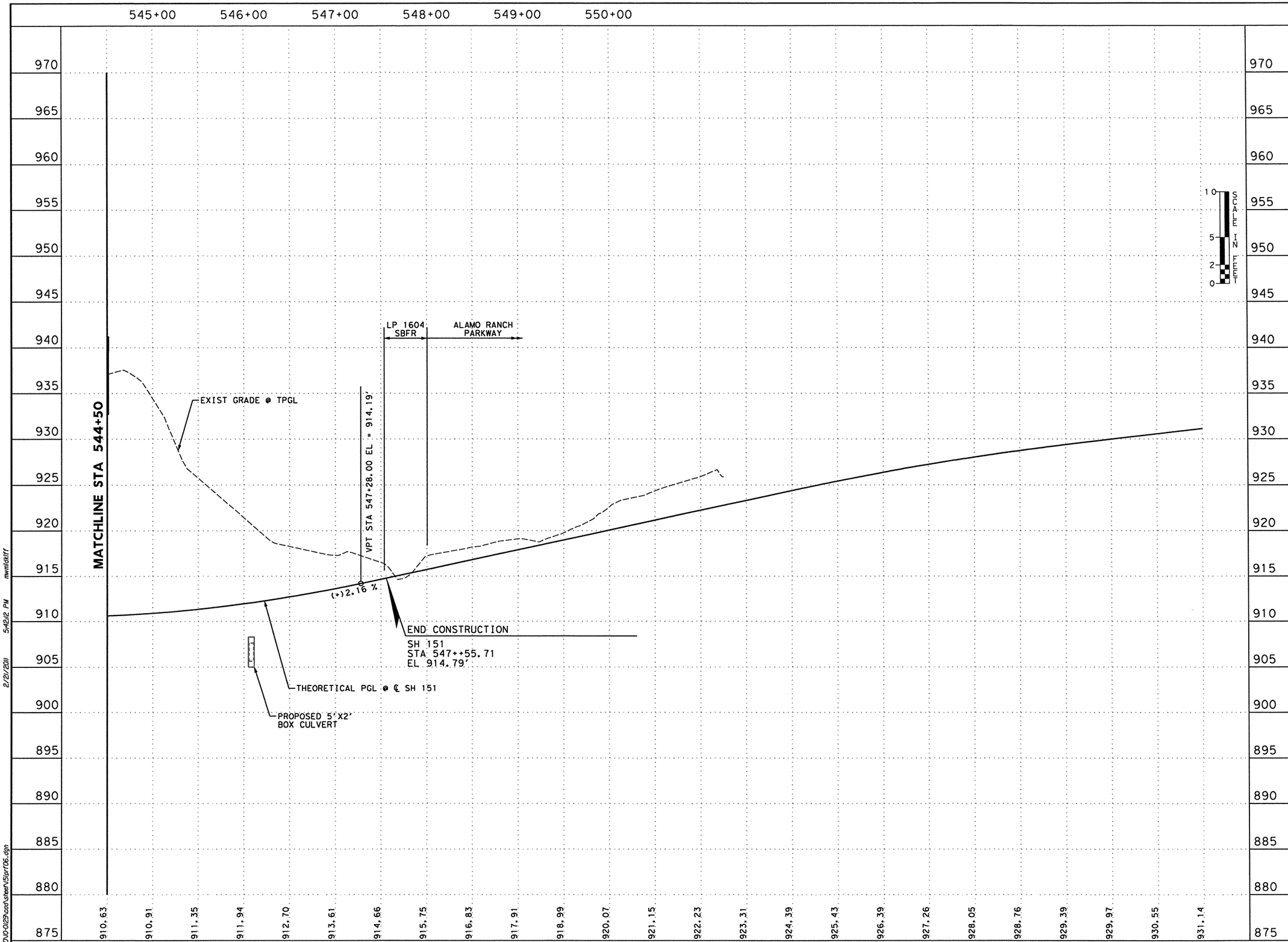

SCALE: H 1" = 100'
V 1" = 10'

STATE OF TEXAS
MICHAEL W. MIDKIFF
75435
REGISTERED PROFESSIONAL ENGINEER

Michael W. Midkiff
2/21/11

NO.	DATE	REVISION DESCRIPTION	APP. BY

© 2011

Texas Department of Transportation

MACTEC
3520 EXECUTIVE CENTER DRIVE
SUITE 200
AUSTIN, TEXAS 78731
(512) 795-0360

REGISTRATION NUMBER: F-1784

SH 151
ROADWAY PROFILE
SH 151
STA 544+50 TO END PROJECT
(SHEET 4 OF 6)

FED. RD. DIV. NO.			SHEET NO.
			156
STATE	DIST.	COUNTY	
TEXAS	SA	BEXAR	
CONT.	SECT.	JOB	HIGHWAY NO.
2452	01	043	SH 151

p:\4760\0-0129\cad\sheet\151prf06.dgn 2/21/2011 5:42:12 PM mwmidkiff

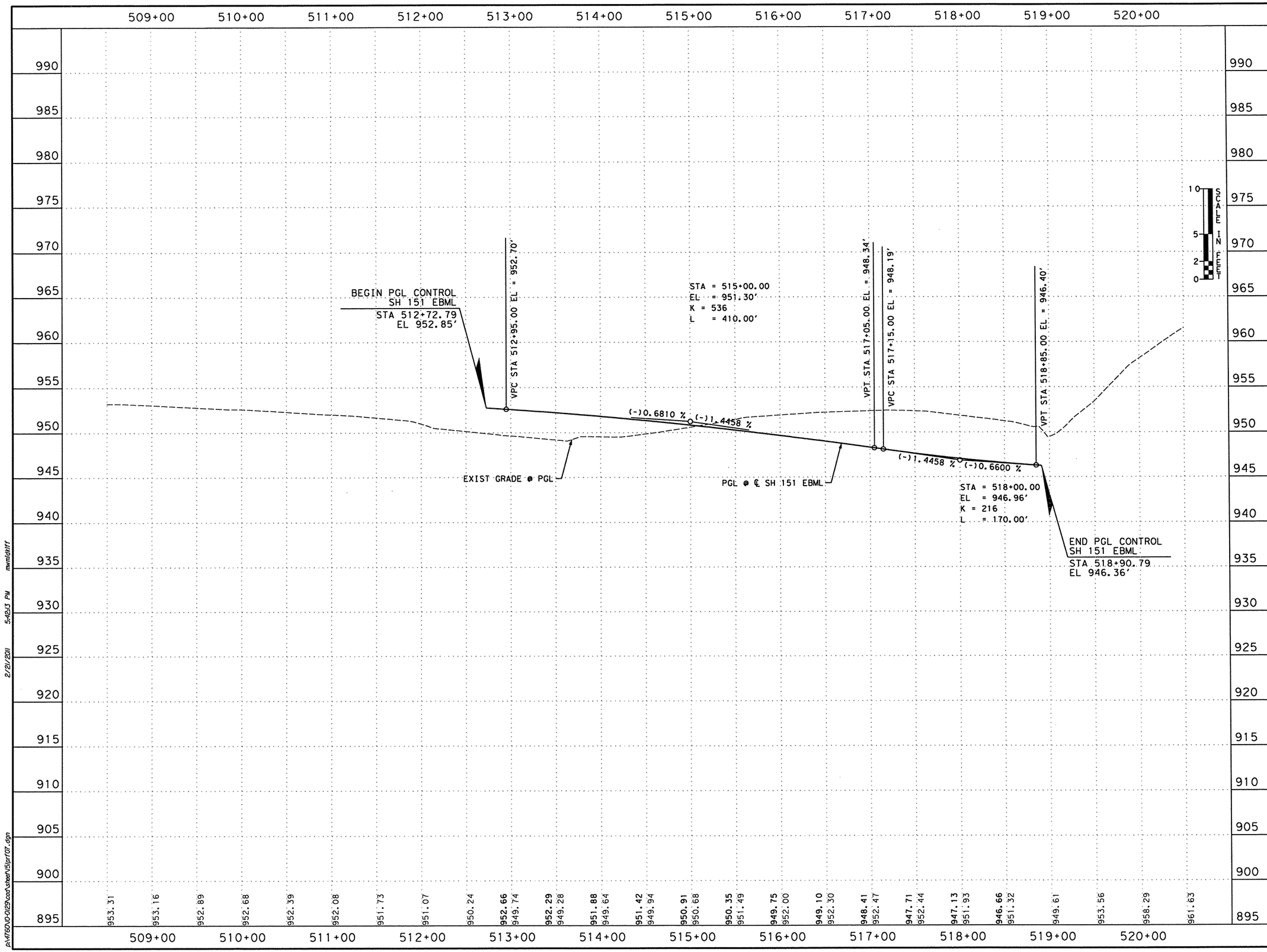

SCALE: H 1" = 100'
V 1" = 10'

STATE OF TEXAS
MICHAEL W. MIDKIFF
75435
REGISTERED PROFESSIONAL ENGINEER

Michael W. Midkiff
2/21/11

NO.	DATE	REVISION DESCRIPTION	APP. BY

© 2011

Texas Department of Transportation

MACTEC
3520 EXECUTIVE CENTER DRIVE
SUITE 200
AUSTIN, TEXAS 78731
(512) 795-0360

REGISTRATION NUMBER: F-1784

SH 151
ROADWAY PROFILE
SH 151 EB ML
STA 512+72.79 TO STA 518+90.79
(SHEET 5 OF 6)

FED. RD. DIV. NO.			SHEET NO.
			157
STATE	DIST.	COUNTY	
TEXAS	SA	BEXAR	
CONT.	SECT.	JOB	HIGHWAY NO.
2452	01	043	SH 151

p:\4760\0-0129\cad\sheet\151prf07.dgn 2/21/2011 5:42:13 PM mwmidkiff

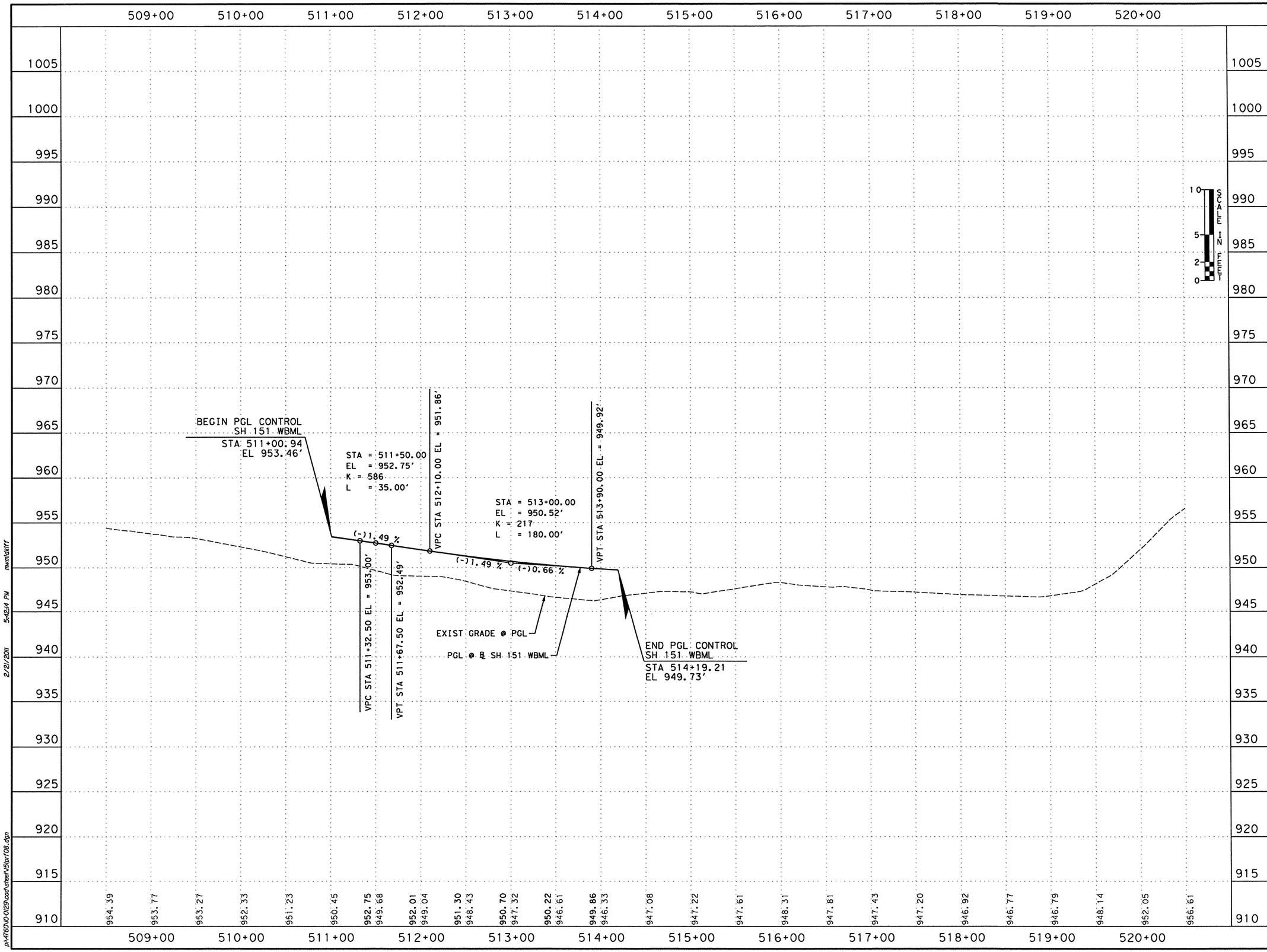

SCALE: H 1" = 100'
V 1" = 10'

STATE OF TEXAS
MICHAEL W. MIDKIFF
75435
REGISTERED
PROFESSIONAL ENGINEER
2/21/11

NO.	DATE	REVISION DESCRIPTION	APP. BY

© 2011

Texas Department of Transportation

MACTEC
3520 EXECUTIVE CENTER DRIVE
SUITE 200
AUSTIN, TEXAS 78731
(512) 795-0360

REGISTRATION NUMBER: F-1784

SH 151
ROADWAY PROFILE
SH 151 WB ML
STA 511+00.94 TO
STA 514+19.21
(SHEET 6 OF 6)

FED. RD. DIV. NO.			SHEET NO.
			158
STATE	DIST.	COUNTY	
TEXAS	SA	BEXAR	
CONT.	SECT.	JOB	HIGHWAY NO.
2452	01	043	SH 151

p:\4760\0-0129\cad\sheet\15part08.dgn 2/21/2011 5:42:14 PM mwmidkiff

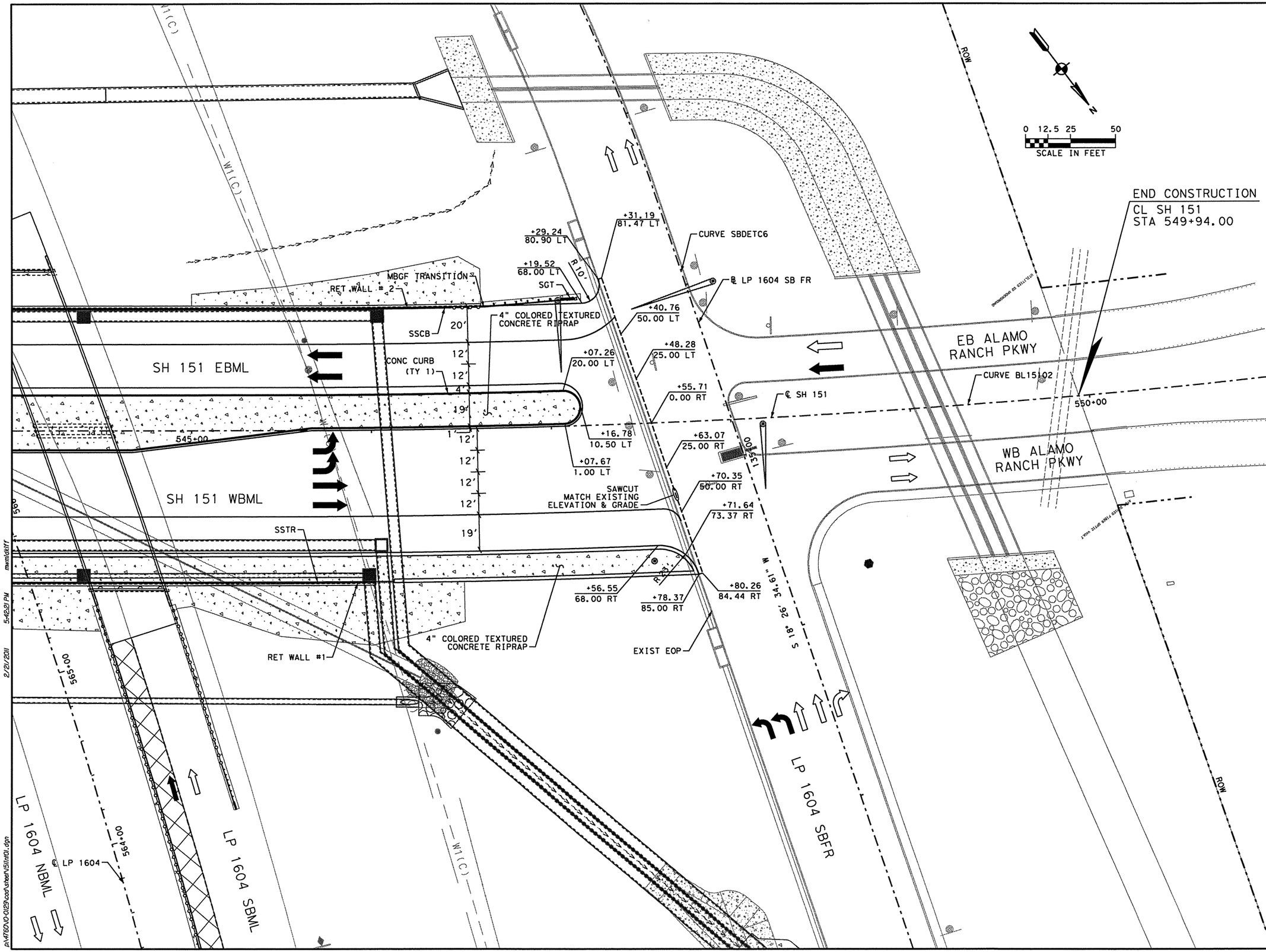

STATE OF TEXAS
MICHAEL W. MIDKIFF
75435
REGISTERED
PROFESSIONAL ENGINEER

Michael W. Midkiff
2/21/11

NO.	DATE	REVISION DESCRIPTION	APP. BY

© 2011

Texas Department of Transportation

MACTEC
3520 EXECUTIVE CENTER DRIVE
SUITE 200
AUSTIN, TEXAS 78731
(512) 795-0360

REGISTRATION NUMBER: F-1784

SH 151

INTERSECTION LAYOUT

(SHEET 1 OF 1)

FED. RD. DIV. NO.			SHEET NO.
			159
STATE	DIST.	COUNTY	
TEXAS	SA	BEXAR	
CONT.	SECT.	JOB	HIGHWAY NO.
2452	01	043	SH 151

p:\4760\0-0129\cad\sheet\151int01.dgn 2/21/2011 5:42:21 PM mwmidkiff

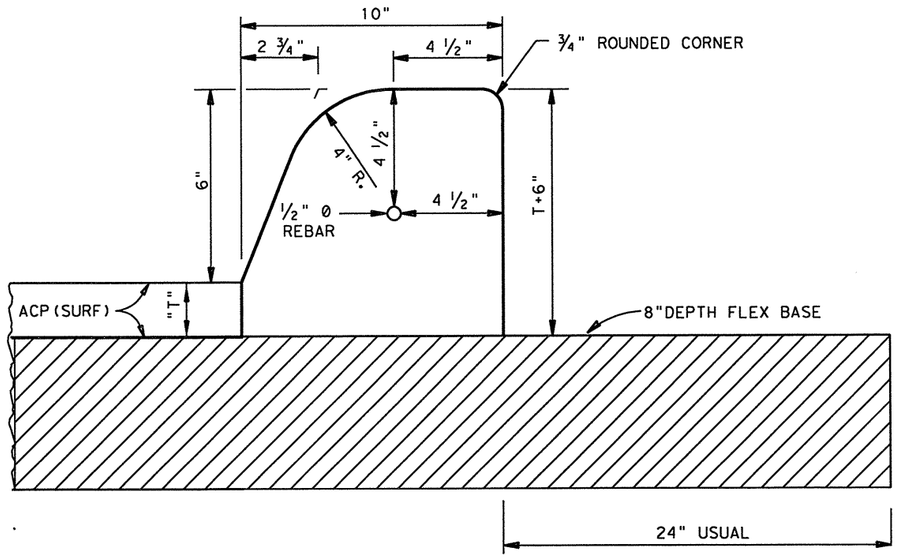

CONCRETE CURB (TYPE 1)

NTS

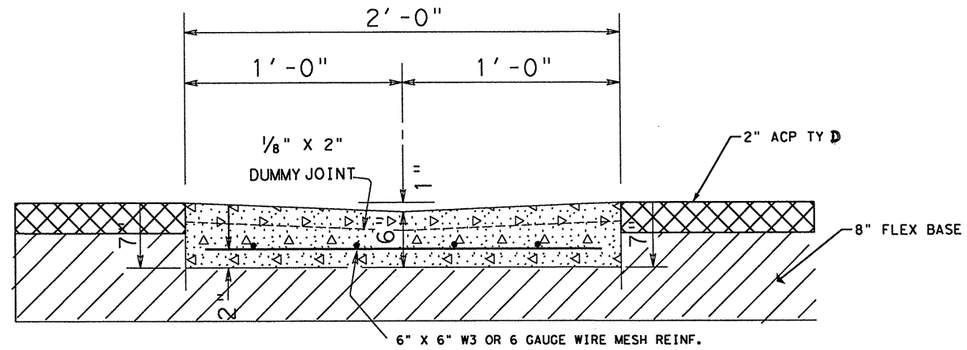

2' CONC RIBBON CURB

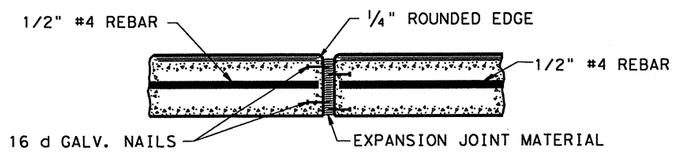

EXPANSION JOINTS TO BE PLACED AT BEGINNING AND END OF CURVES, DRIVEWAYS, WHEELCHAIR RAMPS, INLETS AND OTHER FIXED OBJECTS.

TYPICAL CURB EXPANSION JOINT DETAIL

NTS

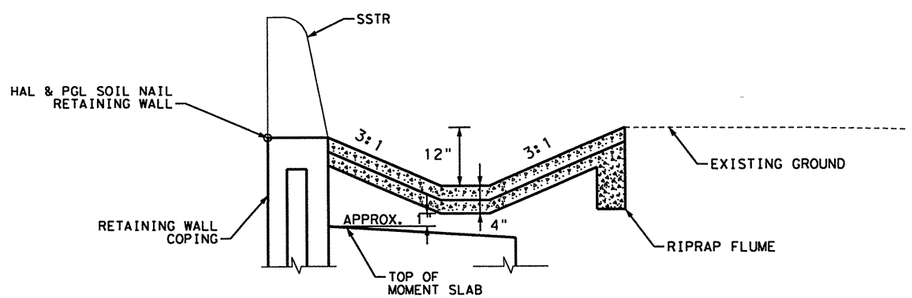

TYPICAL RIPRAP FLUME SECTION

NTS

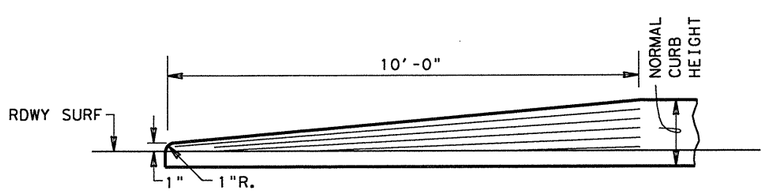

TRANSITION FOR CONCRETE CURB ENDS

NTS

CURB NOTES:

1. THE FLEX BASE UNDER THE CURB WILL BE SPRINKLED AND ROLLED/TAMPED AS APPROVED BY THE ENGINEER.

2. REFER TO STANDARD SHEET CCCG-10A FOR REMAINING DETAILS AND GENERAL NOTES

STATE OF TEXAS
MICHAEL W. MIDKIFF
75435
REGISTERED
PROFESSIONAL ENGINEER

Michael W. Midkiff
2/21/11

NO.	DATE	REVISION DESCRIPTION	APP. BY

© 2011

Texas Department of Transportation

MACTEC
3520 EXECUTIVE CENTER DRIVE
SUITE 200
AUSTIN, TEXAS 78731
(512) 795-0360

REGISTRATION NUMBER: F-1784

SH 151

ROADWAY DETAILS

(SHEET 1 OF 1)

FED. RD. DIV. NO.			SHEET NO.
			160
STATE	DIST.	COUNTY	
TEXAS	SA	BEXAR	
CONT.	SECT.	JOB	HIGHWAY NO.
2452	01	043	SH 151

p:\4760\0-0129\cad\sheet\5ldet_rdwy01.dgn 2/21/2011 5:42:25 PM mwmidkiff

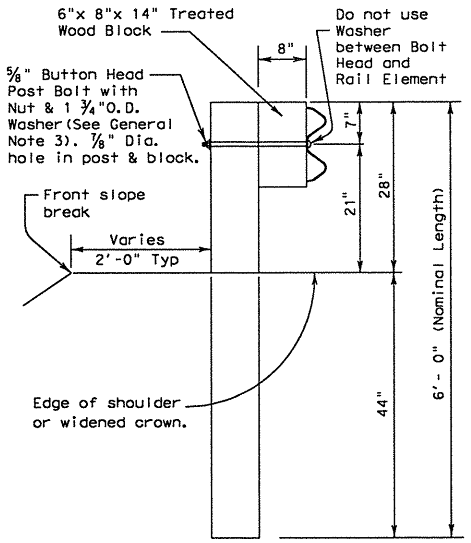

TYPICAL POST

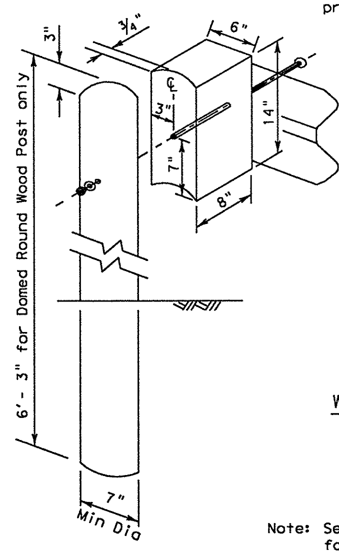

WOOD BLOCK TO ROUND WOOD POST

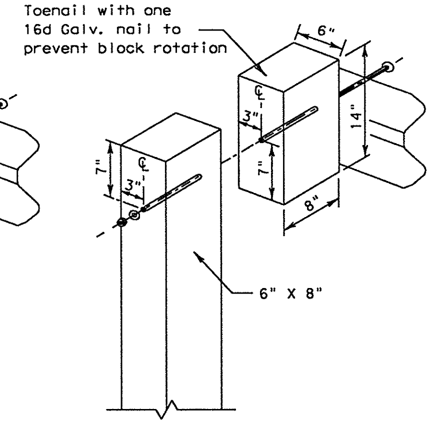

WOOD BLOCK TO RECTANGULAR WOOD POST

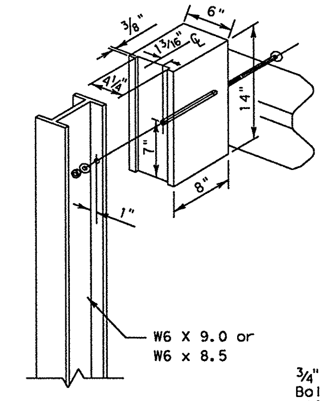

WOOD BLOCK TO STEEL POST

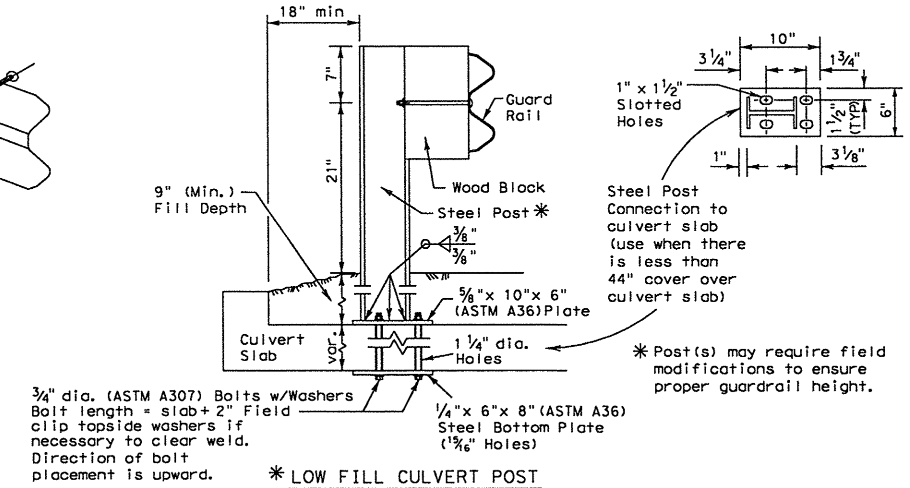

✱ LOW FILL CULVERT POST

FOR USE ON NON-BRIDGE CLASS CULVERTS ONLY

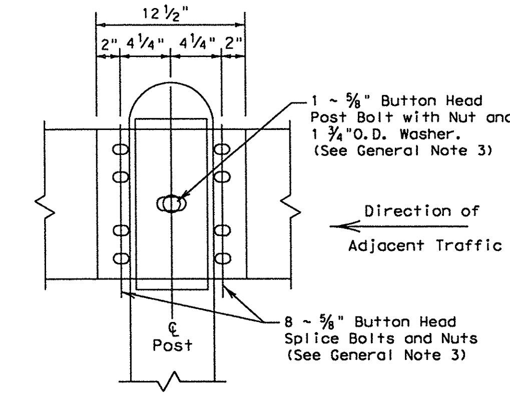

RAIL SPLICE DETAIL

Note: See Rail Splice Detail for the required hardware.

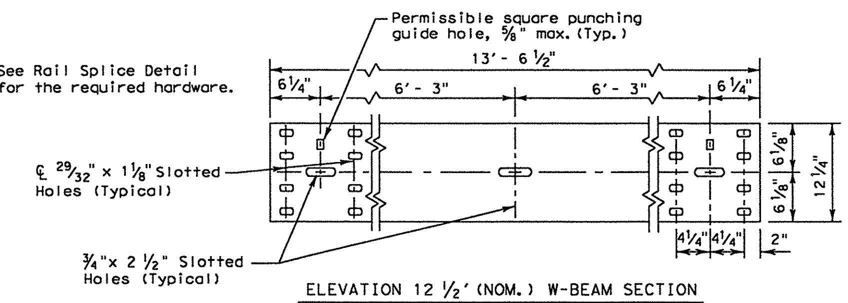

ELEVATION 12 1/2' (NOM.) W-BEAM SECTION

25 foot sections may also be supplied (See General Note 2)

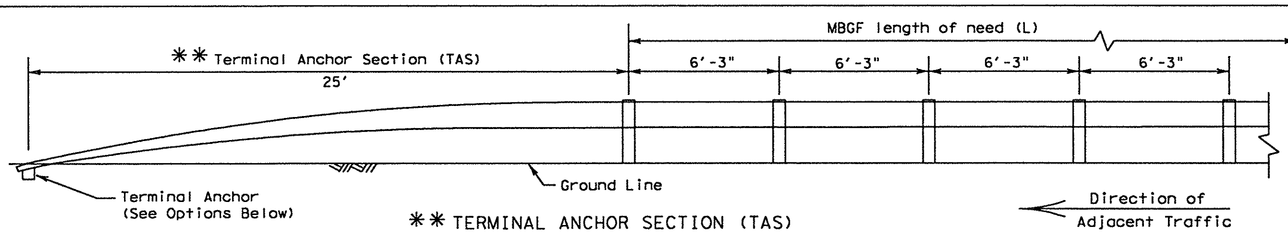

✱✱ TERMINAL ANCHOR SECTION (TAS)

Terminal anchor sections are only for downstream use, when located outside the horizontal clearance area of opposing traffic.

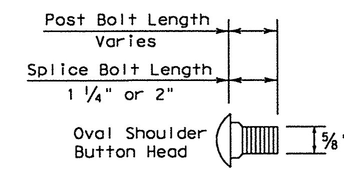

BUTTON HEAD BOLT

Post and Splice Bolts (See General Note 3)

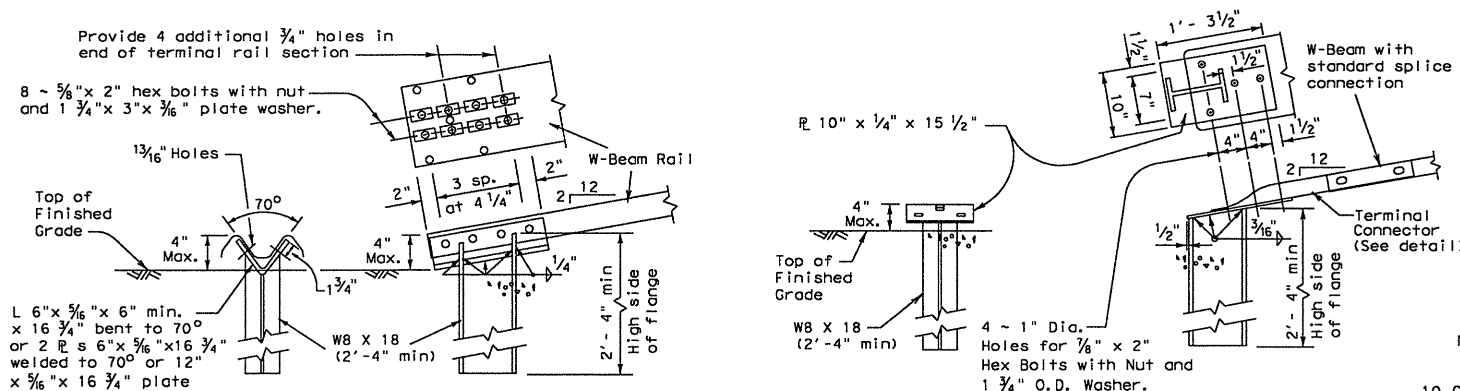

OPTION (1)

Note: This anchor post requires four additional 3/4" holes (shop or field) in the rail member with eight 5/8" hex bolts with nut and plate washer.

OPTION (2)

Note: This anchor post requires the use of the 10 ga. terminal connector with four 7/8" hex bolts with nut and washer.

TERMINAL ANCHOR POST OPTIONS

(See General Note 11)

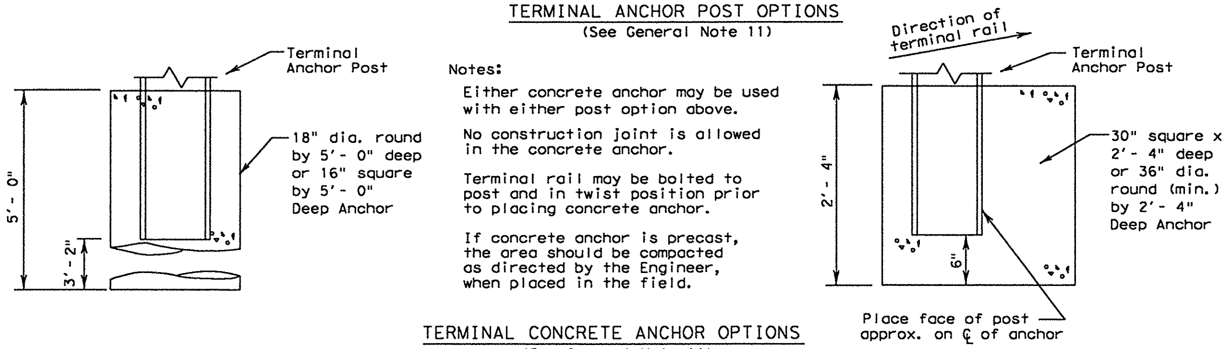

Notes:

Either concrete anchor may be used with either post option above.

No construction joint is allowed in the concrete anchor.

Terminal rail may be bolted to post and in twist position prior to placing concrete anchor.

If concrete anchor is precast, the area should be compacted as directed by the Engineer, when placed in the field.

TERMINAL CONCRETE ANCHOR OPTIONS

(See General Note 11)

Note: Terminal Connector to be used with terminal anchor post options 2.

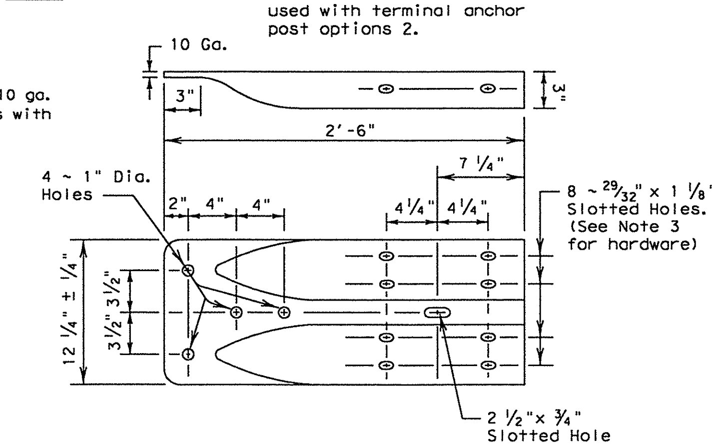

TERMINAL CONNECTOR

For connection hardware to concrete rails, see the MBGF transition standards.

GENERAL NOTES

1. The type of post (round wood post, rectangular wood post, or steel post) will be shown elsewhere in the plans. The exact position of MBGF shall be shown elsewhere in the plans or as directed by the Engineer. Steel posts to be galvanized in accordance with Item 445, "Galvanizing."
2. Rail element shall meet the requirements of Item 540, "Metal Beam Guard Fence" except as modified on the plans. The Contractor may furnish rail elements of 12 1/2 or 25 foot nominal lengths.
3. Button head "post" bolts (ASTM A307) shall be of sufficient length to extend through the full thickness of the nut (ASTM A563) and Type A (1 3/4" O.D.)washer and not more than 1" beyond it. Button head "splice" bolts (ASTM A307) are 5/8" x 1 1/4" (or 2" long at triple rail splices) with a 5/8" double recessed nut (ASTM A563).
4. Fittings (bolts, nuts, and washers) shall be galvanized in accordance with Item 445, "Galvanizing." Fittings shall be subsidiary to the bid item.
5. Crown shall be widened to accommodate the Metal Beam Guard Fence.
6. The lateral approach to the guard fence, shall have a slope rate of not more than 1V:10H.
7. Unless otherwise shown in the plans, guard fence placed in the vicinity of curbs shall be positioned so that the face of curb is located directly below or behind the face of the block. Rail placed over curbs shall be installed so that the post bolt is located approximately 21 inches above the gutter pan or roadway surface.
8. If solid rock is encountered within 0 to 18" of the finished grade, drill a 22" dia. hole, 24" into the rock, or drill two 12" dia. front to back overlapping holes, 24" into the rock. If solid rock is encountered below 18", drill a 12" dia. hole, 12" into the rock or to the standard embedment depth, whichever is less. Any excess post length, after meeting these depths, may be field cut to ensure proper guardrail mounting height. Backfill with a cohesionless material.
9. Posts shall not be set in concrete, of any depth.
10. Special fabrication will be required at installations having a curvature of less than 150 ft. radius.
11. The terminal anchor section (TAS) post shall be set in Class A concrete (unless otherwise shown in the plans) in accordance with Item 421, "Hydraulic Cement Concrete." Concrete shall be subsidiary to the bid item requiring construction of the terminal anchor section (TAS). Terminal anchor post to be galvanized in accordance with Item 445, "Galvanizing."
12. Unless otherwise shown in the plans, a composite material post and/or block that meets the requirements of DMS-7210, "Composite Material Posts and Blocks for Metal Beam Guard Fence" may be substituted for posts and/or blocks of similar dimensions. The Construction Division, TxDOT maintains a Material Producer List (MPL) for producers of materials conforming to DMS-7210. Only producers on the MPL can furnish composite material posts and/or blocks.

Texas Department of Transportation
Design Division (Roadway)

METAL BEAM GUARD FENCE

MBGF-09

FILE: mbgf09.dgn	DN: AM	CK: AM	DW: BD	CK:		
© TxDOT JULY 1994	DIST	FEDERAL AID PROJECT				SHEET
REVISIONS	SA					161
	COUNTY		CONTROL	SECT	JOB	HIGHWAY
	BEXAR		2452	01	043	SH 151

DISCLAIMER:
The use of this standard is governed by the "Texas Engineering Practice Act". No warranty of any kind is made by TxDOT for any purpose whatsoever. TxDOT assumes no responsibility for the conversion of this standard to other formats or for incorrect results or damages resulting from its use.

p:\4760\0-0129\cad\sheets\standard\5\std_rdwy03.dgn 2/21/2011 5:42:26 PM mwmldkiff

LEVELS DISPLAYED 1

p:\4760\0-0129\cad\str" "odot\v5\std_rdwy04.dgn 2/21/2011 5:42:27 PM mwmldet11

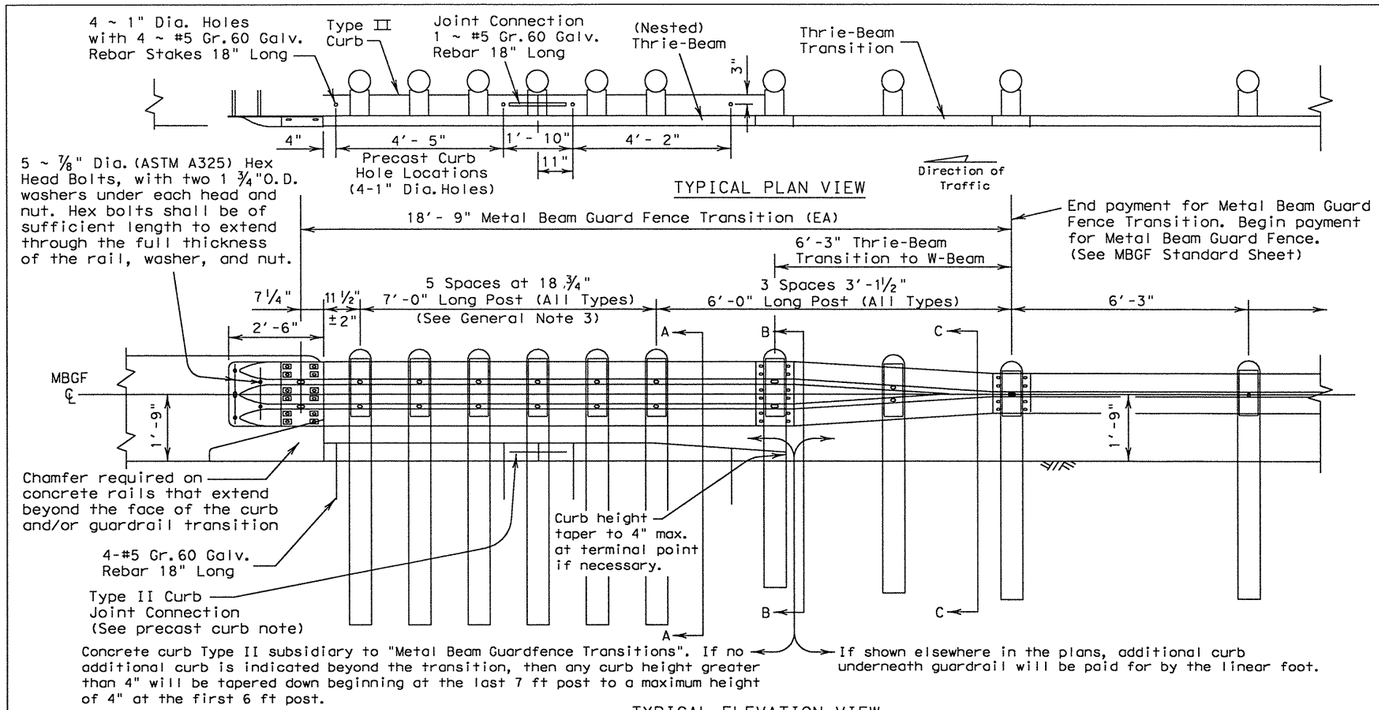

TYPICAL PLAN VIEW

TYPICAL ELEVATION VIEW

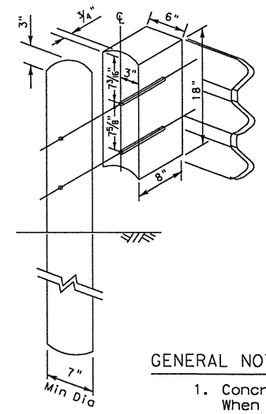

WOOD BLOCK TO ROUND WOOD POST

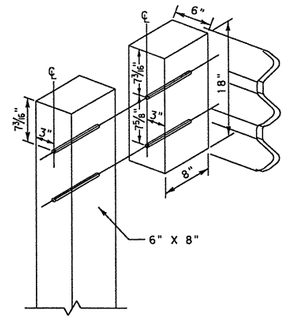

WOOD BLOCK TO RECTANGULAR WOOD POST

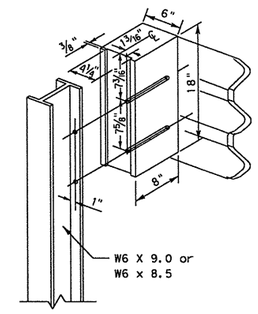

WOOD BLOCK TO STEEL POST

GENERAL NOTES

1. Concrete curb may be cast-in-place or precast as shown on this sheet. When used in conjunction with thrie-beam guard fence transitions, curb shall be Type II (Typically 5 3/4" height above surface; See CCCG standard sheet) unless otherwise shown in the plans. If other curb heights are shown in the plans in conjunction with the transition, the curb height may be from 4" to 8" with a relatively vertical face. Concrete curb shall be continuous to the seventh post.

   Contact the Design Division for drainage cut options needed within the curb section of the transition.

2. The type of post (round wood, rectangular wood or steel) will be shown elsewhere in the plans.

3. The post length shall be marked on all 7'- 0" long posts by the Manufacturer. The mark shall be located within the top 1 ft. region of the post, at least 5/8" in height, and visible after installation. Wooden posts shall be marked with a brand, and steel posts with a stencil before galvanizing.

4. Rail element shall meet the requirements of Item 540, "Metal Beam Guard Fence" except as modified on the plans. The thrie-beam terminal connector and the thrie-beam transition to w-beam shall be of the same material, but shall not be less than 10 gauge.

   Contractor shall verify that the locations of bolt holes match those in the thrie-beam terminal connector prior to ordering materials.

5. Unless otherwise shown in the plans, transitions shall be placed with the block face in front of or directly above the curb face.

6. Galvanized washers used with the 5/8" dia. post bolts shall be Type A 1 3/4" O.D. washers. The (24) plate washers required at the terminal connector splice are 1 3/4"x 3"x 3/16" plate washers with a 1/16"x 1" hole.

7. Button head "post" bolts (ASTM A307) shall be of sufficient length to extend through the full thickness of the nut (ASTM A563) and washer and not more than 1" beyond it. Button head "splice" bolts (ASTM A307) 5/8" Dia.x 2" (at triple rail splices) with 5/8" double recessed nuts.

8. Fittings (bolts, nuts, and washers) shall be galvanized in accordance with Item 445, "Galvanizing". Fittings shall be subsidiary to the bid item.

9. Crown shall be widened to accommodate transitions.

10. If solid rock is encountered. See the MBGF standard sheet for the proper installation guidance.

11. Posts shall not be set in concrete.

12. Unless otherwise shown in the plans, a composite material post and/or block that meets the requirements of DMS-7210, "Composite Material Posts and Blocks for Metal Beam Guard Fence" may be substituted for posts and/or blocks of similar dimensions. The Construction Division, TxDOT, maintains a Material Producer List (MPL) for producers of materials conforming to DMS-7210. Only producers on the MPL can furnish composite material posts and/or blocks.

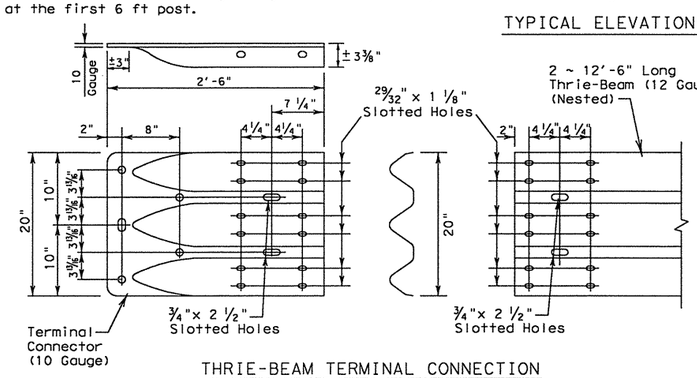

THRIE-BEAM TERMINAL CONNECTION

(See General Notes 6 & 7 for required hardware)

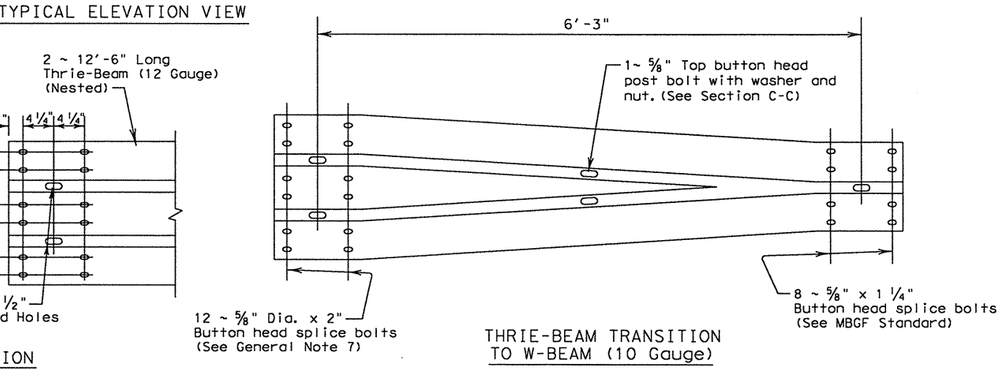

THRIE-BEAM TRANSITION TO W-BEAM (10 Gauge)

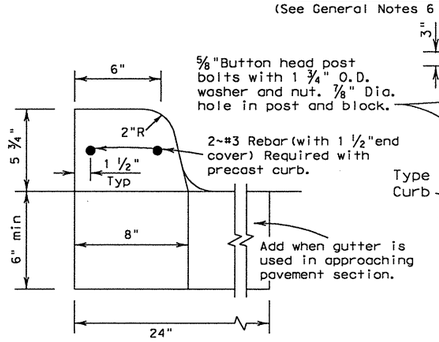

TYPE II CURB

Cast-in-Place or Precast

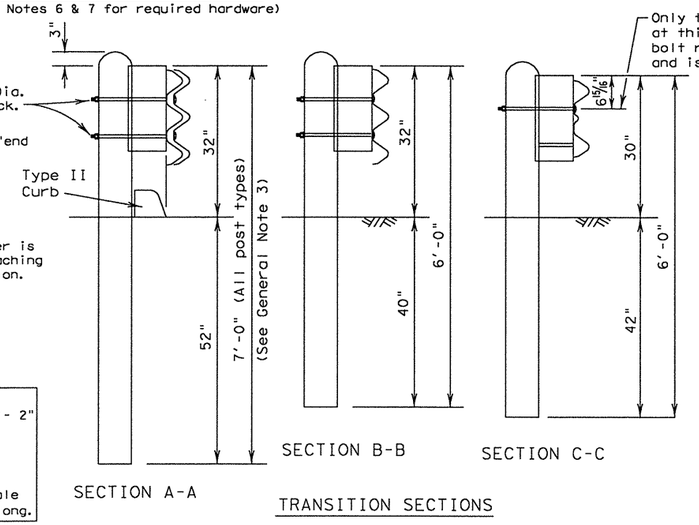

SECTION A-A

SECTION B-B

SECTION C-C

TRANSITION SECTIONS

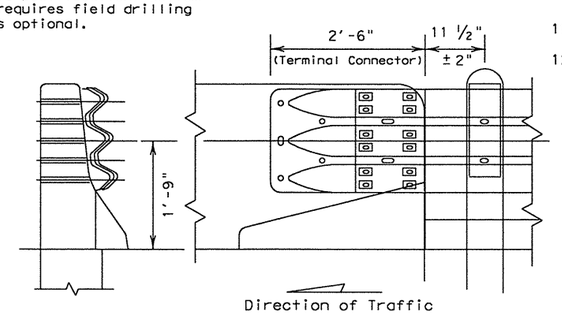

CONNECTION TO CONCRETE BRIDGE RAIL AND TRAFFIC BARRIERS

Galvanized plate washers are required under the button head and nut at the terminal connector splice to nested thrie-beam. (See General Notes 6 & 7).
The 5 ~ 7/8" Dia. (ASTM A325) hex bolts shall be of sufficient length to extend through the full thickness of the rail, washers, and nuts.

PRECAST CURB: Type II Precast Curb secured with 4~#5 Gr.60 Galv. Rebar stakes 18" long. The 12'- 2" section of curb may be cast in two sections.
Section ① 5'- 8" long
Section ② 6'- 6" long with the last 3'- 6" of curb tapered to a 4" height.
The Joint Connection is two 9" long 1" dia female ends connected with 1~#5 Gr.60 Galv. Rebar 18" long.

DISCLAIMER:
The use of this standard is governed by the "Texas Engineering Practice Act". No warranty of any kind is made by TxDOT for any purpose whatsoever. TxDOT assumes no responsibility for the conversion of this standard to other formats or for incorrect results or damages resulting from its use.

LEVELS DISPLAYED

1		3		5	6	7	8	9	10	11	12	31	41	51	61																
17	18	19	22	22	32	42	52	62	72	82	92	93	93	132																	
33	43	53	63	73	83	94	104	124	134	144	154	164	174	184																	
195	195	196	256	356	455																										

Texas Department of Transportation
Design Division (Roadway)

METAL BEAM GUARD FENCE TRANSITION

(Thrie-Beam Transition)

MBGF (TR) -09

FILE: mbgftr09.dgn	DN: MAM	CK: MAM	DW: BGD	CK:			
©TxDOT December 2001	DIST	FEDERAL AID PROJECT					SHEET
REVISIONS	SA						162
	COUNTY			CONTROL	SECT	JOB	HIGHWAY
	BEXAR			2452	01	043	SH 151

DISCLAIMER:
The use of this standard is governed by the "Texas Engineering Practice Act". No warranty of any kind is made by TxDOT for any purpose whatsoever. TxDOT assumes no responsibility for the conversion of this standard to other formats or for incorrect results or damages resulting from its use.

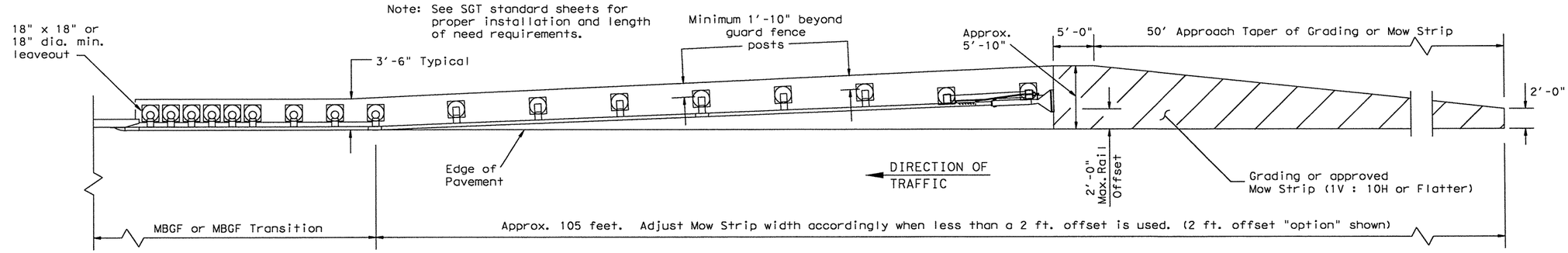

GRADING AND MOW STRIP AT GUARDRAIL END TREATMENTS

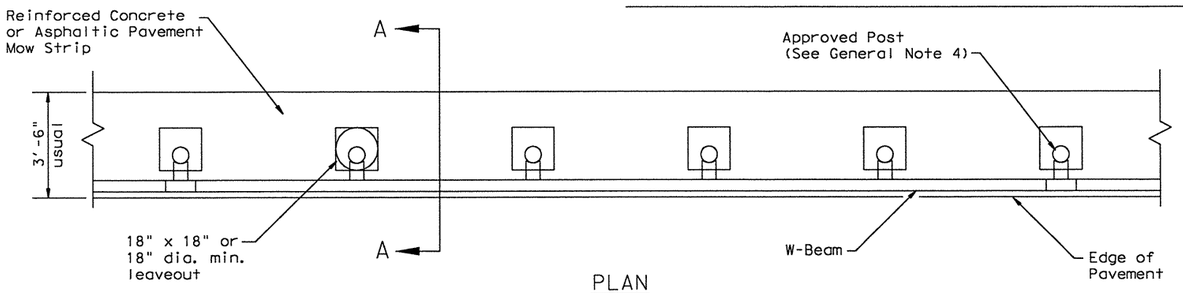

PLAN

Regular MBGF shown with Mow Strip

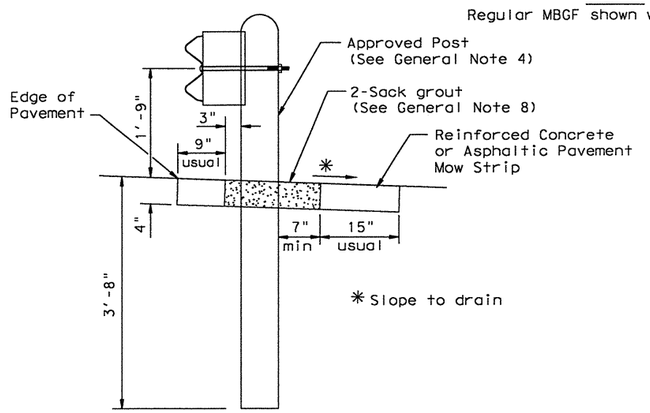

SECTION A-A

Typical

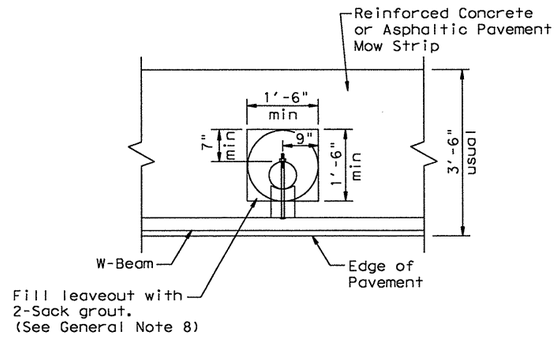

MOW STRIP DETAIL

Reinforced Concrete or Asphaltic Pavement Mow Strip with 18" x 18" or 18" dia. minimum leaveout.

Note: Site Condition(s)

Site conditions may exist where grading is required for the proper installation of metal guard fence and end treatments.

Approach grading or mow strip may be decreased or eliminated. As directed by the Engineer.

GENERAL NOTES

1. This mow strip design is for use with metal beam guard fence, guard fence transitions, and guard fence end treatments (See SGT standards for proper SGT installation).
2. Mow strips shall be asphaltic pavement or reinforced concrete (wire mesh or synthetic fiber), as shown on the plans and will be paid for under the pertinent bid item of work. Asphaltic pavement shall meet the requirements of the item, and be placed in accordance with the pertinent bid item as shown on the plans. Reinforced concrete shall be placed in accordance with Item 432, "Riprap." The use of the synthetic fiber in lieu of steel reinforcing is acceptable, provided the fiber producer is on the Department Material Producer List (MPL), maintained by TxDOT, Construction Division.
3. The leaveout behind the post shall be a minimum of 7".
4. The type of approved post will be shown elsewhere in the plans. See the applicable standard sheets for additional details and information.
5. Other curb placement options may be used. Curbs are not considered part of the mow strip and will be paid for under other pertinent bid item.
6. Depth of mow strip will be 4".
7. The limits of payment for asphaltic pavement or reinforced concrete will include leaveouts for post.
8. The leaveouts shall be filled with no more than a 2-sack grout mixture and placed in accordance with Section 421.2.F, "Mortar and Grout." Payment for furnishing and placing the grout mixture will be considered subsidiary to the pay item of asphaltic pavement or reinforced concrete.

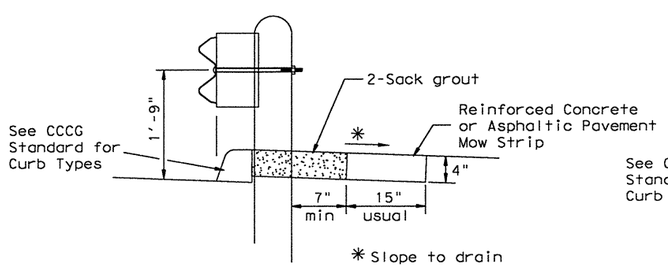

CURB OPTION (1)

This option will increase the post embedment through out the system.

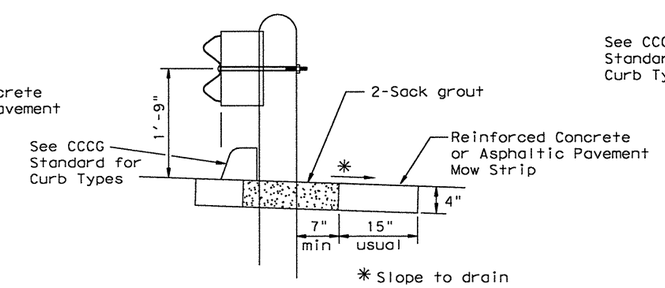

CURB OPTION (2)

Curb shown on top of mow strip

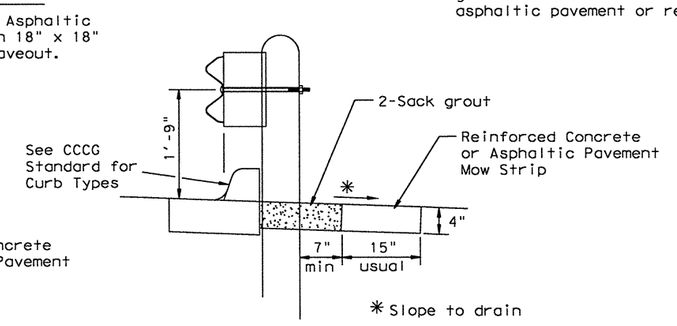

CURB OPTION (3)

Texas Department of Transportation
Design Division Standard

METAL BEAM GUARD FENCE

(MOW STRIP)

MBGF (MS) - 10

FILE: mbgfms10.dgn	DN: TxDOT	CK:	DW:	CK:
© TxDOT April 2003	CONT	SECT	JOB	HIGHWAY
REVISIONS	2452	01	043	SH 151
	DIST		COUNTY	SHEET NO.
	SA		BEXAR	163

DATE:
FILE:

p:\4760\0-0129\cad\dgn\ rdwr05_rdwr05.dgn 2/21/2011 5:42:28 PM mwmldell1

DISCLAIMER:
The use of this standard is governed by the "Texas Engineering Practice Act". No warranty of any kind is made by TxDOT for any purpose whatsoever. TxDOT assumes no responsibility for the conversion of this standard to other formats or for incorrect results or damages resulting from its use.

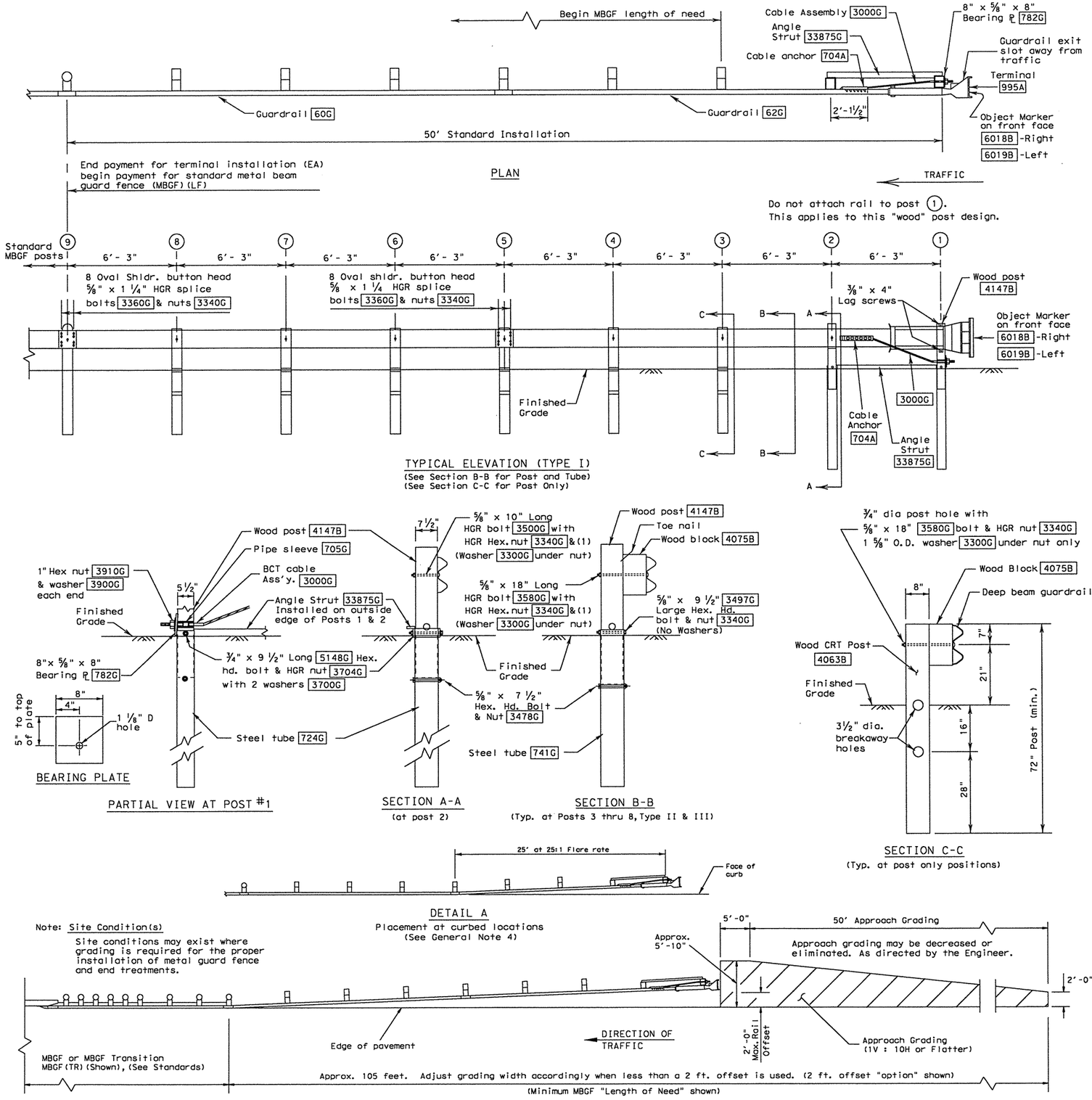

GRADING AT GUARDRAIL END TREATMENTS

Note: Site Condition(s)

Site conditions may exist where grading is required for the proper installation of metal guard fence and end treatments.

GENERAL NOTES

1. The Type of SGT unit will be specified elsewhere in the plans. Numbers in circles indicate post position. The Type of SGT unit chosen is a maintenance consideration and does not affect the systems performance.

Post & Tube Options		Post Only
Type I	Posts 1 thru 2	Posts 3 thru 8
Type II	Posts 1 thru 4	Posts 5 thru 8
Type III	Posts 1 thru 8	None

2. SGT's placed within the "minimum" 150 ft. radius, shall be installed straight. Standard rail elements may be installed within the radius, without special fabrication.
3. All bolts, nuts, cable assemblies, cable anchors, steel tubes & bearing plates shall be galvanized.
4. At non-curbed locations, a flare rate of 25:1 may be used over the first 50 ft. of the system to prevent the terminal head from encroaching on the shoulder. The flare may be decreased or eliminated for specific installations, if directed by the Engineer.
   At curbed locations, a flare rate of 25:1 shall be used beginning at post number 5 and ending at post number 1.
5. The steel tubes shall not protrude more than 4 inches above ground. Site grading may be necessary to meet this requirement.
6. The steel tubes may be driven with an approved driving head. They shall not be driven with the wood post in the tube. If the steel tubes are placed in drilled holes, the backfill material must be satisfactorily compacted to prevent tube settlement.
7. If solid rock is encountered. See the manufacturer's installation manual for the proper installation guidance.
8. The breakaway cable assembly must be taut. A locking device, (vice grips or channel lock pliers) should be used to prevent the cable from twisting when tightening the nuts.
9. The wood blocks shall be "toe nailed" to the rectangular wood posts to prevent them from turning when the wood shrinks.
10. For curb installations, the soil tubes and posts shall be installed at the proper ground elevation behind the curb. The posts will then require field drilling new holes to accommodate the rail to post connection bolt to maintain the proper height of the rail above the gutter pan. The excess post length above the rail will be removed if directed by the Engineer.
11. An object marker shall be installed on the front of the impact head as detailed on D&OM(VIA).
12. A special site evaluation should be considered, prior to using this end treatment where there is less than 25 feet between the extrusion side of the end treatment and any adjacent driving lane.

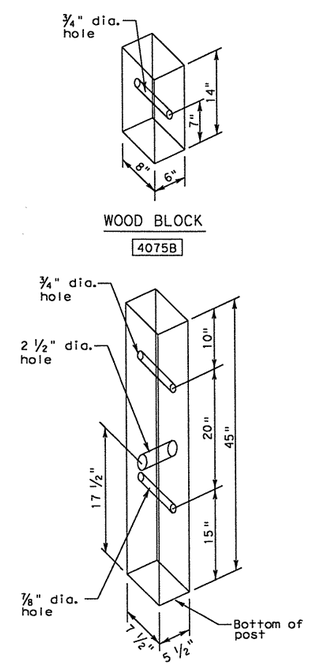

POST & TUBE OPTIONS		
Type I	Posts 1	thru 2
Type II	Posts 1	thru 4
Type III	Posts 1	thru 8

BILL OF MATERIAL

Code #	POST & TUBE OPTIONS Type I Qty.	Type II Qty.	Type III Qty.	DESCRIPTION
62G	1	1	1	#1 Deep Beam Guardrail (12 Ga) at 25'
60G	1	1	1	#2 Deep Beam Guardrail (12 Ga) at 25'
724G	2	2	2	Steel Tube - 6"x 8"x 72"x 1/8" min
741G	0	2	6	Steel Tube - 6" x 8" x 54" x 1/8" min
4147B	2	4	8	Wood Posts - 5 1/2" x 7 1/2" x 45"
4063B	6	4	0	Wood CRT Posts - 6"x 8"x 72"
4075B	6	6	6	Wood Block - 6"x 8"x 14"
705G	1	1	1	Pipe Sleeve - 2" std. pipe x 5 1/2"
782G	1	1	1	Bearing Plate - 8"x 8"x 5/8"
704A	1	1	1	Cable Anchor
3000G	1	1	1	Cable Assembly (3/4" x 78")
33875G	1	1	1	Angle Strut
995A	1	1	1	ET-2000 Plus Guardrail Terminal
				HARDWARE
5148G	2	2	2	3/4" x 9 1/2" Hex Hd (Top of tubes 1&2) A325
3300G	7	7	7	5/8" Washers
3478G	2	4	8	5/8" x 7 1/2" Hex Bolt
3500G	1	1	1	5/8" x 10" Post Bolt (Post 2 of LET)
3580G	6	6	6	5/8" x 18" HGR Post Bolt (posts 3 thru 8)
3360G	16	16	16	5/8" x 1 1/4" HGR Splice Bolt
3340G	25	27	31	5/8" HGR Nut (16-spl, 7-posts)
4228G	2	2	2	3/8" x 4" Lag Screw
3910G	2	2	2	1" Hex Nut (Anchor Cable)
3900G	2	2	2	1" Washer (Anchor Cable)
6018B	1	1	1	Right - Object Marker
6019B	1	1	1	Left - Object Marker
3700G	4	4	4	3/4" Washer
3704G	2	2	2	3/4" Heavy Hex Nut
3497G	0	2	6	5/8" x 9 1/2" Hex Hd (Top of Tubes 3-8) A307

Texas Department of Transportation
Design Division Standard

SINGLE GUARDRAIL TERMINAL
(ET-2000 PLUS)
(WOOD POST)

SGT(7)-10

FILE: sgt710.dgn	DN: TxDOT	CK: AM	DW: BD	CK:
© TxDOT April 1997	CONT	SECT	JOB	HIGHWAY
REVISIONS	SA			164
	DIST		COUNTY	SHEET NO.
	BEXAR		2452 01	043 SH 15

DATE:
FILE:
p:\4TEXDOT\0129\cad\sgt\sgt710_ray05.dgn
2/21/2011 5:42:28 PM
mwmldktff

p:\4760\0-0129\cad\sgt\sgt809.dgn
8/21/2011 5:42:29 PM mwmlakff

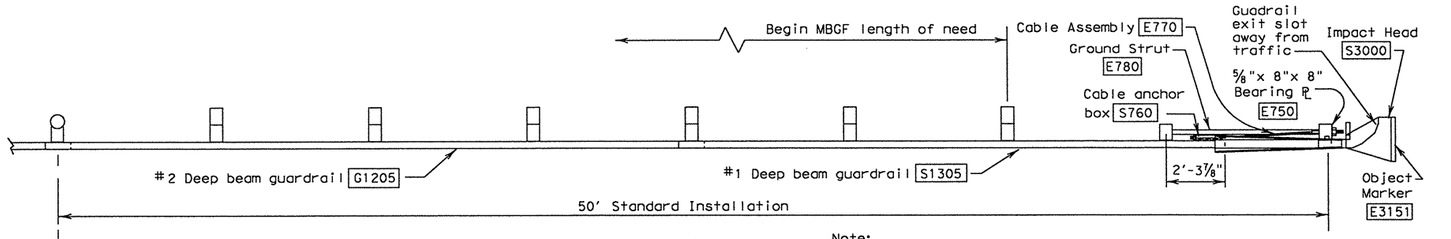

PLAN

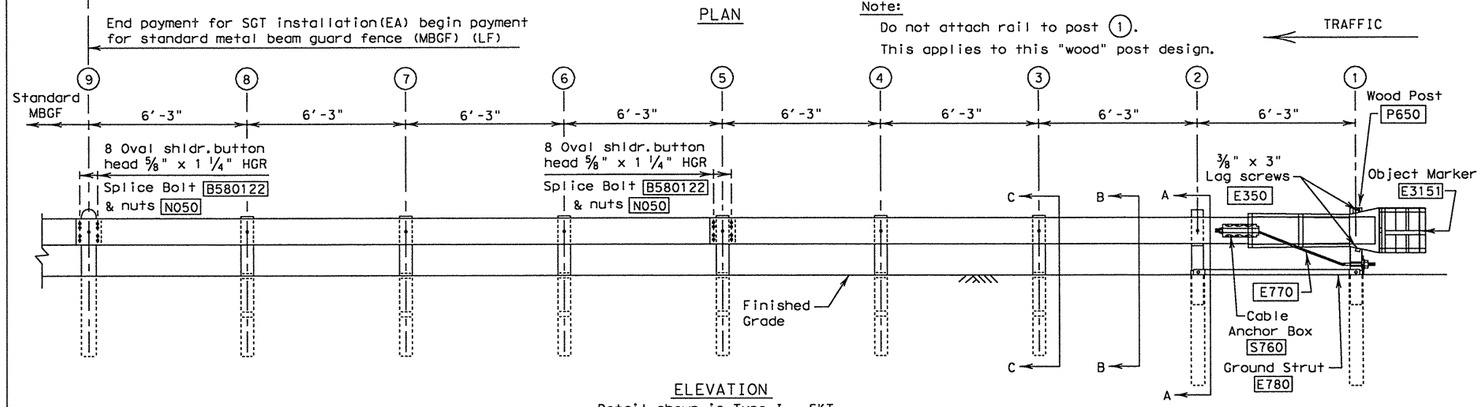

ELEVATION

Detail shown is Type I - SKT

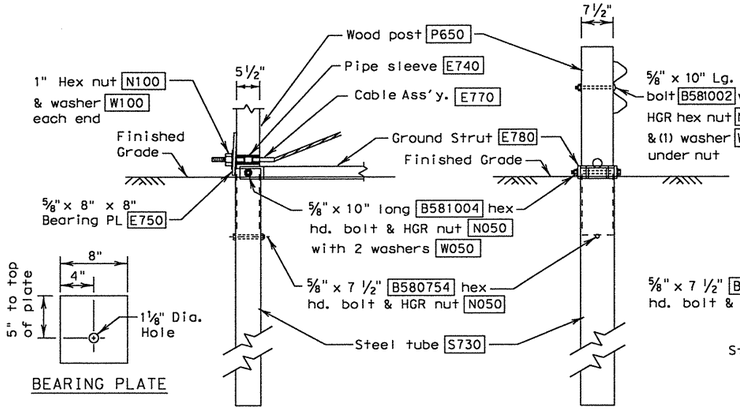

BEARING PLATE

PARTIAL VIEW AT POST #1

SECTION A-A

(at post 2)

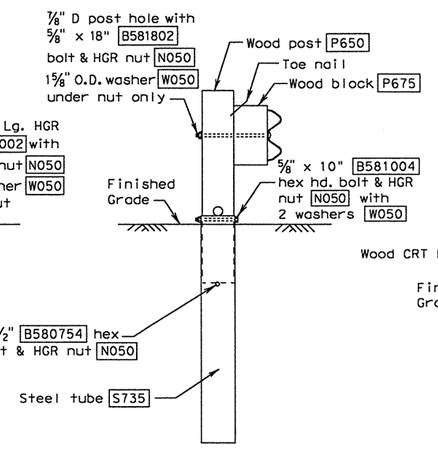

SECTION B-B

Typical Post & Tube System, Posts 3 & 4 with (Type II) & Posts 3 Thru 8 with (Type III)

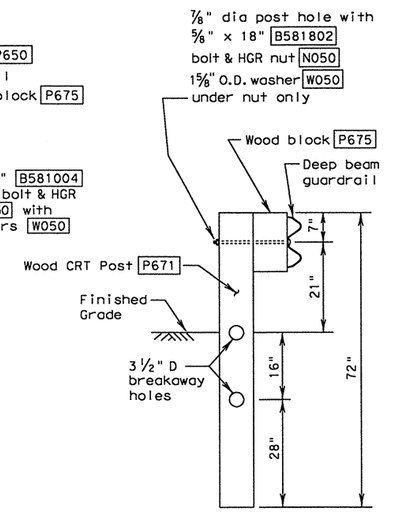

SECTION C-C

Typ. at Posts 3 Thru 8 with (Type I)

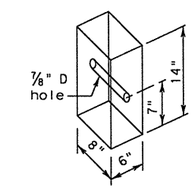

WOOD BLOCK

P675

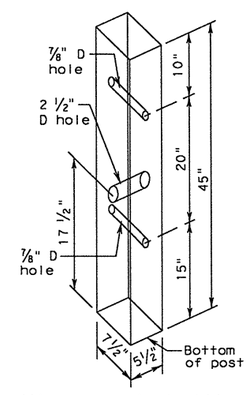

All measurements should be taken from bottom of posts.

WOOD POST

P650

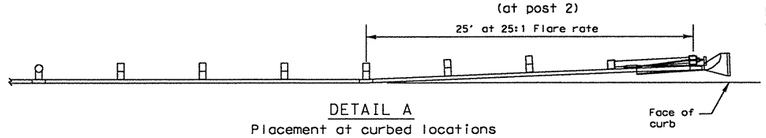

DETAIL A

Placement at curbed locations (See General Note 4)

Note: Site Condition(s)

Site conditions may exist where grading is required for the proper installation of metal guard fence and end treatments.

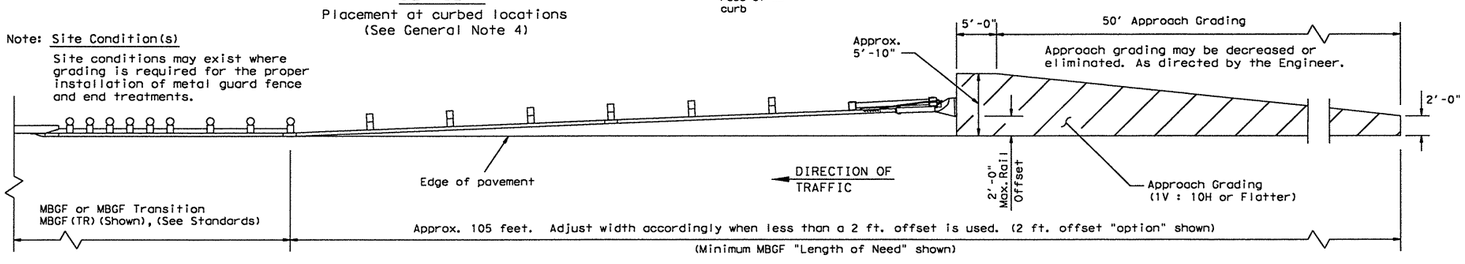

GRADING AT GUARDRAIL END TREATMENTS

GENERAL NOTES

1. The Type of SGT unit will be specified elsewhere in the plans. Numbers in circles indicate post position. The Type of SGT unit chosen is a maintenance consideration and does not affect the systems performance.

	Post & Tube Options	Post Only
Type I	Posts 1 thru 2	Posts 3 thru 8
Type II	Posts 1 thru 4	Posts 5 thru 8
Type III	Posts 1 thru 8	None

2. SGT's placed within the "minimum" 150 ft. radius, shall be installed straight. Standard rail elements may be installed within the radius, without special fabrication.
3. All bolts, nuts cable assemblies, cable anchors, steel tubes & bearing plates shall be galvanized.
4. At non-curbed locations, a flare rate of 25:1 may be used over the first 50 ft. of the system to prevent the terminal head from encroaching on the shoulder. The flare may be decreased or eliminated for specific installations, if directed by the Engineer.
   At curbed locations, a flare rate of 25:1 shall be used beginning at post number 5 and ending at post number 1.
5. The steel tubes shall not protrude more than 4 inches above ground. Site grading may be necessary to meet this requirement.
6. The steel tubes may be driven with an approved driving head. They shall not be driven with the wood post in the tube. If the steel tubes are placed in drilled holes, the backfill material must be satisfactorily compacted to prevent tube settlement.
7. If solid rock is encountered. See the Manufacturer's installation manual for the proper installation guidance.
8. The breakaway cable assembly must be taut. A locking device, (vice grips or channel lock pliers) should be used to prevent the cable from twisting when tightening the nuts.
9. The wood blocks shall be "toe nailed" to the rectangular wood posts to prevent them from turning when the wood shrinks.
10. For curb installations, the soil tubes and posts shall be installed at the proper ground elevation behind the curb. The posts will then require field drilling new holes to accommodate the rail to post connection bolt to maintain the proper height of the rail above the gutter pan. The excess post length above the rail will be removed if directed by the Engineer.
11. An object marker shall be installed on the front of the impact head as detailed on D&OM(VIA).
12. A special site evaluation should be considered, prior to using this end treatment where there is less than 25 feet between the outlet side of the end treatment and any adjacent driving lane.

BILL OF MATERIAL

Code #	POST & TUBE OPTIONS Type I Qty.	Type II Qty.	Type III Qty.	DESCRIPTION
S1305	1	1	1	#1 Deep Beam Guardrail (12 Ga.)
G1205	1	1	1	#2 Deep Beam Guardrail (12 Ga.)
S730	2	2	2	Steel Tube - 6" x 8" x 72" x 3/16" or 1/8" min
S735	0	2	6	Steel Tube - 6" x 8" x 54" x 3/16" or 1/8" min
P650	2	4	8	Wood Posts - 5 1/2" x 7 1/2" x 45"
P671	6	4	0	Wood CRT Posts - 6" x 8" x 72"
P675	6	6	6	Wood Block - 6" x 8" x 14"
E740	1	1	1	Pipe Sleeve - 2" Std. Pipe x 5 1/2"
E750	1	1	1	Bearing Plate - 5/8" x 8" x 8"
S760	1	1	1	Cable Anchor Box
E770	1	1	1	Cable Assembly
E780	1	1	1	Ground Strut
S3000	1	1	1	Impact Head
HARDWARE				
B580754	2	4	8	5/8" x 7 1/2" Hex Hd. Bolt
B581004	2	4	8	5/8" x 10" Hex Hd. Bolt (Top of Tubes)
W050	11	15	23	5/8" Washers
B581002	1	1	1	5/8" x 10" HGR Post Bolt (Post 2)
B580122	16	16	16	5/8" x 1 1/4" HGR Splice Bolt
B581802	6	6	6	5/8" x 18" HGR Post Bolt (Posts 3 thru 8)
N050	27	31	39	5/8" HGR Nut (16-Spl, 8-Posts, 2-Strut)
E350	2	2	2	3/8" x 3" Lag Screw
N100	2	2	2	1" Hex Nut (Anchor Cable)
W100	2	2	2	1" Washer (Anchor Cable)
SB58A	8	8	8	Cable Anchor Box Shoulder Bolts
N055A	8	8	8	1/2" A325 Structural Nut
W050A	16	16	16	1/2" A325 Structural Washer
E3151	1	1	1	Object Marker - (18" x 18")

POST & TUBE OPTIONS	
Type I	post 1 thru 2
Type II	post 1 thru 4
Type III	post 1 thru 8

Texas Department of Transportation
Design Division (Roadway)

SINGLE GUARDRAIL TERMINAL

(SKT 350) (WOOD POST)

SGT(8)-09

FILE: sgt809.dgn	DN: MAM	CK: MAM	DW: BGD	CK: MAM	
© TxDOT July 2001	DIST	FEDERAL AID PROJECT			SHEET
REVISIONS	SA				165
	COUNTY	CONTROL	SECT	JOB	HIGHWAY
	BEXAR	2452	01	043	SH 151

DISCLAIMER:
The use of this standard is governed by the "Texas Engineering Practice Act". No warranty of any kind is made by TxDOT for any purpose whatsoever. TxDOT assumes no responsibility for the conversion of this standard to other formats or for incorrect results or damages resulting from its use.

LEVELS DISPLAYED

DISCLAIMER:
The use of this standard is governed by the "Texas Engineering Practice Act". No warranty of any kind is made by TxDOT for any purpose whatsoever. TxDOT assumes no responsibility for the conversion of this standard to other formats or for incorrect results or damages resulting from its use.

SITE CONDITIONS AND PLACEMENT GUIDELINES

CONDITION	RECOMMENDATIONS	ILLUSTRATION
1. Angle of array in relation to center line of obstacle	Not recommended for more than 10°	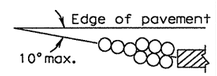
2. Bi-directional traffic	Offset array to avoid rear corner module snagging potential by traffic in the upstream direction of flow	See detail showing bi-directional traffic
3. Module spacing: Module to Module Module to fixed object	6" usual 12" to 24"	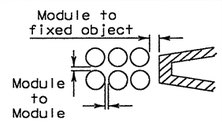
4. "Coffin" corner	Shield 30" min. outside of fixed object	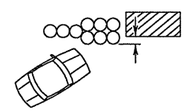
5. Sloping sites (lateral and longitudinal) (See Gen. Note 6)	1:10 Maximum (V:H)	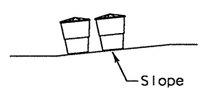
6. Curbs and raised islands	No more than 4" high (remove if possible)	
7. Foundation pads	Flat surface: Concrete or Asphalt	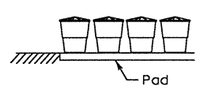
8. Maintenance	Keep site clear of debris and snow	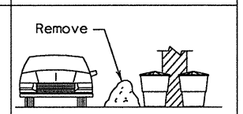
9. Sand densities	100 LBS/CF	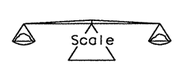
10. Vandalism	Check periodically for damages	

TYPICAL MODULE ARRAYS WITH CORRESPONDING DESIGN SPEED AND SAND WEIGHT (X 100 LB) shown in circles.

Module arrays shown are the minimum designs required. Site specific variations of these designs will require additional details with an Engineer's seal.

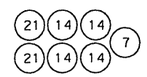

30 MPH

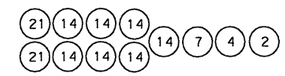

50 MPH

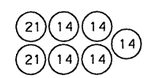

35 MPH

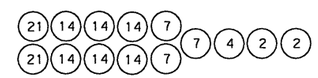

55 MPH

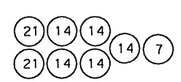

40 MPH

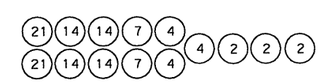

60 MPH

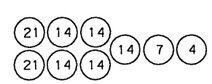

45 MPH

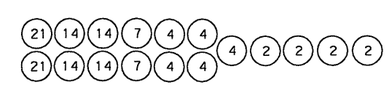

65 MPH

GENERAL NOTES

1. Rear modules should overlap (in width) the fixed object on each side by a minumum of 30 inches. (See Detail)
2. Modification of array: When proximity of traffic lanes exclude the use of a wider barrier. The front of the barrier may retain the standard width, but the rear can be widened by spacing as shown in this diagram.

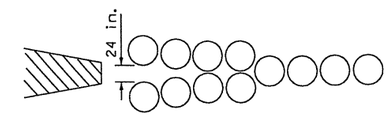

3. Barrier can be placed at any distance from the shoulder both at roadside and in median sites from 0 to 30 feet depending on the location of the hazardous fixed object. Angling of the barrier toward on-coming traffic is suggested from 3 to 10 degrees depending on space available.
4. Whenever possible, curbs 4 inches and higher should be removed from hazardous sites. However, when removal is not possible, modules can be separated along the barrier axis to fit the situation.
5. Longitudinal spacing of modules may be increased where space permits. for example, A two foot or three foot spacing of some of the modules may permit the design engineer to use all the space allocated for an energy-absorbing barrier.
6. The entire area of the crash cushion installation and approaches shall be graded so that the maximum slope does not exceed 1:10 (vertical : horizontal) in any direction.
7. Where required, support pads will be measured and paid for in accordance with pertiment bid items.

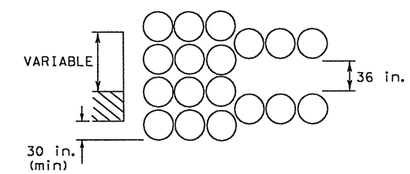

MODULE PLACEMENT FOR FIXED OBJECT OF VARIABLE WIDTH

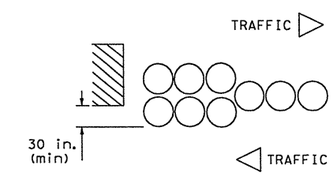

MODULE PLACEMENT FOR BI-DIRECTIONAL TRAFFIC

Texas Department of Transportation
Design Division Standard

VEHICLE IMPACT ATTENUATOR

(SAND FILLED PLASTIC MODULES)

VIA(SFPM)-10

FILE: viasfp10.dgn	DN: TxDOT	CK: AM	DW: BD	CK:
© TxDOT March 2010	CONT	SECT	JOB	HIGHWAY
REVISIONS	2452	01	043	SH 151
	DIST		COUNTY	SHEET NO.
	SA		BEXAR	166

p:\47600-0129-ead\sf\ ~xdardv5\std_rdwy08.dgn 2/21/2011 5:42:30 PM mwmldt1f

DATE:
FILE:

6:35:17 PM
mwinkelf1

DISCLAIMER:
The use of this standard is governed by the "Texas Engineering Practice Act". No warranty of any kind is made by TxDOT for any purpose whatsoever. TxDOT assumes no responsibility for the conversion of this standard to other formats or for incorrect results or damages resulting from its use.

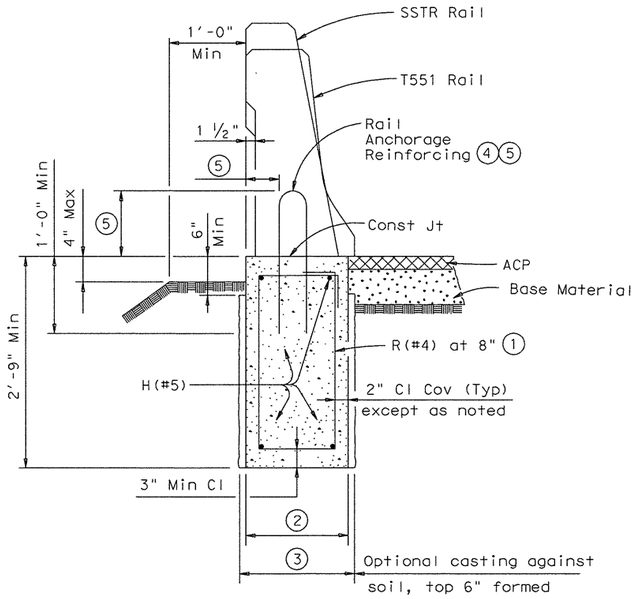

TRAFFIC RAIL FOUNDATION

(Showing T551 & SSTR Rails, other Bridge Rails similar)

1. Stirrup hook length is 5". (Typ)
2. 1'-4" for Bridge Rail Types: All rails except for C412, T80HT and T80SS.
   Approximate Footing Concrete = 0.14 CY/LF and Reinforcement = 11.5 LB/LF.

   1'-7" for Bridge Rail Types: C412, T80HT and T80SS.
   Approximate Footing Concrete = 0.16 CY/LF and Reinforcement = 12.0 LB/LF.
3. 1'-6" for Bridge Rail Types: All rails except for C412, T80HT and T80SS.

   1'-9" for Bridge Rail Types: C412, T80HT and T80SS.
4. Modify reinforcement on standard bridge rail anchorage if necessary by extending rail anchorage 12" Min, vertically, into traffic rail foundation.
5. See applicable bridge rail standard.

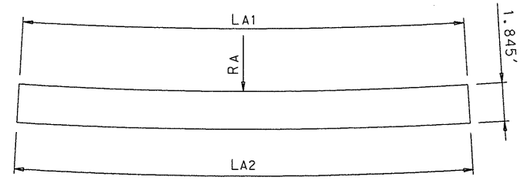

DEVELOPED SURFACE-A

(T551 Type Rail)

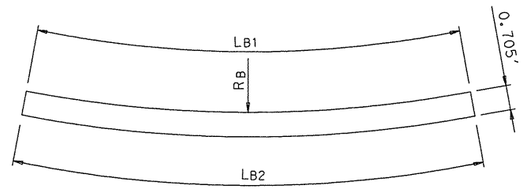

DEVELOPED SURFACE-B

(T551 Type Rail)

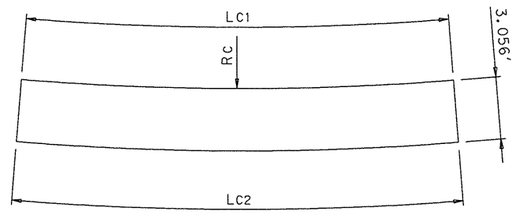

DEVELOPED SURFACE-C

(SSTR Rail)

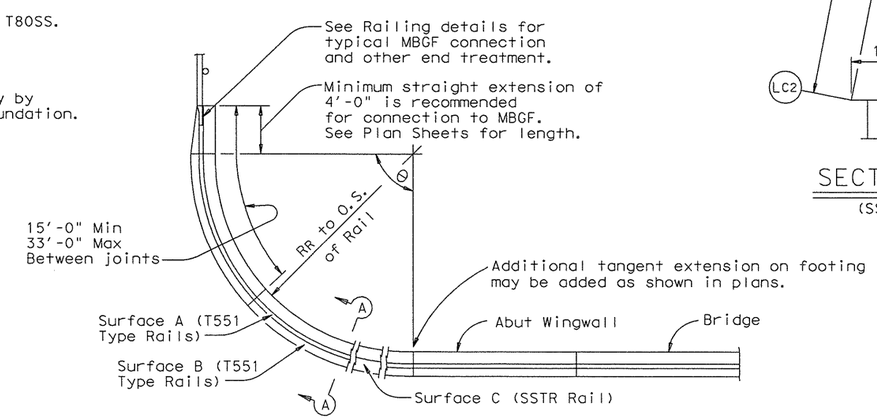

CURVED T551 & SSTR TYPE RAILING AT BRIDGE ENDS

TABLE OF DEVELOPED SURFACES

DIMENSIONS FOR Θ = 90°

Reference Radius RR (ft) to back of Rail	T551 TYPE RAILS						SSTR RAIL		
	Radius	Arc Length		Radius	Arc Length		Radius	Arc Length	
	RA ft	LA1 ft	LA2 ft	RB ft	LB1 ft	LB2 ft	RC ft	LC1 ft	LC2 ft
10	95.76	16.99	17.31	19.63	17.31	17.93	55.66	16.69	17.61
15	140.04	24.84	25.17	28.54	25.17	25.79	81.86	24.54	25.46
20	184.32	32.69	33.02	37.44	33.02	33.64	108.05	32.40	33.31
25	228.60	40.55	40.87	46.35	40.87	41.50	134.25	40.25	41.17
30	272.88	48.40	48.73	55.25	48.73	49.35	160.44	48.11	49.02

RA = 8.8560(RR+0.813') RB = 1.7811(RR+1.021') RC = 5.2389(RR+0.625')

LA1 = 1.5708(RR+0.813') LB1 = 1.5708(RR+1.021') LC1 = 1.5708(RR+0.625')

LA2 = 1.5708(RR+1.021') LB2 = 1.5708(RR+1.417') LC2 = 1.5708(RR+1.208')

The linear ratio may be used to obtain the above arc length dimensions for included Θ angles other than 90°. The dimensions are intended as an aid in constructing forms for curved SSTR & Type T551 Railing.

Example: For RR = 10' & 80° ~ LA1 = 16.99(8/9)

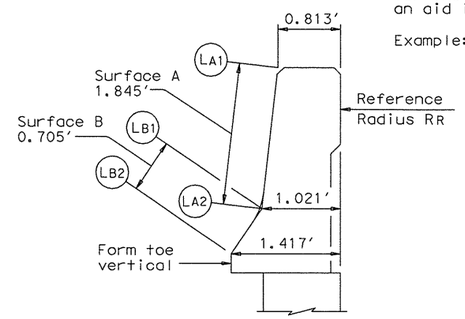

SECTION A-A

(T551 Type Rails)

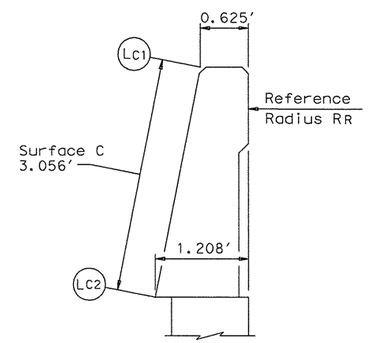

SECTION A-A

(SSTR Rail)

DESIGN GUIDANCE:
The use of curved rail sections at bridge ends must be appropriate for the design speed and site conditions.

MATERIAL NOTES:
Use Class "C" concrete. Use Class "C" (HPC) if required elsewhere.
All reinforcing must be Grade 60.

GENERAL NOTES:
The foundations indicated are suitable for mounting typical concrete bridge barrier type railings.
The design resistance is based on the current AASHTO bridge railing requirements with the assumption of fair to good soil support conditions. Poor soil conditions will require suitably deeper foundations.
See Railing standards for details not shown.
The primary use of the curved railing detail is to avoid the necessity of curved MBGF at the ends of bridges adjacent to grade intersections.
This detail is intended for use as a guide to unusual railing anchorage situations but may be included in the plans, modified as necessary to apply to specific installations required on the project.
Payment for railing foundations will be by CY of Class "C" or Class "C" (HPC) concrete.
Reinforcing steel quantities shown are for contractor's information only.
The associated bridge railing will be paid for by the linear foot which includes the concrete and reinforcement.
Excavation will be considered subsidiary to other Items.

Texas Department of Transportation
Bridge Division

TRAFFIC RAIL FOUNDATION AND MISCELLANEOUS DETAILS

TRF

FILE: rlstd027.dgn	DN: TxDOT	CK: MPM	DW: JTR	CK: TxDOT
© TxDOT April 2009	DISTRICT	FEDERAL AID PROJECT		SHEET
REVISIONS	SA			167
05-11: TRF width and additional rails.	COUNTY	CONTROL	SECT	JOB	HIGHWAY
	BEXAR	2452	01	043	SH 151

ACC:

LEVELS DIS

P:\4716DN0-01\29\orm^~^eeh\standard\15std_rw02.dgn 4/12/2011 2:44:24 PM dbenett

DISCLAIMER:
The use of this standard is governed by the "Texas Engineering Practice Act". No warranty of any kind is made by TxDOT for any purpose whatsoever. TxDOT assumes no responsibility for the conversion of this standard to other formats or for incorrect results or damages resulting from its use.

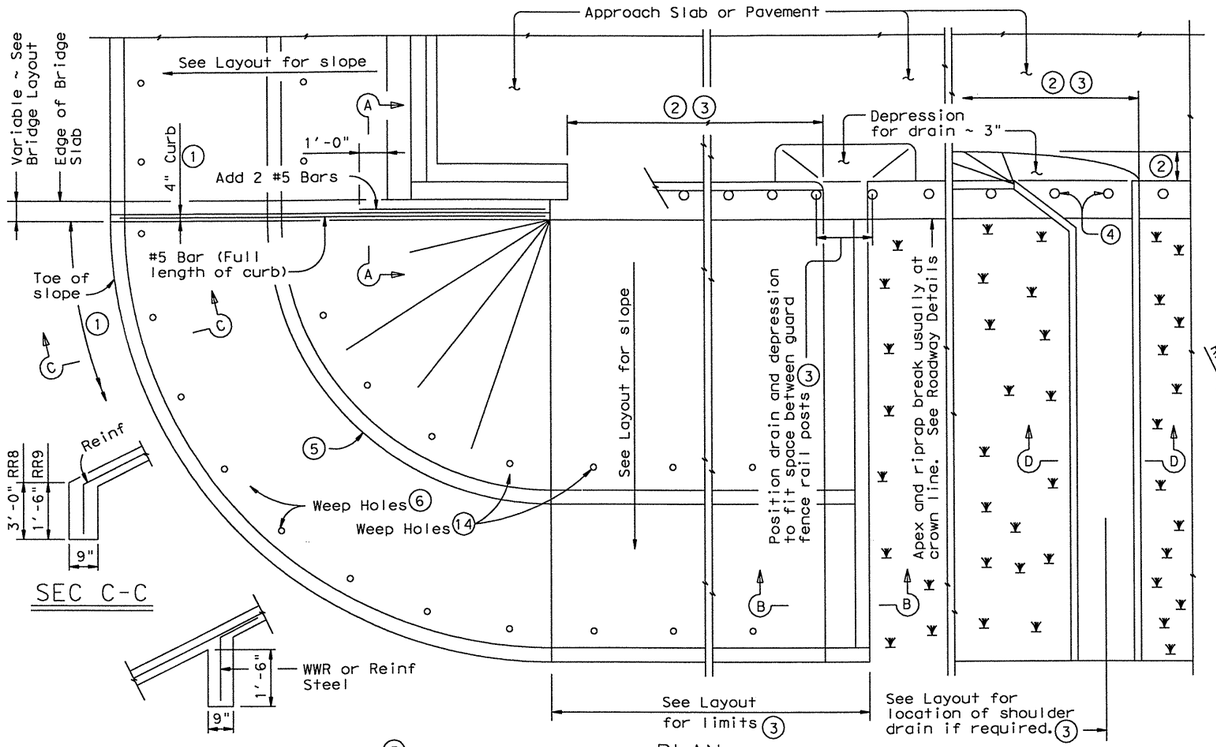

PLAN

SEC C-C

INTERMEDIATE TOEWALL (5)

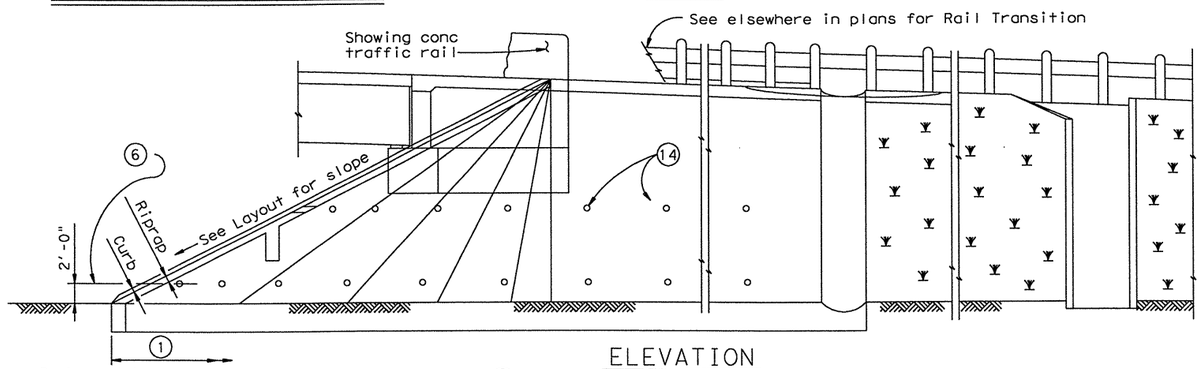

ELEVATION

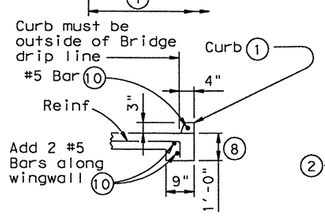

SEC A-A

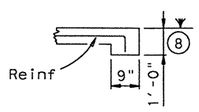

SEC B-B

(No Drain)

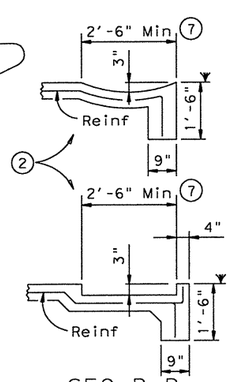

SEC B-B

(Shoulder Drain integral with riprap)

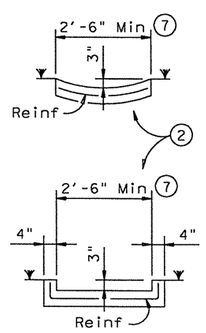

SEC D-D

(Shoulder Drain)

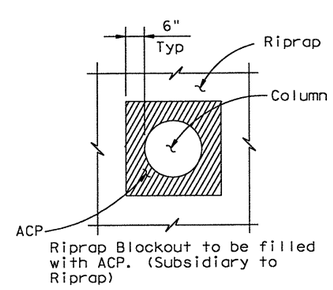

RIPRAP DETAIL AT COLUMNS

(As directed by the Engineer)

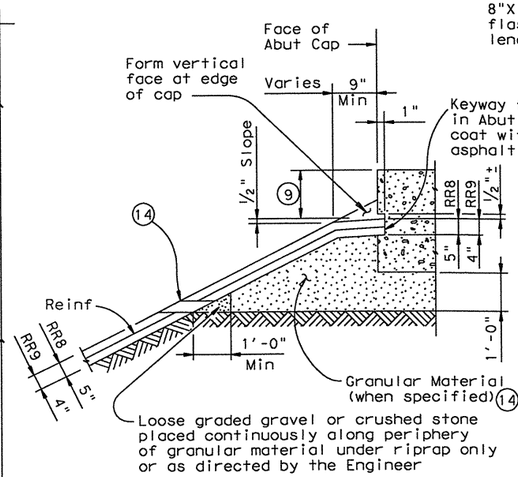

SHOWING KEYWAY OPTION

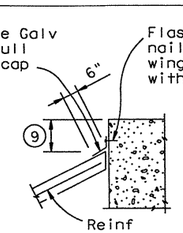

CAP OPTION A

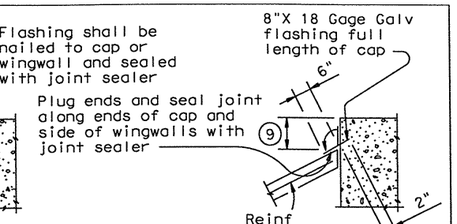

CAP OPTION B

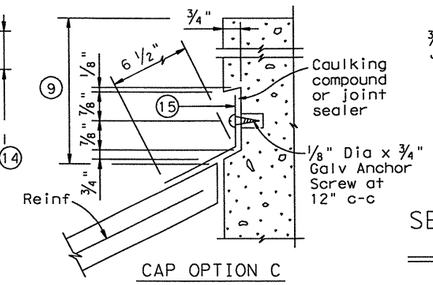

CAP OPTION C

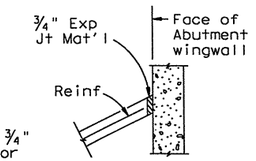

SECT THRU RIPRAP AT WINGWALL (12)

SECTIONS THRU RIPRAP AT CAP (11)

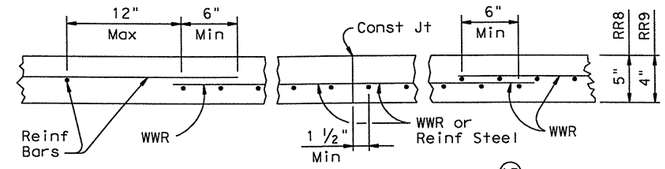

REINFORCEMENT DETAILS (13)

See General Notes for optional sythetic fiber reinforcement.

(1) When riprap is shown extended around header on layout, extend slab and toewall as shown and eliminate 4" curb.

(2) Limits and configuration of drains and depressions shall be as shown elsewhere in plans or as directed by the Engineer.

(3) Location of shoulder drain must consider limitations imposed by rail transition. Do not locate shoulder drains at expansion joints between approach slab and concrete pavement.

(4) See details elsewhere in plans for installation of guard fence posts through concrete riprap.

(5) Provide Intermediate toewall only when designated elsewhere in the plans or included in the specifications.

(6) Provide lower level of 2" Dia weep holes at 10' c-c backed by 1 CF packet of gravel and galvanized hardware cloth at all locations unless directed by the Engineer to eliminate.

(7) Wider or other drain configurations shall be used if shown elsewhere in plans or if directed by the Engineer.

(8) Wall extension may be reduced or modified if approved by the Engineer. Wall extension shall be increased to 1'-6" whenever the optional intermediate toewall is called for in the plans.

(9) Top of cap to top of riprap dimension varies as directed by the Engineer. Should be 9" Min for beam/slab type bridges and 1'-6" for slab span, box beam, or slab beam bridges.

(10) #5 bars shown are required even when synthetic fiber reinforcing option is selected.

(11) The sealing option of the joint between the face of cap and riprap shall be as designated by the Engineer or as shown elsewhere on plans.

(12) Flashing (shown in Cap Option A) may be used at wingwall in addition to Exp Jt Mat'l if shown on plans or directed by the Engineer.

(13) Reinforcing bars shall be #3 at 18" Spa c-c. Welded Wire Reinforcement (WWR) shall be 6X6-W2.9XW2.9. Combinations of WWR and reinforcing bars may be used if both are permitted. Lap splices shall be a minimum of 6 inches, measured from the transverse wire of WWR, and the ends of reinforcing bars.

(14) If granular material is specified, provide upper level of 2" Dia weep holes at 10' c-c backed by galvanized hardware cloth.

(15) 8" x 18 Gage Galv Sheet Metal

GENERAL NOTES:

Concrete shall be Class "B" with a minimum compressive strength of 2,000 psi unless noted elsewhere in plans.

All reinforcing steel shall be Grade 60.

Synthetic fibers listed on the "Fibers for Concrete" Material Producer List (MPL) may be used in lieu of steel reinforcing in riprap concrete unless noted otherwise.

Construction joints or grooved joints extending the full slant slope height shall be at intervals of approximately 20 feet unless otherwise directed by the Engineer.

Hardware cloth, loose graded stone behind weep holes, flashing, or other sealing material shall not be paid for directly but shall be subsidiary to the bid item "Riprap".

Unless specified elsewhere in the plans to be only reinforcing bars, the riprap reinforcing may be composed of reinforcing bars, Welded Wire Reinforcement (WWR), or any suitable combination of both types.

See Layout for limits of riprap.

RR8 is to be used on stream crossings.

RR9 is to be used on other embankments.

FOR CONTRACTOR'S INFORMATION ONLY:
5" of RR8 = 0.015 CY/SF
4" of RR9 = 0.012 CY/SF
#3 Reinf at 18" c-c = 0.501 Lbs/SF
6X6-W2.9XW2.9 = 0.394 Lbs/SF

Texas Department of Transportation
Bridge Division

CONCRETE RIPRAP AND SHOULDER DRAINS
EMBANKMENTS AT BRIDGE ENDS (TYPES RR8 & RR9)

CRR

FILE: crrstdel.dgn	DN: TxDOT	CK: TxDOT	DW: TxDOT	CK: TxDOT
©TxDOT April 2006	DISTRICT	FEDERAL AID PROJECT		SHEET
REVISIONS 08-07: Revised Note 6, removed "H" reference, added Note 14 & changed weep hole size & spacing. 04-11: Added fiber reinforcement.	SA			168
	COUNTY	CONTROL	SECT	JOB	HIGHWAY
	BEXAR	2452	01	043	SH 151

PATH:

LEVELS D... ...ED

pw:\\TR60\0-0129\ccad\v\ ...andard\v5std_rdwy\l_dgn
2/21/2011
5:42:32 PM
mwmldcff

DISCLAIMER:
The use of this standard is governed by the "Texas Engineering Practice Act". No warranty of any kind is made by TxDOT for any purpose whatsoever. TxDOT assumes no responsibility for the conversion of this standard to other formats or for incorrect results or damages resulting from its use.

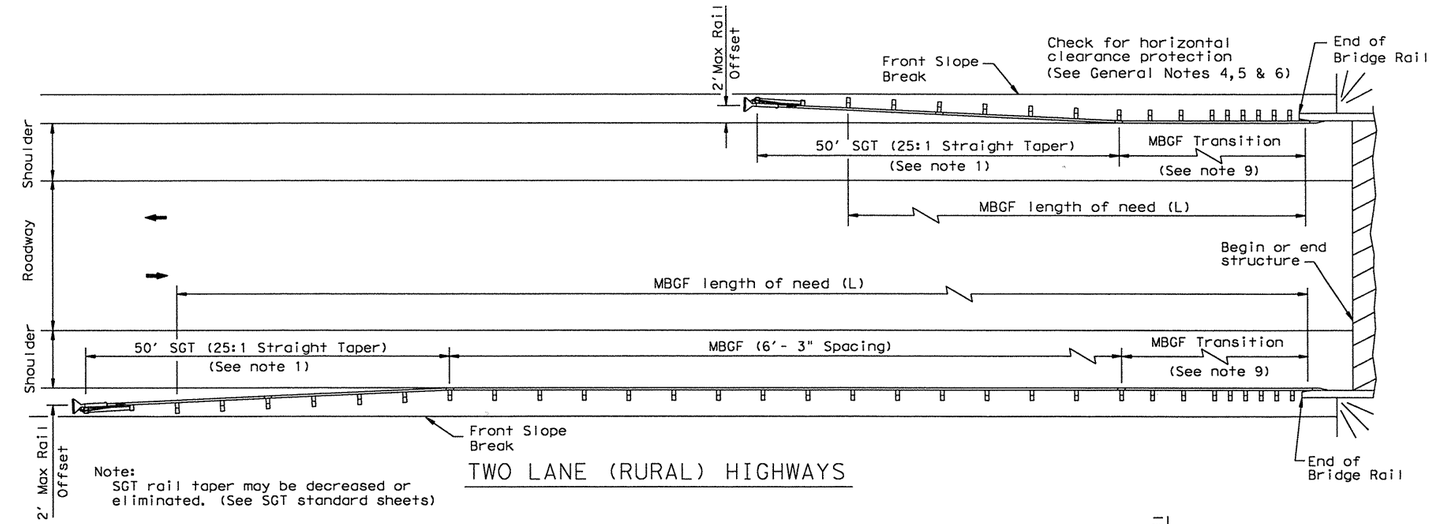

Note:
SGT rail taper may be decreased or eliminated. (See SGT standard sheets)

TWO LANE (RURAL) HIGHWAYS

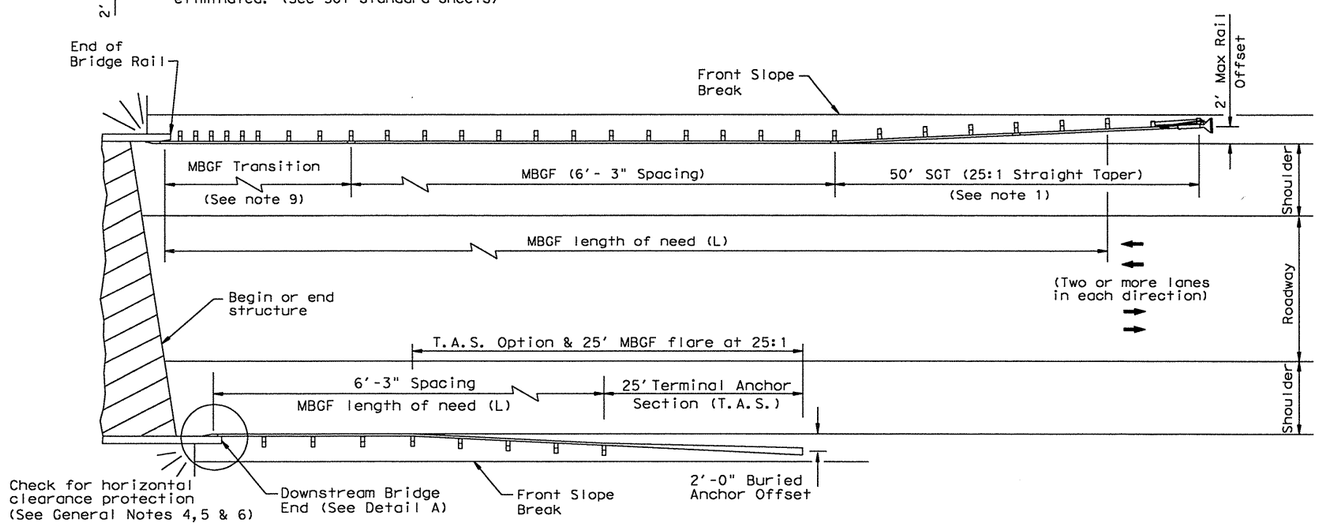

MULTILANE UNDIVIDED (RURAL) HIGHWAYS

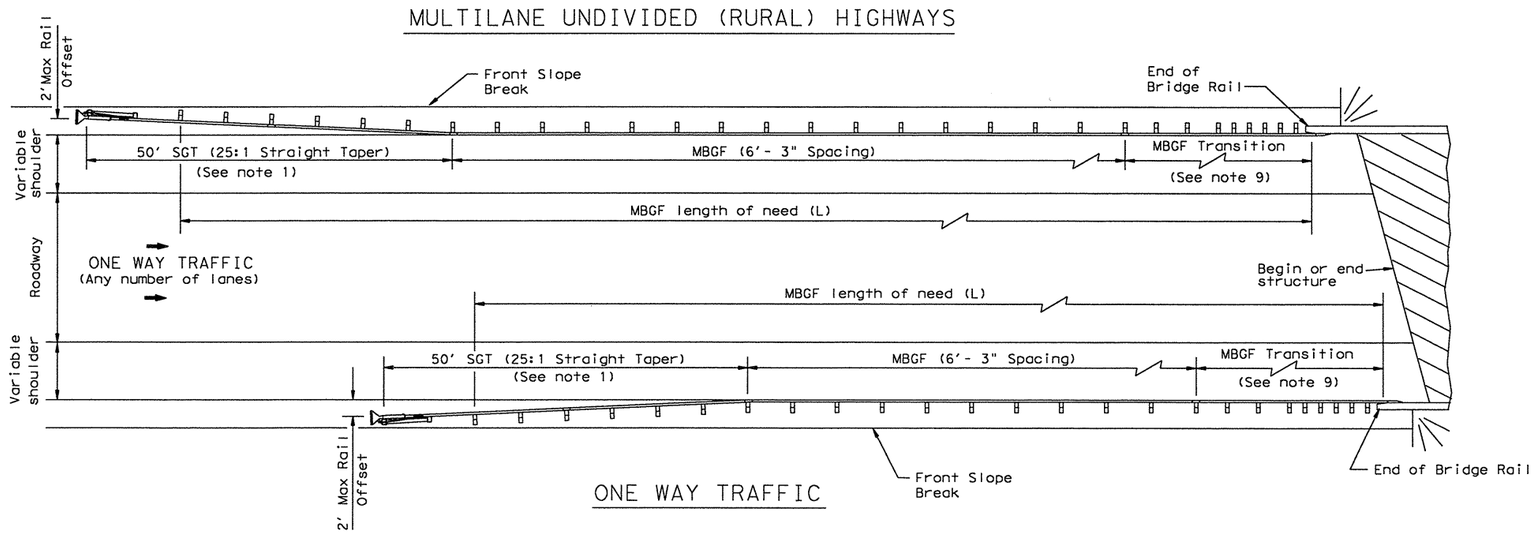

ONE WAY TRAFFIC

GENERAL NOTES

1. For more detail: See MBGF, SGT, and MBGF Transition standard sheets.
2. Quantities of metal beam guard fence (MBGF) at individual bridge ends are shown elsewhere in plans.
3. Use average daily traffic (ADT) for the current year to determine MBGF length of need in accordance with the Roadway Design Manual unless otherwise specified. Where significant traffic volume growth is anticipated on low volume (0-750 ADT) highways, use length determinations for the higher volume category.
4. MBGF may not be required to shield departure end of bridge unless other obstacles within the horizontal clearance limits or opposing traffic indicate a MBGF consideration.
5. Terminal anchor sections (TAS) are only for downstream end anchorage use, outside the horizontal clearance area of opposing traffic.
6. Direct connection of MBGF (at 6'-3" post spacing without transition) to concrete rail are only for downstream rail connections outside the horizontal clearance area of opposing traffic. (See Detail A)
7. The crown shall be widened to accommodate MBGF. Typically the "front slope" break should be 2'- 0" from the back of the MBGF post. This applies to new construction on new alignment or where existing roadway cross section is to be widened to increase roadway width. This does not apply to rehabilitation work where existing roadway crown width is to be retained (See Typical Cross Section at MBGF).
8. For restrictive bridge widths: The MBGF should be properly transitioned from the existing bridge rail to the adjoining MBGF (See MBGF Transition Standards). Metal beam guard fence at these bridge location(s) shall be flared at the rate of 25:1 or flatter, and be of the length necessary to locate the terminal end at the 2 ft."maximum" offset from the shoulder edge.
9. Transition length and post spacing will vary depending on the transition type. Transition type will be shown elsewhere in the plans.

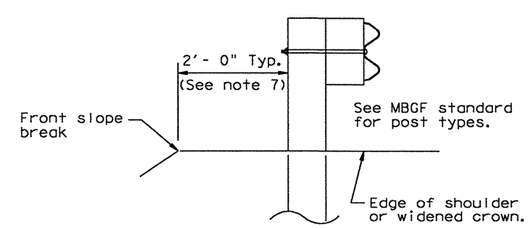

TYPICAL CROSS SECTION AT MBGF

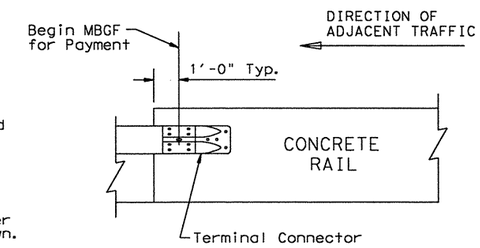

DETAIL A

All rail elements shall be lapped in the direction of adjacent traffic.

Texas Department of Transportation
Design Division Standard

BRIDGE END DETAILS

(Metal Beam Guard Fence Applications to Rigid Rails)

BED-09

FILE: bed09.dgn	DN: TxDOT	CK: AM	DW: BD	CK:
© TxDOT December 2001	CONT	SECT	JOB	HIGHWAY
REVISIONS	2452	01	043	SH 151
	DIST		COUNTY	SHEET NO.
	SA		BEXAR	169

DATE:
FILE:

DISCLAIMER:
The use of this standard is governed by the "Texas Engineering Practice Act". No warranty of any kind is made by TxDOT for any purpose whatsoever. TxDOT assumes no responsibility for the conversion of this standard to other formats or for incorrect results or damages resulting from its use.

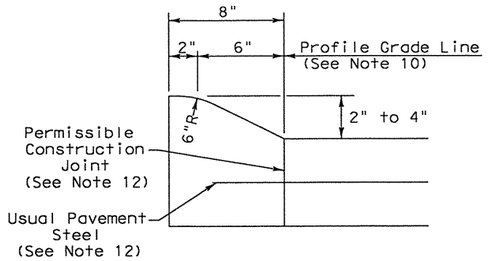

TYPE I CURB (MONOLITHIC)
2" - 4" HEIGHT

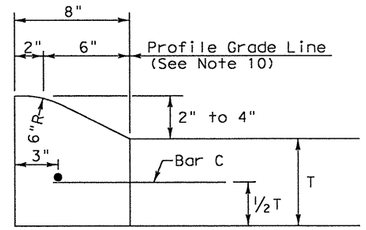

TYPE I CURB
2" - 4" HEIGHT

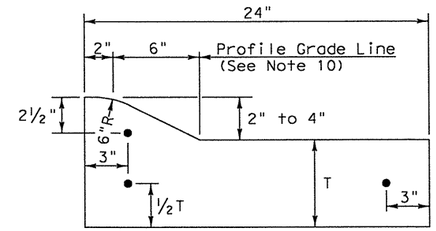

TYPE I CURB AND GUTTER
2" - 4" HEIGHT

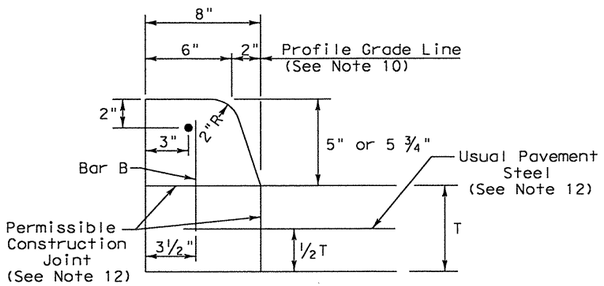

TYPE II CURB (MONOLITHIC)
5" - 5 ¾" HEIGHT

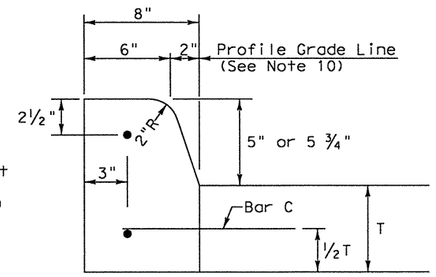

TYPE II CURB
5" - 5 ¾" HEIGHT

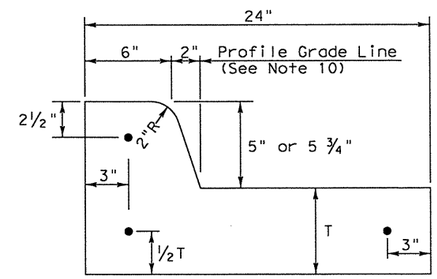

TYPE II CURB AND GUTTER
5" - 5 ¾" HEIGHT

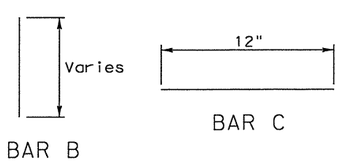

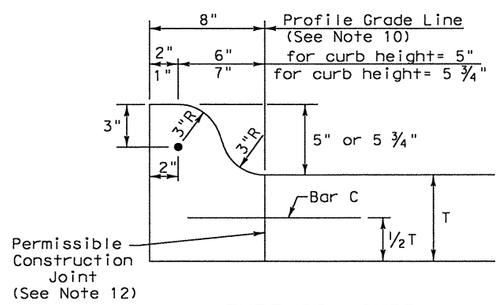

TYPE IIa CURB
5" - 5 ¾" HEIGHT

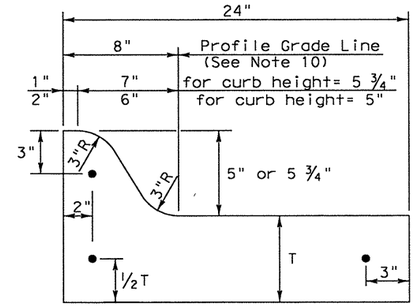

TYPE IIa CURB AND GUTTER
5" - 5 ¾" HEIGHT

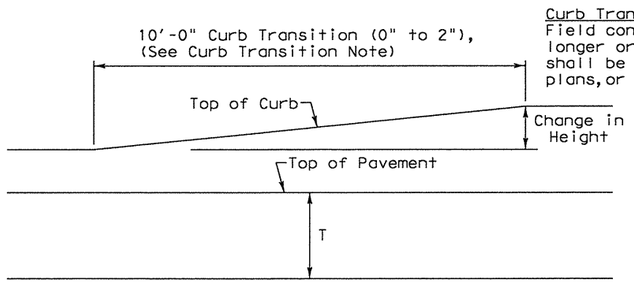

Curb Transition Note:
Field conditions may require a longer or shorter transition, and shall be shown elsewhere in the plans, or as directed by the Engineer.

CURB TRANSITION
Note: To be paid for as Highest Curb

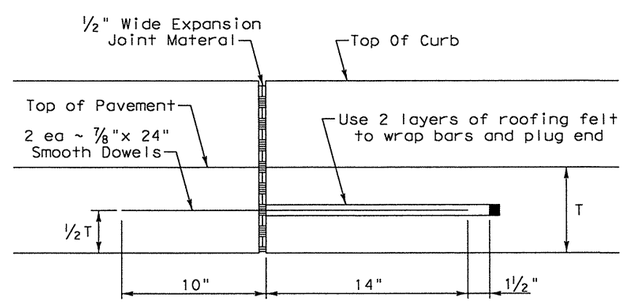

EXPANSION JOINT DETAIL

General Notes

1. All materials and construction shall be in accordance with Item 529, "Concrete Curb, Gutter, and Combined Curb and Gutter."
2. Concrete shall be Class A.
3. When reinforcing bars are used, they shall be No. 4 unless otherwise shown. The use of synthetic fiber in lieu of steel reinforcing is acceptable, provided the fiber producer is on the Department Producer List (MPL), maintained by TxDOT, Construction Division.
4. Round exposed sharp edges with a rounding tool, to a minimum radius of ¼ inch.
5. All existing curbs and driveways to be removed shall be sawed or removed at existing joints.
6. Where concrete curb is placed on existing concrete pavement, the pavement shall be drilled and the reinforcing bars grouted in place.
7. Expansion and contraction joints shall be constructed to match pavement joints in all curbs and curb and gutter adjacent to jointed concrete pavement. Where placement of curb or curb and gutter is not adjacent to concrete pavement, expansion joints shall be provided at structures, curb returns at streets, and at locations directed by The Engineer.
8. Vertical and horizontal dowel bars and transverse reinforcing bars shall be placed at four feet C~C.
9. Dimension 'T' shown is the thickness of concrete pavement. When curb is installed adjacent to flexible pavement dimension 'T' is 8" maximum.
10. Usual profile grade line. Refer to typical sections and plan-profile sheets for exact locations.
11. One-half inch expansion joint material shall be provided where curb or curb and gutter is adjacent to sidewalk or riprap.
12. When vertical permissible construction joints are used, resulting in a longitudinal construction joint in the pavement, the longitudinal pavement steel shall be placed in accordance with pavement details shown elsewhere in the plans for longitudinal construction joints. Reinforcing steel for curb section shall then conform to that required for concrete curb.

Texas Department of Transportation
Design Division Standard

CONCRETE CURB AND CURB AND GUTTER

CCCG-10A

FILE: cccg10a.dgn	DN: TxDOT	CK: AM	DW: BD	CK:
© TxDOT 1995	CONT	SECT	JOB	HIGHWAY
REVISIONS	2452	01	043	SH 151
	DIST		COUNTY	SHEET NO.
	SA		BEXAR	170

p:\4760\0-0129\cccg10 pwdgrv05std_rdwy12.dgn 2/21/2011 5:42:32 PM mwmickiff
DATE:
FILE:

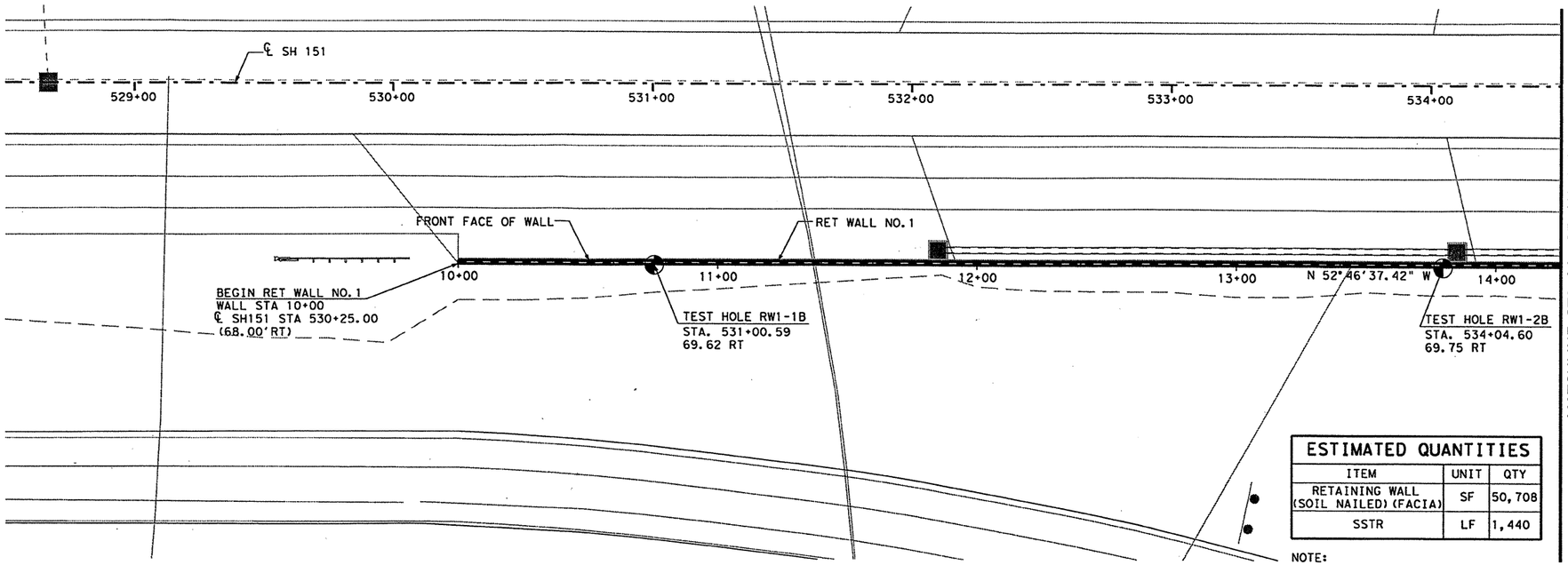

PLAN

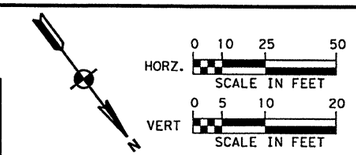

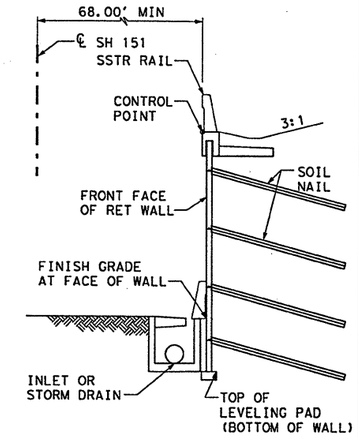

TYPICAL SECTION
(NOT TO SCALE)

ESTIMATED QUANTITIES		
ITEM	UNIT	QTY
RETAINING WALL (SOIL NAILED) (FACIA)	SF	50,708
SSTR	LF	1,440

NOTE:
SEE ROADWAY PLAN AND PROFILE, BRIDGE DETAILS, SOIL NAIL LAYOUTS AND DRAINAGE PLAN SHEETS FOR ADDITIONAL INFORMATION.

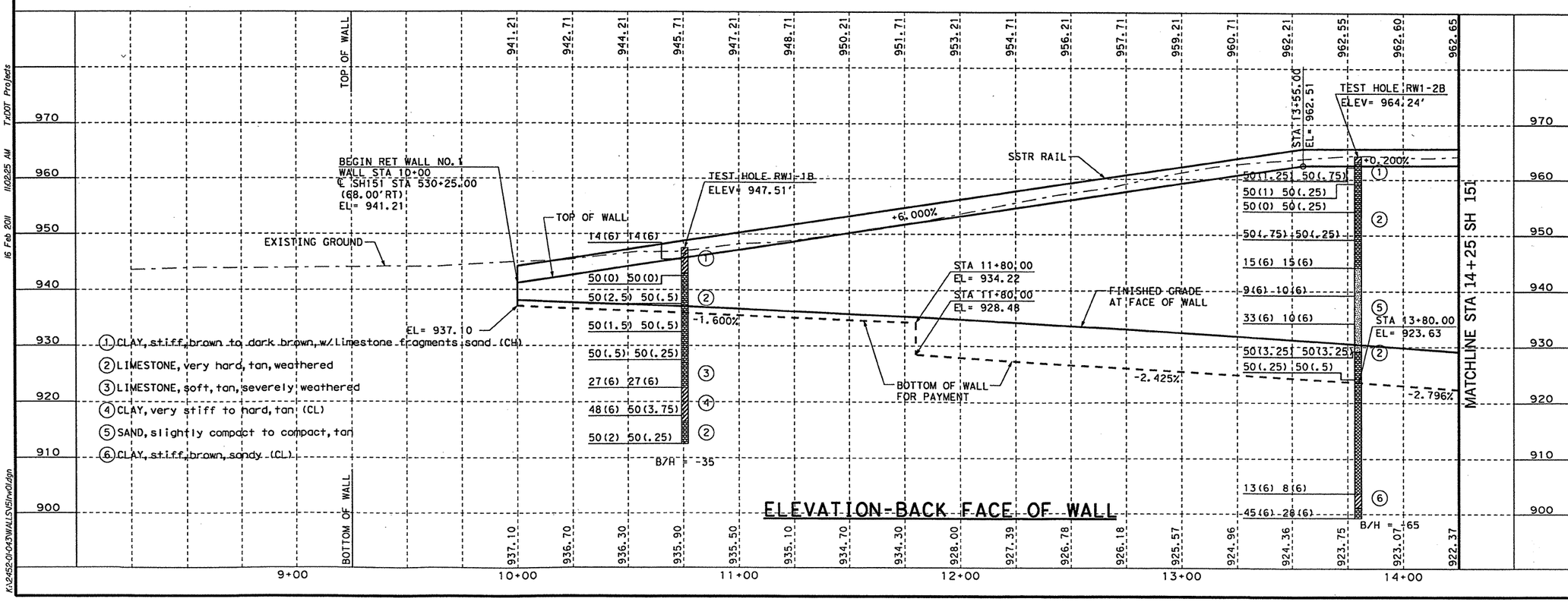

① CLAY, stiff, brown to dark brown, w/ Limestone fragments sand (CH)
② LIMESTONE, very hard, tan, weathered
③ LIMESTONE, soft, tan, severely weathered
④ CLAY, very stiff to hard, tan (CL)
⑤ SAND, slightly compact to compact, tan
⑥ CLAY, stiff, brown, sandy (CL)

ELEVATION-BACK FACE OF WALL

STATE OF TEXAS
ALVARO J. LOPEZ
102216
LICENSED
PROFESSIONAL ENGINEER
SEA REG NO. F-199
2/16/11

NO.	DATE	REVISION DESCRIPTION	APP. BY

© 2011

Texas Department of Transportation

MACTEC
3520 EXECUTIVE CENTER DRIVE
SUITE 200
AUSTIN, TEXAS 78731
(512) 795-0360
REGISTRATION NUMBER: F-1784

SEA STRUCTURAL ENGINEERING ASSOCIATES, INC.
CONSULTING ENGINEERS
SAN ANTONIO, TEXAS
REGISTRATION NUMBER: F-199

SH 151

RETAINING WALL NO. 1

(SHEET 1 OF 3)

FED. RD. DIV. NO.			SHEET NO.
			171
STATE	DIST.	COUNTY	
TEXAS	SA	BEXAR	
CONT.	SECT.	JOB	HIGHWAY NO.
2452	01	043	SH 151

K:\2452-01-043\WALLS\151rw01.dgn 16 Feb 2011 11:02:25 AM TxDOT Projects

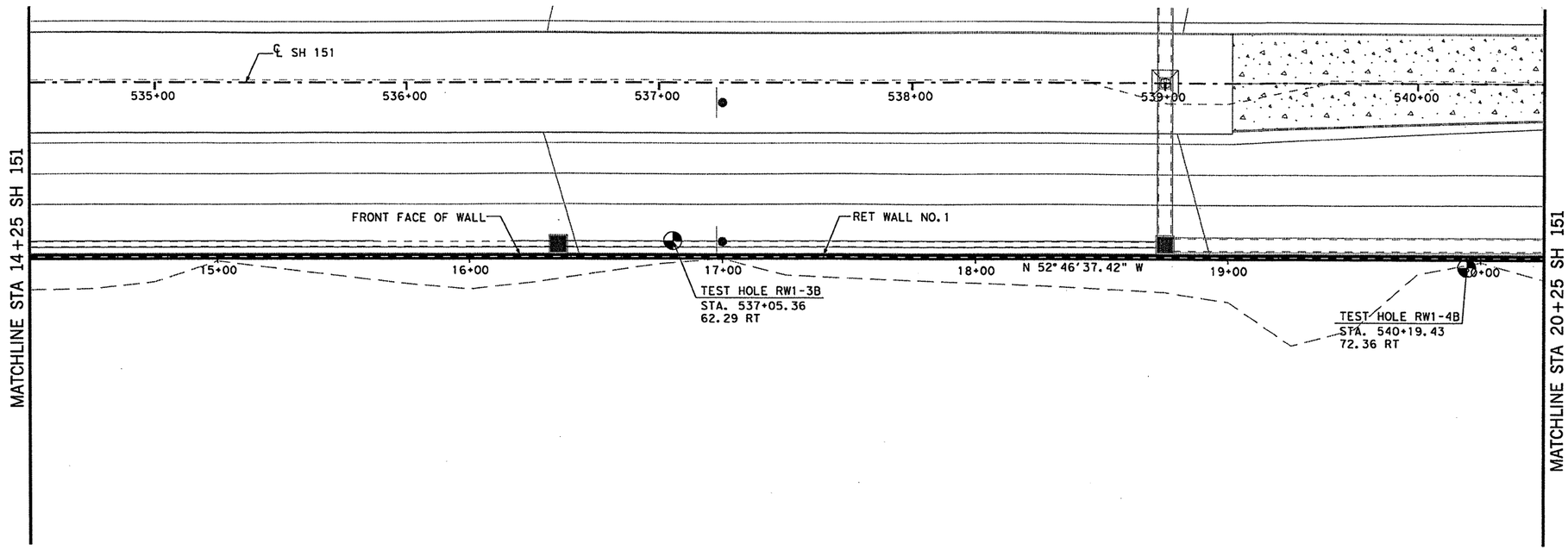

PLAN

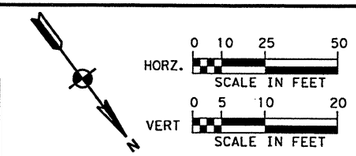

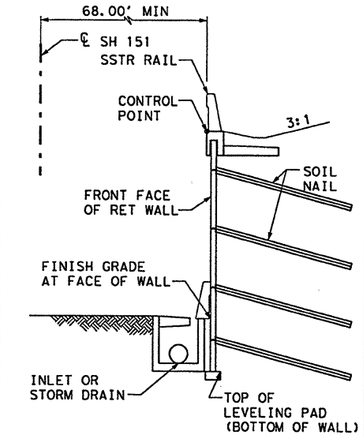

TYPICAL SECTION
(NOT TO SCALE)

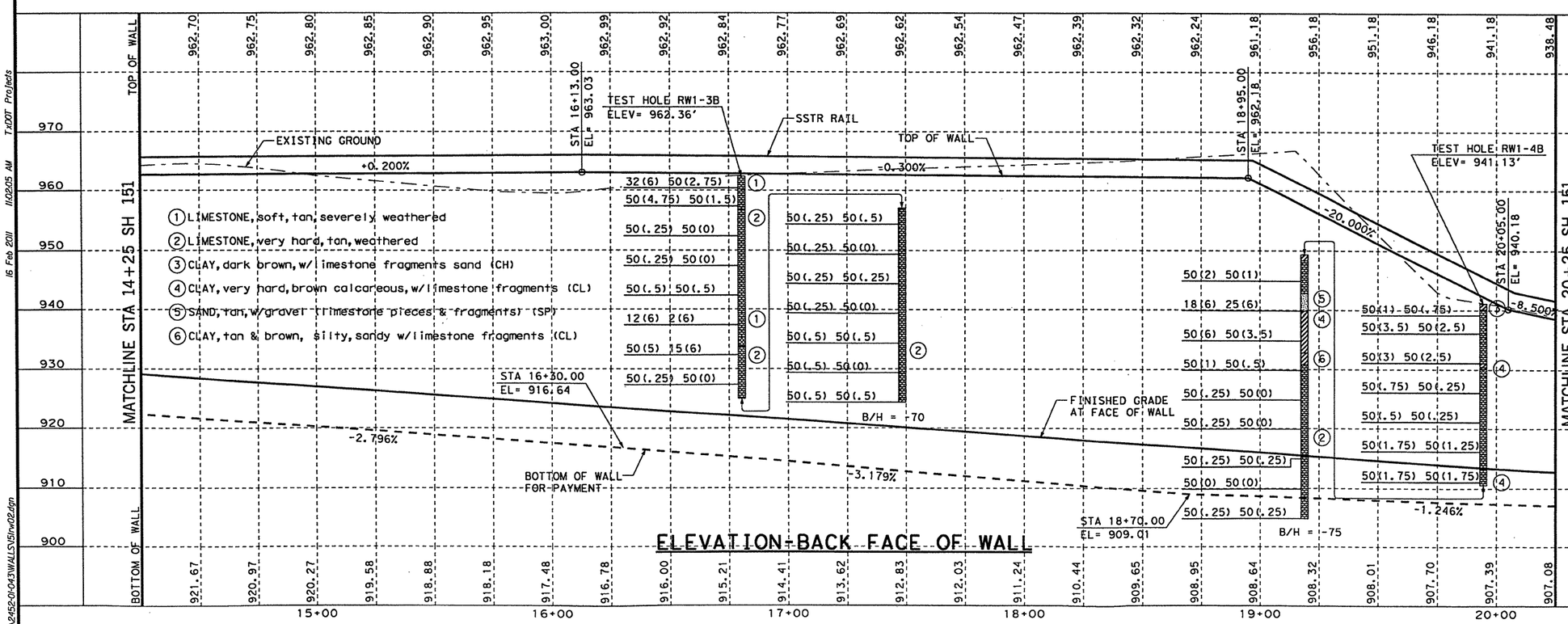

ELEVATION-BACK FACE OF WALL

STATE OF TEXAS
ALVARO J. LOPEZ
102216
LICENSED PROFESSIONAL ENGINEER
2/16/11
SEAL REG. NO. F-199

NO.	DATE	REVISION DESCRIPTION	APP. BY

© 2011

Texas Department of Transportation

MACTEC
3520 EXECUTIVE CENTER DRIVE
SUITE 200
AUSTIN, TEXAS 78731
(512) 795-0360
REGISTRATION NUMBER: F-1784

STRUCTURAL ENGINEERING ASSOCIATES, INC.
CONSULTING ENGINEERS
SAN ANTONIO, TEXAS
REGISTRATION NUMBER: F-199

SH 151

RETAINING WALL NO. 1

(SHEET 2 OF 3)

FED. RD. DIV. NO.			SHEET NO.
			172
STATE	DIST.	COUNTY	
TEXAS	SA	BEXAR	
CONT.	SECT.	JOB	HIGHWAY NO.
2452	01	043	SH 151

K:\2452-01-043\WALLS\151rw02.dgn 16 Feb 2011 11:02:05 AM TxDOT Projects

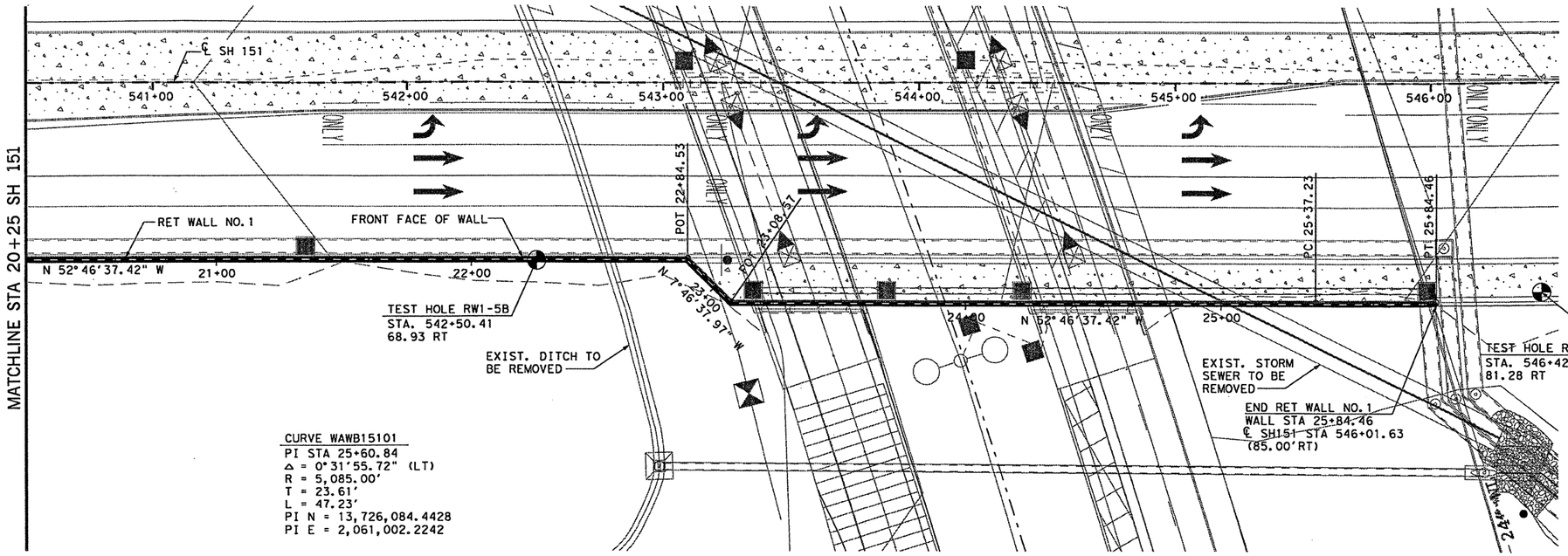

PLAN

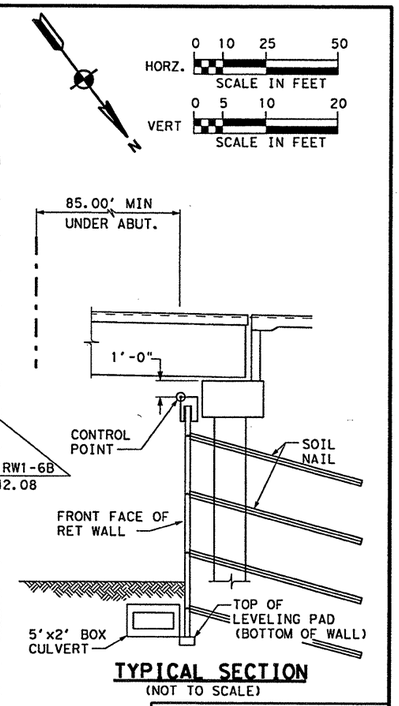

TYPICAL SECTION
(NOT TO SCALE)

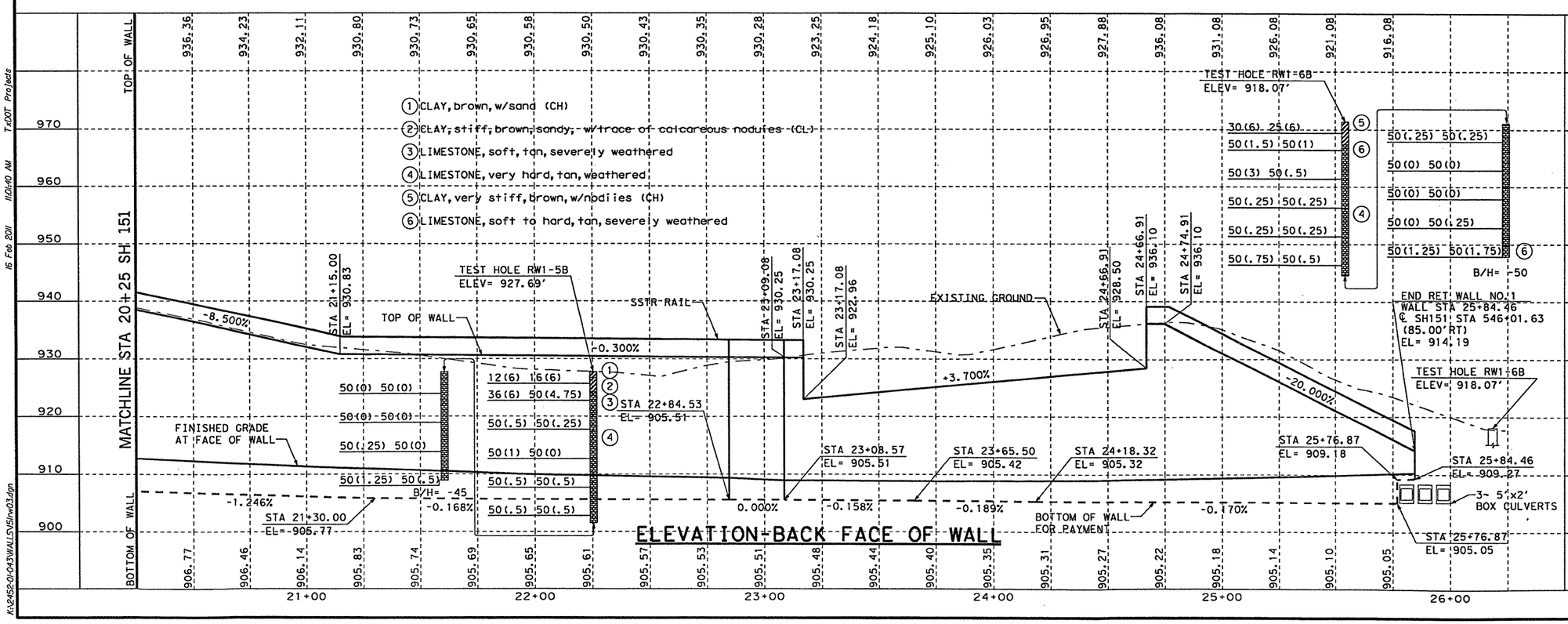

ELEVATION-BACK FACE OF WALL

STATE OF TEXAS
ALVARO J. LOPEZ
102216
LICENSED
PROFESSIONAL ENGINEER
2/16/11
SEA REG. NO. F-199

NO.	DATE	REVISION DESCRIPTION	APP. BY

© 2011

Texas Department of Transportation

MACTEC
3520 EXECUTIVE CENTER DRIVE
SUITE 200
AUSTIN, TEXAS 78731
(512) 795-0360
REGISTRATION NUMBER: F-1784

SEA
STRUCTURAL ENGINEERING ASSOCIATES, INC.
CONSULTING ENGINEERS
SAN ANTONIO, TEXAS
REGISTRATION NUMBER: F-199

SH 151

RETAINING WALL NO. 1

(SHEET 3 OF 3)

FED. RD. DIV. NO.		SHEET NO.
		173

STATE	DIST.	COUNTY	
TEXAS	SA	BEXAR	
CONT.	SECT.	JOB	HIGHWAY NO.
2452	01	043	SH 151

K:\2452-01-043\WALLS\Sl\rw03.dgn 16 Feb 2011 11:01:40 AM TxDOT Projects

ESTIMATED QUANTITIES		
ITEM	UNIT	QTY
RETAINING WALL (SOIL NAILED) (FACIA)	SF	52,612
SSTR	LF	1,544

NOTE:

SEE ROADWAY PLAN AND PROFILE, BRIDGE DETAILS, SOIL NAIL LAYOUTS AND DRAINAGE PLAN SHEETS FOR ADDITIONAL INFORMATION.

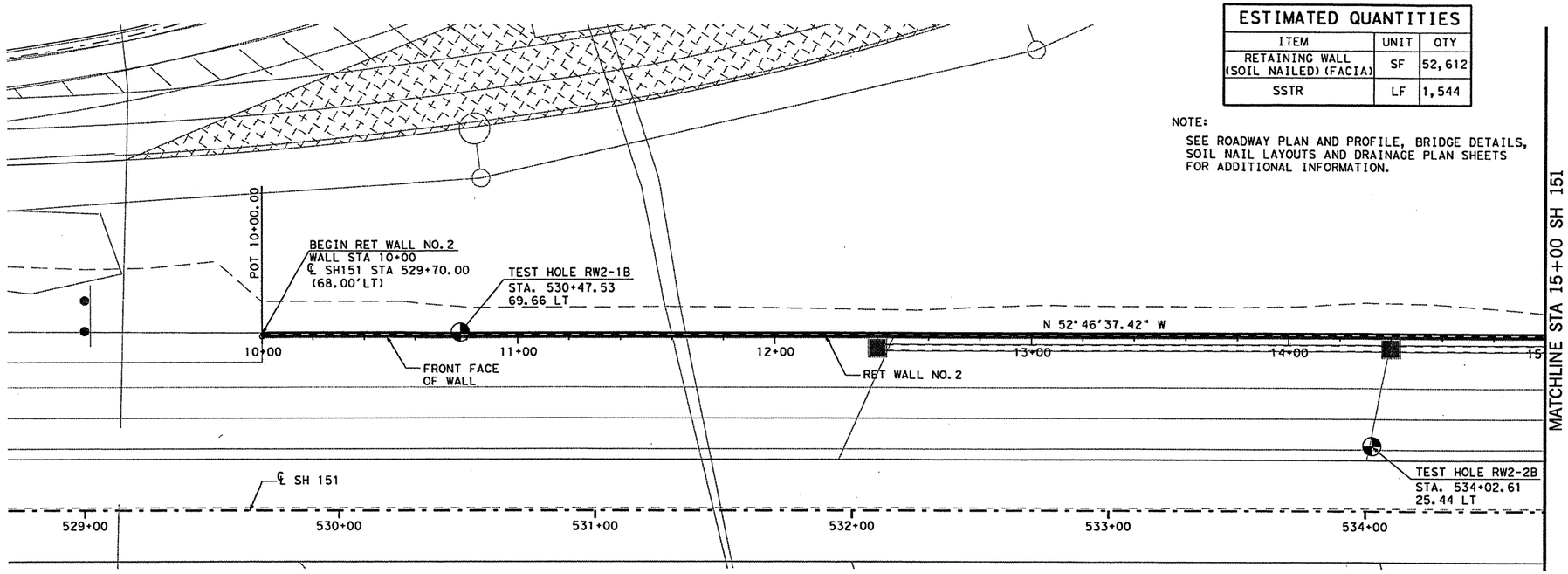

PLAN

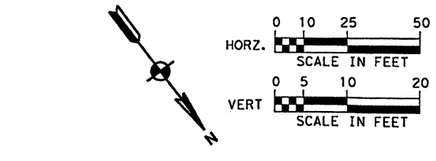

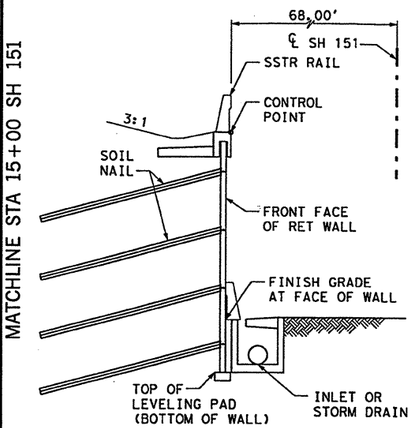

TYPICAL SECTION
(NOT TO SCALE)

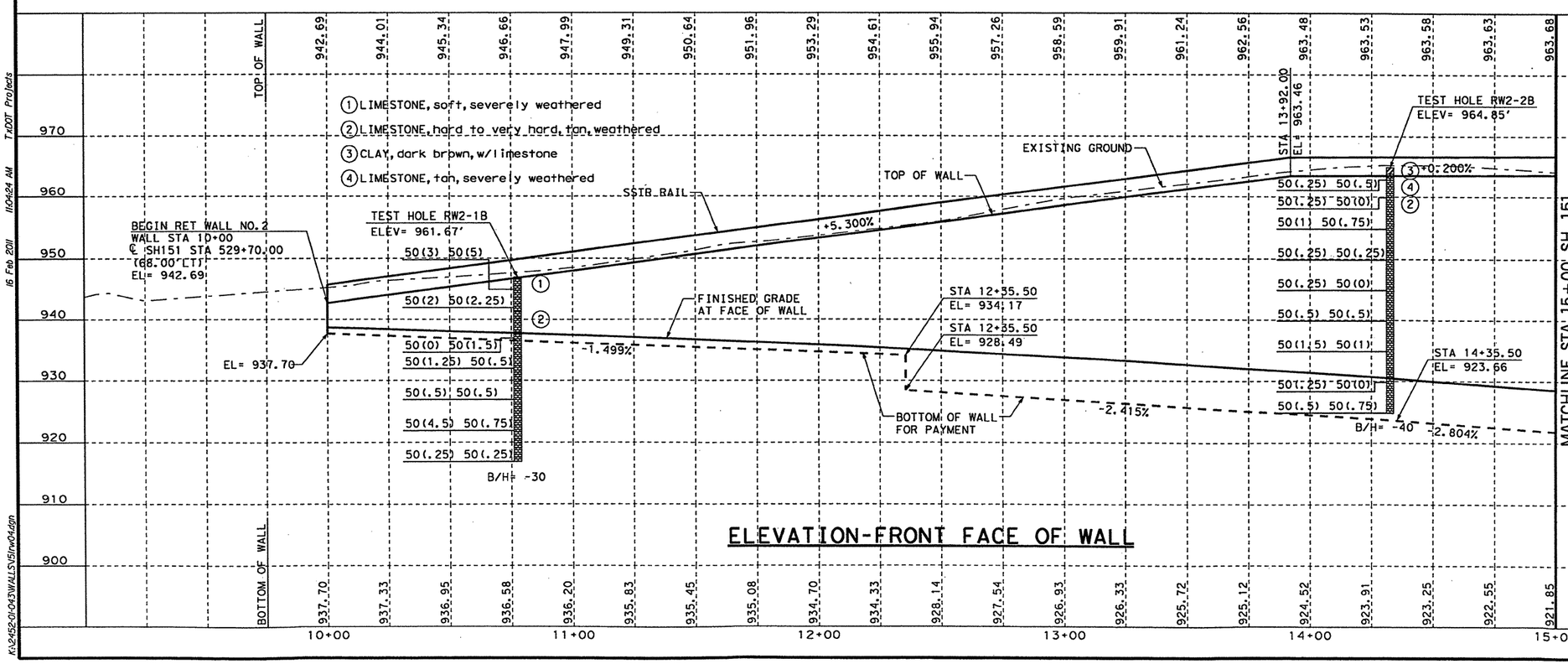

ELEVATION-FRONT FACE OF WALL

STATE OF TEXAS
ALVARO J. LOPEZ
102216
LICENSED PROFESSIONAL ENGINEER
2/16/11
STA REG. NO. F-199

NO.	DATE	REVISION DESCRIPTION	APP. BY

© 2011

Texas Department of Transportation

MACTEC
3520 EXECUTIVE CENTER DRIVE
SUITE 200
AUSTIN, TEXAS 78731
(512) 795-0360
REGISTRATION NUMBER: F-1784

STRUCTURAL ENGINEERING ASSOCIATES, INC.
CONSULTING ENGINEERS
SAN ANTONIO, TEXAS
REGISTRATION NUMBER: F-199

SH 151

RETAINING WALL NO. 2

(SHEET 1 OF 3)

FED. RD. DIV. NO.			SHEET NO.
			174
STATE	DIST.	COUNTY	
TEXAS	SA	BEXAR	
CONT.	SECT.	JOB	HIGHWAY NO.
2452	01	043	SH 151

K:\2452-01-043\WALLS\SH\rw04.dgn 16 Feb 2011 11:04:24 AM TxDOT Projects

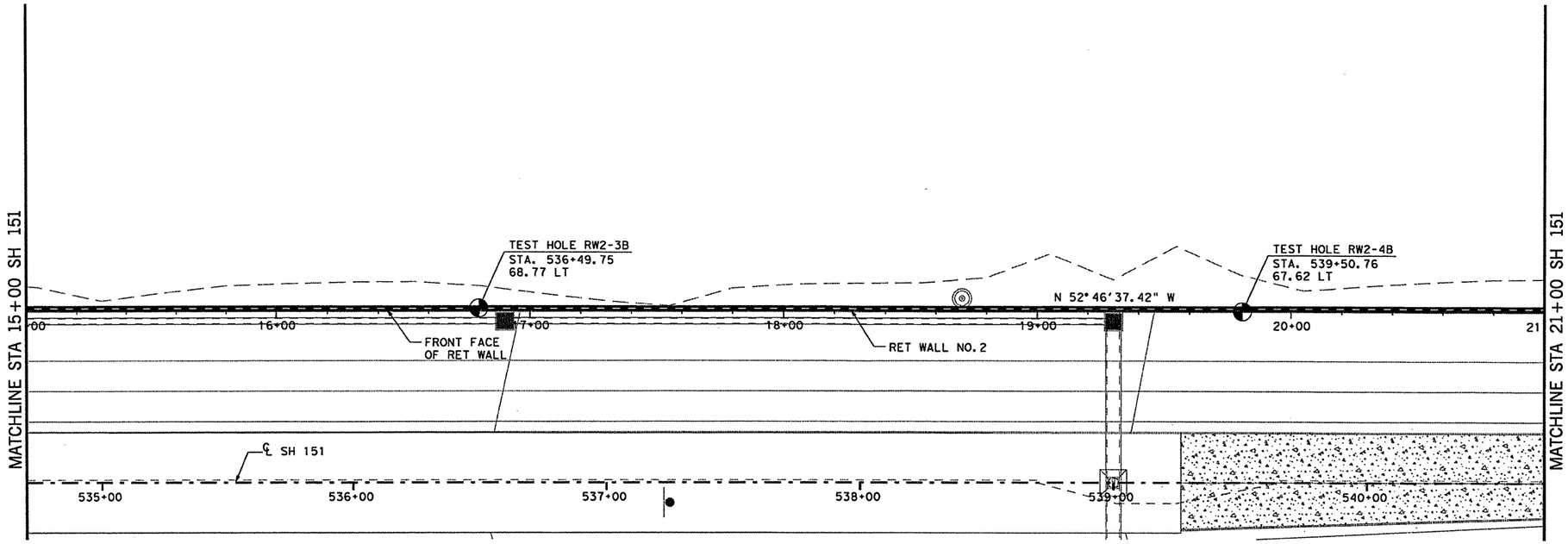

PLAN

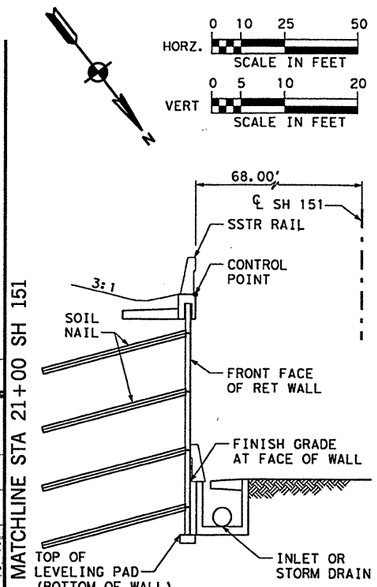

TYPICAL SECTION
(NOT TO SCALE)

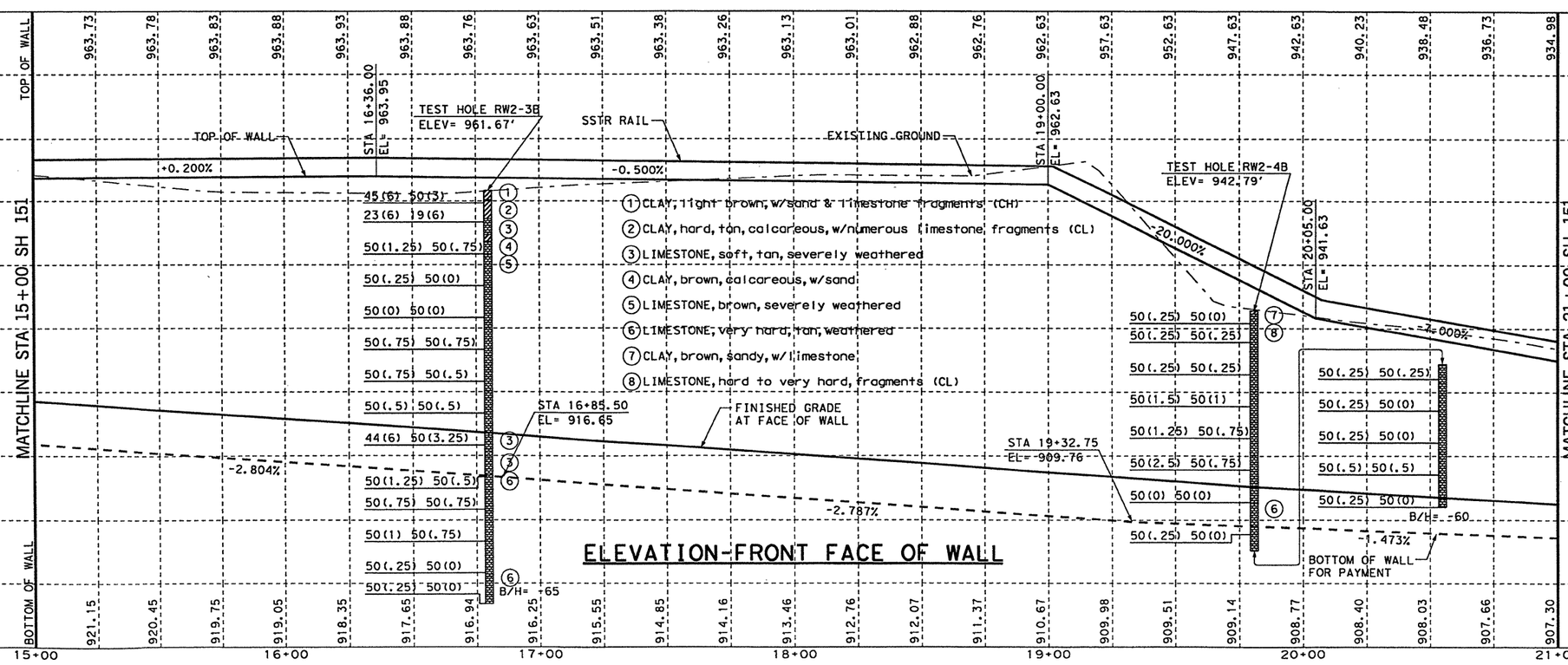

ELEVATION-FRONT FACE OF WALL

1. CLAY, light brown, w/sand & limestone fragments (CH)
2. CLAY, hard, tan, calcareous, w/numerous limestone fragments (CL)
3. LIMESTONE, soft, tan, severely weathered
4. CLAY, brown, calcareous, w/sand
5. LIMESTONE, brown, severely weathered
6. LIMESTONE, very hard, tan, weathered
7. CLAY, brown, sandy, w/limestone
8. LIMESTONE, hard to very hard, fragments (CL)

STATE OF TEXAS
ALVARO J. LOPEZ
102216
LICENSED PROFESSIONAL ENGINEER
2/14/11
SEA REG NO. F-199

NO.	DATE	REVISION DESCRIPTION	APP. BY

© 2011

Texas Department of Transportation

MACTEC
3520 EXECUTIVE CENTER DRIVE
SUITE 200
AUSTIN, TEXAS 78731
(512) 795-0360
REGISTRATION NUMBER: F-1784

STRUCTURAL ENGINEERING ASSOCIATES, INC.
CONSULTING ENGINEERS
SAN ANTONIO, TEXAS
REGISTRATION NUMBER: F-199

SH 151

RETAINING WALL NO. 2

(SHEET 2 OF 3)

FED. RD. DIV. NO.			SHEET NO.
			175
STATE	DIST.	COUNTY	
TEXAS	SA	BEXAR	
CONT.	SECT.	JOB	HIGHWAY NO.
2452	01	043	SH 151

K:\2452-01-043\WALLS\SH151rw05.dgn 16 Feb 2011 10:59:41 AM TxDOT Projects

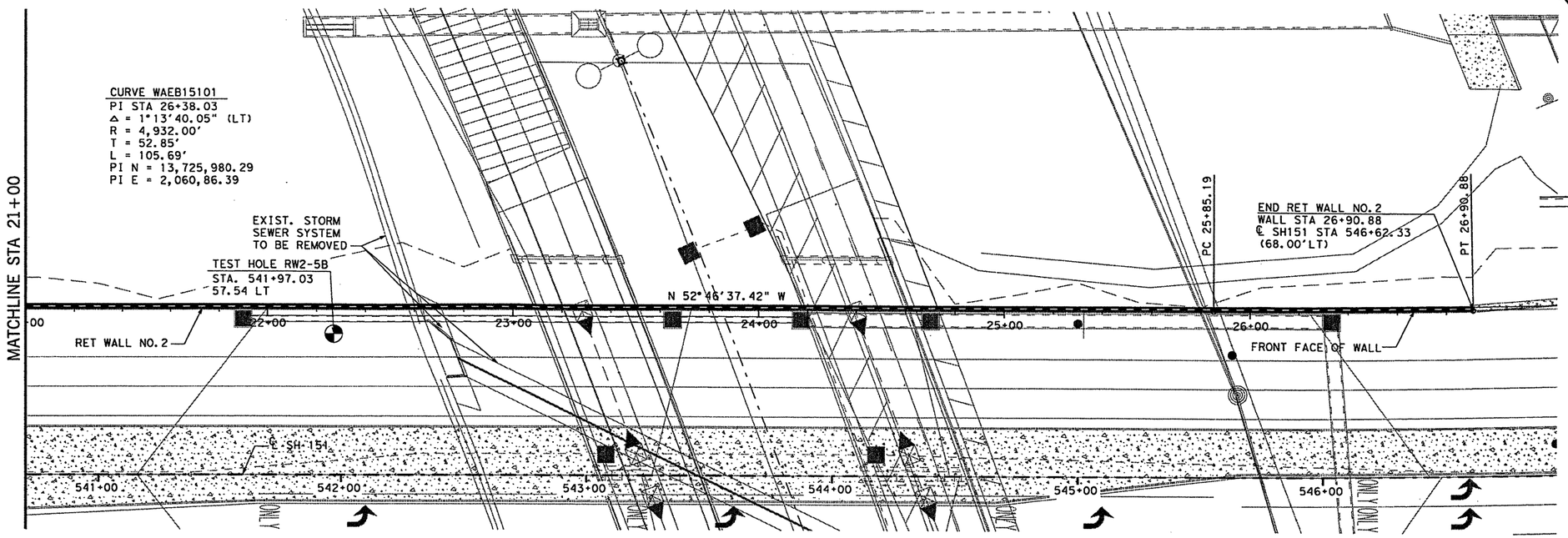

PLAN

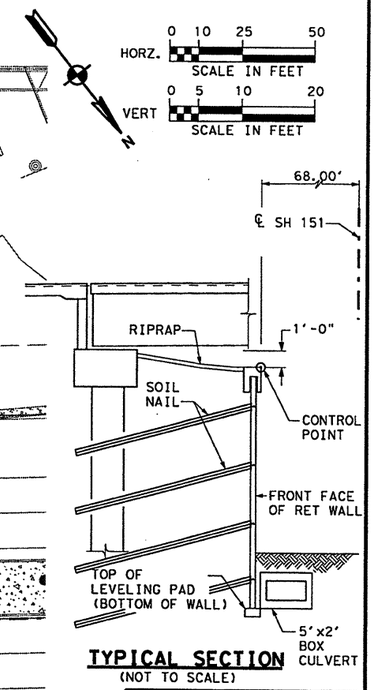

TYPICAL SECTION
(NOT TO SCALE)

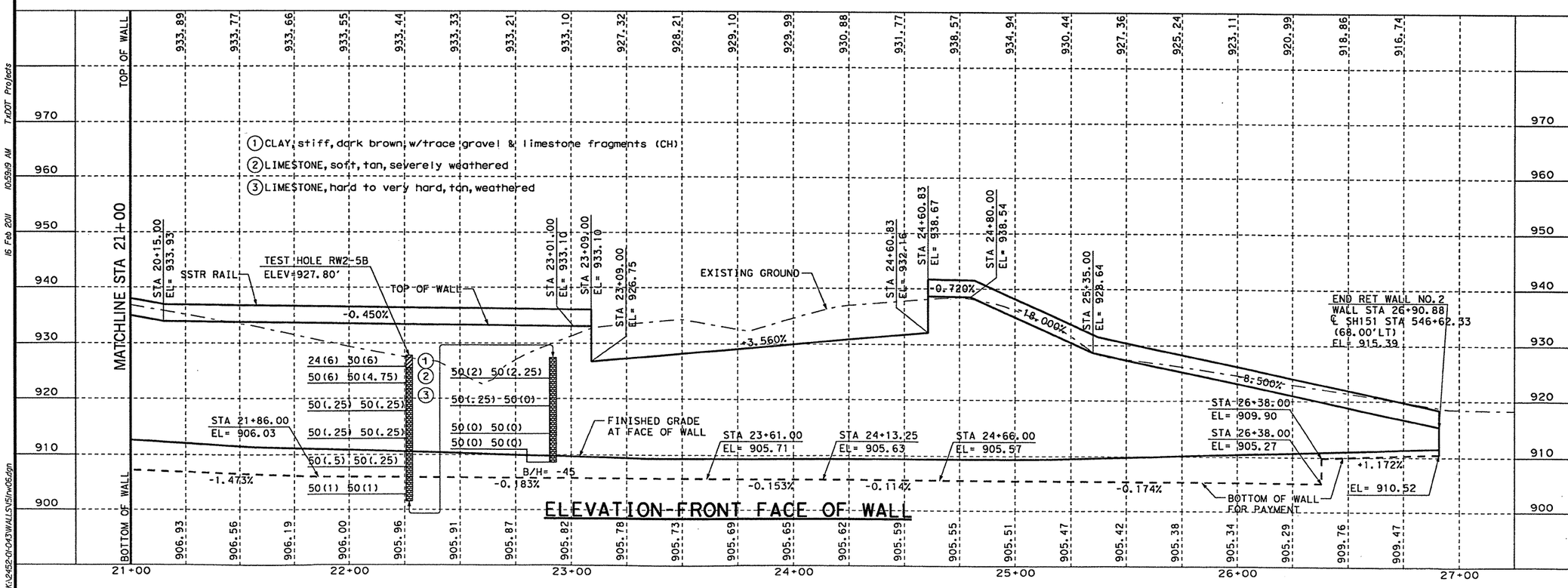

ELEVATION-FRONT FACE OF WALL

STATE OF TEXAS
ALVARO J. LOPEZ
102216
LICENSED PROFESSIONAL ENGINEER
SEA REG. NO. F-199
2/14/11

NO.	DATE	REVISION DESCRIPTION	APP. BY

© 2011

Texas Department of Transportation

MACTEC
3520 EXECUTIVE CENTER DRIVE
SUITE 200
AUSTIN, TEXAS 78731
(512) 795-0360
REGISTRATION NUMBER: F-1784

STRUCTURAL ENGINEERING ASSOCIATES, INC.
CONSULTING ENGINEERS
SAN ANTONIO, TEXAS
REGISTRATION NUMBER: F-199

SH 151

RETAINING WALL NO.2

(SHEET 3 OF 3)

FED. RD. DIV. NO.			SHEET NO.
			176
STATE	DIST.	COUNTY	
TEXAS	SA	BEXAR	
CONT.	SECT.	JOB	HIGHWAY NO.
2452	01	043	SH 151

16 Feb 2011 10:59:19 AM TxDOT Projects
K:\2452-01-043\WALLS\15\rw06.dgn

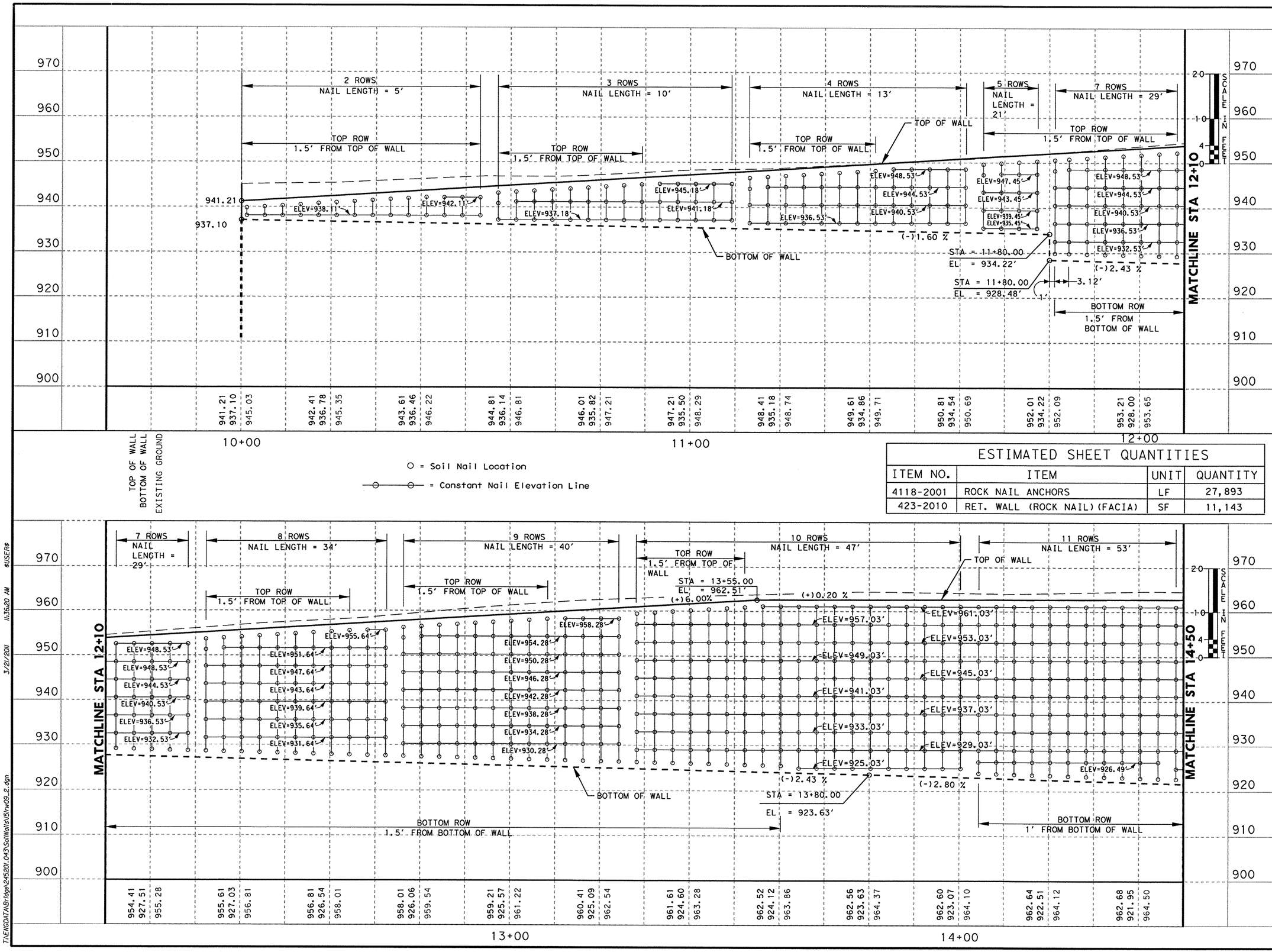

ESTIMATED SHEET QUANTITIES			
ITEM NO.	ITEM	UNIT	QUANTITY
4118-2001	ROCK NAIL ANCHORS	LF	27,893
423-2010	RET. WALL (ROCK NAIL) (FACIA)	SF	11,143

STATE OF TEXAS
SCOTT D. LYSSY
103637
LICENSED
PROFESSIONAL ENGINEER
3-21-11
Scott Lyssy P.E.

NO.	DATE	REVISION DESCRIPTION	APP. BY

Texas Department of Transportation © 2011

SH 151

RETAINING WALL RW1 NAIL LAYOUT

SHEET 1 OF 4

FED. RD. DIV. NO.		SHEET NO.
		177

STATE	DIST.	COUNTY	
TEXAS	SAT	BEXAR	
CONT.	SECT.	JOB	HIGHWAY NO.
2452	01	043	SH 151

T:\ENGDATA\Bridge\245201.043\Soilnails\Sinv09_2.dgn 3/21/2011 11:36:20 AM $USER$

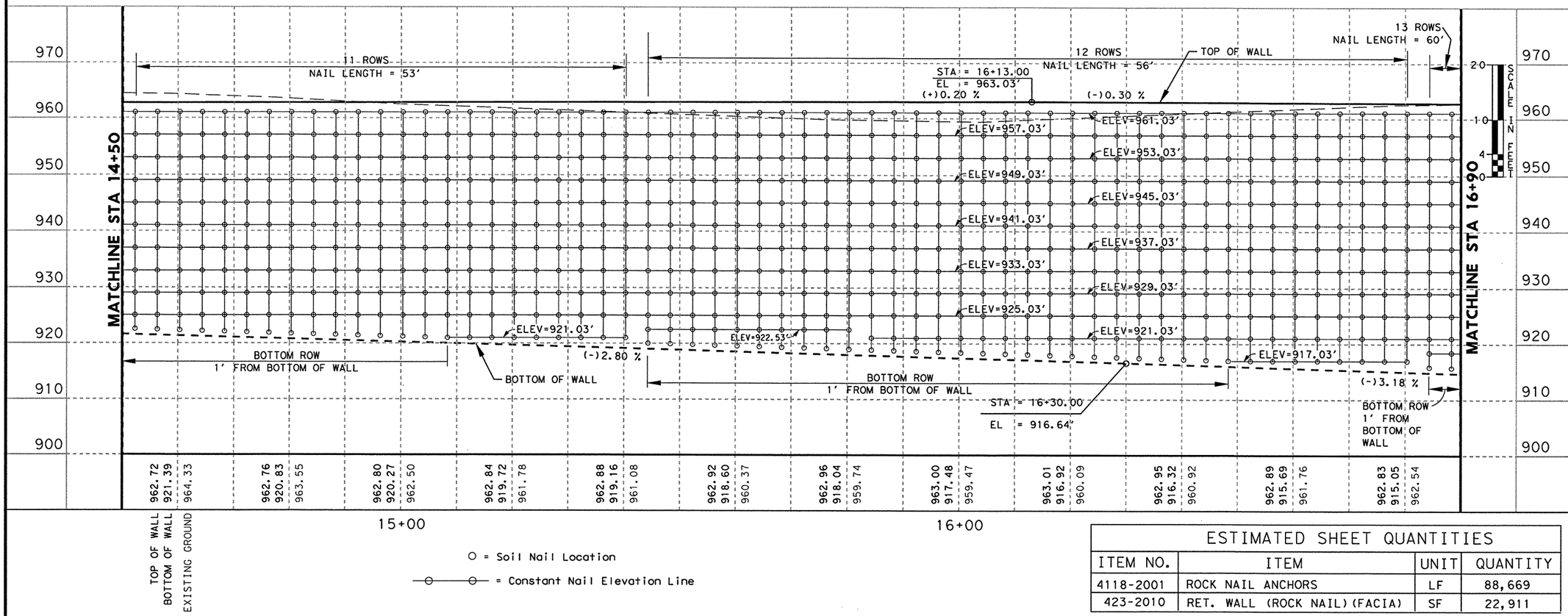

○ = Soil Nail Location

—○—○— = Constant Nail Elevation Line

ESTIMATED SHEET QUANTITIES			
ITEM NO.	ITEM	UNIT	QUANTITY
4118-2001	ROCK NAIL ANCHORS	LF	88,669
423-2010	RET. WALL (ROCK NAIL)(FACIA)	SF	22,911

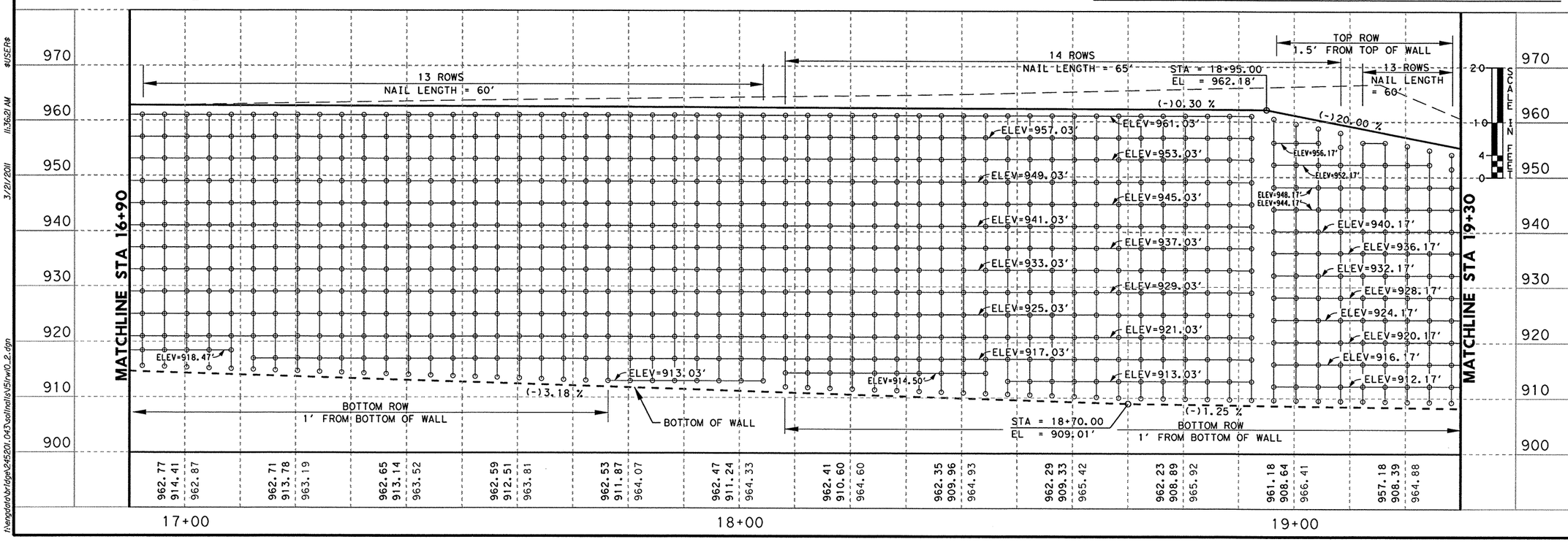

STATE OF TEXAS
SCOTT D. LYSSY
103637
LICENSED
PROFESSIONAL ENGINEER
3-21-11
Scott Lyssy P.E.

NO.	DATE	REVISION DESCRIPTION	APP. BY

Texas Department of Transportation © 2011

SH 151

RETAINING WALL RW 1 NAIL LAYOUT

SHEET 2 OF 4

FED. RD. DIV. NO.			SHEET NO.
			178
STATE	DIST.	COUNTY	
TEXAS	SAT	BEXAR	
CONT.	SECT.	JOB	HIGHWAY NO.
2452	01	043	SH 151

$USER$ 3/21/2011 11:36:21 AM
I:\engdata\bridge\245201.043\soilnails\151rw10_2.dgn

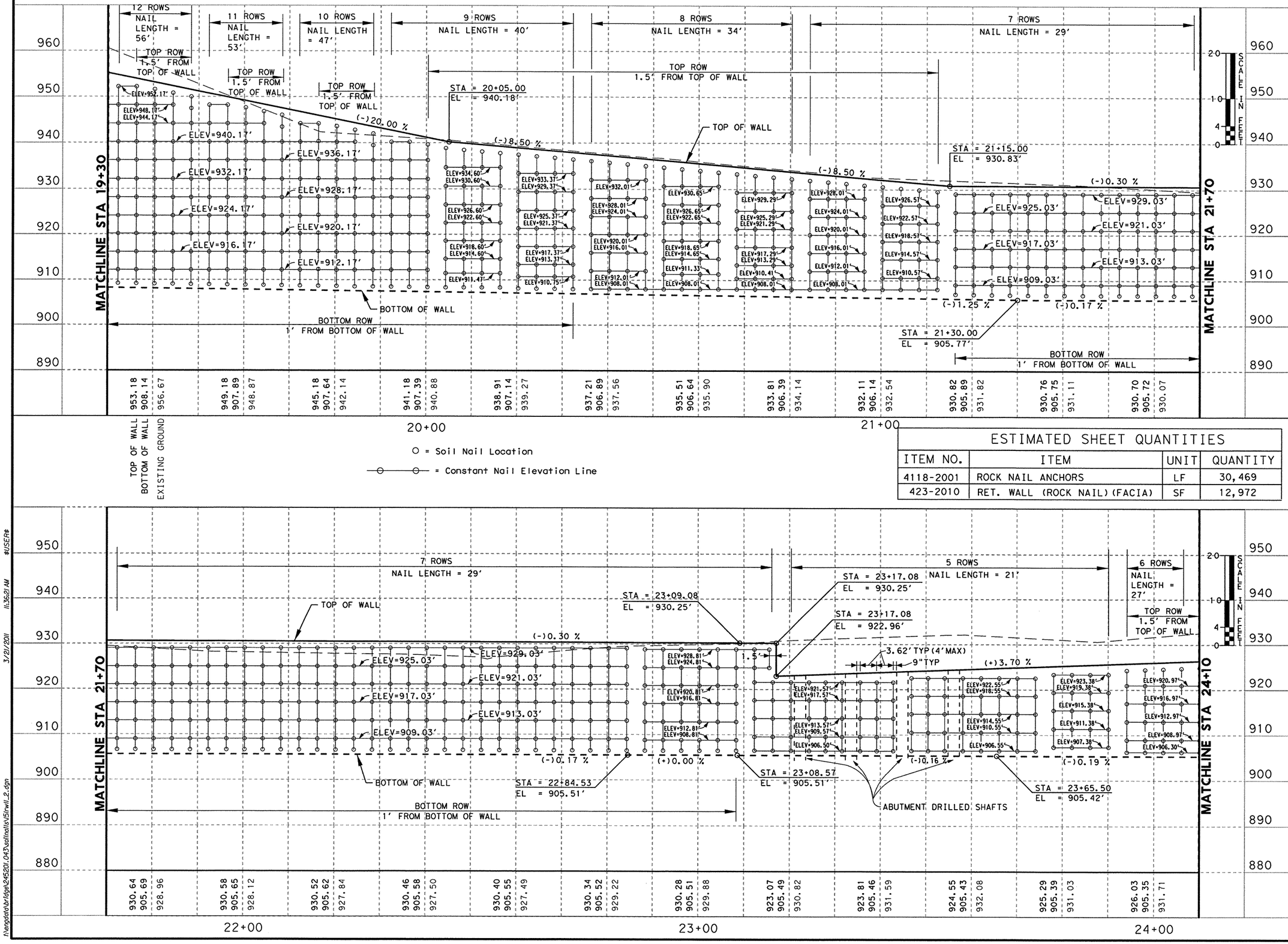

ESTIMATED SHEET QUANTITIES

ITEM NO.	ITEM	UNIT	QUANTITY
4118-2001	ROCK NAIL ANCHORS	LF	30,469
423-2010	RET. WALL (ROCK NAIL)(FACIA)	SF	12,972

STATE OF TEXAS
SCOTT D. LYSSY
103637
LICENSED PROFESSIONAL ENGINEER
3-21-11
Scott Lyssy P.E.

NO.	DATE	REVISION DESCRIPTION	APP. BY

Texas Department of Transportation ©2011

SH 151

RETAINING WALL RW 1 NAIL LAYOUT

SHEET 3 OF 4

FED. RD. DIV. NO.		SHEET NO.
		179

STATE	DIST.	COUNTY	
TEXAS	SAT	BEXAR	
CONT.	SECT.	JOB	HIGHWAY NO.
2452	01	043	SH 151

$USER$ 3/21/2011 11:36:21 AM f:\engdata\bridge\245201.043\sailnails\5irwll_2.dgn

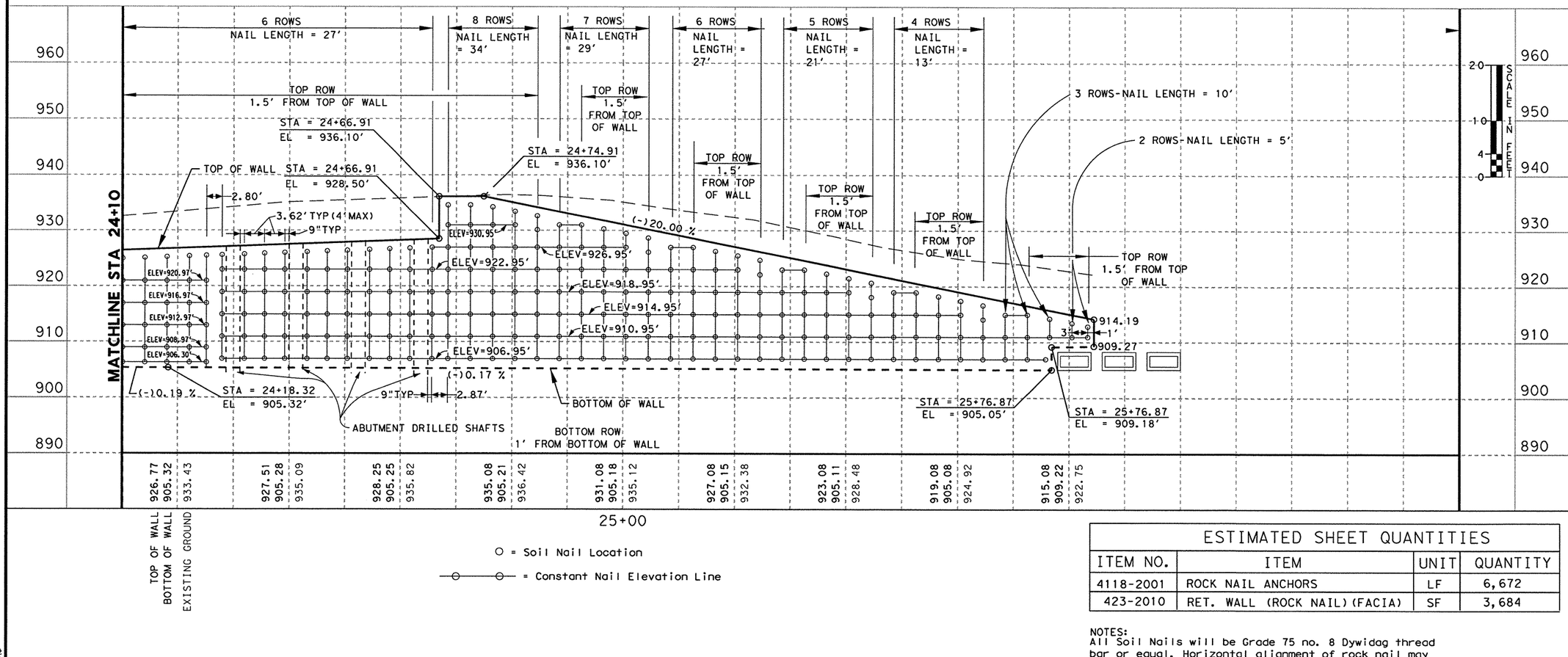

○ = Soil Nail Location

—○—○— = Constant Nail Elevation Line

ESTIMATED SHEET QUANTITIES			
ITEM NO.	ITEM	UNIT	QUANTITY
4118-2001	ROCK NAIL ANCHORS	LF	6,672
423-2010	RET. WALL (ROCK NAIL) (FACIA)	SF	3,684

NOTES:
All Soil Nails will be Grade 75 no. 8 Dywidag thread bar or equal. Horizontal alignment of rock nail may be adjusted up to 10 degrees from perpendicular to the wall face to avoid existing foundation or other obstructions.
Preformed Soil Drainage Mats will drain into an under-drain as shown on the Rock Nail Retaining Wall Details.
Facia thickness will be increased to provide a min. 2" clear cover for reinforcing steel with Hill Country Theme Form Liners.
Typical nail spacing shall be 4' in the horizontal and vertical directions unless otherwise shown. Minimum vertical nail spacing may be adjusted to a min spacing of 2'-4" as needed.

STATE OF TEXAS
SCOTT D. LYSSY
103637
LICENSED PROFESSIONAL ENGINEER
3-21-11
Scott Lyssy P.E.

NO.	DATE	REVISION DESCRIPTION	APP. BY

Texas Department of Transportation © 2011

SH 151

RETAINING WALL RW 1 NAIL LAYOUT

SHEET 4 OF 4

FED. RD. DIV. NO.		SHEET NO.
		180

STATE	DIST.	COUNTY	
TEXAS	SAT	BEXAR	
CONT.	SECT.	JOB	HIGHWAY NO.
2452	01	043	SH 151

h:\engdata\bridge\24520\.043\sdlnotes\5\rw12_2.dgn 3/21/2011 11:36:22 AM $USER$

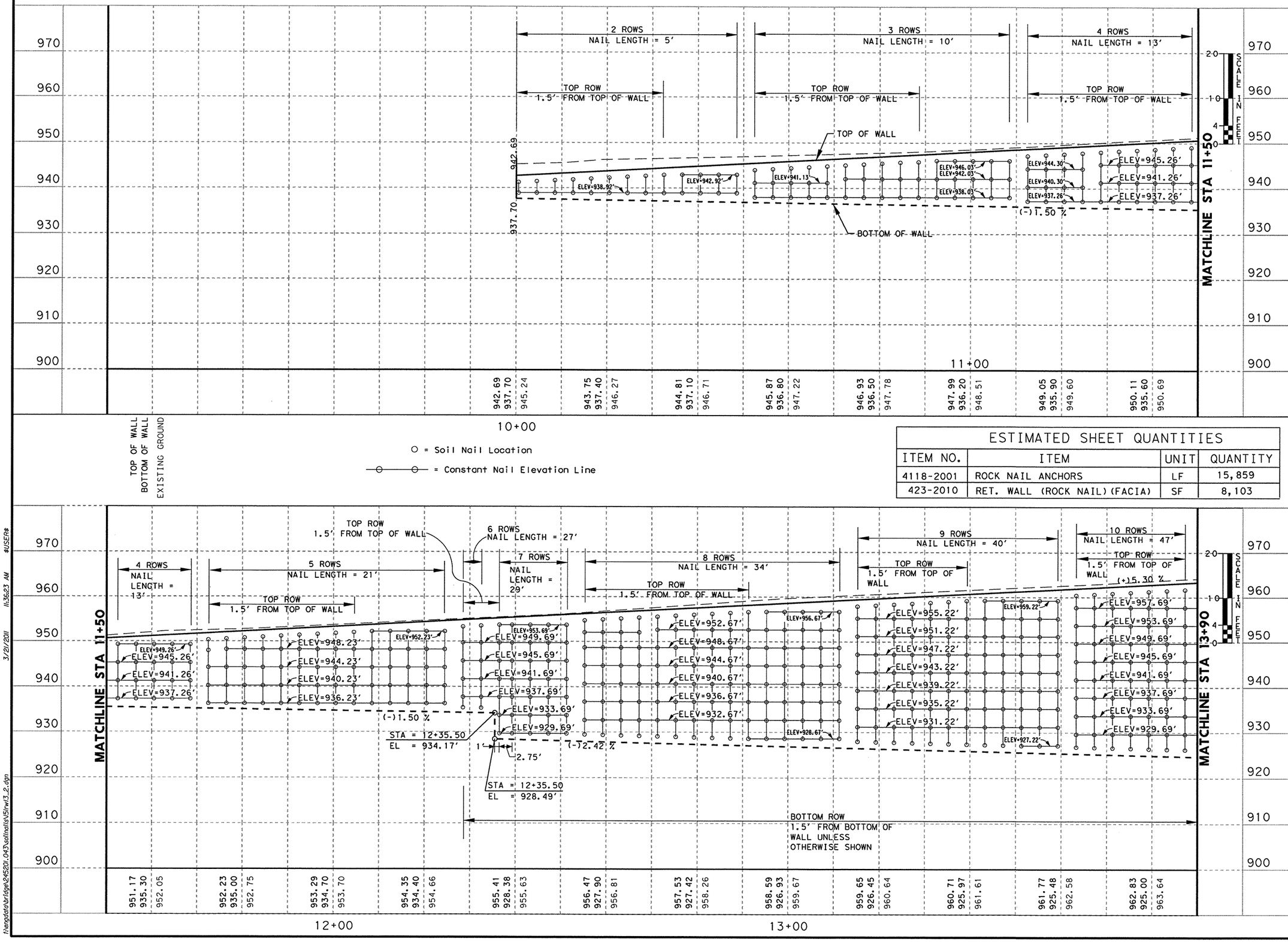

ESTIMATED SHEET QUANTITIES			
ITEM NO.	ITEM	UNIT	QUANTITY
4118-2001	ROCK NAIL ANCHORS	LF	15,859
423-2010	RET. WALL (ROCK NAIL)(FACIA)	SF	8,103

STATE OF TEXAS
SCOTT D. LYSSY
103637
LICENSED PROFESSIONAL ENGINEER
3-21-11
Scott Lyssy P.E.

NO.	DATE	REVISION DESCRIPTION	APP. BY

Texas Department of Transportation ©2011

SH 151

RETAINING WALL RW2 NAIL LAYOUT

SHEET 1 OF 4

FED. RD. DIV. NO.		SHEET NO.
		181

STATE	DIST.	COUNTY	
TEXAS	SAT	BEXAR	
CONT.	SECT.	JOB	HIGHWAY NO.
2452	01	043	SH 151

f:\engdata\bridge\245201.043\sollnails\151rw13_2.dgn 3/21/2011 11:36:23 AM $USER$

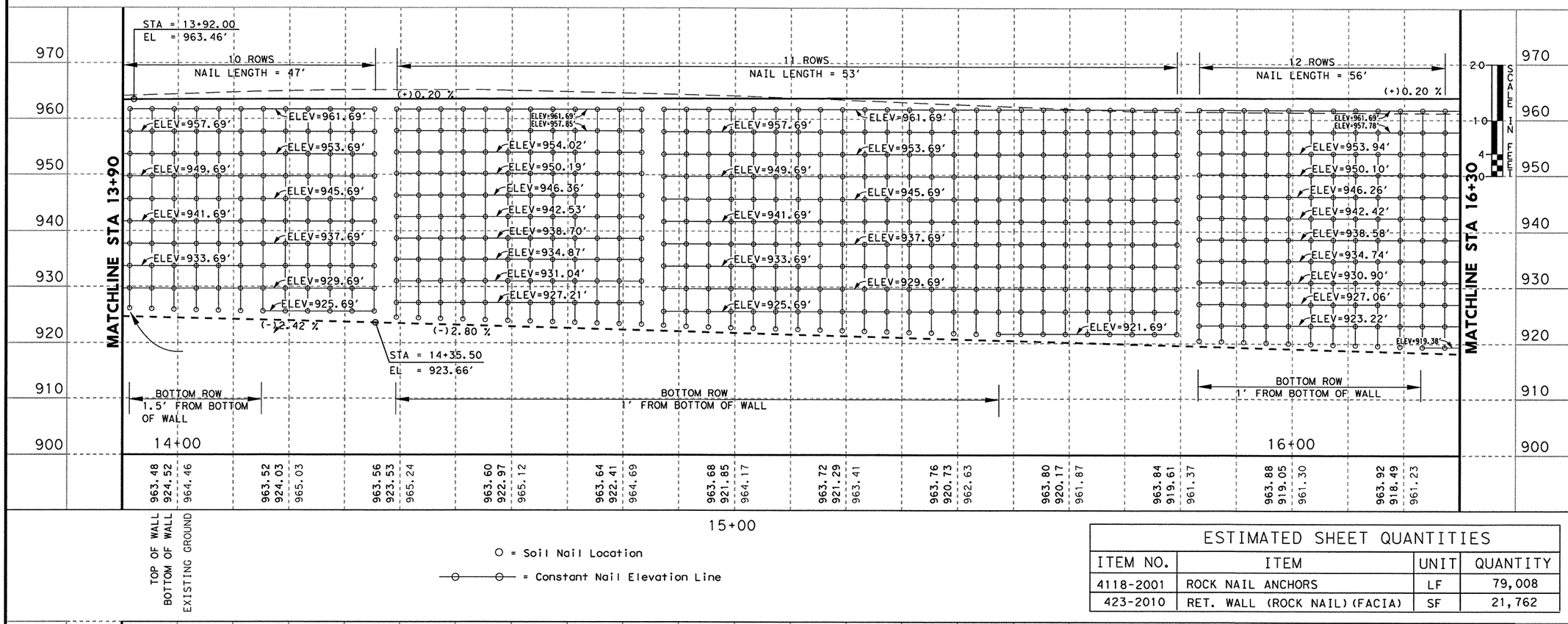

○ = Soil Nail Location

—○—○— = Constant Nail Elevation Line

ESTIMATED SHEET QUANTITIES			
ITEM NO.	ITEM	UNIT	QUANTITY
4118-2001	ROCK NAIL ANCHORS	LF	79,008
423-2010	RET. WALL (ROCK NAIL)(FACIA)	SF	21,762

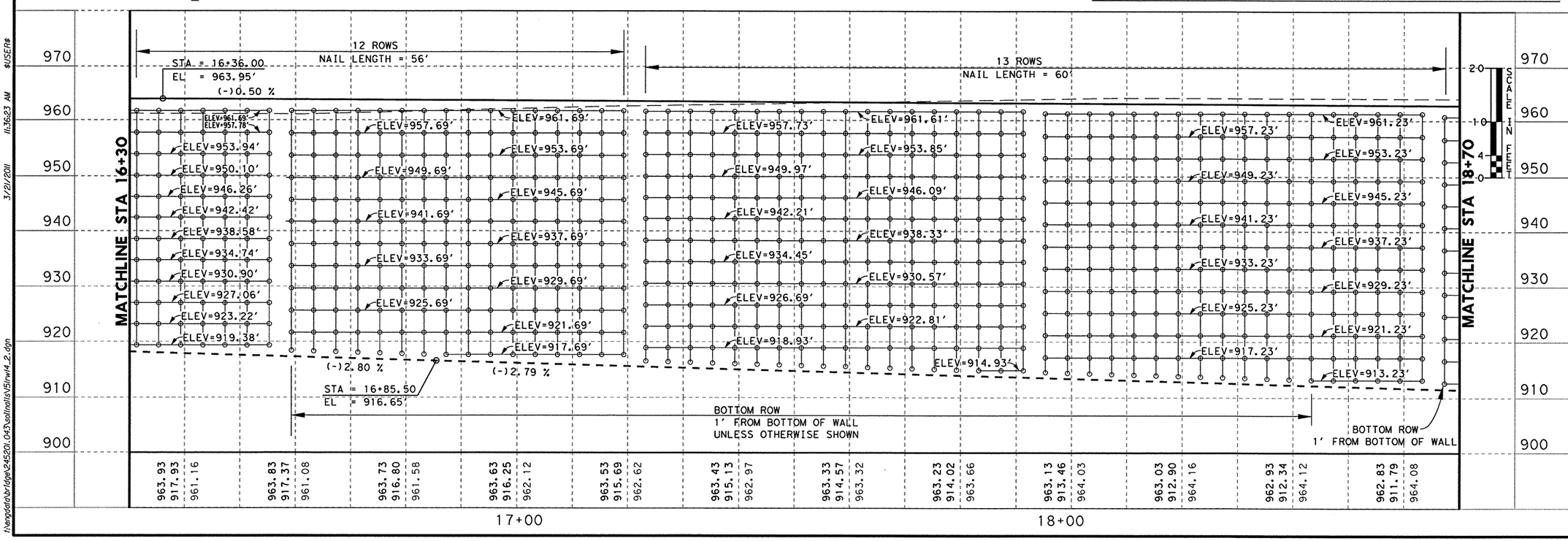

STATE OF TEXAS
SCOTT D. LYSSY
103637
LICENSED
PROFESSIONAL ENGINEER
3-21-11
Scott Lyssy P.E.

NO.	DATE	REVISION DESCRIPTION	APP. BY

Texas Department of Transportation ©2011

SH 151

RETAINING WALL RW2 NAIL LAYOUT

SHEET 2 OF 4

FED. RD. DIV. NO.		SHEET NO.
		182

STATE	DIST.	COUNTY	
TEXAS	SAT	BEXAR	
CONT.	SECT.	JOB	HIGHWAY NO.
2452	01	043	SH 151

f:\engdata\bridge\245201.043\solinails\151rw14_2.dgn 3/21/2011 11:36:23 AM $USER$

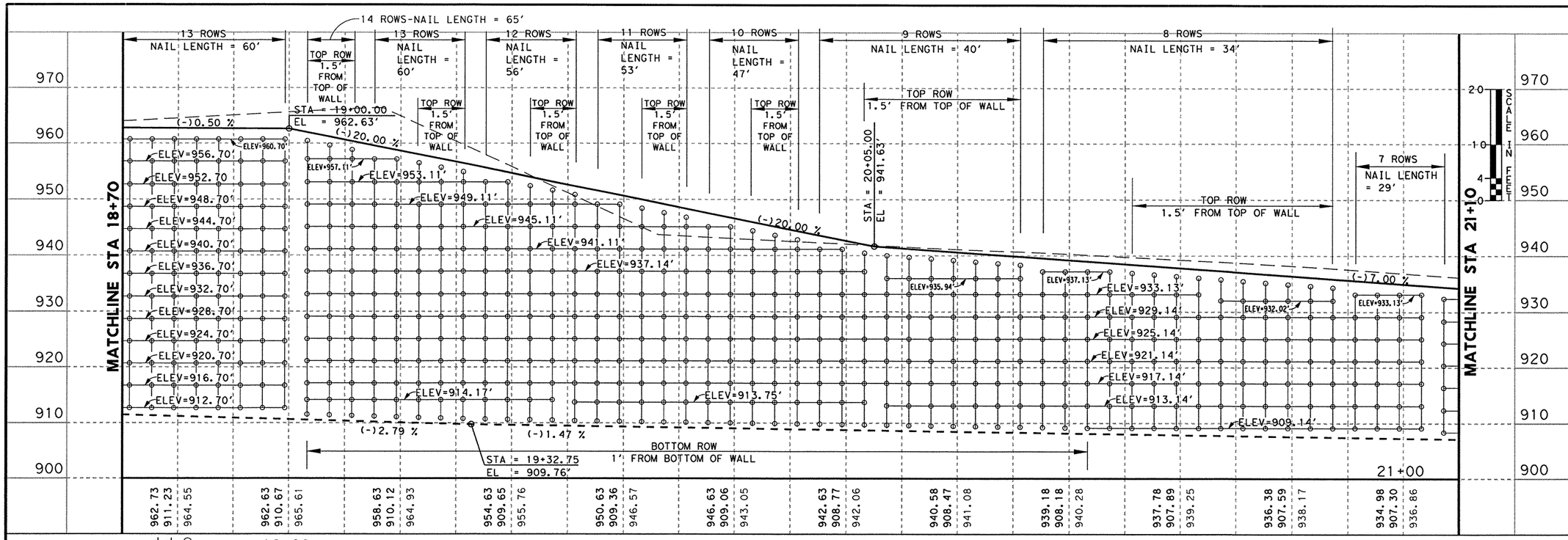

O = Soil Nail Location

—O—O— = Constant Nail Elevation Line

ESTIMATED SHEET QUANTITIES			
ITEM NO.	ITEM	UNIT	QUANTITY
4118-2001	ROCK NAIL ANCHORS	LF	41,850
423-2010	RET. WALL (ROCK NAIL) (FACIA)	SF	15,505

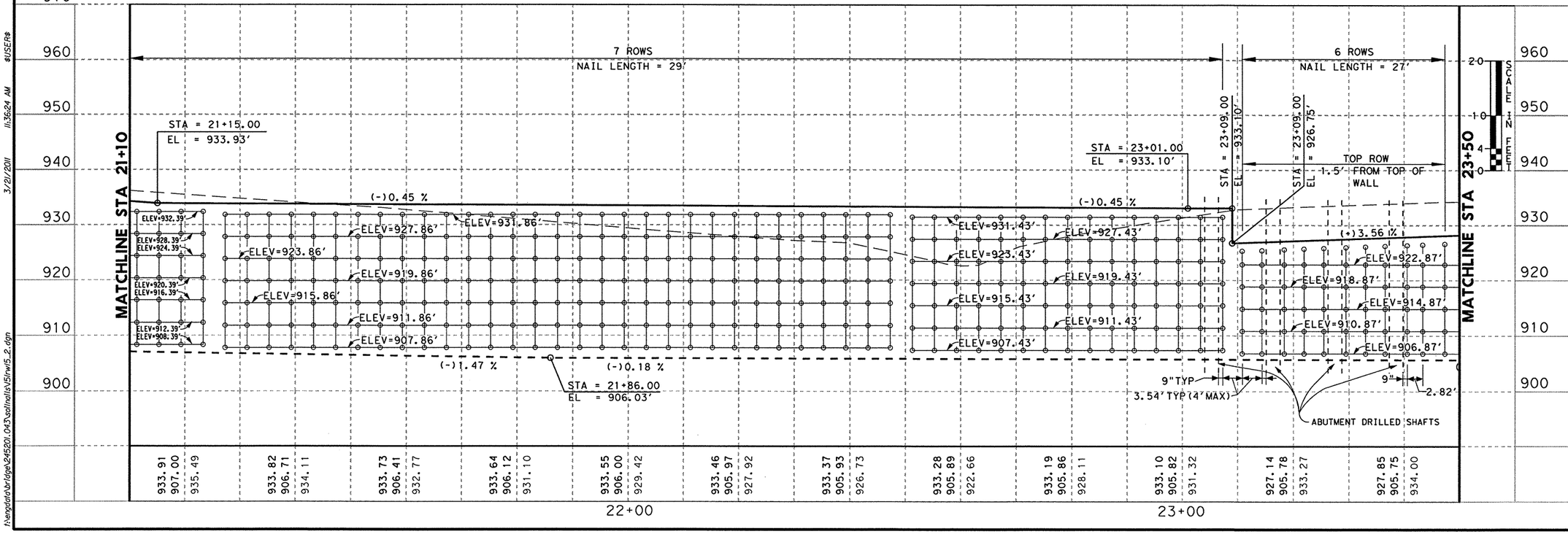

STATE OF TEXAS
SCOTT D. LYSSY
103637
LICENSED
PROFESSIONAL ENGINEER
3-21-11
Scott Lyssy P.E

NO.	DATE	REVISION DESCRIPTION	APP. BY

Texas Department of Transportation © 2011

SH 151

RETAINING WALL RW2 NAIL LAYOUT

SHEET 3 OF 4

FED. RD. DIV. NO.			SHEET NO. 183
STATE	DIST.	COUNTY	
TEXAS	SAT	BEXAR	
CONT.	SECT.	JOB	HIGHWAY NO.
2452	01	043	SH 151

$USER$ 3/21/2011 11:36:24 AM t:\engdata\bridge\245201_043\sollnails\v5\rw15_2.dgn

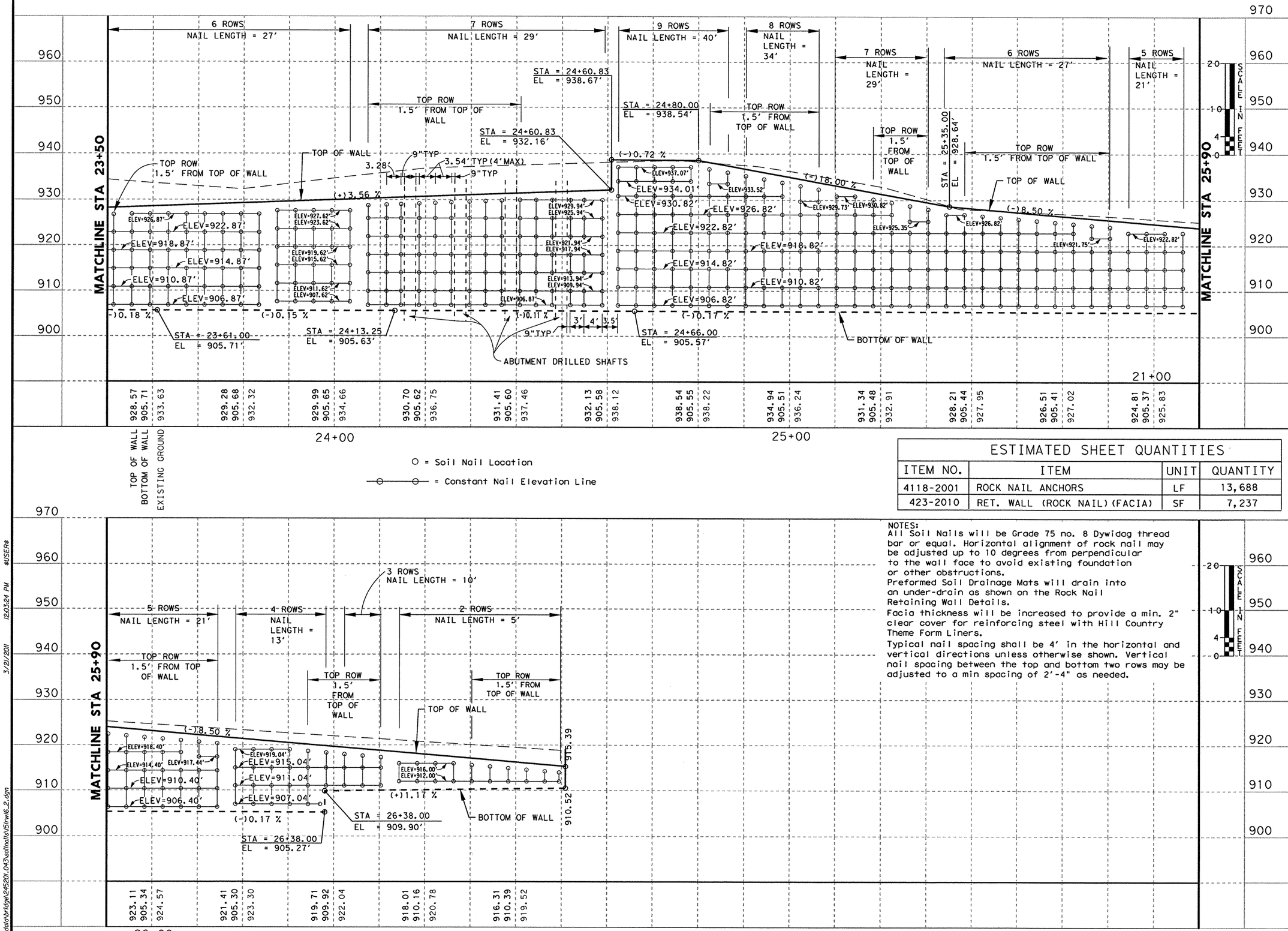

ESTIMATED SHEET QUANTITIES			
ITEM NO.	ITEM	UNIT	QUANTITY
4118-2001	ROCK NAIL ANCHORS	LF	13,688
423-2010	RET. WALL (ROCK NAIL) (FACIA)	SF	7,237

NOTES:
All Soil Nails will be Grade 75 no. 8 Dywidag thread bar or equal. Horizontal alignment of rock nail may be adjusted up to 10 degrees from perpendicular to the wall face to avoid existing foundation or other obstructions.
Preformed Soil Drainage Mats will drain into an under-drain as shown on the Rock Nail Retaining Wall Details.
Facia thickness will be increased to provide a min. 2" clear cover for reinforcing steel with Hill Country Theme Form Liners.
Typical nail spacing shall be 4' in the horizontal and vertical directions unless otherwise shown. Vertical nail spacing between the top and bottom two rows may be adjusted to a min spacing of 2'-4" as needed.

STATE OF TEXAS
SCOTT D. LYSSY
103637
LICENSED PROFESSIONAL ENGINEER
3-21-11
Scott Lyssy P.E.

NO.	DATE	REVISION DESCRIPTION	APP. BY

Texas Department of Transportation ©2011

SH 151

RETAINING WALL RW2 NAIL LAYOUT

SHEET 4 OF 4

FED. RD. DIV. NO.			SHEET NO. 184
STATE	DIST.	COUNTY	
TEXAS	SAT	BEXAR	
CONT.	SECT.	JOB	HIGHWAY NO.
2452	01	043	SH 151

h:\engdata\bridge\245201.043\soilnails\v5\rw6_2.dgn 3/21/2011 12:03:24 PM $USER$

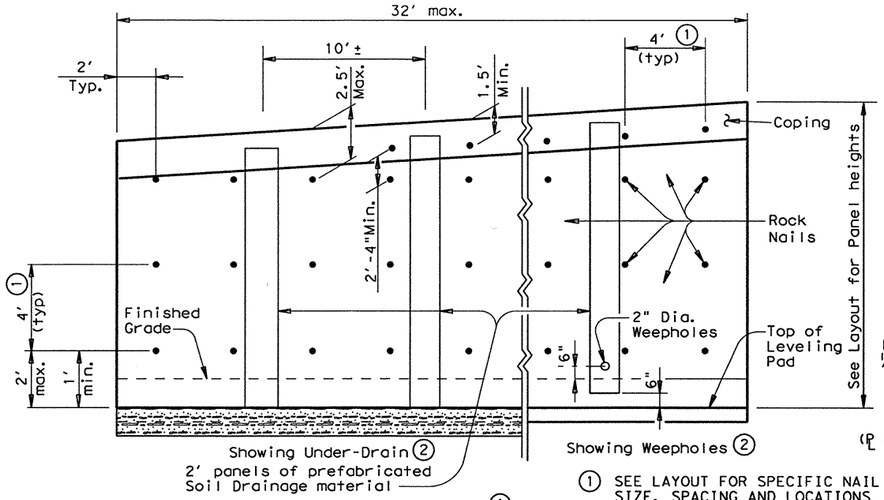

TYPICAL PANEL

‡ ROCK NAIL TEST ANCHORS		
NO. TEST ANCHORS	LENGTH FT.	MINIMUM LOAD K
2	18	35

‡Nail test anchors shall be #9 Gr. 75 Dywidag threadbar or equal. Tests will be performed in lower half of wall. It is recommended that the contractor apply 1.3 times the minimum load shown.

1. SEE LAYOUT FOR SPECIFIC NAIL SIZE, SPACING AND LOCATIONS
2. SEE LAYOUT FOR DRAINAGE SYSTEM, UNDER-DRAIN OR WEEPHOLES.
3. UNLESS SHOWN OTHERWISE IN THE PLANS.
4. THICKNESS OF FACIA WILL BE INCREASED AS REQUIRED TO ACCOMIDATE FORM LINERS SPECIFIED ELSEWHERE IN THE PLANS TO ASSURE A MIN. 2" CLEAR COVER OVER REINF. STEEL.
5. ADJUST NAIL HEIGHT AS NEEDED TO ACHIEVE 6 INCHES OF CLEARANCE BETWEEN THE TOP ROW OF NAILS AND THE BOTTOM RIPRAP FLUME.

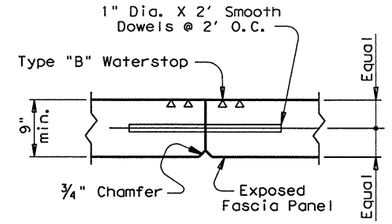

TYPICAL CONSTRUCTION JOINT DETAIL

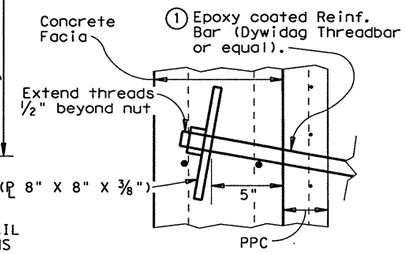

ANCHOR PLAT DETAIL

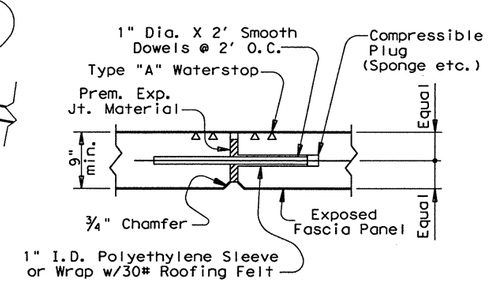

EXPANSION JOINT

GENERAL NOTES:

All Concrete shall be Class "C" unless otherwise noted.
All reinforcing steel shall be Grade 60.
Chamfer all exposed corners 3/4".
Expansion joints shall be located at 64' centers (max.)
Rock Nail Test Anchors will be required as shown on the plans.
The location of the test anchors shall be approved by the Engineer.
The test anchors may Not be used as production nails. If widely varying soil conditions are encountered, the Engineer may require up to two additional test anchors per wall. Test anchors will not be paid for directly but will be considered subsidiary.

Pneumatically Placed Concrete (PPC) shall comply with requirements of the Item 431"Pneumatically Placed Concrete"(Class III), except that it will not be paid for directly and strength testing will not be required. Membrane curing will be alowed in place of water curing.

Drainage system shall consist of 2' panels of Prefabricated Soil Drainage Mats, Special Specification 7522 "Prefabricated Soil Drainage Mats". Filter Fabric shall meet the requirements of DMS-6200 TYPE 1.

PPC shall be placed over the drains, with the Drainage Mats placed against the soil.

The price bid per square foot of Retaining Wall (Facia) shall include all concrete, reinforcing steel, PPC, drainage materials and any other materials necessary to complete the wall.

The price bid per linear foot of rock Nail as per Item 4118 "Rock Nail Anchors" shall include all drilling, nail reinforcement, grout, and test nails.

All temporary earth walls required to construct the rock nail wall will be subsidiary to pertinent rock nail wall items.

"As approved by the engineer, the contractor may provide a precast facing design, sealed drawings and calculations will be required. Design will conform to all applicable AASHTO LRFD specifications and TxDOT guidelines, design will incorporate rail impact loading."

CONSTRUCTION PROCEDURE:

The slope in front of the retaining wall shall be removed in lifts. The depth of each lift shall be limited to the amount necessary to install a single horizontal row of Soil Nails. At no time shall more than 5 feet of unnailed vertical soil be exposed. The length of each lift removed shall be limited to the amount that can be nailed in one day. At no time shall any unnailed cut face be exposed for over 48 hours.

Upon completion of each day's installation of nails, PPC shall be applied to the cut face. The concrete shall be reinforced with a single layer of Welded Wire Reinforcing Fabric, 4" X 4" - W24. Anchor Plates and nuts shall be tightened up to the face of the PPC until the concrete facia is installed, at which time the anchor plates shall be approximately centered in the facia pour. At the Contractor's option, the original plate may be left in place, and a second plate provided to be centered in the facia.

Proposed Drilled Shafts shall be installed prior to begining construction of soil nailed wall.

Angle nails as necessary to clear existing foundations and structures.

When all rows of nails have been placed, the permanent Concrete Fascia Wall shall be completed.

The permanent concrete facia wall shall be installed within 45 working days of the completion of rock nailing.

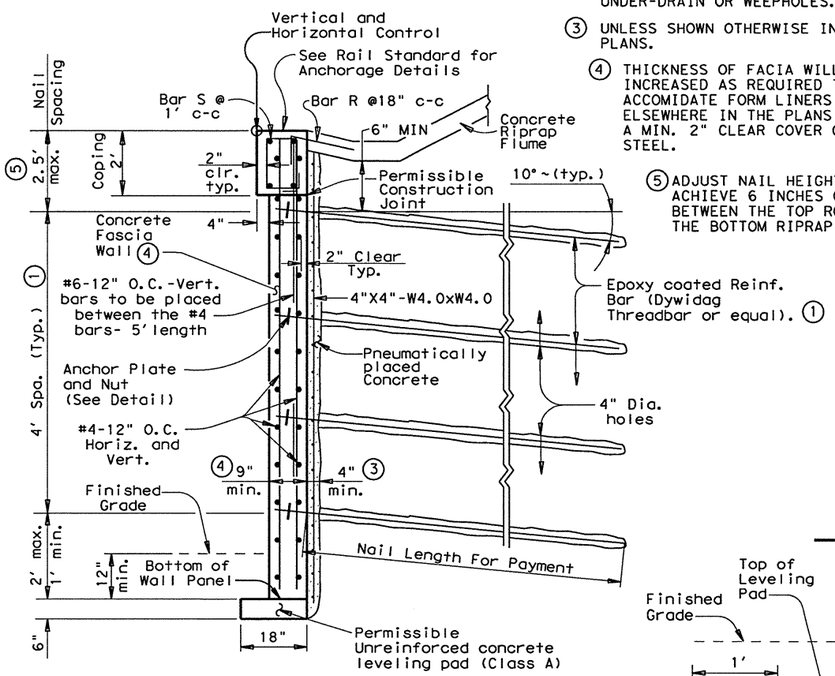

TYPICAL SECTION 1 THROUGH WALL

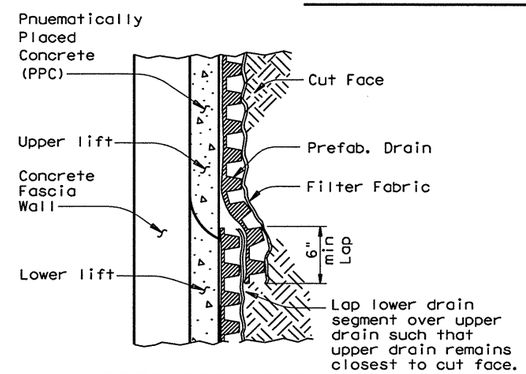

PREFABRICATED DRAINAGE DETAIL

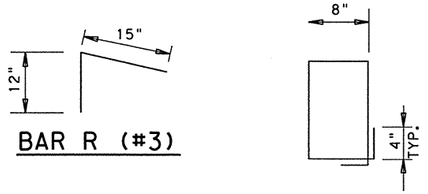

BAR R (#3)

BAR S (#4)

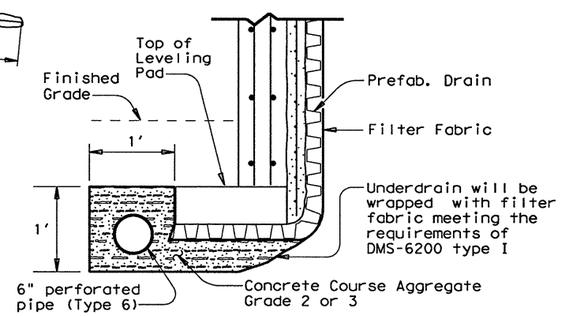

UNDER-DRAIN DETAIL

The underdrain outfall shall be as directed by the engineer. The drainage system will not be paid for directly but will be considered subsidiary to the item "Retaining Walls."

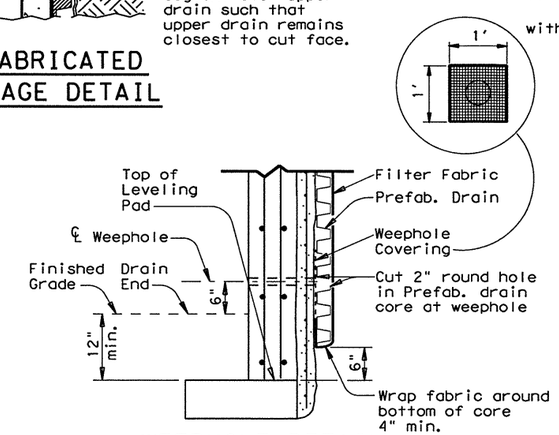

WEEPHOLE DETAIL

Weephole covering shall be one of the following material types:

A. Galvanized steel wire cloth with 12 to 6 mesh, minimum wire diameter 1/16".
B. Stainless steel type 304 or 316 with 1/2" to 1/4" mesh, minimum wire diameter 3/64".
C. Polyethylene or polypropylene geonet with 0.15" min. thickness such as Tensar DN-4 or equal.

The seal appearing on this document was authorized by Jon H. Kilgore, P.E. 73980, on 3/21/11

Jon H. Kilgore, P.E. — P.E. — Date

STATE OF TEXAS — JON H. KILGORE — 73980 — REGISTERED PROFESSIONAL ENGINEER

TEXAS DEPARTMENT OF TRANSPORTATION
BRIDGE DIVISION

ROCK NAIL RETAINING WALL DETAILS

T:\Engdata\Bridge\245201.043\SoilNails\NailDtl.dgn		PREPARED BY AND FOR USE OF Tx DOT				
ORIGINAL DRAWING DATE: FEB 2010	REVISIONS	STATE DISTRICT	FEDERAL REGION	STATE PROJECT		SHEET
DN.:- SDL		SAT				185
CK.:- JHK		COUNTY		CONTROL	SECTION	JOB	HIGHWAY
DW.:- SDL		BEXAR		2452	01	043	SH 151
CK.:- JHK							

© TxDOT FEB. 2011

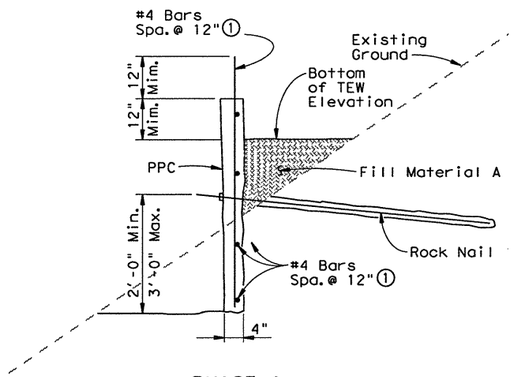

PHASE 1

① REINFORCING IS IN ADDITION TO WWF SHOWN IN ROCK NAIL RETAINING WALL DETAILS.

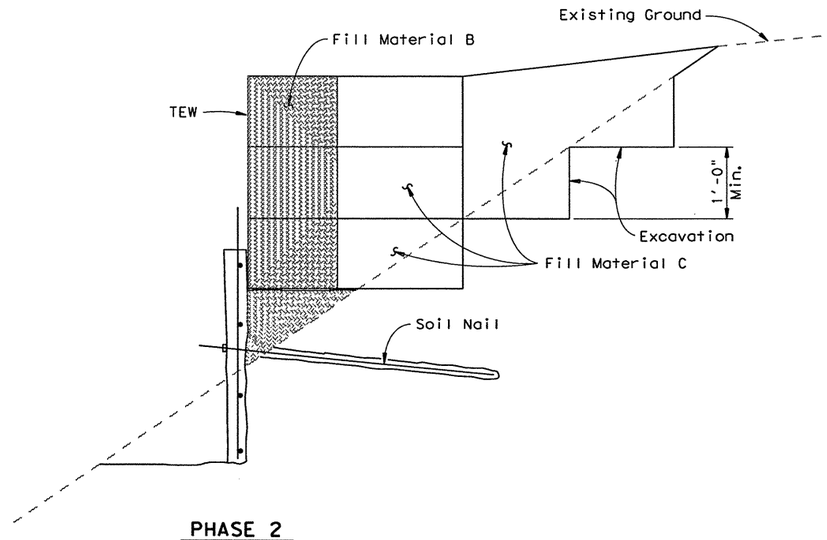

PHASE 2

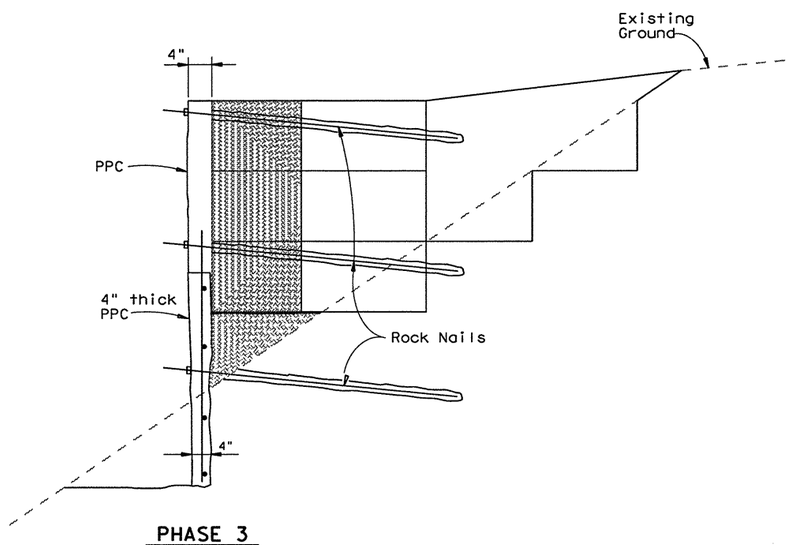

PHASE 3

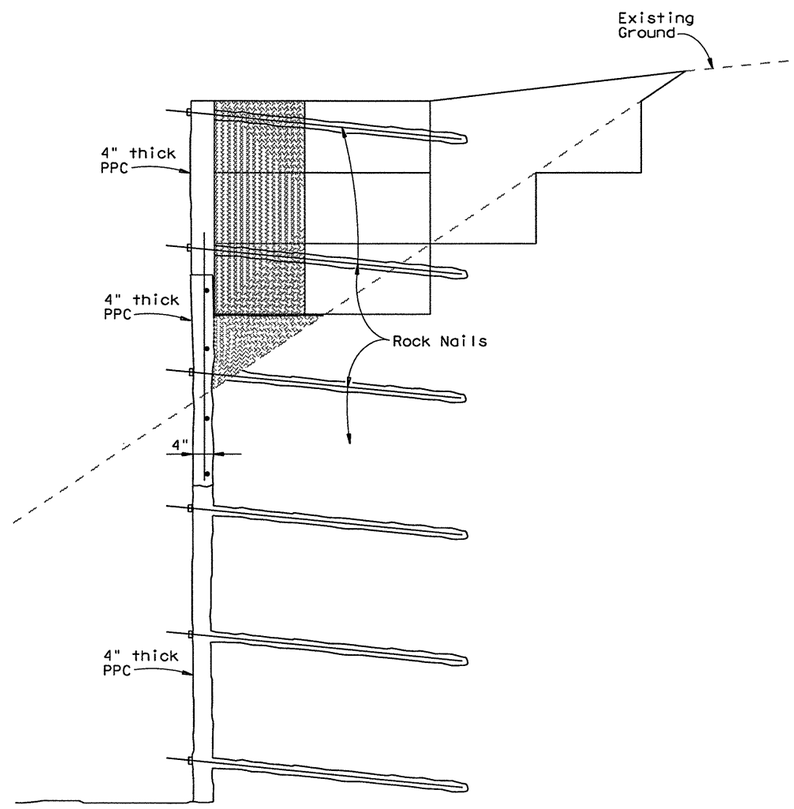

PHASE 4

Construction Sequence:

Phase 1 - Excavate first lift and install first nail in fill portion of wall.
Phase 2 - Construct temporary earth wall (TEW).
Phase 3 - Install nails thru TEW and pneumatically placed concrete (PPC).
Phase 4 - Install remaining nails below TEW and wall fascia as per "Rock Nail Retaining Wall Details".

Material A
Cement stabilized material such as cement stabilized sand, pneumatically placed concrete or other material as approved by the engineer to fill void between face of retaining wall and existing ground.

Material B
Controlled Low Strength Material (CLSM) such as cement stabilized sand that has adequate strength to provide stability to the face of the TEW but permits drilling of rock nails.

Material C
Type C Embankment meeting the following criteria, Plasticity Index (PI) >15 and < 30 and a Liquid Limit (LL) < 45. It should be placed following density control and compacted to a level greater than or equal to 95% of maximum dry density as determined by Tex 114-E.

General Notes:
For all details not shown, refer to "Rock Nail Retaining Wall Details" and RW(TEW).
The contractor may submit for review and approval an alternate retaining wall design sealed by a professional engineer. The use of a hybrid soil nail and mechanically stabilized earth (MSE) system will be permitted, height of the MSE portion of the wall will not exceed 50 percent of the total wall height. Design will meet all TxDOT and AASHTO specifications and guidelines.
All temporary earth walls required to construct the rock nail wall will be subsidiary to pertinent rock nail wall items.

© 2010
Texas Department of Transportation
San Antonio District (Structural Design)

The seal appearing on this document was authorized by Jon H. Kilgore, P.E. 73980, on 3/21/11

STATE OF TEXAS
JON H. KILGORE
73980
REGISTERED PROFESSIONAL ENGINEER

Jon H. Kilgore, P.E. P.E. Date

ROCK NAIL INSTALLATION IN FILL PORTION OF WALL

T:Engdata/Bridge/245201.043/SoilNails/NailDtl.dgn				PREPARED BY AND FOR USE OF TxDoT.			
ORIGINAL DRAWING DATE: FEB. 2011		STATE DISTRICT	FEDERAL REGION	FEDERAL AID PROJECT #			SHEET
DN.: SDL	REVISIONS	SAT	6				185A
CK.: JHK	- -	COUNTY		CONTROL	SECTION	JOB	HIGHWAY
DW.: SDL	- -	BEXAR		2452	01	043	SH 151
CK.: JHK	- -						

p:\4760\0\0129coa\~\standard\0ISstd_rw04.dgn
2/21/2011
5:42:33 PM
mwmldlff

DISCLAIMER:
The use of this standard is governed by the "Texas Engineering Practice Act". No warranty of any kind is made by TxDOT for any purpose whatsoever. TxDOT assumes no responsibility for the conversion of this standard to other formats or for incorrect results or damages resulting from its use.

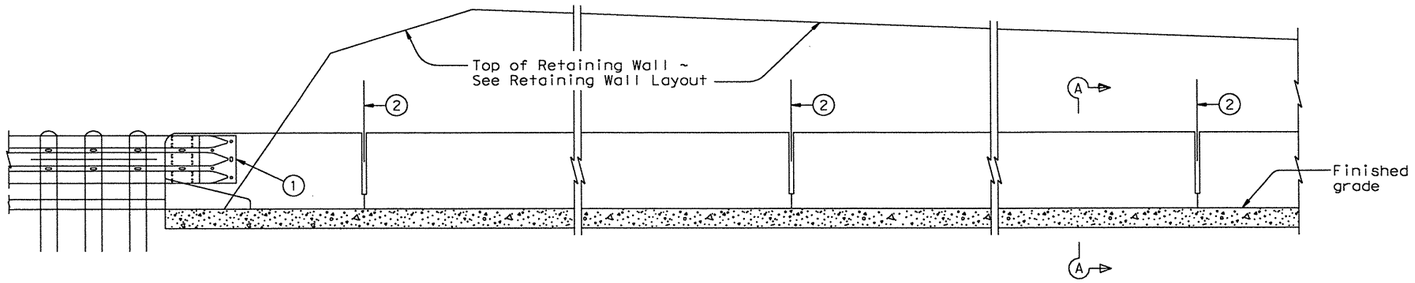

ELEVATION

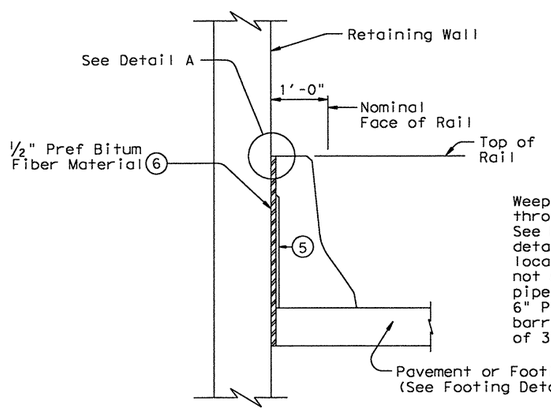

TYPICAL SECTION

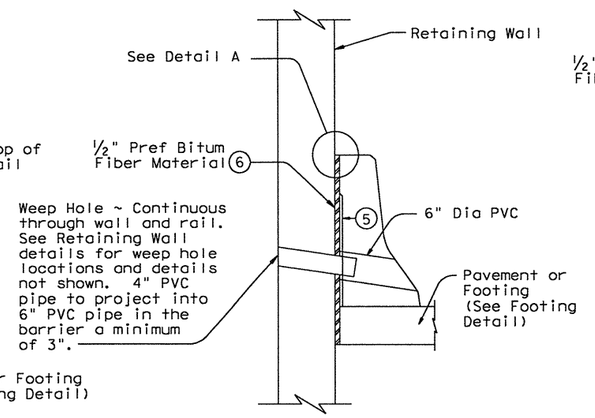

SECTION AT WEEP HOLES

Note: Weep holes must not be placed within 1'-4" of Intermediate Rail Joints. Adjust bar spacing or field bend bars in rail as required to clear weep holes by 1" Min.

SECTIONS A-A

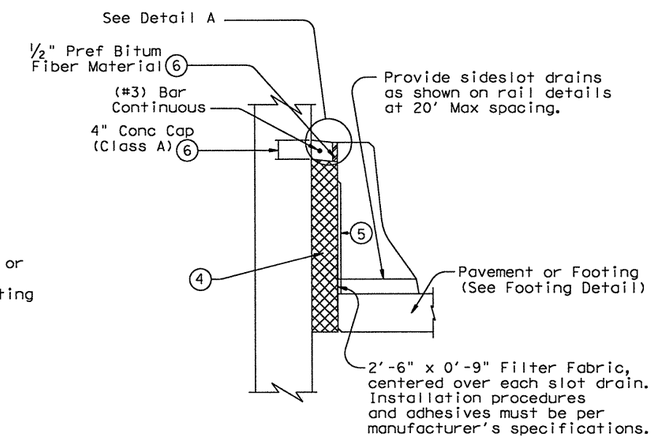

SECTION AT MSE WALLS
WITHOUT DRAINAGE SYSTEM

1. See details elsewhere in plans for rail end treatment.
2. Provide intermediate rail wall joints at intervals not exceeding the requirements shown on the rail details.
3. See rail details for anchorage reinforcement. Use anchorage reinforcement required for bridge decks unless noted otherwise.
4. Clean gravel (¼" - ½"). Example: Concrete Course Aggregate Grades 6,7,8. The width of the backfill will be dependent upon the width of the coping leg (3 ½" Min). Minimum backfill width = Width of front leg of MSE wall coping.
5. Do not recess back of rail as shown on rail details.
6. Place ½" Bituminous Fiber Material and concrete cap continuously behind rail expansion joints and rail intermediate wall joints.

GENERAL NOTES:
These details are for constructing a concrete barrier-type rail against a retaining wall.
All reinforcing steel, concrete, expansion joint material, etc. shown is to be included in unit price of the rail type used.
All concrete for rail footing shall be Class "C".
All reinforcing steel shall be Grade 60.

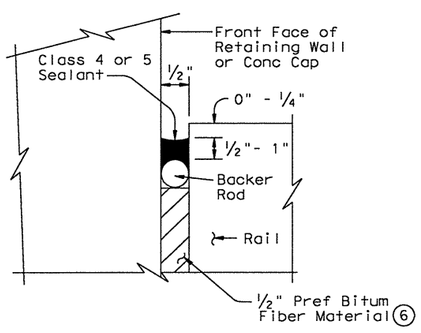

DETAIL A

Place in accordance with Item 438 "Cleaning and/or Sealing Joints and Cracks"

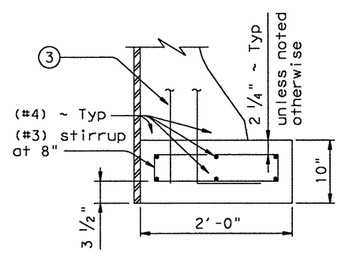

FOOTING DETAIL

Footing for traffic rail required when concrete pavement is not present. This footing is adequate only when back of rail is fully supported by the retaining wall. Use Traffic Rail Foundation standard TRF for other cases.

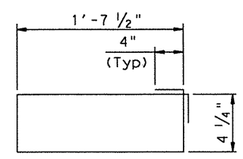

(#3) STIRRUP

Texas Department of Transportation
Bridge Division

RETAINING WALL
TRAFFIC RAIL AT BASE

RW(BTR)

FILE: rwstde13.dgn	DN: TxDOT	CK: TxDOT	DW: TxDOT	CK: TxDOT
© TxDOT March 2010	DISTRICT	FEDERAL AID PROJECT		SHEET
REVISIONS	SA			186

COUNTY	CONTROL	SECT	JOB	HIGHWAY
BEXAR	2452	01	043	SH 151

PATH:
LEVELS DISPLAYED
1

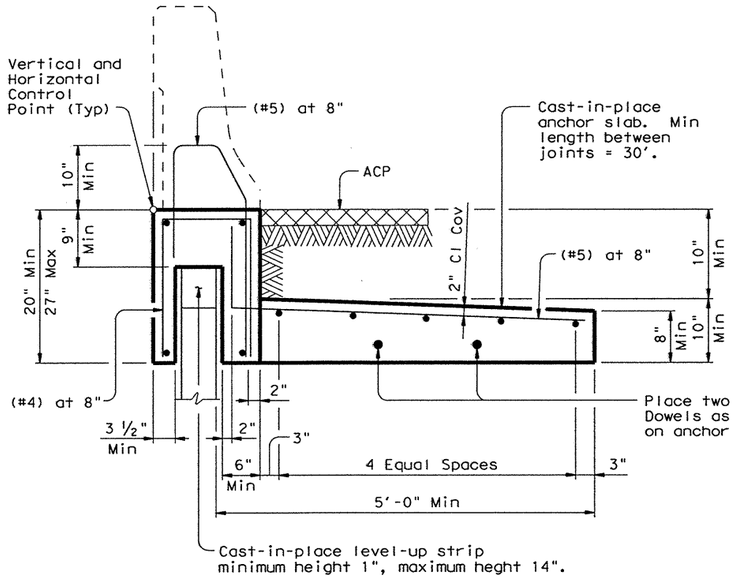

"WIDE BASED" RAILING T551, T552 & SSTR ADJACENT TO ACP

(Showing T551 Rail, other rails listed similar)

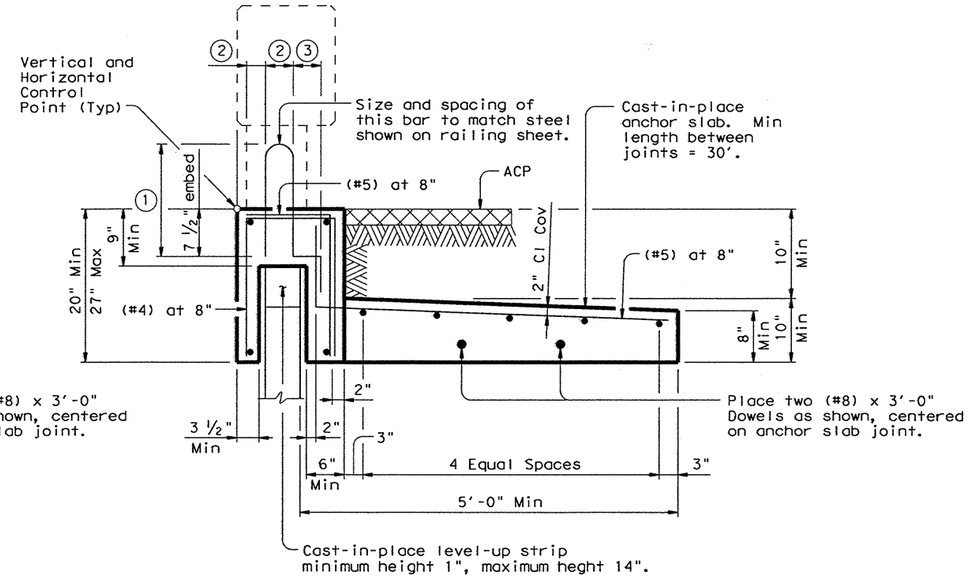

"NARROW BASED" RAILING T1F, T1W, T221, T223, T401, T402, T411, C1W, C221, C223, C402, C411 ADJACENT TO ACP

(Showing T223 Rail, other rails listed similar)

1. Reinforcement length equal to length shown on the appropriate Rail standard plus 1".
2. Match dimension on the appropriate Rail standard.
3. Match dimension on the appropriate Rail standard. Bend end of rail anchorage reinforcing as shown as required to maintain Clear Cover.

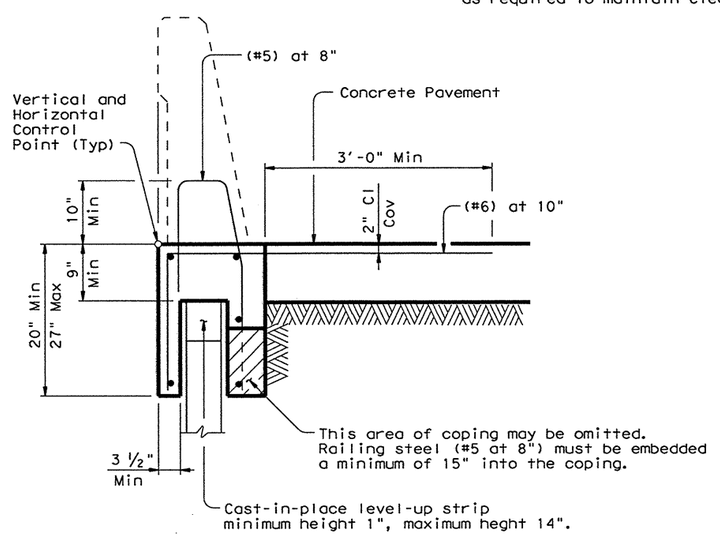

"WIDE BASED" RAILING T551, T552 & SSTR ADJACENT TO CONCRETE PAVEMENT

(Showing SSTR Rail, other rails listed similar)

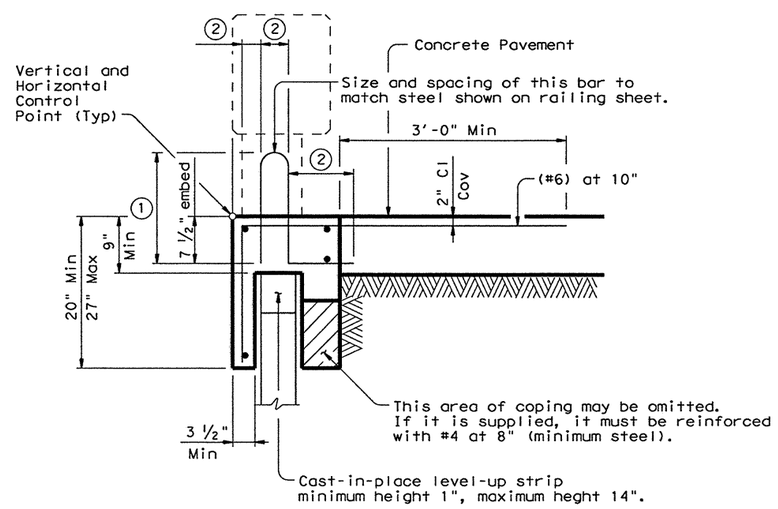

"NARROW BASED" RAILING T1F, T1W, T221, T223, T401, T402, T411, C1W, C221, C223, C402, C411 ADJACENT TO CONCRETE PAVEMENT

(Showing T223 Rail, other rails listed similar)

CAST-IN-PLACE COPINGS:

Casting of the coping directly against the precast panel sides will not be permitted, as this may result in panel cracking. The contractor must use a ¼" (Min) compressible material on both sides of the panel to isolate the coping from the precast panel.

When cast-in-place coping is anchored to reinforced concrete pavement, a smooth level-up strip must be provided on the top of the precast panels. The purpose of the level-up is to allow the pavement and coping to move longitudinally relative to the wall without causing damage.

Railing and coping joints must be provided at 33' maximum spacing. Railing and coping joints must be placed to coincide with precast panel joints.

PRECAST COPINGS:

A smooth level-up strip must be provided on top of the precast panels prior to installation of the coping. Shims may be used on top of the level-up strip to facilitate alignment. Total shim thickness not to exceed 1".

Precast coping must be provided in 10' minimum lengths.

JOINTED CONCRETE PAVEMENT:

When coping is adjacent to and anchored into jointed concrete pavement, the coping joints must coincide with the pavement joints.

JOINT SEALER:

The joints between coping segments must be sealed in accordance with the DMS-6310 "Joint Sealant's and Fillers", joint sealing material, Class 4. The joint must be sealed 3" below and 6" above the adjoining pavement surface, or as directed by the Engineer. The purpose of the joint sealing is to contain surface drainage and prevent infiltration into the retaining wall backfill.

GENERAL NOTES:

Details on this sheet are to be used in development of specific details for mounting traffic railing on mechanically stabilized earth (MSE) walls.

The specific details proposed must have strengths equivalent to those shown on this sheet. Areas of particular importance are the connection of the coping to the railing, the strength of the vertical coping leg connecting the railing to the anchor slab, and the connection of the coping to the anchor slab or concrete pavement.

Shop drawings for the traffic railing foundations must be submitted to the Engineer in accordance with the Item "Retaining Wall". The shop drawings must include bar bending details.

Precasting of the coping or coping and railing will be allowed. The anchor slab, when required, must be cast-in-place.

The Contractor's attention is directed to the fact that various configurations of precast coping/railing combinations are covered by patent. The contractor must provide for use of these systems in accordance with Article 7.3.

Concrete must be Class "C".

All reinforcing steel must be Grade 60.

Longitudinal bars must be (#4), unless otherwise shown.

Coping and anchor slabs must be considered subsidiary to the Item "Retaining Wall". The traffic railing will be paid for by the linear foot for the appropriate railing type.

DISCLAIMER:
The use of this standard is governed by the "Texas Engineering Practice Act". No warranty of any kind is made by TxDOT for any purpose whatsoever. TxDOT assumes no responsibility for the conversion of this standard to other formats or for incorrect results or damages resulting from its use.

PATH:

LEVELS DISPLAYED

1

Texas Department of Transportation
Bridge Division

RETAINING WALL TRAFFIC RAILING FOUNDATIONS

RW(TRF)

FILE: rwstde03.dgn	DN: TxDOT	CK: TxDOT	DW: JTR		CK: MPM
© TxDOT March 2010	DISTRICT	FEDERAL AID PROJECT			SHEET
REVISIONS	SAT				187
	COUNTY		CONTROL	SECT	JOB	HIGHWAY
	BEXAR		2452	01	043	SH 151

Computation Point	Cum. A acres	Cum. C*A	Tc min	Q50 cfs	Q100 cfs
1	31.57	18.96	13.60	204.36	237.85
2	72.37	43.65	15.01	449.62	523.09
3	105.77	62.54	16.46	615.88	716.27
4	7.93	6.60	14.56	68.79	80.04
5	14.88	10.56	14.57	113.56	132.37
6	128.46	77.93	18.76	718.34	835.00

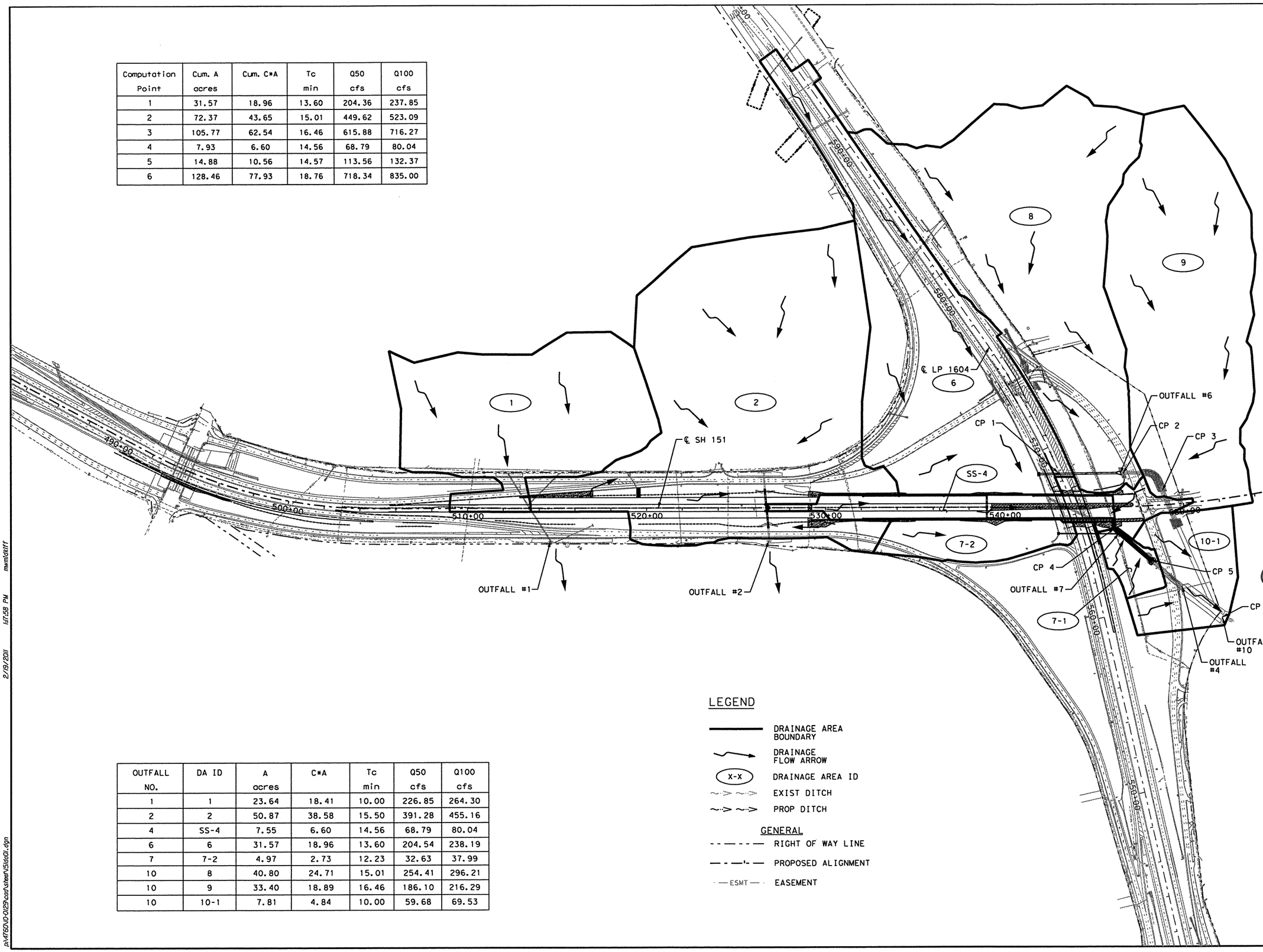

OUTFALL NO.	DA ID	A acres	C*A	Tc min	Q50 cfs	Q100 cfs
1	1	23.64	18.41	10.00	226.85	264.30
2	2	50.87	38.58	15.50	391.28	455.16
4	SS-4	7.55	6.60	14.56	68.79	80.04
6	6	31.57	18.96	13.60	204.54	238.19
7	7-2	4.97	2.73	12.23	32.63	37.99
10	8	40.80	24.71	15.01	254.41	296.21
10	9	33.40	18.89	16.46	186.10	216.29
10	10-1	7.81	4.84	10.00	59.68	69.53

LEGEND

- DRAINAGE AREA BOUNDARY
- DRAINAGE FLOW ARROW
- X-X DRAINAGE AREA ID
- EXIST DITCH
- PROP DITCH

GENERAL

- RIGHT OF WAY LINE
- PROPOSED ALIGNMENT
- ESMT EASEMENT

STATE OF TEXAS
JOHN D. CONQUEST
89243
LICENSED
PROFESSIONAL ENGINEER
2/19/11

NO.	DATE	REVISION DESCRIPTION	APP. BY

© 2011

Texas Department of Transportation

MACTEC
3520 EXECUTIVE CENTER DRIVE
SUITE 200
AUSTIN, TEXAS 78731
(512) 795-0360

REGISTRATION NUMBER: F-1784

SH 151

OVERALL DRAINAGE AREA MAP

(SHEET 1 OF 1)

FED. RD. DIV. NO.			SHEET NO.
			188
STATE	DIST.	COUNTY	
TEXAS	SA	BEXAR	
CONT.	SECT.	JOB	HIGHWAY NO.
2452	01	043	SH 151

p:\4760\0-0129\cad\sheet\5ldo01.dgn 2/19/2011 1:17:58 PM mwmldkiff

OUTFALL NO.	DRAINAGE AREA	A (acre)	RUNOFF C	RUNOFF C_{50}	RUNOFF C_{100}	T_c (min)	I_{50}	I_{100}	Q_{50}	Q_{100}
1	1-2	11.62	0.76	0.91	0.95	10.00	10.27	11.49	108.85	126.81
1	1-1A	10.62	0.80	0.96	1.00	10.00	10.27	11.49	104.72	122.00
1	1-1	1.40	0.77	0.92	0.96	10.00	10.27	11.49	13.29	15.48
2	2-1	5.35	0.71	0.85	0.89	10.00	10.27	11.49	46.71	54.55
2	2-2	1.20	0.55	0.66	0.69	10.00	10.27	11.49	8.13	9.48
2	2-3	9.00	0.73	0.88	0.91	15.50	8.45	9.44	66.64	77.52
2	2-4	35.32	0.78	0.94	0.98	12.00	9.51	10.63	314.45	366.13

LEGEND

DRAINAGE AREA BOUNDARY

DRAINAGE FLOW ARROW

X-X DRAINAGE AREA ID

EXIST DITCH

PROP DITCH

GENERAL

RIGHT OF WAY LINE

PROPOSED ALIGNMENT

ESMT EASEMENT

2/19/11

STATE OF TEXAS
JOHN D. CONQUEST
89243
LICENSED PROFESSIONAL ENGINEER

NO.	DATE	REVISION DESCRIPTION	APP. BY

© 2011

Texas Department of Transportation

MACTEC
3520 EXECUTIVE CENTER DRIVE
SUITE 200
AUSTIN, TEXAS 78731
(512) 795-0360

REGISTRATION NUMBER: F-1784

SH 151

DRAINAGE AREA MAP SH 151 OUTFALL 1 & 2

(SHEET 1 OF 1)

FED. RD. DIV. NO.		SHEET NO.
		189

STATE	DIST.	COUNTY	
TEXAS	SA	BEXAR	
CONT.	SECT.	JOB	HIGHWAY NO.
2452	01	043	SH 151

p:\4760\0-0129\cad\sheet\151da02.dgn 2/19/2011 1:18:05 PM mwmldkiff

OUTFALL NO.	DRAINAGE AREA	A (acre)	RUNOFF C	RUNOFF C_{50}	RUNOFF C_{100}	T_c (min)	I_{50}	I_{100}	Q_{50}	Q_{100}
4	SS-4	7.93	0.83	1.00	1.04	14.56	8.71	9.73	68.79	80.04
6	6-1	5.17	0.60	0.72	0.75	13.40	9.05	10.11	33.70	39.22
6	6-2	26.40	0.60	0.72	0.75	13.60	8.99	10.05	170.90	198.90
7	7-1	1.97	0.55	0.66	0.69	10.00	10.27	11.49	13.35	15.56
7	7-2	4.97	0.58	0.70	0.73	12.23	9.43	10.54	32.63	37.99
10	8-1	7.60	0.63	0.76	0.79	10.00	10.27	11.49	59.01	68.76
10	8-2	33.20	0.60	0.72	0.75	15.01	8.58	9.59	205.19	238.72
10	9-1	0.71	0.64	0.77	0.80	10.00	10.27	11.49	5.60	6.53
10	9-2	1.04	0.68	0.82	0.85	10.00	10.27	11.49	8.72	10.16
10	9-3	31.65	0.56	0.67	0.70	16.46	8.21	9.16	174.56	203.01
10	10-1	7.81	0.62	0.74	0.78	10.00	10.27	11.49	59.68	69.53

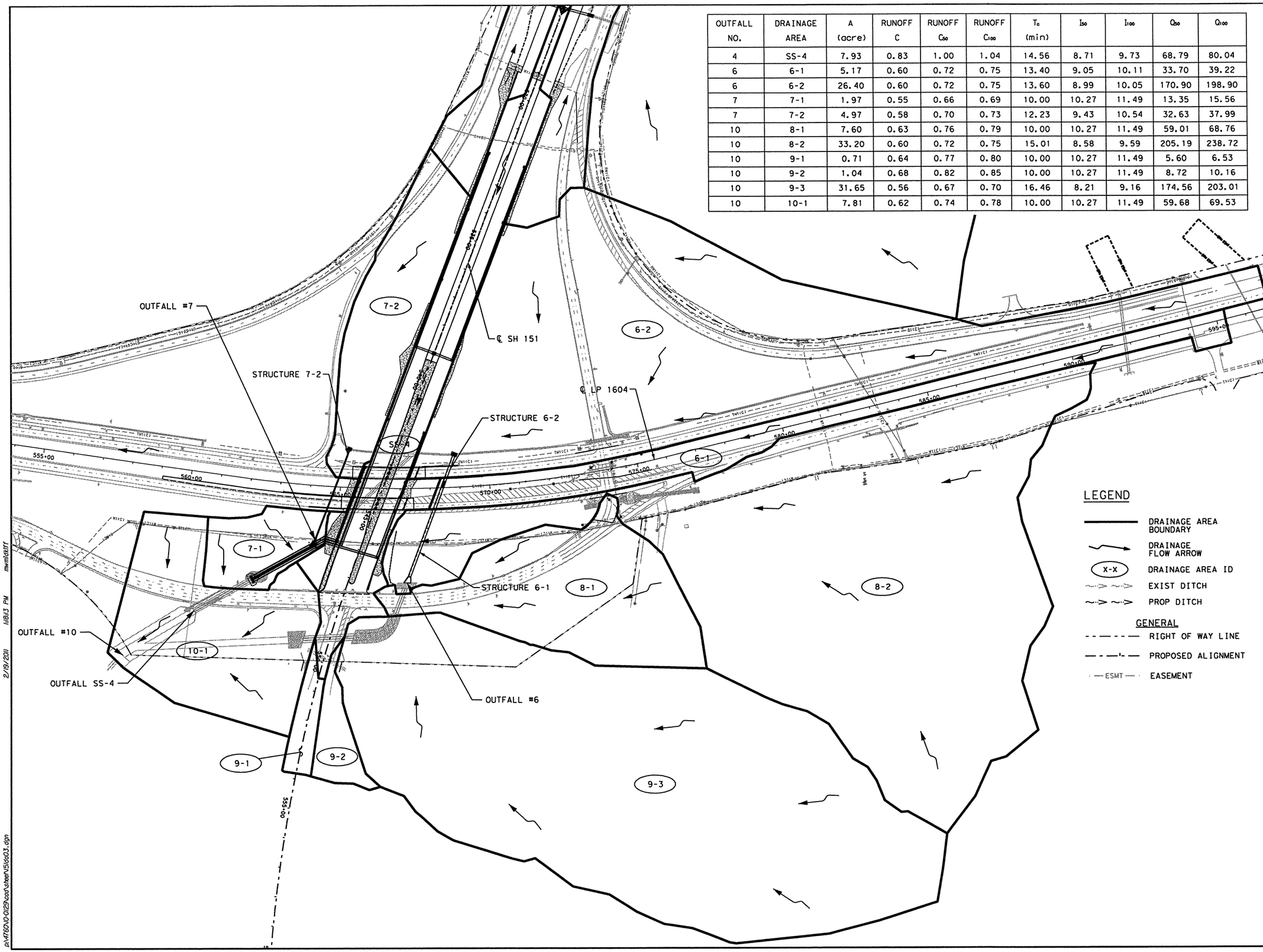

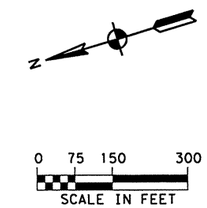

LEGEND

- DRAINAGE AREA BOUNDARY
- DRAINAGE FLOW ARROW
- X-X DRAINAGE AREA ID
- EXIST DITCH
- PROP DITCH

GENERAL

- RIGHT OF WAY LINE
- PROPOSED ALIGNMENT
- ESMT EASEMENT

2/19/11

STATE OF TEXAS
JOHN D. CONQUEST
89243
LICENSED
PROFESSIONAL ENGINEER

NO.	DATE	REVISION DESCRIPTION	APP. BY

© 2011

Texas Department of Transportation

MACTEC
3520 EXECUTIVE CENTER DRIVE
SUITE 200
AUSTIN, TEXAS 78731
(512) 795-0360

REGISTRATION NUMBER: F-1784

SH 151

DRAINAGE AREA MAP LP 1604 OUTFALL 4, 6 & 7

(SHEET 1 OF 1)

FED. RD. DIV. NO.			SHEET NO.
			190
STATE	DIST.	COUNTY	
TEXAS	SA	BEXAR	
CONT.	SECT.	JOB	HIGHWAY NO.
2452	01	043	SH 151

p:\4760\0-0129\cad\sheet\51da03.dgn 2/19/2011 1:18:13 PM mwmldkiff

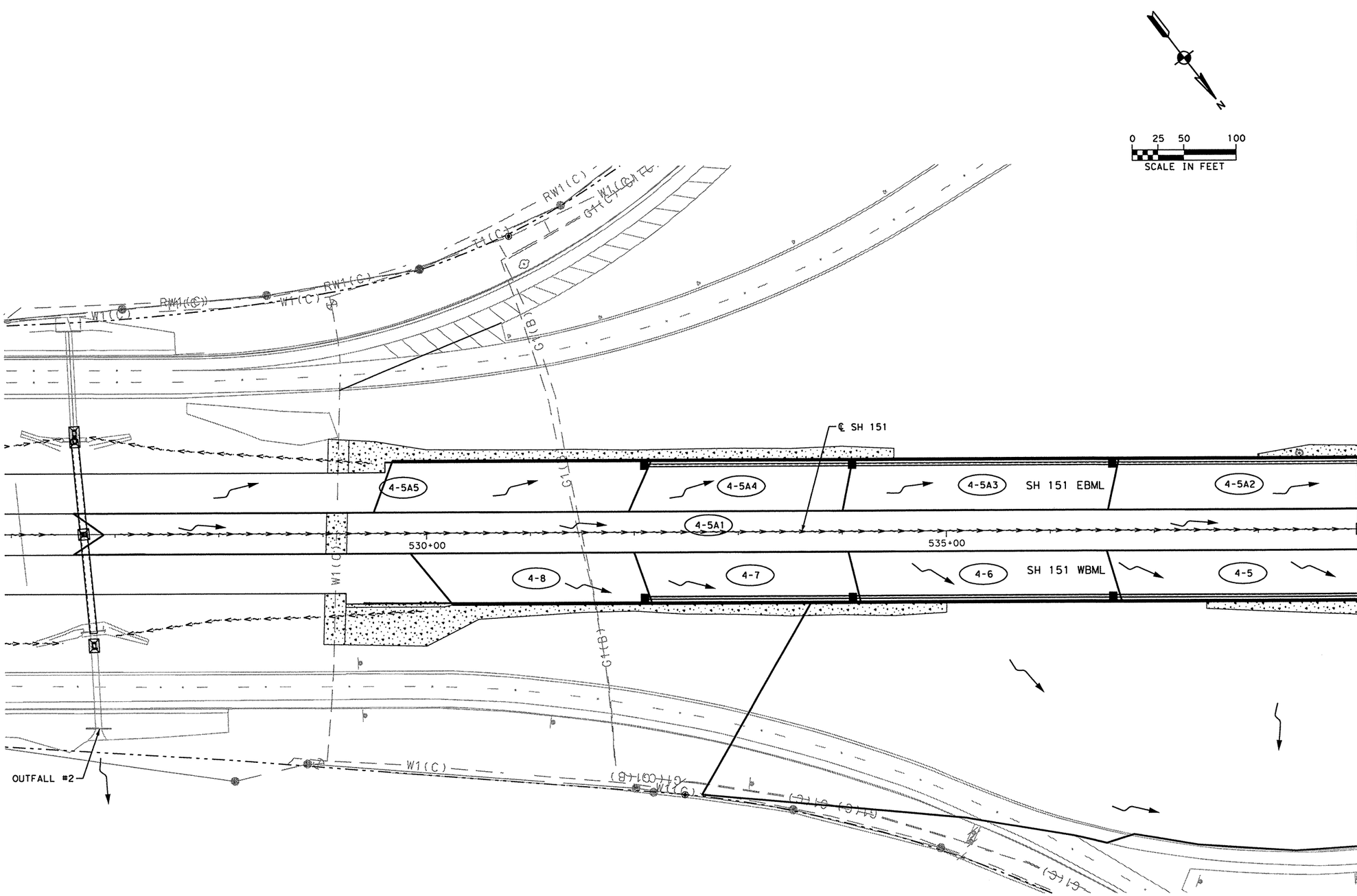

LEGEND

- DRAINAGE AREA BOUNDARY
- DRAINAGE FLOW ARROW
- X-X DRAINAGE AREA ID
- EXIST DITCH
- PROP DITCH

GENERAL

- RIGHT OF WAY LINE
- PROPOSED ALIGNMENT
- ESMT EASEMENT

DRAINAGE AREA CALCULATIONS SEE SHEETS 197 AND 199

2/19/11

STATE OF TEXAS
JOHN D. CONQUEST
89243
LICENSED PROFESSIONAL ENGINEER

NO.	DATE	REVISION DESCRIPTION	APP. BY

© 2011

Texas Department of Transportation

MACTEC
3520 EXECUTIVE CENTER DRIVE
SUITE 200
AUSTIN, TEXAS 78731
(512) 795-0360

REGISTRATION NUMBER: F-1784

SH 151

DRAINAGE AREA MAP STORM SEWER SYSTEMS 3, 4, 4A, 5

(SHEET 1 OF 2)

FED. RD. DIV. NO.			SHEET NO.
			191
STATE	DIST.	COUNTY	
TEXAS	SA	BEXAR	
CONT.	SECT.	JOB	HIGHWAY NO.
2452	01	043	SH 151

p:\4760\0-0129\cad\sheet\5ldda04.dgn 2/19/2011 1:18:20 PM mwmidkiff

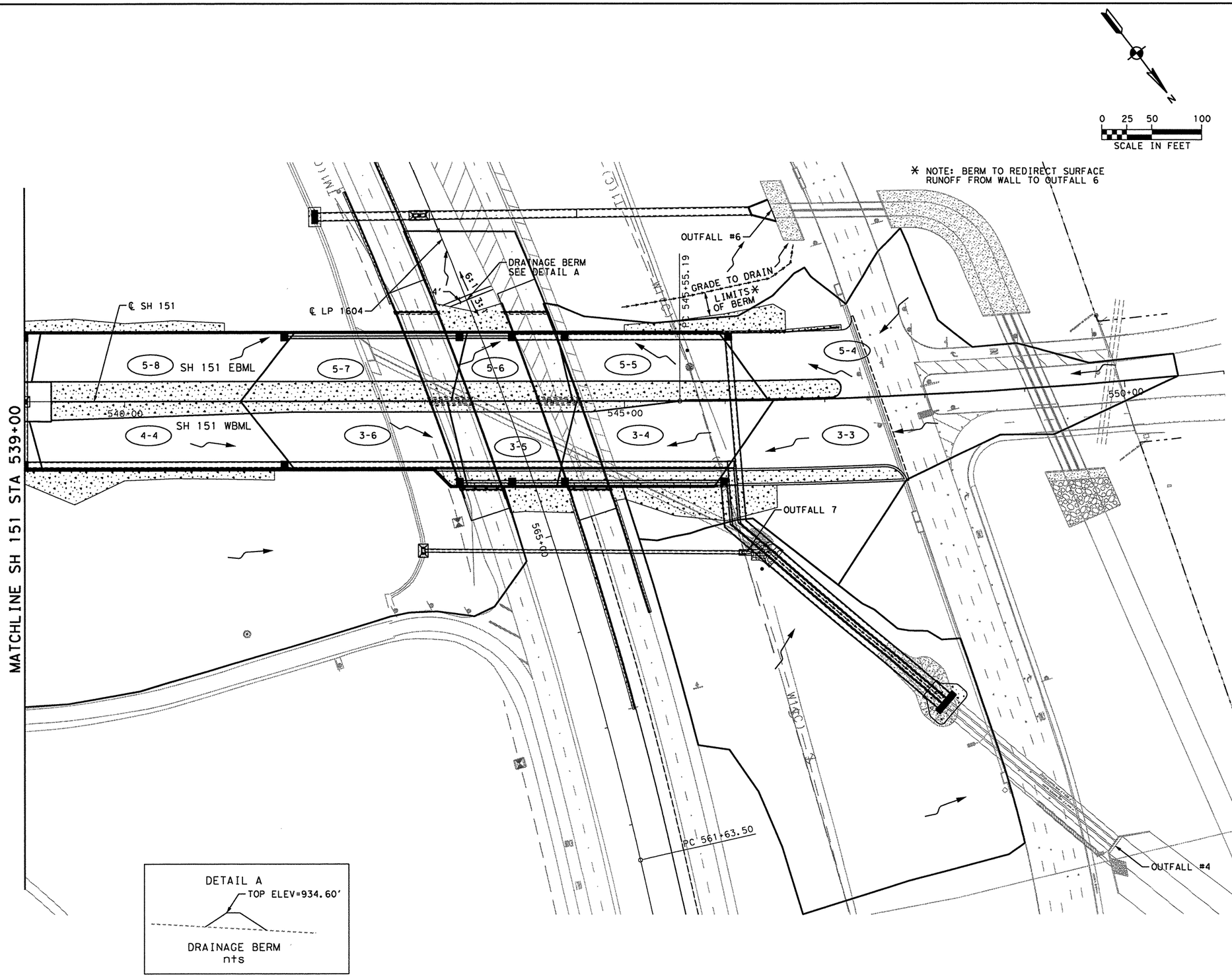

LEGEND

- DRAINAGE AREA BOUNDARY
- DRAINAGE FLOW ARROW
- X-X DRAINAGE AREA ID
- EXIST DITCH
- PROP DITCH

GENERAL

- RIGHT OF WAY LINE
- PROPOSED ALIGNMENT
- ESMT EASEMENT

DRAINAGE AREA CALCULATIONS SEE SHEETS 197 AND 199

2/19/11

STATE OF TEXAS
JOHN D. CONQUEST
89243
LICENSED
PROFESSIONAL ENGINEER

NO.	DATE	REVISION DESCRIPTION	APP. BY

© 2011

Texas Department of Transportation

MACTEC
3520 EXECUTIVE CENTER DRIVE
SUITE 200
AUSTIN, TEXAS 78731
(512) 795-0360

REGISTRATION NUMBER: F-1784

SH 151

DRAINAGE AREA MAP STORM SEWER SYSTEMS 3, 4, 4A, 5

(SHEET 2 OF 2)

FED. RD. DIV. NO.			SHEET NO.
			192
STATE	DIST.	COUNTY	
TEXAS	SA	BEXAR	
CONT.	SECT.	JOB	HIGHWAY NO.
2452	01	043	SH 151

p:\4760\0-0129\cad\sheet\51da05.dgn 2/19/2011 1:18:26 PM mwmidkiff

HYDRAULIC DATA SHEET FOR STRUCTURES UNDER 1500 CFS

(PIPES, PIPE ARCHES & BOX CULVERTS)

STR. NO. / STATION	FREQ. YEAR	"Q" CFS	ALLOW HW (ELEV)	OUTLET CHANNEL W (FT)	SS	N	S FT/FT	TW (ELEV)	SIZE, LENGTH & DESCRIPTION	SLOPE FT/FT	KE	HW (ELEV)	V-OUT FT/SEC	HYDROLOGIC METHOD USED	HEADWATER COMPUTATION METHOD	% FLOW & HEIGHT (M) OVERTOPPING ROAD	% FLOW PASSING THRU CULVERT	REMARKS
OUTFALL 1	50 (DES)	226.85	957.00	EXIST NATURAL GROUND				931.12	EXIST 1 - 4 ft x 4 ft x 448' SBC	BRKN BCK	0.20	950.15	14.18	RATIONAL METHOD	THYSYS CULVERT	0%	100%	EXISTING STRUCTURE TO REMAIN
	100	264.30						931.24				951.88	16.52					
OUTFALL 1A	50 (DES)	102.52	954.00	EXIST NATURAL GROUND				941.50	EXIST 1 - 3 ft x 246' RCP	BRKN BCK	0.50	952.39	14.50	RATIONAL METHOD	THYSYS CULVERT	1%	99%	EXISTING STRUCTURE TO REMAIN
	100	120.44						942.52				955.52	16.81					
OUTFALL 2	50 (DES)	391.28	944.00	EXIST NATURAL GROUND				924.64	1 - 6 ft x 4 ft x 384' SBC	BRKN BCK	0.20	938.36	16.30	RATIONAL METHOD	THYSYS CULVERT	0%	100%	EXISTING HEADWALLS TO REMAIN
	100	455.16						924.72				941.77	18.97					
OUTFALL 6	50 (DES)	204.36	934.40	15.00	4:1	0.02	0.010	916.85	1 - 7 ft x 4 ft x 434' SBC	BRKN BCK	0.20	930.90	22.56	RATIONAL METHOD	GEOPAK DRAINAGE	0%	100%	ALLOW HW: 1 FT BELOW 1604 MAINLANE ELEVATION
	100	237.85						918.23				931.52	23.28					
OUTFALL 7	50 (DES)	32.46	929.80	6.00	3:1	0.03	.0065	918.18	1 - 30" x 327' RCP	0.00128	0.20	928.65	10.86	RATIONAL METHOD	GEOPAK DRAINAGE	0%	100%	
	100	37.80						918.33				929.45	11.21					

2/19/11

STATE OF TEXAS
JOHN D. CONQUEST
89243
LICENSED
PROFESSIONAL ENGINEER

NO.	DATE	REVISION DESCRIPTION	APP. BY

© 2011

Texas Department of Transportation

MACTEC
3520 EXECUTIVE CENTER DRIVE
SUITE 200
AUSTIN, TEXAS 78731
(512) 795-0360

REGISTRATION NUMBER: F-1784

SH 151

CULVERT HYDRAULIC DATA SUMMARY

(SHEET 1 OF 1)

FED. RD. DIV. NO.		SHEET NO.
		193

STATE	DIST.	COUNTY	
TEXAS	SA	BEXAR	
CONT.	SECT.	JOB	HIGHWAY NO.
2452	01	043	SH 151

p:\4760\0-0129\cad\sheet\5thyd01.dgn 2/19/2011 1:18:28 PM mwmldkiff

```
TEXAS HYDRAULIC SYSTEM,          CULVERT  (ver. 1.2. Feb/2002)
                                   Tue Jan 25 09:23:35 2011

                        CULVERT HYDRAULIC COMPUTATIONS
                        ------------------------------
CULVERT NAME:     Outfall 1                    Input Units:  English
PROJECT NAME:     Name                         Output Units: English
                PROJECT CONTROL: CSJ:
                COUNTY:          County
DESCRIPTION:     Description

                ANALYZE   SINGLE     OPENING    CULVERT

                      MATERIAL: CONCRETE
                     SHAPE:     CONCRETE BOX.
                     ENTRANCE: BEVEL 1:1
                  PROFILE:  BROKEN BACK CULVERT

              FREQUENCY: 50 yr     DISCHARGE:   226.85 cfs
              FREQUENCY: 100 yr    DISCHARGE:   264.30 cfs

                   TAILWATER ELEVATION (computed).

                n value:  0.0120        Ke value:  0.2000

CULVERT RISE =  4.00 ft    CULVERT SPAN =   4.00 ft    BARRELS =    1

      INLET  station:       10.00      elevation:      941.80 ft
      OUTLET station:      458.24      elevation:      929.60 ft

                        BROKEN BACK CULVERT CONFIGURATION
                                UPSTREAM                DOWNSTREAM
  Unit    Slope    Length     Sta.     Elev.          Sta.     Elev.
   1     0.09044   129.90     10.00    941.80         139.90   930.10
   2     0.00157   318.34    139.90    930.10         458.24   929.60

            Cross section profile  (XY Coordinates)  ft
        X          Y          X          Y          X          Y
     0.00       935.60       7.28       934.26     17.08      929.60
    22.18       929.60      33.35       934.79     43.47      936.84

              Road profile  (XY Coordinates)  ft
        X          Y          X          Y          X          Y
                  0.00     958.20      50.00     957.00
-------------------------------------------------------------------------
-------------------------------------------------------------------------
                        CULVERT  OUTPUT      RUN NO =>  1
-------------------------------------------------------------------------

              TAILWATER ELEVATION:    931.12 ft (computed).

              ANALYSIS for discharge frequency of :   50 yr

Barls. Qpb  Rise  Span  Length  Max.HW  Calc.HW  HW  Control  Veloc.  Out.depth
                                                elev   elev
       cfs   ft    ft     ft      ft       ft     ft                ft/s     ft
-------------------------------------------------------------------------
  1 226.85  4.00  4.00  448.24    0.00   950.15  8.35 Inlet    14.18    4.00

                 Inlet control depth  =      8.35 ft
                 Outlet control depth =      2.21 ft

       Normal depth    =     1.63 ft    Culvert slope  =     0.02723
       Critical depth =     4.00 ft    Critical slope =     0.01311
       Road top width  => 34.00 ft.  Road pavement type => asphalt
                 Computed Weir Coefficient => 3.00.

                 No discharge over the road.
-------------------------------------------------------------------------
                        CULVERT  OUTPUT      RUN NO =>  2
-------------------------------------------------------------------------

              TAILWATER ELEVATION:    931.24 ft (computed).

              ANALYSIS for discharge frequency of :   100 yr

Barls. Qpb  Rise  Span  Length  Max.HW  Calc.HW  HW  Control  Veloc.  Out.depth
                                                elev   elev
       cfs   ft    ft     ft      ft       ft     ft                ft/s     ft
-------------------------------------------------------------------------
  1 264.30  4.00  4.00  448.24    0.00   951.88 10.08 Inlet    16.52    4.00

                 Inlet control depth  =     10.08 ft
                 Outlet control depth =      2.67 ft

       Normal depth    =     1.83 ft    Culvert slope  =     0.02723
       Critical depth =     4.00 ft    Critical slope =     0.01779
       Road top width  => 34.00 ft.  Road pavement type => asphalt
                 Computed Weir Coefficient => 3.00.

                 No discharge over the road.
-------------------------------------------------------------------------

                 RUNING MESSAGES LIST:

          NORMAL TERMINATION OF THYSYS,  CULVERT.
```

Bentley FlowMaster [08.01.071.00]
INLET CALCS

DROP INLET 1-1 50 YR
Project Description

Solve For	Spread

Input Data

Discharge	13.30 cfs
Left Side Slope	4.00 ft/ft (H:V)
Right Side Slope	6.00 ft/ft (H:V)
Bottom Width	6.00 ft
Grate Width	1.50 ft
Grate Length	3.50 ft
Local Depression	0.00 in
Local Depression Width	0.00 ft
Grate Type	P-50 mm x 100 mm (P-1-7/8"-4")
Clogging	50.00 %

Results

Spread	19.89 ft
Depth	1.39 ft
Wetted Perimeter	20.17 ft
Top Width	19.89 ft
Open Grate Area	2.10 sf
Active Grate Weir Length	8.50 ft

DROP INLET 1-1 CHECK 100 YR
Project Description

Solve For	Spread

Input Data

Discharge	15.50 cfs
Left Side Slope	4.00 ft/ft (H:V)
Right Side Slope	6.00 ft/ft (H:V)
Bottom Width	6.00 ft
Grate Width	1.50 ft
Grate Length	3.50 ft
Local Depression	0.00 in
Local Depression Width	0.00 ft
Grate Type	P-50 mm x 100 mm (P-1-7/8"-4")
Clogging	50.00 %

Results

Spread	24.86 ft
Depth	1.89 ft
Wetted Perimeter	25.25 ft
Top Width	24.86 ft
Open Grate Area	2.10 sf
Active Grate Weir Length	8.50 ft

2/19/12

STATE OF TEXAS
JOHN D. CONQUEST
89243
LICENSED
PROFESSIONAL ENGINEER

John Conquest PE

NO.	DATE	REVISION DESCRIPTION	APP. BY

© 2011

Texas Department of Transportation

MACTEC
3520 EXECUTIVE CENTER DRIVE
SUITE 200
AUSTIN, TEXAS 78731
(512) 795-0360
REGISTRATION NUMBER: F-1784

SH 151

CULVERT HYDRAULIC DATA OUTFALL 1

(SHEET 1 OF 1)

FED. RD. DIV. NO.			SHEET NO.
			194
STATE	DIST.	COUNTY	
TEXAS	SA	BEXAR	
CONT.	SECT.	JOB	HIGHWAY NO.
2452	01	043	SH 151

p:\4760\0-0129\cad\Steel\Sitly04.dgn 2/19/2011 1:48:30 PM mwmldktff

```
TEXAS HYDRAULIC SYSTEM,          CULVERT  (ver. 1.2. Feb/2002)
                                   Wed Feb 02 07:49:31 2011

                    CULVERT HYDRAULIC COMPUTATIONS
                    ------------------------------
CULVERT NAME:    Outfall 2                    Input Units:  English
PROJECT NAME:    Name                         Output Units: English
              PROJECT CONTROL: CSJ:
              COUNTY:          County
DESCRIPTION:     Description

              ANALYZE   SINGLE    OPENING    CULVERT

                   MATERIAL: CONCRETE
                  SHAPE:    CONCRETE BOX.
                  ENTRANCE: BEVEL 1:1.5
              PROFILE:  BROKEN BACK CULVERT

            FREQUENCY: 50 yr     DISCHARGE:   391.28 cfs
            FREQUENCY: 100 yr    DISCHARGE:   455.16 cfs

                TAILWATER ELEVATION (computed).

             n value:  0.0120        Ke value:  0.2000

CULVERT RISE =  4.00 ft    CULVERT SPAN =   6.00 ft    BARRELS =    1

      INLET  station:      10.00      elevation:     926.64 ft
      OUTLET station:     393.68      elevation:     923.44 ft

                   BROKEN BACK CULVERT CONFIGURATION
                          UPSTREAM                DOWNSTREAM
  Unit    Slope    Length    Sta.     Elev.        Sta.     Elev.
   1     0.00598   103.70    10.00    926.64      113.70    926.02
   2     0.01120   187.50   113.70    926.02      301.20    923.92
   3     0.00519    92.48   301.20    923.92      393.68    923.44

          Cross section profile  (XY Coordinates)  ft
       X        Y        X        Y        X        Y
    0.00      928.60    32.50    927.56    73.70    923.42
   78.50      923.40   139.00    929.07   225.00    929.80

           Road profile  (XY Coordinates)  ft
       X        Y        X        Y        X        Y
                0.00    944.50    50.00    944.00
-------------------------------------------------------------------------
-------------------------------------------------------------------------
                   CULVERT  OUTPUT      RUN NO =>  1
-------------------------------------------------------------------------

              TAILWATER ELEVATION:     924.64 ft (computed).

              ANALYSIS for discharge frequency of :    50 yr

Barls. Qpb  Rise  Span  Length  Max.HW  Calc.HW  HW  Control  Veloc.  Out.depth
                                                elev   elev
       cfs   ft    ft     ft      ft       ft     ft                ft/s     ft
-------------------------------------------------------------------------
  1 391.28  4.00  6.00  383.68   0.00   938.36 11.72 Inlet    16.30    4.00

                 Inlet control depth  =      11.72 ft
                 Outlet control depth =       6.02 ft

        Normal depth    =      4.00 ft    Culvert slope  =      0.00834
        Critical depth  =      4.00 ft    Critical slope =      0.01359
        Road top width  => 34.00 ft.  Road pavement type => asphalt
                   Computed Weir Coefficient => 3.00.

                  No discharge over the road.
-------------------------------------------------------------------------
                   CULVERT  OUTPUT      RUN NO =>  2
-------------------------------------------------------------------------

              TAILWATER ELEVATION:     924.72 ft (computed).

              ANALYSIS for discharge frequency of :   100 yr

Barls. Qpb  Rise  Span  Length  Max.HW  Calc.HW  HW  Control  Veloc.  Out.depth
                                                elev   elev
       cfs   ft    ft     ft      ft       ft     ft                ft/s     ft
-------------------------------------------------------------------------
  1 455.16  4.00  6.00  383.68   0.00   941.77 15.13 Inlet    18.97    4.00

                 Inlet control depth  =      15.13 ft
                 Outlet control depth =       7.86 ft

        Normal depth    =      4.00 ft    Culvert slope  =      0.00834
        Critical depth  =      4.00 ft    Critical slope =      0.01839
        Road top width  => 34.00 ft.  Road pavement type => asphalt
                   Computed Weir Coefficient => 3.00.

                  No discharge over the road.
-------------------------------------------------------------------------

                   RUNING MESSAGES LIST:

          NORMAL TERMINATION OF THYSYS,  CULVERT.
```

Bentley FlowMaster [08.01.071.00]
INLET CALCS

DROP INLET 2-1 50 YR

Project Description

Solve For	Spread

Input Data

Discharge	47.00 cfs
Left Side Slope	6.00 ft/ft (H:V)
Right Side Slope	3.00 ft/ft (H:V)
Bottom Width	7.00 ft
Grate Width	2.50 ft
Grate Length	4.00 ft
Local Depression	0.00 in
Local Depression Width	0.00 ft
Grate Type	P-50 mm (P-1-7/8")
Clogging	50.00 %

Results

Spread	40.99 ft
Depth	3.78 ft
Wetted Perimeter	41.91 ft
Top Width	40.99 ft
Open Grate Area	4.50 sf
Active Grate Weir Length	10.50 ft

DROP INLET 2-1 100 YR

Project Description

Solve For	Spread

Input Data

Discharge	54.55 cfs
Left Side Slope	6.00 ft/ft (H:V)
Right Side Slope	3.00 ft/ft (H:V)
Bottom Width	7.00 ft
Grate Width	2.50 ft
Grate Length	4.00 ft
Local Depression	0.00 in
Local Depression Width	0.00 ft
Grate Type	P-50 mm (P-1-7/8")
Clogging	50.00 %

Results

Spread	52.78 ft
Depth	5.09 ft
Wetted Perimeter	54.03 ft
Top Width	52.78 ft
Open Grate Area	4.50 sf
Active Grate Weir Length	10.50 ft

DROP INLET 2-2 50 YR

Project Description

Solve For	Spread

Input Data

Discharge	8.13 cfs
Left Side Slope	6.00 ft/ft (H:V)
Right Side Slope	6.00 ft/ft (H:V)
Bottom Width	4.00 ft
Grate Width	1.50 ft
Grate Length	3.50 ft
Local Depression	0.00 in
Local Depression Width	0.00 ft
Grate Type	P-50 mm x 100 mm (P-1-7/8"-4")
Clogging	50.00 %

Results

Spread	10.23 ft
Depth	0.52 ft
Wetted Perimeter	10.31 ft
Top Width	10.23 ft
Open Grate Area	2.10 sf
Active Grate Weir Length	8.50 ft

DROP INLET 2-2 100 YR

Project Description

Solve For	Spread

Input Data

Discharge	9.50 cfs
Left Side Slope	6.00 ft/ft (H:V)
Right Side Slope	6.00 ft/ft (H:V)
Bottom Width	4.00 ft
Grate Width	1.50 ft
Grate Length	3.50 ft
Local Depression	0.00 in
Local Depression Width	0.00 ft
Grate Type	P-50 mm x 100 mm (P-1-7/8"-4")
Clogging	50.00 %

Results

Spread	12.50 ft
Depth	0.71 ft
Wetted Perimeter	12.62 ft
Top Width	12.50 ft
Open Grate Area	2.10 sf
Active Grate Weir Length	8.50 ft

DROP INLET 2-3 50 YR

Project Description

Solve For	Spread

Input Data

Discharge	66.70 cfs
Left Side Slope	3.00 ft/ft (H:V)
Right Side Slope	6.00 ft/ft (H:V)
Bottom Width	8.00 ft
Grate Width	5.00 ft
Grate Length	4.00 ft
Local Depression	0.00 in
Local Depression Width	0.00 ft
Grate Type	P-50 mm (P-1-7/8")
Clogging	50.00 %

Results

Spread	25.11 ft
Depth	1.90 ft
Wetted Perimeter	25.58 ft
Top Width	25.11 ft
Open Grate Area	9.00 sf
Active Grate Weir Length	13.00 ft

DROP INLET 2-3 100 YR

Project Description

Solve For	Spread

Input Data

Discharge	77.50 cfs
Left Side Slope	3.00 ft/ft (H:V)
Right Side Slope	6.00 ft/ft (H:V)
Bottom Width	8.00 ft
Grate Width	5.00 ft
Grate Length	4.00 ft
Local Depression	0.00 in
Local Depression Width	0.00 ft
Grate Type	P-50 mm (P-1-7/8")
Clogging	50.00 %

Results

Spread	31.10 ft
Depth	2.57 ft
Wetted Perimeter	31.73 ft
Top Width	31.10 ft
Open Grate Area	9.00 sf
Active Grate Weir Length	13.00 ft

STATE OF TEXAS
JOHN D. CONQUEST
89243
LICENSED
PROFESSIONAL ENGINEER
2/19/11

NO.	DATE	REVISION DESCRIPTION	APP. BY

© 2011

Texas Department of Transportation

MACTEC
3520 EXECUTIVE CENTER DRIVE
SUITE 200
AUSTIN, TEXAS 78731
(512) 795-0360
REGISTRATION NUMBER: F-1784

SH 151

CULVERT HYDRAULIC DATA OUTFALL 2

(SHEET 1 OF 1)

FED. RD. DIV. NO.			SHEET NO.
			195
STATE	DIST.	COUNTY	
TEXAS	SA	BEXAR	
CONT.	SECT.	JOB	HIGHWAY NO.
2452	01	043	SH 151

p:\4760\0-0129\cad\sheet\151hyd05.dgn 2/19/2011 1:18:31 PM mwmldtlf

Bentley FlowMaster [08.01.071.00]
INLET CALCS

DROP INLET 6-1 50 YR

Project Description

Solve For	Spread

Input Data

Discharge	33.70 cfs
Left Side Slope	4.00 ft/ft (H:V)
Right Side Slope	6.00 ft/ft (H:V)
Bottom Width	14.00 ft
Grate Width	8.00 ft
Grate Length	2.50 ft
Local Depression	0.00 in
Local Depression Width	0.00 ft
Grate Type	P-50 mm x 100 mm (P-1-7/8"-4")
Clogging	50.00 %

Results

Spread	23.07 ft
Depth	0.91 ft
Wetted Perimeter	23.26 ft
Top Width	23.07 ft
Open Grate Area	8.00 sf
Active Grate Weir Length	

DROP INLET 6-1 100 YR

Project Description

Solve For	Spread

Input Data

Discharge	39.22 cfs
Left Side Slope	4.00 ft/ft (H:V)
Right Side Slope	6.00 ft/ft (H:V)
Bottom Width	14.00 ft
Grate Width	8.00 ft
Grate Length	2.50 ft
Local Depression	0.00 in
Local Depression Width	0.00 ft
Grate Type	P-50 mm x 100 mm (P-1-7/8"-4")
Clogging	50.00 %

Results

Spread	24.04 ft
Depth	1.00 ft
Wetted Perimeter	24.24 ft
Top Width	24.04 ft
Open Grate Area	8 sf
Active Grate Weir Length	13.00 ft

DROP INLET 6-2 50 YR

Project Description

Solve For	Spread

Input Data

Discharge	171.00 cfs
Left Side Slope	4.00 ft/ft (H:V)
Right Side Slope	4.00 ft/ft (H:V)
Bottom Width	6.00 ft
Grate Width	5.00 ft
Grate Length	12.00 ft
Local Depression	0.00 in
Local Depression Width	0.00 ft
Grate Type	P-50 mm x 100 mm (P-1-7/8"-4")
Clogging	50.00 %

Results

Spread	20.06 ft
Depth	1.76 ft
Wetted Perimeter	20.49 ft
Top Width	20.06 ft
Open Grate Area	24.00 sf
Active Grate Weir Length	29.00 ft

DROP INLET 6-2 100 YR

Project Description

Solve For	Spread

Input Data

Discharge	199.00 cfs
Left Side Slope	4.00 ft/ft (H:V)
Right Side Slope	4.00 ft/ft (H:V)
Bottom Width	6.00 ft
Grate Width	5.00 ft
Grate Length	12.00 ft
Local Depression	0.00 in
Local Depression Width	0.00 ft
Grate Type	P-50 mm x 100 mm (P-1-7/8"-4")
Clogging	50.00 %

Results

Spread	25.04 ft
Depth	2.38 ft
Wetted Perimeter	25.63 ft
Top Width	25.04 ft
Open Grate Area	24.00 sf
Active Grate Weir Length	29.00 ft

CUMULATIVE JUNCTION COMPUTATION FOR 50 YR

DRAINAGE NODE ID	NODE TYPE	CUMULATIVE C VALUE	CUMULATIVE DRAINAGE AREA (AC)	CUMULATIVE Tc (MIN)	CUMULATIVE INTENSITY (IN/HR)	SUPPLIED DISCHARGE (CFS)	CUMULATIVE DISCHARGE (CFS)
6-OUT	Outlet	0	0	0.54	0.00	0.00	0
6--1a	Junction	0	0	0.42	0.00	0.00	204.7
6--1	Junction	0	0	0.18	0.00	33.70	204.7
6--2	Junction	0	0	0.00	0.00	171.00	171

LINK COMPUTATION FOR 50 YR

DRAINAGE LINK ID	UPSTREAM NODE ID	DOWNSTREAM NODE ID	INVERT UPSTREAM (ELEV)	INVERT DOWNSTREAM (ELEV)	HGL UPSTREAM (ELEV)	HGL DOWNSTREAM (ELEV)	SHAPE	LINK TYPE	LINK	NUMBER OF BARRELS	SPAN (FT)	RISE (FT)	ACTUAL LENGTH (FT)	ACTUAL SLOPE (%)	FRICTION SLOPE (%)	MANNING'S "n" VALUE	UNIFORM DEPTH (FT)	ACTUAL DEPTH (FT)	UNIFORM VELOCITY (FPS)	ACTUAL VELOCITY (FPS)	DISCHARGE (CFS) (CFS)	CAPACITY (CFS) (CFS)
6--1a	6--1a	6-OUT	919.37	910.71	922.36	912.01	Box	Pipe	Concrete	1	7	4	173.48	4.994	5.000	0.012	1.16	1.30	25.25	22.56	204.70	910.01
6--1	6--1	6--1a	919.98	919.37	923.10	922.17	Box	Pipe	Concrete	1	7	4	152.71	0.4	0.400	0.012	2.78	2.79	10.50	10.47	204.70	257.44
6--2	6--2	6--1	920.42	919.98	924.96	922.44	Box	Pipe	Concrete	1	7	4	109.18	0.4	0.400	0.012	2.44	2.46	10.00	9.93	171.00	257.50

CUMULATIVE JUNCTION COMPUTATION FOR 100 YR

DRAINAGE NODE ID	NODE TYPE	CUMULATIVE C VALUE	CUMULATIVE DRAINAGE AREA (AC)	CUMULATIVE Tc (MIN)	CUMULATIVE INTENSITY (IN/HR)	SUPPLIED DISCHARGE (CFS)	CUMULATIVE DISCHARGE (CFS)
6-OUT	Outlet	0	0	0.51	0.00	0.00	0
6--1a	Junction	0	0	0.41	0.00	0.00	238.22
6--1	Junction	0	0	0.17	0.00	39.22	238.22
6--2	Junction	0	0	0.00	0.00	199.00	199

LINK COMPUTATION FOR 100 YR

DRAINAGE LINK ID	UPSTREAM NODE ID	DOWNSTREAM NODE ID	INVERT UPSTREAM (ELEV)	INVERT DOWNSTREAM (ELEV)	HGL UPSTREAM (ELEV)	HGL DOWNSTREAM (ELEV)	SHAPE	LINK TYPE	LINK	NUMBER OF BARRELS	SPAN (FT)	RISE (FT)	ACTUAL LENGTH (FT)	ACTUAL SLOPE (%)	FRICTION SLOPE (%)	MANNING'S "n" VALUE	UNIFORM DEPTH (FT)	ACTUAL DEPTH (FT)	UNIFORM VELOCITY (FPS)	ACTUAL VELOCITY (FPS)	DISCHARGE (CFS) (CFS)	CAPACITY (CFS) (CFS)
6--1a	6--1a	6-OUT	919.37	910.71	922.68	912.17	Box	Pipe	Concret	1	7	4	173.48	4.994	5.000	0.012	1.28	1.46	26.55	23.28	238.22	910.01
6--1	6--1	6--1a	919.98	919.37	923.43	922.49	Box	Pipe	Concret	1	7	4	152.71	0.4	0.400	0.012	3.09	3.12	11.00	10.91	238.22	257.44
6--2	6--2	6--1	920.42	919.98	925.54	922.73	Box	Pipe	Concret	1	7	4	109.18	0.4	0.400	0.012	2.72	2.74	10.44	10.37	199.00	257.50

2/19/11

STATE OF TEXAS
JOHN D. CONQUEST
89243
LICENSED
PROFESSIONAL ENGINEER

John Conquest PE

NO.	DATE	REVISION DESCRIPTION	APP. BY

© 2011

Texas Department of Transportation

MACTEC
3520 EXECUTIVE CENTER DRIVE
SUITE 200
AUSTIN, TEXAS 78731
(512) 795-0360

REGISTRATION NUMBER: F-1784

SH 151

CULVERT HYDRAULIC DATA OUTFALL 6

(SHEET 1 OF 1)

FED. RD. DIV. NO.			SHEET NO.
			196
STATE	DIST.	COUNTY	
TEXAS	SA	BEXAR	
CONT.	SECT.	JOB	HIGHWAY NO.
2452	01	043	SH 151

p:\4760\0-01\25\cad\sheet\51hyd06.dgn 2/19/2011 1:18:32 PM mvmldkt11

DROP INLET 4-5A-1 50 YR
Project Description

Solve For	Spread

Input Data

Discharge	7.57 cfs
Left Side Slope	6.00 ft/ft (H:V)
Right Side Slope	6.00 ft/ft (H:V)
Bottom Width	4.50 ft
Grate Width	1.50 ft
Grate Length	3.50 ft
Local Depression	0.00 in
Local Depression Width	0.00 ft
Grate Type	P-50 mm x 100 mm (P-1-7/8"-4")
Clogging	50.00 %

Results

Spread	9.90 ft
Depth	0.45 ft
Wetted Perimeter	9.97 ft
Top Width	9.90 ft
Open Grate Area	2.10 sqft
Active Grate Weir Length	8.50 ft

DROP INLET 4-1 50 YR
Project Description

Solve For	Spread

Input Data

Discharge	44.00 cfs
Left Side Slope	3.00 ft/ft (H:V)
Right Side Slope	3.00 ft/ft (H:V)
Bottom Width	24.00 ft
Grate Width	5.00 ft
Grate Length	24.00 ft
Local Depression	0.00 in
Local Depression Width	0.00 ft
Grate Type	P-50 mm x 100 mm (P-1-7/8"-4")
Clogging	50.00 %

Results

Spread	26.55 ft
Depth	0.42 ft
Wetted Perimeter	26.69 ft
Top Width	26.55 ft
Open Grate Area	48.00 sf
Active Grate Weir Length	53.00 ft

DROP INLET 7-2 50 YR
Project Description

Solve For	Spread

Input Data

Discharge	32.50 cfs
Left Side Slope	6.00 ft/ft (H:V)
Right Side Slope	6.00 ft/ft (H:V)
Bottom Width	6.00 ft
Grate Width	2.50 ft
Grate Length	4.00 ft
Local Depression	0.00 in
Local Depression Width	0.00 ft
Grate Type	P-50 mm x 100 mm (P-1-7/8"-4")
Clogging	50.00 %

Results

Spread	33.42 ft
Depth	2.29 ft
Wetted Perimeter	33.80 ft
Top Width	33.42 ft
Open Grate Area	4.00 sf
Active Grate Weir Length	10.50 ft

PROJECT: SH 151 / LP 1604
DESIGN FREQUENCY: 50 YR
SYSTEM: 3, 4, 4A, 5, 7

RUNOFF COMPUTATION FOR 50 YR

Drainage Area ID	Total Area (acre)	Composite C Value	GRASS (acre)	GRASS C Value	PVMT (acre)	PVMT C Value	Tc (min)	Tc Used (min)	Intensity (in/hr)	Discharge (cfs)
7--1	1.97	0.55	0.00	0.55	0.31	0.95	10.00	10.00	10.27	13.38
7--2	4.97	0.58	4.63	0.55	0.34	0.95	12.23	12.23	9.43	32.46
3--3	0.91	0.76	0.43	0.55	0.48	0.95	10.00	10.00	10.27	8.57
5--4	0.78	0.77	0.35	0.55	0.42	0.95	10.00	10.00	10.27	7.36
3--4	0.35	0.95	0.00	0.55	0.35	0.95	10.00	10.00	10.27	4.10
4--4	0.36	0.92	0.03	0.55	0.36	0.95	10.00	10.00	10.27	4.11
5--5	0.28	0.95	0.00	0.55	0.28	0.95	10.00	10.00	10.27	3.33
3--5	0.22	0.95	0.00	0.55	0.22	0.95	10.00	10.00	10.27	2.53
4--5	0.28	0.95	0.00	0.55	0.28	0.95	10.00	10.00	10.27	3.32
5--6	0.17	0.95	0.00	0.55	0.17	0.95	10.00	10.00	10.27	1.96
3--6	0.31	0.95	0.00	0.55	0.31	0.95	10.00	10.00	10.27	3.60
4--6	0.28	0.95	0.00	0.55	0.28	0.95	10.00	10.00	10.27	3.32
4--5A1	1.14	0.55	1.14	0.55	0.00	0.00	10.47	10.47	10.08	7.57
5--7	0.31	0.95	0.00	0.55	0.31	0.95	10.00	10.00	10.27	3.57
4--7	0.23	0.95	0.00	0.55	0.23	0.95	10.00	10.00	10.27	2.70
4--5A2	0.29	0.95	0.00	0.55	0.28	0.95	10.00	10.00	10.27	3.34
5--8	0.36	0.86	0.10	0.55	0.36	0.95	10.00	10.00	10.27	3.85
4--8	0.23	0.95	0.00	0.55	0.23	0.95	10.00	10.00	10.27	2.70
4--5A3	0.29	0.95	0.00	0.55	0.29	0.95	10.00	10.00	10.27	3.40
4--5A4	0.23	0.95	0.00	0.55	0.23	0.95	10.00	10.00	10.27	2.65
4--5A5	0.28	0.95	0.00	0.55	0.28	0.95	10.00	10.00	10.27	3.29

CUMULATIVE JUNCTION COMPUTATION FOR 50 YR

DRAINAGE NODE ID	NODE TYPE	CUM. C VALUE	CUM. DRAINAGE AREA	CUM. Tc (MIN)	CUM. INTENSITY (IN/HR)	SUPPLIED DISCHARGE (CFS)	CUM. DISCHARGE (CFS)
CULVERT OUTLET	Outlet	0.71	14.24	15.41	0.00	0.00	0
CULVERT-1	Junction	0.71	14.24	14.87	8.65	0.00	104.61
CULVERT-2	Junction	0.71	14.24	14.75	8.65	0.00	104.61
3--1	Junction	0.85	1.79	12.61	9.78	0.00	17.9
4--1	Junction	0.82	3.62	14.74	9.47	0.00	33.7
5--1	Junction	0.86	1.9	14.12	9.44	0.00	18.44
7--1	Junction	0.57	6.94	12.72	9.27	0.00	43.97
3--2	Junction	0.85	1.79	11.45	9.78	0.00	17.9
4--2	Junction	0.82	3.62	13.82	9.47	0.00	33.7
5--2	Junction	0.86	1.9	12.99	9.44	0.00	18.44
7--2	Junction	0.58	4.97	12.23	9.43	0.00	32.46
3--3	Grate	0.85	1.79	11.26	9.78	0.00	17.9
4--3	Junction	0.82	3.62	13.62	9.47	0.00	33.7
5--4	Grate	0.86	1.9	12.21	9.44	0.00	18.44
3--4	Grate	0.95	0.87	10.56	10.05	0.00	10.01
4--4	Grate	0.82	3.62	12.12	9.47	0.00	33.7
5--5	Grate	0.92	1.12	11.44	9.71	0.00	12.01
3--5	Grate	0.95	0.52	10.29	10.15	0.00	6.05
4--5	Grate	0.81	3.25	11.64	9.64	0.00	30.44
5--6	Grate	0.91	0.83	11.21	9.80	0.00	8.94
3--6	Grate	0.95	0.31	10.00	10.27	0.00	3.6
4--6	Grate	0.95	0.75	10.94	9.90	0.00	8.41
4--5A1	Junction	0.74	2.22	11.46	9.71	0.00	19.27
5--7	Grate	0.9	0.67	10.96	9.89	0.00	7.14
4--7	Grate	0.95	0.46	10.48	10.08	0.00	5.3
4--5A2	Grate	0.95	1.09	11.28	9.77	0.00	12.07
5--8	Grate	0.86	0.36	10.00	10.27	0.00	3.85
4--8	Grate	0.95	0.23	10.00	10.27	0.00	2.7
4--5A3	Grate	0.95	0.8	10.90	9.91	0.00	9.02
4--5A4	Grate	0.95	0.51	10.45	10.09	0.00	5.84
4--5A5	Grate	0.95	0.28	10.00	10.27	0.00	3.29

2/19/11
STATE OF TEXAS
JOHN D. CONQUEST
89243
LICENSED
PROFESSIONAL ENGINEER
PE

NO.	DATE	REVISION DESCRIPTION	APP. BY

© 2011

Texas Department of Transportation

MACTEC
3520 EXECUTIVE CENTER DRIVE
SUITE 200
AUSTIN, TEXAS 78731
(512) 795-0360

REGISTRATION NUMBER: F-1784

SH 151

STORM SEWER HYDRAULIC DATA OUTFALL 4

(SHEET 1 OF 4)

FED. RD. DIV. NO.			SHEET NO.
			197
STATE	DIST.	COUNTY	
TEXAS	SA	BEXAR	
CONT.	SECT.	JOB	HIGHWAY NO.
2452	01	043	SH 151

P:\4760\0-01259\cad\sheet\15thyd02.dgn 2/19/2011 6:25:53 PM mvmldd11

INLET COMPUTATION FOR 50 YR

DRAINAGE NODE ID	INLET TYPE	PROFILE TYPE	SUPPLIED Q (cfs)	INLET Q (cfs)	INTERCEPT CAPACITY (CFS)	Q BYPASS ALLOWED (CFS)	Q BYPASS ACTUAL (CFS)	BYPASS INLET ID	LONG. SLOPE (%)	GUTTER "n" VALUE	GUTTER DEPRESSION (FT)	CURB LENGTH (FT)	GRATE AREA (SF)	GRATE PERIMETER (FT)	GRATE WIDTH (FT)	GRATE TYPE	COMPUTED HEAD (FT)	PONDED WIDTH (FT)	PONDED WIDTH ALLOWED	FREEBOARD (>6")
3--3	Grate	On Grade	0.00	8.57	7.83	5.00	0.74	3--4	8.71	0.01	n/a	n/a	30	18	6	Parallel 1 1/8	0.21	10.51	20.00	2.60
5--4	Grate	On Grade	0.00	7.36	6.85	5.00	0.51	5--5	8.70	0.02	n/a	n/a	30	18	6	Parallel 1 1/8	0.2	9.93	16.00	2.98
3--4	Grate	On Grade	0.00	4.85	4.33	5.00	0.51	3--5	3.33	0.01	n/a	n/a	30	18	6	Parallel 1 1/8	0.19	12.00	0.00	1.00
4--4	Grate	On Grade	0.00	4.30	4.15	5.00	0.15	3--6	5.64	0.01	n/a	n/a	30	18	6	Parallel 1 1/8	0.18	8.81	16.00	2.18
5--5	Grate	On Grade	0.00	3.83	3.68	5.00	0.16	5--6	3.33	0.02	n/a	n/a	30	18	6	Parallel 1 1/8	0.19	9.32	16.00	1.55
3--5	Grate	Sag	0.00	3.15	9.82	5.00	0.00	0.00	n/a	0.01	n/a	n/a	30	18	6	Parallel 1 1/8	0.23	11.58	16.00	0.88
4--5	Grate	On Grade	0.00	3.43	3.24	5.00	0.19	4--4	0.76	0.01	n/a	n/a	30	18	6	Parallel 1 1/8	0.24	11.73	16.00	5.42
5--6	Grate	Sag	0.00	2.15	9.82	5.00	0.00	0.00	n/a	0.02	n/a	n/a	30	18	6	Parallel 1 1/8	0.18	9.07	16.00	1.39
3--6	Grate	On Grade	0.00	3.75	3.64	5.00	0.11	3--5	3.40	0.01	n/a	n/a	30	18	6	Parallel 1 1/8	0.19	8.76	16.00	0.90
4--6	Grate	On Grade	0.00	3.42	3.31	5.00	0.11	4--5	3.26	0.02	n/a	n/a	30	18	6	Parallel 1 1/8	0.18	8.96	16.00	5.04
5--7	Grate	On Grade	0.00	3.62	3.59	5.00	0.03	5--6	10.20	0.01	n/a	n/a	30	18	6	Parallel 1 1/8	0.15	7.39	16.00	1.41
4--7	Grate	On Grade	0.00	2.71	2.61	5.00	0.11	4--6	0.86	0.01	n/a	n/a	30	18	6	Parallel 1 1/8	0.21	10.53	16.00	5.26
4--5A2	Grate	On Grade	0.00	3.46	3.26	5.00	0.20	5--8	0.76	0.01	n/a	n/a	30	18	6	Parallel 1 1/8	0.24	11.81	0.00	4.40
5--8	Grate	On Grade	0.00	4.05	4.00	5.00	0.06	5--7	10.20	0.02	n/a	n/a	30	18	6	Parallel 1 1/8	0.15	7.71	16.00	2.88
4--8	Grate	On Grade	0.00	2.70	2.69	5.00	0.01	4--7	7.48	0.02	n/a	n/a	30	18	6	Parallel 1 1/8	0.14	7.02	16.00	5.37
4--5A3	Grate	On Grade	0.00	3.51	3.39	5.00	0.12	4--5A2	3.26	0.01	n/a	n/a	30	18	6	Parallel 1 1/8	0.18	9.04	0.00	5.00
4--5A4	Grate	On Grade	0.00	2.69	2.58	5.00	0.11	4--5A3	0.86	0.02	n/a	n/a	30	18	6	Parallel 1 1/8	0.21	10.50	0.00	5.19
4--5A5	Grate	On Grade	0.00	3.29	3.26	5.00	0.04	4--5A4	7.48	0.01	n/a	n/a	30	18	6	Parallel 1 1/8	0.15	7.56	0.00	5.28

PROJECT: SH 151 / LP 1604
DESIGN FREQUENCY: 50 YR
SYSTEM: 3, 4, 4A, 5, 7

LINK COMPUTATION FOR 50 YR

DRAINAGE LINK ID	US NODE ID	DS NODE ID	INVERT US (ELEV)	INVERT DS (ELEV)	HGL US (ELEV)	HGL DS (ELEV)	SHAPE	LINK TYPE	LINK	NUMBER OF BARRELS	SPAN (FT)	RISE (FT)	ACTUAL LENGTH (FT)	ACTUAL SLOPE (%)	FRICTION SLOPE (%)	N VALUE	UNIFORM DEPTH (FT)	ACTUAL DEPTH (FT)	UNIFORM VELOCITY (FPS)	ACTUAL VELOCITY (FPS)	DISCHARGE CFS	CAPACITY CFS
CULVERT-1	CULVERT-1	CULVERT OUTLET	904.74	904.33	907.46	907.24	Box	Pipe	Concrete	3	5	2	173.04	0.237	0.200	0.012	1.30	2.00	5.37	3.49	104.61	144.50
CULVERT-2	CULVERT-2	CULVERT-1	904.90	904.74	907.51	907.46	Box	Pipe	Concrete	3	5	2	43.86	0.365	0.400	0.012	1.11	2.00	6.26	3.49	104.61	179.29
3--1	3--1	CULVERT-2	904.95	904.90	907.52	907.51	n/a	Ditch	n/a	n/a	24	8	8.28	0.604	0.600	0.012	0.22	2.61	3.44	0.26	17.90	7667.49
4--1	4--1	CULVERT-2	904.95	904.90	907.55	907.51	n/a	Ditch	n/a	n/a	24	8	5.00	1	1.000	0.012	0.27	2.61	5.12	0.49	33.70	9866.05
5--1	5--1	CULVERT-2	904.95	904.90	907.51	907.51	n/a	Ditch	n/a	n/a	24	8	8.24	0.607	0.600	0.012	0.22	2.61	3.48	0.27	18.44	7687.18
7--1	7--1	CULVERT-2	916.66	914.26	917.97	915.26	n/a	Ditch	n/a	n/a	6	4	257.98	0.927	0.900	0.030	1.13	1.00	4.13	4.91	43.97	598.29
3--2	3--2	3--1	905.45	904.95	907.61	907.52	Box	Pipe	Concrete	1	5	2	278.53	0.18	0.200	0.012	0.90	2.00	3.99	1.79	17.90	41.98
4--2	4--2	4--1	905.44	904.95	907.87	907.55	Box	Pipe	Concrete	1	5	2	273.74	0.18	0.200	0.012	1.36	2.00	4.95	3.37	33.70	41.98
5--2	5--2	5--1	905.43	904.95	907.60	907.51	Box	Pipe	Concrete	1	5	2	269.05	0.18	0.200	0.012	0.93	2.00	3.97	1.84	18.44	41.98
7--2	7--2	7--1	920.84	916.66	924.25	918.12	Circular	Pipe	Concrete	1	n/a	2.5	322.94	1.294	1.300	0.012	1.46	1.46	10.93	10.91	32.46	50.55
3--3	3--3	3--2	905.54	905.46	907.70	907.61	Box	Pipe	Concrete	1	5	2	41.20	0.18	0.200	0.012	0.90	2.00	3.99	1.79	17.90	41.98
4--3	4--3	4--2	905.56	905.45	908.17	907.87	Box	Pipe	Concrete	1	5	2	59.23	0.18	0.200	0.012	1.36	2.00	4.95	3.37	33.70	41.98
5--4	5--4	5--2	905.77	905.44	907.74	907.60	Box	Pipe	Concrete	1	5	2	182.15	0.18	0.200	0.012	0.93	2.00	3.97	1.84	18.44	41.98
3--4	3--4	3--3	905.83	905.54	907.99	907.70	Circular	Pipe	Concrete	1	n/a	2	152.80	0.18	0.200	0.012	1.58	2.00	3.75	3.19	10.01	10.40
4--4	4--4	4--3	906.36	905.56	908.69	908.17	Box	Pipe	Concrete	1	5	2	442.28	0.18	0.200	0.012	1.36	2.00	4.95	3.37	33.70	41.98
5--5	5--5	5--4	906.07	905.78	907.77	907.74	Box	Pipe	Concrete	1	5	2	157.22	0.18	0.200	0.012	0.68	1.96	3.53	1.23	12.01	41.98
3--5	3--5	3--4	905.93	905.83	908.03	907.99	Circular	Pipe	Concrete	1	n/a	2	46.72	0.18	0.200	0.012	1.12	2.00	3.36	1.93	6.06	10.40
4--5	4--5	4--4	909.64	906.37	911.27	907.04	Box	Pipe	Concrete	1	5	2	254.03	1.258	1.300	0.012	0.67	0.67	9.10	9.07	30.44	110.96
5--6	5--6	5--5	906.18	906.08	907.85	907.77	Circular	Pipe	Concrete	1	n/a	2	46.72	0.18	0.200	0.012	1.41	1.69	3.78	3.17	8.94	10.40
3--6	3--6	3--5	906.02	905.93	908.06	908.03	Circular	Pipe	Concrete	1	n/a	2	46.28	0.18	0.200	0.012	0.82	2.00	2.96	1.15	3.60	10.40
4--6	4--6	4--5	917.24	909.64	918.35	910.24	Circular	Pipe	Concrete	1	n/a	2	234.00	3.167	3.200	0.012	0.60	0.60	10.73	10.72	8.41	43.61
4--5A1	4--5A1	4--5	909.96	909.64	911.30	911.27	Box	Pipe	Concrete	1	5	2	60.58	0.5	0.500	0.012	0.67	1.63	5.73	2.36	19.27	69.97
5--7	5--7	5--6	906.21	906.12	907.90	907.85	Circular	Pipe	Concrete	1	n/a	2	46.28	0.18	0.200	0.012	1.23	1.73	3.52	2.48	7.14	10.40
4--7	4--7	4--6	924.21	917.24	925.09	917.73	Circular	Pipe	Concrete	1	n/a	2	244.00	2.788	2.800	0.012	0.49	0.49	8.99	8.99	5.30	40.92
4--5A2	4--5A2	4--5A1	910.28	909.96	912.30	911.19	Circular	Pipe	Concrete	1	n/a	2	60.58	0.5	0.500	0.012	1.23	1.23	5.94	5.94	12.07	17.33
5--8	5--8	5--7	906.54	906.22	907.98	907.90	Circular	Pipe	Concrete	1	n/a	2	168.97	0.18	0.200	0.012	0.85	1.68	3.03	1.37	3.85	10.40
4--8	4--8	4--7	929.06	924.24	929.84	924.60	Circular	Pipe	Concrete	1	n/a	2	194.00	2.41	2.400	0.012	0.36	0.36	7.00	7.00	2.70	38.05
4--5A3	4--5A3	4--5A2	917.24	910.28	918.39	910.91	Circular	Pipe	Concrete	1	n/a	2	234.00	2.9	2.900	0.012	0.63	0.63	10.60	10.58	9.02	41.74
4--5A4	4--5A4	4--5A3	924.24	917.24	925.16	917.75	Circular	Pipe	Concrete	1	n/a	2	244.00	2.8	2.800	0.012	0.51	0.51	9.25	9.24	5.84	41.01
4--5A5	4--5A5	4--5A4	929.06	924.24	929.92	924.64	Circular	Pipe	Concrete	1	n/a	2	194.00	2.41	2.400	0.012	0.40	0.40	7.42	7.42	3.29	38.05

2/19/11

STATE OF TEXAS
JOHN D. CONQUEST
89243
LICENSED
PROFESSIONAL ENGINEER

John Conquest PE

NO.	DATE	REVISION DESCRIPTION	APP. BY

© 2011

Texas Department of Transportation

MACTEC
3520 EXECUTIVE CENTER DRIVE
SUITE 200
AUSTIN, TEXAS 78731
(512) 795-0360

REGISTRATION NUMBER: F-1784

SH 151

STORM SEWER HYDRAULIC DATA OUTFALL 4

(SHEET 2 OF 4)

FED. RD. DIV. NO.			SHEET NO.
			198
STATE	DIST.	COUNTY	
TEXAS	SA	BEXAR	
CONT.	SECT.	JOB	HIGHWAY NO.
2452	01	043	SH 151

p:\4760\0-0129\cad\sheet\5lhyd03.dgn 2/19/2011 1:18:35 PM mwmldkitt

Bentley FlowMaster [08.01.071.00]
INLET CALCS

DROP INLET 4-5A1 100 YR

Project Description

Solve For Spread

Input Data

Discharge	8.80 cfs
Left Side Slope	6.00 ft/ft (H:V)
Right Side Slope	6.00 ft/ft (H:V)
Bottom Width	4.50 ft
Grate Width	1.50 ft
Grate Length	3.50 ft
Local Depression	0.00 in
Local Depression Width	0.00 ft
Grate Type	P-50 mm x 100 mm (P-1-7/8"-4")
Clogging	50.00 %

Results

Spread	11.79 ft
Depth	0.61 ft
Wetted Perimeter	11.90 ft
Top Width	11.79 ft
Open Grate Area	2.10 sf
Active Grate Weir Length	8.50 ft

DROP INLET 4-1 100 YR

Project Description

Solve For Spread

Input Data

Discharge	51.20 cfs
Left Side Slope	3.00 ft/ft (H:V)
Right Side Slope	3.00 ft/ft (H:V)
Bottom Width	24.00 ft
Grate Width	5.00 ft
Grate Length	24.00 ft
Local Depression	0.00 in
Local Depression Width	0.00 ft
Grate Type	P-50 mm x 100 mm (P-1-7/8"-4")
Clogging	50.00 %

Results

Spread	26.82 ft
Depth	0.47 ft
Wetted Perimeter	26.97 ft
Top Width	26.82 ft
Open Grate Area	48.00 sf
Active Grate Weir Length	53.00 ft

DROP INLET 7-2 100 YR

Project Description

Solve For Spread

Input Data

Discharge	37.80 cfs
Left Side Slope	6.00 ft/ft (H:V)
Right Side Slope	6.00 ft/ft (H:V)
Bottom Width	6.00 ft
Grate Width	2.50 ft
Grate Length	4.00 ft
Local Depression	0.00 in
Local Depression Width	0.00 ft
Grate Type	P-50 mm x 100 mm (P-1-7/8"-4")
Clogging	50.00 %

Results

Spread	43.10 ft
Depth	3.09 ft
Wetted Perimeter	43.61 ft
Top Width	43.10 ft
Open Grate Area	4.00 sf
Active Grate Weir Length	10.50 ft

PROJECT: SH 151 / LP 1604
DESIGN FREQUENCY: 100 YR
SYSTEM: 3, 4, 4A, 5, 7

RUNOFF COMPUTATION FOR 100 YR

Drainage Area ID	Total Area (acre)	Composite C Value	GRASS (acre)	GRASS C Value	PVMT (acre)	PVMT C Value	Tc (min)	Tc Used (min)	Intensity (in/hr)	Discharge (cfs)
7--1	1.97	0.55	0.00	0.55	0.31	0.95	10.00	10.00	11.49	15.59
7--2	4.97	0.58	4.63	0.55	0.34	0.95	12.23	12.23	10.54	37.79
3--3	0.91	0.76	0.43	0.55	0.48	0.95	10.00	10.00	11.49	9.99
5--4	0.78	0.77	0.35	0.55	0.42	0.95	10.00	10.00	11.49	8.58
3--4	0.35	0.95	0.00	0.55	0.35	0.95	10.00	10.00	11.49	4.78
4--4	0.36	0.92	0.03	0.55	0.36	0.95	10.00	10.00	11.49	4.79
5--5	0.28	0.95	0.00	0.55	0.28	0.95	10.00	10.00	11.49	3.88
3--5	0.22	0.95	0.00	0.55	0.22	0.95	10.00	10.00	11.49	2.95
4--5	0.28	0.95	0.00	0.55	0.28	0.95	10.00	10.00	11.49	3.87
5--6	0.17	0.95	0.00	0.55	0.17	0.95	10.00	10.00	11.49	2.28
3--6	0.31	0.95	0.00	0.55	0.31	0.95	10.00	10.00	11.49	4.19
4--6	0.28	0.95	0.00	0.55	0.28	0.95	10.00	10.00	11.49	3.87
4--5A1	1.14	0.55	1.14	0.55	0.00	0.00	10.47	10.47	11.27	8.82
5--7	0.31	0.95	0.00	0.55	0.31	0.95	10.00	10.00	11.49	4.15
4--7	0.23	0.95	0.00	0.55	0.23	0.95	10.00	10.00	11.49	3.15
4--5A2	0.29	0.95	0.00	0.55	0.28	0.95	10.00	10.00	11.49	3.89
5--8	0.36	0.86	0.10	0.55	0.36	0.95	10.00	10.00	11.49	4.49
4--8	0.23	0.95	0.00	0.55	0.23	0.95	10.00	10.00	11.49	3.15
4--5A3	0.29	0.95	0.00	0.55	0.29	0.95	10.00	10.00	11.49	3.96
4--5A4	0.23	0.95	0.00	0.55	0.23	0.95	10.00	10.00	11.49	3.09
4--5A5	0.28	0.95	0.00	0.55	0.28	0.95	10.00	10.00	11.49	3.84

CUMULATIVE JUNCTION COMPUTATION FOR 100 YR

DRAINAGE NODE ID	NODE TYPE	CUM. C VALUE	CUM. DRAINAGE AREA	CUM. Tc (MIN)	CUM. INTENSITY (IN/HR)	SUPPLIED DISCHARGE (CFS)	CUM. DISCHARGE (CFS)
CULVERT OUTLET	Outlet	0.71	14.24	15.20	0.00	0.00	0
CULVERT-1	Junction	0.71	14.24	14.70	9.72	0.00	122.37
CULVERT-2	Junction	0.71	14.24	14.59	9.72	0.00	122.37
3--1	Junction	0.85	1.79	12.49	10.95	0.00	20.88
4--1	Junction	0.82	3.62	14.57	10.62	0.00	39.38
5--1	Junction	0.86	1.9	13.92	10.58	0.00	21.54
7--1	Junction	0.57	6.94	12.71	10.36	0.00	51.21
3--2	Junction	0.85	1.79	11.39	10.95	0.00	20.88
4--2	Junction	0.82	3.62	13.68	10.62	0.00	39.38
5--2	Junction	0.86	1.9	12.85	10.58	0.00	21.54
7--2	Junction	0.58	4.97	12.23	10.54	0.00	37.79
3--3	Grate	0.85	1.79	11.22	10.95	0.00	20.88
4--3	Junction	0.82	3.62	13.48	10.62	0.00	39.38
5--4	Grate	0.86	1.9	12.12	10.58	0.00	21.54
3--4	Grate	0.95	0.87	10.52	11.25	0.00	11.67
4--4	Grate	0.82	3.62	12.02	10.62	0.00	39.38
5--5	Grate	0.92	1.12	11.37	10.89	0.00	14.02
3--5	Grate	0.95	0.52	10.28	11.36	0.00	7.06
4--5	Grate	0.81	3.25	11.57	10.80	0.00	35.55
5--6	Grate	0.91	0.83	11.14	10.98	0.00	10.44
3--6	Grate	0.95	0.31	10.00	11.49	0.00	4.19
4--6	Grate	0.95	0.75	10.90	11.08	0.00	9.81
4--5A1	Junction	0.74	2.22	11.40	10.87	0.00	22.5
5--7	Grate	0.9	0.67	10.90	11.08	0.00	8.34
4--7	Grate	0.95	0.46	10.45	11.28	0.00	6.18
4--5A2	Grate	0.95	1.09	11.22	10.95	0.00	14.09
5--8	Grate	0.86	0.36	10.00	11.49	0.00	4.49
4--8	Grate	0.95	0.23	10.00	11.49	0.00	3.15
4--5A3	Grate	0.95	0.8	10.86	11.10	0.00	10.52
4--5A4	Grate	0.95	0.51	10.43	11.29	0.00	6.81
4--5A5	Grate	0.95	0.28	10.00	11.49	0.00	3.83

2/19/11

STATE OF TEXAS
JOHN D. CONQUEST
89243
LICENSED
PROFESSIONAL ENGINEER

NO.	DATE	REVISION DESCRIPTION	APP. BY

© 2011

Texas Department of Transportation

MACTEC
3520 EXECUTIVE CENTER DRIVE
SUITE 200
AUSTIN, TEXAS 78731
(512) 795-0360

REGISTRATION NUMBER: F-1784

SH 151

STORM SEWER HYDRAULIC DATA OUTFALL 4

(SHEET 3 OF 4)

FED. RD. DIV. NO.			SHEET NO.
			199
STATE	DIST.	COUNTY	
TEXAS	SA	BEXAR	
CONT.	SECT.	JOB	HIGHWAY NO.
2452	01	043	SH 151

2/19/2011 6:25:15 PM mvmldkt11
P:\47600\0-01\29\cad\sheet\151\yd07.dgn

INLET COMPUTATION FOR 100 YR

DRAINAGE NODE ID	INLET TYPE	PROFILE TYPE	SUPPLIED Q (cfs)	INLET Q (cfs)	INTERCEPT CAPACITY (CFS)	Q BYPASS ALLOWED (CFS)	Q BYPASS ACTUAL (CFS)	BYPASS INLET ID	LONG. SLOPE (%)	GUTTER "n" VALUE	GUTTER DEPRESSION (FT)	CURB LENGTH (FT)	GRATE AREA (SF)	GRATE PERIMETER (FT)	GRATE WIDTH (FT)	GRATE TYPE	COMPUTED HEAD (FT)	PONDED WIDTH (FT)	PONDED WIDTH ALLOWED	FREEBOARD (>6")
3--3	Grate	On Grade	0.00	9.99	8.93	5.00	1.06	3--4	8.71	0.01	n/a	n/a	30	18	6	Parallel 1 1/8	0.22	11.12	20.00	2.43
5--4	Grate	On Grade	0.00	8.58	7.83	5.00	0.75	5--5	8.70	0.01	n/a	n/a	30	18	6	Parallel 1 1/8	0.21	10.52	16.00	2.80
3--4	Grate	On Grade	0.00	5.84	5.08	5.00	0.76	3--5	3.33	0.01	n/a	n/a	30	18	6	Parallel 1 1/8	0.2	12.88	0.00	0.73
4--4	Grate	On Grade	0.00	5.07	4.82	5.00	0.24	3--6	5.64	0.01	n/a	n/a	30	18	6	Parallel 1 1/8	0.19	9.37	16.00	1.65
5--5	Grate	On Grade	0.00	4.62	4.36	5.00	0.26	5--6	3.33	0.02	n/a	n/a	30	18	6	Parallel 1 1/8	0.2	9.99	16.00	1.35
3--5	Grate	Sag	0.00	3.89	9.82	5.00	0.00	0.00	n/a	0.01	n/a	n/a	30	18	6	Parallel 1 1/8	0.27	13.32	16.00	0.59
4--5	Grate	On Grade	0.00	4.05	3.77	5.00	0.28	4--4	0.76	0.01	n/a	n/a	30	18	6	Parallel 1 1/8	0.25	12.48	16.00	5.24
5--6	Grate	Sag	0.00	2.62	9.82	5.00	0.00	0.00	n/a	0.02	n/a	n/a	30	18	6	Parallel 1 1/8	0.21	10.35	16.00	1.17
3--6	Grate	On Grade	0.00	4.44	4.25	5.00	0.18	3--5	3.40	0.01	n/a	n/a	30	18	6	Parallel 1 1/8	0.2	9.33	16.00	0.60
4--6	Grate	On Grade	0.00	4.03	3.84	5.00	0.18	4--5	3.26	0.02	n/a	n/a	30	18	6	Parallel 1 1/8	0.19	9.52	16.00	4.94
5--7	Grate	On Grade	0.00	4.27	4.20	5.00	0.07	5--6	10.20	0.01	n/a	n/a	30	18	6	Parallel 1 1/8	0.16	7.86	16.00	1.17
4--7	Grate	On Grade	0.00	3.18	3.02	5.00	0.16	4--6	0.86	0.01	n/a	n/a	30	18	6	Parallel 1 1/8	0.22	11.17	16.00	5.18
4--5A2	Grate	On Grade	0.00	4.09	3.79	5.00	0.29	5--8	0.76	0.01	n/a	n/a	30	18	6	Parallel 1 1/8	0.25	12.56	0.00	4.20
5--8	Grate	On Grade	0.00	4.78	4.67	5.00	0.12	5--7	10.20	0.01	n/a	n/a	30	18	6	Parallel 1 1/8	0.16	8.20	16.00	2.64
4--8	Grate	On Grade	0.00	3.15	3.12	5.00	0.03	4--7	7.48	0.02	n/a	n/a	30	18	6	Parallel 1 1/8	0.15	7.44	16.00	5.30
4--5A3	Grate	On Grade	0.00	4.12	3.93	5.00	0.19	4--5A2	3.26	0.01	n/a	n/a	30	18	6	Parallel 1 1/8	0.19	9.60	0.00	4.90
4--5A4	Grate	On Grade	0.00	3.16	3.00	5.00	0.16	4--5A3	0.86	0.02	n/a	n/a	30	18	6	Parallel 1 1/8	0.22	11.16	0.00	5.11
4--5A5	Grate	On Grade	0.00	3.83	3.76	5.00	0.07	4--5A4	7.48	0.01	n/a	n/a	30	18	6	Parallel 1 1/8	0.16	8.01	0.00	5.21

LINK COMPUTATION FOR 100 YR

DRAINAGE LINK ID	US NODE ID	DS NODE ID	INVERT US (ELEV)	INVERT DS (ELEV)	HGL US (ELEV)	HGL DS (ELEV)	SHAPE	LINK TYPE	LINK	NUMBER OF BARRELS	SPAN (FT)	RISE (FT)	ACTUAL LENGTH (FT)	ACTUAL SLOPE (%)	FRICTION SLOPE (%)	N VALUE	UNIFORM DEPTH (FT)	ACTUAL DEPTH (FT)	UNIFORM VELOCITY (FPS)	ACTUAL VELOCITY (FPS)	DISCHARGE CFS	CAPACITY CFS
CULVERT-1	CULVERT-1	CULVERT OUTLET	904.74	904.33	907.54	907.24	Box	Pipe	Concrete	3	5	2	173.04	0.237	0.200	0.012	1.42	2.00	5.73	4.08	122.37	144.50
CULVERT-2	CULVERT-2	CULVERT-1	904.90	904.74	907.61	907.54	Box	Pipe	Concrete	3	5	2	43.86	0.365	0.400	0.012	1.24	2.00	6.59	4.08	122.37	179.29
3--1	3--1	CULVERT-2	904.95	904.90	907.63	907.61	n/a	Ditch	n/a	n/a	24	8	8.28	0.604	0.600	0.012	0.24	2.71	3.65	0.29	20.88	7667.49
4--1	4--1	CULVERT-2	904.95	904.90	907.66	907.61	n/a	Ditch	n/a	n/a	24	8	5.00	1	1.000	0.012	0.30	2.71	5.44	0.54	39.38	9866.05
5--1	5--1	CULVERT-2	904.95	904.90	907.61	907.61	n/a	Ditch	n/a	n/a	24	8	8.24	0.607	0.600	0.012	0.24	2.71	3.70	0.30	21.54	7687.18
7--1	7--1	CULVERT-2	916.66	914.26	918.08	915.35	n/a	Ditch	n/a	n/a	6	4	257.98	0.927	0.900	0.030	1.23	1.09	4.31	5.09	51.21	598.29
3--2	3--2	3--1	905.45	904.95	907.75	907.63	Box	Pipe	Concrete	1	5	2	278.53	0.18	0.200	0.012	0.99	2.00	4.22	2.09	20.88	41.98
4--2	4--2	4--1	905.44	904.95	908.10	907.66	Box	Pipe	Concrete	1	5	2	273.74	0.18	0.200	0.012	1.55	2.00	5.09	3.94	39.38	41.98
5--2	5--2	5--1	905.43	904.95	907.74	907.61	Box	Pipe	Concrete	1	5	2	269.05	0.18	0.200	0.012	1.02	2.00	4.22	2.15	21.54	41.98
7--2	7--2	7--1	920.84	916.66	924.85	918.28	Circular	Pipe	Concrete	1	n/a	2.5	322.94	1.294	1.300	0.012	1.61	1.62	11.28	11.27	37.79	50.55
3--3	3--3	3--2	905.54	905.46	907.87	907.75	Box	Pipe	Concrete	1	5	2	41.20	0.18	0.200	0.012	0.99	2.00	4.22	2.09	20.88	41.98
4--3	4--3	4--2	905.56	905.45	908.51	908.10	Box	Pipe	Concrete	1	5	2	59.23	0.18	0.200	0.012	1.55	2.00	5.09	3.94	39.38	41.98
5--4	5--4	5--2	905.77	905.44	907.93	907.74	Box	Pipe	Concrete	1	5	2	182.15	0.18	0.200	0.012	1.02	2.00	4.22	2.15	21.54	41.98
3--4	3--4	3--3	905.83	905.54	908.26	907.87	Circular	Pipe	Concrete	1	n/a	2	152.80	0.18	0.200	0.012	2.00	2.00	3.81	3.72	11.67	10.40
4--4	4--4	4--3	906.36	905.56	909.22	908.51	Box	Pipe	Concrete	1	5	2	442.28	0.18	0.200	0.012	1.55	2.00	5.09	3.94	39.38	41.98
5--5	5--5	5--4	906.07	905.78	907.97	907.93	Box	Pipe	Concrete	1	5	2	157.22	0.18	0.200	0.012	0.77	2.00	3.63	1.40	14.02	41.98
3--5	3--5	3--4	905.93	905.83	908.31	908.26	Circular	Pipe	Concrete	1	n/a	2	46.72	0.18	0.200	0.012	1.20	2.00	3.58	2.25	7.06	10.40
4--5	4--5	4--4	909.64	906.37	911.46	907.11	Box	Pipe	Concrete	1	5	2	254.03	1.258	1.300	0.012	0.74	0.74	9.57	9.55	35.55	110.96
5--6	5--6	5--5	906.18	906.08	908.07	907.97	Circular	Pipe	Concrete	1	n/a	2	46.72	0.18	0.200	0.012	1.64	1.89	3.78	3.40	10.44	10.40
3--6	3--6	3--5	906.02	905.93	908.36	908.31	Circular	Pipe	Concrete	1	n/a	2	46.28	0.18	0.200	0.012	0.88	2.00	3.15	1.33	4.19	10.40
4--6	4--6	4--5	917.24	909.64	918.44	910.29	Circular	Pipe	Concrete	1	n/a	2	234.00	3.167	3.200	0.012	0.64	0.65	11.21	11.19	9.81	43.61
4--5A1	4--5A1	4--5	909.96	909.64	911.48	911.46	Box	Pipe	Concrete	1	5	2	60.58	0.5	0.500	0.012	0.74	1.82	6.06	2.48	22.50	69.97
5--7	5--7	5--6	906.21	906.12	908.14	908.07	Circular	Pipe	Concrete	1	n/a	2	46.28	0.18	0.200	0.012	1.35	1.95	3.70	2.67	8.34	10.40
4--7	4--7	4--6	924.21	917.24	925.16	917.77	Circular	Pipe	Concrete	1	n/a	2	244.00	2.788	2.800	0.012	0.53	0.53	9.39	9.38	6.18	40.92
4--5A2	4--5A2	4--5A1	910.28	909.96	912.50	911.48	Circular	Pipe	Concrete	1	n/a	2	60.58	0.5	0.500	0.012	1.38	1.52	6.10	5.48	14.09	17.33
5--8	5--8	5--7	906.54	906.22	908.23	908.14	Circular	Pipe	Concrete	1	n/a	2	168.97	0.18	0.200	0.012	0.91	1.92	3.23	1.45	4.49	10.40
4--8	4--8	4--7	929.06	924.24	929.90	924.63	Circular	Pipe	Concrete	1	n/a	2	194.00	2.41	2.400	0.012	0.39	0.39	7.33	7.33	3.15	38.05
4--5A3	4--5A3	4--5A2	917.24	910.28	918.49	910.97	Circular	Pipe	Concrete	1	n/a	2	234.00	2.9	2.900	0.012	0.69	0.69	11.07	11.06	10.52	41.74
4--5A4	4--5A4	4--5A3	924.24	917.24	925.24	917.79	Circular	Pipe	Concrete	1	n/a	2	244.00	2.8	2.800	0.012	0.55	0.55	9.67	9.66	6.81	41.01
4--5A5	4--5A5	4--5A4	929.06	924.24	930.00	924.67	Circular	Pipe	Concrete	1	n/a	2	194.00	2.41	2.400	0.012	0.43	0.43	7.76	7.76	3.84	38.05

PROJECT: SH 151 / LP 1604
DESIGN FREQUENCY: 100 YR
SYSTEM: 3, 4, 4A, 5, 7

2/19/11

STATE OF TEXAS
JOHN D. CONQUEST
89243
LICENSED
PROFESSIONAL ENGINEER

NO.	DATE	REVISION DESCRIPTION	APP. BY

©2011

Texas Department of Transportation

MACTEC
3520 EXECUTIVE CENTER DRIVE
SUITE 200
AUSTIN, TEXAS 78731
(512) 795-0360
REGISTRATION NUMBER: F-1784

SH 151

STORM SEWER HYDRAULIC DATA OUTFALL 4

(SHEET 4 OF 4)

FED. RD. DIV. NO.			SHEET NO.
			200
STATE	DIST.	COUNTY	
TEXAS	SA	BEXAR	
CONT.	SECT.	JOB	HIGHWAY NO.
2452	01	043	SH 151

P:\4760\0-01\29\cad\sheet\5\hyd08.dgn 2/19/2011 1:18:37 PM mwmlckf1

SYSTEM 3

Beginning chain A_SSNB030 description

Point SS03001 N 13,725,933.5118 E 2,061,193.7403 Sta 0+00.00

Course from SS03001 to ABSS03002 N 52° 46′ 37.42" W Dist 105.0000

Point SS03002 N 13,725,997.0282 E 2,061,110.1301 Sta 1+05.00

Course from SS03002 to SS03003 N 52° 50′ 42.14" W Dist 158.7953

Point SS03003 N 13,726,092.9362 E 2,060,983.5695 Sta 2+63.80

Course from SS03003 to SS03004 N 32° 54′ 37.33" E Dist 44.2707

Point SS03004 N 13,726,130.1025 E 2,061,007.6229 Sta 3+08.07

Course from SS03004 to SS03005 N 12° 22′ 31.70" W Dist 284.5323

Point SS03005 N 13,726,408.0234 E 2,060,946.6428 Sta 5+92.60

Ending chain A_SSNB030 description

SYSTEM 4

Beginning chain A_SSNB040 description

Point SS04001 N 13,725,239.4420 E 2,062,079.2803 Sta 0+00.00

Course from SS04001 to SS04002 N 52° 46′ 37.42" W Dist 200.0000

Point SS04002 N 13,725,360.4256 E 2,061,920.0227 Sta 2+00.00

Course from SS04002 to SS04003 N 52° 46′ 37.42" W Dist 250.0000

Point SS04003 N 13,725,511.6551 E 2,061,720.9508 Sta 4+50.00

Course from SS04003 to SS04004 N 52° 46′ 37.33" W Dist 239.9999

Point SS04004 N 13,725,656.8354 E 2,061,529.8418 Sta 6+90.00

Course from SS04004 to SS04005 N 52° 46′ 37.41" W Dist 260.0282

Point SS04005 N 13,725,814.1312 E 2,061,322.7845 Sta 9+50.03

Course from SS04005 to SS04006 N 52° 46′ 37.42" W Dist 445.2665

Point SS04006 N 13,726,083.4809 E 2,060,968.2243 Sta 13+95.29

Course from SS04006 to SS04007 N 32° 37′ 28.30" E Dist 59.2321

Point SS04007 N 13,726,133.3674 E 2,061,000.1582 Sta 14+54.53

Course from SS04007 to SS04008 N 12° 22′ 42.00" W Dist 279.7350

Point SS04008 N 13,726,406.5996 E 2,060,940.1925 Sta 17+34.26

Ending chain A_SSNB040 description

CHANNEL 7

Beginning chain A_SSNB070 description

Point SS07001 N 13,725,966.0337 E 2,061,264.5284 Sta 0+00.00

Course from SS07001 to SS07002 N 52° 26′ 40.18" W Dist 317.8000

Point SS07002 N 13,726,159.7423 E 2,061,012.5882 Sta 3+17.80

Course from SS07002 to SS07003 N 52° 26′ 40.30" W Dist 27.6426

Point SS07003 N 13,726,176.5913 E 2,060,990.6742 Sta 3+45.44

Course from SS07003 to SS07004 N 12° 22′ 43.93" W Dist 235.4829

Point SS07004 N 13,726,406.5996 E 2,060,940.1925 Sta 5+80.93

Ending chain A_SSNB070 description

SYSTEM 4A

Beginning chain A_SSNB04A description

Point SSA4001 N 13,725,138.0482 E 2,062,002.2542 Sta 0+00.00

Course from SSA4001 to SSA4002 N 52° 46′ 37.42" W Dist 200.0000

Point SSA4002 N 13,725,259.0318 E 2,061,842.9966 Sta 2+00.00

Course from SSA4002 to SSA4003 N 52° 46′ 37.42" W Dist 250.0000

Point SSA4003 N 13,725,410.2613 E 2,061,643.9247 Sta 4+50.00

Course from SSA4003 to SSA4004 N 52° 46′ 37.42" W Dist 239.9999

Point SSA4004 N 13,725,555.4416 E 2,061,452.8157 Sta 6+90.00

Course from SSA4004 to ABSSA4005 N 37° 13′ 22.59" E Dist 63.6664

Point SSA4005 N 13,725,606.1383 E 2,061,491.3286 Sta 7+53.67

Course from SSA4005 to SSA4006 N 37° 13′ 22.58" E Dist 63.6668

Point SSA4006 N 13,725,656.8354 E 2,061,529.8418 Sta 8+17.33

Ending chain A_SSNB04A description

SYSTEM 5

Beginning chain A_SSNB050 description

Point SS05001 N 13,725,712.7373 E 2,061,245.7583 Sta 0+00.00

Course from SS05001 to SS05002 N 52° 46′ 37.81" W Dist 174.9717

Point SS05002 N 13,725,818.5806 E 2,061,106.4303 Sta 1+74.97

Course from SS05002 to SS05003 N 52° 46′ 36.11" W Dist 52.2801

Point SS05003 N 13,725,850.2060 E 2,061,064.8005 Sta 2+27.25

Course from SS05003 to SS05004 N 52° 46′ 37.42" W Dist 52.7200

Point SS05004 N 13,725,882.0973 E 2,061,022.8202 Sta 2+79.97

Course from SS05004 to SS05005 N 52° 51′ 28.82" W Dist 163.2211

Point SS05005 N 13,725,980.6490 E 2,060,892.7099 Sta 4+43.19

Course from SS05005 to SS05006 N 32° 41′ 34.98" E Dist 185.2254

Point SS05006 N 13,726,136.5303 E 2,060,992.7572 Sta 6+28.42

Course from SS05006 to SS05007 N 12° 22′ 37.39" W Dist 275.0512

Point SS05007 N 13,726,405.1888 E 2,060,933.8016 Sta 9+03.47

Ending chain A_SSNB050 description

STATE OF TEXAS
JOHN D. CONQUEST
89243
LICENSED
PROFESSIONAL ENGINEER

2/19/11

NO.	DATE	REVISION DESCRIPTION	APP. BY

© 2011

Texas Department of Transportation

MACTEC
3520 EXECUTIVE CENTER DRIVE
SUITE 200
AUSTIN, TEXAS 78731
(512) 795-0360
REGISTRATION NUMBER: F-1784

SH 151

DRAINAGE HORIZONTAL ALIGNMENT DATA

(SHEET 1 OF 1)

FED. RD. DIV. NO.			SHEET NO.
			201
STATE	DIST.	COUNTY	
TEXAS	SA	BEXAR	
CONT.	SECT.	JOB	HIGHWAY NO.
2452	01	043	SH 151

p:\4160\0-0129\cad\sheet\Sltxc05.dgn 2/19/2011 1:19:39 PM mwmldkfff

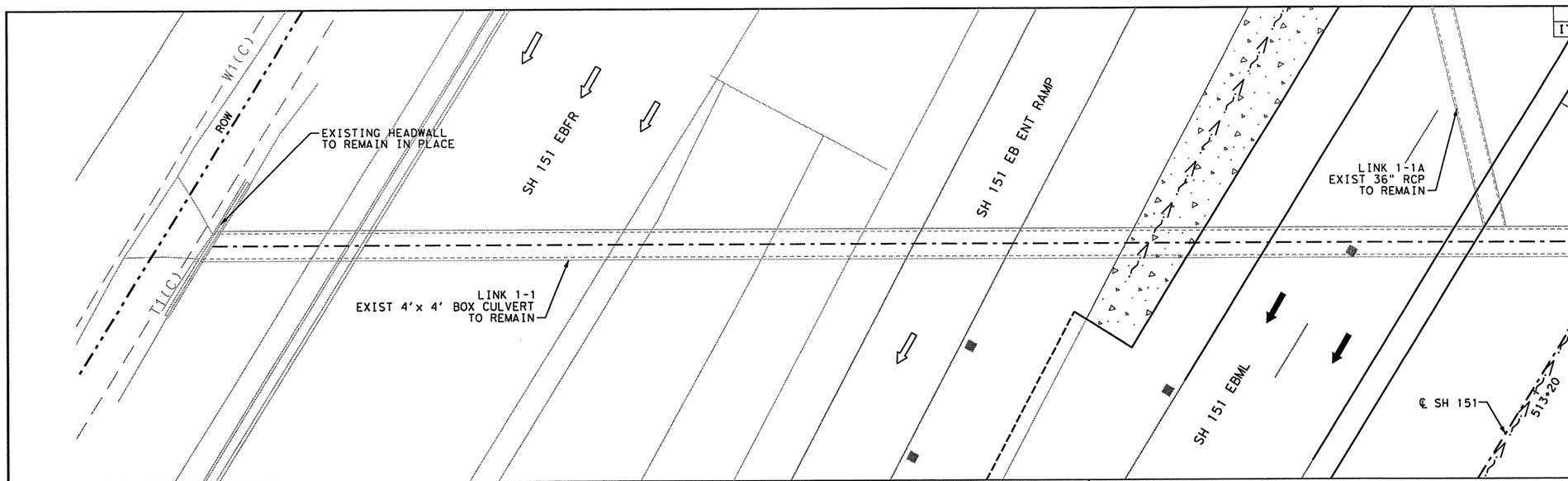

SHEET SUMMARY OF ESTIMATED QUANTITIES

ITEM#	DESCRIPTION	UNIT	QTY

LEGEND

- RIGHT OF WAY LINE
- PROPOSED ALIGNMENT
- EXIST TRAFFIC FLOW ARROW
- PROP TRAFFIC FLOW ARROW

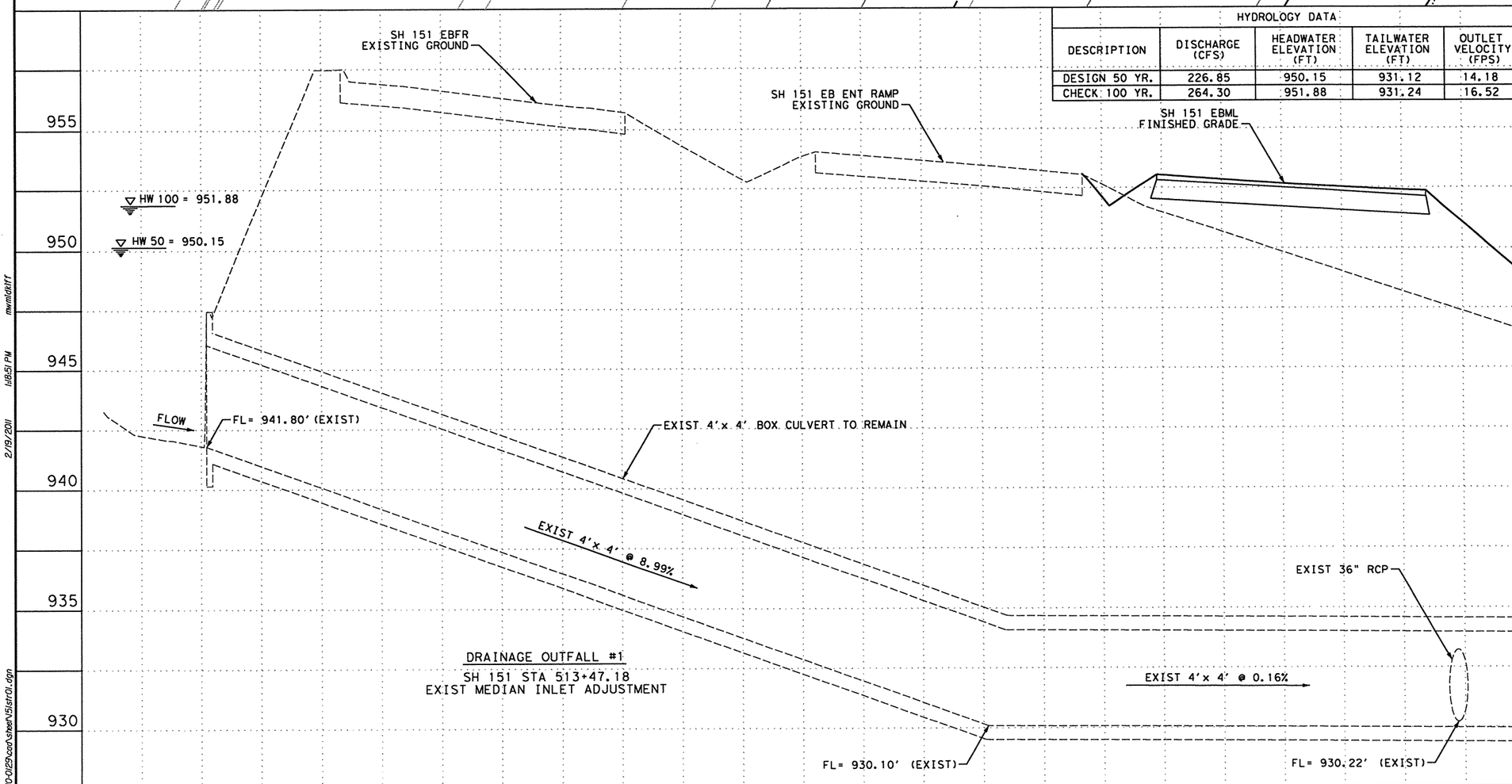

DRAINAGE OUTFALL #1
SH 151 STA 513+47.18
EXIST MEDIAN INLET ADJUSTMENT

HYDROLOGY DATA

DESCRIPTION	DISCHARGE (CFS)	HEADWATER ELEVATION (FT)	TAILWATER ELEVATION (FT)	OUTLET VELOCITY (FPS)
DESIGN 50 YR.	226.85	950.15	931.12	14.18
CHECK 100 YR.	264.30	951.88	931.24	16.52

SCALE IN FEET: 0 1 2 5

N

0 5 10 20
SCALE IN FEET

2/19/11

STATE OF TEXAS
JOHN D. CONQUEST
89243
LICENSED
PROFESSIONAL ENGINEER

NO.	DATE	REVISION DESCRIPTION	APP. BY

© 2011

Texas Department of Transportation

MACTEC
3520 EXECUTIVE CENTER DRIVE
SUITE 200
AUSTIN, TEXAS 78731
(512) 795-0360
REGISTRATION NUMBER: F-1784

SH 151

CULVERT LAYOUT OUTFALL 1 SH 151 STA 513+47.18

(SHEET 1 OF 2)

FED. RD. DIV. NO.			SHEET NO.
			202
STATE	DIST.	COUNTY	
TEXAS	SA	BEXAR	
CONT.	SECT.	JOB	HIGHWAY NO.
2452	01	043	SH 151

p:\4760\0-0129\cad\sheet\151str01.dgn 2/19/2011 1:18:51 PM mwmldkiff

SHEET SUMMARY OF ESTIMATED QUANTITIES			
ITEM#	DESCRIPTION	UNIT	QTY
0479	ADJ INLETS	EA	1

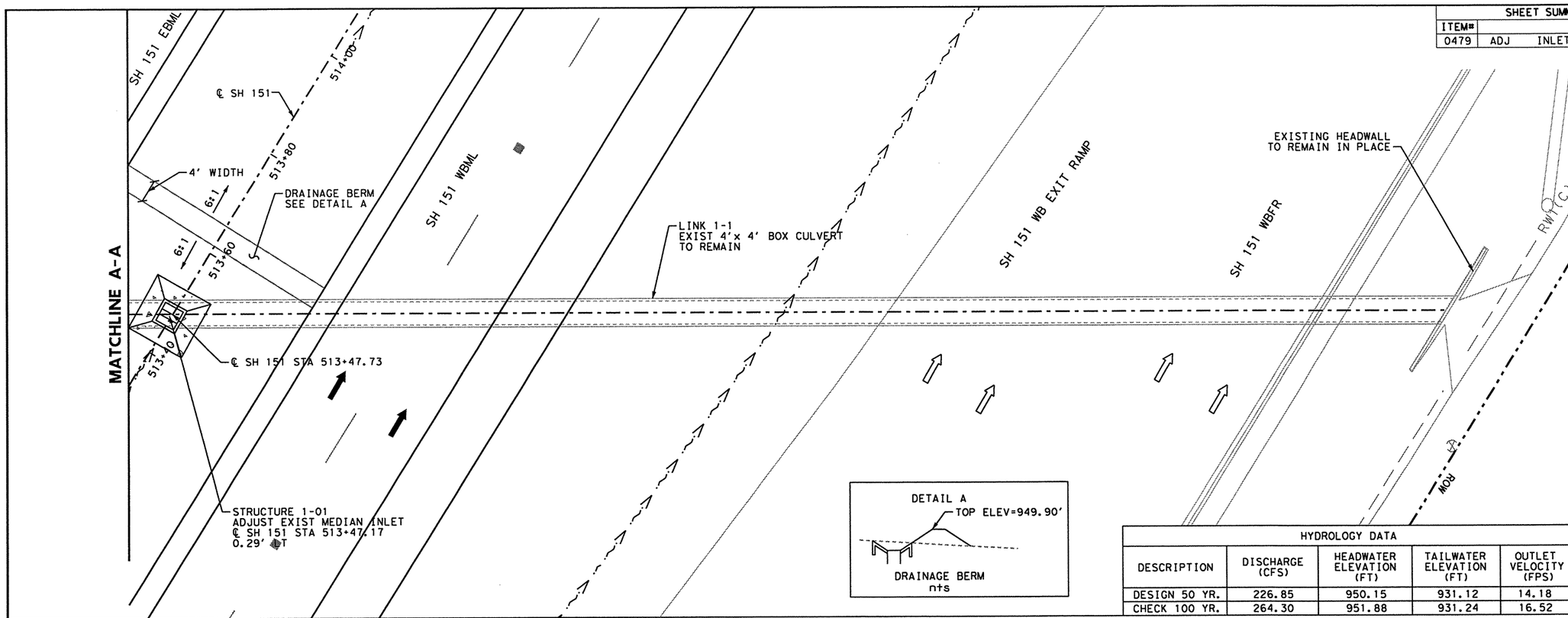

LEGEND

- RIGHT OF WAY LINE
- PROPOSED ALIGNMENT
- EXIST TRAFFIC FLOW ARROW
- PROP TRAFFIC FLOW ARROW

N

0 5 10 20
SCALE IN FEET

HYDROLOGY DATA				
DESCRIPTION	DISCHARGE (CFS)	HEADWATER ELEVATION (FT)	TAILWATER ELEVATION (FT)	OUTLET VELOCITY (FPS)
DESIGN 50 YR.	226.85	950.15	931.12	14.18
CHECK 100 YR.	264.30	951.88	931.24	16.52

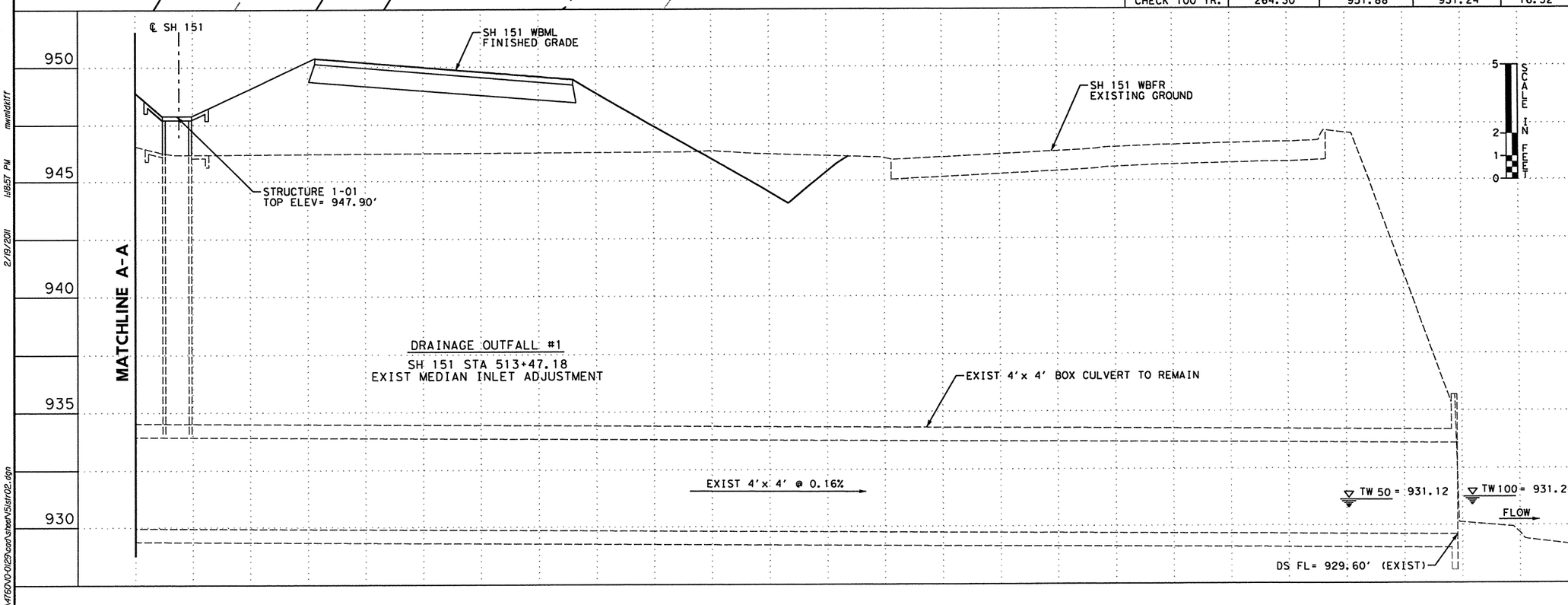

STATE OF TEXAS
JOHN D. CONQUEST
89243
LICENSED
PROFESSIONAL ENGINEER

2/19/11

NO.	DATE	REVISION DESCRIPTION	APP. BY

© 2011

Texas Department of Transportation

MACTEC
3520 EXECUTIVE CENTER DRIVE
SUITE 200
AUSTIN, TEXAS 78731
(512) 795-0360
REGISTRATION NUMBER: F-1784

SH 151

CULVERT LAYOUT OUTFALL 1 SH 151 STA 513+47.18

(SHEET 2 OF 2)

FED. RD. DIV. NO.			SHEET NO.
			203
STATE	DIST.	COUNTY	
TEXAS	SA	BEXAR	
CONT.	SECT.	JOB	HIGHWAY NO.
2452	01	043	SH 151

p:\4760\0-0129\cad\sheet\151str02.dgn 2/19/2011 1:18:57 PM mwmldkiff

SHEET SUMMARY OF ESTIMATED QUANTITIES			
ITEM#	DESCRIPTION	UNIT	QTY
0462	CONC BOX CULV (6 FT X 4 FT)	LF	107
0465	INLET (COMPL) (DROP) (TY 3A)	EA	1
0465	INLET (COMPL) (DROP) (TY Y-1A)	EA	2

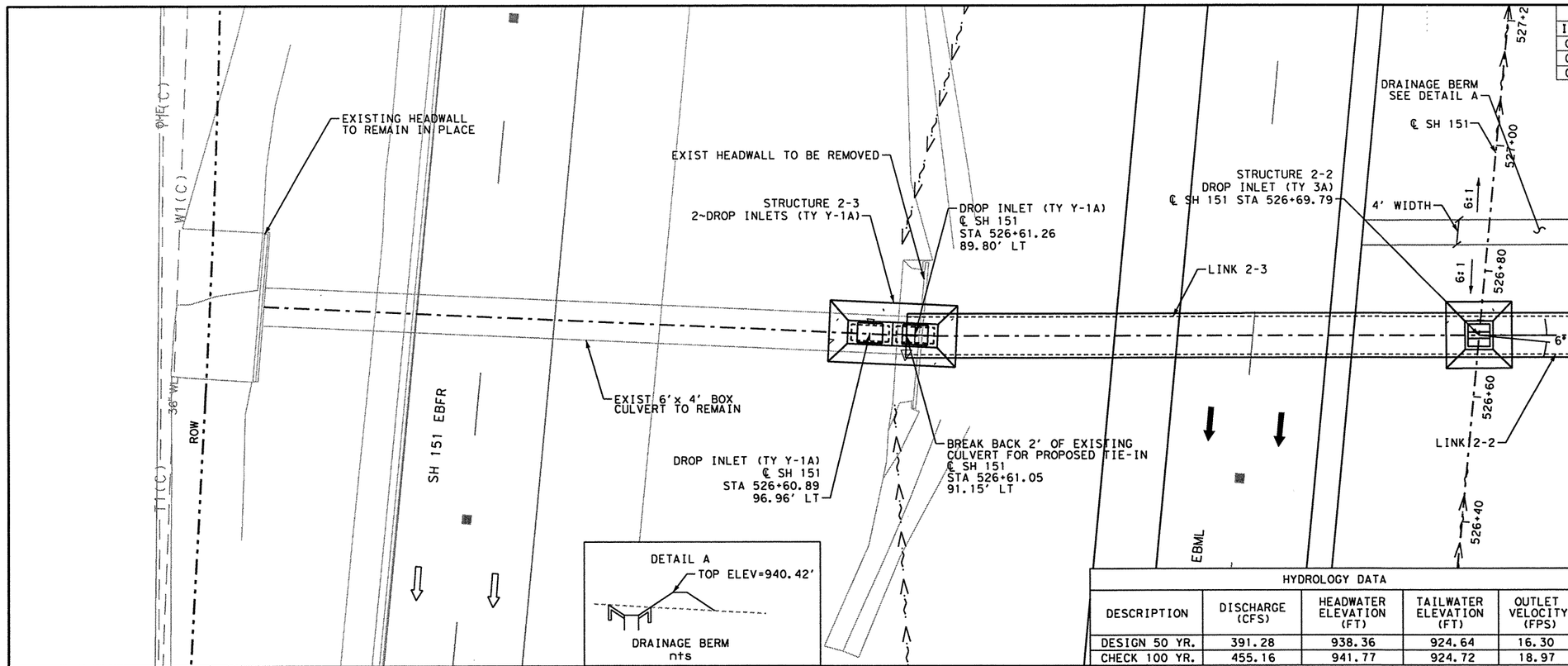

LEGEND

- RIGHT OF WAY LINE
- PROPOSED ALIGNMENT
- EXIST TRAFFIC FLOW ARROW
- PROP TRAFFIC FLOW ARROW

0 5 10 20
SCALE IN FEET

HYDROLOGY DATA				
DESCRIPTION	DISCHARGE (CFS)	HEADWATER ELEVATION (FT)	TAILWATER ELEVATION (FT)	OUTLET VELOCITY (FPS)
DESIGN 50 YR.	391.28	938.36	924.64	16.30
CHECK 100 YR.	455.16	941.77	924.72	18.97

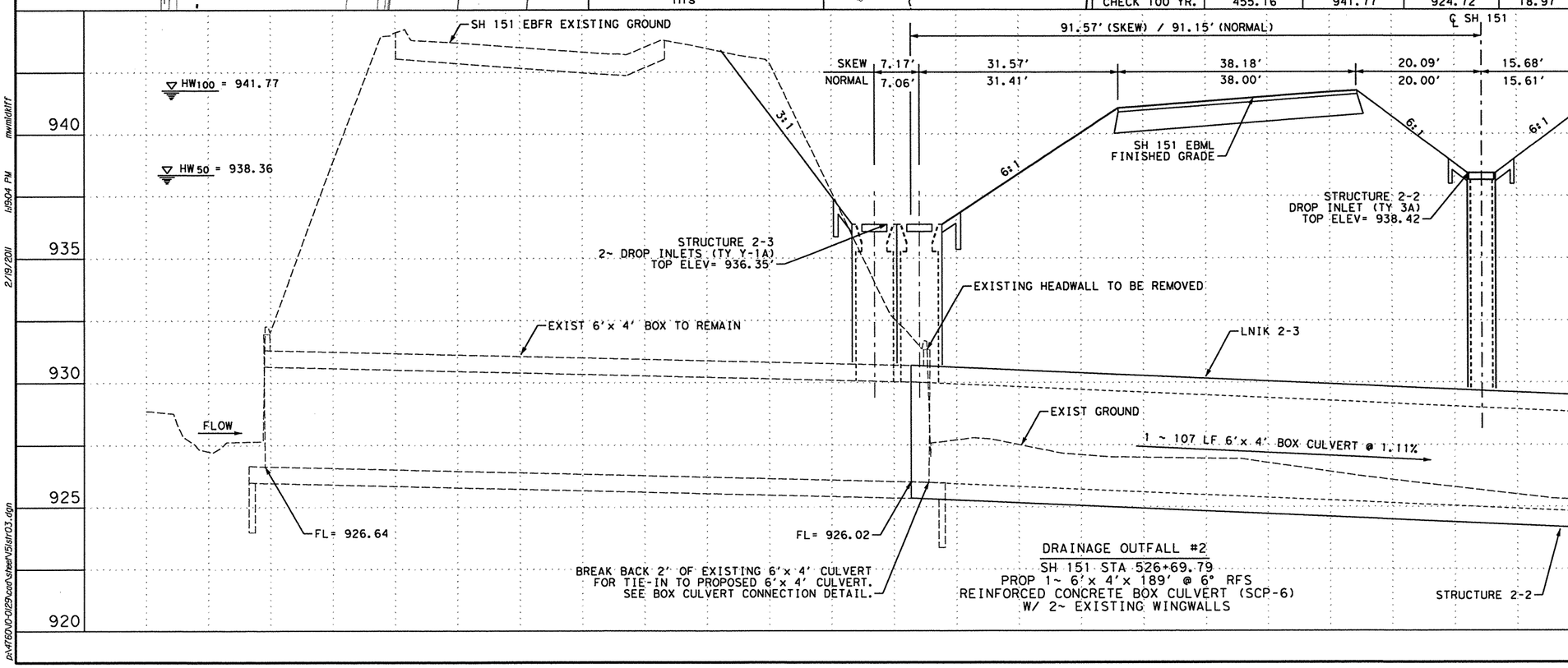

DRAINAGE OUTFALL #2
SH 151 STA 526+69.79
PROP 1~ 6'x 4'x 189' @ 6° RFS
REINFORCED CONCRETE BOX CULVERT (SCP-6)
W/ 2~ EXISTING WINGWALLS

2/19/11

STATE OF TEXAS
JOHN D. CONQUEST
89243
LICENSED
PROFESSIONAL ENGINEER

NO.	DATE	REVISION DESCRIPTION	APP. BY

©2011

Texas Department of Transportation

MACTEC
3520 EXECUTIVE CENTER DRIVE
SUITE 200
AUSTIN, TEXAS 78731
(512) 795-0360
REGISTRATION NUMBER: F-1784

SH 151

CULVERT LAYOUT OUTFALL 2 SH 151 STA 526+69.79

(SHEET 1 OF 2)

FED. RD. DIV. NO.			SHEET NO.
			204
STATE	DIST.	COUNTY	
TEXAS	SA	BEXAR	
CONT.	SECT.	JOB	HIGHWAY NO.
2452	01	043	SH 151

p:\4760\0-0129\cad\sheet\151str03.dgn 2/19/2011 1:19:04 PM mwmldkiff

SHEET SUMMARY OF ESTIMATED QUANTITIES			
ITEM#	DESCRIPTION	UNIT	QTY
0462	CONC BOX CULV (6 FT X 4 FT)	LF	81
0465	INLET (COMPL) (DROP) (TY Y-1A)	EA	1

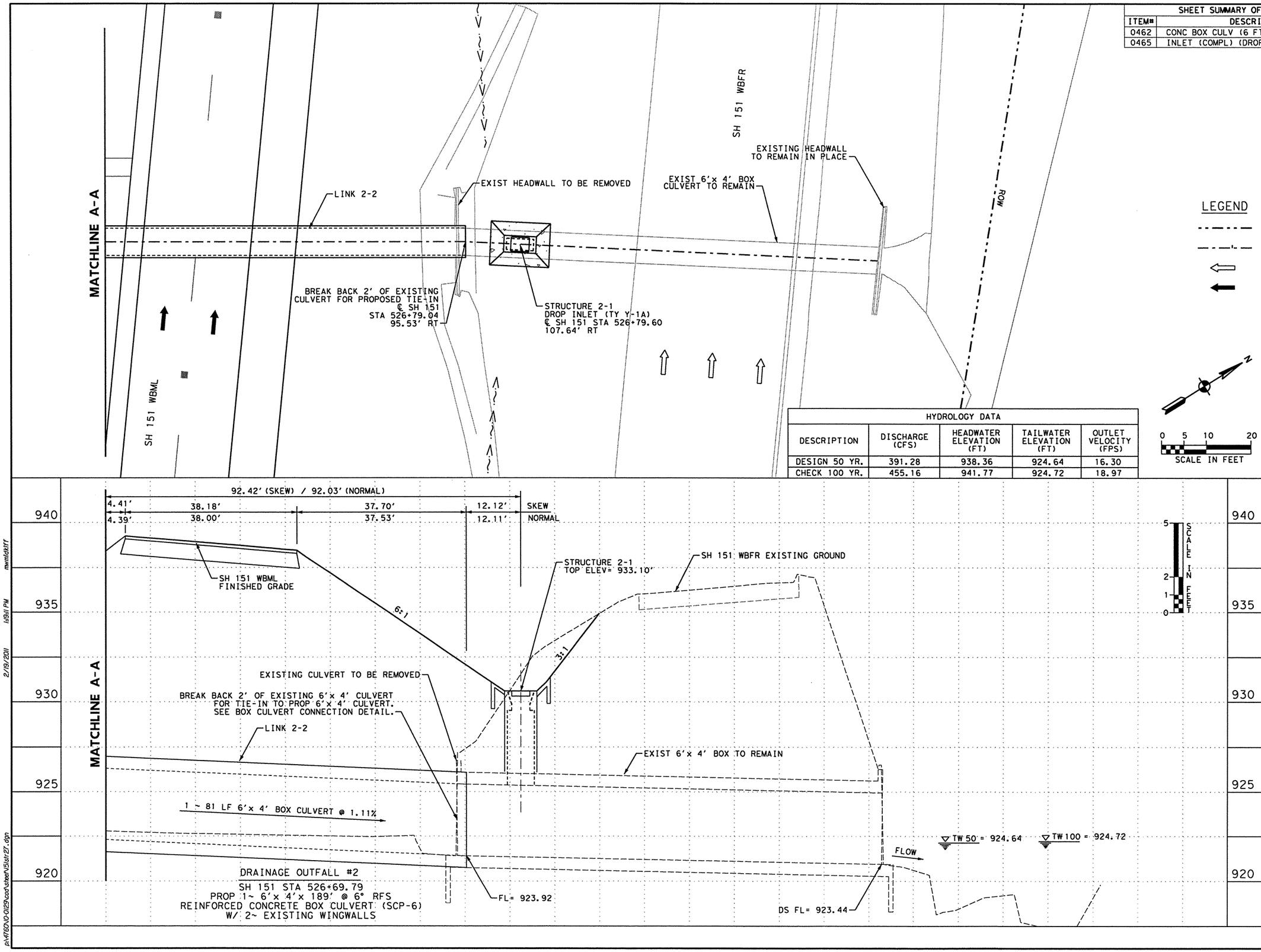

HYDROLOGY DATA				
DESCRIPTION	DISCHARGE (CFS)	HEADWATER ELEVATION (FT)	TAILWATER ELEVATION (FT)	OUTLET VELOCITY (FPS)
DESIGN 50 YR.	391.28	938.36	924.64	16.30
CHECK 100 YR.	455.16	941.77	924.72	18.97

DRAINAGE OUTFALL #2
SH 151 STA 526+69.79
PROP 1~ 6'x 4'x 189' @ 6° RFS
REINFORCED CONCRETE BOX CULVERT (SCP-6)
W/ 2~ EXISTING WINGWALLS

2/19/11

STATE OF TEXAS
JOHN D. CONQUEST
89243
LICENSED PROFESSIONAL ENGINEER

NO.	DATE	REVISION DESCRIPTION	APP. BY

©2011

Texas Department of Transportation

MACTEC
3520 EXECUTIVE CENTER DRIVE
SUITE 200
AUSTIN, TEXAS 78731
(512) 795-0360
REGISTRATION NUMBER: F-1784

SH 151

CULVERT LAYOUT OUTFALL 2 SH 151 STA 526+69.79

(SHEET 2 OF 2)

FED. RD. DIV. NO.			SHEET NO.
			205
STATE	DIST.	COUNTY	
TEXAS	SA	BEXAR	
CONT.	SECT.	JOB	HIGHWAY NO.
2452	01	043	SH 151

mwmtdxtff 1:19:11 PM 2/19/2011 p:\4780\0-0129\cad\sheet\151st27.dgn

SHEET SUMMARY OF ESTIMATED QUANTITIES			
ITEM#	DESCRIPTION	UNIT	QTY
0465	INLET (COMPL) (DROP) (TY Y-1A)	EA	2
0465	INLET (COMPL) (DROP) (TY W-2)	EA	1

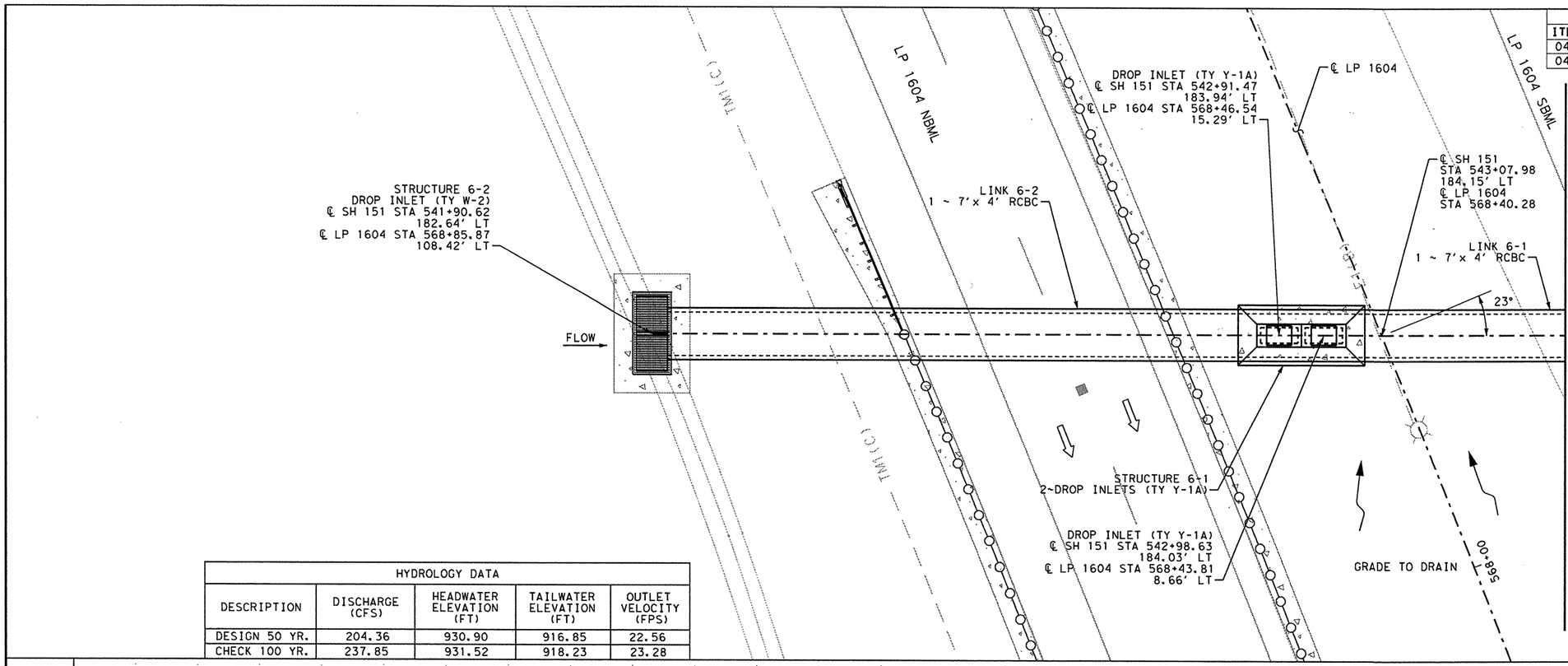

LEGEND

- RIGHT OF WAY LINE
- PROPOSED ALIGNMENT
- EXIST TRAFFIC FLOW ARROW
- PROP TRAFFIC FLOW ARROW

HYDROLOGY DATA				
DESCRIPTION	DISCHARGE (CFS)	HEADWATER ELEVATION (FT)	TAILWATER ELEVATION (FT)	OUTLET VELOCITY (FPS)
DESIGN 50 YR.	204.36	930.90	916.85	22.56
CHECK 100 YR.	237.85	931.52	918.23	23.28

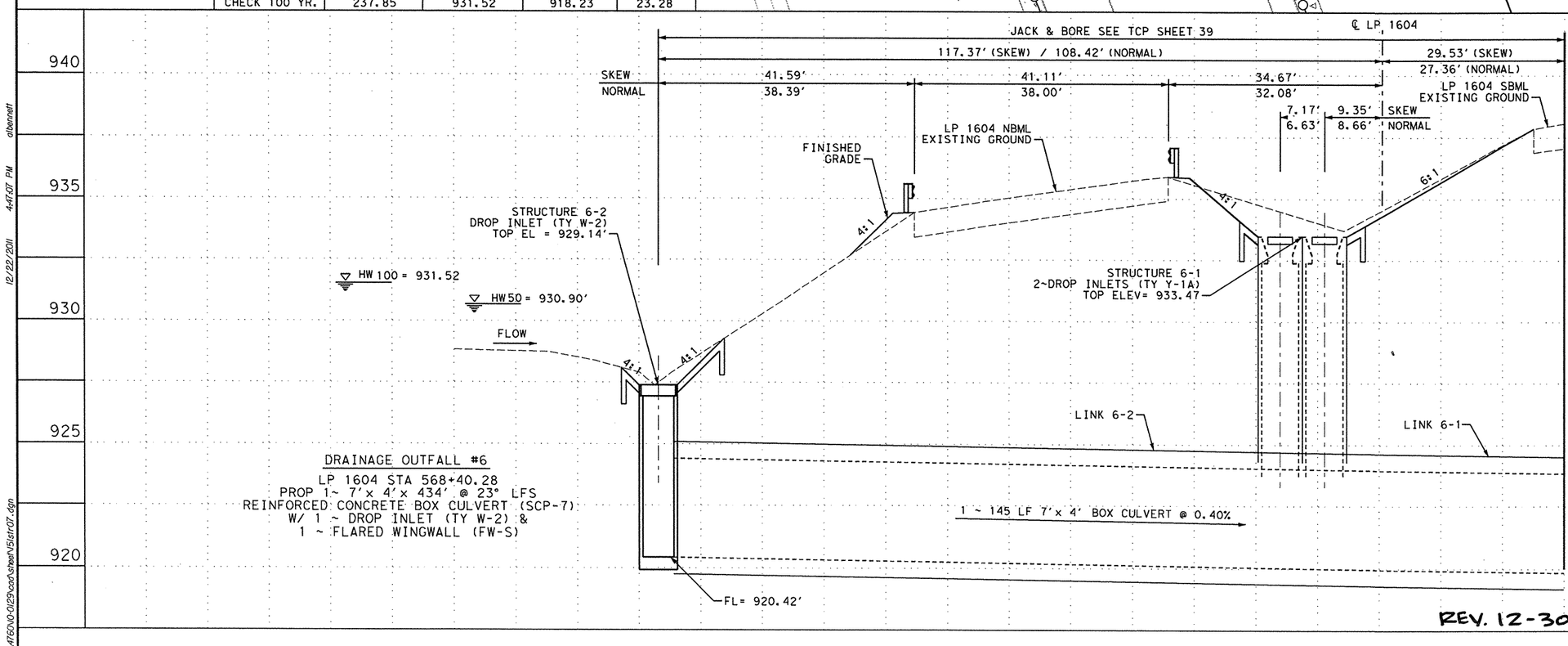

DRAINAGE OUTFALL #6

LP 1604 STA 568+40.28
PROP 1~ 7'x 4'x 434' @ 23° LFS
REINFORCED CONCRETE BOX CULVERT (SCP-7)
W/ 1 ~ DROP INLET (TY W-2) &
1 ~ FLARED WINGWALL (FW-S)

REV. 12-30-11

12/23/11

STATE OF TEXAS
JOHN D. CONQUEST
89243
LICENSED
PROFESSIONAL ENGINEER

NO.	DATE	REVISION DESCRIPTION	APP. BY
	12/22/11	QUANTITY CHANGE	MWM

© 2011

Texas Department of Transportation

MACTEC
3520 EXECUTIVE CENTER DRIVE
SUITE 200
AUSTIN, TEXAS 78731
(512) 795-0360
REGISTRATION NUMBER: F-1784

SH 151

CULVERT LAYOUT
OUTFALL 6
LP 1604
STA 568+40.28

(SHEET 1 OF 3)

FED. RD. DIV. NO.			SHEET NO.
			206
STATE	DIST.	COUNTY	
TEXAS	SA	BEXAR	
CONT.	SECT.	JOB	HIGHWAY NO.
2452	01	043	SH 151

p:\4760\0-0129\cad\sheet\151sht07.dgn 12/22/2011 4:47:07 PM dbennett

SHEET SUMMARY OF ESTIMATED QUANTITIES			
ITEM#	DESCRIPTION	UNIT	QTY

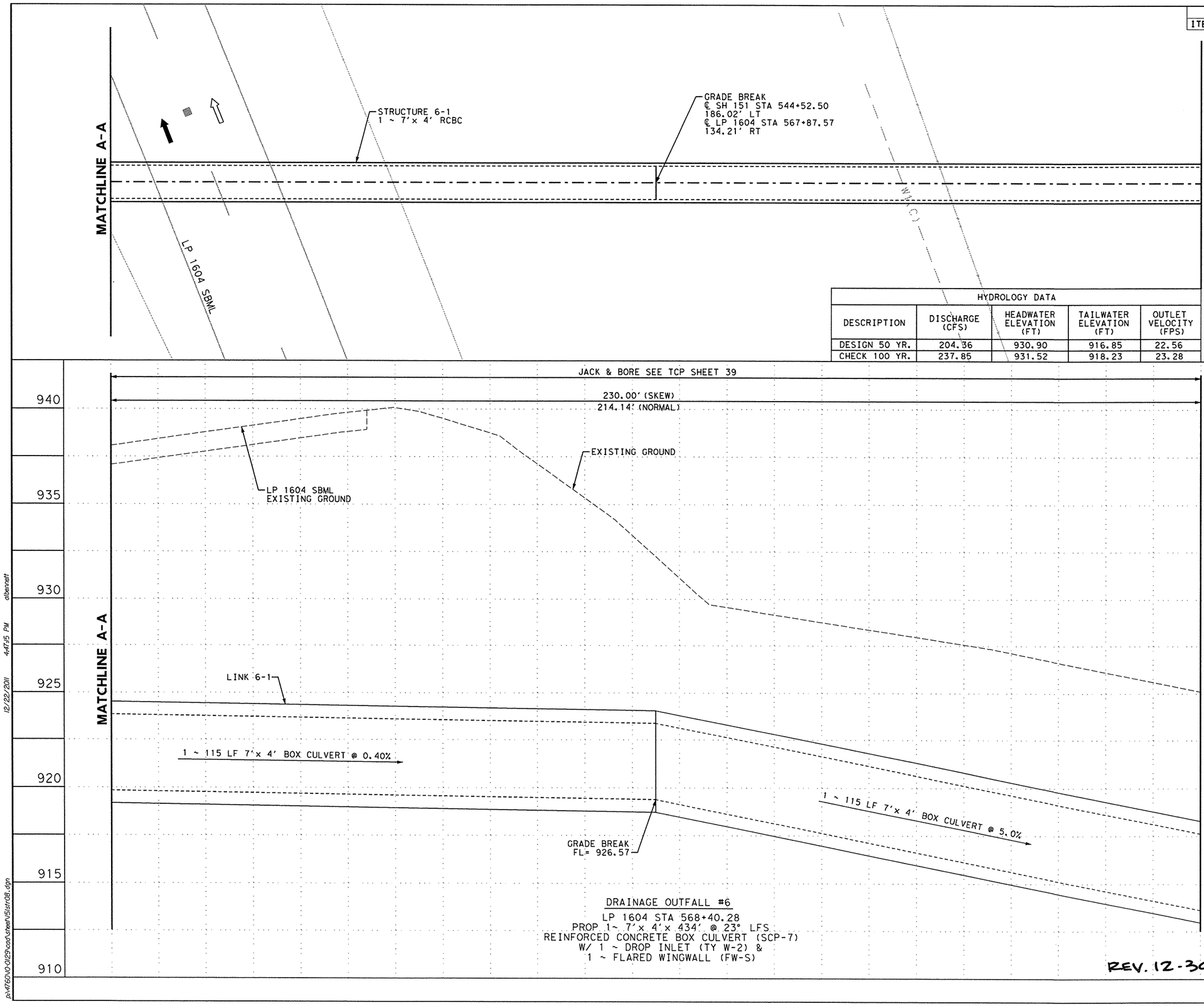

LEGEND

- RIGHT OF WAY LINE
- PROPOSED ALIGNMENT
- EXIST TRAFFIC FLOW ARROW
- PROP TRAFFIC FLOW ARROW

HYDROLOGY DATA				
DESCRIPTION	DISCHARGE (CFS)	HEADWATER ELEVATION (FT)	TAILWATER ELEVATION (FT)	OUTLET VELOCITY (FPS)
DESIGN 50 YR.	204.36	930.90	916.85	22.56
CHECK 100 YR.	237.85	931.52	918.23	23.28

DRAINAGE OUTFALL #6

LP 1604 STA 568+40.28
PROP 1~ 7'x 4'x 434' @ 23° LFS
REINFORCED CONCRETE BOX CULVERT (SCP-7)
W/ 1 ~ DROP INLET (TY W-2) &
1 ~ FLARED WINGWALL (FW-S)

REV. 12-30-11

12/22/11

STATE OF TEXAS
JOHN D. CONQUEST
89243
LICENSED
PROFESSIONAL ENGINEER

NO.	DATE	REVISION DESCRIPTION	APP. BY
	12/22/11	QUANTITY CHANGE	MWM

© 2011

Texas Department of Transportation

MACTEC
3520 EXECUTIVE CENTER DRIVE
SUITE 200
AUSTIN, TEXAS 78731
(512) 795-0360
REGISTRATION NUMBER: F-1784

SH 151

CULVERT LAYOUT OUTFALL 6 SH 151 STA 526+69.79

(SHEET 2 OF 3)

FED. RD. DIV. NO.			SHEET NO.
			207
STATE	DIST.	COUNTY	
TEXAS	SA	BEXAR	
CONT.	SECT.	JOB	HIGHWAY NO.
2452	01	043	SH 151

12/22/2011 4:47:15 PM albennett
p:\4160\0-0\29\cad\sheet\151st108.dgn

SHEET SUMMARY OF ESTIMATED QUANTITIES			
ITEM#	DESCRIPTION	UNIT	QTY
0466	WINGWALL (FW-S) (HW=5 FT)	EA	1

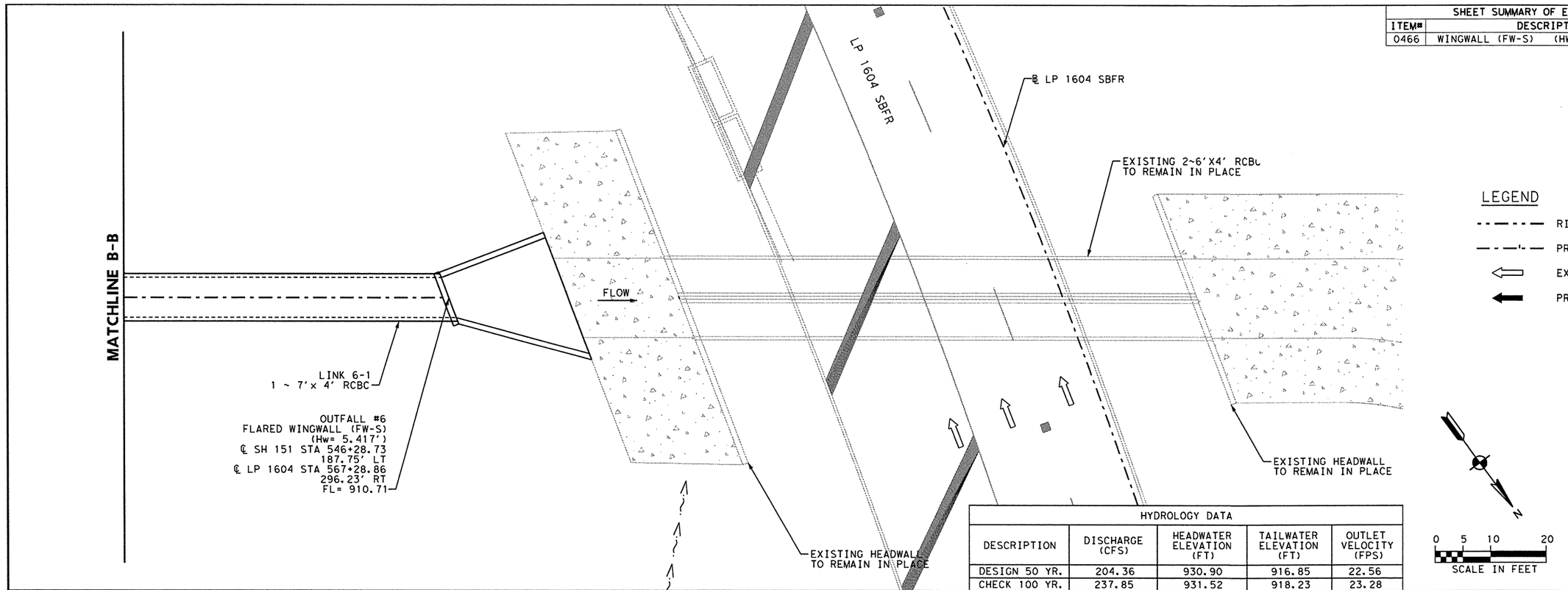

LEGEND

- RIGHT OF WAY LINE
- PROPOSED ALIGNMENT
- EXIST TRAFFIC FLOW ARROW
- PROP TRAFFIC FLOW ARROW

HYDROLOGY DATA				
DESCRIPTION	DISCHARGE (CFS)	HEADWATER ELEVATION (FT)	TAILWATER ELEVATION (FT)	OUTLET VELOCITY (FPS)
DESIGN 50 YR.	204.36	930.90	916.85	22.56
CHECK 100 YR.	237.85	931.52	918.23	23.28

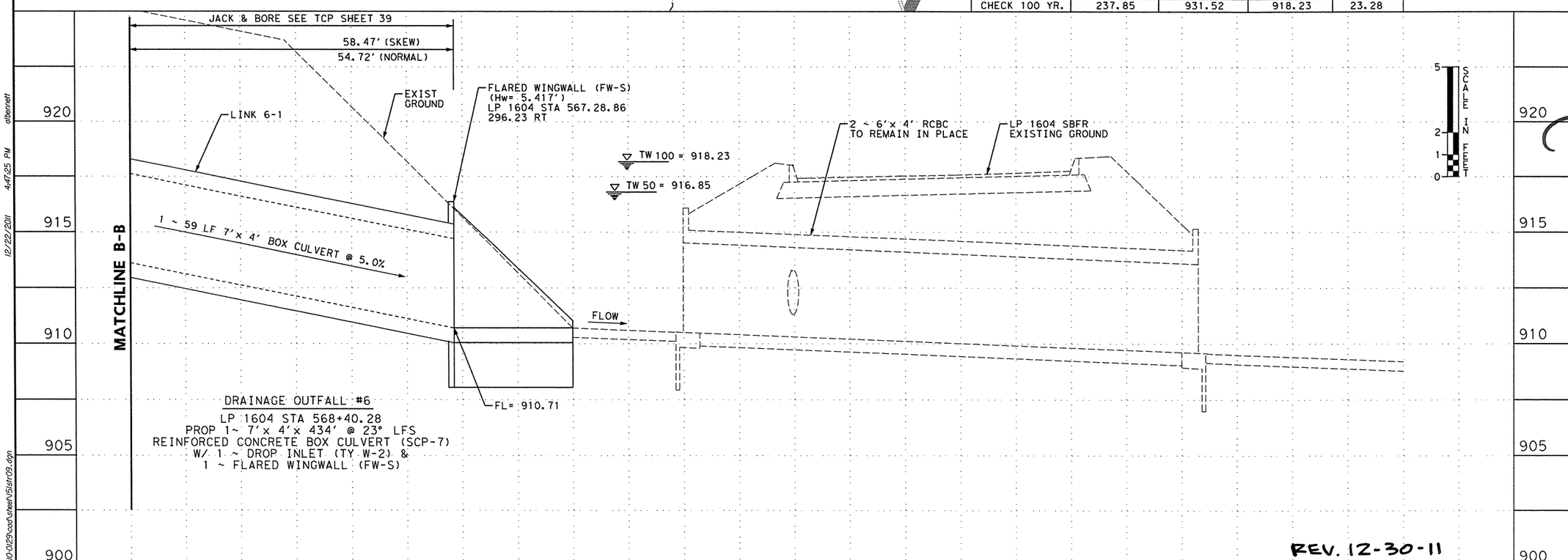

DRAINAGE OUTFALL #6

LP 1604 STA 568+40.28
PROP 1~ 7'x 4'x 434' @ 23° LFS
REINFORCED CONCRETE BOX CULVERT (SCP-7)
W/ 1 ~ DROP INLET (TY W-2) &
1 ~ FLARED WINGWALL (FW-S)

REV. 12-30-11

12/22/11

STATE OF TEXAS
JOHN D. CONQUEST
89243
LICENSED
PROFESSIONAL ENGINEER

NO.	DATE	REVISION DESCRIPTION	APP. BY
	12/22/11	QUANTITY CHANGE	MWM

© 2011

Texas Department of Transportation

MACTEC
3520 EXECUTIVE CENTER DRIVE
SUITE 200
AUSTIN, TEXAS 78731
(512) 795-0360

REGISTRATION NUMBER: F-1784

SH 151

CULVERT LAYOUT OUTFALL 6 LP 1604 STA 568+40.28

(SHEET 3 OF 3)

FED. RD. DIV. NO.			SHEET NO.
			208
STATE	DIST.	COUNTY	
TEXAS	SA	BEXAR	
CONT.	SECT.	JOB	HIGHWAY NO.
2452	01	043	SH 151

p:\4760\0-0129\cad\sheet\5lstr09.dgn 12/22/2011 4:47:25 PM dbennett

SHEET SUMMARY OF ESTIMATED QUANTITIES			
ITEM#	DESCRIPTION	UNIT	QTY
0465	INLET (COMPL) (DROP) (TY Y-1)	EA	1

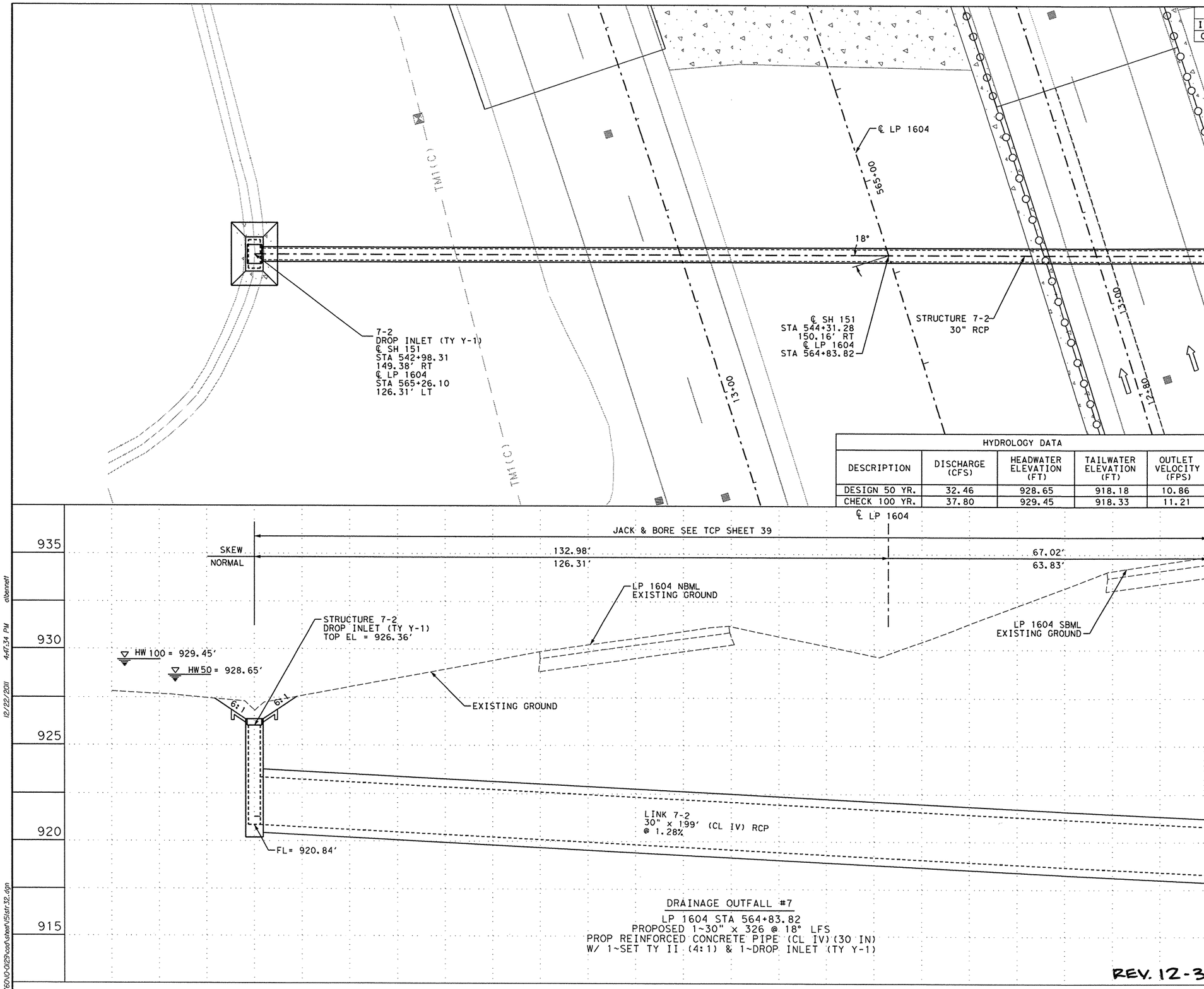

LEGEND

- RIGHT OF WAY LINE
- PROPOSED ALIGNMENT
- EXIST TRAFFIC FLOW ARROW
- PROP TRAFFIC FLOW ARROW

N

0 5 10 20
SCALE IN FEET

HYDROLOGY DATA				
DESCRIPTION	DISCHARGE (CFS)	HEADWATER ELEVATION (FT)	TAILWATER ELEVATION (FT)	OUTLET VELOCITY (FPS)
DESIGN 50 YR.	32.46	928.65	918.18	10.86
CHECK 100 YR.	37.80	929.45	918.33	11.21

DRAINAGE OUTFALL #7

LP 1604 STA 564+83.82
PROPOSED 1~30" x 326 @ 18° LFS
PROP REINFORCED CONCRETE PIPE (CL IV)(30 IN)
W/ 1~SET TY II (4:1) & 1~DROP INLET (TY Y-1)

REV. 12-30-11

12/22/11

STATE OF TEXAS
JOHN D. CONQUEST
89243
LICENSED
PROFESSIONAL ENGINEER

NO.	DATE	REVISION DESCRIPTION	APP. BY
	12/22/11	QUANTITY CHANGE	MWM

© 2011

Texas Department of Transportation

MACTEC
3520 EXECUTIVE CENTER DRIVE
SUITE 200
AUSTIN, TEXAS 78731
(512) 795-0360

REGISTRATION NUMBER: F-1784

SH 151

CULVERT LAYOUT
OUTFALL 7
LP 1604
STA 564+83.82

(SHEET 1 OF 2)

FED. RD. DIV. NO.			SHEET NO.
			209
STATE	DIST.	COUNTY	
TEXAS	SA	BEXAR	
CONT.	SECT.	JOB	HIGHWAY NO.
2452	01	043	SH 151

p:\476010-0125\cad\sheet\151st-32.dgn 12/22/2011 4:47:34 PM dbennett

SHEET SUMMARY OF ESTIMATED QUANTITIES			
ITEM#	DESCRIPTION	UNIT	QTY
0467	SET (TY II) (30 IN) (RCP)	EA	1

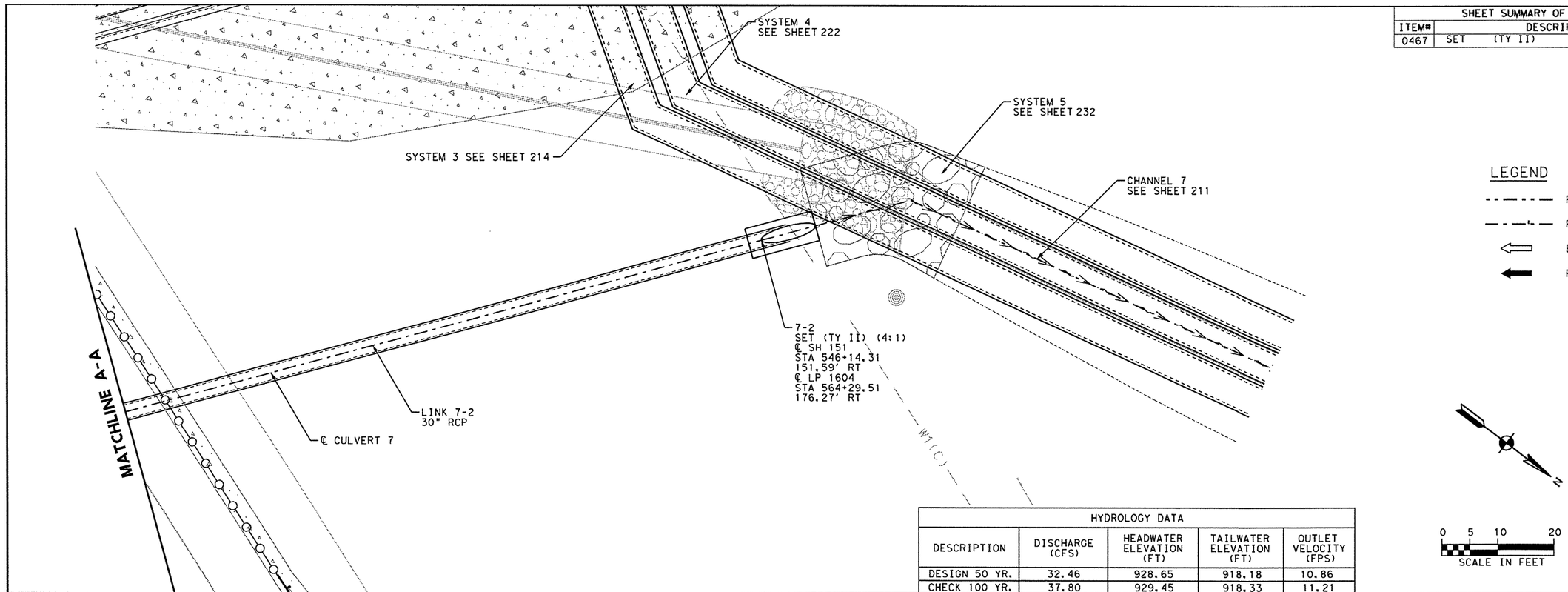

LEGEND

- RIGHT OF WAY LINE
- PROPOSED ALIGNMENT
- EXIST TRAFFIC FLOW ARROW
- PROP TRAFFIC FLOW ARROW

HYDROLOGY DATA				
DESCRIPTION	DISCHARGE (CFS)	HEADWATER ELEVATION (FT)	TAILWATER ELEVATION (FT)	OUTLET VELOCITY (FPS)
DESIGN 50 YR.	32.46	928.65	918.18	10.86
CHECK 100 YR.	37.80	929.45	918.33	11.21

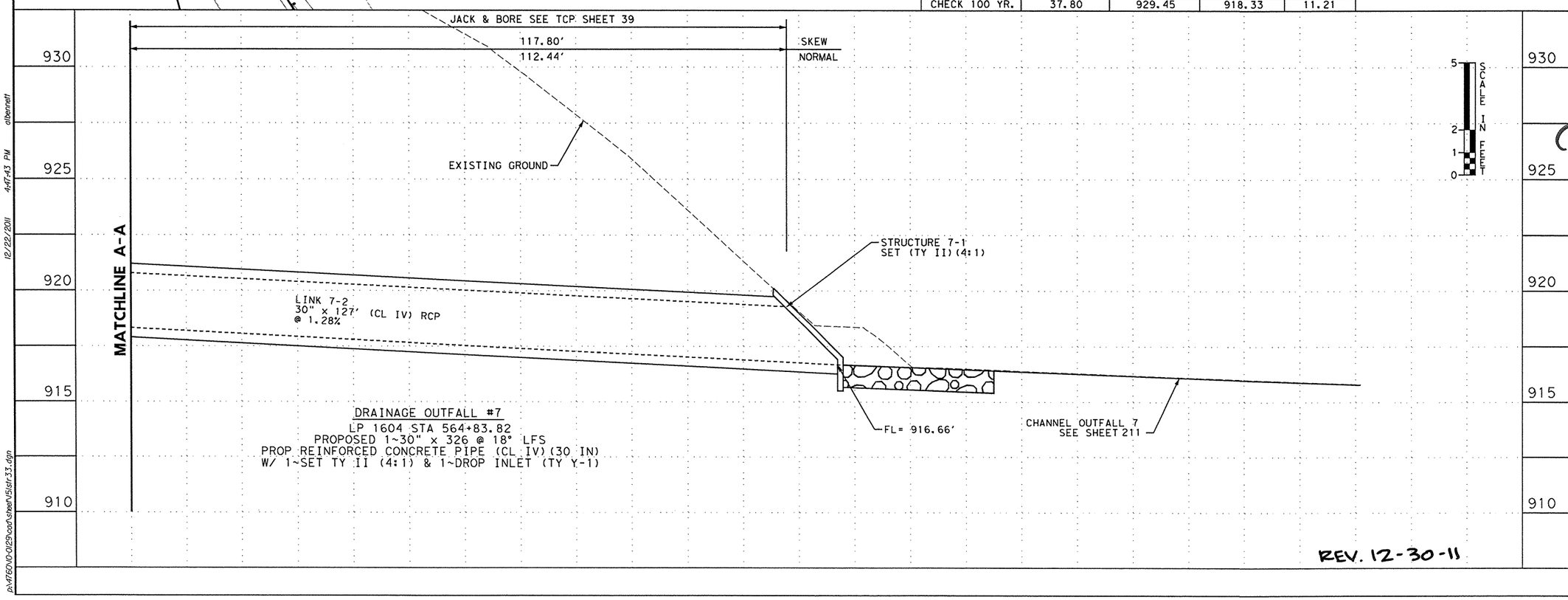

DRAINAGE OUTFALL #7
LP 1604 STA 564+83.82
PROPOSED 1~30" x 326 @ 18° LFS
PROP REINFORCED CONCRETE PIPE (CL IV)(30 IN)
W/ 1~SET TY II (4:1) & 1~DROP INLET (TY Y-1)

REV. 12-30-11

12/23/11

STATE OF TEXAS
JOHN D. CONQUEST
89243
LICENSED
PROFESSIONAL ENGINEER

NO.	DATE	REVISION DESCRIPTION	APP. BY
	12/22/11	QUANTITY CHANGE	MWM

© 2011

Texas Department of Transportation

MACTEC
3520 EXECUTIVE CENTER DRIVE
SUITE 200
AUSTIN, TEXAS 78731
(512) 795-0360
REGISTRATION NUMBER: F-1784

SH 151

CULVERT LAYOUT
OUTFALL 7
LP 1604
STA 564+83.82

(SHEET 2 OF 2)

FED. RD. DIV. NO.			SHEET NO.
			210
STATE	DIST.	COUNTY	
TEXAS	SA	BEXAR	
CONT.	SECT.	JOB	HIGHWAY NO.
2452	01	043	SH 151

p:\4760\10-0129\cad\sheet\151str33.dgn 12/22/2011 4:47:43 PM albennett

SHEET SUMMARY OF ESTIMATED QUANTITIES			
ITEM#	DESCRIPTION	UNIT	QTY

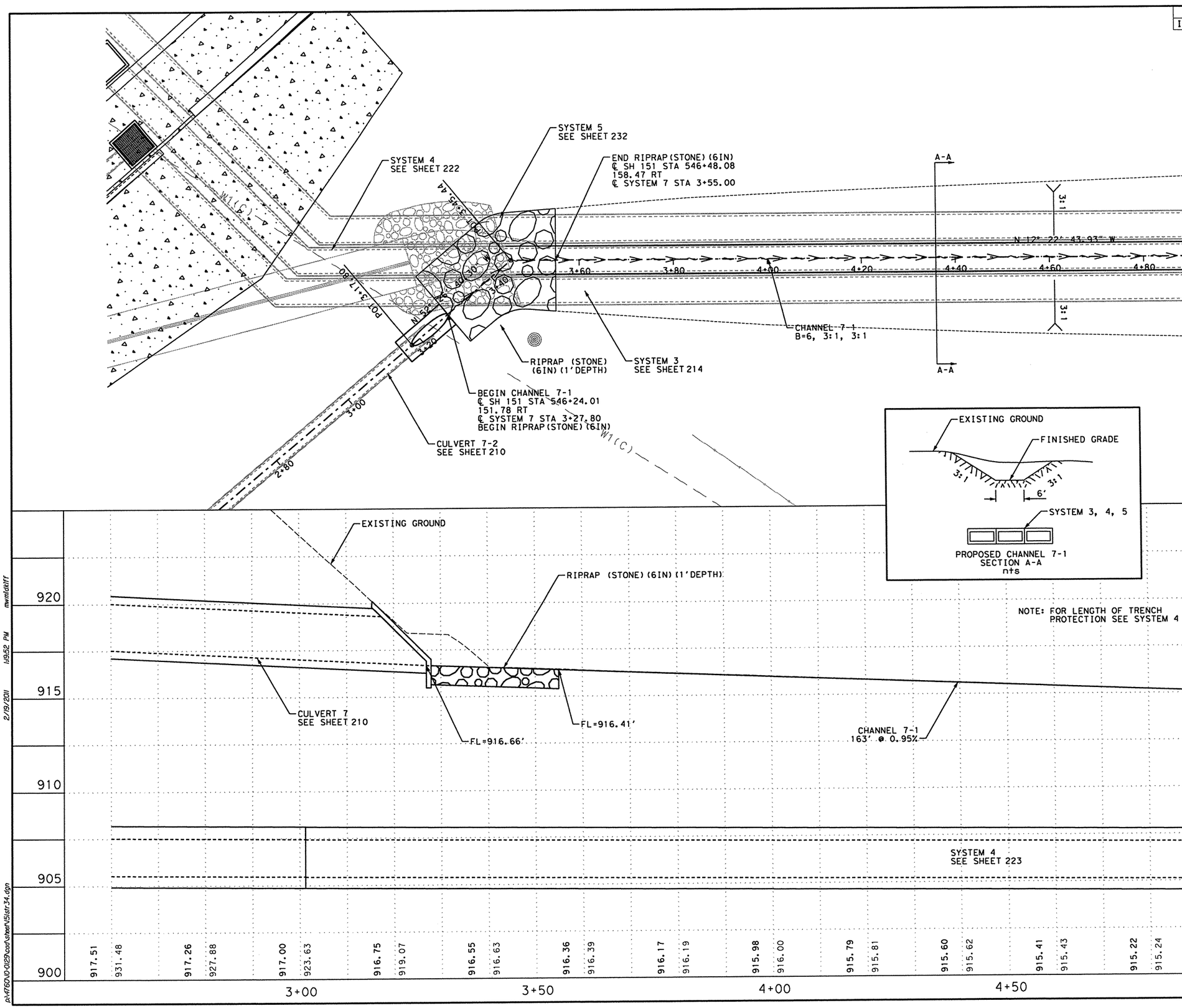

2/19/11

STATE OF TEXAS
JOHN D. CONQUEST
89243
LICENSED
PROFESSIONAL ENGINEER

NO.	DATE	REVISION DESCRIPTION	APP. BY

© 2011

Texas Department of Transportation

MACTEC
3520 EXECUTIVE CENTER DRIVE
SUITE 200
AUSTIN, TEXAS 78731
(512) 795-0360

REGISTRATION NUMBER: F-1784

SH 151

CHANNEL LAYOUT OUTFALL 7 LP 1604

(SHEET 1 OF 2)

FED. RD. DIV. NO.			SHEET NO.
			211
STATE	DIST.	COUNTY	
TEXAS	SA	BEXAR	
CONT.	SECT.	JOB	HIGHWAY NO.
2452	01	043	SH 151

p:\4760\0-0129\cad\sheet\151str34.dgn 2/19/2011 1:19:52 PM mwmldkiff

SHEET SUMMARY OF ESTIMATED QUANTITIES			
ITEM#	DESCRIPTION	UNIT	QTY

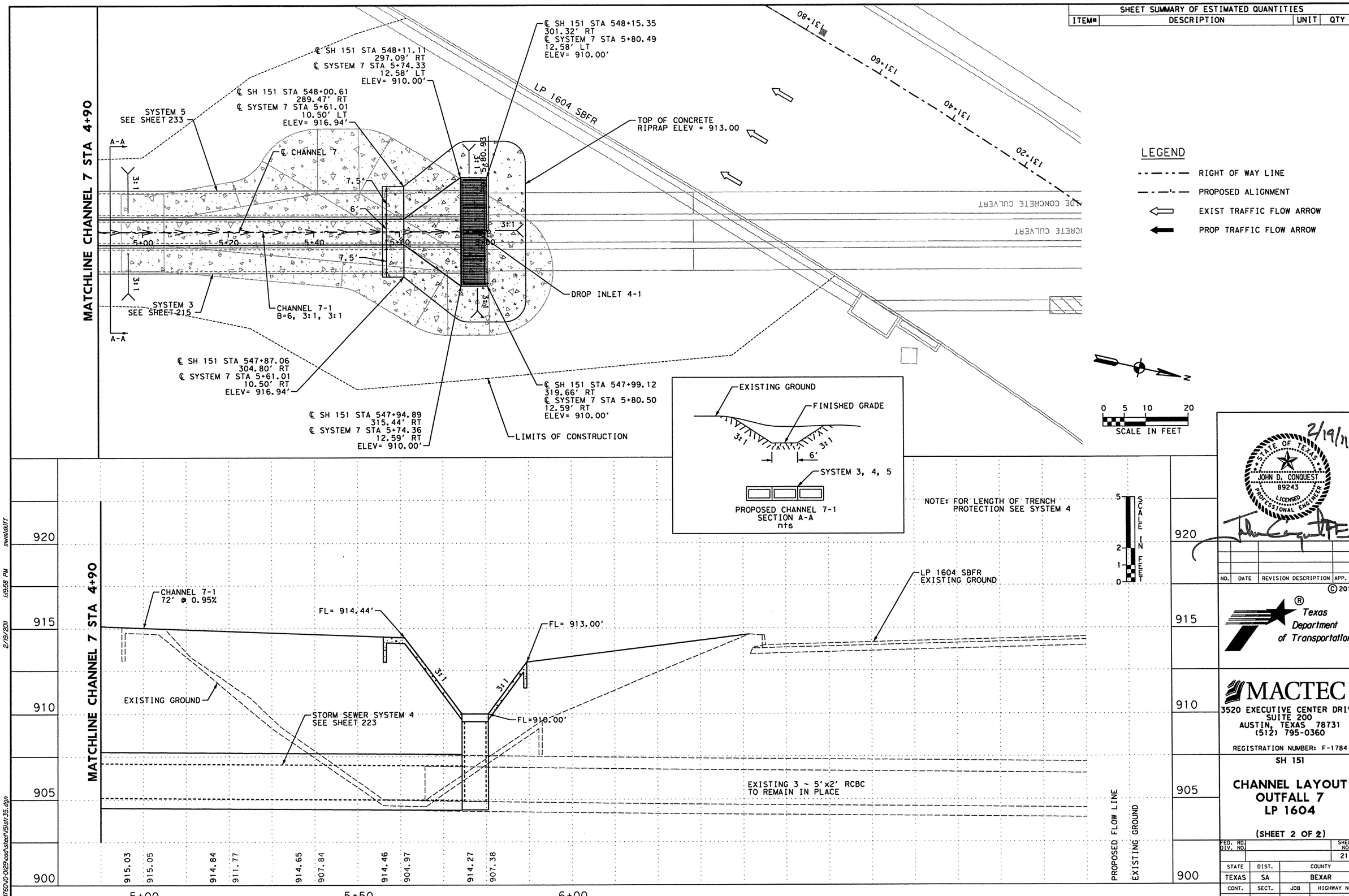

2/19/11

STATE OF TEXAS
JOHN D. CONQUEST
89243
LICENSED
PROFESSIONAL ENGINEER

NO.	DATE	REVISION DESCRIPTION	APP. BY

© 2011

Texas Department of Transportation

MACTEC
3520 EXECUTIVE CENTER DRIVE
SUITE 200
AUSTIN, TEXAS 78731
(512) 795-0360

REGISTRATION NUMBER: F-1784

SH 151

CHANNEL LAYOUT OUTFALL 7 LP 1604

(SHEET 2 OF 2)

FED. RD. DIV. NO.			SHEET NO.
			212
STATE	DIST.	COUNTY	
TEXAS	SA	BEXAR	
CONT.	SECT.	JOB	HIGHWAY NO.
2452	01	043	SH 151

p:\4760\0-0129\cad\sheet\151str35.dgn 2/19/2011 1:19:58 PM mwmldkiff

SHEET SUMMARY OF ESTIMATED QUANTITIES			
ITEM#	DESCRIPTION	UNIT	QTY
0464	RC PIPE (CL IV) (24 IN)	LF	180
0465	INLET (COMPL) (DROP) (TY W-1)	EA	3

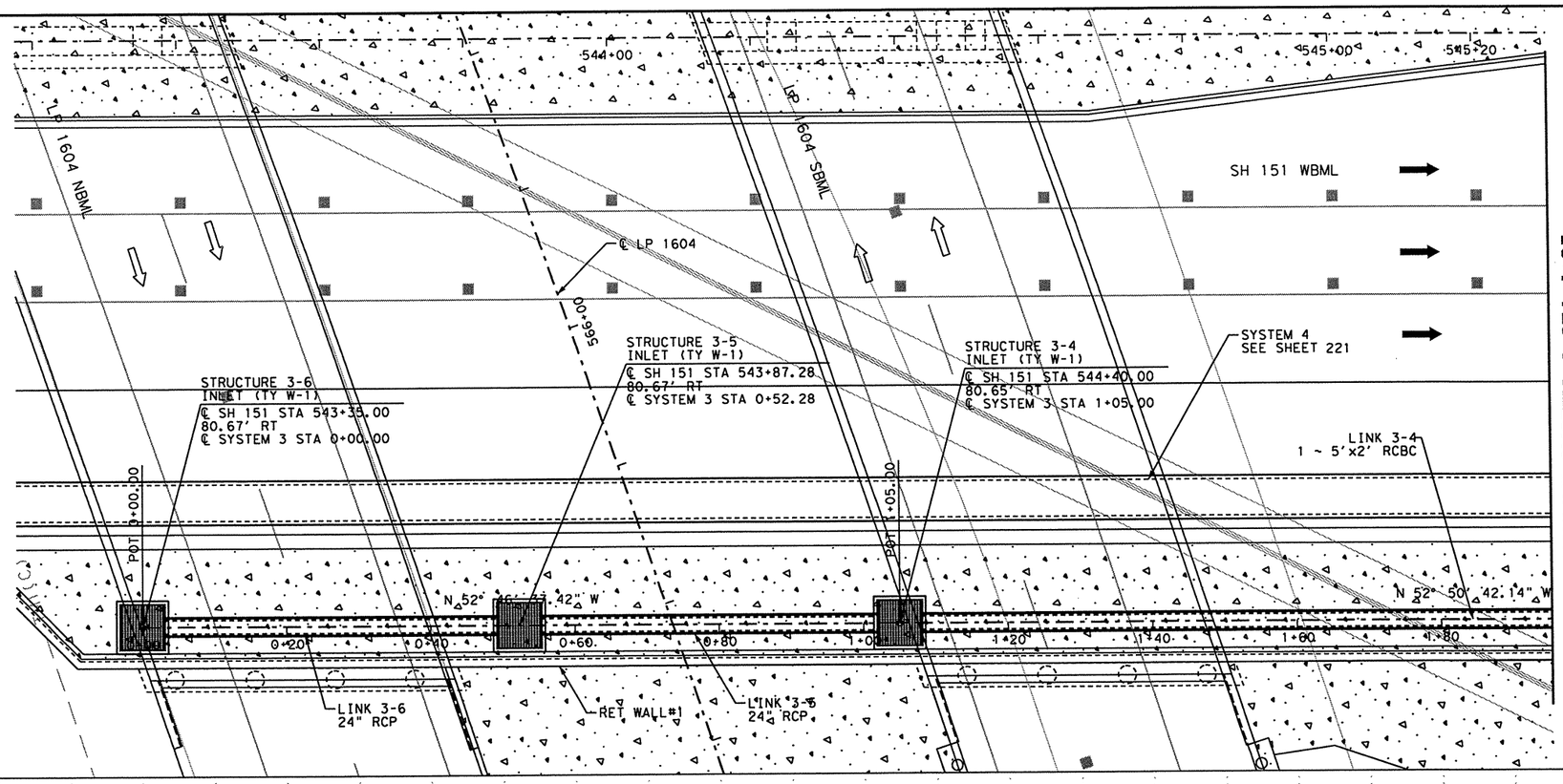

MATCHLINE SYSTEM 3 STA 1+95

LEGEND

- RIGHT OF WAY LINE
- PROPOSED ALIGNMENT
- EXIST TRAFFIC FLOW ARROW
- PROP TRAFFIC FLOW ARROW

N

0 5 10 20
SCALE IN FEET

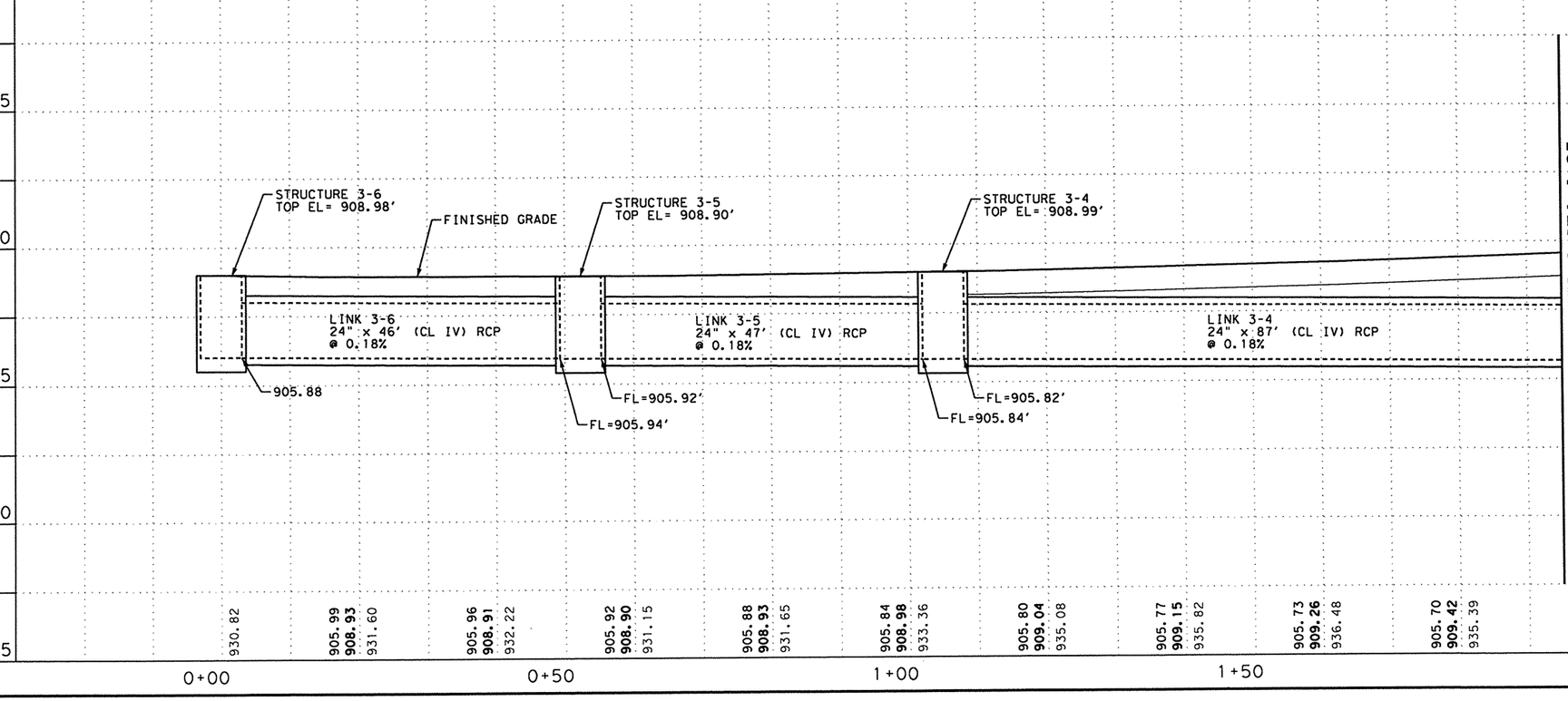

MATCHLINE SYSTEM 3 STA 1+95

SCALE IN FEET
5
2
1
0

2/19/11

STATE OF TEXAS
JOHN D. CONQUEST
89243
LICENSED
PROFESSIONAL ENGINEER

NO.	DATE	REVISION DESCRIPTION	APP. BY

© 2011

Texas Department of Transportation

MACTEC
3520 EXECUTIVE CENTER DRIVE
SUITE 200
AUSTIN, TEXAS 78731
(512) 795-0360

REGISTRATION NUMBER: F-1784

SH 151

STORM SEWER LAYOUT SYSTEM 3 OUTFALL 4

(SHEET 1 OF 3)

FED. RD. DIV. NO.			SHEET NO.
			213
STATE	DIST.	COUNTY	
TEXAS	SA	BEXAR	
CONT.	SECT.	JOB	HIGHWAY NO.
2452	01	043	SH 151

p:\4760\0-0129\cad\Sheet\151st29.dgn 2/19/2011 1:20:06 PM mwmldell1

SHEET SUMMARY OF ESTIMATED QUANTITIES			
ITEM#	DESCRIPTION	UNIT	QTY
0462	CONC BOX CULV (5 FT X 2 FT)	LF	143
0464	RC PIPE (CL IV) (24 IN)	LF	66
0465	INLET (COMPL) (DROP) (TY W-1)	EA	1

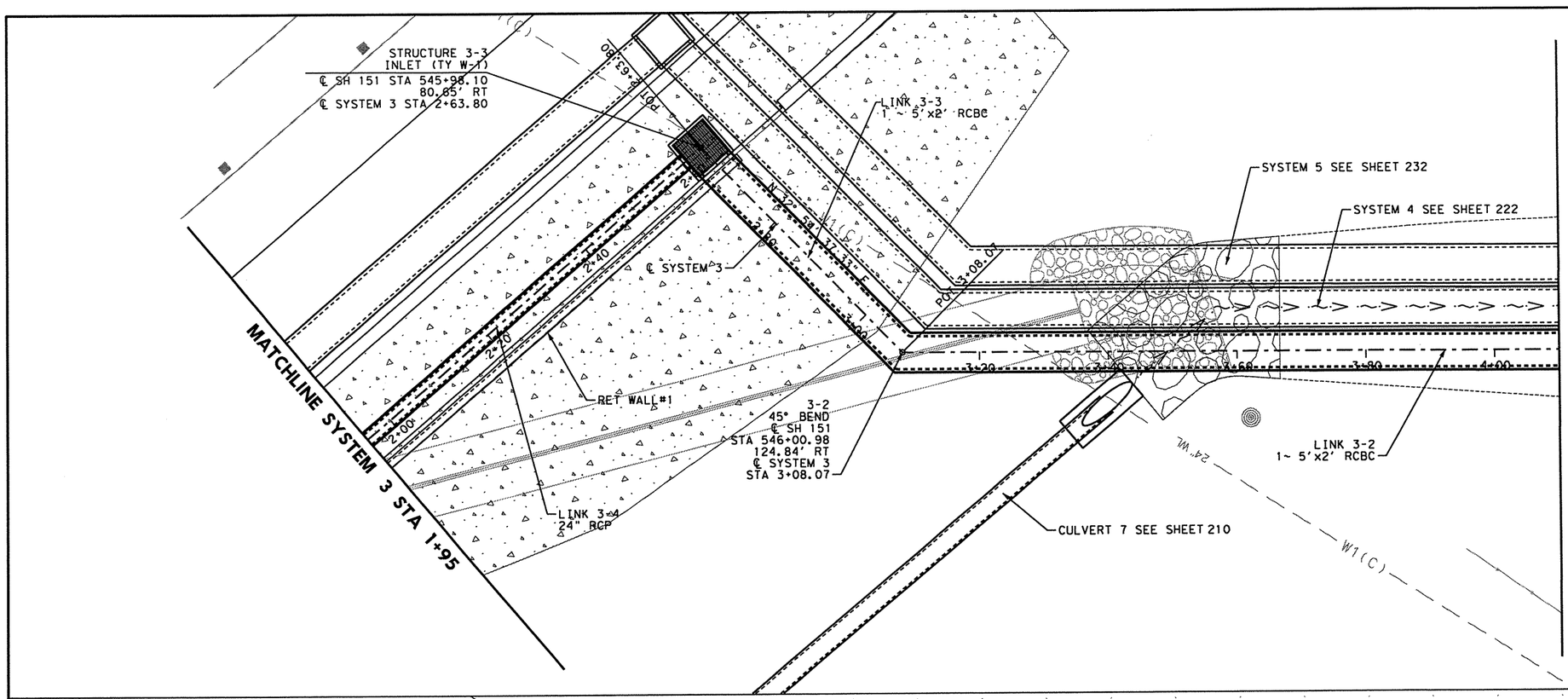

LEGEND

- RIGHT OF WAY LINE
- PROPOSED ALIGNMENT
- EXIST TRAFFIC FLOW ARROW
- PROP TRAFFIC FLOW ARROW

0 5 10 20
SCALE IN FEET

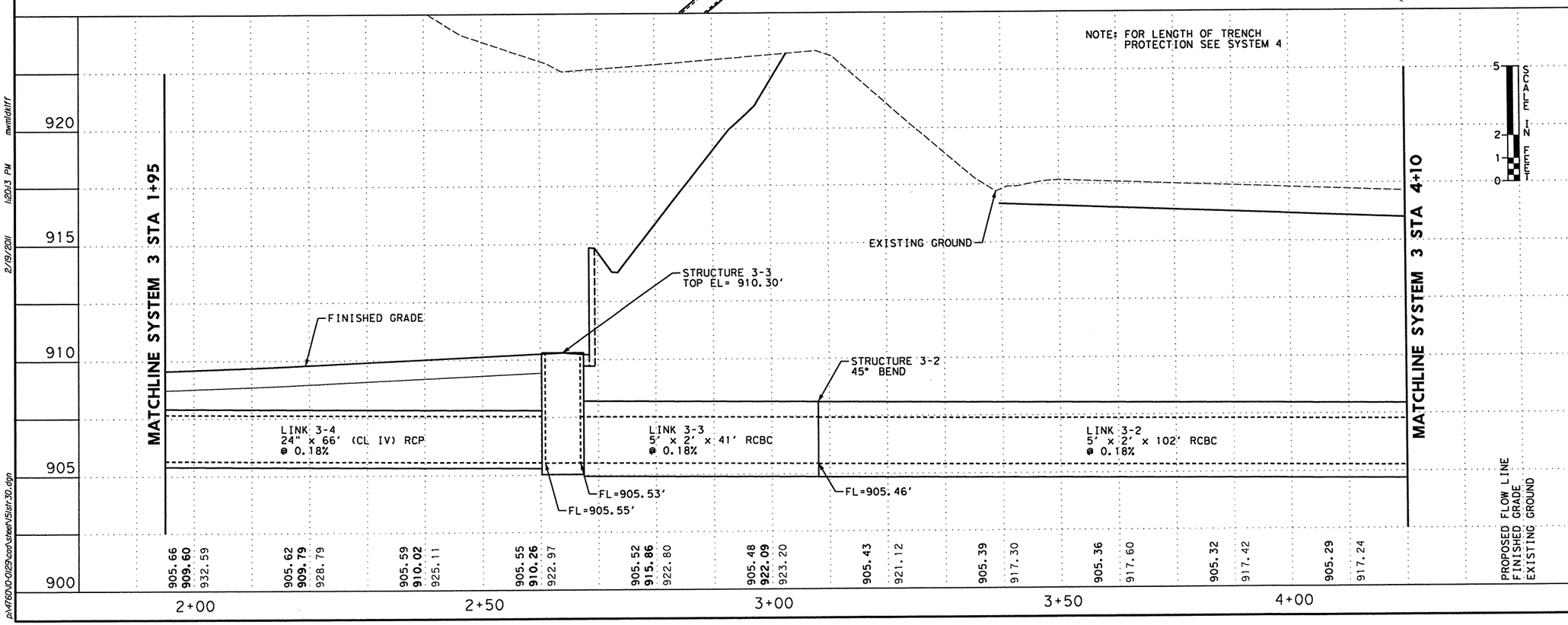

STATE OF TEXAS
JOHN D. CONQUEST
89243
LICENSED PROFESSIONAL ENGINEER
2/19/11

NO.	DATE	REVISION DESCRIPTION	APP. BY

© 2011

Texas Department of Transportation

MACTEC
3520 EXECUTIVE CENTER DRIVE
SUITE 200
AUSTIN, TEXAS 78731
(512) 795-0360

REGISTRATION NUMBER: F-1784

SH 151

STORM SEWER LAYOUT SYSTEM 3 OUTFALL 4

(SHEET 2 OF 3)

FED. RD. DIV. NO.			SHEET NO.
			214
STATE	DIST.	COUNTY	
TEXAS	SA	BEXAR	
CONT.	SECT.	JOB	HIGHWAY NO.
2452	01	043	SH 151

p:\4760\0-0129\cad\sheet\151str30.dgn 2/19/2011 1:20:13 PM mwmldkiff

SHEET SUMMARY OF ESTIMATED QUANTITIES			
ITEM#	DESCRIPTION	UNIT	QTY
0462	CONC BOX CULV (5 FT X 2 FT)	LF	177

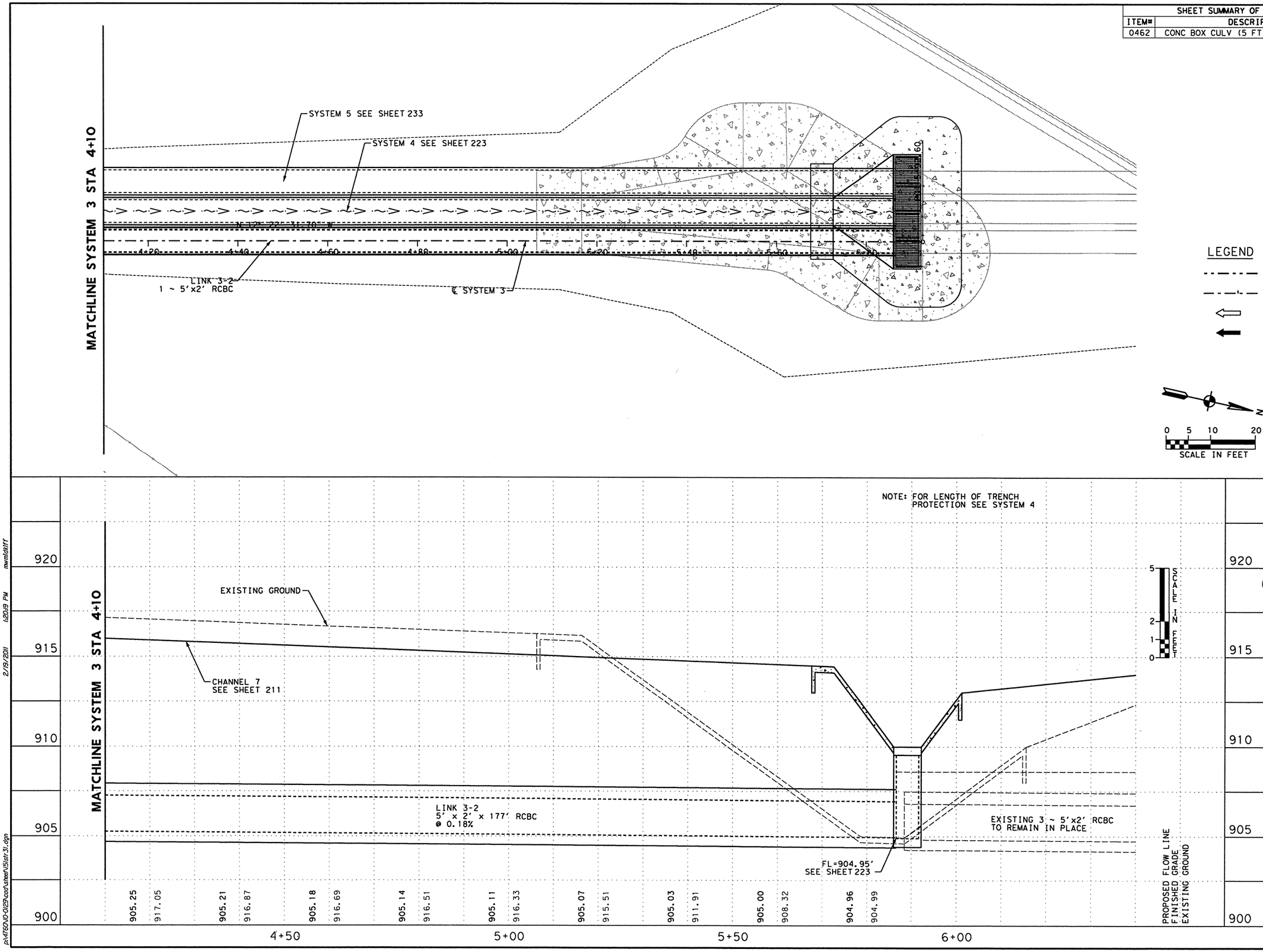

2/19/11

STATE OF TEXAS
JOHN D. CONQUEST
89243
LICENSED
PROFESSIONAL ENGINEER

NO.	DATE	REVISION DESCRIPTION	APP. BY

©2011

Texas Department of Transportation

MACTEC
3520 EXECUTIVE CENTER DRIVE
SUITE 200
AUSTIN, TEXAS 78731
(512) 795-0360

REGISTRATION NUMBER: F-1784

SH 151

STORM SEWER LAYOUT SYSTEM 3 OUTFALL 4

(SHEET 3 OF 3)

FED. RD. DIV. NO.			SHEET NO.
			215
STATE	DIST.	COUNTY	
TEXAS	SA	BEXAR	
CONT.	SECT.	JOB	HIGHWAY NO.
2452	01	043	SH 151

p:\4760\10-0129\cad\sheet\151str31.dgn 2/19/2011 1:20:19 PM mwmldkiff

SHEET SUMMARY OF ESTIMATED QUANTITIES			
ITEM#	DESCRIPTION	UNIT	QTY
0464	RC PIPE (CL IV) (24 IN)	LF	182
0465	INLET (COMPL) (DROP) (TY W-1)	EA	1

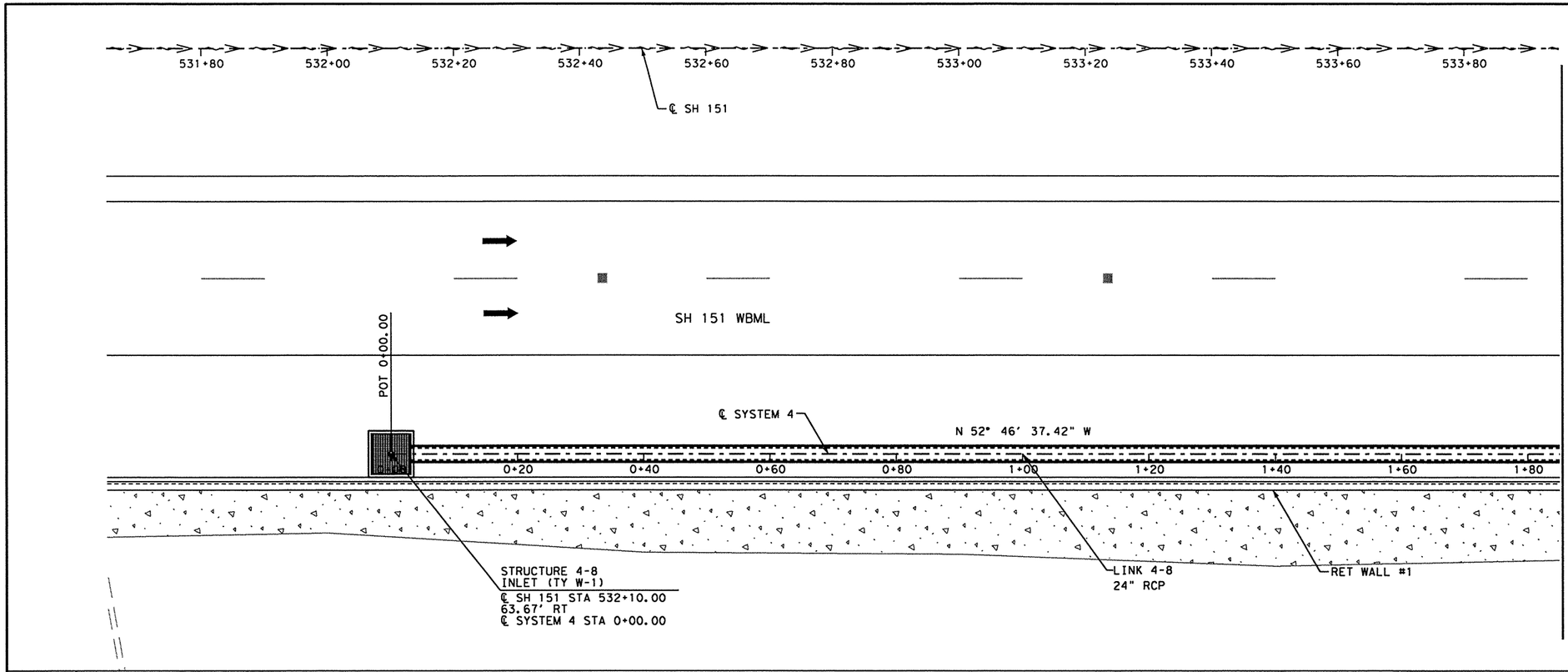

LEGEND

- RIGHT OF WAY LINE
- PROPOSED ALIGNMENT
- EXIST TRAFFIC FLOW ARROW
- PROP TRAFFIC FLOW ARROW

N

0 5 10 20
SCALE IN FEET

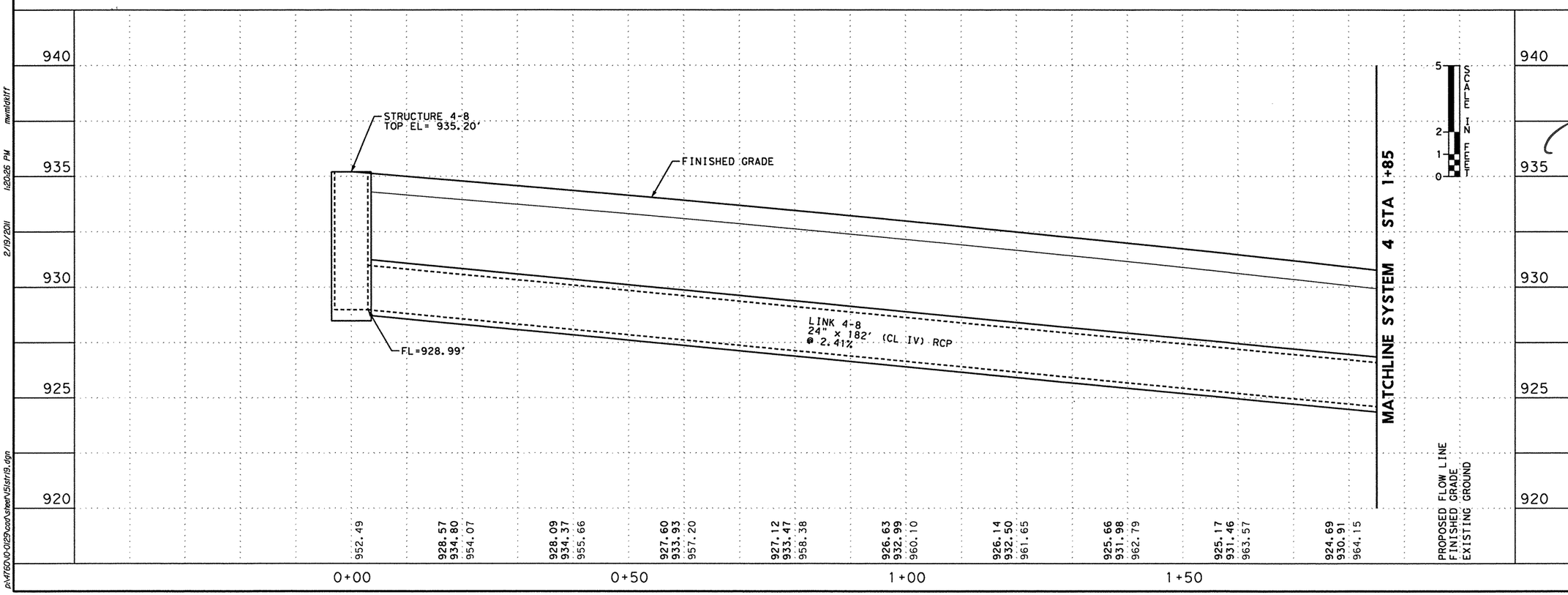

STATE OF TEXAS
JOHN D. CONQUEST
89243
LICENSED
PROFESSIONAL ENGINEER
2/9/11

NO.	DATE	REVISION DESCRIPTION	APP. BY

©2011

Texas Department of Transportation

MACTEC
3520 EXECUTIVE CENTER DRIVE
SUITE 200
AUSTIN, TEXAS 78731
(512) 795-0360

REGISTRATION NUMBER: F-1784

SH 151

STORM SEWER LAYOUT SYSTEM 4 OUTFALL 4

(SHEET 1 OF 9)

FED. RD. DIV. NO.			SHEET NO.
			216
STATE	DIST.	COUNTY	
TEXAS	SA	BEXAR	
CONT.	SECT.	JOB	HIGHWAY NO.
2452	01	043	SH 151

p:\4760\0-0129\cad\sheet\151str19.dgn 2/19/2011 1:20:26 PM mwmldkiff

SHEET SUMMARY OF ESTIMATED QUANTITIES			
ITEM#	DESCRIPTION	UNIT	QTY
0464	RC PIPE (CL IV) (24 IN)	LF	224
0465	INLET (COMPL) (DROP) (TY W-1)	EA	1

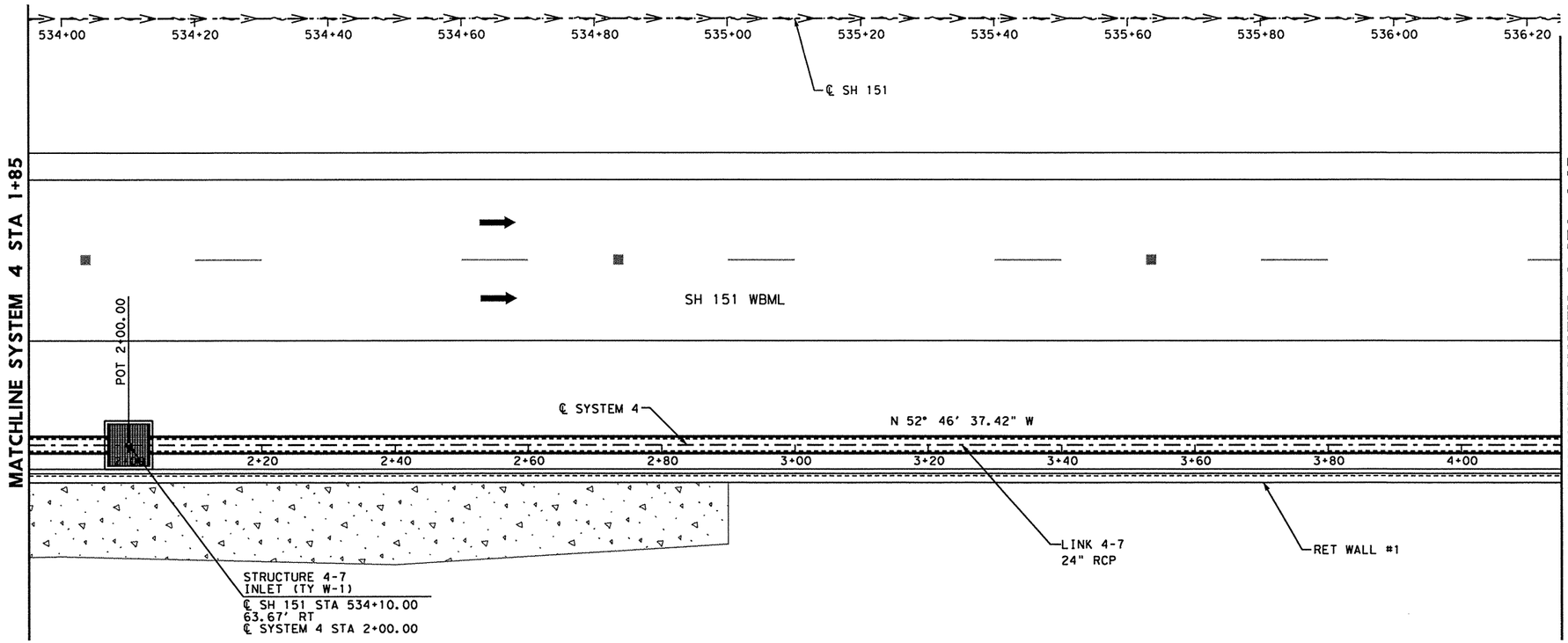

LEGEND

- RIGHT OF WAY LINE
- PROPOSED ALIGNMENT
- EXIST TRAFFIC FLOW ARROW
- PROP TRAFFIC FLOW ARROW

N

0 5 10 20
SCALE IN FEET

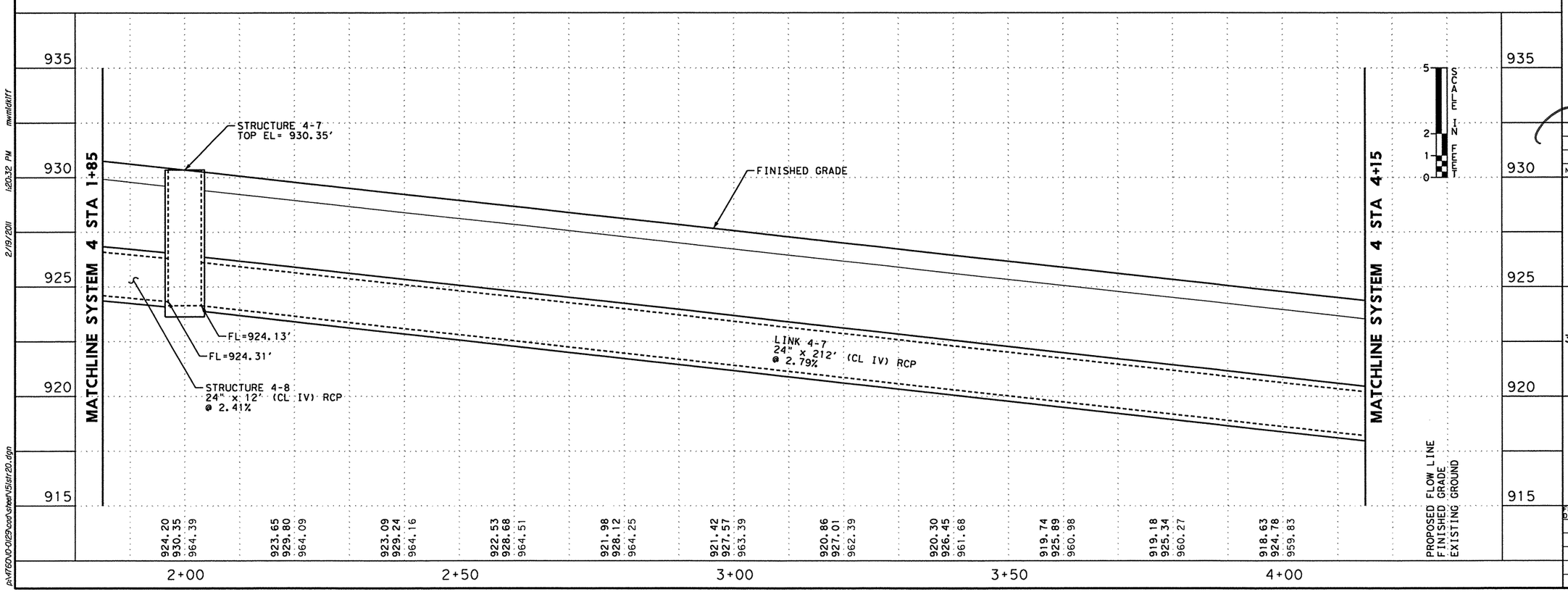

2/19/11

STATE OF TEXAS
JOHN D. CONQUEST
89243
LICENSED
PROFESSIONAL ENGINEER

NO.	DATE	REVISION DESCRIPTION	APP. BY

© 2011

Texas Department of Transportation

MACTEC
3520 EXECUTIVE CENTER DRIVE
SUITE 200
AUSTIN, TEXAS 78731
(512) 795-0360

REGISTRATION NUMBER: F-1784

SH 151

STORM SEWER LAYOUT SYSTEM 4 OUTFALL 4

(SHEET 2 OF 9)

FED. RD. DIV. NO.			SHEET NO.
			217
STATE	DIST.	COUNTY	
TEXAS	SA	BEXAR	
CONT.	SECT.	JOB	HIGHWAY NO.
2452	01	043	SH 151

mwmldkt11 1:20:32 PM 2/19/2011 p:\4760\0-01\25cad\sheet\151st20.dgn

SHEET SUMMARY OF ESTIMATED QUANTITIES			
ITEM#	DESCRIPTION	UNIT	QTY
0464	RC PIPE (CL IV) (24 IN)	LF	224
0465	INLET (COMPL) (DROP) (TY W-1)	EA	1

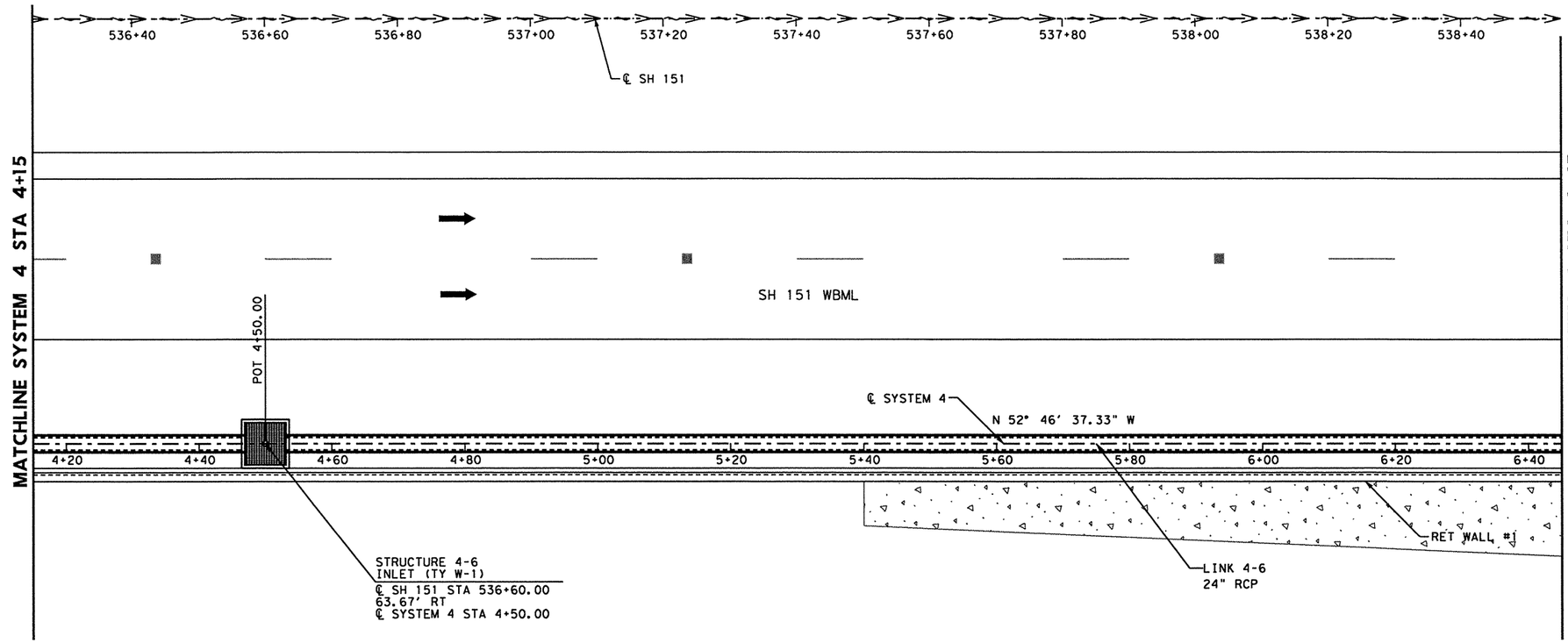

LEGEND

- RIGHT OF WAY LINE
- PROPOSED ALIGNMENT
- EXIST TRAFFIC FLOW ARROW
- PROP TRAFFIC FLOW ARROW

N

0 5 10 20
SCALE IN FEET

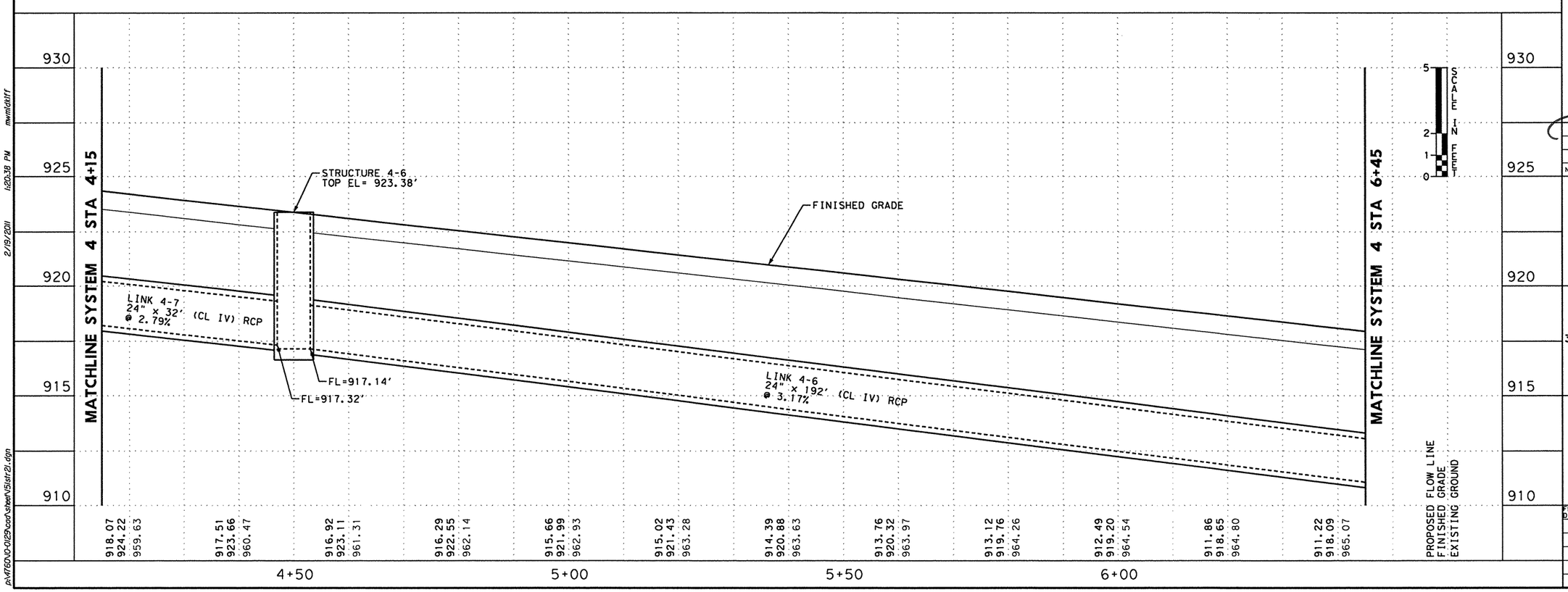

2/19/12

STATE OF TEXAS
JOHN D. CONQUEST
89243
LICENSED
PROFESSIONAL ENGINEER

NO.	DATE	REVISION DESCRIPTION	APP. BY

©2011

Texas Department of Transportation

MACTEC
3520 EXECUTIVE CENTER DRIVE
SUITE 200
AUSTIN, TEXAS 78731
(512) 795-0360
REGISTRATION NUMBER: F-1784

SH 151

STORM SEWER LAYOUT SYSTEM 4 OUTFALL 4

(SHEET 3 OF 9)

FED. RD. DIV. NO.			SHEET NO.
			218
STATE	DIST.	COUNTY	
TEXAS	SA	BEXAR	
CONT.	SECT.	JOB	HIGHWAY NO.
2452	01	043	SH 151

2/19/2011 1:20:38 PM mwmldxlf1
P:\4760\0-0129\cad\sheet\15str21.dgn

SHEET SUMMARY OF ESTIMATED QUANTITIES			
ITEM#	DESCRIPTION	UNIT	QTY
0462	CONC BOX CULV (5 FT X 2 FT)	LF	182
0464	RC PIPE (CL IV) (24 IN)	LF	42
0465	INLET (COMPL) (DROP) (TY W-1)	EA	1

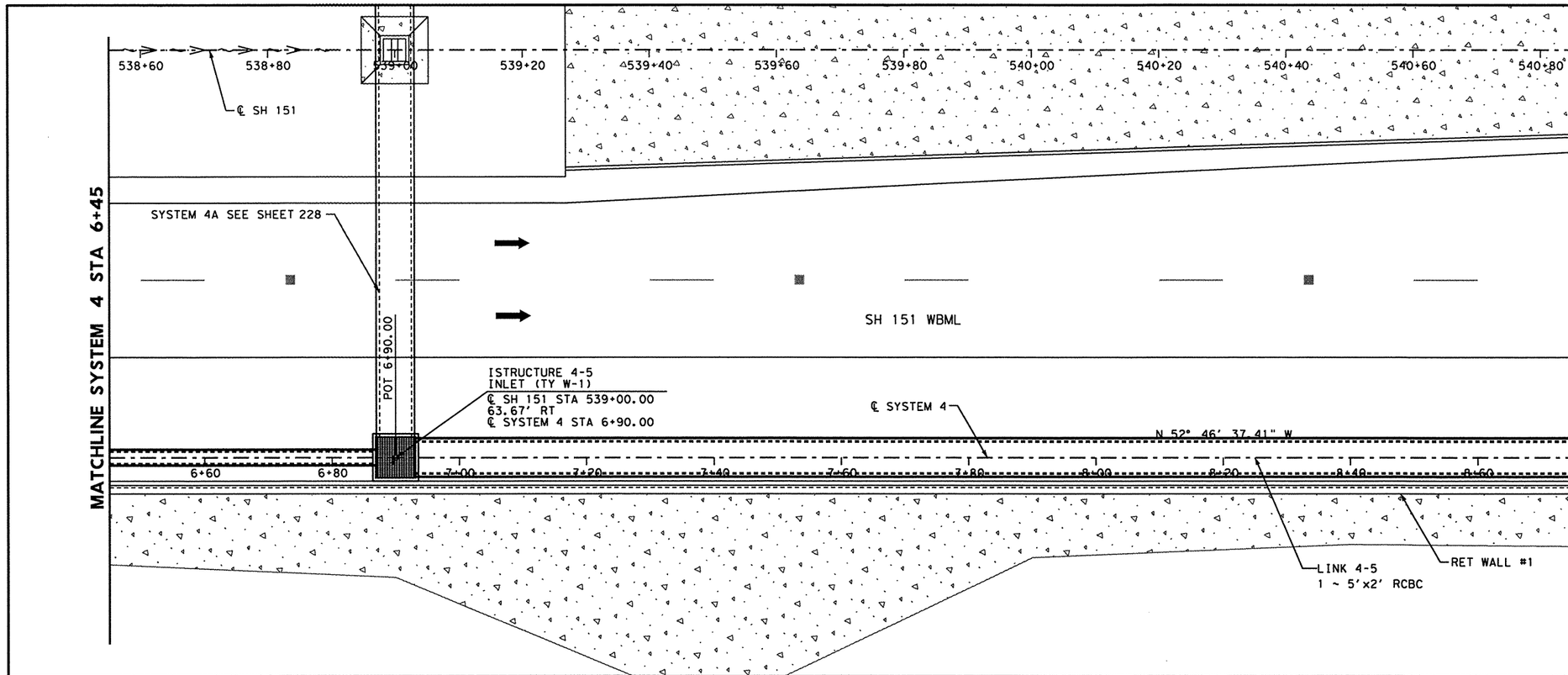

LEGEND

- RIGHT OF WAY LINE
- PROPOSED ALIGNMENT
- EXIST TRAFFIC FLOW ARROW
- PROP TRAFFIC FLOW ARROW

N

0 5 10 20
SCALE IN FEET

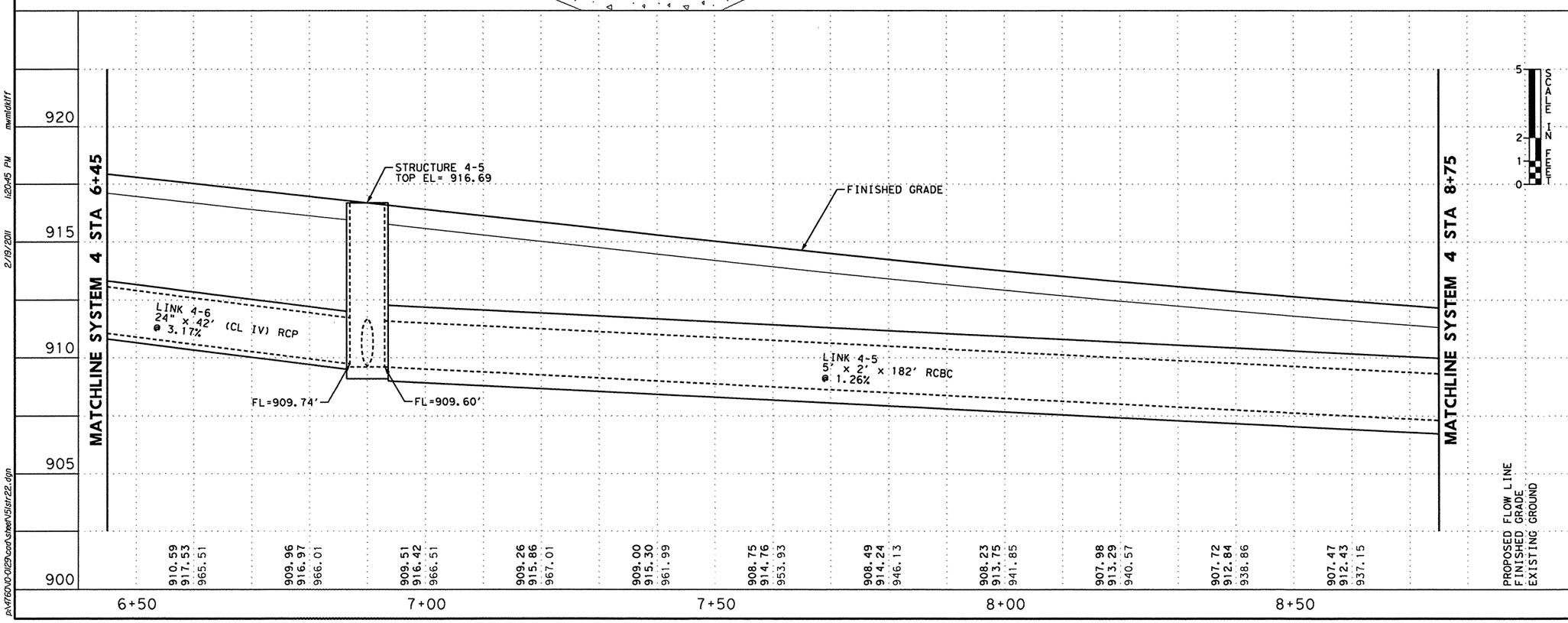

2/19/11

STATE OF TEXAS
JOHN D. CONQUEST
89243
LICENSED
PROFESSIONAL ENGINEER

NO.	DATE	REVISION DESCRIPTION	APP. BY

© 2011

Texas Department of Transportation

MACTEC
3520 EXECUTIVE CENTER DRIVE
SUITE 200
AUSTIN, TEXAS 78731
(512) 795-0360

REGISTRATION NUMBER: F-1784

SH 151

STORM SEWER LAYOUT SYSTEM 4 OUTFALL 4

(SHEET 4 OF 9)

FED. RD. DIV. NO.			SHEET NO.
			219
STATE	DIST.	COUNTY	
TEXAS	SA	BEXAR	
CONT.	SECT.	JOB	HIGHWAY NO.
2452	01	043	SH 151

p:\4760\00-0129\cad\sheet\151str22.dgn 2/19/2011 1:20:45 PM mwmldkiff

SHEET SUMMARY OF ESTIMATED QUANTITIES			
ITEM#	DESCRIPTION	UNIT	QTY
0462	CONC BOX CULV (5 FT X 2 FT)	LF	224
0465	INLET (COMPL) (DROP) (TY W-1)	EA	1

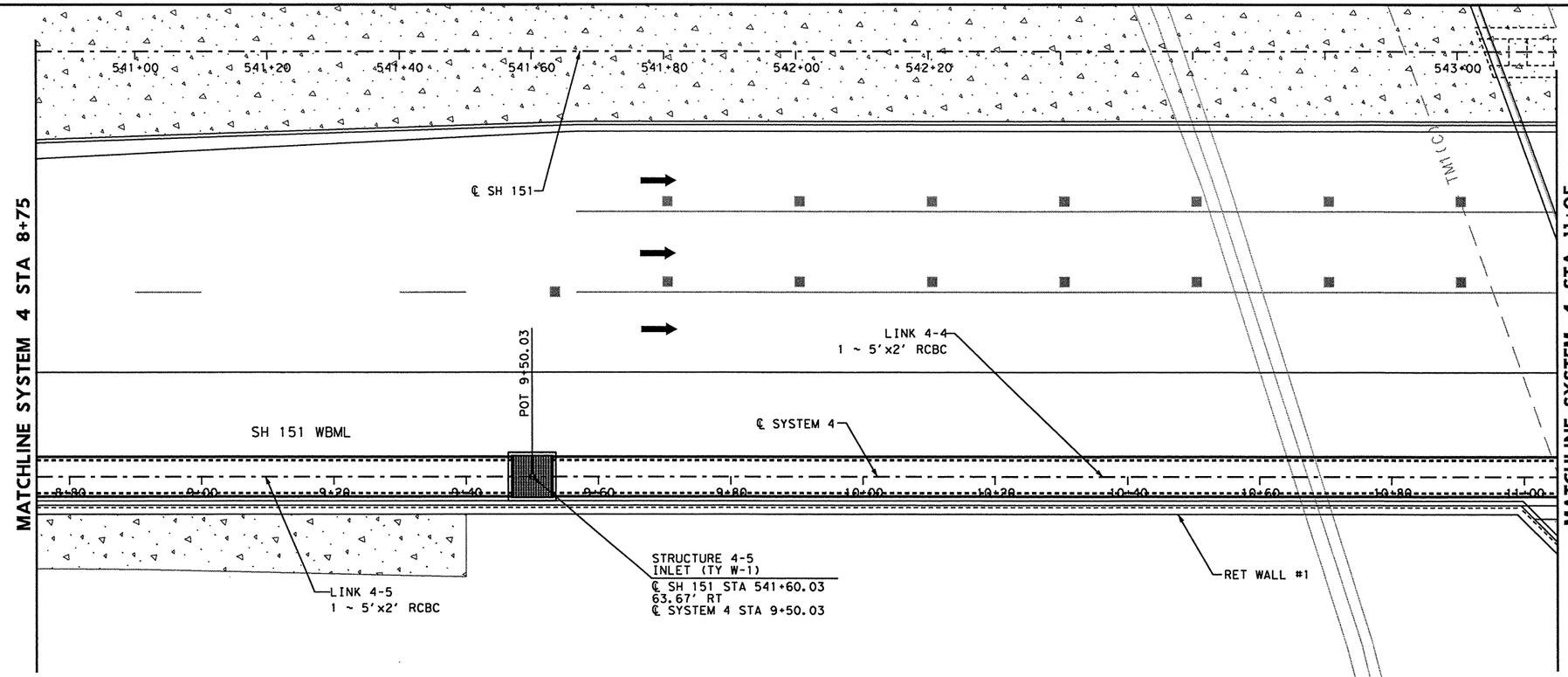

LEGEND

- RIGHT OF WAY LINE
- PROPOSED ALIGNMENT
- EXIST TRAFFIC FLOW ARROW
- PROP TRAFFIC FLOW ARROW

N

0 5 10 20
SCALE IN FEET

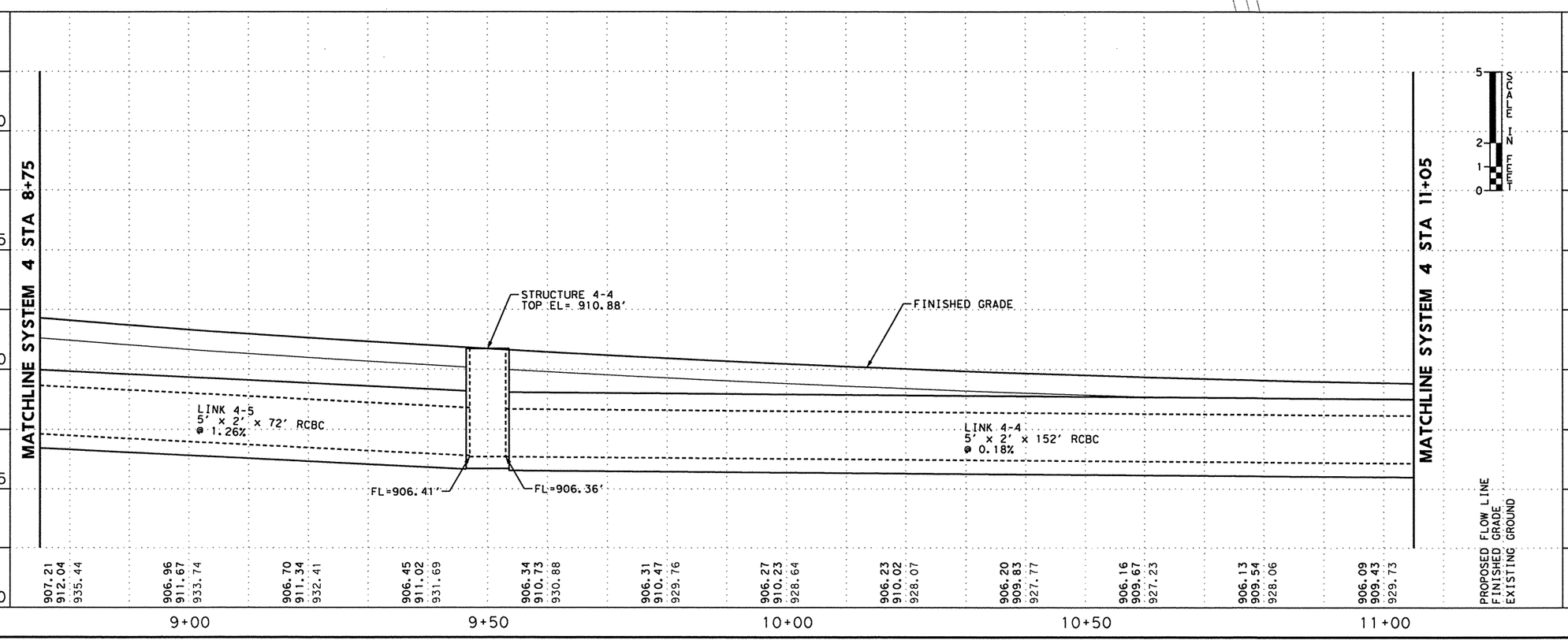

2/19/11

STATE OF TEXAS
JOHN D. CONQUEST
89243
LICENSED
PROFESSIONAL ENGINEER

NO.	DATE	REVISION DESCRIPTION	APP. BY

© 2011

Texas Department of Transportation

MACTEC
3520 EXECUTIVE CENTER DRIVE
SUITE 200
AUSTIN, TEXAS 78731
(512) 795-0360

REGISTRATION NUMBER: F-1784

SH 151

STORM SEWER LAYOUT SYSTEM 4 OUTFALL 4

(SHEET 5 OF 9)

FED. RD. DIV. NO.			SHEET NO.
			220
STATE	DIST.	COUNTY	
TEXAS	SA	BEXAR	
CONT.	SECT.	JOB	HIGHWAY NO.
2452	01	043	SH 151

p:\4760\0-0129\cad\sheet\151str23.dgn 2/19/2011 1:20:52 PM mwmldkiff

SHEET SUMMARY OF ESTIMATED QUANTITIES			
ITEM#	DESCRIPTION	UNIT	QTY

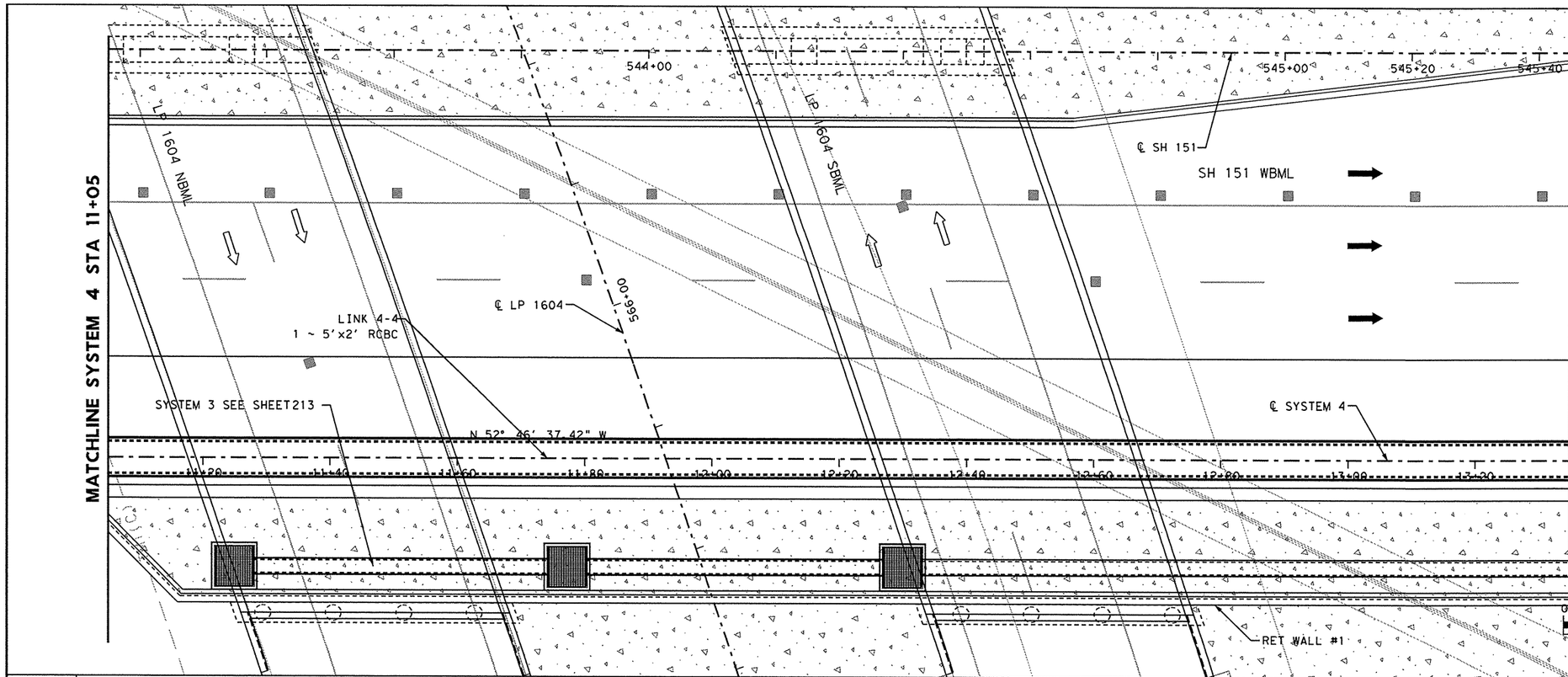

LEGEND

- RIGHT OF WAY LINE
- PROPOSED ALIGNMENT
- EXIST TRAFFIC FLOW ARROW
- PROP TRAFFIC FLOW ARROW

0 5 10 20
SCALE IN FEET

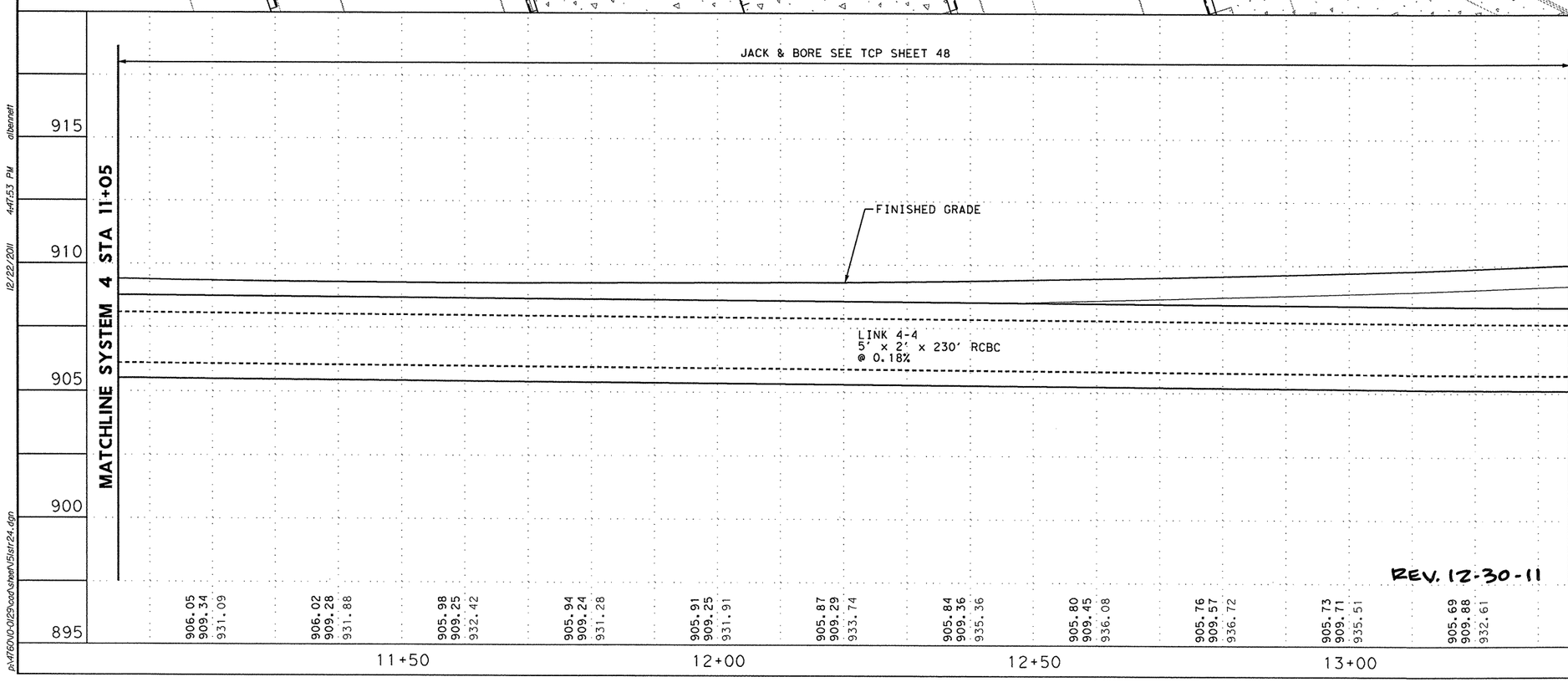

12/23/11

STATE OF TEXAS
JOHN D. CONQUEST
89243
LICENSED
PROFESSIONAL ENGINEER

NO.	DATE	REVISION DESCRIPTION	APP. BY
	12/22/11	QUANTITY CHANGE	MWM

© 2011

Texas Department of Transportation

MACTEC
3520 EXECUTIVE CENTER DRIVE
SUITE 200
AUSTIN, TEXAS 78731
(512) 795-0360

REGISTRATION NUMBER: F-1784

SH 151

STORM SEWER LAYOUT SYSTEM 4 OUTFALL 4

(SHEET 6 OF 9)

FED. RD. DIV. NO.		SHEET NO.
		221

STATE	DIST.	COUNTY	
TEXAS	SA	BEXAR	
CONT.	SECT.	JOB	HIGHWAY NO.
2452	01	043	SH 151

p:\4760\00-01\29\cad\sheet\15list24.dgn 12/22/2011 4:47:53 PM albernett

SHEET SUMMARY OF ESTIMATED QUANTITIES			
ITEM#	DESCRIPTION	UNIT	QTY
0402	TRENCH EXCAVATION PROTECTION	LF	141
0462	CONC BOX CULV (5 FT X 2 FT)	LF	159
0465	MANH (COMPL) (TY M)	EA	1

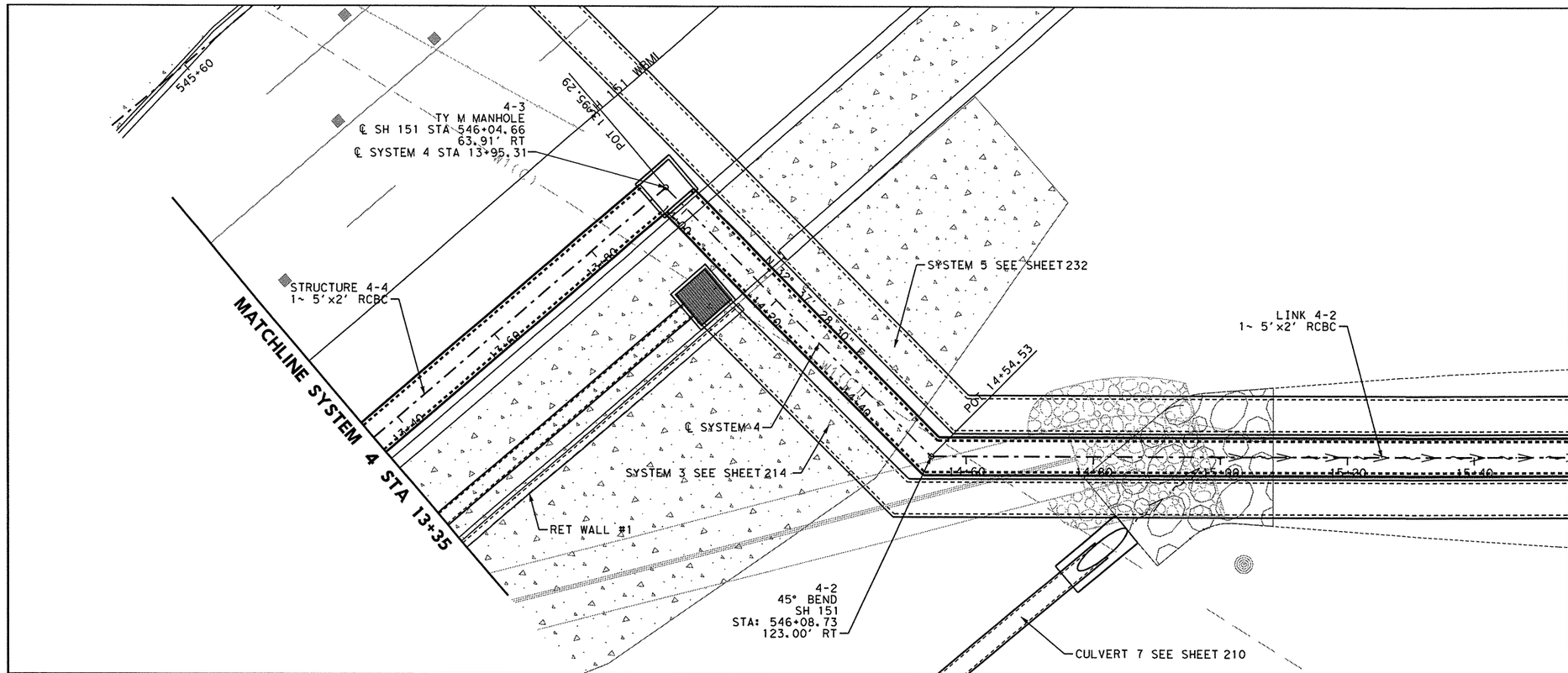

LEGEND

- RIGHT OF WAY LINE
- PROPOSED ALIGNMENT
- EXIST TRAFFIC FLOW ARROW
- PROP TRAFFIC FLOW ARROW

N

0 5 10 20
SCALE IN FEET

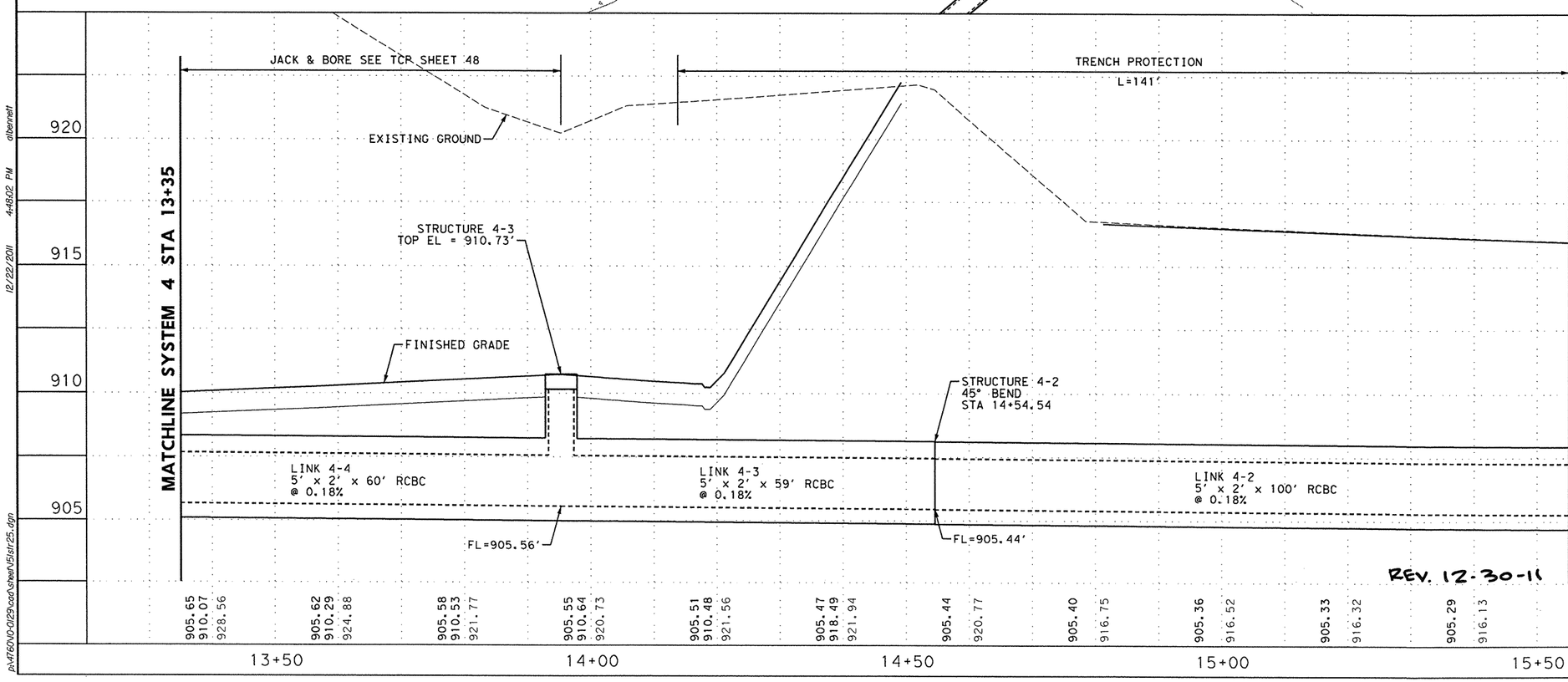

REV. 12-30-11

12/23/11

STATE OF TEXAS
JOHN D. CONQUEST
89243
LICENSED
PROFESSIONAL ENGINEER

NO.	DATE	REVISION DESCRIPTION	APP. BY
	12/22/11	QUANTITY CHANGE	MMM

© 2011

Texas Department of Transportation

MACTEC
3520 EXECUTIVE CENTER DRIVE
SUITE 200
AUSTIN, TEXAS 78731
(512) 795-0360

REGISTRATION NUMBER: F-1784

SH 151

STORM SEWER LAYOUT SYSTEM 4 OUTFALL 4

(SHEET 7 OF 9)

FED. RD. DIV. NO.			SHEET NO.
			222
STATE	DIST.	COUNTY	
TEXAS	SA	BEXAR	
CONT.	SECT.	JOB	HIGHWAY NO.
2452	01	043	SH 151

12/22/2011 4:48:02 PM dbennett

p:\4760\0-0129\cad\sheet\15st25.dgn

SHEET SUMMARY OF ESTIMATED QUANTITIES			
ITEM#	DESCRIPTION	UNIT	QTY
0402	TRENCH EXCAVATION PROTECTION	LF	188
0462	CONC BOX CULV (5 FT X 2 FT)	LF	193
0465	INLET (COMPL) (DROP) (TY W-4)	EA	1

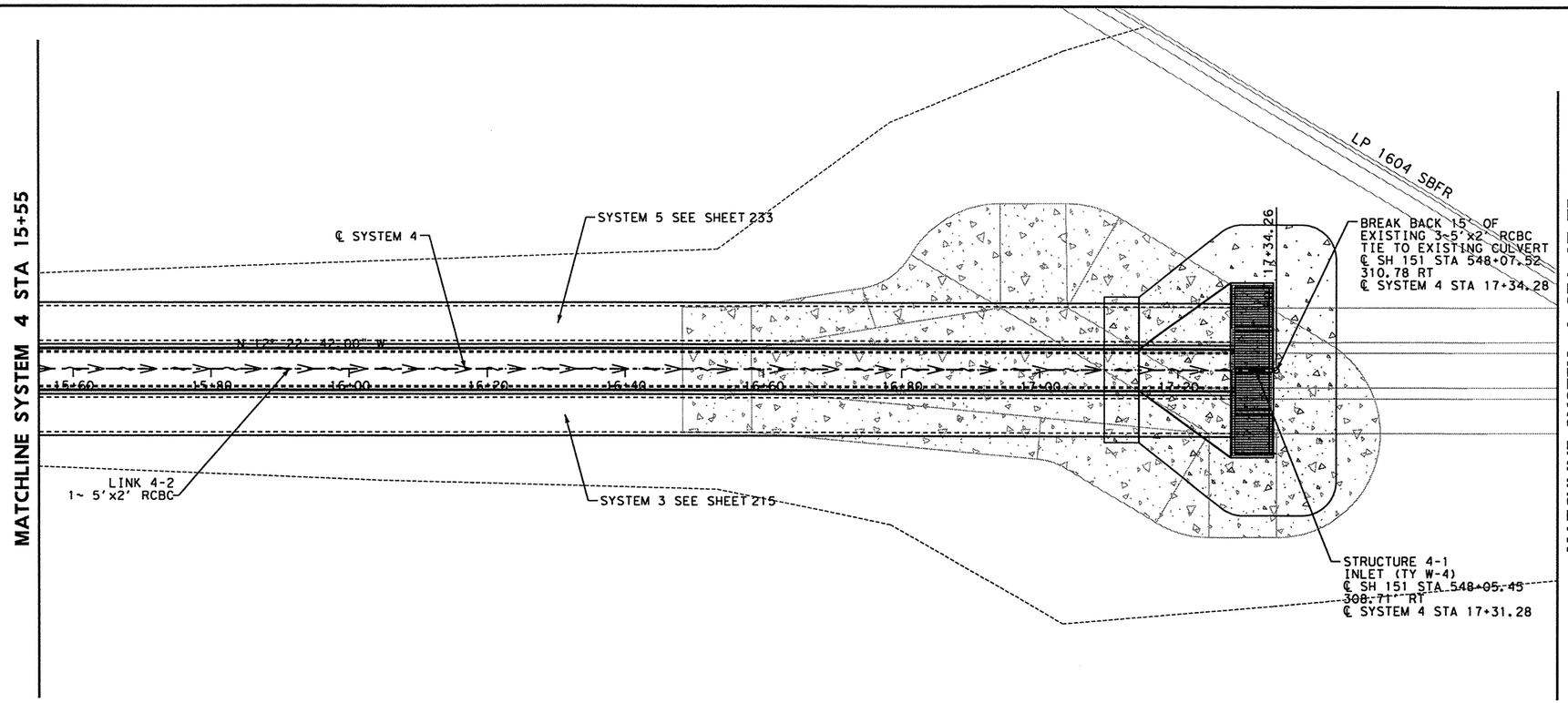

LEGEND

- RIGHT OF WAY LINE
- PROPOSED ALIGNMENT
- EXIST TRAFFIC FLOW ARROW
- PROP TRAFFIC FLOW ARROW

N

0 5 10 20
SCALE IN FEET

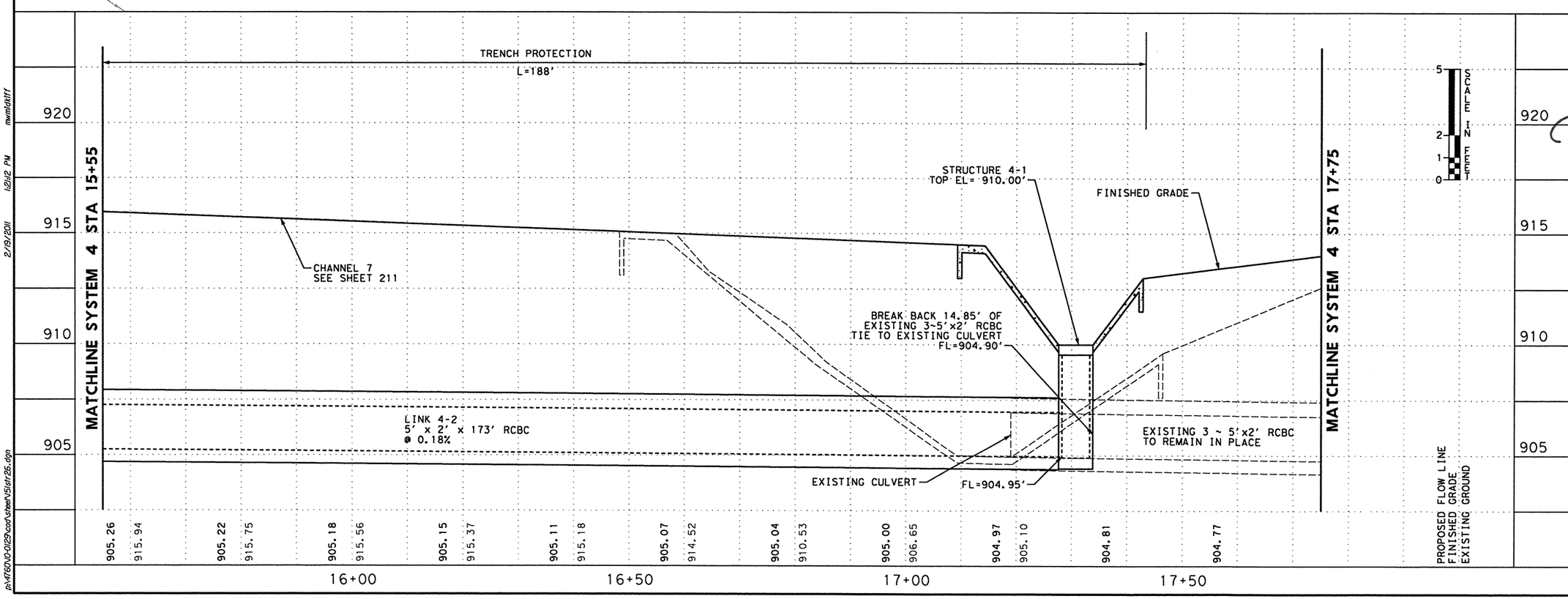

2/19/11

STATE OF TEXAS
JOHN D. CONQUEST
89243
LICENSED
PROFESSIONAL ENGINEER

NO.	DATE	REVISION DESCRIPTION	APP. BY

© 2011

Texas Department of Transportation

MACTEC
3520 EXECUTIVE CENTER DRIVE
SUITE 200
AUSTIN, TEXAS 78731
(512) 795-0360

REGISTRATION NUMBER: F-1784

SH 151

STORM SEWER LAYOUT SYSTEM 4 OUTFALL 4

(SHEET 8 OF 9)

FED. RD. DIV. NO.			SHEET NO.
			223
STATE	DIST.	COUNTY	
TEXAS	SA	BEXAR	
CONT.	SECT.	JOB	HIGHWAY NO.
2452	01	043	SH 151

p:\4760\0-0129\cad\sheet\151str26.dgn 2/19/2011 1:21:12 PM mwmldkiff

SHEET SUMMARY OF ESTIMATED QUANTITIES			
ITEM#	DESCRIPTION	UNIT	QTY

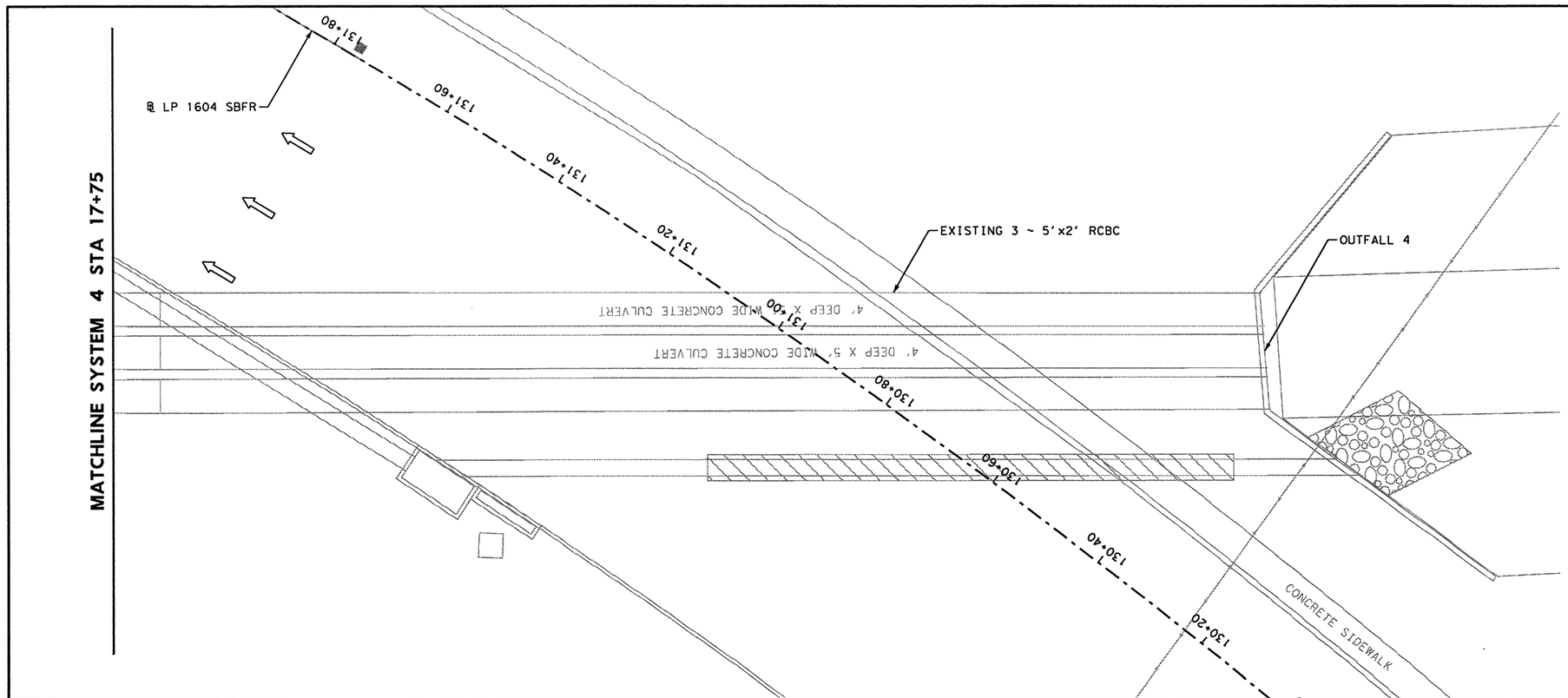

LEGEND

- RIGHT OF WAY LINE
- PROPOSED ALIGNMENT
- EXIST TRAFFIC FLOW ARROW
- PROP TRAFFIC FLOW ARROW

N

0 5 10 20
SCALE IN FEET

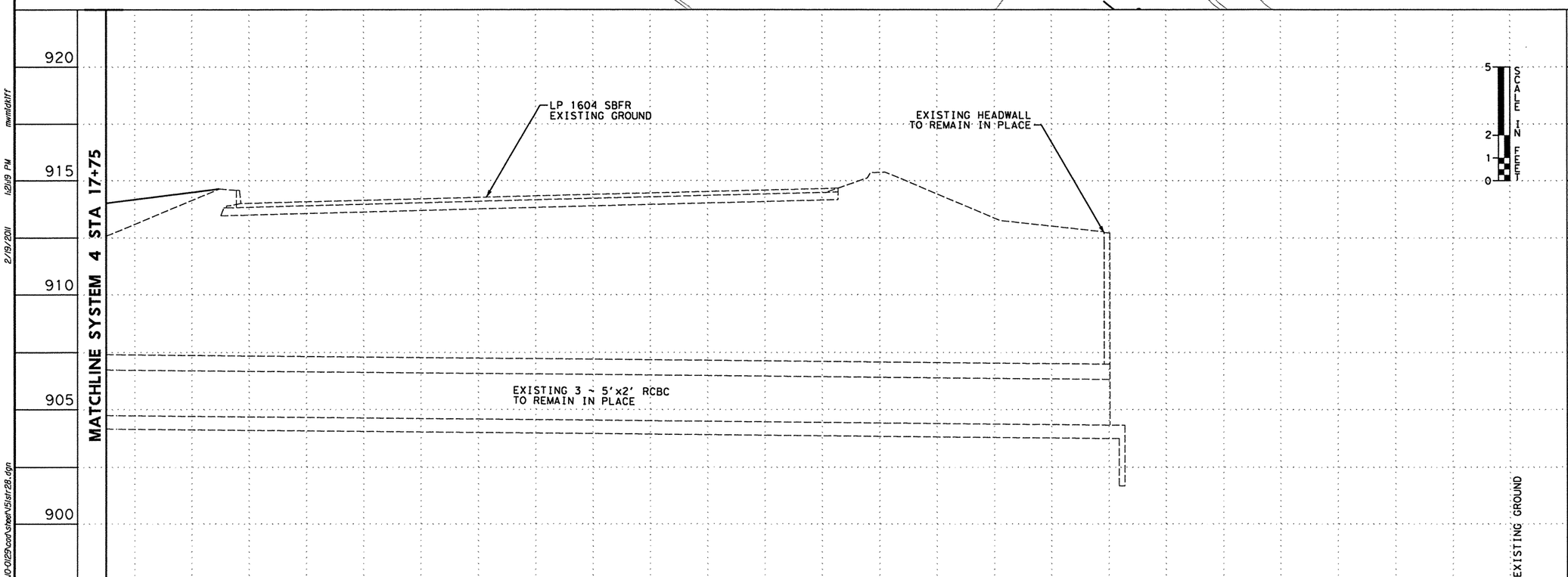

2/19/11

STATE OF TEXAS
JOHN D. CONQUEST
89243
LICENSED
PROFESSIONAL ENGINEER

NO.	DATE	REVISION DESCRIPTION	APP. BY

© 2011

Texas Department of Transportation

MACTEC
3520 EXECUTIVE CENTER DRIVE
SUITE 200
AUSTIN, TEXAS 78731
(512) 795-0360
REGISTRATION NUMBER: F-1784

SH 151

STORM SEWER LAYOUT SYSTEM 4 OUTFALL 4

(SHEET 9 OF 9)

FED. RD. DIV. NO.			SHEET NO.
			224
STATE	DIST.	COUNTY	
TEXAS	SA	BEXAR	
CONT.	SECT.	JOB	HIGHWAY NO.
2452	01	043	SH 151

mwmldkt17 1:2:19 PM 2/19/2011 p:\4760\10-0129\cad\Street\15str28.dgn

SHEET SUMMARY OF ESTIMATED QUANTITIES			
ITEM#	DESCRIPTION	UNIT	QTY
0464	RC PIPE (CL IV) (24 IN)	LF	182
0465	INLET (COMPL) (DROP) (TY W-1)	EA	1

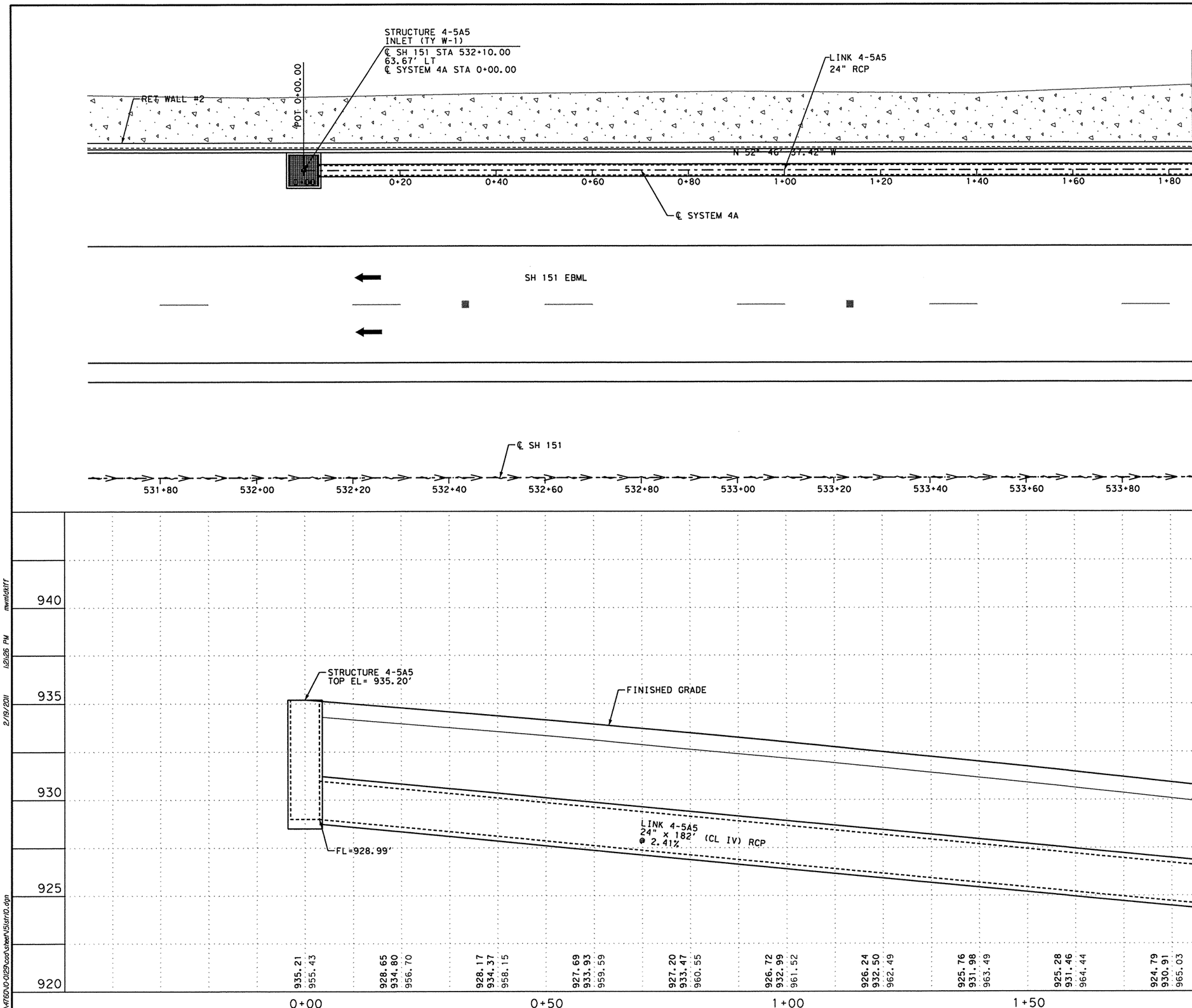

2/19/11

STATE OF TEXAS
JOHN D. CONQUEST
89243
LICENSED
PROFESSIONAL ENGINEER

NO.	DATE	REVISION DESCRIPTION	APP. BY

©2011

Texas Department of Transportation

MACTEC
3520 EXECUTIVE CENTER DRIVE
SUITE 200
AUSTIN, TEXAS 78731
(512) 795-0360

REGISTRATION NUMBER: F-1784

SH 151

STORM SEWER LAYOUT SYSTEM 4A OUTFALL 4

(SHEET 1 OF 4)

FED. RD. DIV. NO.			SHEET NO.
			225
STATE	DIST.	COUNTY	
TEXAS	SA	BEXAR	
CONT.	SECT.	JOB	HIGHWAY NO.
2452	01	043	SH 151

p:\4760\0-0129\cad\sheet\151str10.dgn 2/19/2011 1:21:26 PM mwmldkiff

SHEET SUMMARY OF ESTIMATED QUANTITIES			
ITEM#	DESCRIPTION	UNIT	QTY
0464	RC PIPE (CL IV) (24 IN)	LF	224
0465	INLET (COMPL) (DROP) (TY W-1)	EA	1

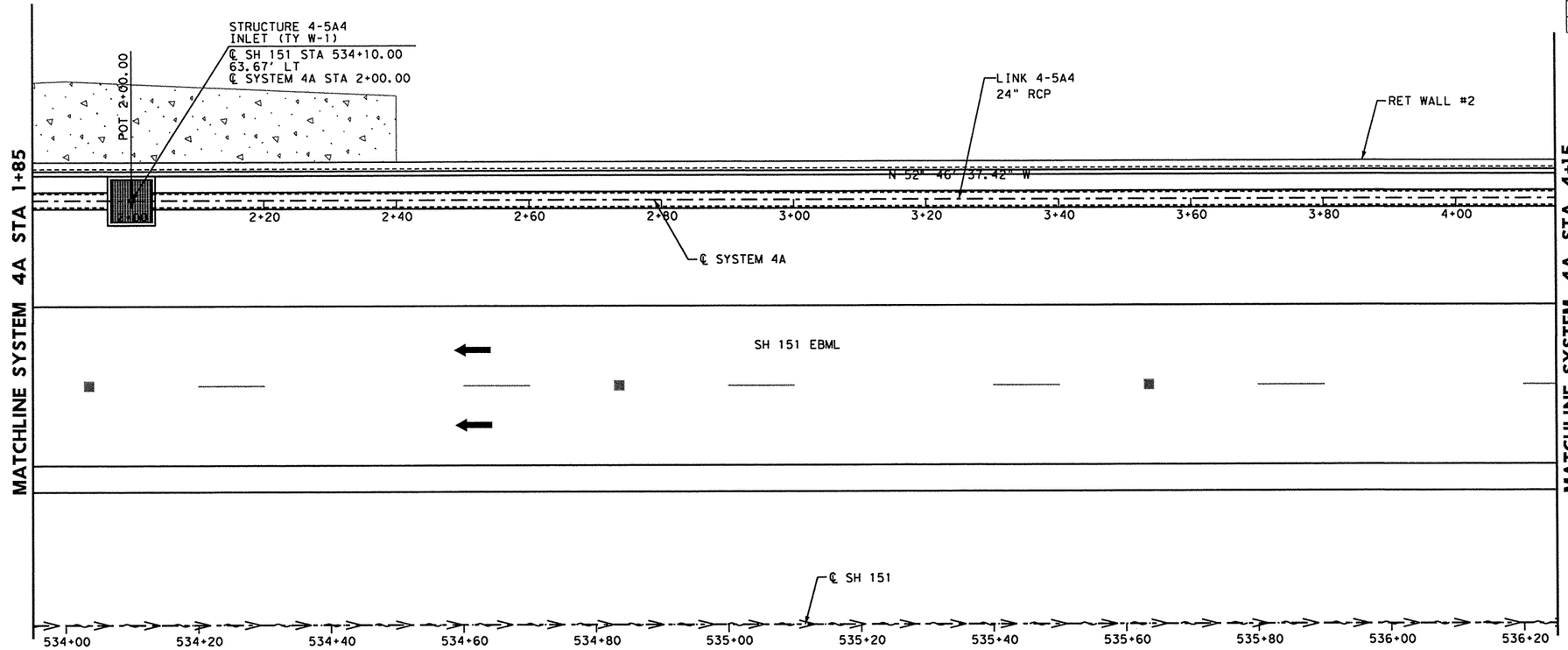

LEGEND

- RIGHT OF WAY LINE
- PROPOSED ALIGNMENT
- EXIST TRAFFIC FLOW ARROW
- PROP TRAFFIC FLOW ARROW

N

0 5 10 20
SCALE IN FEET

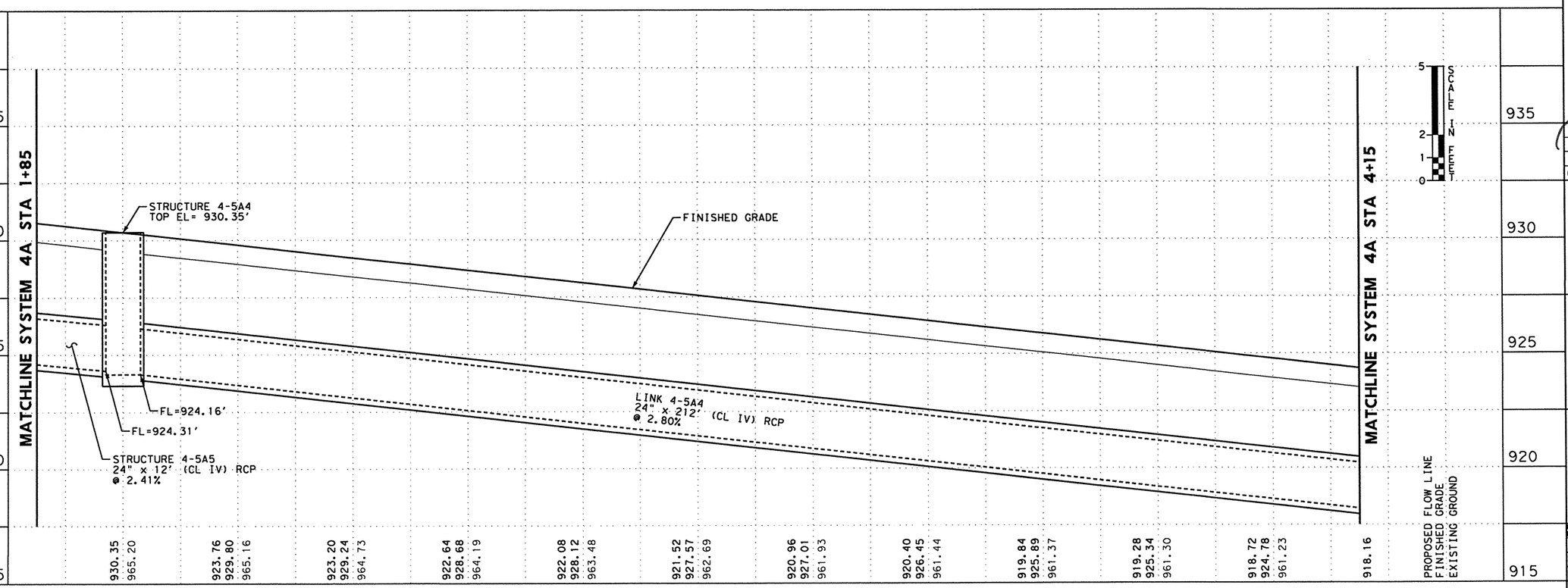

STATE OF TEXAS
JOHN D. CONQUEST
89243
LICENSED
PROFESSIONAL ENGINEER
2/19/11

NO.	DATE	REVISION DESCRIPTION	APP. BY

© 2011

Texas Department of Transportation

MACTEC
3520 EXECUTIVE CENTER DRIVE
SUITE 200
AUSTIN, TEXAS 78731
(512) 795-0360

REGISTRATION NUMBER: F-1784

SH 151

STORM SEWER LAYOUT SYSTEM 4A OUTFALL 4

(SHEET 2 OF 4)

FED. RD. DIV. NO.			SHEET NO.
			226
STATE	DIST.	COUNTY	
TEXAS	SA	BEXAR	
CONT.	SECT.	JOB	HIGHWAY NO.
2452	01	043	SH 151

p:\4760\0-0129\cad\sheet\151str11.dgn 2/19/2011 1:21:32 PM mwmldkiff

SHEET SUMMARY OF ESTIMATED QUANTITIES			
ITEM#	DESCRIPTION	UNIT	QTY
0464	RC PIPE (CL IV) (24 IN)	LF	224
0465	INLET (COMPL) (DROP) (TY W-1)	EA	1

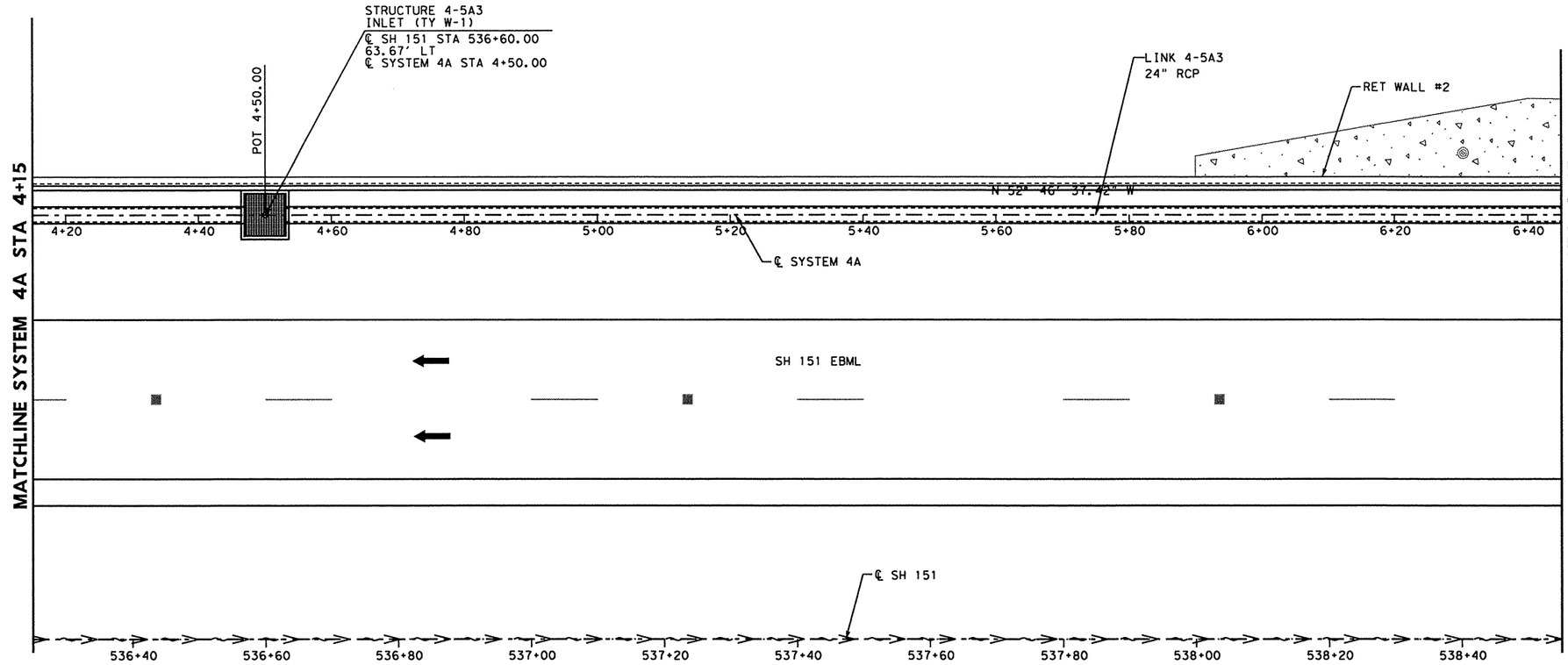

LEGEND

- RIGHT OF WAY LINE
- PROPOSED ALIGNMENT
- EXIST TRAFFIC FLOW ARROW
- PROP TRAFFIC FLOW ARROW

N

0 5 10 20
SCALE IN FEET

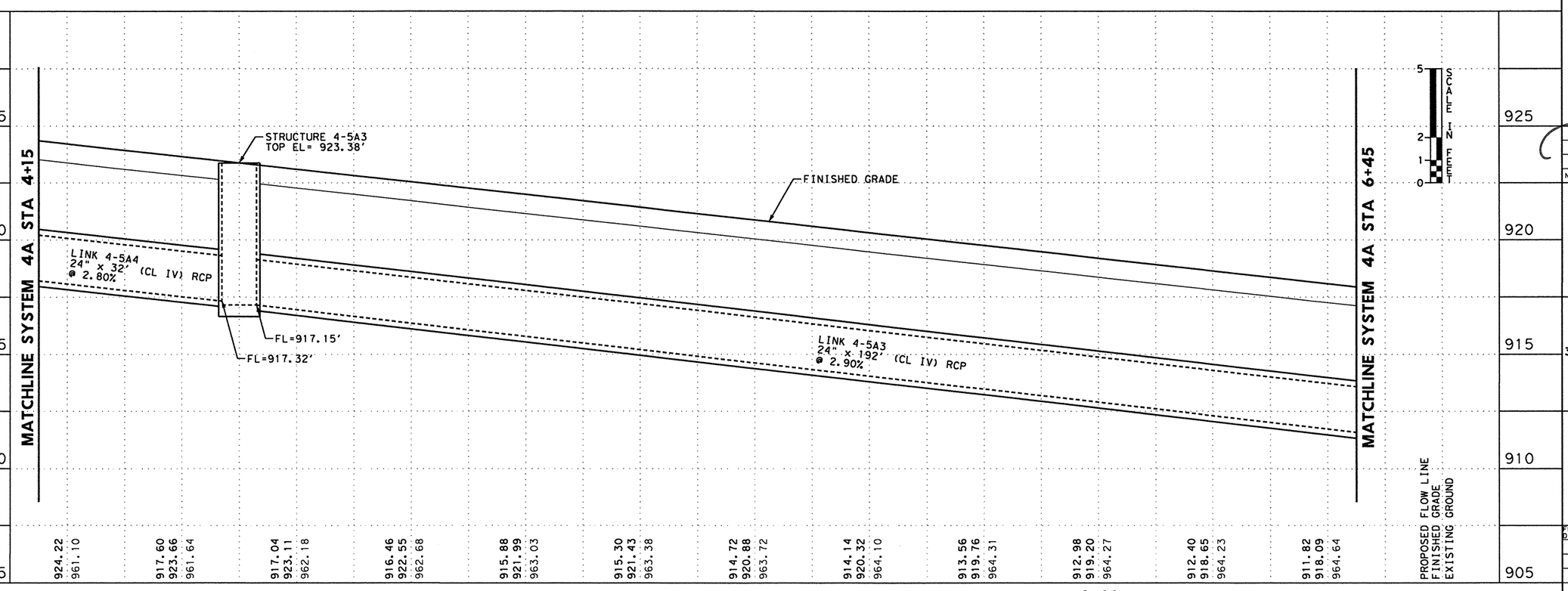

STATE OF TEXAS
JOHN D. CONQUEST
89243
LICENSED
PROFESSIONAL ENGINEER
2/9/11

NO.	DATE	REVISION DESCRIPTION	APP. BY

©2011

Texas Department of Transportation

MACTEC
3520 EXECUTIVE CENTER DRIVE
SUITE 200
AUSTIN, TEXAS 78731
(512) 795-0360

REGISTRATION NUMBER: F-1784

SH 151

STORM SEWER LAYOUT SYSTEM 4A OUTFALL 4

(SHEET 3 OF 4)

FED. RD. DIV. NO.			SHEET NO.
			227
STATE	DIST.	COUNTY	
TEXAS	SA	BEXAR	
CONT.	SECT.	JOB	HIGHWAY NO.
2452	01	043	SH 151

mwmldkt1f1
1:21:39 PM
2/19/2011
p:\4760\0-0129cad\sheet\151sht12.dgn

SHEET SUMMARY OF ESTIMATED QUANTITIES			
ITEM#	DESCRIPTION	UNIT	QTY
0462	CONC BOX CULV (5 FT X 2 FT)	LF	122
0464	RC PIPE (CL IV) (24 IN)	LF	42
0465	INLET (COMPL) (DROP) (TY 3A)	EA	1
0465	INLET (COMPL) (DROP) (TY W-1)	EA	1

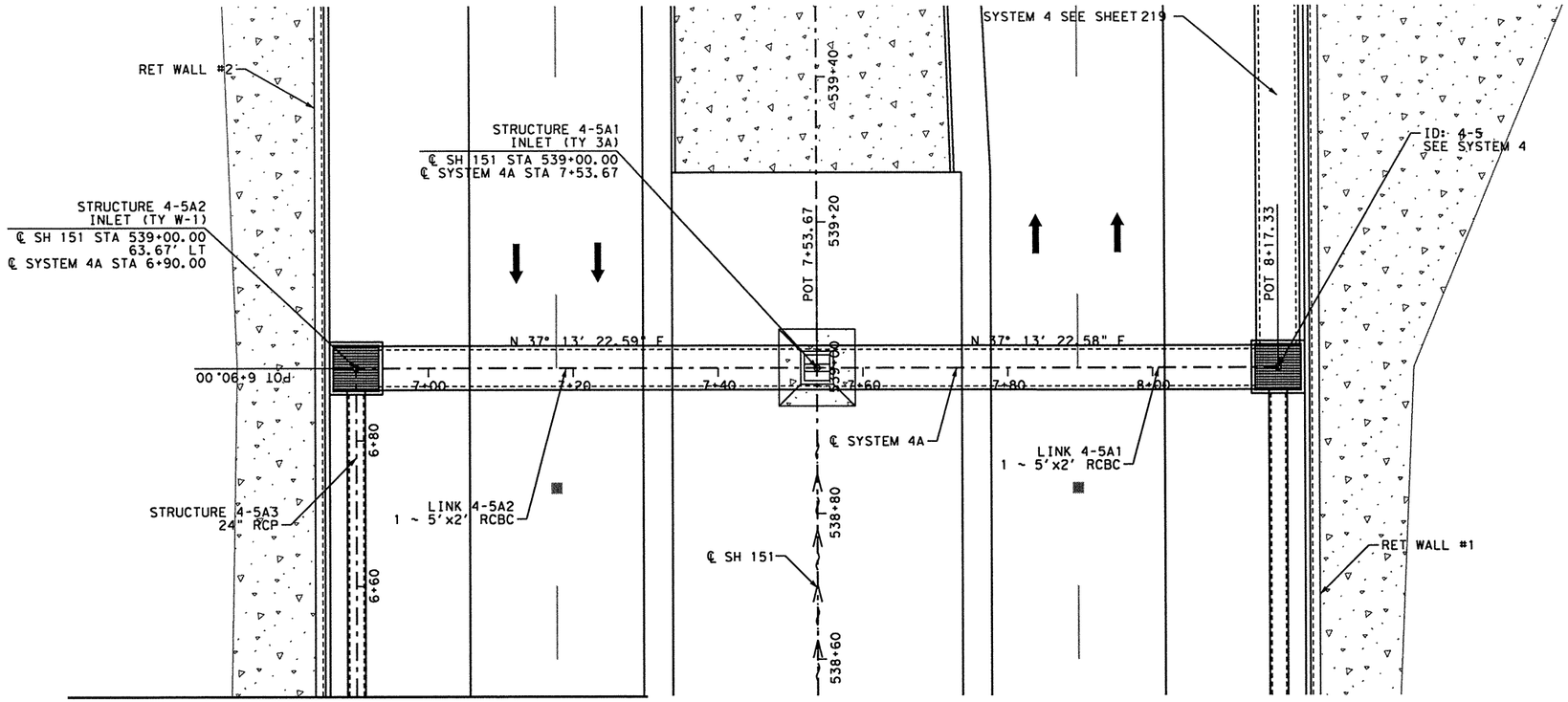

MATCHLINE SYSTEM 4A STA 6+45

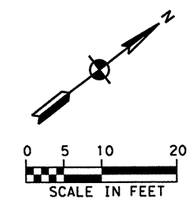

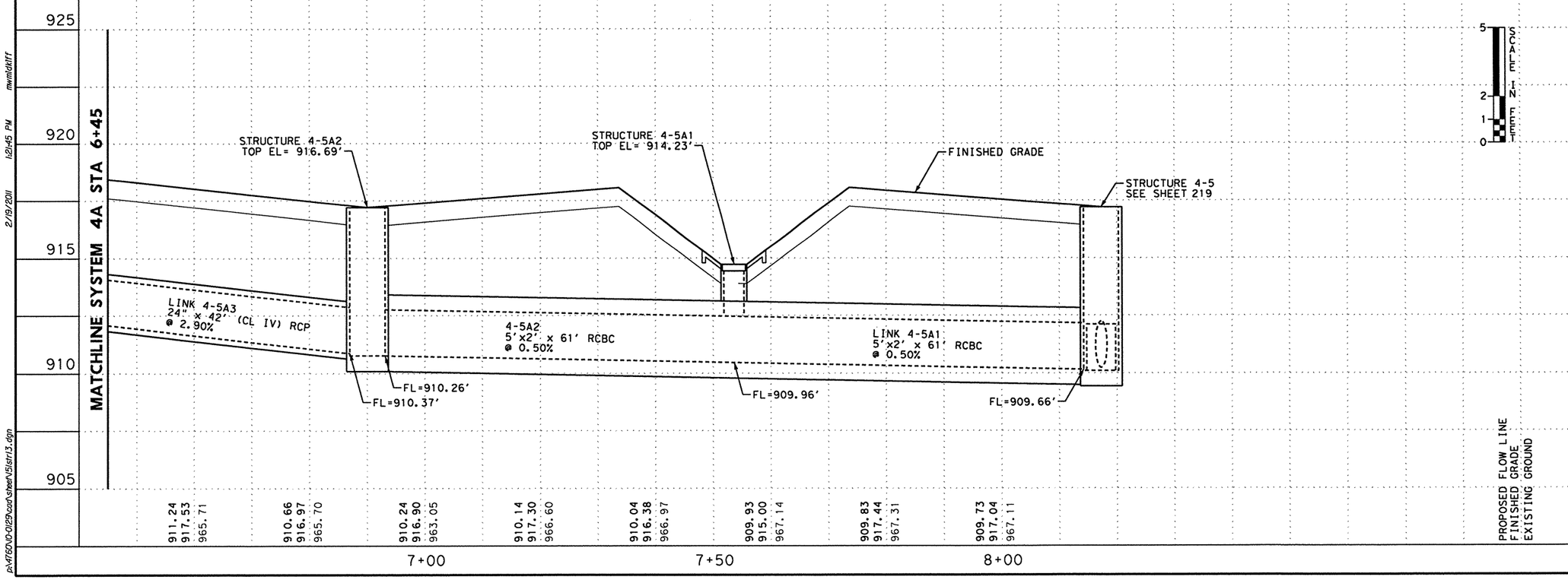

LEGEND

- RIGHT OF WAY LINE
- PROPOSED ALIGNMENT
- EXIST TRAFFIC FLOW ARROW
- PROP TRAFFIC FLOW ARROW

2/19/11

STATE OF TEXAS
JOHN D. CONQUEST
89243
LICENSED
PROFESSIONAL ENGINEER

NO.	DATE	REVISION DESCRIPTION	APP. BY

©2011

Texas Department of Transportation

MACTEC
3520 EXECUTIVE CENTER DRIVE
SUITE 200
AUSTIN, TEXAS 78731
(512) 795-0360
REGISTRATION NUMBER: F-1784

SH 151

STORM SEWER LAYOUT SYSTEM 4A OUTFALL 4

(SHEET 4 OF 4)

FED. RD. DIV. NO.			SHEET NO.
			228
STATE	DIST.	COUNTY	
TEXAS	SA	BEXAR	
CONT.	SECT.	JOB	HIGHWAY NO.
2452	01	043	SH 151

p:\4760\0-0129\cad\sheet\151str13.dgn 2/19/2011 1:21:45 PM mwmldkliff

SHEET SUMMARY OF ESTIMATED QUANTITIES			
ITEM#	DESCRIPTION	UNIT	QTY
0464	RC PIPE (CL IV) (24 IN)	LF	169
0465	INLET (COMPL) (DROP) (TY W-1)	EA	2

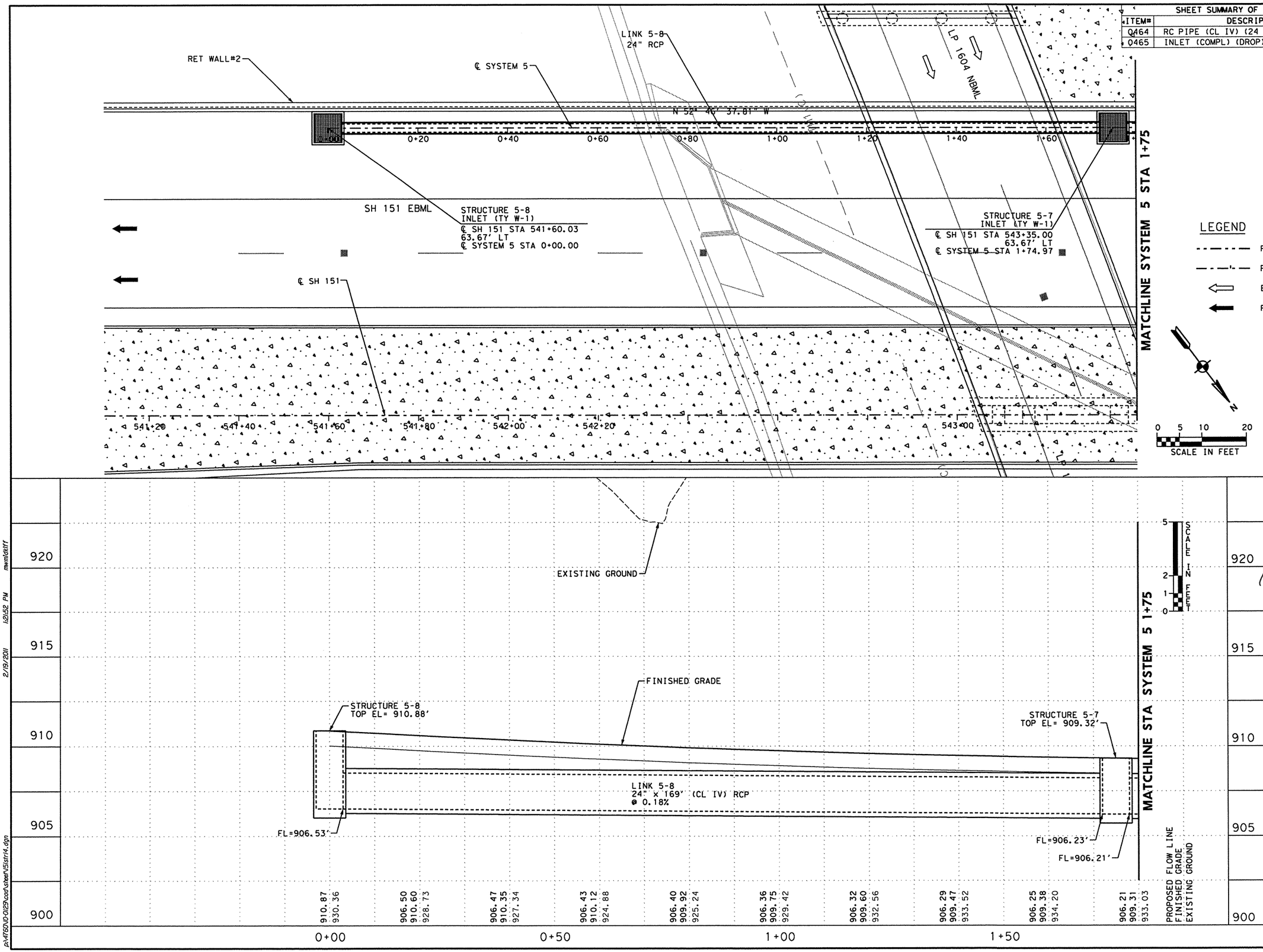

LEGEND

- RIGHT OF WAY LINE
- PROPOSED ALIGNMENT
- EXIST TRAFFIC FLOW ARROW
- PROP TRAFFIC FLOW ARROW

0 5 10 20
SCALE IN FEET

STATE OF TEXAS
JOHN D. CONQUEST
89243
LICENSED
PROFESSIONAL ENGINEER
2/19/11

NO.	DATE	REVISION DESCRIPTION	APP. BY

© 2011

Texas Department of Transportation

MACTEC
3520 EXECUTIVE CENTER DRIVE
SUITE 200
AUSTIN, TEXAS 78731
(512) 795-0360

REGISTRATION NUMBER: F-1784

SH 151

STORM SEWER LAYOUT SYSTEM 5 OUTFALL 4

(SHEET 1 OF 5)

FED. RD. DIV. NO.			SHEET NO.
			229
STATE	DIST.	COUNTY	
TEXAS	SA	BEXAR	
CONT.	SECT.	JOB	HIGHWAY NO.
2452	01	043	SH 151

p:\4760\0-0129\cad\sheet\151str14.dgn 2/19/2011 1:21:52 PM mwmldkiff

SHEET SUMMARY OF ESTIMATED QUANTITIES			
ITEM#	DESCRIPTION	UNIT	QTY
0462	CONC BOX CULV (5 FT X 2 FT)	LF	174
0464	RC PIPE (CL IV) (24 IN)	LF	46
0465	INLET (COMPL) (DROP) (TY W-1)	EA	2

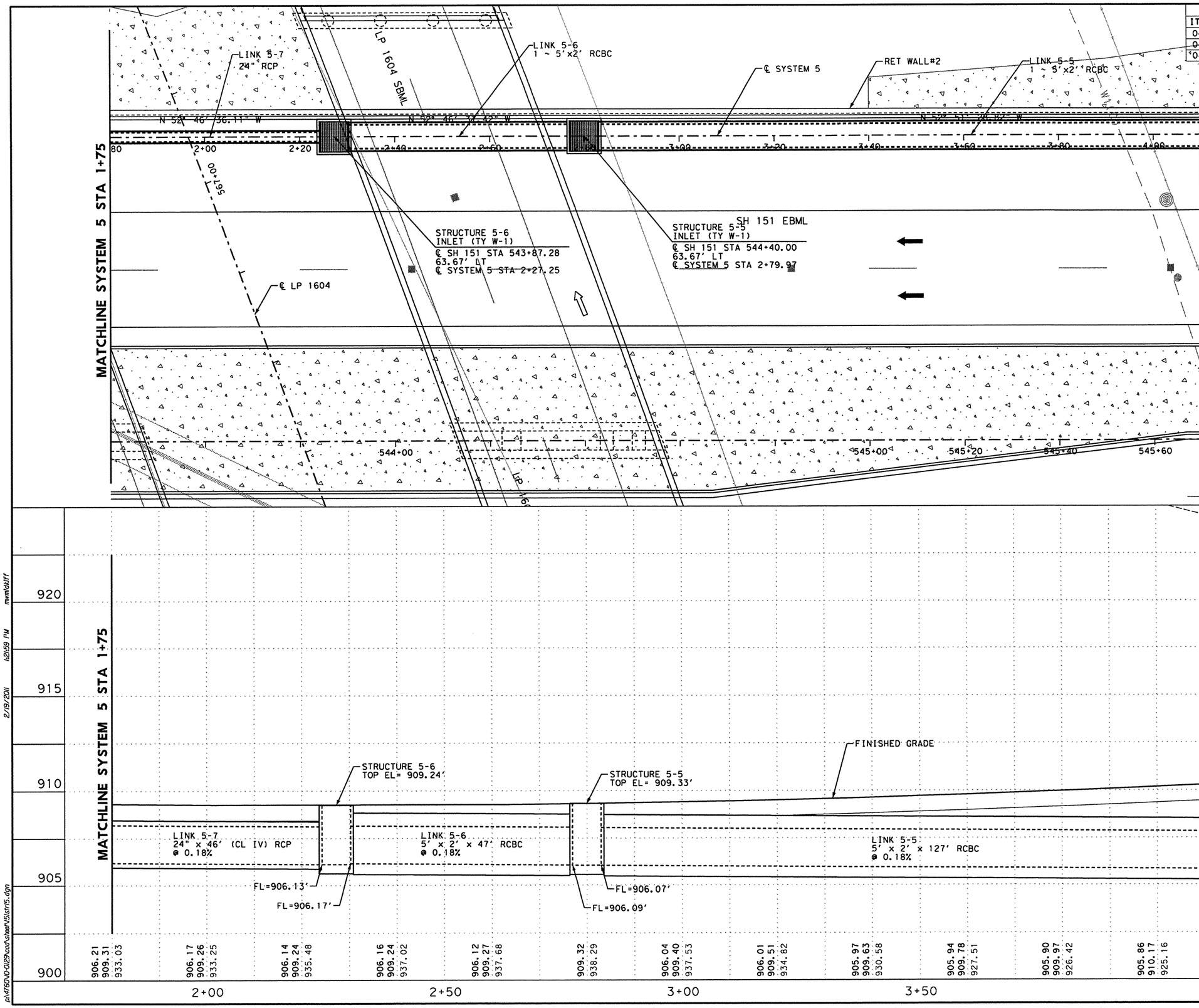

2/19/11

STATE OF TEXAS
JOHN D. CONQUEST
89243
LICENSED
PROFESSIONAL ENGINEER

NO.	DATE	REVISION DESCRIPTION	APP. BY

©2011

Texas Department of Transportation

MACTEC
3520 EXECUTIVE CENTER DRIVE
SUITE 200
AUSTIN, TEXAS 78731
(512) 795-0360

REGISTRATION NUMBER: F-1784

SH 151

STORM SEWER LAYOUT SYSTEM 5 OUTFALL 4

(SHEET 2 OF 5)

FED. RD. DIV. NO.			SHEET NO.
			230
STATE	DIST.	COUNTY	
TEXAS	SA	BEXAR	
CONT.	SECT.	JOB	HIGHWAY NO.
2452	01	043	SH 151

p:\4760\0-0129\cad\sheet\151str15.dgn 2/19/2011 1:21:59 PM mwmldkiff

SHEET SUMMARY OF ESTIMATED QUANTITIES			
ITEM#	DESCRIPTION	UNIT	QTY
0462	CONC BOX CULV (5 FT X 2 FT)	LF	194
0465	INLET (COMPL) (DROP) (TY W-1)	EA	1

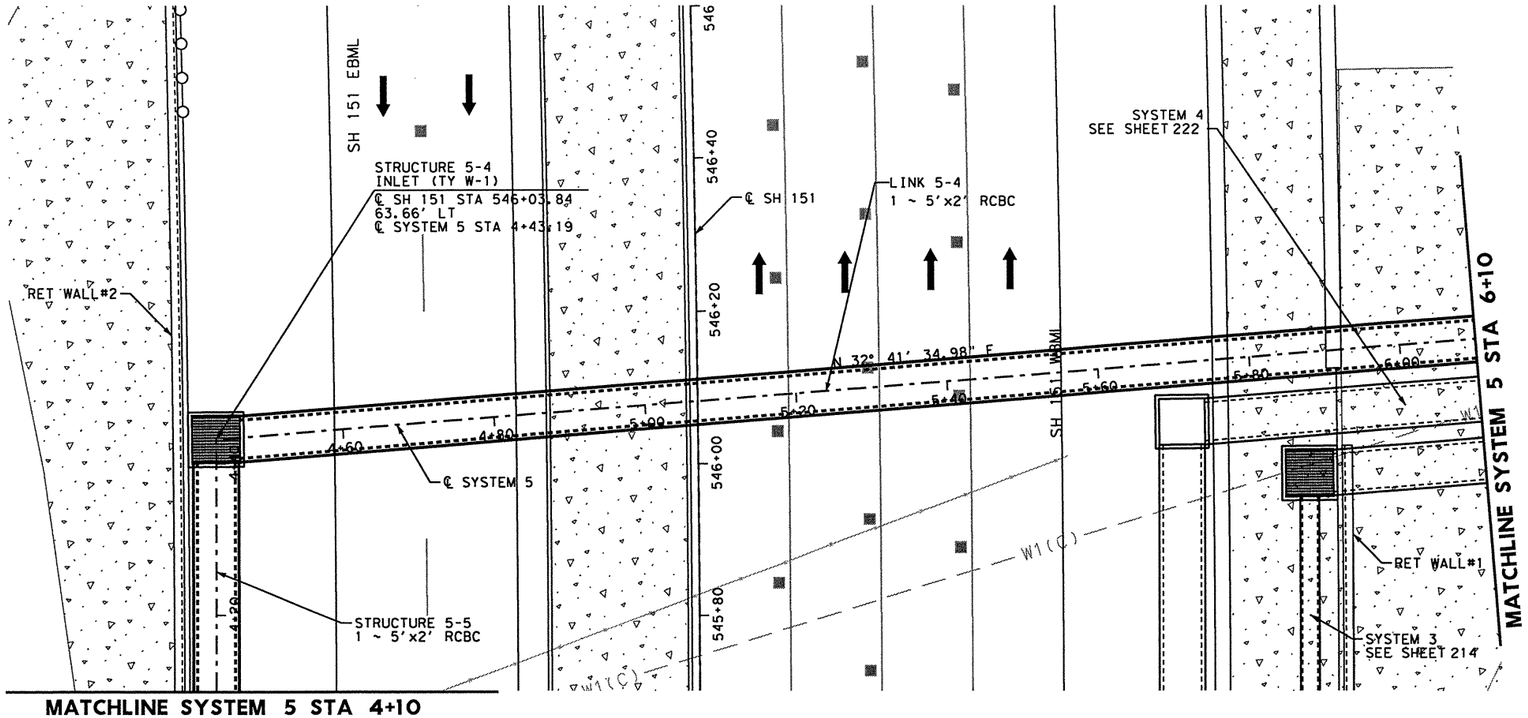

LEGEND

- RIGHT OF WAY LINE
- PROPOSED ALIGNMENT
- EXIST TRAFFIC FLOW ARROW
- PROP TRAFFIC FLOW ARROW

0 5 10 20
SCALE IN FEET

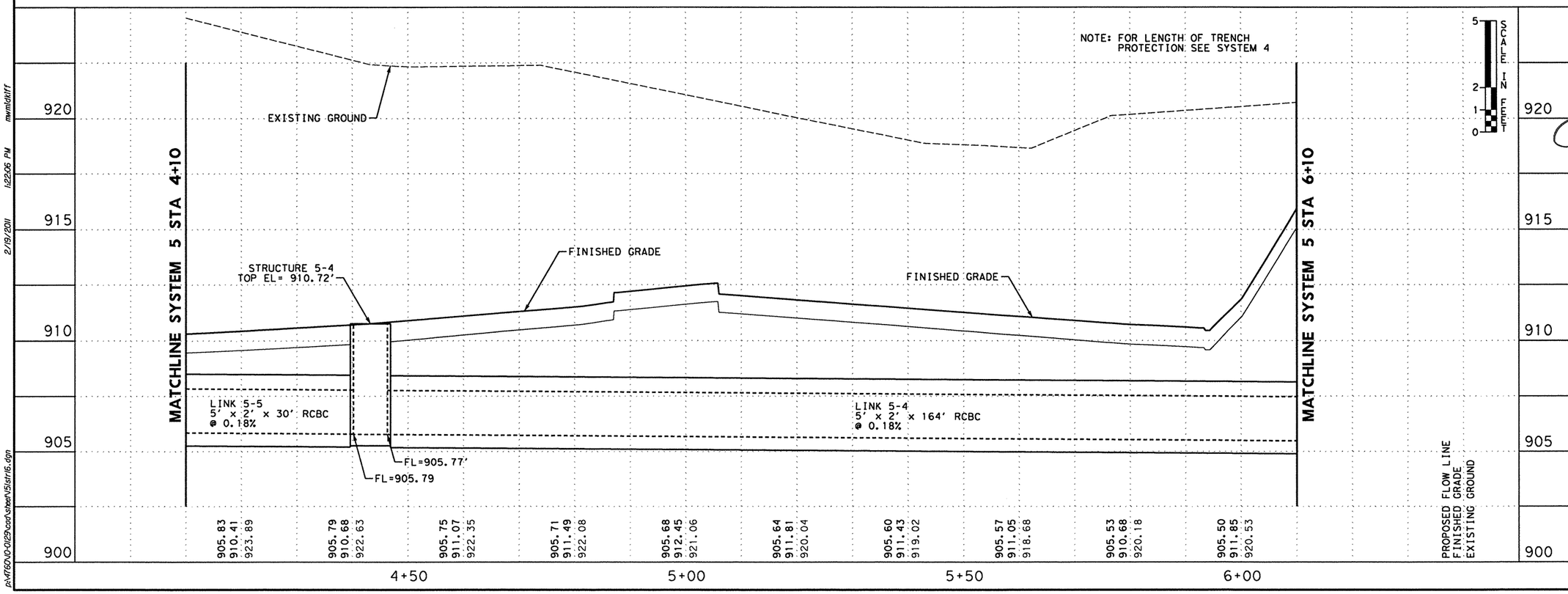

2/19/11

STATE OF TEXAS
JOHN D. CONQUEST
89243
LICENSED
PROFESSIONAL ENGINEER

NO.	DATE	REVISION DESCRIPTION	APP. BY

©2011

Texas Department of Transportation

MACTEC
3520 EXECUTIVE CENTER DRIVE
SUITE 200
AUSTIN, TEXAS 78731
(512) 795-0360

REGISTRATION NUMBER: F-1784

SH 151

STORM SEWER LAYOUT SYSTEM 5 OUTFALL 4

(SHEET 3 OF 5)

FED. RD. DIV. NO.			SHEET NO.
			231
STATE	DIST.	COUNTY	
TEXAS	SA	BEXAR	
CONT.	SECT.	JOB	HIGHWAY NO.
2452	01	043	SH 151

p:\4760\0-0129\cad\sheet\5\str16.dgn 2/19/2011 1:22:06 PM mwmldkliff

SHEET SUMMARY OF ESTIMATED QUANTITIES			
ITEM#	DESCRIPTION	UNIT	QTY
0462	CONC BOX CULV (5 FT X 2 FT)	LF	180

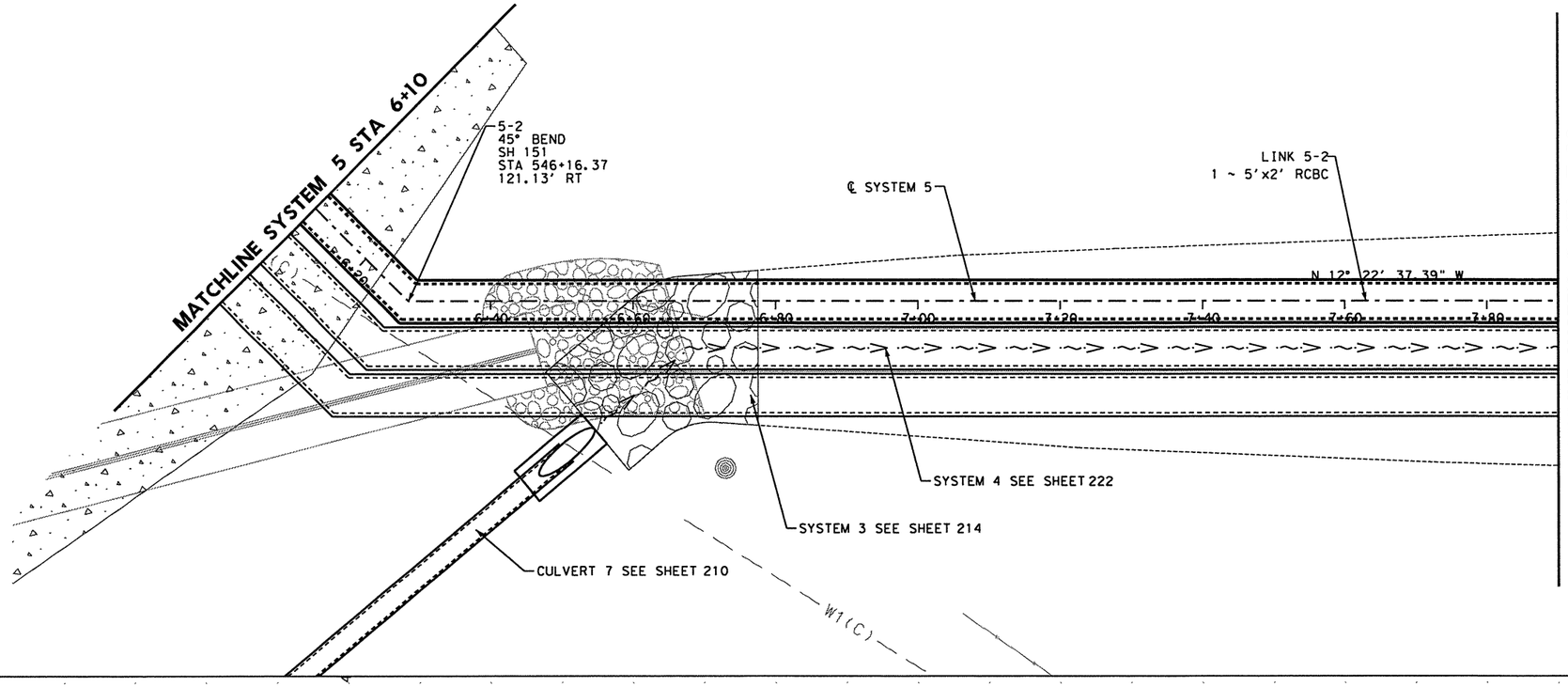

LEGEND

- RIGHT OF WAY LINE
- PROPOSED ALIGNMENT
- EXIST TRAFFIC FLOW ARROW
- PROP TRAFFIC FLOW ARROW

N

0 5 10 20
SCALE IN FEET

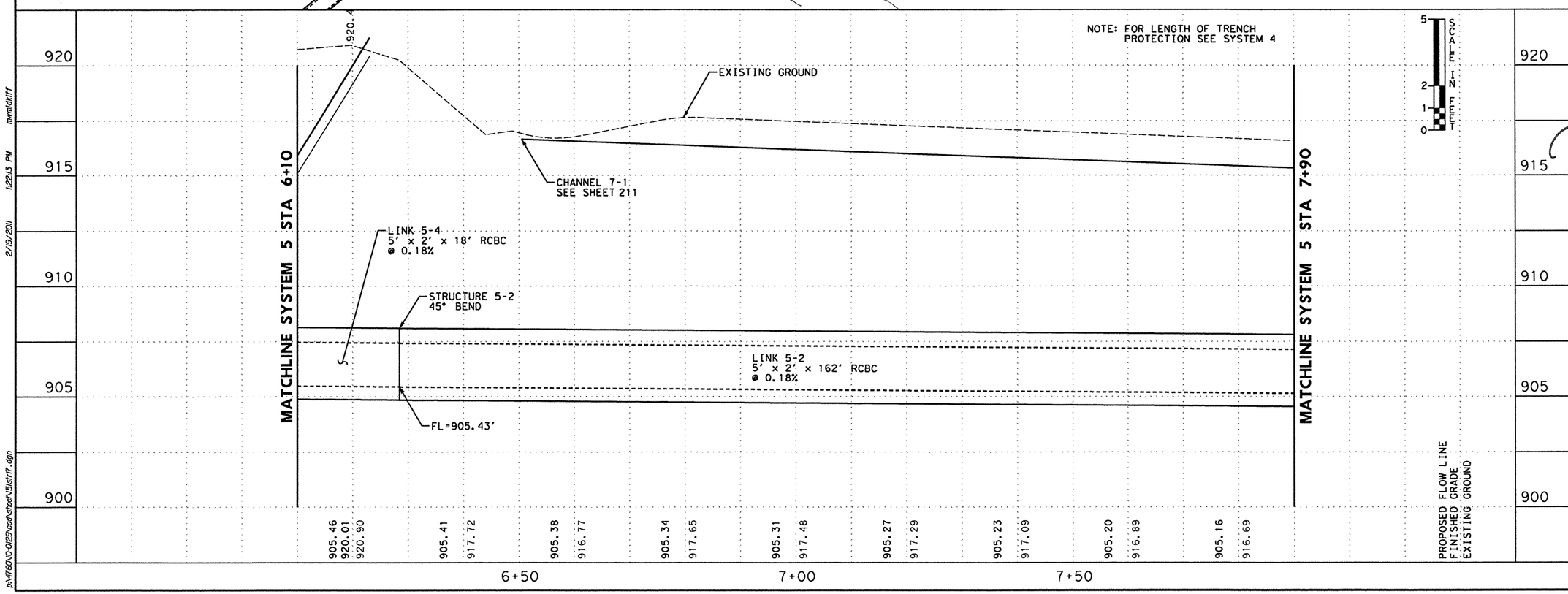

2/19/11

STATE OF TEXAS
JOHN D. CONQUEST
89243
LICENSED
PROFESSIONAL ENGINEER

John Conquest PE

NO.	DATE	REVISION DESCRIPTION	APP. BY

© 2011

Texas Department of Transportation

MACTEC
3520 EXECUTIVE CENTER DRIVE
SUITE 200
AUSTIN, TEXAS 78731
(512) 795-0360
REGISTRATION NUMBER: F-1784

SH 151

STORM SEWER LAYOUT SYSTEM 5 OUTFALL 4

(SHEET 4 OF 5)

FED. RD. DIV. NO.			SHEET NO.
			232
STATE	DIST.	COUNTY	
TEXAS	SA	BEXAR	
CONT.	SECT.	JOB	HIGHWAY NO.
2452	01	043	SH 151

2/19/2011 1:22:13 PM mwmldkltf1

P:\4760\0-01\25\cad\sheet\15stf1T.dgn

SHEET SUMMARY OF ESTIMATED QUANTITIES			
ITEM#	DESCRIPTION	UNIT	QTY
0462	CONC BOX CULV (5 FT X 2 FT)	LF	107

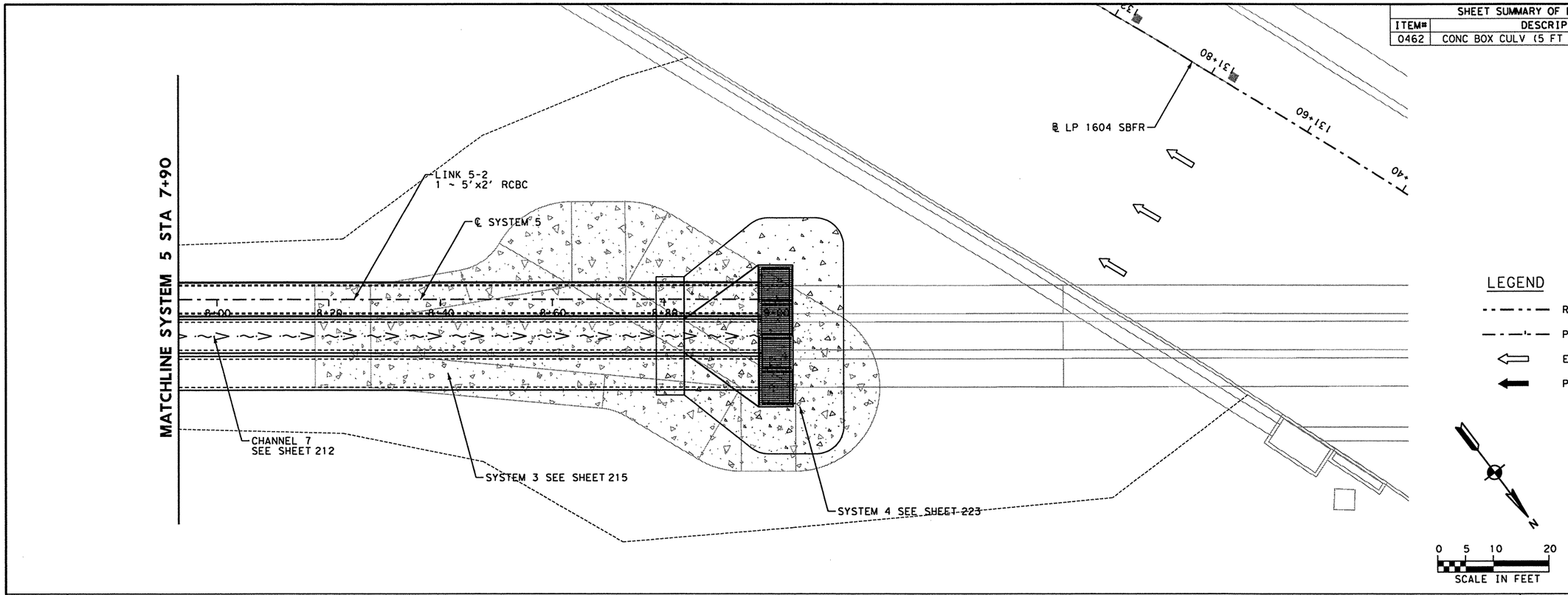

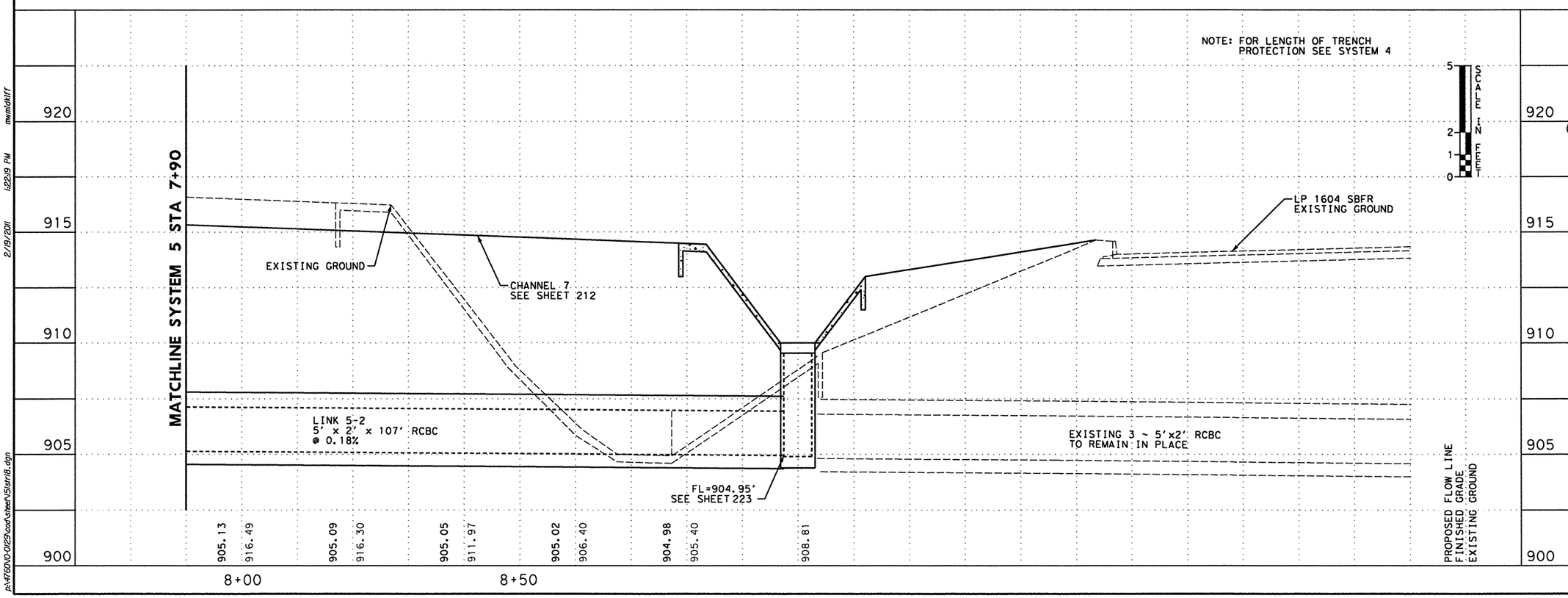

STATE OF TEXAS
JOHN D. CONQUEST
89243
LICENSED
PROFESSIONAL ENGINEER
2/19/11

NO.	DATE	REVISION DESCRIPTION	APP. BY

©2011

Texas Department of Transportation

MACTEC
3520 EXECUTIVE CENTER DRIVE
SUITE 200
AUSTIN, TEXAS 78731
(512) 795-0360

REGISTRATION NUMBER: F-1784

SH 151

STORM SEWER LAYOUT SYSTEM 5 OUTFALL 4

(SHEET 5 OF 5)

FED. RD. DIV. NO.			SHEET NO.
			233
STATE	DIST.	COUNTY	
TEXAS	SA	BEXAR	
CONT.	SECT.	JOB	HIGHWAY NO.
2452	01	043	SH 151

p:\4760\0-0129\cad\sheet\151str18.dgn 2/19/2011 1:22:19 PM mwmldkiff

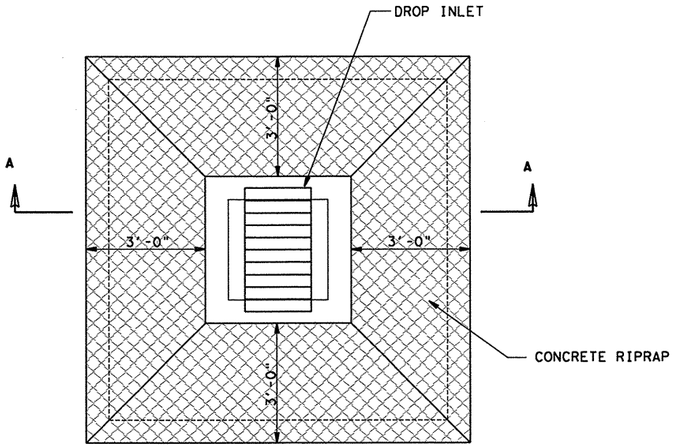

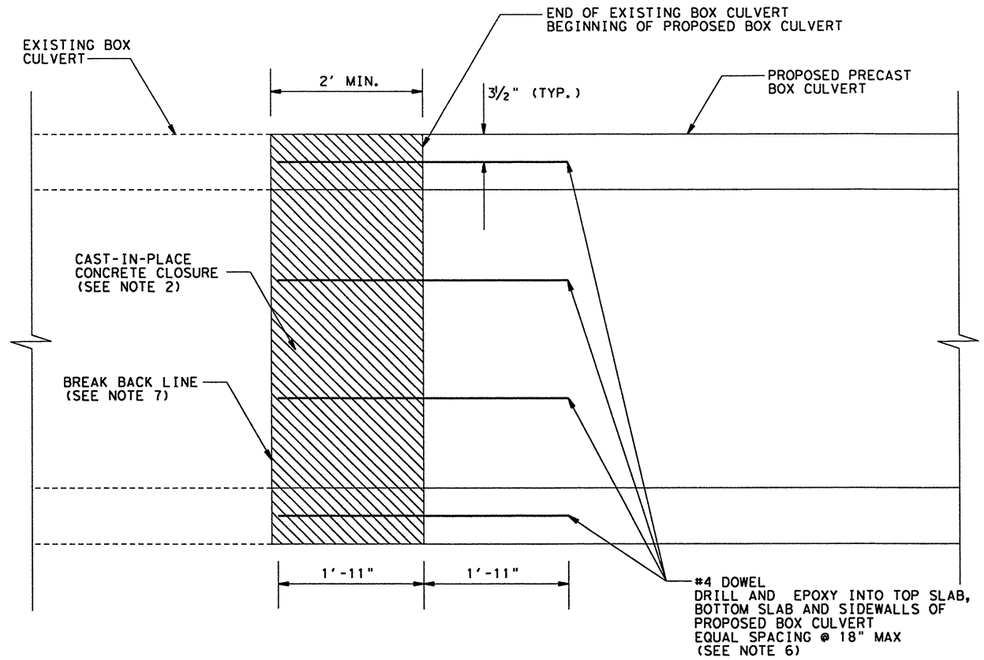

STRUCTURE BOX CULVERT CONNECTION
N.T.S.

NOTES:

1. HEADWALL REMOVAL SHALL BE CONSIDERED SUBSIDIARY TO THE CONCRETE BOX CULVERT.
2. ALL REINFORCING IN THE CLOSURE SHALL BE THE SAME SIZE AND SPACING AS IN THE PRECAST BOX SECTION. THE CAST-IN-PLACE CLOSURE SHALL BE FLUSH WITH THE INSIDE FACE OF THE PRECAST BOX SECTION.
3. CONCRETE AND REINFORCING REQUIRED FOR THE CLOSURE SHALL BE CONSIDERED SUBSIDIARY TO THE CONCRETE BOX CULVERT.
4. ALL CLOSURE CONCRETE SHALL BE CLASS "C" WITH A MINIMUM COMPRESSIVE STRENGTH OF 3600 P.S.I. AND SHALL BE PLACED ACCORDING TO ITEM 420, "CONCRETE STRUCTURES". REINFORCING SHALL BE PLACED ACCORDING TO ITEM 440, "REINFORCING STEEL".
5. SLOPE OF CONCRETE CLOSURE SHALL MATCH PROPOSED BOX CULVERT SLOPE.
6. INSTALLATION OF DOWELS SHALL BE PERFORMED IN ACCORDANCE WITH ITEM 420, "CONCRETE STRUCTURES".
7. EXPOSED BOX CULVERT REINFORCING, AFTER BREAKING BACK, SHALL EXTEND INTO CAST-IN PLACE CONCRETE CLOSURE BY TRIMMING AND BENDING AND NECESSARY.

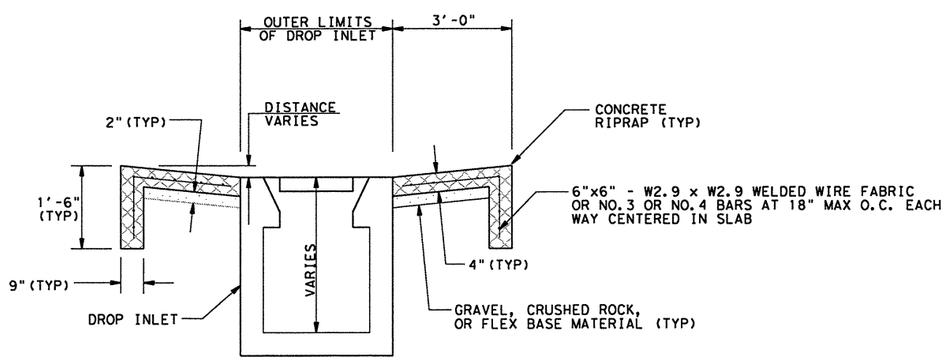

SECTION A-A

RIPRAP APRON DETAIL FOR DROP INLET
N.T.S.

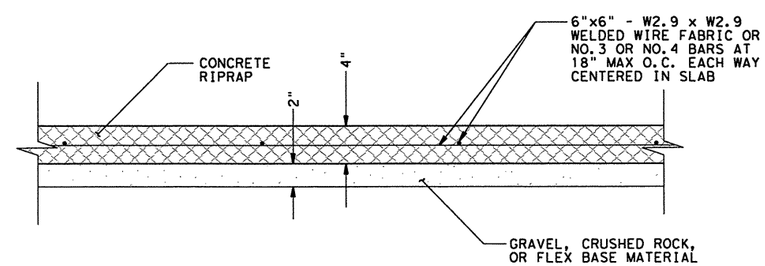

CONCRETE RIPRAP DETAIL
N.T.S.

2/19/11

STATE OF TEXAS
JOHN D. CONQUEST
89243
LICENSED
PROFESSIONAL ENGINEER

John Conquest PE

NO.	DATE	REVISION DESCRIPTION	APP. BY

© 2011

Texas Department of Transportation

MACTEC
3520 EXECUTIVE CENTER DRIVE
SUITE 200
AUSTIN, TEXAS 78731
(512) 795-0360

REGISTRATION NUMBER: F-1784

SH 151

DRAINAGE DETAILS

(SHEET 1 OF 1)

FED. RD. DIV. NO.			SHEET NO.
			234
STATE	DIST.	COUNTY	
TEXAS	SA	BEXAR	
CONT.	SECT.	JOB	HIGHWAY NO.
2452	01	043	SH 151

p:\4760\0-0129\cad\sheet\5ldet_drn01.dgn 2/19/2011 1:22:22 PM mwmldkiff

Culvert Station and/or Creek name followed by applicable end (Lt, Rt or Both)	Description of Box Culvert No. Spans ~ Span X Height	Max Fill Height (Ft)	Applicable Box Culvert Standard (4)	Applicable Wingwall or End Treatment Standard	Skew Angle (0°, 15°, 30° or 45°)	Side Slope or Channel Slope Ratio (SL:1)	T Culvert Top Slab Thickness (In)	U Culvert Wall Thickness (In)	C Estimated Curb Height (Ft)	Hw (1) Height of Wingwall (Ft)	A Curb to End of Wingwall (Ft)	B Offset of End of Wingwall (Ft)	Lw Length of Longest Wingwall (Ft)	Ltw Culvert Toewall Length (Ft)	Atw Anchor Toewall Length (Ft)	Riprap Apron (C.Y.)	Class (2) "C" Conc (Curb) (C.Y.)	Class (3) "C" Conc (Wingwall) (C.Y.)	Total Wingwall Area (S.F.)
Structure 6-1 (Rt)	1 ~ 7'x 4'	7'	SCP-7	FW-S	15°	4:1	8"	8"	1.00'	5.417'	20.333'	15.883'	25.80'	N/A	N/A	3.8	0.3	7.8	126

NOTES:

Skew Angle = 0° for SW-0, FW-0, SETB-CD, SETB-SW-0, and SETB-FW-0 standards.
30° Maximum for Safety End Treatment

SL:1 = Horizontal:1 Vertical
Side Slope at culvert for Flared or Straight Wingwalls. Channel Slope for Parallel Wingwalls.
Slope shall be 3:1 or flatter for Safety End Treatments.

T = Box Culvert Top Slab Thickness. Dimension can be found on the applicable Box Culvert Standard.

U = Box Culvert Wall Thickness. Dimension can be found on the applicable Box Culvert Standard.

C = Curb Height.

See applicable wing or end treatment standards for calculations of Hw, A, B, Lw, Ltw, Atw, and Total Wingwall Area.
Hw = Height of Wingwall.
A = Distance from Face of Curb to End of Wingwall (Not applicable to Parallel or Straight Wingwalls).
B = Offset of End of Wingwall (Not applicable to Parallel or Straight Wingwalls).
Lw = Length of Longest Wingwall.
Ltw = Length of Culvert Toewall (Not applicable when using Riprap Apron).
Atw = Length of Anchor Toewall (Applicable to Safety End Treatment only).
Total Wingwall Area = Wingwall area in S.F. for two wingwalls (one structure end) if Lt or Rt.
Area for four wingwalls (two structure ends) if Both.

(1) The wall heights shown will be rounded to the nearest Foot for bidding purposes.

(2) Concrete volume shown is for box culvert curb only. For curbs using the RAC standard, quantities shown must be increased by a factor of 2. If Class "S" concrete is required for the top slab of the culvert, the curb concrete shall also be Class "S". Curb concrete is considered part of the Box Culvert for payment.

(3) Concrete volume shown is total of wing, footing, culvert toewall (if any), anchor toewall (if any) and wingwall toewall. Riprap apron, culvert and curb quantities are not included.

(4) Regardless of the type of culvert shown on this sheet, the Contractor shall have the option of furnishing cast-in-place or precast culverts unless otherwise shown elsewhere on the plans. If the Contractor elects to provide culverts of a different type than those shown on this sheet, it shall be the Contractor's responsibility to make the necessary adjustments to the dimensions and quantities shown.

SPECIAL NOTE:

This sheet is a supplement to the Box Culvert standards. It is to be filled out by the culvert specifier and provides dimensions for the construction of the Box Culvert Wingwalls and Safety End Treatments.

An Excel 97 spreadsheet to assist in completing this table can be downloaded from the Bridge Standards (English) web page on the TxDOT web site. The completed sheet shall be signed, sealed, and dated by a licensed Professional Engineer.

STATE OF TEXAS
JOHN D. CONQUEST
89243
LICENSED
PROFESSIONAL ENGINEER
2/19/11
PE

Texas Department of Transportation
Bridge Division

BOX CULVERT SUPPLEMENT
WINGS AND END TREATMENTS

BCS

FILE: bcsstdel.dgn	DN: TxDOT	CK: TxDOT	DW: TxDOT	CK: GAF
© TxDOT February 2010	DISTRICT	FEDERAL AID PROJECT		SHEET
REVISIONS	SA			235

COUNTY	CONTROL	SECT	JOB	HIGHWAY
BEXAR	2452	01	043	SH 151

DISCLAIMER:
The use of this standard is governed by the "Texas Engineering Practice Act". No warranty of any kind is made by TxDOT for any purpose whatsoever. TxDOT assumes no responsibility for the conversion of this standard to other formats or for incorrect results or damages resulting from its use.

COMMENTS:

LEVELS DISPLAYED

p:\4760\0-01\29\acad\standard\bcsstd_dtn01.dgn 2/18/2011 1:22:23 PM mwmldkfit

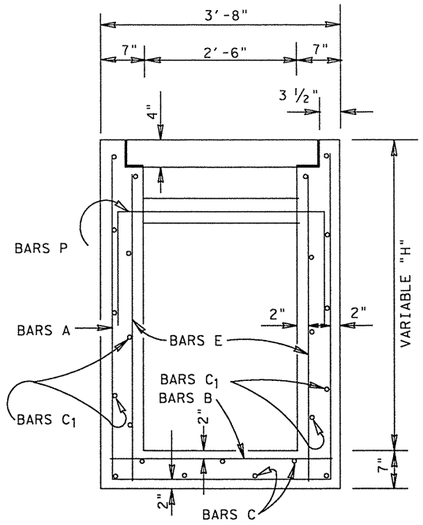

SECTION B-B

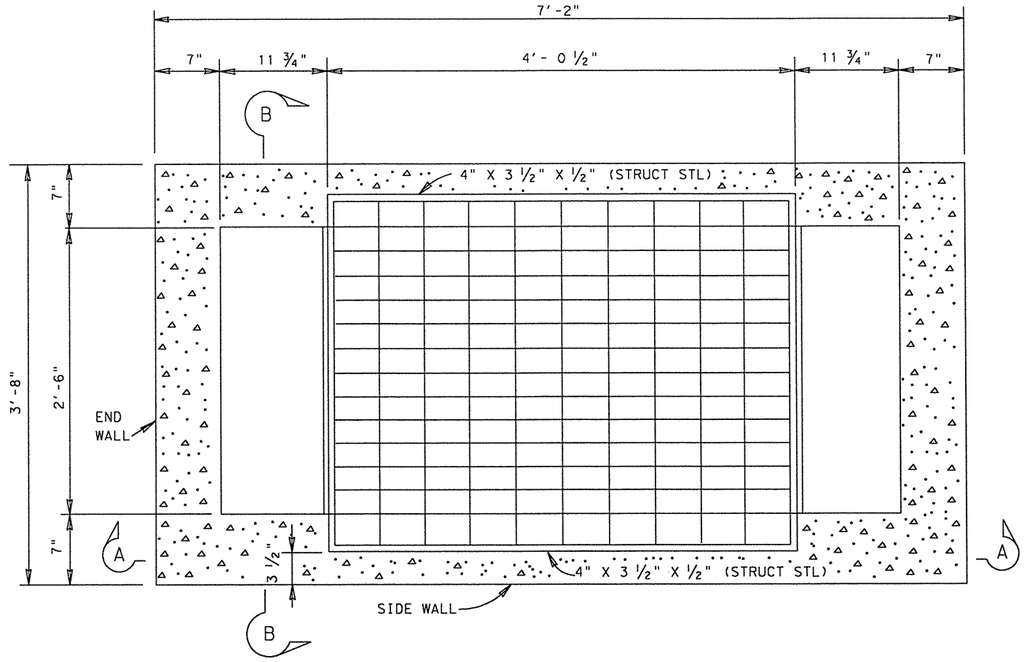

PLAN VIEW W/GRATE

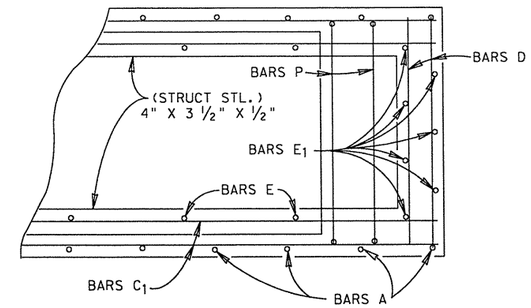

PARTIAL PLAN

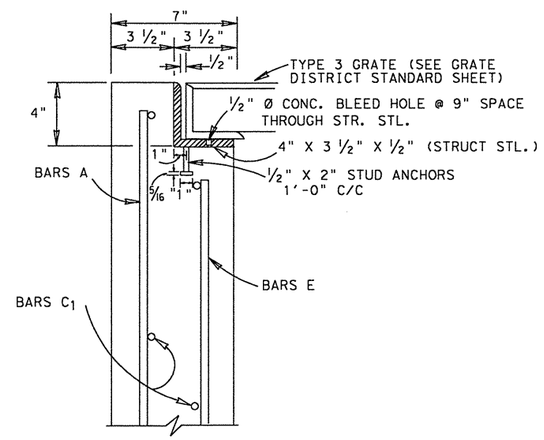

SIDE WALL
DETAIL
@ GRATE

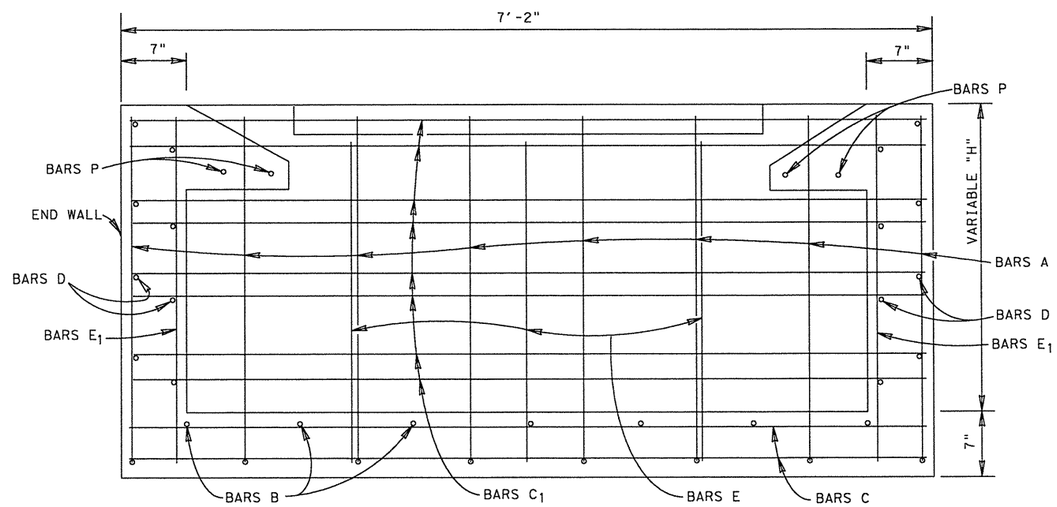

SIDE WALL
SECTION A-A

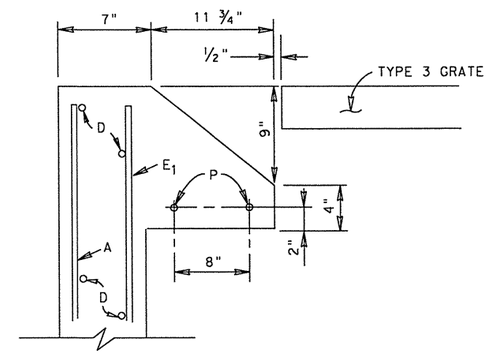

END WALL
DETAIL

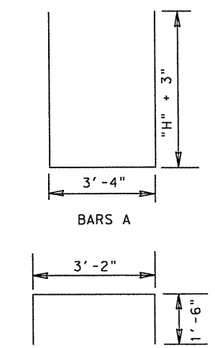

NOTES :

1. ALL CONCRETE SHALL BE CLASS "A". COARSE AGGREGATE GRADE "4" MAY BE USED.
2. DIMENSIONS RELATING TO REINFORCING STEEL ARE TO CENTER OF BARS.
3. REINFORCING STEEL SHALL BE FIELD BENT OR CUT TO ALLOW FOR INSTALLATION OF PIPE(S).
4. PIPES MAY BE PLACED ON ANY SIDE AS INDICATED IN THE PLANS.
5. THE STATION LOCATION AND OFFSET DISTANCE SHOWN IN THE PLANS IS TO THE CENTER OF THE INLET.
6. RIPRAP BASIN AROUND THE INLET WHEN SHOWN IN THE PLANS IS PAID FOR UNDER ITEM 432.
7. ALL EXPOSED CORNERS SHALL HAVE A 3/4" CHAMFER.

QUANTITIES WILL VARY WITH "H"

REINFORCING STEEL AND ESTIMATED QUANTITIES (BASED ON H = 3'-0")

BARS A (FLOOR & WALLS)					BARS B (FLOOR)					BARS C (FLOOR)					BARS C1 (SIDE WALLS)					BARS D (END WALLS)					BARS E (WALLS)					BARS E1 WALLS					BARS P					TOTALS			GRATE
NO.	SIZE	SPA.	LENGTH	WT.	NO.	SIZE	SPA.	LENGTH	WT.	NO.	SIZE	SPA.	LENGTH	WT.	NO.	SIZE	SPA.	LENGTH	WT.	NO.	SIZE	SPA.	LENGTH	WT.	NO.	SIZE	SPA.	LENGTH	WT.	NO.	SIZE	SPA.	LENGTH	WT.	NO.	SIZE	SPA.	LENGTH	WT.	REINF. STL. LBS.	CL."A"CONC. C.Y.	STRUCT. STL. LBS.	TYPE 3 EA.
8	#4	12"±	9'-11"	53	7	#4	12"±	3'-5"	16	7	#4	12"±	6'-10"	32	16	#4	13±	6'-10"	73	16	#4	13±	3'-5"	37	6	#4	18"±	2'-11"	12	14	#4	12"±	3'-3"	30	4	#4	SHOWN	6'-2"	16	269 *	1.92 *	97 *	1 *

* FOR CONTRACTOR'S INFORMATION ONLY

DROP INLET TYPE Y-1
SAN ANTONIO DISTRICT STANDARD

©1998 Texas Department of Transportation

FED. RD. DIV. NO.	PROJECT NO.			SHEET NO.
6				236
STATE	STATE DISTRICT	COUNTY		
TEXAS	SAT	BEXAR		
CONT.	SECT.	JOB	HIGHWAY NO.	
2452	01	043	SH 151	

10/95

STRUCTURE DESIGN
/BRIDGE/STDS/DROPINY1.DGN

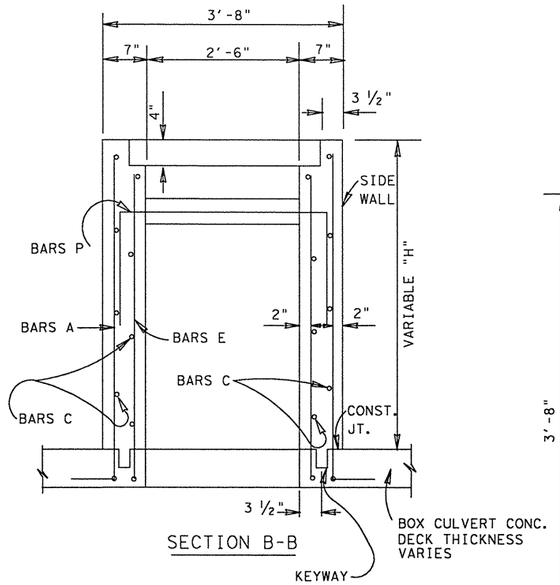

SECTION B-B

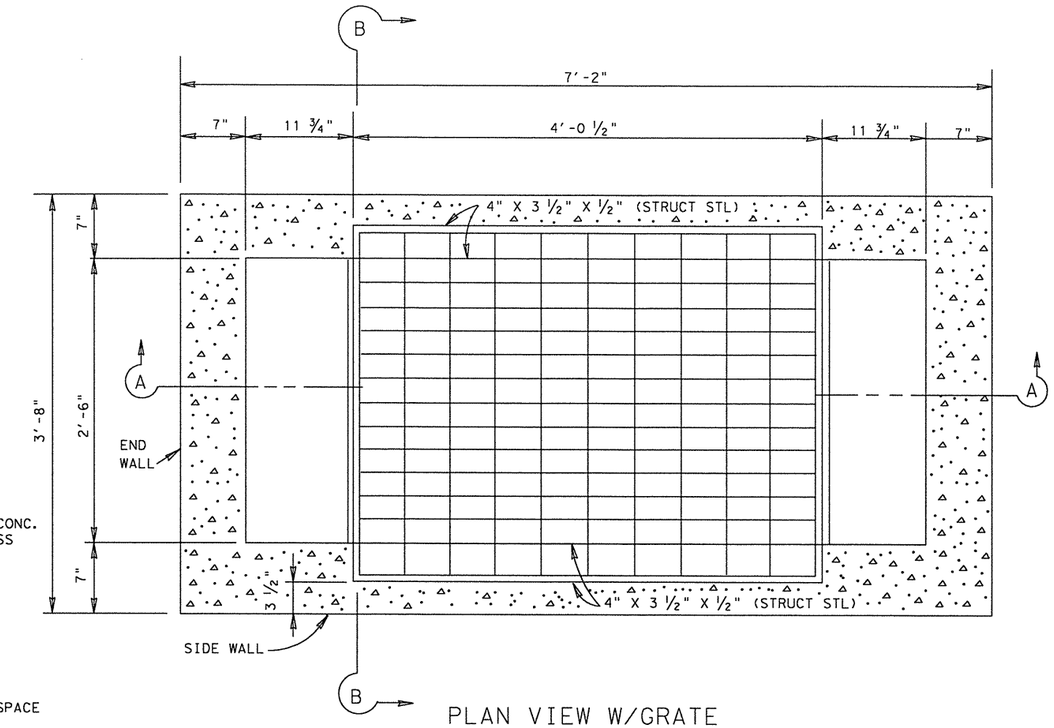

PLAN VIEW W/GRATE

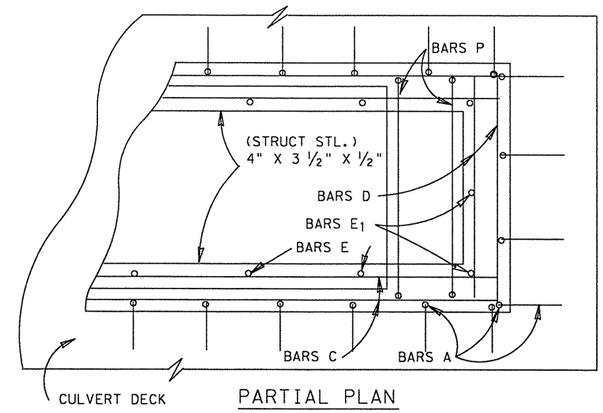

PARTIAL PLAN

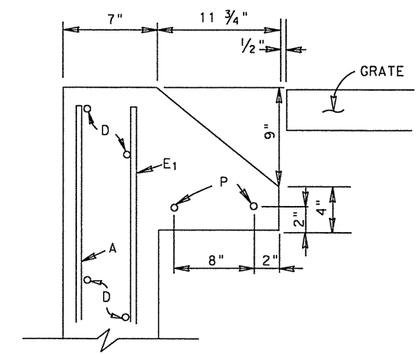

END WALL DETAIL

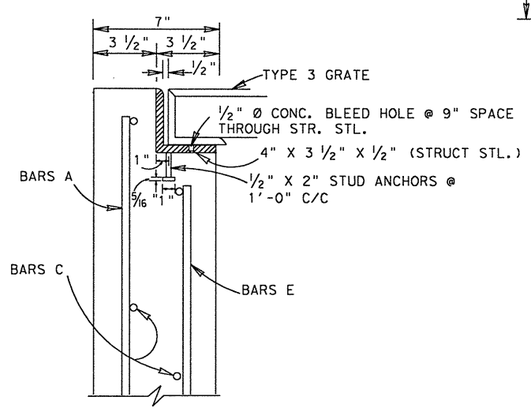

SIDE WALL DETAIL @ GRATE

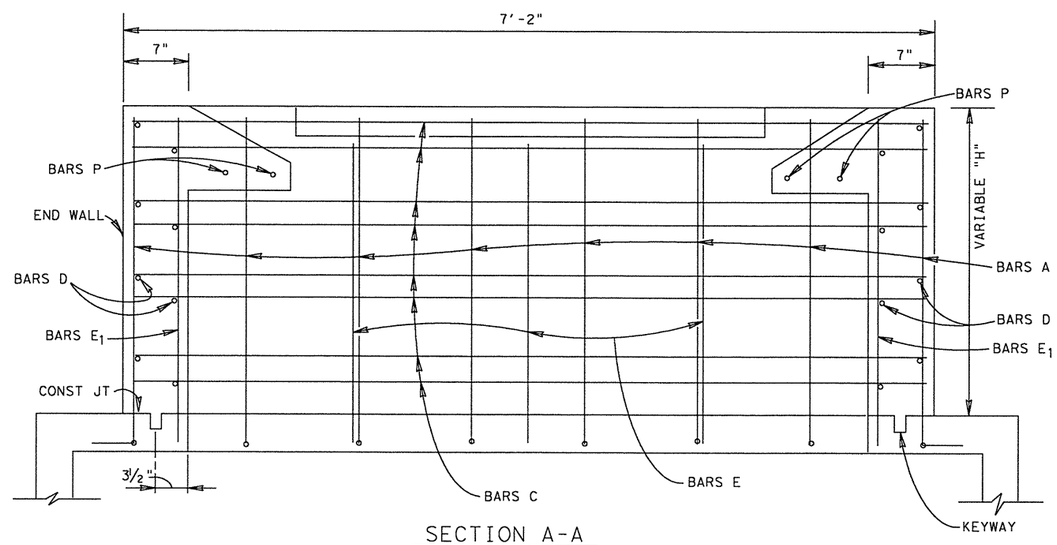

SECTION A-A

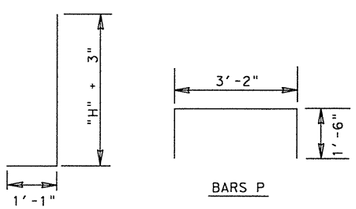

NOTES :

1. ALL CONCRETE SHALL BE CLASS "A". COARSE AGGREGATE GRADE "4" MAY BE USED.
2. DIMENSIONS RELATING TO REINFORCING STEEL ARE TO CENTER OF BARS.
3. THE STATION LOCATION AND OFFSET DISTANCE SHOWN IN THE PLANS IS TO THE CENTER OF THE INLET.
4. PAYMENT FOR GRATES, CONC., REIN. & STRUCTURAL STEEL SHALL BE INCLUDED IN THE UNIT COST OF ITEM 465 "MANHOLES & INLETS".
5. THE WORK FOR THE BLOCKOUT IN THE BOX CULVERT DECK FOR A PROP. CULVERT OR THE BREAKOUT OF THE DECK ON AN EXIST. CULVERT IS SUBSIDIARY TO THE INLET.
6. THE GRATE INFORMATION IS SHOWN ON THE TY 3 & TY 4 GRATE STANDARD SHEET.
7. RIPRAP BASIN AROUND THE INLET WHEN SHOWN IN THE PLANS IS PAID FOR UNDER ITEM 432.
8. ALL EXPOSED CORNERS SHALL HAVE A 3/4" CHAMFER.

DROP INLET TYPE Y-1A
SAN ANTONIO DISTRICT STANDARD

REINFORCING STEEL AND ESTIMATED QUANTITIES (BASED ON H = 3'-0")

BARS A (DECK & WALLS)					BARS C (SIDE WALLS)					BARS D (END WALLS)					BARS E (SIDE WALLS)					BARS E1 (END WALLS)					BARS P					TOTAL			GRATE
NO.	SIZE	SPA.	LENGTH	WT.	NO.	SIZE	SPA.	LENGTH	WT.	NO.	SIZE	SPA.	LENGTH	WT.	NO.	SIZE	SPA.	LENGTH	WT.	NO.	SIZE	SPA.	LENGTH	WT.	NO.	SIZE	SPA.	LENGTH	WT.	REINF. STL. LBS.	CL. A CONC. C.Y.	STRUCT STL. LBS.	TYPE 3 EA.
24	#4	12"±	4'-4"	69	16	#4	13±	6'-10"	73	16	#4	13±	3'-5"	37	6	#4	18"±	2'-11"	12	6	#4	18"±	3'-3"	13	4	#4	SHOWN	6'-2"	16	220 *	1.35 *	97 *	1 *

QUANTITIES WILL VARY WITH "H".

* FOR CONTRACTOR'S INFORMATION ONLY

© 1998 Texas Department of Transportation

FED. RD. DIV. NO.	PROJECT NO.		SHEET NO.
6			237
STATE	STATE DISTRICT	COUNTY	
TEXAS	SAT	BEXAR	
CONT.	SECT.	JOB	HIGHWAY NO.
2452	01	043	SH 151

10/95

STRUCTURE DESIGN
/BRIDGE/STDS/DROPINY1A.DGN

p:\4760\V0-0129\cad\sh---\standard\5std_dr1f5.dgn
2/19/2011
1:22:25 PM
mwmldk117

NOTES :

1. ALL CONCRETE SHALL BE CLASS "A". COARSE AGGREGATE GRADE "4" MAY BE USED.
2. DIMENSIONS RELATING TO REINFORCING STEEL ARE TO CENTER OF BARS.
3. REINFORCING STEEL SHALL BE FIELD BENT OR CUT TO ALLOW FOR INSTALLATION OF PIPE(S).
4. PIPES MAY BE PLACED ON ANY SIDE(S) AS INDICATED IN THE PLANS.
5. PAYMENT FOR GRATE, CONC. & STEEL SHALL BE INCLUDED IN THE UNIT COST OF ITEM 465 "MANHOLES & INLETS".
6. THE STATION LOCATION AND OFFSET DISTANCE SHOWN IN THE PLANS IS TO THE CENTER OF THE INLET.
7. RIPRAP BASIN AROUND THE INLET WHEN SHOWN IN THE PLANS IS PAID FOR UNDER ITEM 432.
8. ALL EXPOSED CORNERS SHALL HAVE A ¾" CHAMFER.

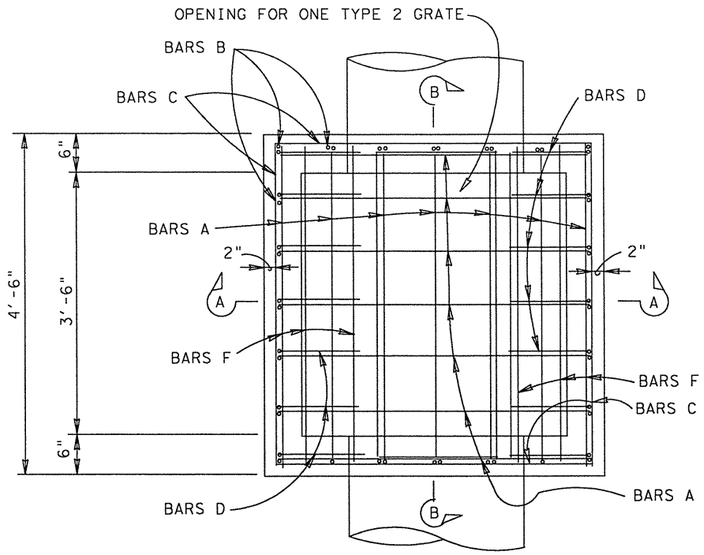

PLAN VIEW

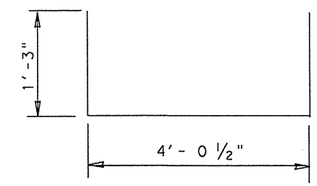

BARS A

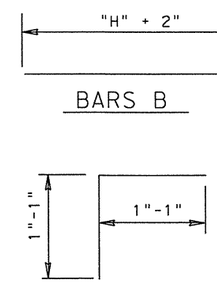

BARS B

BARS D

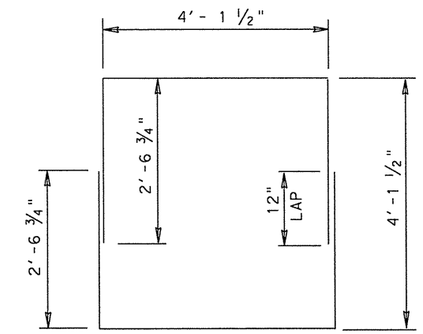

BARS C

2 BARS @ EACH SPACING

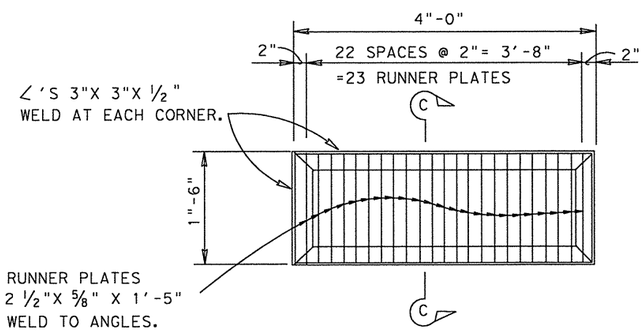

GRATE ~ TYPE 2

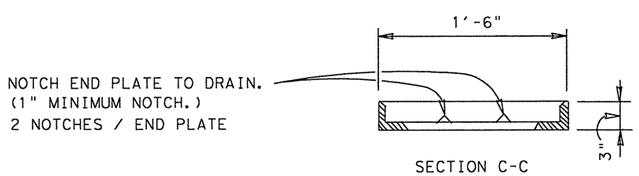

SECTION C-C

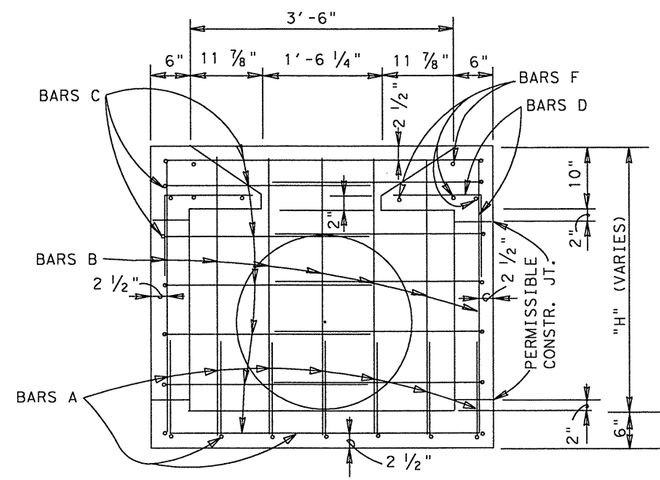

SECTION A-A

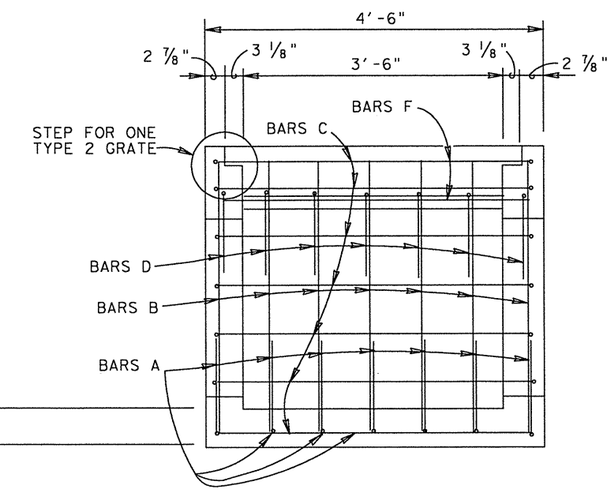

SECTION B-B

QUANTITIES VARY WITH "H"

ESTIMATED QUANTITIES FOR "H"= 3'					
REINFORCING STEEL					
BAR	NO.	SIZE	SPACING	LENGTH	WEIGHT
A	14	#4	8"±	6'-6½"	61
B	24	#4	8"±	3'-2"	51
C	12	#4	8"±	9'-3"	74
D	14	#4	8"±	2'-2"	20
F	8	#5	AS SHOWN	4'-2"	35
TOTAL REINFORCING STEEL (LBS) = 241 ✳					
CL A CONCRETE (C.Y.) = 1.59 ✳					
GRATE TYPE 2 (EA.) = 1 ✳					

✳ FOR CONTRACTOR'S INFORMATION ONLY.

DROP INLET TYPE 3

GRATE TYPE 2

SAN ANTONIO DISTRICT STANDARD

© 1998 Texas Department of Transportation

FED. RD. DIV. NO.	PROJECT NO.		SHEET NO.
6			238
STATE	STATE DISTRICT	COUNTY	
TEXAS	SAT	BEXAR	
CONT.	SECT.	JOB	HIGHWAY NO.
2452	01	043	SH 151

10/95

STRUCTURE DESIGN
/BRIDGE/STDS/DROPIN3.DGN

p:\4760\0-0129\cad\sheet\standard\j51std_drn02.dgn
2/19/2011
11:22:25 PM
mwmldeff

NOTES :

1. ALL CONCRETE SHALL BE CLASS "A". COARSE AGGREGATE GRADE "4" MAY BE USED.
2. DIMENSIONS RELATING TO REINFORCING STEEL ARE TO CENTER OF BARS.
3. PAYMENT FOR CONC., STEEL & GRATE SHALL BE INCLUDED IN THE UNIT COST OF ITEM 465 "MANHOLES & INLETS".
4. THE STATION LOCATION AND OFFSET DISTANCE SHOWN IN THE PLANS IS TO THE CENTER OF THE INLET.
5. RIPRAP BASIN AROUND THE INLET WHEN SHOWN IN THE PLANS IS PAID FOR UNDER ITEM 432.
6. THE WORK FOR THE BLOCKOUT IN THE BOX CULVERT DECK FOR A PROPOSED CULVERT OR THE BREAKOUT OF THE DECK ON AN EXIST. BOX IS SUBSIDIARY TO THE INLET.
7. ALL EXPOSED CORNERS SHALL HAVE A ¾" CHAMFER.

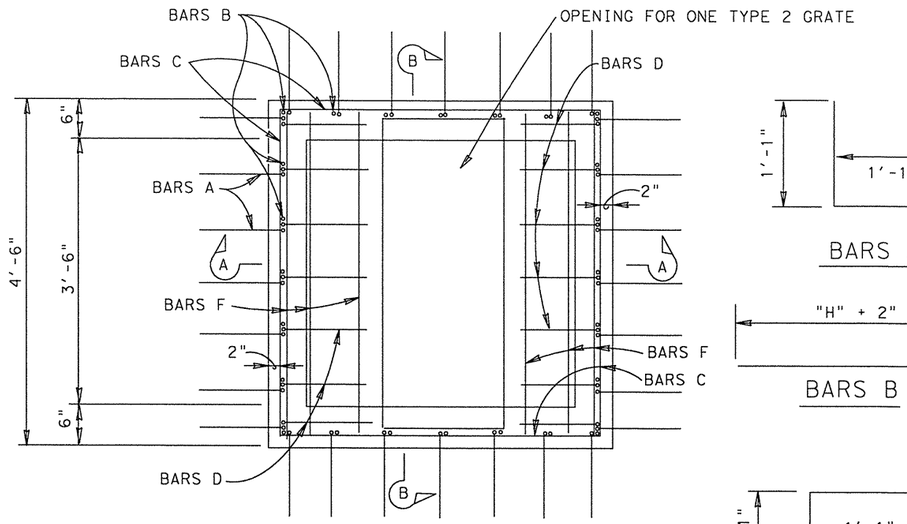

PLAN VIEW

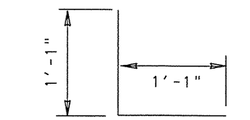

BARS A

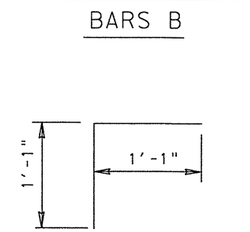

BARS B

BARS D

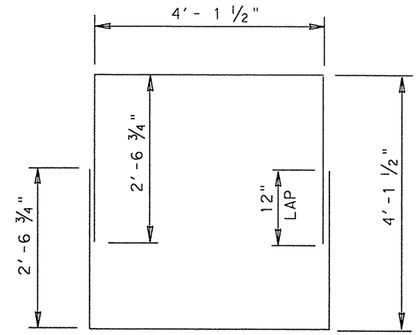

BARS C

2 BARS @ EACH SPACING

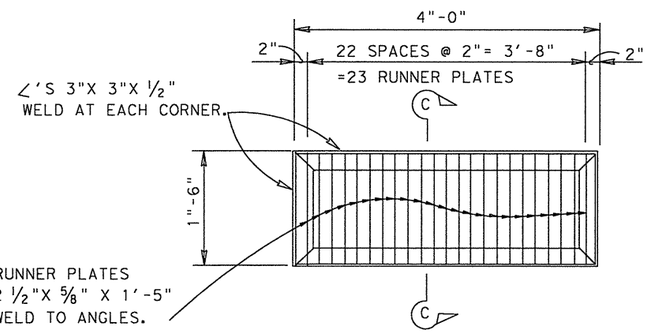

GRATE ~ TYPE 2

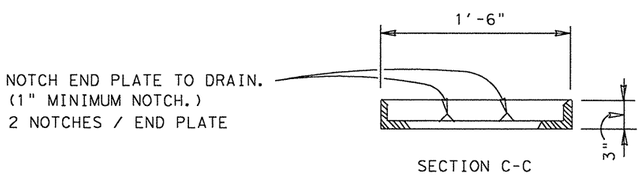

SECTION C-C

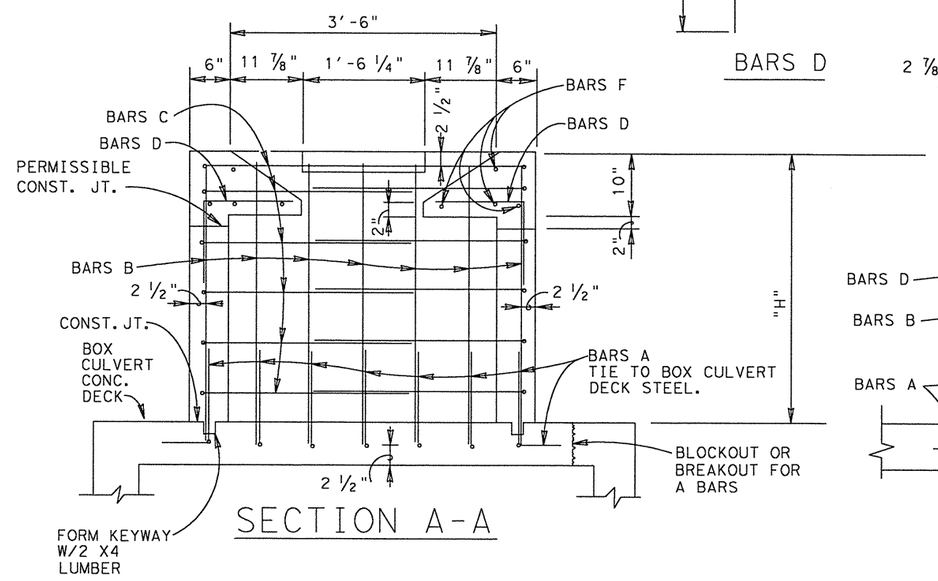

SECTION A-A

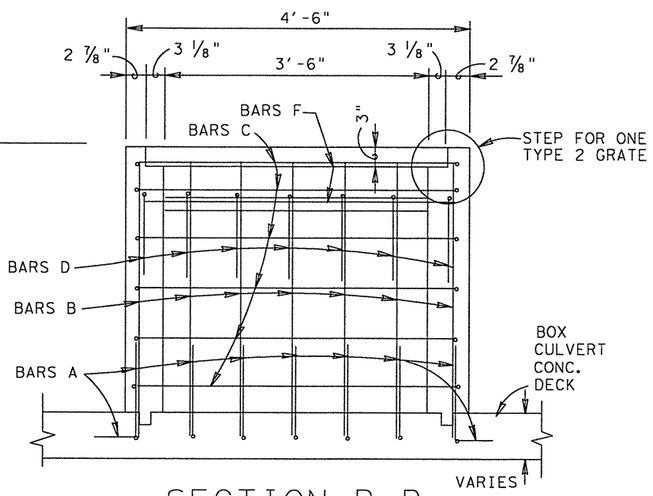

SECTION B-B

QUANTITIES VARY WITH "H"

ESTIMATED QUANTITIES FOR "H"= 3'					
REINFORCING STEEL					
BAR	NO.	SIZE	SPACING	LENGTH	WEIGHT
A	28	#4	8" ±	2'-2"	41
B	24	#4	8" ±	3'-2"	51
C	10	#4	8" ±	9'-3"	62
D	14	#4	8" ±	2'-2"	20
F	8	#5	AS SHOWN	4'-2"	35
TOTAL REINFORCING STEEL (LBS)					209 ✳
CL A CONCRETE (C.Y.) = 1.02 ✳					
GRATE TYPE 2 (EA.) =1 ✳					

✳ FOR CONTRACTOR'S INFORMATION ONLY

DROP INLET TYPE 3A
GRATE TYPE 2

SAN ANTONIO
DISTRICT STANDARD

© 1998 Texas Department of Transportation

FED. RD. DIV. NO.	PROJECT NO.		SHEET NO.
6			239
STATE	STATE DISTRICT	COUNTY	
TEXAS	SA	BEXAR	
CONT.	SECT.	JOB	HIGHWAY NO.
2452	01	043	SH 151

10/95

STRUCTURE DESIGN
/BRIDGE/STDS/DROP1N3A.DGN

D:\4716000-01\29\cad\~~\standard\5std_drn17.dgn
2/19/2011
1:34:54 PM
mwmlakit1

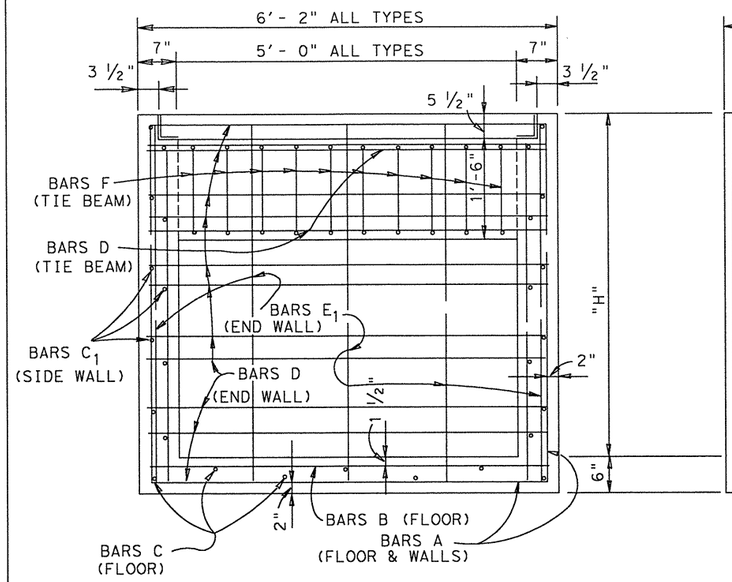

SECTION B-B

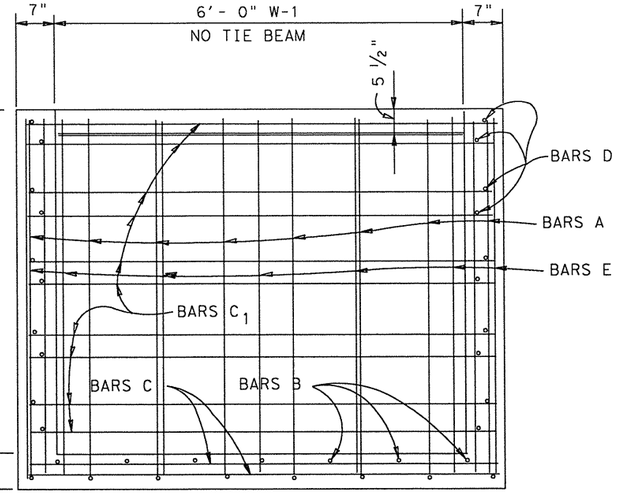

SECTION A-A

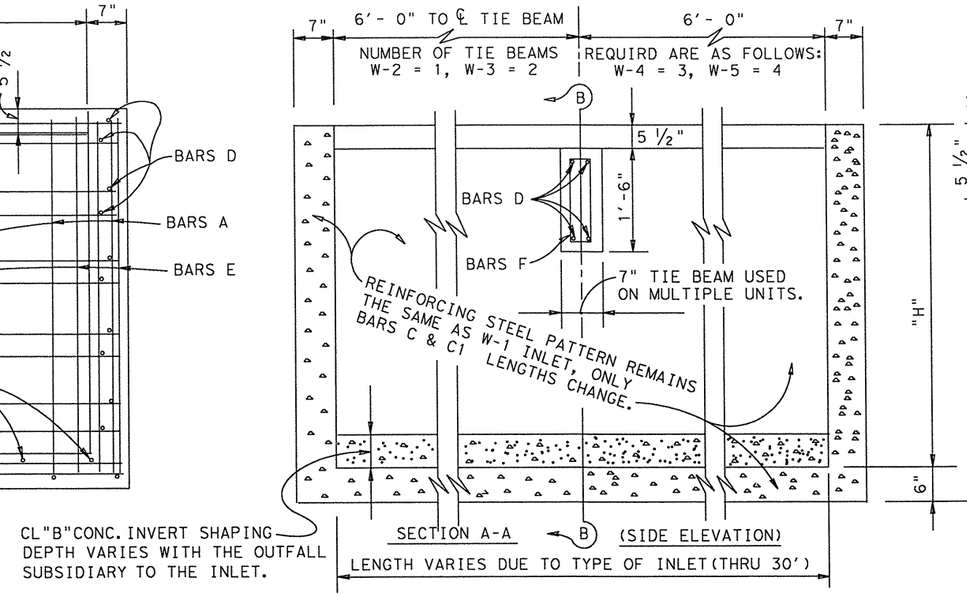

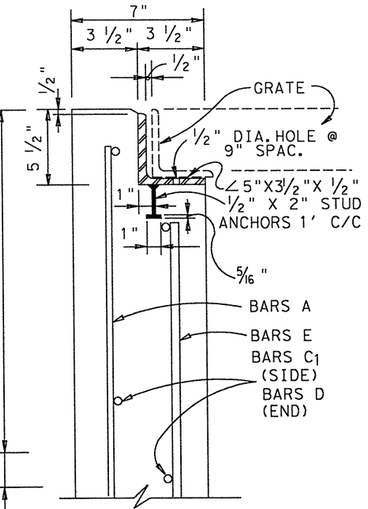

SECTION THRU
SIDE WALL
(ANGLE IRON DETAIL)

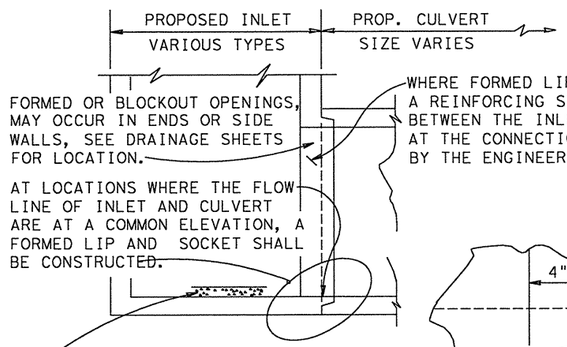

SECTION THRU INLET AND CULVERT

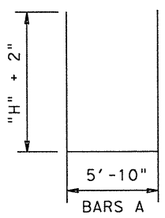

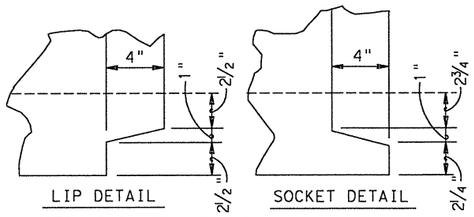

LIP DETAIL

SOCKET DETAIL

NOTE: THE LIP AND SLOPE DISTANCE SHOWN ABOVE MAY BE VARIED SLIGHTLY WITH APPROVAL BY THE ENGINEER.

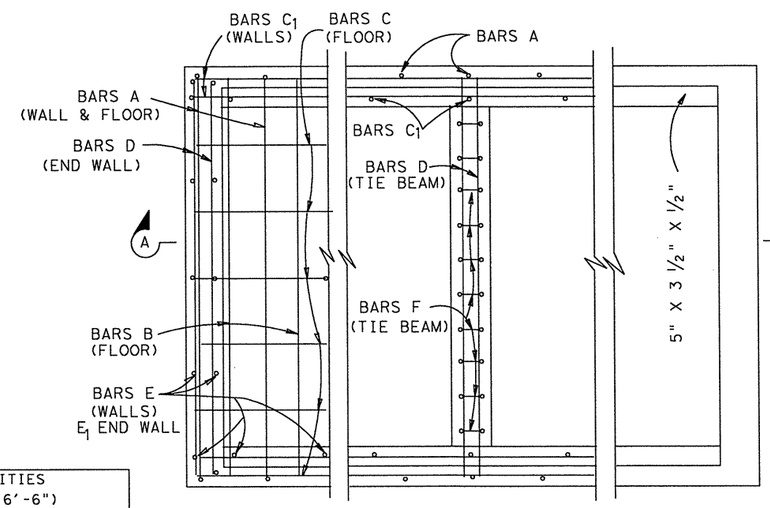

PLAN VIEW

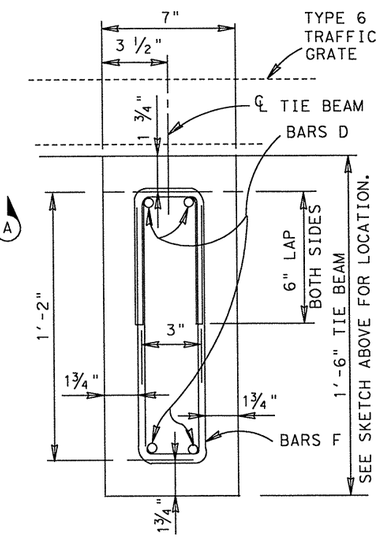

SECTION THRU
TIE BEAM

ESTIMATED QUANTITIES (BASED ON "H" = 6'-6")					
DESCRIPTION	TRAFFIC INLET TYPE				
	W-5	W-4	W-3	W-2	W-1
CL "C" CONC. C.Y.	✯ 14.15	✯ 11.66	✯ 9.17	✯ 6.68	✯ 4.19
REINFORCING STEEL-LBS.	1685	1388	1095	790	495
STRUCTURAL STEEL-LBS.	724	579	434	290	145
GRATE (TRAFFIC) TY 6	5	4	3	2	1

✯ NOTE : CONCRETE QUANTITY INCLUDES TIE BEAMS WHERE REQUIRED BUT DOES NOT TAKE INTO ACCOUNT WALL BLOCKOUTS.

NOTE :

TYPE W-1 = 6', TYPE W-2 = 12',
TYPE W-3 = 18', TYPE W-4 = 24',
TYPE W-5 = 30'

REINFORCING STEEL (BASED ON "H" - 6'-6")																
INLET TYPE	BARS A					BARS C 1					BARS E1				
	NO.	SIZE	SPAC.	LENGTH	WT.	NO.	SIZE	SPAC.	LENGTH	WT.	NO.	SIZE	SPAC.	LENGTH	WT.
W-5	32	#4	12" ±	19'-2"	410	24	#4	1'-0 ⅜" ±	30'-10"	494	10	#4	17" ±	6'-8"	45
W-4	26	#4	12" ±	19'-2"	333	24	#4	1'-0 ⅜" ±	24'-10"	398	10	#4	17" ±	6'-8"	45
W-3	20	#4	12" ±	19'-2"	256	24	#4	1'-0 ⅜" ±	18'-10"	302	10	#4	17" ±	6'-8"	45
W-2	14	#4	12" ±	19'-2"	179	24	#4	1'-0 ⅜" ±	12'-10"	206	10	#4	17" ±	6'-8"	45
W-1	8	#4	12" ±	19'-2"	102	24	#4	1'-0 ⅜" ±	6'-10"	110	10	#4	17" ±	6'-8"	45
	BARS B					BARS D					BARS F				
W-5	31	#4	12"	5'-10"	121	46	#4	13" ±	5'-10"	179	40	#4	6"	3'-10"	76
W-4	25	#4	12"	5'-10"	97	42	#4	13" ±	5'-10"	164	30	#4	6"	3'-10"	57
W-3	19	#4	12"	5'-10"	74	38	#4	13" ±	5'-10"	148	20	#4	6"	3'-10"	39
W-2	13	#4	12"	5'-10"	51	34	#4	13" ±	5'-10"	132	10	#4	6"	3'-10"	19
W-1	7	#4	12"	5'-10"	27	30	#4	13" ±	5'-10"	117	0	#4			0
	BARS C					BARS E									
W-5	7	#4	11 ⅝"	30'-10"	144	48	#4	17"	6'-8"	214					
W-4	7	#4	11 ⅝"	24'-10"	116	40	#4	17"	6'-8"	178					
W-3	7	#4	11 ⅝"	18'-10"	88	32	#4	17"	6'-8"	143					
W-2	7	#4	11 ⅝"	12'-10"	60	22	#4	17"	6'-8"	98					
W-1	7	#4	11 ⅝"	6'-10"	32	14	#4	17"	6'-8"	62					

GENERAL NOTES :

1. QUANTITIES SHOWN ARE FOR CONTRACTOR'S INFORMATION ONLY.
2. ALL CONCRETE SHALL BE CLASS "C", COARSE AGGREGATE GRADE 4 MAY BE USED.
3. DIMENSIONS RELATING TO REINFORCING STEEL ARE TO CENTER OF BARS.
4. REINFORCING STEEL SHALL BE FIELD BENT OR CUT TO PROVIDE A TIE TO THE PROPOSED CONNECTIONS.
5. THE CONTRACTOR SHALL PROVIDE AN ADEQUATE MEANS TO LIFT AND PLACE PRECAST INLETS SUBJECT TO THE APPROVAL OF THE ENGINEER.
6. ALL EXPOSED CORNERS SHALL HAVE A ¾" CHAMFERED.

SAN ANTONIO DISTRICT STANDARD

TRAFFIC INLET

TYPE W-1 THRU W-5

© 1998 Texas Department of Transportation

FED. RD. DIV. NO.	PROJECT NO.		SHEET NO.
6			240
STATE	STATE DISTRICT	COUNTY	
TEXAS	SAT	BEXAR	
CONT.	SECT.	JOB	HIGHWAY NO.
2452	01	043	SH 151

10/95

STRUCTURE DESIGN
/BRIDGE/STDS/DTRAFWIT5.DGN

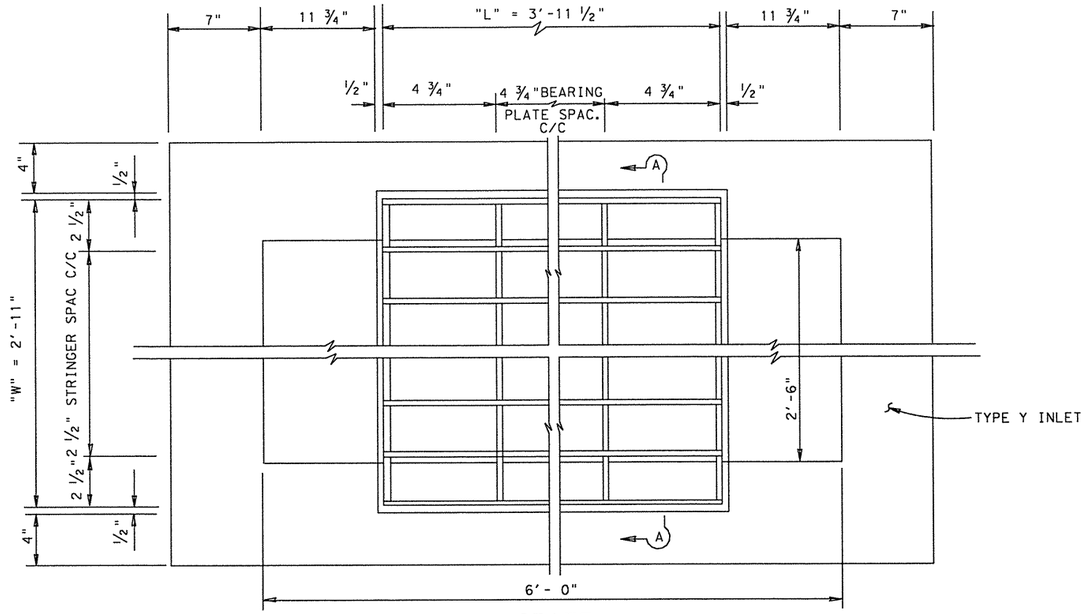

GRATE
PLAN VIEW

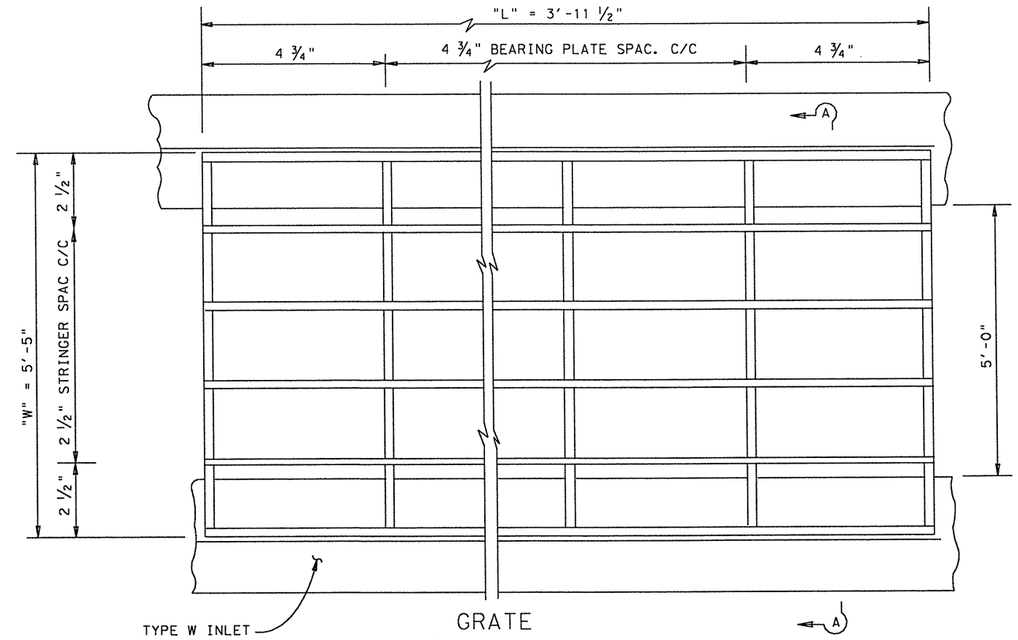

GRATE
PLAN VIEW

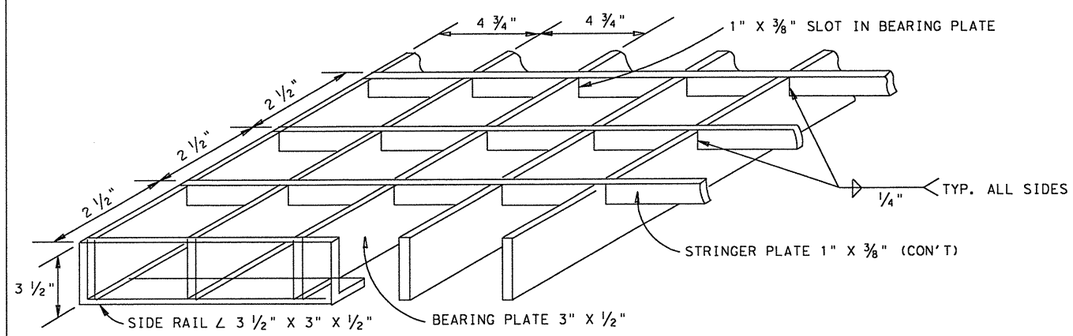

GRATE CORE

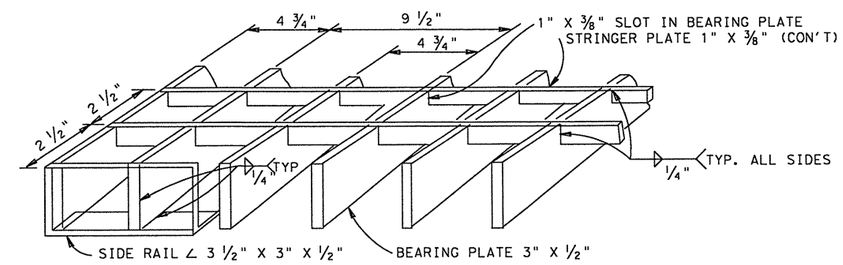

GRATE CORE

STRUCTURAL STEEL FOR ONE TYPE 3 GRATE											
GRATE DIM. OUT TO OUT		SIDE-RAIL 3 1/2"X 3"X 1/2"			BEARING PLATE PL 3" X 1/2"			STRINGER PLATE PL 1" X 3/8"			TOTAL WEIGHT
L	W	NO.	LGTH.	WT.	NO.	LGTH.	WT.	NO.	LGTH.	WT.	LBS.
3'-11 1/2"	2'-11"	2	3'-11 1/2"	81	11	2'-10"	159	13	3'-11 1/2"	66	306 *

* FOR CONTRACTOR'S INFORMATION ONLY

GRATE TYPE 3

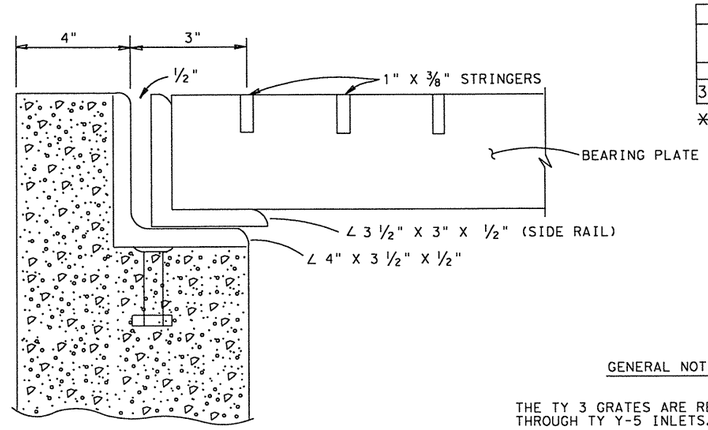

SECTION A-A

STRUCTURAL STEEL FOR ONE TYPE 4 GRATE											
GRATE DIM. OUT TO OUT		SIDE-RAIL 3 1/2"X 3"X 1/2"			BEARING PLATE PL 3" X 1/2"			STRINGER PLATE PL 1" X 3/8"			TOTAL WEIGHT
L	W	NO.	LGTH.	WT.	NO.	LGTH.	WT.	NO.	LGTH.	WT.	LBS.
3'-11 1/2"	5'-5"	2	3'-11 1/2"	81	11	5'-4"	299	27	3'-11 1/2"	137	517 *

* FOR CONTRACTOR'S INFORMATION ONLY

GRATE TYPE 4

TYPE 3 & TYPE 4 GRATE

SAN ANTONIO DISTRICT STANDARD

GENERAL NOTES :

THE TY 3 GRATES ARE REQUIRED ON TY Y-1 THROUGH TY Y-5 INLETS.

THE TY 4 GRATES ARE REQUIRED ON TY W-1 THROUGH TY W-5 INLETS.

THE GRATE(S) ARE SUBSIDARY TO THE INLET.

© 1998 Texas Department of Transportation

FED. RD. DIV. NO.	PROJECT NO.		SHEET NO.
6			241
STATE	STATE DISTRICT	COUNTY	
TEXAS	SA	BEXAR	
CONT.	SECT.	JOB	HIGHWAY NO.
2452	01	043	SH 151

10/95

p:\4760\0-0129\cad\standard\15\std_drn04.dgn 2/19/2011 1:34:54 PM mwmldkiff

STRUCTURE DESIGN /BRIDGE/STDS/DGRATE3T4.DGN

p:\4750\0129\cad\~~\standard\15std_drn18.dgn
2/19/2011
1:34:55 PM
mwmlckfrt

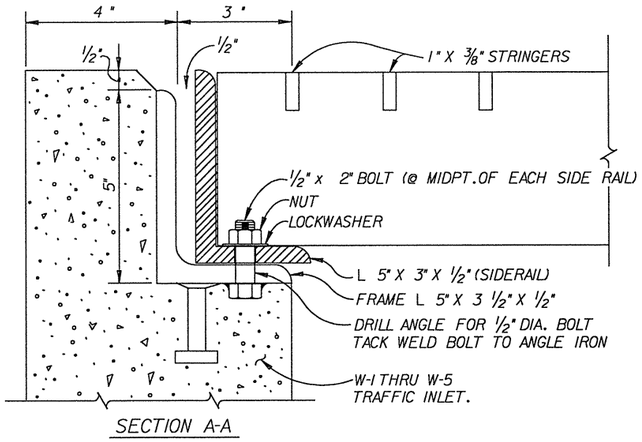

SECTION A-A

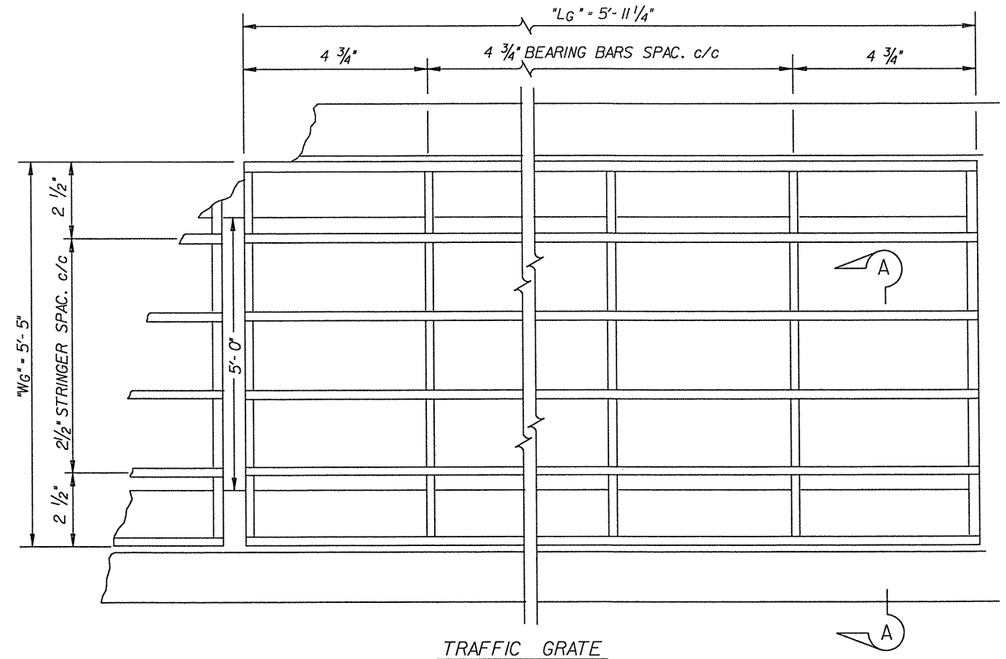

TRAFFIC GRATE
PLAN VIEW

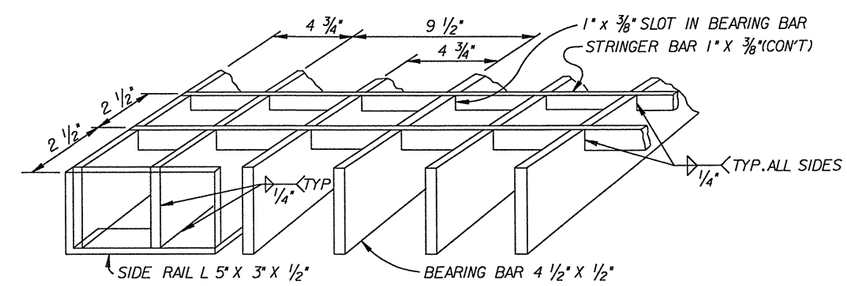

DETAIL OF GRATE CORE

STRUCTURAL STEEL FOR ONE TY. 6 TRAFFIC GRATE

GRATE DIMENSION OUT TO OUT		SIDERAIL			BEAR BAR			STRINGER			TOTAL WEIGHT
		L 5" X 3" X 1/2" (13.6 LBS. PER. FT.)			PL 4 1/2" X 1/2"			BAR 1" X 3/8"			
LG	WG	NO.	LGTH.	WGTH.	NO.	LGTH.	WGTH.	NO.	LGTH.	WGTH.	LBS.
5'-11 1/4"	5'-5"	2	5'-11 1/4"	162	16	5'-4"	653	27	5'-11 1/4"	205	1020

GENERAL NOTES:

1 QUANTITIES SHOWN ARE FOR CONTRACTOR'S INFORMATION ONLY.

2 WHEN THE GRATE IS PART OF A "COMPLETE" INLET, IT WILL BE SUBSIDARY TO THE INLET.

3 WHEN THE GRATE IS NOT PART OF A "COMPLETE" INLET, IT WILL BE PAID FOR BY THE "EACH".

NOTE: THIS GRATE IS USED WITH TYPE W-1 THRU W-5 TRAFFIC INLETS.

TYPE 6 TRAFFIC GRATE

© 1998 Texas Department of Transportation

SAN ANTONIO DISTRICT STANDARD

10/95

FED. RD. DIV. NO.	PROJECT NO.		SHEET NO.
6			242
STATE	STATE DISTRICT	COUNTY	
TEXAS	SAT	BEXAR	
CONT.	SECT.	JOB	HIGHWAY NO.
2452	01	043	SH 151

STRUCTURE DESIGN
/BRIDGE/STDS/DTGTRAFGR.DGN

pw:\\TXDOT-01293cadv\...\standard\DSlsfd_dr\05.dgn
2/19/2011
13:45:55 PM
mwmlakitt

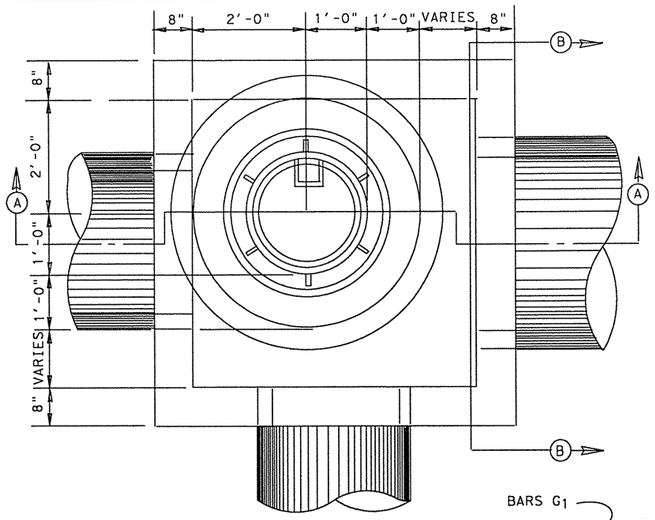

PLAN

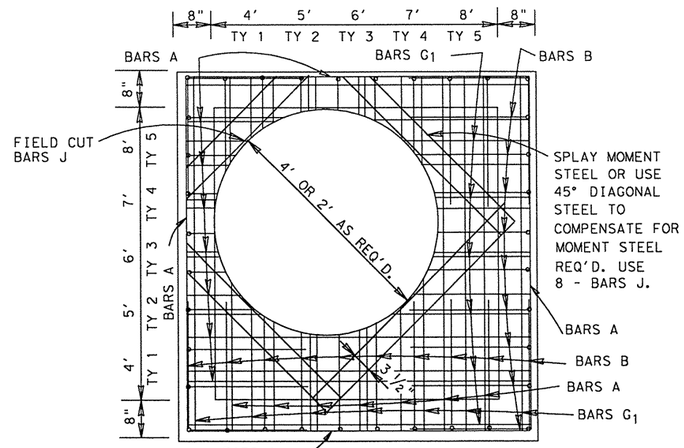

PLAN
JUNCTION BOX TOP SLAB

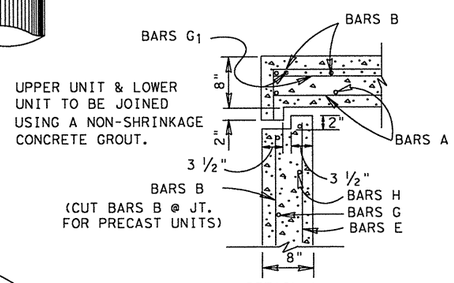

DETAIL A
PRECAST UPPER & LOWER UNIT

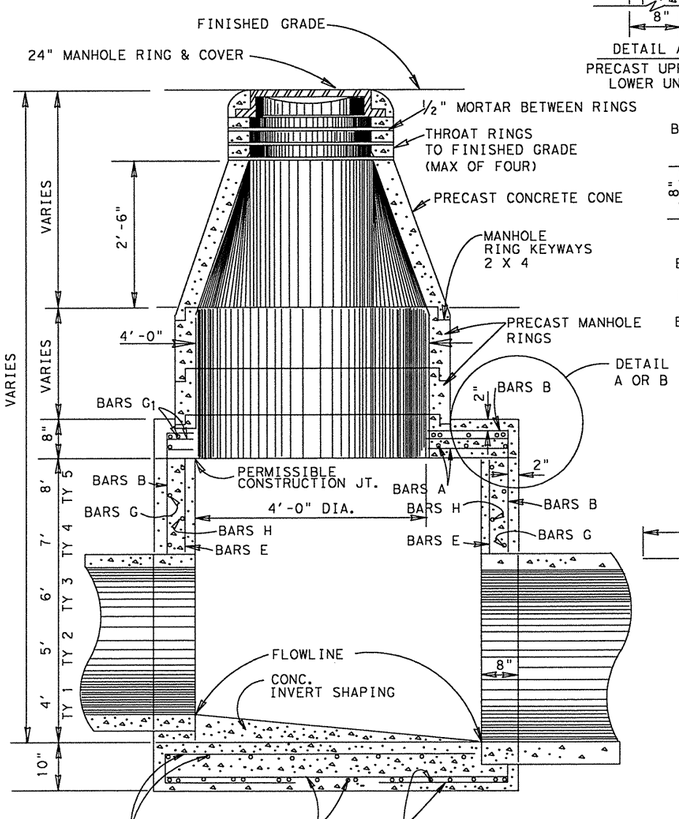

SECTION A-A

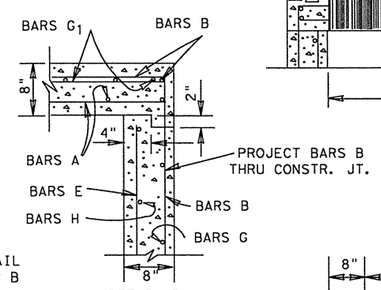

DETAIL B
CAST-IN-PLACE UPPER UNIT W/PRECAST LOWER UNIT

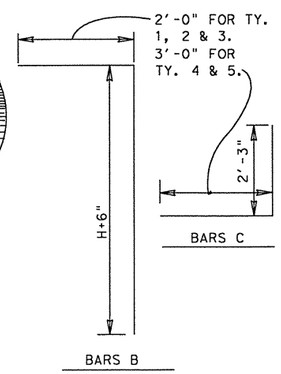

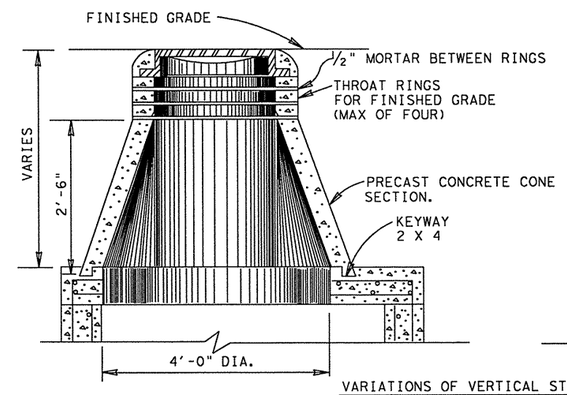

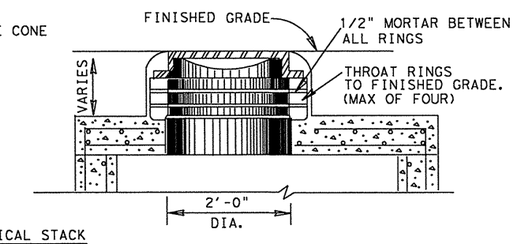

VARIATIONS OF VERTICAL STACK

VERTICAL STACK DESIGN SHALL BE GOVERNED BY THE DEPTH FROM THE TOP OF THE LOWER UNIT TO FINISHED GRADE.

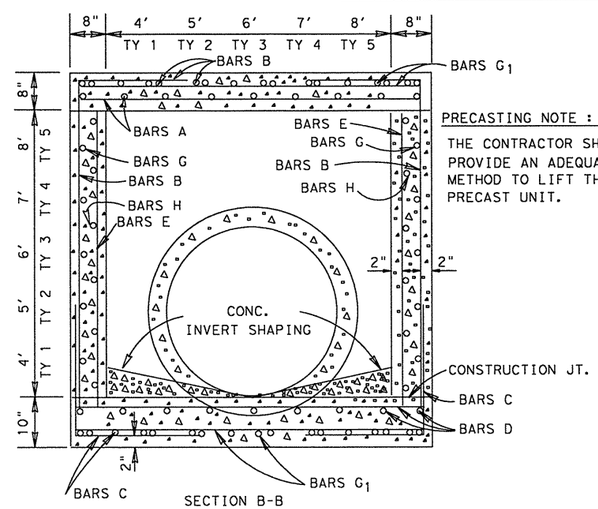

SECTION B-B

PRECASTING NOTE :

THE CONTRACTOR SHALL PROVIDE AN ADEQUATE METHOD TO LIFT THE PRECAST UNIT.

4' X 4' X 4' (TY 1)

BAR	NO.	SIZE	SPAC.	LEN.	WGT.
A	16	4	9"	5'-1"	54
B	32	5	8"	6'-6"	217
C	32	5	8"	4'-3"	142
D	16	4	9"	5'-1"	54
E	20	3	12"	3'-11"	29
G	20	4	12"	5'-0"	67
G_1	24	4	12"	5'-0"	80
H	20	3	12"	4'-5"	33
J	8	6	3 1/2"	3'-9"	45
REINF. STEEL				LBS.	721 *
‡ CL. A CONC.				C.Y.	3.35 *

6' X 6' X 6' (TY 3)

BAR	NO.	SIZE	SPAC.	LEN.	WGT.
A	20	4	9"	7'-1"	95
B	44	5	8"	8'-6"	390
C	44	5	8"	4'-3"	195
D	20	4	9"	7'-1"	95
E	28	3	12"	5'-11"	62
G	28	4	12"	7'-0"	131
G_1	32	4	12"	7'-0"	150
H	28	3	12"	6'-5"	68
J	8	6	3 1/2"	3'-9"	45
REINF. STEEL				LBS.	1231 *
‡ CL. A CONC.				C.Y.	6.87 *

5' X 5' X 5' (TY 2)

BAR	NO.	SIZE	SPAC.	LEN.	WGT.
A	18	4	9"	6'-1"	73
B	40	5	8"	7'-6"	313
C	40	5	8"	4'-3"	177
D	18	4	9"	6'-1"	73
E	24	3	12"	4'-11"	44
G	24	4	12"	6'-0"	96
G_1	28	4	12"	6'-0"	112
H	24	3	12"	5'-5"	49
J	8	6	3 1/2"	3'-9"	45
REINF. STEEL				LBS.	982 *
‡ CL. A CONC.				C.Y.	4.96 *

7' X 7' X 7' (TY 4)

BAR	NO.	SIZE	SPAC.	LEN.	WGT.
A	24	4	9"	8'-1"	130
B	52	5	8"	10'-6"	569
C	52	5	8"	5'-3"	285
D	24	4	9"	8'-1"	130
E	32	4	12"	6'-11"	148
G	32	4	12"	8'-0"	171
G_1	36	4	12"	8'-0"	192
H	32	3	12"	7'-5"	89
J	8	6	3 1/2"	3'-9"	45
REINF. STEEL				LBS.	1759 *
‡ CL. A CONC.				C.Y.	9.09 *

8' X 8' X 8' (TY 5)

BAR	NO.	SIZE	SPAC.	LEN.	WGT.
A	26	5	9"	9'-1"	246
B	56	5	8"	11'-6"	672
C	56	5	8"	5'-3"	307
D	26	5	9"	9'-1"	246
E	36	4	12"	7'-11"	190
G	36	4	12"	9'-0"	216
G_1	40	4	12"	9'-0"	240
H	36	4	12"	8'-5"	202
J	8	6	3 1/2"	3'-9"	45
REINF. STEEL				LBS.	2364 *
‡ CL. A CONC.				C.Y.	11.62 *

* QUANTITIES ARE FOR CONTRACTOR'S INFORMATION ONLY.
‡ CONCRETE QUANTITIES ALLOW FOR MANHOLE ACCESS BUT HAVE NOT BEEN DECREASED FOR DRAINAGE PIPES BECAUSE THE NUMBER AND SIZE VARY.

GENERAL NOTES:

DIMENSIONS FOR REINFORCING STEEL ARE TO CENTER OF BARS.
ALL BARS INTERCEPTING MANHOLE AND PIPE OPENINGS SHALL BE FIELD CUT OR BEND.
WHEN THE MANHOLE IS CLOSE TO EXISTING UTILITIES, IT SHALL BE THE CONTRACTOR'S RESPONSIBILITY TO PROTECT AND MAINTAIN THESE LINES.

MANHOLE RING AND COVER SHALL BE DESIGNED FOR HEAVY DUTY ROADWAY SERVICE. THE COVER SHALL BE SECURED BY BOLTS OR A LOCKING DEVICE. FOR COVER NOT ON SAN ANTONIO CITY STREET, DELETE "CITY OF SAN ANTONIO & SCALES OF JUSTICE". THE LOAD BEARING SURFACE SHALL BE MACHINE GROUND.

THE NUMBER, SIZE AND LOCATION OF PIPES WILL VARY; SEE THE CULVERT SECTIONS.

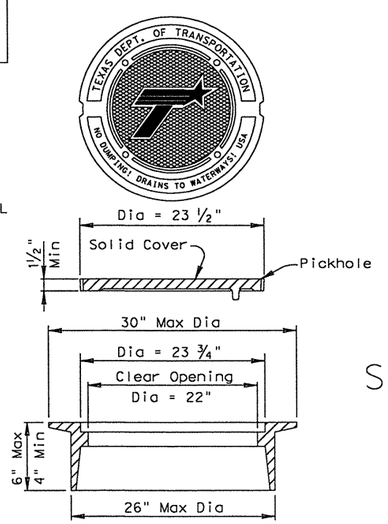

RING AND COVER DETAILS
Approximate Weight = 255 lb

MANHOLE
TYPE 1 THRU 5
SAN ANTONIO DISTRICT STANDARD

© 1998 Texas Department of Transportation

FED. RD. DIV. NO.	PROJECT NO.		SHEET NO.
6			243
STATE	STATE DISTRICT	COUNTY	
TEXAS	SA	BEXAR	
CONT.	SECT.	JOB	HIGHWAY NO.
2452	01	043	SH 151

10/95

STRUCTURE DESIGN
/BRIDGE/STDS/DMHOLE1T5.DGN

pw:\\FTW0\Q129\cad\...\standard\151std_drnl.dgn
2/19/2011
1:34:55 PM
mwmlakit1

CAP FOR A CURB INLET

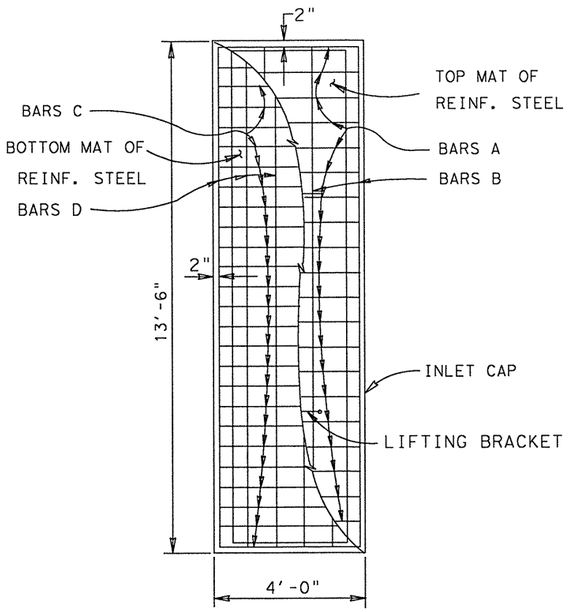

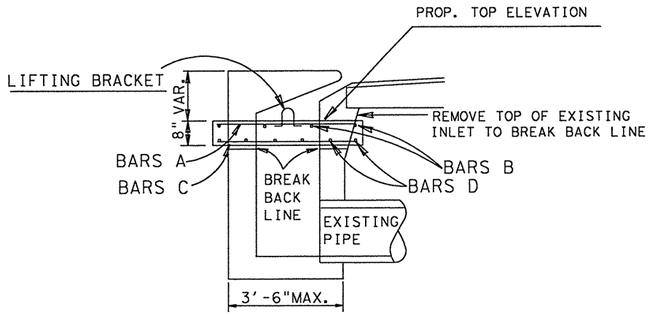

REINFORCING STEEL					
BAR	NO.	SIZE	SPAC.	LEN.	WGT.
A	24	4	7"	3'-8"	59
B	4	4	1'-2"	13'-2"	35
C	19	6	9"	3'-8"	105
D	9	4	6"	13'-2"	80
REINFORCING STEEL =				279 LBS.	✳
CL "A" CONCRETE =				1.33 C.Y.	✳

6'-4" SQUARE CAP

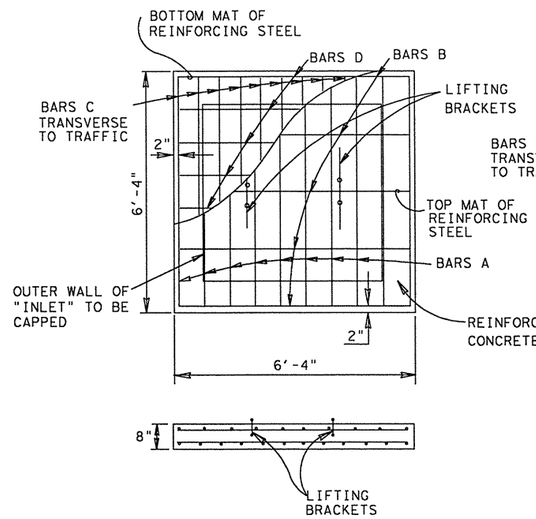

REINFORCING STEEL					6'-4" CAP
BAR	NO.	SIZE	SPAC.	LEN.	WGT.
A	10	4	8"	6'-0"	40
B	5	4	18"	6'-0"	20
C	12	6	6"	6'-0"	108
D	8	4	10"	6'-0"	32
REINFORCING STEEL =				200 LBS.	✳
CL "A" CONCRETE =				0.99 C.Y.	✳

✳ FOR CONTRACTORS INFORMATION ONLY

9'-2" SQUARE CAP

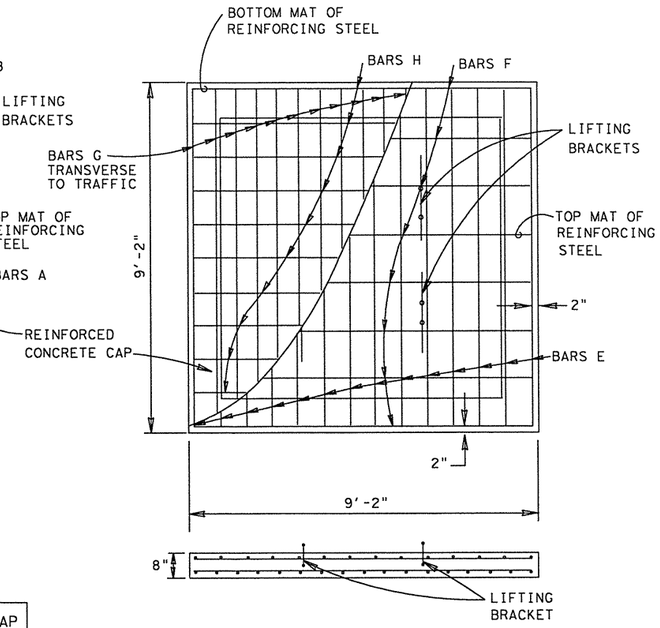

REINFORCING STEEL					9'-2" CAP
BAR	NO.	SIZE	SPAC.	LEN.	WGT.
E	14	4	7"	8'-10"	83
F	8	4	7"	8'-10"	47
G	17	6	7"	8'-10"	226
H	12	4	10"	8'-10"	71
REINFORCING STEEL =				427 LBS.	✳
CL "A" CONCRETE =				2.08 C.Y.	✳

✳ FOR CONTRACTORS INFORMATION ONLY

CAP SIZE	LOCATION	AT STR. NO.	TOP OF CAP ELEV.

NOTES:

1) REMOVAL OF THE TOP PORTION OF THE INLET AND/OR MANHOLE WHERE REQUIRED PLUS FURNISHING & INSTALLING THE CONC. CAP WILL BE PAID FOR UNDER ITEM 479 "ADJUSTING MANHOLES AND INLETS"

2) ALL CONCRETE SHALL BE CLASS "A" AND SHALL MEET THE REQUIREMENTS OF ITEMS 420 & 421

3) ALL REINFORCING STEEL SHALL BE GRADE 60 AND SHALL MEET THE REQUIREMENTS OF ITEM 440

4) THE BREAK-BACK LINE SHALL BE CUT SMOOTH TO ENSURE UNIFORM BEARING OF THE CAP ON THE INLET/M.H. WALLS.

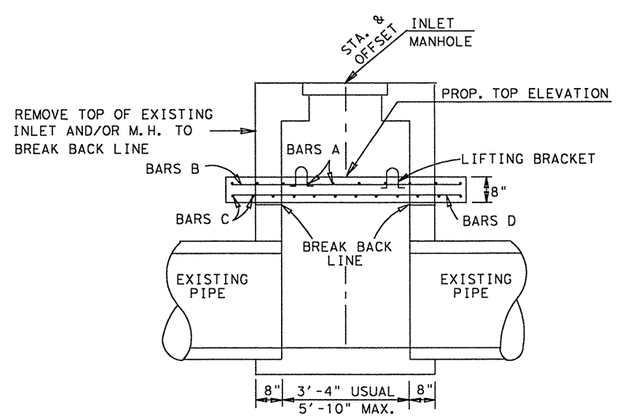

CAP FOR A DROP INLET OR MANHOLE

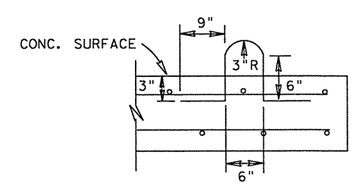

LIFTING BRACKET
NO. 4 REBAR

PLACEMENT OF LIFTING BRACKETS

CURB INLET CAP: 2 CENTERED 4FT +/- FROM EACH END
6'-4" CAP: 2 CENTERED 2FT +/- FROM EACH END
9'-2" CAP: 4 PLACED 3FT +/- IN FROM EACH END

SAN ANTONIO DISTRICT STANDARD

CAPPING INLETS & MANHOLES

© 1998 Texas Department of Transportation

FED. RD. DIV. NO.	PROJECT NO.		SHEET NO.
6			244
STATE	STATE DISTRICT	COUNTY	
TEXAS	SA	BEXAR	
CONT.	SECT.	JOB	HIGHWAY NO.
2452	01	043	SH 151

10/95

STRUCTURE DESIGN
/BRIDGE/STDS/CAPINLET.DGN

pw:\\PW76DUO-01\Z9\cad\~standard\US\std_dtn\12_dgn 2/19/2011 13:45:56 PM mwmlckt1

DISCLAIMER:
The use of this standard is governed by the "Texas Engineering Practice Act". No warranty of any kind is made by TxDOT for any purpose whatsoever. TxDOT assumes no responsibility for the conversion of this standard to other formats or for incorrect results or damages resulting from its use.

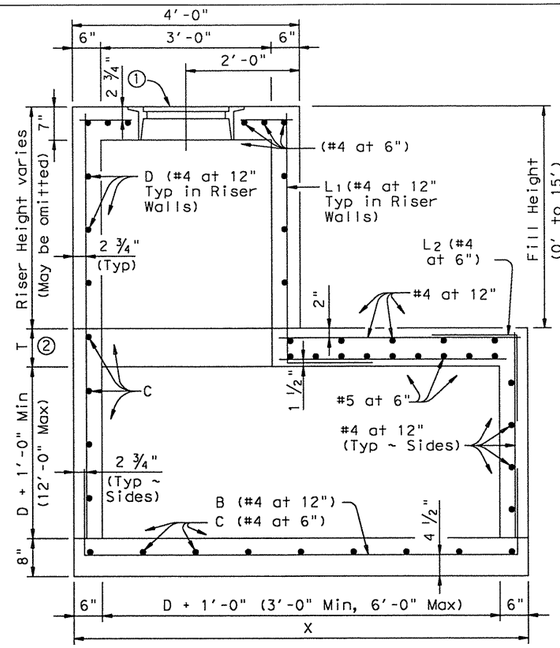

ELEVATION

D = Maximum inside diameter of any Pipe entering the side shown or the opposite side

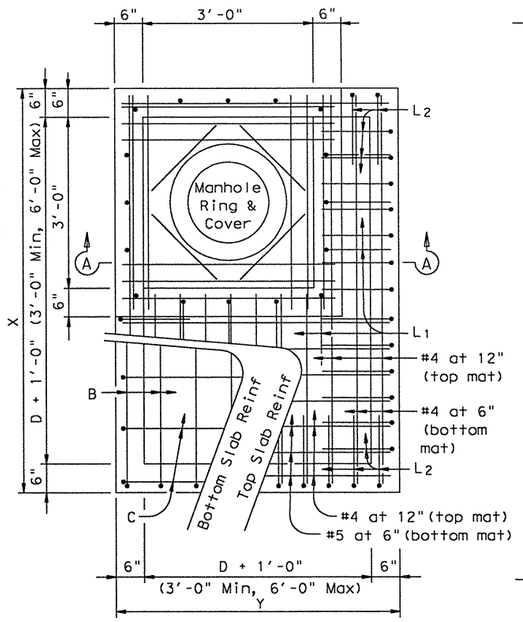

PLAN

MANHOLE WITH CAST-IN-PLACE RISER

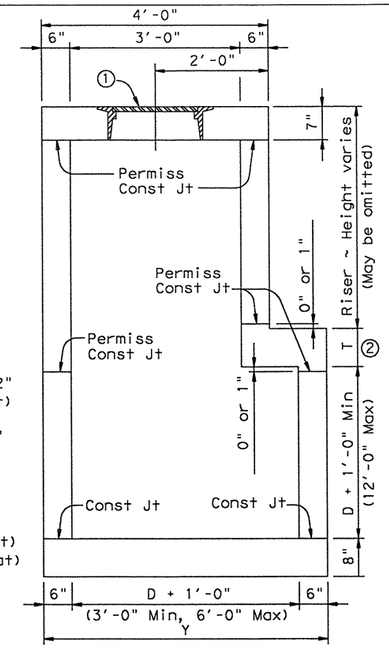

SECTION A-A

② For Fill Height less than or equal to 10', T=8".
For Fill Height between 10' and 15', T=10".

① See Ring and Cover Details

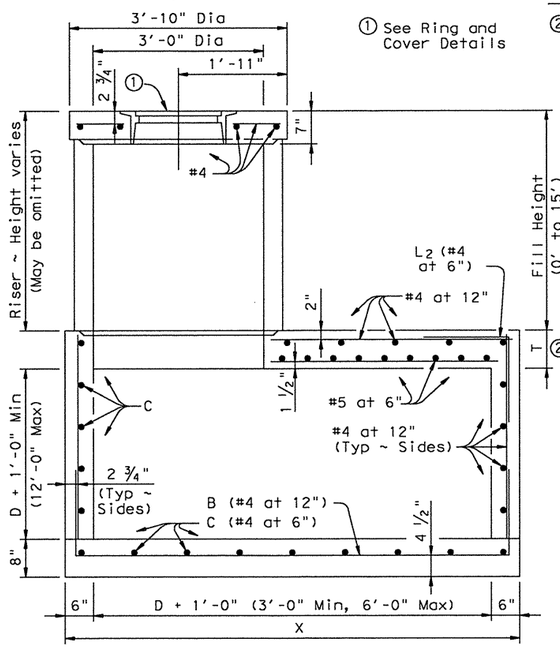

ELEVATION

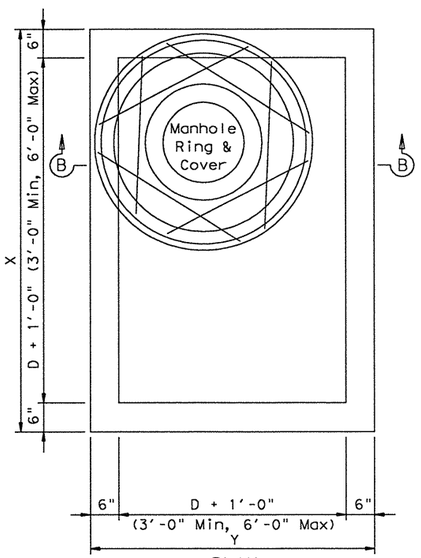

PLAN

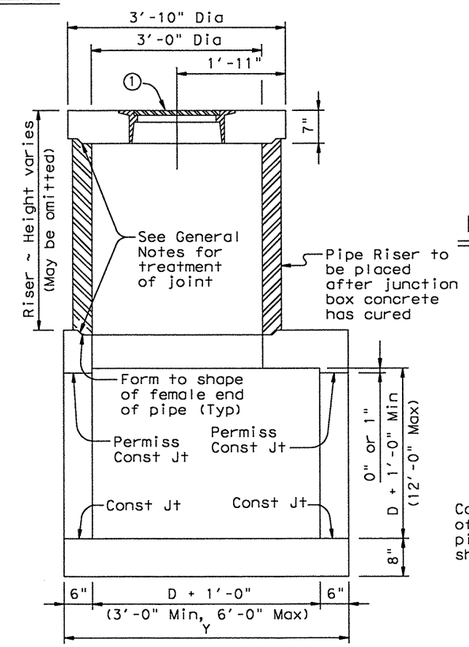

SECTION B-B

OPTIONAL MANHOLE WITH CONCRETE PIPE RISER

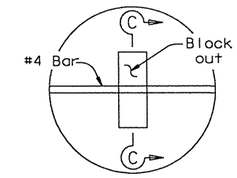

DETAIL "A"

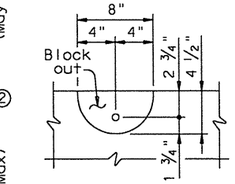

SECTION C-C

LIFTING CATCH

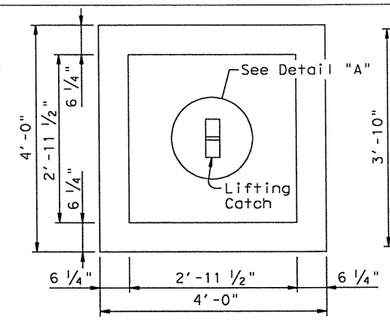

PLAN

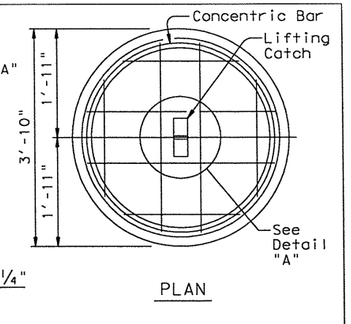

PLAN

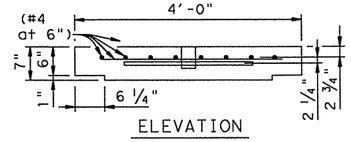

ELEVATION

CAST-IN-PLACE RISER COVER

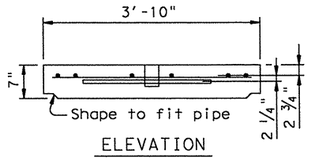

ELEVATION

CONCRETE PIPE RISER COVER

OPTIONAL PRECAST CONCRETE LIFT-OFF COVERS

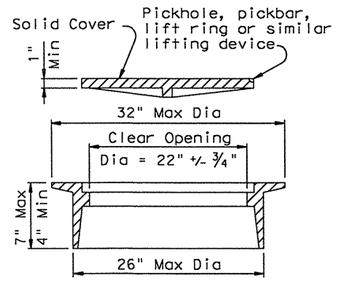

RING AND COVER DETAILS

Approximate Weight = 245 lb

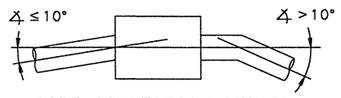

PIPE CONNECTION DETAIL

Connecting pipes should enter within 10° of normal to inlet wall. If necessary, pipe elbow or curved approach alignment should be used to stay within this limit.

GENERAL NOTES:

Unless otherwise shown in the plans, payment will be made for each manhole of the Type M.

When approved, precast inlets with equivalent structural capacity may be furnished. Sealed engineering calculations and drawings shall be submitted for approval prior to construction.

Shop drawings will not be required.

In areas of conflict between reinforcing steel, blockouts, pipes, anchor bolts or other reinforcing steel, the reinforcement shall be bent or adjusted to clear as directed by the Engineer.

The riser may be constructed of reinforced concrete as shown or of Reinforced Concrete Pipe, Class III, in accordance with ASTM Designation C-76. If pipe is used, joints shall conform to the Item "Reinforced Concrete Pipe Culverts". Precast Concrete Lift-Off Cover may be substituted for Ring and Cover.

The riser, either cast-in-place or concrete pipe, may be located in any corner.

All reinforcing steel shall be #4 unless otherwise noted.

Pipes may enter any or all walls. The maximum size of pipe that can be accommodated is 60". More than one pipe may enter a side, subject to the maximum box dimension shown. The clear distance between adjacent pipes should be 9" minimum.

Ring and cover shall conform to the requirements of AASHTO M306, "Standard Specification for Drainage Structure Castings". Materials shall conform to ASTM A48, Class 35B for gray iron castings or ASTM A536, Grade 65-45-12 for ductile iron castings. Aluminum alloy castings shall not be permitted.

All concrete shall be Class "A" (f'c = 3000 psi).

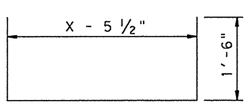

BARS B

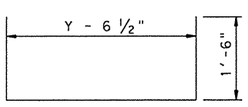

BARS C

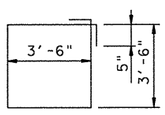

BARS D

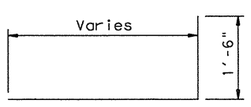

BARS L1

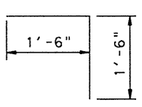

BARS L2

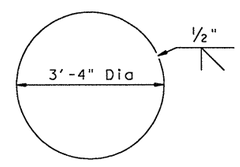

CONCENTRIC BAR

Texas Department of Transportation
Bridge Division

MANHOLE TYPE M
(JUNCTION BOX WITH ACCESS)
15' MAX FILL

MH-M

FILE: mh-mstde.dgn	DN: TxDOT	CK: TER	DW: MCB	CK: TER/GAF
© TxDOT February 2010	DISTRICT	FEDERAL AID PROJECT		SHEET
REVISIONS	SA			245
	COUNTY	CONTROL	SECT	JOB	HIGHWAY
	BEXAR	2452	01	043	SH 151

ACC:

LEVELS DISPLAYED

TABLE OF DIMENSIONS & REINFORCING STEEL
(Wings for One Structure End)

Dimensions					Variable Reinforcing				Estimated Quantities per ft of wing length (2~Wings) (3)	
					Bars J1		Bars J2			
Maximum Wingwall Height Hw	W	X	Y	Z	Size	Spa	Size	Spa	Reinf (Lb/Ft)	Conc (CY/Ft)
2'-6"	2'- 5"	1'- 0"	9"	7"	#4	1'-0"	#4	1'-0"	33.73	0.248
3'-0"	2'- 5"	1'- 0"	9"	7"	#4	1'-0"	#4	1'-0"	37.07	0.261
3'-6"	2'- 5"	1'- 0"	9"	7"	#4	1'-0"	#4	1'-0"	37.74	0.273
4'-0"	2'- 5"	1'- 0"	9"	7"	#4	1'-0"	#4	1'-0"	38.41	0.285
4'-6"	3'- 2"	1'- 6"	1'- 0"	7"	#4	1'-0"	#4	1'-0"	41.75	0.330
5'-0"	3'- 2"	1'- 6"	1'- 0"	7"	#4	1'-0"	#4	1'-0"	45.09	0.343
5'-6"	3'- 2"	1'- 6"	1'- 0"	7"	#4	1'-0"	#4	1'-0"	45.75	0.355
6'-0"	3'- 2"	1'- 6"	1'- 0"	7"	#4	1'-0"	#4	1'-0"	46.42	0.367
7'-0"	3'- 8"	1'- 9"	1'- 3"	7"	#4	1'-0"	#4	1'-0"	52.77	0.414
8'-0"	4'- 2"	2'- 0"	1'- 6"	8"	#5	1'-0"	#4	1'-0"	60.19	0.486
9'-0"	4'- 8"	2'- 3"	1'- 9"	8"	#4	6"	#4	6"	81.49	0.535
10'-0"	5'- 2"	2'- 6"	2'- 0"	8"	#5	6"	#4	6"	97.25	0.584
11'-0"	5'- 8"	2'- 9"	2'- 3"	8"	#6	6"	#5	6"	133.65	0.634
12'-0"	6'- 2"	3'- 0"	2'- 6"	9"	#7	6"	#5	6"	162.29	0.721
13'-0"	6'- 8"	3'- 3"	2'- 9"	11"	#7	6"	#5	6"	178.80	0.856
14'-0"	7'- 2"	3'- 6"	3'- 0"	1'- 0"	#8	6"	#5	6"	216.78	0.959
15'-0"	7'- 8"	4'- 0"	3'- 0"	1'- 1"	#9	6"	#6	6"	283.06	1.068
16'-0"	8'- 2"	4'- 6"	3'- 0"	1'- 3"	#9	6"	#6	6"	297.02	1.234

TABLE OF WINGWALL REINFORCING (2~Wings)

Bar	Size	No.	Spa
DL	#5	~	1'-0"
DS	#5	~	1'-0"
E	#4	~	1'-0"
F	#4	~	1'-0"
G	#6	4	~
M	#4	4	~
P	#4	~	1'-0"
RS	#5	3	~
RL	#5	3	~
V	#4	~	1'-0"

TABLE OF ESTIMATED CULVERT TOEWALL QUANTITIES

Bar	Size	No.	Spa
L	#4	~	1'-6"
Q	#4	1	~
Reinf (Lb/Ft)			2.45
Conc (CY/Ft)			0.037

WING DIMENSION CALCULATIONS:

Formulas: (All values are in Feet)

Hw = H + T + C - 0.250'

A = (Hw - 0.333') (SL)

B = (A) [Tangent (θ + 15°)]

Lw = (A) ÷ [Cosine (θ + 15°)]

For Cast-in-place culverts:

Ltw = [(N) (S) + (N + 1) (U)] ÷ (Cosine θ)

For Precast culverts:

Ltw = [(N) (2U + S) + (N - 1) (0.500')] ÷ (Cosine θ)

Total Wingwall Area (Two Wings ~ S.F.) =
(0.5) (Hw + 0.333') (Lw + A)

Hw = Height of Wingwall
SL:1 = Side Slope Ratio (Horizontal:1 Vertical)
A = Length of Short Wingwall
Lw = Length of Long Wingwall
Ltw = Culvert Toewall Length
N = Number of Culvert Spans
θ = Culvert Skew

See applicable box culvert standard for H, S, T, and U values.

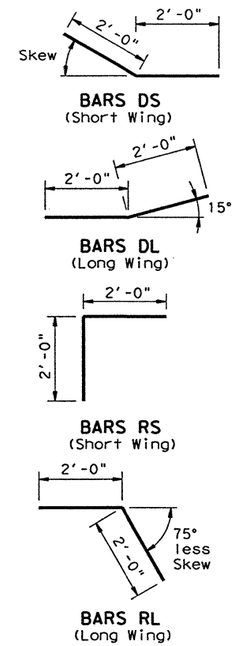

1. Extend Bars P 3'-0" minimum into bottom slab of Box Culvert.
2. Adjust to fit as necessary to maintain 1 ¼" clear cover and 4" minimum between bars.
3. Quantities shown are based on an average wing height for two wings (one structure end). To determine total quantities for two wings multiply the tabulated values by 0.5 x (A*Lw).
4. Recommended values of Slope are: 2:1, 3:1, 4:1, & 6:1.
5. When shown elsewhere on the plans, a 5" deep concrete riprap shall be constructed. Payment for riprap shall be as required by Item 432, "Riprap". Unless otherwise shown on the plans or directed by the Engineer, the riprap shall have a 6" wide by 1'-6" deep reinforced concrete toewall along all edges adjacent to natural ground; the toewall shall be reinforced by extending typical riprap reinforcing into the toewall; construction joints or grooved joints, oriented in the direction of flow, shall extend across the full distance of the riprap, at intervals of approximately 20'. When such riprap is provided, the culvert toewall shown in SECTION B-B will not be required.
6. At Contractor's option, Culvert Toewall may be ended flush with Wingwall Toewall. Adjust reinforcing from that shown as necessary.
7. Applicable values of of Skew are: 15°, 30°, and 45°.
8. Typical wingwall angle for all skews.
9. 0" min to 5'-0" max. Estimated curb heights are shown elsewhere in the plans. For structures with pedestrian rail, bicycle rail or curbs taller than 1'-0", refer to ECD standard. For structures with T6 bridge rail, refer to T6-CM standard. For structures with traffic rail, other than T6, refer to RAC standard.
10. For vehicle safety, curb heights and wall heights shall be reduced, if necessary, to provide a maximum 3" projection above finished grade. No changes will be made in quantities and no additional compensation will be allowed for this work.

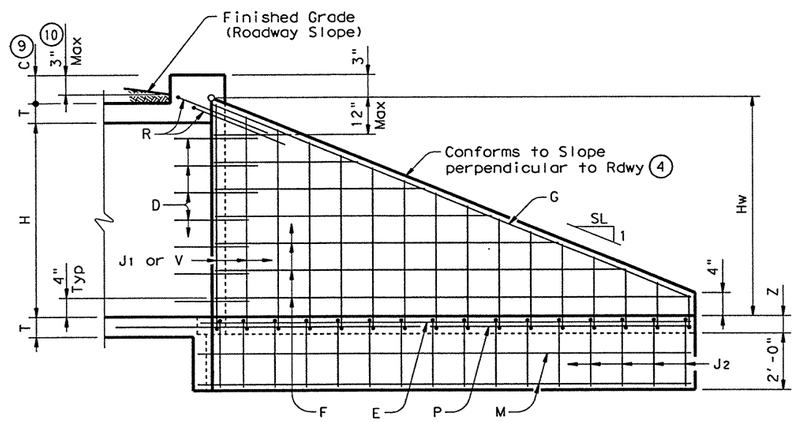

INSIDE ELEVATION

(Showing reinforcing. Culvert and Culvert Toewall reinforcing not shown for clarity.)

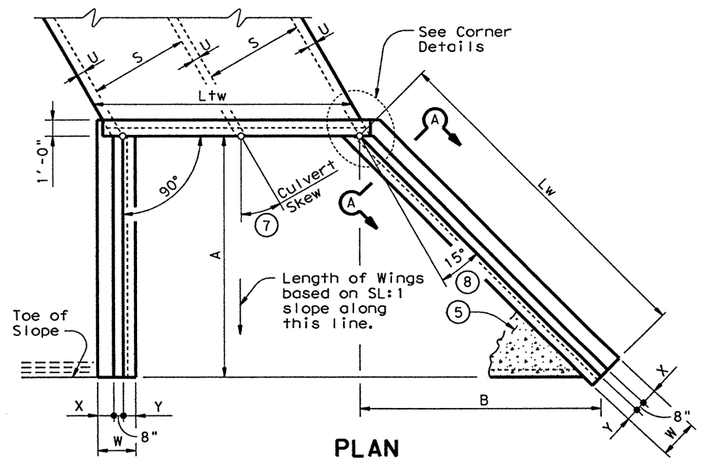

PLAN

(Showing dimensions and 30° Skew.)

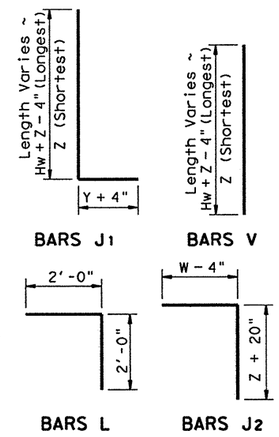

GENERAL NOTES:

Designed according to AASHTO LRFD Specifications.

All reinforcing steel shall be Grade 60.

Synthetic fibers listed on the "Fibers for Concrete" Material Producer List (MPL) may be used in lieu of steel reinforcing in riprap concrete unless noted otherwise.

All concrete shall be Class "C" and shall have a minimum compressive strength of 3600 psi.

All reinforcing bars shall be adjusted to provide a minimum of 1 ¼" clear cover.

When structure is founded on solid rock, depth of toewalls for culverts and wingwalls may be reduced or eliminated as directed by the Engineer.

See BCS sheet for additional dimensions and information.

The quantities for concrete and reinforcing steel resulting from the formulas given on this sheet are for Contractor's information only.

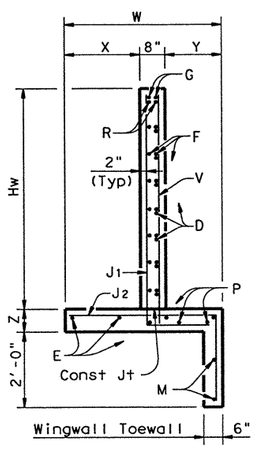

SECTION A-A

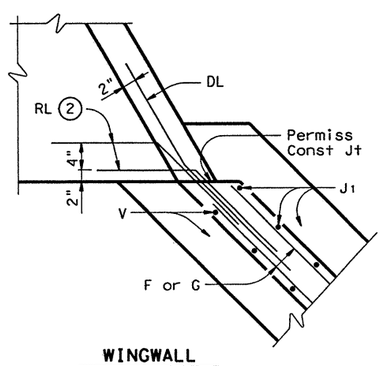

WINGWALL

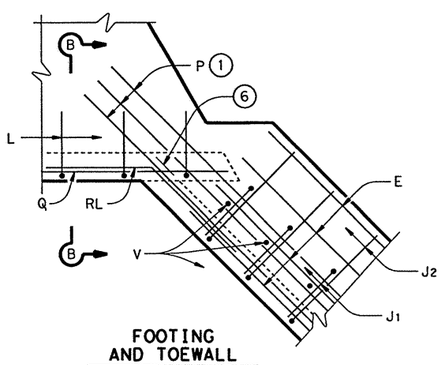

FOOTING AND TOEWALL

CORNER DETAILS

(Culvert and Culvert Toewall reinforcing not shown for clarity.)

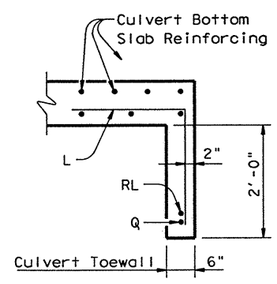

SECTION B-B 5

Texas Department of Transportation
Bridge Division

CONCRETE WINGWALLS WITH FLARED WINGS FOR SKEWED BOX CULVERTS

FW-S

FILE: fw-sstde.dgn	DN: GAF	CK: CAT	DW: TxDOT	CK: GAF	
©TxDOT February 2010	DISTRICT	FEDERAL AID PROJECT			SHEET
REVISIONS	SAT	NH 2007(705)			246
11-10: Add note for synthetic fibers.	COUNTY		CONTROL	SECT	JOB	HIGHWAY
	BEXAR		2452	01	043	LP1604

DISCLAIMER:
The use of this standard is governed by the "Texas Engineering Practice Act". No warranty of any kind is made by TxDOT for any purpose whatsoever. TxDOT assumes no responsibility for the conversion of this standard to other formats or for incorrect results or damages resulting from its use.

COMMENTS:

LEVELS DISPLAYED

p:\4760\0129\cad\ ~\standard\15std_dtrn0.dgn 2/19/2011 1:34:57 PM mwmldkfft

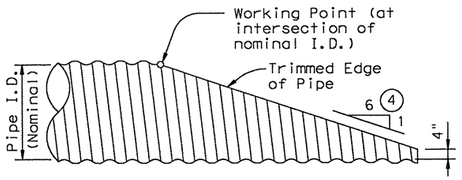

NOTE: All Cross Pipes, calculations, and dimensions are based on the pipe culverts mitered as shown in this detail. Alternate styles of mitered ends will require that appropriate adjustments be made to the values presented on this standard.

SIDE ELEVATION OF TYPICAL PIPE CULVERT MITER

(Showing Corrugated Metal Pipe Culvert.)
(Details at Concrete Pipe Culvert are similar.)

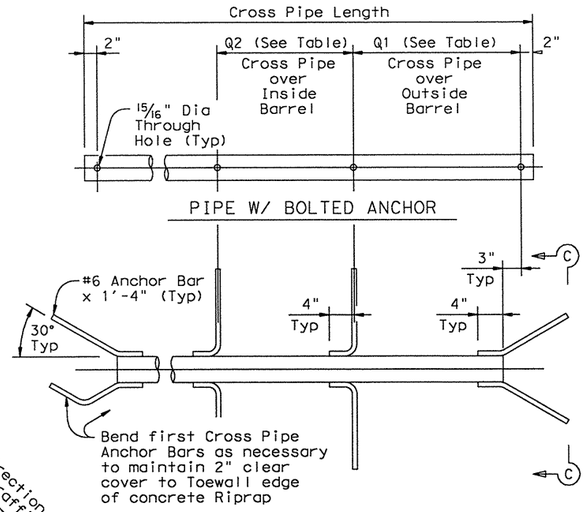

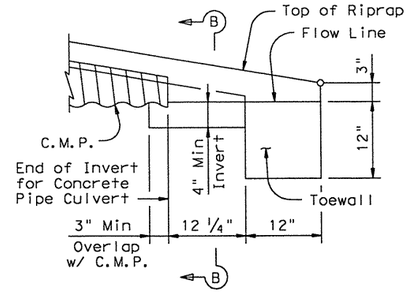

DETAIL "A"

(Showing Invert with Corrugated Metal Pipe Culvert. Concrete Pipe Culvert details are similar. Cross Pipes not shown for clarity.)

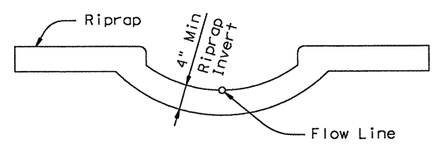

SECTION B-B

(Cross Pipes not shown for clarity.)

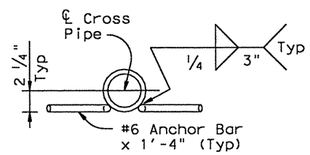

SECTION C-C

CROSS PIPE DETAILS

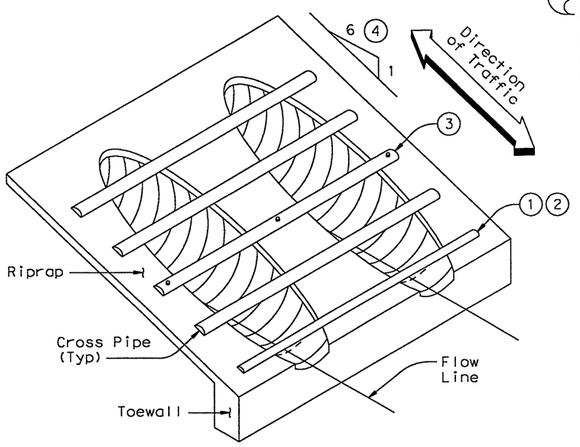

ISOMETRIC VIEW OF TYPICAL INSTALLATION

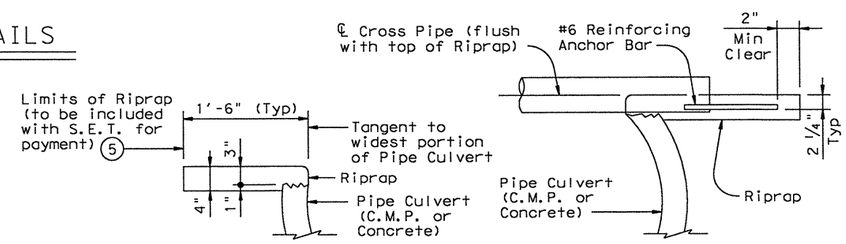

SHOWING TYPICAL PIPE CULVERT & RIPRAP

SHOWING CROSS PIPE WITH ANCHOR BAR

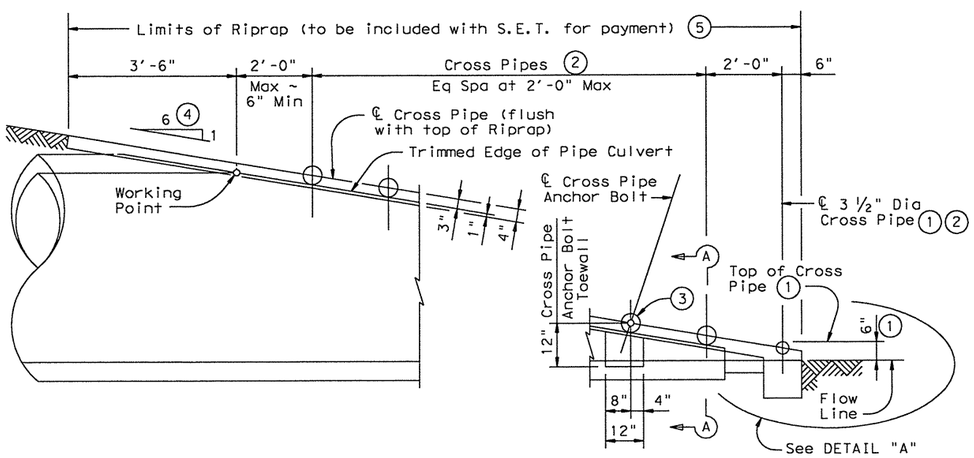

SIDE ELEVATION OF CAST-IN-PLACE CONCRETE

(Showing Concrete Pipe Culvert.)
(Details at Corrugated Metal Pipe Culvert are similar.)

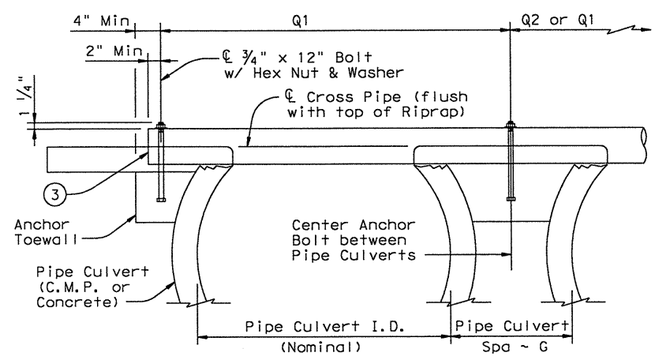

SHOWING CROSS PIPE WITH BOLTED ANCHOR

SECTION A-A

CROSS PIPE LENGTHS, REQUIRED PIPE SIZES, & RIPRAP QUANTITIES 2

Nominal Culvert I.D.	Conc Riprap (CY) 6	Pipe Culvert Spa ~ G	Single Barrel ~ Q1	Multi-Barrel ~ Q1	Q2	Conditions for use of Cross Pipes	Cross Pipe Size
12"	0.6	9"	N/A	2'- 1"	1'- 9"	3 or more Pipe Culverts	3" Std (3.500" O.D.)
15"	0.7	11"	N/A	2'- 5"	2'- 2"		
18"	0.8	1'- 2"	N/A	2'-10"	2'- 8"		
21"	0.9	1'- 4"	N/A	3'- 2"	3'- 1"		
24"	0.9	1'- 7"	N/A	3'- 6"	3'- 7"		
27"	1.0	1'- 8"	N/A	3'-10"	3'-11"	3 or more Pipe Culverts	3 1/2" Std (4.000" O.D.)
30"	1.1	1'-10"	N/A	4'- 2"	4'- 4"	2 or more Pipe Culverts	
33"	1.2	1'-11"	4'- 2"	4'- 5"	4'- 8"	All Pipe Culverts	
36"	1.3	2'- 1"	4'- 5"	4'- 9"	5'- 1"	All Pipe Culverts	4" Std (4.500" O.D.)
42"	1.5	2'- 4"	4'-11"	5'- 5"	5'-10"		
48"	1.7	2'- 7"	5'- 5"	6'- 0"	6'- 7"	All Pipe Culverts	5" Std (5.563" O.D.)
54"	2.0	3'- 0"	5'-11"	6'- 9"	7'- 6"		
60"	2.2	3'- 3"	6'- 5"	7'- 4"	8'- 3"		
66"	2.4	3'- 3"	6'-11"	7'-10"	8'- 9"		
72"	2.7	3'- 4"	7'- 5"	8'- 5"	9'- 4"		

1. The proper installation of the first Cross Pipe is critical for vehicle safety. The top of the first Cross Pipe must be placed at no more than 6" above the flow line.
2. Size of Cross Pipes, except the first bottom pipe, shall be as shown in the PIPE SIZE table. The first bottom pipe shall be 3 1/2" Standard Pipe (4" O.D.).
3. The third Cross Pipe from the bottom of the Culvert shall always be installed using a bolted connection. Care shall be taken to ensure that Riprap concrete does not flow into the Cross Pipe so as to permit disassembly of the bolted connection to allow cleanout access. At the Contractor's option, all other Cross Pipes may also be installed using the bolted connection details.
4. Match Cross Slope as shown elsewhere in the plans. Cross Slope of 6:1 or flatter is required for vehicle safety.
5. Riprap placed beyond the limits shown will be paid as Concrete Riprap in accordance with Item 432, "Riprap".
6. Quantities shown are for one end of one reinforced Concrete Pipe Culvert. For multiple pipe culverts or for Corrugated Metal Pipe Culverts, quantities will need to be adjusted. Riprap quantities are for Contractor's information only.

GENERAL NOTES:

Cross Pipes are designed for a traversing load of 10,000 pounds at yield as recommended by Research Report 280-2F, "Safety Treatment of Roadside Parallel-Drainage Structures", Texas Transportation Institute, March 1981.

Safety End Treatments shown herein are intended for use in those installations where out of control vehicles are likely to traverse the openings approximately perpendicular to the Cross Pipes.

Riprap and all necessary inverts shall be Concrete Riprap conforming to the requirements of Item 432, "Riprap".

Synthetic fibers listed on the "Fibers for Concrete" Material Producer List (MPL) may be used in lieu of steel reinforcing in riprap concrete unless noted otherwise.

Payment for riprap and toewall is included in the Price Bid for each Safety End Treatment.

Cross Pipes shall conform to the requirements of ASTM A53 (Type E or S, Grade B), ASTM A500 (Grade B), or API 5LX52.

Bolts and nuts shall conform to ASTM A307.

All steel components, except concrete reinforcing, shall be galvanized after fabrication. Galvanizing damaged during transport or construction shall be repaired in accordance with the specifications.

DISCLAIMER:
The use of this standard is governed by the "Texas Engineering Practice Act". No warranty of any kind is made by TxDOT for any purpose whatsoever. TxDOT assumes no responsibility for the conversion of this standard to other formats or for incorrect results or damages resulting from its use.

ACC:

LEVELS DISPLAYED

Texas Department of Transportation
Bridge Division

SAFETY END TREATMENT
FOR 12" DIA TO 72" DIA PIPE CULVERTS
TYPE II ~ PARALLEL DRAINAGE

SETP-PD

FILE: setppdse.dgn	DN: GAF	CK: CAT	DW: JRP	CK: GAF
© TxDOT February 2010	DISTRICT	FEDERAL AID PROJECT		SHEET
REVISIONS	SA			247
11-10: Add note for synthetic fibers.	COUNTY	CONTROL	SECT	JOB	HIGHWAY
	BEXAR	2452	01	043	SH 151

p:\4760\0-0129cr ~\n\standard\ISlstd_dn\9.dgn 2/19/2011 1:34:58 PM mwmldelt1

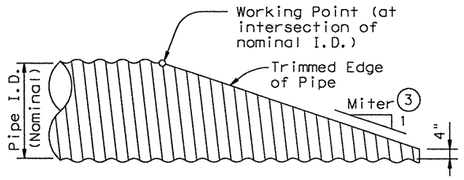

NOTE: All Pipe Runners, calculations, and dimensions are based on the pipe culverts mitered as shown in this detail. Alternate styles of mitered ends will require that appropriate adjustments be made to the values presented on this standard.

SIDE ELEVATION OF TYPICAL PIPE CULVERT MITER

(Showing Corrugated Metal Pipe Culvert. Details of Concrete Pipe Culvert are similar.)

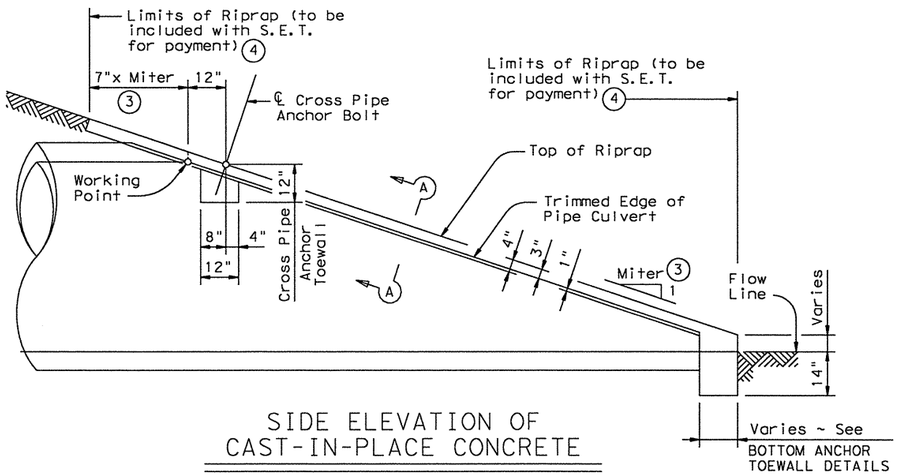

SIDE ELEVATION OF CAST-IN-PLACE CONCRETE

(Showing Concrete Pipe Culvert. Details of Corrugated Metal Pipe Culvert are similar. Pipe Runners not shown for clarity)

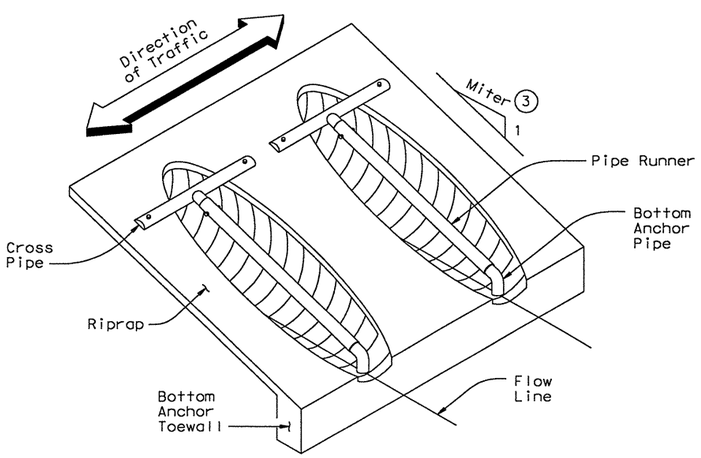

ISOMETRIC VIEW OF TYPICAL INSTALLATION

(Showing installation with no skew.)

CROSS PIPE LENGTHS & PIPE RUNNER LENGTHS (1)(2)

Nominal Culvert I.D.	Pipe Culvert Spa ~ G	Cross Pipe Length	Pipe Runner Length											
			3:1 Side Slope				4:1 Side Slope				6:1 Side Slope			
			0° Skew	15° Skew	30° Skew	45° Skew	0° Skew	15° Skew	30° Skew	45° Skew	0° Skew	15° Skew	30° Skew	45° Skew
24"	1'- 7"	3'- 5"	N/A	N/A	N/A	5'-10"	N/A	N/A	N/A	8'- 1"	N/A	N/A	N/A	12'- 9"
27"	1'- 8"	3'- 8"	N/A	N/A	5'- 5"	6'-11"	N/A	N/A	7'- 7"	9'- 7"	N/A	N/A	11'-11"	14'-11"
30"	1'-10"	3'-11"	N/A	N/A	6'- 4"	8'- 0"	N/A	N/A	8'- 9"	11'- 0"	N/A	N/A	13'- 8"	17'- 0"
33"	1'-11"	4'- 2"	6'- 2"	6'- 5"	7'- 3"	9'- 1"	8'- 6"	8'-10"	10'- 0"	12'- 5"	13'- 3"	13'- 9"	15'- 5"	19'- 2"
36"	2'- 1"	4'- 5"	6'-11"	7'- 3"	8'- 2"	10'- 2"	9'- 6"	9'-11"	11'- 2"	13'-10"	14'- 9"	15'- 3"	17'- 2"	21'- 3"
42"	2'- 4"	4'-11"	8'- 6"	8'-10"	9'-11"	12'- 4"	11'- 7"	12'- 0"	13'- 6"	16'- 8"	17'- 9"	18'- 5"	20'- 8"	25'- 7"
48"	2'- 7"	5'- 5"	10'- 1"	10'- 5"	11'- 9"	N/A	13'- 7"	14'- 2"	15'-10"	N/A	20'- 9"	21'- 6"	24'- 2"	N/A
54"	3'- 0"	5'-11"	11'- 8"	12'- 1"	N/A	N/A	15'- 8"	16'- 3"	N/A	N/A	23'-10"	24'- 8"	N/A	N/A
60"	3'- 3"	6'- 5"	13'- 3"	N/A	N/A	N/A	17'- 9"	N/A	N/A	N/A	26'-10"	N/A	N/A	N/A

TYPICAL PIPE CULVERT MITERS (3)

Side Slope	0° Skew	15° Skew	30° Skew	45° Skew
3:1	3:1	3.106:1	3.464:1	4.243:1
4:1	4:1	4.141:1	4.619:1	5.657:1
6:1	6:1	6.212:1	6.928:1	8.485:1

CONDITIONS WHERE PIPE RUNNERS (2) ARE NOT REQUIRED

Nominal Culvert I.D.	Single Pipe Culvert	Multiple Pipe Culverts
12" thru 21"	Skews thru 45°	Skews thru 45°
24"	Skews thru 45°	Skews thru 30°
27"	Skews thru 30°	Skews thru 15°
30"	Skews thru 15°	Skews thru 15°
33"	Skews thru 15°	Always required
36"	Normal (No Skew)	Always required
42" to 60"	Always required	Always required

STANDARD PIPE SIZES & MAX PIPE RUNNER LENGTHS (1)

Pipe Size	Pipe O.D.	Pipe I.D.	Max Pipe Runner Length
2" STD	2.375"	2.067"	N/A
3" STD	3.500"	3.068"	10'- 0"
4" STD	4.500"	4.026"	19'- 8"
5" STD	5.563"	5.047"	34'- 2"

ESTIMATED CONCRETE RIPRAP QUANTITIES (CY) (5)

Nominal Culvert I.D.	3:1 Side Slope				4:1 Side Slope				6:1 Side Slope			
	0° Skew	15° Skew	30° Skew	45° Skew	0° Skew	15° Skew	30° Skew	45° Skew	0° Skew	15° Skew	30° Skew	45° Skew
12"	0.4	0.4	0.5	0.5	0.5	0.5	0.5	0.6	0.7	0.7	0.7	0.8
15"	0.5	0.5	0.5	0.6	0.6	0.6	0.6	0.7	0.7	0.7	0.8	0.9
18"	0.5	0.5	0.6	0.6	0.6	0.7	0.7	0.8	0.8	0.8	0.9	1.0
21"	0.6	0.6	0.6	0.7	0.7	0.7	0.8	0.9	0.9	0.9	1.0	1.2
24"	0.6	0.7	0.7	0.8	0.8	0.8	0.8	1.0	1.0	1.0	1.1	1.3
27"	0.7	0.7	0.8	0.9	0.8	0.9	0.9	1.1	1.1	1.1	1.2	1.4
30"	0.8	0.8	0.8	0.9	0.9	0.9	1.0	1.2	1.2	1.2	1.3	1.6
33"	0.8	0.8	0.9	1.0	1.0	1.0	1.1	1.3	1.3	1.4	1.5	1.7
36"	0.9	0.9	0.9	1.1	1.1	1.1	1.2	1.4	1.4	1.5	1.6	1.8
42"	1.0	1.0	1.1	1.3	1.2	1.3	1.3	1.6	1.6	1.7	1.8	2.1
48"	1.1	1.1	1.2	N/A	1.4	1.4	1.5	N/A	1.9	1.9	2.1	N/A
54"	1.3	1.3	N/A	N/A	1.6	1.6	N/A	N/A	2.1	2.1	N/A	N/A
60"	1.4	N/A	N/A	N/A	1.7	N/A	N/A	N/A	2.3	N/A	N/A	N/A

(1) Size of Pipe Runner shall be as shown in the tables. Cross Pipe shall be the same size as the Pipe Runner. Cross Pipe Stub Out and Bottom Anchor Pipe shall be the next smaller size pipe as shown in the STANDARD PIPE SIZES table.

(2) This standard allows for the placement of only one pipe runner across each culvert pipe opening. In order to limit the clear opening to be traversed by an errant vehicle, the following conditions must be met:

For 60" culvert pipes, the skew must not exceed 0°.
For 54" culvert pipes, the skew must not exceed 15°.
For 48" culvert pipes, the skew must not exceed 30°.
For all culvert pipe sizes 42" and less, the skew must not exceed 45°.

If the above conditions cannot be met, the designer should consider using a safety end treatment with flared wings. For further information, refer to the TxDOT "Roadway Design Manual".

(3) Miter = Slope of Mitered Pipe Culvert End

(4) Riprap placed beyond the limits shown will be paid as Concrete Riprap in accordance with Item 432, "Riprap".

(5) Quantities shown are for one end of one reinforced Concrete Pipe Culvert. For multiple Pipe Culverts or for Corrugated Metal Pipe Culverts, quantities will need to be adjusted. Riprap quantities are for Contractor's information only.

DISCLAIMER:
The use of this standard is governed by the "Texas Engineering Practice Act". No warranty of any kind is made by TxDOT for any purpose whatsoever. TxDOT assumes no responsibility for the conversion of this standard to other formats or for incorrect results or damages resulting from its use.

LEVELS DISPLAYED
ACC:

SHEET 1 OF 2

Texas Department of Transportation
Bridge Division

SAFETY END TREATMENT

FOR 12" DIA TO 60" DIA
PIPE CULVERTS
TYPE II ~ CROSS DRAINAGE

SETP-CD

FILE: setpcdse.dgn	DN: GAF	CK: CAT	DW: JRP	CK: GAF
© TxDOT February 2010	DISTRICT	FEDERAL AID PROJECT		SHEET
REVISIONS				248
11-10: Add note for synthetic fibers.	COUNTY	CONTROL	SECT	JOB	HIGHWAY
	BEXAR	2452	01	043	SH 151

p:\4760\0-0129\cad\s* ~standard\5\std_dtn\20.dgn
2/19/2011
1:34:58 PM
mwmldatt1

DISCLAIMER:
The use of this standard is governed by the "Texas Engineering Practice Act". No warranty of any kind is made by TxDOT for any purpose whatsoever. TxDOT assumes no responsibility for the conversion of this standard to other formats or for incorrect results or damages resulting from its use.

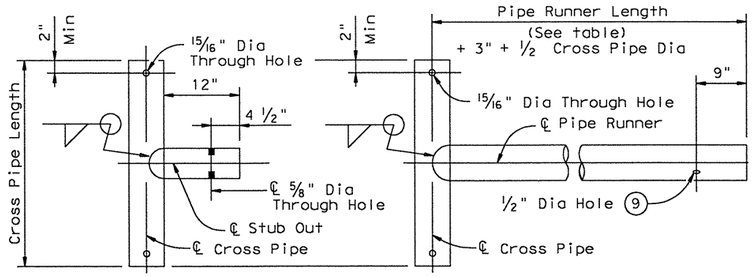

OPTION A1 OPTION A2

CROSS PIPE AND CONNECTIONS DETAILS

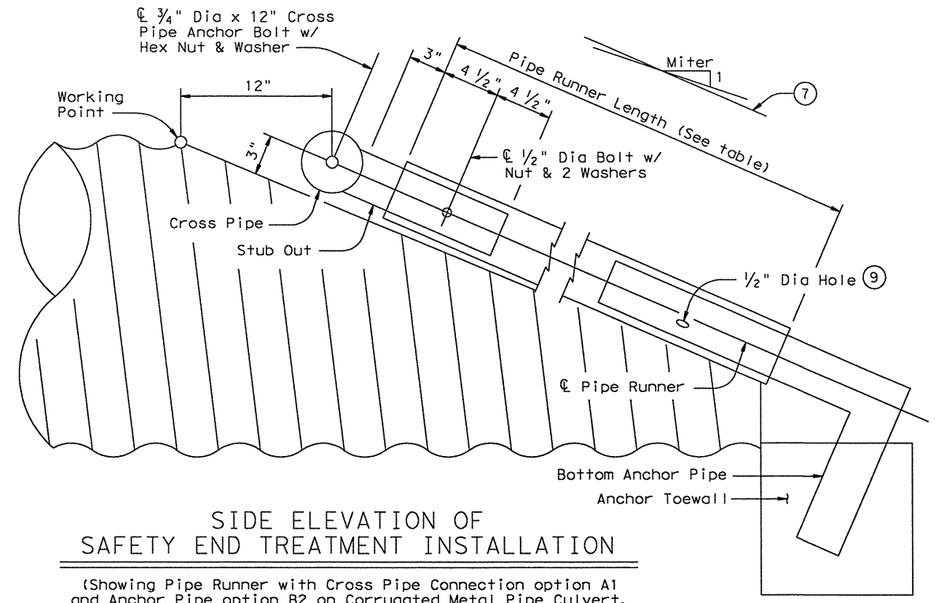

SIDE ELEVATION OF SAFETY END TREATMENT INSTALLATION

(Showing Pipe Runner with Cross Pipe Connection option A1 and Anchor Pipe option B2 on Corrugated Metal Pipe Culvert. Concrete Pipe Culvert details are similar. Riprap not shown for clarity)

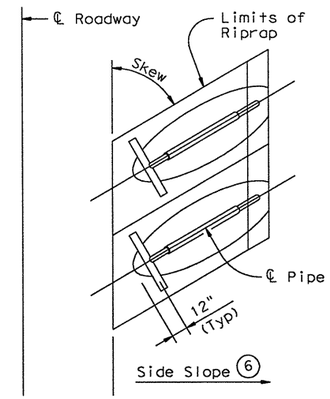

PLAN OF SKEWED INSTALLATION

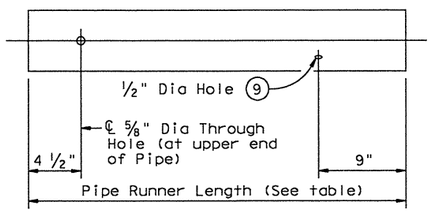

NOTE: The separate Pipe Runner shown is required when Cross Pipe Connection Option A1 is used.

PIPE RUNNER DETAILS

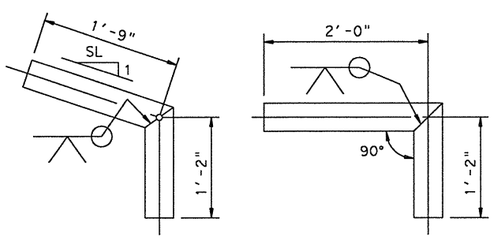

OPTION B1 OPTION B2

BOTTOM ANCHOR PIPE DETAILS (10)

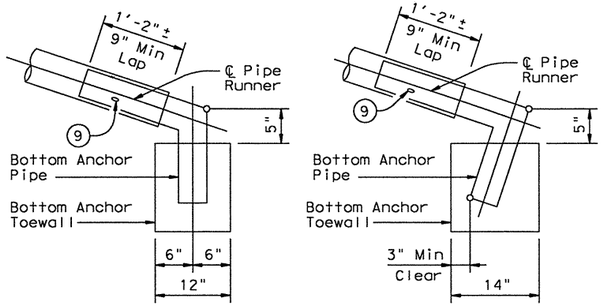

OPTION B1 OPTION B2

BOTTOM ANCHOR TOEWALL DETAILS

(Culvert & Riprap not shown for clarity)

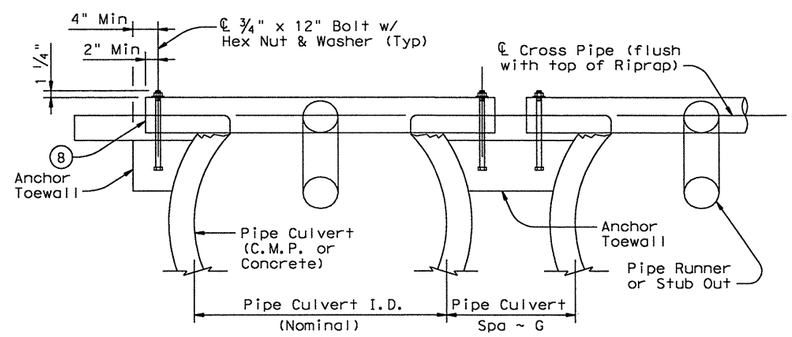

SHOWING CROSS PIPE & ANCHOR TOEWALL

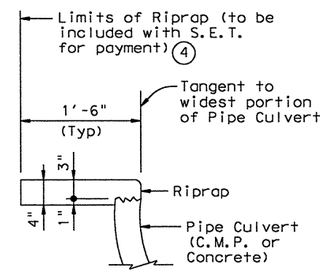

SHOWING TYPICAL PIPE CULVERT & RIPRAP

SECTION A-A

(4) Riprap placed beyond the limits shown will be paid as Concrete Riprap in accordance with Item 432, "Riprap".

(6) Recommended values of side slope are 3:1, 4:1, & 6:1. All quantities, calculations, and dimensions shown herein are based on these recommended values. Slope of 3:1 or flatter is required for vehicle safety.

(7) Note that actual slope of Pipe Runner may vary slightly from Side Slope of Riprap and trimmed Culvert Pipe edge.

(8) Care shall be taken to ensure that Riprap concrete does not flow into the Cross Pipe so as to permit disassembly of the bolted connection to allow cleanout access.

(9) After installation, the 1/2" hole shall be inspected to ensure that the lap of the Pipe Runner with the Bottom Anchor Pipe is adequate.

(10) At fabricator's option, a heat bend to a smooth 5" radius or a manufactured elbow (of the same material as the Runner) may be substituted for the mitered and welded joint in the Bottom Anchor Pipe.

GENERAL NOTES:

Pipe Runners are designed for a traversing load of 1,800 pounds at yield as recommended by Research Report 280-1, "Safety Treatment of Roadside Cross-Drainage Structures", Texas Transportation Institute, March 1981.

The Safety End Treatments shown herein are intended for use in those installations where out of control vehicles are likely to traverse the openings approximately perpendicular to the Pipe Runners.

Riprap and all necessary inverts shall be Concrete Riprap conforming to the requirements of Item 432, "Riprap".

Synthetic fibers listed on the "Fibers for Concrete" Material Producer List (MPL) may be used in lieu of steel reinforcing in riprap concrete unless noted otherwise.

Payment for riprap and toewall is included in the Price Bid for each Safety End Treatment.

Pipe Runners, Cross Pipes, and Anchor Pipes shall conform to the requirements of ASTM A53 (Type E or S, Grade B), ASTM A500 (Grade B), or API 5LX52.

Bolts and nuts shall conform to ASTM A307.

All steel components, except concrete reinforcing, shall be galvanized after fabrication. Galvanizing damaged during transport or construction shall be repaired in accordance with the specifications.

Texas Department of Transportation
Bridge Division

SAFETY END TREATMENT

FOR 12" DIA TO 60" DIA
PIPE CULVERTS
TYPE II ~ CROSS DRAINAGE

SETP-CD

FILE: setpcdse.dgn	DN: GAF	CK: CAT	DW: JRP	CK: GAF
© TxDOT February 2010	DISTRICT	FEDERAL AID PROJECT		SHEET
REVISIONS 11-10: Add note for synthetic fibers.				249
	COUNTY	CONTROL	SECT	JOB	HIGHWAY
	BEXAR	2452	01	043	SH 151

ACC:
LEVELS DISPLAYED
1

DISCLAIMER:
The use of this standard is governed by the "Texas Engineering Practice Act". No warranty of any kind is made by TxDOT for any purpose whatsoever. TxDOT assumes no responsibility for the conversion of this standard to other formats or for incorrect results or damages resulting from its use.

LEVELS DISPLAYED

ACC:

BOX DATA

SECTION DIMENSIONS S (ft)	H (ft)	T_T (in)	T_B (in)	T_S (in)	Fill Height (ft)	M (Min) (in)	REINFORCING (in^2/ft) ② A_{S1}	A_{S2}	A_{S3}	A_{S4}	A_{S5}	A_{S6}	A_{S7}	A_{S8}	① Lift Weight (Tons)
5	3	8	7	6	<2	-	0.19	0.31	0.21	0.14	0.19	0.19	0.19	0.17	6.6
5	3	6	6	6	2<3	45	0.18	0.24	0.19	0.14	-	-	-	-	5.7
5	3	6	6	6	3-5	36	0.14	0.17	0.16	0.14	-	-	-	-	5.7
5	3	6	6	6	10	36	0.14	0.16	0.17	0.14	-	-	-	-	5.7
5	3	6	6	6	15	35	0.16	0.21	0.22	0.14	-	-	-	-	5.7
5	3	6	6	6	20	35	0.21	0.27	0.28	0.14	-	-	-	-	5.7
5	3	6	6	6	25	35	0.26	0.34	0.34	0.14	-	-	-	-	5.7
5	3	6	6	6	30	35	0.31	0.41	0.41	0.14	-	-	-	-	5.7
5	4	8	7	6	<2	-	0.19	0.33	0.24	0.14	0.19	0.19	0.19	0.17	7.2
5	4	6	6	6	2<3	45	0.16	0.27	0.22	0.14	-	-	-	-	6.3
5	4	6	6	6	3-5	45	0.14	0.19	0.18	0.14	-	-	-	-	6.3
5	4	6	6	6	10	36	0.14	0.18	0.18	0.14	-	-	-	-	6.3
5	4	6	6	6	15	35	0.14	0.23	0.24	0.14	-	-	-	-	6.3
5	4	6	6	6	20	35	0.17	0.30	0.31	0.14	-	-	-	-	6.3
5	4	6	6	6	25	35	0.21	0.37	0.38	0.14	-	-	-	-	6.3
5	4	6	6	6	30	35	0.25	0.44	0.45	0.14	-	-	-	-	6.3
5	5	8	7	6	<2	-	0.19	0.35	0.26	0.14	0.19	0.19	0.19	0.17	7.8
5	5	6	6	6	2<3	45	0.14	0.29	0.24	0.14	-	-	-	-	6.9
5	5	6	6	6	3-5	45	0.14	0.21	0.20	0.14	-	-	-	-	6.9
5	5	6	6	6	10	45	0.14	0.19	0.20	0.14	-	-	-	-	6.9
5	5	6	6	6	15	36	0.14	0.24	0.25	0.14	-	-	-	-	6.9
5	5	6	6	6	20	35	0.15	0.31	0.32	0.14	-	-	-	-	6.9
5	5	6	6	6	25	35	0.18	0.38	0.39	0.14	-	-	-	-	6.9
5	5	6	6	6	30	35	0.21	0.46	0.47	0.14	-	-	-	-	6.9
5	2	8	7	6	<2	-	0.20	0.31	0.20	0.14	0.22	0.19	0.19	0.17	6.0
5	2	6	6	6	30	44	0.39	0.33	0.34	0.14	-	-	-	-	5.1

⑤

① For Box Length = 8'-0"

② A_{S1} thru A_{S4}, A_{S7} and A_{S8} are minimum required areas of reinforcement per linear foot of box length. A_{S6} and A_{S5} are minimum required areas of reinforcement per linear foot of box width.

⑤ These designs were created by TxDOT and are not shown in the ASTM Specifications.

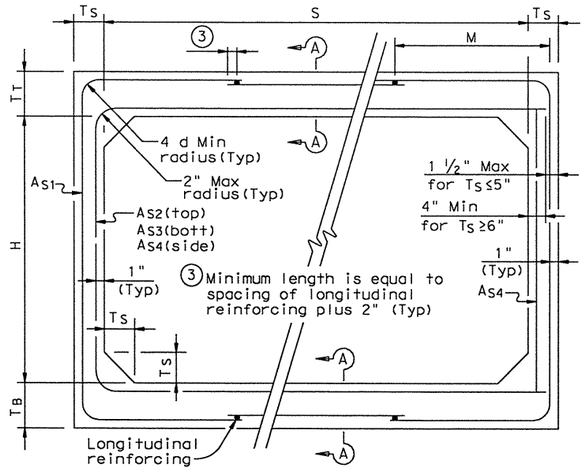

CORNER OPTION "A" CORNER OPTION "B"

FILL HEIGHT 2 FT AND GREATER

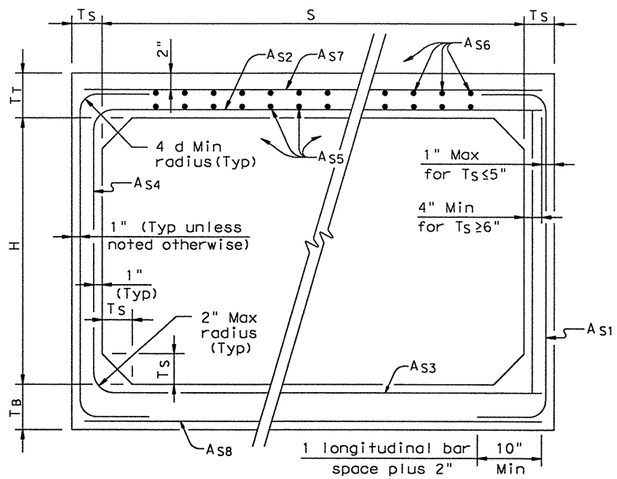

CORNER OPTION "A" CORNER OPTION "B"

FILL HEIGHT LESS THAN 2 FT

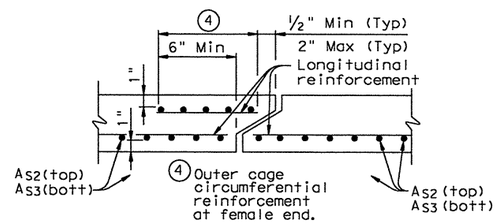

SECTION A-A

(TOP AND BOTTOM SLAB JOINT REINFORCEMENT)

GENERAL NOTES:

Designs shown conform to ASTM C1577.

Refer to ASTM C1577 for information or details not shown.

All concrete shall be Class "H" Concrete with a minimum compressive strength of 5,000 psi.

See SCP-MD standard sheet for miscellaneous details and notes not shown.

In lieu of furnishing the designs shown on this sheet, the contractor may furnish an alternate design that is equal to or exceeds the box design for the design fill height in the table. Shop plans for alternate designs shall be submitted in accordance with Item "Precast Concrete Structures".

HL93 LOADING

Texas Department of Transportation
Bridge Division

SINGLE BOX CULVERTS PRECAST

5'-0" SPAN

SCP-5

FILE: scp05ste.dgn	DN: GAF	CK: LMW	DW: BWH/TxDOT	CK: GAF	
©TxDOT February 2010	DISTRICT	FEDERAL AID PROJECT			SHEET
REVISIONS	SA				250
	COUNTY		CONTROL	SECT	JOB	HIGHWAY
	BEXAR		2452	01	043	SH 151

p:\4760\0-0129\scp\ \standards\5std_drn3.dgn 2/19/2011 1:34:59 PM mwmldkt17

DN:4716DU0-0129ccad ... \standardV5\std_dn\14.dgn 2/19/2011 13:45:59 PM mwmldkfl1

DISCLAIMER:
The use of this standard is governed by the "Texas Engineering Practice Act". No warranty of any kind is made by TxDOT for any purpose whatsoever. TxDOT assumes no responsibility for the conversion of this standard to other formats or for incorrect results or damages resulting from its use.

ACC:

LEVELS DISPLAYED 1

BOX DATA

SECTION DIMENSIONS S (ft)	H (ft)	T_T (in)	T_B (in)	T_S (in)	Fill Height (ft)	M (Min) (in)	REINFORCING (in^2/ft) ② A_{S1}	A_{S2}	A_{S3}	A_{S4}	A_{S5}	A_{S6}	A_{S7}	A_{S8}	① Lift Weight (Tons)
6	3	8	7	7	<2	-	0.20	0.31	0.22	0.17	0.19	0.19	0.19	0.17	7.9
6	3	7	7	7	2<3	43	0.21	0.24	0.19	0.17	-	-	-	-	7.5
6	3	7	7	7	3-5	39	0.17	0.18	0.17	0.17	-	-	-	-	7.5
6	3	7	7	7	10	39	0.17	0.18	0.19	0.17	-	-	-	-	7.5
6	3	7	7	7	15	38	0.22	0.24	0.24	0.17	-	-	-	-	7.5
6	3	7	7	7	20	38	0.28	0.31	0.31	0.17	-	-	-	-	7.5
6	3	7	7	7	25	38	0.35	0.38	0.39	0.17	-	-	-	-	7.5
6	3	7	7	7	30	38	0.42	0.46	0.46	0.17	-	-	-	-	7.5
6	4	8	7	7	<2	-	0.19	0.34	0.25	0.17	0.19	0.19	0.19	0.17	8.6
6	4	7	7	7	2<3	43	0.19	0.27	0.21	0.17	-	-	-	-	8.2
6	4	7	7	7	3-5	39	0.17	0.21	0.19	0.17	-	-	-	-	8.2
6	4	7	7	7	10	39	0.17	0.20	0.21	0.17	-	-	-	-	8.2
6	4	7	7	7	15	38	0.18	0.27	0.27	0.17	-	-	-	-	8.2
6	4	7	7	7	20	38	0.24	0.34	0.35	0.17	-	-	-	-	8.2
6	4	7	7	7	25	38	0.29	0.43	0.42	0.17	-	-	-	-	8.2
6	4	7	7	7	30	38	0.35	0.51	0.52	0.17	-	-	-	-	8.2
6	5	8	7	7	<2	-	0.19	0.37	0.28	0.17	0.19	0.19	0.19	0.17	9.3
6	5	7	7	7	2<3	43	0.17	0.30	0.24	0.17	-	-	-	-	8.9
6	5	7	7	7	3-5	43	0.17	0.23	0.21	0.17	-	-	-	-	8.9
6	5	7	7	7	10	39	0.17	0.22	0.23	0.17	-	-	-	-	8.9
6	5	7	7	7	15	38	0.17	0.28	0.29	0.17	-	-	-	-	8.9
6	5	7	7	7	20	38	0.20	0.37	0.38	0.17	-	-	-	-	8.9
6	5	7	7	7	25	38	0.25	0.45	0.46	0.17	-	-	-	-	8.9
6	5	7	7	7	30	38	0.30	0.54	0.55	0.17	-	-	-	-	8.9
6	6	8	7	7	<2	-	0.19	0.38	0.30	0.17	0.19	0.19	0.19	0.17	10.0
6	6	7	7	7	2<3	52	0.17	0.32	0.26	0.17	-	-	-	-	9.6
6	6	7	7	7	3-5	52	0.17	0.24	0.22	0.17	-	-	-	-	9.6
6	6	7	7	7	10	43	0.17	0.23	0.24	0.17	-	-	-	-	9.6
6	6	7	7	7	15	39	0.17	0.29	0.31	0.17	-	-	-	-	9.6
6	6	7	7	7	20	39	0.18	0.38	0.39	0.17	-	-	-	-	9.6
6	6	7	7	7	25	38	0.23	0.46	0.48	0.17	-	-	-	-	9.6
6	6	7	7	7	30	38	0.27	0.55	0.57	0.17	-	-	-	-	9.6

① For Box Length = 8'-0"

② A_{S1} thru A_{S4}, A_{S7} and A_{S8} are minimum required areas of reinforcement per linear foot of box length. A_{S6} and A_{S5} are minimum required areas of reinforcement per linear foot of box width.

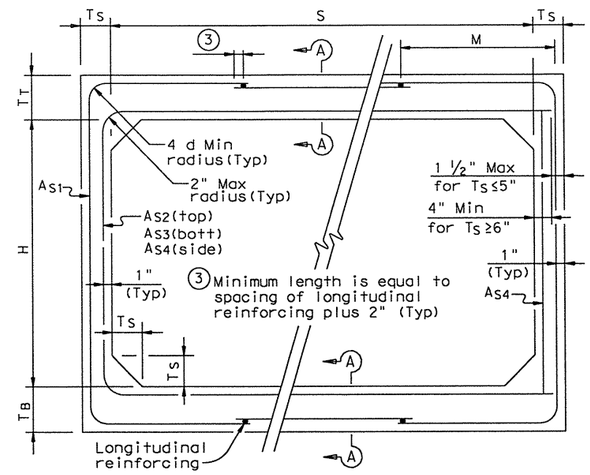

CORNER OPTION "A" CORNER OPTION "B"

FILL HEIGHT 2 FT AND GREATER

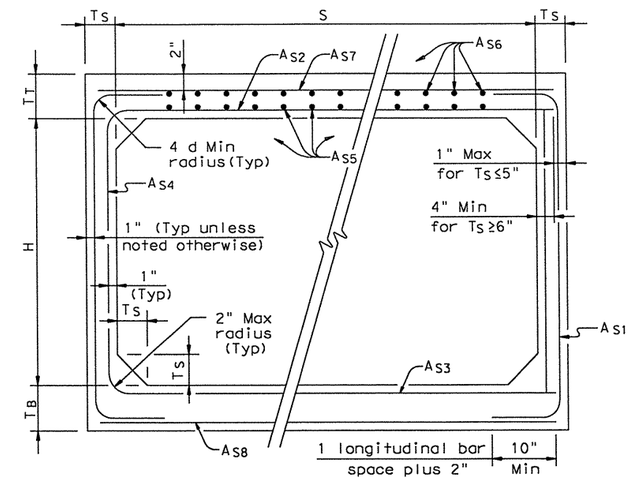

CORNER OPTION "A" CORNER OPTION "B"

FILL HEIGHT LESS THAN 2 FT

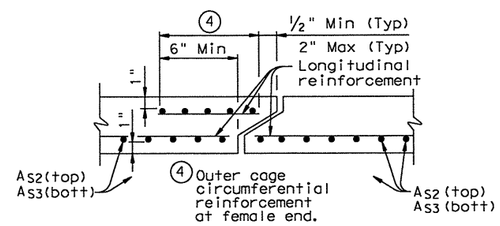

SECTION A-A

(TOP AND BOTTOM SLAB JOINT REINFORCEMENT)

GENERAL NOTES:

Designs shown conform to ASTM C1577.

Refer to ASTM C1577 for information or details not shown.

All concrete shall be Class "H" Concrete with a minimum compressive strength of 5,000 psi.

See SCP-MD standard sheet for miscellaneous details and notes not shown.

In lieu of furnishing the designs shown on this sheet, the contractor may furnish an alternate design that is equal to or exceeds the box design for the design fill height in the table. Shop plans for alternate designs shall be submitted in accordance with Item "Precast Concrete Structures".

HL93 LOADING

Texas Department of Transportation
Bridge Division

SINGLE BOX CULVERTS PRECAST 6'-0" SPAN

SCP-6

FILE: scp06ste.dgn	DN: GAF	CK: LMW	DW: BWH/TxDOT	CK: GAF
© TxDOT February 2010	DISTRICT	FEDERAL AID PROJECT		SHEET
REVISIONS	SA			251
	COUNTY	CONTROL	SECT	JOB	HIGHWAY
	BEXAR	2452	01	043	SH 151

p:\4760\0-0129.cir "\standard\15std_drn\5_dgn 2/19/2011 1:35:00 PM mwmldatt1f

DISCLAIMER:
The use of this standard is governed by the "Texas Engineering Practice Act". No warranty of any kind is made by TxDOT for any purpose whatsoever. TxDOT assumes no responsibility for the conversion of this standard to other formats or for incorrect results or damages resulting from its use.

ACC:

LEVELS DISPLAYED

BOX DATA

SECTION DIMENSIONS S (ft)	H (ft)	T_T (in)	T_B (in)	T_S (in)	Fill Height (ft)	M (Min) (in)	REINFORCING (in²/ft) ② A_{S1}	A_{S2}	A_{S3}	A_{S4}	A_{S5}	A_{S6}	A_{S7}	A_{S8}	① Lift Weight (Tons)
7	4	8	8	8	<2	-	0.21	0.34	0.25	0.19	0.19	0.19	0.19	0.19	10.4
7	4	8	8	8	2<3	43	0.23	0.28	0.28	0.19	-	-	-	-	10.4
7	4	8	8	8	3-5	43	0.19	0.22	0.19	0.19	-	-	-	-	10.4
7	4	8	8	8	10	43	0.19	0.23	0.23	0.19	-	-	-	-	10.4
7	4	8	8	8	15	41	0.24	0.30	0.30	0.19	-	-	-	-	10.4
7	4	8	8	8	20	41	0.31	0.38	0.39	0.19	-	-	-	-	10.4
7	4	8	8	8	25	41	0.38	0.47	0.48	0.19	-	-	-	-	10.4
7	4	8	8	8	30	41	0.46	0.57	0.57	0.19	-	-	-	-	10.4
7	5	8	8	8	<2	-	0.19	0.36	0.27	0.19	0.19	0.19	0.19	0.19	11.2
7	5	8	8	8	2<3	47	0.21	0.31	0.31	0.19	-	-	-	-	11.2
7	5	8	8	8	3-5	43	0.19	0.24	0.21	0.19	-	-	-	-	11.2
7	5	8	8	8	10	43	0.19	0.25	0.26	0.19	-	-	-	-	11.2
7	5	8	8	8	15	41	0.21	0.32	0.33	0.19	-	-	-	-	11.2
7	5	8	8	8	20	41	0.27	0.41	0.42	0.19	-	-	-	-	11.2
7	5	8	8	8	25	41	0.33	0.51	0.52	0.19	-	-	-	-	11.2
7	5	8	8	8	30	41	0.40	0.61	0.62	0.19	-	-	-	-	11.2
7	6	8	8	8	<2	-	0.19	0.38	0.30	0.19	0.19	0.19	0.19	0.19	12.0
7	6	8	8	8	2<3	59	0.19	0.33	0.34	0.19	-	-	-	-	12.0
7	6	8	8	8	3-5	47	0.19	0.25	0.23	0.19	-	-	-	-	12.0
7	6	8	8	8	10	43	0.19	0.26	0.27	0.19	-	-	-	-	12.0
7	6	8	8	8	15	41	0.19	0.34	0.35	0.19	-	-	-	-	12.0
7	6	8	8	8	20	41	0.24	0.43	0.45	0.19	-	-	-	-	12.0
7	6	8	8	8	25	41	0.29	0.53	0.55	0.19	-	-	-	-	12.0
7	6	8	8	8	30	41	0.35	0.64	0.65	0.19	-	-	-	-	12.0
7	7	8	8	8	<2	-	0.19	0.40	0.33	0.19	0.19	0.19	0.19	0.19	12.8
7	7	8	8	8	2<3	59	0.19	0.36	0.37	0.19	-	-	-	-	12.8
7	7	8	8	8	3-5	59	0.19	0.27	0.25	0.19	-	-	-	-	12.8
7	7	8	8	8	10	47	0.19	0.27	0.29	0.19	-	-	-	-	12.8
7	7	8	8	8	15	43	0.19	0.35	0.37	0.19	-	-	-	-	12.8
7	7	8	8	8	20	43	0.22	0.44	0.46	0.19	-	-	-	-	12.8
7	7	8	8	8	25	43	0.27	0.54	0.57	0.19	-	-	-	-	12.8
7	7	8	8	8	30	41	0.32	0.65	0.67	0.19	-	-	-	-	12.8
7	3	8	8	8	<2	-	0.28	0.36	0.24	0.19	0.21	0.19	0.19	0.19	9.6
7	3	8	8	8	30	58	0.53	0.49	0.50	0.19	-	-	-	-	9.6

⑤

① For Box Length = 8'-0"

② A_{S1} thru A_{S4}, A_{S7} and A_{S8} are minimum required areas of reinforcement per linear foot of box length. A_{S6} and A_{S5} are minimum required areas of reinforcement per linear foot of box width.

⑤ These designs were created by TxDOT and are not shown in the ASTM Specifications.

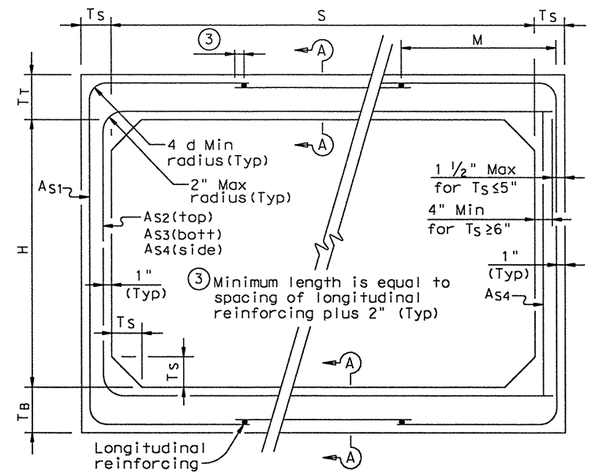

CORNER OPTION "A" CORNER OPTION "B"

FILL HEIGHT 2 FT AND GREATER

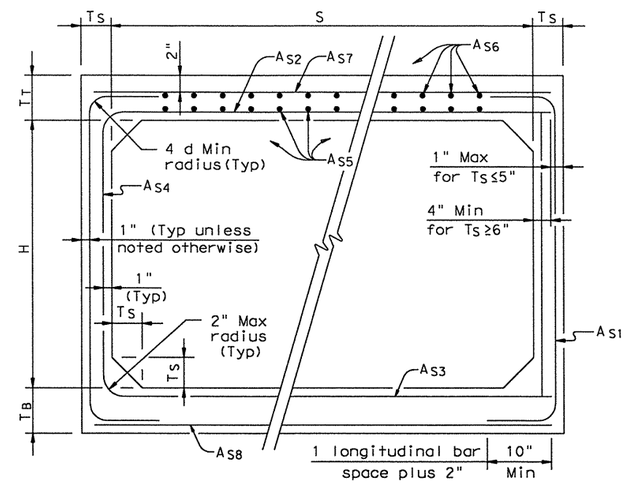

CORNER OPTION "A" CORNER OPTION "B"

FILL HEIGHT LESS THAN 2 FT

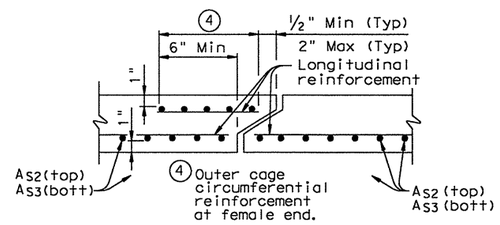

SECTION A-A

(TOP AND BOTTOM SLAB JOINT REINFORCEMENT)

GENERAL NOTES:

Designs shown conform to ASTM C1577.

Refer to ASTM C1577 for information or details not shown.

All concrete shall be Class "H" Concrete with a minimum compressive strength of 5,000 psi.

See SCP-MD standard sheet for miscellaneous details and notes not shown.

In lieu of furnishing the designs shown on this sheet, the contractor may furnish an alternate design that is equal to or exceeds the box design for the design fill height in the table. Shop plans for alternate designs shall be submitted in accordance with Item "Precast Concrete Structures".

HL93 LOADING

Texas Department of Transportation
Bridge Division

SINGLE BOX CULVERTS PRECAST
7'-0" SPAN

SCP-7

FILE: scp07ste.dgn	DN: GAF	CK: LMW	DW: BWH/TxDOT	CK: GAF
©TxDOT February 2010	DISTRICT	FEDERAL AID PROJECT		SHEET
REVISIONS	SA			252

COUNTY	CONTROL	SECT	JOB	HIGHWAY
BEXAR	2452	01	043	SH 151

pw:\\ftb010-0129\car "standards\bsd\bsd_dgn\07_dgn" 2/19/2011 1:35:00 PM mwmldkfft

DISCLAIMER:
The use of this standard is governed by the "Texas Engineering Practice Act". No warranty of any kind is made by TxDOT for any purpose whatsoever. TxDOT assumes no responsibility for the conversion of this standard to other formats or for incorrect results or damages resulting from its use.

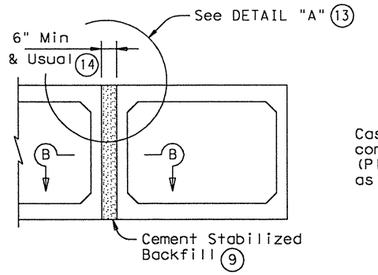

MULTIPLE UNIT PLACEMENT

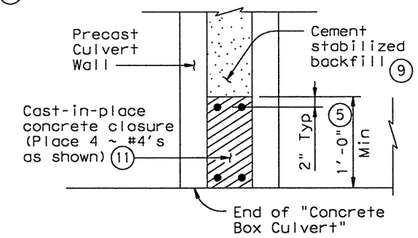

SECTION B-B

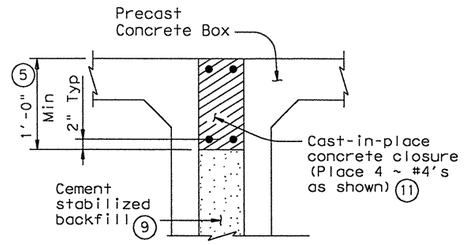

DETAIL "A" (13)

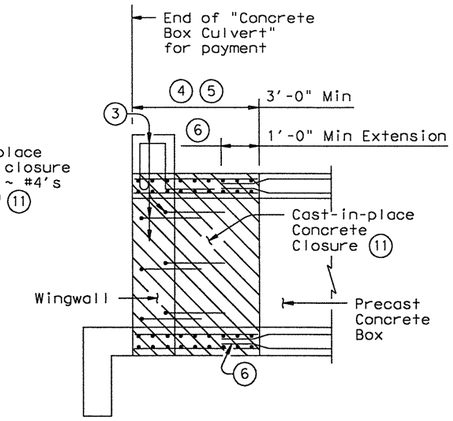

WINGWALL CONNECTION

(Also applies to Safety End Treatment)

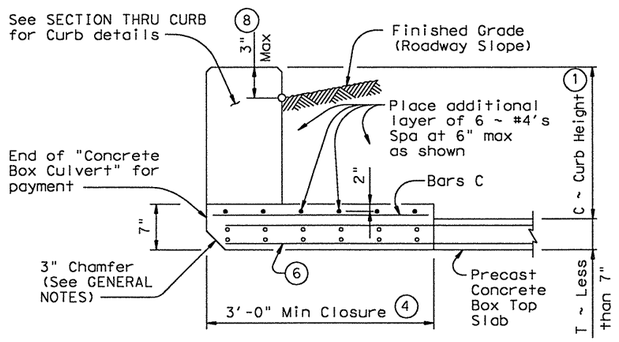

SECTION THRU TOP SLABS LESS THAN 7"

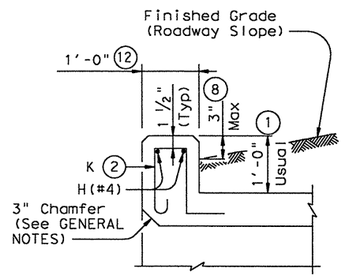

SECTION THRU CURB

(10) QUANTITIES PER FOOT OF CURB	
Reinforcing Steel	4.18 Lb
Concrete	0.037 CY

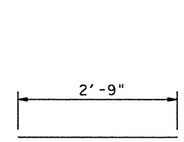

BARS C ~ #4
(Spa = 1'-0" Max)

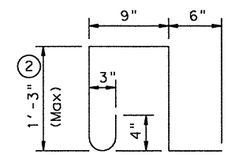

BARS K ~ #4
(Spa = 1'-0" Max)
(Length = 4'-3")

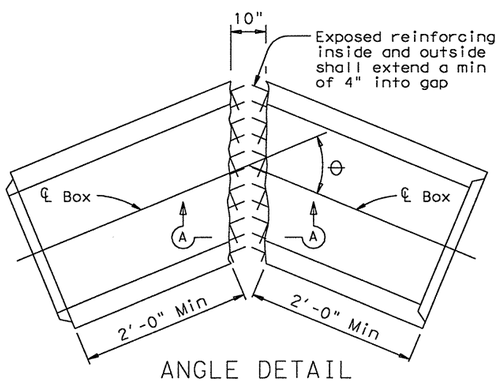

ANGLE DETAIL

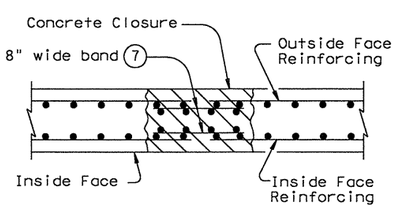

SECTION A-A

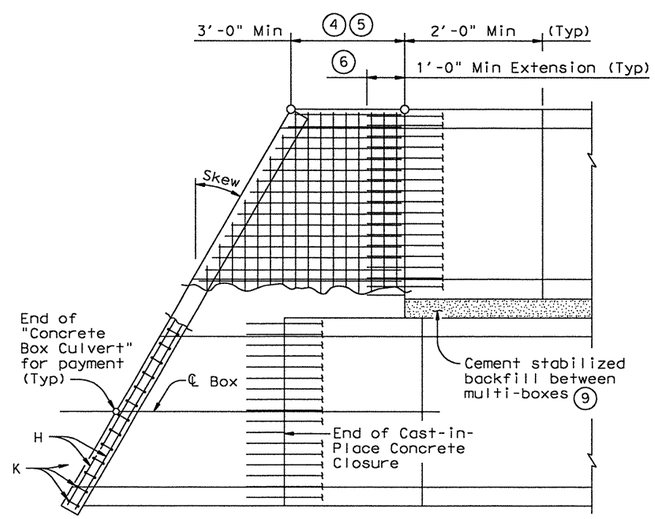

PLAN OF SKEWED ENDS

(Showing multi-box placement)

(1) 0" min to 5'-0" max. Estimated curb heights are shown elsewhere in the plans. For structures with pedestrian rail, bicycle rail or curbs taller than 1'-0", refer to ECD standard. For structures with T6 traffic rail, refer to T6-CM standard. For structures with traffic rail, other than T6, refer to RAC standard.

(2) For curbs less than 1'-0" high, tilt Bars K or reduce bar height as necessary to maintain cover. For curbs less than 3" high, Bars K may be omitted.

(3) Curb, Wingwall or Safety End Treatment reinforcing shall extend into concrete closure. Any reinforcing that does not fit into the closure shall be bent or trimmed as necessary.

(4) Cast-in-place concrete closure shall be 3'-0" min. Boxes shall be cast short or broken back in the field. All reinforcing in the closure shall be the same size and spacing as in the precast box section. Except where shown otherwise, the cast-in-place closure shall be flush with the inside and outside faces of the precast box section.

(5) For multiple unit placements the length of the closure for the interior walls may be adjusted as necessary. The length of the top slab, bottom slab, and exterior wall closure shall not be less than 3'-0". See Section B-B detail when interior walls are cast full length.

(6) Precast box reinforcing shall extend a minimum of 1'-0" into concrete closure (Typ).

(7) Bands of reinforcing matching the inside and outside face reinforcing shall be placed in the gaps of the top and bottom slabs. A band matching the outside face reinforcing of the wall shall be placed in the gaps of the walls (placed in the outside face only). The bands shall be tack welded to the exposed reinforcing at each point of contact.

(8) For vehicle safety, the following requirements must be met:
- For structures without bridge rail, curbs shall project no more than 3" above finished grade.
- For structures with bridge rail, curbs shall be flush with finished grade.

Curb heights shall be reduced, if necessary, to meet the above requirements. No changes will be made in quantities and no additional compensation will be allowed for this work.

(9) Cement Stabilized Backfill between boxes is considered part of the Box Culvert for payment.

(10) All curb concrete and reinforcing is considered part of the Box Culvert for payment.

(11) Any additional concrete and reinforcing required for the closures shall be considered as subsidiary to the Concrete Box Culvert.

(12) 1'-0" typical. 2'-0" when RAC standard is referred to elsewhere in the plans.

(13) For multiple unit placement with overlay, with 1 to 2 course surface treatment, or with the top slab as the final riding surface, provide wall closure as shown in DETAIL "A".

(14) This dimension may be increased with approval of the Engineer to allow the precast boxes to be tunneled or jacked in accordance with Item 476, "Jacking, Boring, or Tunneling Pipe or Box". No payment will be made for any additional material in the gap between adjacent boxes.

GENERAL NOTES:
Designed according to AASHTO LRFD Specifications.
All closure concrete shall be Class "C" with a minimum compressive strength of 3600 psi and shall be placed according to the Item, "Concrete Structures".
Any additional concrete required for the closures shall be considered as subsidiary to the Concrete Box Culvert.
Refer to the Single Box Culverts Precast standard for details not shown.
The bottom edge of the top slab closure shall be chamfered 3 inches at the entrance.

HL93 LOADING

Texas Department of Transportation
Bridge Division

BOX CULVERTS PRECAST MISCELLANEOUS DETAILS

SCP-MD

FILE: scpmdste.dgn	DN: GAF	CK: LMW	DW: BWH/TxDOT	CK: GAF
©TxDOT February 2010	DISTRICT	FEDERAL AID PROJECT		SHEET
REVISIONS	SA			253

COUNTY	CONTROL	SECT	JOB	HIGHWAY
BEXAR	2452	01	043	SH 151

ACC:
LEVELS DISPLAYED
1

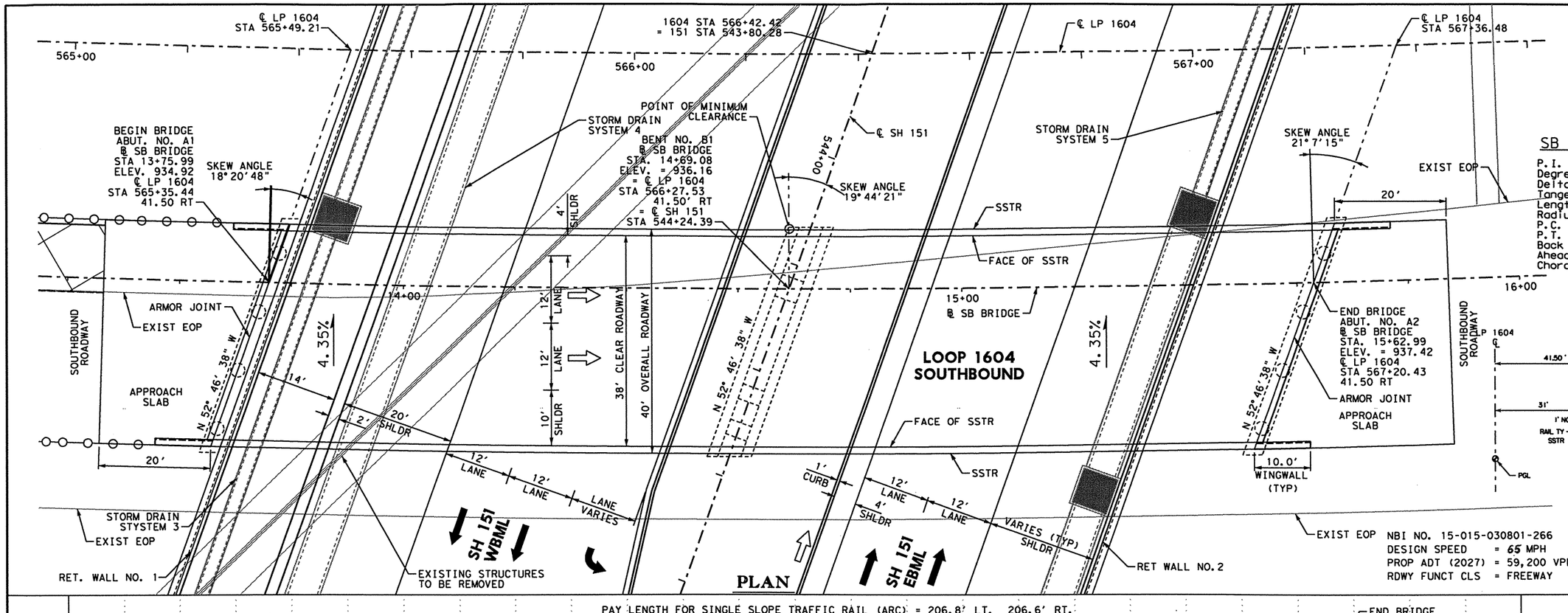

PLAN

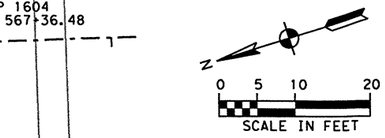

SB BRIDGE ℄ CURVE DATA

P.I. Station	= 17+45.083
Degree	= 21°50'37.54" (LT)
Delta	= 1°29'01.96"
Tangent	= 745.0829
Length	= 1,472.0724
Radius	= 3,861.2186
P.C. Station	= 10+00.000
P.T. Station	= 24+72.072
Back	= S 24°27'21.91" W
Ahead	= S 2°36'44.37" W
Chord Bear	= S 13°32'03.14" W

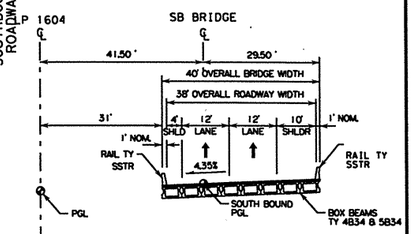

TYPICAL SECTION

SOUTH BOUND BRIDGE

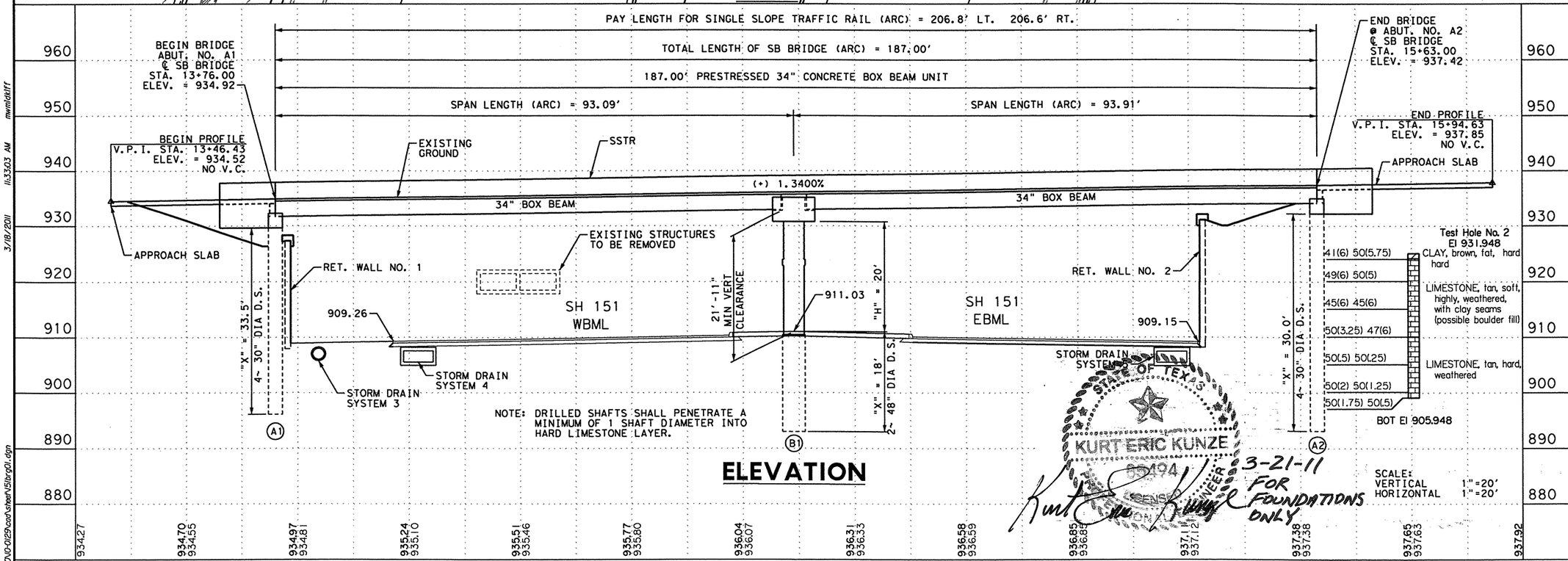

NOTE: DRILLED SHAFTS SHALL PENETRATE A MINIMUM OF 1 SHAFT DIAMETER INTO HARD LIMESTONE LAYER.

ELEVATION

SCALE:
VERTICAL 1" = 20'
HORIZONTAL 1" = 20'

STATE OF TEXAS
KURT ERIC KUNZE
92494
LICENSED
PROFESSIONAL ENGINEER

3-21-11
FOR FOUNDATIONS ONLY

3/18/11

STATE OF TEXAS
MICHAEL W. MIDKIFF
75435
REGISTERED
PROFESSIONAL ENGINEER

FOR ROADWAY GEOMETRICS ONLY

NO.	DATE	REVISION DESCRIPTION	APP. BY

© 2011

Texas Department of Transportation

MACTEC
3520 EXECUTIVE CENTER DRIVE
SUITE 200
AUSTIN, TEXAS 78731
(512) 795-0360

REGISTRATION NUMBER: F-1784

SH 151
BRIDGE LAYOUT
LP 1604 MAINLANES SOUTHBOUND OVERPASS AT SH 151
(SHEET 2 OF 10)

FED. RD. DIV. NO.			SHEET NO.
			254
STATE	DIST.	COUNTY	
TEXAS	SA	BEXAR	
CONT.	SECT.	JOB	HIGHWAY NO.
2452	01	043	SH 151

mwmidkiff
11:33:03 AM
3/18/2011
p:\4760\0-0125\cad\sheet\151br-g01.dgn

SUMMARY OF ESTIMATED QUANTITIES

ITEM / DESCRIPTION	DRILLED SHAFTS		CLASS"C"CONCRETE		CLASS "S" CONCRETE		PRESTRESSED CONCRETE BOX BEAM		ARMOR JOINT (WITH SEAL)	RAIL	RIPRAP CONC. (CL. B)	SIGN & BRACKET
	30"Ø	48"Ø	ABUT.	BENT	SLAB	SHEAR KEY	(4B34)	(5B34)		TY SSTR		
	L.F.	L.F.	C.Y.	C.Y.	C.Y.	C.Y.	L.F.	L.F.	L.F.	L.F.	C.Y.	EA.
ABUTMENT NO. A1	134		22.5						37.91	20.0		
ABUTMENT NO. A2	120		22.9						38.61	20.0		
BENT NO. B1		36		62.3								
SPANS 1 & 2					126.7	76.1	363.4	1090.2		373.4		
TOTAL	254	36	45.4	62.3	126.7	76.1	363.4	1090.2	76.52	413.4		1

FOUNDATION DESIGN TABLE ▽

LOCATION	DESIGN LOAD/DS (TONS)	CAPACITY		
		FRICTION		TOTAL TONS
		TSF	TONS	
ABUT A1	150	3.66	230	230
BENT B1	542	3.37	720	720
BENT A2	150	3.66	230	230

▽ NO BELLS REQUIRED.

NOTE: DRILLED SHAFTS SHALL PENETRATE A MINIMUM OF 1 SHAFT DIAMETER INTO HARD LIMESTONE LAYER.

T:/ENGDATA/BRIDGE/

REV. 12-30-11

© 2005

Texas Department of Transportation
San Antonio District (Structural Design)

The seal appearing on this document was authorized by Kurt Eric Kunze, P.E. 85494, on

Kurt Eric Kunze, P.E. 03-17-11
Kurt Eric Kunze, P.E. Date

STATE OF TEXAS
KURT ERIC KUNZE
85494
LICENSED PROFESSIONAL ENGINEER

ESTIMATED QUANTITIES

LOOP 1604 SOUTHBOUND MAINLANES OVERPASS AT S.H. 151

T:Engdata/Bridge/245201.043/eq.dgn

PREPARED BY AND FOR USE OF TEXAS SDH&PT

ORIGINAL DRAWING DATE: JUNE 2005

DN. KEK
CK. MMM
DW. MRM
CK. KEK

REVISIONS

STATE DISTRICT	FEDERAL REGION	FEDERAL AID PROJECT	SHEET
SAT	6		255

COUNTY	CONTROL	SECTION	JOB	HIGHWAY
BEXAR	2452	01	043	LP1604

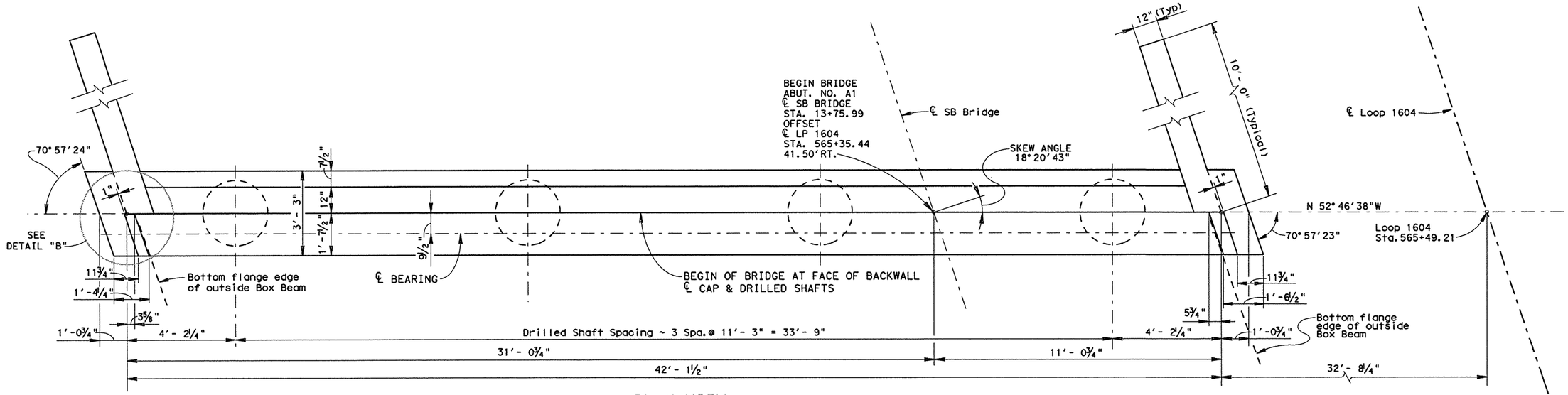

PLAN VIEW
(Looking Back Stationwise)

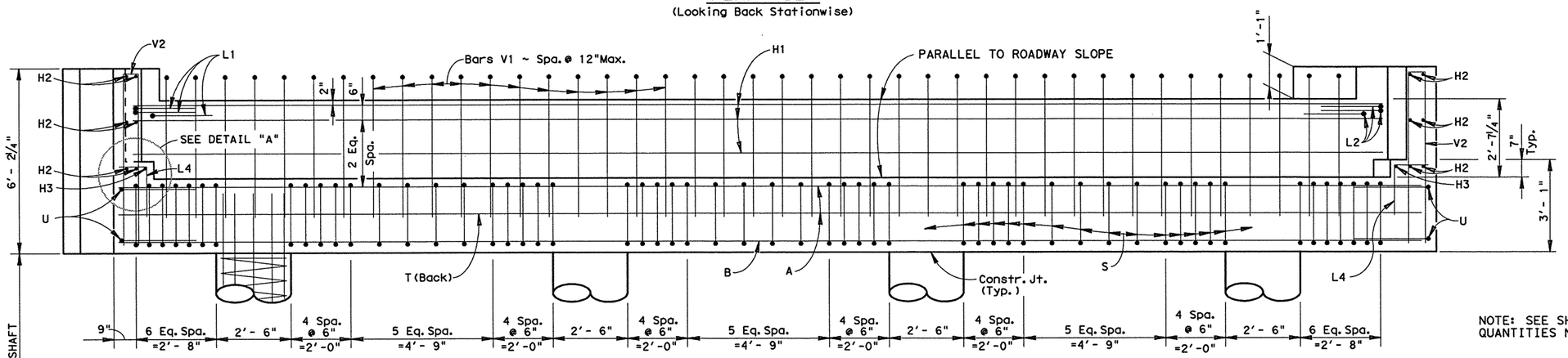

ELEVATION

NOTE: SEE SHEET 2 OF 2 FOR DETAILS AND QUANTITIES NOT SHOWN ON THIS SHEET.

SHEET 1 OF 2

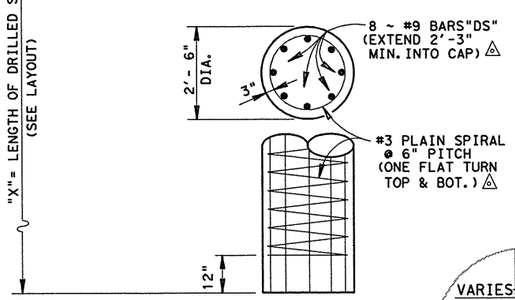

△ INCLUDED IN PRICE BID FOR DRILLED SHAFTS.

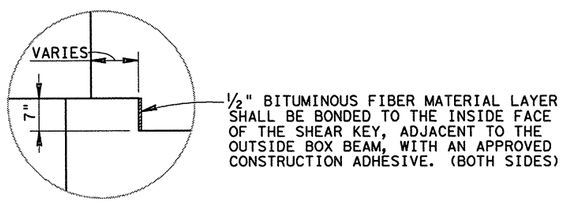

DETAIL "A"
(SHEAR KEY)

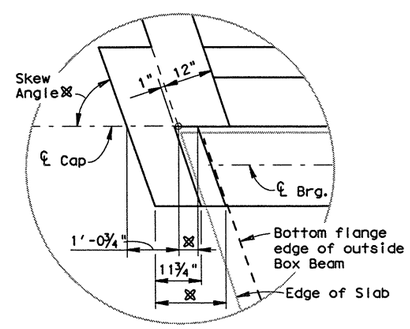

DETAIL "B"
(Abutment End with Ear Wall)

⊠ Varies, see Abutment ends in Plan View. One side shown. Typical for both sides, Opposit hand.

© 2003

Texas Department of Transportation
San Antonio District (Structural Design)

The seal appearing on this document was authorized by Kurt Eric Kunze, P.E. 85494, on 03-17-11

Kurt Eric Kunze, P.E. — Date

STATE OF TEXAS — KURT ERIC KUNZE — 85494 — LICENSED PROFESSIONAL ENGINEER

ABUTMENT DETAILS
ABUTMENT NO. A1
LOOP 1604 SOUTHBOUND MAINLANES OVERPASS AT S.H. 151

T:Engdata/Bridge/245201.043/ChangeforTollrd/BBAbut.dgn

PREPARED BY AND FOR USE OF TxDoT.

ORIGINAL DRAWING DATE: OCTOBER 2005

DN.: KEK
CK.: MMM
DW.: MRM
CK.: KEK

REVISIONS

STATE DISTRICT	FEDERAL REGION	FEDERAL AID PROJECT #	SHEET
SAT	6		256

COUNTY	CONTROL	SECTION	JOB	HIGHWAY
BEXAR	2452	01	043	LP1604

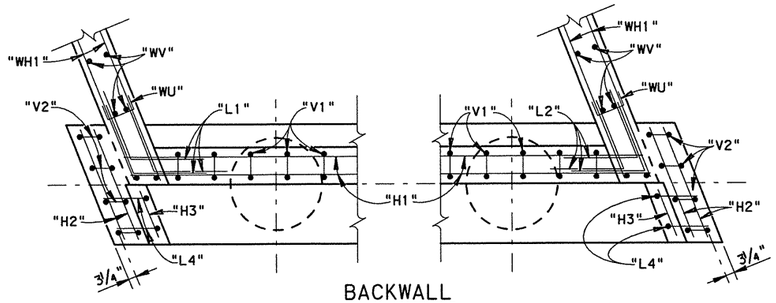

BACKWALL

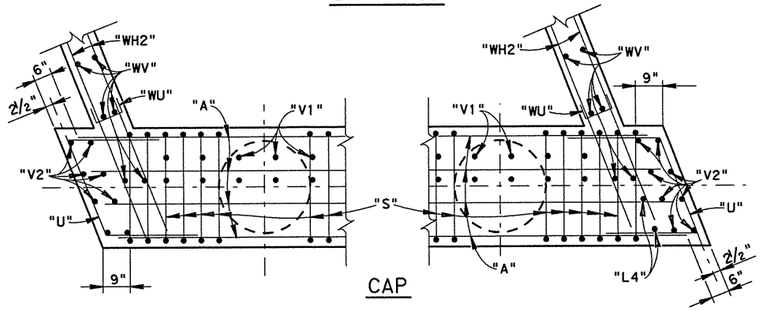

CAP

CORNER DETAILS

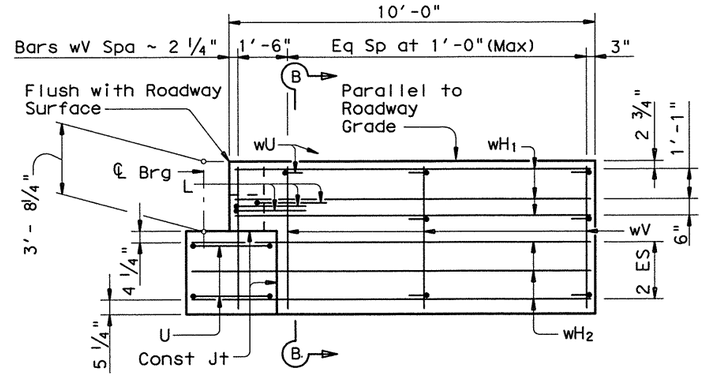

WINGWALL ELEVATION

Ear wall not shown for clarity

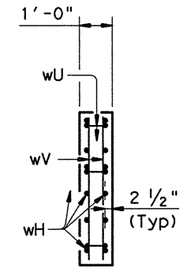

SECTION B-B

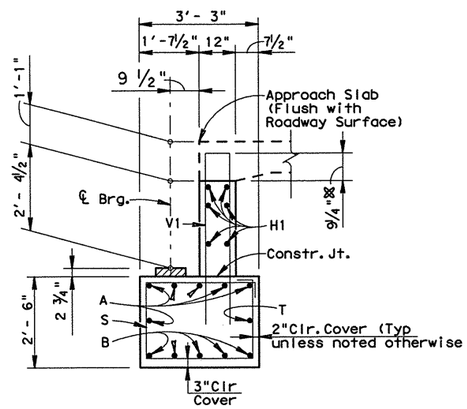

SECTION THRU CAP

(With Approach Slab)

※Increase as required to maintain 3 3/4" from finished grade.

ESTIMATED QUANTITIES

FOR ONE COMPLETE ABUTMENT

BAR	NO.	SIZE	LENGTH	WEIGHT
A	6	#11	42'-9"	1363
B	5	#11	42'-9"	1136
H1	6	#5	41'-10"	262
H2	12	#5	3'-3"	41
H3	2	#5	1'-4"	3
L1	3	#6	4'-0"	18
L2	3	#6	4'-0"	18
L4	4	#5	2'-5"	10
S	56	#5	10'-8"	623
T	1	#5	42'-9"	45
U	4	#6	7'-11"	48
V1	42	#5	9'-11"	435
V2	8	#5	12'-1"	101
WH1	12	#6	9'-8"	174
WH2	12	#6	11'-4"	204
WU	14	#4	1'-7"	15
WV	44	#5	5'-10"	268
REINFORCING STEEL ✳			LBS.	4764
CL."C" CONC.(ABUT.)			C.Y.	22.5

✳FOR CONTRACTORS INFO ONLY.

GENERAL NOTES:

DESIGN: HL93 LOADING IN ACCORDANCE WITH A.A.S.H.T.O. STANDARD SPECIFICATIONS.

ALL CONCRETE FOR CAP, BACKWALL, & DRILLED SHAFTS SHALL BE CLASS "C"

DESIGN f'c = 3600 P.S.I.

ALL REINF. STEEL FOR CAP & BACKWALL SHALL BE GRADE 60.

AVERAGE CALCULATED LOAD = 120 TONS/D.S.

CHAMFER ALL EXPOSED EDGES 3/4" UNLESS NOTED OTHERWISE.

SHEET 2 OF 2

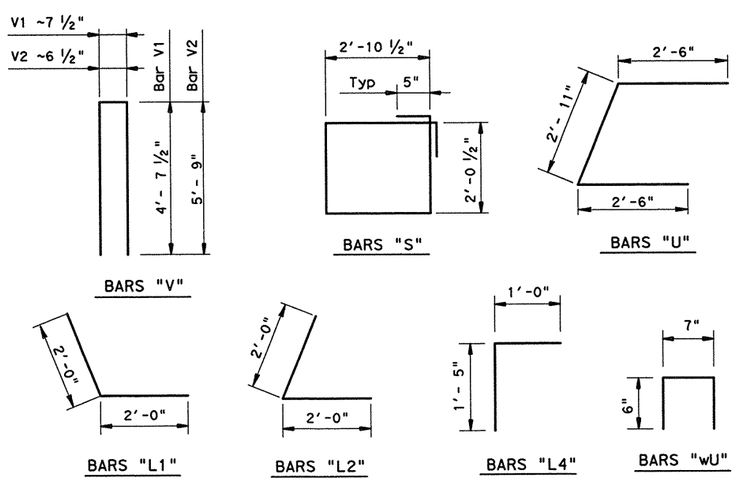

© 2005

Texas Department of Transportation

San Antonio District (Structural Design)

The seal appearing on this document was authorized by Kurt Eric Kunze, P.E. 85494, on 03-17-11

Kurt Eric Kunze, P.E. — Date

STATE OF TEXAS — KURT ERIC KUNZE — 85494 — LICENSED PROFESSIONAL ENGINEER

ABUTMENT DETAILS

ABUTMENT NO. A1

LOOP 1604 SOUTHBOUND MAINLANES OVERPASS AT S.H. 151

T:Engdata/Bridge/245201.043/ChangeforTollrd/BBAbut.dgn

PREPARED BY AND FOR USE OF TxDoT.

ORIGINAL DRAWING DATE: OCTOBER 2005

DN.: KEK — REVISIONS — CK.: MMM — DW.: MRM — CK.: KEK

STATE DISTRICT	FEDERAL REGION	FEDERAL AID PROJECT	SHEET
SAT	6		257

COUNTY	CONTROL	SECTION	JOB	HIGHWAY
BEXAR	2452	01	043	LP1604

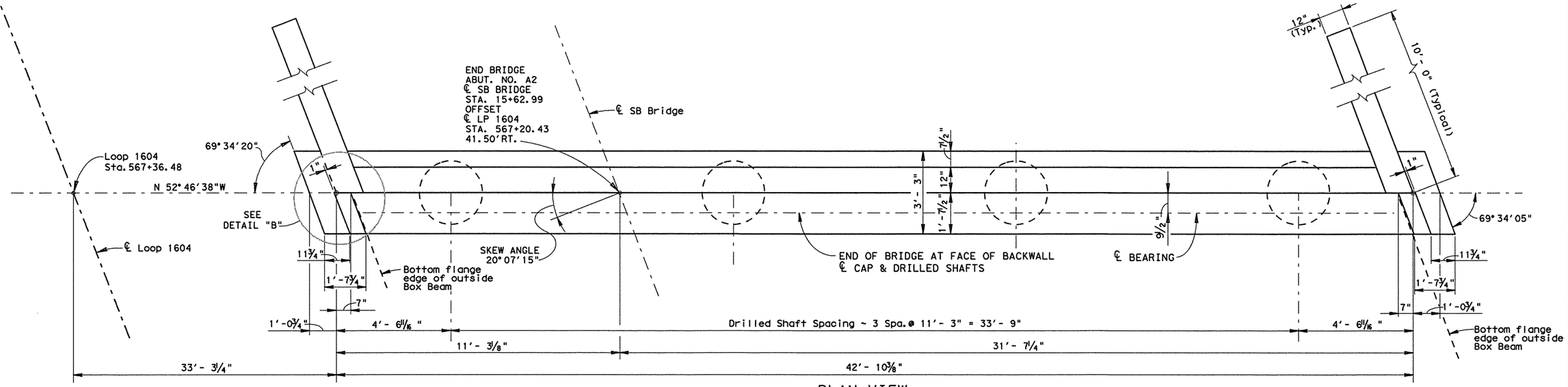

PLAN VIEW
(Looking Stationwise)

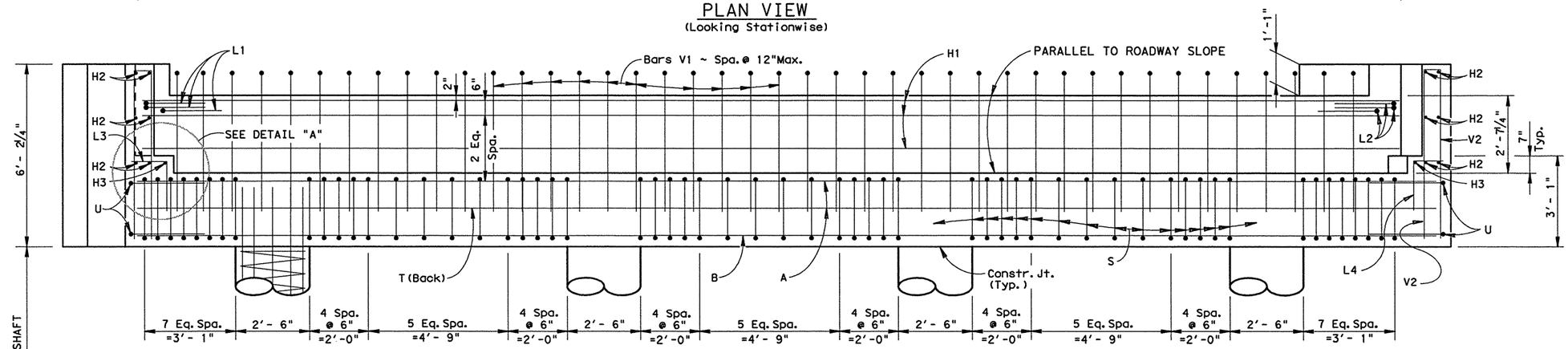

ELEVATION

NOTE: SEE SHEET 2 OF 2 FOR DETAILS AND QUANTITIES NOT SHOWN ON THIS SHEET.

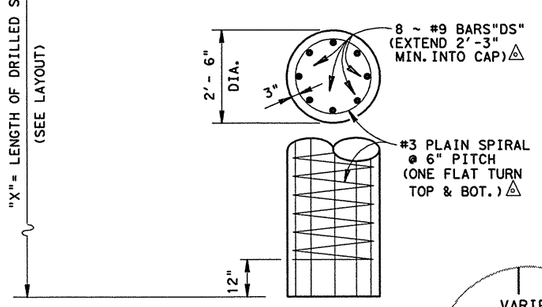

△ INCLUDED IN PRICE BID FOR DRILLED SHAFTS.

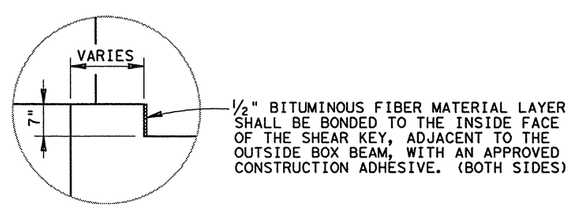

1/2" BITUMINOUS FIBER MATERIAL LAYER SHALL BE BONDED TO THE INSIDE FACE OF THE SHEAR KEY, ADJACENT TO THE OUTSIDE BOX BEAM, WITH AN APPROVED CONSTRUCTION ADHESIVE. (BOTH SIDES)

DETAIL "A"
(SHEAR KEY)

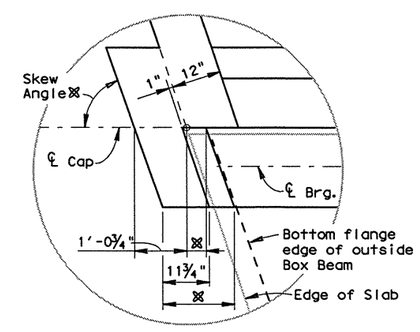

DETAIL "B"
(Abutment End with Ear Wall)

⊠ Varies, see Abutment ends in Plan View. One side shown. Typical for both sides, Opposit hand.

SHEET 1 OF 2

© 2003 Texas Department of Transportation
San Antonio District (Structural Design)

The seal appearing on this document was authorized by Kurt Eric Kunze, P.E. 85494, on

Kurt Eric Kunze, P.E. 03-17-11
Date

STATE OF TEXAS
KURT ERIC KUNZE
85494
LICENSED PROFESSIONAL ENGINEER

ABUTMENT DETAILS
ABUTMENT NO. A2
LOOP 1604 SOUTHBOUND MAINLANES OVERPASS AT S.H. 151

T:Engdata/Bridge/245201.043/ChangeforTollrd/BBAbut.dgn
PREPARED BY AND FOR USE OF TxDoT.

ORIGINAL DRAWING DATE: OCTOBER 2005		STATE DISTRICT	FEDERAL REGION	FEDERAL AID PROJECT	SHEET
DN.: KEK	REVISIONS	SAT	6		258
CK.: MMM	- -				
DW.: MRM	- -				
CK.: KEK	- -				

COUNTY	CONTROL	SECTION	JOB	HIGHWAY
BEXAR	2452	01	043	LP1604

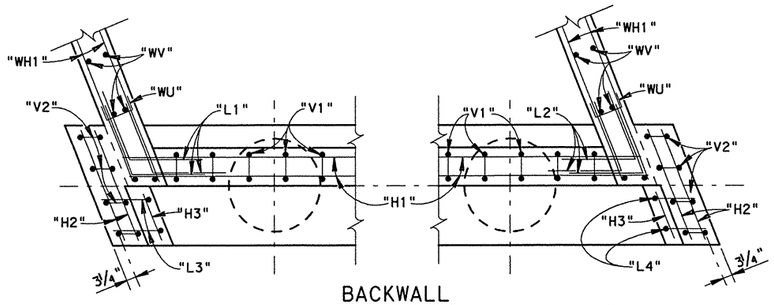

BACKWALL

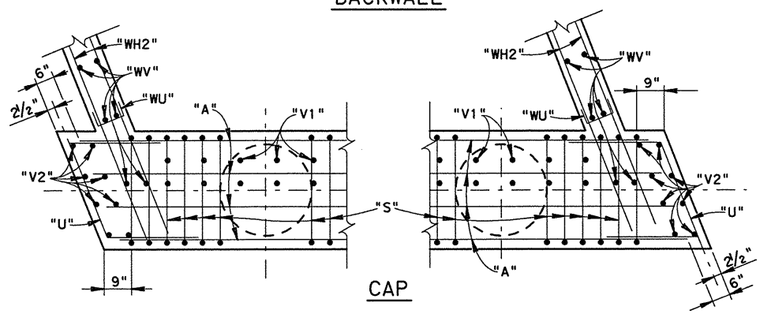

CAP

CORNER DETAILS

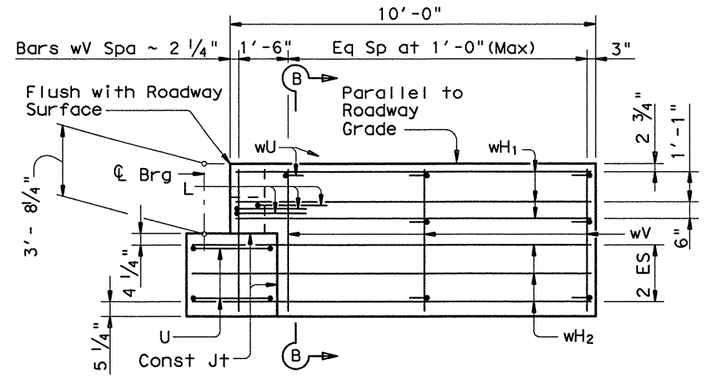

WINGWALL ELEVATION

Ear wall not shown for clarity

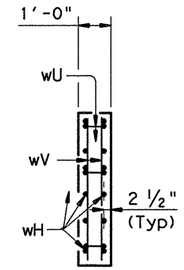

SECTION B-B

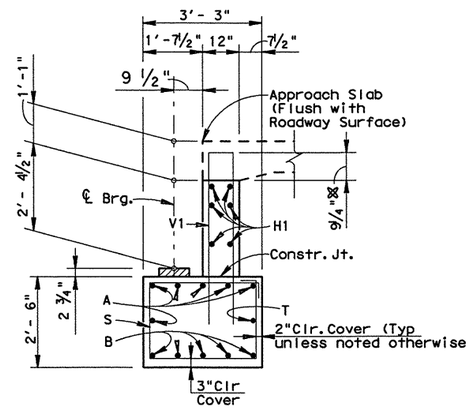

SECTION THRU CAP

(With Approach Slab)

※Increase as required to maintain 3¾" from finished grade.

ESTIMATED QUANTITIES

FOR ONE COMPLETE ABUTMENT

BAR	NO.	SIZE	LENGTH	WEIGHT
A	6	#11	43'-6"	1387
B	5	#11	43'-6"	1156
H1	6	#5	42'-6"	266
H2	12	#5	3'-3"	41
H3	2	#5	1'-4"	3
L1	3	#6	4'-0"	18
L2	3	#6	4'-0"	18
L3	2	#5	2'-8"	6
L4	2	#5	2'-6"	5
S	58	#5	10'-8"	645
T	1	#5	43'-6"	45
U	4	#6	7'-11"	48
V1	43	#5	9'-11"	445
V2	8	#5	12'-1"	101
WH1	12	#6	9'-8"	174
WH2	12	#6	11'-4"	204
WU	14	#4	1'-7"	15
WV	44	#5	5'-10"	268
REINFORCING STEEL ✱			LBS.	4943
CL."C" CONC. (ABUT.)			C.Y.	22.9

✱FOR CONTRACTORS INFO ONLY.

GENERAL NOTES:

DESIGN: HL93 LOADING IN ACCORDANCE WITH A.A.S.H.T.O. STANDARD SPECIFICATIONS.

ALL CONCRETE FOR CAP, BACKWALL, & DRILLED SHAFTS SHALL BE CLASS "C"

DESIGN f'c = 3600 P.S.I.

ALL REINF. STEEL FOR CAP & BACKWALL SHALL BE GRADE 60.

AVERAGE CALCULATED LOAD = 120 TONS/D.S.

CHAMFER ALL EXPOSED EDGES ¾" UNLESS NOTED OTHERWISE.

SHEET 2 OF 2

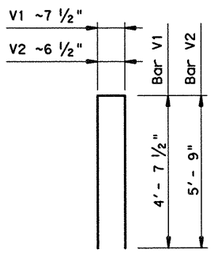

BARS "V"

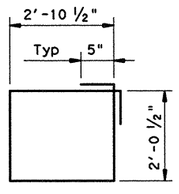

BARS "S"

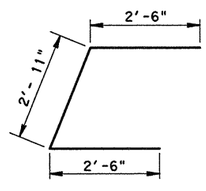

BARS "U"

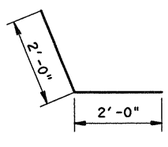

BARS "L1"

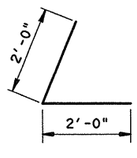

BARS "L2"

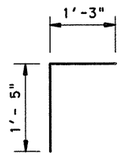

BARS "L3"

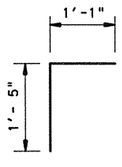

BARS "L4"

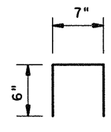

BARS "wU"

© 2005

Texas Department of Transportation

San Antonio District (Structural Design)

The seal appearing on this document was authorized by Kurt Eric Kunze, P.E. 85494, on 03-17-11

Kurt Eric Kunze, P.E.

Date

STATE OF TEXAS — KURT ERIC KUNZE — 85494 — LICENSED PROFESSIONAL ENGINEER

ABUTMENT DETAILS

ABUTMENT NO. A2

LOOP 1604 SOUTHBOUND MAINLANES OVERPASS AT S.H. 151

T:Engdata/Bridge/245201.043/ChangeforTollrd/BBAbut.dgn

PREPARED BY AND FOR USE OF TxDoT.

ORIGINAL DRAWING DATE: OCTOBER 2005

STATE DISTRICT	FEDERAL REGION	FEDERAL AID PROJECT	SHEET
SAT	6		259

COUNTY	CONTROL	SECTION	JOB	HIGHWAY
BEXAR	2452	01	043	LP1604

DN.: KEK
CK.: MMM
DW.: MRM
CK.: KEK

REVISIONS
- -
- -
- -
- -

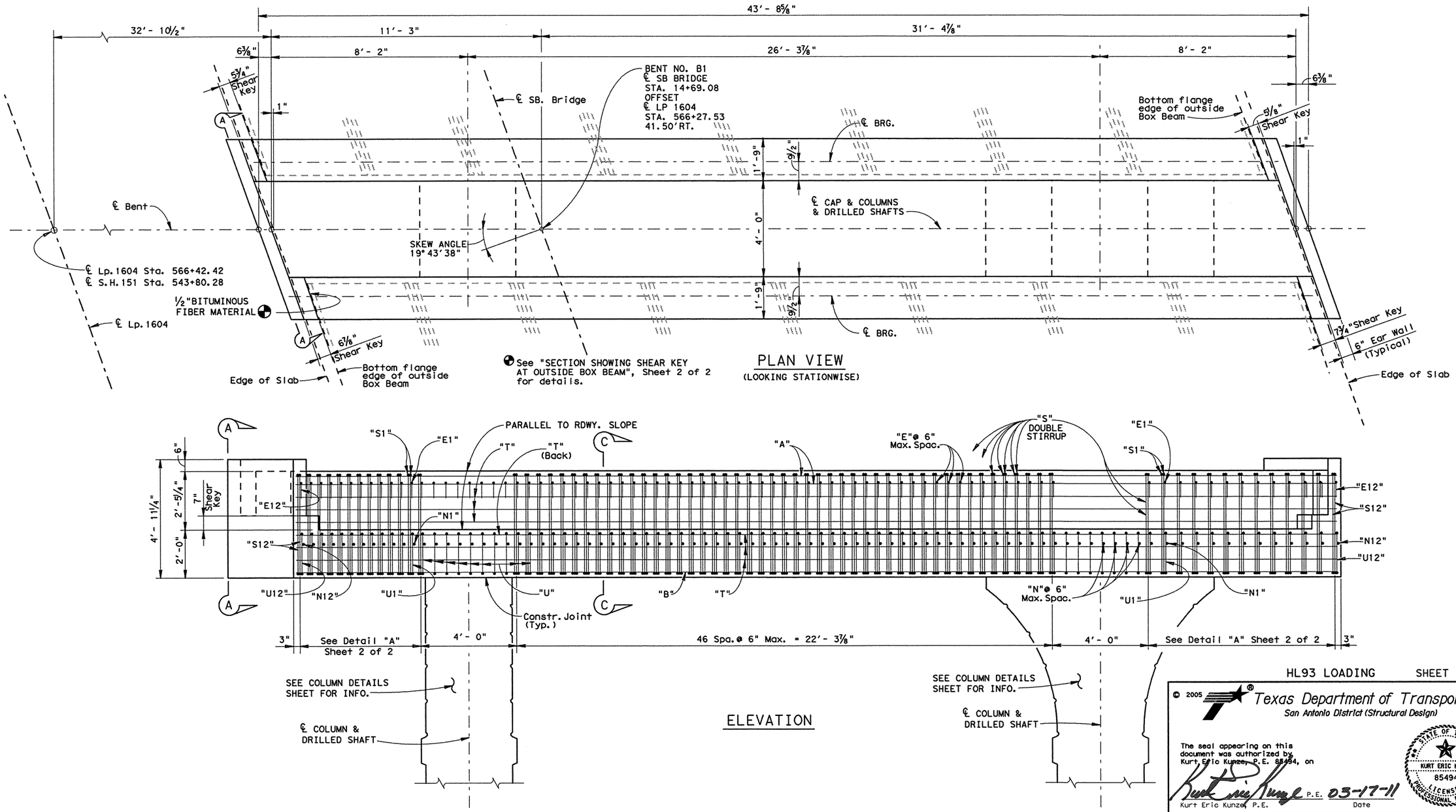

HL93 LOADING SHEET 1 OF 2

© 2005

Texas Department of Transportation
San Antonio District (Structural Design)

The seal appearing on this document was authorized by Kurt Eric Kunze, P.E. 85494, on

Kurt Eric Kunze P.E. 03-17-11
Kurt Eric Kunze, P.E. Date

STATE OF TEXAS KURT ERIC KUNZE 85494 LICENSED PROFESSIONAL ENGINEER

INTERIOR BENT DETAILS

INTERIOR BENT NO. B1

LOOP 1604 SOUTHBOUND MAINLANES OVERPASS AT S.H. 151

T:Engdata/Bridge/245201.043/ChangeforTollRd/Tbent.dgn
PREPARED BY AND FOR USE OF TxDoT.
ORIGINAL DRAWING DATE: OCTOBER 2005

DN.: KEK	REVISIONS	STATE DISTRICT	FEDERAL REGION	FEDERAL AID PROJECT		SHEET
CK.: MMM	- -	SAT	6			260
DW.: MRM	- -	COUNTY		CONTROL	SECTION	JOB	HIGHWAY
CK.: KEK	- -	BEXAR		2452	01	043	LP1604

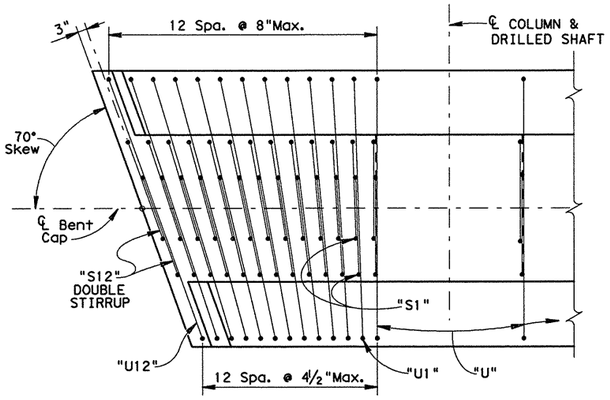

DETAIL "A"

(Showing Bars "S1"-"S12" & "U1"-"U12" only, Bars "E1"-"E12" and "N1"-"N12" not shown for clarity)

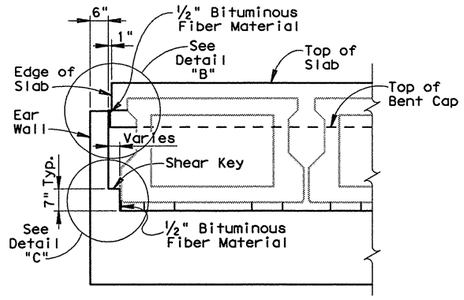

SECTION SHOWING SHEAR KEY & EAR WALL AT OUTSIDE BOX BEAM

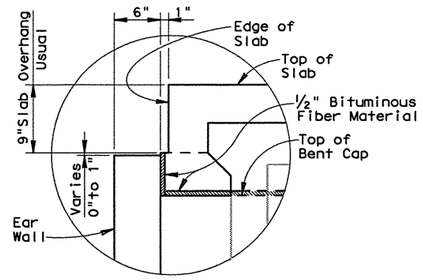

DETAIL "B"

NOTE: A ½" BITUMINOUS FIBER MATERIAL LAYER SHALL BE BONDED TO THE TOP OF BENT CAP AND BACK OF EAR WALL WITH AN APPROVED CONSTRUCTION ADHESIVE.

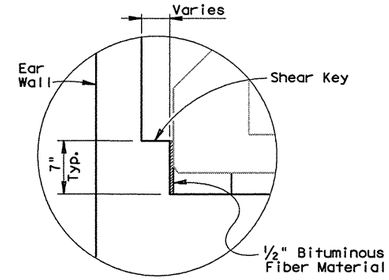

DETAIL "C"

NOTE: A ½" BITUMINOUS FIBER MATERIAL LAYER SHALL BE BONDED TO THE INSIDE FACE OF THE SHEAR KEY, ADJACENT TO THE OUTSIDE BOX BEAM, WITH AN APPROVED CONSTRUCTION ADHESIVE.

ESTIMATED QUANTITIES
FOR ONE BENT CAP ONLY

BAR	NO.	SIZE	LENGTH	WEIGHT
A	16	#11	43'-5"	3691
B	22	#11	43'-5"	5075
C	12	#6	11'-11"	215
E	63	#5	4'-7"	301
※E1-12	24	#5	4'-9"	119
G	12	#5	7'-7"	95
K	16	#5	11'-8"	195
L	24	#6	8'-0"	288
N	63	#6	7'-1"	670
※N1-12	24	#6	7'-4"	264
S	98	#6	15'-3"	2244
※S1-12	48	#6	15'-6"	1118
T	14	#6	43'-5"	915
U	63	#6	18'-5"	1743
※U1-12	24	#6	18'-10"	680
REINF. STEEL			✱ LBS.	17613
CL."C" CONC. (BENT)			C.Y.	40.6

✱ FOR CONTRACTORS INFO ONLY.
※ AVERAGE LENGTH

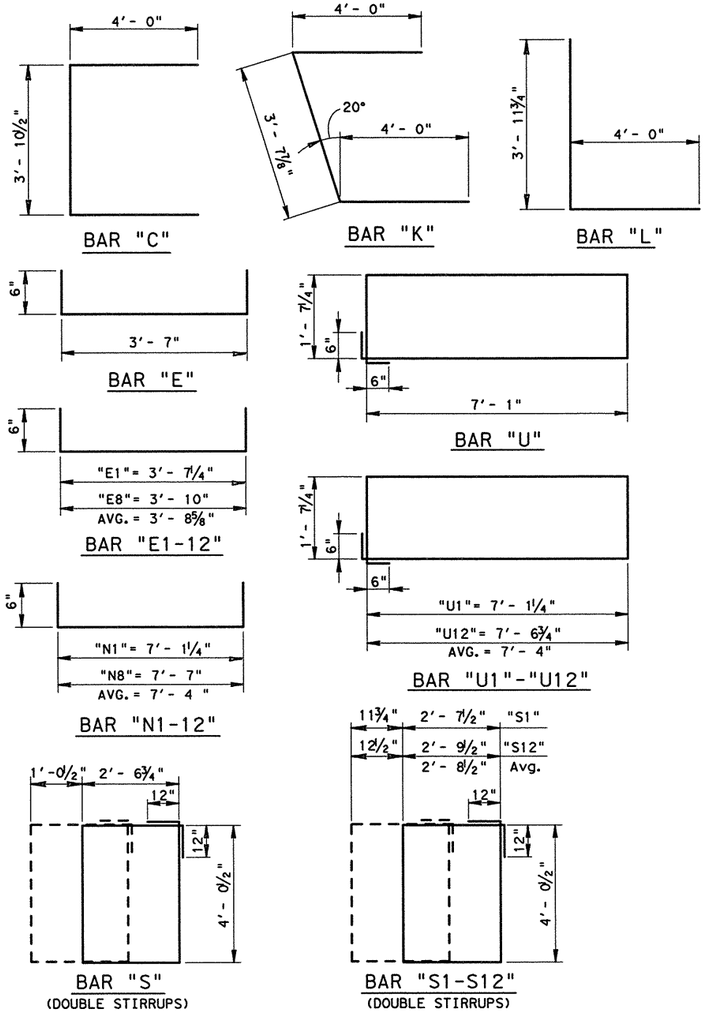

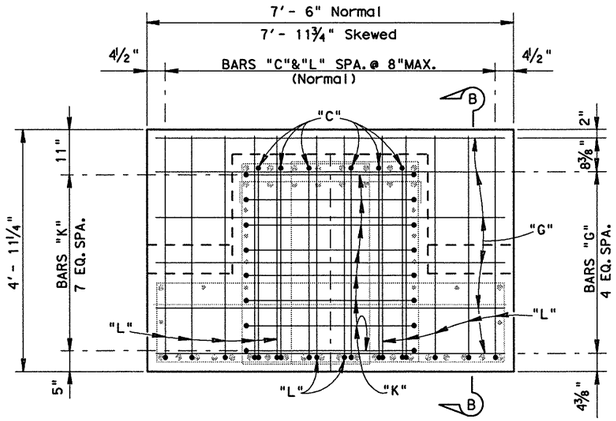

SECTION A-A

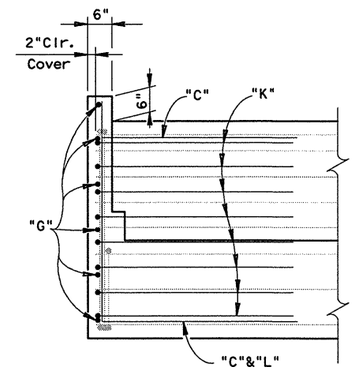

SECTION B-B

(Sections A-A & B-B showing End Cap Earwall Reinforcing steel. Main reinforcing is shaded for clearity)

NOTE: SEE COLUMN DETAILS FOR ADDITIONAL QUANTITIES AND DETAILS TO BE INCLUDED WITH INTERIOR BENTS.

GENERAL NOTES:

DESIGN: HL93 LOADING IN ACCORDANCE WITH A.A.S.H.T.O. STANDARD SPECIFICATIONS.
ALL CONCRETE SHALL BE CLASS "C".
ALL REINFORCING STEEL SHALL BE GRADE 60.
CONCRETE STRENGTH f'c = 3600 P.S.I.
CHAMFER ALL EXPOSED EDGES ¾" UNLESS NOTED OTHERWISE.
AVERAGE CALCULATED LOAD = 480 TONS/D.S.

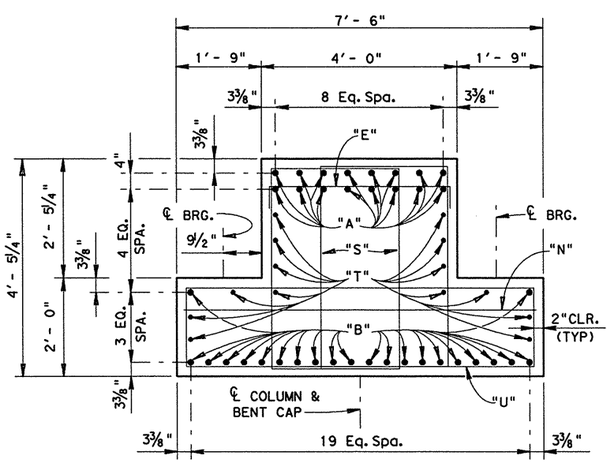

SECTION C-C

(Showing Main reinforcing Steel)

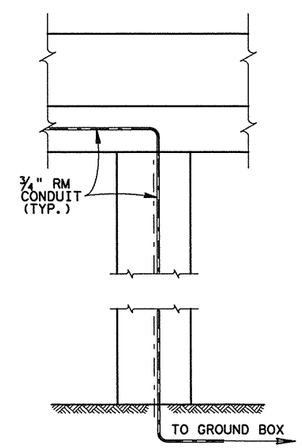

SECTION SHOWING CONDUIT PLACEMENT

(SEE ROADWAY ILLUMINATION DETAILS "RID(4)-04" AND ILLUMINATION LAYOUT SHEETS FOR MORE INFORMATION)

SHEET 2 OF 2

© 2005

Texas Department of Transportation
San Antonio District (Structural Design)

The seal appearing on this document was authorized by Kurt Eric Kunze, P.E. 85494, on 03-17-11

Kurt Eric Kunze, P.E. — Date

STATE OF TEXAS — KURT ERIC KUNZE — 85494 — LICENSED PROFESSIONAL ENGINEER

INTERIOR BENT DETAILS

INTERIOR BENT NO. B1

LOOP 1604 SOUTHBOUND MAINLANES OVERPASS AT S.H. 151

T:Engdata/Bridge/245201.043/ChangeforTollRd/Tbent.dgn			PREPARED BY AND FOR USE OF TxDoT.				
ORIGINAL DRAWING DATE: OCTOBER 2005		STATE DISTRICT	FEDERAL REGION	FEDERAL AID PROJECT			SHEET
DN.: KEK	REVISIONS	SAT	6				261
CK.: MMM	- -	COUNTY		CONTROL	SECTION	JOB	HIGHWAY
DW.: MRM	- -	BEXAR		2452	01	043	LP1604
CK.: KEK	- -						

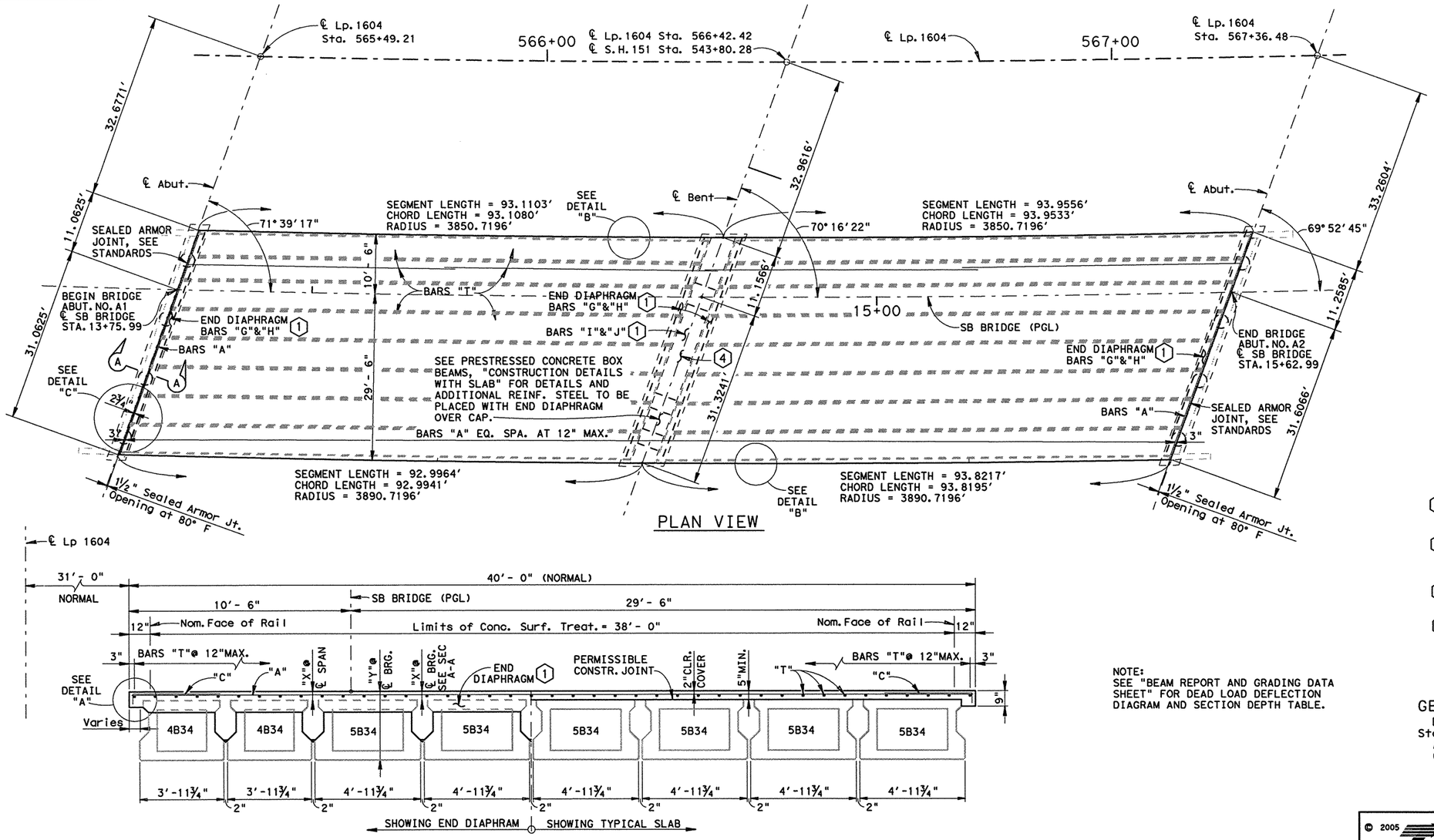

PLAN VIEW

TRANSVERSE SECTION
(LOOKING STATIONWISE)

NOTE:
SEE "BEAM REPORT AND GRADING DATA SHEET" FOR DEAD LOAD DEFLECTION DIAGRAM AND SECTION DEPTH TABLE.

ESTIMATED QUANTITIES
FOR ONE COMPLETE DECK UNIT

BAR	NO.	SIZE	LENGTH	WEIGHT
A	188	#4	42'-0" ‡	5275
C	752	#4	4'-5"	2219
(1) G1	168	#4	2'-8"	299
(1) G2	8	#4	2'-9"	15
(1) G3	8	#4	3'-1"	17
(1) H	16	#5	41'-0"	684
(1) I	83	#5	6'-8"	577
(1) J	42	#4	7'-4"	206
(1) K1	8	#4	3'-2"	17
(1) K2	4	#4	3'-8"	10
⊠ T	42	#4	191'-10"	5382
REINFORCING STEEL ✳			LBS.	14701
CL S CONC. (SLAB) (2)			C.Y.	126.7
CL S CONC. (SHEAR KEY)			C.Y.	76.1
PRESTR. CONC. BOX BMS. (5B34) (3)			L.F.	1090.2
PRESTR. CONC. BOX BMS. (4B34) (3)			L.F.	363.4

✳ FOR CONTRACTORS INFO ONLY.
⊠ INCLUDES THREE (3), 1'-9" MIN. LAPS
‡ AVERAGE LENGTH

(1) See "Prestressed Concrete Box Beam Construction Details with Slab" sheet for reinforcing.

(2) End diaphragm concrete and haunch concrete included in Class "S" Concrete (slab) quantity.

(3) Fabricator shall adjust beam lengths for beam slopes as required.

(4) Bars A and Bars T shall remain continuous through control joints and over Bent.

GENERAL NOTES:
Designed according to current AASHTO Standard and Interim Specifications.
All Reinforcing shall be Grade 60.
Concrete strength f'c = 4000 psi.

HL93 LOADING

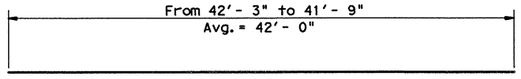

BARS A (#4)

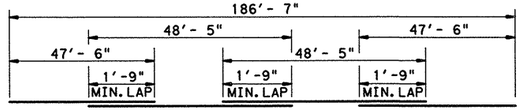

BARS T (#4)

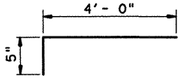

BARS C (#4)

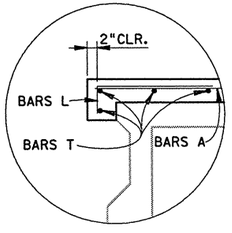

DETAIL "A"

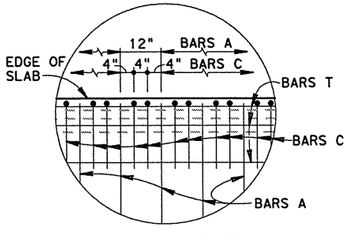

DETAIL "B"

NOTE: 2 BARS "C" EQUALLY SPACED BETWEEN EACH BAR "A".

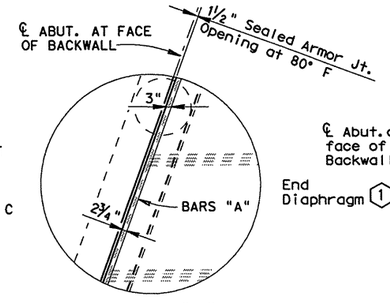

DETAIL "C"

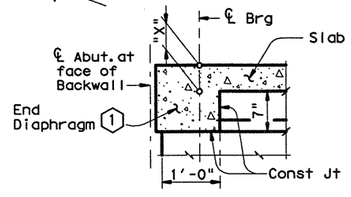

SECTION A-A

SEE PRESTRESSED CONCRETE BOX BEAMS, "CONSTRUCTION DETAILS WITH SLAB" FOR DETAILS AND ADDITIONAL REINF. STEEL TO BE PLACED WITH END DIAPHRAGM OVER ABUTMENT CAP.

© 2005
Texas Department of Transportation
San Antonio District (Structural Design)

The seal appearing on this document was authorized by Kurt Eric Kunze, P.E. 85494, on 03-17-11

Kurt Eric Kunze, P.E. — Date

STATE OF TEXAS — KURT ERIC KUNZE — 85494 — LICENSED PROFESSIONAL ENGINEER

PRESTRESSED CONCRETE BOX BEAM SPAN DETAILS
DECK SPANS 1 AND 2
LOOP 1604 SOUTHBOUND MAINLANES
OVERPASS AT S.H. 151

T:Engdata/Bridge/245201.043/Changefor.../boxbmspan.dgn
PREPARED BY AND FOR USE OF TxDoT.
ORIGINAL DRAWING DATE: APRIL 2005
REVISIONS
DN.: KEK
CK.: MMM
DW.: MRM
CK.: KEK

STATE DISTRICT	FEDERAL REGION	FEDERAL AID PROJECT	SHEET
SAT	6		262

COUNTY	CONTROL	SECTION	JOB	HIGHWAY
BEXAR	2452	01	043	LP1604

BEAM REPORT - SOUTHBOUND

BOX BEAM. NO.	SPAN 1				SPAN 2			
	HORIZ. DIST. C-C BENT	TRUE DIST. BOT. BM. FLANGE	BEAM SLOPE	BEAM BEARINGS	HORIZ. DIST. C-C BENT	TRUE DIST. BOT. BM. FLANGE	BEAM SLOPE	BEAM BEARINGS
1-3	93.0798′	90.4433′	0.01342	S18°10′56.59W	93.9189′	91.2594′	0.01345	S16°47′48.33"W
4-8	93.0798′	90.4431′	0.01328	S18°10′56.59W	93.9189′	91.2592′	0.01330	S16°47′48.33"W

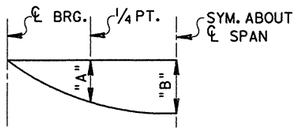

SPAN	BM.	"A"	"B"
1 & 2	1 - 2	0.1052′	0.1476′
1 & 2	3 - 8	0.0973′	0.1366′

DEAD LOAD DEFLECTION DIAGRAM

NOTE: DEFLECTIONS SHOWN ARE DUE TO CAST-IN-PLACE CONCRETE ($E=4.3 \times 10^6$psi)

TABLE OF SECTION DEPTHS

SPAN	BEAM NO.	"X" @ ℄ BRG.	"X" @ ℄ SPAN ☆	"Y" @ ℄ BRG.
1,2	1 - 2	7.522"	6.476"	41.522"
1,2	3 - 8	7.783"	6.735"	41.783"

☆ THEORETICAL DIMENSION

© 2005 Texas Department of Transportation
San Antonio District (Structural Design)

The seal appearing on this document was authorized by Kurt Eric Kunze, P.E., 85494, on 03-17-11

Kurt Eric Kunze, P.E. — Date

STATE OF TEXAS — KURT ERIC KUNZE — 85494 — LICENSED PROFESSIONAL ENGINEER

BEAM REPORT AND GRADING DATA

LOOP 1604 SOUTHBOUND MAINLANES OVERPASS AT S.H. 151

T:Engdata/Bridge/245201.043/Changefor.../boxbmspan.dgn

PREPARED BY AND FOR USE OF TxDoT.

ORIGINAL DRAWING DATE: JUNE 2005

DN. KEK	REVISIONS
CK. MMM	- -
DW. MRM	- -
CK. KEK	- -

STATE DISTRICT	FEDERAL REGION	FEDERAL AID PROJECT #	SHEET
SAT	6		263

COUNTY	CONTROL	SECTION	JOB	HIGHWAY
BEXAR	2452	01	043	LP1604

T:/ENGDATA/BRIDGE/

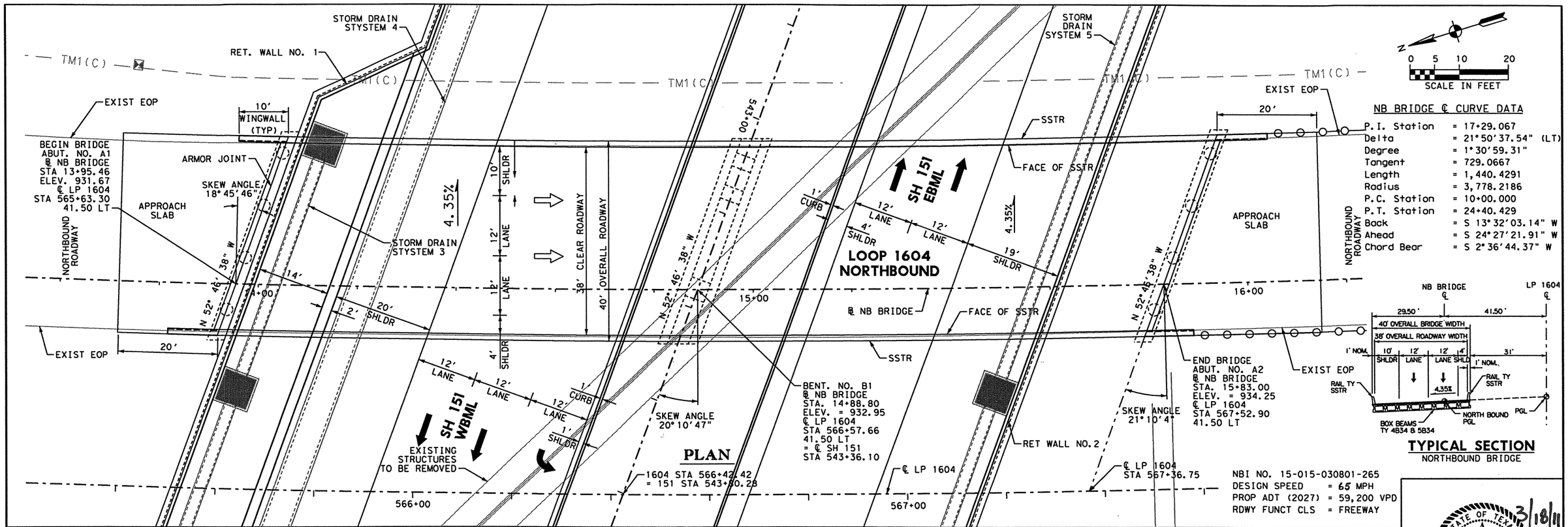

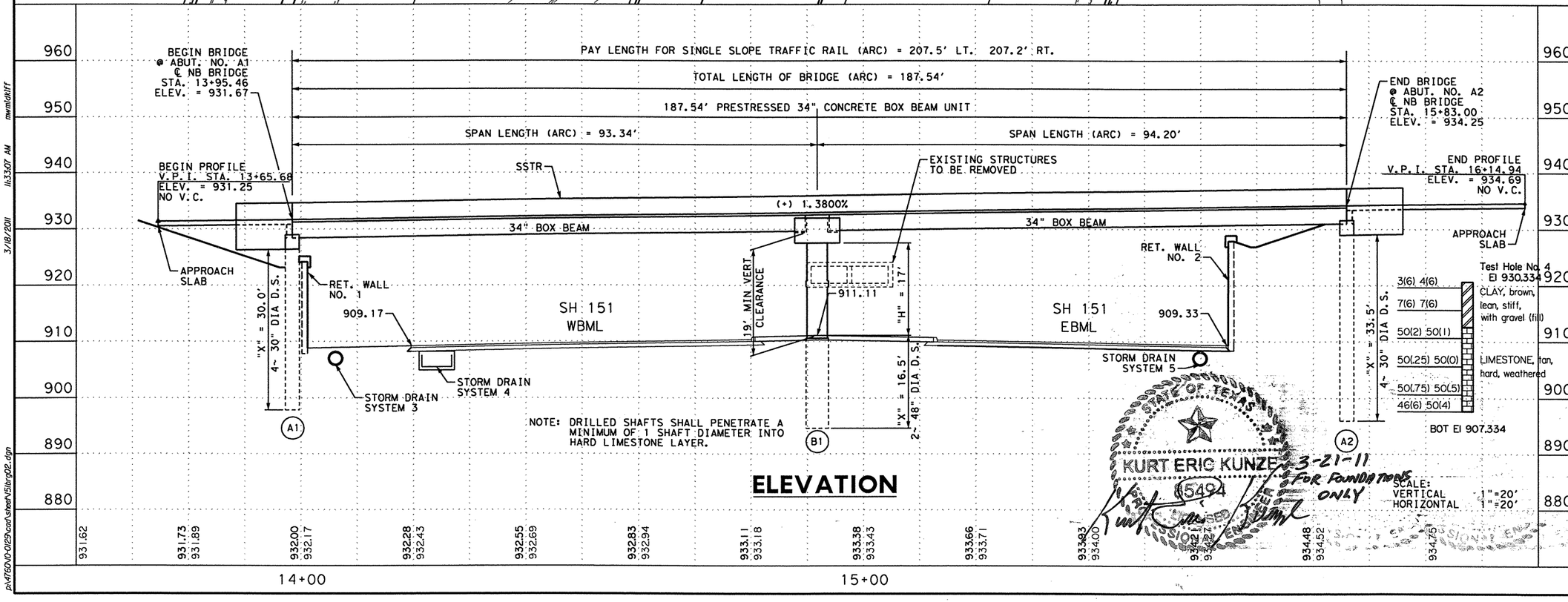

ELEVATION

STATE OF TEXAS
MICHAEL W. MIDKIFF
75435
REGISTERED PROFESSIONAL ENGINEER
3/18/11
FOR ROADWAY GEOMETRICS ONLY

NO.	DATE	REVISION DESCRIPTION	APP. BY

©2011

Texas Department of Transportation

MACTEC
3520 EXECUTIVE CENTER DRIVE
SUITE 200
AUSTIN, TEXAS 78731
(512) 795-0360
REGISTRATION NUMBER: F-1784

STATE OF TEXAS
KURT ERIC KUNZE
5494
REGISTERED PROFESSIONAL ENGINEER
3-21-11
FOR FOUNDATIONS ONLY

SH 151
BRIDGE LAYOUT
LP 1604 MAINLANES
NORTHBOUND
OVERPASS
AT SH 151
(SHEET 2 OF 10)

FED. RD. DIV. NO.			SHEET NO.
			264
STATE	DIST.	COUNTY	
TEXAS	SA	BEXAR	
CONT.	SECT.	JOB	HIGHWAY NO.
2452	01	043	SH 151

mwmidkiff 11:33:07 AM 3/18/2011
p:\4760\0-0129\cad\sheet\15lrg02.dgn

SUMMARY OF ESTIMATED QUANTITIES

ITEM / DESCRIPTION	DRILLED SHAFTS		CLASS"C"CONCRETE		CLASS "S" CONCRETE		PRESTRESSED CONCRETE BOX BEAM		ARMOR JOINT (WITH SEAL)	RAIL	RIPRAP CONC. (CL. B)	SIGN & BRACKET
	30"Ø	48"Ø	ABUT.	BENT	SLAB	SHEAR KEY	(4B34)	(5B34)		TY SSTR		
	L.F.	L.F.	C.Y.	C.Y.	C.Y.	C.Y.	L.F.	L.F.	L.F.	L.F.	C.Y.	EA.
ABUTMENT NO. A1	120		22.5						38.03	20.0		
ABUTMENT NO. A2	134		22.8						38.74	20.0		
BENT NO. B1		33.0		59.5								
SPANS 1 & 2					127.0	78.7	364.5	1093.6		374.7		
TOTAL	254	33.0	45.3	59.5	127.0	78.7	364.5	1093.6	76.77	414.7		1

FOUNDATION DESIGN TABLE ▽

LOCATION	DESIGN LOAD/DS (TONS)	CAPACITY		
		FRICTION		TOTAL TONS
		TSF	TONS	
ABUT A1	150	3.64	200	200
BENT B1	542	3.37	720	720
BENT A2	150	3.64	200	200

▽ NO BELLS REQUIRED.

NOTE: DRILLED SHAFTS SHALL PENETRATE A MINIMUM OF 1 SHAFT DIAMETER INTO HARD LIMESTONE LAYER.

© 2005

Texas Department of Transportation
San Antonio District (Structural Design)

The seal appearing on this document was authorized by Kurt Eric Kunze, P.E. 85494, on 03-17-11

Kurt Eric Kunze, P.E. — Date

STATE OF TEXAS — KURT ERIC KUNZE — 85494 — LICENSED PROFESSIONAL ENGINEER

ESTIMATED QUANTITIES

LOOP 1604 NORTHBOUND MAINLANES OVERPASS AT S.H. 151

T:Engdata/Bridge/245201.043/eq.dgn

PREPARED BY AND FOR USE OF TEXAS SDH&PT

ORIGINAL DRAWING DATE: JUNE 2005

DN. KEK	REVISIONS	STATE DISTRICT	FEDERAL REGION	FEDERAL AID PROJECT	SHEET
CK. MMM	- -	SAT	6		265
DM. MRM	- -				
CK. KEK	- -				

COUNTY	CONTROL	SECTION	JOB	HIGHWAY
BEXAR	2452	01	043	LP1604

T:/ENGDATA/BRIDGE/

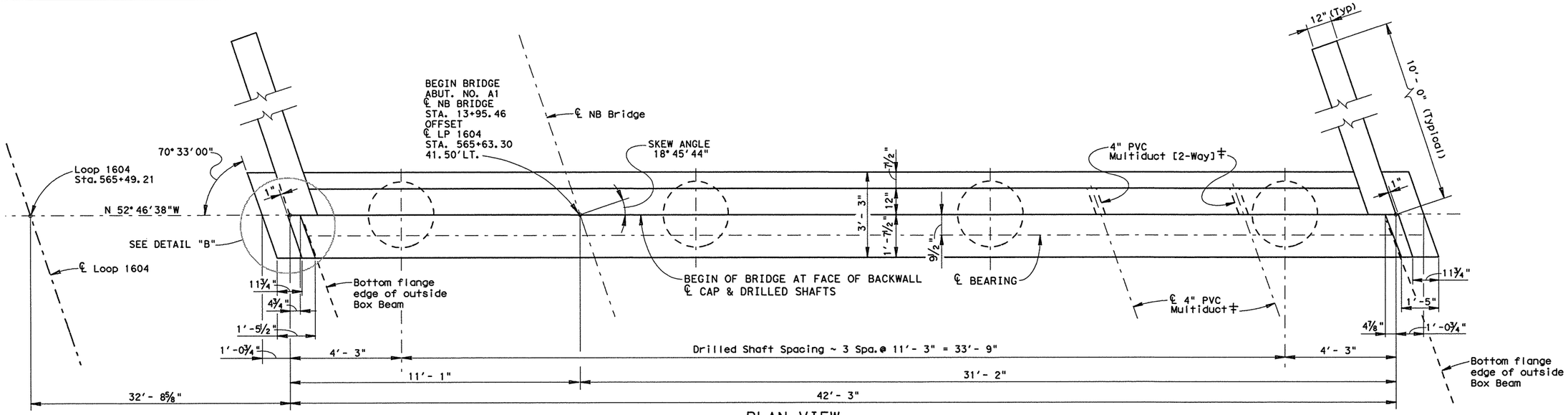

PLAN VIEW

(Looking Back Stationwise)

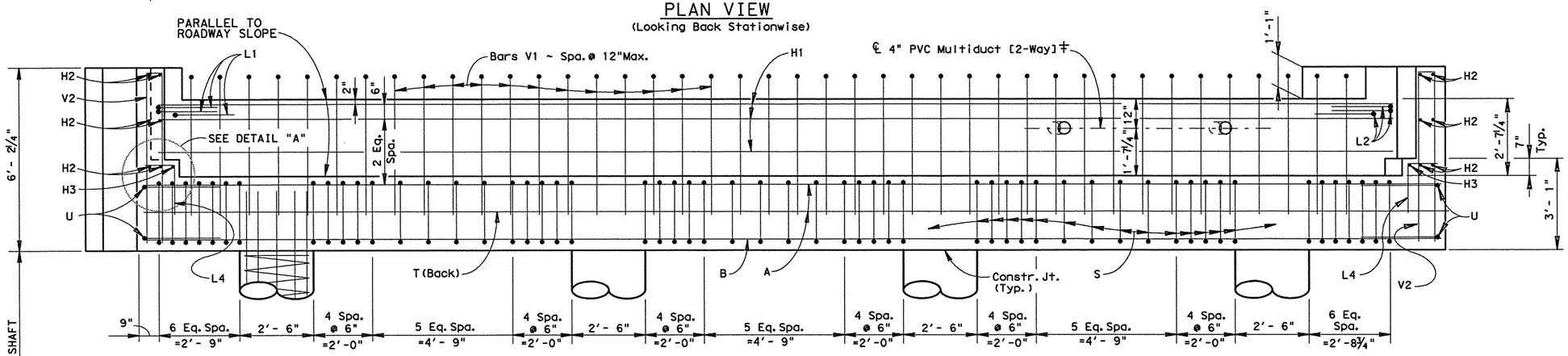

ELEVATION

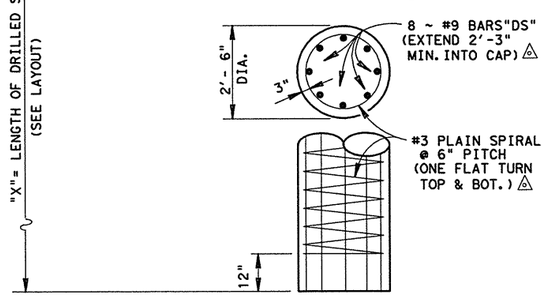

△ INCLUDED IN PRICE BID FOR DRILLED SHAFTS.

‡4" PVC Multiduct [2-Way] shall be placed in the upper portion of the Abutment backwall to align with PVC Multiduct to be placed in two outer Box Beam Shear Keys. The Contractor shall determine that the location of the PVC Multiduct is correctly aligned throughout the Bridge. See LP 1604 TMS Plan Layoutsheet for information.

NOTE: SEE SHEET 2 OF 2 FOR DETAILS AND QUANTITIES NOT SHOWN ON THIS SHEET.

½" BITUMINOUS FIBER MATERIAL LAYER SHALL BE BONDED TO THE INSIDE FACE OF THE SHEAR KEY, ADJACENT TO THE OUTSIDE BOX BEAM, WITH AN APPROVED CONSTRUCTION ADHESIVE. (BOTH SIDES)

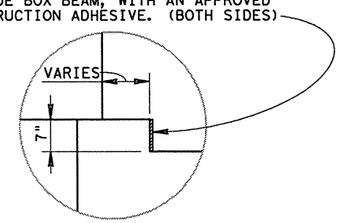

DETAIL "A"

(SHEAR KEY)

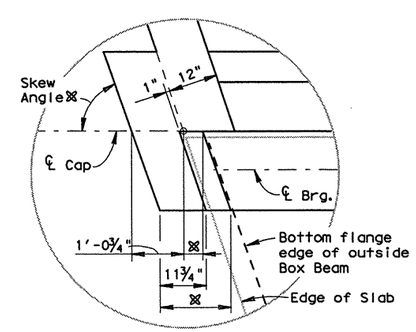

DETAIL "B"

(Abutment End with Ear Wall)

⊠ Varies, see Abutment ends in Plan View. One side shown. Typical for both sides, Opposit hand.

SHEET 1 OF 2

© 2003

Texas Department of Transportation
San Antonio District (Structural Design)

The seal appearing on this document was authorized by Kurt Eric Kunze, P.E. 85494, on 03-17-11

Kurt Eric Kunze, P.E. — Date

STATE OF TEXAS — KURT ERIC KUNZE — 85494 — LICENSED PROFESSIONAL ENGINEER

ABUTMENT DETAILS

ABUTMENT NO. A1

LOOP 1604 NORTHBOUND MAINLANES OVERPASS AT S.H. 151

T:Engdata/Bridge/245201.043/ChangeforTollrd/BBAbut.dgn				PREPARED BY AND FOR USE OF TxDoT.			
ORIGINAL DRAWING DATE: OCTOBER 2005		STATE DISTRICT	FEDERAL REGION	FEDERAL AID PROJECT			SHEET
DN.: KEK	REVISIONS	SAT	6				266
CK.: MMM	- -	COUNTY		CONTROL	SECTION	JOB	HIGHWAY
DW.: MRM	- -	BEXAR		2452	01	043	LP1604
CK.: KEK	- -						

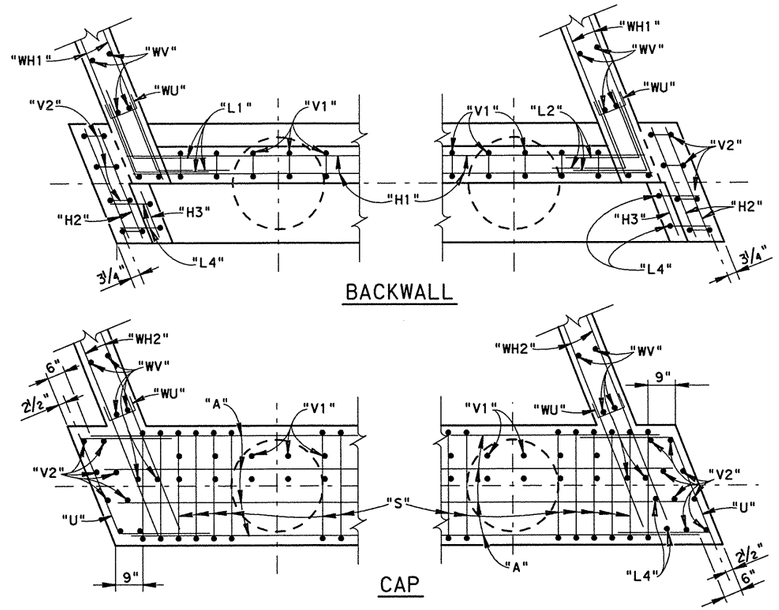

CORNER DETAILS

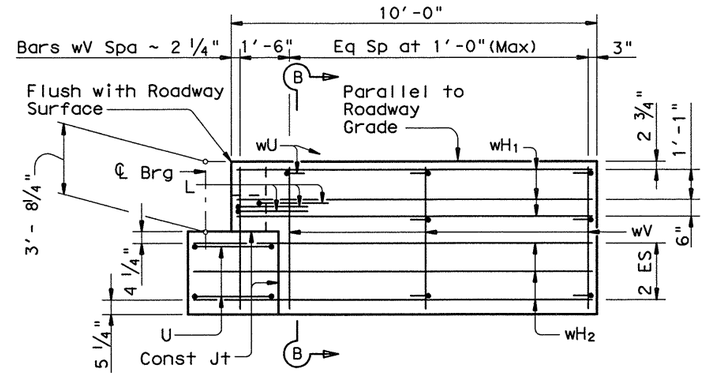

WINGWALL ELEVATION

Ear wall not shown for clarity

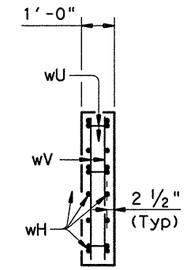

SECTION B-B

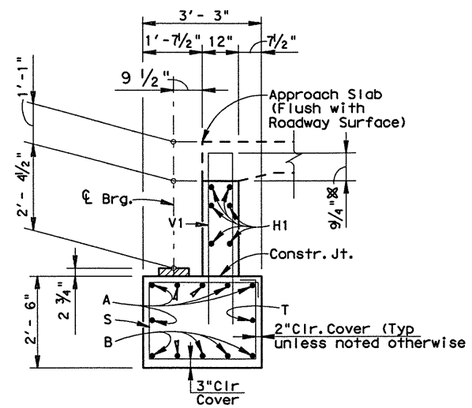

SECTION THRU CAP

(With Approach Slab)

※Increase as required to maintain 3 3/4" from finished grade.

ESTIMATED QUANTITIES
FOR ONE COMPLETE ABUTMENT

BAR	NO.	SIZE	LENGTH	WEIGHT
A	6	#11	42'-11"	1368
B	5	#11	42'-11"	1140
H1	6	#5	41'-11"	262
H2	12	#5	3'-3"	41
H3	2	#5	1'-4"	3
L1	3	#6	4'-0"	18
L2	3	#6	4'-0"	18
L4	4	#5	2'-5"	10
S	56	#5	10'-8"	623
T	1	#5	42'-11"	45
U	4	#6	7'-11"	48
V1	42	#5	9'-11"	435
V2	8	#5	12'-1"	101
WH1	12	#6	9'-8"	174
WH2	12	#6	11'-4"	204
WU	14	#4	1'-7"	15
WV	44	#5	5'-10"	268
REINFORCING STEEL ✳			LBS.	4773
CL."C" CONC. (ABUT.)			C.Y.	22.5

✳FOR CONTRACTORS INFO ONLY.

GENERAL NOTES:

DESIGN: HL93 LOADING IN ACCORDANCE WITH A.A.S.H.T.O. STANDARD SPECIFICATIONS.

ALL CONCRETE FOR CAP, BACKWALL, & DRILLED SHAFTS SHALL BE CLASS "C"

DESIGN f'c = 3600 P.S.I.

ALL REINF. STEEL FOR CAP & BACKWALL SHALL BE GRADE 60.

AVERAGE CALCULATED LOAD = 120 TONS/D.S.

CHAMFER ALL EXPOSED EDGES 3/4" UNLESS NOTED OTHERWISE.

SHEET 2 OF 2

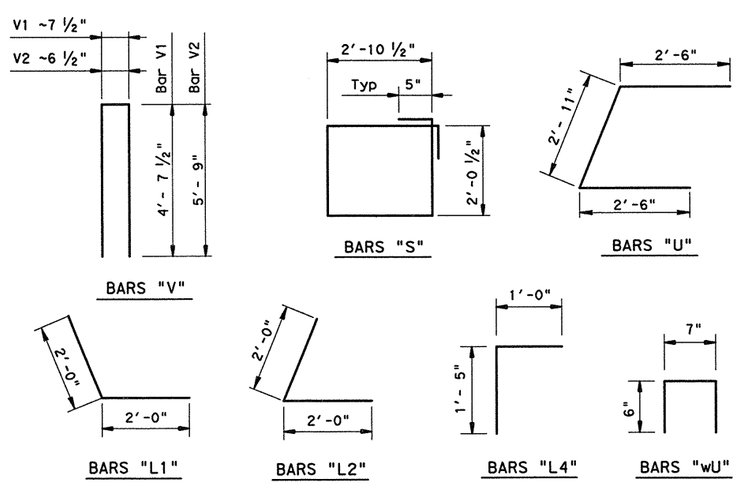

© 2005

Texas Department of Transportation
San Antonio District (Structural Design)

The seal appearing on this document was authorized by Kurt Eric Kunze, P.E. 85494, on 03-17-11

Kurt Eric Kunze, P.E.

Date

STATE OF TEXAS
KURT ERIC KUNZE
85494
LICENSED PROFESSIONAL ENGINEER

ABUTMENT DETAILS
ABUTMENT NO. A1

LOOP 1604 NORTHBOUND MAINLANES OVERPASS AT S.H. 151

T:Engdata/Bridge/245201.043/ChangeforTollrd/BBAbut.dgn

PREPARED BY AND FOR USE OF TxDoT.

ORIGINAL DRAWING DATE: APRIL 2005

DN.: KEK	REVISIONS		
CK.: MMM	- -		
DW.: MRM	- -		
CK.: KEK	- -		

STATE DISTRICT	FEDERAL REGION	FEDERAL AID PROJECT #	SHEET
SAT	6		267

COUNTY	CONTROL	SECTION	JOB	HIGHWAY
BEXAR	2452	01	043	LP1604

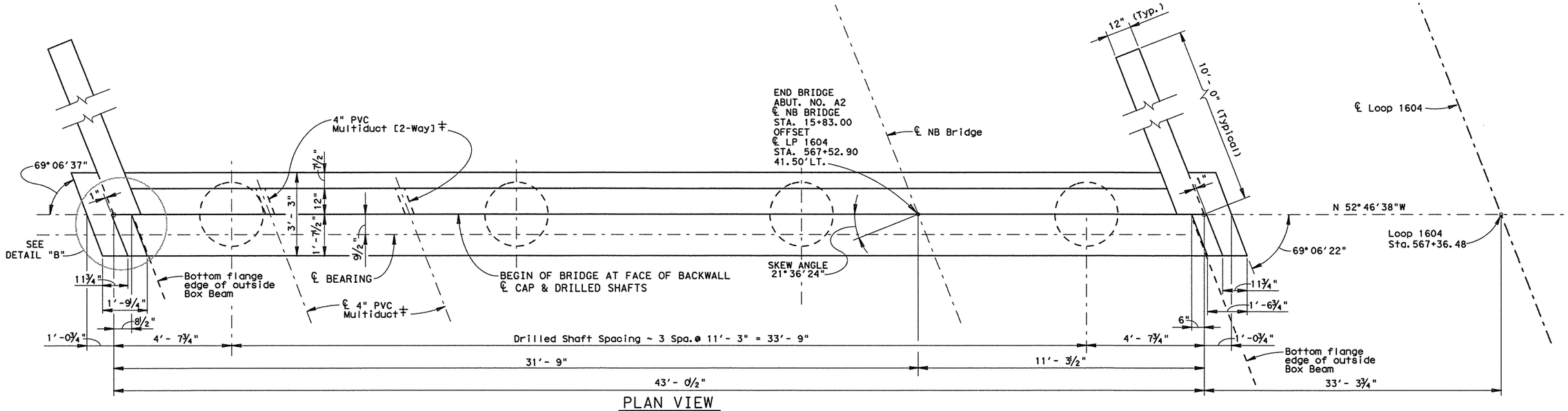

PLAN VIEW
(Looking Stationwise)

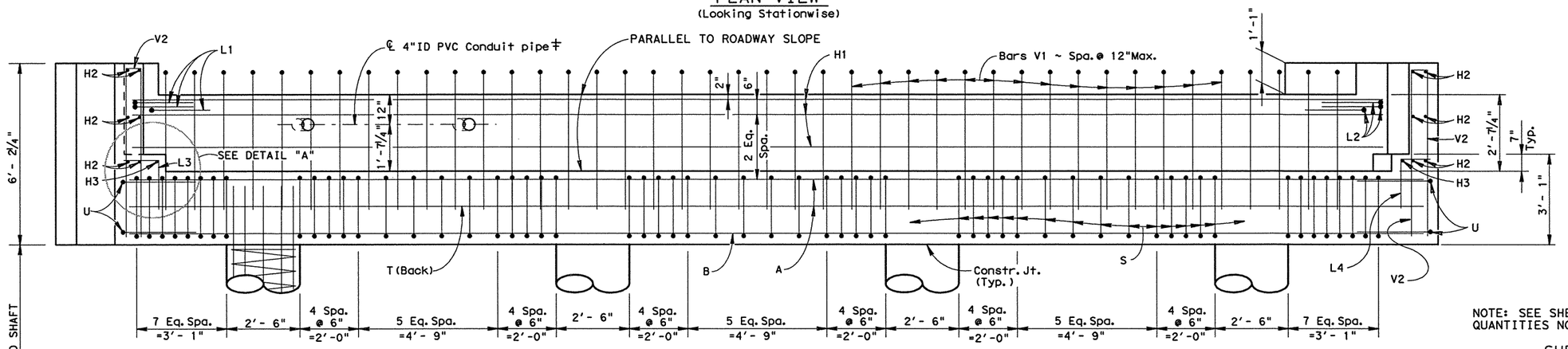

ELEVATION

‡ 4" PVC Multiduct [2-Way] shall be placed in the upper portion of the Abutment backwall to align with PVC Multiduct to be placed in two outer Box Beam Shear Keys. The Contractor shall determine that the location of the PVC Multiduct is correctly aligned throughout the Bridge. See LP 1604 TMS Plan Layoutsheet for information.

NOTE: SEE SHEET 2 OF 2 FOR DETAILS AND QUANTITIES NOT SHOWN ON THIS SHEET.

SHEET 1 OF 2

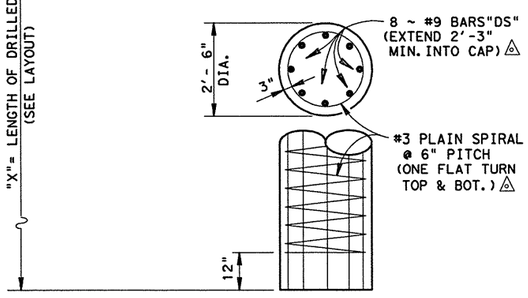

△ INCLUDED IN PRICE BID FOR DRILLED SHAFTS.

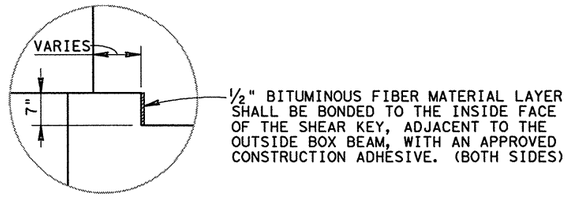

DETAIL "A"
(SHEAR KEY)

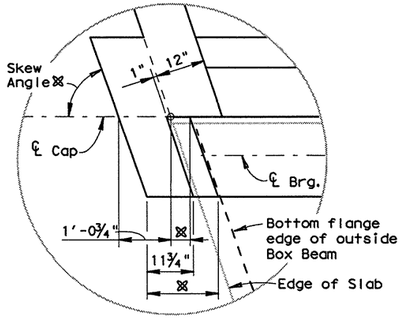

DETAIL "B"
(Abutment End with Ear Wall)

⊠ Varies, see Abutment ends in Plan View. One side shown. Typical for both sides, Opposit hand.

© 2003

Texas Department of Transportation
San Antonio District (Structural Design)

The seal appearing on this document was authorized by Kurt Eric Kunze, P.E. 85494, on 03-17-11

Kurt Eric Kunze, P.E. Date

STATE OF TEXAS
KURT ERIC KUNZE
85494
LICENSED
PROFESSIONAL ENGINEER

ABUTMENT DETAILS
ABUTMENT NO. A2

LOOP 1604 NORTHBOUND MAINLANES OVERPASS AT S.H. 151

T:\Engdata/Bridge/245201.043/ChangeforTollrd/BBAbut.dgn				PREPARED BY AND FOR USE OF TxDoT.				
ORIGINAL DRAWING DATE: OCTOBER 2005		STATE DISTRICT	FEDERAL REGION	FEDERAL AID PROJECT				SHEET
DN.: KEK	REVISIONS	SAT	6					268
CK.: MMM	- -	COUNTY		CONTROL	SECTION	JOB		HIGHWAY
DW.: MRM	- -	BEXAR		2452	01	043		LP1604
CK.: KEK	- -							

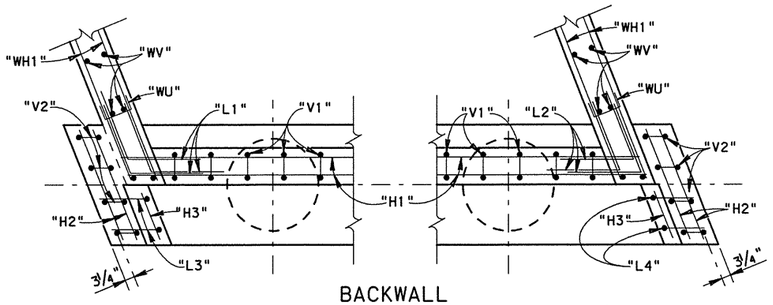

BACKWALL

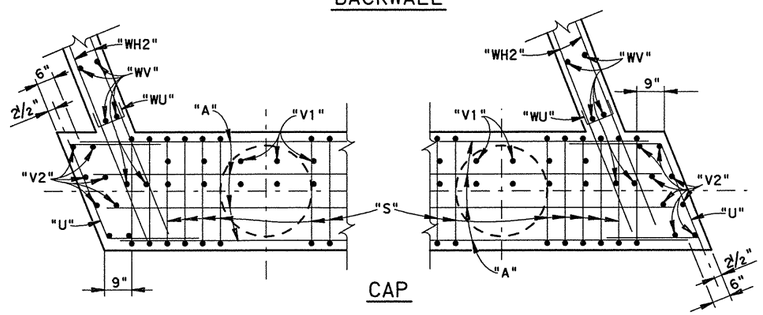

CAP

CORNER DETAILS

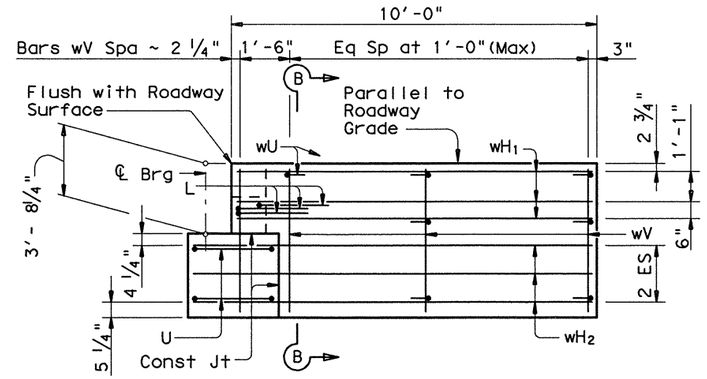

WINGWALL ELEVATION

Ear wall not shown for clarity

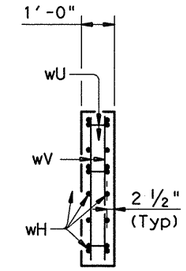

SECTION B-B

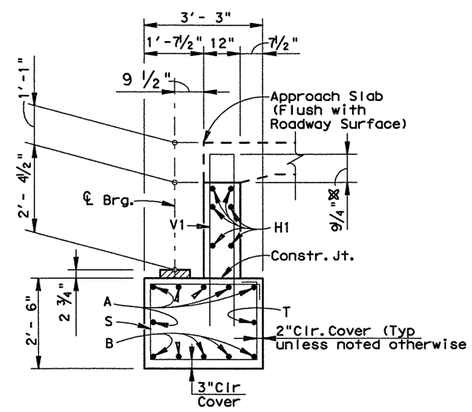

SECTION THRU CAP

(With Approach Slab)

※Increase as required to maintain 3 3/4" from finished grade.

ESTIMATED QUANTITIES

FOR ONE COMPLETE ABUTMENT

BAR	NO.	SIZE	LENGTH	WEIGHT
A	6	#11	43'-8"	1392
B	5	#11	43'-8"	1160
H1	6	#5	42'-9"	268
H2	12	#5	3'-3"	41
H3	2	#5	1'-4"	3
L1	3	#6	4'-0"	18
L2	3	#6	4'-0"	18
L3	2	#5	2'-8"	6
L4	2	#5	2'-6"	5
S	58	#5	10'-8"	645
T	1	#5	43'-8"	46
U	4	#6	7'-11"	48
V1	43	#5	9'-11"	445
V2	8	#5	12'-1"	101
WH1	12	#6	9'-8"	174
WH2	12	#6	11'-4"	204
WU	14	#4	1'-7"	15
WV	44	#5	5'-10"	268
REINFORCING STEEL ✱			LBS.	4857
CL."C" CONC.(ABUT.)			C.Y.	22.8

✱FOR CONTRACTORS INFO ONLY.

GENERAL NOTES:

DESIGN: HL93 LOADING IN ACCORDANCE WITH A.A.S.H.T.O. STANDARD SPECIFICATIONS.

ALL CONCRETE FOR CAP, BACKWALL, & DRILLED SHAFTS SHALL BE CLASS "C"

DESIGN f'c = 3600 P.S.I.

ALL REINF. STEEL FOR CAP & BACKWALL SHALL BE GRADE 60.

AVERAGE CALCULATED LOAD = 120 TONS/D.S.

CHAMFER ALL EXPOSED EDGES 3/4" UNLESS NOTED OTHERWISE.

SHEET 2 OF 2

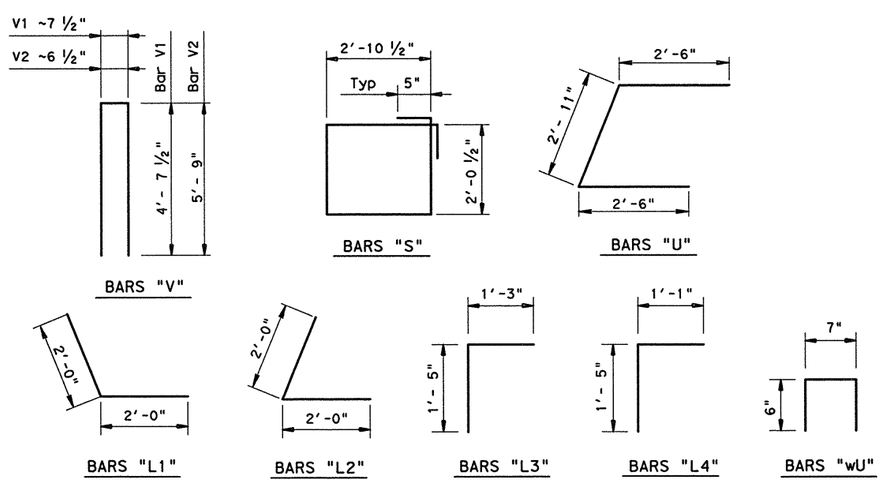

© 2005

Texas Department of Transportation

San Antonio District (Structural Design)

The seal appearing on this document was authorized by Kurt Eric Kunze, P.E. 85494, on 03-17-11

Kurt Eric Kunze, P.E. — Date

STATE OF TEXAS — KURT ERIC KUNZE — 85494 — LICENSED PROFESSIONAL ENGINEER

ABUTMENT DETAILS

ABUTMENT NO. A2

LOOP 1604 NORTHBOUND MAINLANES OVERPASS AT S.H. 151

T:Engdata/Bridge/245201.043/ChangeforTollrd/BBAbut.dgn

PREPARED BY AND FOR USE OF TxDoT.

ORIGINAL DRAWING DATE: OCTOBER 2005

DN.: KEK
CK.: MMM
DW.: MRM
CK.: KEK

REVISIONS

STATE DISTRICT	FEDERAL REGION	FEDERAL AID PROJECT	SHEET
SAT	6		269

COUNTY	CONTROL	SECTION	JOB	HIGHWAY
BEXAR	2452	01	043	LP1604

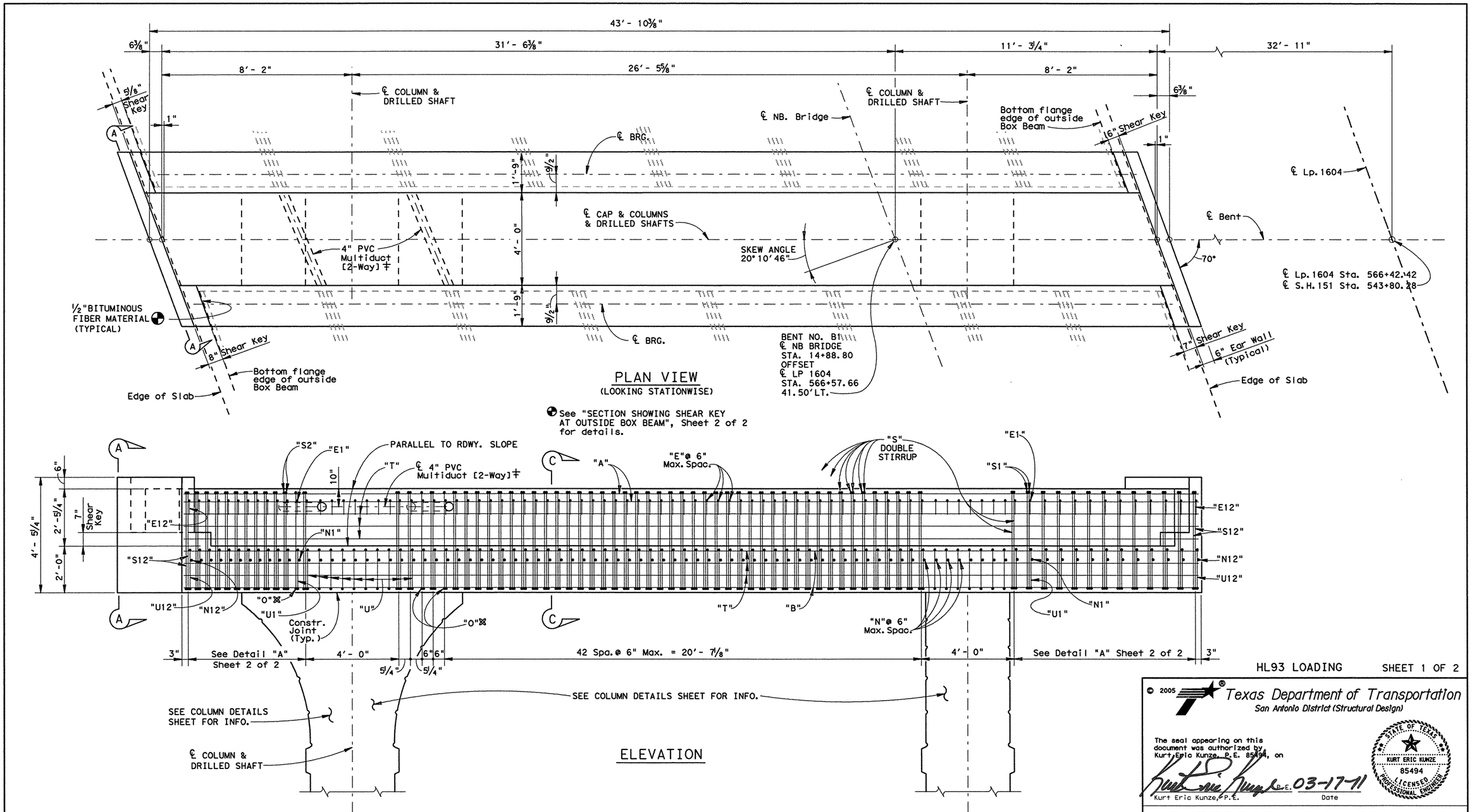

PLAN VIEW
(LOOKING STATIONWISE)

See "SECTION SHOWING SHEAR KEY AT OUTSIDE BOX BEAM", Sheet 2 of 2 for details.

ELEVATION

⊠ Bars "S" & "S1" (Double Stirrup) to be replaced with Bar "O" (Single Stirrup) to clear the 4"ID PVC conduit pipes. See Detail "A", sheet 2 of 2 for details.

‡ 4"ID PVC conduit pipe shall be placed in the upper portion of the Bent cap to align with PVC pipe to be placed in the two outer Box Beam Shear Keys. The Contractor shall determine that the location of the PVC pipe is correctly aligned throughout the Bridge.

HL93 LOADING

SHEET 1 OF 2

© 2005

Texas Department of Transportation
San Antonio District (Structural Design)

The seal appearing on this document was authorized by Kurt Eric Kunze, P.E. 85494, on

Kurt Eric Kunze, P.E. 03-17-11
Date

STATE OF TEXAS
KURT ERIC KUNZE
85494
LICENSED
PROFESSIONAL ENGINEER

INTERIOR BENT DETAILS

INTERIOR BENT NO. B1

LOOP 1604 NORTHBOUND MAINLANES OVERPASS AT S.H. 151

T:Engdata/Bridge/245201.043/ChangeforTollRd/Tbent.dgn

PREPARED BY AND FOR USE OF TxDoT.

ORIGINAL DRAWING DATE: October 2005

DN.: KEK	REVISIONS	STATE DISTRICT	FEDERAL REGION	FEDERAL AID PROJECT		SHEET
CK.: MMM	- -	SAT	6			270
DW.: MRM	- -	COUNTY		CONTROL	SECTION	JOB	HIGHWAY
CK.: KEK	- -	BEXAR		2452	01	043	LP1604

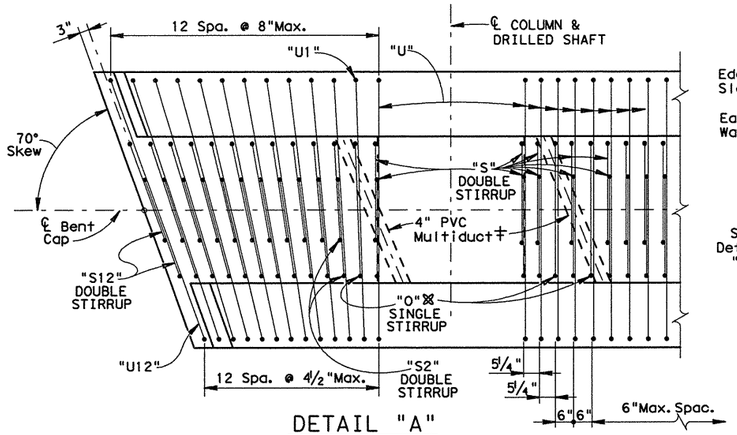

DETAIL "A"

(Showing Bars "S","S1"-"S12","U","U1"-"U12" & "O" only, Bars "E","E1"-"E12" and "N","N1"-"N12" not shown for clarity)

※ Bars "S" & "S1" (Double Stirrup) to be replaced with Bar "O" (Single Stirrup) to clear the 4"ID PVC conduit pipes.

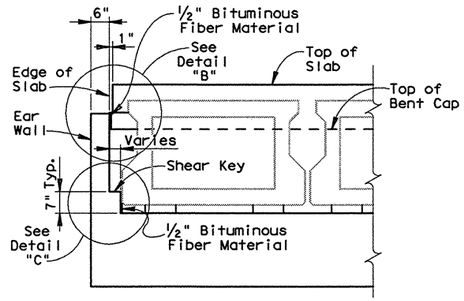

SECTION SHOWING SHEAR KEY & EAR WALL AT OUTSIDE BOX BEAM

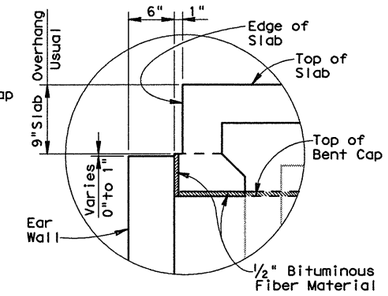

DETAIL "B"

NOTE: A ½" BITUMINOUS FIBER MATERIAL LAYER SHALL BE BONDED TO THE TOP OF BENT CAP AND BACK OF EAR WALL WITH AN APPROVED CONSTRUCTION ADHESIVE.

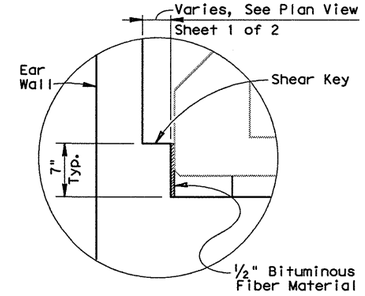

DETAIL "C"

NOTE: A ½" BITUMINOUS FIBER MATERIAL LAYER SHALL BE BONDED TO THE INSIDE FACE OF THE SHEAR KEY, ADJACENT TO THE OUTSIDE BOX BEAM, WITH AN APPROVED CONSTRUCTION ADHESIVE.

ESTIMATED QUANTITIES
FOR ONE BENT CAP ONLY

BAR	NO.	SIZE	LENGTH	WEIGHT
A	16	#11	43'-6"	3698
B	22	#11	43'-6"	5085
C	12	#6	11'-11"	215
E	63	#5	4'-7"	301
※E1-12	24	#5	4'-9"	119
G	12	#5	7'-7"	95
K	16	#5	11'-8"	195
L	24	#6	8'-0"	288
N	63	#6	7'-1"	670
※N1-12	24	#6	7'-4"	264
O	3	#7	17'-4"	106
S	94	#6	15'-3"	2153
※S1-12	48	#6	15'-6"	1118
T	14	#6	43'-6"	915
U	63	#6	18'-5"	1743
※U1-12	24	#6	18'-10"	680
REINF. STEEL			✱ LBS.	17645
CL."C" CONC. (BENT)			C.Y.	40.6

✱ FOR CONTRACTORS INFO ONLY.
※ AVERAGE LENGTH

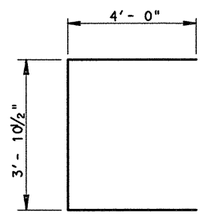

BAR "C"

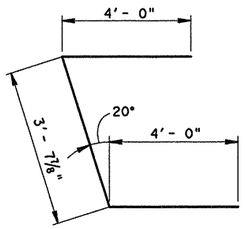

BAR "K"

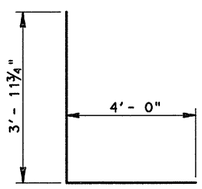

BAR "L"

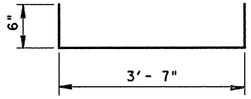

BAR "E"

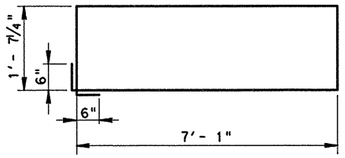

BAR "U"

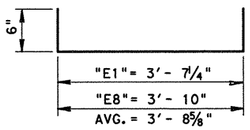

BAR "E1-12"

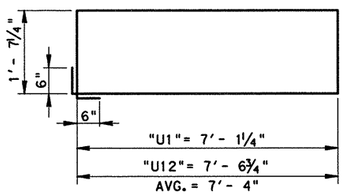

BAR "U1"-"U12"

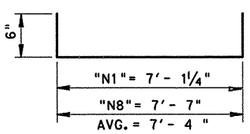

BAR "N1-12"

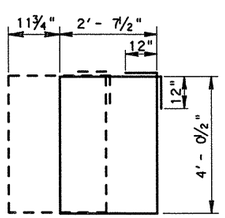

BAR "S"
(DOUBLE STIRRUPS)

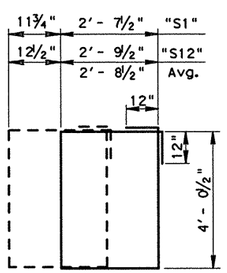

BAR "S1-S12"
(DOUBLE STIRRUPS)

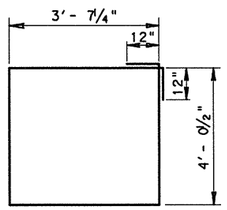

BAR "O"※
(SINGLE STIRRUPS)

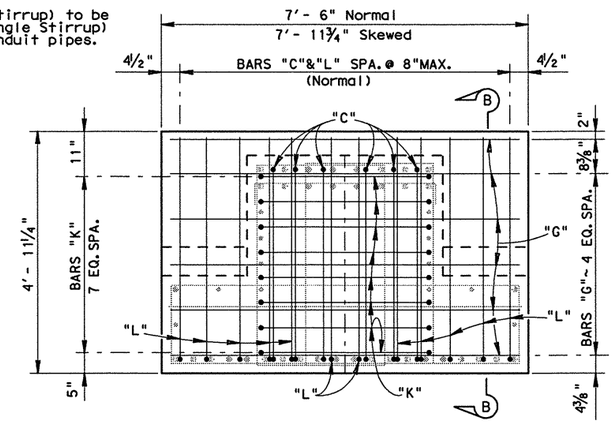

SECTION A-A

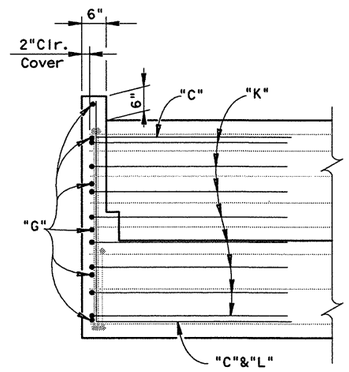

SECTION B-B

(Sections A-A & B-B showing End Cap Earwall Reinforcing steel. Main reinforcing is shaded for clearity)

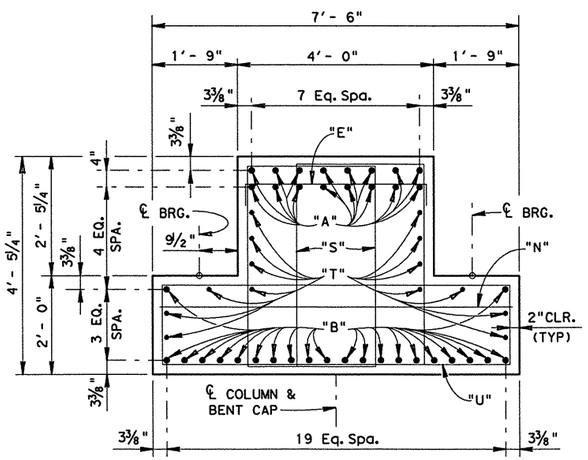

SECTION C-C
(Showing Main reinforcing Steel)

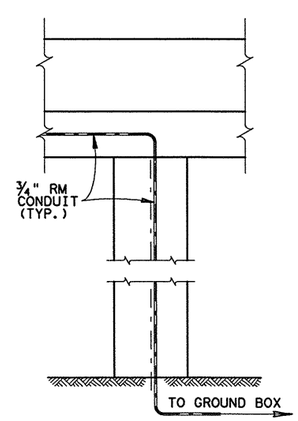

SECTION SHOWING CONDUIT PLACEMENT

(SEE ROADWAY ILLUMINATION DETAILS "RID(4)-04" AND ILLUMINATION LAYOUT SHEETS FOR MORE INFORMATION)

NOTE: SEE COLUMN DETAILS FOR ADDITIONAL QUANTITIES AND DETAILS TO BE INCLUDED WITH INTERIOR BENTS.

GENERAL NOTES:

DESIGN: HL93 LOADING IN ACCORDANCE WITH A.A.S.H.T.O. STANDARD SPECIFICATIONS.
ALL CONCRETE SHALL BE CLASS "C".
ALL REINFORCING STEEL SHALL BE GRADE 60.
CONCRETE STRENGTH f'c = 3600 P.S.I.
CHAMFER ALL EXPOSED EDGES ¾" UNLESS NOTED OTHERWISE.
AVERAGE CALCULATED LOAD = 480 TONS/D.S.

SHEET 2 OF 2

© 2005
Texas Department of Transportation
San Antonio District (Structural Design)

The seal appearing on this document was authorized by Kurt Eric Kunze, P.E. 85494 on 03-17-11

Kurt Eric Kunze, P.E. — Date

STATE OF TEXAS · KURT ERIC KUNZE · 85494 · LICENSED PROFESSIONAL ENGINEER

INTERIOR BENT DETAILS

INTERIOR BENT NO. B1

LOOP 1604 NORTHBOUND MAINLANES OVERPASS AT S.H. 151

T:Engdata/Bridge/245201.043/ChangeforTollRd/Tbent.dgn			PREPARED BY AND FOR USE OF TxDoT.				
ORIGINAL DRAWING DATE: OCTOBER 2005		STATE DISTRICT	FEDERAL REGION	FEDERAL AID PROJECT ✱			SHEET
DN.: KEK	REVISIONS	SAT	6				271
CK.: MMM	- -	COUNTY		CONTROL	SECTION	JOB	HIGHWAY
DW.: MRM	- -	BEXAR		2452	01	043	LP1604
CK.: KEK	- -						

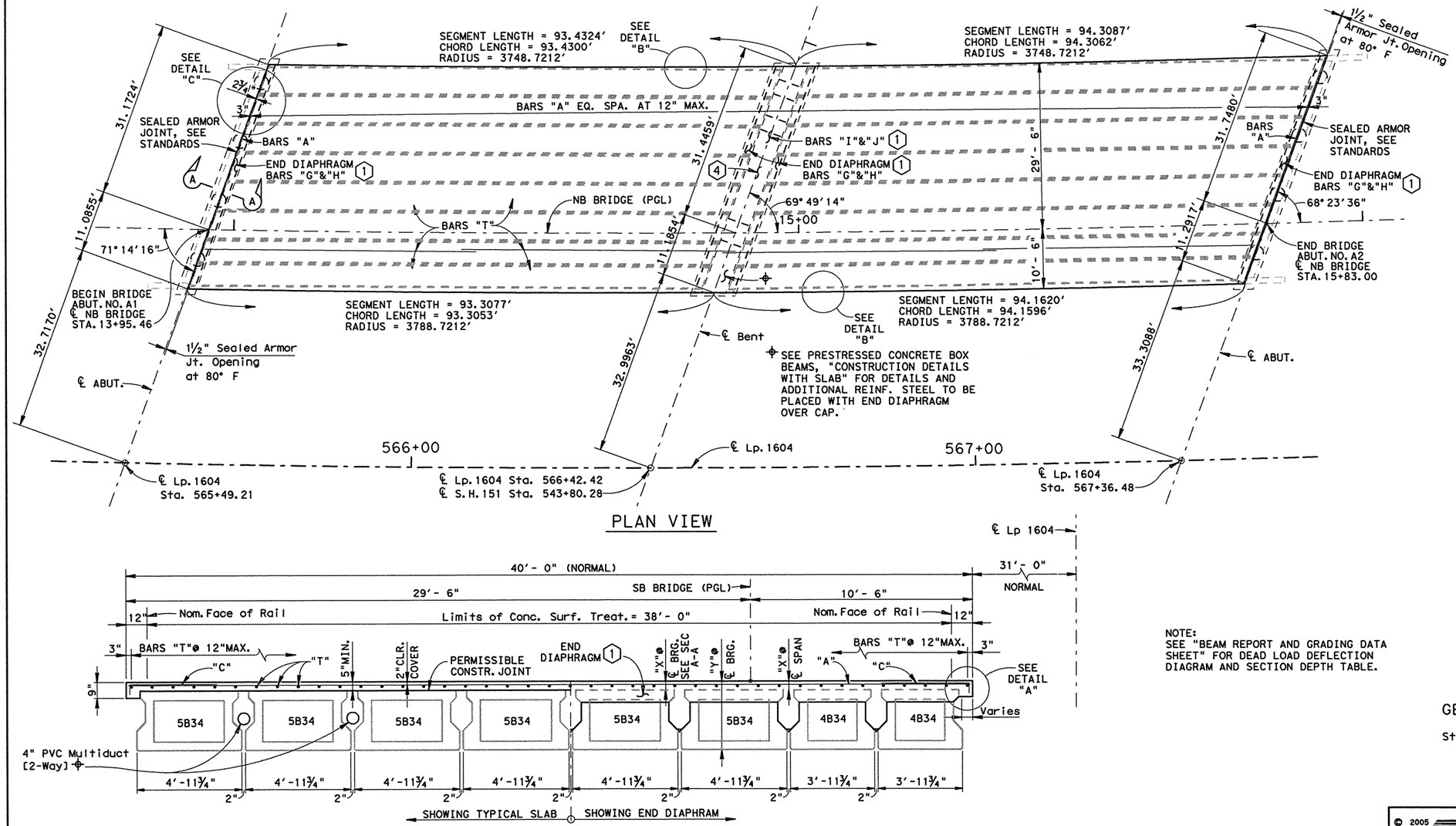

PLAN VIEW

TRANSVERSE SECTION
(LOOKING STATIONWISE)

4" PVC Multiduct [2-Way] shall be placed in the two outer Box Beam Shear Keys and shall align with the PVC Multiduct in the Abutment backwall and the Bent cap. The Contractor shall determine that the location of the PVC Multiduct is correctly aligned throughout the bridge. See LP 1604 TMS Plan Layout for more information.

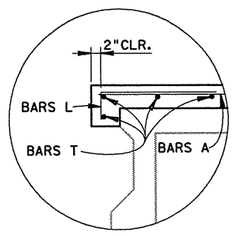

DETAIL "A"

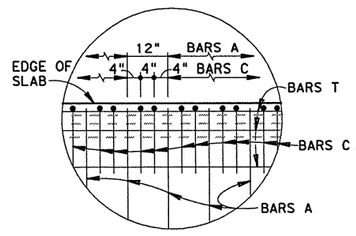

DETAIL "B"

NOTE: 2 BARS "C" EQUALLY SPACED BETWEEN EACH BAR "A".

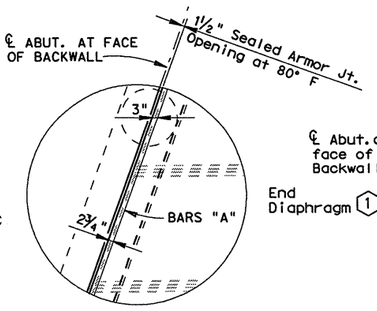

DETAIL "C"

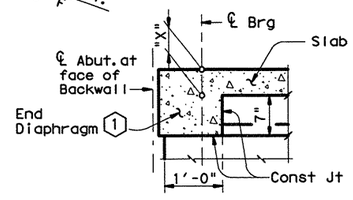

SECTION A-A

SEE PRESTRESSED CONCRETE BOX BEAMS, "CONSTRUCTION DETAILS WITH SLAB" FOR DETAILS AND ADDITIONAL REINF. STEEL TO BE PLACED WITH END DIAPHRAGM OVER ABUTMENT CAP.

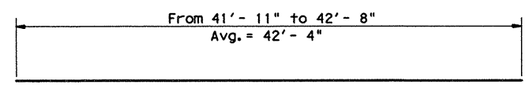

BARS A (#4)

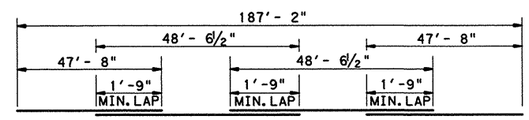

BARS T (#4)

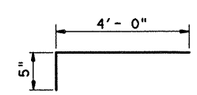

BARS C (#4)

NOTE:
SEE "BEAM REPORT AND GRADING DATA SHEET" FOR DEAD LOAD DEFLECTION DIAGRAM AND SECTION DEPTH TABLE.

ESTIMATED QUANTITIES
FOR ONE COMPLETE DECK UNIT

BAR	NO.	SIZE	LENGTH	WEIGHT
A	188	#4	42'-4" ‡	5316
C	752	#4	4'-5"	2219
(1) G1	168	#4	2'-8"	299
(1) G2	8	#4	2'-9"	15
(1) G3	8	#4	3'-1"	17
(1) H	16	#5	41'-2"	687
(1) I	83	#5	6'-8"	577
(1) J	42	#4	7'-4"	206
(1) K1	8	#4	3'-2"	17
(1) K2	4	#4	3'-8"	10
⊠ T	42	#4	191'-10"	5382
REINFORCING STEEL ✳			LBS.	14745
CL S CONC. (SLAB) (2)			C.Y.	127.0
CL S CONC. (SHEAR KEY)			C.Y.	78.7
PRESTR. CONC. BOX BMS. (5B34) (3)			L.F.	1093.6
PRESTR. CONC. BOX BMS. (4B34) (3)			L.F.	364.5

✳ FOR CONTRACTORS INFO ONLY.
⊠ INCLUDES THREE (3), 1'-9"MIN. LAPS
‡ AVERAGE LENGTH

(1) See "Prestressed Concrete Box Beam Construction Details with Slab" sheet for reinforcing.

(2) End diaphragm concrete and haunch concrete included in Class "S" Concrete (slab) quantity.

(3) Fabricator shall adjust beam lengths for beam slopes as required.

(4) Bars A and Bars T shall remain continuous through control joints and over Bent.

GENERAL NOTES:
Designed according to current AASHTO Standard and Interim Specifications.
All Reinforcing shall be Grade 60.
Concrete strength f'c = 4000 psi.

HL93 LOADING

© 2005
Texas Department of Transportation
San Antonio District (Structural Design)

The seal appearing on this document was authorized by Kurt Eric Kunze, P.E. 85494, on 03-17-11

Kurt Eric Kunze, P.E. — Date

STATE OF TEXAS — KURT ERIC KUNZE — 85494 — LICENSED PROFESSIONAL ENGINEER

PRESTRESSED CONCRETE BOX BEAM SPAN DETAILS
DECK SPANS 1 AND 2
LOOP 1604 NORTHBOUND MAINLANES
OVERPASS AT S.H. 151

T:Engdata/Bridge/245201.043/Changefor.../boxbmspan.dgn
PREPARED BY AND FOR USE OF TxDoT.
ORIGINAL DRAWING DATE: APRIL 2005
DN.: KEK
CK.: MMM
DW.: MRM
CK.: KEK
REVISIONS

STATE DISTRICT	FEDERAL REGION	FEDERAL AID PROJECT	SHEET
SAT	6		272

COUNTY	CONTROL	SECTION	JOB	HIGHWAY
BEXAR	2452	01	043	LP1604

BEAM REPORT - NORTHBOUND

BOX BEAM. NO.	SPAN 1				SPAN 2			
	HORIZ. DIST. C-C BENT	TRUE DIST. BOT. BM. FLANGE	BEAM SLOPE	BEAM BEARINGS	HORIZ. DIST. C-C BENT	TRUE DIST. BOT. BM. FLANGE	BEAM SLOPE	BEAM BEARINGS
1-3	93.3392′	90.7113′	0.01377	S17°44′54.60"W	94.1980′	91.5483′	0.01379	S16°19′42.96"W
4-8	93.3392′	90.7115′	0.01392	S17°44′54.60"W	94.1980′	91.5485′	0.01395	S16°19′42.96"W

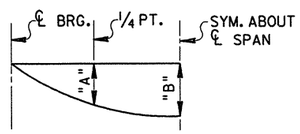

SPAN	BM.	"A"	"B"
1,2	1 - 2	0.1052′	0.1476′
1,2	3 - 8	0.0973′	0.1366′

DEAD LOAD DEFLECTION DIAGRAM

NOTE: DEFLECTIONS SHOWN ARE DUE TO CAST-IN-PLACE CONCRETE (E=4.3 X 10^6psi)

TABLE OF SECTION DEPTHS

SPAN	BEAM NO.	"X" @ ℄ BRG.	"X" @ ℄ SPAN ☆	"Y" @ ℄ BRG.
1,2	1 - 2	7.522"	6.476"	41.522"
1,2	3 - 8	7.783"	6.735"	41.783"

☆ THEORETICAL DIMENSION

© 2005

Texas Department of Transportation
San Antonio District (Structural Design)

The seal appearing on this document was authorized by Kurt Eric Kunze, P.E. 85494, on 03-17-11

Kurt Eric Kunze, P.E. Date

STATE OF TEXAS
KURT ERIC KUNZE
85494
LICENSED PROFESSIONAL ENGINEER

BEAM REPORT AND GRADING DATA

LOOP 1604 NORTHBOUND MAINLANES OVERPASS AT S.H. 151

T:Engdata/Bridge/245201.043/Changefor.../boxbmspan.dgn

PREPARED BY AND FOR USE OF TxDoT.

ORIGINAL DRAWING DATE: JUNE 2005

DN.: KEK
CK.: MMM
DW.: MRM
CK.: KEK

REVISIONS
- -
- -
- -
- -

STATE DISTRICT	FEDERAL REGION	FEDERAL AID PROJECT #	SHEET
SAT	6		273

COUNTY	CONTROL	SECTION	JOB	HIGHWAY
BEXAR	2452	01	043	LP1604

T:/ENGDATA/BRIDGE/

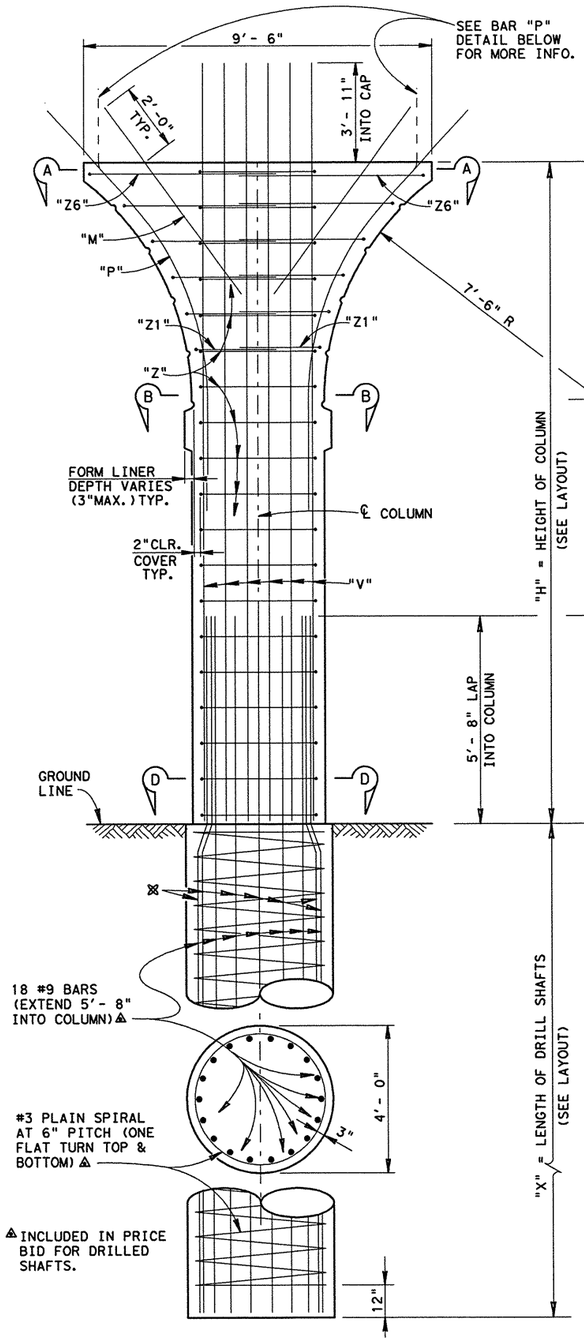

ELEVATION OF FLAIRED COLUMN AND DRILLED SHAFT

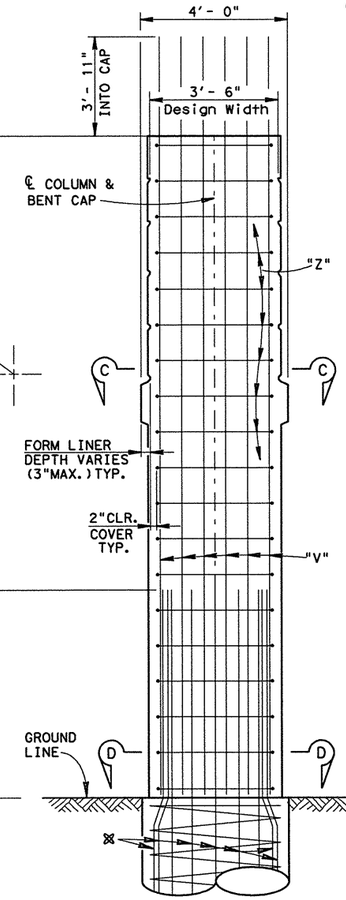

ELEVATION OF SQUARE COLUMN AND PARTIAL DRILLED SHAFT

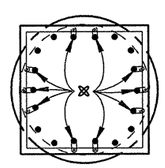

SECTION D-D

※10 ~ #9 DRILLED SHAFT REINF. STEEL BARS SHALL BE BENT TO CREATE A 2 INCH CLEAR COVER TO TIE INTO COLUMN REINFORCING STEEL. SEE DRILLED SHAFT BAR BEND DETAILS FOR MORE INFO.

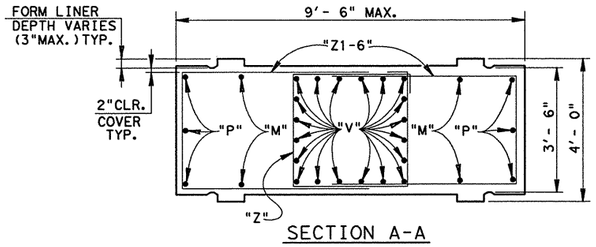

SECTION A-A

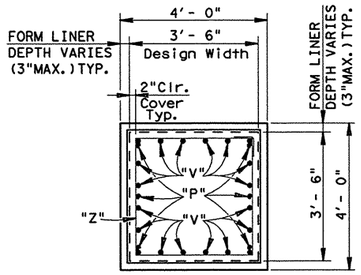

SECTION B-B

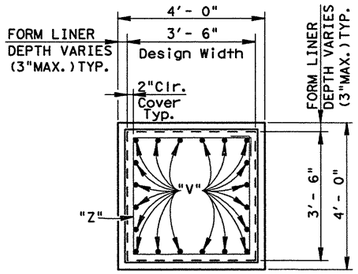

SECTION C-C

ESTIMATED QUANTITIES
FOR ONE COLUMN, FLARES ONLY

BAR	NO.	SIZE	LENGTH	WEIGHT
M	4	#4	6'-3"	17
P	6	#8	12'-5"	199
Z1	2	#5	7'-5"	16
Z2	2	#5	7'-11"	17
Z3	2	#5	8'-9"	18
Z4	2	#5	9'-9"	20
Z5	2	#5	11'-5"	24
Z6	2	#5	13'-3"	28
REINFORCING STEEL ✱			LBS.	339
CL C CONC. (BENT)			C.Y.	2.3

✱ FOR CONTRACTORS INFO ONLY.

VARIABLE QUANTITIES
FOR ONE 4'-0" X 4'-0" SQUARE COLUMNS ⌖

"H"	20 BARS "V" #9		BARS "Z" 13'-5" ~ #5		REINF. STEEL✱	CL"C" CONC. (BENT)
FT	LENG.	WGT.	NO.	WGT.	LBS.	C.Y.
16	19'-11"	1354	17	238	1592	7.8
17	20'-11"	1422	18	252	1674	8.3
18	21'-11"	1490	19	266	1756	8.8
19	22'-11"	1558	20	280	1838	9.3
20	23'-11"	1626	21	294	1920	9.7
21	24'-11"	1694	22	308	2002	10.2
22	25'-11"	1762	23	322	2084	10.7
23	26'-11"	1830	24	336	2166	11.2

✱ FOR CONTRACTORS INFO ONLY.
⌖ FOR COLUMNS WITH FLARE, ADD ADDITIONAL REINFORCING STEEL AND CL C CONCRETE FROM "ESTIMATED QUANTITIES FOR ONE COLUMN FLARE ONLY" BOX.

GENERAL NOTES:

DESIGN: HL93 LOADING IN ACCORDANCE WITH A.A.S.H.T.O. STANDARD SPECIFICATIONS.
ALL CONCRETE SHALL BE CLASS "C".
ALL REINFORCING STEEL SHALL BE GRADE 60.
CONCRETE STRENGTH f'c = 3600 P.S.I.
AVERAGE CALCULATED LOAD = 480 TONS/D.S.
CHAMFER ALL EXPOSED EDGES ¾" UNLESS NOTED OTHERWISE.

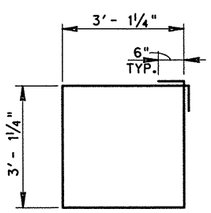

BARS "Z"

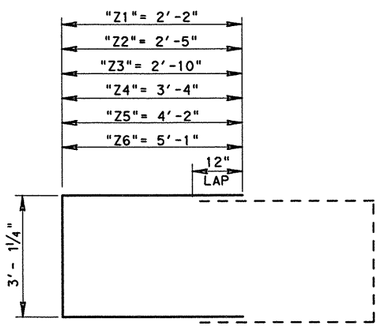

BARS "Z1-6"
(2 EACH)

AT THE CONTRACTORS OPTION, BARS "P" MAY BE SHOP BENT AS INDICATED BY THE DASHED LINE TO FACILITATE PLACEMENT OF BENT CAP REINFORCING STEEL

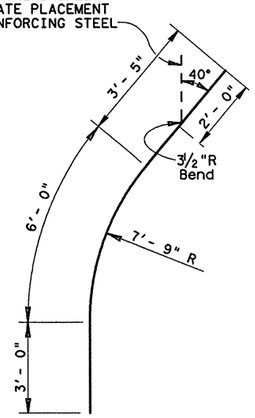

BAR "P"

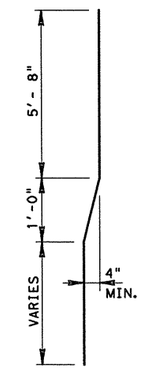

※DRILLED SHAFT BAR BEND DETAIL

© 2005
Texas Department of Transportation
San Antonio District (Structural Design)

The seal appearing on this document was authorized by Kurt Eric Kunze, P.E. 85494, on 03-17-11

Kurt Eric Kunze P.E. Date

STATE OF TEXAS — KURT ERIC KUNZE — 85494 — LICENSED PROFESSIONAL ENGINEER

COLUMN DETAILS

INTERIOR BENT NO. B1

LOOP 1604 NORTH AND SOUTHBOUND MAINLANE OVERPASS AT S.H. 151

T:Engdata/Bridge/245201.043/Tbent.dgn

PREPARED BY AND FOR USE OF TxDoT.

ORIGINAL DRAWING DATE: MAY. 2005

DN.: JHK	REVISIONS	STATE DISTRICT	FEDERAL REGION	FEDERAL AID PROJECT	SHEET
CK.: MMM	- -	SAT	6		274
DW.: MRM	- -	COUNTY	CONTROL	SECTION	JOB	HIGHWAY
CK.: KEK	- -	BEXAR	2452	01	043	LP1604

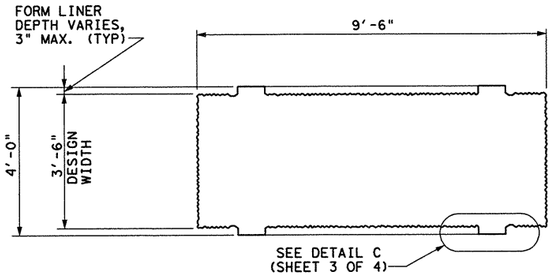

PLAN VIEW TOP

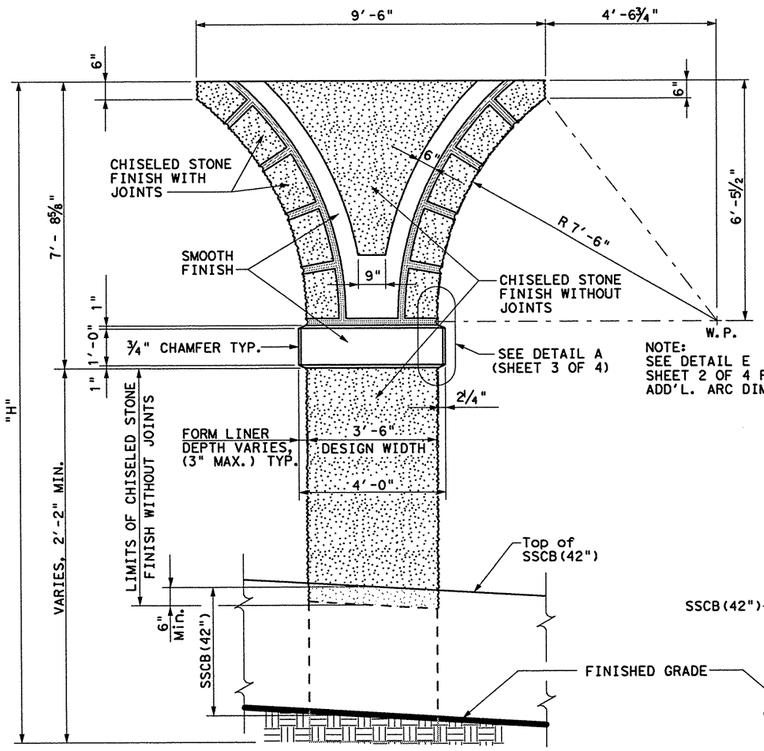

FRONT FACE VIEW

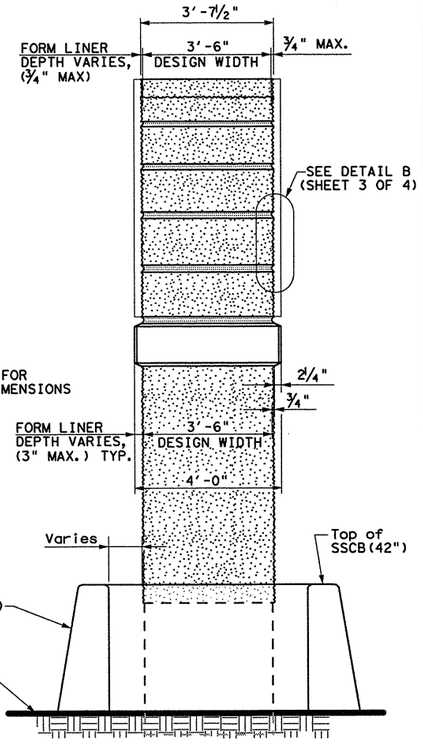

SIDE VIEW

ELEVATION OF FLARED COLUMN

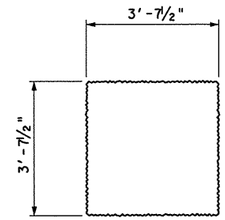

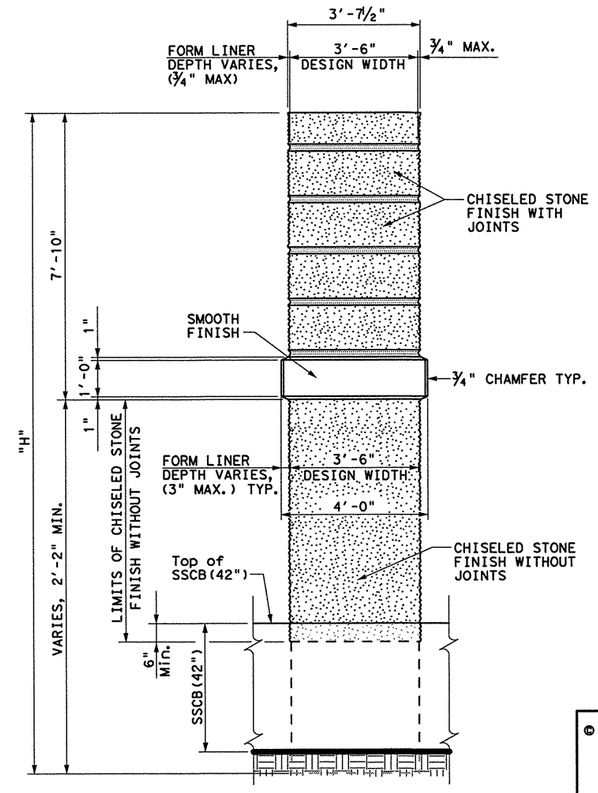

FRONT FACE OR SIDE VIEW

ELEVATION OF SQUARE COLUMN

NOTE: COLUMNS SHALL BE ONE SOLID COLOR-(COLOR 1). SEE SHEET 4 OF 4, GENERAL NOTES FOR COLORS.

SHEET 1 OF 4

© 2005

Texas Department of Transportation
San Antonio District (Structural Design)

The seal appearing on this document was authorized by Kurt Eric Kunze, P.E. 85494, on 03-17-11

Kurt Eric Kunze, P.E.

Date

STATE OF TEXAS
KURT ERIC KUNZE
85494
LICENSED
PROFESSIONAL ENGINEER

ARCHITECTURAL DETAILS

AESTHETIC TREATMENT FOR INTERIOR BENT COLUMNS

LOOP 1604 OVERPASSES AT S.H. 151

T:Engdata/Bridge/245201.043/Aesthetics/ColAesth.dgn			PREPARED BY AND FOR USE OF TxDoT.					
ORIGINAL DRAWING DATE: MAY 2005		STATE DISTRICT	FEDERAL REGION	FEDERAL AID PROJECT •				SHEET
DN.:	REVISIONS	SAT	6					275
CK.:	- -							
DW.: MRM	- -	COUNTY		CONTROL	SECTION	JOB	HIGHWAY	
CK.:	- -	BEXAR		2452	01	043	LP1604	

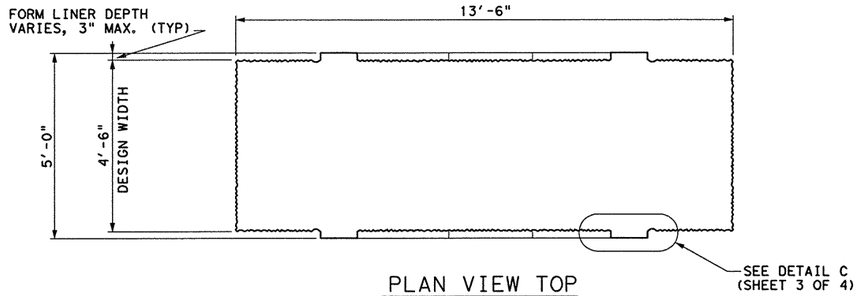

PLAN VIEW TOP

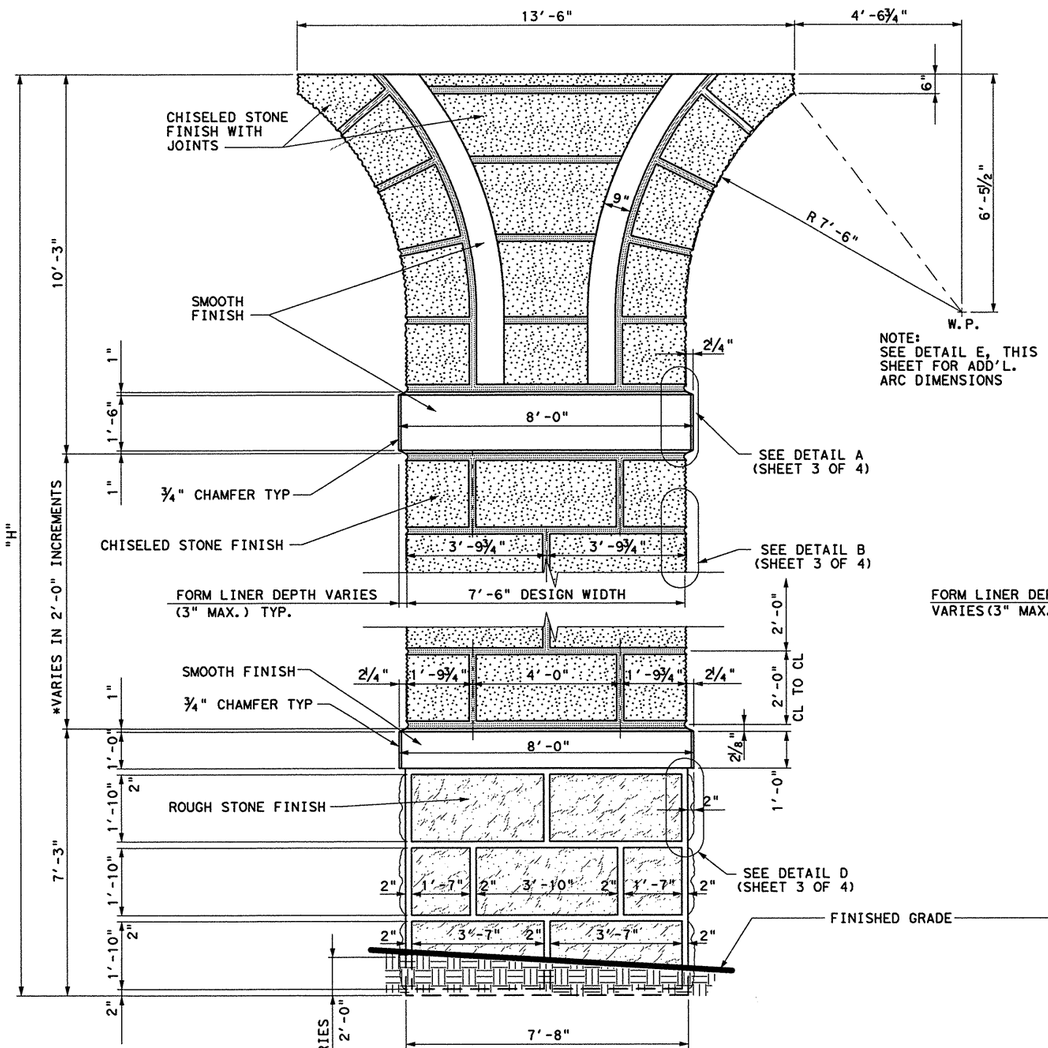

FRONT FACE VIEW

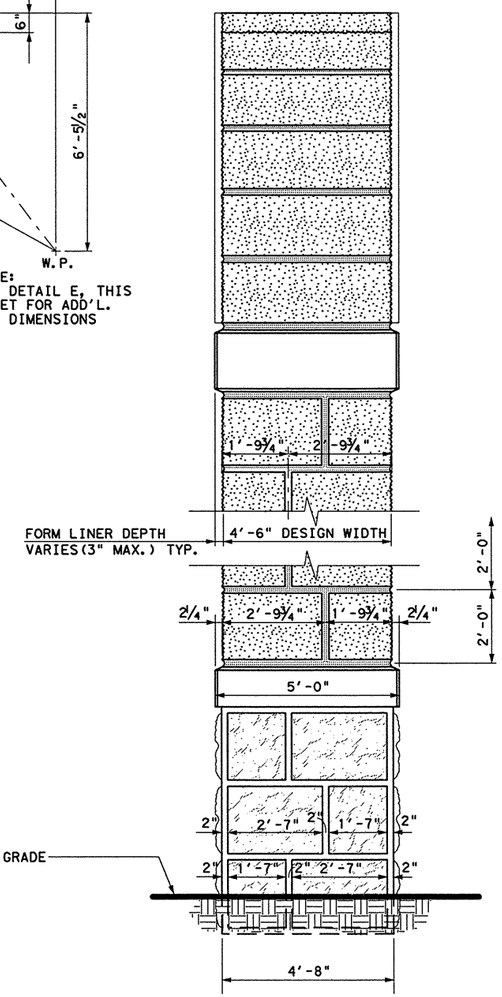

SIDE VIEW

ELEVATION OF FLARED COLUMN

(5' X 8')

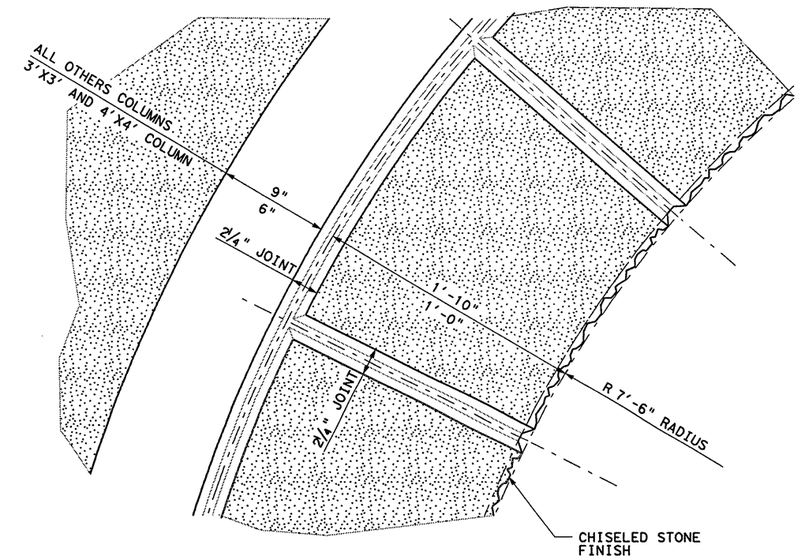

Detail E

NOTE: COLUMNS SHALL BE ONE SOLID COLOR-(COLOR 1). SEE SHEET 4 OF 4, GENERAL NOTES FOR COLORS.

* COORDINATE FORM LINER LAYOUT WITH FINISHED GRADE

SHEET 2 OF 4

© 2005

Texas Department of Transportation

San Antonio District (Structural Design)

The seal appearing on this document was authorized by Kurt Eric Kunze, P.E. 85494, on 03-17-11

Kurt Eric Kunze, P.E.

Date

STATE OF TEXAS — KURT ERIC KUNZE — 85494 — LICENSED PROFESSIONAL ENGINEER

ARCHITECTURAL DETAILS

AESTHETIC TREATMENT FOR INTERIOR BENT COLUMNS

LOOP 1604 SOUTHBOUND CONNECTOR TO S.H. 151 INBOUND

LOOP 1604 OVERPASSES AT S.H. 151

T:Engdata/Bridge/245201.043/Aesthetics/ColAesth.dgn			PREPARED BY AND FOR USE OF TxDoT.					
ORIGINAL DRAWING DATE: MAY 2005		STATE DISTRICT	FEDERAL REGION	FEDERAL AID PROJECT •			SHEET	
DN. •	REVISIONS	SAT	6				276	
CK. •	- -							
DW. • MRM	- -	COUNTY		CONTROL	SECTION	JOB	HIGHWAY	
CK. •	- -	BEXAR		2452	01	043	LP1604	

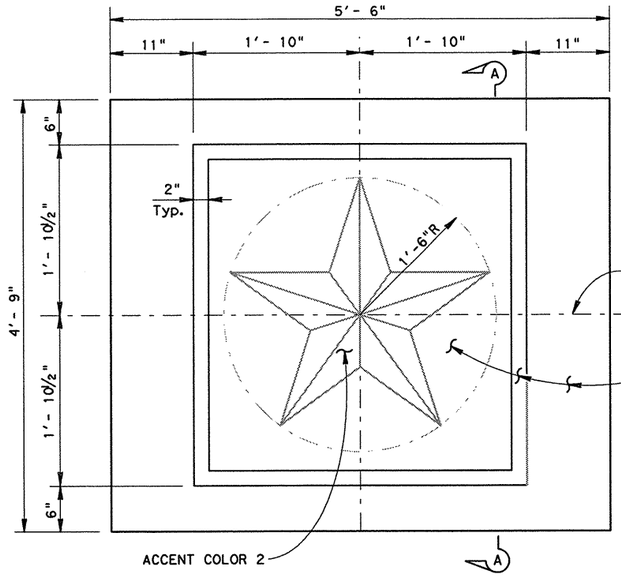

END OF BENT CAP EAR WALL END VIEW

(LOOP 1604 SOUTHBOUND CONNECTOR TO S.H. 151 INBOUND)

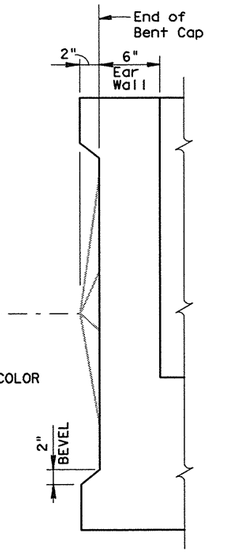

SECTION A-A

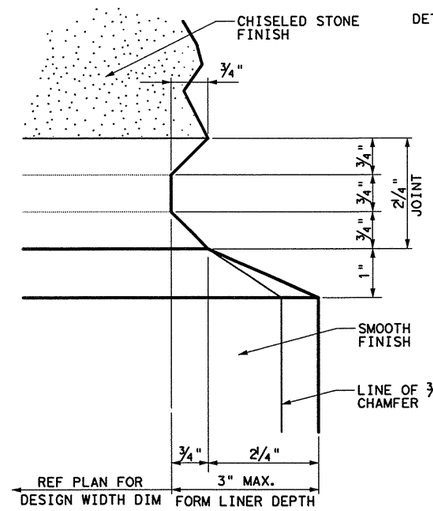

Detail A

JOINT

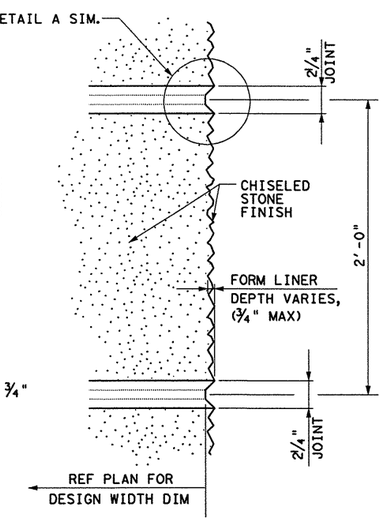

Detail B

CHISELED STONE FINISH

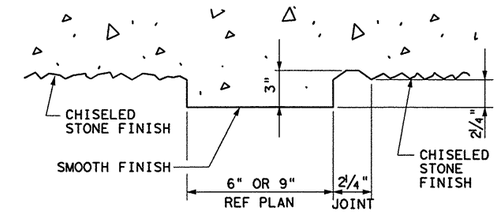

Detail C

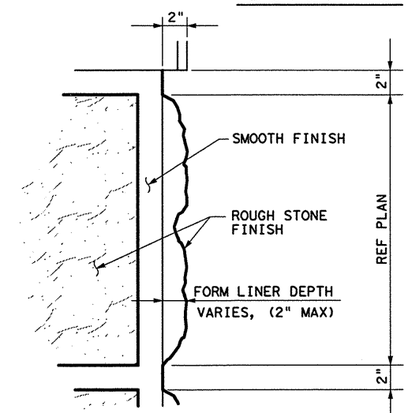

Detail D

ROUGH STONE FINISH

AESTHETICS FOR FLARED AND SQUARE COLUMNS

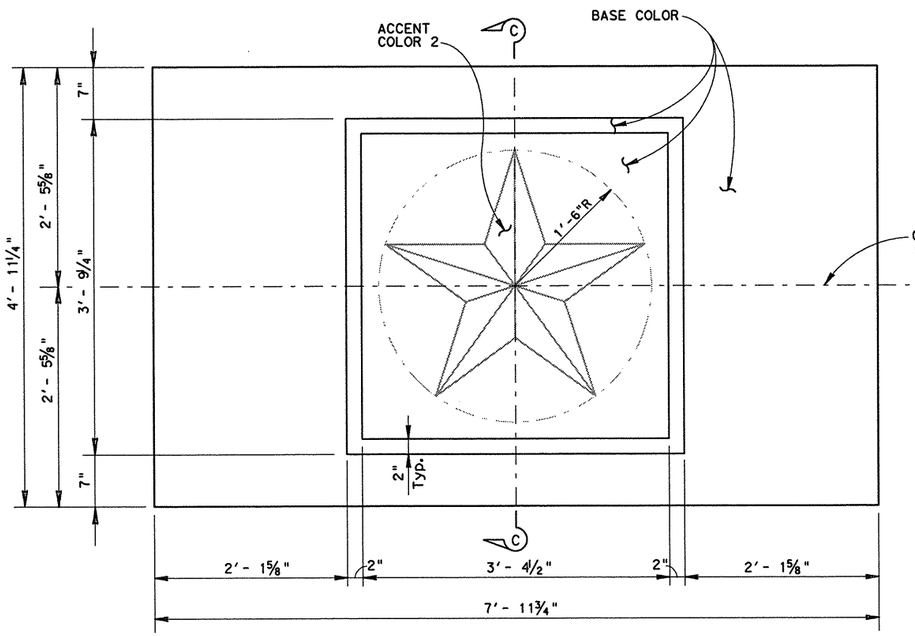

END OF BENT CAP EAR WALL END VIEW

(NORTH & SOUTHBOUND LOOP 1604 AT S.H. 151)

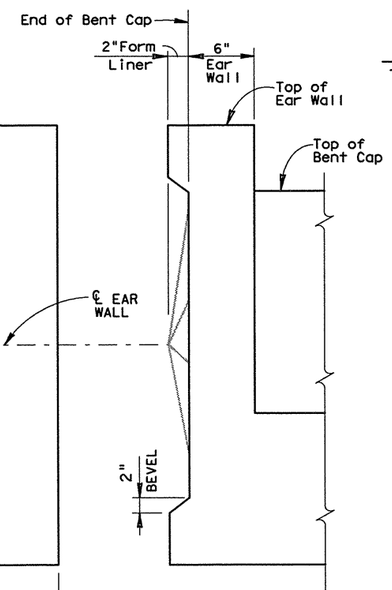

SECTION C-C

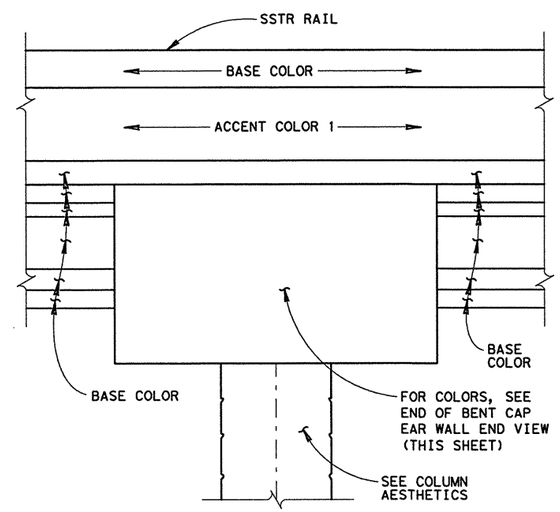

ELEVATION

(SHOWING BENT CAP EAR WALL & RAIL ART & COLOR SCHEME)

AESTHETICS FOR BENT CAP EAR WALL, BEAMS & BRIDGE RAIL

NOTE: FOR COLORS, SEE GENERAL NOTES ON SHEET 3 OF 4.

SHEET 3 OF 4

© 2005

Texas Department of Transportation

San Antonio District (Structural Design)

The seal appearing on this document was authorized by Kurt Eric Kunze, P.E. 85494 on

Kurt Eric Kunze, P.E. 03-17-11

Kurt Eric Kunze, P.E. Date

STATE OF TEXAS — KURT ERIC KUNZE — 85494 — LICENSED PROFESSIONAL ENGINEER

ARCHITECTURAL DETAILS

AESTHETIC TREATMENT FOR INTERIOR BENT COLUMNS AND BENT CAP EAR WALL

LOOP 1604 OVERPASSES AT S.H. 151

T:Engdata/Bridge/245201.043/Aesthetics/ColAesth.dgn				PREPARED BY AND FOR USE OF TxDoT.			
ORIGINAL DRAWING DATE: MAY 2005		STATE DISTRICT	FEDERAL REGION	FEDERAL AID PROJECT			SHEET
DN.:	REVISIONS	SAT	6				277
CK.:	- -						
DW.: MRM	- -	COUNTY		CONTROL	SECTION	JOB	HIGHWAY
CK.:	- -	BEXAR		2452	01	043	LP1604

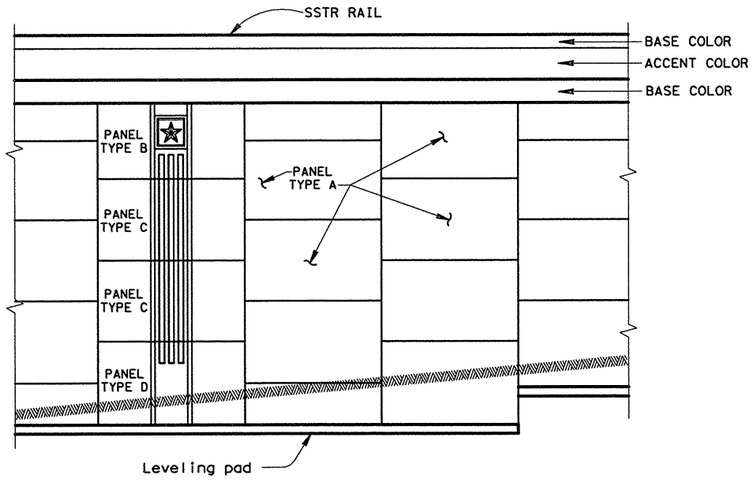

PARTIAL RETAINING WALL ELEVATION

NOTE: PANELS "B","C" & "D" SHALL BE SPACED AT 100 FEET.

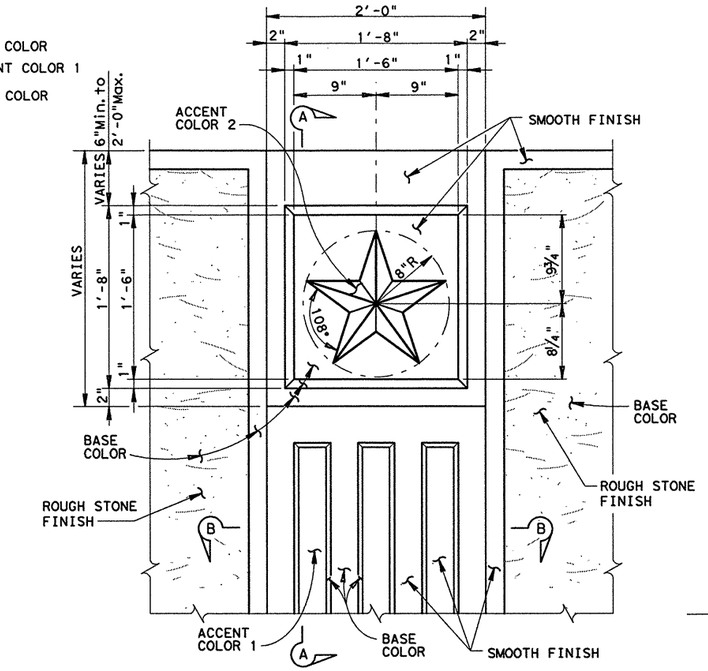

PARTIAL PANEL ELEVATION

(STAR & VERTICAL STRIPS)

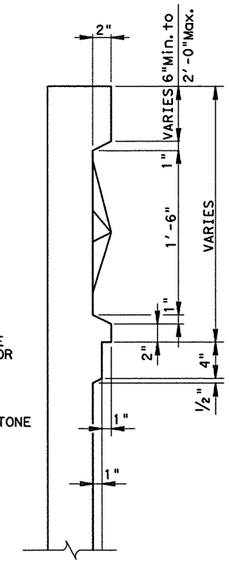

SECTION A-A

(STAR & VERTICAL STRIPS)

GENERAL NOTES:

SURFACE FINISH
CONCRETE SURFACE FINISH WILL BE FORMED USING FORM LINERS AND AN OPAQUE SEALER UNDER ITEM 427 "SURFACE FINISHES FOR CONCRETE."

BASE COLOR - SHERWIN WILLIAMS: MACADAMIA - SW6142 (OR EQUAL)
ACCENT COLOR 1 - SHERWIN WILLIAMS: ARTICHOKE - SW6179 (OR EQUAL)
ACCENT COLOR 2 - SHERWIN WILLIAMS: SUPERIOR BRONZE - SW6152 (OR EQUAL)

FORM LINERS
SHAPES AND TEXTURES FOR HILL COUNTRY THEME:
RAISED STAR (36" DIA.) - BENT CAP ENDS
RAISED STAR (16" DIA.) - RETAINING WALL
ROUGH STONE - INTERIOR BENT COLUMNS & RETAINING WALL
CHISELED STONE - INTERIOR BENT COLUMNS (WITH AND W/O JOINTS)
RW COLUMN RELIEF - RETAINING WALL

THE ROUGH STONE BASE OF COLUMNS SHALL BE ELIMINATED WHEN THE COLUMN HEIGHT IS SUCH THAT THE CHISELED STONE MID SECTION HEIGHT TO WIDTH RATIO IS LESS THAN 1.5. IN THIS CASE THE CHISELED STONE TEXTURE WILL EXTEND TO THE GROUND LINE OR TOP OF BARRIER.

FORM LINERS WILL PRODUCE A FINISHED CONCRETE SURFACE WHICH IS EQUAL IN QUALITY TO ADJACENT SURFACES.

THE FORM LINERS WILL RELEASE WITHOUT LEAVING PIECES OF LINER MATERIAL ON THE CONCRETE AND WITHOUT PULLING OR BREAKING CONCRETE FROM THE TEXTURED SURFACE. FORM RELEASE AGENTS WILL BE AS RECOMMENDED BY THE MANUFACTURER. FORM LINERS THAT HAVE, IN THE OPINION OF THE ENGINEER, BECOME DAMAGED OR WORN, WILL BE REPLACED BY THE CONTRACTOR. REPLACEMENT OF FORM LINERS IS CONSIDERED INCIDENTAL TO THE WORK AND WILL NOT ENTITLE THE CONTRACTOR TO ADDITIONAL COMPENSATION.

HORIZONTAL SPLICES IN THE FORM LINERS WILL OCCUR ONLY AT RUSTICATION LINES. VERTICAL SPLICES ARE NOT ALLOWED. SAMPLE PANELS OF EACH FORM LINER FINSIH AS REQUIRED BY ITEM 427 WILL BE FABRICATED BY THE CONTRACTOR FOR APPROVAL BY THE ENGINEER.

AREAS SHOWN TO RECIEVE A SURFACE TEXTURE THAT DOES NOT EXHIBIT THE SURFACE SPECIFIED WILL BE TOOLED OR REPALCED AT THE CONTRACTOR'S EXPENSE SO AS TO EXHIBIT THE SPECIFIED FINISH.

PAYMENT FOR FORM LINERS IS SUBSIDIARY TO THE CONCRETE ON WHICH IT IS USED.

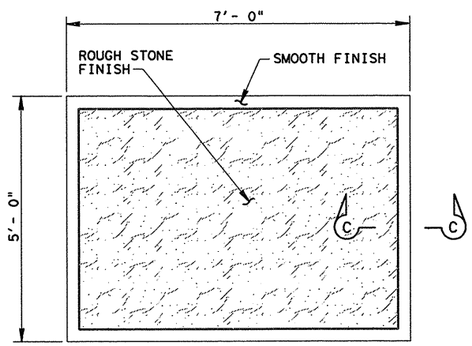

PANEL TYPE A

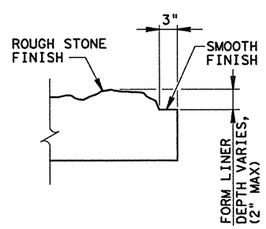

SECTION C-C

PANEL EDGE

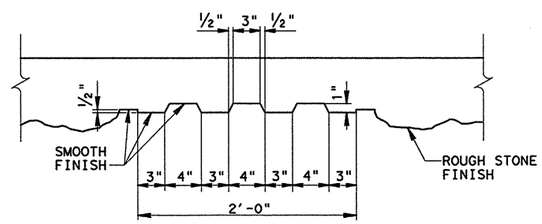

SECTION B-B

VERTICAL STRIP

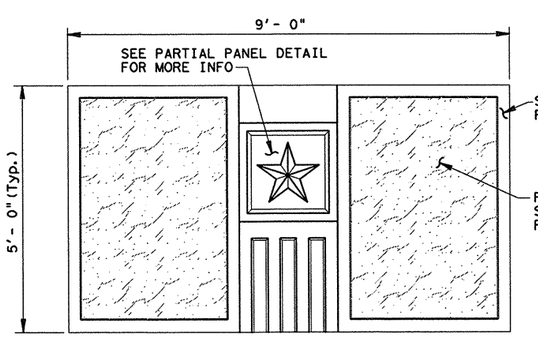

PANEL TYPE B

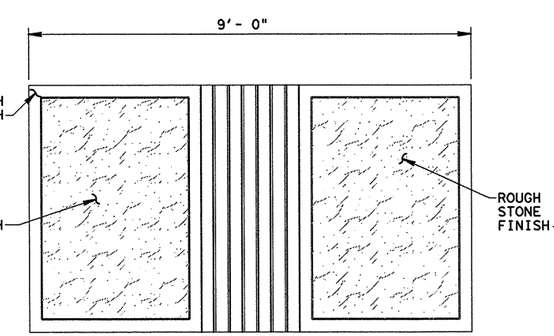

PANEL TYPE C

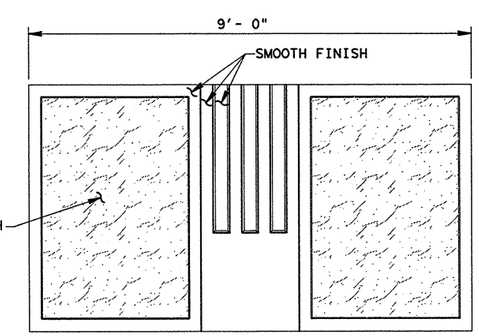

PANEL TYPE D

AESTHETICS FOR RETAINING WALLS

SHEET 4 OF 4

© 2004

Texas Department of Transportation
San Antonio District (Structural Design)

The seal appearing on this document was authorized by Kurt Eric Kunze, P.E. 85494, on 03-17-11

Kurt Eric Kunze, P.E.
Date

STATE OF TEXAS
KURT ERIC KUNZE
85494
LICENSED PROFESSIONAL ENGINEER

ARCHITECTURAL DETAILS

AESTHETIC TREATMENT FOR RETAINING WALLS

LOOP 1604 OVERPASSES AT S.H. 151

T:Engdata/Bridge/245201.043/Aesthetics/ColAesth.dgn				PREPARED BY AND FOR USE OF TxDoT.				
ORIGINAL DRAWING DATE: MAY 2005		STATE DISTRICT	FEDERAL REGION	FEDERAL AID PROJECT #				SHEET
DN.:	REVISIONS	SAT	6					278
CK.:	- -							
DW.: MRM	- -	COUNTY		CONTROL	SECTION	JOB	HIGHWAY	
CK.:	- -	BEXAR		2452	01	043	LP1604	

DESIGNED BEAMS (STRAIGHT STRANDS) / OPTIONAL DESIGN

STRUCTURE	SPAN NO.	BEAM NO.	BEAM TYPE	NON-STD STRAND PATTERN	PRESTRESSING STRANDS NO.	SIZE (in)	STRGTH fpu (ksi)	"e" ℄ (in)	"e" END (in)	TOT NO. DEB	DEBONDED STRAND PATTERN PER ROW: DIST FROM BOTTOM (in)	NO. OF STRANDS TOTAL	NO. OF STRANDS DE-BONDED	NUMBER OF STRANDS DEBONDED TO (ft from end) 3	6	9	12	15						CONCRETE RELEASE STRGTH f'ci (ksi)	MINIMUM 28 DAY COMP STRGTH f'c (ksi)	OPTIONAL DESIGN: DESIGN LOAD COMP STRESS (TOP ℄) (SERVICE I) fct (ksi)	DESIGN LOAD TENSILE STRESS (BOTT ℄) (SERVICE III) fcb (ksi)	REQUIRED MINIMUM ULTIMATE MOMENT CAPACITY (STRENGTH I) (ft-kips)	LIVE LOAD DISTRIB FACTOR ①
S.H. 151 OVERPASS AT LP 1604 NORTHBOUND AND SOUTHBOUND	1,2	3-8	5B34		48	½	270	11.95	11.46	10	2.50	28	10	2	2	2	2	2	0	0	0	0	0	5000	6000	3094	-3274	3939	0.341
	1,2	1-2	4B34		48	½	270	10.66	9.90	10	2.50	22	10	2	2	2	2	2	0	0	0	0	0	5700	6400	3406	-3508	3540	0.319

GENERAL NOTES:

Designed according to AASHTO LRFD Specifications.

Use Class H concrete. Use Class H (HPC) if required elsewhere in plans. All reinforcing bars must be Grade 60.

When shown on this sheet, the Fabricator has the option of furnishing either the designed beam or an approved optional beam design. All optional design submittals and shop drawings must be signed, sealed and dated by a Professional Engineer registered in the State of Texas.

Prestress losses for the designed beams have been calculated for a relative humidity of 70 percent. Optional designs must likewise conform.

Locate strands for the designed beam as low as possible on the 2" grid system unless a Non-Standard Strand Pattern is indicated. Fill row "2.5", then row "4.5", then row "6.5", etc. Place strands within a row as follows:

1) Locate a strand in each "1" position
2) Place strand pattern symmetrically about vertical centerline of box
3) Space strands as equally as possible across the entire width

Strands in the position "1" may not be debonded. Distribute debonded strands equally about the vertical centerline. Decrease debonded lengths working inward, with debonding staggered in each row.

Encase debonded strands in plastic sheathing along entire debonded length, and seal ends of sheathing with waterproof tape. Split plastic sheathing may be used provided the seam of the sheathing is sufficiently sealed with waterproof tape to prohibit grout infiltration. Wrapping of strands with tape to provide debonding is not allowed.

Use low relaxation strands pretensioned to 75 percent of fpu.

① Portion of full HL93.

② Bottom corner chamfer required for 4 ft & 5 ft B40 Boxes when beam lengths are greater than 100 feet.

③ Full-length debonded strands are only permitted in strand positions marked Δ. Double encase all full-length debonded strands. Internal vibrator diameter cannot exceed 1 ⅛" diameter for bottom flange concrete placement. Full-length debonding must comply with Item 426.4.F.4.

0.65 f 'ci was used in the design of the prestressed I beams.

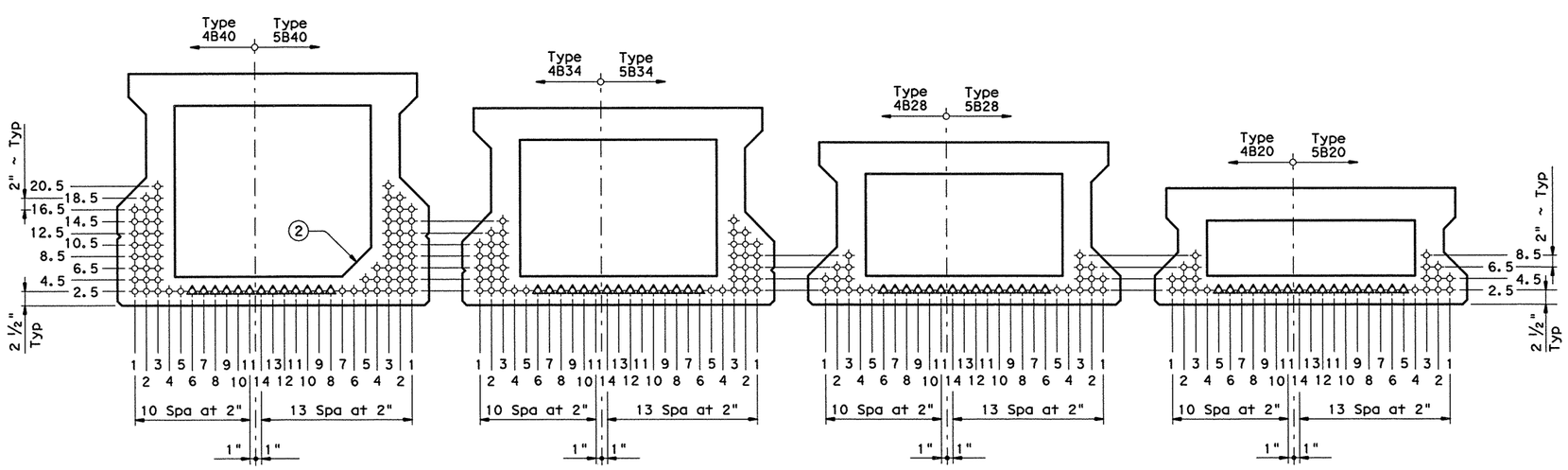

TxDOT B40 BOX BEAMS ③ TxDOT B34 BOX BEAMS ③ TxDOT B28 BOX BEAMS ③ TxDOT B20 BOX BEAMS ③

The seal appearing on this document was authorized by Kurt Eric Kunze, P.E. 85494, on

Kurt Eric Kunze, P.E. 03-17-11 Date

STATE OF TEXAS — KURT ERIC KUNZE — 85494 — LICENSED PROFESSIONAL ENGINEER

HL93 LOADING

Texas Department of Transportation
Bridge Division

PRESTRESSED CONCRETE BOX BEAM DESIGNS (NON-STANDARD SPANS)

BBND

FILE: bbstde07.dgn	DN: TxDOT	CK: TxDOT	DW: TxDOT	CK: TxDOT
© TxDOT December 2006	DISTRICT	FEDERAL AID PROJECT		SHEET
REVISIONS	SAT			279
	COUNTY	CONTROL	SECT	JOB	HIGHWAY
	BEXAR	2452	01	043	LP1604

DISCLAIMER:
The use of this standard is governed by the "Texas Engineering Practice Act". No warranty of any kind is made by TxDOT for any purpose whatsoever. TxDOT assumes no responsibility for the conversion of this standard to other formats or for incorrect results or damages resulting from its use.

PATH:

LEVELS DISPLAYED

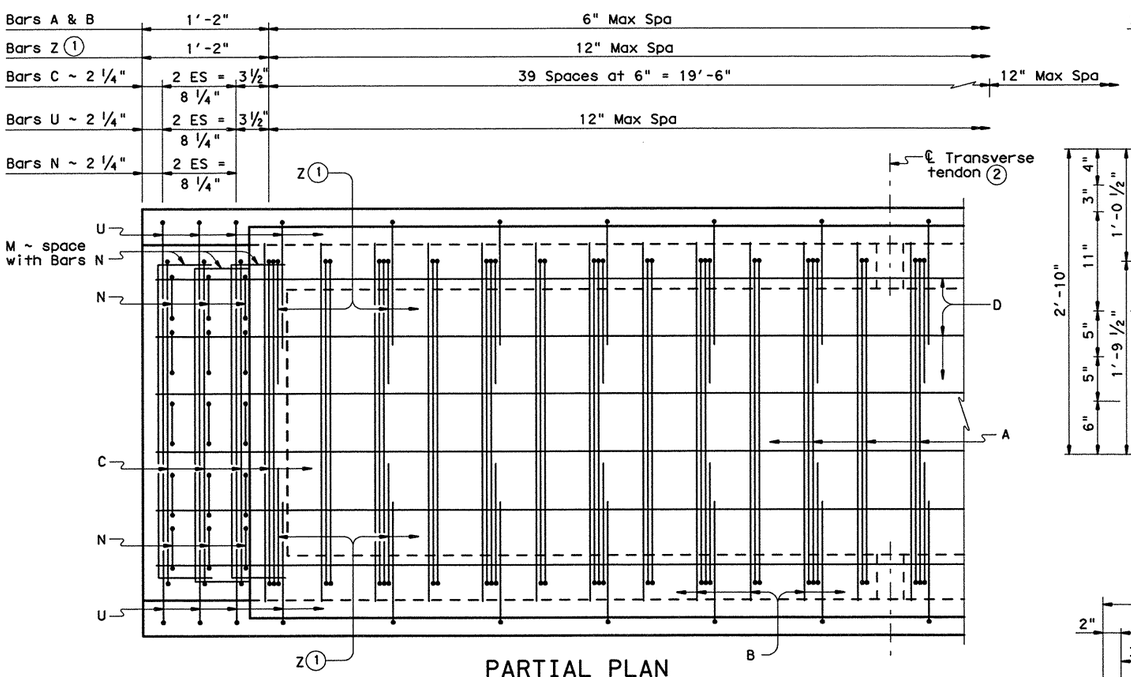

PARTIAL PLAN
(Showing Type 4B34)

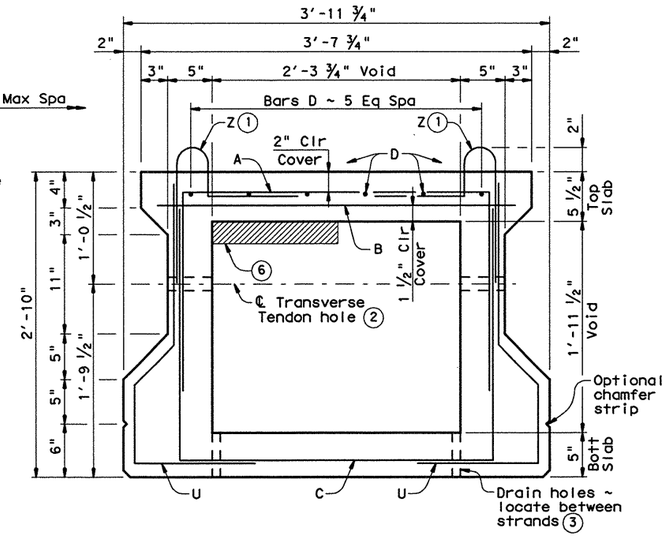

TYPICAL SECTION ~ TYPE 4B34

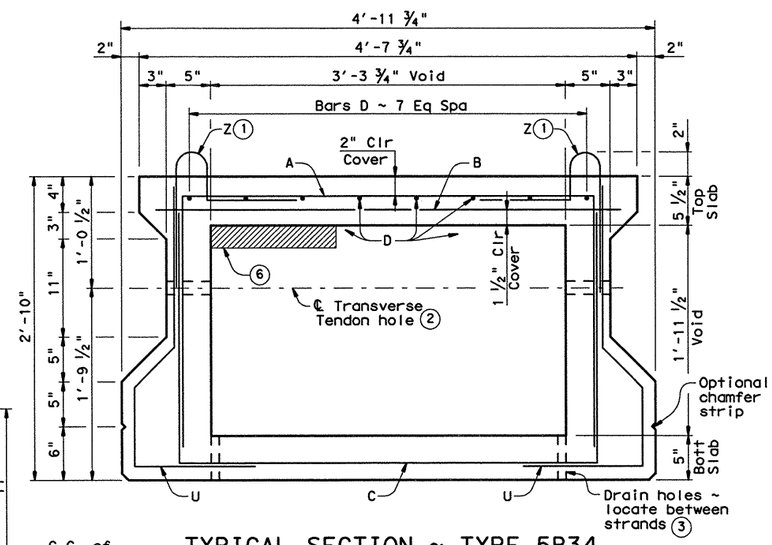

TYPICAL SECTION ~ TYPE 5B34

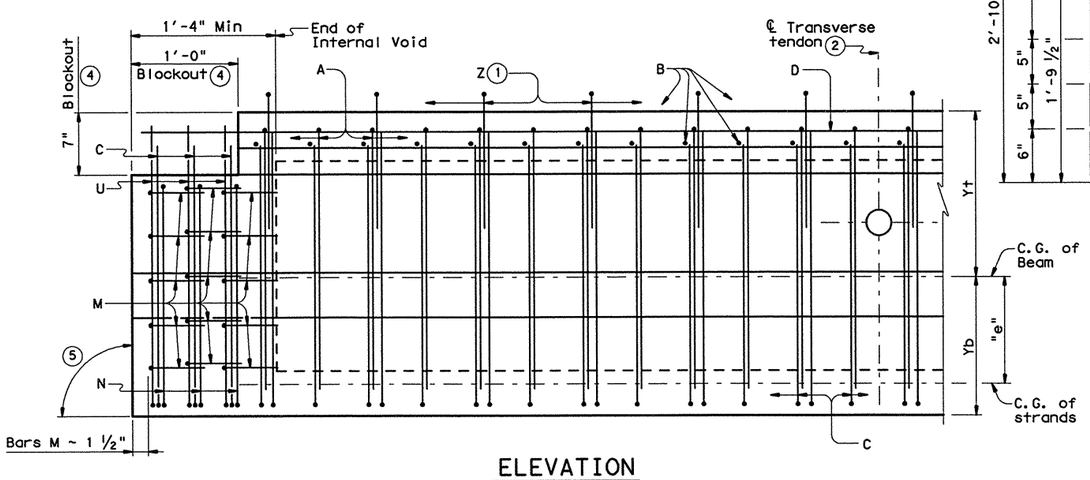

ELEVATION

BEAM PROPERTIES			
		Type 4B34	Type 5B34
Area	in²	798.8	924.8
Y top	in	17.92	17.72
Y bott	in	16.08	16.28
I	in⁴	115,655	142,161
Weight ⑦	lb/ft	832	963

① Bars Z are required for beams topped with a cast-in-place concrete slab only.

② Post-tensioning tendons are required for beams not topped with a Min 5" cast-in-place concrete slab. See span details for number and spacing of transverse tendons. Cast interior diaphragms in exterior beams and beams that serve temporarily as exterior beams in staged constructed bridges. See "Blockout, Interior Diaphragm, and Drain Details". Form 3" Dia holes in interior beams. See standard BBPT for details.

③ Place drain holes (1" Dia PVC Sch 40 Pipe) as shown in all beam void corners including each side of interior diaphragms. See "Blockout, Interior Diaphragm, and Drain Details".

④ Blockouts required at ends of all beams. Extend beam reinforcement into blockouts.

⑤ 90° at conventional Interior Bents. Ends of beams shall be vertical at Abutment backwall and Inverted Tee Bent Stems.

⑥ Showing void modification required in exterior beams not topped with a Min 5" cast-in-place concrete slab. See standard BBRAO for void modification dimensions.

⑦ Based on 150 pcf weight density of concrete. Weight of end blocks and interior diaphragms is not included.

GENERAL NOTES:

Designed according to AASHTO LRFD Specifications. Use Class H concrete. Use Class H (HPC) if required elsewhere in plans. All reinforcing steel must be Grade 60.

Two-stage monolithic casting is required. The concrete in the first stage cast (bottom beam flange) must remain plastic until the second stage cast (webs and top beam flange) is placed. Vibrate as required to ensure consolidation between the two casts.

1 1/4" clear cover to reinforcement is required unless noted otherwise.

See standard BBRAS or BBRAO for railing anchorage at bridge edges to be cast in beams.

An equal area of welded wire reinforcement (WWR) meeting the requirements of ASTM A 497 may be substituted for Bars A, B, C, and D.

These details are applicable for skews up to 30 degrees only.

Chamfer bottom beam corners 3/4" or round to a 3/4" radius.

HL93 LOADING — SHEET 1 OF 3

Texas Department of Transportation
Bridge Division

PRESTRESSED CONCRETE BOX BEAM DETAILS (TYPE B34)

BB-B34

FILE: bbstde03.dgn	DN: TxDOT	CK: TxDOT	DW: TxDOT	CK: TxDOT
©TxDOT December 2006	DISTRICT	FEDERAL AID PROJECT		SHEET
REVISIONS	SAT			280
	COUNTY	CONTROL	SECT	JOB	HIGHWAY
	BEXAR	2452	01	043	LP1604

DISCLAIMER:
The use of this standard is governed by the "Texas Engineering Practice Act". No warranty of any kind is made by TxDOT for any purpose whatsoever. TxDOT assumes no responsibility for the conversion of this standard to other formats or for incorrect results or damages resulting from its use.

PATH:
LEVELS DISPLAYED

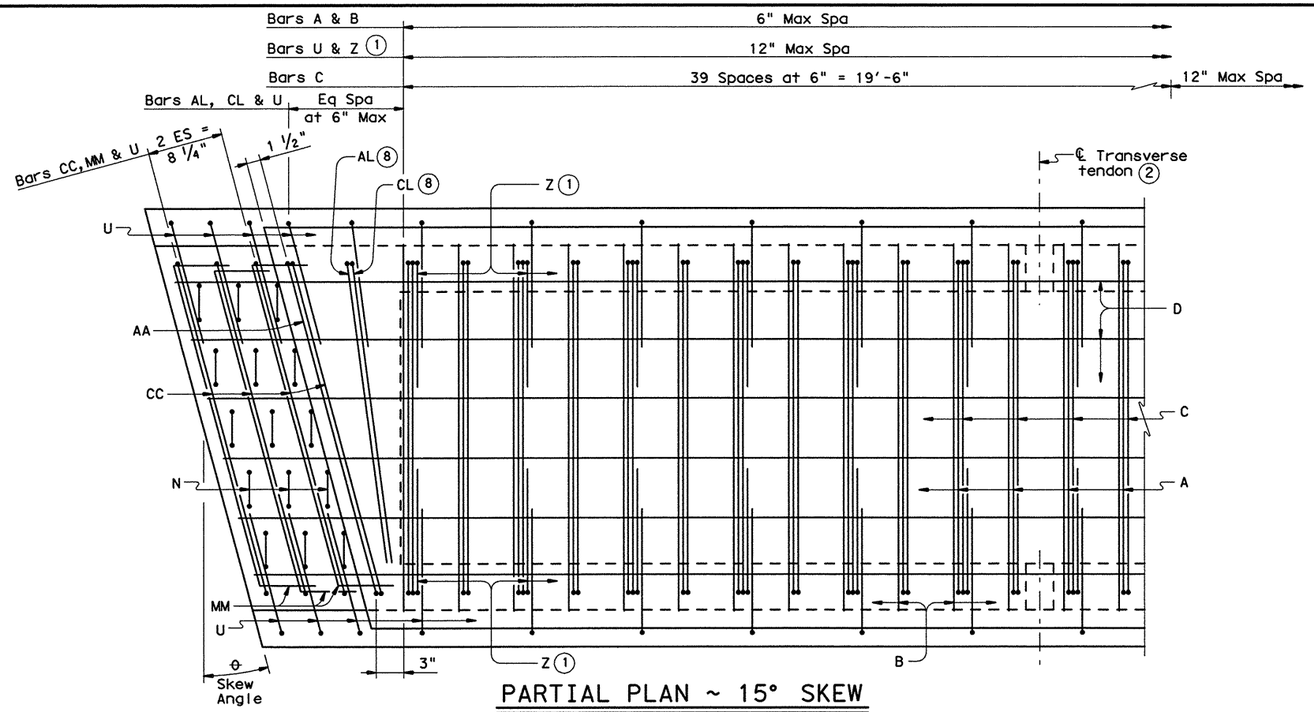

PARTIAL PLAN ~ 15° SKEW

(Showing Type 4B34)
(use for skew angles of 15° or less)

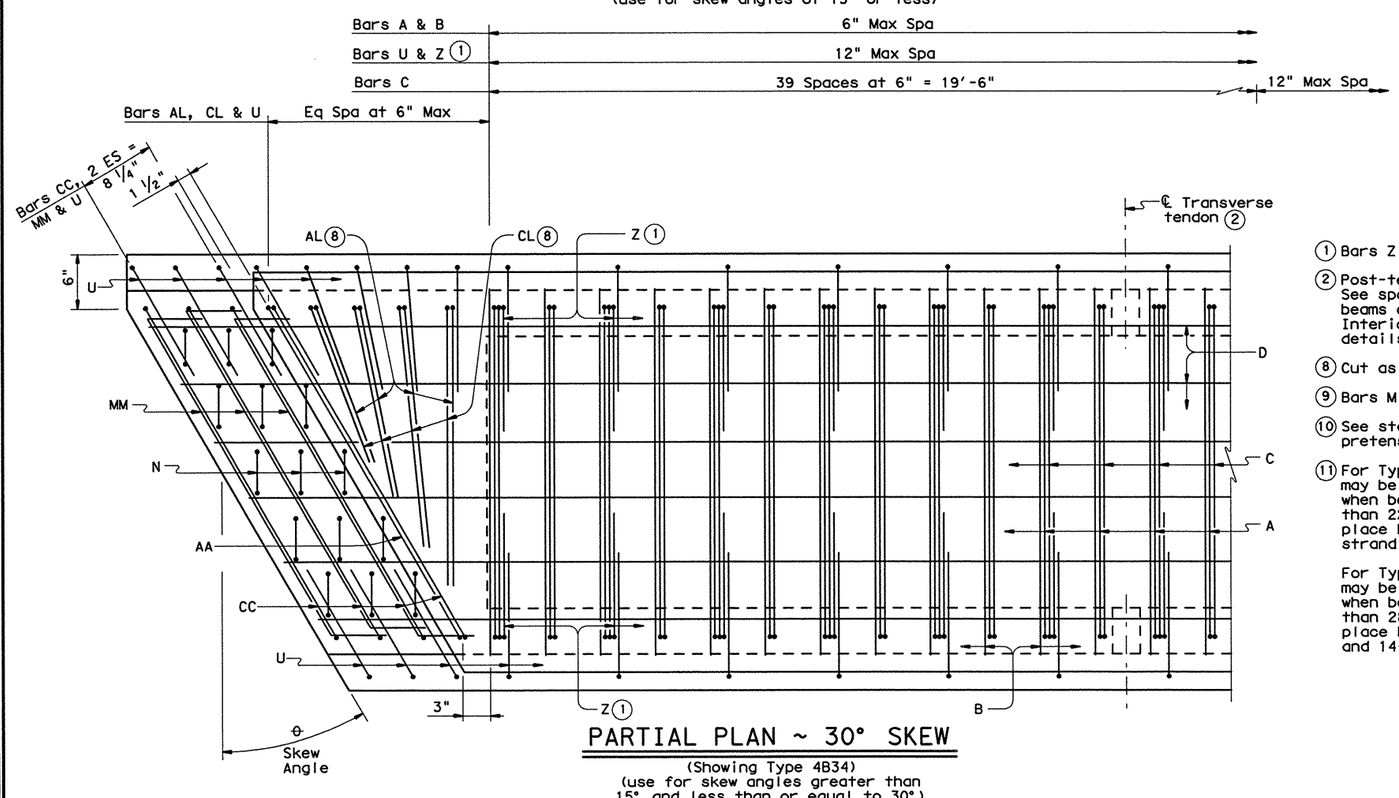

PARTIAL PLAN ~ 30° SKEW

(Showing Type 4B34)
(use for skew angles greater than 15° and less than or equal to 30°)

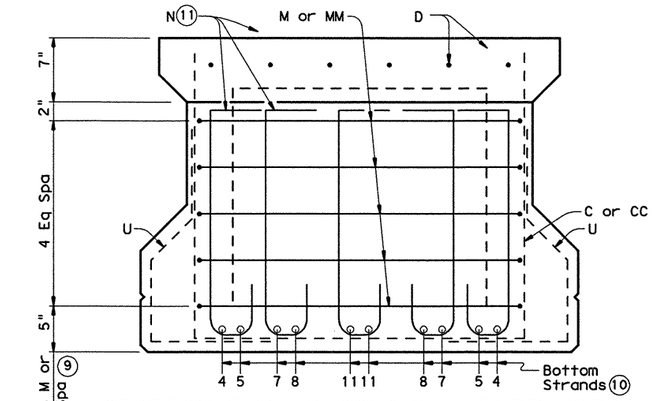

SECTION THRU BLOCKOUT ~ TYPE 4B34

(Showing End Mat Reinforcing)

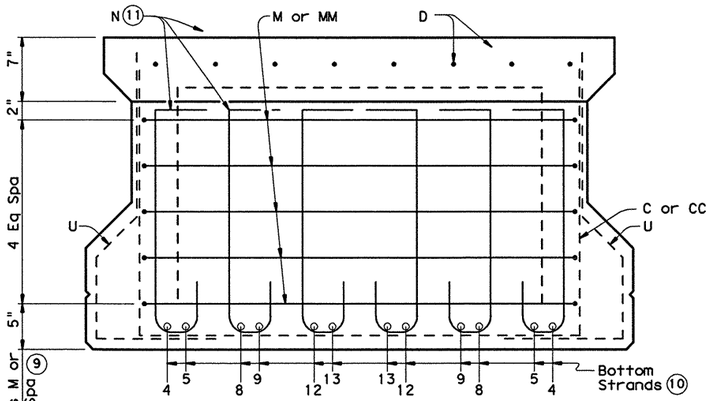

SECTION THRU BLOCKOUT ~ TYPE 5B34

(Showing End Mat Reinforcing)

(1) Bars Z are required for beams topped with a cast-in-place concrete slab only.

(2) Post-tensioning tendons are required for beams not topped with a Min 5" cast-in-place concrete slab. See span details for number and spacing of transverse tendons. Cast interior diaphragms in exterior beams and beams that serve temporarily as exterior beams in staged constructed bridges. See "Blockout, Interior Diaphragm, and Drain Details". Form 3" Dia holes in interior beams. See standard BBPT for details.

(8) Cut as required to maintain one inch clear between bars.

(9) Bars M may be adjusted vertically as required to avoid pretensioning strands in web.

(10) See standard BBND or appropriate Prestressed Concrete Box Beam Standard Designs sheet for locations of pretensioning strands.

(11) For Type 4B34 Box Beams: Bars N may be reduced to 4 bars per row when beam design contains fewer than 22 strands. In this case, place Bars N at the 5-6 and 8-9 strand locations.

For Type 5B34 Box Beams: Bars N may be reduced to 5 bars per row when beam design contains fewer than 28 strands. In this case, place Bars N at the 4-5, 9-10 and 14-14 strand locations.

HL93 LOADING — SHEET 2 OF 3

Texas Department of Transportation
Bridge Division

PRESTRESSED CONCRETE BOX BEAM DETAILS (TYPE B34)

BB-B34

FILE: bbstde03.dgn	DN: TxDOT	CK: TxDOT	DW: TxDOT	CK: TxDOT
© TxDOT December 2006	DISTRICT	FEDERAL AID PROJECT		SHEET
REVISIONS	SAT			28
	COUNTY	CONTROL	SECT	JOB	HIGHWAY
	BEXAR	2452	01	043	LP1604

DISCLAIMER:
The use of this standard is governed by the "Texas Engineering Practice Act". No warranty of any kind is made by TxDOT for any purpose whatsoever. TxDOT assumes no responsibility for the conversion of this standard to other formats or for incorrect results or damages resulting from its use.

PATH:
LEVELS DISPLAYED

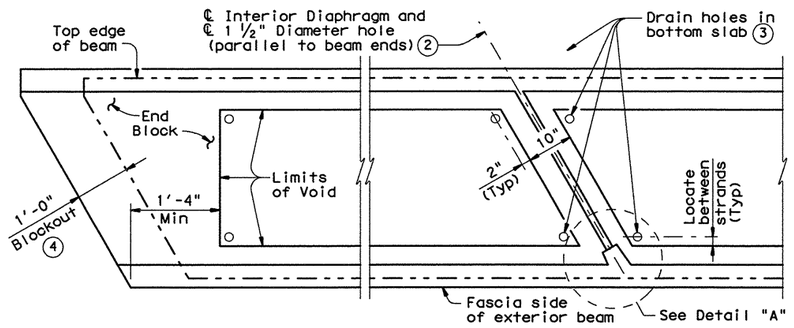

BLOCKOUT, INTERIOR DIAPHRAGM AND DRAIN DETAILS

(Showing 30° skew)

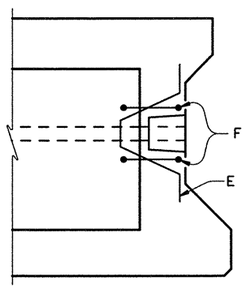

POST-TENSION ANCHORAGE DETAIL

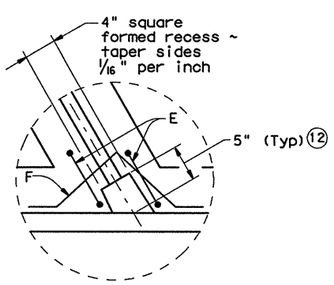

DETAIL A (12)

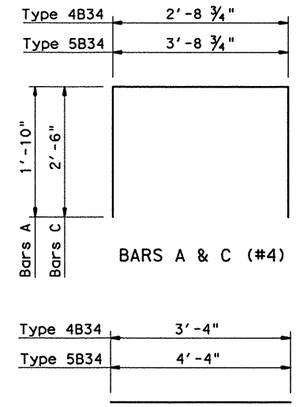

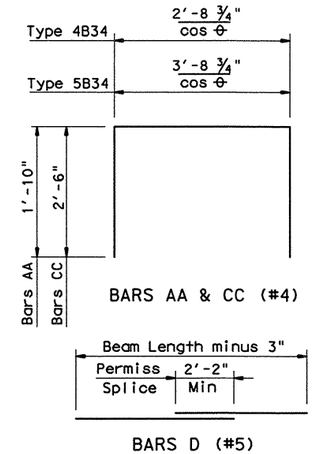

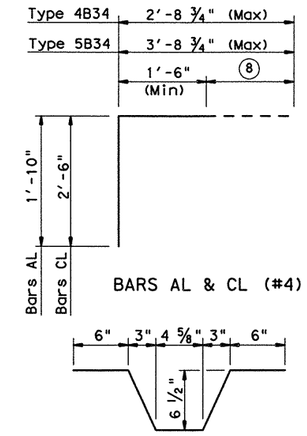

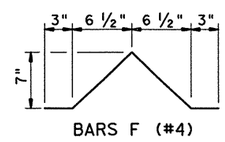

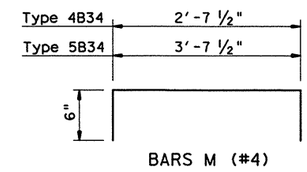

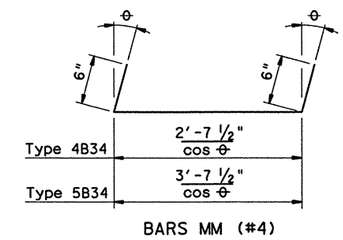

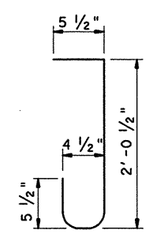

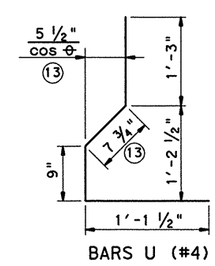

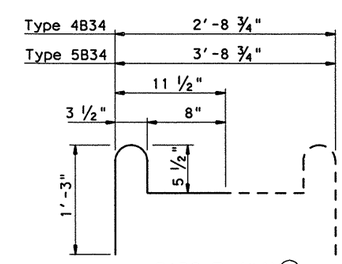

At fabricator's option, Bars Z pairs may be fabricated using one continuous bar. If this option is used, Bars B at Bar Z locations (only) may be omitted.

(1) Bars Z are required for beams topped with a cast-in-place concrete slab only.

(2) Post-tensioning tendons are required for beams not topped with a Min 5" cast-in-place concrete slab. See span details for number and spacing of transverse tendons. Cast interior diaphragms in exterior beams and beams that serve temporarily as exterior beams in staged constructed bridges. Form 3" Dia holes in interior beams. See "Blockout, Interior Diaphragm, and Drain Details". See standard BBPT for details.

(3) Place drain holes (1" Dia PVC Sch 40 Pipe) as shown in all beam void corners including each side of interior diaphragms. See "Blockout, Interior Diaphragm, and Drain Details".

(4) Blockouts required at ends of all beams. Extend beam reinforcement into blockouts.

(8) Cut as required to maintain one inch clear between bars.

(12) 5" (Typ) or sufficient depth to provide 1" Cover on cut-off tendon. See BBPT for details.

(13) Dimension will vary slightly with skew. Adjust as necessary.

HL93 LOADING — SHEET 3 OF 3

Texas Department of Transportation
Bridge Division

PRESTRESSED CONCRETE BOX BEAM DETAILS (TYPE B34)

BB-B34

FILE: bbstde03.dgn	DN: TxDOT	CK: TxDOT	DW: TxDOT	CK: TxDOT
© TxDOT December 2006	DISTRICT	FEDERAL AID PROJECT		SHEET
REVISIONS	SAT			282

COUNTY	CONTROL	SECT	JOB	HIGHWAY
BEXAR	2452	01	043	LP1604

DISCLAIMER:
The use of this standard is governed by the "Texas Engineering Practice Act". No warranty of any kind is made by TxDOT for any purpose whatsoever. TxDOT assumes no responsibility for the conversion of this standard to other formats or for incorrect results or damages resulting from its use.

PATH:

LEVELS DISPLAYED

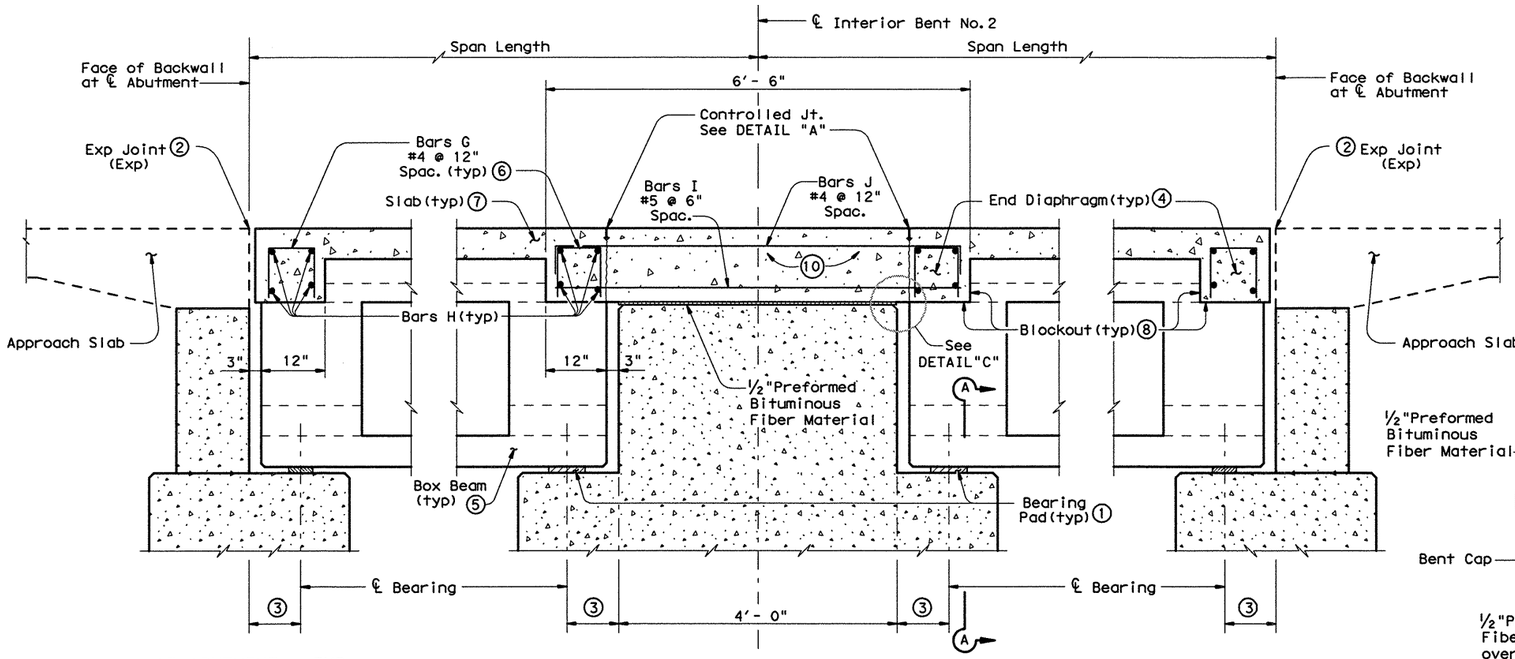

AT ABUTMENT ~ EXP
(Showing Approach Slab)

AT INTERIOR BENT ~ FIX

AT ABUTMENT ~ EXP
(Showing Approach Slab)

TYPICAL LONGITUDINAL SECTION

ELEVATION AT CENTERLINE OF BOXES
(SEE BRIDGE LAYOUT FOR JOINT CONDITION)

Note: End diaphragm shall be cast integrally with the bridge slab. The slab and end diaphragm may be cast integrally with the shear key.

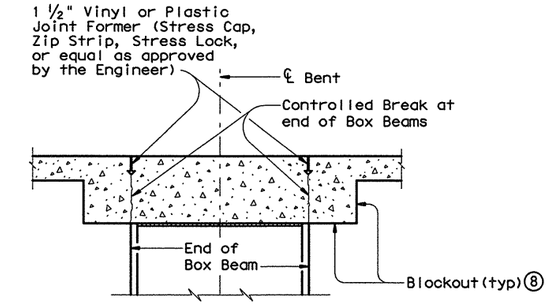

DETAIL "A"
CONTROLLED JOINT DETAIL
(AT INVERTED "T" BENT CAP)

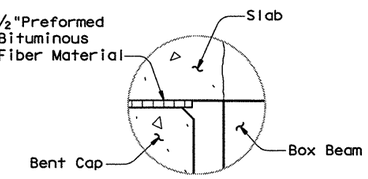

DETAIL "C"

½" Preformed Bituminous Fiber Material should extend over chamfer to be flush with cap face. This will ensure that a bond will not form between the top of cap and slab.

① See Elastomeric Bearing Details Sheet for Bearing Pad Details.

② See SEJ Sheet for Sealed Expansion Joint or AJ sheet for Armor Joint or Detail "A" for Controlled Joint.

③ See Elastomeric Bearing Details Sheet for distance to centerline of Bearing

④ Box Beam End Diaphragm concrete shall be Cast-in-Place Class "S" Concrete. See "END DIAPHRAGM DETAIL" for welded attachment.

⑤ See Prestressed Concrete Box Beam Detail sheet for additional information.

⑥ Details for Diaphragm Reinforcing Steel Bars G, H and J are shown on Sheet 2 of 2.

⑦ See Prestressed Concrete Box Beam Span Detail Sheets for Slab Details not shown.

⑧ See Prestressed Concrete Box Beam Detail Sheets for Box Beam blockout.

⑨ See Abutment and Interior Bent Sheets for details.

⑩ Slab Reinforcing not shown for clarity. See PRESTRESSED CONCRETE BOX BEAM DECK DETAILS for placement of slab Reinforcing Steel.

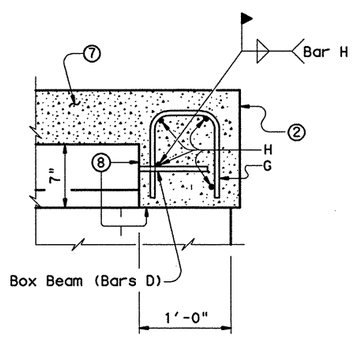

END DIAPHRAGM DETAIL

(DETAIL SHOWN AT ABUTMENT CAP, SIMILAR FOR INVERTED "T" BENT CAP, SEE TYPICAL LONGITUDINAL SECTION AT INTERIOR BENT FOR CONTINUOUS DIAPHRAGM OVER BENT CAP)

NOTE: After all Box Beams have been placed, Fillet Weld one Bar H to every other Bar D at each end of all Box Beams. Additional bracing may be required as directed by the Engineer.

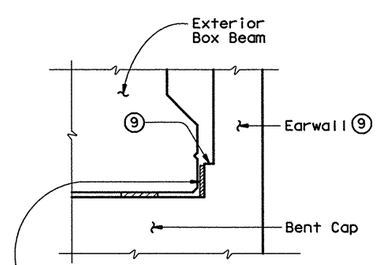

ALL INTERIOR BENTS

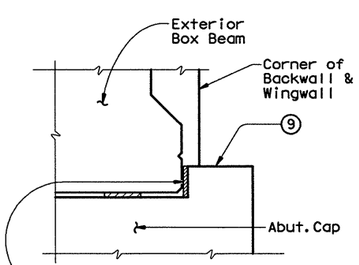

ABUTMENTS ONLY

A ½" bituminous material layer shall be bonded to the inside face of the shear key, adjacent to the outside box beam, with an approved construction adhesive.

VIEW A-A

SEE ABUTMENTS AND BENTS DETAILS FOR LOCATIONS AND DETAILS

The seal appearing on this document was authorized by Kurt Eric Kunze, P.E. 85494, on 03-17-11

Kurt Eric Kunze, P.E.

Date

STATE OF TEXAS — KURT ERIC KUNZE — 85494 — LICENSED PROFESSIONAL ENGINEER

HL93 LOADING — SHEET 1 OF 2

Texas Department of Transportation
Bridge Division

PRESTRESSED CONCRETE BOX BEAMS
SLAB DETAILS AT INVERTED "T" BENTS AND ABUTMENTS
BBCD-S (MOD)

FILE: bbconslb.dgn	DN:	CK:	DW:	CK:	STD:
ORIG DATE: OCTOBER 1996	DIST	FED REG	FEDERAL AID PROJECT		SHEET
REVISIONS WORKING DRAWING BB-CDS Rev-01/2002 Modified for Inv.T Bent Cap on 06-03-05	SAT	6			283
	COUNTY		CONTROL	SECT	JOB	HIGHWAY
	BEXAR		2452	01	043	LP1604

DISCLAIMER:
The use of this working drawing is governed by the "Texas Engineering Practice Act". No warranty of any kind is made by TxDOT for any purpose whatsoever. TxDOT assumes no responsibility for the conversion of this working drawing to other formats or for incorrect results or damages resulting from its use.

LEVELS DISPLAYED 1 3 ACC:

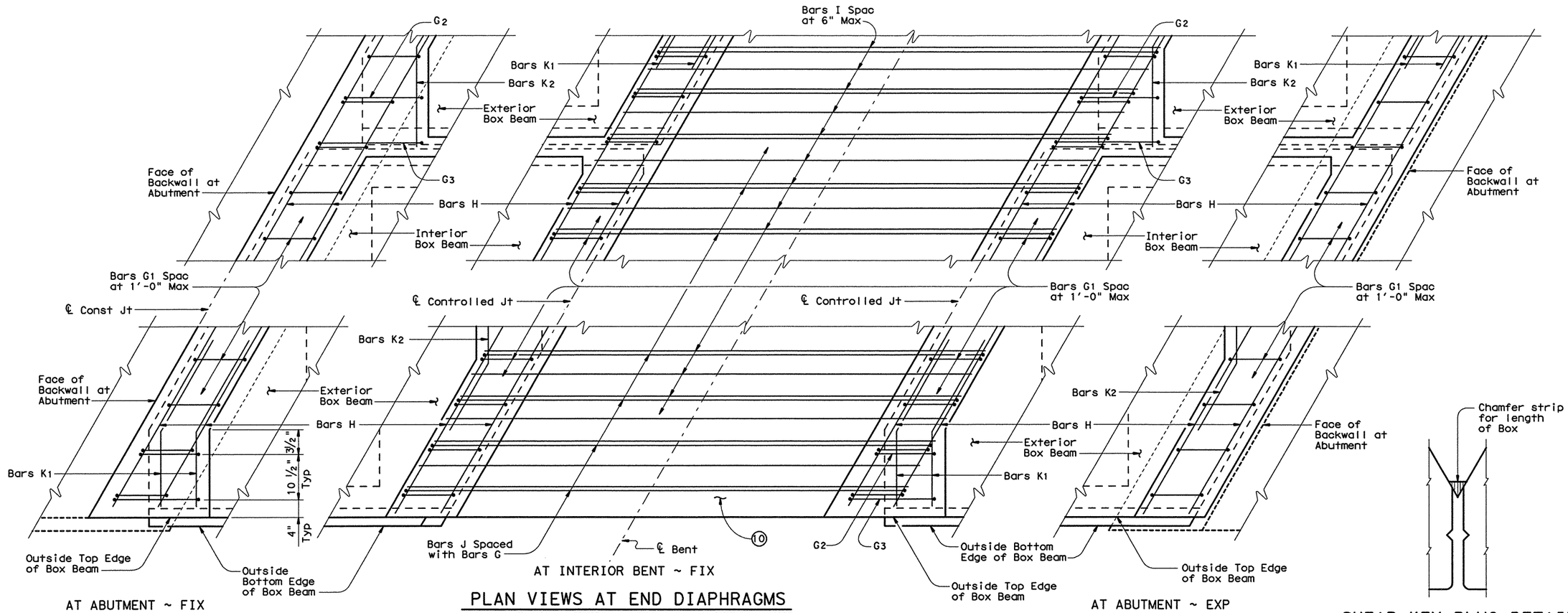

PLAN VIEWS AT END DIAPHRAGMS

(Skews Over 15° Thru 30°)

10 Slab Reinforcing not shown for clarity. See PRESTRESSED CONCRETE BOX BEAM DECK DETAILS for placement of slab Reinforcing Steel.

SHEAR KEY PLUG DETAIL

Other type of Joint Sealer may be used if approved by the Engineer.

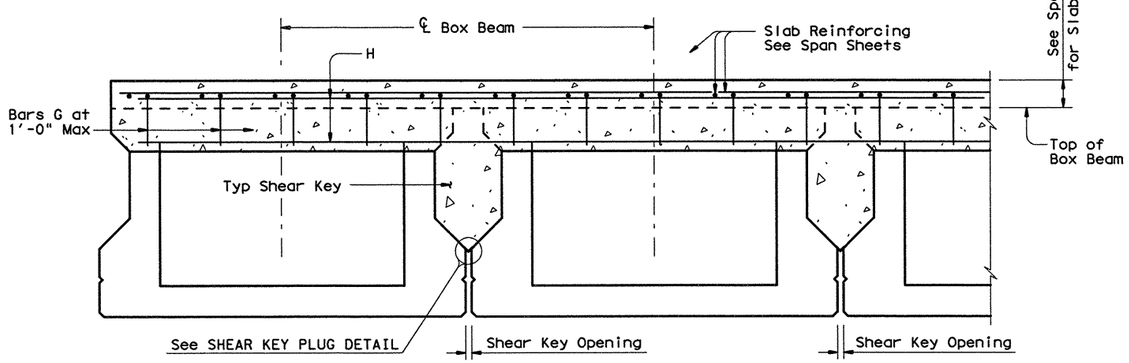

PARTIAL TRANSVERSE SECTION AT END DIAPHRAGM

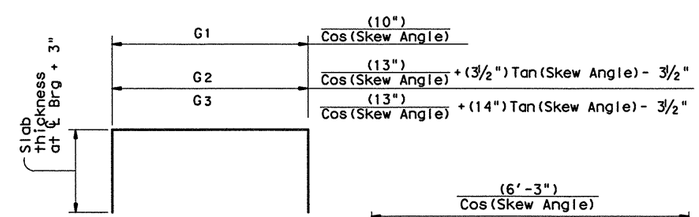

BARS G (#4)
Slab Thickness shown on Span Sheets

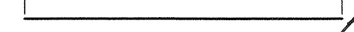

BARS I (#5)

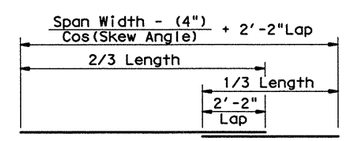

BARS H (#5)
(Alternate Laps)

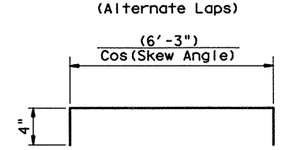

BARS J (#4)

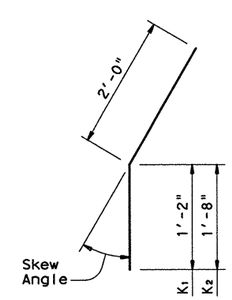

BARS K (#4)

The seal appearing on this document was authorized by Kurt Eric Kunze, P.E. #85494, on 03-17-11

Kurt Eric Kunze, P.E. — Date

STATE OF TEXAS — KURT ERIC KUNZE — 85494 — LICENSED PROFESSIONAL ENGINEER

HL93 LOADING — SHEET 2 OF 2

Texas Department of Transportation
Bridge Division

PRESTRESSED CONCRETE BOX BEAMS
SLAB DETAILS AT INVERTED "T" BENTS AND ABUTMENTS
BBCD-S (MOD)

FILE: bbstde10.dgn	DN: TxDOT	CK: TxDOT	DW: JTR	CK: TxDOT
© TxDOT December 2002	DISTRICT	FEDERAL AID PROJECT		SHEET
REVISIONS	SAT			284

COUNTY	CONTROL	SECT	JOB	HIGHWAY
BEXAR	2452	01	043	LP1604

DISCLAIMER:
The use of this standard is governed by the "Texas Engineering Practice Act". No warranty of any kind is made by TxDOT for any purpose whatsoever. TxDOT assumes no responsibility for the conversion of this standard to other formats or for incorrect results or damages resulting from its use.

LEVELS DISPLAYED — PATH:

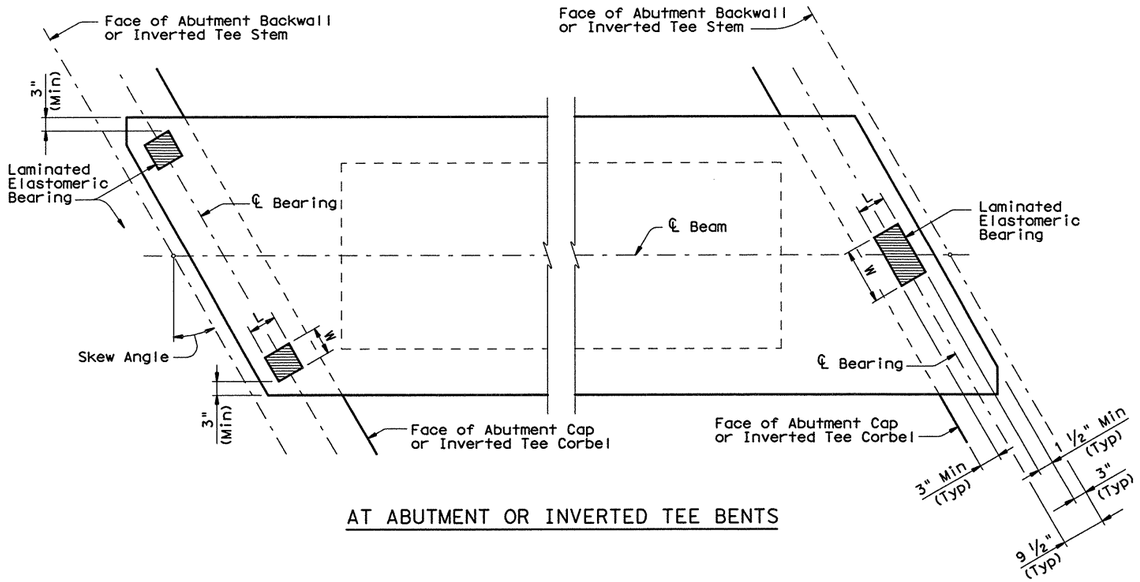

AT ABUTMENT OR INVERTED TEE BENTS

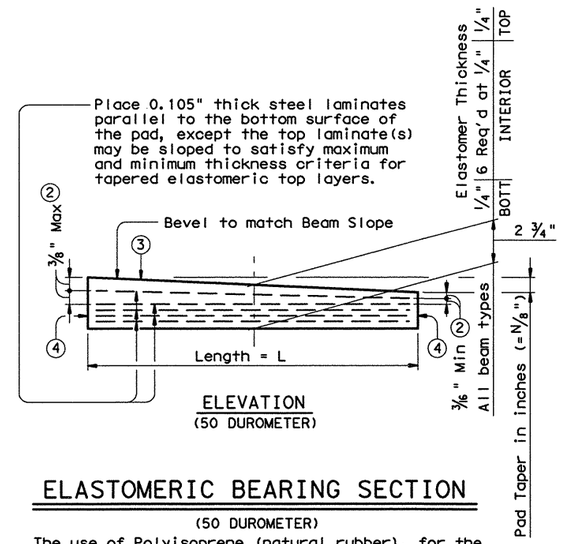

ELEVATION
(50 DUROMETER)

ELASTOMERIC BEARING SECTION

(50 DUROMETER)

The use of Polyisoprene (natural rubber), for the manufacture of bearing pads, is not permitted.

ELASTOMETRIC BEARING DIMENSIONS

BEARING TYPE	BEAM TYPE	ONE BEARING		TWO BEARINGS	
		L	W	L	W
B20-"N"	4B20	6"	12"	6"	6"
	5B20	6"	12"	6"	6"
B28-"N"	4B28	6"	14"	6"	7"
	5B28	6"	14"	6"	7"
B34-"N"	4B34	6"	16"	6"	8"
	5B34	6"	16"	6"	8"
B40-"N"	4B40	6"	20"	6"	10"
	5B40	6"	20"	6"	10"

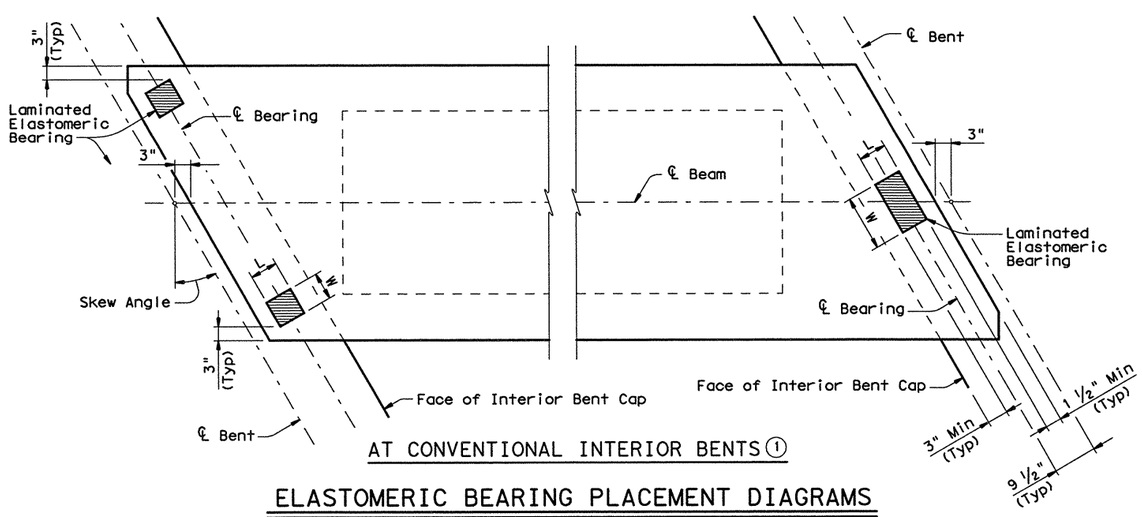

AT CONVENTIONAL INTERIOR BENTS ①

ELASTOMERIC BEARING PLACEMENT DIAGRAMS

The Forward Station Beam End will have one bearing and the Back Station Beam End will have two bearings.

① For Transition Bents with backwall, beams and elastomeric bearings will receive the same treatment as shown for Abutment Bents.

② Maximum and minimum layer thicknesses shown are for elastomer only, on tapered layers.

③ Indicate BEARING TYPE on all pads. For tapered pads, BEARING TYPE will be located on the high side. The Fabricator will include the value of "N" (amount of taper in 1/8" increments) in this mark.
Examples: N=0, (for 0" taper)
N=1, (for 1/8" taper)
N=2, (for 1/4" taper)
(etc.)
Fabricated pad top surface slope must not vary from plan beam slope by more than $\left(\frac{0.0625"}{\text{Length}}\right)$ IN/IN.

④ Locate Permanent Mark here.

GENERAL NOTES:

Set beams on elastomeric bearings of the dimensions shown. Center bearings as near nominal ℄ bearing as possible within limits shown.

Constant thickness bearings may be used for moderate beam slopes up to 0.0113 ft/ft.

For skewed supports, Bearings beveled for beam slope may not provide uniform contact. However, predicted contact is considered within allowable tolerances.

Shop drawings for approval are required.

A bearing layout which identifies location and orientation of all bearings will be developed by the bearing fabricator. Permanently mark each bearing in accordance with the bearing layout. A copy of the bearing layout is to be provided to the Engineer.

Cost of furnishing and installing elastomeric bearings is to be included in unit price bid for "Prestressed Concrete Box Beams".

Details are drawn showing right forward skew. See Bridge Layout for actual direction.

These details are applicable for skews up to 30 degrees only.

HL93 LOADING

Texas Department of Transportation
Bridge Division

ELASTOMERIC BEARING DETAILS
PRESTR CONC BOX BEAMS

BBEB

FILE: bbstde08.dgn	DN: TxDOT	CK: TxDOT	DW: TxDOT	CK: TxDOT
©TxDOT December 2006	DISTRICT	FEDERAL AID PROJECT		SHEET
REVISIONS	SAT			285

COUNTY	CONTROL	SECT	JOB	HIGHWAY
BEXAR	2452	01	043	LP1604

DISCLAIMER:
The use of this standard is governed by the "Texas Engineering Practice Act". No warranty of any kind is made by TxDOT for any purpose whatsoever. TxDOT assumes no responsibility for the conversion of this standard to other formats or for incorrect results or damages resulting from its use.

PATH:
LEVELS DISPLAYED

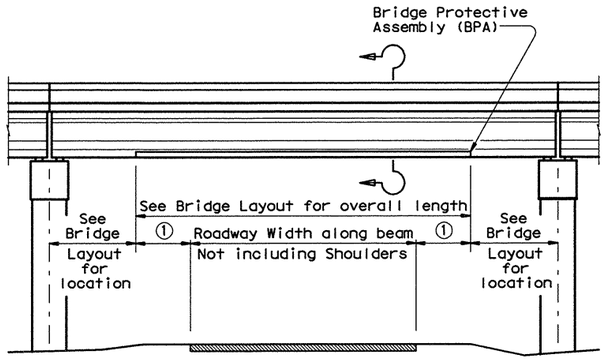

TYPICAL BRIDGE ELEVATION

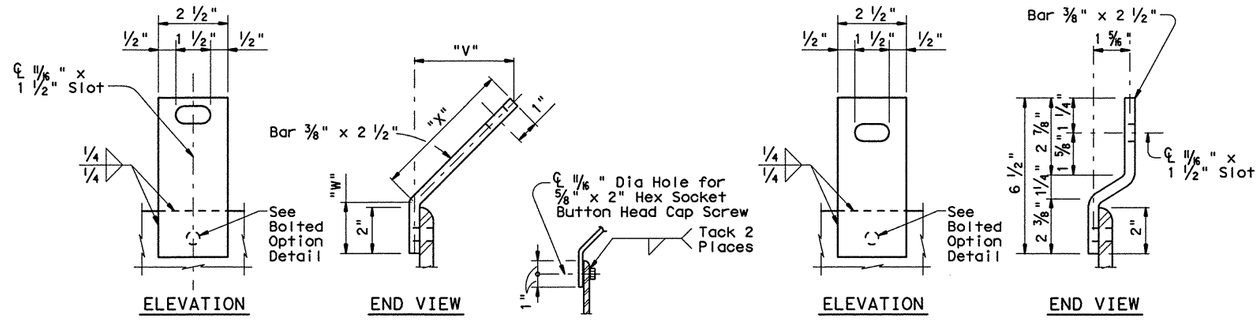

PRESTR CONC I-BEAMS & BOX BEAMS

CG (PAN FORM) SPANS & PRESTR CONC SLAB BMS

SUPPORT BRACKET DETAILS

TABLE OF VARIABLE DIMENSIONS					
I-BEAM	"V"	"W"	"X"	"Y"	"Z"
TYPE A	4 3/8"	2 7/16"	6 5/16"	2 9/16"	3 5/8"
TYPE B	5 1/2"	3 3/16"	7 13/16"	2 1/4"	3 3/16"
TYPE C	7 5/16"	2 3/16"	10 5/16"	2 1/4"	3 3/16"
TYPE IV	4 13/16"	3 3/16"	6 13/16"	6 1/4"	8 13/16"
TYPE VI	5 9/16"	3 3/16"	9 3/16"	6 1/2"	9 9/16"
BOX BEAM	"V"	"W"	"X"	"Y"	"Z"
TYPE B20	4 1/16"	2 3/16"	5 3/4"	1 15/16"	2 3/4"
TYPE B28	4 7/16"	2 3/16"	6 5/16"	2 9/16"	3 5/8"
TYPE B34	4 7/16"	6 3/16"	6 5/16"	2 9/16"	3 5/8"
TYPE B40	4 7/16"	12 3/16"	6 5/16"	2 9/16"	3 5/8"

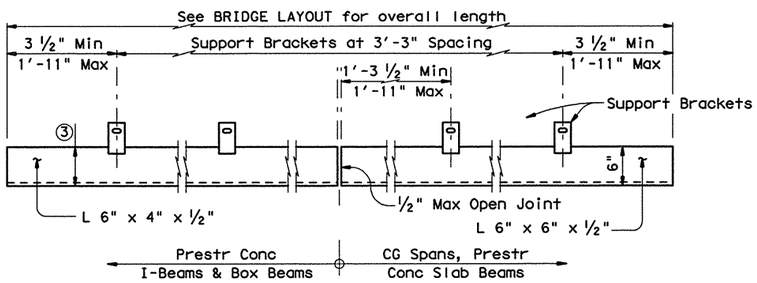

ELEVATION OF BRIDGE PROTECTION ASSEMBLY

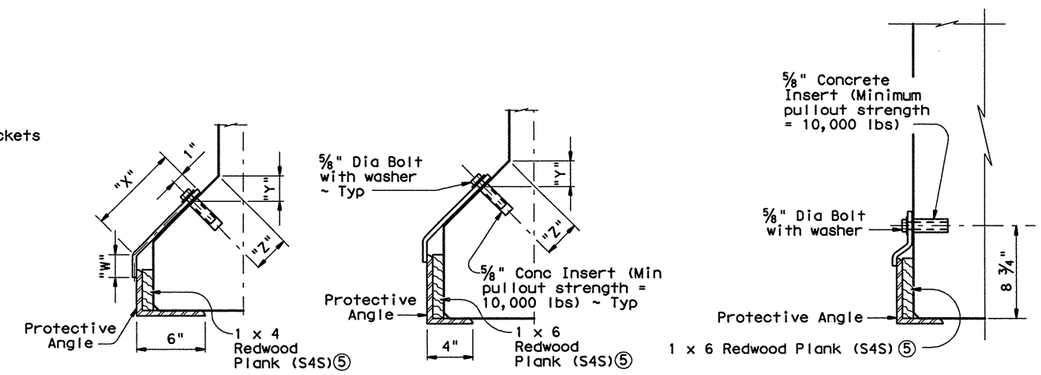

TYPE A & B I-BMS & TYPE B20 & B28 BOX BMS

TYPE C, IV & VI I-BMS & TYPE B34 & B40 BOX BMS

CG (PAN FORM) SPANS & PRESTR CONC SLAB BEAMS

SECTIONS THRU BRIDGE PROTECTION ASSEMBLY

①1'-0" Min, 3'-0" Max

②When "BOLTED OPTION" is used, notch Redwood Plank to accommodate bolt and nut.

③Type A I-Beams ~ L 6 x 4 x 1/2 (LLH).

Type B I-Beams ~ L 6 x 4 x 1/2 (LLH).

Type C I-Beams ~ L 6 x 4 x 1/2 (LLV). ④

Type IV I-Beams ~ L 6 x 4 x 1/2 (LLV).④

Type VI I-Beams ~ L 6 x 4 x 1/2 (LLV).④

Type B20 Box Beams ~ L 6 x 4 x 1/2 (LLH).

Type B28 Box Beams ~ L 6 x 4 x 1/2 (LLH).

Type B34 Box Beams ~ L 6 x 4 x 1/2 (LLV).④

Type B40 Box Beams ~ L 6 x 4 x 1/2 (LLV).④

④At Contractor's option, L 6 x 6 x 1/2 may be substituted without additional compensation.

⑤Attach redwood plank to protective angle with a construction adhesive.

Note:
LLH ~ Long leg horizontal
LLV ~ Long leg vertical

GENERAL NOTES:
Protective Angles and Support Brackets shall be Structural Steel conforming to ASTM designation A36, A572 or A588 and may be shipped in convenient lengths (11'-0" Min).
Joints in plank shall not coincide with joints in angle.
All steel components shall be galvanized, excluding concrete inserts in accordance with Item 445.
Approximate weight per linear foot
L 6 x 4 x 1/2 ~ 17.6 plf
L 6 x 6 x 1/2 ~ 21.0 plf
Payment for the BPA is in accordance with Item 442, "Metal for Structures" and includes angles, brackets, bolts and wood plank.

DISCLAIMER:
The use of this standard is governed by the "Texas Engineering Practice Act". No warranty of any kind is made by TxDOT for any purpose whatsoever. TxDOT assumes no responsibility for the conversion of this standard to other formats or for incorrect results or damages resulting from its use.

LEVELS DISPLAYED | ACC:

Texas Department of Transportation
Bridge Division

BRIDGE PROTECTION ASSEMBLY

BPA

FILE: bpastdel.dgn	DN: TxDOT	CK: TxDOT	DW: TxDOT	CK: TxDOT
©TxDOT April 2006	DISTRICT	FEDERAL AID PROJECT		SHEET
REVISIONS	SAT			286

COUNTY	CONTROL	SECT	JOB	HIGHWAY
BEXAR	2452	01	043	LP1604

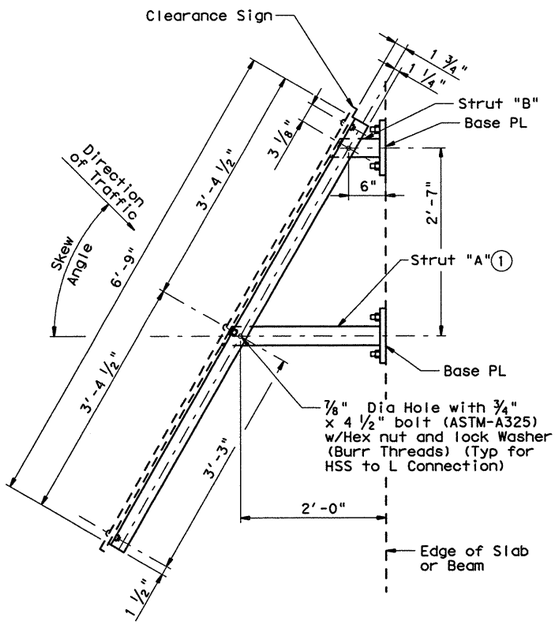

PLAN OF TYPE S MOUNT

(Used for Skews over 30°)

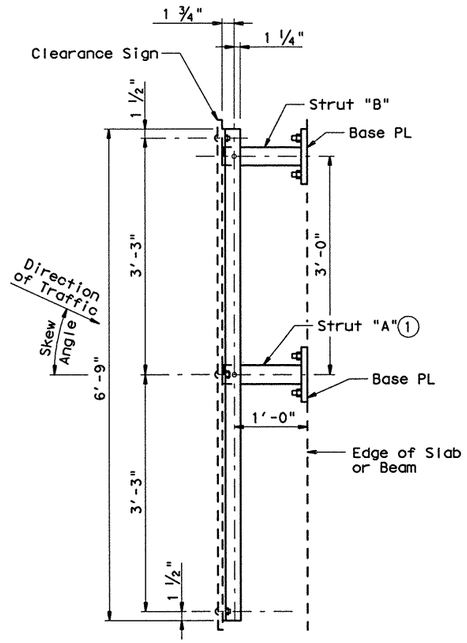

PLAN OF TYPE N MOUNT

(Used for 0° to 30° Skews)

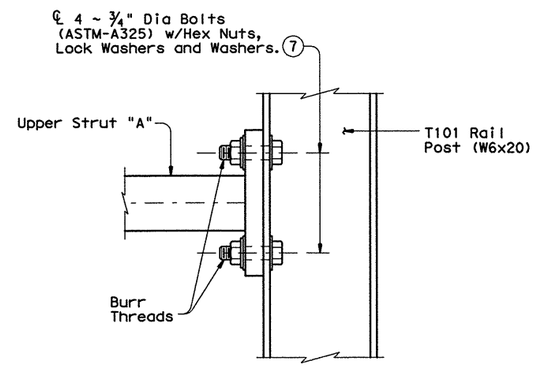

SHOWING ELEVATION VIEW OF CONNECTION AT T101 RAIL POST

1. Locate centerline of Strut A no closer than 12" from a vertical concrete edge.
2. ℄ 5/8" Dia x 2" Hexagon Socket Button Head Cap Screws (ASTM A574) w/Hex Nuts. Attach hex nuts to L 3 x 3 x 1/2 by tack welding in two places. Threads shall have Class 3A fit tolerance in accordance ASME B1.1. Six screws required.
3. Epoxy anchors utilizing 3/4" Dia A193 Grade B7 anchor rods (no expansion anchors) can be substituted for the anchor bolts detailed at all locations. Minimum pullout strength of epoxy anchors must exceed 7 kips, taking spacing and edge distances into consideration. Install according to the manufacturer's specifications. Min embedment allowed is 6". Galvanize anchor rods and lock washers and washers used with optional epoxy anchors.
4. For Prestressed Concrete Box Beams and Dbl-T Beams topped with a 2 course surface treatment and ACP overlay.
5. Anchor bolts to be cast in Box Beams and Dbl-T Beams topped with a 2 course surface treatment and ACP overlay. The Anchor Bolts w/Hex Nuts, Lock Washers and Anchor PL that is embeded in the beam will be provided by the beam fabricator.
6. For Prestressed Concrete Box Beams, Slab Beams and Dbl-T Beams with a composite cast-in-place slab used as a topping.
7. Field Drill 13/16 " Holes in back of T101 Rail Post.

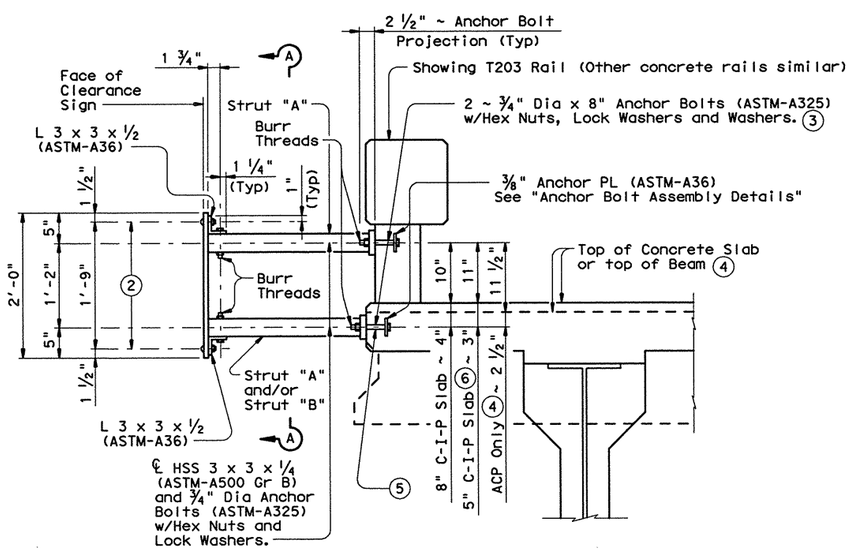

SECTION

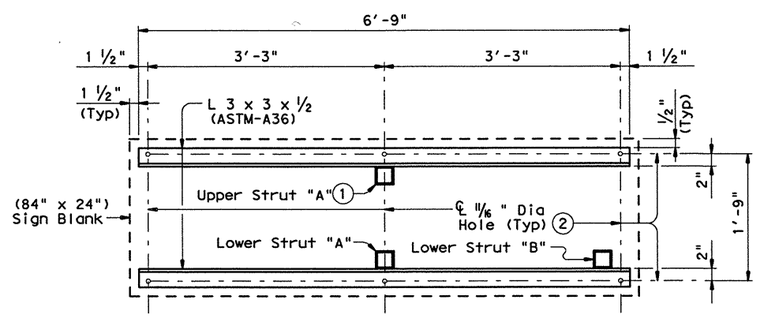

VIEW A-A

GENERAL NOTES:

This standard provides details to mount a vertical clearance sign (84" x 24") to bridges. Rail Types T6, T77, PR1 and PR2 are not accommodated.

The vertical face of clearance sign will be plumb unless otherwise approved by the Engineer.

All steel components shall be galvanized after fabrication unless otherwise noted.

The Engineer will furnish the clearance to be shown on the sign.

See Bridge Layout for sign location and mounting type (Type N or S).

Cost of furnishing, installing, relocating or removing a Clearance Sign will be included in unit price bid for "Aluminum Signs (Type A)".

One Sign Blank (84" x 24") is 14 SF.

Average steel weight for one complete Type N Mount is 209 Lb.

Average steel weight for one complete Type S Mount is 222 Lb.

Sign mounts will be paid for at the unit price bid for "Structural Steel (Misc)".

SHEET 1 OF 2

Texas Department of Transportation
Bridge Division

BRIDGE MOUNTED CLEARANCE SIGN ASSEMBLY

BMCS

FILE: bmcsstel.dgn	DN: TxDOT	CK: TxDOT	DW: TxDOT		CK: TxDOT
© TxDOT April 2006	DISTRICT	FEDERAL AID PROJECT			SHEET
REVISIONS 08-2007: Removed reference of W12-2P.	SAT				287
	COUNTY		CONTROL	SECT	JOB	HIGHWAY
	BEXAR		2452	01	043	LP1604

DISCLAIMER:
The use of this standard is governed by the "Texas Engineering Practice Act". No warranty of any kind is made by TxDOT for any purpose whatsoever. TxDOT assumes no responsibility for the conversion of this standard to other formats or for incorrect results or damages resulting from its use.

ACC:

LEVELS DISPLAYED

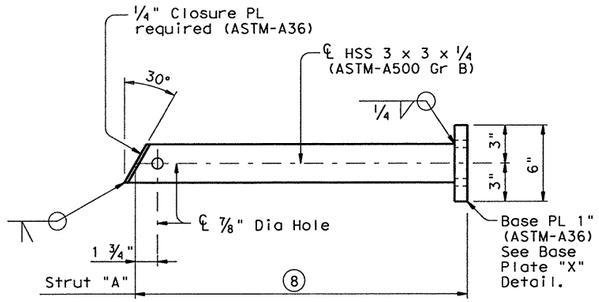

FOR T101, T411 AND C411 RAIL TYPES

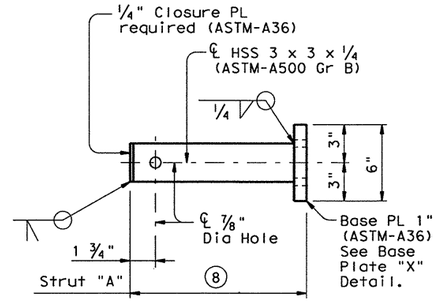

FOR T101, T411 AND C411 RAIL TYPES

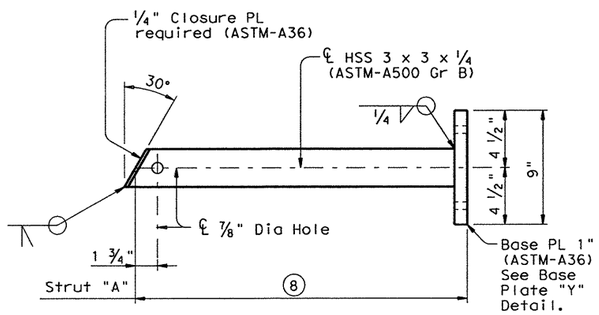

FOR T203, C203, T221, C221, T401, T402, C402, T501, C501, T502, C502, T503, T504, HT AND SSTR RAIL TYPES

UPPER STRUT DETAIL FOR (TYPE S MOUNT)

(Used for Skews over 30°)

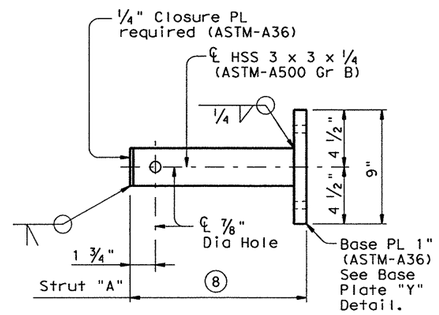

FOR T203, C203, T221, C221, T401, T402, C402, T501, C501, T502, C502, T503, T504, HT AND SSTR RAIL TYPES

UPPER STRUT DETAIL FOR (TYPE N MOUNT)

(Used for 0° to 30° Skews)

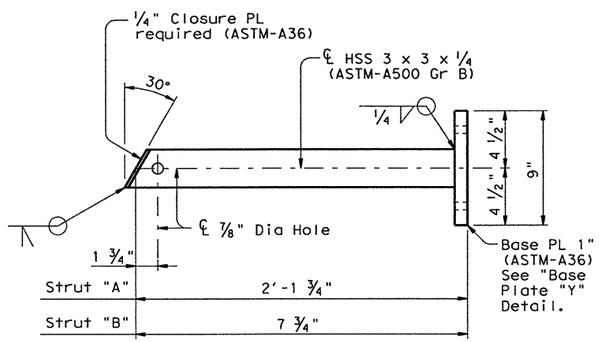

LOWER STRUT DETAILS FOR (TYPE S MOUNT)

(Used for Skews over 30°)

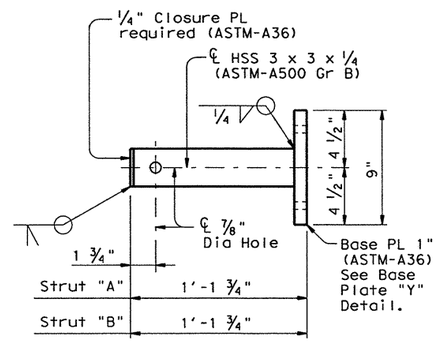

LOWER STRUT DETAILS FOR (TYPE N MOUNT)

(Used for 0° to 30° Skews)

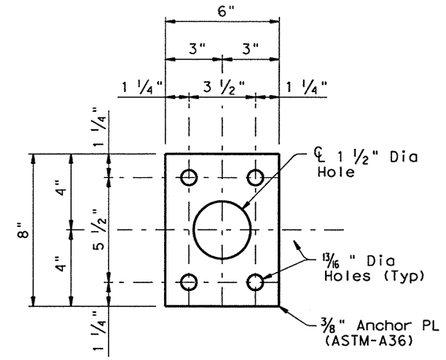

PLAN OF ANCHOR PLATE

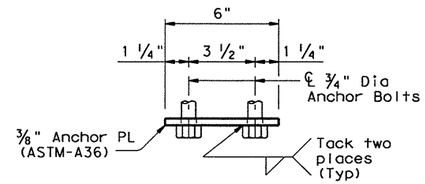

ELEVATION

ANCHOR BOLT ASSEMBLY DETAILS (3)

(USED ON UPPER BASE PLATE "X" WITH T411 & C411 RAIL TYPES)

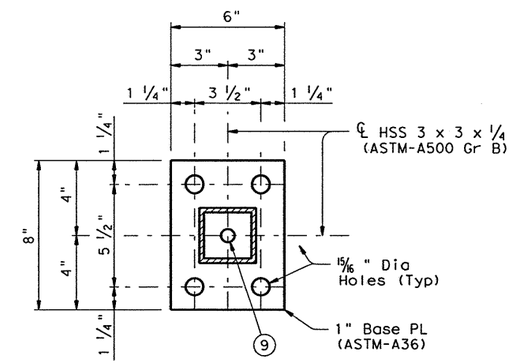

BASE PLATE "X" DETAIL

(3) Epoxy anchors utilizing A193 Grade B7 anchor rods (no expansion anchors) can be substituted for the anchor bolts detailed at all locations. Minimum pullout strength of epoxy anchors must exceed 7 kips, taking spacing and edge distances into consideration. Install according to the manufacturer's specifications. Min embedment allowed is 6". Galvanize anchor rods and lock washers and washers used with optional epoxy anchors.

(8) Adjust length to accommodate edge of slab to back of rail for specific project conditions and to help plumb the vertical face of clearance sign.

(9) Hole required to drain zinc from base plate during galvanizing.

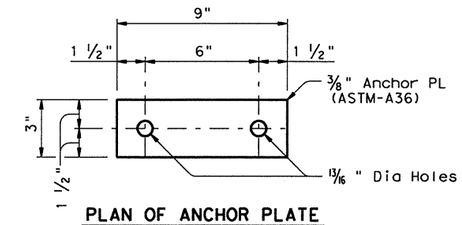

PLAN OF ANCHOR PLATE

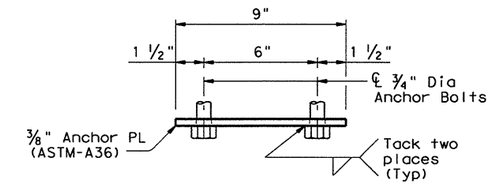

ELEVATION

ANCHOR BOLT ASSEMBLY DETAILS (3)

(USED ON UPPER AND/OR LOWER BASE PLATE "Y")

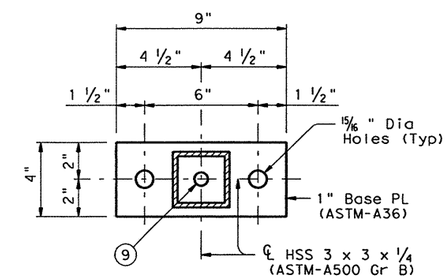

BASE PLATE "Y" DETAIL

SHEET 2 OF 2

Texas Department of Transportation
Bridge Division

BRIDGE MOUNTED CLEARANCE SIGN ASSEMBLY

BMCS

FILE: bmcsstel.dgn	DN: TxDOT	CK: TxDOT	DW: TxDOT	CK: TxDOT
© TxDOT April 2006	DISTRICT	FEDERAL AID PROJECT		SHEET
REVISIONS 08-2007: Removed reference of W12-2P.	SAT			287A
	COUNTY	CONTROL	SECT	JOB	HIGHWAY
	BEXAR	2452	01	043	LP1604

DISCLAIMER:
The use of this standard is governed by the "Texas Engineering Practice Act". No warranty of any kind is made by TxDOT for any purpose whatsoever. TxDOT assumes no responsibility for the conversion of this standard to other formats or for incorrect results or damages resulting from its use.

ACC:
LEVELS DISPLAYED

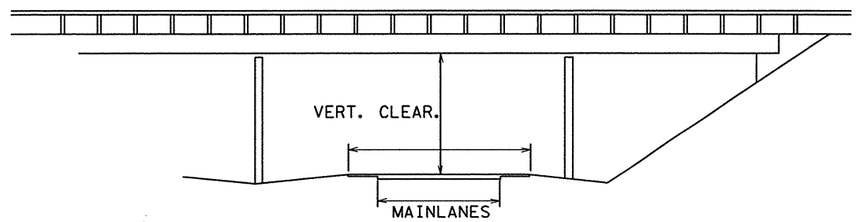

EXAMPLE "A"

MINIMUM VERTICAL CLEARANCE TO BE MEASURED BETWEEN OUTER EDGE OF SHOULDER

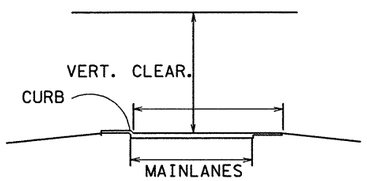

EXAMPLE "B"

MINIMUM VERTICAL CLEARANCE TO BE MEASURED BETWEEN FACE OF CURB AND OUTER EDGE OF SHOULDER

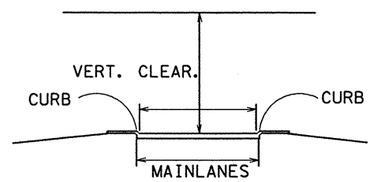

EXAMPLE "C"

MINIMUM VERTICAL CLEARANCE TO BE MEASURED BETWEEN THE FACES OF THE TWO CURBS

SIGNS SHALL BE MOUNTED AS INDICATED HERE ON OTHERWISE AS DIRECTED BY THE ENGINEER

ALL BOLTS USED IN ATTACHING THE W12-3 SIGN TO THE TRAFFIC RAIL SHALL BE GALVANIZED AND COMPLYWITH REQUIREMENTS OF ASTM A307 (SEE ITEM 449), AND BE OF SUFFICIENT LENGTH TO EXTEND THROUGH THE FULL THICKNESS OF THE NUT AND WASHER NO MORE THAN 6. THE EXPOSED THREADS TO BE BURRED.

THE W12-3 SIGN SHALL BE PLACED OVER THE CENTER OF THE LANE IT IS TO SERVE OR AS NEAR THE CENTER AS POSSIBLE.
THE CONTRACTOR SHALL VERIFY, WITH THE ENGINEER, THE VERTICAL CLEARANCE FOR THE W12-3 SIGNS PRIOR TO FABRICATION.

ALL WORK, MATERIALS, BOLTS, NUTS, WASHERS, SPACERS, ETC. AND INCIDENTALS NECESSARY TO FIELD DRILL AND ATTACH W12-3 SIGNS AS INDICATED HEREON WILL NOT BE PAID FOR SEPERATELY BUT SHALL BE CONSIDERED SUBSIDIARY TO THE ITEM "ALUMINUM SIGNS (TY A)"

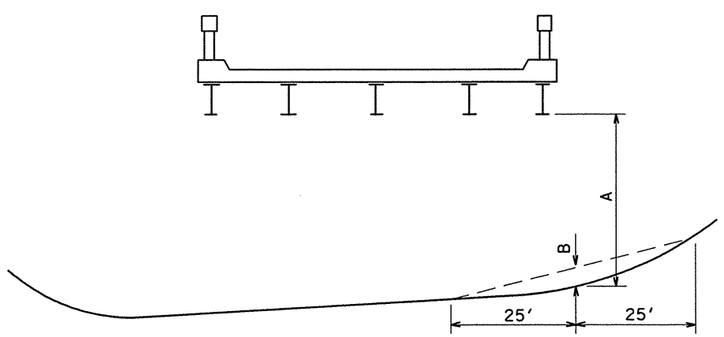

SKETCHES SHOWING METHOD FOR DETERMINING VERTICAL CLEARANCE OF OVERHEAD STRUCTURES FOR SIGNING

EQUATION FOR DEPRESSED VERTICAL CURVE

SIGNED CLEARANCE = ACTUAL CLEARANCE MINUS 3"
ACTUAL CLEARANCE = "A" MINUS "B"

EQUATION FOR LEVEL ROADWAY

SIGNED CLEARANCE = ACTUAL CLEARANCE MINUS 3"

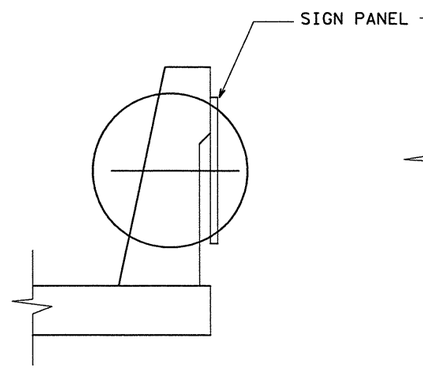

SECTION A-A

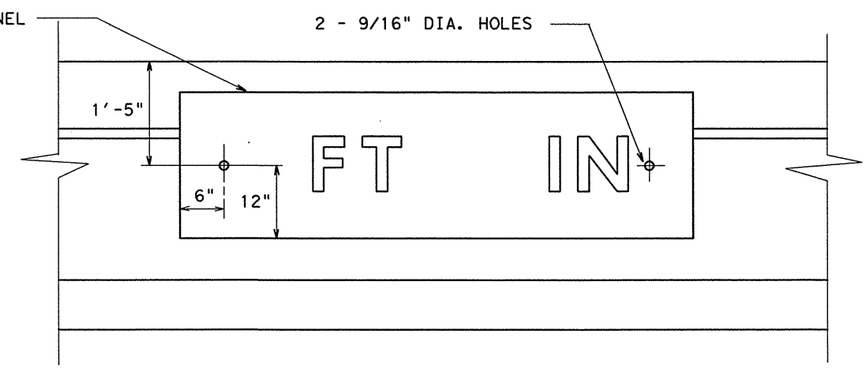

ELEVATION

SIGN MOUNTING ON TYPE SSTR

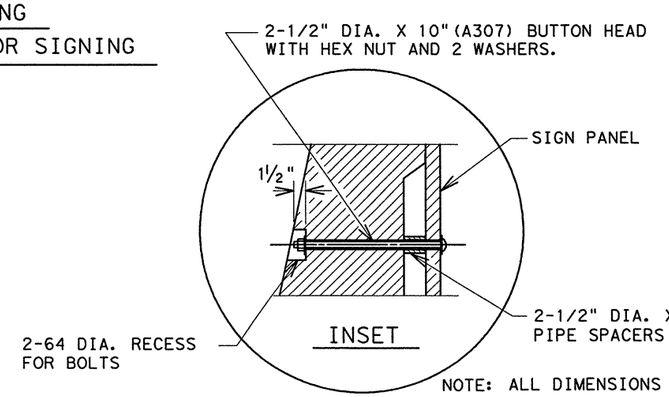

INSET

W12-3 MOUNTING DETAILS

(SAN ANTONIO DISTRICT STANDARD)

NOTE: ALL DIMENSIONS ARE IN MILLIMETERS OTHERWISE AS SHOWN ON PLANS.
SIGN PANEL HOLES SHALL BE FIELD PUNCHED.

FED.RD. DIV.NO.	FEDERAL AID PROJECT NO.		SHEET NO.
6			28B
STATE	STATE DIST.NO.	COUNTY	
TEXAS	SAT	BEXAR	
CONT.	SECT.	JOB	HIGHWAY NO.
2452	01	043	LP1604

PLAN

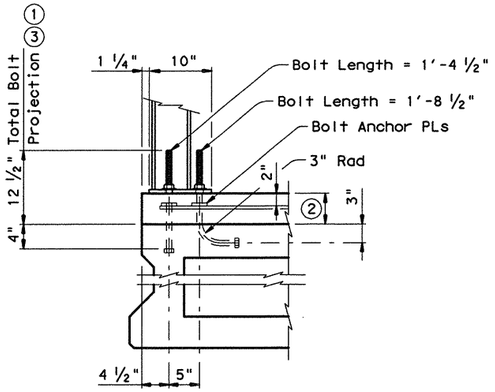

T101 RAILS

Bolt Anchor PLs must be provided by the contractor.
ASTM-A449 Anchor Bolts are permitted.

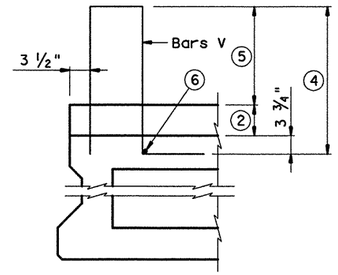

T401, T402 & C402 RAILS

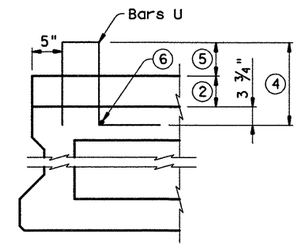

T411 & C411 RAILS

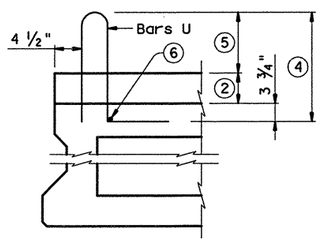

T221, T223, T551, T552, C221, C223 & SSTR RAILS

Bars L on T223 and C223 Rails are not used for this structure.

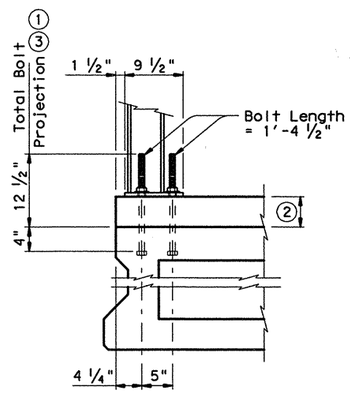

T6 RAIL

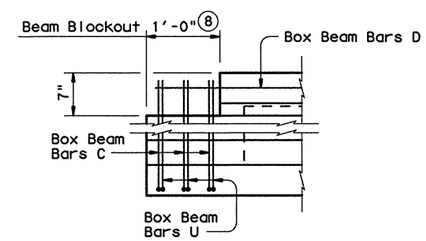

PARTIAL SECTION AT END OF BOX BEAM

TYPICAL ANCHORAGE PLACEMENT

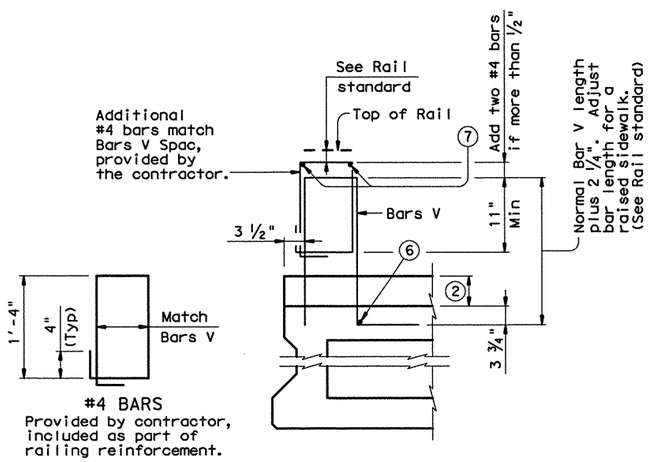

OPTIONAL RAIL ANCHORAGE FOR T401, T402 & C402 RAILS

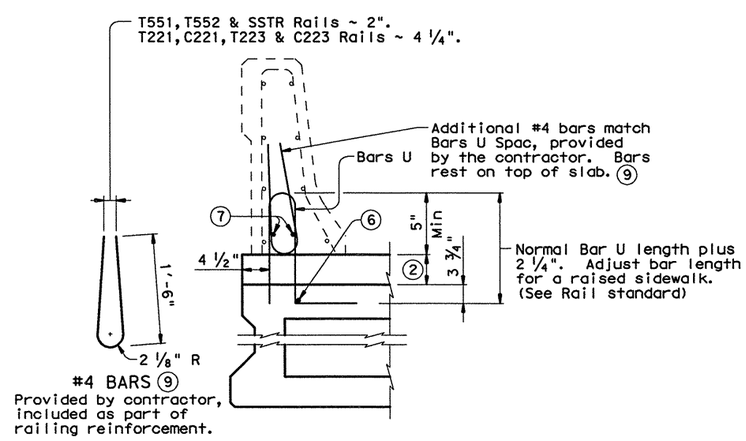

OPTIONAL RAIL ANCHORAGE FOR T221, T223, C221, C223, T551, T552 & SSTR RAILS

(Showing T551 Rail, other rails listed similar)
(Bars L on T223 and C223 Rails are not used for this structure)

① Bolts, nuts and washers must be provided by the beam fabricator. Bolt must have a minimum thread length of 7".

② Cast-in-place slab thickness varies due to beam camber (5" minimum).

③ Excess bolt length has been provided to accommodate a variable slab thickness due to beam camber. If slab thickness on span details exceed 10", bolt length must be increased accordingly. After posts have been set and bolts tightened, bolt projection above nuts of more than ½" must be cut off and painted with two coats of zinc-rich paint.

④ Bar length shown on rail standard, plus 2 ¼" minimum (varies due to beam camber). Adjust bar length for a raised sidewalk. On bridges with significant beam camber variable length rail anchor bars U or V may be required to maintain adequate projection into rail. See optional rail anchorage details for some rails that offer optional anchorage with a constant bar length.

⑤ See Rail standard for projection from finish grade or top of sidewalk.

⑥ Place additional #4 longitudinal bar. Bar embedded in beams must be provided by the beam fabricator, included as part of railing reinforcement. Bar shown is required to control alignment of rail anchorage steel. Bar shown may be placed outside of beam at the fabricator's option and may be removed prior to shipping.

⑦ Place additional #4 longitudinal bars. These bars must be provided by the Contractor.

⑧ The beam fabricator must supply all rail anchorage that is required in the blockout area. Reinforcing steel or anchor bolts must be firmly secured to the beam by the fabricator at the detailed position (per applicable Rail standard sheet), prior to shipment of the beam. Anchor bolt groups for Type T101 and T6 Rails cannot be centered less than 9" from the centerline of an Open Joint, Sealed Joint, or from the centerline of an Interior Bent with an End Diaphragm condition where no Joint opening is present. (See applicable Rail standard and Span sheets) Contractor must verify spacing and location of rail reinforcing and anchor bolts in beam blockouts before diaphragm concrete is placed.

⑨ Provide when Bars U extension above slab is less than 8".

GENERAL NOTES:

Designed in accordance with AASHTO LRFD Specifications.

This standard is for use with structures with a 5" minimum cast-in-place concrete slab. See Span Details for estimating slab thickness due to camber and to aid in making adjustments to anchorage projection lengths.

This standard only applies to rails at the outside edge of the bridge and not in conditions where interior rails and median barriers are used.

Box beam rail anchorage hardware, embedded in the beams and required in blockout areas, must be provided by the beam fabricator and reflected in the box beam shop drawings.

Rail anchorage bars may be field bent as required to clear rail reinforcing or provide minimum cover shown on standard rail detail sheets.

See Rail standard sheets for approved design speed restrictions, notes and details not shown.

This standard does not support the use of Type T1F, T1W, T77, T80HT, T80SS, C1W, PR1, PR2 and PR3 Rails on box beam bridges.

Epoxy coat reinforcement shown on this standard if rail reinforcement is epoxy coated.

DISCLAIMER:
The use of this standard is governed by the "Texas Engineering Practice Act". No warranty of any kind is made by TxDOT for any purpose whatsoever. TxDOT assumes no responsibility for the conversion of this standard to other formats or for incorrect results or damages resulting from its use.

LEVELS DISPLAYED | PATH:

Texas Department of Transportation
Bridge Division

RAIL ANCHORAGE DETAILS
PRESTR CONC BOX BEAMS (WITH SLAB)

BBRAS

FILE: bbstde09.dgn	DN: TxDOT	CK: TxDOT	DW: JTR	CK: JMH	
© TxDOT December 2006	DISTRICT	FEDERAL AID PROJECT			SHEET
REVISIONS	SAT				289
04-09: Updated for new rails.	COUNTY		CONTROL	SECT	JOB	HIGHWAY
	BEXAR		2452	01	043	LP1604

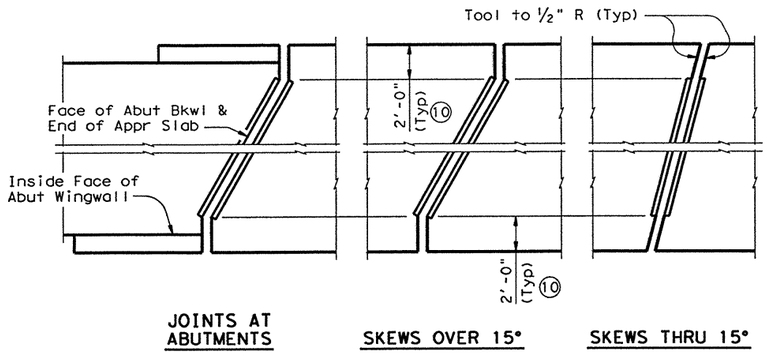

PLANS OF ARMOR JOINT PLATES

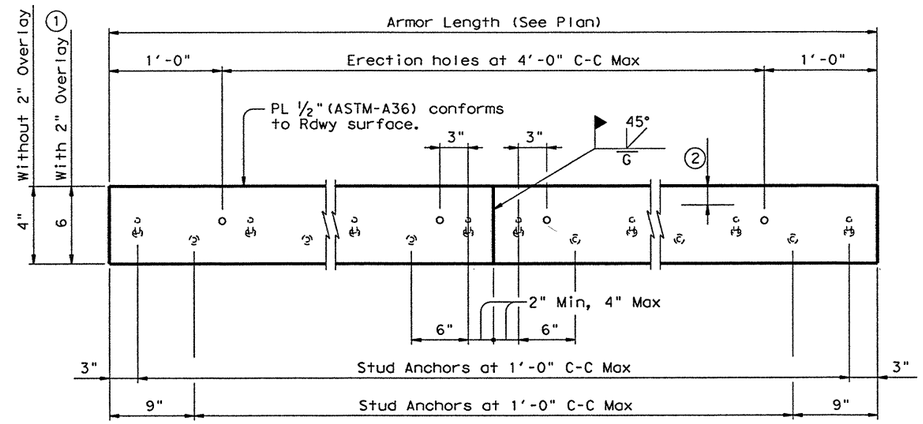

ELEVATION OF BASIC ARMOR PLATE

WEIGHTS P.L.F. FOR ONE ARMOR JOINT (2 PLATES)	
WITHOUT OVERLAY	16.10 Lb
WITH 2" OVERLAY ①	22.90 Lb

① Adjust 6" plate height for overlay thicknesses other than the 2" shown. Adjust values by 1.70 Lbs for each ½" variation in thickness.

② Do not paint top 1 ½" of plate if using sealed armor joint.

③ Set top of backer rod 1" below top of armor plate. Backer rod must be compatible with joint sealant. Use of multiple pieces to create a backer rod cross section is not permitted. Top of backer rod must be convex as shown.

④ Blast clean entire contact area between sealant and plate (SSPC-SP10) before installing sealant. Light brush blast and thoroughly clean all dust and debris from concrete surfaces in contact with joint sealant before application of Silicone Seal.

⑤ Use Class 7 joint sealant that conforms to DMS-6310.

⑥ Place sealant while ambient temperature is between 55°F and 80°F and is rising.

⑦ Armor Joint does not include joint sealant or backer rod.

⑧ Armor Joint (Sealed) includes Class 7 joint sealant and backer rod.

⑨ Form vertical leg of seal as per the Manufacturer's recommendations. Use Class 4 joint sealant if Class 7 cannot be installed correctly. Install according to Manufacturer's recommendations.

⑩ Unless shown otherwise, terminate armor plate at slab break point if break is more than 2' from slab edge.

⑪ 2'-0" Perpendicular to Edge of Slab unless noted otherwise.

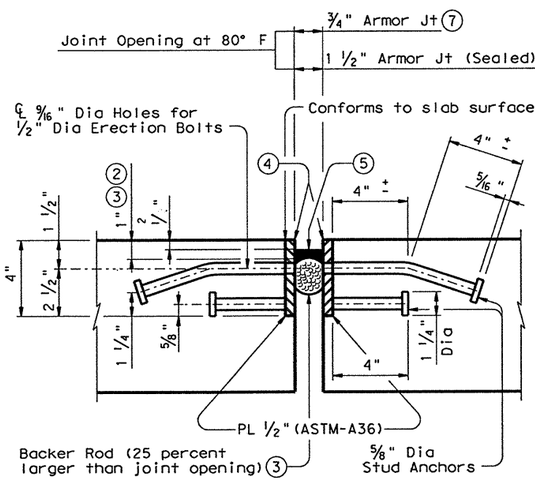

SHOWN WITHOUT 2" OVERLAY AT JOINT LOCATION

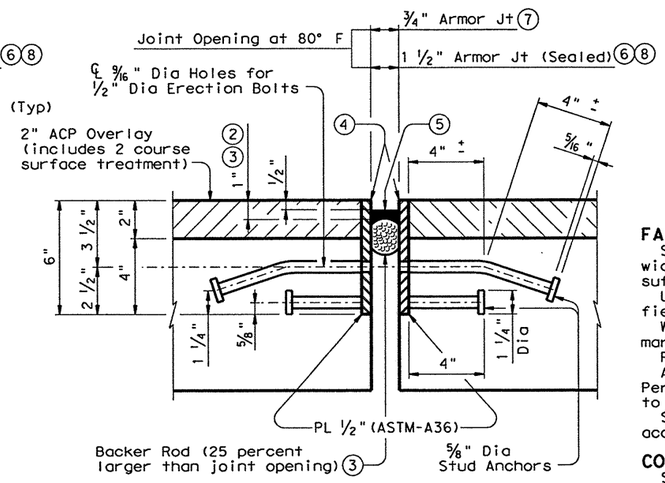

SHOWN WITH 2" OVERLAY AT JOINT LOCATION ①

ARMOR JOINT SECTIONS

Showing Armor Joint (Sealed)

FABRICATION NOTES:

Ship armor joints in convenient lengths of 10'-0" Min and 24'-0" Max unless necessary for stage construction or widenings. One shop splice is permitted in each shipping length provided no piece is less than 2'-0" long and sufficient studs are added to limit the stud to shop splice distance to 2" Min and 4" Max.

Use groove welds for all shop and field butt splices. Grind smooth areas in contact with seal. Make all necessary field splice joint preparations in the shop.

Weld studs in accordance with AWS D1.1. Punch erection holes to line up in final position of Armor Joint. Match mark corresponding plate sections and bolt together for shipment.

Paint portions of plate not in contact with concrete with the primer specified for System II paint.

An Armor Joint Layout which identifies location of each steel section shall be developed by the fabricator. Permanently mark each steel section in accordance with the Armor Joint Layout. A copy of the Armor Joint layout is to be provided to the Engineer.

Shop drawings for the fabrication of Armor Joints will not require the Engineer's approval if fabrication is in accordance with the details shown on this standard.

CONSTRUCTION NOTES:

Secure armor joints in position and place to proper grade and alignment by welding braces to adjacent reinforcing steel. Cost of furnishing and installing temporary bracing is subsidiary to the pertinent bid item.

Remove erection bolts and spacers when needed to prevent damage to the joint and slab concrete.

GENERAL NOTES:

Provide Armor Joints at locations indicated on the Bridge Layout. Provide the seal when "Armor Joint (Sealed)" is noted on the Bridge Layout.

These joint details accommodate a joint movement range of 1 ⅜" (¾" opening movement and ⅝" closure movement).

Payment for Armor Joint with or wthout Seal is based on length of Armor Plate.

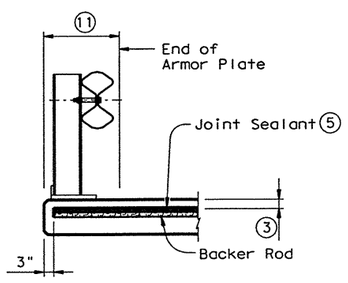

SHOWN AT STEEL RAIL

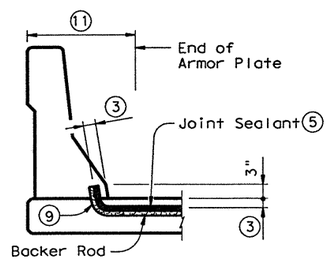

SHOWN AT BARRIER RAIL

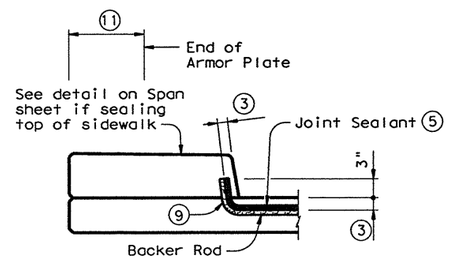

SHOWN AT CURB

JOINT SEALANT TERMINATION DETAILS

Armor Joint (Sealed) only. Armor Plate is not shown for clarity.

DISCLAIMER:
The use of this standard is governed by the "Texas Engineering Practice Act". No warranty of any kind is made by TxDOT for any purpose whatsoever. TxDOT assumes no responsibility for the conversion of this standard to other formats or for incorrect results or damages resulting from its use.

PATH:

LEVELS DISPLAYED

Texas Department of Transportation
Bridge Division

ARMOR JOINT DETAILS

AJ

FILE: ojstde01.dgn	DN: TxDOT	CK: TxDOT	DW: TxDOT	CK: TxDOT	
©TxDOT April 2006	DISTRICT	FEDERAL AID PROJECT			SHEET
REVISIONS	SAT	NH 2007(705)			290
12/10: Changed plate size.	COUNTY		CONTROL	SECT	JOB	HIGHWAY
	BEXAR		2452	01	043	LP1604

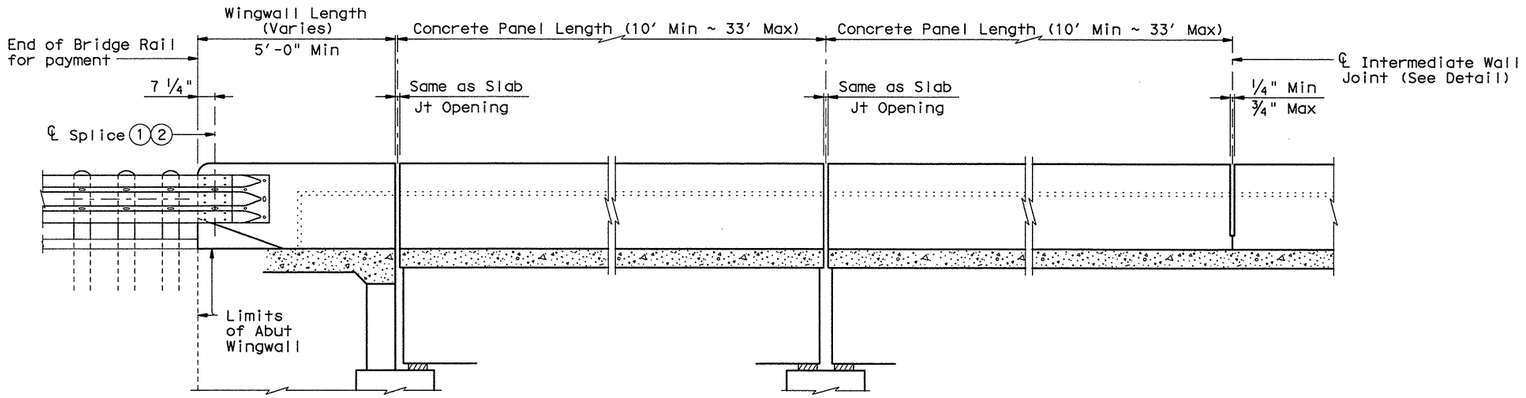

AT ABUTMENT BENTS
Showing TL-3 Transition

AT SLAB EXP JOINTS

AT INTERMEDIATE WALL JOINTS

ROADWAY ELEVATION OF RAIL

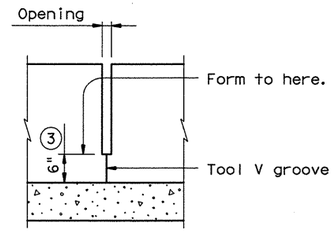

INTERMEDIATE WALL JOINT DETAIL

Provide at all interior bents without slab expansion joints. Space equally in between at 33' Max, 10' Min.

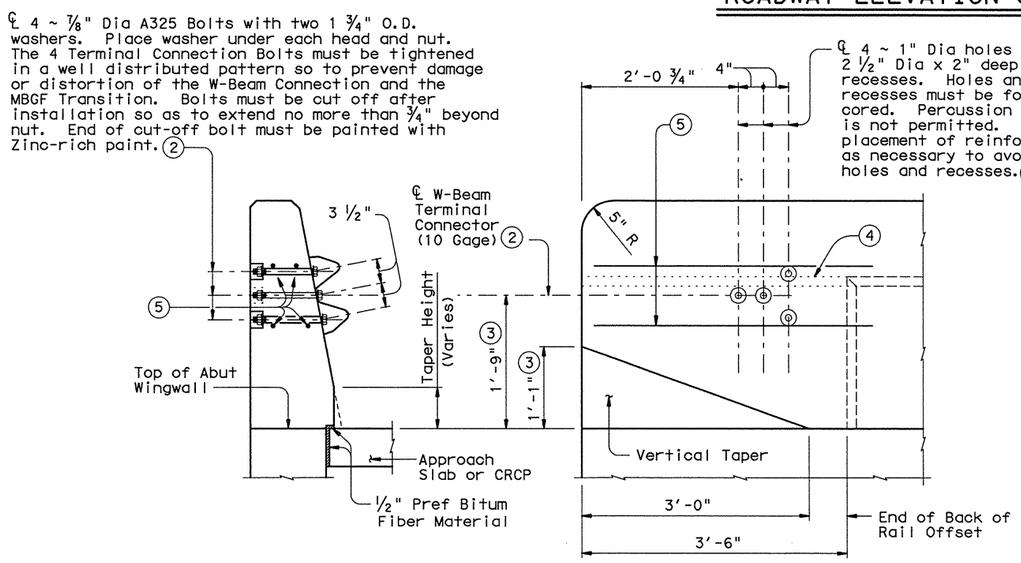

SECTION

ELEVATION

TL-2 TERMINAL CONNECTION DETAILS

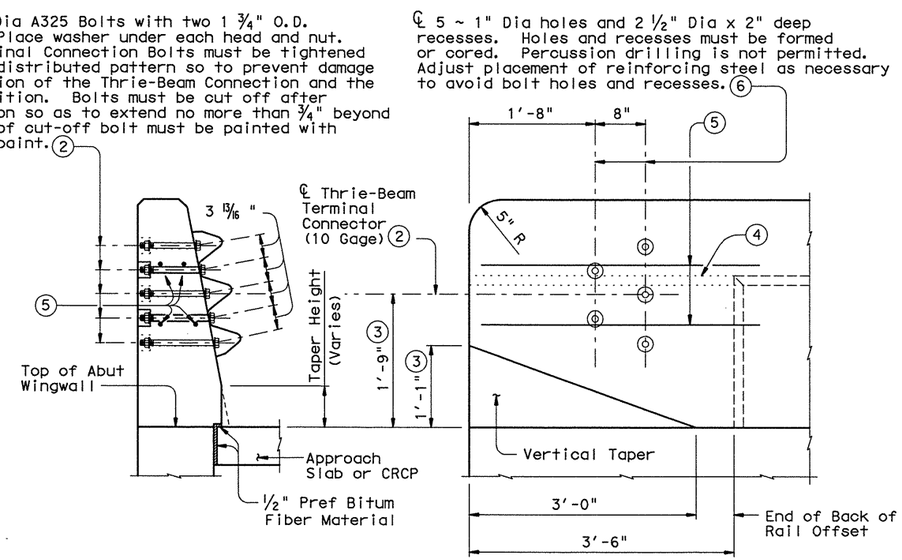

SECTION

ELEVATION

TL-3 TERMINAL CONNECTION DETAILS

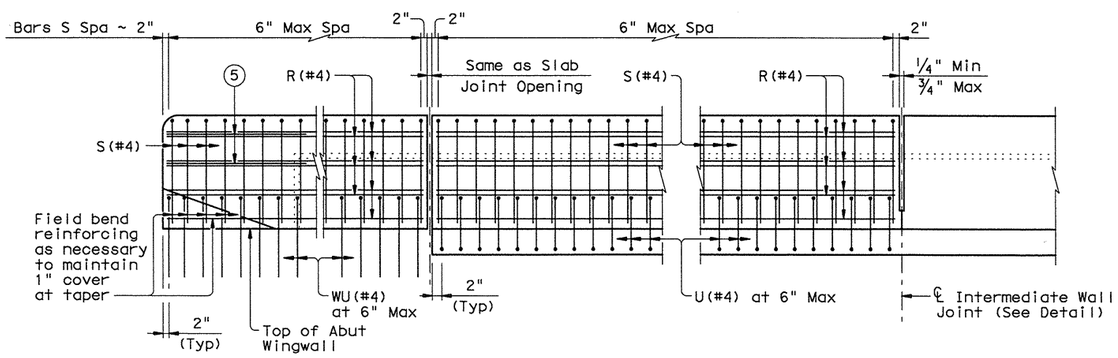

ELEVATION SHOWING TYPICAL REINFORCING PLACEMENT

(1) Metal Beam Guard Fence Transitions must be attached to the bridge rail and extended along the embankment unless otherwise shown in the plans.

(2) Terminal Connectors and associated hardware are to be paid for under the Item "Metal Beam Guard Fence".

(3) Increase 2" for structures with Overlay.

(4) Back of rail offset may, with Engineer's approval be continued to the end of the railing.

(5) 4 additional Bars R(#4) 3'-8" in length must be placed inside Bars S(#4) and centered 2'-0" from end of rail when Terminal Connections are required.

(6) Bolt recesses are only required when pedestrian sidewalks are adjacent to back of rail.

DISCLAIMER:
The use of this standard is governed by the "Texas Engineering Practice Act". No warranty of any kind is made by TxDOT for any purpose whatsoever. TxDOT assumes no responsibility for the conversion of this standard to other formats or for incorrect results or damages resulting from its use.

PATH:

LEVELS DISPLAYED

SHEET 1 OF 2

Texas Department of Transportation
Bridge Division

TRAFFIC RAIL SINGLE SLOPE

TYPE SSTR

FILE: ristd014.dgn	DN: TxDOT	CK: TxDOT	DW: JTR	CK: TxDOT	
©TxDOT April 2009	DISTRICT	FEDERAL AID PROJECT			SHEET
REVISIONS	SA				291
05-11: Gen Notes; Wall Joint Note.	COUNTY		CONTROL	SECT	JOB	HIGHWAY
	BEXAR		2452	01	043	SH 151

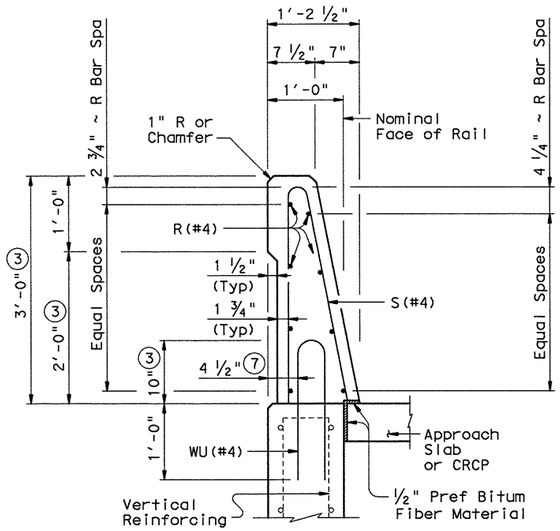

ON ABUTMENT WINGWALLS OR CIP RETAINING WALLS

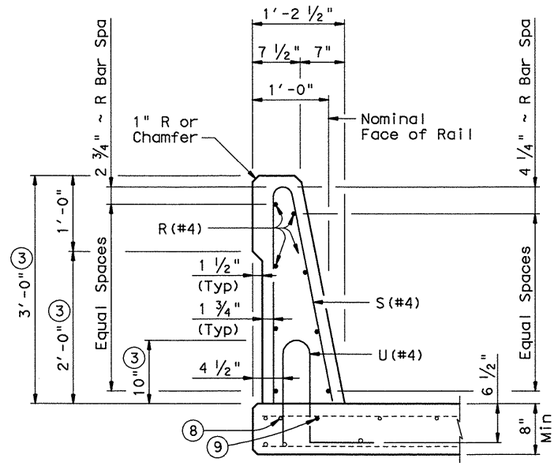

ON BRIDGE SLAB

SECTIONS THRU RAIL

(3) Increase 2" for structures with Overlay.

(7) 5 1/2" when vertical reinforcing has closer clear cover over horizontal reinforcing in abutment wingwalls or retaining walls on traffic side of wall.

(8) As an aid in supporting reinforcement, additional longitudinal bars may be used in the slab with the approval of the Engineer. Such bars must be furnished at the Contractors expense.

(9) Top longitudinal slab bar may be adjusted laterally 3" plus or minus to tie reinforcing.

(10) No longitudinal wires may be within upper bend.

(11) Bend or cut as required to clear drain slots.

(12) Space U(#4) bars at 4" Max when end region of panel length is less than 6'-0" to side slot drain. Space U(#4) bars at 6" Max when end region of panel length is 6'-0" and greator to side slot drain.

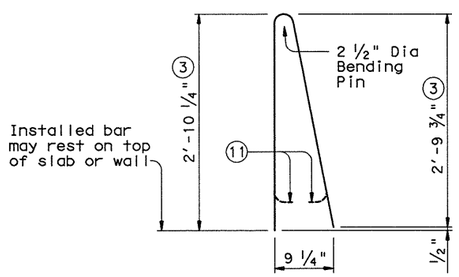

BARS S (#4)

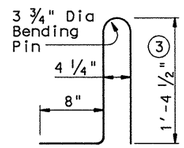

BARS U (#4)

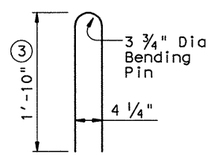

BARS WU (#4)

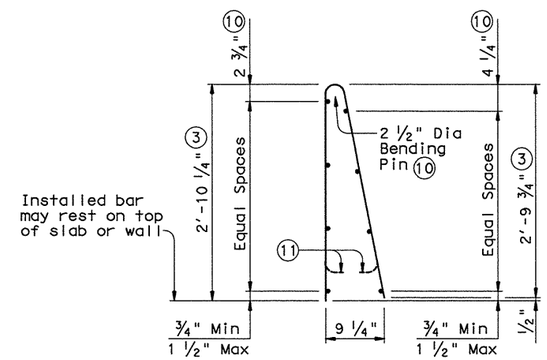

OPTIONAL WELDED WIRE REINFORCEMENT (WWR)

DESCRIPTION	LONGITUDINAL WIRES	VERTICAL WIRES
Minimum (Cumulative Total) Wire Area	1.067 Sq In.	0.267 Sq In. per Ft
	No. of Wires	Spacing
Minimum	8	4"
Maximum	10	8"
Maximum Wire Size Differential	The smaller wire must have an area of 40% or more of the larger wire.	

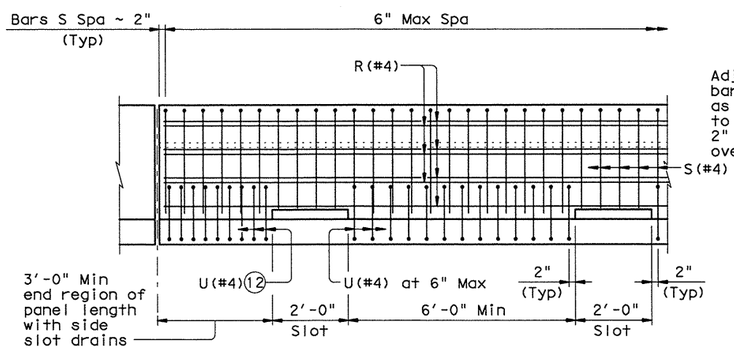

OPTIONAL SIDE SLOT DRAIN DETAIL

Note: Side Slot Drains may be used where shown elsewhere on the plans or as directed by the Engineer. Drains should not be placed over railroad tracks, lower roadways, or sidewalks. When this rail is used as a separator between a roadway surface and a sidewalk surface, side drain slots will not be permitted.

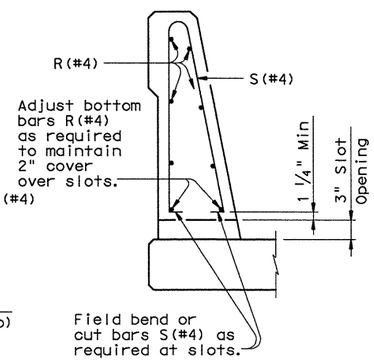

SECTION THRU OPTIONAL SIDE SLOT DRAIN

CONSTRUCTION NOTES:

This railing may be constructed with slip-forms when approved by the Engineer, with equipment approved by the Engineer. Sensor control for both line and grade must be provided. Tack welding to provide bracing for slip-form operations is acceptable. Welding can be performed at a minimum spacing of 3 ft between the cage and the anchorage. It is permissible to weld to U, WU and S bars at any location on the cage. If increased bracing is needed, additional anchorage devices must be added and welding must be performed in the upper two thirds of the cage.

The back of railing must be vertical unless otherwise shown in the plans or approved by the Engineer.

MATERIAL NOTES:

All steel components except reinforcing must be galvanized unless otherwise shown in plans.

Use Class "C" concrete. Use Class "C" (HPC) if required elsewhere.

All reinforcing steel must be grade 60.

Epoxy coat all rail reinforcement if slab bars are epoxy coated.

Deformed welded wire reinforcement (WWR) may be used as an option to conventional reinforcement and must be made in accordance with ASTM A497 (Deformed Wire). Combinations of Reinforcing Steel and WWR or configurations of WWR other than shown will be permitted when the conditions in the table are satisfied.

GENERAL NOTES:

This rail has been successfully evaluated by full-scale crash test to meet MASH TL-4 criteria. This rail can be used for design speeds of 50 mph and greater when a TL-3 rated guard fence transition is used. When a TL-2 rated guard fence transition is used, this rail can only be used for design speeds of 45 mph and less.

This railing cannot be used on bridges with expansion joints providing more than 5" movement.

Rail anchorage details shown on this standard may require modification for select structure types. See appropriate details elsewhere in plans for these modifications.

Shop drawings will not be required for this rail.

Average weight of railing with no overlay is 376 plf.

DISCLAIMER:
The use of this standard is governed by the "Texas Engineering Practice Act". No warranty of any kind is made by TxDOT for any purpose whatsoever. TxDOT assumes no responsibility for the conversion of this standard to other formats or for incorrect results or damages resulting from its use.

PATH:

LEVELS DISPLAYED

Texas Department of Transportation
Bridge Division

TRAFFIC RAIL SINGLE SLOPE

TYPE SSTR

FILE: rlstd014.dgn	DN: TxDOT	CK: TxDOT	DW: JTR	CK: TxDOT
© TxDOT April 2009	DISTRICT	FEDERAL AID PROJECT		SHEET
REVISIONS	SA			292
05-11: Gen Notes; Wall Joint Note.	COUNTY	CONTROL	SECT	JOB	HIGHWAY
	BEXAR	2452	01	043	SH 151

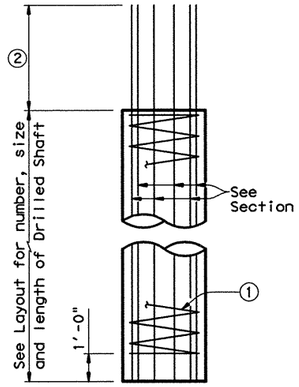

ABUTMENTS, WINGWALLS AND MULTI-DRILLED SHAFT FOOTINGS

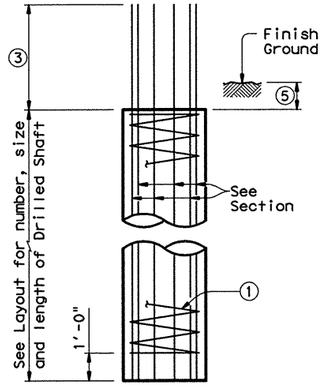

INTERIOR BENTS DRILLED SHAFT DIA EQUAL TO COLUMN DIA

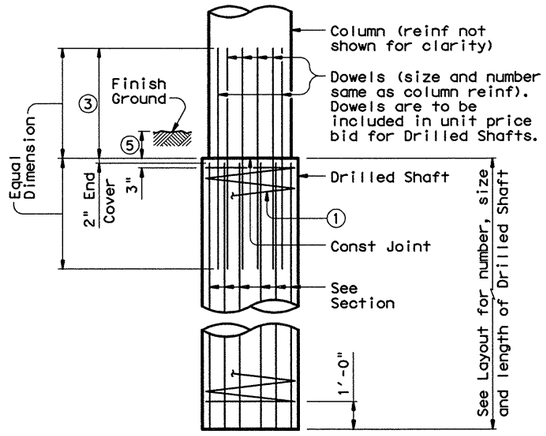

INTERIOR BENTS DRILLED SHAFT DIA GREATER THAN COLUMN DIA

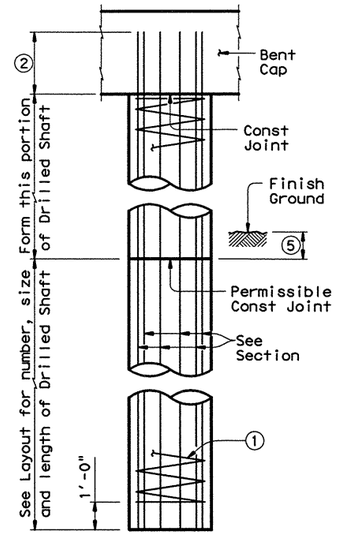

OPTIONAL INTERIOR BENT DRILLED SHAFT DETAIL④

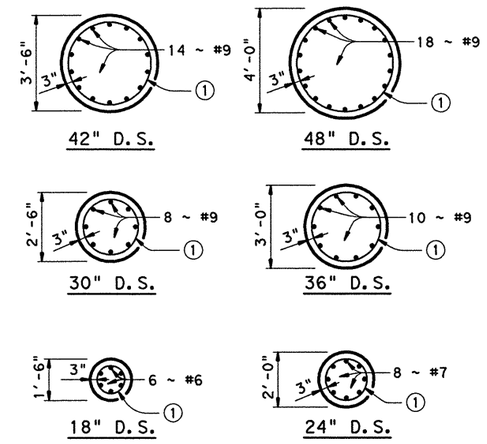

DRILLED SHAFT SECTIONS

DRILLED SHAFT DETAILS

① #3 Spiral at 6" pitch (One flat turn top & bottom)

② Min extension into supported element:
#6 Bars = 1'-0"
#7 Bars = 1'-5"
#9 Bars = 2'-3"

③ Min lap with Column reinf:
#7 Bars = 2'-4"
#9 Bars = 3'-10"

④ If approved by the Engineer, Drilled Shafts may extend to bottom of bent caps for "H" heights of 6 ft or less (as shown on Bridge Layout). This option can only be used when Drilled Shaft Dia equals Column Dia. The forming method shall be submitted for approval prior to construction. No adjustments in payment will be made if this option is used.

⑤ 6" Min at Grade Crossing, 1'-0" Min in Channel.

⑥ Or as shown on plans.

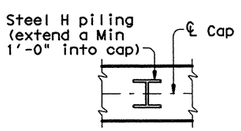

ORIENTATION OF STEEL H PILING

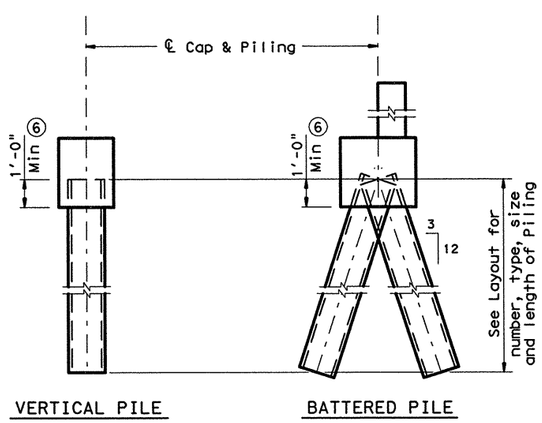

PILING DETAILS
(Concrete or Steel H)

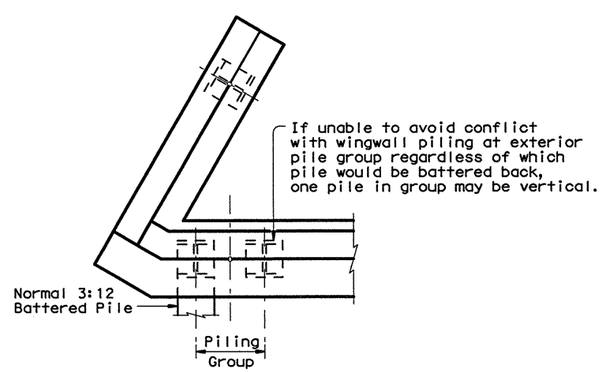

DETAIL "A"
(Showing Plan View of a 30° Skewed Abutment)

SHEET 1 OF 2

Texas Department of Transportation
Bridge Division

COMMON FOUNDATION DETAILS

FD

FILE: fdstde01.dgn	DN: TxDOT	CK: TxDOT	DW: TxDOT	CK: TxDOT
©TxDOT April 2006	DISTRICT	FEDERAL AID PROJECT		SHEET
REVISIONS	SAT			293
	COUNTY	CONTROL	SECT	JOB	HIGHWAY
	BEXAR	2452	01	043

LP1604

DISCLAIMER:
The use of this standard is governed by the "Texas Engineering Practice Act". No warranty of any kind is made by TxDOT for any purpose whatsoever. TxDOT assumes no responsibility for the conversion of this standard to other formats or for incorrect results or damages resulting from its use.

ACC:
LEVELS DISPLAYED
1

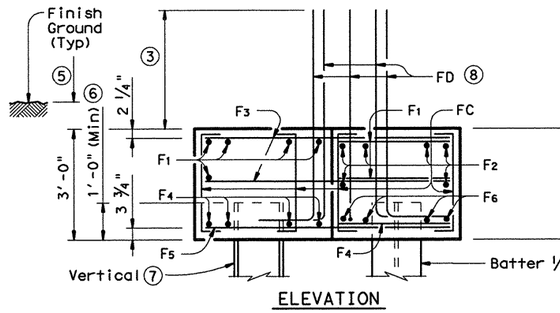

ELEVATION

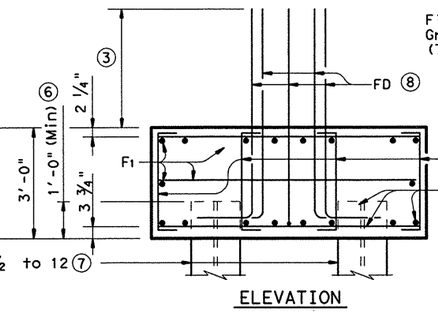

ELEVATION

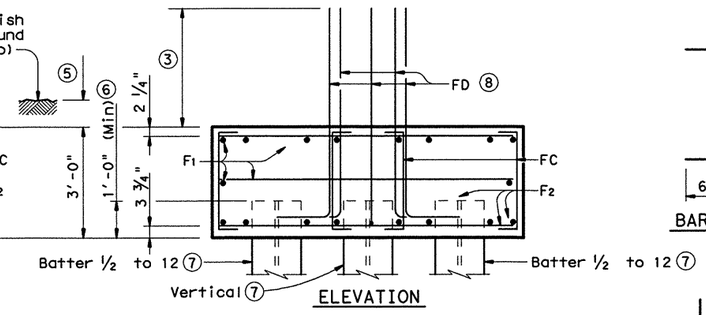

ELEVATION

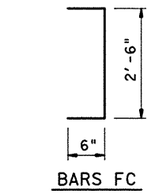

BARS FC

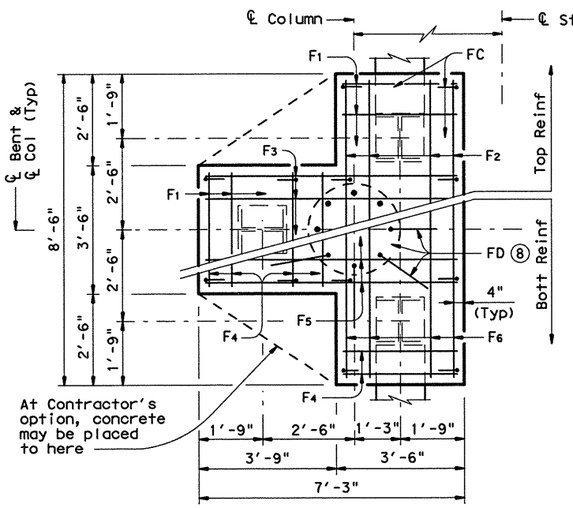

PLAN

THREE PILE FOOTING

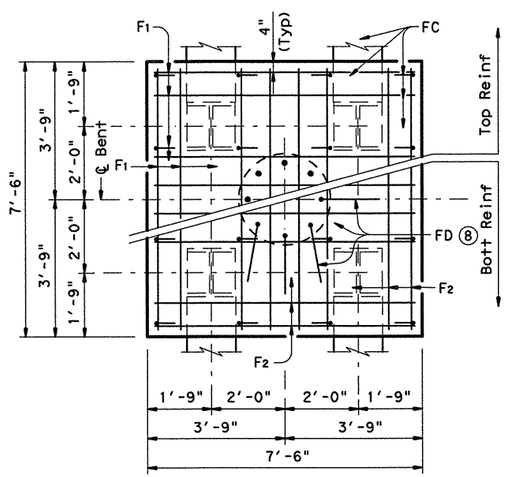

PLAN

FOUR PILE FOOTING

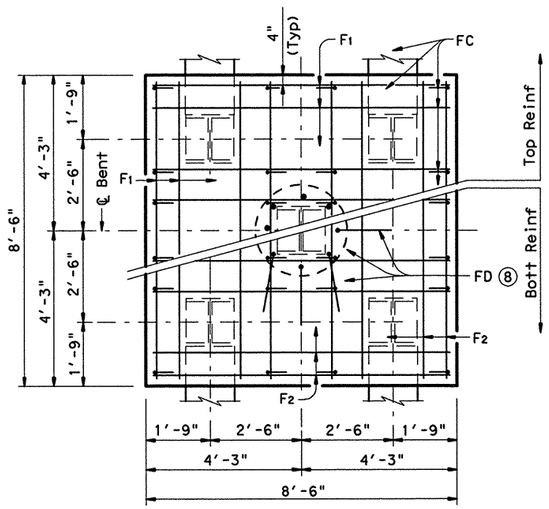

PLAN

FIVE PILE FOOTING

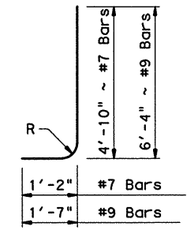

BARS FD ⑧

R = 3 1/4" ~ #7 Bars
and 5 1/4" ~ #9 Bars

TABLE OF FOOTING QUANTITIES FOR 30" COLUMNS

ONE 3 PILE FOOTING				
Bar	No.	Size	Length	Weight
F_1	11	#4	3'- 2"	23
F_2	6	#4	8'- 2"	33
F_3	6	#4	6'- 11"	28
F_4	8	#9	3'- 2"	86
F_5	4	#9	6'- 11"	94
F_6	4	#9	8'- 2"	111
FC	12	#4	3'- 6"	28
FD ⑨	8	#9	7'- 11"	215
Reinforcing Steel			Lb	618
Class "C" Concrete			CY	4.8

ONE 4 PILE FOOTING				
Bar	No.	Size	Length	Weight
F_1	20	#4	7'- 2"	96
F_2	16	#8	7'- 2"	306
FC	16	#4	3'- 6"	37
FD ⑨	8	#9	7'- 11"	215
Reinforcing Steel			Lb	654
Class "C" Concrete			CY	6.3

ONE 5 PILE FOOTING				
Bar	No.	Size	Length	Weight
F_1	20	#4	8'- 2"	109
F_2	16	#9	8'- 2"	444
FC	24	#4	3'- 6"	56
FD ⑨	8	#9	7'- 11"	215
Reinforcing Steel			Lb	824
Class "C" Concrete			CY	8.0

③ Min lap with Column reinf:
#7 Bars = 2'-4"
#9 Bars = 3'-10"

⑤ 6" Min at Grade Crossing, 1'-0" Min in Channel.

⑥ Or as shown on plans.

⑦ See Layout for Type, Size and length of Piling.

⑧ Number and size of FD bars must match Column reinforcing. FD bars shall be tied to the top of the bottom mat of reinforcing

⑨ For 24" Columns, use #7 FD bars (6'-0") in place of #9 bars and deduct 116 lbs. For 36" Columns, add 2 FD bars (54 lbs).

GENERAL NOTES:

Designed according to AASHTO LRFD Specifications.

See Bridge Layout of each Structure for Foundation Type to be used.

Drilled shaft details shown are not to be used for retaining wall, noise wall, barrier or sign foundation without structural evaluation.

Footings shown on this standard are not applicable for columns larger than 36" Diameter.

Details shown on this standard to be used unless shown otherwise in the plans.

Maximum Pile Load for the footings shown shall be as follows : 72 Tons/Pile with 24" Dia Column
80 Tons/Pile with 30" Dia Column
100 Tons/Pile with 36" Dia Column

The footings shown on this Standard are not to be used in direct contact with salt water or exposed to salt water spray.

Drilled Shaft reinforcing may be Grade 40.

Piling under abutment wings to be driven to a minimum resistance of 10 Tons.

DISCLAIMER:
The use of this standard is governed by the "Texas Engineering Practice Act". No warranty of any kind is made by TxDOT for any purpose whatsoever. TxDOT assumes no responsibility for the conversion of this standard to other formats or for incorrect results or damages resulting from its use.

ACC:

LEVELS DISPLAYED

SHEET 2 OF 2

Texas Department of Transportation
Bridge Division

COMMON FOUNDATION DETAILS

FD

FILE: fdstde01.dgn	DN: TxDOT	CK: TxDOT	DW: TxDOT	CK: TxDOT
© TxDOT April 2006	DISTRICT	FEDERAL AID PROJECT		SHEET
REVISIONS	SAT			294
	COUNTY		CONTROL SECT JOB	HIGHWAY
	BEXAR		2452 01 043	LP 1604

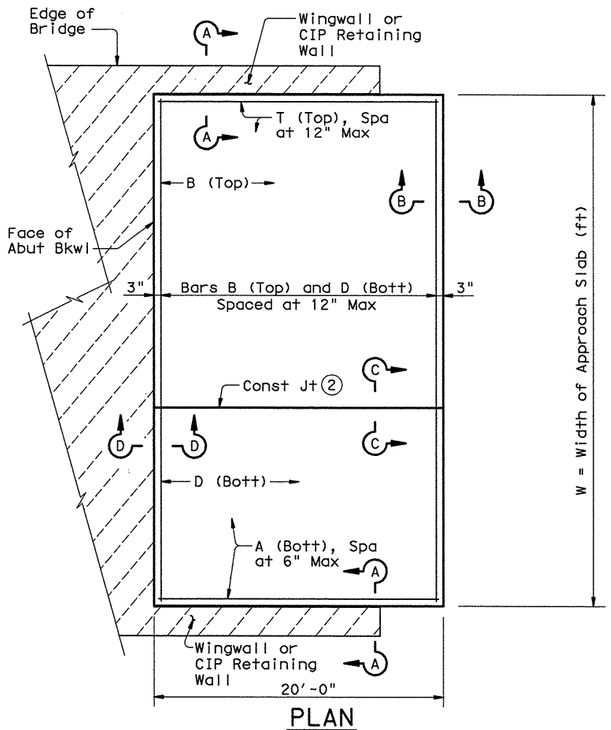

PLAN
(Showing Non-Skewed Approach Slab)

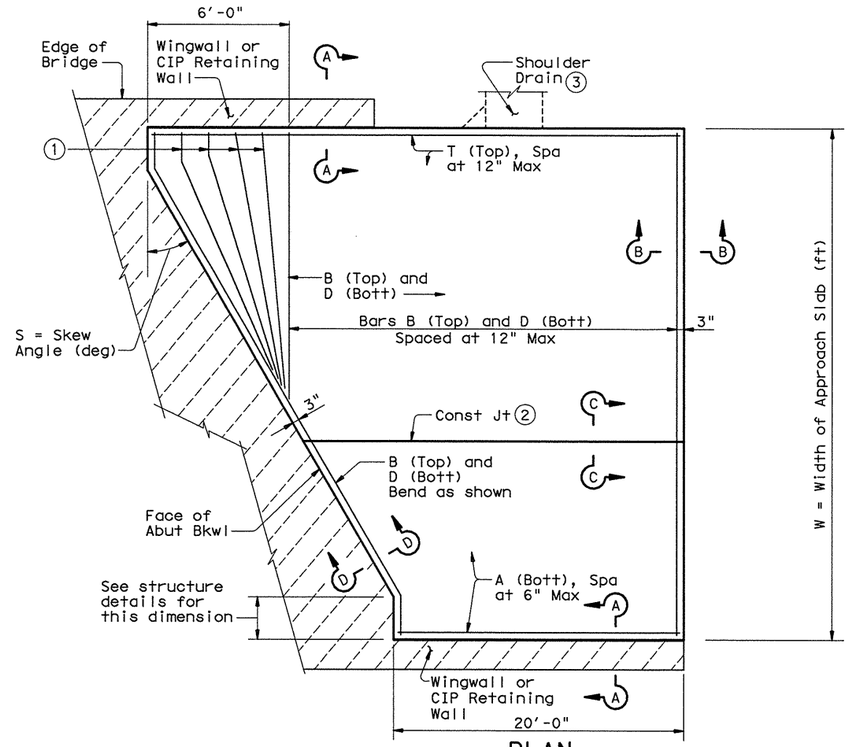

PLAN
(Showing Skewed Approach Slab)

BAR TABLE	
BAR	SIZE
A	#8
B	#5
D	#5
T	#5

APPROXIMATE QUANTITIES (4)

Reinf steel weight = 8.5 Lbs/SF of Approach Slab

Area of Appr Slab = $20W + 0.5W^2 \tan S$ (SF)

W = Width of Approach Slab (ft)

S = Skew Angle (deg)

(1) Flare Bars B and D in this region (1'-6" Max Spa, 3" Min Spa). Minimum flared bar length = 2'-6". Bend bars as necessary.

(2) Provide longitudinal construction joints that align with longitudinal construction joints in the bridge slab with bridges built in stages. Other longitudinal construction joints must receive approval of the Engineer.

(3) See details elsewhere in plans for shoulder drain location and details.

(4) For Contractor's information only.

(5) Multiple piece tie bars are acceptable at longitudinal construction joints provided minimum laps shown are achieved.

(6) See details elsewhere in plans for required cross-slope.

(7) Place in accordance with Item 438.

(8) Backer rod shall be 25% larger than joint opening and shall be compatible with the sealant.

(9) Place ½" Preformed Bituminous Fiber Material between concrete railing and top of approach slab as shown when concrete railing projects over the approach slab.

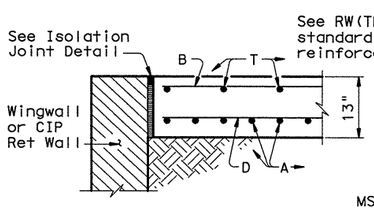

SHOWING WINGWALL OR CIP RETAINING WALL

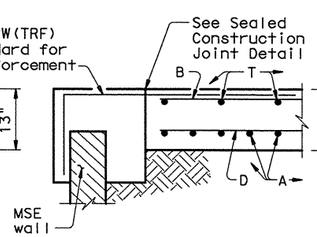

SHOWING MSE WALL

SECTION A-A

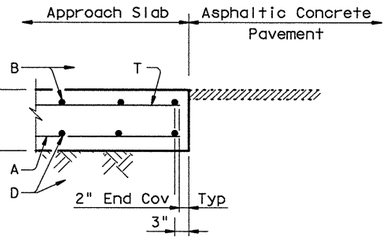

SECTION B-B

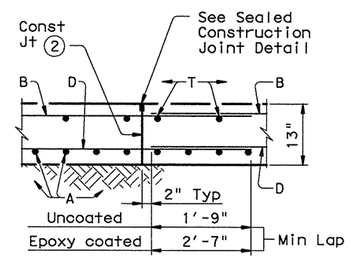

SECTION C-C (5)

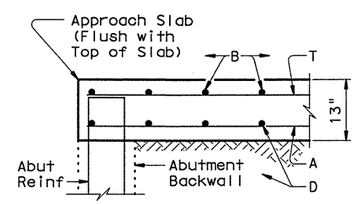

SECTION D-D

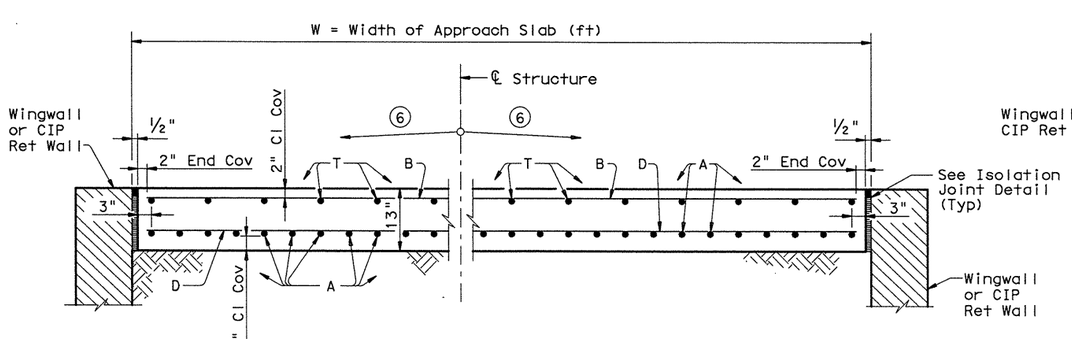

TYPICAL TRANSVERSE SECTION

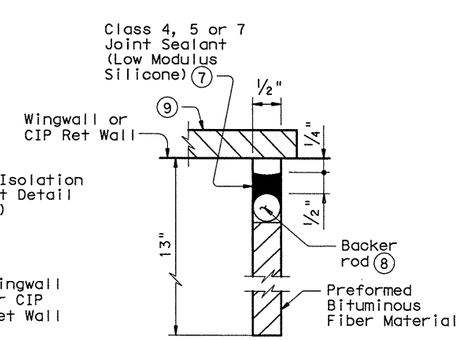

ISOLATION JOINT DETAIL

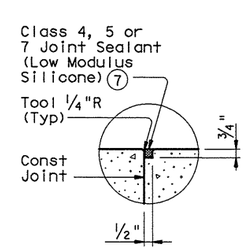

SEALED CONSTRUCTION JOINT DETAIL

GENERAL NOTES:

Construct approach slab in accordance with Item 420.

Concrete shall be Class "S" with a minimum compressive strength of 4,000 psi.

All reinforcing steel shall be Grade 60.

Construct the subgrade or subbase from the bridge for a minimum distance of 100 feet prior to the approach slab, unless otherwise indicated on the plans.

Compact and finish the subgrade or foundation for the approach slab to the typical cross-section and to the lines and grades shown on the plans.

Cure for 4 days using water or membrane curing per Item 420.

Sealant, backer rod and preformed bituminous fiber material is subsidiary to approach slab concrete.

Provide a 1" bondbreaker (asphaltic concrete pavement or asphalt stabilized base) between the approach slab and cement stabilized backfill or cement treated base. Other bondbreakers may be used if approved by the Engineer.

ADDED 12-30-11

Texas Department of Transportation
Bridge Division

BRIDGE APPROACH SLAB
ASPHALTIC CONCRETE PAVEMENT

BAS-A

FILE: basastel.dgn	DN: TxDOT	CK: TxDOT	DW: TxDOT	CK: TxDOT	
© TxDOT April 2006	DISTRICT	FEDERAL AID PROJECT			SHEET
REVISIONS					294A
	COUNTY		CONTROL	SECT	JOB	HIGHWAY
	BEXAR		2452	01	043	SH 151

DISCLAIMER:
The use of this standard is governed by the "Texas Engineering Practice Act". No warranty of any kind is made by TxDOT for any purpose whatsoever. TxDOT assumes no responsibility for the conversion of this standard to other formats or for incorrect results or damages resulting from its use.

PATH:
LEVELS DISPLAYED
1

NOTES:
1. LOCATE ALL UTILITIES PRIOR TO CONSTRUCTION. ANY UTILITIES DAMAGED BY CONTRACTOR WILL BE REPAIRED BY CONTRACTOR AT NO COST TO TXDOT.
2. THE CONTRACTOR IS RESPONSIBLE FOR ESTABLISHING THE T-1 TELEPHONE SERVICE CONNECTION (COMMUNICATION LINK BETWEEN THE CCTV'S AND TRANSGUIDE) AT LOCATION SHOWN, INCLUDING THE INSTALLATION OF ALL TELEPHONE EQUIPMENT NECESSARY BOTH IN THE FIELD AND AT TRANSGUIDE, SUBSIDIARY TO THE VARIOUS BID ITEMS. CONTACT JAMES KADI (TXDOT) AT (210)615-6139 TO COORDINATE THIS WORK WITH THE TELEPHONE COMPANY.
3. CONSIDER AS SUBSIDIARY TO THE VARIOUS BID ITEMS ALL CONNECTORS, CABLES, MOUNTING EQUIPMENT AND HARDWARE, SURGE SUPPRESSORS, PUNCHDOWN BLOCKS, TELCO T-1 DEMARC EQUIPMENT, LOCAL AND REMOTE SOFTWARE, FIRMWARE, POWER SUPPLY UNITS, AND ANY OTHER SUPPORT, CALIBRATION, OR TEST EQUIPMENT NECESSARY TO MAKE THE CCTV'S FULLY OPERATIONAL WITH THE TRANSGUIDE SYSTEM.
4. CONTRACTOR IS RESPONSIBLE FOR CONFIGURING AND INTEGRATING ALL NEW EQUIPMENT SO THAT IT IS FULLY OPERATIONAL WITH THE TRANSGUIDE SYSTEM.
5. ALL EQUIPMENT CONFIGURATIONS MUST BE COMPLIANT WITH TXDOT'S LONESTAR SOFTWARE "EQUIPMENT CONFIGURATION PLAN" (ECP). CONTACT MIKE WULCZYN AT (210)731-5133 FOR DETAILS.
6. CONTACT BRAD ADAMI AT (210)731-5109 TO SCHEDULE PICK UP OF ITEMS PROVIDED BY TXDOT.
7. 1/C ELECTRICAL CABLES HAVE 3' OF SLACK (SERVICE LOOP) IN EACH GROUND BOX WHICH IS INCLUDED IN QUANTITIES.

TRAFFIC MANAGEMENT SYSTEM ESTIMATED QUANTITIES

	ITEM No.	DESCRIPTION	UNIT	QTY
	416-2029	DRILL SHAFT (RDWY ILL POLE) (30 IN)	LF	10
	432-2066	RIPRAP (CONC)(CL B)	CY	1.25
*	610-2099	INS RD IL AM (INSTALL ONLY)	EA	1
	618-2034	CONDT (PVC) (SCH 80) (2")	LF	40
	620-2010	ELEC CONDR (NO. 6) INSULATED	LF	80
	624-2008	GROUND BOX TY A (122311) W/APRON	EA	1
	624-2014	GROUND BOX TY D (162922) W/APRON	EA	1
	628-2065	ELC SRV TY D 120/240 060 (NS)GS(N)TP(O)	EA	1
	6010-2031	COMM CABLE (22 AWG) (6 PAIR)	LF	30
		CCTV FIELD EQUIPMENT	EA	1
		WIRELESS ETHERNET RADIO (LOCAL) LINK	EA	1
		T-1 ETHERNET EXTENDER EQUIPMENT	EA	1
**		INSTALL ETHERNET MPEG-4 ENCODER	EA	1
**		INSTALL FIELD ETHERNET SWITCH	EA	1
**		INSTALL CIP-3 MODULE	EA	1
**		INSTALL CCTV CABINET	EA	1

* ITEM PROVIDED BY TXDOT, TO BE PICKED UP BY CONTRACTOR FROM TXDOT. (SEE NOTES THIS SHEET)

** ITEM PROVIDED BY TXDOT, TO BE PICKED UP BY CONTRACTOR FROM TXDOT. INSTALLATION SUBSIDIARY TO VARIOUS BID ITEMS. (SEE NOTES THIS SHEET)

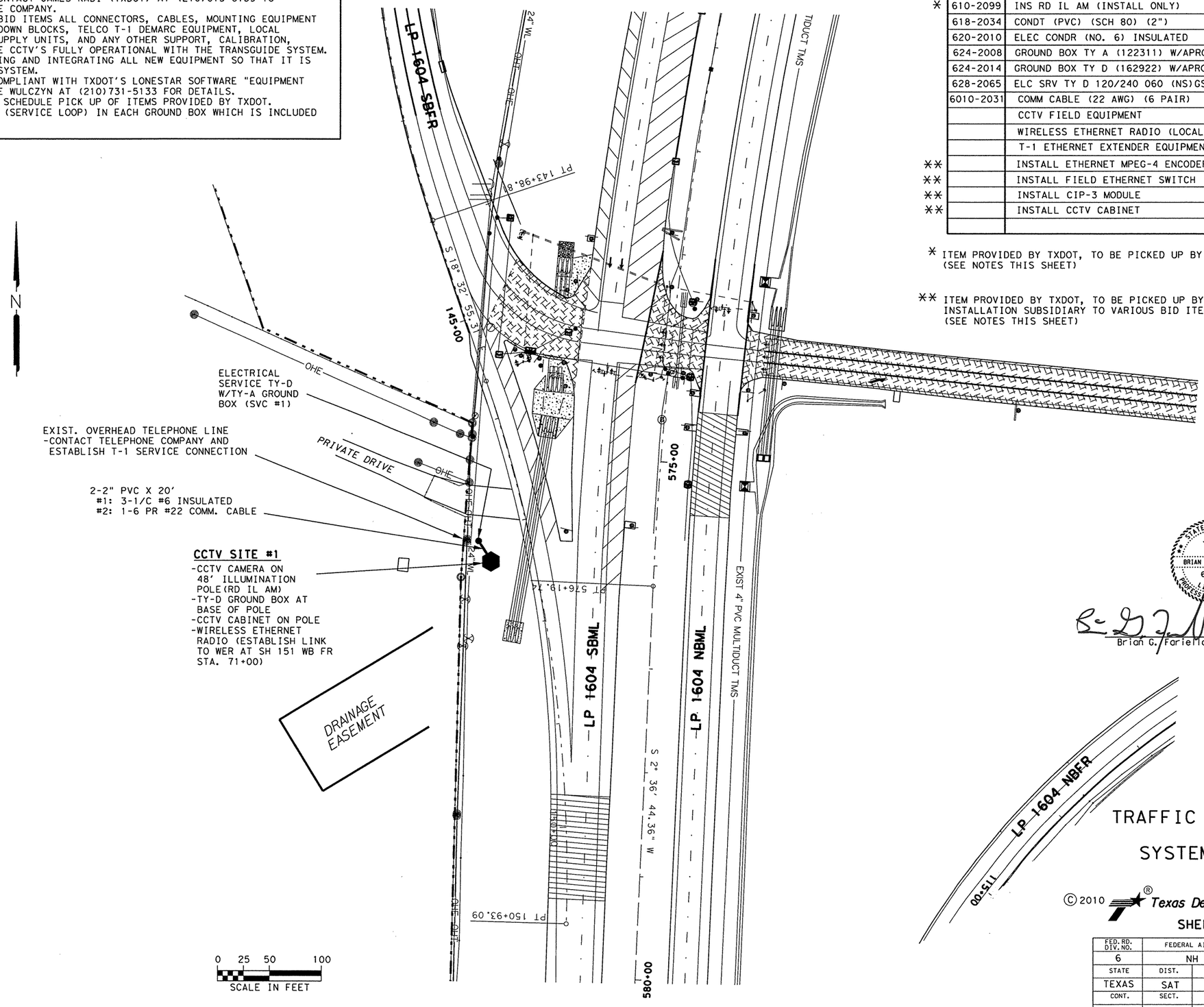

WER = WIRELESS ETHERNET RADIO

0 25 50 100
SCALE IN FEET

STATE OF TEXAS
BRIAN G. FARIELLO
66186
LICENSED
PROFESSIONAL ENGINEER

Brian G. Fariello, P.E. 3/17/11
DATE

TRAFFIC MANAGEMENT SYSTEM LAYOUT

© 2010 Texas Department of Transportation

SHEET 1 OF 3

FED. RD. DIV. NO.	FEDERAL AID PROJECT NO.		SHEET NO.
6	NH 2007(705)		295
STATE	DIST.	COUNTY	
TEXAS	SAT	BEXAR	
CONT.	SECT.	JOB	HIGHWAY NO.
2452	01	043	LP 1604

9:49:50 AM
3/17/2011
T:\TMS\1604=2452-01-043 (LP1604 @ SH151)\DECEMBER 2010\TMS LAYOUTS\151TMS 1 of 3 (CCTV 1).dgn

PLAN

NOTES:
1. LOCATE ALL UTILITIES PRIOR TO CONSTRUCTION. ANY UTILITIES DAMAGED BY CONTRACTOR WILL BE REPAIRED BY CONTRACTOR AT NO COST TO TXDOT.
2. THE CONTRACTOR IS RESPONSIBLE FOR ESTABLISHING THE T-1 TELEPHONE SERVICE CONNECTION (COMMUNICATION LINK BETWEEN THE CCTV'S AND TRANSGUIDE) AT LOCATION SHOWN, INCLUDING THE INSTALLATION OF ALL TELEPHONE EQUIPMENT NECESSARY BOTH IN THE FIELD AND AT TRANSGUIDE, SUBSIDIARY TO THE VARIOUS BID ITEMS. CONTACT JAMES KADI (TXDOT) AT (210)615-6139 TO COORDINATE THIS WORK WITH THE TELEPHONE COMPANY.
3. CONSIDER AS SUBSIDIARY TO THE VARIOUS BID ITEMS ALL CONNECTORS, CABLES, MOUNTING EQUIPMENT AND HARDWARE, SURGE SUPPRESSORS, PUNCHDOWN BLOCKS, TELCO T-1 DEMARC EQUIPMENT, LOCAL AND REMOTE SOFTWARE, FIRMWARE, POWER SUPPLY UNITS, AND ANY OTHER SUPPORT, CALIBRATION, OR TEST EQUIPMENT NECESSARY TO MAKE THE CCTV'S FULLY OPERATIONAL WITH THE TRANSGUIDE SYSTEM.
4. CONTRACTOR IS RESPONSIBLE FOR CONFIGURING AND INTEGRATING ALL NEW EQUIPMENT SO THAT IT IS FULLY OPERATIONAL WITH THE TRANSGUIDE SYSTEM.
5. ALL EQUIPMENT CONFIGURATIONS MUST BE COMPLIANT WITH TXDOT'S LONESTAR SOFTWARE "EQUIPMENT CONFIGURATION PLAN" (ECP). CONTACT MIKE WULCZYN AT (210)731-5133 FOR DETAILS.
6. CONTACT BRAD ADAMI AT (210)731-5109 TO SCHEDULE PICK UP OF ITEMS PROVIDED BY TXDOT.
7. 1/C ELECTRICAL CABLES HAVE 3' OF SLACK (SERVICE LOOP) IN EACH GROUND BOX WHICH IS INCLUDED IN QUANTITIES.

TRAFFIC MANAGEMENT SYSTEM ESTIMATED QUANTITIES

	ITEM No.	DESCRIPTION		QTY
	416-2029	DRILL SHAFT (RDWY ILL POLE) (30 IN)	LF	10
	432-2066	RIPRAP (CONC)(CL B)	CY	1.25
*	610-2099	INS RD IL AM (INSTALL ONLY)	EA	1
	618-2034	CONDT (PVC) (SCH 80) (2")	LF	40
	620-2010	ELEC CONDR (NO. 6) INSULATED	LF	80
	624-2008	GROUND BOX TY A (122311) W/APRON	EA	1
	624-2014	GROUND BOX TY D (162922) W/APRON	EA	1
	628-2065	ELC SRV TY D 120/240 060 (NS)GS(N)TP(O)	EA	1
		CCTV FIELD EQUIPMENT	EA	1
**		INSTALL ETHERNET MPEG-4 ENCODER	EA	1
**		INSTALL FIELD ETHERNET SWITCH	EA	1
**		INSTALL CIP-3 MODULE	EA	1
**		INSTALL CCTV CABINET	EA	1

* ITEM PROVIDED BY TXDOT, TO BE PICKED UP BY CONTRACTOR FROM TXDOT. (SEE NOTES THIS SHEET)

** ITEM PROVIDED BY TXDOT, TO BE PICKED UP BY CONTRACTOR FROM TXDOT. INSTALLATION SUBSIDIARY TO VARIOUS BID ITEMS. (SEE NOTES THIS SHEET)

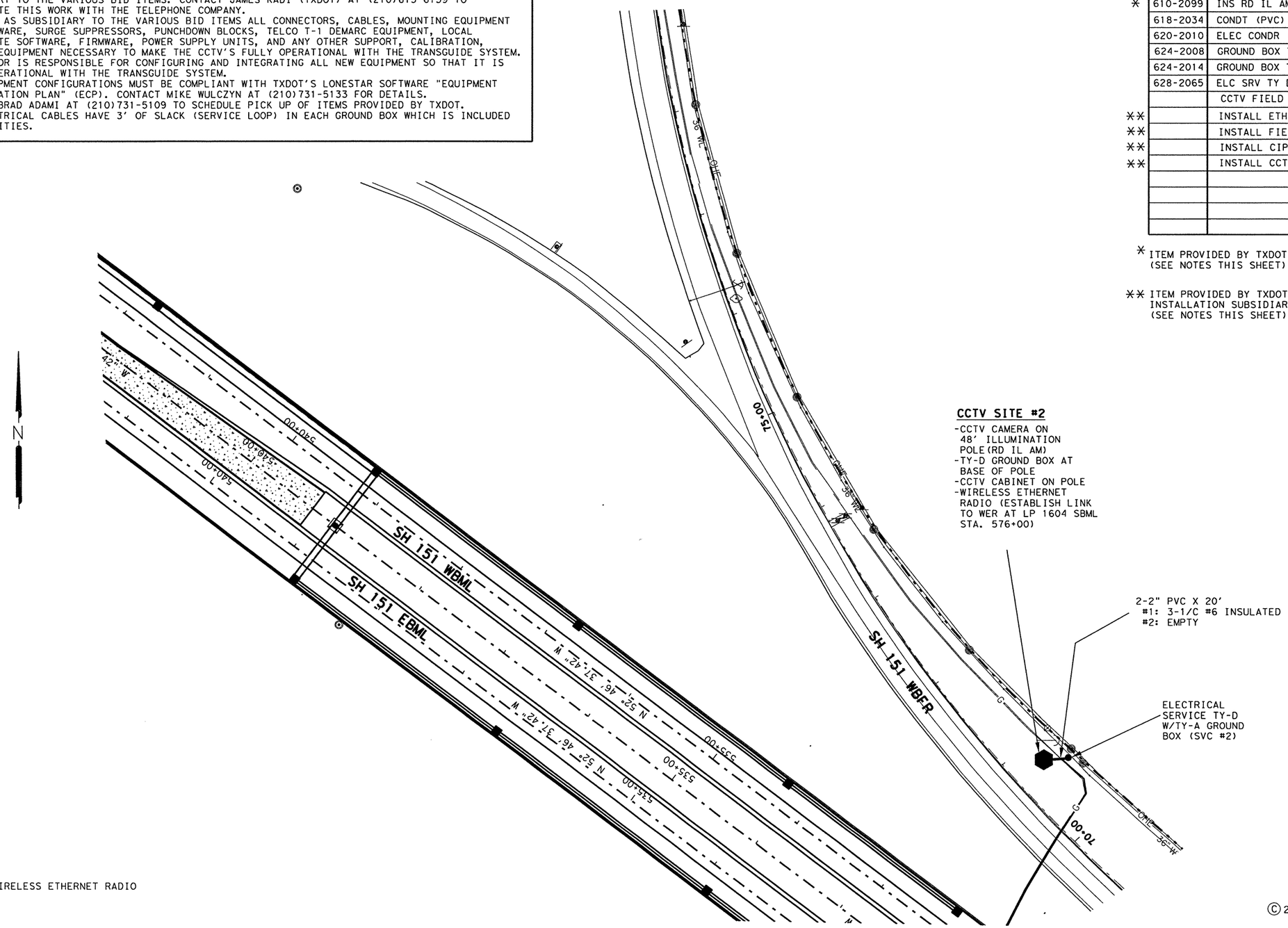

WER = WIRELESS ETHERNET RADIO

0 25 50 100
SCALE IN FEET

STATE OF TEXAS
BRIAN G. FARIELLO
66186
LICENSED PROFESSIONAL ENGINEER

Brian G. Fariello, P.E. 3/17/11
DATE

TRAFFIC MANAGEMENT SYSTEM LAYOUT

© 2010 Texas Department of Transportation

SHEET 2 OF 3

FED. RD. DIV. NO.	FEDERAL AID PROJECT NO.		SHEET NO.
6	NH 2007(705)		296
STATE	DIST.	COUNTY	
TEXAS	SAT	BEXAR	
CONT.	SECT.	JOB	HIGHWAY NO.
2452	01	043	LP 1604

9:51:42 AM
3/17/2011
T:\TMS\1604=2452-01-043 (LP1604 @ SH151)\DECEMBER 2010\TMS LAYOUTS\151TMS 2 of 3 (CCTV 2).dgn
PLAN

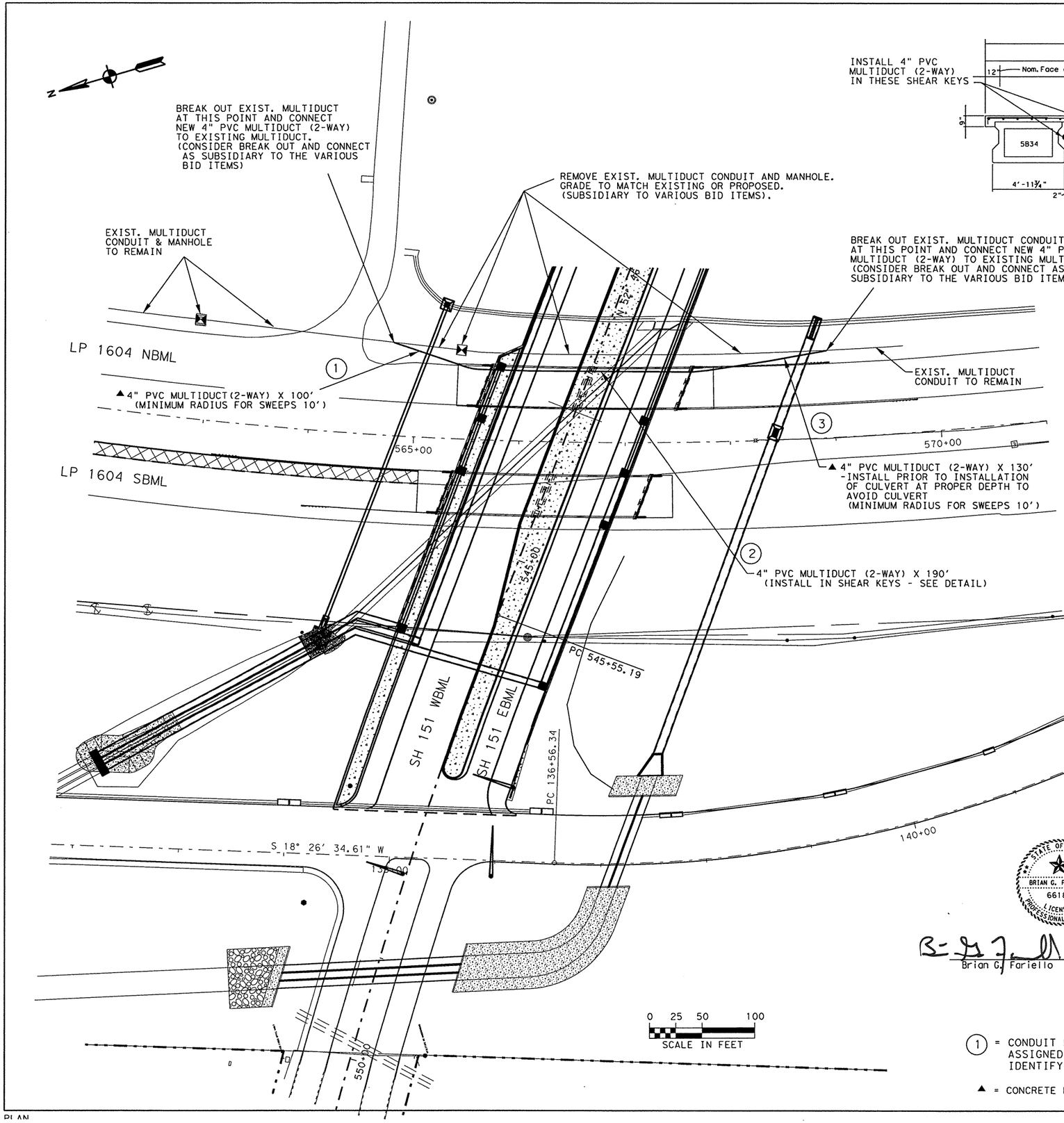

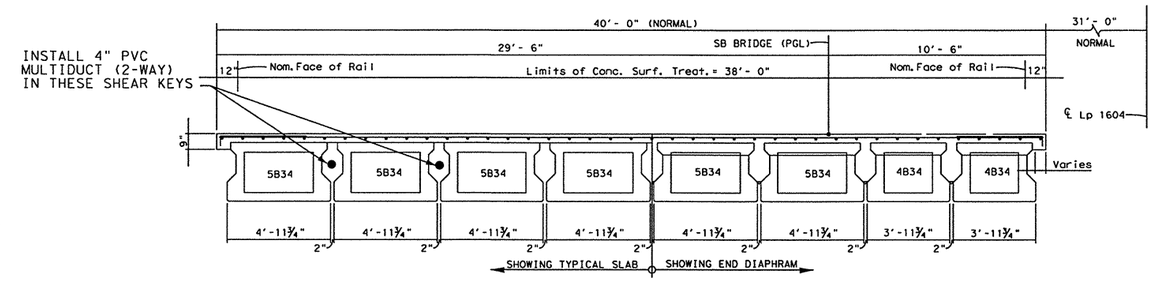

TRANSVERSE SECTION
(LOOKING STATIONWISE)
DETAIL

NOTES:

1. MULTIDUCT MUST BE MANUFACTURED BY OPTI-COM MFG. NETWORK INCORPORATED (OMNI) (WWW.OMNI-OPTI.COM) IN ORDER TO MATCH EXISTING MULTIDUCT CONDUIT WHICH IS PRODUCT # S-40PVC WITH OPTIC-COM 44 INNERDUCT.
2. FIELD VERIFY LENGTHS OF NEW CONDUIT NEEDED BEFORE ORDERING MATERIAL.
3. SEE "4" PVC MULTIDUCT CONDUIT (2-WAY SYSTEM)" FOR TMS MULTIDUCT INSTALLATION DETAILS.
4. INSTALL 1-1/C #14 INSULATED TRACER WIRE IN ONE EMPTY CONDUIT (MATCH LOCATION OF EXISTING), TERMINATING IN FIRST MANHOLE AT EACH END OF NEW CONDUIT. TRACER WIRE MUST BE CONTINUOUS BETWEEN MANHOLES (NO SPLICES). CONSIDER TRACER WIRE INSTALLATION AS SUBSIDIARY TO THE VARIOUS BID ITEMS.

TRAFFIC MANAGEMENT SYSTEM ESTIMATED QUANTITIES

ITEM No.	DESCRIPTION	UNIT	QTY
6981	4" PVC MULTIDUCT CONDUIT	LF	190
6981	4" PVC MULTIDUCT CONDUIT(CONC ENCASED)	LF	230

STATE OF TEXAS
BRIAN G. FARIELLO
66186
LICENSED PROFESSIONAL ENGINEER

Brian G. Fariello P.E. 3/17/11
Brian G. Fariello DATE

LEGEND

(1) = CONDUIT RUN NUMBER (ARBITRARY NUMBER ASSIGNED TO CONDUIT RUN TO HELP CONTRACTOR IDENTIFY RUN DURING CONSTRUCTION)

▲ = CONCRETE ENCASED CONDUIT

TRAFFIC MANAGEMENT SYSTEM LAYOUT

© 2010 Texas Department of Transportation

SHEET 3 OF 3

FED. RD. DIV. NO.	FEDERAL AID PROJECT NO.		SHEET NO.
6	NH 2007(705)		297
STATE	DIST.	COUNTY	
TEXAS	SAT	BEXAR	
CONT.	SECT.	JOB	HIGHWAY NO.
2452	01	043	LP 1604

9:54:02 AM
3/17/2011
T:\TMS\1604=2452-01-043 (LP1604 @ SH151)\DECEMBER 2010\TMS LAYOUTS\151TMS 3 of 3 (MULT-D).dgn

PLAN

NOTES:

1. CONTRACTOR TO INSTALL ALL ITEMS SHOWN.
2. CONTRACTOR IS RESPONSIBLE FOR ESTABLISHING THE T-1 TELEPHONE SERVICE CONNECTION (COMMUNICATION LINK BETWEEN THE CCTV'S AND TRANSGUIDE) AT LOCATION SHOWN IN PLANS, INCLUDING THE INSTALLATION OF ALL TELEPHONE EQUIPMENT NECESSARY BOTH IN THE FIELD AND AT TRANSGUIDE, SUBSIDIARY TO THE VARIOUS BID ITEMS. CONTACT JAMES KADI (TXDOT) AT (210)615-6139 TO COORDINATE THIS WORK WITH THE TELEPHONE COMPANY.
3. CONSIDER AS SUBSIDIARY TO THE VARIOUS BID ITEMS ALL CONNECTORS, CABLES, MOUNTING EQUIPMENT AND HARDWARE, SURGE SUPPRESSERS, PUNCHDOWN BLOCKS, TELCO T-1 DEMARC EQUIPMENT, LOCAL AND REMOTE SOFTWARE, FIRMWARE, POWER SUPPLY UNITS, AND ANY OTHER SUPPORT, CALIBRATION, OR TEST EQUIPMENT NECESSARY TO MAKE THE WIRELESS LINK AND THE CCTV'S FULLY OPERATIONAL WITH THE TRANSGUIDE SYSTEM.
4. THE CONTRACTOR IS RESPONSIBLE FOR CONFIGURING AND INTEGRATING ALL NEW EQUIPMENT SO THAT IT IS FULLY OPERATIONAL WITH THE TRANSGUIDE SYSTEM.
5. ALL EQUIPMENT CONFIGURATIONS MUST BE COMPLIANT WITH TXDOT'S LONESTAR SOFTWARE "EQUIPMENT CONFIGURATION PLAN" (ECP). CONTACT MIKE WULCZYN AT (210)731-5133 FOR DETAILS.

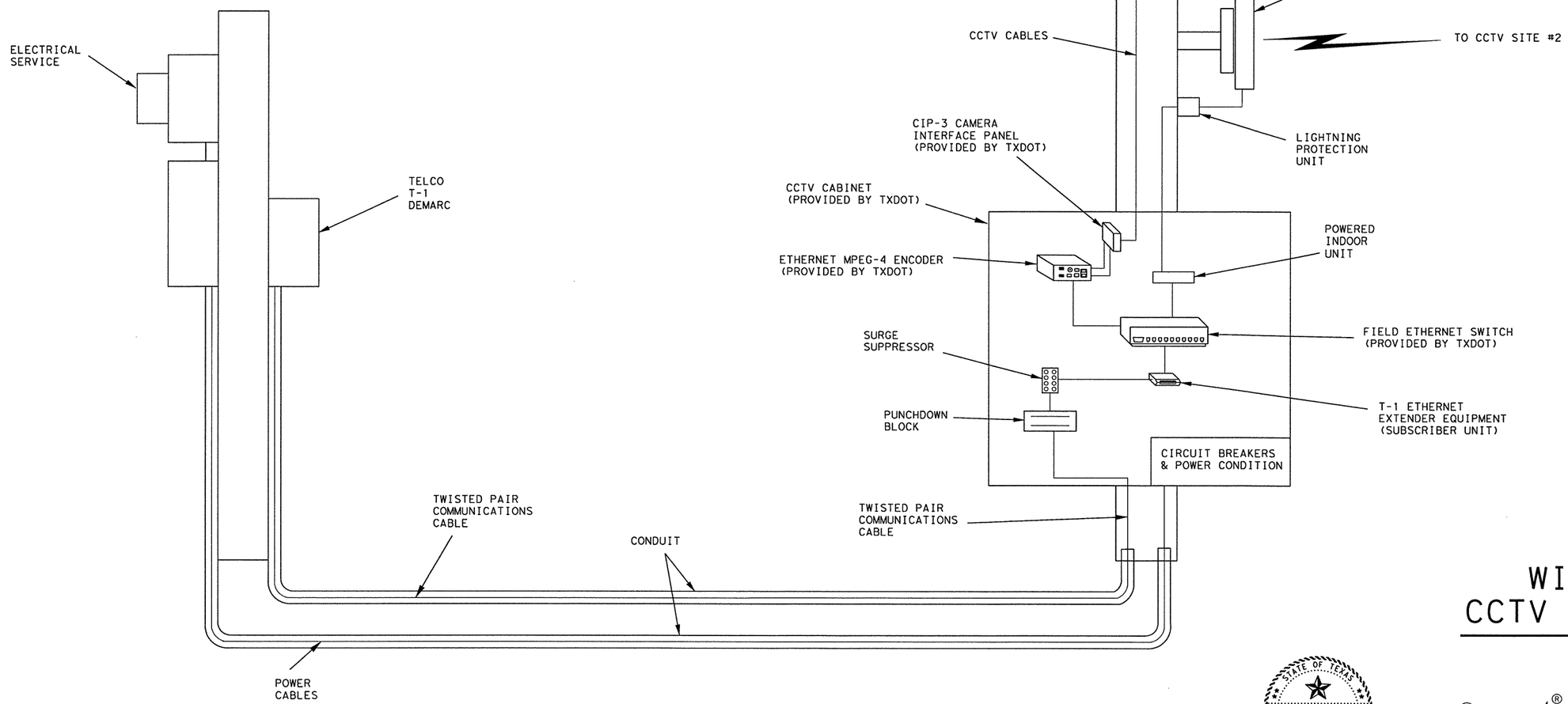

CCTV SITE #1 WITH WER

LP 1604 SBND
APPROX. STA. 576+00

WER = WIRELESS ETHERNET RADIO

(NOT TO SCALE)

WIRELESS CCTV SCHEMATIC

STATE OF TEXAS
BRIAN G. FARIELLO
66186
LICENSED
PROFESSIONAL ENGINEER

Brian G. Fariello, P.E. 3/17/11
Brian G. Fariello DATE

© 2010 Texas Department of Transportation

SHEET 1 OF 3

FED. RD. DIV. NO.	FEDERAL AID PROJECT NO.		SHEET NO.
6	NH 2007(705)		298
STATE	DIST.	COUNTY	
TEXAS	SAT	BEXAR	
CONT.	SECT.	JOB	HIGHWAY NO.
2452	01	043	LP 1604

9:58:32 AM
3/17/2011
T:\TMS\1604=2452-01-043 (LP1604 @ SH151)\DECEMBER 2010\WIRELESS SCHEMATICS\Wireless CCTV.dgn

PLAN

NOTES:

1. CONTRACTOR TO INSTALL ALL ITEMS SHOWN.
2. CONTRACTOR IS RESPONSIBLE FOR ESTABLISHING THE T-1 TELEPHONE SERVICE CONNECTION (COMMUNICATION LINK BETWEEN THE CCTV'S AND TRANSGUIDE) AT LOCATION SHOWN IN PLANS, INCLUDING THE INSTALLATION OF ALL TELEPHONE EQUIPMENT NECESSARY BOTH IN THE FIELD AND AT TRANSGUIDE, SUBSIDIARY TO THE VARIOUS BID ITEMS. CONTACT JAMES KADI (TXDOT) AT (210)615-6139 TO COORDINATE THIS WORK WITH THE TELEPHONE COMPANY.
3. CONSIDER AS SUBSIDIARY TO THE VARIOUS BID ITEMS ALL CONNECTORS, CABLES, MOUNTING EQUIPMENT AND HARDWARE, SURGE SUPPRESSERS, PUNCHDOWN BLOCKS, TELCO T-1 DEMARC EQUIPMENT, LOCAL AND REMOTE SOFTWARE, FIRMWARE, POWER SUPPLY UNITS, AND ANY OTHER SUPPORT, CALIBRATION, OR TEST EQUIPMENT NECESSARY TO MAKE THE WIRELESS LINK AND THE CCTV'S FULLY OPERATIONAL WITH THE TRANSGUIDE SYSTEM.
4. THE CONTRACTOR IS RESPONSIBLE FOR CONFIGURING AND INTEGRATING ALL NEW EQUIPMENT SO THAT IT IS FULLY OPERATIONAL WITH THE TRANSGUIDE SYSTEM.
5. ALL EQUIPMENT CONFIGURATIONS MUST BE COMPLIANT WITH TXDOT'S LONESTAR SOFTWARE "EQUIPMENT CONFIGURATION PLAN" (ECP). CONTACT MIKE WULCZYN AT (210)731-5133 FOR DETAILS.

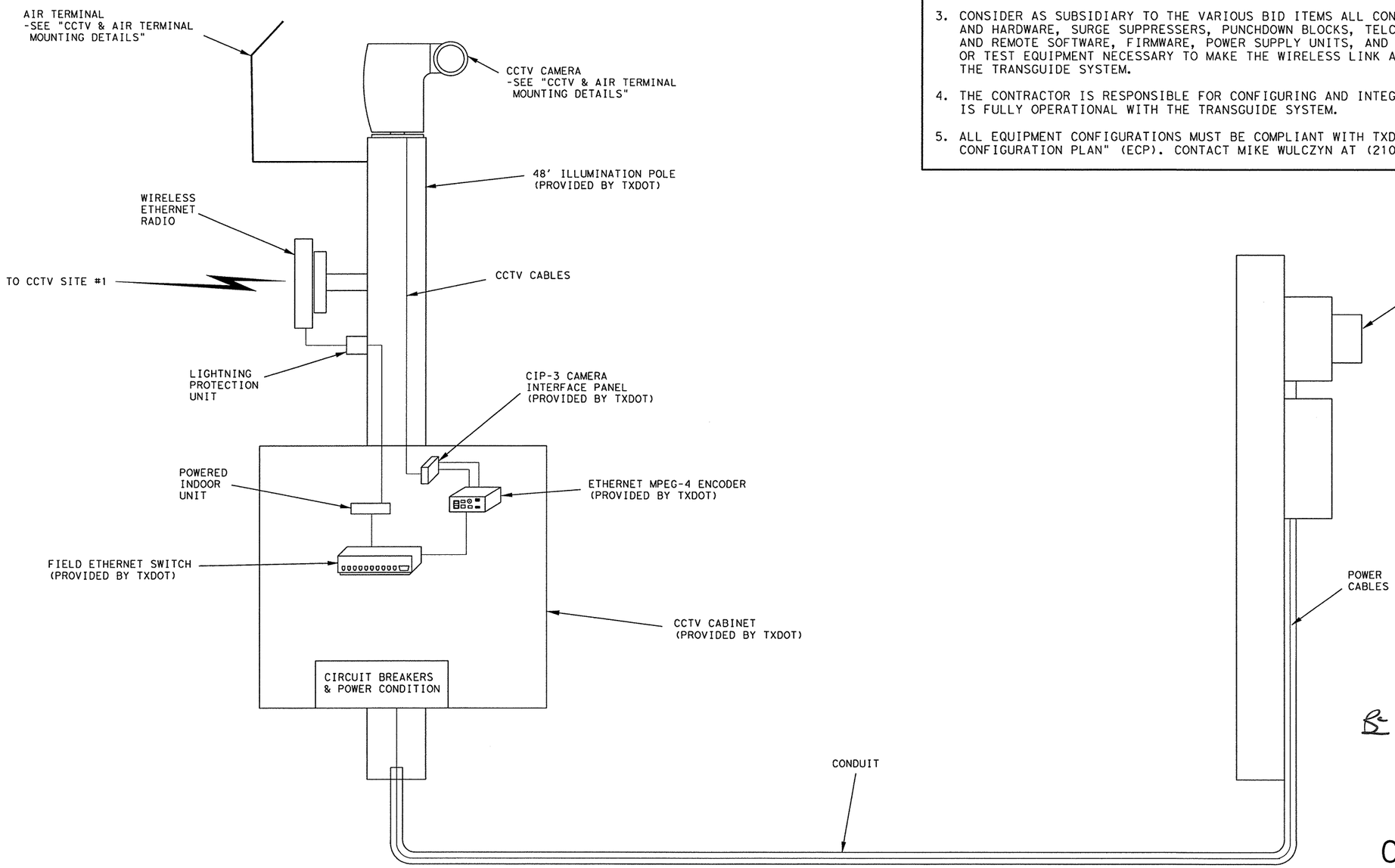

STATE OF TEXAS
BRIAN G. FARIELLO
66186
LICENSED PROFESSIONAL ENGINEER

Brian G. Fariello, P.E. 3/17/11
DATE

WIRELESS CCTV SCHEMATIC

CCTV SITE #2 WITH WER

SH 151 WBFR
APPROX. STA. 71+00

(NOT TO SCALE)

WER = WIRELESS ETHERNET RADIO

©2010 Texas Department of Transportation

SHEET 2 OF 3

FED. RD. DIV. NO.	FEDERAL AID PROJECT NO.		SHEET NO.
6	NH 2007(705)		299
STATE	DIST.	COUNTY	
TEXAS	SAT	BEXAR	
CONT.	SECT.	JOB	HIGHWAY NO.
2452	01	043	LP 1604

9:59:26 AM
3/17/2011
T:\TMS\1604=2452-01-043 (LP1604 @ SH151)\DECEMBER 2010\WIRELESS SCHEMATICS\Wireless CCTV.dgn
PLAN

NOTES:

1. CONTRACTOR TO INSTALL ALL ITEMS SHOWN.

2. CONTRACTOR IS RESPONSIBLE FOR ESTABLISHING THE T-1 TELEPHONE SERVICE CONNECTION (COMMUNICATION LINK BETWEEN THE CCTV'S AND TRANSGUIDE) AT LOCATION SHOWN IN PLANS, INCLUDING THE INSTALLATION OF ALL TELEPHONE EQUIPMENT NECESSARY BOTH IN THE FIELD AND AT TRANSGUIDE, SUBSIDIARY TO THE VARIOUS BID ITEMS. CONTACT JAMES KADI (TXDOT) AT (210)615-6139 TO COORDINATE THIS WORK WITH THE TELEPHONE COMPANY.

3. CONSIDER AS SUBSIDIARY TO THE VARIOUS BID ITEMS ALL CONNECTORS, CABLES, MOUNTING EQUIPMENT AND HARDWARE, SURGE SUPPRESSERS, PUNCHDOWN BLOCKS, TELCO T-1 DEMARC EQUIPMENT, LOCAL AND REMOTE SOFTWARE, FIRMWARE, POWER SUPPLY UNITS, AND ANY OTHER SUPPORT, CALIBRATION, OR TEST EQUIPMENT NECESSARY TO MAKE THE WIRELESS LINK AND THE CCTV'S FULLY OPERATIONAL WITH THE TRANSGUIDE SYSTEM.

4. THE CONTRACTOR IS RESPONSIBLE FOR CONFIGURING AND INTEGRATING ALL NEW EQUIPMENT SO THAT IT IS FULLY OPERATIONAL WITH THE TRANSGUIDE SYSTEM.

5. ALL EQUIPMENT CONFIGURATIONS MUST BE COMPLIANT WITH TXDOT'S LONESTAR SOFTWARE "EQUIPMENT CONFIGURATION PLAN" (ECP). CONTACT MIKE WULCZYN AT (210)731-5133 FOR DETAILS.

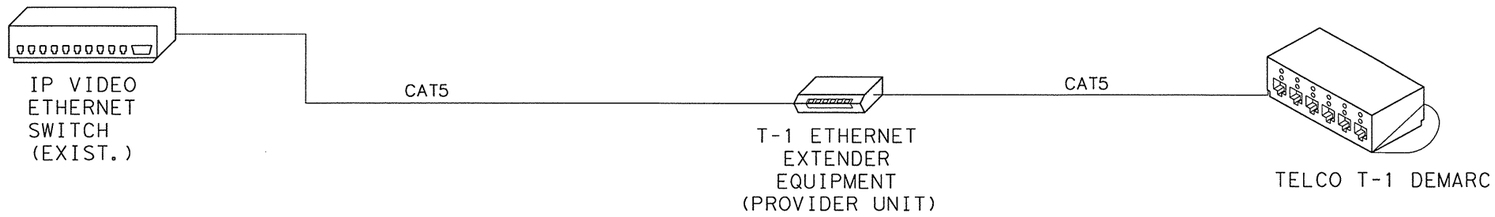

TRANSGUIDE SITE

3500 NW LOOP 410

STATE OF TEXAS
BRIAN G. FARIELLO
66186
LICENSED
PROFESSIONAL ENGINEER

Brian G. Fariello, P.E. 3/17/11
Brian G. Fariello DATE

WIRELESS CCTV SCHEMATIC

© 2010 Texas Department of Transportation

SHEET 3 OF 3

FED. RD. DIV. NO.	FEDERAL AID PROJECT NO.		SHEET NO.
6	NH 2007(705)		300
STATE	DIST.	COUNTY	
TEXAS	SAT	BEXAR	
CONT.	SECT.	JOB	HIGHWAY NO.
2452	01	043	LP 1604

10:00:33 AM
3/17/2011
T:\TMS\1604=2452-01-043 (LP1604 @ SH151)\DECEMBER 2010\WIRELESS SCHEMATICS\Wireless CCTV.dgn

PLAN

NOTES:
1. CONSIDER ALL CONDUIT, LB CONNECTORS, WELDING, MOUNTING BRACKETS, FASTENERS, STAINLESS STEEL STRAPS, AND INCIDENTALS AS SUBSIDIARY TO THE VARIOUS BID ITEMS WITH NO DIRECT PAYMENT.
2. MOUNT CABINET PLUMB IN ALL DIRECTIONS.
3. PROVIDE HOT DIPPED GALVANIZED MOUNTING BRACKETS AND HARDWARE.
4. COLD GALVANIZE ANY WELDS
5. INSTALL POWER CABLES IN SEPERATE CONDUIT FROM COMMUNICATION CABLES.
6. SUBMIT SHOP DRAWINGS OF MOUNTING METHOD TO ENGINEER FOR APPROVAL.

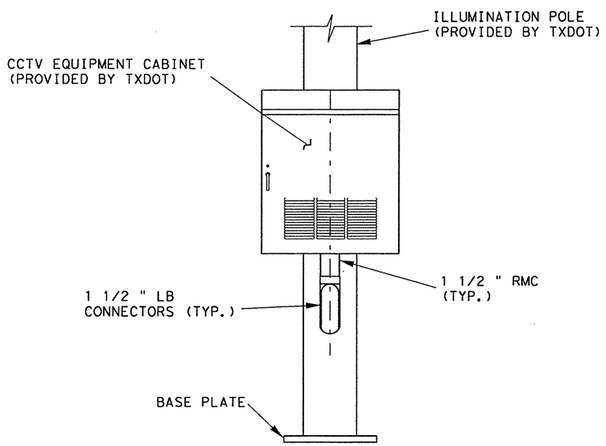

ELEVATION

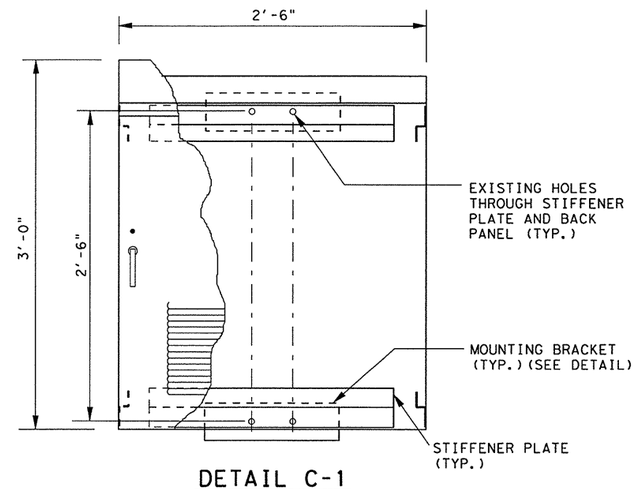

DETAIL C-1

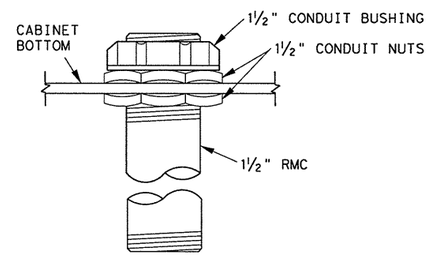

DETAIL C-2

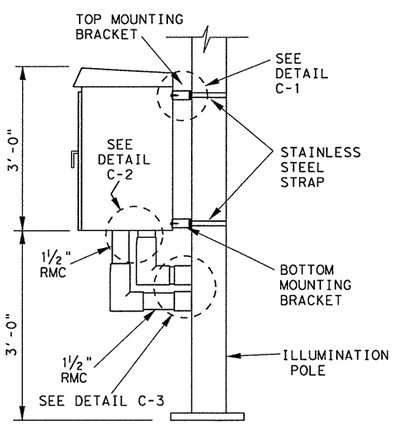

SIDE VIEW

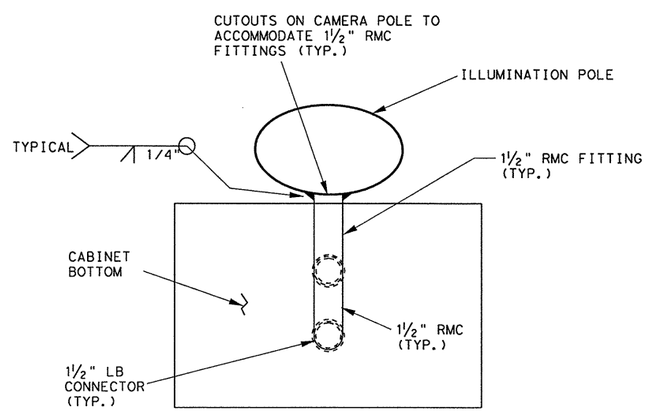

DETAIL C-3

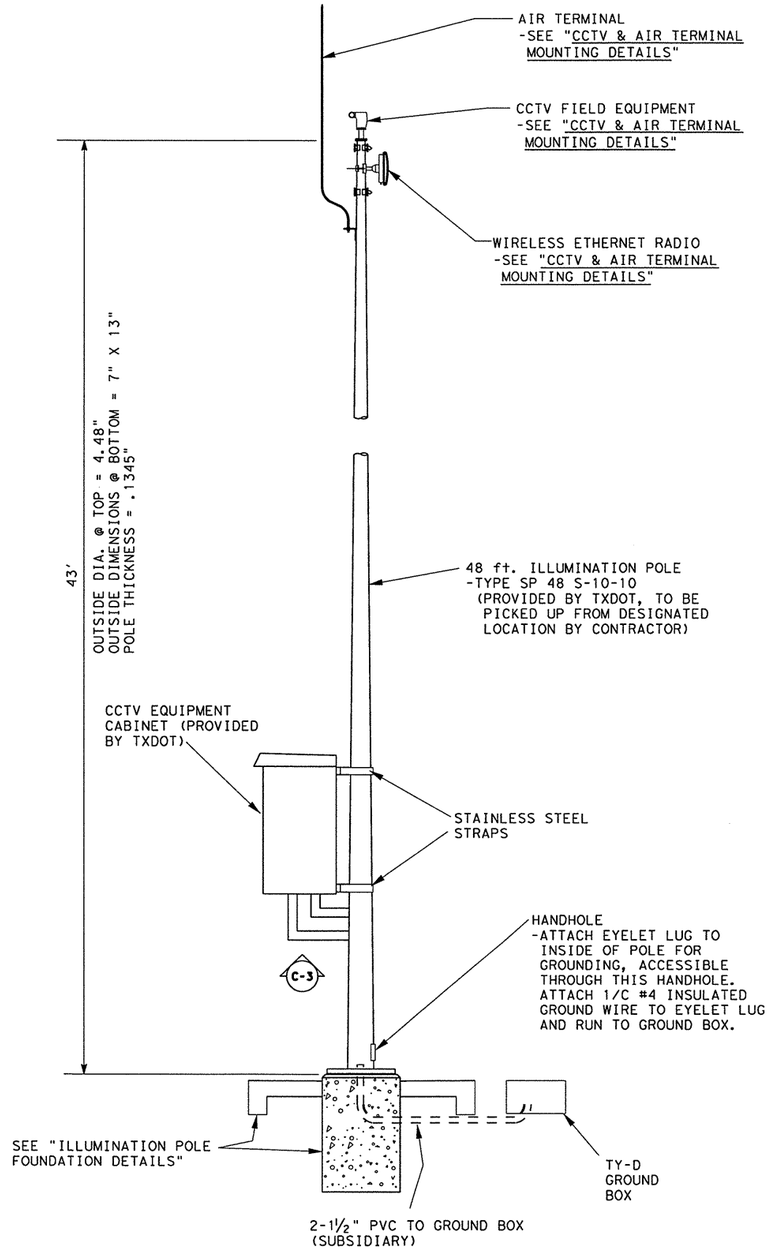

ILLUMINATION POLE & CCTV CABINET DETAILS

© 2010 Texas Department of Transportation

STATE OF TEXAS
BRIAN G. FARIELLO
66186
LICENSED
PROFESSIONAL ENGINEER

Brian G. Fariello P.E. 3/17/11
DATE

SHEET 1 OF 1

FED. RD. DIV. NO.	FEDERAL AID PROJECT NO.		SHEET NO.
6	NH 2007(705)		301
STATE	DIST.	COUNTY	
TEXAS	SAT	BEXAR	
CONT.	SECT.	JOB	HIGHWAY NO.
2452	01	043	LP 1604

10:05:43 AM
3/17/2011
T:\TMS\1604=2452-01-043 (LP1604 @ SH151)\DECEMBER 2010\STANDARDS\cctvcabinet-REV.dgn

PLAN

NOTES:
1. ERECT POLE PLUMB AND TRUE. FORM AND LEVEL THE TOP 6" OF THE FOUNDATION SO THE POLE WILL BE PLUMB. USE LEVELING NUTS TO PLUMB POLES. DO NOT GROUT BETWEEN BASEPLATE AND FOUNDATION.
2. ENSURE ANSI/ASME CLASS 2A AND 2B FIT FOR ANCHOR BOLTS AND NUTS. TAP AND CHASE NUTS AFTER GALVANIZING.
3. RIPRAP IS ESTIMATED AT 1.25 CU YDS PER SITE, PAID FOR UNDER ITEM 432 "RIPRAP".
4. CAP UNUSED CONDUITS IN FOUNDATIONS ON BOTH ENDS.
5. BOND ANCHOR BOLT TO REBAR CAGE WITH #6 BARE STRANDED COPPER CONDUCTOR. USE LISTED MECHANICAL CONNECTORS RATED FOR EMBEDMENT IN CONCRETE.

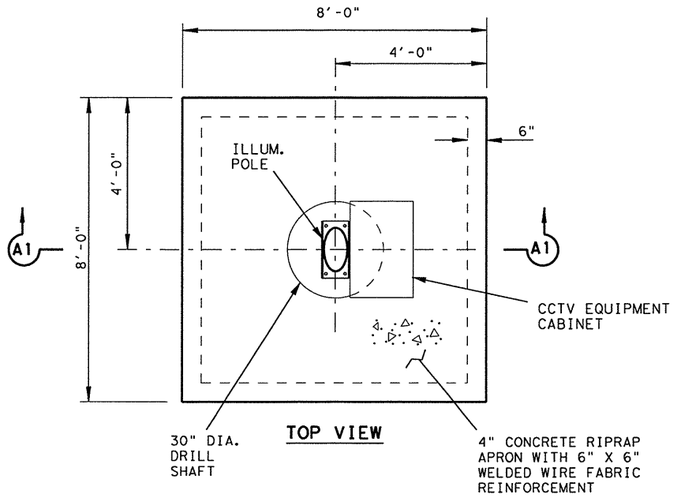

TOP VIEW

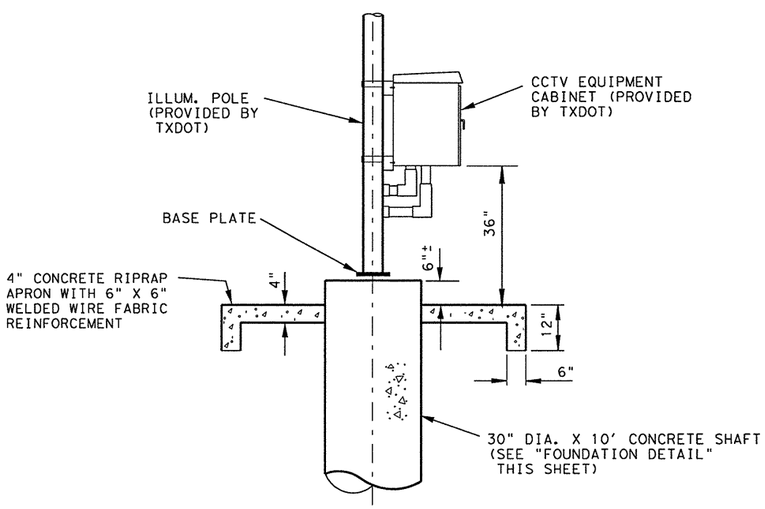

A-1 SECTION PROFILE

RIPRAP APRON DETAIL

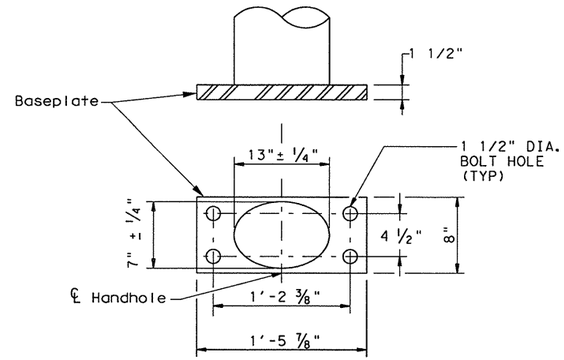

EXIST. POLE BASEPLATE

(FOR INFORMATION ONLY)

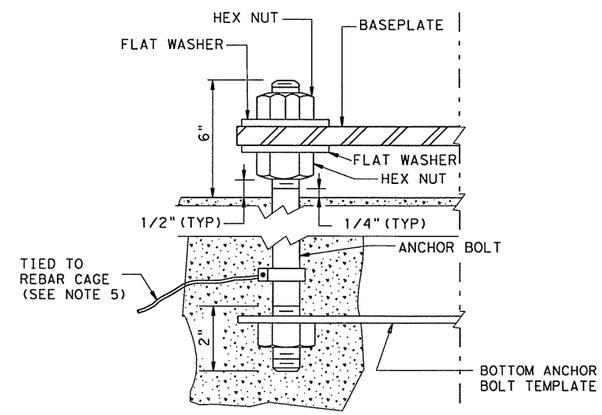

ANCHOR BOLT DETAIL

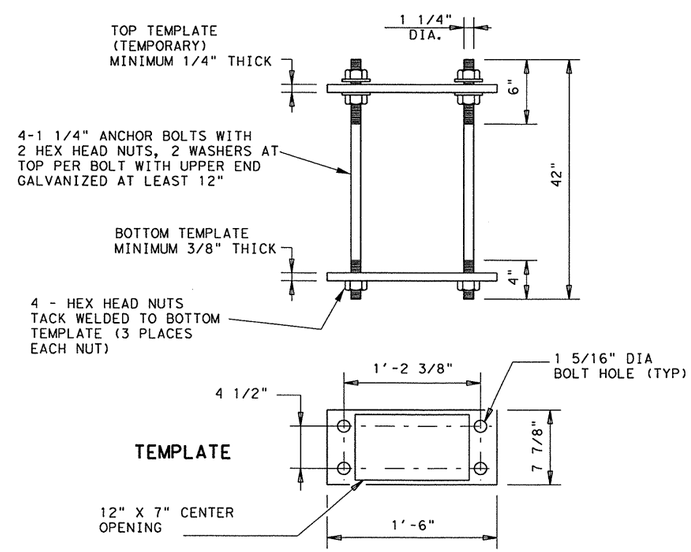

BASE ANCHOR BOLT ASSEMBLY

ANCHOR BOLT TEMPLATES NEED NOT BE GALVANIZED

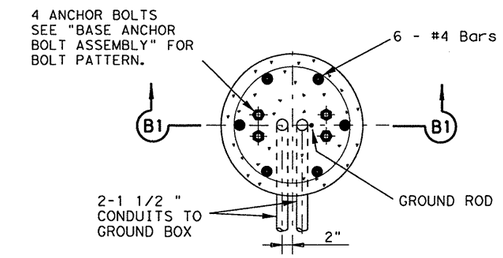

TOP VIEW

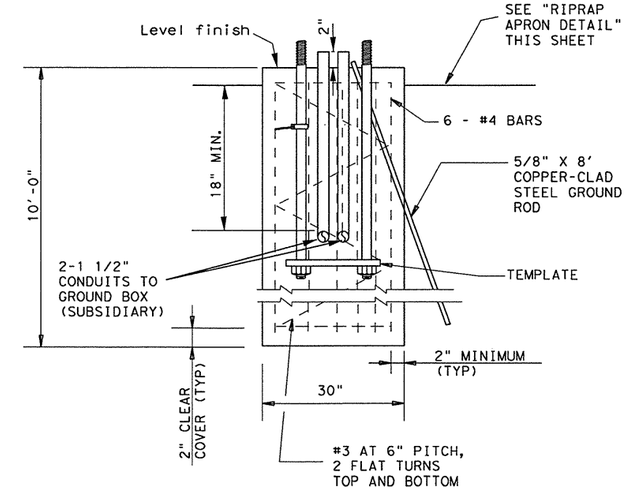

B-1 SECTION PROFILE

FOUNDATION DETAIL

STATE OF TEXAS
BRIAN G. FARIELLO
66186
LICENSED PROFESSIONAL ENGINEER

Brian G. Fariello, P.E. 3/17/11
DATE

ILLUMINATION POLE FOUNDATION DETAILS

(FOR TYPE SP 48 S-10-10 GROUND MOUNTED POLE)

© 2010 Texas Department of Transportation

FED. RD. DIV. NO.	FEDERAL AID PROJECT NO.		SHEET NO.
6	NH 2007(705)		302
STATE	DIST.	COUNTY	
TEXAS	SAT	BEXAR	
CONT.	SECT.	JOB	HIGHWAY NO.
2452	01	043	LP 1604

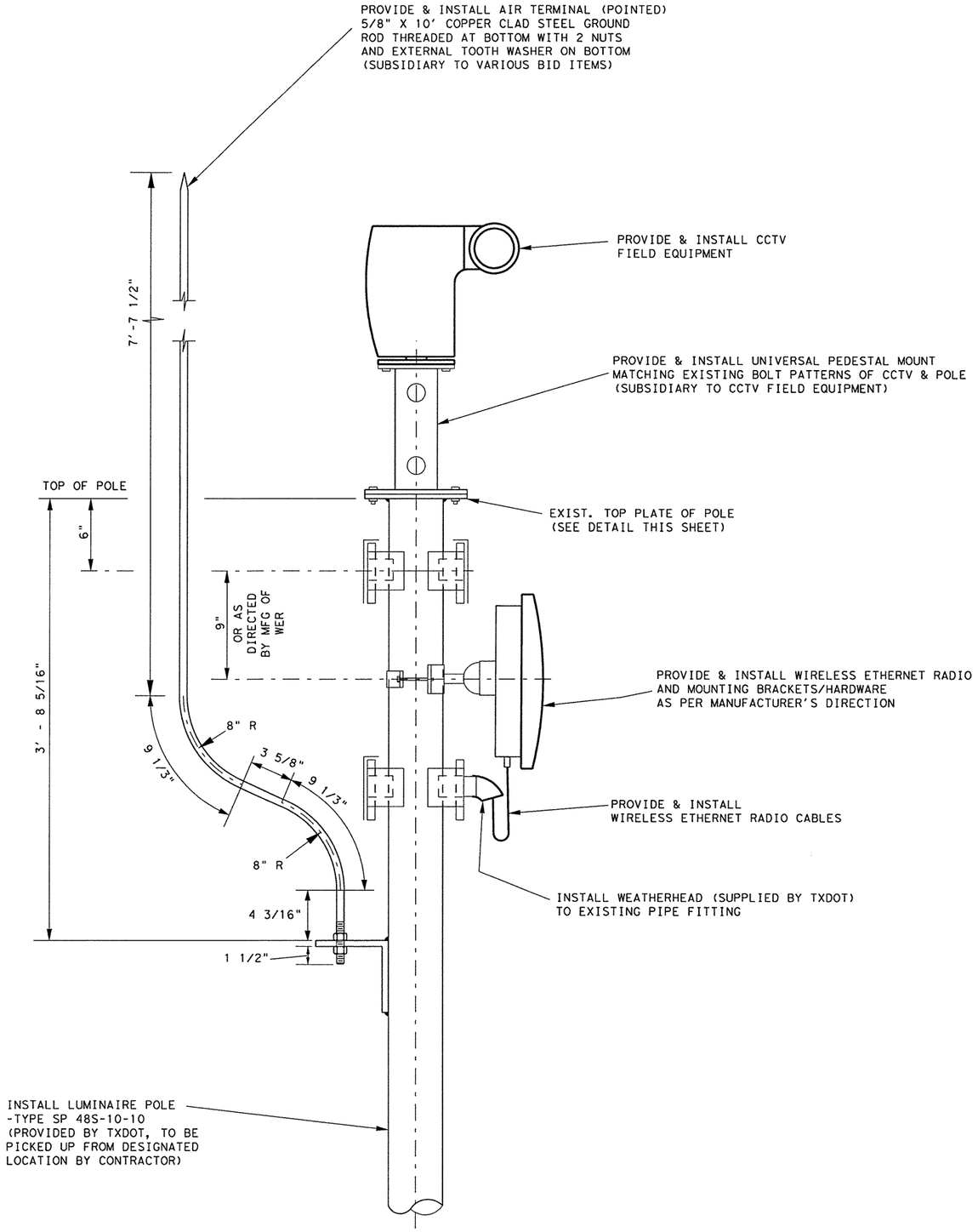

WER = WIRELESS ETHERNET RADIO

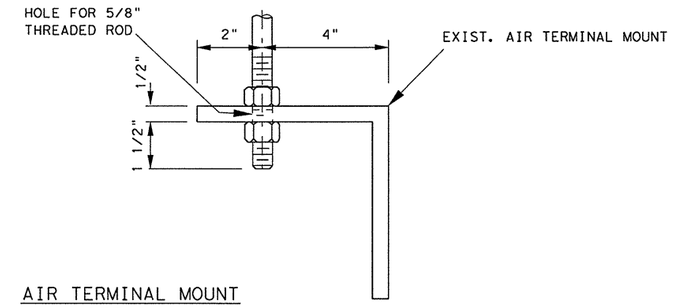

AIR TERMINAL MOUNT DETAIL

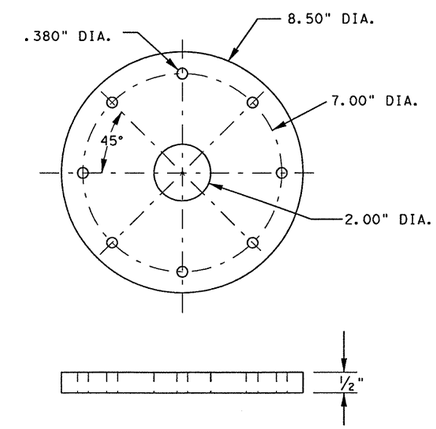

TOP PLATE OF POLE

CCTV & AIR TERMINAL MOUNTING DETAILS

© 2010 Texas Department of Transportation

STATE OF TEXAS
BRIAN G. FARIELLO
66186
LICENSED PROFESSIONAL ENGINEER

Brian G. Fariello, P.E. 3/17/11
DATE

FED. RD. DIV. NO.	FEDERAL AID PROJECT NO.		SHEET NO.
6	NH 2007(705)		303
STATE	DIST.	COUNTY	
TEXAS	SAT	BEXAR	
CONT.	SECT.	JOB	HIGHWAY NO.
2452	01	043	LP 1604

10:02:50 AM
3/17/2011
T:\TMS\1604=2452-01-043 (LP1604 @ SH151)\DECEMBER 2010\STANDARDS\CCTV & AIRTERM Mounting details.dgn

PLAN

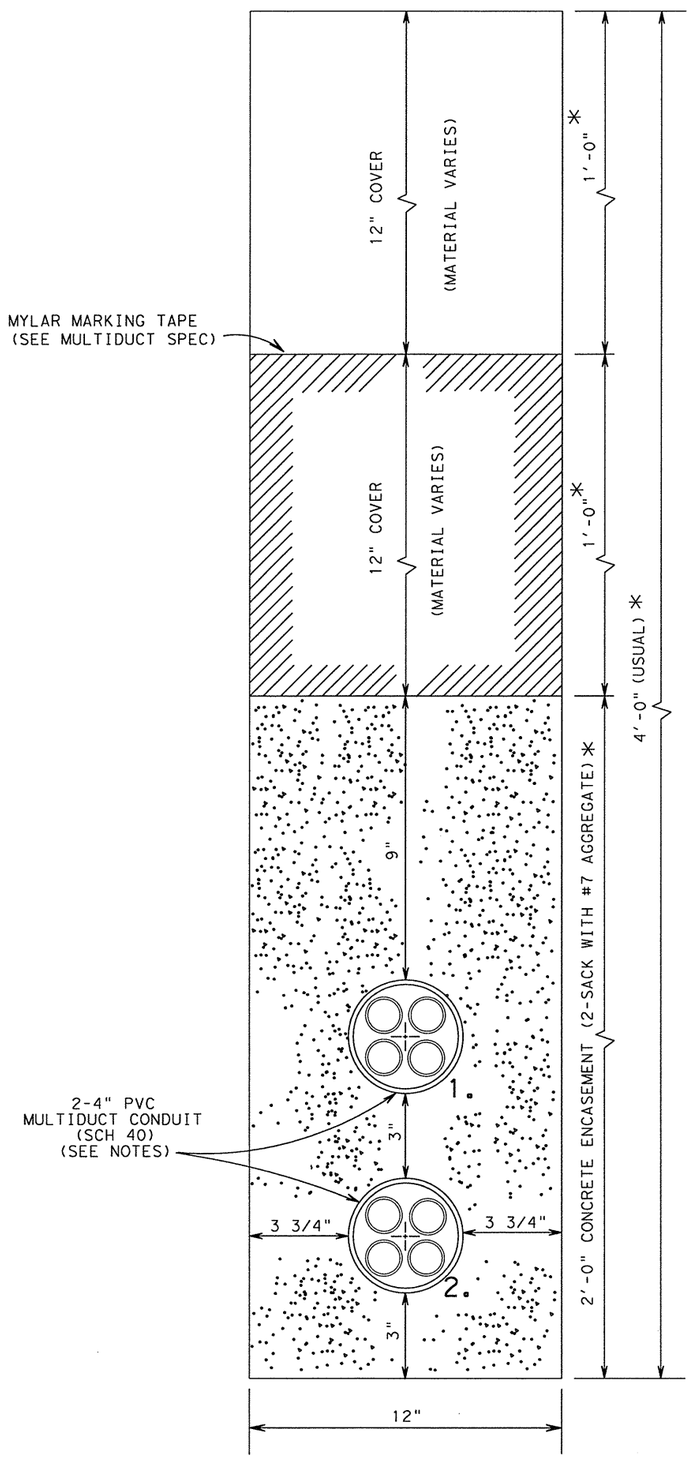

TYPICAL TRENCH

(TRENCH IN SOIL)

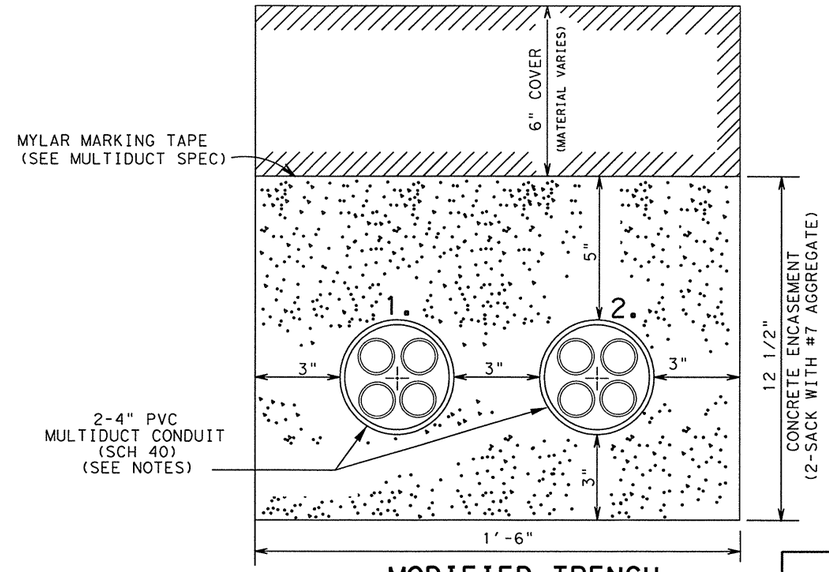

MODIFIED TRENCH

(USE ONLY WHEN APPROVED BY THE ENGINEER DUE TO UTILITY CONFLICT)

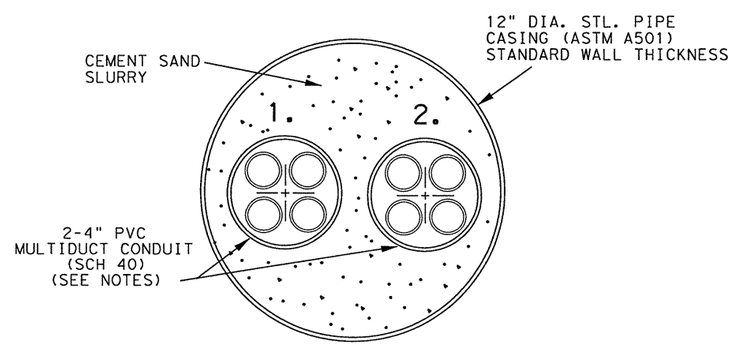

TYPICAL BORE

NOTES:

1. PAY SPECIAL ATTENTION TO THE LOCATION OF EXISTING UTILITIES. DEPTH OF THE TRENCH MAY HAVE TO BE VARIED IN ORDER TO PASS OVER/UNDER ANY EXISTING UTILITY.
2. PROVIDE A TEMPLATE AT 10' (FOOT) INTERVALS TO INSURE THAT THE CONDUIT REMAINS IN ITS ORIGINAL POSITION AS APPROVED BY THE ENGINEER.
3. CONCRETE ENCASEMENT AND TEMPLATES ARE SUBSIDIARY TO THE VARIOUS BID ITEMS.
4. USE A 10' (FOOT) TRANSITION TO GO FROM A TYPICAL TRENCH TO A MODIFIED TRENCH.
5. VERIFY THE LOCATION OF UNDERGROUND OR OVERHEAD UTILITIES BEFORE BEGINNING CONSTRUCTION OPERATIONS.
6. FOR TYPICAL BORE, INJECT A 2' (FOOT) PLUG OF CEMENT SAND SLURRY INTO EACH END OF STEEL PIPE CASING TO MAKE IT WATERTIGHT. CONSIDER CASING SUBSIDIARY TO THE MULTIDUCT.
7. INSTALL A SINGLE 1/C #14 INSULATED WIRE IN CONDUIT RUN. (TRACER WIRE FOR LOCATING UNDERGROUND CONDUIT, SUBSIDIARY TO MULTIDUCT)
8. EACH 4" MULTIDUCT CONTAINS 4 EA 1.25" POLYETHYLENE INNERDUCTS OR AS DIRECTED BY THE ENGINEER.
9. INSTALL A FLAT PULL CORD IN ALL EMPTY CONDUITS AND INNERDUCTS. PULL CORD MUST HAVE TENSILE STRENGTH OF 1250 LBS. MINIMUM AND HAVE FOOT MARKINGS TO DETERMINE LENGTH INSTALLED. CONSIDER CORD AND INSTALLATION SUBSIDIARY TO VARIOUS BID ITEMS.

FOR TRENCH IN ROADWAY

* CONCRETE ENCASE 4 FEET IN DEPTH (WITH CLASS "A" CONCRETE) ANY TRENCHES THROUGH MAINLANES, FRONTAGE ROADS, INTERSECTIONS, OR RAMPS. POUR CONCRETE SO THAT TOP IS 1 1/2" BELOW FINISHED GRADE OR AS DIRECTED BY THE ENGINEER. PLACE 1 1/2" OF ASPHALT ON TOP OF CONCRETE ENCASEMENT TO FINISHED GRADE OR AS DIRECTED BY THE ENGINEER. ANY ADDITIONAL CONCRETE NEEDED IS SUBSIDIARY TO THE VARIOUS BID ITEMS.

STATE OF TEXAS
BRIAN G. FARIELLO
66186
LICENSED PROFESSIONAL ENGINEER

Brian G. Fariello, P.E. 3/17/11
Brian G. Fariello DATE

4" PVC MULTIDUCT CONDUIT [2-WAY SYSTEM]

© 2009 Texas Department of Transportation

FED. RD. DIV. NO.	FEDERAL AID PROJECT NO.		SHEET NO.
6	NH 2007(705)		304
STATE	DIST.	COUNTY	
TEXAS	SAT	BEXAR	
CONT.	SECT.	JOB	HIGHWAY NO.
2452	01	043	LP 1604

10:10:22 AM
3/17/2011
T:\TMS\1604=2452-01-043 (LP1604 @ SH151)\DECEMBER 2010\STANDARDS\TRUNKLIN2WAY.dgn
LEVELS C
ACC:
FILE: .DGN

TMS EQUIPMENT ELECTRICAL SERVICE DATA (LP 1604 CSJ 2452-01-043)

LOCATION	TMS SVC #	ELECTRICAL SERVICE DESCRIPTION SEE ED (4)-03 & ED (5)-03	SERVICE CONDUIT SIZE (RMC)	SERVICE CONDUCTORS NO./SIZE	SAFETY SWITCH AMPS	MAIN DISCONNECT		TWO-POLE CONTACTOR AMPS	PANELBD./ LOADCENTER AMP RATING (MIN)	CIRCUIT NO.	BRANCH CKT. BRK. POLE/AMPS(EQUIP.)	KVA LOAD
						SWITCH AMP/FUSES	CKT. BRK. POLE/AMP					
STA.576+00 LP 1604 SBML	1	ELC SRV TY D 120/240 060 (NS)GS(N)TP(O)	1 1/2"	3/#4	N/A	N/A	2P/60	N/A	100	TM	1P/20(CCTV)	1.2
STA.71+00 SH 151 WBFR	2	ELC SRV TY D 120/240 060 (NS)GS(N)TP(O)	1 1/2"	3/#4	N/A	N/A	2P/60	N/A	100	TM	1P/20(CCTV)	1.2

TYPICAL EQUIPMENT LOADS			
EQUIPMENT	AMP LOADS	BREAKER SIZE (TYPICAL)	KVA LOAD
DYNAMIC MESSAGE SIGN (DMS)	36 AMPS	2P/50	4.3
LANE CONTROL SIGNAL (LCS)	18 AMPS	2P/30	2.2
COMM. CABINET (CC)	10 AMPS	1P/20	1.2
FIBER HUB (FH)	10 AMPS	1P/20	1.2
CLOSED CIRCUIT TV CAMERA (CCTV)	10 AMPS	1P/20	1.2

STATE OF TEXAS
BRIAN C. FARIELLO
66186
LICENSED
PROFESSIONAL ENGINEER

Brian C. Fariello, P.E. 3/17/11
Brian C. Fariello DATE

TMS
ELECTRICAL SERVICE
DATA

© 2011 Texas Department of Transportation

SHEET 1 OF 1

FED. RD. DIV. NO.	FEDERAL AID PROJECT NO.		SHEET NO.
6	NH 2007(705)		305
STATE	DIST.	COUNTY	
TEXAS	SAT	BEXAR	
CONT.	SECT.	JOB	HIGHWAY NO.
2452	01	043	LP 1604

10:07:04 AM
3/17/2011
T:\TMS\1604=2452-01-043 (LP1604 @ SH151)\DECEMBER 2010\STANDARDS\electsvcdata.dgn
PLAN

PRIVATE UTILITY INFORMATION

THE FOLLOWING IS A LISTING OF KNOWN PRIVATE UTILITY COMPANIES WITH FACILITIES IN THE IMMEDIATE VICINITY OF THE INTERSECTION. THE CONTRACTOR WILL NOT ASSUME THIS TO BE A FULL AND COMPLETE LIST AND WILL NOTIFY DIG-TESS AT 1-800-344-8377 AND THE UTILITY CONTACTS PROVIDED AT LEAST 48 HOURS IN ADVANCE OF COMMENCING WORK FOR UTILITY LOCATES.

AT&T - CALL 1-800-344-8377

PUBLIC UTILITY INFORMATION

THE FOLLOWING IS A LISTING OF KNOWN PUBLIC UTILITY COMPANIES WITH FACILITIES IN THE IMMEDIATE VICINITY OF THE INTERSECTION. NOTIFY THE UTILITY CONTACTS PROVIDED AT LEAST 48 HOURS IN ADVANCE OF COMMENCING WORK FOR UTILITY LOCATES.

SAN ANTONIO WATER SYSTEM: (210) 704-7297

NOTE:

EXISTING LAYOUT IS REPRESENTATIVE OF ULTIMATE ROADWAY CONFIGURATION.

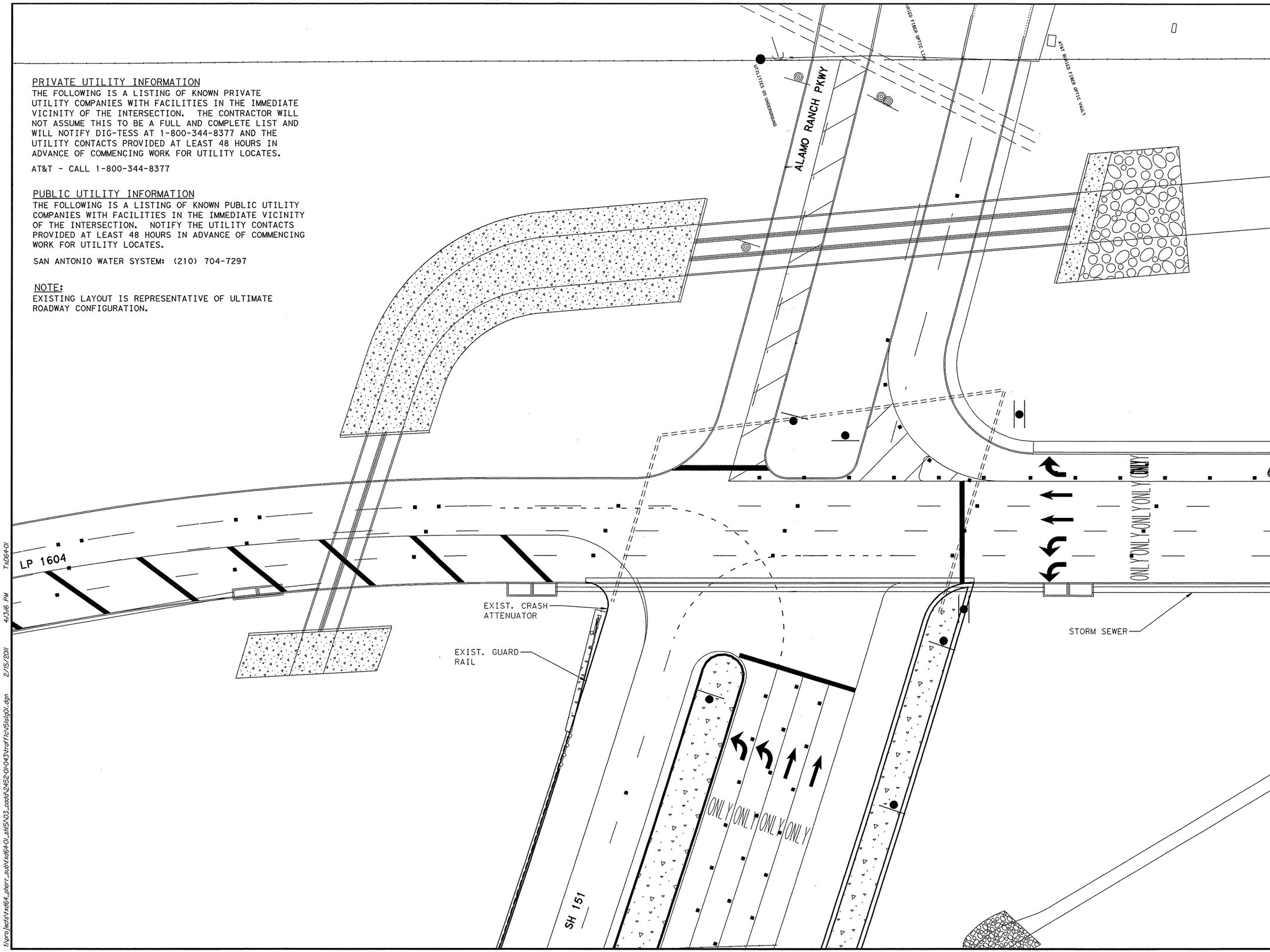

2-15-11

STATE OF TEXAS
FEDERICO J. MENDOZA
63311
REGISTERED PROFESSIONAL ENGINEER

NO.	DATE	REVISION DESCRIPTION	APP. BY

© 2009

Texas Department of Transportation

MACTEC
3520 EXECUTIVE CENTER DRIVE
SUITE 200
AUSTIN, TEXAS 78731
(512) 795-0360
REGISTRATION NUMBER: F-1784

BROWN & GAY ENGINEERS, INC.
Brown & Gay Engineers, Inc.
Houston • Fort Worth • Austin • Frisco
TBPE FIRM REGISTRATION NO. 1046

SH 151

EXISTING SIGNAL LAYOUT

(SHEET 1 OF 5)

FED. RD. DIV. NO.			SHEET NO.
			306
STATE	DIST.	COUNTY	
TEXAS	SA	BEXAR	
CONT.	SECT.	JOB	HIGHWAY NO.
2452	01	043	SH 151

f:\proj\tedt\Vxd64_phart_sub\Vxd64-01_sh151\03_cadd\2452-01-043\rdf11o\15lstg01.dgn 2/15/2011 4:33:16 PM TxDot64-01

LEGEND

- (B) PROP. POLE NUMBER
- PROP. CONTROLLER, SLAB, AND FOUNDATION
- PROP. GROUND BOX (TYPE "D") W/ APRON
- PROP. MAST ARM POLE AND FOUNDATION
- 1 2 PROP. 3 SECTION SIGNAL HEAD WITH BACKPLATE
- PROP. RADAR PRESENCE DETECTOR (RPDD)
- PROP. RADAR ADVANCE DETECTOR (RADD)
- PROP. WIRELESS ACCESS POINT
- PROP. WIRELESS BRIDGE
- PROP. MAST ARM SIGN
- PROP. SMALL ROADSIDE SIGN
- PROP. ELECTRICAL SERVICE
- PROP. 2 IN PVC SCHEDULE 80
- PROP. 3 IN PVC SCHEDULE 80
- RPDD DETECTION ZONE

COMMUNICATION EQUIPMENT NOTES:
THE CONTRACTOR SHALL INSTALL WIRELESS COMMUNICATION EQUIPMENT IN THE FIELD AS NOTED IN THE PLANS AND AS DIRECTED BY COSA INFORMATION TECHNOLOGY SERVICES DEPARTMENT (ITSD). FINAL LOCATION OF THE WIRELESS COMMUNICATION EQUIPMENT SHALL BE APPROVED BY ITSD BEFORE INSTALLATION. THE CONTRACTOR SHALL COORDINATE WITH ITSD TO PREPARE SIGNAL STRENGTH SURVEY AND DETERMINE LOCATION FOR BRIDGE, IF SPECIFIED, AND ACCESS POINT. ALL WIRELESS MESH COMMUNICATION EQUIPMENT AND INSTALLATION SHALL BE SUBSIDIARY TO ITEM 680.

PROPOSED TRAFFIC SIGNS

ONE WAY R6-1L (36"X12") S1	ONE WAY R6-1R (36"X12") S2	ONLY ONLY R3-8 LL (36"X30") S3 S4	ANDERSON LOOP <#### ####> S5 S6
R9-3a (24"X24") S8 – S17			ALAMO RANCH ####> S7

NOTES:
1. S1-S7 SHALL BE MOUNTED ON SIGNAL MAST ARMS AS SHOWN ON PLANS.
2. S8-S9 SHALL BE MOUNTED ON PEDSTAL POLE ASSEMBLY AS SHOWN ON PLANS.
3. S10-S15 SHALL BE MOUNTED ON TRAFFIC SIGNAL POLES AS SHOWN ON PLANS.
4. S16-S18 SHALL BE MOUNTED ON SMALL ROADSIDE SIGN ASSEMBLIES.

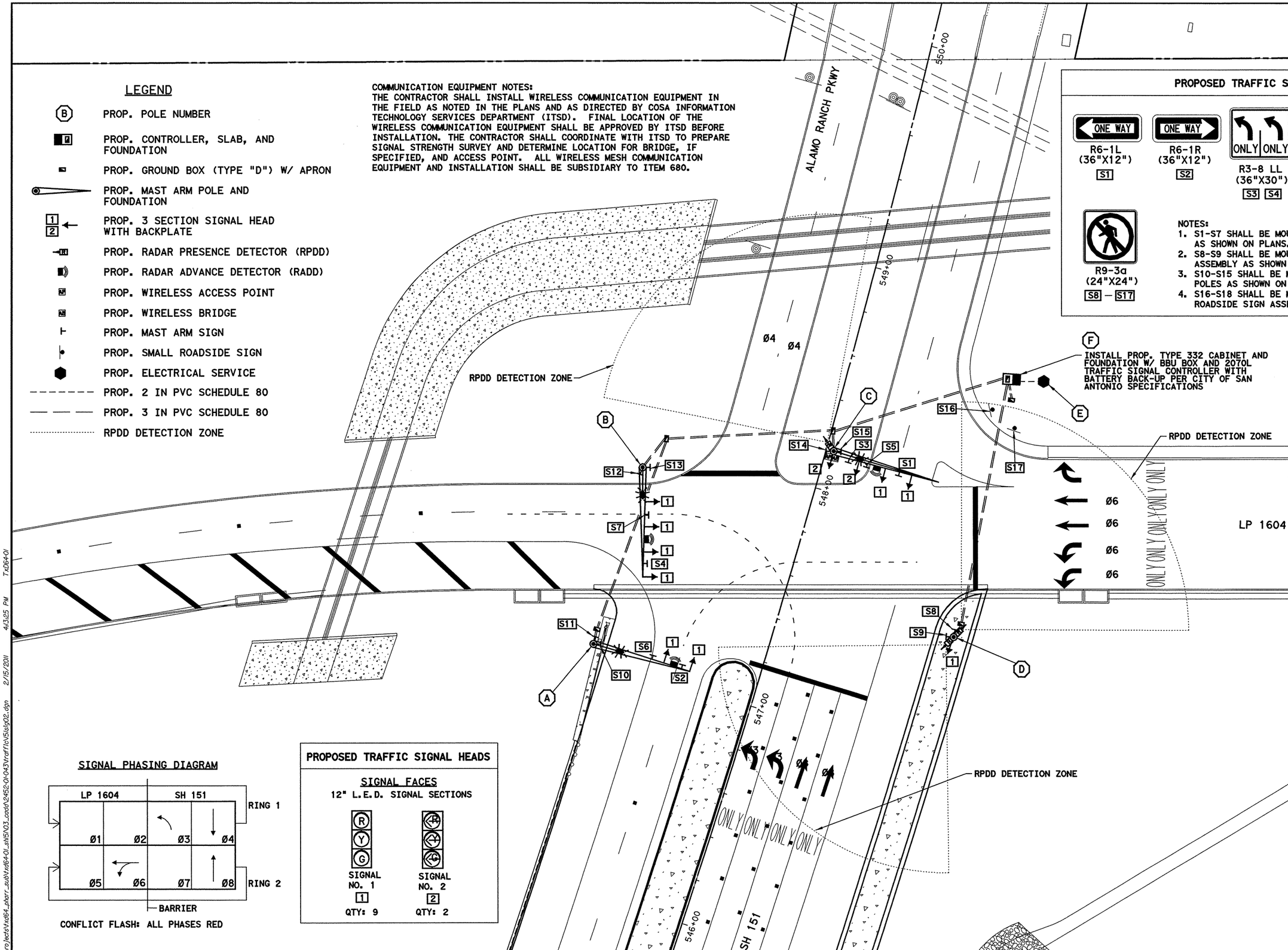

SIGNAL PHASING DIAGRAM

CONFLICT FLASH: ALL PHASES RED

PROPOSED TRAFFIC SIGNAL HEADS

SIGNAL FACES
12" L.E.D. SIGNAL SECTIONS

SIGNAL NO. 1	SIGNAL NO. 2
1	2
QTY: 9	QTY: 2

2-15-11

STATE OF TEXAS
FEDERICO J. MENDOZA
63311
REGISTERED PROFESSIONAL ENGINEER

NO.	DATE	REVISION DESCRIPTION	APP. BY

© 2009

Texas Department of Transportation

MACTEC
3520 EXECUTIVE CENTER DRIVE
SUITE 200
AUSTIN, TEXAS 78731
(512) 795-0360
REGISTRATION NUMBER: F-1784

BROWN & GAY ENGINEERS, INC.
Brown & Gay Engineers, Inc.
Houston • Fort Worth • Austin • Frisco
TBPE FIRM REGISTRATION NO. 1046

SH 151

PROPOSED SIGNAL LAYOUT

(SHEET 2 OF 5)

FED. RD. DIV. NO.		SHEET NO.
		307

STATE	DIST.	COUNTY	
TEXAS	SA	BEXAR	
CONT.	SECT.	JOB	HIGHWAY NO.
2452	01	043	SH 151

t:\projects\txd64_pharr_sub\txd64-01_sh151\03_cadd\2452-01-043\traffic\51sig02.dgn 2/15/2011 4:13:25 PM TxD64-01

LEGEND

- [2] PROP. RUN NUMBER
- (B) PROP. POLE NUMBER
- PROP. CONTROLLER, SLAB, AND FOUNDATION
- PROP. GROUND BOX (TYPE "D") W/ APRON
- PROP. MAST ARM POLE AND FOUNDATION
- 1 2 ← PROP. 3 SECTION SIGNAL HEAD WITH BACKPLATE
- PROP. VIVDS CAMERA ASSEMBLY
- PROP. ELECTRICAL SERVICE
- PROP. 2 IN PVC SCHEDULE 80
- PROP. 3 IN PVC SCHEDULE 80

METRO STREET NAME SIGN DETAILS

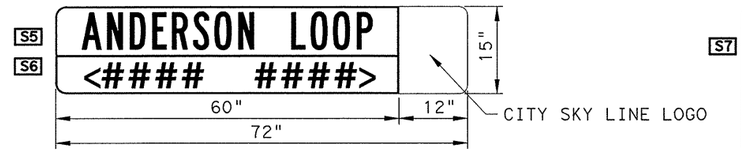

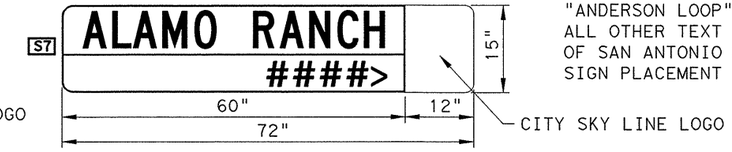

"ALAMO RANCH" SERIES C
"ANDERSON LOOP" SERIES B
ALL OTHER TEXT AND DESIGN ELEMENTS PER CITY OF SAN ANTONIO METRO STREET NAME SIGN AND SIGN PLACEMENT DETAIL.

ELECTRICAL SERVICE DESCRIPTION (SEE ED (4 & 5) - 03)	SERVICE CONDUIT SIZE	SERVICE CONDUCTORS NO./SIZE	MAIN CKT BKR POLE/AMP	TWO-POLE CONTACTOR AMPS	CIRCUIT NO.	BRANCH CKT BKR POLE/AMPS	BRANCH CIRCUIT AMPS	KVA LOAD
ELC SRV TY D 120/240 100 (NS)SS(E)SP(O)	1 1/4"	3/#6	2P/100	30	SIGNAL	1P/50	40.0	5.5
					ILLUMINATION	2P/15	3.0	

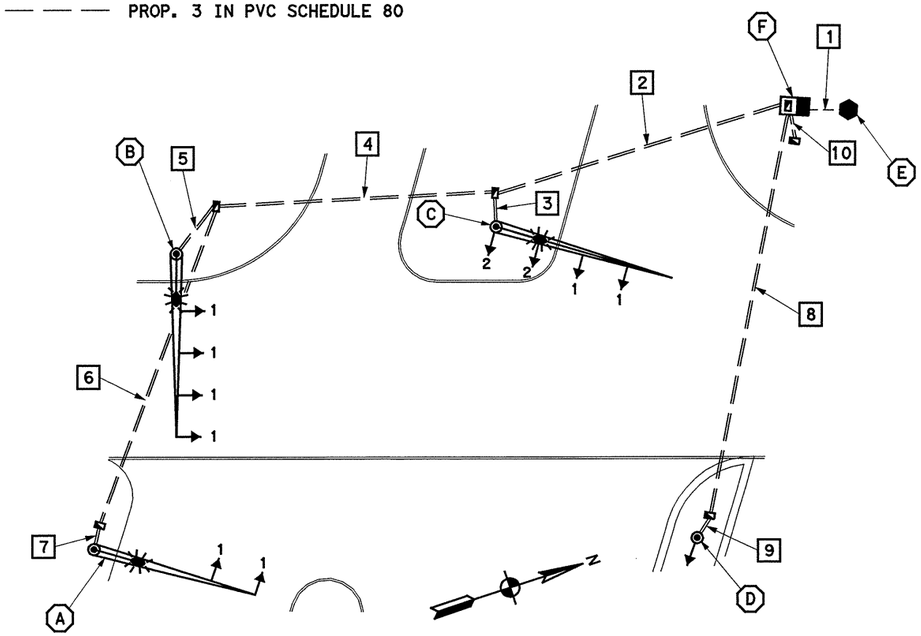

PROPOSED CONDUIT AND CONDUCTOR SCHEDULE											
	RUN NUMBER		1	2	3	4	5	6	7	8	9	10
	CONDUIT SIZE IN INCHES		2	3	3	3	3	3	3	3	3	2
	NUMBER OF CONDUIT(S)		1	2	2	2	2	2	2	2	2	2
	LENGTH OF CONDUIT (FT)		15	85	10	75	20	95	10	120	10	10
	TRENCH(T)/BORE(B)/EXIST(E)		T	B	T	B	T	B	T	B	T	T
CABLE	CIRCUIT		NUMBER OF CONDUCTORS									
# 6 XHHW	120 POWER HOT		1									
	120 POWER COMMON		1									
# 6 BARE	BARE GROUND			2	2	2	2	2	2	2	2	
9-COND. 14 AWG SOLID SIGNAL CABLE	SIGNALS	Ø3		1	1							
		Ø4		1		1		1	1			
		Ø6		1		1	1					
		Ø8		1	1					1	1	
6-COND. 20/22 AWG TWISTED PAIR RS-485 SMARTSENSOR CABLE	RADAR PRESENCE	Ø3, Ø8								1	1	
		Ø4		1	1							
		Ø6								1	1	
	RADAR ADVANCE	Ø3, Ø8		1	1							
		Ø4		1		1		1	1			
		Ø6		1		1	1					
IND ETH 5E4P24 HLD	BRIDGE/ACCESS PT ETHERNET			2	2							
27331A 01010000 BELDEN	WIRELESS ACCESS POINT POWER			1	1							
3/C #12 TRAY CABLE	ILLUMINATION	POLE A	1	1		1		1	1			
		POLE B	1	1		1	1					
		POLE C	1	1	1							

NOTE:
1. CONDUIT SHALL BE INSTALLED IN RUN 10 FOR FUTURE USE.
2. AN EXTRA 2 INCH CONDUIT SHALL BE STUBBED OUT AND CAPPED 2 FEET FROM EACH CONCRETE FOUNDATION, INCLUDING CONTROLLER CABINET AND EACH DRILLED SHAFT.

ID NO.	DESCRIPTION/ATTACHMENTS	STATION	OFFSET
A	INSTALL 30-FT SMA-80, 44 FT ARM W/ ONE ADVANCE RADAR VEHICLE DETECTOR, TWO VERTICAL SIGNAL HEADS, SIGN, AND LUMINAIRE AS INDICATED ON LAYOUT	547+05.83	70.07 LT
B	INSTALL 30-FT SMA-80, 48 FT ARM W/ ONE ADVANCE RADAR VEHICLE DETECTOR, THREE VERTICAL SIGNAL HEADS, AND LUMINAIRE	547+87.58	75.42 LT
C	INSTALL 30-FT SMA-80, 48 FT ARM W/ ONE ADVANCE RADAR VEHICLE DETECTOR, ONE PRESENCE RADAR VEHICLE DETECTOR, THREE VERTICAL SIGNAL HEADS, SIGN, LUMINAIRE, WIRELESS ACCESS POINT, WIRELESS BRIDGE, AND ONE VERTICAL AUXILIARY POLE-MOUNTED SIGNAL HEAD	548+17.69	3.29 RT
D	INSTALL 15-FT 4.5 IN O.D. STEEL PEDESTAL POLE ASSEMBLY WITH ONE VERTICAL POLE-MOUNTED AUXILIARY SIGNAL HEAD AND TWO PRESENCE RADAR VEHICLE DETECTORS	547+54.31	76.58 RT
E	PROPOSED ELECTRIC SERVICE METER ON STEEL POLE WITH AERIAL DROP	548+71.31	84.30 RT
F	PROPOSED 2070L TRAFFIC SIGNAL CONTROLLER WITH NEXTPHASE SOFTWARE, ETHERNET RADIO, AND BATTERY BACKUP IN A TYPE 332 CONTROLLER CABINET ASSEMBLY ON A TYPE 332 CONTROLLER FOUNDATION WITH BBU BOX PER CITY OF SAN ANTONIO SPECIFICATIONS	548+68.50	70.76 RT

PROPOSED POLE SCHEDULE					
	POLE	A	B	C	D
	MAST ARM LENGTH	44'	48'	48'	N/A
	FOUNDATION TYPE	36-A	36-A	36-A	24-A
	FOUNDATION DEPTH	14	14	14	6
CABLE	CIRCUIT				
# 6 BARE	BARE GROUND	1	1	1	1
9-COND. 14 AWG	SIGNALS Ø3			1	
	Ø4	1			
	Ø6		1		
	Ø8			1	1
6-CONDUCTOR 20/22 AWG TWISTED PAIR RS-485 SMARTSENSOR CABLE	RADAR PRESENCE Ø3, Ø8				1
	Ø4			1	
	Ø6				1
	RADAR ADVANCE Ø3, Ø8			1	
	Ø4	1			
	Ø6		1		
IND ETH 5E4P24 HLD	WIRELESS ETHERNET			2	
27331A 01010000	WIRELESS POWER			1	
3/C #12 TRAY CABLE	ILLUMINATION	1	1	1	
CONDT STUB	PVC SCHD 80 2" X 2'	1	1	1	1

4-11-11
STATE OF TEXAS
FEDERICO J. MENDOZA
63311
REGISTERED PROFESSIONAL ENGINEER

NO.	DATE	REVISION DESCRIPTION	APP. BY

© 2009

Texas Department of Transportation

MACTEC
3520 EXECUTIVE CENTER DRIVE
SUITE 200
AUSTIN, TEXAS 78731
(512) 795-0360
REGISTRATION NUMBER: F-1784

BROWN & GAY ENGINEERS, INC.
Brown & Gay Engineers, Inc.
Houston • Fort Worth • Austin • Frisco
TBPE FIRM REGISTRATION NO. 1046

SH 151

CONDUIT AND CABLE, POLE AND CABLE SCHEDULES

(SHEET 3 OF 5)

FED. RD. DIV. NO.			SHEET NO.
			308
STATE	DIST.	COUNTY	
TEXAS	SA	BEXAR	
CONT.	SECT.	JOB	HIGHWAY NO.
2452	01	043	SH 151

t:\projects\txd64_pharr_sub\txd6401_sh151\03_cadd\2452-01-043\traffic\151sig03.dgn 4/8/2011 3:35:29 PM TxD64-01

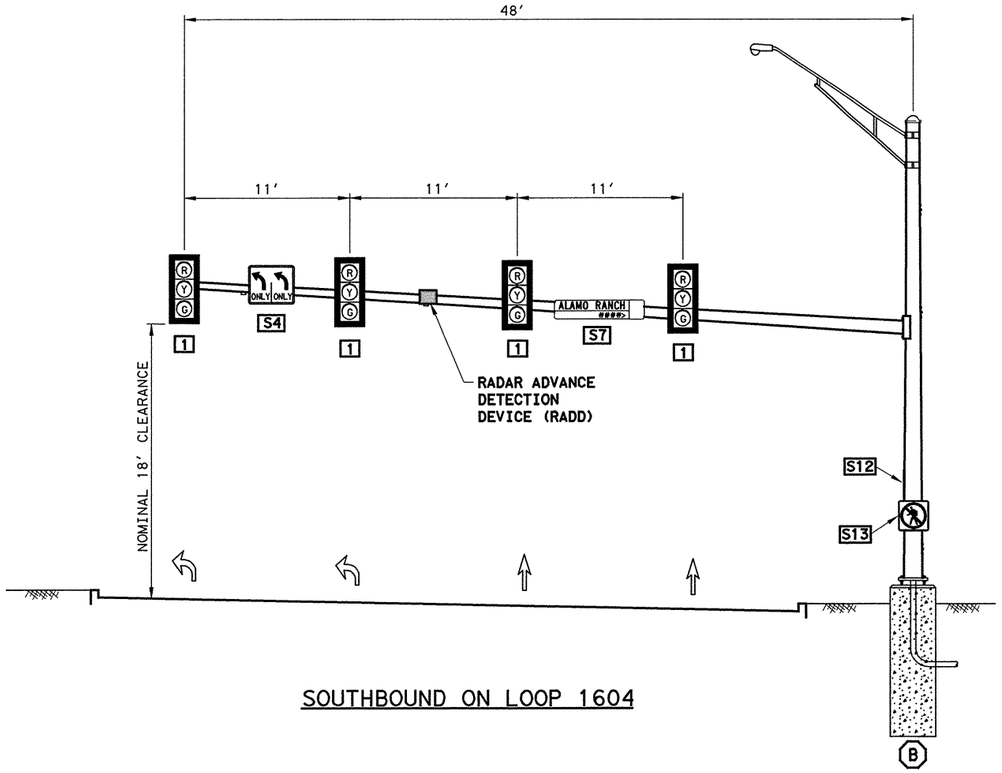

SOUTHBOUND ON LOOP 1604

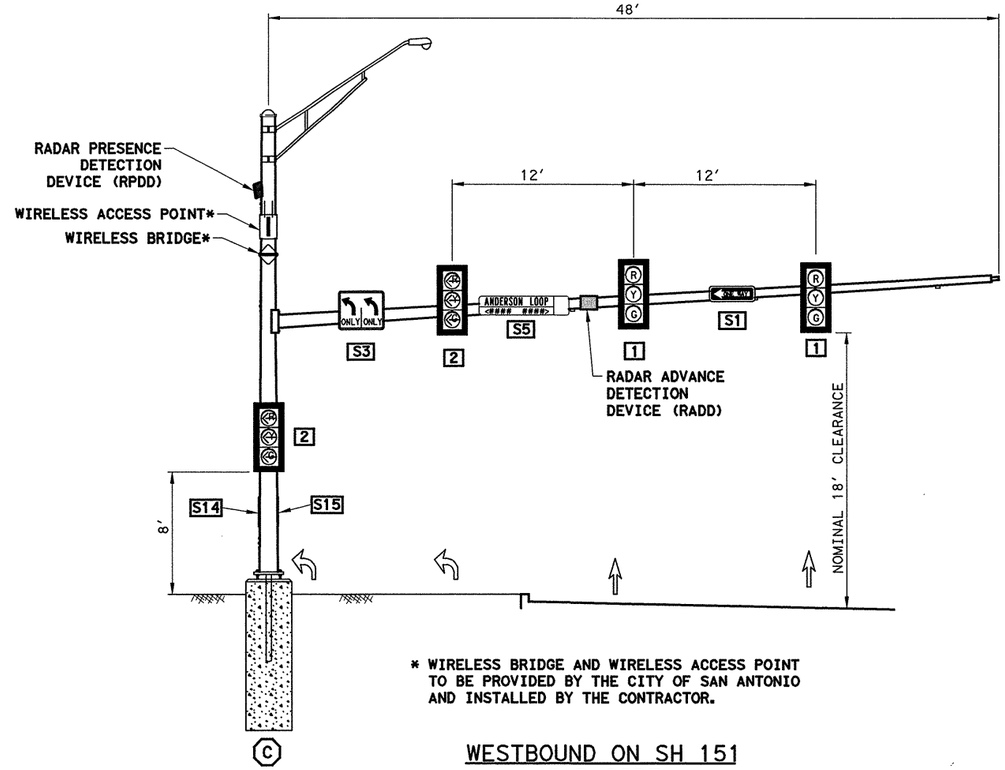

* WIRELESS BRIDGE AND WIRELESS ACCESS POINT TO BE PROVIDED BY THE CITY OF SAN ANTONIO AND INSTALLED BY THE CONTRACTOR.

WESTBOUND ON SH 151
(FAR SIDE)

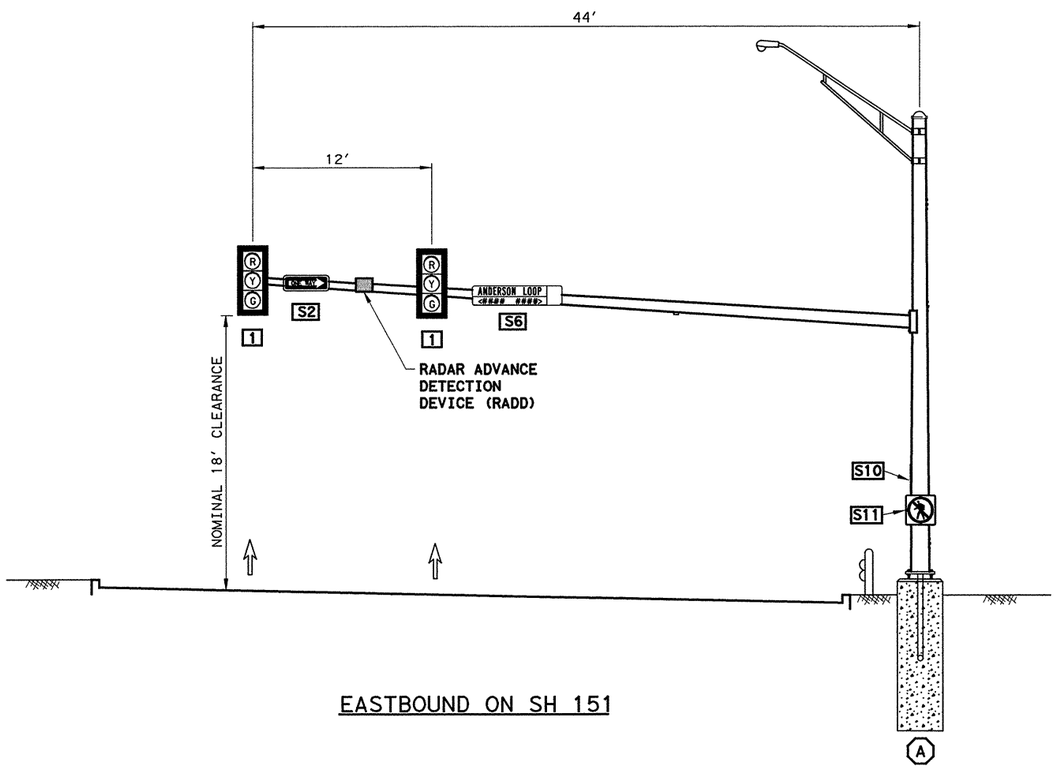

EASTBOUND ON SH 151

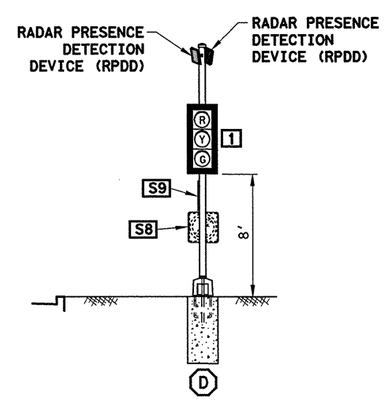

WESTBOUND ON SH 151
(NEAR SIDE)

NOT TO SCALE

2-15-11

STATE OF TEXAS
FEDERICO J. MENDOZA
63311
REGISTERED PROFESSIONAL ENGINEER

NO.	DATE	REVISION DESCRIPTION	APP. BY

© 2009

Texas Department of Transportation

MACTEC
3520 EXECUTIVE CENTER DRIVE
SUITE 200
AUSTIN, TEXAS 78731
(512) 795-0360
REGISTRATION NUMBER: F-1784

BROWN & GAY ENGINEERS, INC.
Brown & Gay Engineers, Inc.
Houston • Fort Worth • Austin • Frisco
TBPE FIRM REGISTRATION NO. 1046

SH 151

PROPOSED SIGNAL ELEVATION LAYOUT

(SHEET 4 OF 5)

FED. RD. DIV. NO.			SHEET NO.
			309
STATE	DIST.	COUNTY	
TEXAS	SA	BEXAR	
CONT.	SECT.	JOB	HIGHWAY NO.
2452	01	043	SH 151

f:\pro\lists\txdot64_phnr_sub\txdot64-01_sh151\03_cadd\2452-01-043\traffic\15lsldg04.dgn 2/15/2011 4:13:40 PM TxDot64-01

LEGEND

PROP. SOLAR-POWERED ROADSIDE FLASHING BEACON ASSEMBLY

PROPOSED SOLAR POWERED ROADSIDE FLASHING BEACON ASSEMBLIES

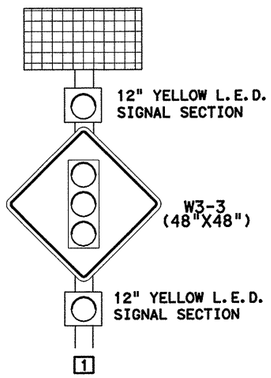

QTY: 1

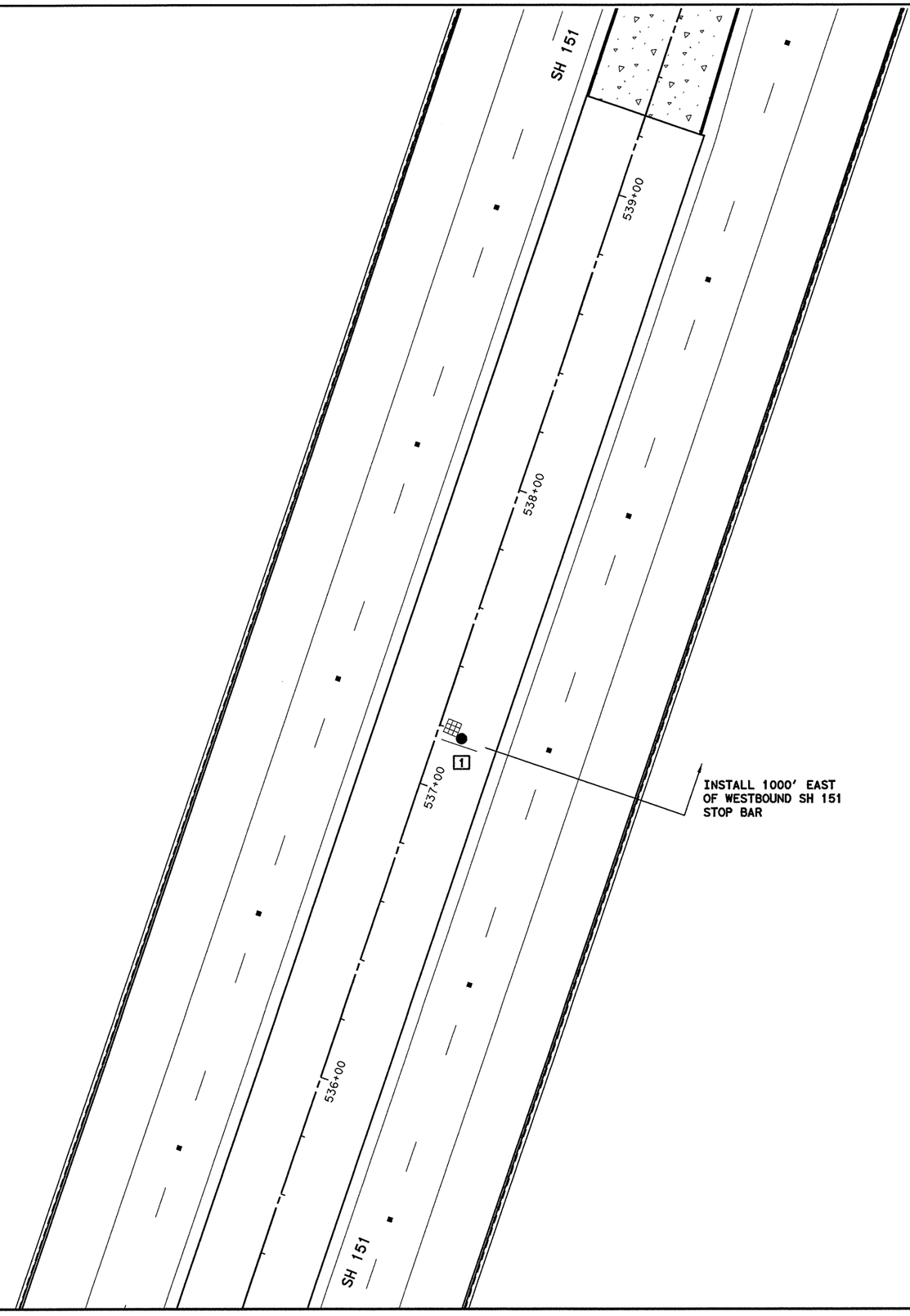

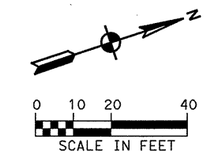

10-19-11

STATE OF TEXAS
FEDERICO J. MENDOZA
63311
REGISTERED PROFESSIONAL ENGINEER

NO.	DATE	REVISION DESCRIPTION	APP. BY

© 2009

Texas Department of Transportation

MACTEC
3520 EXECUTIVE CENTER DRIVE
SUITE 200
AUSTIN, TEXAS 78731
(512) 795-0360
REGISTRATION NUMBER: F-1784

BROWN & GAY ENGINEERS, INC.
Brown & Gay Engineers, Inc.
Houston • Fort Worth • Austin • Frisco
TBPE FIRM REGISTRATION NO. 1046

SH 151

PROPOSED ROADSIDE FLASHING BEACON ASSEMBLY LAYOUT

(SHEET 5 OF 5)

FED. RD. DIV. NO.			SHEET NO.
			310
STATE	DIST.	COUNTY	
TEXAS	SA	BEXAR	
CONT.	SECT.	JOB	HIGHWAY NO.
2452	01	043	SH 151

f:\projects\txd64_pharr_sub\txd64-01_sh151\03_cadd\2452-01-043\traffic\151sig05.dgn 10/19/2011 12:04:24 PM TxD64-01

p:\4760\0-0129\ca\standard\5\std_slg01.dgn 2/21/2011 7:05:13 PM mwmldkiff

DISCLAIMER: The use of this standard is governed by the "Texas Engineering Practice Act". No warranty of any kind is made by TxDOT for any purpose whatsoever. TxDOT assumes no responsibility for the conversion of this standard to other formats or for incorrect results or damages resulting from its use.

I. GENERAL REQUIREMENTS FOR ALL ELECTRICAL WORK

The location of all conductors, conduits, junction boxes, ground boxes, and electrical services is diagrammatic only and may be shifted by the Engineer to accommodate local conditions.

Materials shall be new and unused. Materials and installation shall comply with the applicable provisions of the National Electrical Code (NEC), National Electrical Manufacturers Association (NEMA) standards, and shall be Underwriters Laboratories (UL) Listed unless otherwise shown on the plans or specifications or approved by the Engineer in writing. Faulty fabrication or poor workmanship in any material, equipment, or installation shall be justification for rejection. When reference is made to UL, it can be considered to mean a Nationally Recognized Independent Testing Lab (NRTL). Comparable standards of Canadian Standard Association, Electrical Testing Laboratories or Factory Mutual can be equal to the referenced UL standard. Where reference is made to NEMA listed devices, IEC listed devices shall not be considered to be an acceptable equal to a NEMA listed device. Acceptable devices may have both a NEMA and IEC listing.

With the exception of high strength bolts, miscellaneous nuts, bolts and hardware may be stainless steel when plans specify galvanized, provided that bolts are 1/2 inch or less in diameter. The Contractor shall provide the following electrical test instruments as required by the Engineer to confirm compliance with the contract and the NEC. Those test instruments are voltmeter, amp probe, megger (1000 volt DC) and torque wrenches. All meters shall have been properly calibrated within one year. Calibration certification shall be provided to the Engineer upon request. Calibration certification tag shall also be applied to the meter. The Contractor shall operate meters during inspection as requested by the Engineer. Grounding shall be as shown on the plans and in accordance with the NEC. Metallic conduit, light poles, luminaires on bridge structures, and all metal enclosures shall be bonded to the system-grounding conductor. The ground rod in each ground box or junction box at the bridge ends, and in each ground box installed for underpass lighting will also be bonded to the system grounding conductor. The grounding conductor shall be bare or, if insulated, shall be green. Ground rods, connectors, and bonding jumpers will not be paid for separately, but will be subsidiary to the various bid items.

SUBMITTALS:

The contractor shall submit for approval six (6) copies of catalog cut sheets for each of the following three (3) categories.
Category 1. Electrical services including photocell.
Catagory 2. Breakaway disconnects, heat shrink tubing, heat shrink filler tape, GelCaps and ground boxes which will include loading capacity certification.
Category 3. Highmast assembly kits, when applicable. See Item 614 "Highmast Illumination Assemblies". Submittals shall be legible and shall be marked to indicate which product on a cut sheet is to be supplied. Where manufacturers provide warranties and guarantees as a customary trade practice, the Contractor shall furnish to the State such warranties and guarantees.
Any deviation from plans or specifications, including deviations due to plan error should be prominently displayed on the submittal.
Any changes not prominently noted in submittal and incorporated into the work without proper authorization will constitute grounds for rejection of that portion of the work.

II. CONDUIT

A. MATERIALS

1. Conduit and fittings shall be UL Listed for the intended use shown on plan sheets.
2. Conduit shall be the type shown by descriptive code or shown elsewhere on the plans. Substitution of the various types of conduits will not be permitted. All flexible conduit in rigid metallic conduit (RMC) systems shall be Liquidtight Flexible Metal (LFMC) conduit. All flexible conduit in PVC systems shall be Liquidtight Flexible Non-metallic conduit (LFNC).
3. All exposed conduits shall be RMC, unless otherwise specifically shown on the plans. All metal conduit shall be properly grounded.
4. Couplings, connectors, conduit bodies, grounding bushings, and offset nipples for RMC shall be electro-zinc plated steel or hot dipped galvanized malleable iron, threaded or threadless compression type, rain-tight and shall be UL listed for the intended use.
5. Expansion joints for metal conduit shall be provided with an internal or external bonding jumper and shall be UL listed.
6. Unless otherwise shown on the plans, junction box minimum sizes shall be in accordance with the following table which applies to the greatest number of conductors entering the box through one conduit with no more than four conduits per box. When a mixture of conductor sizes are present, the conductors shall be counted as if all are of the larger size. Situations not applicable to the table shall be sized in accordance with NEC 370-28.

AWG	3 CONDUCTORS	5 CONDUCTORS	7 CONDUCTORS
#1	10" x 10" x 4"	12" x 12" x 4"	16" x 16" x 4"
#2	8" x 8" x 4"	10" x 10" x 4"	12" x 12" x 4"
#4	8" x 8" x 4"	10" x 10" x 4"	10" x 10" x 4"
#6	8" x 8" x 4"	8" x 8" x 4"	10" x 10" x 4"
#8	8" x 8" x 4"	8" x 8" x 4"	8" x 8" x 4"

7. RMC system junction boxes equal to or smaller, in any dimension, than 12 x 12 x 6 (HxWxD), surface mounted and containing conductors #8 or larger, shall be hot dipped galvanized cast iron with minimum wall thickness of 3/16 inch, shall have external mounting lugs, and shall be UL listed Crouse-Hinds Type WAB, OZ/Gedney Type YS or approved equal. Unless otherwise shown elsewhere on the plans, RMC system junction boxes larger than the aforementioned boxes but equal to or smaller, in any dimension, than 18 x 18 x 6 (HxWxD) shall be 14-ga. stainless steel; RMC system junction boxes larger than 18 x 18 x 6 (HxWxD) shall be 12-ga. stainless steel. All metal junction boxes shall be equipped with a threaded hole or lug for grounding. Stainless steel boxes 12 x 12 x 6 and larger need not be UL Listed but shall meet the other requirements of the NEC and shall have ribs, stiffeners, or thicker metal and shall have external mounting feet. Junction boxes with an internal volume of more than 100 cu. in. may be supported by connection of two or more rigid metal conduits, where specifically shown on the plans or where approved by the Engineer.
8. Junction boxes containing only #10 or #12 AWG conductors shall be Crouse Hinds Type GRFX, Appleton Type JBOX, two-gang FD, or similar approved cast iron box. Boxes shall be sized according to NEC Table 370-16(a).
9. IMC and EMT conduit shall not be used unless specifically required by the plan layout sheets. Junction boxes in EMT conduit systems shall be made from galvanized sheeting and shall be UL listed and approved for outdoor use, unless otherwise noted on the plans. Sheet metal junction boxes shall be sized in accordance with the NEC. Junction boxes for IMC conduit systems shall meet the requirements of boxes used with RMC systems.
10. Junction boxes in PVC conduit systems shall be PVC, intended for outdoor use, unless otherwise noted on the plans.
11. Elbows in PVC conduit systems one inch and larger shall be rigid metal, with the exception of traffic signal systems which may have PVC elbows instead of rigid. If any part of the rigid metal elbow is buried less than 18 inches underground the elbow and rigid metal extension shall be grounded. Grounding shall be accomplished by means of a grounding bushing installed on the extension. Unless specifically shown on the plans, rigid metal elbows containing, or entering ground boxes containing only communications conductors, loop detectors, or other low voltage power limited circuits need not be grounded unless a ground wire is present in the conduit or ground box. The rigid metal elbows located in concrete foundations may be extended with PVC conduit and need not be grounded provided that the end of the elbow nearest the end of the conduit run exiting the foundation is at least 2 inches below the concrete. RMC elbows will not be eliminated. RMC elbows will not be paid for directly, but will be subsidiary to various bid items.
12. High-Density Polyethylene (HDPE) conduit shall meet the requirements of Item 622, Duct Cable, except that the HDPE conduit, when bid under Item 618, Conduit, shall not contain factory installed conductors. Fittings for HDPE conduit shall be UL listed as an electrical conduit connector or shall be thermally fused using an electrically heated wound wire resistance welding method. HDPE conduit may be substituted for bored schedule 40 or schedule 80 PVC conduit. When such substitution is made, bored HDPE shall be schedule 40 of the size PVC being replaced. The HDPE conduit shall transition to PVC (or RMC elbow when required) at the bore pit. Size and schedule shall be as shown on the plans. Substituted conduit may not be extended to ground boxes or foundations; RMC elbows shall be installed at ground boxes and foundations. RMC elbows will not be eliminated.
13. All conduit support hardware including straps, nuts, bolts, screws, retaining anchors and washers shall be hot dipped galvanized or stainless steel. Strut type conduit straps shall be stainless steel or hot dipped galvanized. Strut type straps need not be made of malleable type material. Stamped-cadmium plated straps will not be allowed. Straps having only one mounting hole shall not be allowed for use on conduits 2 inches and larger with the exception of electrical service poles where stainless steel standoff straps will be allowed. Two piece conduit straps designed to be used with a mounting shoe shall be installed only with the correctly sized shoe.

B. CONSTRUCTION METHODS

1. Conduit in structures shall have expansion fittings at structure expansion joints. All straight runs of RMC conduit exposed on structures such as bridges shall have expansion joints installed at maximum intervals of 150 feet. Expansion joints shall be installed so they allow for movement of the conduit. Installation of the joint in such a manner that will not allow for movement shall be repaired at no expense to the state. The method of determining the final setting length of the expansion joint shall be provided to the Engineer upon request.
2. Conduit supports shall be spaced at maximum intervals of 5 feet. Conduit spacers shall be used with metal conduit placed on surfaces of concrete structures (See conduit mounting options).
3. Conduit supports shall not be attached directly to prestressed concrete beams except as shown specifically in the plans and approved by the Engineer.
4. Unless otherwise shown on the plans, conduit placed beneath existing roadways, driveways, or sidewalks, or after the base or surfacing operation has begun, shall be accomplished by jacking or boring. The Contractor shall back fill and compact the bore pits to the bottom of the conduit prior to installing connecting conduit or duct cable to prevent bending of the connection.
5. Conduit trenched in the subgrade of new roadways shall be backfilled with excavated material, unless otherwise noted on the plans. Conduit trenched in the sub-base of new roadways shall be backfilled with cement-stabilized base.
6. Open ends of all conduit and raceways shall be fitted with temporary caps or plugs to prevent entry of dirt, debris and rodents during construction. The temporary cap may be constructed of duct tape, but in all cases shall be tightly fixed to the conduit and shall be durable. The contractor shall clean out the conduit and prove it clear in accordance with Standard Specifications Item 618.3 prior to installing any conductors.
7. Conduit entry into the top of enclosures such as safety switches, meter cans, service enclosures, auxiliary enclosures and junction boxes shall be made weatherproof using conduit sealing hubs, or threaded bosses.
8. A bonding jumper shall be installed from each grounding bushing to the nearest grounding rod, grounding lug, and/or equipment grounding conductor. All jumpers shall be the same size as equipment grounding conductor. Conduit used as casing under roadways for duct cable need not be grounded if duct extends full length through the casing. At electrical services, grounding electrode conductor shall be a solid Copper #6 AWG.
9. Metal junction boxes shall be bonded to the grounding conductor in accordance with the NEC.
10. Conduits entering ground boxes shall be placed so that the conduit ends shall be not less than 3 inches nor more than 6 inches from bottom of box (See ground box detail on sheet ED(3).
11. Conduit ends shall be sealed with heat shrink boots with waterproof sealant, urethane foam, or by other methods approved by the Engineer. Sealing shall be done after completion of any required pull tests. Duct tape shall not be used as a permanent conduit sealant. Silicone caulking shall not be used as a sealant.
12. All strut mounting material and hardware shall be hot-dip galvanized or shall be stainless steel. The cut ends of strut and non-galvanized rigid metal conduit threads shall be coated with a zinc rich paint (90% or more zinc content). Zinc rich paint may only be used to touch up galvanized material as allowed under item 445.6 galvanizing. The painting of non-galvanized material with a zinc rich paint shall not be considered as an approved alternative for galvanized materials.
13. All PVC conduit terminations shall be fitted with bushings or bell ends. All metal conduit terminations shall be fitted with a grounding type bushing.

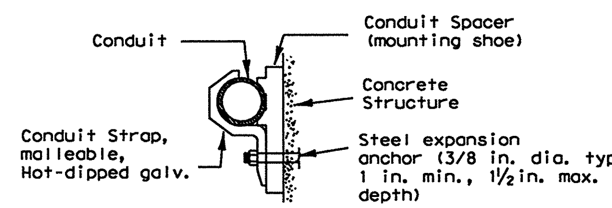

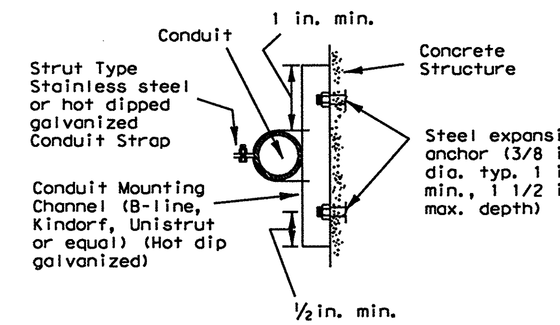

CONDUIT MOUNTING OPTIONS

(Attachment to concrete surfaces)
(See para. II.B.2)

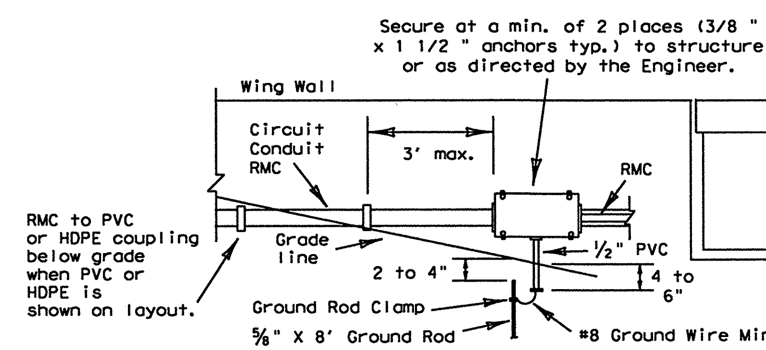

TYPICAL CONDUIT ENTRY TO BRIDGE STRUCTURE DETAIL

NOTES

1.) Ground rod clamp to be UL listed for direct burial. (revision 1)
2.) For conduit placed in structure, use flush-mounted box.
3.) Bond junction box and metal conduits to equipment grounding conductor and grounding electrode conductor using listed connector.
4.) Seal all conduits entering the junction box from underground.
5.) Install bell end or bushing on 1/2 " PVC conduit both ends.
6.) Ground rod to be driven within 8 inches of 1/2 inch PVC conduit end.

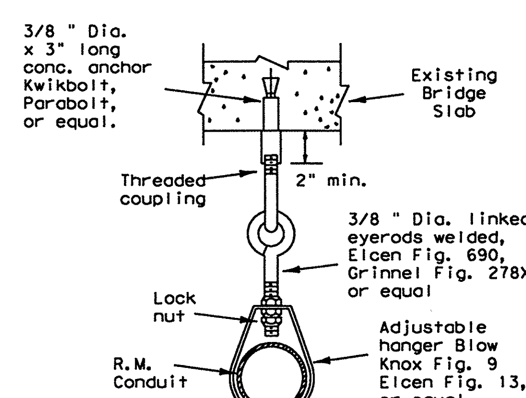

CONDUIT HANGER DETAIL

(Attachment to horizontal surfaces)
Hangers need not be UL listed for electrical use
ie: plumber pipe hangers are acceptable

5/03 Revision

(1) Revised notes.

Texas Department of Transportation
Traffic Operations Division

ELECTRICAL DETAILS-CONDUIT

ED(1)-03

©TxDOT January 1992	DN: TXDOT	CK: TXDOT	DW: TXDOT	CK: TXDOT
REVISIONS	CONT	SECT	JOB	HIGHWAY
4-98 12-00 3-03 5-03	2452	01	043	SH 151
	DIST	COUNTY		SHEET NO.
	SA	BEXAR		311

DISCLAIMER: The use of this standard is governed by the "Texas Engineering Practice Act". No warranty of any kind is made by TxDOT for any purpose whatsoever. TxDOT assumes no responsibility for the conversion of this standard to other formats or for incorrect results or damages resulting from its use.

p:\4760\0-0129\cad \standard\51std_sig02.dgn 2/21/2011 7:05:14 PM mwmldkiff

I. ELECTRICAL CONDUCTORS

A. MATERIALS

1. Insulated conductors shall be NEC Type XHHW. Insulated conductors shall be color coded in accordance with the NEC, articles 200, 250, and 310; i.e. Insulation of grounded conductors (neutrals) shall be white. Grounding conductors (ground wires) shall be bare or insulation shall be green. Insulation of ungrounded conductors (hots) shall be any color except green, white, or gray. Identification of conductors #6 American Wire Guage (AWG) and smaller shall be by continuous jacket color. Color coding of electrical conductors #4 AWG and larger shall be either by continuous color jacket or by colored tape. Colored tape marker shall consist of a half-lap of tape covering a 6-inch length of conductor.
2. Where two or more circuits are present in one conduit or enclosure, the conductors of each circuit shall be identified by a permanent non-metallic tag at each accessible location. The tag shall be fastened to the conductors by two plastic straps. Each tag shall indicate circuit number, letter, or other identification shown in the plans.
3. Grounding electrode conductor #6 AWG for bonding to ground rod at electrical service, shall be solid. Connection of conductor to ground rod shall be made using UL Listed connectors designed for such purposes.
4. Heat Shrink Tape filler shall be used to seal the ends of heat shrink tubing around two or more conductors that are insulated with heat shrink tubing. Tape material shall have a minimum dielectric strength of 225 volts per mil and shall be cross-linked butyl rubber. Tape shall be supplied in rolls and shall have a backing (release paper) to prevent the tape from sticking to itself.
5. Heat shrink tubing shall be heavy wall, UL listed for 600 volts or greater and shall have factory applied internal sealant.
6. GelCaps shall be UL listed for 600-volt applications. GelCap shall have see-through elastomer molded cover. Cover shall be filled with high dielectric insulating gel silicone sealant to provide waterseal. Cover shall be held in place by snap-lock, molded clamp made of UV stable polypropylene.
7. Splicing materials, insulating materials, breakaway disconnects, GelCaps and fuse holders will not be paid for directly but shall be subsidiary to various bid items.

B. CONSTRUCTION METHODS

1. After conductors have been installed in conduit, a pull test shall be made on conductors. When any length of conductor cannot be freely pulled, the Contractor shall make any needed alterations or repairs at no expense to the State.
2. The Contractor shall perform insulation resistance tests in accordance with Item 620, "Electrical Conductors." The Contractor shall coordinate with the Engineer to witness the tests.
3. A sufficient length of conductor for making up connections shall be left in ground boxes (2 feet minimum, 3 feet maximum, to point of splice, 3 feet minimum, 4 feet maximum, when conductor is pulled through with no splice), enclosures, weatherheads and pole bases (1 foot minimum, 1.5 feet maximum).
4. Splices shall be made only in junction boxes, ground boxes, pole bases, or electrical enclosures and shall be made with listed compression or screw type pressure connectors, terminal blocks, bolted lugs, or split bolt connectors. Splices shall be insulated with heavy wall heat shrink tubing or GelCaps and shall be made so as to provide a watertight splice. Heat shrink sleeve shall overlap conductor insulation a minimum of 2 inches on both sides of the splice. Where heat shrink tubing may not shrink sufficiently to provide a watertight seal around the individual conductors, prior to heating the tubing, the Contractor shall increase the diameter of the conductors insulation using heat shrink filler tape to provide a watertight seal between the individual conductors and the heat shrink tubing. Tape shall be visible after completion of all splices. Where filler tape is used but not visible, the Engineer shall approve each individual splice by conducting a physical inspection of each splice. When it appears the tubing has been burned, or overheated the tubing shall be considered to be defective and shall be replaced.
5. GelCaps when used in place of heat shrink method of splicing, shall be sized and installed according to manufacturer's specifications. (Raychem GelCap and GelCap SL or equal.)
6. Wire nuts may be used for #8 AWG or smaller conductors in above-ground junction boxes, but not in pole bases or ground boxes. Wire nuts shall be positioned upright to prevent the accumulation of water. Wire nuts used at these locations shall have factory applied waterproof sealant.
7. Conductors in illumination poles shall be supported by a J-hook in the top of the pole.
8. All conductors bid under Item 620 "Electrical Conductors" shall have breakaway electrical disconnects installed anytime conductors pass through a break-away support device.
9. For terminating the conductors, insulation-jacketing material shall be removed in such a manner as to not nick any of the individual strands of the conductor. When individual conductor strands are removed, the conductor shall be considered to be damaged.
10. When a conductor or cable has been damaged, or fails to pass an insulation resistance test, the conductor shall be replaced.
11. Duct tape, black electrical tape, or wire nuts shall not be used in the repair of a damaged conductor.
12. For terminations, no more than one wire may be installed under a single pressure connector, unless the device is listed for more than one wire.
13. Conductors connected to break-away in line fuse holders must be installed in accordance with the specific manufacturer's installation instructions. Where threaded connections are made, they shall be properly torqued. Where crimp type connections are made, crimps shall be made using properly sized crimping pliers. Proper conductor terminations are critical to the safe operation of break-away devices.
14. Waterproofing boots shall be properly trimmed to fit snugly around the conductor so as to provide a water proof connection. No more than one wire may enter a single opening in any one boot. Water proofing boots must provide the correct number of openings. Where only one wire is to be connected to a boot, the boot may not be a two wire type.

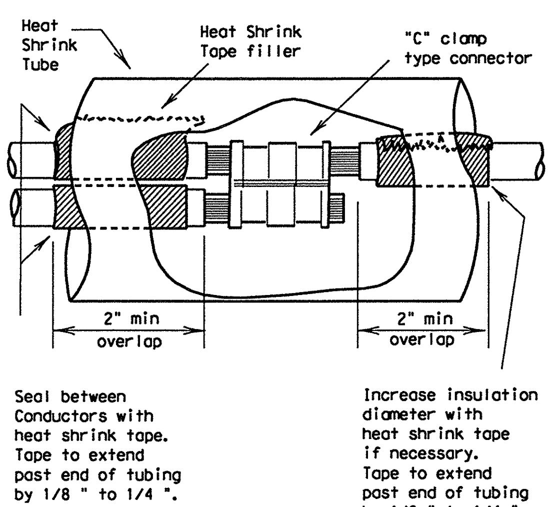

SPLICE OPTION 1

C-CLAMP

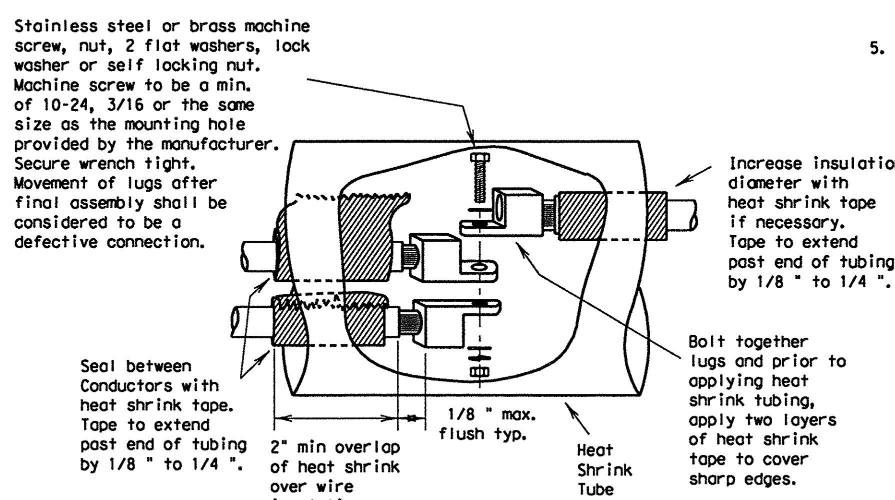

SPLICE OPTION 2

BOLTED WIRE LUGS

SPLICE OPTION 3

SPLIT BOLT

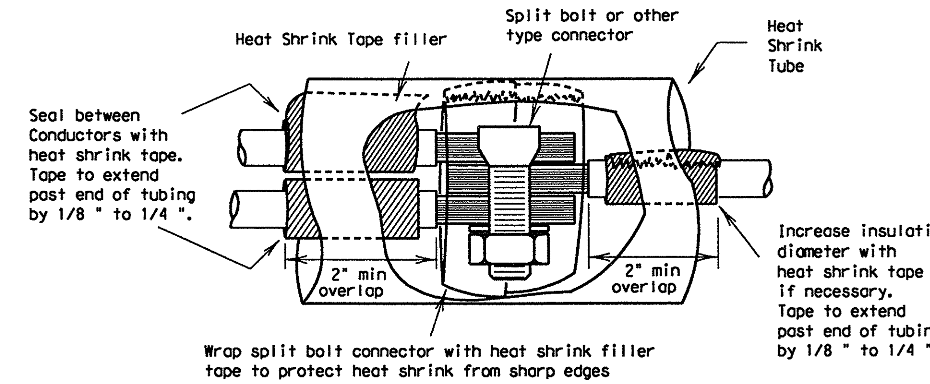

SPLICE OPTION 4

GELCAP

GelCap shall be sized and installed according to manufacturers specifications

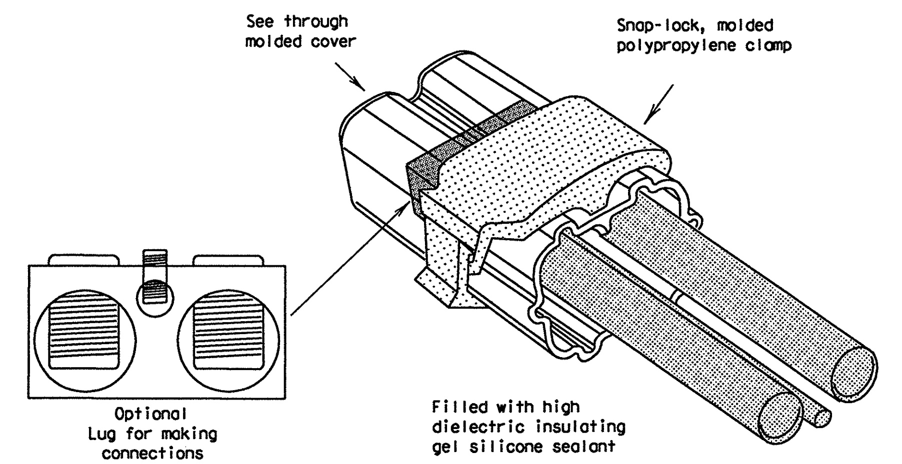

15. All conduits that contain circuit wiring of 50 volts or more shall contain an equipment grounding conductor (EGC). Conduit for traffic signals shall have an EGC, with a minimum size of #8 AWG stranded. Unless otherwise shown on the plans, the EGC for all other conduits shall be the same AWG size as the largest current carrying conductor contained in that conduit. The EGC shall be paid for item 620-Electrical Conductors.

C. TEMPORARY WIRING

1. Temporary conductors and electrical equipment to provide power for utilization equipment, shall be installed in accordance with the NEC article 305. All temporary wiring materials and methods shall comply with the standard sheets. All power outlets for portable electrical equipment, power tools, ice machines, ice storage bins and refrigerators located outdoors at grade, supplied from a utility power source, shall be provided with a ground fault circuit interrupter.
2. Residual current protective devices (GFCI) may be any one of the following: molded cord and plug set, receptacle, or circuit breaker type.
3. Where wire nuts are approved for temporary wiring, they shall be of the self-sealing type.
4. All conductor splices must be contained within a listed enclosure, ground box or the splices will be more than ten feet above grade vertically and more than five feet horizontally from any metal structure. Where temporary conductors are installed in any area that is likely to be subjected to vehicle traffic, or mobile construction equipment, the vertical clearance to ground shall be at least 18 feet when measured at the lowest point. Where power conductors are to be supported by a span wire, the span wire shall be properly grounded.
5. Existing conduit containing service conductors uncovered during the construction process shall be repaired in a timely manner in accordance with the NEC. Existing non-metallic conduit exposed during construction shall not be left exposed above grade, or with less than eighteen inches of cover, without protective methods approved by the Engineer.

Texas Department of Transportation
Traffic Operations Division

ELECTRICAL DETAILS-CONDUCTORS

ED(2)-03

© TxDOT January 1992

DN: TXDOT	CK: TXDOT	DW: TXDOT	CK: TXDOT

REVISIONS	CONT	SECT	JOB	HIGHWAY
10-93	2452	01	043	SH 151
4-98	DIST	COUNTY		SHEET NO.
12-00	SA	BEXAR		312
3-03				

DISCLAIMER: The use of this standard is governed by the "Texas Engineering Practice Act". No warranty of any kind is made by TxDOT for any purpose whatsoever. TxDOT assumes no responsibility for the conversion of this standard to other formats or for incorrect results or damages resulting from its use.

p:\4760\0-0129\car\standard\V5\std_slg03.dgn 2/21/2011 7:05:14 PM mwmldkiff

II. GROUND RODS

A. MATERIALS

1. All ground rods installed at electrical services, including supplemental lightning protection ground rods specified by the plans in other locations such as pole bases, shall be copper clad and UL listed. Rods shall be a minimum diameter of 5/8 inch. The length shall be a minimum of 8 feet. Larger diameter or longer length rods may be called for in some specific locations, see the individual plans sheets.
2. Ground rod clamps shall be listed to be in direct contact with the soil. Where concrete encasement is required, the clamp shall be listed for concrete encasement.

B. CONSTRUCTION METHODS

1. Ground rods installed in locations such as pole bases, to provide supplemental lightning protection need not be totally in contact with the soil. Where called for in the plans, rods may be encased in soil or concrete or any combination of soil and concrete. When concrete encased, the connection of the conductor to the rod shall be readily accessible for inspection or repairs. When driven into the soil the upper end shall be between 2 to 4 inches below finished grade. Ground rods shall not be placed in the same drilled hole as a timber pole.
2. Ground rods shall be installed such that the end imprinted with the rod's part number is installed as being the upper end.
3. Non-conductive coatings such as concrete splatter shall be removed from the rod at the clamp location.
4. Routing of lightning protection ground rod wires shall be run as short and straight as possible. Where bends are required they shall have a minimum radius of four inches.
5. Unless specifically called for by the plans, conduits used for ground rod wires shall be non-metallic. Where metal conduits are specified, a grounding bushing and properly sized bonding jumper shall be provided and properly installed on each end.
6. Where rocky soil or a solid rock bottom is encountered when driving a ground rod and the horizontal trench placement method is the only viable solution, written authorization from the Engineer must be obtained.

III. GROUND BOX

A. MATERIALS

1. Ground boxes 16x30x24 inches (WxLxD) or smaller shall be polymer concrete of the type required by the descriptive code shown elsewhere. Larger ground boxes shall be as shown elsewhere in the plans.
2. All ground boxes and covers shall be permanently marked either by impress or by permanent ink, with manufacturer's model number and manufacturer's name or logo.
3. Covers shall be bolted down, and bolt holes in the box shall be arranged to drain dirt.
4. Ground box Types A, B, C, D & E shall meet the following requirements:
   a. Ground boxes and covers be manufactured from polymer concrete reinforced with continuous strands of woven or stitched borosilicate fiberglass cloth. The polymer concrete shall be made from catalyzed polyester resin, sand and aggregate, and shall have a minimum compressive strength of 11,000 psi. Polymer concrete containing chopped fiberglass or fiberglass reinforced plastic is not acceptable.
   b. Minimum inside dimensions shall be as follows (width x length x depth):
      Type A shall be 11.5 inches x 21 inches x 10 inches, (122311)
      Type B shall be 11.5 inches x 21 inches x 20 inches, (122322)
      Type C shall be 15.25 inches x 28.25 inches x 10 inches, (162911)
      Type D shall be 15.25 inches x 28.25 inches x 20 inches, (162922)
      Type E shall be 11.5 inches x 21 inches x 16 inches, (122317)
   c. Bottom edge of box or extension shall be footed with a minimum 1 1/4 inch flange.
   d. Ground boxes shall withstand 600 lbs. per sq. ft. applied over the entire sidewall with less than 1/4 inch deflection per foot length of box. Ground boxes and covers shall withstand a test loading of 20,000 lbs. over a 10 inch by 10 inch area centered on the cover with less than 1/2 inch deflection. Ground boxes and covers shall meet Western Underground Standards 3.6. Manufacturer shall supply certification by an independent laboratory or sealed by a Texas-Licensed Professional Engineer.
   e. Covers shall be 2 inch (nominal) thick polymer concrete. All hardware shall be stainless steel. Cover shall be secured with two 1/2 inch stainless steel bolts. Bolts shall be self-retaining and shall withstand a minimum of 70 ft-lbs. torque and shall have a minimum 750 lbs. straight pull out strength. Nuts shall be floating and shall provide a minimum of 1/2 inch movement from the center of the nut. Covers shall be skid resistant, minimum 0.5 coefficient of friction. Covers shall be interchangeable between manufacturers and shall conform to the dimensions shown herein. Unless otherwise approved by the Engineer, cover shall be legibly imprinted with the following words in minimum 1 inch letters:
      Ground Boxes containing wiring for traffic signals shall be labeled, Danger High Voltage Traffic Signal.
      Ground boxes containing wiring for illumination systems shall be labeled, Danger High Voltage Illumination.
      Ground boxes containing wiring for traffic management systems shall be labeled, Danger High Voltage Traffic Management.
      Ground boxes containing wiring for sign illumination systems shall be labeled, Danger High Voltage Sign Illumination.
      Ground boxes containing wiring for traffic signals that also contain illumination, powered by the signal electrical service, shall be labeled, Danger High Voltage Traffic Signal.

B. CONSTRUCTION METHODS

⚠1 1. Ground boxes shall be set on a 9 inch (minimum) bed of aggregate from 3/4 " up to 2" in size. Aggregate shall be in place prior to setting box and conduits shall be capped. Any gravel or dirt in conduit shall be removed.
2. When required by Item descriptive code, construction of an apron encasing a ground box including concrete and reinforcing steel shall not be paid for directly but shall be subsidiary to the ground box. Reinforcing steel may be field bent. Concrete for aprons shall be considered miscellaneous concrete for testing purposes. Aprons shall be cast in place.
3. Conduit holes may be cut in the walls of type B & D boxes at least 18 inches beneath the cover.
4. If, within the limits of this project, the Contractor must utilize an existing ground box equipped with a metal cover, the Contractor shall bond the cover to the grounding conductor with a 3 foot long flexible stranded jumper the same size as the grounding conductor. Connection of bonding jumper to metal ground cover shall not be paid for directly but shall be subsidiary to various bid items. The box(es) must be clearly shown on the plans with plan notes fully describing the work required.
5. If there are other ground boxes with metal Covers within the project limits but not involved in the contract, the Engineer may direct the Contractor to ground the covers, designating and identifying the specific boxes in writing. This work will be paid for separately.
6. Termination to metal ground box covers shall be made using a tank ground type lug.

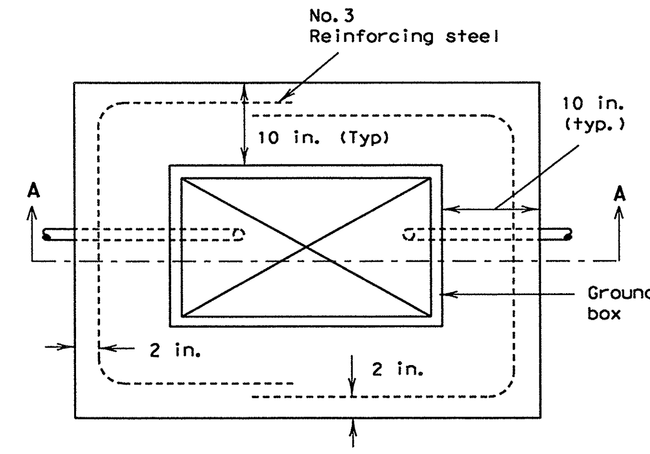

PLAN VIEW

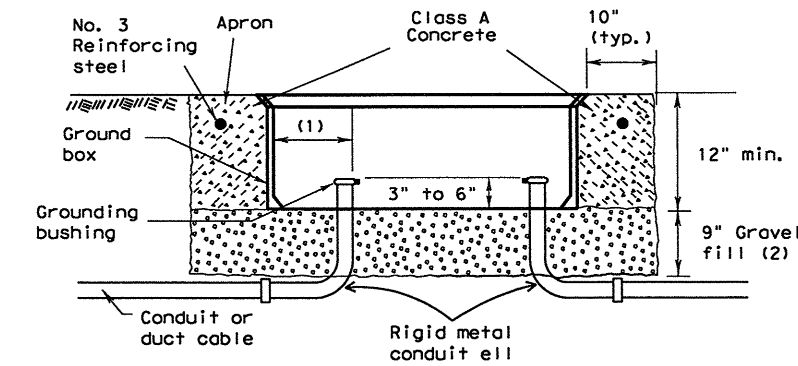

SECTION A - A

APRON FOR GROUND BOXES

(Where required)

(1) Final position of end of conduit shall not exceed one-half the distance to the side of box opposite the conduit entry.
(2) Place gravel "under" the box. not "in" the box. Gravel should not encroach on the interior volume of the box.
(3) Install bushing on the upper end of all ells.
(4) Where a ground rod is present in the ground box, connect it to any and all equipment grounding conductors using a listed connector.
(5) Maintain sufficient space between all conduits so as to allow for proper installation of bushings.
(6) All conduits shall be installed in a neat and workmanlike manner.
(7) All conduits installed in the ground box shall be sealed after completion of conductor installation and any required pull tests. Silicone shall not be used as sealant.

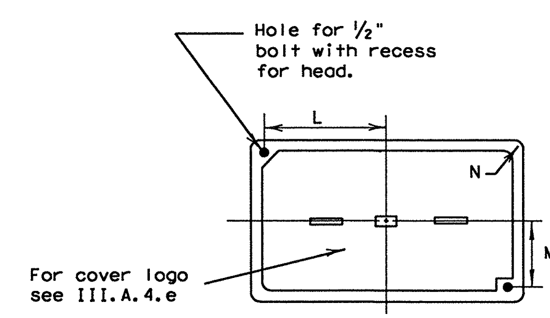

PLAN VIEW

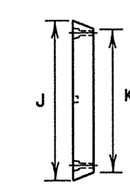

END

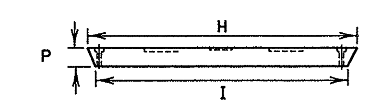

SIDE

GROUND BOX COVER

GROUND BOX COVER DIMENSIONS								
BOX	DIMENSIONS (INCHES)							
SIZE	H	I	J	K	L	M	N	P
A, B & E	23 1/4	23	13 3/4	13 1/2	9 7/8	5 1/8	1 3/8	2
C & D	30 1/2	30 1/4	17 1/2	17 1/4	13 1/4	6 3/4	1 3/8	2

5/03 Revision

⚠1 Revised notes.

Texas Department of Transportation
Traffic Operations Division

ELECTRICAL DETAILS- GROUND BOXES

ED(3)-03

©TxDOT January 1992

DN: TXDOT	CK: TXDOT	DW: TXDOT	CK: TXDOT

REVISIONS: 4-98, 12-00, 3-03, 5-03

CONT	SECT	JOB	HIGHWAY
2452	01	043	SH 151
DIST	COUNTY		SHEET NO.
SA	BEXAR		313

p:\4760\0-0129\car \standard\5\std_slg04.dgn 2/21/2011 7:05:15 PM mwmldkiff

DISCLAIMER: The use of this standard is governed by the "Texas Engineering Practice Act". No warranty of any kind is made by TxDOT for any purpose whatsoever. TxDOT assumes no responsibility for the conversion of this standard to other formats or for incorrect results or damages resulting from its use.

ELECTRICAL SERVICES NOTES

All work, materials, services, and incidentals, whether or not specifically shown on the plans, which may be necessary for a complete and proper electrical service installation as specified in the plans to obtain electrical power shall be paid for, performed, furnished and installed by the Contractor. The Contractor shall contact the Utility for metering and shall comply with all Utility requirements.

Primary line extensions, connection charges, meter charges, and other charges by the Utility company to provide power to the location shown, when required, shall be paid for under force account work. The costs associated with these charges shall be approved by the Engineer prior to engaging the Utility company to do the work. The Contractor shall consult with the appropriate Utility to determine costs and requirements, and shall coordinate the Utility's work as approved by the Engineer. The Contractor shall be reimbursed only the amount billed by the Utility. No additional amount for supervision of the Utility's work will be paid.

Materials shall be new and unused, materials and installation shall comply with the applicable provisions of the National Electrical Code (NEC) and National Electrical Manufacturers Association (NEMA) standards and shall be Underwriters Laboratories (UL) Listed. Electrical Service conduits, conductors, disconnects, contactors, circuit breaker panel sizes, and branch circuit breakers, shall be as shown in the Electrical Service Data elsewhere in the plans. Faulty fabrication or poor workmanship in any material, equipment, or installation shall be justification for rejection.

The Contractor shall submit for approval no less than six (6) copies of catalog cut sheets on electrical service materials. Submittals shall be legible and shall be marked to indicate which product on a cut-sheet is to be supplied. Where manufacturers provide warranties and guarantees as a customary trade practice, Contractor shall furnish to the State such warranties or guarantees.

The Contractor shall provide locks keyed with Master #2195 for all lockable electrical enclosures. Keys and locks become property of the State. Unless otherwise approved by the Engineer, enclosures shall not be energized until locks are provided and all bolts are installed.

Circuit directories, where provided, shall be filled out. All breakers and components in shop built panels and enclosures shall be labeled with duo-colored plastic labels. Letters shall be a minimum 3/8 " in height.

Enclosures with external disconnects that de-energize all equipment inside the enclosure, need not have dead front trim, except that incoming line terminations shall be protected from incidental contact.

When galvanized is specified for nuts, screws, bolts or miscellaneous hardware, stainless steel may be used. All wiring and components shall be rated for 75 degrees C. Minimum size for service entrance conductors shall be #6 XHHW.

I. Safety Switch. A safety switch, placed ahead of the meter, shall only be used when specified by the Utility and when shown on the Electrical Service Data. The switch shall be UL Listed, heavy duty type, 600 volt, unfused, with a UL type 3R enclosure and equipped with a solid neutral (s/n) assembly. The switch shall be padlockable in the "on" position.

II. Service Type. Electrical service types A, C, D, and T shall be as schematically detailed on ED(4) or ED(5). Other service types shall be as detailed elsewhere on the plans.

III. Branch Circuit Breakers. Circuit breakers shall be thermal magnetic and have a minimum interrupting capacity of 10,000 amps and a voltage rating compatible with their use. Circuit breakers shall be sized as shown in the electrical service data. Circuit breakers in panelboards and load centers shall be full size and designed exclusively for the panelboard or load center in use. Tandem and half-width breakers shall not be used. All circuit breakers shall be permanently and clearly marked identifying the circuit or device supplied. Circuit breakers shall be UL Listed to UL489.

IV. Circuit Breaker Panelboard. Panelboards shall be UL Listed. Panelboards shall have copper busses, a minimum of 6 one-pole spaces or as required in the electrical service data, and when required will be rated for service equipment. Enclosure shall meet or exceed UL type 3R classification. Panelboards shall have a threaded hub conduit entry for conduit entering the top of the enclosure. Circuit breakers shall be bolt-in type only.

V. Circuit Breaker Load Center. Load centers shall be UL Listed.
Load centers for type T services may have copper or aluminum busses, all other load centers will be copper bus only. Load center will have a minimum of 4 one-pole spaces, and shall be rated for service equipment. Enclosure shall meet UL type 3R classification. Load centers shall have a threaded hub conduit entry for conduit entering the top of the enclosure. Circuit breakers shall be plug-in type only. Load centers for type T services shall accomodate a maximum of 6 one-pole breakers.

VI. Separate or Auxiliary Enclosure. Separate enclosures for HOA, photocell and lighting contactors for types D & T Services shall be a UL Listed assembly with outer door. Interior shall have dead front trim. HOA switch operator shall extend through the dead front trim. Photocell shall be mounted inside the enclosure as described in paragraph XIII when required by descriptive code. Separate enclosures shall meet the construction requirements of paragraph VIII. E, except that separate enclosure shall not have external operating handle, need not have a data pocket and door may latch at only one point. All equipment may be located in one enclosure instead of two, when approved by the Engineer.

VII. Where a Type D or T service is provided, laminated "as built" drawings are required as shown on ED(5) VIII E; shall be delivered before completion of the work, to the Engineer in lieu of placement within these smaller enclosures. Conduit may not enter the back wall of a service enclosure penetrating the equipment mounting panel. Provide grounding bushings on all metal conduits, terminate bonding jumper to grounding bus. Grounding bushing is not required when the end of the metal conduit is fitted with a conduit sealing hub or threaded boss such as a meter base.

EXPLANATION OF ELECTRICAL SERVICE DESCRIPTIVE CODE

ELEC SERV TY X (XXX/XXX) XXX (XX) XX (X) XX (X)

Example: ELEC SERV TY A(240/480)100(NS)SS(E)GC(O)

Schematic Type

Service Voltage (V / V)

Disconnect Amp Rating
(000 indicates main lug only)

SS= Safety switch ahead of meter
NS= No switch ahead of meter and/or no meter required

Enclosure Type
GS= Galvanized steel (see ED(5)VIII,D)
SS= Stainless steel
AL= Aluminum

Photocell Mounting Location
T= Top of pole
E= Inside service/separate enclosure
L= Luminaire mounted
N= None

Service Support Type
GC= Granite concrete
OC= Other concrete
TP= Timber pole
SP= Steel pole
SF= Steel frame
OT= Pole by others or paid for separately
EX= Existing pole
TS= Switch gear to be placed on traffic signal pole
RT= Rectangular structural tubing
PS= Pedestal Service (see ED(5)VIII,G)

O= Overhead service
U= Underground service

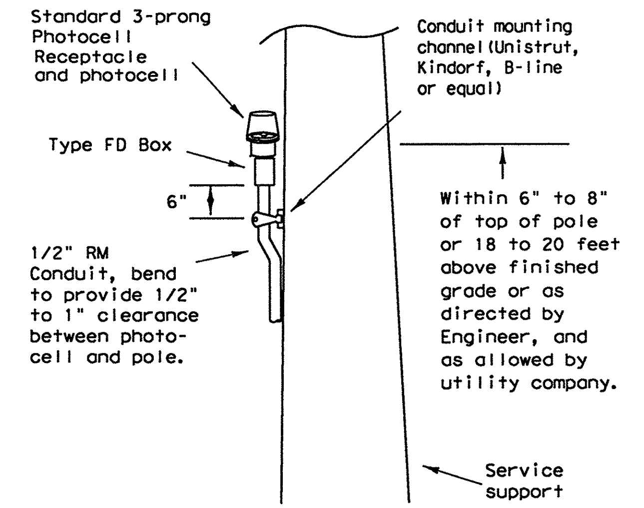

TOP MOUNTED PHOTOCELL

Conduit support spacing 3 feet from enclosure; 5 feet max.

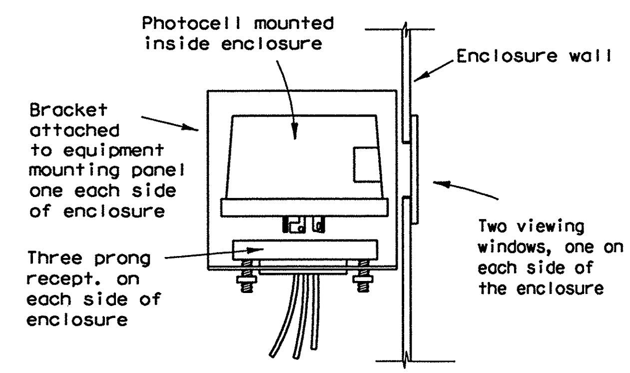

ENCLOSURE MOUNTED PHOTOCELL

For photocell specifications see ED(5),XIII.

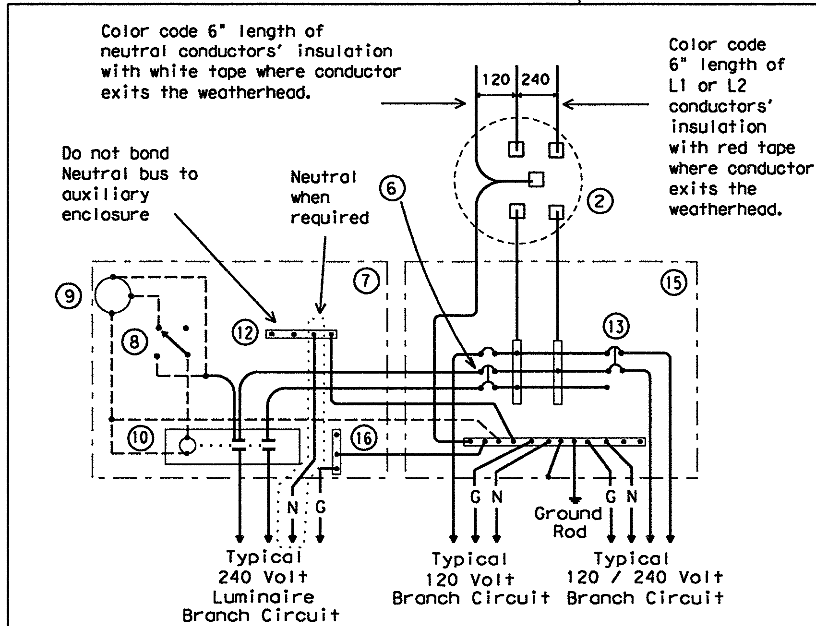

SCHEMATIC TYPE T

120/240 VOLTS - THREE WIRE

Install photocell and lighting contactor when shown on Electrical Service Data.

SCHEMATIC LEGEND

1 - omitted
2 - Meter (when required)
3 - Service Assembly Enclosure
4 - Main Disconnect Breaker (Not Used)
5 - Omit
6 - Circuit Breaker, 15 Amp typical for control circuit wiring
7 - Auxiliary Enclosure
8 - Control Station ("H-O-A" Switch)
9 - Photo Electric Control (enclosure-mounted shown)
10 - Lighting Contactor
11 - Power Distribution Terminal Blocks (Not Used)
12 - Neutral Bus required when 120 v. lights are controlled by lighting contactor
13 - Branch Circuit Breaker (See Electrical Service Data)
14 - Circuit Breaker Panelboard (Not Used)
15 - Load Center
16 - Ground Bus

——— Power Wiring
- - - - Control Wiring
—N— Neutral Conductor (when required-to serve 120 v. loads only)
—G— Equipment grounding conductor-always required

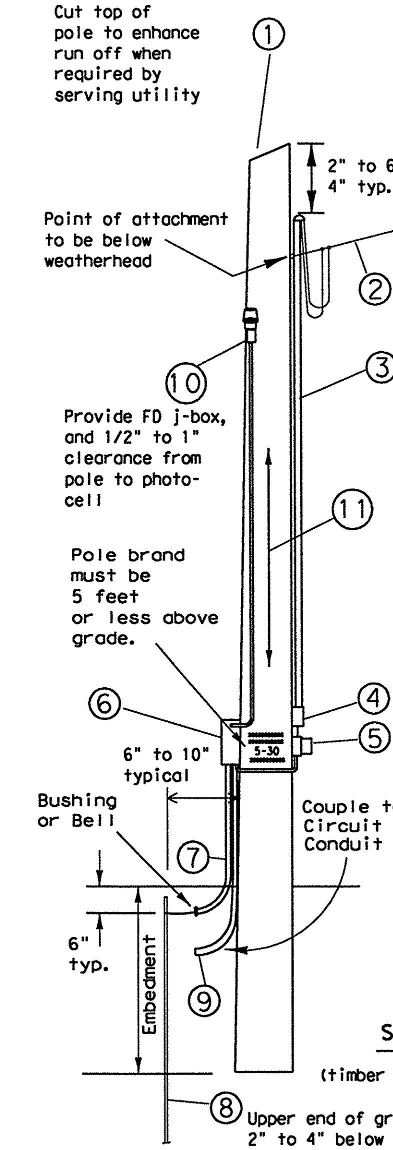

1 - Class 5 pole, height as required
2 - Service drop from utility company (attached below weatherhead)
3 - Service conduit and service entrance conductors(RMC) (See Electrical Service Data)
4 - Safety switch (when required)
5 - Meter (when required)
6 - Service enclosure
7 - No. 6 bare grounding electrode conductor in 1/2 " PVC to ground rod - extend 1/2 " PVC 6" underground.
8 - 5/8 " x 8' Copper clad ground rod - drive ground rod completely underground unless otherwise approved by the Engineer.
9 - RM conduit - same size as branch circuit conduit.
10 - Photocell and conduit - if top mounted. (See Electrical Service Data)
11 - When required by the serving utility provide bare #6 awg copper conductor. Run wire from pole top to butt wrap or copper butt plate. Protect conductor to a height of 8 ft above finish grade.

LIQUIDTIGHT FLEXIBLE METAL CONDUIT (LFMC)

(If applicable)

- Liquidtight flexible metal conduit, may be used when meter and service enclosure are mounted 90 to 180 degrees to each other. Size shall be same as service entrance conduit.
- LFMC shall not exceed 3 ft. and shall be securely supported within one ft. of each end. No strap required for LFMC shorter then 12"
- Each end of LFMC must have a grounding bushing or be terminated with a grounding fitting.
- A neutral conductor must be installed within the LFMC.
- Bend in liquidtight flexible metal conduit shall not exceed 180 degrees.
- A pull test is required on all installed conductors, at least six inches of free conductor movement shall be demonstrated to the satisfaction of the Engineer.

SERVICE SUPPORT TYPE TP (O)

(timber pole, overhead service, typical arrangement)

TIMBER POLE NOTES

1. Conduit and electrical conductors attached to the electrical service pole and underground within 12 inches of service pole shall not be paid for directly but shall be subsidiary to the service pole.
2. Pole top mounted photocell, install on north side of pole or in service enclosure as required. See Electrical Service Data.
3. Attach meter and service equipment with stainless steel or galvanized channel (Unistrut, Kindorf, or equal). Gain pole as required to provide flat surfaces for each strut. Paint ends of galvanized channel with zinc rich paint. Gain depth 5/8" max. Gain height 1 7/8" max. Strut to be 1" max. deep, and 1 5/8" wide max. Secure each strut section to timber pole with two galvanized or SS lag bolts, 1/4" diameter min. by 1 1/2" length min. Place flat cut galvanized or SS washer on each lag bolt. Gain pole in a neat and workmanlike manner.
4. Embedment depth shall be as required in Item 627 Treated Timber Poles.
5. Poles trimmed for excess length shall be trimmed from the top end only.

Texas Department of Transportation
Traffic Operations Division

ELECTRICAL DETAILS-SERVICE SCHEMATICS AND SUPPORT-TYPE TP (OVERHEAD)

ED(4)-03

©TxDOT April 1998

DN: TXDOT	CK: TXDOT	DW: TXDOT	CK: TXDOT

REVISIONS
12-00
3-03

CONT	SECT	JOB	HIGHWAY
2452	01	043	SH 151
DIST	COUNTY		SHEET NO.
SA	BEXAR		314

SERVICE ENCLOSURE NOTES

VIII. Service Assembly Enclosures. All service assemblies and enclosures shall be UL Listed for the intended purpose.

A. Shop built or shop assembled service assemblies (all types except Type T and Type D without lighting contactor or enclosure mounted photo cell) and all auxilliary equipment enclosures mounted with service equipment and paid for as part of Item 628, "Electrical Services", shall be built or assembled by a UL Listed Industrial Control Panel shop and shall have a unique serial numbered UL Label with the words "LISTED ENCLOSED INDUSTRIAL CONTROL PANEL". The same or an additional label shall have the name, location, and phone number of the shop, the UL file number of the shop, the shop order or drawing number, date of manufacture or assembly, and the line voltage. The service assembly enclosure shall also be labeled "SUITABLE ONLY FOR USE AS SERVICE EQUIPMENT".

B. Conduit entries into the top of enclosures shall have threaded hub. Conduit entries through the equipment mounting back plate will not be allowed.

C. All service enclosure front doors shall be permanently labeled "DANGER HIGH VOLTAGE". Label shall be a self sticking type, intended for outdoor installation. Lettering style, layout and colors of red, black and white shall be as required by OSHA. Label letters shall be 1 to 1 1/2 inches high or as high as the enclosure door width will permit for smaller services. Separate or auxiliary lighting enclosures need not be OSHA labeled when mounted in the same viewing plane as the service enclosure front door. Where only one type of load is served by the service, the service door shall be marked using duo-colored plastic labels or self adhesive vinyl weather resistant labels, minimum of 1 inch high; applied in a neat and workmanlike manner. On the label will be the service number shown on the plans as well as identifying the load served specifically (i.e. lighting, landscaping, signals, traffic management or other wording as directed by the Engineer). Safety switches need not be OSHA labeled unless specifically required by the serving utility.

D. Type GS enclosures will only be allowed for service Types D and T without an enclosure mounted photocell and/or lighting contactor and the Type C panelboard. This spec will allow an "off the shelf" product meeting these specifications to be used. Type GS enclosures shall be made from pre-galvanized steel sheeting, hot dipped galvanized steel, or powder coat painted steel unless shown differently on the plans. Steel enclosures shall be painted inside and outside; galvanized enclosures may be painted. Unless otherwise approved by the Engineer, painted enclosures shall be gray, beige, white or light green. Panelboard/loadcenter enclosures shall meet UL type 3R requirements, shall have a dead front trim, and an outer padlockable door preventing unauthorized persons from operating contained equipment. Galvanized steel is no longer allowed for Types A, C, or custom-built D or T enclosures. If GS is shown in the descriptive code for any of these, an AL shall be provided.

E. Type AL enclosures for service Types A and C shall meet UL type 3R requirements and shall also meet additional requirements of this paragraph. The enclosure shall have both a main disconnect remote operator handle and a door latch handle. Die-cast handles are not acceptable. The main disconnect remote operator shall be flange-mounted, shall interlock the door when in the "on" position, and shall be padlockable in both the "on" or "off" positions. Door latch shall latch at two or more points, operate by a handle separate from disconnect switch and be capable of being locked. Door closure clamps will not be allowed. Lock must be keyed to Master #2195. All the enclosures shall have either a continuous stainless steel piano hinge with stainless steel pin or enclosures less than 30 inches may have two heavy duty hinges, those over 30 inches must have three. Heavy duty two and three point hinges shall have a 0.185 inch minimum diameter electro-zinc plated steel pin or a stainless steel pin. Two point hinged doors shall be rated for 56 lbs of loading. Three point hinged doors shall be rated for 70 lbs of loading. The door shall have an attached data pocket constructed of either thermoplastic or metal. Pocket shall be 12" x 12", unless that size will not fit in enclosure. The pocket shall then be as large as possible, as approved by the Engineer, and mechanically attached with stainless steel nuts and bolts, or stainless steel or aluminum rivets. Enclosure shall include an equipment mounting panel installed inside the enclosure on collar studs or tapped bosses, and constructed of a minimum 12 guage galvanized steel. Equipment mounting panels shall not be painted. Enclosure shall have factory installed external mounting feet. Enclosure door shall be capable of opening at least 130 degrees, with arm or other approved means to hold the door open. Only the enclosure exterior will be primed and painted. Paint color shall be beige or gray and shall be powder coat paint as shown below. Condensation drainage shall be provided in the bottom of the enclosure before leaving the factory. The Contractor shall prepare and submit a schematic drawing unique to an individual service. The approved drawing shall be laminated and placed in the document pocket of the service at the time of shipment to the job site. All applicable wiring diagrams and plan sheet layouts for all equipment and branch breaker circuits supplied by that service shall also be laminated and placed in the document pocket prior to shipping. Type AL enclosures for Type D and T services with enclosure mounted photocell and/or lighting contactor shall have the loadcenter interior mounted in an enclosure with properly adapted dead front trim. Types D and T shall not have a loadcenter exterior "can" mounted inside another enclosure meeting these specifications. (Do not put one enclosure inside another enclosure). Types D and T with enclosure mounted photocell and/or lighting contactor shall meet the additional requirements of this paragraph except that remote-operating handle will not be provided.

F. Type SS enclosures for Type A and C shall meet all the requirements above for their respective type AL. Type SS enclosures for D and T shall meet all the requirements above for their respective type AL. Stainless Steel shall not be painted.

G. PS enclosure shall be as detailed and specified on ED(8). Galvanized steel will not be allowed for any pedestal service. If GS is shown in the descriptive code an AL will be provided.

IX. Powder Coat Paint. Powder coating shall be either a polyester thermosetting resin, a zinc rich primer with a TGIC (triglycidyl isocyanurate) powder overcoating, or a zinc-rich epoxy powder, applied by either electrostatic spray or fluidized bed immersion, high temperature oven cured, high density, low gloss, 4 mil thick (minimum), coating. Adhesion shall meet the 5A or 5B classifications of ASTM D3359. Finish shall be uniform in appearance and free of scratches.

X. Main Disconnect. Main disconnect device shall be a circuit breaker, as specified in the Electrical Service Data, shall be two or three pole, and rated for the voltage and amperage specified. Circuit breaker shall be an UL Listed thermal-magnetic circuit breaker controlled by flange-mounted remote operator in the service assembly enclosure when required. Circuit breakers shall have a minimum interrupting rating of 10,000 Amps. When the utility company provides a transformer larger than 50 KVA, Contractor shall verify that the available fault current is less than the circuit breaker amps interrupting capacity (AIC) rating and shall provide documentation from the Utility to the Engineer. Documentation shall be submitted at the same time as other electrical submittals. Circuit breaker shall be UL Listed to UL489. No backfed breakers will be allowed for use as a main disconnect.

XI. Control Circuit. Control circuit protection shall be 15 amp circuit breaker.

XII. Control Station ("H-O-A" Switch). Control station shall be a maintained-contact, three position selector switch in an UL type enclosure. Switch shall be rated 600 volts and shall be fitted with "Hand-Off-Auto" legend.

XIII. Photo Electric Control. Photo electric control shall consist of a photocell, internal lightning arrester, and relay or bimetallic switch mounted inside a weatherproof enclosure with standard 3-prong twist lock photocell plug and receptacle. The enclosure shall be made of poly-acrylic with clear acrylic window. Enclosure chassis shall be molded thermosetting plastic. The photocell shall have a polyethylene gasket, and shall have a hermetically sealed cadmium sulfide cell. The arrester shall have an enclosed type expulsion arrester rated 2.0 kV sparkover with 5,000 amps follow-through. Relay or switch shall be time delay type with normally closed contacts. Photo electric control shall be rated a minimum of 1800 VA, voltage as required. Enclosure mounted photocells shall be the same as above except that the photocell shall be mounted inside the enclosure. The enclosure shall have two acrylic paned windows, or other material approved by the Engineer, one on each side of the enclosure. Each window shall be rectangular approximately one inch by two inches, round 2 inch diameter, or as otherwise approved by the Engineer. Bracket and photocell's receptacle will be mounted inside enclosure next to each window. Except for window side, 2" of clearance is required on all sides of photocell for ease of replacement. The photocell's receptacle is held in place by two mounting screws on bracket and located next to each window of the enclosure. The 3-prong twist lock photocell shall be mounted in a position to receive light from the window closest to the photocell. The photocell shall be mounted in a position to receive light from one window. Top of pole mounted photocells shall be mounted as shown on ED(4). The Contractor shall be responsible for proper operation of the photo-electric control. The Contractor shall move and/or adjust or shield the photocell from stray or ambient nighttime light or shall make any other adjustments required for proper operation. The photocell shall face North when practicable. Unless otherwise shown on the plans, the photocell shall turn on the illumination system at 1.0 +(-) 0.5 footcandle and turn off the illumination system at two footcandles higher than turn on.

XIV. Lighting Contactor. Lighting contactor shall be a UL Listed NEMA rated lighting contactor, two-pole or multipole as required, electrically held type designed to control high pressure sodium lighting loads, with silver alloy double break contacts rated at 240 volts, 480 volts or 600 volts as required. Lighting contactor shall not be the DIN rail mounted type.

XV. Power Distribution Terminal Blocks. Power distribution terminal blocks shall be rated for 600 volts and shall be used for line side connections to branch circuit breakers where more than one circuit breaker is required. Lugs on blocks shall be properly sized for conductors being used. Only one conductor shall be placed under each lug.

XVI. Neutral/Ground Bus. Neutral/ground bus shall be a factory made bus permanently bonded to the enclosure with properly sized lugs for grounding and neutral conductors.

SCHEMATIC LEGEND

1 - Safety Switch (when required)
2 - Meter (when required)
3 - Service Assembly Enclosure
4 - Main Disconnect Breaker (See Electrical Service Data)
5 - Omit
6 - Circuit Breaker, 15Amp
7 - Auxiliary Enclosure
8 - Control Station ("H-O-A" Switch)
9 - Photo Electric Control (enclosure-mounted shown)
10 - Lighting Contactor
11 - Power Distribution Terminal Blocks
12 - Neutral/Ground Bus
13 - Branch Circuit Breaker (See Electrical Service Data)
14 - Circuit Breaker Panelboard (See Electrical Service Data) (If Type C is shown as AL or SS on descriptive code, this is the service assembly enclosure only. Panelboard enclosure is GS unless otherwise noted.
15 - Load Center

———— Power Wiring
- - - - - - - - Control Wiring
——N—— Neutral Conductor (when required) serve 120 v. loads only)
——G—— Equipment grounding conductor-always required

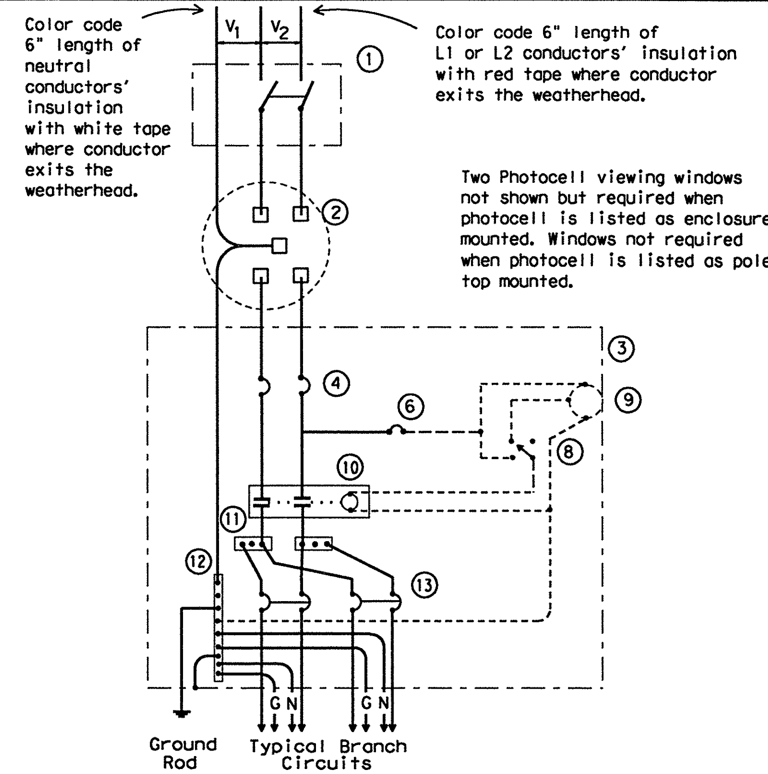

SCHEMATIC TYPE A

THREE WIRE

Maximum feeder circuit size (High Mast Poles): 100 amps for two pole 480V, 125 amps for one or two pole 120V or 240V. Maximum branch circuit size: 50 amps.

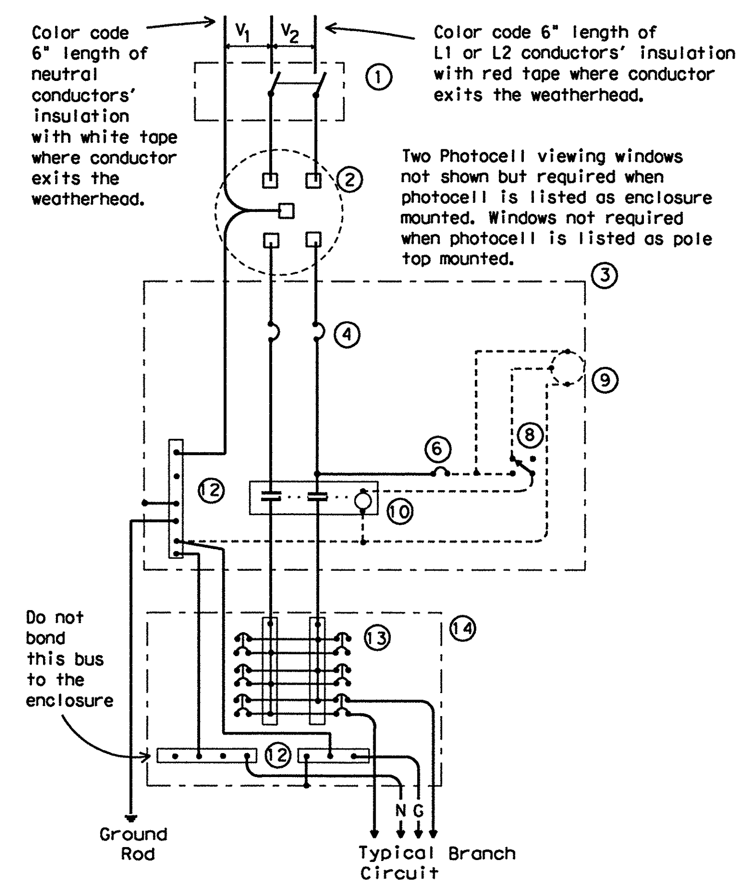

SCHEMATIC TYPE C

THREE WIRE

Maximum feeder circuit size (High Mast Poles): 100 amps for two pole 480V, 125 amps for one or two pole 120V or 240V. Maximum branch circuit size: 50 amps.

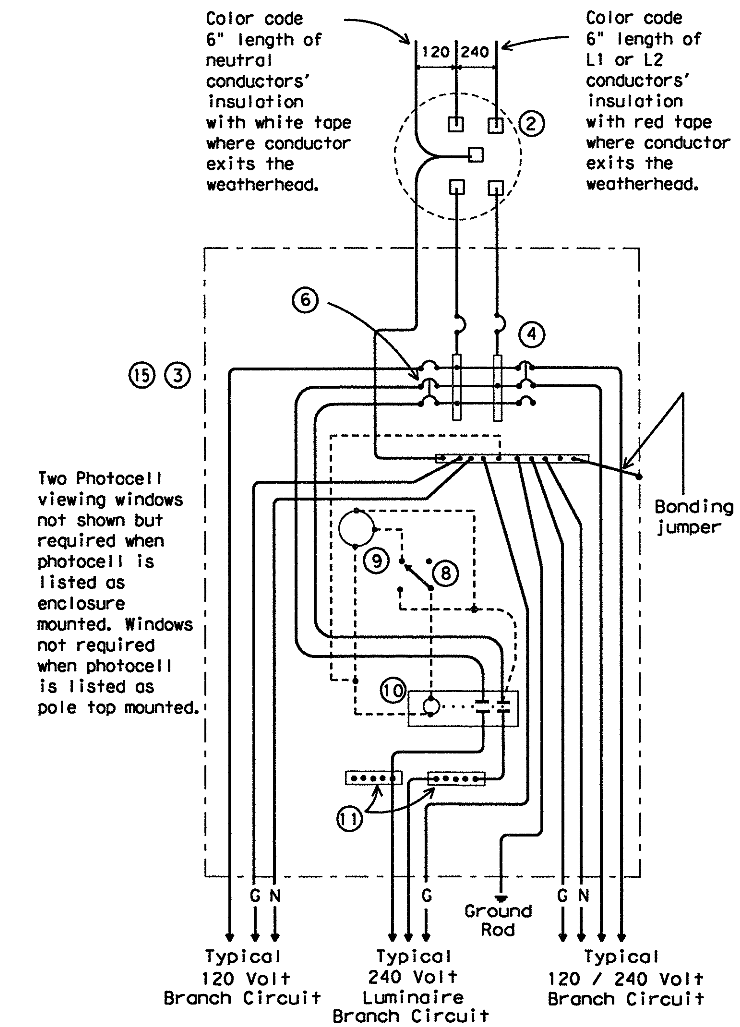

SCHEMATIC TYPE D

120/240 VOLTS - THREE WIRE

Install photocell and lighting contactor when shown on Electrical Service Data. See Type D service notes.

TYPE D SERVICE NOTES

Photocell and lighting contactor shall be located either in the same UL type 3R enclosure with load center or, if approved by Engineer, in separate enclosure. There shall be a window on each side of enclosure to allow operation of photocell. Both photocell contactor and breaker area shall have dead front trim. Enclosure, except for RT and PS supports, shall not exceed 36 inches in height or 16 inches in width unless approved by the Engineer. Ty D load center with lighting controls or TY D separate lighting control enclosure shall have power distribution blocks for a minimum of 4, #8 conductors per phase.

Texas Department of Transportation
Traffic Operations Division

ELECTRICAL DETAILS-SERVICE ENCLOSURE & NOTES

ED(5)-03

©TxDOT April 1998	DN: TXDOT	CK: TXDOT	DW: TXDOT	CK: TXDOT
REVISIONS 12-00 3-03	CONT 2452	SECT 01	JOB 043	HIGHWAY SH 151
	DIST SA	COUNTY BEXAR		SHEET NO. 315

DISCLAIMER: The use of this standard is governed by the "Texas Engineering Practice Act". No warranty of any kind is made by TxDOT for any purpose whatsoever. TxDOT assumes no responsibility for the conversion of this standard to other formats or for incorrect results or damages resulting from its use.

p:\4760\0-0129\cad\standard\5\std_sfg05.dgn 2/21/2011 7:05:16 PM mwmldkiff

DISCLAIMER: The use of this standard is governed by the "Texas Engineering Practice Act". No warranty of any kind is made by TxDOT for any purpose whatsoever. TxDOT assumes no responsibility for the conversion of this standard to other formats or for incorrect results or damages resulting from its use.

p:\4760\0-0129\cad\standard\5\std_sig06.dgn 2/21/2011 7:05:17 PM mwmdkiff

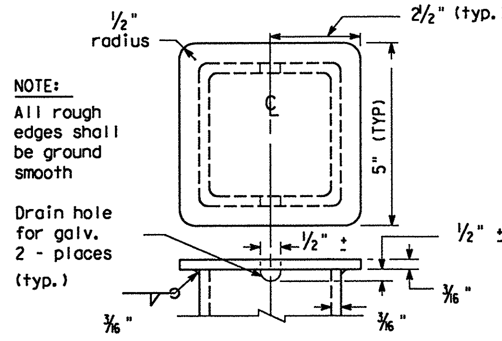

TOP OF POLE
TYPE SF & SP

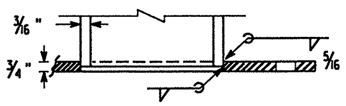

BOTTOM OF POLE
TYPE SF & SP

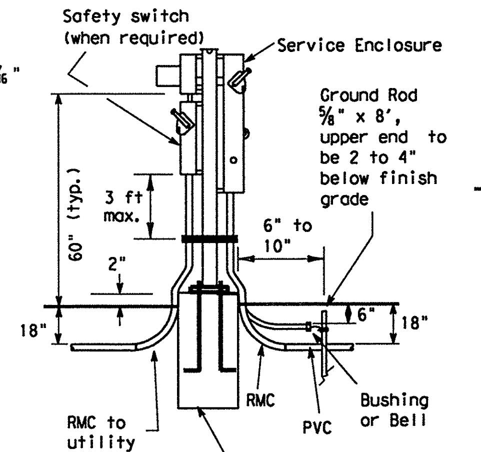

SERVICE SUPPORT
TYPE SP (U)
UNDERGROUND SERVICE
WITH SAFETY SWITCH

Color code 6" of grounded neutral conductors insulation with white tape where conductor exits the weatherhead. Color code 6" of L1 or L-2 Hot-ungrounded conductors insulation with red tape where conductor exits the weatherhead. Conductor free length, 12" min., 18" max.

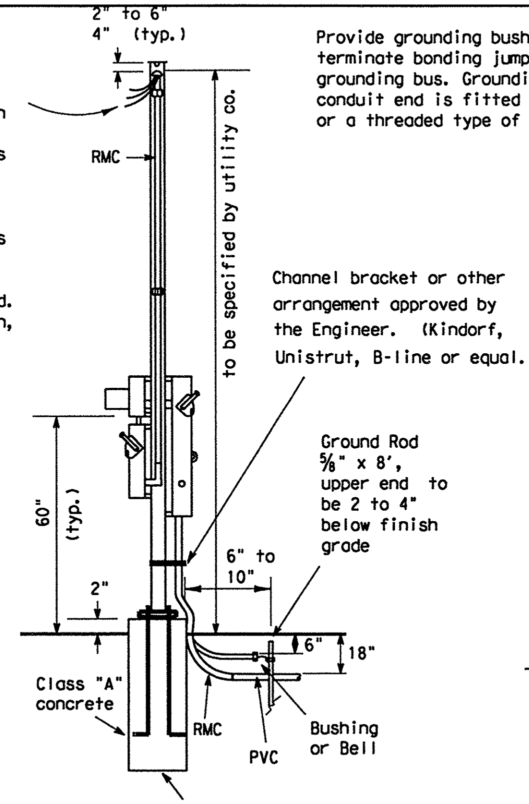

SERVICE SUPPORT
TYPE SP (O)
OVERHEAD SERVICE
WITH SAFETY SWITCH

Provide grounding bushings on all metal conduits, terminate bonding jumpers(min. #6 AWG. Copper) to grounding bus. Grounding bushing not required when conduit end is fitted with a conduit sealing hub or a threaded type of boss such as a meter hub.

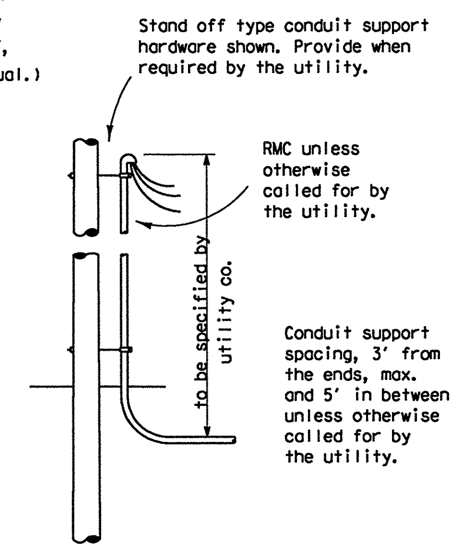

UNDERGROUND RISER
AT UTILITY POLE
(for underground service)

NOTES:

1. Support Type SP and SF: Fabricated from 4" x 4" x 3/16 " square structural tubing, ASTM A500 Grade A or G or equal. Base plate shall be 3/4 " plate, ASTM A36 or equal. All equipment and conduit shall be mounted on galvanized channel strut, 1 1/2 " x 1 5/8 " x 12 guage galvanized steel channel (Unistrut, Kindorf, B-line or equal) clamped with channel hardware, bolted or welded to vertical member as approved by the Engineer.
2. Paint field cut ends of all channels with zinc-rich paint.
3. All Steel Poles (SP and SF) shall be hot-dip galvanized after fabrication. Poles for overhead service shall be fitted with eyebolt or similar fitting, as approved by the utility company, for attachment of sevice drop to the pole.
4. All conduit and conductors attached to the electrical service and within 12 inches of the electrical service will not be paid for directly, but shall be subsidiary to the electrical service. All conduit and conductors from the utility company pole to the point 12 inches from the electrical service, including conduit and conductors required for the utility pole riser when furnished by the Contractor, will be paid for separately.
5. All mounting hardware and installation details of services shall be in accordance with utility company specifications.
6. Anchor bolts for underground service supports shall be 3/4" x 18" x 4" (dia. x length x hook length). Anchor bolts for overhead services shall be 3/4" x 56" x 4". Anchor bolts shall be provided with leveling nuts.
7. Conduit for grounding electrode conductor (ground rod wire) shall be 1/2" PVC. All other conduit on electrical services shall be rigid metal conduit. Service entrance conduit size shall be as shown elsewhere. Conduit for branch circuit entry to enclosure shall be the same size as that shown on the layout sheets for branch circuit conduit. Rigid metal conduit shall extend to the rigid metal elbow and then be coupled to the type conduit shown on the layout for that particular branch circuit. RMC shall have grounding bushings in enclosures.
8. If pole is painted, each separate painted piece shall have a bonding jumper attached to a tapped hole.
9. Sheet metal screws are not allowed for bonding. Provide 1/4-20 machine screws. Remove all non-conductive material at contact points. Terminate bonding jumper using listed device. Bonding jumper min. #6 AWG Copper. Make up all threaded bonding connections wrench tight.
10. Conduits entering enclosure from underground shall be sealed at both ends. Silicone sealant will not be allowed.
11. (Revision 1) Ground rod clamp to be UL listed for direct burial.
12. Service entrance conductors shall exit separately bushed non-metallic openings in weatherhead.
13. Free conductor at weatherhead to be 12 in. min., 18 in. max., or as required by utility. Color code grounded-neutral conductor with white tape covering 6 in. of conductor. Color code L1 or L2 Hot un-grounded conductor with red tape covering 6 in. of conductor. Service drop and service entrance conductors must not contact metal pole in such a manner as to result in abrasion of insulated conductors.
14. Conduit support spacing to be max. 3 ft. from ends, and max. 5 ft. in between.
15. Shop drawings are not required for service support structure unless specifically stated elsewhere or as directed by the Engineer.
16. Service enclosure to be labeled as specified on ED(5) VIII C.
17. Liquidtight flexible metal conduit (LFMC) may be used between the meter and service enclosure when they are mounted 90 to 180 degrees to each other. LFMC shall be the same size as service entrance conduit. LFMC shall not exceed 3 ft. and shall be securely supported within one foot of each end. LFMC shorter then 12" need not be strapped. Each end of LFMC must have a grounding bushing or be terminated with a grounding fitting. A neutral conductor must be installed within the LFMC. Bend in LFMC shall not exceed 180 degrees.
A pull test is required on all installed conductors, at least six inches of free conductor movement shall be demonstrated to the satisfaction of the Engineer.

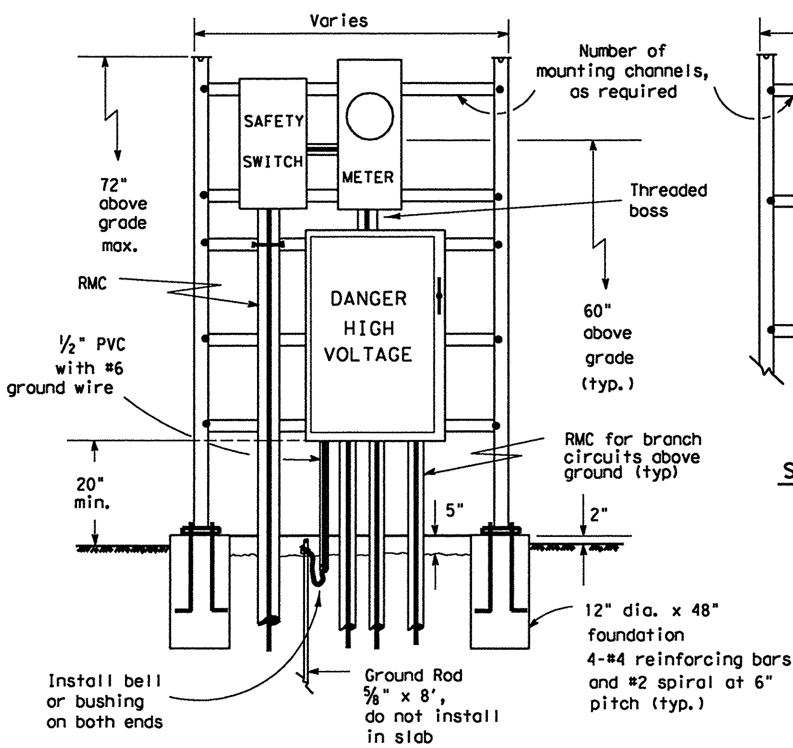

SERVICE SUPPORT TYPE SF (U)
UNDERGROUND SERVICE
WITH SAFETY SWITCH
(Typical Arrangement)

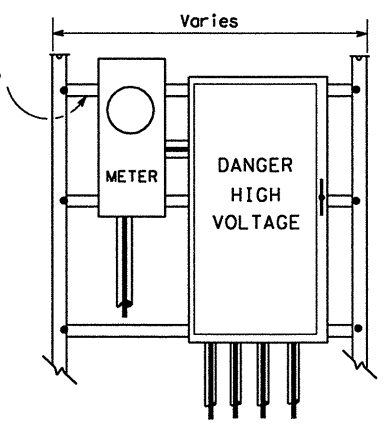

SERVICE SUPPORT TYPE SF (U)
UNDERGROUND SERVICE
WITHOUT SAFETY SWITCH

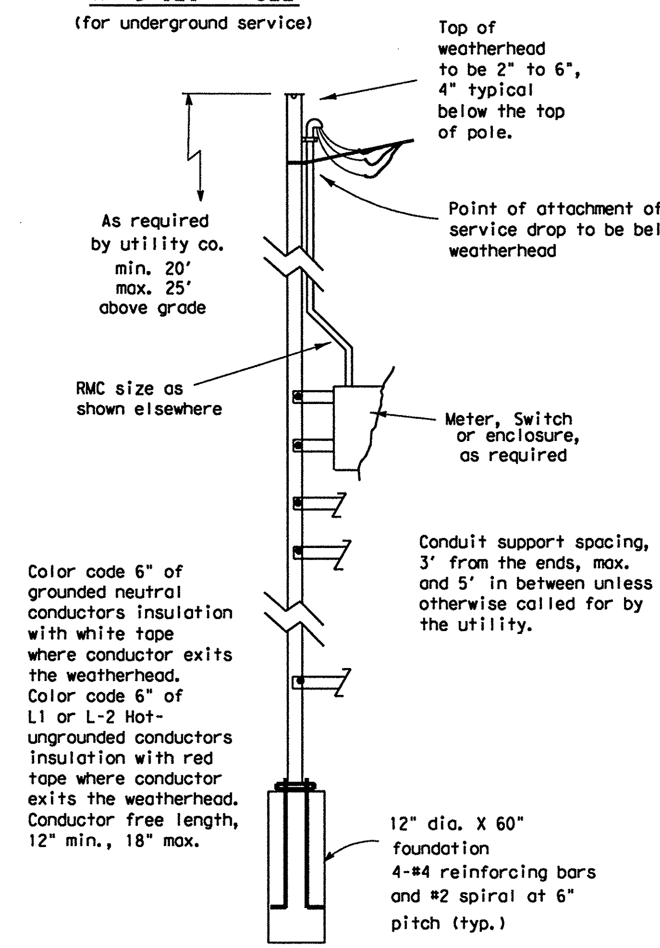

Color code 6" of grounded neutral conductors insulation with white tape where conductor exits the weatherhead. Color code 6" of L1 or L-2 Hot-ungrounded conductors insulation with red tape where conductor exits the weatherhead. Conductor free length, 12" min., 18" max.

SERVICE SUPPORT TYPE SF (O)
OVERHEAD SERVICE

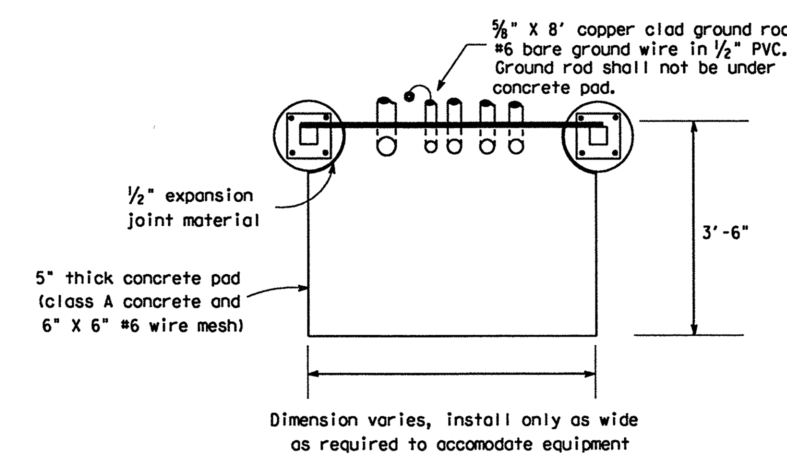

SERVICE SUPPORT TY SF (O) & SF (U)
TOP VIEW

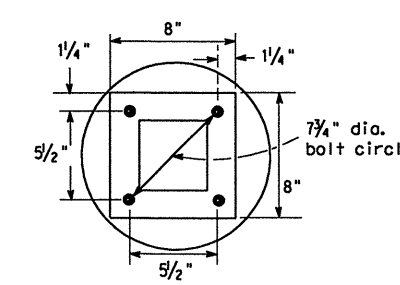

BASE PLATE DETAIL
TYPE SF & SP

5/03 Revision
(Revision 1) Revised notes.

Texas Department of Transportation
Traffic Operations Division

ELECTRICAL DETAILS- SERVICE SUPPORT TYPES SF & SP

ED(6)-03

© TxDOT January 1992

REVISIONS	DN: TXDOT		CK: TXDOT	DW: TXDOT	CK: TXDOT
4-98	CONT	SECT	JOB	HIGHWAY	
12-00	2452	01	043	SH 151	
3-03	DIST	COUNTY		SHEET NO.	
5-03	SA	BEXAR		316	

DISCLAIMER: The use of this standard is governed by the "Texas Engineering Practice Act". No warranty of any kind is made by TxDOT for any purpose whatsoever. TxDOT assumes no responsibility for the conversion of this standard to other formats or for incorrect results or damages resulting from its use.

'standard\ISlsld_sigDT.dgn 2/21/2011 7:05:18 PM mwmldk117
pw4160\ND0129.cor

NOTES:

1. Luminaire conductors shall not be looped through controller cabinet.
2. Electrical system to include an equipment grounding conductor noted here as "G". All exposed metal parts are to be bonded to grounding conductor.
3. Photocell, when required, shall be mounted at top of pole or in enclosure as shown on ED(4) and ED(5) and as required by descriptive code.
4. Roadway lighting fixtures, when required, shall be in accordance with the material and construction methods of the Item, "Roadway Illumination Assemblies" except for the test period for proper operation of the luminaires. Installed roadway lighting luminaires and internally lighted street name signs shall be tested for proper operation as a part of the associated traffic signal system.
5. Internally lighted street name signs (ILSN), when required, shall be in accordance with the Item "Internally Lighted Street Name Signs". Because of the electrical isolation of ILSN hinges, a #12 green grounding conductor shall be run to the ILSN fixture.
6. Install ground rod at alternate location when directed by the Engineer. Maintain a minimum of 8 ft in contact with the earth.
7. Liquidtight flexible metal conduit (LFMC), may be used when meter and service enclosure are mounted 90 to 180 degrees to each other. LFMC shall be same size as service entrance conduit. LFMC shall not exceed 3 ft. and shall be securely supported within one foot of each end. No strap required for a LFMC shorter than 12". Each end of LFMC must have a grounding bushing or be terminated with a grounding fitting. A neutral conductor must be installed within the LFMC. Bend in liquidtight flexible metal conduit shall not exceed 180 degrees.
8. Minimum embedment depth as per Item 627 Treated Timber Poles.
9. Pole to be set plumb.
10. Back fill thoroughly tamped in 6 in. lifts. Place 6 inches additional backfill above grade around pole base to allow for settling, as per Item 627.
11. Excess pole length shall be trimmed from the top at a slope to aid water run off.
12. Gain pole two places for each meter, service, separate or auxiliary enclosure. See ED(4) for details.
13. All illumination and power conductors to be pull tested and megged. Do not meg traffic signal cable.
14. Enclosures are to be locked, and ground box covers are to be bolted before power is applied to the circuit.
15. Conduits entering top of enclosures to be fitted with conduit sealing hub or threaded boss, such as meter hub. Off-set nipple, when required, shall not be zinc-die-pressure cast. All metal conduits not connected to conduit sealing hub, or threaded boss must have a grounding bushing. Terminate bonding jumper to ground bus. All conduits entering enclosures shall be sealed. Silicone shall not be allowed.

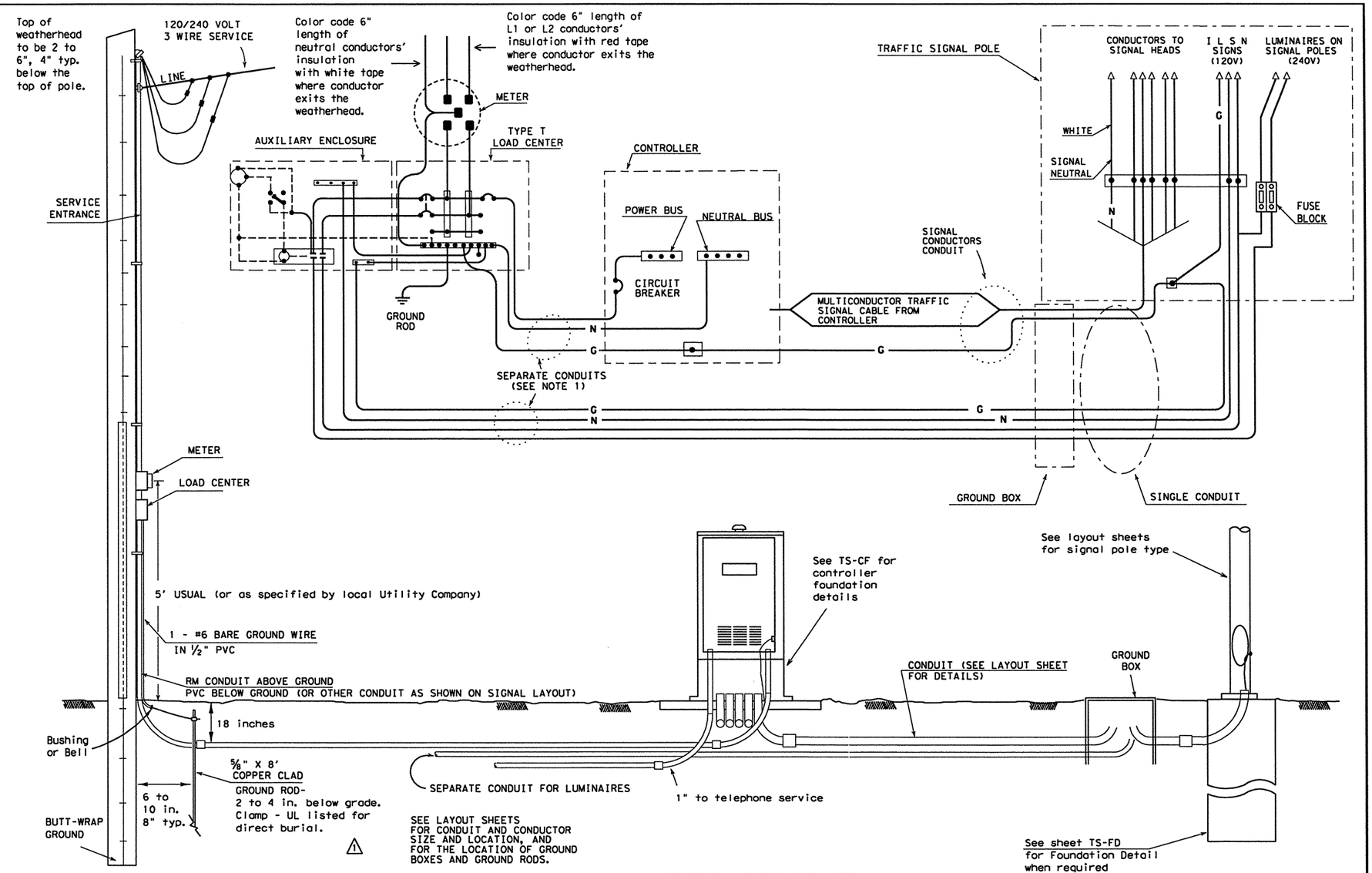

Unless shown elsewhere in the plans, electrical service data for Types D and T shall be as follows.

ELECTRICAL SERVICE DATA

ELECTRICAL SERVICE DESCRIPTION (SEE ED(4))	SERVICE CONDUIT SIZE (RMC)	SERVICE CONDUCTORS NO./SIZE	SAFETY SWITCH AMPS	MAIN DISCONNECT CKT. BRK. POLE/AMP	TWO-POLE CONTACTOR AMPS ***	PANELBD./ LOADCENTER AMP RATING (MIN)	CIRCUIT NO.	BRANCH CKT. BRK. POLE/AMPS	KVA LOAD
TY D (120/240)070(NS)AL(E)**(*)	1¼ △1	3/#4	N/A	2P/70	30	100	T.S. Lighting	1P/50 2P/15	<7.1
TY T (120/240)000(NS)GS(E)**(*)	1¼ △1	3/#4	N/A	None	30	70	T.S. Lighting	1P/50 2P/15	<7.1

*** Eliminate photocell, contactor and seperate enclosure if lighting, or internally lighted signs are not required by plans
** See descriptive code in estimate for service support type.
* See descriptive code in estimate for overhead or underground service.

5/03 Revision

△1 Revised notes.

Texas Department of Transportation
Traffic Operations Division

ELECTRICAL DETAILS- TYPICAL TRAFFIC SIGNAL SYSTEM DETAILS

ED(7)-03

© TxDOT January 1992

REVISIONS	DN: TXDOT	CK: TXDOT	DW: TXDOT	CK: TXDOT
4-98 12-00 3-03 5-03	CONT	SECT	JOB	HIGHWAY
	2452	01	043	SH 151
	DIST		COUNTY	SHEET NO.
	SA		BEXAR	317

DISCLAIMER: The use of this standard is governed by the "Texas Engineering Practice Act". No warranty of any kind is made by TxDOT for any purpose whatsoever. TxDOT assumes no responsibility for the conversion of this standard to other formats or for incorrect results or damages resulting from its use.

p:\4760\0-0129.cad standard\5std_sig09.dgn 2/21/2011 7:05:19 PM mwmldktlf

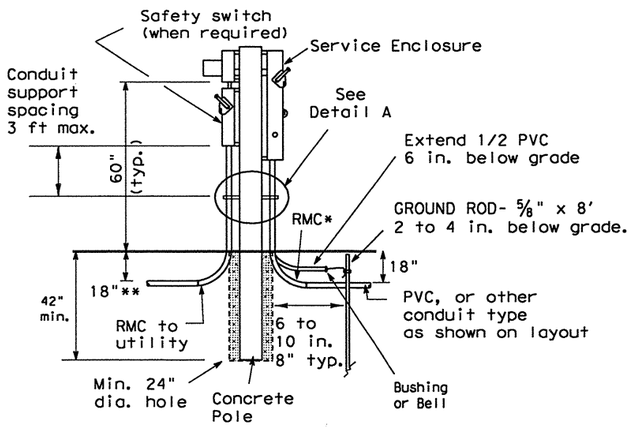

CONCRETE SERVICE SUPPORT

(Underground)

Color code grounded - neutral conductor with white tape covering 6 in. of conductor length. Color code L1 or L2 Hot conductor with red tape covering 6 in. of conductor length. Where conductors exit weatherhead, conductors free length shall be 12 in. min., 18 in. max.

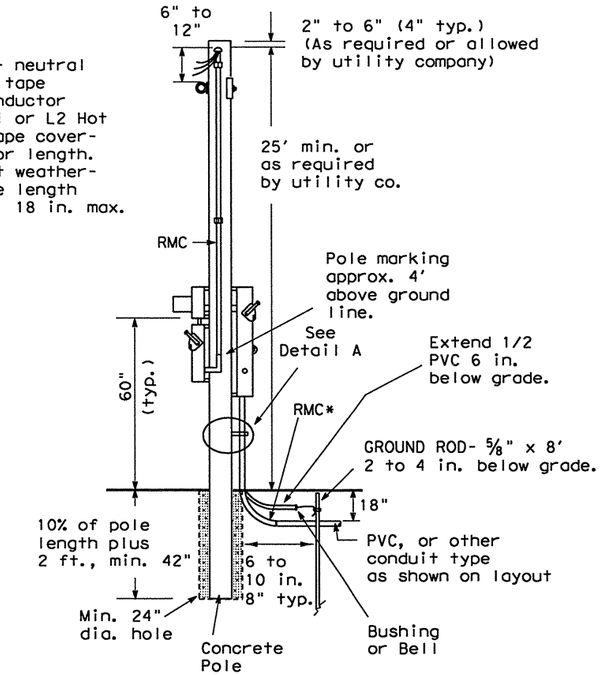

CONCRETE SERVICE SUPPORT

(Overhead)

*same size as branch circuit conduit shown on layout sheets.
** or as required by utility company.

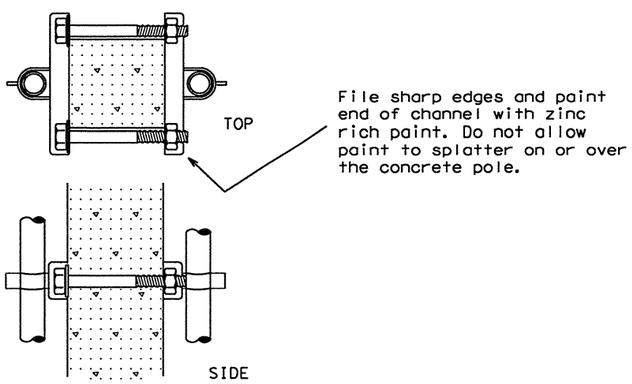

DETAIL A

Channel bracket or other arrangement approved by the Engineer. (Kindorf, Unistrut, B-line or equal)

Note: Attach channels with stainless steel concrete anchors (max. 1" depth), square U-bolts or back to back channel with long bolts, or other secure mounting as approved by the Engineer. Bolts galvanized in accordance with ASTM A153. Channel shall be galvanized.

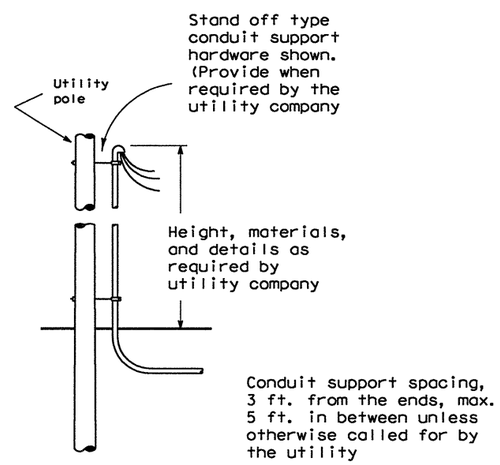

UTILITY POLE CONNECTIONS

(When underground service is required by descriptive code and utility is overhead.)

NOTES:

Electrical service support structures bid as type GC or OC shall be concrete poles and shall meet the following specifications.

1. Poles shall be prestressed concrete and suitable for direct embedment into the ground without special foundations.
2. Poles bid as type "GC" shall be a granite concrete mixture consisting of gray Portland cement with exposed pink granite aggregate. Poles bid as type "OC" shall be other concrete mixture as shown elsewhere on the plans or as directed by the Engineer.
3. Poles greater than 10 ' shall be square in cross-section, with chamfered corners, and shall have a standard taper of 0.162 inch per foot. Cross sectional dimensions shall not deviate by more than 3/8 inch. Poles 10' or less may be tapered .162"/ft or may be non-tapered. The allowable tolerance shall be plus 3 inches and -2 inches in the overall length. The width of the bottom face of the pole as it is cast may be less than the top face. All small cavities shall be cleaned, saturated with water and then filled with mortar. A small cavity is defined as one larger than 1/4 inch but smaller than 3/4 inch in diameter, and less than 3/8 inch deep. Larger non-structural cavities and spalls shall be repaired by opening side of the damaged area on a 1 to 1 slope using a mechanical grinder, cleaning thoroughly and filling with a high-strength non-shrink concrete repair material. Poles with other defects may be repaired only upon authorization of and using the method prescribed by the Engineer.
4. The end of each steel reinforcing strand in the tip and butt shall be burned back to a minimum depth of 1/2 inch. The holes left by the removal of the strand shall be thoroughly cleaned of any loose residue. The holes shall then be completely filled with non-shrink grout and smoothed evenly with tip or butt surface.
5. Prestressing strands shall have a minimum concrete cover of 1 1/4 inch.
6. A straight line joining the edge of the pole at the butt and the edge of the pole at the top shall not be distant from the surface of the pole at any point by more than 3/8 inch for each 10 feet of length.
7. The chloride content of the concrete mix, including all ingredients shall be 0.4 pounds per cubic yard, or less.
8. Concrete used in poles shall have a compressive strength at transfer of not less than 4,000 PSI, and a 28-day compressive strength of not less than 7,000 PSI.
9. Materials shall comply with the latest version of the following standards:
   a) Portland Cement - ASTM C105
   b) Admixtures - ASTM C494
   c) Aggregates - ASTM C33 or C330
   d) Reinforcing Bars - ASTM A615
   e) Cold-Drawn Spiral Wire - ASTM A82
   f) Prestressing Strand, 270K - ASTM A416
10. Poles greater than 10' shall have a 4 inch tip and 3/8 inch strands. Poles 10' or less shall have a 5 inch min. tip and 3/8 inch strands. Pole shall have a load capacity of greater than 1188 lbs. applied 2 ft. below tip.
11. Poles shall be capable of withstanding single point pick up from the horizontal position when lifting from a point 30% of the overall length down from the tip.
12. All poles shall be marked by imprinting on one face. Marking shall indicate manufacturer's name, year of manufacture, length and name or type of pole. Marking shall be located approximately 4 ft. above ground line.
13. Dunnage points, two-point pickup locations for handling pole in horizontal position, and one-point pickup locations for use in raising the pole to a vertical position and handling in setting operation shall be marked on the pole with durable ink or paint or cast into the pole. These marks shall be small but conspicuous.
14. Poles shall be embedded 42 inches or 10% of length plus 2 ft. into the ground whichever is greater.
15. When required by utility company for overhead services, poles longer than 10 feet shall have a #6 solid ground wire running the entire length exiting within 6 inches from the top and bottom of the pole. The Contractor shall connect the bottom to a butt wrap or butt plate grounding device.
16. All conduit and conductors attached to the service support and within 12 inches of the service support will not be paid for directly, but shall be subsidiary to the electrical service. All conduit and conductors from the utility company pole to a point 12 inches from the service support, including conduit and conductors required for the utility pole riser when furnished by the Contractor, will be paid for separately.
17. All mounting hardware and installation details of services shall be in accordance with utility company specifications.
18. All conduit on service supports shall be rigid metal conduit except the conduit for grounding electrode conductor (ground rod wire) shall be 1/2 inch PVC. Service entrance conduit size shall be as shown elsewhere. Conduit for branch circuit entry to enclosure shall be the same size as that shown on the layout sheets for branch circuit conduit. Rigid metal conduit shall extend a minimum of six inches underground and then coupled to the type conduit shown on the layout for that particular branch circuit. RMC shall have grounding bushings in enclosures.
19. Backfill shall be in accordance with Item 400 except for measurement and payment. Backfilling will not be paid for directly but shall be subsidiary to the various bid items.
20. Liquid tight flexible metal conduit (LFMC), may be used when meter and service enclosure are mounted 90 to 180 degrees to each other. LFMC shall not exceed 3 ft. and shall be securely supported within one ft. of each end. Each end of LFMC must have a grounding bushing or be terminated with a grounding fitting. A neutral conductor must be installed within the LFMC. Bend in LFMC shall not exceed 180 degrees. LFMC may not be installed on utility company owned poles. A pull test is required on all installed conductors, at least six inches of free conductor movement shall be demonstrated to the satisfaction of the Engineer.
21. Contractor may order concrete service support structures with 3/4" hole near top of pole for eye bolt type bracket. Eye bolt bracket may be installed as means of overhead service drop anchoring point by utility. Pole may also be center drilled in the field for installation of eye bolt bracket. When used, install bracket 6" to 12" below weatherhead.

Texas Department of Transportation
Traffic Operations Division

ELECTRICAL DETAILS- SERVICE SUPPORT TYPES GC AND OC

ED(9)-03

© TxDOT April 1998

DN: TXDOT	CK: TXDOT	DW: TXDOT	CK: TXDOT

REVISIONS: 12-00, 3-03

CONT	SECT	JOB	HIGHWAY
2452	01	043	SH 151

DIST	COUNTY	SHEET NO.
SA	BEXAR	318

DISCLAIMER: The use of this standard is governed by the "Texas Engineering Practice Act". No warranty of any kind is made by TxDOT for any purpose whatsoever. TxDOT assumes no responsibility for the conversion of this standard to other formats or for incorrect results or damages resulting from its use.

p:\4760\10-0129\cad\standard\51std_sig10.dgn 2/21/2011 7:05:20 PM mwmidkiff

I. DUCT CABLE

A. Duct cable shall be placed by the open trench method at a minimum depth of 18 inches. Bends in duct cable shall be made in the manner recommended by the manufacturer; minimum bending radius shall be 20 inches for 1 1/2 inch duct and 26 inches for 2 inch duct. Unless otherwise approved by the Engineer in writing, duct cable shall be 2 inch diameter. Handling of duct cable reels and installation of duct shall be as recommended by the manufacturer. Duct for duct cable is designed as a conduit system and shall be considered as such in NEC interpretations. Conductors shall not be spliced within a duct. Duct entering a ground box or foundation shall be coupled to a RMC elbow.

B. Duct cable shall have factory installed conductors. AWG size of electrical conductors shall be as called for in the plans or as required by the National Electrical Code. Conduit bid as High Density Polyethylene (HDPE) conduit shall meet the requirements of duct cable except that the conduit shall be supplied without factory installed conductors. HDPE conduit may be substituted for duct cable. After HDPE conduit is installed, conductors shall be installed. AWG size of electrical conductors shall be as called for in the plans.

C. Duct cable shall be extended through conduit casings in one continuous length without connection to the casing.

D. After duct cable has been installed, a pull test will be made on conductors. If conductors cannot be freely pulled, Contractor shall replace or otherwise adjust installation to free up the conductors. Duct cable ends shall be sealed with foam electrical conduit sealant or with heat-shrinking material after pull test is completed.

E. Sufficient clearance shall be left between each conduit ell so the bonding bushings may be correctly installed. Conduit cover is shown as 18 inches minimum, where run under a road, the minimum cover requirement is 24 inches.

F. All duct splices shall be by means of UL listed fittings, threaded duct with PVC threaded connector or UL listed tiewrap fitting or central Fusamatic electrically heated fusing conduit coupling installed in accordance with the manufacturer's instructions and approved by the Engineer. Glue on connectors, water pipefittings and heat shrink tubing splices will not be allowed.

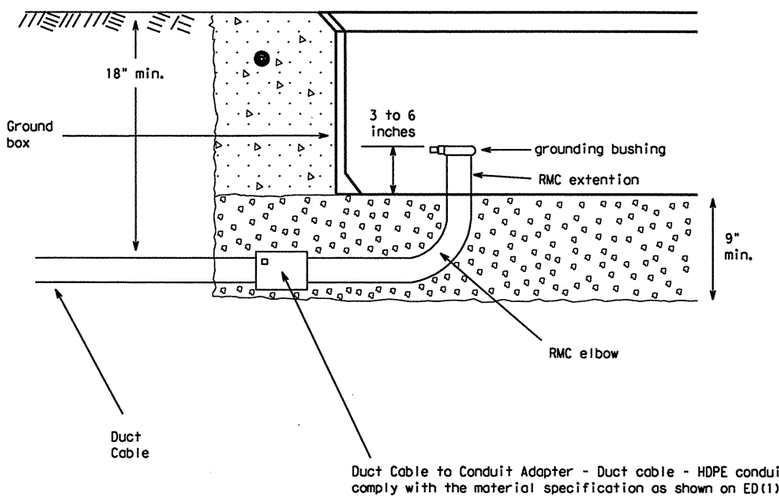

When the upper end of an RMC Ell does not enter the ground box, it may be extended with a Sch-40 PVC conduit nipple and bell end, provided there is 18" of cover over all parts of the elbow. If not, a rigid extension and ground bushing is required.

Gravel bed is to be a min, of 9 inches deep, placed under and not in the ground box. Gravel shall not encroach into the interior of the box.

DUCT CABLE AT GROUND BOX

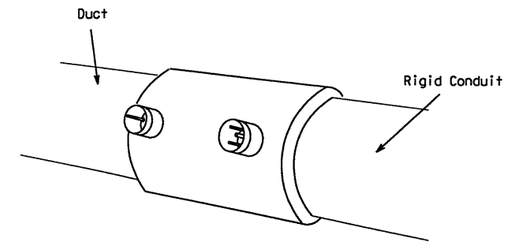

Central Fuseamatic
Electrically Heated Fusing
Conduit Coupling

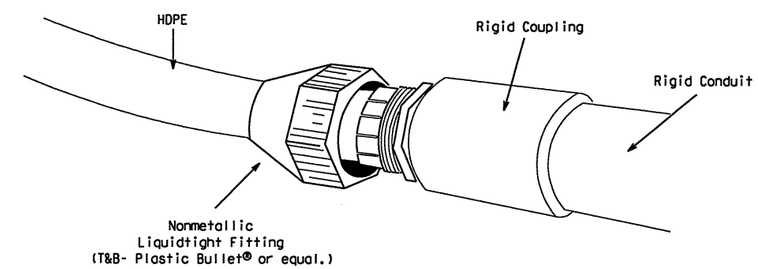

EXAMPLES OF PROPER CONNECTIONS

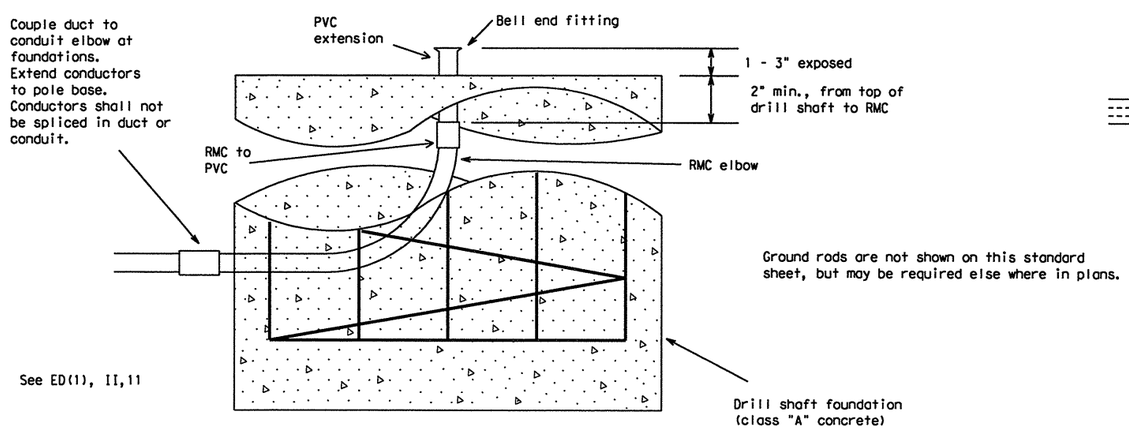

See ED(1), II,11

Ground rods are not shown on this standard sheet, but may be required else where in plans.

DUCT CABLE AT FOUNDATION

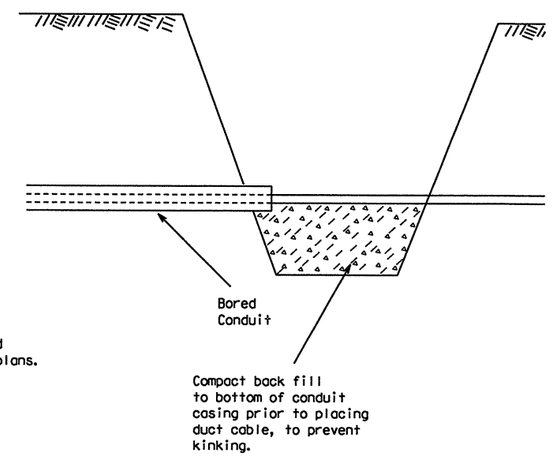

BORE PIT DETAIL

Texas Department of Transportation
Traffic Operations Division

ELECTRICAL DETAILS- DUCT CABLE

ED(10)-03

©TxDOT April 1998

REVISIONS	DN: TXDOT	CK: TXDOT	DW: TXDOT	CK: TXDOT
12-00 3-03	CONT	SECT	JOB	HIGHWAY
	2452	01	043	SH 151
	DIST		COUNTY	SHEET NO.
	SA		BEXAR	319

DISCLAIMER: The use of this standard is governed by the "Texas Engineering Practice Act". No warranty of any kind is made by TxDOT for any purpose whatsoever. TxDOT assumes no responsibility for the conversion of this standard to other formats or for incorrect results or damages resulting from its use.

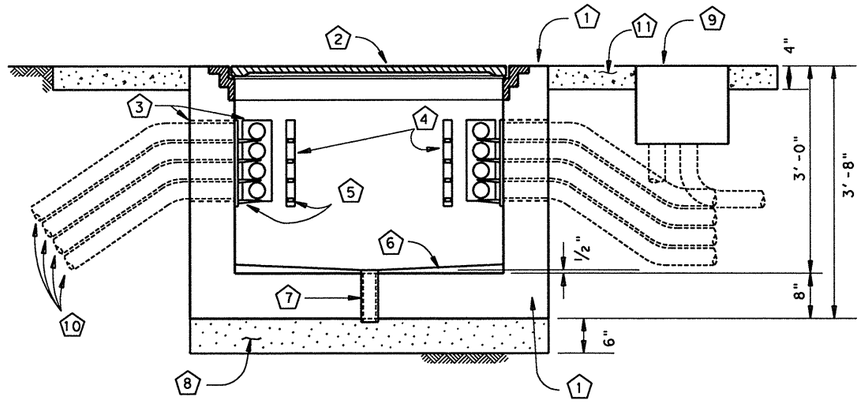

TYPICAL VERTICAL SECTION

1. Concrete ground box Type J - shall be 48" by 48" inside dimension and shall have AASHTO HS 20 wheel loading structural design. Fabricator shall submit shop drawings sealed by a Texas Licensed Structural Engineer. Shop drawings and calculations shall be for the box and lid as a unit.
2. Lid and ring shall be cast from Gray Iron in accordance with AASHTO M306, and shall be suitable for HS 20 loading or better. Proof-load testing certification in accordance with AASHTO M 306 shall be submitted. Lid shall have type T hinges and type G handles, and shall have a safety device to prevent accidental closing once the lid has been opened. Lid shall be cast with "TxDOT CONNUMICATIONS" in one inch lettering on top. Lid and ring shall be supplied together, and shall have no sharp edges. Shop drawings shall be submitted. (Neenah Foundry R-6662-TH, or equal.)
3. 18" by 9" knockout in concrete
4. Cable rack - Joslyn J5124, Chance C203-1124 or equivalent
5. Cable rach hooks - Joslyn J5131A, Chance C203-1131 or equivalent
6. Concrete drain invert, ½" pitch from center to walls
7. 3" drain
8. Filter material - Grade 3 aggregate or finer. See ITEM 302
9. RPM ground box, as called for in layouts, for electrical power conductors and traffic signal cables. See ED(3) for ground box details
10. Conduits (See layouts for number, details, specifications, and sizes)
11. Concrete riprap apron, Bid as ITEM 432. 1 cubic yard minimum

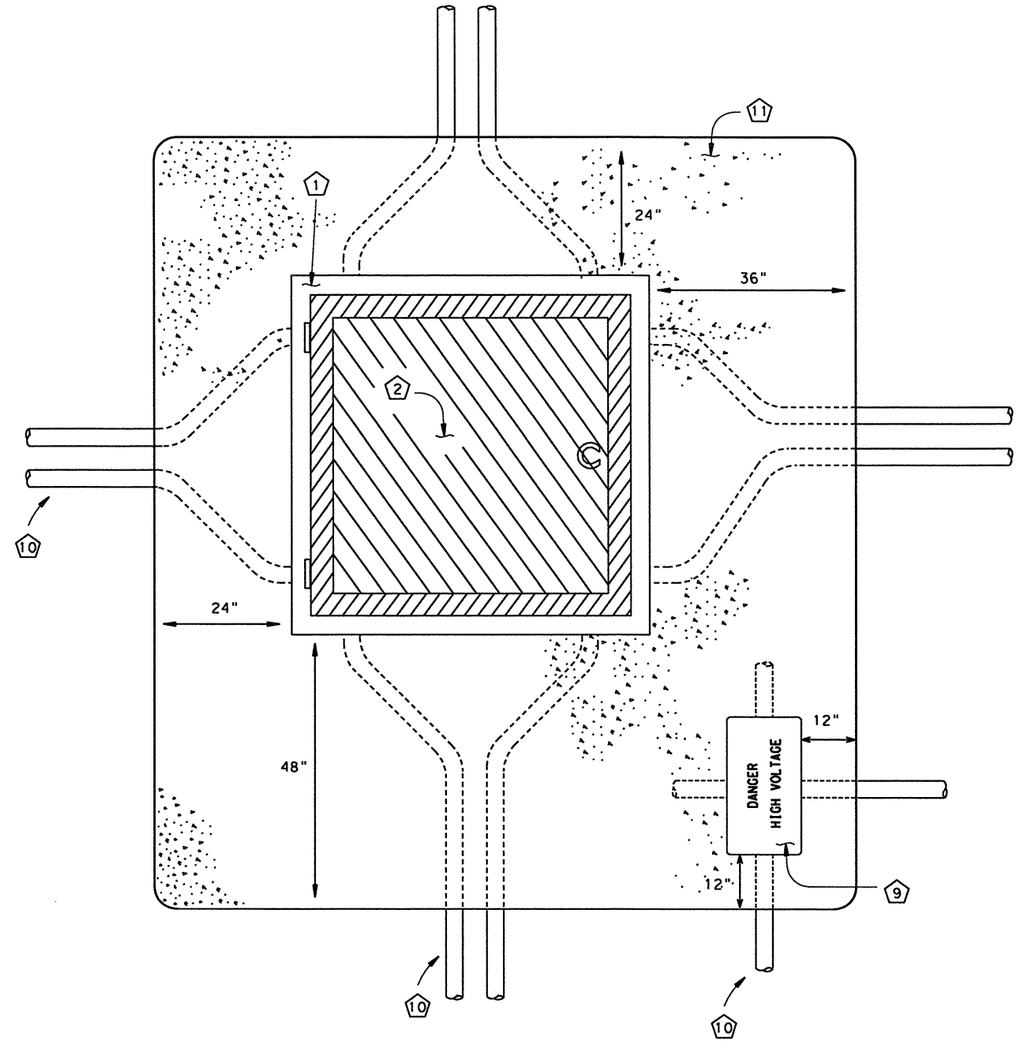

TYPICAL PLAN VIEW

GENERAL NOTES

1) Illumination, traffic signal and other conductors carrying full voltages (50 volts or greater) shall not enter the communications ground box, but shall be run into an adjacent RPM ground box, as shown in the detail.
2) Conductors in the Type J ground box shall be laid on the racks and secured in place with plastic ties. At no time shall any conductor be run through the center of the box. Contractor shall arrange conduit runs so cables shall enter and exit the box without violating the required bend radius or running throught the center of the box.
3) Riprap shown is the minimum required. Riprap shall extend to protect all conduits with less than the minimum allowed ground cover.
4) Conduits shall not extend inside the box more than 1", including the required bell end fitting or bushing. Conduits shall be securely grounted in place with Portland cement completely filling the knockout window around the conduits.
5) Rigrap and boxes shall be cast flat with a maximum slope of 0.25% (3" over 10').
6) Payment - concrete ground box Type J shall be bid as ITEM 628. RPM ground box and riprap shall be bid separately.

Texas Department of Transportation
Traffic Operations Division

CONCRETE GROUND BOX (TYPE J) FOR TRAFFIC MANAGEMENT SYSTEMS

ED(11)-03

© TxDOT July 2000

REVISIONS	DN: TXDOT	CK: TXDOT	DW: TXDOT	CK: TXDOT
9-00 12-00 3-03	CONT	SECT	JOB	HIGHWAY
	2452	01	043	SH 151
	DIST		COUNTY	SHEET NO.
	SA		BEXAR	320

DISCLAIMER: The use of this standard is governed by the "Texas Engineering Practice Act". No warranty of any kind is made by TxDOT for any purpose whatsoever. TxDOT assumes no responsibility for the conversion of this standard to other formats or for incorrect results or damages resulting from its use.

p:\4760\0-0129\dcd "standard\5lstd_sig12.dgn 2/21/2011 7:05:22 PM mwmldatt1t

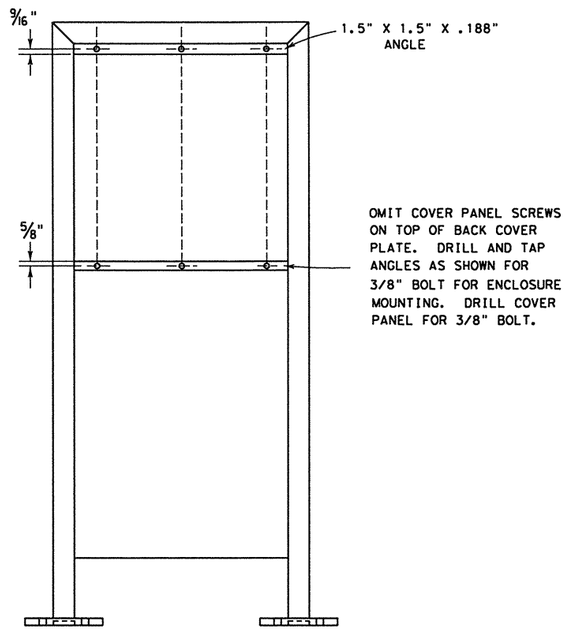

BACK ELEVATION VIEW

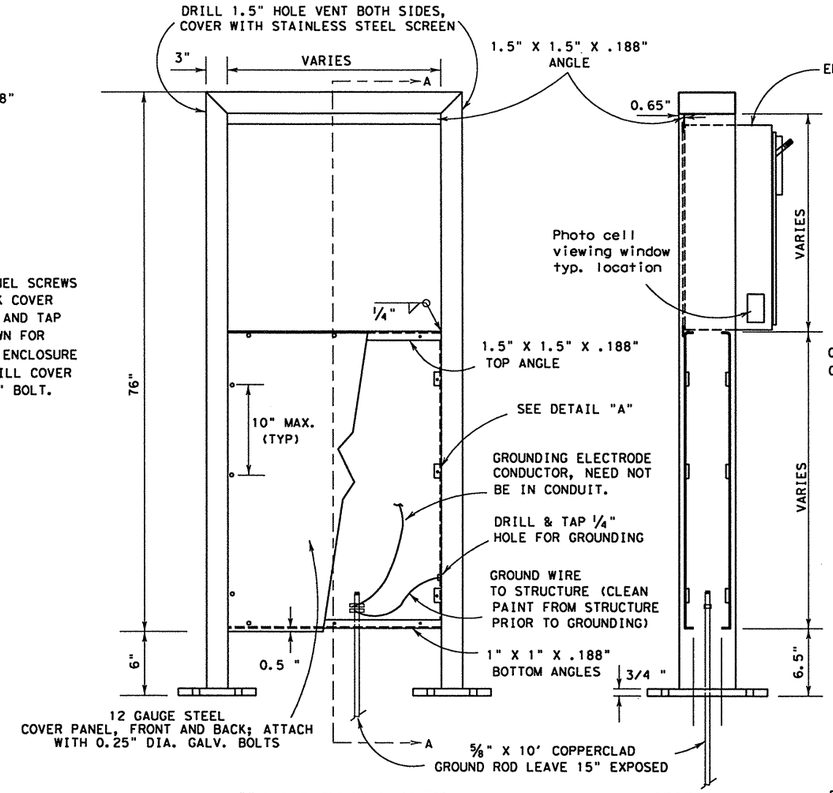

FRONT ELEVATION VIEW

SECTION A-A

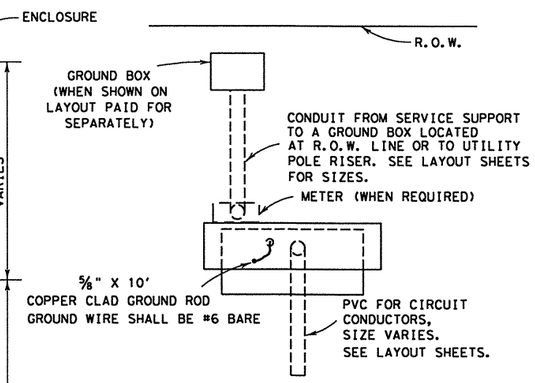

PLAN VIEW

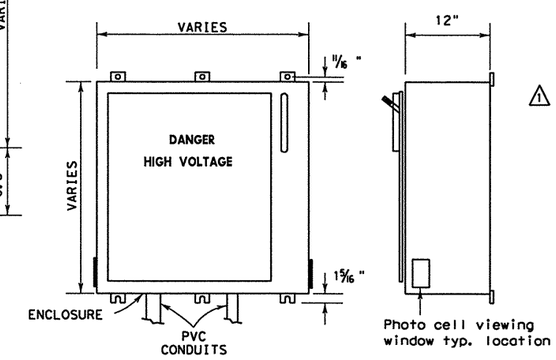

FRONT

RIGHT SIDE

ENCLOSURE

GENERAL NOTES:

1. Structure shall be designed in accordance with latest issue of AASHTO "STANDARD SPECIFICATIONS FOR STRUCTURAL SUPPORTS FOR HIGHWAY SIGNS, LUMINAIRES AND TRAFFIC SIGNALS." Structures shall be designed for 80 mph wind load with 1.3 gust factor. Shop drawings shall include ASTM material designations. Shop drawings shall be submitted for the electrical service support in accordance with Item 441, "STEEL STRUCTURES." Catalog cut sheets shall be submitted for the enclosure and equipment.
2. The structure shall be galvanized. Twelve gauge sheet covers and enclosure may be made from pre-galvanized sheeting. When shown elsewhere on the plans, structure and outside of enclosure may be painted in lieu of galvanizing.
3. Structure mounting dimensions may vary to match enclosure provided.
4. All conduit and conductors attached to the electrical service and within 12" of the electrical service will not be paid for directly, but shall be subsidiary to the electrical service. All conduit and conductors from the utility company pole to a point 12" from the electrical service, including conduit and conductors required for the utility pole riser, when furnished by the Contractor, will be paid for separately.
5. All conduits entering enclosures from underground to be sealed. Silicone will not be allowed.
6. All PVC conduits to be fitted with a bell end or bushing.
7. Support structure to be bonded to the ground rod using a #6 AWG Copper Bonding jumper to be terminated with a listed eyelet type connector connected to a 1/4-20 SS machine screw-bolt. Sheet metal screws will not be allowed for bonding. All threaded bonding connections shall be made up wrench tight. All non- conductive materials to be removed from contact surfaces.
8. Service enclosures to be labeled and steciled see ED(5) VIII C.
9. Ground rod clamp to be UL listed for direct burial. △1
10. Photo cell viewing window location on each side of the service enclosure to be clear of obstructure and provide a clear line of sight view and allow for the proper light level sensing by the photo cell.
11. Liquidtight flexible metal conduit may not be used on type RT(U) service supports.

STRUCTURE DATA	
TUBULAR POLE MEMBER SIZE	ANCHOR BOLTS DIA. X LENGTH X HOOK
8" X 3" X 3/16"	5/8" X 16" X 4"

COMPONENT	ASTM
TUBING MEMBERS	A500 GRADE A
BASE PLATES	A36
ANCHOR BOLTS	A307 or A36

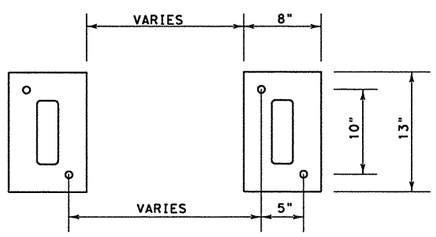

BASE PLAN VIEW

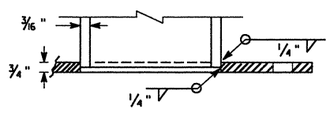

BOTTOM OF POLE

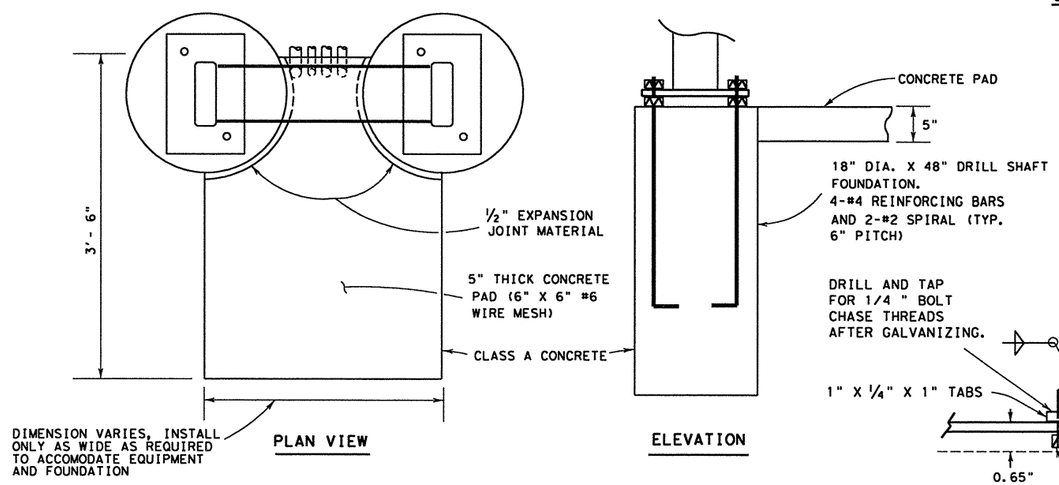

PLAN VIEW

ELEVATION

FOUNDATION

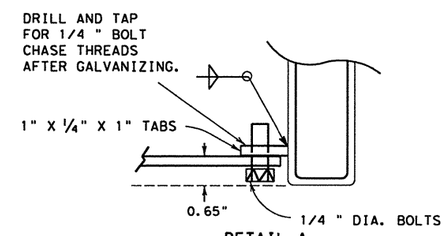

DETAIL A

5/03 Revision

△1 Revised notes.

Texas Department of Transportation
Traffic Operations Division

ELECTRICAL DETAILS- ELECTRICAL SERVICE SUPPORT TYPE RT (U)

ED(12)-03

© TxDOT January 1992

REVISIONS: 4-98, 12-00, 3-03, 5-03

DN: TXDOT	CK: TXDOT	DW: TXDOT	CK: TXDOT
CONT	SECT	JOB	HIGHWAY
2452	01	043	SH 151
DIST		COUNTY	SHEET NO.
SA		BEXAR	321

DISCLAIMER: The use of this standard is governed by the "Texas Engineering Practice Act". No warranty of any kind is made by TxDOT for any purpose whatsoever. TxDOT assumes no responsibility for the conversion of this standard to other formats or for incorrect results or damages resulting from its use.

p:\4760\0-0129\cad\standard\15std_sig3.dgn 2/21/2011 1:05:23 PM mwmtakit1

GROUND BOX - Type - Battery Box

A. MATERIALS

1. Battery box ground boxes shall be constructed such that it will be possible to install and accomodate up to 4 batteries measuring 8" x 13.5" x 10" (W x L x D).
2. All battery box ground boxes and covers shall be permanently marked either by impress or by permanent ink, with manufacturer's model number and manufacturer's name or logo.
3. Covers shall be bolted down, and bolt holes in the box shall be arranged to drain dirt.
4. Battery box ground boxes shall meet the following requirements:
   a. Battery box cover and cover ring will be manufactured from polymer concrete reinforced with continuous strands of woven or stitched borosilicate fiberglass cloth. The polymer concrete shall be made from catalyzed polyester resin, sand and aggregate, and shall have a minimum compressive strength of 11,000 psi. Polymer concrete containing chopped fiberglass or fiberglass reinforced plastic is not acceptable.
   b. Battery box ground box walls will be manufactured from fiberglass reinforced plastic reinforced with continuos strands of woven or stitched borosilicate fiberglass cloth. The fiberglass reinforced plastic shall be made from catalyzed polyester resin, lightweight filler and reinforced with woven roving and shall have a minimum compressive strength of 7,500 psi.
   c. Minimum inside dimensions shall be at least as follows (width x length x depth): Battery box shall be at least 15 ¼ inches x 28 ¼ inches x 14 ½ inches.
   d. Bottom edge of box or extension shall be footed with a minimum 1½ inch flange.
   e. Battery ground boxes shall withstand 600 lbs. per sq. ft. applied over the entire sidewall with less than ¼ inch deflection per foot length of box. Ground boxes and covers shall withstand a test loading of 20,000 lbs. over a 10 inch by 20 inch area centered on the cover with less than ½ inch deflection. Battery ground boxes and covers shall meet Western Underground Standards 3.6. Manufacturer shall supply certification by an independent laboratory or sealed by a Texas-Licensed Professional Engineer.
   f. Covers shall be 2 inch thick polymer concrete. All hardware shall be stainless steel. Cover shall be secured with two 1/2 inch stainless steel bolts. Bolts shall be self-retaining and shall withstand a minimum of 70 ft-lbs. torque and shall have a minimum 750 lbs. straight pull out strength. Nuts shall be floating and shall provide a minimum of 1/2 inch movement from the center of the nut. Covers shall be skid resistant, minimum 0.5 coefficient of friction. Covers shall be interchangeable between manufacturers and shall conform to the dimensions shown herein. Unless otherwise approved by the Engineer, cover shall be legibly labeled, "Traffic Signals Danger High Voltage" in minimum 1 inch letters.
   g. The battery box shall be supplied with predrilled holes to accept ⅜ inch stainless steel rods. The holes shall be installed 1 ½ inches (+/- ¼ inches) above the bottom edge of the box along the length of the box at 3 ½ inch centers beginning 4 ½ inches from the edge of the box.
   h. A minimum of seven ⅜ inch stainless steel rods threaded on both ends shall come equipped to be inserted in the predrilled holes to serve as a rack sufficient to accommodate up to four batteries. The rods shall be secured in place utilizing ⅜" stainless steel (s.s.) nuts and ⅜" X 1" s.s. flat washers.
   i. Ground boxes of the type specified above shall meet the requirements shown above. The Contractor will be permitted to furnish like materials of any manufacturer provided they are of equal quality and comply with the specifications.
   j. Two ⅜" plastic sheets measuring a nominal 6" x 24" shall be supplied which are to be placed on the secured rods upon which the batteries (supplied by others) are to be set.
   k. A minimum of four battery "bell jars" and respective tie down straps are to be supplied. These bell jars are inverted over the batteries and strapped to the batteries.

B. CONSTRUCTION METHODS

1. Battery box ground boxes shall be set on a 9 inch (minimum) bed of coarse No. 1 aggregate as defined by Item 421. Gravel shall be in place prior to setting box and conduits shall be capped. Any gravel or dirt in conduit shall be removed.
2. Construction of an apron encasing the battery box ground box including concrete and reinforcing steel is required and shall not be paid for directly but shall be subsidiary to the ground box. Reinforcing steel may be field bent. Concrete for aprons shall be considered miscellaneous concrete for testing purposes. Aprons shall be cast in place.
3. Any holes cut into the sidewall of battery box ground boxes shall be accomplished using a round hole saw or other method approved by the Engineer.

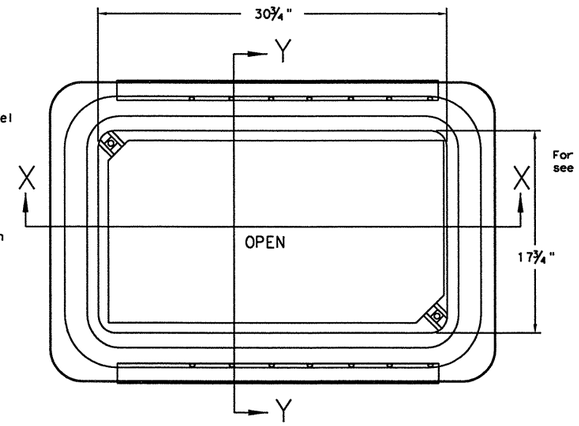

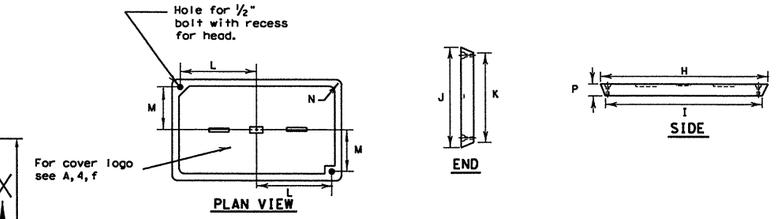

GROUND BOX COVER

GROUND BOX COVER DIMENSIONS								
BOX	DIMENSIONS (INCHES)							
SIZE	H	I	J	K	L	M	N	P
Battery box	30 ½	30 ¼	17 ½	17 ¼	13 ¼	6 ¾	1 ⅜	2

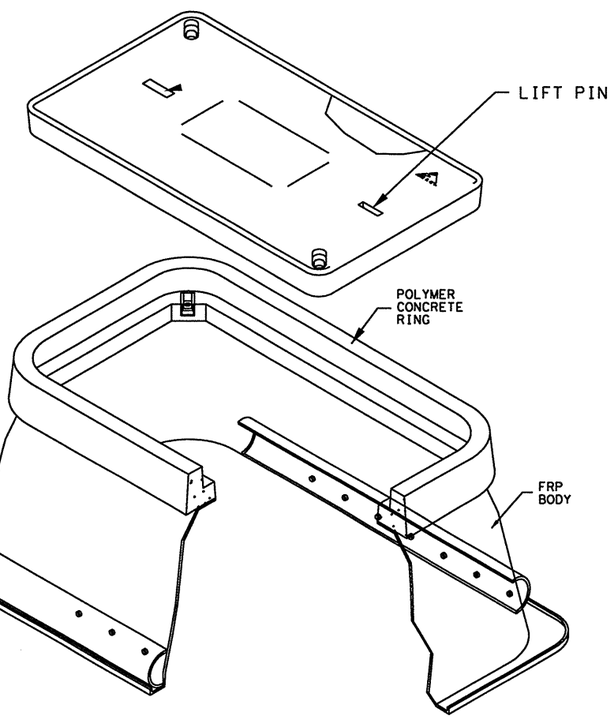

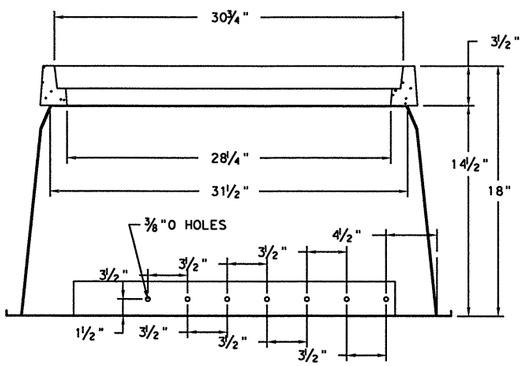

SECTION X-X

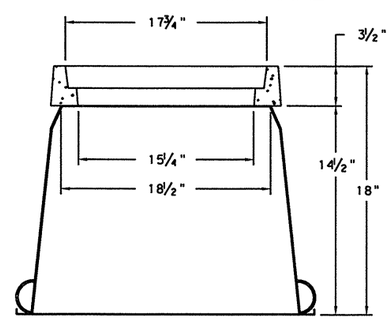

SECTION Y-Y

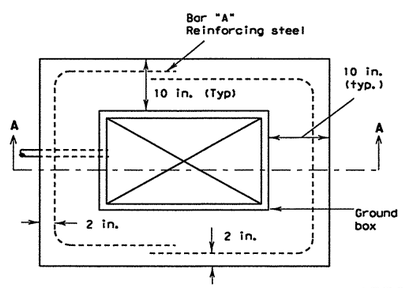

PLAN VIEW

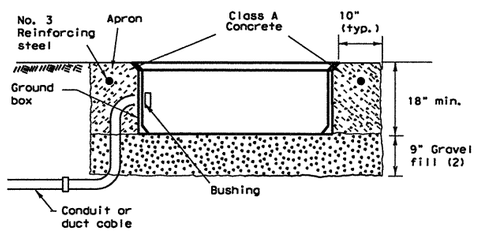

SECTION A - A

APRON FOR GROUND BOXES

(Where required)

(1) Place gravel "under" the box. not "in" the box. Gravel should not encroach on the interior volume of the box.
(2) Install bushing on the upper end of all ells.
(3) All conduits shall be installed in a neat and workmanlike manner.

Texas Department of Transportation
Traffic Operations Division

ELECTRICAL DETAILS GROUND BOXES/ BATTERY BOX

ED(13)-03

© TxDOT May 2003

REVISIONS

DN: TXDOT	CK: TXDOT	DW: TXDOT	CK: TXDOT
CONT	SECT	JOB	HIGHWAY
2452	01	043	SH 151
DIST		COUNTY	SHEET NO.
SA		BEXAR	322

P:\4750\NO\0129\cad standard\Sld_sfp8.dgn 2/22/2011 3:46:49 PM PRHAHN

DISCLAIMER: The use of this standard is governed by the "Texas Engineering Practice Act". No warranty of any kind is made by TxDOT for any purpose whatsoever. TxDOT assumes no responsibility for the conversion of this standard to other formats or for incorrect results or damages resulting from its use.

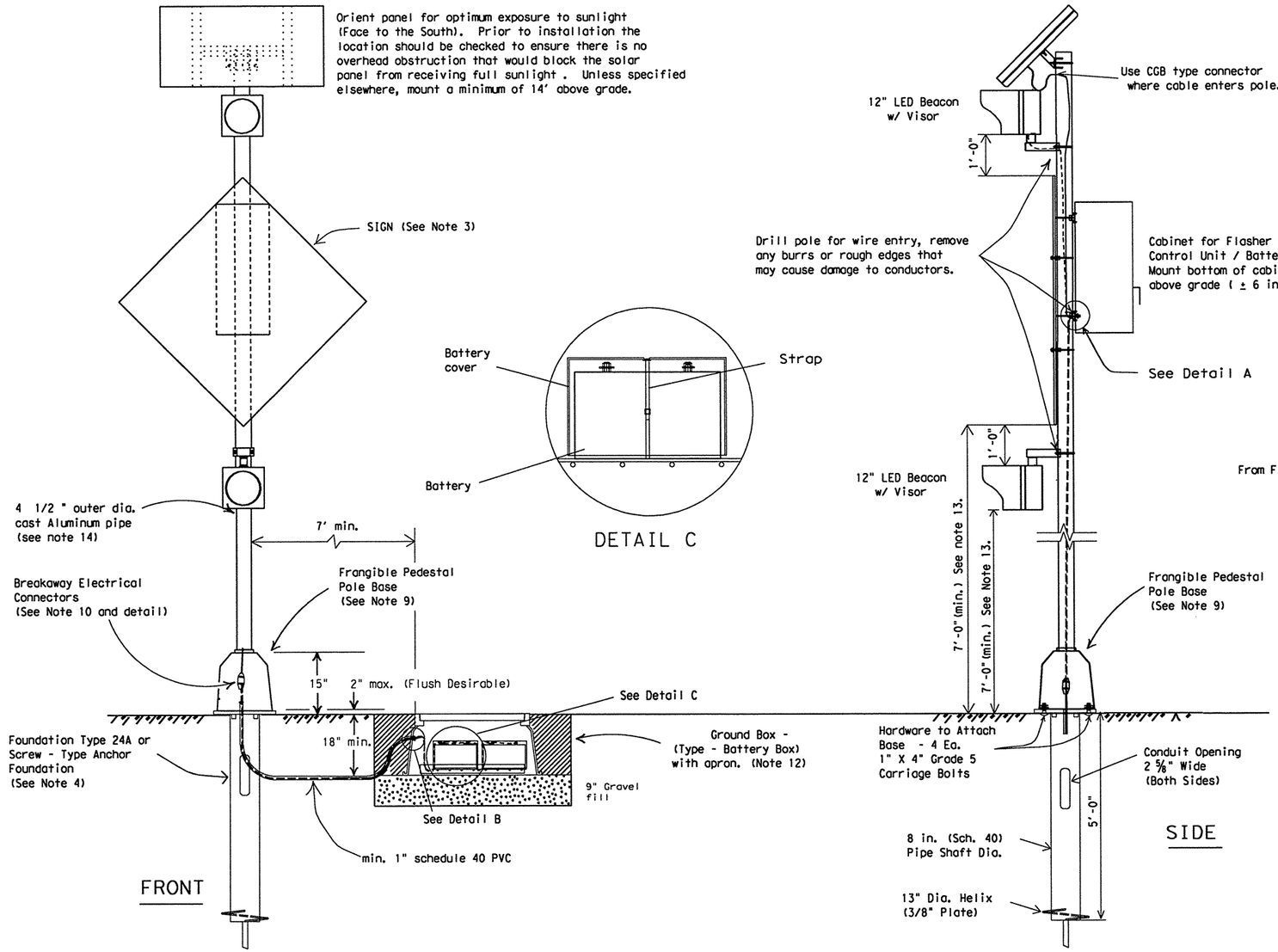

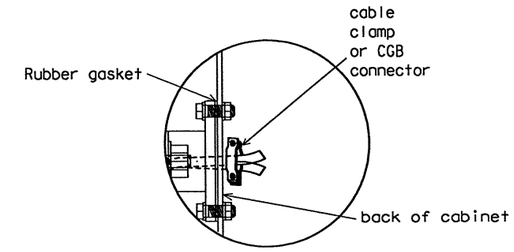

DETAIL A

Pull conductors to remove slack in run between cabinet and ground box. Clamp cable at conduit end in ground box and in cabinet at entry as shown.

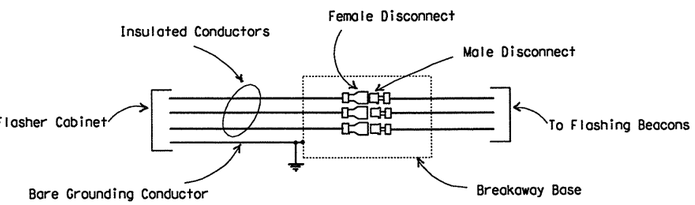

BREAKAWAY ELECTRICAL CONNECTORS

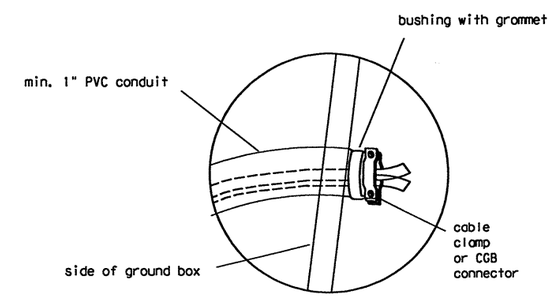

DETAIL B

NOTES:

1. Details show a typical warning sign with two flashing beacon heads, other arrangements are possible. When only one beacon is required, install the upper beacon.
2. See Item 685, "Roadside Flashing Beacon Assemblies" for further requirements.
3. See SMD standard sheets for lateral and vertical clearances and sign mounting details. Install signs as shown on the sign layout sheets.
4. Use either a Screw-In Type Anchor Foundation or 24 in. Drill Shaft Foundation as shown elsewhere in the plans. When plans require 24 in. Drill Shaft Foundation, see standard sheet TS-FD. Install the Screw-In Type Anchor Foundation as shown. On slope, install one edge at ground level.
5. When used, provide one of the following Screw-In Type Anchor foundations:
   A. B. Chance Co., model C11242NG4VP; Component Products, Inc., model CPI-SLSF-5TX; Pelco Products, Inc., models PB-5359, PB-5360 or PB 5375; or Approved equal.
6. Use materials specifically designed for attaching cabinets, beacon heads, solar panels, etc., to poles.
7. Install beacon heads as shown here, as shown elsewhere on the plans, or as directed. Use hardware specifically design for mounting beacon heads on poles.
8. Conduit in foundation and within 6 in. of foundation is subsidiary to the Item 685, "Roadside Flashing Beacon Assemblies."
9. Per manufacturer's recommendations, engage all threads on the pedestal pole base and pipe unless the pipe is fully seated into base. In high winds, use a pole and base collar assembly to add strength and prevent loosening on connection.
10. Provide non-fused watertight breakaway electrical connectors for breakaway poles. (Bussmann HET, Littelfuse LET, Ferraz-Shawmut FEBN, or approved equal).
11. Install the batteries in a Battery Box. Place the batteries on a 3/16 " thick plastic sheet and connect together. Place a plastic cover (Battery Bell Jar) over the top of each battery and secure the battery bell jar to the battery with a strap. The batteries, bell jars, straps and 3/16 " plastic sheet are subsidiary to the Item 685, "Roadside Flashing Beacon Assemblies." When required, install batteries in the flasher cabinet. Provide the number of batteries as required on the plans. Wire batteries according to manufacturers recommendations.
12. See standard sheet ED (13) for battery box details.
13. Provide clearance as shown above the sidewalk or pavement grade at the edge of the road. When a bottom beacon is not used, mount the sign at least 7 ft. above the sidewalk or pavement grade at the edge of the road.
14. Unless otherwise shown on the plans, pole shaft shall be one piece, schedule 40 Aluminum pipe, ASTM B429 or B221 (Alloy 6061-T6 only). Aluminum conduit will not develop the necessary strength and will not be allowed.

Texas Department of Transportation
Traffic Operations Division

SOLAR POWERED ROADSIDE FLASHING BEACON ASSEMBLY DETAILS

SPRFBA(1)-04

© TxDOT May 2003

DN: TXDOT	CK: TXDOT	DW: TXDOT	CK: TXDOT

REVISIONS
12-04

CONT	SECT	JOB	HIGHWAY
2452	01	043	SH 151

DIST	COUNTY	SHEET NO.
SA	BEXAR	323

DATE:
FILE:

DISCLAIMER: The use of this standard is governed by the "Texas Engineering Practice Act". No warranty of any kind is made by TxDOT for any purpose whatsoever. TxDOT assumes no responsibility for the conversion of this standard to other formats or for incorrect results or damages resulting from its use.

Arm Length	ROUND POLES					POLYGONAL POLES					Foundation Type
	D_B	D_{19}	D_{24}	D_{30}	① thk	D_B	D_{19}	D_{24}	D_{30}	① thk	
ft.	in.	in.	in.	in.	in.	in.	in.	in.	in.	in.	
20	10.5	7.8	7.1	6.3	.179	11.5	8.5	7.7	6.8	.179	30-A
24	11.0	8.3	7.6	6.8	.179	12.0	9.0	8.2	7.3	.179	30-A
28	11.5	8.8	8.1	7.3	.179	12.5	9.5	8.7	7.8	.179	30-A
32	12.5	9.8	9.1	8.3	.179	12.0	9.0	8.2	7.3	.239	30-A
36	12.0	9.3	8.6	7.8	.239	12.5	9.5	8.7	7.8	.239	36-A
40	12.0	9.3	8.6	7.8	.239	13.5	10.5	9.7	8.8	.239	36-A
44	12.5	9.8	9.1	8.3	.239	14.0	11.0	10.2	9.3	.239	36-A
48	13.0	10.3	9.6	8.8	.239	15.0	12.0	11.2	10.3	.239	36-A

Arm Length	ROUND ARMS					POLYGONAL ARMS				
	L_1	D_1	D_2	① thk	Rise	L_1	D_1	② D_2	① thk	Rise
ft.	ft.	in.	in.	in.		ft.	in.	in.	in.	
20	19.1	6.5	3.8	.179	1'-9"	19.1	7.0	3.5	.179	1'-8"
24	23.1	7.5	4.3	.179	1'-10"	23.1	7.5	3.5	.179	1'-9"
28	27.1	8.0	4.2	.179	1'-11"	27.1	8.0	3.5	.179	1'-10"
32	31.0	9.0	4.7	.179	2'-1"	31.0	9.0	3.5	.179	2'-0"
36	35.0	9.5	4.6	.179	2'-4"	35.0	10.0	3.5	.179	2'-1"
40	39.0	9.5	4.1	.239	2'-8"	39.0	9.5	3.5	.239	2'-3"
44	43.0	10.0	4.1	.239	2'-11"	43.0	10.0	3.5	.239	2'-6"
48	47.0	10.5	4.1	.239	3'-4"	47.0	11.0	3.5	.239	2'-9"

D_B = Pole Base O.D.
D_{19} = Pole Top O.D. with no Luminaire and no ILSN
D_{24} = Pole Top O.D. with ILSN w/out Luminaire
D_{30} = Pole Top O.D. with Luminaire
D_1 = Arm Base O.D.
D_2 = Arm End O.D.
L_1 = Shaft Length
L = Nominal Arm Length

① Thickness shown are minimums, thicker materials may be used.

② D_2 may be increased by up to 1" for polygonal arms.

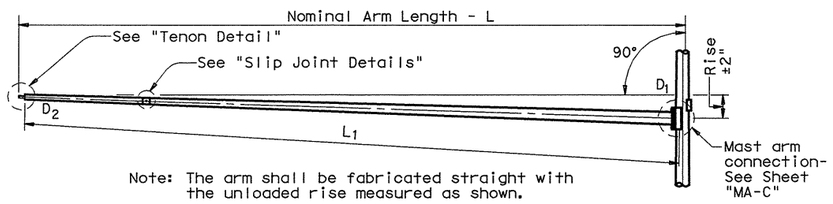

Note: The arm shall be fabricated straight with the unloaded rise measured as shown.

TRAFFIC SIGNAL ARM

(Fixed Mount)

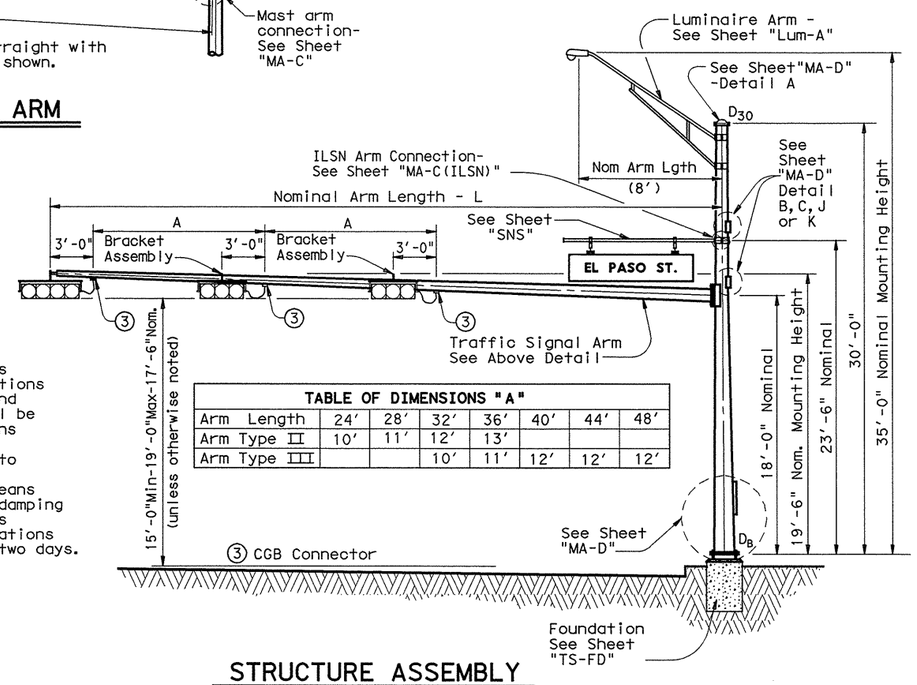

TABLE OF DIMENSIONS "A"							
Arm Length	24'	28'	32'	36'	40'	44'	48'
Arm Type II	10'	11'	12'	13'			
Arm Type III			10'	11'	12'	12'	12'

STRUCTURE ASSEMBLY

VIBRATION WARNING

Mast Arms of approximately 40' or longer are subject to possible harmonic vertical vibrations in light wind conditions due to unusual combinations of signal numbers, weights or positions, arm-wind orientation, and arm-pole stiffness. Arms shall be visually inspected in 5 to 20 mph wind conditions after signal head installation and, if vertical movements with a total excursion (max positive to max negative) of more than approximately 8" are observed at arm tip, damping devices or other means shall be fitted to the arm(s). The necessary damping device(s) or other remedial measures shall be as recommended by the fabricator. Excessive vibrations shall not be allowed to continue for more than two days.

4-14-11

STATE OF TEXAS
FEDERICO J. MENDOZA
63311
REGISTERED PROFESSIONAL ENGINEER

BROWN & GAY ENGINEERS, INC
TBPE FIRM REGISTRATION NO. 1046

SHIPPING PARTS LIST

Ship each pole with the following attached: enlarged hand hole, pole cap, fixed-arm connection bolts and washers and any additional hardware listed in the table.

Nominal Arm Length	30' Poles With Luminaire		24' Poles With ILSN		19' Poles With No Luminaire and No ILSN	
	Above hardware plus: One (or two if ILSN attached) small hand hole, clamp-on simplex		Above hardware plus one small hand hole		See note above	
ft	Designation	Quantity	Designation	Quantity	Designation	Quantity
20	20L-80		20S-80		20-80	
24	24L-80		24S-80		24-80	
28	28L-80		28S-80		28-80	
32	32L-80		32S-80		32-80	
36	36L-80		36S-80		36-80	
40	40L-80		40S-80		40-80	
44	44L-80	1	44S-80		44-80	
48	48L-80	2	48S-80		48-80	

Traffic Signal Arms (1 per Pole) Ship each arm with the listed equipment attached

Nominal Arm Length	Type I Arm (1 Signal)		Type II Arm (2 Signals)		Type III Arm (3 Signals)	
	1 CGB connector		1 Bracket Assembly and 2 CGB Connectors ④		2 Bracket Assemblies and 3 CGB Connectors ④	
ft	Designation	Quantity	Designation	Quantity	Designation	Quantity
20	20I-80					
24	24I-80		24II-80			
28	28I-80		28II-80			
32			32II-80		32III-80	
36			36II-80		36III-80	
40					40III-80	
44					44III-80	1
48					48III-80	2

Luminaire Arms (1 per 30' pole)

Nominal Arm Length	Quantity
8' Arm	3

④ Supply Option "A" unless otherwise noted

ILSN Arm (Max. 2 per pole) Ship with clamps, bolts and washers

Nominal Arm Length	Quantity
7' Arm	
9' Arm	

Anchor Bolt Assemblies (1 per pole)

Anchor Bolt Diameter	Anchor Bolt Length	Quantity
1 1/2"	3'-4"	
1 3/4"	3'-10"	3

Each anchor bolt assembly consists of the following: Top and Bottom templates, 4 anchor bolts, 8 nuts, 8 flat washers, 4 lock washers and 4 nut anchor devices (Type 2) per Standard Drawing "TS-FD".

Templates may be removed for shipment.

SHEET 1 OF 2

11/99 Revision

Changed to Facilitate new terminal strip enclosure

Texas Department of Transportation
Traffic Operations Division

TRAFFIC SIGNAL SUPPORT STRUCTURES

SINGLE MAST ARM ASSEMBLY

(80 MPH WIND ZONE)

SMA-80(1)-99

©TxDOT August 1996

DN: TXDOT	CK: TXDOT	DW: TXDOT	CK: TXDOT

REVISIONS	CONT	SECT	JOB	HIGHWAY
5-96	2452	01	043	SH 151
11-99	DIST		COUNTY	SHEET NO.
	SA		BEXAR	324

1224

DISCLAIMER: The use of this standard is governed by the "Texas Engineering Practice Act". No warranty of any kind is made by TxDOT for any purpose whatsoever. TxDOT assumes no responsibility for the conversion of this standard to other formats or for incorrect results or damages resulting from its use.

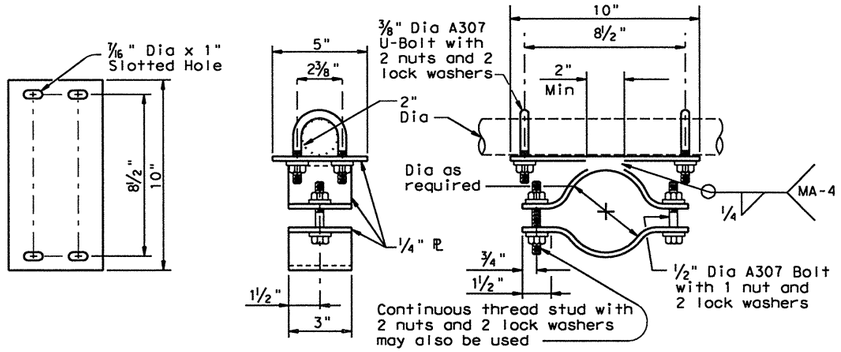

BRACKET ASSEMBLY DETAILS OPTION A

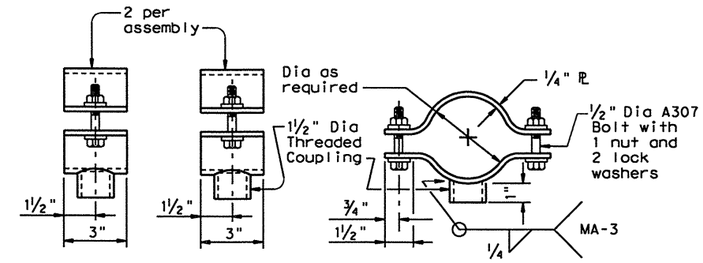

BRACKET ASSEMBLY DETAILS OPTION B

Stainless steel bands and cast bracket as in "Astro-Brac" with 1 1/2" Dia Threaded Coupling.

BRACKET ASSEMBLY OPTION C

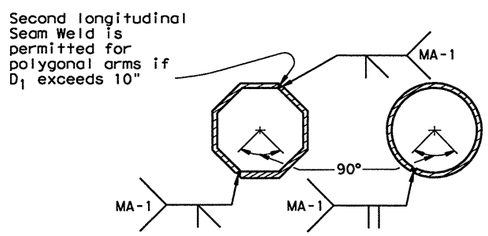

Longitudinal Seam Weld must be oriented within the lower 90° of the signal arm.

ARM WELD DETAIL

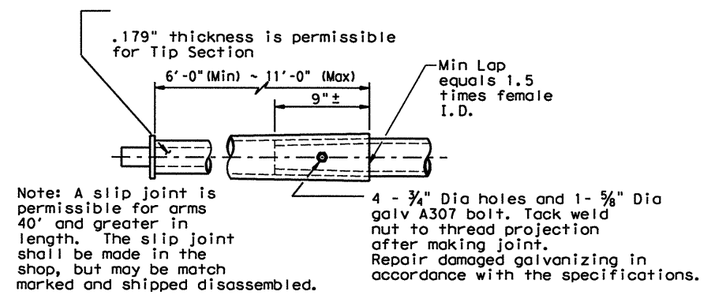

Note: A slip joint is permissible for arms 40' and greater in length. The slip joint shall be made in the shop, but may be match marked and shipped disassembled.

4 - 3/4" Dia holes and 1- 5/8" Dia galv A307 bolt. Tack weld nut to thread projection after making joint. Repair damaged galvanizing in accordance with the specifications.

SLIP JOINT DETAIL

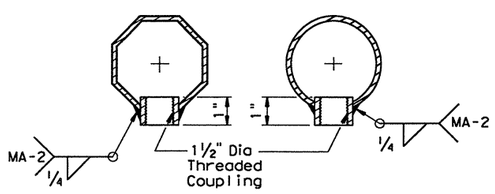

COUPLING DETAILS

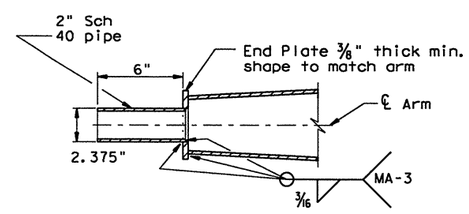

TENON DETAIL

GENERAL NOTES:

Design conforms to 1994 AASHTO Standard Specifications for Structural Supports for Highway Signs, Luminaires, and Traffic Signals and Interim Specifications thereto. Design Wind Speed equals 80 mph plus a 1.3 gust factor.

Poles are designed to support one 8'-0" luminaire arm, one 9'-0" internally lighted street name sign and one traffic signal arm with a length as tabulated. The specified luminaire load applied at the end of the luminaire arm equals 75 lbs vertical dead load plus the horizontal wind load on an effective projected area of 1.5 sq ft. The specified internally lighted street name sign load applied 4.5 ft from the centerline of the pole equals 85 lbs vertical dead load plus horizontal wind load on an effective projected area of 11.5 sq ft. The specified signal load applied at the end of the traffic signal arm equals 180 lbs vertical dead load plus the horizontal wind load on an effective projected area of 32.4 sq ft (actual area times drag coefficient).

See Standard Sheet "MA-D" for pole details, "MA-C" for traffic signal arm connection details, "MA-C (ILSN)" for internally lighted street name sign arm connection details, "LUM-A" for luminaire arm and connection details, "SNS" for internally lighted street name sign details, and "TS-FD" for anchor bolt and foundation details. See "MA-C" for material specifications.

Fabrication shall be in accordance with the Specifications and with the details, dimensions, and weld procedures shown herein. Weld references call for preapproved weld procedures which the Fabricator must obtain prior to fabrication. Miscellaneous welds which do not call for preapproved weld procedures are nevertheless subject to rejection for poor workmanship. Materials, fabrication tolerances, and shipping practices shall meet the requirements of this sheet and the Specifications.

Unless otherwise noted, all parts shall be galvanized in accordance with the Specifications.

Special design require submission of shop drawings in accordance with the item "Steel Structures".

Texas Department of Transportation
Traffic Operations Division

TRAFFIC SIGNAL SUPPORT STRUCTURES

SINGLE MAST ARM ASSEMBLY (80 MPH WIND ZONE)

SMA-80(2)-96

©TxDOT August 1995	DN: TXDOT	CK: TXDOT	DW: TXDOT	CK: TXDOT
REVISIONS	CONT	SECT	JOB	HIGHWAY
5-96	2452	01	043	SH 151
	DIST		COUNTY	SHEET NO.
	SA		BEXAR	325

DISCLAIMER: The use of this standard is governed by the "Texas Engineering Practice Act". No warranty of any kind is made by TxDOT for any purpose whatsoever. TxDOT assumes no responsibility for the conversion of this standard to other formats or for incorrect results or damages resulting from its use.

ARM SIZE D_1 in.	ARM SIZE ‡ in.	A in.	B in.	C in.	D in.	E in.	CONN BOLT DIA in.
6.5	.179	12	9	9	6	1 ¾	1
7.5	.179	13	9	10	6	1 ¾	1
8.0	.179	14	10	11	7	2	1 ¼
9.0	.179	16	11	13	8	2	1 ¼
9.5	.179	17	12	14	9	2	1 ¼
9.5	.239	18	12	15	9	2	1 ¼
10.0	.239	18	12	15	9	2	1 ¼
10.5	.239	18	13	15	10	3	1 ½
11.0	.239	18	13	15	10	3	1 ½

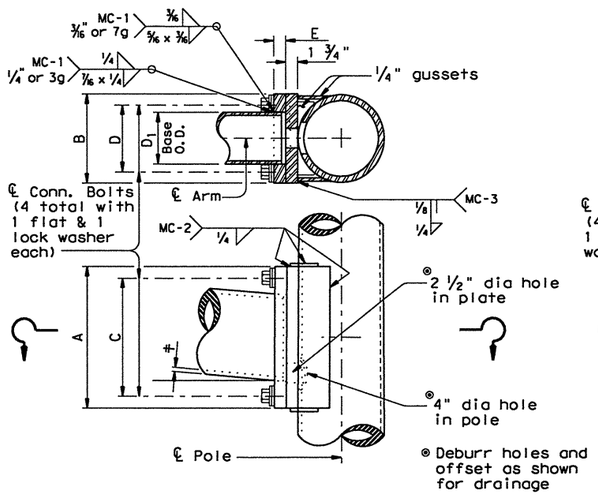

FIXED MOUNT DETAIL 1

ARM SIZE D_1 in.	ARM SIZE ‡ in.	A in.	B in.	C in.	D in.	E in.	CONN BOLT DIA in.
7.0	.179	11	11	8	8	1 ¾	1 ¼
7.5	.179	11	11	8	8	1 ¾	1 ¼
8.0	.179	11	11	8	8	2	1 ¼
9.0	.179	13	13	10	10	2	1 ¼
10.0	.179	13	13	10	10	2	1 ¼
9.5	.239	13	13	10	10	2	1 ¼
10.0	.239	14	14	11	11	2	1 ½
11.0	.239	14	14	11	11	3	1 ½
11.5	.239	14	14	11	11	3	1 ½

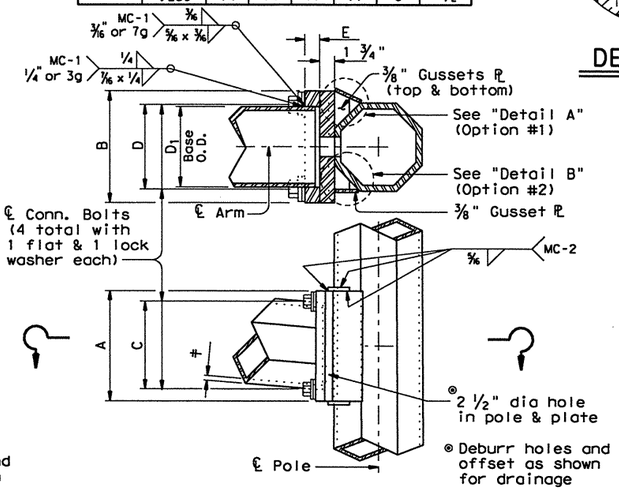

FIXED MOUNT DETAIL 2

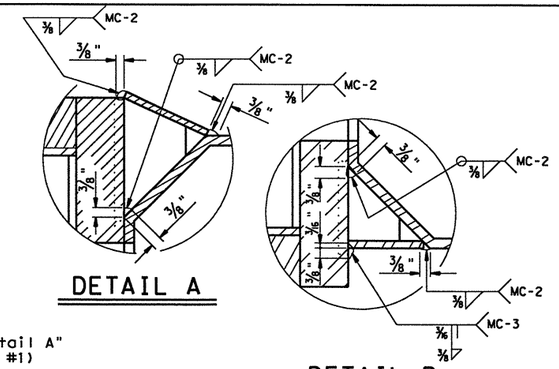

DETAIL A

DETAIL B

MATERIALS	
Round Shafts or Polygonal Shafts	ASTM A595 GR A, ASTM A570 GR 50, ASTM A607 GR 50, ASTM A572 GR 50 or A36M50
Plates (1)	ASTM A36 OR A572 GR 50 or A595(2) or A36M50
Connection Bolts	ASTM A325 except where noted
Pin Bolts	ASTM A325
Pipe	ASTM A53 GR A or B, or A501
Misc. Hardware	Galvanized steel or stainless steel or as noted

(1) Any of the materials listed for plates may be used where the drawings do not specify a particular Grade designation.

(2) If A595 material is used, it need not be cold worked to A595 requirments, but material must have 40 ksi minimum yield prior to fabrication.

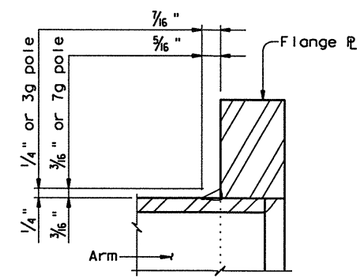

FIXED MOUNT ARM

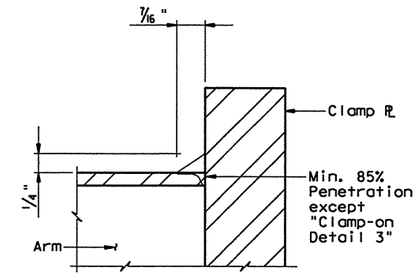

CLAMP-ON ARM

ARM BASE WELD DETAILS

ARM SIZE D_1 in.	ARM SIZE ‡ in.	A in.	F in.	CONN. BOLTS No. ea.	CONN. BOLTS Dia in.	PIN BOLTS No. ea.	PIN BOLTS Dia in.
6.5	.179	12	8	4	* 7/8	2	5/8
7.5	.179	14	8	4	1	2	5/8
8.0	.179	14	8	4	1	2	5/8
9.0	.179	16	10	4	1	2	5/8
9.5	.179	18	12	4	1 1/4	3	5/8
9.5	.239	18	12	4	1 1/4	3	5/8
10.0	.239	18	12	4	1 1/4	3	5/8

*1" Dia connection bolts are permissible

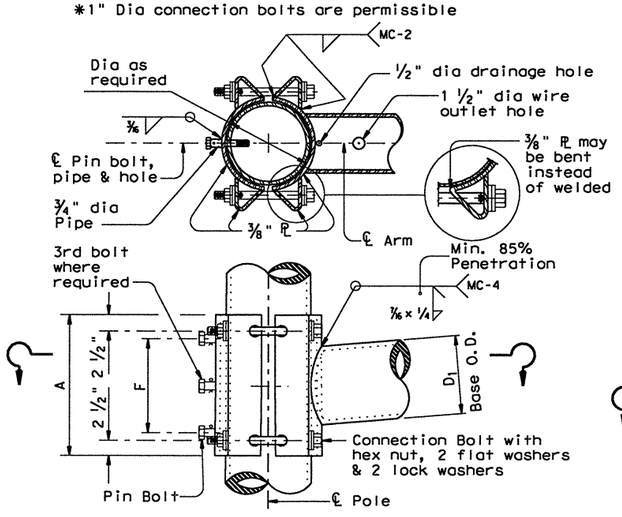

CLAMP-ON DETAIL 1

ARM SIZE D_1 in.	ARM SIZE ‡ in.	A in.	F in.	T in.	CONN. BOLTS No. ea.	CONN. BOLTS Dia in.	PIN BOLTS No. ea.	PIN BOLTS Dia in.
7.0	.179	12	8	3/4	4	3/4	2	5/8
7.5	.179	14	8	3/4	4	3/4	2	5/8
8.0	.179	14	8	3/4	4	3/4	2	5/8
9.0	.179	16	10	7/8	4	1	2	5/8
10.0	.179	18	10	7/8	4	1	2	5/8
9.5	.239	18	10	1	6	1	3	5/8
10.0	.239	18	10	1	6	1	3	5/8

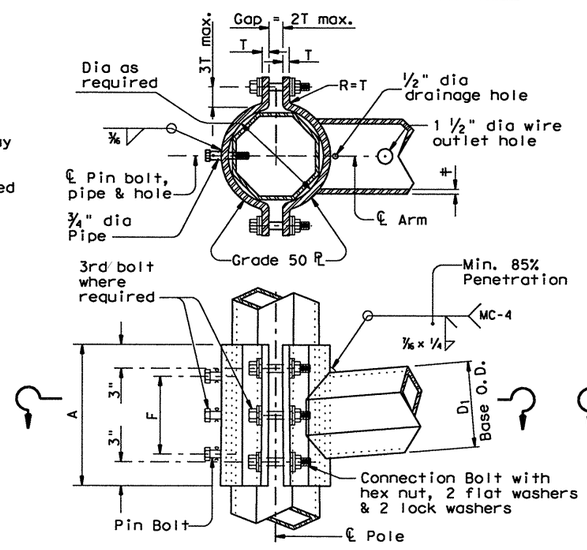

CLAMP-ON DETAIL 2

ARM SIZE D_1 in.	ARM SIZE ‡ in.	A in.	F in.	CONN. BOLTS No. ea.	CONN. BOLTS Dia in.	PIN BOLTS No. ea.	PIN BOLTS Dia in.
6.5	.179	12	8	4	1	2	5/8
7.5	.179	14	8	4	1	2	5/8
8.0	.179	14	8	4	1	2	5/8
9.0	.179	16	10	4	1	2	5/8
9.5	.179	18	12	6	1	3	5/8
9.5	.239	18	12	6	1	3	5/8
10.0	.239	18	12	6	1	3	5/8

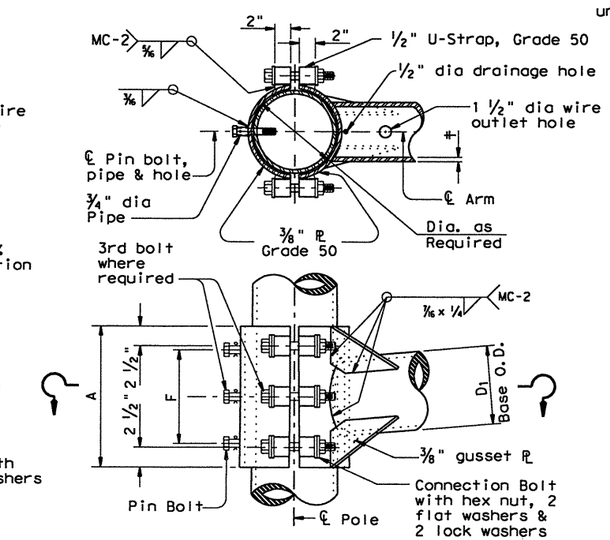

CLAMP-ON DETAIL 3

GENERAL NOTES:

Clamp-on details are used for the second arm on dual mast arm assemblies. A Maximum 1 1/2" wide vertical slotted hole may be cut in the front clamp plate to facilitate drainage during galvanizing. The slot shall be centered behind the arm and shall be no longer than the arm diameter minus 1"

Fixed mount details are used for single mast arm assemblies and for the first arm on dual mast arm assemblies.

Where duplicate parts occur on a detail, welds shown for one part shall apply to all similar parts on the detail.

Pin bolts are required to prevent rotation of clamp-on arms under design wind forces.

NOTE:

Pin bolts shall be A325 with threads excluded from the shear plane. Pin bolt and 3/4" dia pipe shall have 5/8" dia holes for a 1/8" dia galvanized cotter pin. Back clamp plate shall be furnished with a 3/4" dia hole for each pin bolt. An 11/16" dia hole for each pin bolt shall be field drilled through the pole after arm orientations have been approved by the Engineer.

Texas Department of Transportation
Traffic Operations Division

STANDARD ASSEMBLY FOR TRAFFIC SIGNAL SUPPORT STRUCTURES

MAST ARM CONNECTIONS

MA-C-09

©TxDOT August 1995

DN: TXDOT	CK: TXDOT	DW: TXDOT	CK: TXDOT

REVISIONS
5-96
5-09 Connection ℙ Thk E

CONT	SECT	JOB	HIGHWAY
2452	01	043	SH 151
DIST		COUNTY	SHEET NO.
SA		BEXAR	326

pi-MT60-0-0129.dgn standardVSlstd_sig9.dgn 2/21/2011 7:05:26 PM mwmldt1ff

p:\4160\0-0129\cad "standard\15std_sh21.dgn 2/21/2011 7:05:27 PM mwmldstt1"

DISCLAIMER
The use of this standard is governed by the "Texas Engineering Practice Act". No warranty of any kind is made by TxDOT for any purpose whatsoever. TxDOT assumes no responsibility for the conversion of this standard to other formats or for incorrect results or damages resulting from its use.

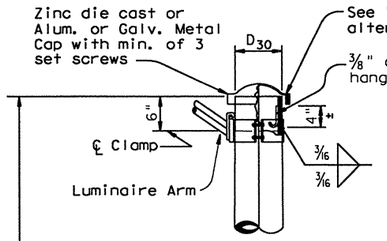

DETAIL A
(for pole with luminaire)

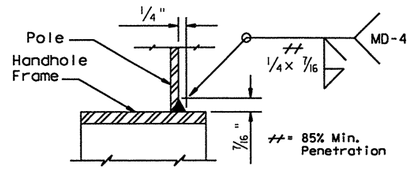

DETAIL E

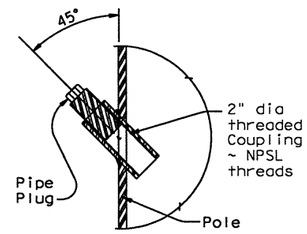

COUPLING DETAIL

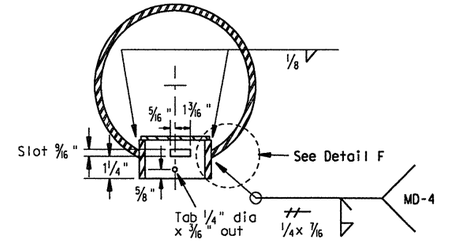

SECTION C-C

Opening for access compartment shall be no more than 1/16 inch wider than the access compartment itself.

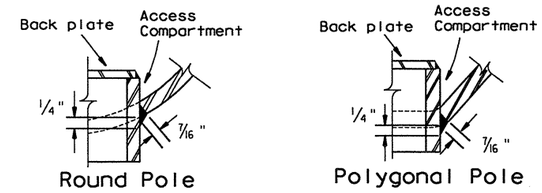

DETAIL F

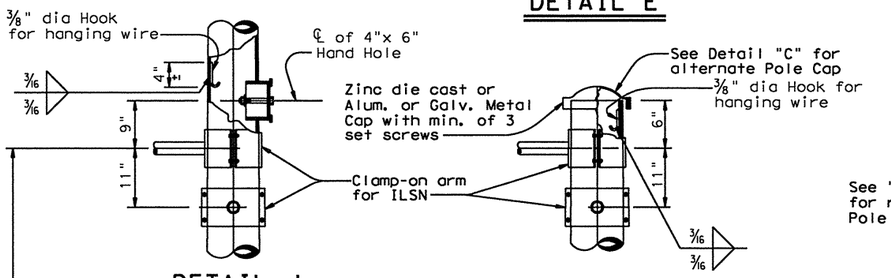

DETAIL J
(If ILSN applied)

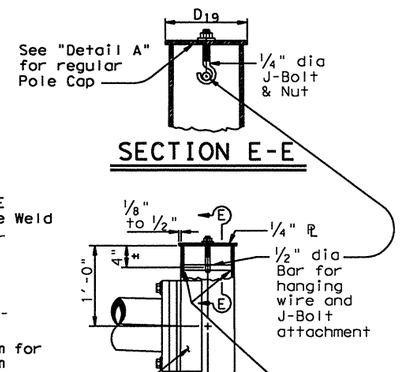

SECTION E-E

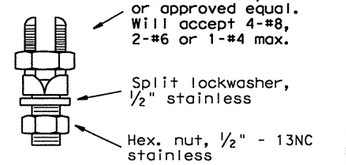

COPPER GROUND CONNECTOR

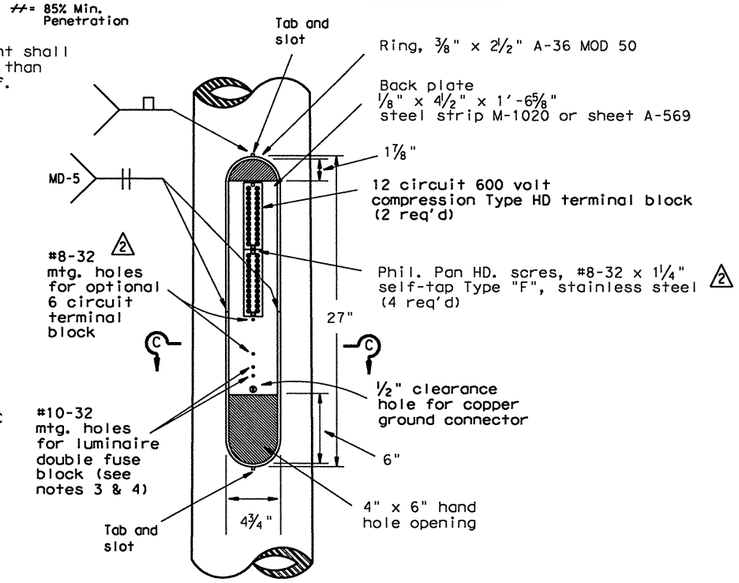

ACCESS COMPARTMENT

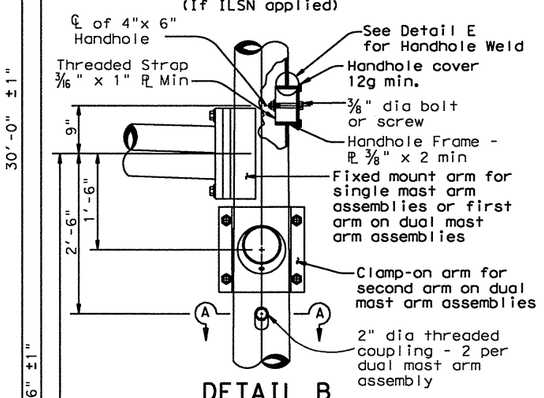

DETAIL B
(for 30' pole with luminaire and ILSN sign)

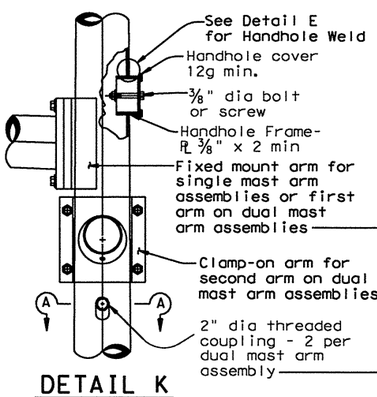

DETAIL K
(for 24' pole with ILSN sign and no luminaire)

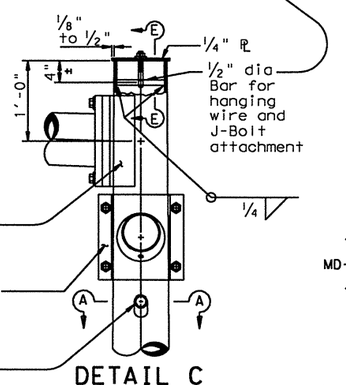

DETAIL C
(for 19' pole with no ILSN sign and no luminaire)

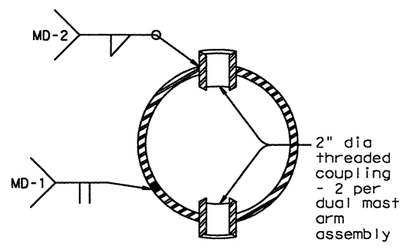

SECTION A-A

1. The cover shall be one piece formed from ABS plastic, shall be a pearl gray color, and shall be suitable for exposure to harsh sunlight and extreme weather. Cover shall latch with two screw latches and shall fit tightly to the enclosure ring to create a rainproof seal. Latch screws shall be 1/4-20 stainless flat socket head screws with tamper proof feature.
2. The pole manufacturer shall provide with each pole a separate kit consisting of: one cover with two latching assemblies, two terminal strips (Marathon #985GP12CU or approved equal), four #8-32 x 1 1/4" self tapping type "F" stainless steel pan head screws, and one ground connector (Blackburn TTC, Burndy KC22J12T13, or Ilsco SSS-5). The traffic signal contractor shall install the kit items in the field.
3. The screw hole spacing on the enclosure back plate shall be for two Marathon #985GP12 terminal strips, one Marathon #985GP06CU terminal strip, and one Bussmann #BM6032B fuse block.
4. Install one Bussmann #BM6032B, Littelfuse #L60030M-2C, or Ferraz-Shawmut #30352 fuse block for poles where luminaires are to be installed.

Anchor Bolt Diameter	Bolt Hole Diameter	Slot Length	Bolt Circle Diameter	Base PL Dim. L x T	Adjust. Range
1 1/2"	1 3/4"	3 1/2"	17"	18" x 1 1/2"	13.4°
1 3/4"	2"	4"	19"	20" x 1 3/4"	13.5°
2"	2 1/4"	4 1/2"	21"	22" x 2"	13.6°
2 1/4"	2 1/2"	5"	23"	24" x 2 1/4"	13.7°

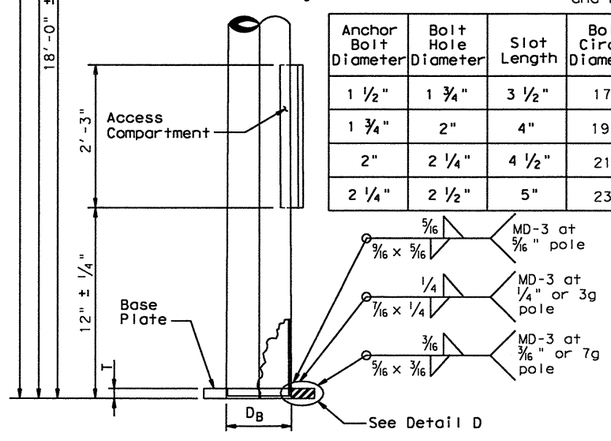

POLE ELEVATION

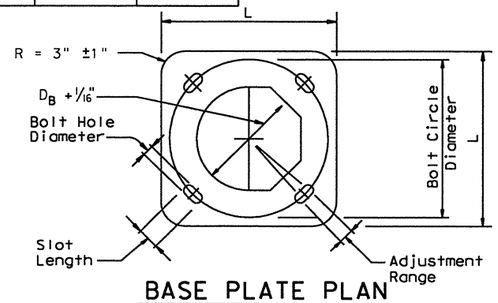

BASE PLATE PLAN

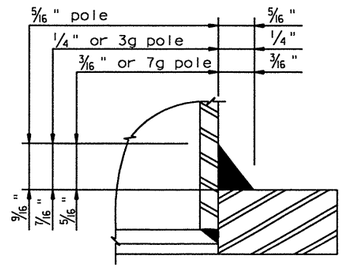

DETAIL D

1 10/03 Revision
Revised notes, and remove detail.

2 2/07 Revision
Revised dimension of terminal-block screw.

STANDARD PLANS
Texas Department of Transportation
Traffic Operations Division

TRAFFIC SIGNAL SUPPORT STRUCTURES MAST ARM POLE DETAILS

MA-D-07

©TxDOT August 1995	DN: - MS	CK: - JSY	DW: - FDN	CK: - CAL
REVISIONS 8-99 10-00 10-03 2-07	STATE DISTRICT: SA	FEDERAL REGION: 6	FEDERAL AID PROJECT	SHEET 327
COUNTY: BEXAR	CONTROL: 2452	SECTION: 01	JOB: 043	HIGHWAY: SH 151

ACC:
Levels DISPLAYED
1 2 3 4 5 6 7 8 9 10 11 12 13 14 15 16
17 18 19 20 21 22 23 24 25 26 27 28 29 30 31 32
33 34 35 36 37 38 39 40 41 42 43 44 45 46 47 48
49 50 51 52 53 54 55 56 57 58 59 60 61 62 63

DISCLAIMER: The use of this standard is governed by the "Texas Engineering Practice Act". No warranty of any kind is made by TxDOT for any purpose whatsoever. TxDOT assumes no responsibility for the conversion of this standard to other formats or for incorrect results or damages resulting from its use.

FOUNDATION DESIGN TABLE

FDN TYPE	DRILLED SHAFT DIA	REINFORCING STEEL: VERT BARS	REINFORCING STEEL: SPIRAL & PITCH	DRILLED SHAFT LENGTH-ft (4), (5), (6): TEXAS CONE PENETROMETER N blows/ft: 10	15	40	ANCHOR BOLT DESIGN (1): ANCHOR BOLT DIA	Fy (ksi)	BOLT CIR DIA	ANCHOR TYPE	FOUNDATION DESIGN LOAD (2): MOMENT K-ft	SHEAR Kips	TYPICAL APPLICATION
24-A	24"	4- #5	#2 at 12"	5.7	5.3	4.5	¾"	36	12 ¾"	1	10	1	Pedestal pole, pedestal mounted controller.
30-A	30"	8- #9	#3 at 6"	11.3	10.3	8.0	1 ½"	55	17"	2	87	3	Mast arm assembly. (see Selection Table)
36-A	36"	10- #9	#3 at 6"	13.2	12.0	9.4	1 ¾"	55	19"	2	131	5	Mast arm assembly. (see Selection Table) 30' strain pole with or without luminaire.
36-B	36"	12- #9	#3 at 6"	15.2	13.6	10.4	2"	55	21"	2	190	7	Mast arm assembly. (see Selection Table) Strain pole taller than 30' & strain pole with mast arm
42-A	42"	14- #9	#3 at 6"	17.4	15.6	11.9	2 ¼"	55	23"	2	271	9	Mast arm assembly. (see Selection Table)

NOTES:

1. Anchor bolt design develops the foundation capacity given under Foundation Design Loads.
2. Foundation Design Loads are the allowable moments and shears at the base of the structure.
3. Foundations may be listed seperately or grouped according to similarity of location and type. Quantities are for the Contractor's information only.
4. Field Penetrometer readings at a depth of approximately 3 to 5 feet may be used to adjust shaft lengths.
5. If rock is encountered, the Drilled Shaft shall extend a minimum of two diameters into solid rock.
6. Decimal lengths in Design Table are to allow interpolation for other penetrometer values. Round to nearest foot for entry into Summary Table.

FOUNDATION SUMMARY TABLE (3)

LOCATION IDENTIFICATION	AVG. N BLOW /ft.	FDN TYPE	NO. EA	DRILLED SHAFT LENGTH (6) (FEET): 24-A	30-A	36-A	36-B	42-A
POLE A	10	36-A	1			14		
POLE B	10	36-A	1			14		
POLE C	10	36-A	1			14		
POLE D	10	24-A	1	6				
TOTAL DRILLED SHAFT LENGTHS				6		42		

4-14-11

STATE OF TEXAS
FEDERICO J. MENDOZA
63311
REGISTERED PROFESSIONAL ENGINEER

BROWN & GAY ENGINEERS, INC
TBPE FIRM REGISTRATION NO. 1046

FOUNDATION SELECTION TABLE FOR STANDARD MAST ARM PLUS ILSN SUPPORT ASSEMBLIES (ft)

		FDN 30-A	FDN 36-A	FDN 36-B	FDN 42-A
80 MPH DESIGN WIND SPEED	MAX SINGLE ARM LENGTH	32' (1)	48'		
	MAXIMUM DOUBLE ARM LENGTH COMBINATIONS	24' X 24'			
		28' X 28'			
		32' X 28'	32' X 32'		
			36' X 36'		
			40' X 36'		
			44' X 28'	44' X 36'	
100 MPH DESIGN WIND SPEED	MAX SINGLE ARM LENGTH	(1)	36'	44'	
	MAXIMUM DOUBLE ARM LENGTH COMBINATIONS		24' X 24'		
			28' X 28'		
			32' X 24'	32' X 32'	
				36' X 36'	
				40' X24'	40' X 36'
					44' x 36'

EXAMPLE:
1. For 80mph design wind speed, foundation 30-A can support up to a 32' arm with another arm up to 28'
2. For 100mph design wind speed, foundation 36-A can support a single 36' mast arm.

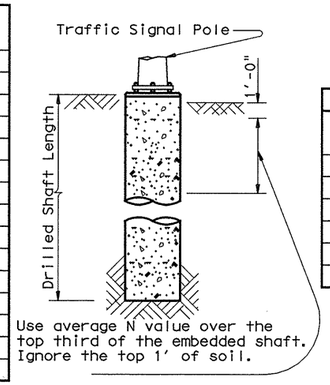

Use average N value over the top third of the embedded shaft. Ignore the top 1' of soil.

ANCHOR BOLT & TEMPLATE SIZES

BOLT DIA IN.	(7) BOLT LENGTH	TOP THREAD	BOTT THREAD	BOLT CIRCLE	R2	R1
¾"	1'-6"	3"	—	12 ¾"	7 ⅛"	5 ⅝"
1 ½"	3'-4"	6"	2"	17"	10"	7"
1 ¾"	3'-10"	7"	2 ¼"	19"	11 ¼"	7 ¾"
2"	4'-3"	8"	2 ½"	21"	12 ½"	8 ½"
2 ¼"	4'-9"	9"	3"	23"	13 ¾"	9 ¼"

(7) Min dimensions given, longer bolts are acceptable.

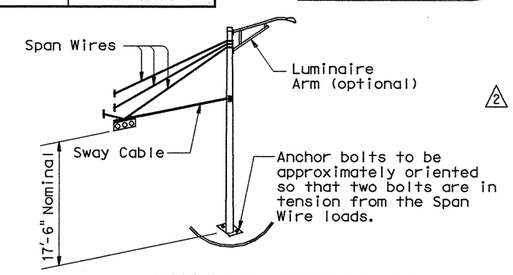

TYPICAL STRAIN POLE ASSEMBLY

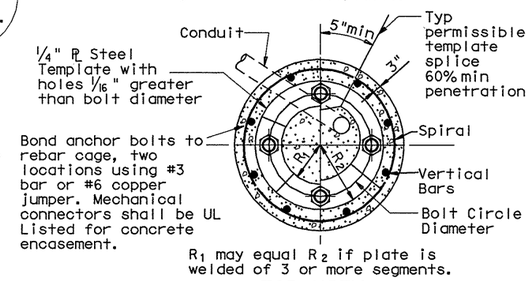

TOP VIEW

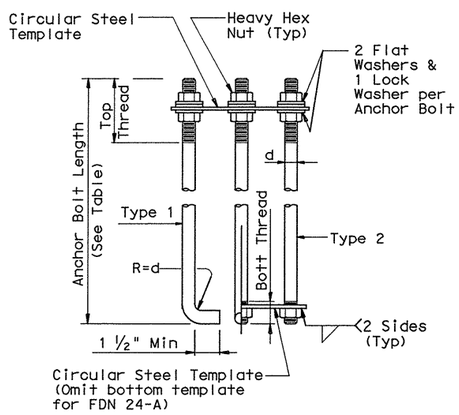

HOOKED ANCHOR (TYPE 1) | NUT ANCHOR (TYPE 2)

ANCHOR BOLT ASSEMBLY

INSTALLATION PROCEDURE:
Threads of anchor bolts shall be coated with pipe joint compound prior to installation of upper nuts when erecting pole. After pole is plumbed and in permanent alignment, the exposed threads of painted bolts shall be cleaned and an additional coating of zinc-rich paint applied to seal the bolt thread-nut joint.

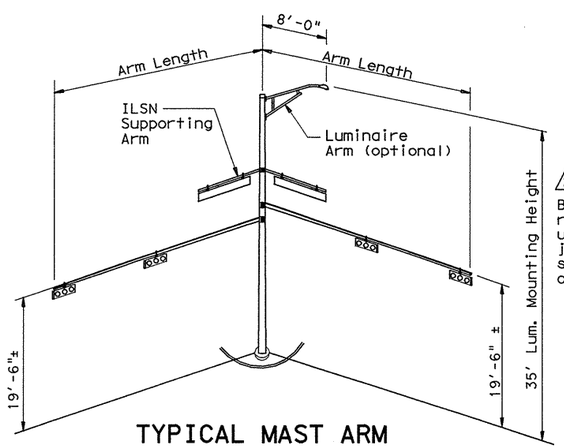

TYPICAL MAST ARM ASSEMBLY

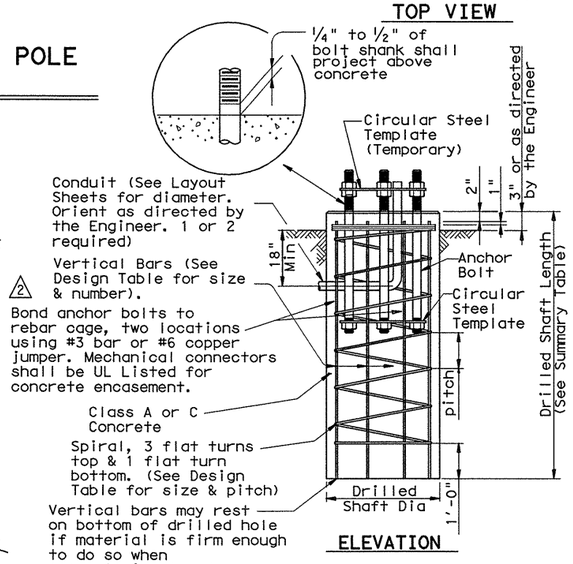

ELEVATION

FOUNDATION DETAILS

GENERAL NOTES:
Design conforms to 1994 AASHTO Standard Specifications for Structural Supports for Highway Signs, Luminaires and Traffic Signals and interim revisions thereto.
Reinforcing steel shall conform to Item 440.
Concrete shall be Class A or C.
Threads for anchor bolts and nuts shall be rolled or cut threads of unified national coarse thread series except for A193B7 bolts which shall have 8 pitch thread series. Bolts and nuts shall have Class 2A and 2B fit tolerances. Galvanized nuts shall be tapped after galvanizing.
Anchor bolts that are 1" in diameter or less shall conform to ASTM A36. Anchor bolts larger than 1" in diameter shall conform to A36M55 in accordance with the Item, "Anchor Bolts" or ASTM A193B7 or A687. Galvanize or coat with zinc-rich paint a minimum of the upper 14 inches of all anchor bolts unless otherwise noted. Exposed nuts shall be galvanized or coated with zinc-rich paint. Washers shall be galvanized. Templates and embeded nuts need not be galvanized.

11/99 Revision

(1) Changed to Facilitate new terminal strip enclosure

(2) Changed from ground rod to UFER ground

Texas Department of Transportation
Traffic Operations Division

TRAFFIC SIGNAL POLE FOUNDATION

TS-FD-99

© TxDOT August 1995

REVISIONS	DN: TXDOT	CK: TXDOT	DW: TXDOT	CK: TXDOT
5-96	CONT	SECT	JOB	HIGHWAY
11-99	2452	01	043	SH 151
	DIST		COUNTY	SHEET NO.
	SA		BEXAR	328

DISCLAIMER: The use of this standard is governed by the "Texas Engineering Practice Act". No warranty of any kind is made by TxDOT for any purpose whatsoever. TxDOT assumes no responsibility for the conversion of this standard to other formats or for incorrect results or damages resulting from its use.

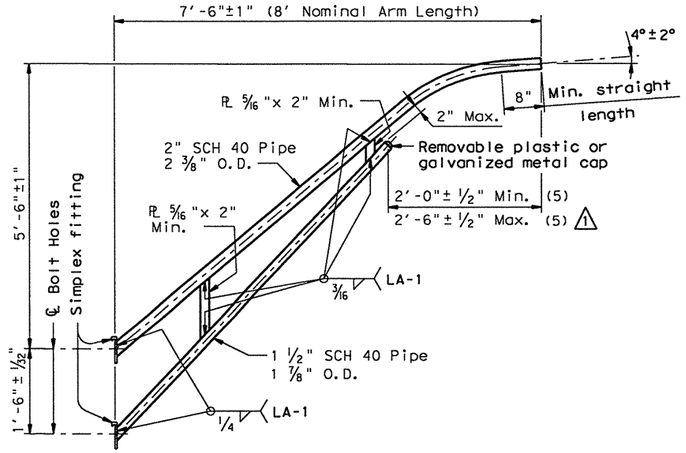

8-FOOT LUMINAIRE ARM

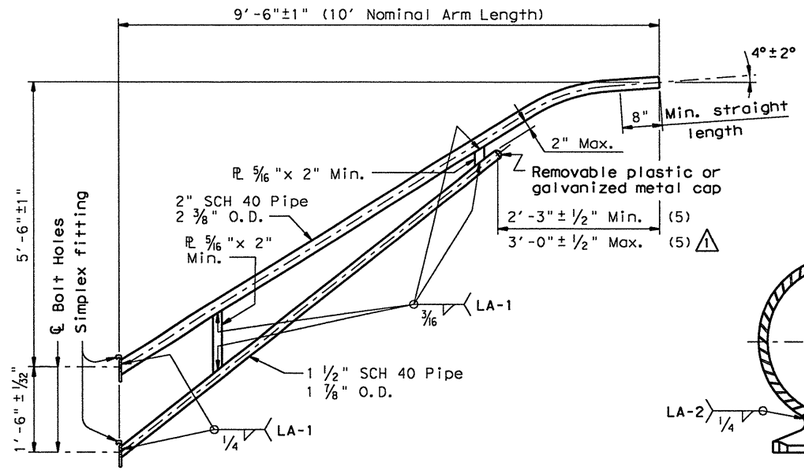

10-FOOT LUMINAIRE ARM

MATERIALS	
Pole or Arm Simplex	ASTM A27 GR 65-35 or A148 GR 80-50 or A576 GR 1021 (4) or A36 (Arm only)
Arm Pipes	ASTM A53 GR A or B or A500 GR B or A501 or A595 (2) or A715 GR 50
Arm Plates (3)	ASTM A36 or A572 GR50 (1) or A595 GR A or A588
Misc.	ASTM designations as noted

(1) ASTM A36M50 steel as described in Item 442 "Metal for Structures" may be used in lieu of A 572 GR 50.

(2) If A595 GR A material is used, arm need not be cold worked to A595 requiremants, but material must have 40 ksi minimum yield prior to fabrication.

(3) Either of the materials listed for pates may be used where the drawings do not specify a particular ASTM designation.

(4) A576 must be suitable for forging and also meet minimum tensile strength of 65 ksi, minimum yield of 35 ksi, and elongation in 2 inches of 22 percent.

(5) Dimensional limits are given to show acceptable variation in design. All of a Fabricator's production of a particular arm length shall have the same dimensions within specified tolerances.

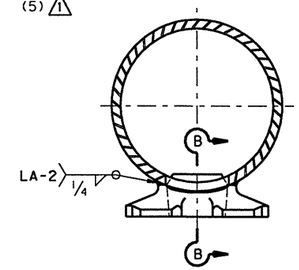

DIRECT ATTACHMENT DETAIL

GENERAL NOTES:

Design conforms to 1994 AASHTO Standard Specifications for Structural Supports for Highway Signs, Luminaires, and Traffic Signals and Interim Revisions thereto. Design Wind Speed equals 90 mph plus a 1.3 gust factor. Arms are designed to support a 75 lb. luminaire having an effective projected area (actual area times drag coefficient) of 1.5 sq. ft.

Materials and fabrication shall be in accordance with the Specificatons and with the details, dimensions, and weld procedures shown herein. Weld references call for preapproved weld procedures which the Fabricator must obtain prior to fabrication. In the absense of specified Fabricaton tolerances, dimensions shall be within the tolerances generally obtainable in normal fabrication practice.

Unless otherwise noted, all parts shall be galvanized after fabrication in accordance with the Specifications.

Special designs require submission of shop drawings in accordance with the item "Steel Structures".

Each pole simplex fitting shall be supplied with 2 A325 bolts and 2 lock washers of the size specified. The bolts and lock washers shall be secured to the pole with the other hardware items called for in the plans. When clamp attachment is specified, the Fabricator shall ship the clamp assembly securely attached to the pole at the location shown on the plans.

If clamp assemblies are ordered without poles, the Fabricator shall ship one upper and one lower clamp assembly together in a single package, including all nuts and washers required for the clamps and simplex fittings.

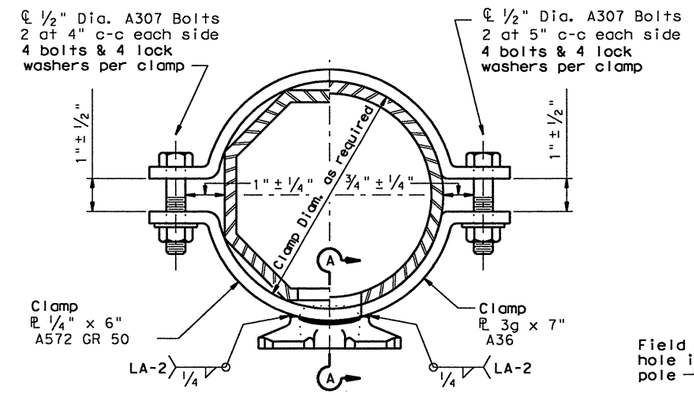

CLAMP ATTACHMENT DETAIL NO. 1 (HALF SECTION)

CLAMP ATTACHMENT DETAIL NO. 2 (HALF SECTION)

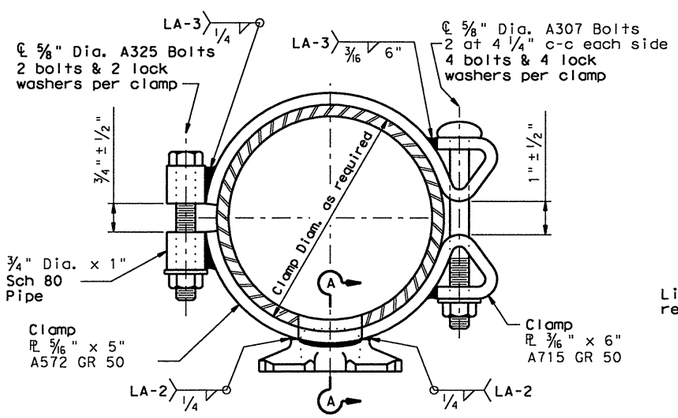

CLAMP ATTACHMENT DETAIL NO. 3 (HALF SECTION)

CLAMP ATTACHMENT DETAIL NO. 4 (HALF SECTION)

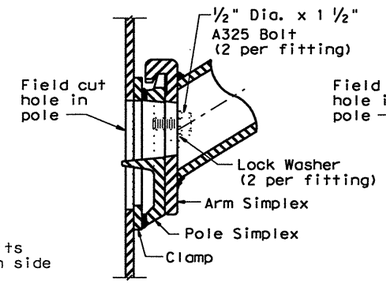

UPPER SIMPLEX FITTING

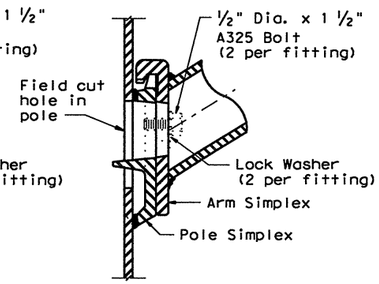

UPPER SIMPLEX FITTING

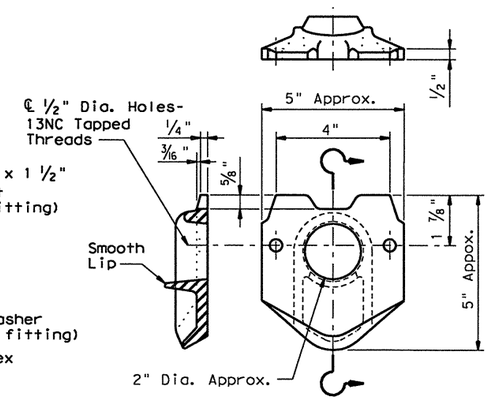

POLE SIMPLEX DETAIL

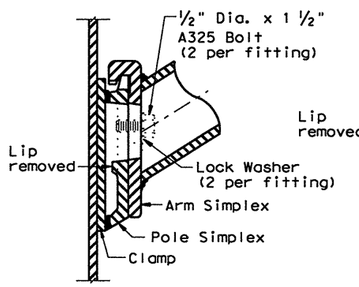

LOWER SIMPLEX FITTING

SECTON A-A

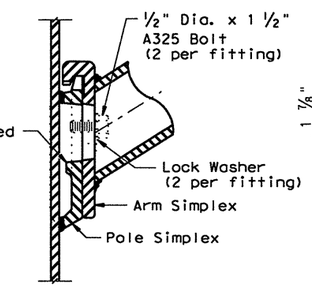

LOWER SIMPLEX FITTING

SECTON B-B

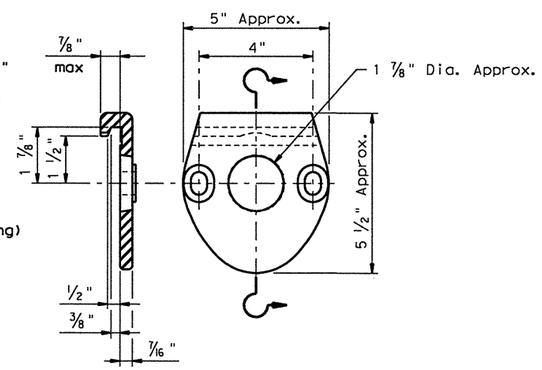

ARM SIMPLEX DETAIL

1 1-99 - minor typo correction

Texas Department of Transportation
Traffic Operations Division

STANDARD ASSEMBLY DRAWINGS FOR LUMINAIRE SUPPORT STRUCTURES

ARM DETAILS

LUM-A-99

© TxDOT August 1995

DN: TXDOT	CK: TXDOT	DW: TXDOT	CK: TXDOT

REVISIONS
5-96
1-99

CONT	SECT	JOB	HIGHWAY
2452	01	043	SH 151
DIST		COUNTY	SHEET NO.
SA		BEXAR	329

DATE:
FILE:

pw:\\TxDOT\Standards\Field_sig\20_dgn
2/21/2011
7:05:29 PM
mwmldkfff

DISCLAIMER: The use of this standard is governed by the "Texas Engineering Practice Act". No warranty of any kind is made by TxDOT for any purpose whatsoever. TxDOT assumes no responsibility for the conversion of this standard to other formats or for incorrect results or damages resulting from its use.

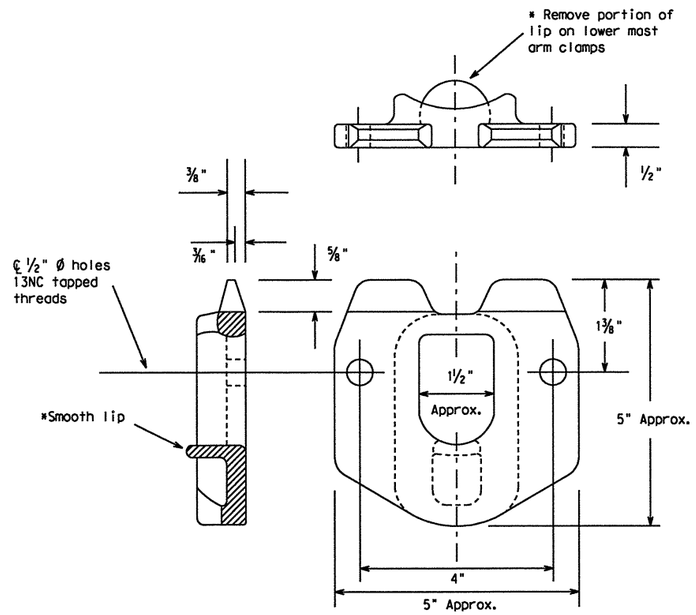

POLE SIMPLEX DETAILS

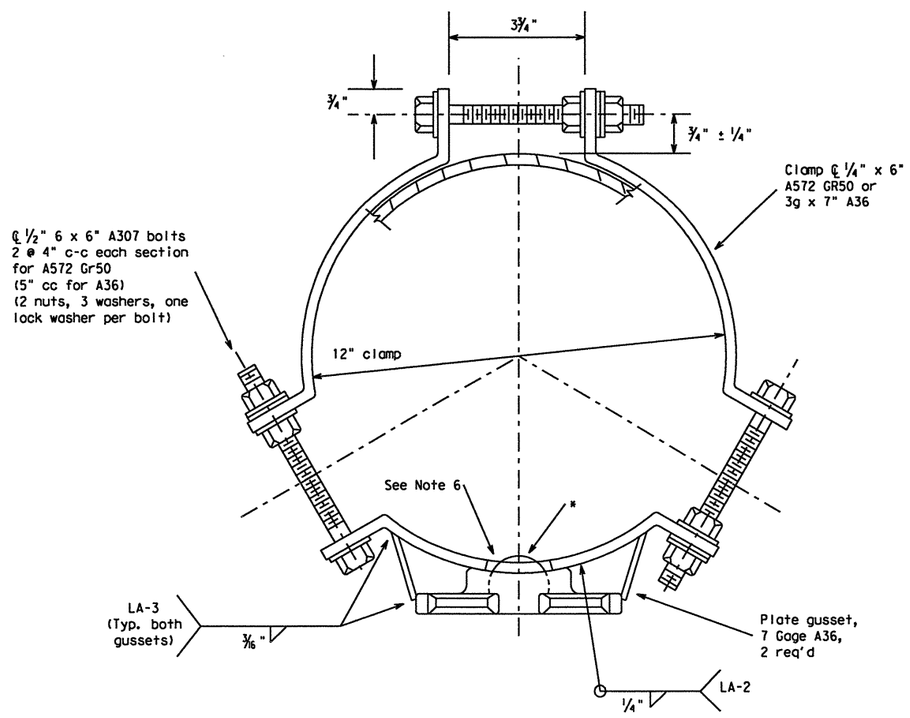

CLAMP DETAIL

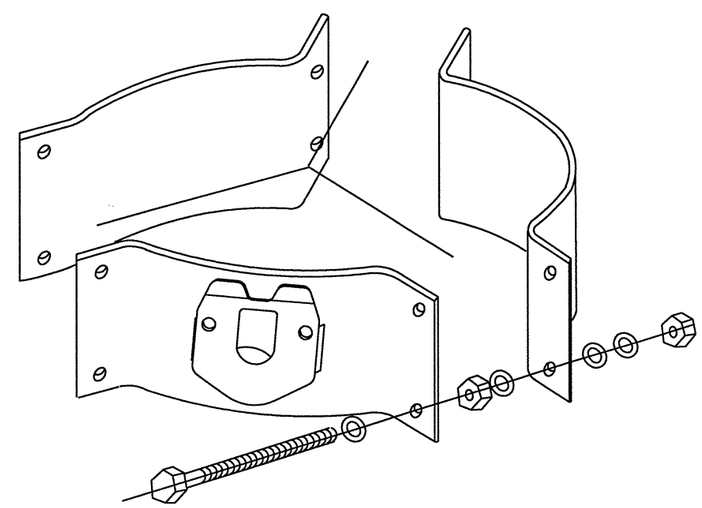

PROJECTION

OTHER MATERIALS:

1. Pole simplex shall be ASTM A27 GR65-35 or A148 GR80-50 or A576 GR1021. ASTM A576 must be suitable for forging and also meet minimum tensile of 65ksi, minimum yield of 35ksi, and elongation in 2 inches of 22 percent.
2. A36M50 steel may be used in lieu of ASTM A572 GR50.
3. Welded tabs and backplates shall be ASTM A-36 steel or better.
4. Nylon insert locknuts shall conform to ASTM A563.

GENERAL NOTES:

1. Materials and fabrication shall be in accordance with the Specifications and with the details, dimensions, and weld procedures shown herein. Weld references call for preapproved weld procedures which the Fabricator must obtain prior to fabrication. In the absense of specified fabrication tolerances, dimensions shall be within the tolerances generally obtainable in normal fabrication practice.
2. All parts shall be galvanized after fabrication in accordance with ASTM 153 or 123. The throat of the Simplex shall be made free of all rough or sharp edges resulting from the galvanizing process.
3. Each simplex fitting shall be supplied with 2 ASTM A325 bolts, 1/2in. X 1 1/2in. and 2 lock washers. The bolts and lock washers shall be secured to the clamp with the other hardware items. The Fabricator shall ship clamp assembly together in a single package, including all bolts, nuts, and washers required for the clamp and simplex fitting.
4. Design conforms to 1985 AASHTO "Standard Specifications for Structural Supports for Highway Signs, Luminaires, and Traffic Signals" and interim revisions thereto. Design Wind Speed equals 80 mph plus a 1.3 gust factor. Clamps are designed to support a 75 lb. luminaire having an effective projected area (actual area times drag coefficient) of 1.4 sq.ft.,12 ft. maximum arm length.
5. Each assembly shall consist of one upper piece simplex fitting having a smooth lip and one lower piece simplex fitting with the lip removed.
6. Approximately 2 in. diameter hole in upper mast arm clamp.

For 8.9 - 12 inch diameter Signal Poles
(Two req'd for each mast arm)

D-18-6100.001
November 99

Texas Department of Transportation
Traffic Operations Division

CLAMP ON FITTING ASSEMBLY FOR LUMINAIRE MAST ARM

CFA-99

© TxDOT November 1999

REVISIONS	DN: TXDOT	CK: TXDOT	DW: TXDOT	CK: TXDOT
	CONT	SECT	JOB	HIGHWAY
	2452	01	043	SH 151
	DIST		COUNTY	SHEET NO.
	SA		BEXAR	330

P:\4760\10-0129\cad\sheet\standard\151std_sig23.dgn 3:57:04 PM 2/22/2011
P:\4760\10-0129\car\standard\151std_sig23.dgn 2/22/2011 3:57:04 PM PRHAHN

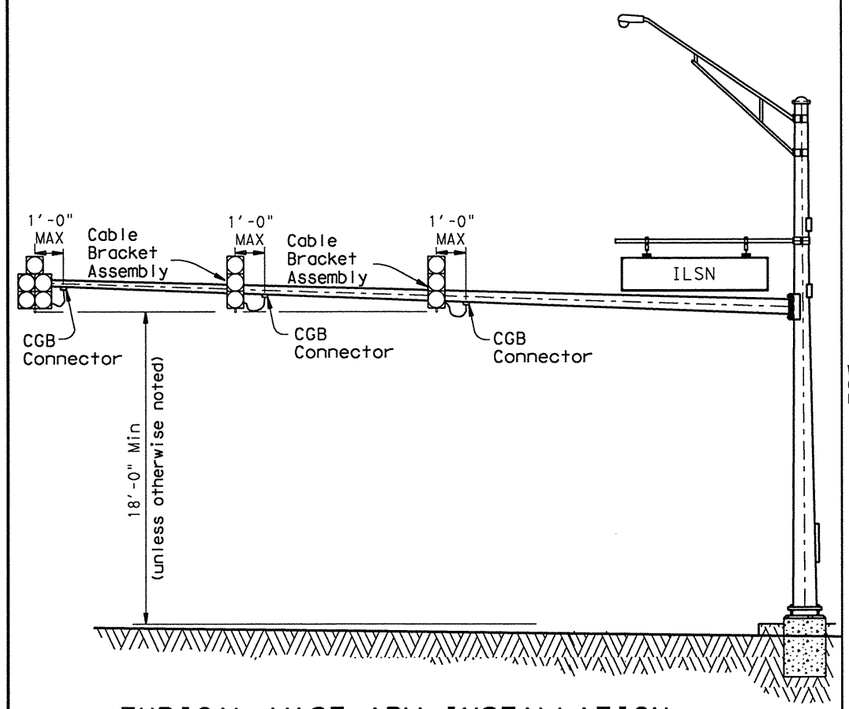

TYPICAL MAST ARM INSTALLATION

BACKPLATES ARE NOT SHOWN FOR CLARITY

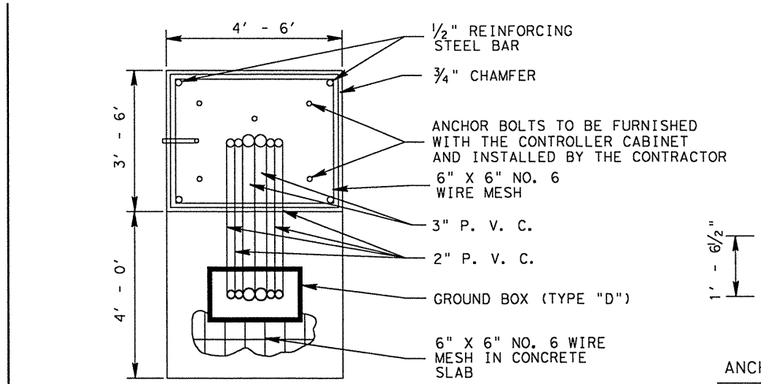

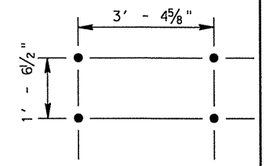

ANCHOR BOLT PATTERN

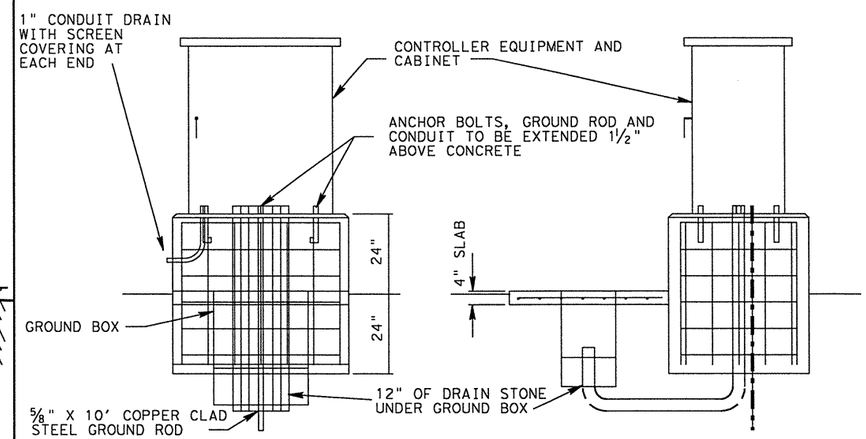

CONTROLLER MOUNT NOTES :

ALL WIRING TERMINATING IN THE CONTROLLER SHALL BE LABELED IN A MANNER THAT CAN BE IDENTIFIED WHEN THE CONTROLLER IS INSTALLED THE CONTRACTOR SHALL CONNECT THE FIELD WIRING TO THE CONTROLLER

ONE 2" PVC SHALL REMAIN EMPTY FOR FUTURE USE

CONCRETE SHALL BE TESTED AS MISCELLANEOUS CONCRETE

ALL MATERIALS SHOWN AND LABOR TO INSTALL THE CONTROLLER FOUNDATION SHALL BE CONSIDERED SUBSIDIARY TO PERTINENT ITEMS

CONTROLLER FOUNDATION SHALL BE AS SHOWN ON THE PLANS, UNLESS OTHERWISE DIRECTED BY THE ENGINEER.

TYPICAL CONTROLLER MOUNT DETAILS

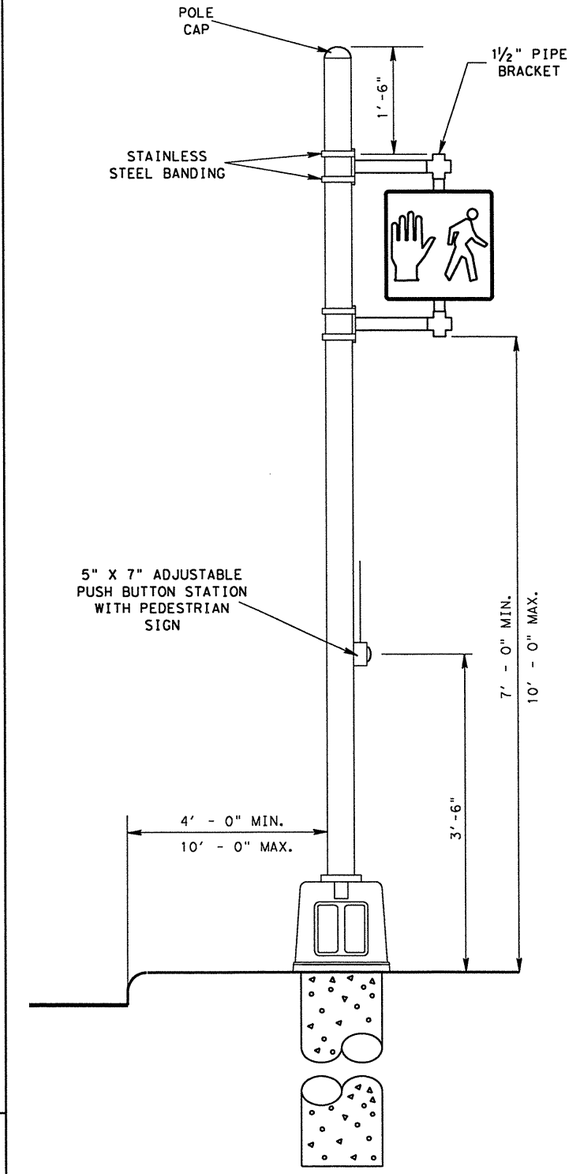

TYPICAL PEDESTAL POLE ASSEMBLY

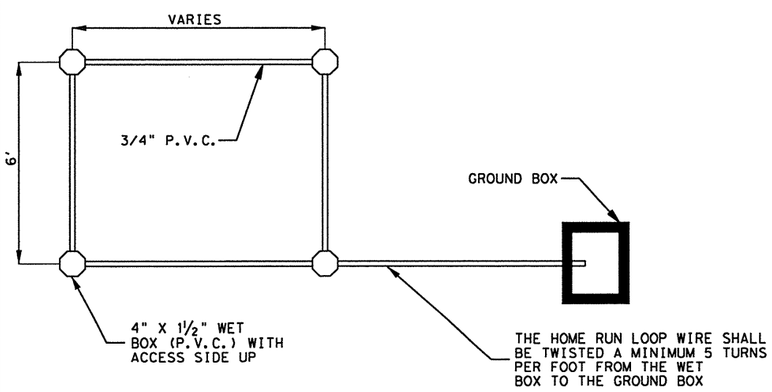

NOTES:

SHALL INSTALL CONDUIT ENCASED LOOPS AT THE LOCATIONS SHOWN ON THE PLANS USING 3/4 " DIAMETER PVC SCHEDULE 40 OR AT NO ADDITIONAL COST 1" DIAMETER PVC SCHEDULE 80.

LOOP LOCATIONS MAY BE STAGGERED SLIGHTLY (6") TO ACCOMMODATE HOME RUN PLACEMENT.

INDIVIDUAL HOME RUN CONDUITS SHALL BE EXTENDED TO THE GROUND BOX SHOWN ON THE PLANS FOR EACH LOOP INSTALLED.

THE NUMBER OF LOOP WIRE TURNS SHALL BE AS SHOWN ON THE TYPICAL LOOP DETECTOR DETAILS.

CONDUIT ENCASED LOOPS

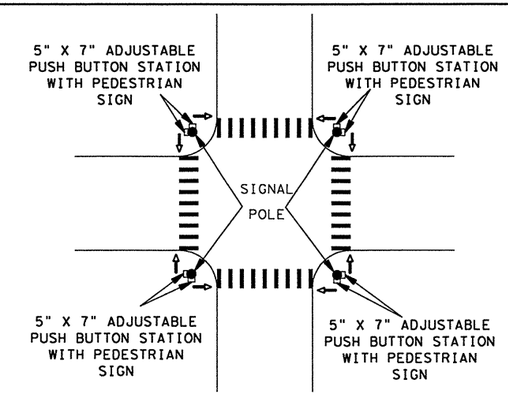

TYPICAL PED PUSH BUTTON LOCATION

THE ENGINEER SHALL VERIFY ALL PEDESTRIAN SIGNAL AND PEDESTRIAN PUSH BUTTON LOCATIONS PRIOR TO INSTALLATION.

San Antonio District Standard

MISCELLANEOUS TRAFFIC SIGNAL DETAILS

MTS

© 2006 Texas Department of Transportation

REVISIONS	FED. RD. DIV. NO.	FEDERAL AID PROJECT NO.		SHEET NO.
FEB. 2006	6			331
OCT. 2007	STATE	DIST.	COUNTY	
	TEXAS	SAT	BEXAR	
	CONT.	SECT.	JOB	HIGHWAY NO.
	2452	01	043	SH 151

LEVELS DISPLAYED
1 2 3 4 5 6 7 8 9 10 11 12 13 14 15 16
17 18 19 20 21 22 23 24 25 26 27 28 29 30 31 32
33 34 35 36 37 38 39 40 41 42 43 44 45 46 47 48
49 50 51 52 53 54 55 56 57 58 59 60 61 62 63
ACC:

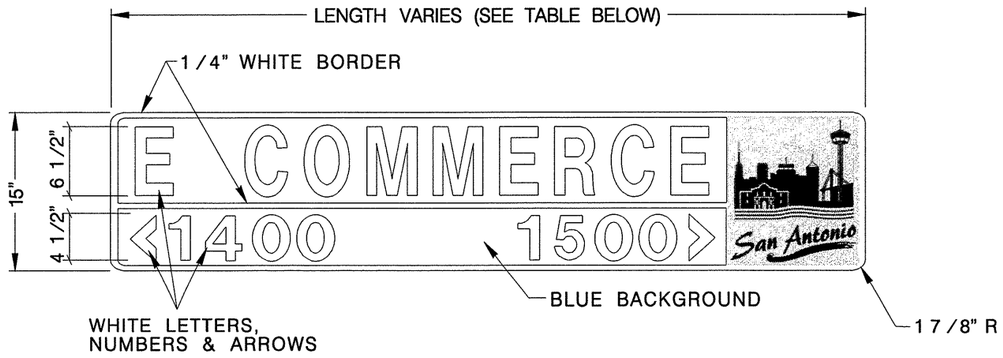

15" METRO – STREET NAME SIGNS

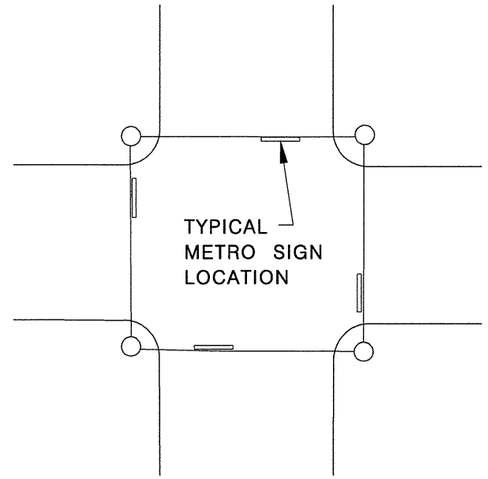

SPAN WIRE INSTALLATION

TYPICAL METRO SIGN PLACEMENT

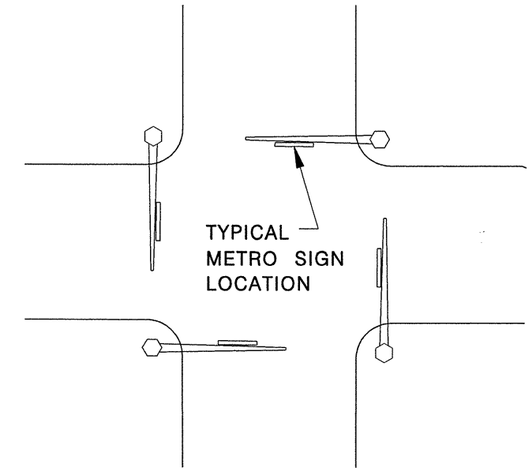

MAST ARM INSTALLATION

15" METRO w/CITY SKY LINE

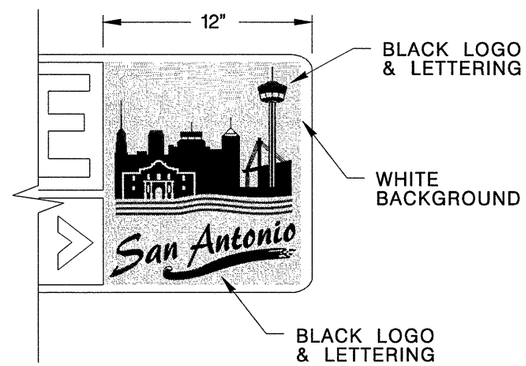

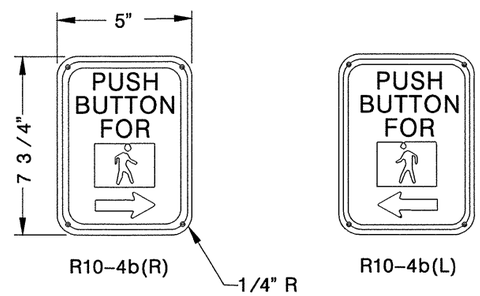

PEDESTRIAN PUSHBUTTON SIGNS

HEIGHT	15" (381 MM)
LENGTH	48" (1200 MM) MIN. 72" (1800 MM) MAX.** 1' (300 MM) INCREMENTS OF LENGTH
THICKNESS	0.125" (3 MM)
SUBSTRATE	ALUMINUM ALLOY, 5052-H38 (ASTM B-209) GOLD CHROMATE FINISH
SIGN FACE MATERIALS	BLUE FILM OVER DIAMOND GRADE FP-85, SECTION 718 AND L-S-300C
LEGENDS AND SYMBOLS	SERIES D (USUAL) SERIES C OR B FOR MAXIMUM LENGTH SIGN BLANK, IF NECESSARY
COLOR	WHITE LEGEND ON BLUE BACKGROUND
LETTER TRACKING	17% (USUAL) 10% (MIN.)

** SIGN PLATE LONGER THAN 72" MUST BE APPROVED BY THE CITY TRAFFIC ENGINEER

* DIAMOND GRADE SHEETING 5052-H38 ALUMINUM SUBSTRATE

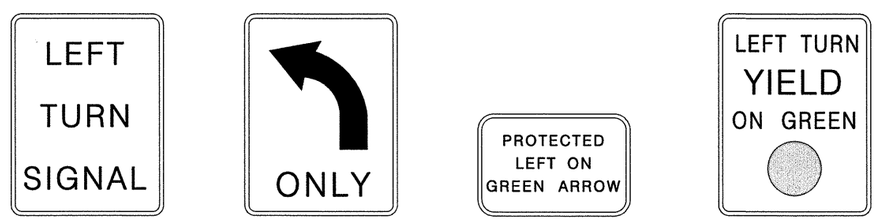

R10-10 *(30" X 36")

R3-5L *(30" X 36")

R10-9 *(30" X 24")

R10-12 *(30" X 36")

LEFT TURN SIGNS

THE ORIGINAL OF THIS DRAWING WAS SIGNED AND SEALED BY EDWARD N. MERY, P.E., #58698 ON 02.06.06 AND IS ON FILE WITH THE TRAFFIC ENGINEERING DIVISION OF THE PUBLIC WORKS DEPARTMENT, CITY OF SAN ANTONIO.

FEBRUARY 2006

CITY OF SAN ANTONIO
DEPARTMENT OF PUBLIC WORKS

TRAFFIC SIGN STANDARDS
METRO STREET NAME SIGN AND SIGN PLACEMENT
2452-01-043 SHEET 4 OF 4 Sht# 332

% SUBMITTAL	PROJECT NO.:		DATE:
DRWN. BY: A.F.G.	DSGN. BY: E.N.M.	CHKD. BY: J.D.F./E.N.M.	SHEET NO.: OF

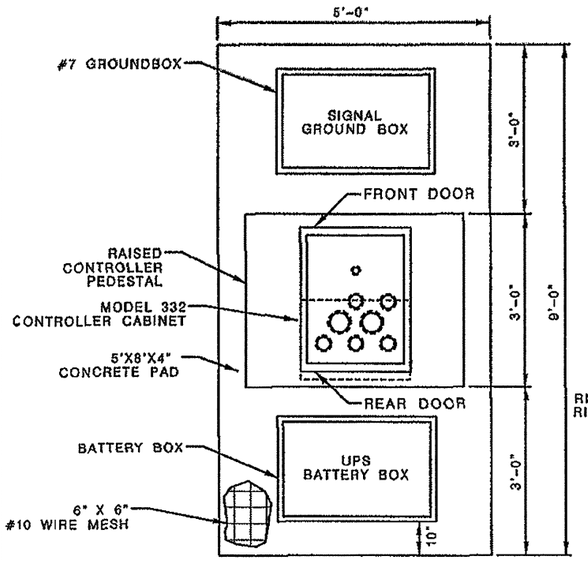

TOP VIEW

(REQUIRED FOR NEW FOUNDATION)

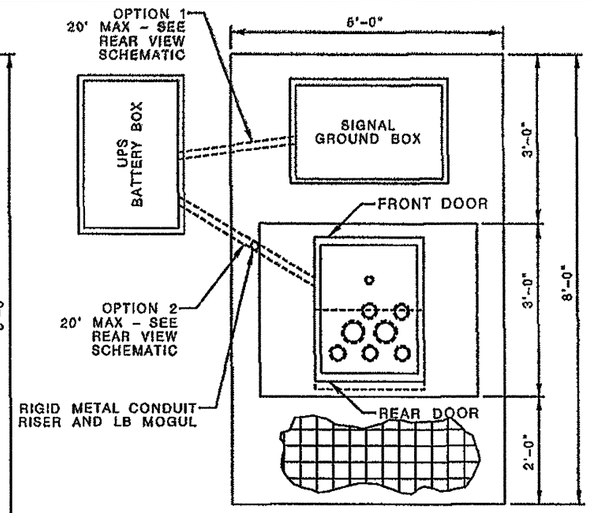

TOP VIEW

(RETROFITTED FOUNDATION)

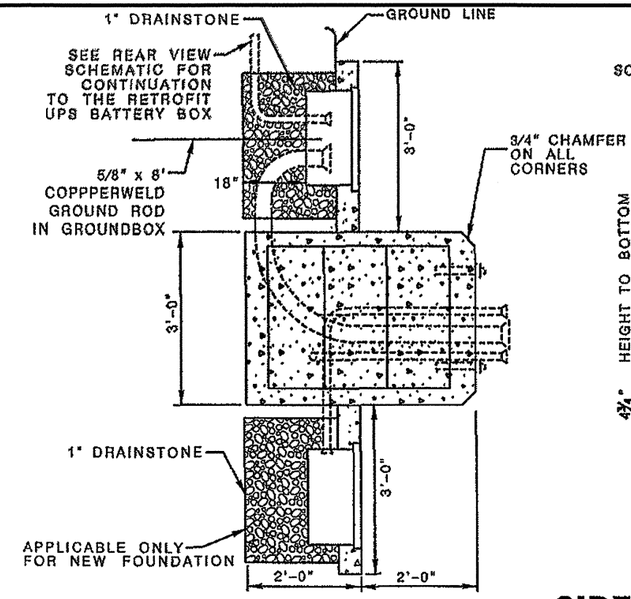

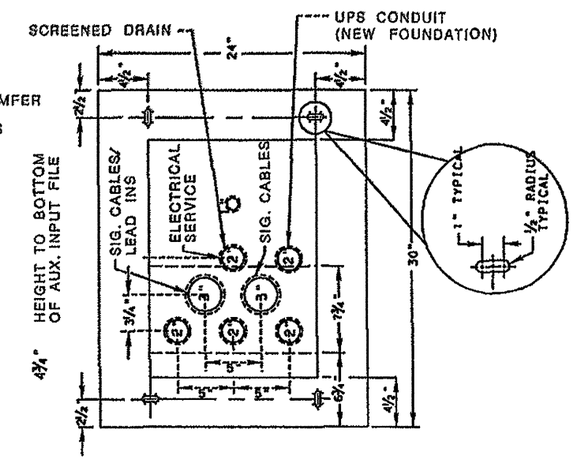

332 BASE PLATE TEMPLATE

SIDE VIEW

OPTION 1:
USE AVAILABLE CONDUIT SPACE TO CONNECT WIRING FROM GROUNDBOX TO CABINET.

OPTION 2:
UPS CONDUIT AND CABLES TO BE ROUTED THROUGH EXISTING CONDUITS, WHEN AVAILABLE. A 2" RMC WITH LB MOGUL MAY BE INSTALLED ON THE RIGHTSIDE (REARVIEW) OF THE CABINET FOR THE UPS CABLING IF NO SPARE CONDUITS ARE AVIAILABLE IN THE EXISTING FOUNDATION.

NOTES:

1) CONTRACTOR TO INSTALL GROUNDBOX, CONDUIT, CONTROLLER FOUNDATION, CONCRETE SLAB AND CONDUIT FROM GROUNDBOX TO CABINET. SEE UPS SPECIAL SPECIFICATION FOR ADDITIONAL WIRING DETAILS.

2) FOR NEW FOUNDATIONS A DEDICATED UPS CONDUIT FROM THE FOUNDATION TO THE BATTERY BOX SHALL BE PROVIDED BY THE CONTRACTOR.

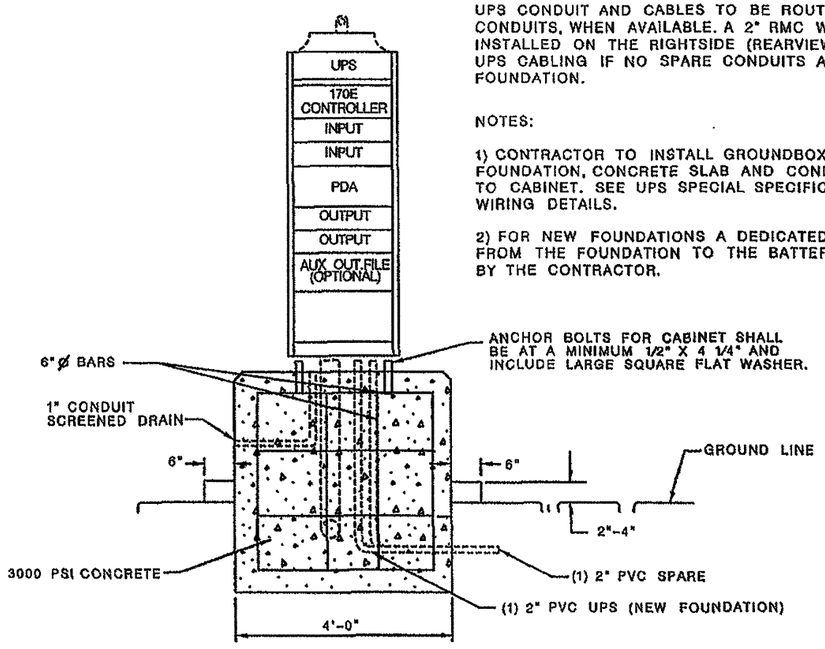

REAR VIEW

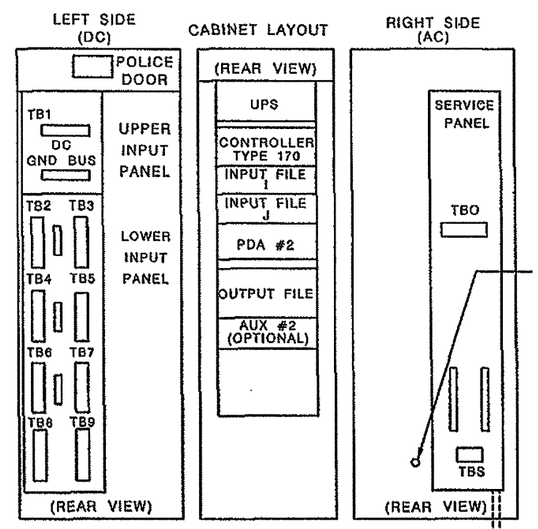

REAR VIEW SCHEMATIC

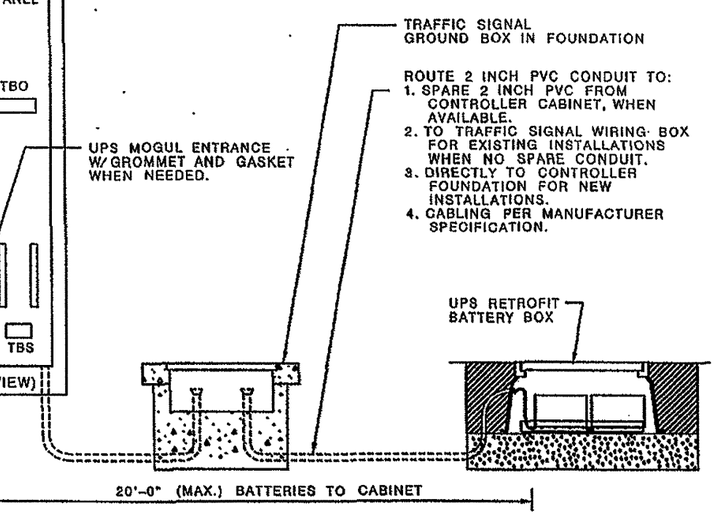

A SIGNED AND SEALED COPY OF THIS STANDARD IS ON FILE WITH THE CITY OF SAN ANTONIO

TRAFFIC SIGNAL DETAILS
UPS LAYOUT, CONDUIT & FOUNDATION

SURVY. BY:	APPR. BY: TRAFFIC SIGNAL DESIGN ENGINEER	SCALE:
DRWN. BY:		REF. NO.: 2452-01-043
DSGN. BY:	APPR. BY: ENGINEERING & TRAFFIC ENGINEER	PROJ NO.:
CHKD. BY:		SHEET NO.: 333

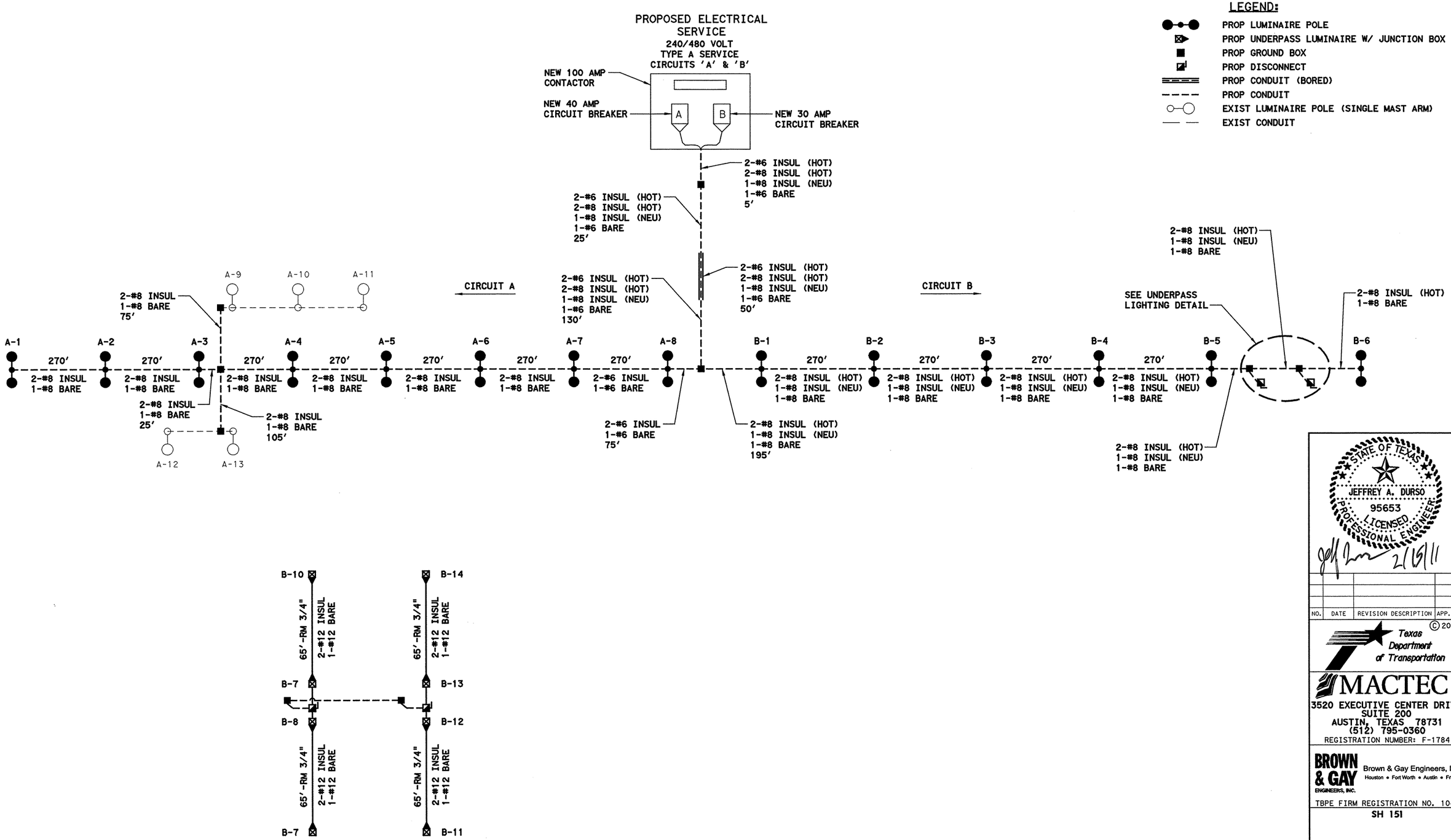

UNDERPASS LIGHTING DETAIL

STATE OF TEXAS
JEFFREY A. DURSO
95653
LICENSED
PROFESSIONAL ENGINEER

2/15/11

NO.	DATE	REVISION DESCRIPTION	APP. BY

© 2009

Texas Department of Transportation

MACTEC
3520 EXECUTIVE CENTER DRIVE
SUITE 200
AUSTIN, TEXAS 78731
(512) 795-0360
REGISTRATION NUMBER: F-1784

BROWN & GAY ENGINEERS, INC.
Brown & Gay Engineers, Inc.
Houston • Fort Worth • Austin • Frisco
TBPE FIRM REGISTRATION NO. 1046

SH 151

ILLUMINATION CIRCUIT DIAGRAM

(SHEET 1 OF 1)

FED. RD. DIV. NO.			SHEET NO.
			334
STATE	DIST.	COUNTY	
TEXAS	SA	BEXAR	
CONT.	SECT.	JOB	HIGHWAY NO.
2452	01	043	SH 151

I:\projects\txd64_pharr_sub\txd64-01_sh151\03_cadd\2452-01-043\traffic\5illmclrdla01.dgn 2/15/2011 10:12:17 AM TxD64-01

LEGEND:

- PROP LUMINAIRE POLE
- PROP UNDERPASS LUMINAIRE W/ JUNCTION BOX
- PROP ELECTRICAL SERVICE
- PROP GROUND BOX
- PROP DISCONNECT
- PROP CONDUIT (BORED)
- PROP CONDUIT
- EXIST LUMINAIRE POLE (DOUBLE MAST ARMS)
- EXIST LUMINAIRE POLE (SINGLE MAST ARM)
- EXIST LUMINAIRE POLE (TO BE REMOVED)
- EXIST GROUND BOX
- EXIST CONDUIT

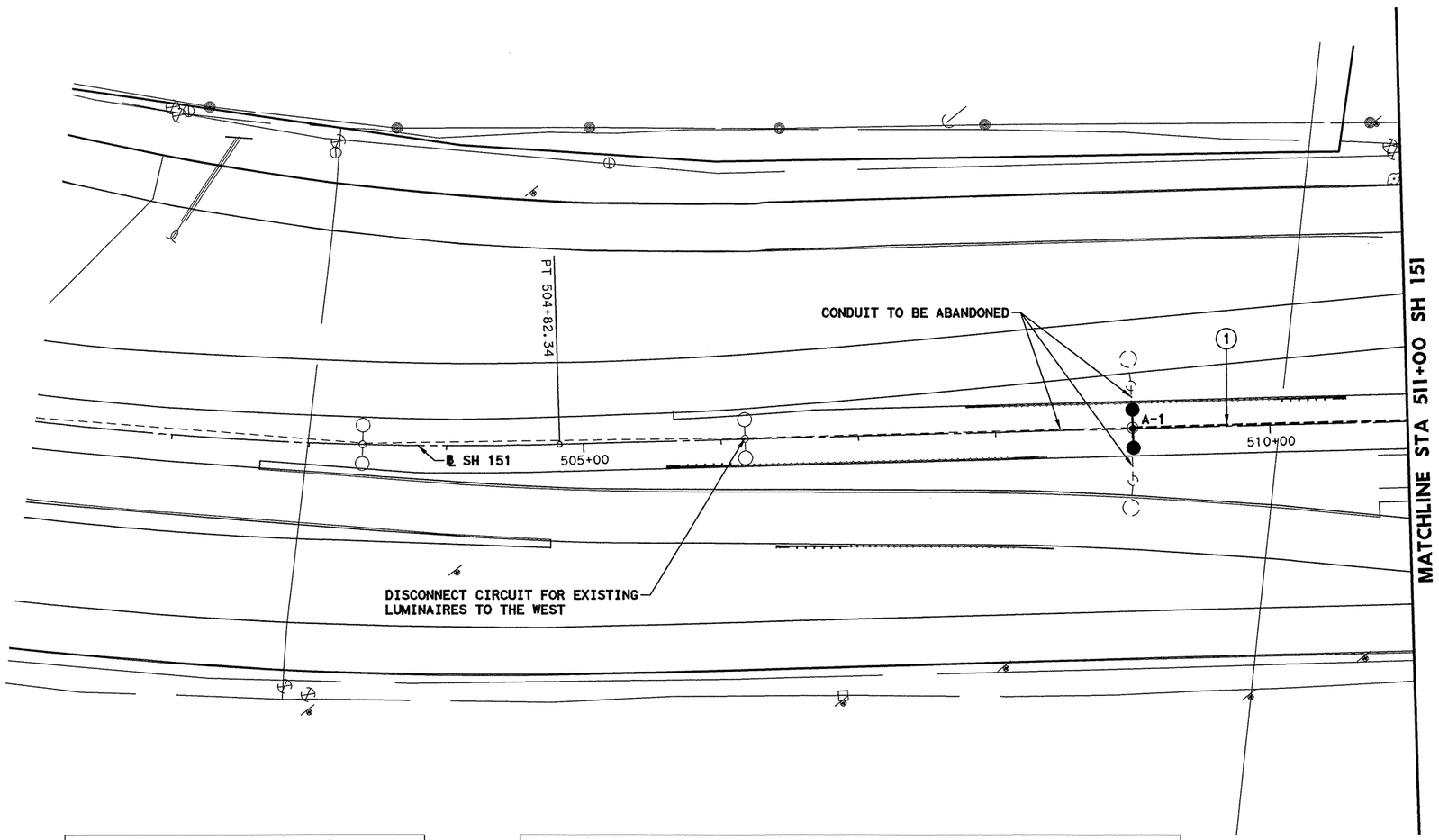

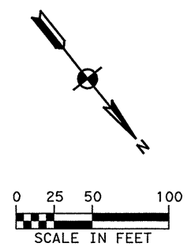

CIRCUIT	RUN NUMBER	CONDUIT 618-2018 # CONDUITS	CONDUIT 618-2018 CONDT (PVC) (SCHD 40) (2")	CONDUCTOR 620-2011 # CONDUCTORS	CONDUCTOR 620-2011 ELEC CONDR (NO. 8) BARE	CONDUCTOR 620-2012 # CONDUCTORS	CONDUCTOR 620-2012 ELEC CONDR (NO. 8) INSULATED	RUN LENGTH
A	1	1	200	1	200	2	400	200
TOTAL			200		200		400	

CONDUIT AND CONDUCTOR SCHEDULE

ITEM-CODE	DESCRIPTION	UNIT	SHEET TOTAL
416-2029	DRILL SHAFT (RDWY ILL POLE) (30 IN)	LF	8
610-2043	INS RD IL AM (TY SA) 50T - 8 - 8 (.4 KW) S	EA	1
610-2068	REMOVE RD IL ASM (TRANS - BASE)	EA	2
618-2018	CONDT (PVC) (SCHD 40) (2")	LF	200
620-2011	ELEC CONDR (NO. 8) BARE	LF	200
620-2012	ELEC CONDR (NO. 8) INSULATED	LF	400

ESTIMATED QUANTITIES (THIS SHEET ONLY)

POLE NO.	STATION	LOCATION	WATT	TYPE	STANDARD TYPE
A-1	509+00	0.0'	400	HPS	INS RD IL AM (TY SA) 50T - 8 - 8 (.4 KW) S

LUMINAIRE LOCATIONS AND TYPE

STATE OF TEXAS
JEFFREY A. DURSO
95653
LICENSED
PROFESSIONAL ENGINEER
2/15/11

NO.	DATE	REVISION DESCRIPTION	APP. BY

© 2009

Texas Department of Transportation

MACTEC
3520 EXECUTIVE CENTER DRIVE
SUITE 200
AUSTIN, TEXAS 78731
(512) 795-0360
REGISTRATION NUMBER: F-1784

BROWN & GAY ENGINEERS, INC.
Brown & Gay Engineers, Inc.
Houston • Fort Worth • Austin • Frisco
TBPE FIRM REGISTRATION NO. 1046

SH 151

ILLUMINATION LAYOUT

(SHEET 1 OF 6)

FED. RD. DIV. NO.		SHEET NO.
		335

STATE	DIST.	COUNTY	
TEXAS	SA	BEXAR	
CONT.	SECT.	JOB	HIGHWAY NO.
2452	01	043	SH 151

I:\projects\TX064_Pharr_Sub\TX064-01_SH15\03_CADD\2452-01-043\TRAFFIC\511ill01.dgn 2/15/2011 10:12:30 AM TxD64-01

LEGEND:

- PROP LUMINAIRE POLE
- PROP UNDERPASS LUMINAIRE W/ JUNCTION BOX
- PROP ELECTRICAL SERVICE
- PROP GROUND BOX
- PROP DISCONNECT
- PROP CONDUIT (BORED)
- PROP CONDUIT
- EXIST LUMINAIRE POLE (DOUBLE MAST ARMS)
- EXIST LUMINAIRE POLE (SINGLE MAST ARM)
- EXIST LUMINAIRE POLE (TO BE REMOVED)
- EXIST GROUND BOX
- EXIST CONDUIT

LUMINAIRE LOCATIONS AND TYPE					
POLE NO.	STATION	LOCATION	WATT	TYPE	STANDARD TYPE
A-2	511+70	0.0'	400	HPS	INS RD IL AM (TY SA) 50T - 8 - 8 (.4 KW) S
A-3	514+40	0.0'	400	HPS	INS RD IL AM (TY SA) 50T - 8 - 8 (.4 KW) S
A-4	517+10	0.0'	400	HPS	INS RD IL AM (TY SA) 50T - 8 - 8 (.4 KW) S
A-5	519+80	0.0'	400	HPS	INS RD IL AM (TY SA) 50T - 8 - 8 (.4 KW) S

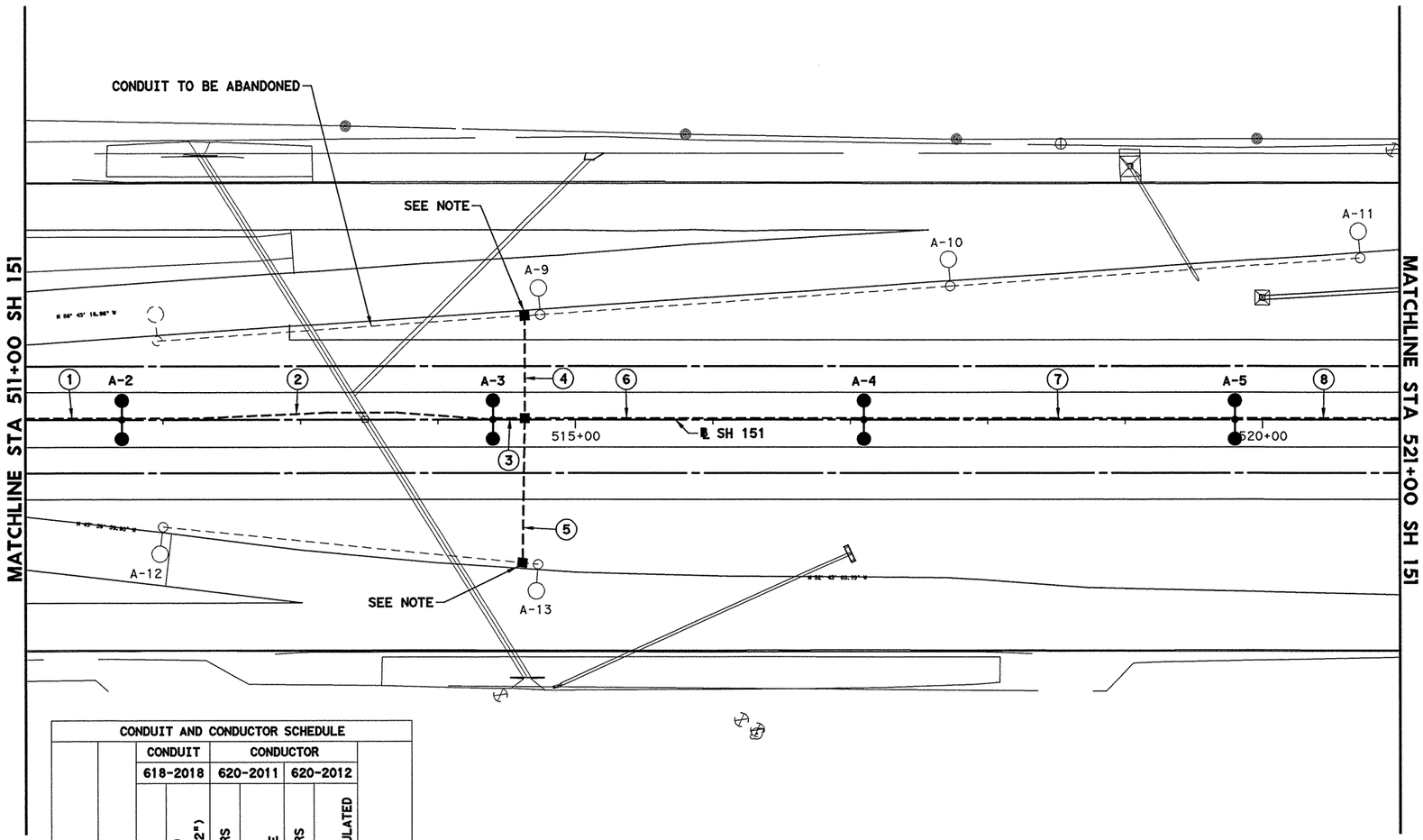

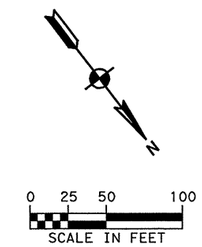

CONDUIT AND CONDUCTOR SCHEDULE								
		CONDUIT		CONDUCTOR				
		618-2018		620-2011		620-2012		
CIRCUIT	RUN NUMBER	# CONDUITS	CONDT (PVC) (SCHD 40) (2")	# CONDUCTORS	ELEC CONDR (NO. 8) BARE	# CONDUCTORS	ELEC CONDR (NO. 8) INSULATED	RUN LENGTH
A	1	1	70	1	70	2	140	70
A	2	1	275	1	275	2	550	275
A	3	1	25	1	25	2	50	25
A	4	1	75	1	75	2	150	75
A	5	1	105	1	105	2	210	105
A	6	1	245	1	245	2	490	245
A	7	1	270	1	270	2	540	270
A	8	1	120	1	120	2	240	120
TOTAL			1185		1185		2370	

ESTIMATED QUANTITIES (THIS SHEET ONLY)			
ITEM-CODE	DESCRIPTION	UNIT	SHEET TOTAL
416-2029	DRILL SHAFT (RDWY ILL POLE) (30 IN)	LF	32
610-2043	INS RD IL AM (TY SA) 50T - 8 - 8 (.4 KW) S	EA	4
610-2068	REMOVE RD IL ASM (TRANS - BASE)	EA	1
618-2018	CONDT (PVC) (SCHD 40) (2")	LF	1185
620-2011	ELEC CONDR (NO. 8) BARE	LF	1185
620-2012	ELEC CONDR (NO. 8) INSULATED	LF	2370
624-2008	GROUND BOX TY A (122311) W / APRON	EA	3

NOTE:
INSTALL EXISTING CONDUIT IN PROPOSED GROUND BOX. SPLICE EXISTING CONDUCTORS TO PROPOSED CONDUCTIONS IN PROPOSED GROUND BOX. THIS WORK WILL NOT BE PAID FOR DIRECTLY AND WILL BE SUBSIDIARY TO VARIOUS BID ITEMS.

STATE OF TEXAS
JEFFREY A. DURSO
95653
LICENSED
PROFESSIONAL ENGINEER
2/15/11

NO.	DATE	REVISION DESCRIPTION	APP. BY

© 2009

Texas Department of Transportation

MACTEC
3520 EXECUTIVE CENTER DRIVE
SUITE 200
AUSTIN, TEXAS 78731
(512) 795-0360
REGISTRATION NUMBER: F-1784

BROWN & GAY ENGINEERS, INC.
Brown & Gay Engineers, Inc.
Houston • Fort Worth • Austin • Frisco
TBPE FIRM REGISTRATION NO. 1046

SH 151

ILLUMINATION LAYOUT

(SHEET 2 OF 6)

FED. RD. DIV. NO.			SHEET NO.
			336
STATE	DIST.	COUNTY	
TEXAS	SA	BEXAR	
CONT.	SECT.	JOB	HIGHWAY NO.
2452	01	043	SH 151

t:\projects\TXD64_Pharr_Sub\TXD64-01_SH151\03_CADD\2452-01-043\TRAFFIC\151lm02.dgn 8/15/2011 10:12:37 AM TxD64-01

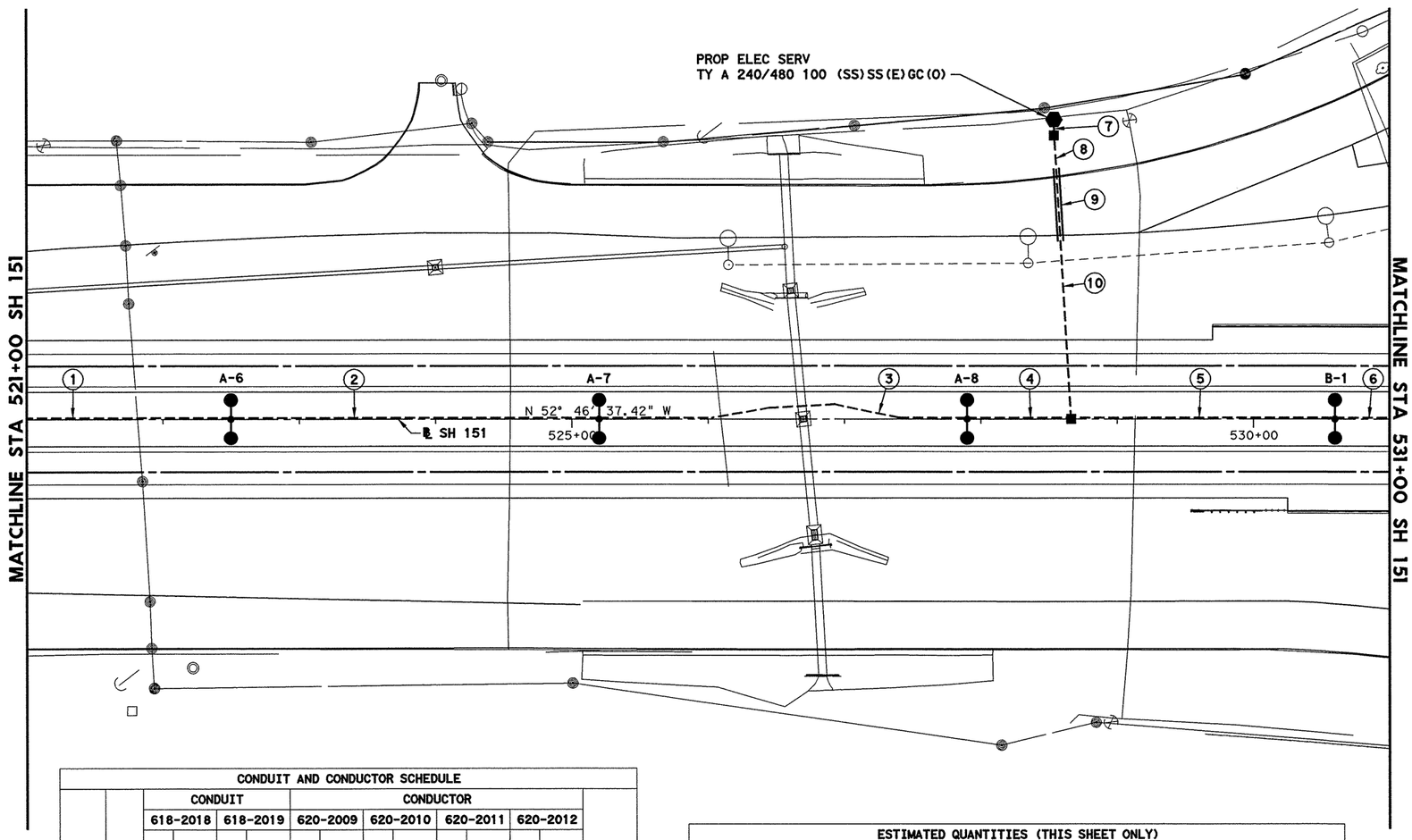

LEGEND:

- PROP LUMINAIRE POLE
- PROP UNDERPASS LUMINAIRE W/ JUNCTION BOX
- PROP ELECTRICAL SERVICE
- PROP GROUND BOX
- PROP DISCONNECT
- PROP CONDUIT (BORED)
- PROP CONDUIT
- EXIST LUMINAIRE POLE (DOUBLE MAST ARMS)
- EXIST LUMINAIRE POLE (SINGLE MAST ARM)
- EXIST LUMINAIRE POLE (TO BE REMOVED)
- EXIST GROUND BOX
- EXIST CONDUIT

N

0 25 50 100
SCALE IN FEET

CONDUIT AND CONDUCTOR SCHEDULE

		CONDUIT				CONDUCTOR								
		618-2018		618-2019		620-2009		620-2010		620-2011		620-2012		
CIRCUIT	RUN NUMBER	# CONDUITS	CONDT (PVC) (SCHD 40) (2")	# CONDUITS	CONDT (PVC) (SCHD 40) (2") (BORE)	# CONDUCTORS	ELEC CONDR (NO. 6) BARE	# CONDUCTORS	ELEC CONDR (NO. 6) INSULATED	# CONDUCTORS	ELEC CONDR (NO. 8) BARE	# CONDUCTORS	ELEC CONDR (NO. 8) INSULATED	RUN LENGTH
A	1	1	150							1	150	2	300	150
A	2	1	270							1	270	2	540	270
A	3	1	280			1	280	2	560					280
A	4	1	80			1	80	2	160					80
B	5	1	190							1	190	3	570	190
B	6	1	40							1	40	3	120	40
A, B	7	1	5			1	5	2	10			3	15	5
A, B	8	1	25			1	25	2	50			3	75	25
A, B	9			1	50	1	50	2	100			3	150	50
A, B	10	1	130			1	130	2	260			3	390	130
TOTAL			1170		50		570		1140		650		2160	

ESTIMATED QUANTITIES (THIS SHEET ONLY)

ITEM-CODE	DESCRIPTION	UNIT	SHEET TOTAL
416-2029	DRILL SHAFT (RDWY ILL POLE) (30 IN)	LF	32
610-2043	INS RD IL AM (TY SA) 50T - 8 - 8 (.4 KW) S	EA	4
618-2018	CONDT (PVC) (SCHD 40) (2")	LF	1170
618-2019	CONDT (PVC) (SCHD 40) (2") (BORE)	LF	50
620-2009	ELEC CONDR (NO. 6) BARE	LF	570
620-2010	ELEC CONDR (NO. 6) INSULATED	LF	1140
620-2011	ELEC CONDR (NO. 8) BARE	LF	650
620-2012	ELEC CONDR (NO. 8) INSULATED	LF	2160
624-2008	GROUND BOX TY A (122311) W / APRON	EA	2
628-2038	ELC SRV TY A 240/480 100 (SS)SS(E)GC(O)	EA	1

LUMINAIRE LOCATIONS AND TYPE

POLE NO.	STATION	LOCATION	WATT	TYPE	STANDARD TYPE
A-6	522+50	0.0'	400	HPS	INS RD IL AM (TY SA) 50T - 8 - 8 (.4 KW) S
A-7	525+20	0.0'	400	HPS	INS RD IL AM (TY SA) 50T - 8 - 8 (.4 KW) S
A-8	527+90	0.0'	400	HPS	INS RD IL AM (TY SA) 50T - 8 - 8 (.4 KW) S
B-1	530+60	0.0'	400	HPS	INS RD IL AM (TY SA) 50T - 8 - 8 (.4 KW) S

STATE OF TEXAS
JEFFREY A. DURSO
95653
LICENSED
PROFESSIONAL ENGINEER
2/15/11

NO.	DATE	REVISION DESCRIPTION	APP. BY

© 2009

Texas Department of Transportation

MACTEC
3520 EXECUTIVE CENTER DRIVE
SUITE 200
AUSTIN, TEXAS 78731
(512) 795-0360
REGISTRATION NUMBER: F-1784

BROWN & GAY ENGINEERS, INC.
Brown & Gay Engineers, Inc.
Houston • Fort Worth • Austin • Frisco
TBPE FIRM REGISTRATION NO. 1046

SH 151

ILLUMINATION LAYOUT

(SHEET 3 OF 6)

FED. RD. DIV. NO.		SHEET NO.
		337

STATE	DIST.	COUNTY
TEXAS	SA	BEXAR

CONT.	SECT.	JOB	HIGHWAY NO.
2452	01	043	SH 151

f:\projects\TX064_Pharr_Sub\TX064-01_SH151\03_CADD\2452-01-043\TRAFFIC\151ill03.dgn 10:12:45 AM TxDot 8/15/2011

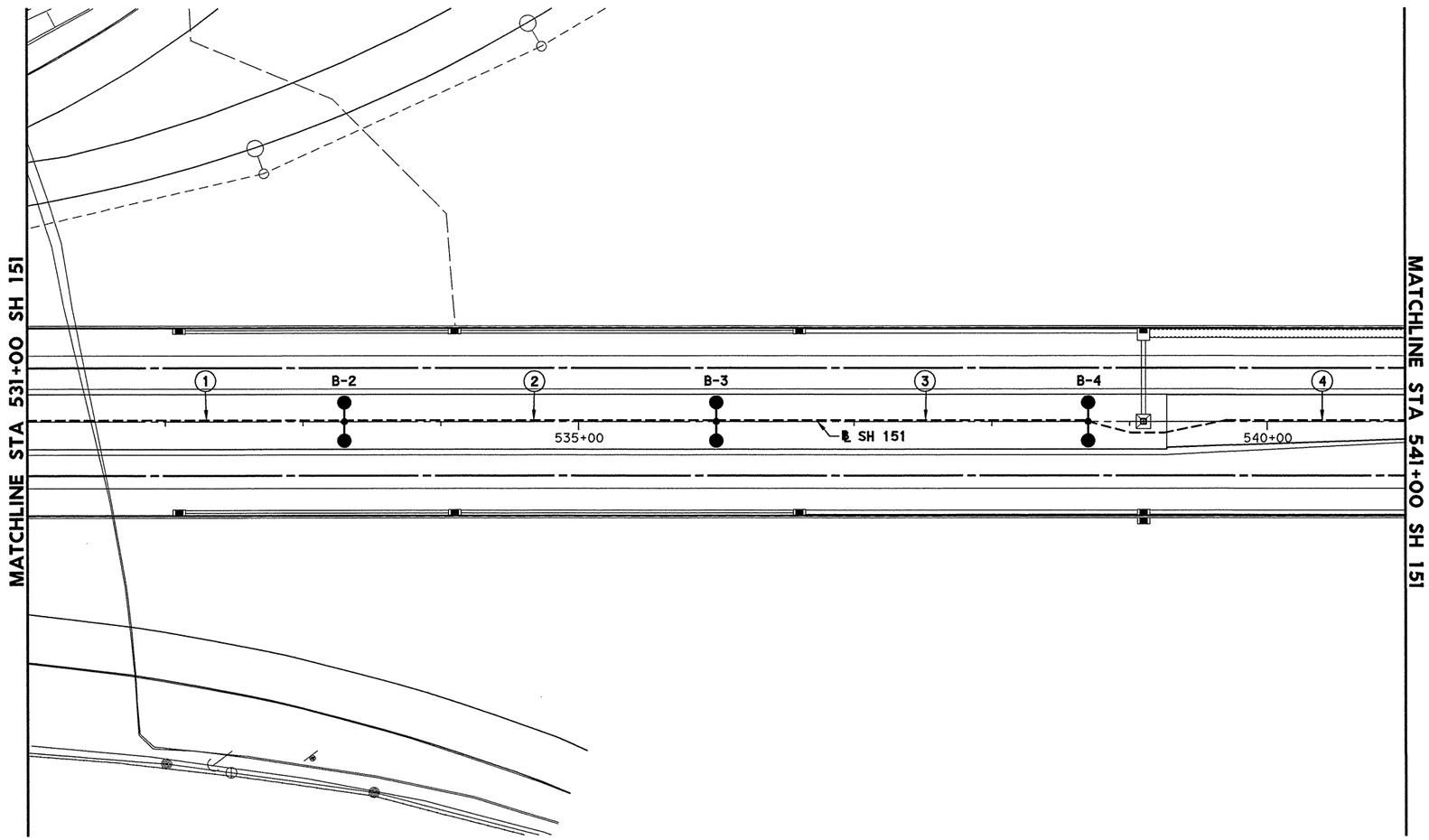

LEGEND:

- PROP LUMINAIRE POLE
- PROP UNDERPASS LUMINAIRE W/ JUNCTION BOX
- PROP ELECTRICAL SERVICE
- PROP GROUND BOX
- PROP DISCONNECT
- PROP CONDUIT (BORED)
- PROP CONDUIT
- EXIST LUMINAIRE POLE (DOUBLE MAST ARMS)
- EXIST LUMINAIRE POLE (SINGLE MAST ARM)
- EXIST LUMINAIRE POLE (TO BE REMOVED)
- EXIST GROUND BOX
- EXIST CONDUIT

N

0 25 50 100
SCALE IN FEET

CONDUIT AND CONDUCTOR SCHEDULE								
		CONDUIT		CONDUCTOR				
		618-2018		620-2011		620-2012		
CIRCUIT	RUN NUMBER	# CONDUITS	CONDT (PVC) (SCHD 40) (2")	# CONDUCTORS	ELEC CONDR (NO. 8) BARE	# CONDUCTORS	ELEC CONDR (NO. 8) INSULATED	RUN LENGTH
B	1	1	230	1	230	3	690	230
B	2	1	270	1	270	3	810	270
B	3	1	270	1	270	3	810	270
B	4	1	240	1	240	3	720	240
TOTAL			1010		1010		3030	

ESTIMATED QUANTITIES (THIS SHEET ONLY)			
ITEM-CODE	DESCRIPTION	UNIT	SHEET TOTAL
416-2029	DRILL SHAFT (RDWY ILL POLE) (30 IN)	LF	24
610-2043	INS RD IL AM (TY SA) 50T - 8 - 8 (.4 KW) S	EA	3
618-2018	CONDT (PVC) (SCHD 40) (2")	LF	1010
620-2011	ELEC CONDR (NO. 8) BARE	LF	1010
620-2012	ELEC CONDR (NO. 8) INSULATED	LF	3030

LUMINAIRE LOCATIONS AND TYPE					
POLE NO.	STATION	LOCATION	WATT	TYPE	STANDARD TYPE
B-2	533+30	0.0'	400	HPS	INS RD IL AM (TY SA) 50T - 8 - 8 (.4 KW) S
B-3	536+00	0.0'	400	HPS	INS RD IL AM (TY SA) 50T - 8 - 8 (.4 KW) S
B-4	538+70	0.0'	400	HPS	INS RD IL AM (TY SA) 50T - 8 - 8 (.4 KW) S

STATE OF TEXAS
JEFFREY A. DURSO
95653
LICENSED
PROFESSIONAL ENGINEER
2/15/11

NO.	DATE	REVISION DESCRIPTION	APP. BY

© 2009

Texas Department of Transportation

MACTEC
3520 EXECUTIVE CENTER DRIVE
SUITE 200
AUSTIN, TEXAS 78731
(512) 795-0360
REGISTRATION NUMBER: F-1784

BROWN & GAY ENGINEERS, INC.
Brown & Gay Engineers, Inc.
Houston • Fort Worth • Austin • Frisco
TBPE FIRM REGISTRATION NO. 1046

SH 151

ILLUMINATION LAYOUT

(SHEET 4 OF 6)

FED. RD. DIV. NO.		SHEET NO.
		338

STATE	DIST.	COUNTY	
TEXAS	SA	BEXAR	
CONT.	SECT.	JOB	HIGHWAY NO.
2452	01	043	SH 151

f:\projects\TXD64_Pharr_Sub\TXD64-01_SH151\03_CADD\2452-01-043\TRAFFIC\5illm04.dgn 10:12:53 AM TxD64-01

NOTE:
SEE "UNDERPASS ILLUMINATION LAYOUT" SHEET FOR UNDERPASS LIGHTING.

CONDUIT AND CONDUCTOR SCHEDULE								
		CONDUIT		CONDUCTOR				
		618-2018		620-2011		620-2012		
CIRCUIT	RUN NUMBER	# CONDUITS	CONDT (PVC) (SCHD 40) (2")	# CONDUCTORS	ELEC CONDR (NO. 8) BARE	# CONDUCTORS	ELEC CONDR (NO. 8) INSULATED	RUN LENGTH
B	1	1	40	1	40	3	120	40
B	2	1	170	1	170	3	510	170
B	3	1	110	1	110	3	330	110
B	4	1	260	1	260	2	520	260
EX	5	1	15	1	15	2	30	15
EX	6	1	30	1	30	2	60	30
EX	7	1	240	1	240	2	480	240
EX	8	1	30	1	30	2	60	30
TOTAL			895		895		2110	

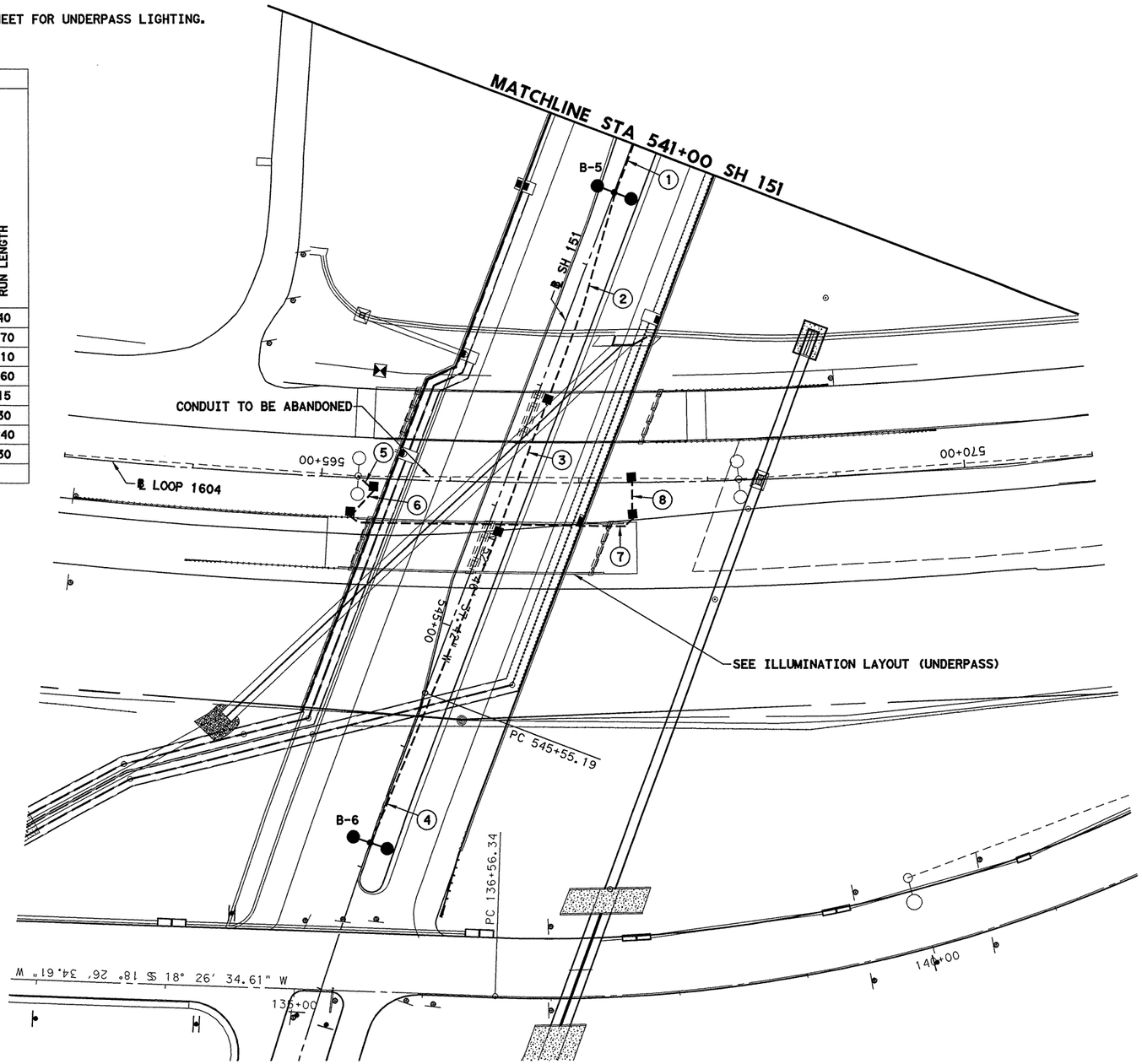

LEGEND:

- PROP LUMINAIRE POLE
- PROP UNDERPASS LUMINAIRE W/ JUNCTION BOX
- PROP ELECTRICAL SERVICE
- PROP GROUND BOX
- PROP DISCONNECT
- PROP CONDUIT (BORED)
- PROP CONDUIT
- EXIST LUMINAIRE POLE (DOUBLE MAST ARMS)
- EXIST LUMINAIRE POLE (SINGLE MAST ARM)
- EXIST LUMINAIRE POLE (TO BE REMOVED)
- EXIST GROUND BOX
- EXIST CONDUIT

N

0 25 50 100
SCALE IN FEET

LUMINAIRE LOCATIONS AND TYPE					
POLE NO.	STATION	LOCATION	WATT	TYPE	STANDARD TYPE
B-5	541+40	0.0'	400	HPS	INS RD IL AM (TY SA) 50T - 8 - 8 (.4 KW) S
B-6	546+80	0.0'	400	HPS	INS RD IL AM (TY SA) 50T - 8 - 8 (.4 KW) S

ESTIMATED QUANTITIES (THIS SHEET ONLY)			
ITEM-CODE	DESCRIPTION	UNIT	SHEET TOTAL
416-2029	DRILL SHAFT (RDWY ILL POLE) (30 IN)	LF	16
610-2043	INS RD IL AM (TY SA) 50T - 8 - 8 (.4 KW) S	EA	2
618-2018	CONDT (PVC) (SCHD 40) (2")	LF	895
620-2011	ELEC CONDR (NO. 8) BARE	LF	895
620-2012	ELEC CONDR (NO. 8) INSULATED	LF	2110
624-2008	GROUND BOX TY A (122311) W / APRON	EA	6

STATE OF TEXAS
JEFFREY A. DURSO
95653
LICENSED
PROFESSIONAL ENGINEER
2/15/11

NO.	DATE	REVISION DESCRIPTION	APP. BY

© 2009

Texas Department of Transportation

MACTEC
3520 EXECUTIVE CENTER DRIVE
SUITE 200
AUSTIN, TEXAS 78731
(512) 795-0360
REGISTRATION NUMBER: F-1784

BROWN & GAY ENGINEERS, INC.
Brown & Gay Engineers, Inc.
Houston • Fort Worth • Austin • Frisco
TBPE FIRM REGISTRATION NO. 1046

SH 151

ILLUMINATION LAYOUT

(SHEET 5 OF 6)

FED. RD. DIV. NO.			SHEET NO.
			339
STATE	DIST.	COUNTY	
TEXAS	SA	BEXAR	
CONT.	SECT.	JOB	HIGHWAY NO.
2452	01	043	SH 151

t:\projects\TX064_Pharr_Sub\TX064-01_SH151\03_CADD\2452-01-043\TRAFFIC\151ill05.dgn 2/15/2011 10:33:01 AM TxDot-01

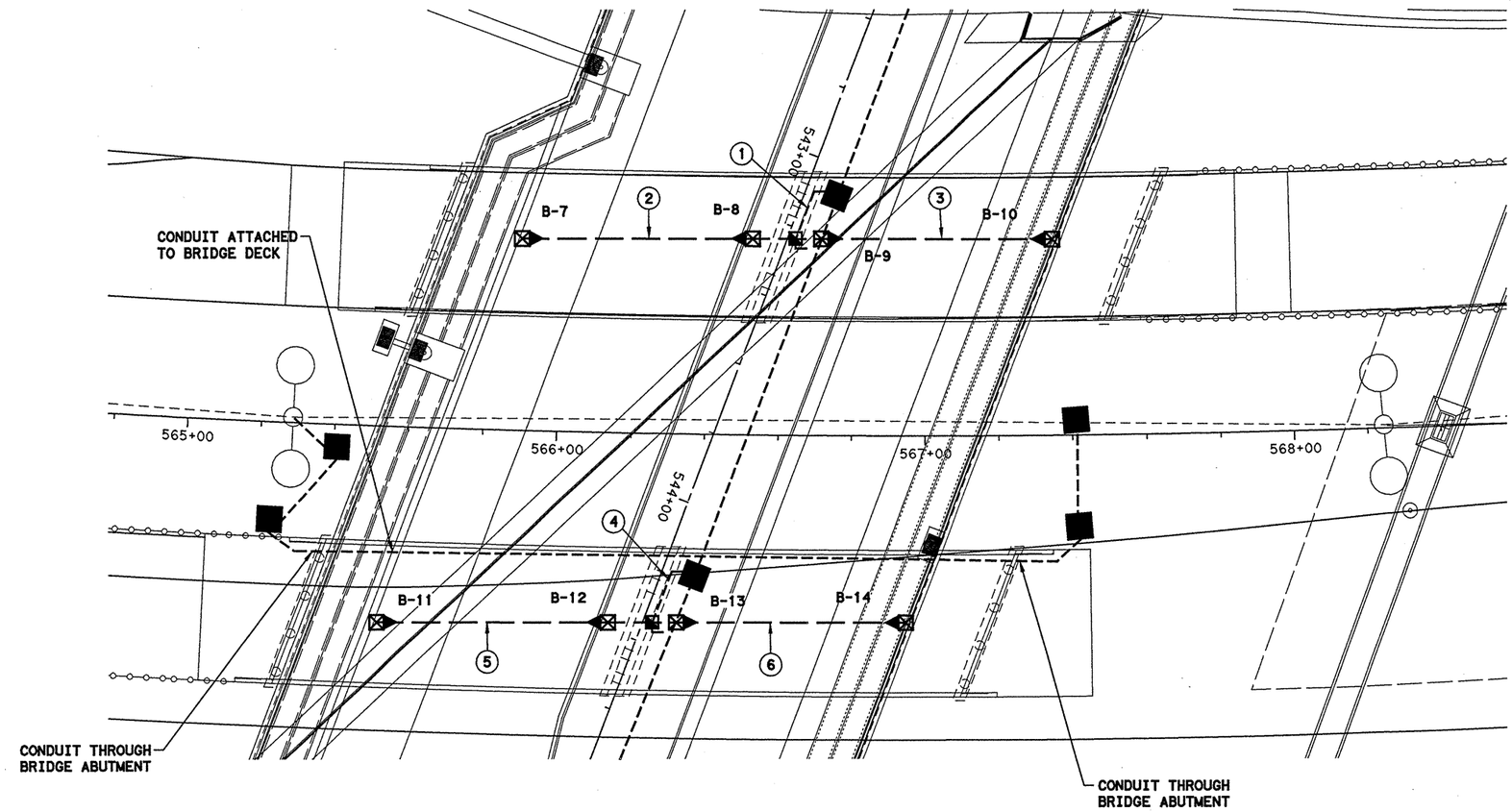

LEGEND:

- PROP LUMINAIRE POLE
- PROP UNDERPASS LUMINAIRE W/ JUNCTION BOX
- PROP ELECTRICAL SERVICE
- PROP GROUND BOX
- PROP DISCONNECT
- PROP CONDUIT (BORED)
- PROP CONDUIT
- EXIST LUMINAIRE POLE (DOUBLE MAST ARMS)
- EXIST LUMINAIRE POLE (SINGLE MAST ARM)
- EXIST LUMINAIRE POLE (TO BE REMOVED)
- EXIST GROUND BOX
- EXIST CONDUIT

0 10 20 40
SCALE IN FEET

CONDUIT AND CONDUCTOR SCHEDULE								
		CONDUIT		CONDUCTOR				
		618-2018		620-2011		620-2012		
CIRCUIT	RUN NUMBER	# CONDUITS	CONDT (RM) (3 / 4")	# CONDUCTORS	ELEC CONDR (NO. 12) BARE	# CONDUCTORS	ELEC CONDR (NO. 12) INSULATED	RUN LENGTH
B	1	1	60	1	60	2	120	60
B	2	1	65	1	65	2	130	65
B	3	1	65	1	65	2	130	65
B	4	1	60	1	60	2	120	60
B	5	1	65	1	65	2	130	65
B	6	1	65	1	65	2	130	65
TOTAL			380		380		760	

LUMINAIRE LOCATIONS AND TYPE					
POLE NO.	STATION	LOCATION	WATT	TYPE	STANDARD TYPE
B-7	565+89.2	51.9'	150	IF	INS RD IL AM (U / P) (TY IF) (.15KW)
B-8	566+52.5	53.1'	150	IF	INS RD IL AM (U / P) (TY IF) (.15KW)
B-9	566+71.6	53.5'	150	IF	INS RD IL AM (U / P) (TY IF) (.15KW)
B-10	567+34.8	53.1'	150	IF	INS RD IL AM (U / P) (TY IF) (.15KW)
B-11	565+53.2	53.3'	150	IF	INS RD IL AM (U / P) (TY IF) (.15KW)
B-12	566+14.8	51.6'	150	IF	INS RD IL AM (U / P) (TY IF) (.15KW)
B-13	566.32.9	51.2'	150	IF	INS RD IL AM (U / P) (TY IF) (.15KW)
B-14	566+94.7	50.8'	150	IF	INS RD IL AM (U / P) (TY IF) (.15KW)

ESTIMATED QUANTITIES (THIS SHEET ONLY)			
ITEM-CODE	DESCRIPTION	UNIT	SHEET TOTAL
610-2059	INS RD IL AM (U / P) (TY IF) (.15KW)	EA	8
618-2044	CONDT (RM) (3 / 4")	LF	380
620-2015	ELEC CONDR (NO.12) BARE	LF	380
620-2016	ELEC CONDR (NO.12) INSULATED	LF	760

NOTE:
RUNS #1 AND #4 ARE IN BRIDGE COLUMN AND ABUTMENT

STATE OF TEXAS
JEFFREY A. DURSO
95653
LICENSED
PROFESSIONAL ENGINEER
4/20/11

NO.	DATE	REVISION DESCRIPTION	APP. BY

© 2009

Texas Department of Transportation

MACTEC
3520 EXECUTIVE CENTER DRIVE
SUITE 200
AUSTIN, TEXAS 78731
(512) 795-0360
REGISTRATION NUMBER: F-1784

BROWN & GAY ENGINEERS, INC.
Brown & Gay Engineers, Inc.
Houston • Fort Worth • Austin • Frisco
TBPE FIRM REGISTRATION NO. 1046

SH 151

ILLUMINATION LAYOUT (UNDERPASS)

(SHEET 6 OF 6)

FED. RD. DIV. NO.			SHEET NO.
			340
STATE	DIST.	COUNTY	
TEXAS	SA	BEXAR	
CONT.	SECT.	JOB	HIGHWAY NO.
2452	01	043	SH 151

T:\Projects\TXD64_Pharr_Sub\TXD64-01_SH151\03_CADD\2452-01-043\Traffic\5illm06.dgn 4/20/2011 8:32:13 AM TxD64-01

p:\4760\0-0129\cad\standard\V5\std_J\lm02.dgn 2/21/2011 7:05:31 PM mwmldkiff

DISCLAIMER: The use of this standard is governed by the "Texas Engineering Practice Act". No warranty of any kind is made by TxDOT for any purpose whatsoever. TxDOT assumes no responsibility for the conversion of this standard to other formats or for incorrect results or damages resulting from its use.

ROADWAY ILLUMINATION LIGHT FIXTURES

Fixture Housing:

A. Provide *UL listed fixture suitable for use in wet locations. Ensure optical compartment meets IEC Standard 60529-IP 65. Place a permanent label inside fixture indicating fixture meets *UL, IP 65 optical, and shows date of manufacture. Meet ANSI 136.15 wattage label requirements.

B. Construct fixture housing, lens frame, and door from 96% copper-free, die cast aluminum. Provide fixture mounting to a 2-in. pipe arm. Equip fixture with a 4-bolt clamp capable of adjustments plus or minus 5 degrees from level. Meet ANSI 136.31 3.0 G vibration requirements.

C. Attach a level bubble to the fixture housing. Ensure the level bubble is sensitive to 1 degree changes in position at any point within 5 degrees of the level position. Ensure the level bubble is clearly visible from the ground up to a 50 ft. mounting height. Ensure level bubble corresponds to level position of fixture.

D. Do not exceed 1.6 sq. ft. effective projected area. Do not exceed 60 lb. maximum weight.

E. Equip fixture with a 3-prong photocell receptacle with shorting cap installed.

F. Paint inside and outside of fixture light gray, when installing on galvanized poles. For all other fixtures, paint to match the color of the pole as directed by the Department.

G. Use a thermoset powder coat system. Ensure paint exceeds 1000-hr. salt-spray test in accordance with ASTM B117. Ensure a nominal thickness of 2.5 mil and no pigment loss upon 50 double-rubs using Methyl Ethyl Ketone (MEK) solvent in accordance with ASTM D5402, "Standard Practice for Assessing the Solvent Resistance of Organic Coatings Using Solvent Rubs."

H. Fabricate brackets, nuts, bolts, washers, ballast tray, and parts from stainless-steel, or aluminum of adequate thickness as approved by the Department except that:
   1. The 4 bolts/studs, 4 flat washers, 4 lock washers, and clamp that attach the luminaire to the arm may be galvanized in accordance with ASTM A123, A153 or B633. Provide means to ensure clamp is in the open position when installing.
   2. Glass lens retainer spring clips may be fabricated from galvanized steel in accordance with ASTM A153.
   3. Provide nylon throat or other approved locking means for all stainless steel nuts.

I. Provide optical assemblies which meet the following:
   1. Polished aluminum reflectors with Alzak or equal coating.
   2. Do not paint reflectors, except that, when approved by the Engineer, some surfaces may be painted with 92% reflective white paint.
   3. Reflectors may be one piece or segmented as follows.
      a. One piece reflectors:
         1. Seal photometric compartment by the use of a seamless or vulcanized seam, closed-cell silicone gasket, or other method approved by the Department.
         2. Provide a non-adjustable lamp socket mounting method so the lamp center is consistent with the reflector.
      b. Segmented reflectors:
         1. Attach segments at both ends (or opposite sides if segments are square) of the segment to a rigid aluminum base plate and side wall support assembly. Seal glass lens to lens frame with a one piece seamless silicone gasket.
   4. Equip the optical assembly with a lamp support in addition to the lamp socket to ensure the outer envelope is positioned as intended.

J. Provide 5/32 in. thick (min.) clear heat tempered or borosilicate glass.

Electrical Components:

K. Meet the following ballast requirements and pass tests in accordance with Test Method Tex-1130-T, "Ballasts of Lighting Assemblies."
   1. Mount electrical components on a removable stainless steel or aluminum tray of adequate thickness.
   2. Provide a fixture wiring diagram on or near the ballast.
   3. Use a copper wound magnetic regulating three isolated coil ballast.
   4. Provide ballast factor between 0.95 and 1.0.
   5. When the circuit voltage indicated on the plans is applied, the ballast input wattage during fluctuations of the test voltage of plus 10 percent and minus 10 percent, do not exceed the following:
      a. 220 Watts for 150 watt nominal lamp rating
      b. 440 Watts for 250 watt nominal lamp rating
      c. 552 Watts for 400 watt nominal lamp rating
   6. During fluctuation of the test voltage of plus 10 percent and minus 10 percent, ensure the lamp wattage fluctuation does not exceed a total of 20 percent and ballast maintains lamp wattage within the following limits.
      a. 110 Watts minimum and 180 Watts maximum for 150 Watt nominal lamp rating
      b. 175 Watts minimum and 370 Watts maximum for 250 Watt nominal lamp rating
      c. 280 Watts minimum and 475 Watts maximum for 400 Watt nominal lamp rating
   7. Ensure the ballast power factor, when tested at circuit voltage indicated on the plans, is not less than 90%.
   8. Permanently and clearly mark ballast or fixture to indicate following:
      a. Lamp type
      b. Catalog number
      c. Voltage rating
      d. Connection diagram
      e. Manufacturer
      f. *UL listing

L. Meet the following electronic starting aid requirements and pass tests in accordance with Test Method Tex-1140-T, "Electronic Starting Aids of High Pressure Sodium Vapor Lighting Assembies."
   1. Provide a starting pulse with an amplitude of 2500 volts minimum, 4000 volts maximum.
   2. Ensure the pulse width is a minimum of 0.8 microseconds at 2250 volts.
   3. Ensure the pulse occurs when the open circuit voltage is equal to or greater than 90 percent of peak open circuit voltage.
   4. Ensure pulse repetition rate is a minimum of one per cycle.
   5. Provide a pulse current of 0.18 amperes (min.).
   6. Discontinue to pulse when, either,
      a. the lamp starts, or
      b. after a minimum of 3 minutes and a maximum of 10 minutes if the lamp fails to start.

M. Do not place fuses inside pole mounted luminaires. For wall mount or underpass mounted luminaires, provide internal 10 amp time-delay fuses.

N. Provide a two position terminal block for connecting supply wires which meet the following requirements:
   1. Insulate using nylon, porcelain, or phenolic material. Ensure phenolic terminal block is of adequate construction as approved by the Department.
   2. Fabricate terminals from nickel, tin plated brass, or aluminum.

O. Equip fixture with MOV surge protection in accordance with IEEE recommendations.
   1. Connect MOV from line to neutral or from line to line.
   2. Install MOV on the terminal block.

Lamp & Socket:

P. Provide *UL listed mogul base lamp sockets rated for 600 V, 1500 W that can withstand a 5000 V pulse. Meet *UL 496 requirements. Use porcelain-insulated lamp sockets with nickel plated copper alloy screw shells. Equip socket shell with a spring tensioned contact. Use nickel-plated copper alloy or stainless steel for the spring and contact.

Q. Supply and secure lamps inside the fixture that meet the following:
   1. Use pre-qualified high pressure sodium (HPS) lamps from TxDOT's material producers list of the wattages shown on the plans. No alternatives allowed.
   2. Average rated lamp life 30,000 hours.
   3. Fully extinguish at end of usable lamp life and remain extinguished without cycling.
   4. Do not provide lamps that burn at reduced output at end of life.
   5. Meet the Federal Toxic Characteristic Leachate Procedure (TCLP) limits.

Performance:

R. Meet the following photometric requirements using published photometric data and photometric data obtained by testing sampled fixtures.
   1. 150 Watt mast arm (underpass) mounted luminaire. Meet IESNA Cutoff requirements. Provide a minimum intensity of 0.20 foot-candle in a rectangular area measuring 110.0 ft. by 30.0 ft., when mounted in a level position as indicated on the properly mounted fixture level bubble 20.0 ft. above the midpoint of either long side of the surface area. Do not exceed 50:1 maximum to minimum horizontal illuminance uniformity ratio within the rectangular area.
   2. 250-watt mast arm mounted luminaire. Meet IESNA Cutoff requirements. Provide a minimum intensity of 0.20 foot-candle in a rectangular area measuring 190.0 ft. by 45.0 ft., when mounted properly in a level position as indicated on the level bubble 40.0 ft. above the midpoint either long side of the surface area. Ensure light intensities along a line parallel to and 20.0 ft. in from the long side of this rectangular area do not decrease by more than 0.50 foot-candles in any 5.0 ft. interval along the line from 10.0 ft. to 90.0 ft. on both sides of the luminaire and provide a minimum intensity of 0.30 foot-candles at any point along the line.Do not exceed 20:1 maximum-to-minimum horizontal illuminance uniformity ratio within the rectangular area.
   3. 400-watt mast arm mounted luminaire. Meet IESNA Cutoff requirements. Provide a minimum intensity of 0.20 foot-candle in a rectanglular area measuring 220.0 ft. by 60.0 ft. when mounted properly in a level position as indicated on the level bubble 50.0 ft. above the midpoint of either long side of the surface area. Ensure light intensities along a line parallel to and 30.0 ft. in from the long side of this rectangular area do not decrease by more than 0.75 foot-candle in any 10.0 ft. interval along the line from 10.0 ft. to 90.0 ft. on both sides of the luminaire and provide a minimum intensity of 0.30 foot-candle at any point along the line. Do not exceed 20:1 maximum-to-minimum horizontal illuminance uniformity ratio within the rectangular area.

S. Ensure photometric data is consistent from fixture to fixture. Match published photometric data (or approved photometric reports submitted during the prequalification process as the typical photometric output instead of published data) as follows:
   1. Point of maximum candela within 5 degrees horizontally and vertically.
   2. Maximum candela within 20% of published maximum candela.
   3. Fixture efficiency within 10% of published efficiency.

* When reference is made to UL, it can be considered to mean a Nationally Recognized Independent Testing Lab (NRTL). Comperable standards of Canadian Standard Association, Electrical Testing Laboratories or Factory Mutual can be equal to the referenced UL standard.

Texas Department of Transportation
Traffic Operations Division

ROADWAY ILLUMINATION DETAILS

(RDWY ILLUM LIGHT FIXTURES)

RID(LUM1)-07

© TxDOT January 2007

DN: TXDOT	CK: TXDOT	DW: TXDOT	CK: TXDOT	
REVISIONS	CONT	SECT	JOB	HIGHWAY
	2452	01	043	SH 151
	DIST	COUNTY		SHEET NO.
	SA	BEXAR		341

DISCLAIMER: The use of this standard is governed by the "Texas Engineering Practice Act". No warranty of any kind is made by TxDOT for any purpose whatsoever. TxDOT assumes no responsibility for the conversion of this standard to other formats or for incorrect results or damages resulting from its use.

standard\USlstd_llnp3.dgn 2/21/2011 7:05:32 PM mwmldstt1 pw:\\FTBOWO\0129\cad

Prequalification:

T. Use only pre-qualified fixtures. No alternates will be considered.
   1. Only materials with approved product codes or designations from prequalified producers are accepted on bids. The Construction Division (CST) of the Texas Department of Transportation (TxDOT) maintains the material producers list of approved producer product codes or designations. Use the following website to view this list:
      http://www.dot.state.tx.us/business/producer_list.htm
      Use of prequalified material does not relieve the contractor of the responsibility to provide materials that meet the specifications. All materials, including those shown on the prequalified material list, may be inspected and tested at any time and may be rejected if not in compliance with the specifications.
   2. Notify the Department in writing as to which fixture from the prequalified list of approved fixtures will be supplied on each project.
   3. To have a fixture listed as pre-qualified:
      a. Submit a sample of each type of luminaire and all pertinent data, including published photometric data and recently tested photometric data (IES format, both "averaged" and both sides of "un-averaged" data) to:
         TXDOT- TRF 118 East Riverside Dr. Austin, TX 78704
      b. Demonstrate a commitment to quality.
      c. Submit the following documentation:
         1. QA/QC program documentation with the following minimum requirements;
            a. Written statement of the companies QA/QC policy.
            b. QA/QC person employed that has special QA/QC training and has QA/QC as their primary job responsibility.
            c. A written procedure specifically for handling orders for fixtures built to TxDOT specifications.
            d. A written procedure for keeping track of fixtures built, certified, and tested for TxDOT orders.
            e. A check list of features for TxDOT fixtures with QA/QC person signature.
         2. Fixture UL certification
         3. IP 65 certification
         4. 3G certification
         5. Aluminum casting and paint analysis
         6. Socket, MOV, and shutoff ignitor data
         7. Stainless steel and aluminum bracket data
         8. Ballast electrical data
         9. Photometric data
         10. Lamp data
      d. Prequalification samples, if approved, will not be returned to the manufacturer but will be retained by the the Department for comparison testing. Once a fixture has been approved, do not change any material or manufacturing method without prior approval of the Department. Unapproved changes will result in rejection of the fixture.
      e. In addition, luminaires will be tested for compliance with this specification. Luminaires that inconsistently pass testing or that are inconsistent with published photometric information will be removed from the pre-qualified list at the discretion of the Department.

Sampling:

U. Sample in accordance with Test Method Tex-1110-T, "Sampling Lighting Assemblies."

Manufacturer Warranty:

V. Replace failed fixtures, when non-operable due to defects in materials or workmanship within five years of installation with a fixture that passes all testing, delivered to the project location. Lamps and photocells are subject to the warranties of their respective manufacturers.

Testing:

W. Conduct electrical testing required in the Ballast section. Provide photometric testing of fixtures. Test fixtures at the following rates.
   1. Manufactuer Testing. Before fixtures are shipped from the manufacturer, test fixtures as follows. From each lot or manufacturing run, select one completed fixture of each 25, with a minimum of 2 and a maximum of 5. Test photometrics at an independent test lab inspected and approved by TxDOT. Electrical testing may be performed at manufacturer's facility.
      a. Provide IES photometric report in two formats:
         1. Standard averaged format for asymmetric fixtures.
         2. Un-averaged format showing both sides. Un-averaged data may be supplied in two files or as approved by the Department.
      b. Provide electrical and photometric test data directly to TRF-TE electronically for evaluation prior to shipping fixtures to the project. Do not ship fixtures until test data for each lot is approved by TRF-TE.
      c. Provide the following information on test reports:
         1. TxDOT's Control-Section-Job number, maintenance contract number, or purchase order number the fixtures are assigned to,
         2. a unique fixture test number per fixture,
         3. date of manufacture, and
         4. quantities supplied and lot number per fixture type.
      d. Write the unique lab report number on the top of the fixture housing with permanent marker. Ensure the test lab retains the results for 5 years. Provide the Department access to documentation.
      e. Retain records of manufacturing lots, test reports, lot quantities, and other pertinent details. Submit records to the Department upon request.
      f. Submit to TRF-TE a daily shipment report for shipments to each job.
      g. Make available to TxDOT inspectors upon request, all manufacturing facilities involved in the production of fixtures for use on Department projects, inventories of fixtures produced to Department specifications, and records of fixture testing and tracking.
   2. Departmental Test Reporting. Departmental test reports will be issued in accordance with Tex 1110-T.

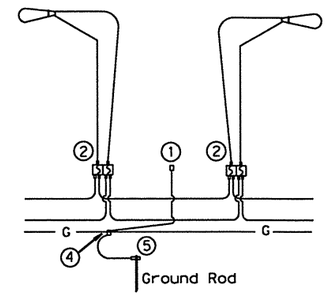

FOR THREE-WIRE CIRCUIT-CENTER GROUNDED
LUMINAIRES SERVED AT 480V ON 240/480 VOLT SERVICE OR LUMINAIRES SERVED AT 240V FOR FOR 120/240 VOLT SERVICE.

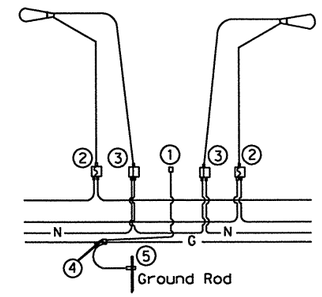

FOUR-WIRE CIRCUIT-CENTER GROUNDED
LUMINAIRES SERVED AT 240V (240/480 VOLT SERVICE)

NOTES:

1. Use 1/2 in.-13 UNC threaded, copper or tin-plated copper, pole bonding connector, sized appropriately for conductors.
2. 3. Use pre-qualified Breakaway Connectors for both T-Base and Shoe-Base installations.
4. Split Bolt or other connector.
5. Use Ground Rod Clamp listed for its intended purpose (i.e. concrete, direct burial...)

Texas Department of Transportation
Traffic Operations Division

ROADWAY ILLUMINATION DETAILS

(RDWY ILLUM LIGHT FIXTURES)

RID(LUM2)-07

© TxDOT January 2007

DN: TXDOT	CK: TXDOT	DW: TXDOT	CK: TXDOT
CONT	SECT	JOB	HIGHWAY
2452	01	043	SH 151
DIST		COUNTY	SHEET NO.
SA		BEXAR	342

REVISIONS

DISCLAIMER: The use of this standard is governed by the "Texas Engineering Practice Act". No warranty of any kind is made by TxDOT for any purpose whatsoever. TxDOT assumes no responsibility for the conversion of this standard to other formats or for incorrect results or damages resulting from its use.

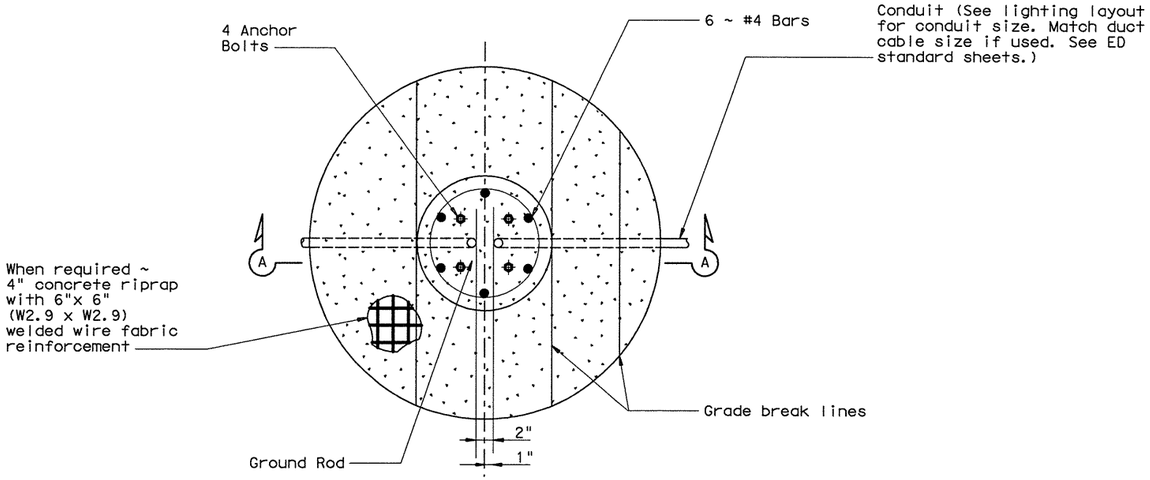

FOUNDATION DETAIL

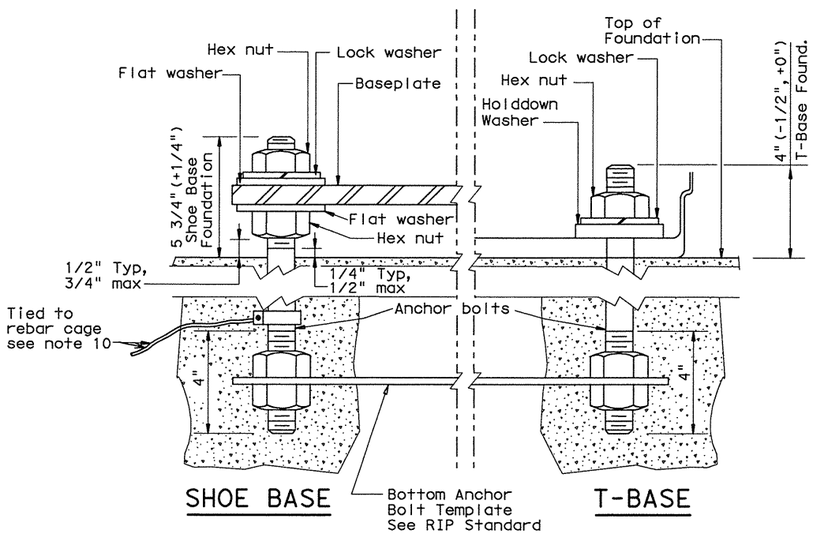

ANCHOR BOLT DETAIL

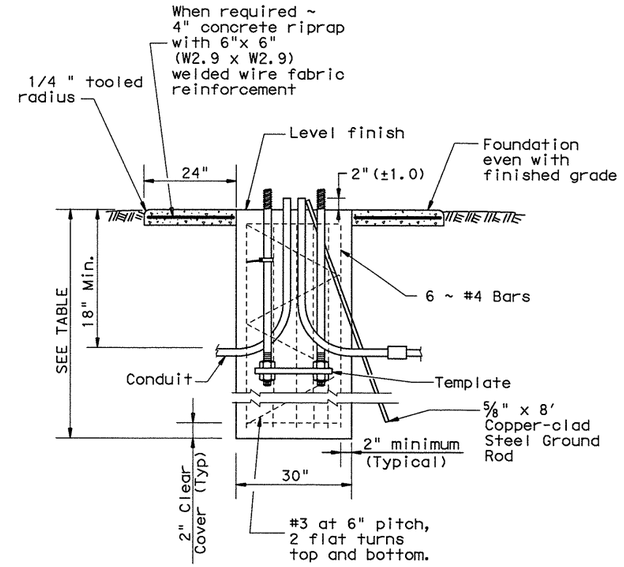

SECTION A-A

SHOWING CONSTANT GRADE

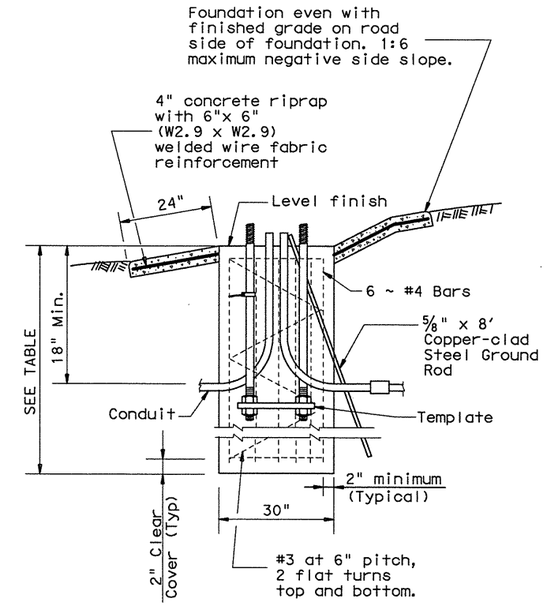

SECTION A-A

SHOWING SLOPED GRADE

PAY QUANTITY OF RIPRAP PER FOUNDATION (Install only when shown on the plans)		
Foundation Diameter	RIPRAP DIAMETER	RIPRAP (CONC) (CL B)
30 in.	78 in.	0.35 CY

ANCHOR BOLTS			
POLE MOUNTING HEIGHT	BOLT CIRCLE		ANCHOR BOLT SIZE
	Shoe Base	T-Base	
<40 ft.	13 in.	14 in.	1 in. x 30in.
40-50 ft.	15 in.	17 1/4 in.	1 1/4 in. x 30in.

RECOMMENDED FOUNDATION LENGTHS (See note 1)			
MOUNTING HEIGHT	TEXAS CONE PENETROMETER N Blows/ft		
	10	15	40
≤20 ft.	6'	6'	6'
>20 ft. to 30 ft.	8'	6'	6'
>30 ft. to 40 ft.	8'	8'	6'
>40 ft. to 50 ft.	10'	8'	6'

BREAKAWAY POLE PLACEMENT (See note 6)	
Roadway Functional Classification	** Pole offset (distance to transformer base, tolerance + 6in.-0in.)
Freeway Mainlanes (roadway with full control of access)	15 ft. (minimum and typical) from lane edge
All curbed, 45 mph or less design speed	2.5 ft. minimum (15 ft. desirable) from curb face
All others	10 ft. minimum*(15 ft. desirable) from lane edge

* or as close to ROW line as is practical

** provide 2/5 of the luminaire mounting height behind the pole for "falling area" to prevent encroachment on the other travel lanes. See design guidelines.

1. "Recommended Foundation Lengths" table is for information purposes only. Foundation lengths shall be as shown on the plans, or as directed by the Engineer. Foundations will be paid for under Item 416, "Drilled Shaft Foundations," unless otherwise shown on the plans.
2. Erect roadway illumination assembly poles plumb and true. Form and level the top 6" of the foundation so the pole will be plumb. Use leveling nuts to plumb shoe base poles. Do not use shims or leveling nuts under transformer bases. Do not grout between baseplate and the foundation.
3. Ensure Class 2A and 2B fit for anchor bolts and nuts. Tap and chase nuts after galvanizing. Anchor bolt body with rolled threads need not be full size.
4. Use appropriate class of concrete as specified in Items 416 and 432.
5. Place riprap around the foundation when called for elsewhere in the plans. Riprap will be paid for under Item 432.
6. Locate breakaway roadway illumination assemblies as shown in the placement table, unless otherwise dimensioned on the plans. Protect non-breakaway illumination assemblies from vehicular impact (i.e. 2 ft. behind guard rail or mounted on traffic barrier), or located outside the clear zone, except that 2.5 ft. from curb face is minimum desired for light poles on city streets, 45 mph or less, see design guidelines for further information.
7. Use 8 hold down washers on transformer base poles as recommended by the manufacturer and supplied with base.
8. Install a minimum of 2 conduits in each foundation. See lighting layout sheets for locations of foundations with more than 2 conduits. Cap unused conduits in foundations on both ends.
9. Conduit location in foundations is critical for breakaway devices. Place conduits 2 in. apart on centerline as shown.
10. Bond anchor bolt to rebar cage with #6 bare stranded copper conductor. Use listed mechanical connectors rated for embedment in concrete.
11. Use rip rap on T-base foundations that are located on a sloped grades.

Texas Department of Transportation
Traffic Operations Division

ROADWAY ILLUMINATION DETAILS

(RDWY ILLUM FOUNDATIONS)

RID(FND)-11

©TxDOT January 2007

REVISIONS
1-11

DN: TXDOT	CK: TXDOT	DW: TXDOT	CK: TXDOT
CONT	SECT	JOB	HIGHWAY
2452	01	043	SH 151
DIST		COUNTY	SHEET NO.
SA		BEXAR	343

DISCLAIMER: The use of this standard is governed by the "Texas Engineering Practice Act". No warranty of any kind is made by TxDOT for any purpose whatsoever. TxDOT assumes no responsibility for the conversion of this standard to other formats or for incorrect results or damages resulting from its use.

p:\4760\ND\0129cad\ standard\Slsfd_Jlm05.dgn 2/21/2011 7:05:33 PM mwmldt11

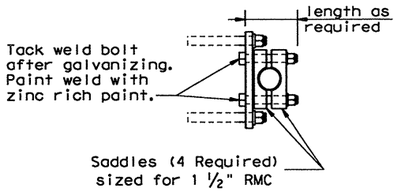

SECTION A-A

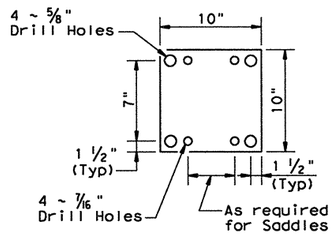

MOUNTING PLATE
Make from ⅜" Plate Galvanized after fabrication

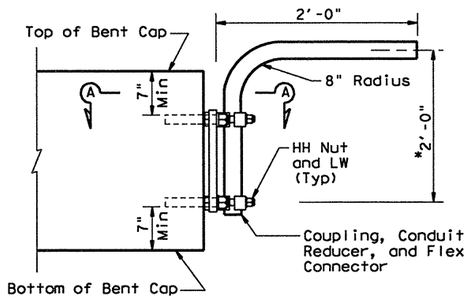

PROFILE VIEW
Or as Required
(See Note A. 4)

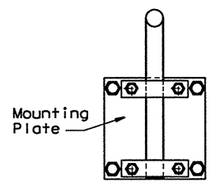

END VIEW

UNDERPASS LIGHTING ARM TYPE 1

NOTES:

A. ALL 150 watt H.P.S. LUMINAIRES
1. Luminaire locations, conduit and conductor sizes and routing are typical and diagrammatic only. See project layout sheets for specific details.
2. Conduit will be paid for under Item 618, "Conduit" and conductors will be paid for under Item 620, "Electrical Conductor," unless otherwise shown on the plans. See lighting layout sheets.
3. Install a ground rod and attach to the equipment grounding conductor in all ground boxes containing conduit that extends above grade 6 in. or more. Install grounding bushings and properly bond RMC in these boxes.
4. Adjust conduit in saddles to place fixture height and orientation as required. See fixture orientation detail and layout sheet. Where practicable, place luminaires so the bottom of luminaire is above the bottom of the beam, maximum of 3 in. (See detail UNDER PASS LIGHTING ARM TYPE 2)
5. Use ASTM A-153 galvanized bolts, nuts and washers.
6. Fabrication of brackets and support arms will not be paid for directly but is subsidiary to Item 610, "Roadway Illumination Assemblies."
7. Install a Heavy Duty, 480 volt or 600 volt, 30 amp fused disconnect switch or breaker with a NEMA 3R enclosure, in circuits to switch underpass luminaires, as shown on plans or a min. of 1 per bridge circuit. Mount disconnect or breaker 10 ft. (min) above grade on columns or bent caps as approved by the Department. Modify switch to allow padlocking in the "ON" and "OFF" positions, and install 20 amp time-delay fuses or inverse-time circuit breakers. Furnishing and installing disconnect switches or circuit breakers for underpass lighting fixtures will not be paid for directly but is subsidiary to the various bid items of the contract.

B. TYPE 1
1. Provide 1½in. rigid metal conduit (1.90" O.D., 0.145" wall) Type 1 arm shaft.
2. Use ⅜in. bolt or stud expansion anchors for Type 1 mounting. Ensure a 3000 lb. (min.) pull-out for each anchor. Provide 4 in. (min) embedment. Use lock washers.
3. Attach conduit to plate with 4 saddles, four-3/8 in. diameter (min.) bolts, hex head nut and lock washer.

C. TYPE 2
1. Provide 2 in. rigid metal conduit (2.375" O.D., 0.154" wall) Type 2 arm shaft. Reduce conduit length for Type C concrete beams. Field cutting and threading will be permitted. Paint cut and threaded areas with zinc rich paint after conduit is connected to adjacent fitting.
2. Connecting conduit may be strapped to tapered section only of precast beams as shown. Anchor as approved by the Engineer. Maximum anchor depth is 1 in.
3. Indiscriminate drilling into precast concrete beams may result in reduced beam strength. Use drilling location and method as directed by the Engineer. See location of underpass lighting mounting bracket detail. The locations shown in the table are such that reinforcing strands will not be damaged.

NOTE: Conduit on columns, caps, and slab is shown surface mounted. For new columns and caps, embed PVC conduit in concrete. Bond and ground metal junction boxes and conduit.

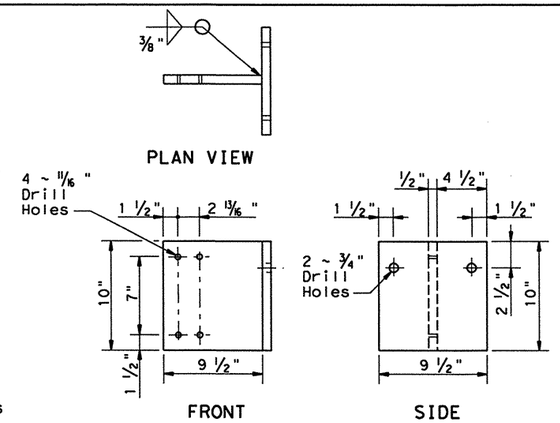

BRACKET DETAIL

Make from ½" plate (ASTM A-36) Galvanize after fabrication, ASTM A-123

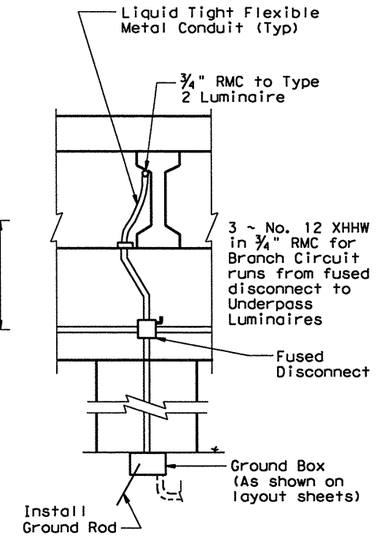

U/P (SPL-CO) (.15 KW)S(TYPE 2)

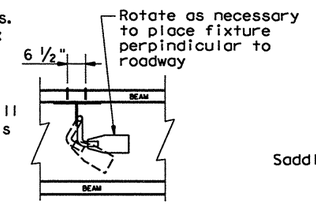

FIXTURE ORIENTATION

Plan View

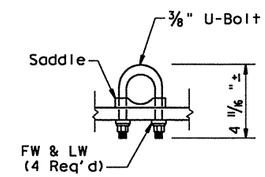

CLAMP DETAIL
(2 Req'd)

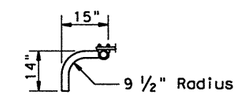

PLAN VIEW

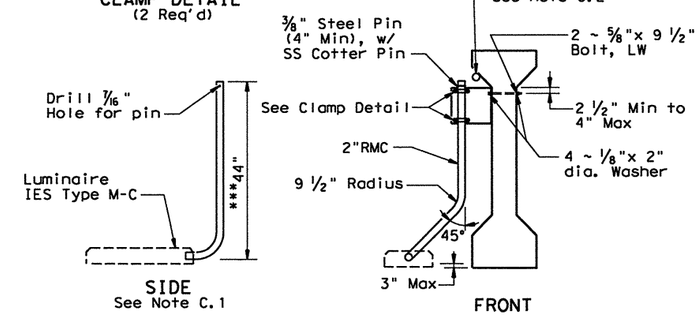

UNDERPASS LIGHTING ARM TYPE 2

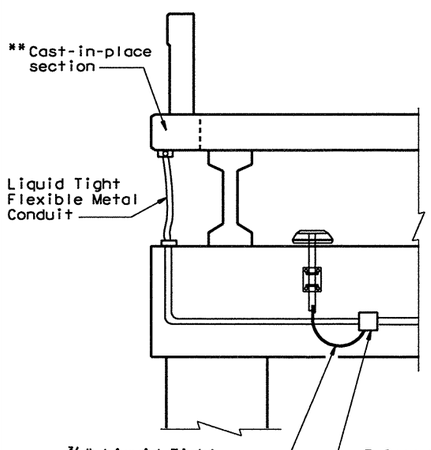

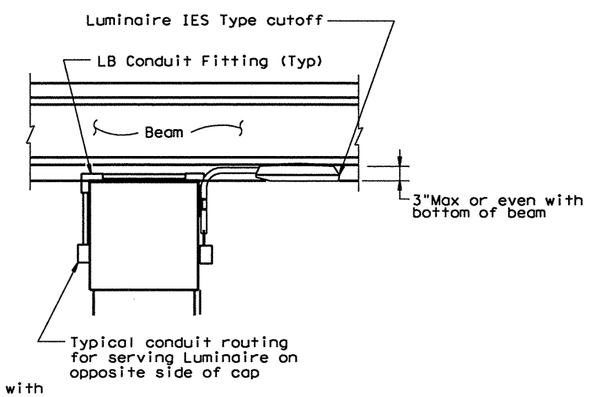

U/P (SPL-CO) (.15 KW)S(TYPE 1)

If bridge has pre-cast panels under deck, run circuit under deck edge.

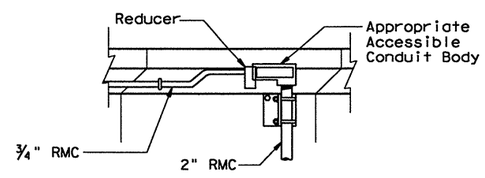

CONDUIT CONNECTION PROFILE

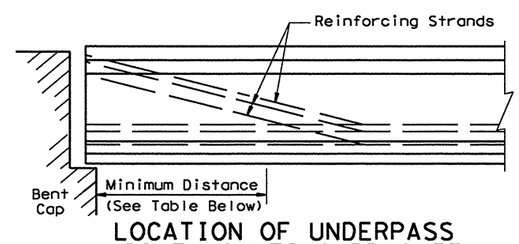

LOCATION OF UNDERPASS LIGHT MOUNTING BRACKET

LOCATION OF UNDERPASS LIGHT MOUNTING BRACKET TABLE

SPAN LENGTH	MINIMUM DISTANCE
≤ 50'	10'-0"
50' - 70'	15'-0"
70' - 90'	20'-0"
> 90'	25'-0"

Texas Department of Transportation
Traffic Operations Division

ROADWAY ILLUMINATION DETAILS

(UNDERPASS LIGHT FIXTURES)

RID(UP)-07

©TxDOT January 2007

REVISIONS

DN: TXDOT	CK: TXDOT	DW: TXDOT	CK: TXDOT
CONT	SECT	JOB	HIGHWAY
2452	01	043	SH 151
DIST		COUNTY	SHEET NO.
SA		BEXAR	344

p:\4760\0-0129\car \standard\5\std_Jlm06.dgn 2/21/2011 7:05:34 PM mwmldkiff

DISCLAIMER: The use of this standard is governed by the "Texas Engineering Practice Act". No warranty of any kind is made by TxDOT for any purpose whatsoever. TxDOT assumes no responsibility for the conversion of this standard to other formats or for incorrect results or damages resulting from its use.

GENERAL NOTES:

Scope:
Details apply to Induction Fluorescent type Roadway Illumination Assemblies, bid under Item 610, "Roadway Illumination Assemblies." Associated hardware, mounting assemblies, parts, junction boxes, lamps, lenses, brackets, required disconnect or transformer disconnect, tools, and labor required to install the underpass lighting assembly will not be paid for directly but are subsidiary to Item 610. Conduit and conductors supplying the fixtures are paid for separately. Mounting channel for conduit supports are not paid for directly but are subsidiary to the various bid items of the contract.

Fixture Housing:

A. Provide fixture with a maximum of 28 in. square housing and 13 in. maximum overall depth (mounting mechanism and junction box may extend outside the 28 in. square). Meet ANSI 136.31 3.0 G vibration requirements.
B. Provide cutoff fixture with flat glass. Provide polished aluminum reflector with a min. of 95% efficiency in reflecting light. Do not block light emitting from the fixture with lens retainer (i.e. lens retainer protruding over the reflecting surface).
C. Provide housing made of aluminum sheeting (0.10 in. min.), stainless steel (14 ga. min.), or low copper content die-cast aluminum (1/8 in. min. wall thickness). Ensure fixture housing is constructed of good workmanship. Provide external mounting mechanism on fixture without any penetrations into fixture housing. Protect and seal penetrations from junction box to ballast compartment to ensure the integrity of conductor insulation and to assure required International Protection (IP) rating. Seal openings or construction joints in housing. Construct seams with continuous welds. Grind flush any seams on frame and housing.
D. Provide a heat tempered C73 flat glass lens a minimum of 5/32 in. thick, or flat clear tempered glass lens with a minimum of 3/16 in. thick. Seal lens frame with a seamless or vulcanized seam, closed cell silicone gasket, or provide a gasket material as approved by the Engineer.
E. Secure lens frame to the housing with a minimum of eight #10 stainless steel screws. Ensure a minimum of IP65 rating will be maintained inside fixture housing, even after any maintenance is performed on the fixture.
F. Provide and mount junction box on the fixture housing to provide wire connection to fixture. Provide junction box with a minimum of 3/16 in. thick aluminum housing or hot dipped galvanized cast iron walls. Provide threaded knockout for a 3/4 in. conduit entry at junction box. Thread, seal, weld or use other department approved means to attach junction box to the fixture housing.
G. Provide fixtures painted completely inside and outside with gray thermal TGIC, consistent in color to "cobra head" luminaire. Use other colors as approved by the Engineer.

Ballast and Lamp:

A. Provide ballast that operates universally between 120 and 277 VAC(+-10%) and meets ANSI 62.41 category"A" transient protection.
B. Provide Induction Fluorescent lamp system with a minimum rated output of 150 watts.
C. Provide lamp system with a minimum Color Rating Index (CRI) of 80 and color temperature of 4100K.
D. Support "Icetron" lamps at each end of the lamp.
E. Provide lamp that passes the Toxicity Characteristics Leachate Procedure (TCLP) test.

Performance:

A. Provide fixture that operates at 11,000 minimum initial rated lumens. Provide fixture that emits minimum light levels as shown below (when mounted at 15 ft. above the midpoint of a circular area);
   1. 0.2 foot-candles in a 35 ft. radius,
   2. 1.0 foot-candle in a 22 ft. radius,
   3. 2.0 foot-candles in a 16 ft. radius,
   4. No point in a 35 ft. radius will exceed 27.0 foot-candles,
   5. Max. to min. ratio of 30 to 1.
B. Provide photometric data that complies with required TxDOT photometrics.

Manufacturer Warranty:

A. Provide warranty from lamp manufacturer certifying the fixture being capable of sufficient heat dissipation. Provide fixture listed to operate in ambient temperatures of 55 degree C. Submit certification of approval with fixture submittal.
B. Provide a written 60,000-hour life replacement warranty from lamp and fixture manufacturers for the ballast/lamp combination for underpass installation conditions. Provide a 10-year fixture warranty from the date of installation. Provide full replacement of failed fixture for the first five-years delivered to project location. Provide replacement parts after 5-years up through 10-years of lifetime of fixture.
C. Lamp or fixture light-output dropping below 60% of initial rated lumens will be considered failed.
D. Present warranty for approval with the fixture submittal.

Mounting:

A. See RID(UP) for general routing of conduits under bridge structures. Embed conduit in concrete of bent caps and columns.
B Install a Heavy Duty, 480 volt or 600 volt, 30 amp fused disconnect switch or breaker with a NEMA 3R enclosure, in circuits to switch underpass luminaires as shown on plans, or a min. of 1 per bridge circuit. Mount disconnect or breaker 10 ft. (min) above grade on columns or bent caps as approved by the Department. Modify switch to allow padlocking in the "ON" and "OFF" positions, and install 20 amp time-delay fuses or inverse-time circuit breakers. Furnishing and installing disconnect for underpass lighting fixtures will not be paid for directly but is subsidiary to the various bid itemsof the contract.
C. Do not randomly drill into pre-cast concrete beams. Drill only as specifically shown or as approved by the Engineer.
D. Position fixture lens flush with bottom of beam and adjust stanchion to seat fully into the 2 1/2 in. pipe. Field drill pipe and pin with bolt as shown. Do not oversize hole for pin. Repair galvanized cut ends and drilled holes with three coats of zinc rich paint (dry completely between coats).
E. Provide stainless steel anchors for concrete use, or provide epoxy type anchors with a minimum of 2650 lb. pullout force, unless otherwise shown, with a maximum depth of 2 1/2 in.
F. Hot dip galvanize all external steel parts according to Item 445 "Galvanizing."
G. For Type "UB" bracket, adjust vertical stanchion with fixture and align fixture lens flush with bottom of beam.
H. Adjust bracket dimensions as necessary to accommodate fixtures being supplied. Use Type "BD" for double T-beam mounting. Use other mounting arrangements as approved by the Engineer.
I. Provide a minimum clearance of 16.5 ft. from the roadway to the fixture, when mounting fixtures on box beams using "BB" type brackets. See Engineer for alternative underpass light mounting, if the 16.5 ft. clearance is not obtainable.
J. Submit other mounting arrangements designed according to the American Association of State Highway Transportations Officials (AASHTO) "Standard Specifications for Structural Supports for Highway Signs, Luminaires and Traffic Signals," and approved by the Engineer.

Pre-qualification:

A. Only provide fixtures and brackets with approved product codes or designations from pre-qualified producers. The Construction Division (CST) of the Texas Department of Transportation (TxDOT) maintains the "Material Producers List" of approved producer product codes or designations. Use the following web site to view this list: http://www.dot.state.tx.us/business/producer__list
B. Use of pre-qualified material does not relieve the contractor of the responsibility to ensure that the material meets specifications. All materials may be tested at any time and may be rejected if not in compliance with the specifications. Do not change material or manufacturing methods of approved fixtures without prior approval by the Department. Unapproved changes may result in removal of the manufacturer from the prequalified list for 1 yr.
C. All materials, including those shown on the prequalified material list, may be inspected and tested at any time and may be rejected if not in compliance with the specifications.

Storage:

A. Store all fixtures in a safe dry environment. Fixtures that arrive damaged or weathered at the testing facility will be rejected and replaced at the contractors expense.

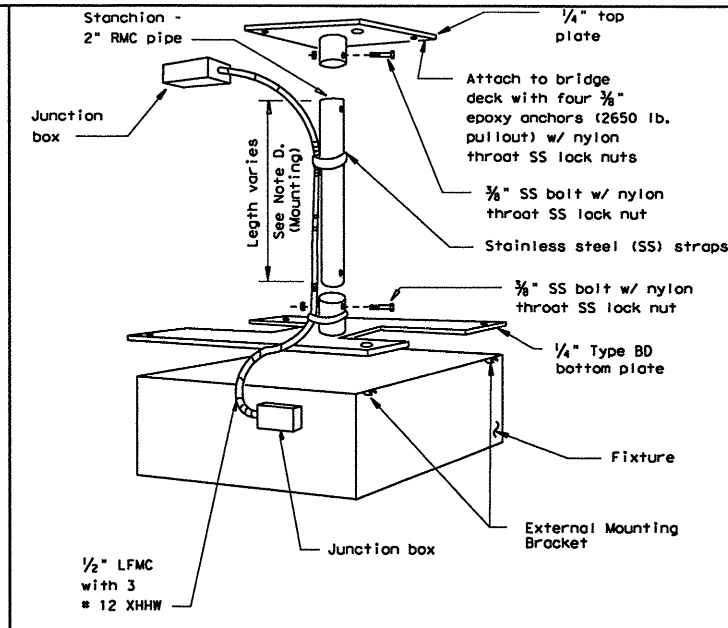

PERSPECTIVE TYPE BD
(BRIDGE DECK)

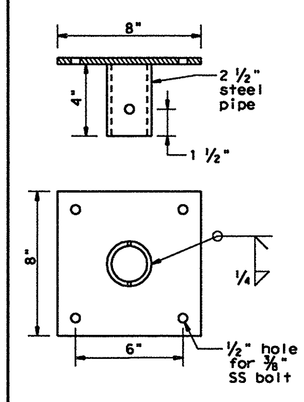

TOP PLATE - TYPE BD

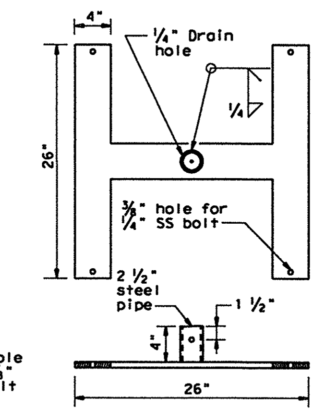

BOTTOM PLATE - TYPE BD

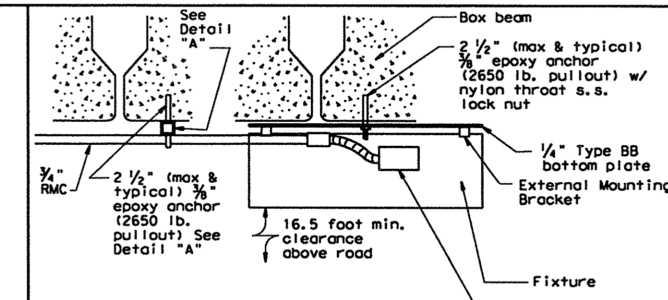

PERSPECTIVE TYPE BB
(BOX BEAM)

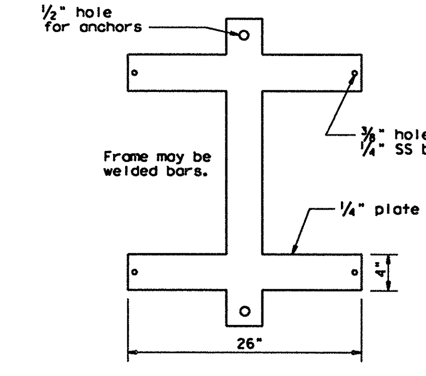

BOTTOM PLATE - TYPE BB

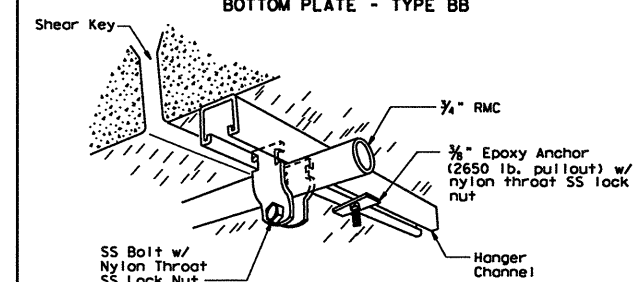

DETAIL "A"
Conduit Attachment to Box Beam
(shown longer than necessary for clarity)

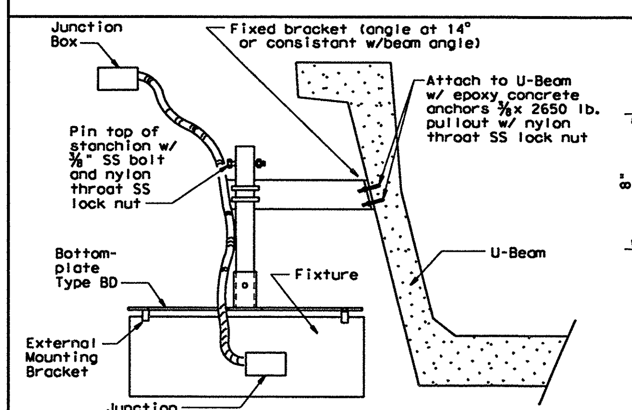

PERSPECTIVE TYPE UB (U-BEAM)

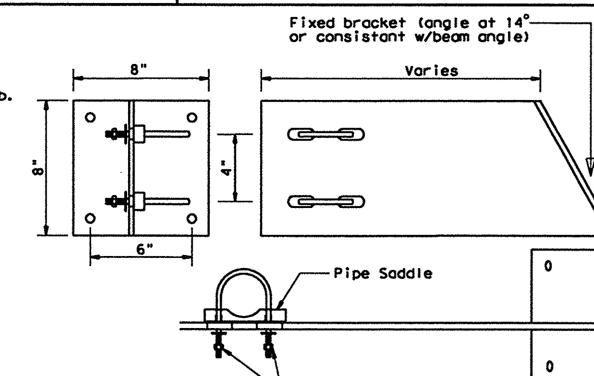

BRACKET TYPE UB
Make from ¼" Plate

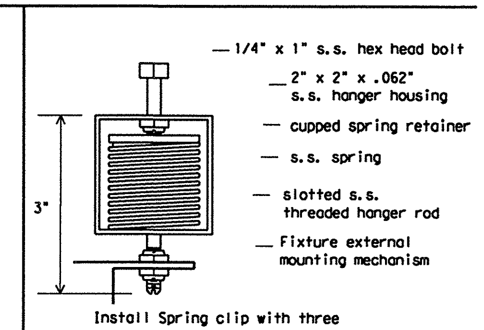

Install Spring clip with three nylon throat s.s. lock nuts.

DETAIL "B"
SHOCK ABSORBER SPRING CLIP

Texas Department of Transportation
Traffic Operations Division

ROADWAY ILLUMINATION DETAILS
(IF UNDERPASS LIGHT FIXTURES)

RID(IF)-07

©TxDOT January 2007	DN: TXDOT	CK: TXDOT	DW: TXDOT	CK: TXDOT	
REVISIONS	CONT	SECT	JOB	HIGHWAY	
	2452	01	043	SH 151	
	DIST	COUNTY		SHEET NO.	
	SA	BEXAR		345	

6:40:16 PM
mwmldkff

DISCLAIMER: The use of this standard is governed by the "Texas Engineering Practice Act". No warranty of any kind is made by TxDOT for any purpose whatsoever. TxDOT assumes no responsibility for the conversion of this standard to other formats or for incorrect results or damages resulting from its use.

DATE:
FILE:

SHIPPING PARTS LIST ~ POLES AND LUMINAIRE ARMS

Nominal Mounting Ht. (ft)	Shoe Base — Designation (Pole, A1, A2, Luminaire)	Shoe Base — Quantity	T-Base — Designation (Pole, A1, A2, Luminaire)	T-Base — Quantity	CSB/SSCB Mounted — Designation (Pole, A1, A2, Luminaire)	CSB/SSCB Mounted — Quantity
20	(Type SA 20 S - 4) (.15kW) S		(Type SA 20 T - 4) (.15kW) S			
	(Type SA 20 S - 4 - 4) (.15kW) S		(Type SA 20 T - 4 - 4) (.15kW) S			
30	(Type SA 30 S - 4) (.25kW) S		(Type SA 30 T - 4) (.25kW) S		(Type SP 28 S - 4) (.25kW) S	
	(Type SA 30 S - 4 - 4) (.25kW) S		(Type SA 30 T - 4 - 4) (.25kW) S		(Type SP 28 S - 4 - 4) (.25kW) S	
	(Type SA 30 S - 8) (.25kW) S		(Type SA 30 T - 8) (.25kW) S		(Type SP 28 S - 8) (.25kW) S	
	(Type SA 30 S - 8 - 8) (.25kW) S		(Type SA 30 T - 8 - 8) (.25kW) S		(Type SP 28 S - 8 - 8) (.25kW) S	
40	(Type SA 40 S - 4) (.25kW) S		(Type SA 40 T - 4) (.25kW) S		(Type SP 38 S - 4) (.25kW) S	
	(Type SA 40 S - 4 - 4) (.25kW) S		(Type SA 40 T - 4 - 4) (.25kW) S		(Type SP 38 S - 4 - 4) (.25kW) S	
	(Type SA 40 S - 8) (.25kW) S		(Type SA 40 T - 8) (.25kW) S		(Type SP 38 S - 8) (.25kW) S	
	(Type SA 40 S - 8 - 8) (.25kW) S		(Type SA 40 T - 8 - 8) (.25kW) S		(Type SP 38 S - 8 - 8) (.25kW) S	
	(Type SA 40 S - 10) (.25kW) S		(Type SA 40 T - 10) (.25kW) S		(Type SP 38 S - 10) (.25kW) S	
	(Type SA 40 S - 10 - 10) (.25kW) S		(Type SA 40 T - 10 - 10) (.25kW) S		(Type SP 38 S - 10 - 10) (.25kW) S	
	(Type SA 40 S - 12) (.25kW) S		(Type SA 40 T - 12) (.25kW) S		(Type SP 38 S - 12) (.25kW) S	
	(Type SA 40 S - 12 - 12) (.25kW) S		(Type SA 40 T - 12 - 12) (.25kW) S		(Type SP 38 S - 12 - 12) (.25kW) S	
50	(Type SA 50 S - 4) (.4kW) S		(Type SA 50 T - 4) (.4kW) S		(Type SP 48 S - 4) (.4kW) S	
	(Type SA 50 S - 4 - 4) (.4kW) S		(Type SA 50 T - 4 - 4) (.4kW) S		(Type SP 48 S - 4 - 4) (.4kW) S	
	(Type SA 50 S - 8) (.4kW) S		(Type SA 50 T - 8) (.4kW) S		(Type SP 48 S - 8) (.4kW) S	
	(Type SA 50 S - 8 - 8) (.4kW) S		(Type SA 50 T - 8 - 8) (.4kW) S		(Type SP 48 S - 8 - 8) (.4kW) S	
	(Type SA 50 S - 10) (.4kW) S		(Type SA 50 T - 10) (.4kW) S		(Type SP 48 S - 10) (.4kW) S	
	(Type SA 50 S - 10 - 10) (.4kW) S		(Type SA 50 T - 10 - 10) (.4kW) S		(Type SP 48 S - 10 - 10) (.4kW) S	
	(Type SA 50 S - 12) (.4kW) S		(Type SA 50 T - 12) (.4kW) S		(Type SP 48 S - 12) (.4kW) S	
	(Type SA 50 S - 12 - 12) (.4kW) S		(Type SA 50 T - 12 - 12) (.4kW) S		(Type SP 48 S - 12 - 12) (.4kW) S	

OTHER — Designation: Pole	A1	A2	Luminaire	Quantity

GENERAL NOTES:

All work, materials and services not shown on the plans which may be necessary for complete and proper construction shall be performed, furnished and installed by the Contractor. Faulty fabrication or poor workmanship in any material, equipment or installation will be considered justification for rejection. Where manufacturers provide warranties or guarantees as a customary trade practice, Contractor shall furnish to the Department such warranties or guarantees.

The location of poles and fixtures are diagrammatic only and may be shifted by the Engineer to accommodate local conditions. Erection and/or removal of poles and luminaires located near overhead electrical lines shall be accomplished using established industry and utility safety practices and in accordance with laws governing such work. The Contractor shall consult with the appropriate utility company prior to beginning such work.

A. Standard Steel Pole Designs. Steel poles fabricated in accordance with the details and dimensions shown herein, shall be considered standard designs. Submission of shop drawings and design calculations for standard designs is not required.

B. Optional Steel Pole Designs. Multi-sided steel poles may be allowed as optional designs, if steel poles are permitted or required, pending approval by the Department as outlined below.
   1. Shop Drawings. Optional designs require submission of shop drawings and design calculations bearing the seal of an engineer registered in the State of Texas, in accordance with Item 441, "Steel Structures." The Department may elect to pre-approve some shop drawings for optionally designed poles. Submission of shop drawings and design calculations is not required for structures fabricated in accordance with the details of shop drawings on the pre-approved list maintained by the TxDOT Traffic Operations Division. Any deviation from the pre-approved shop drawings will require submission of shop drawings of the complete assembly and design calculations as described above.
   2. Structural Support Design for Luminaires. Lighting support structures shall be designed for a 25 year design life in accordance with the 2001 Edition of the AASHTO "Standard Specifications for Structural Supports for Highway Signs, Luminaires and Traffic Signals." All poles shall be designed for 110 mph 3-second gust wind speeds. An additional 1.14 gust factor shall be applied to the wind loads. For transformer base poles, fabricator shall include transformer base and connecting hardware in design calculations and shop drawing submittals. All transformer bases shall have been structurally tested to resist the theoretical plastic moment capacity of the pole. Certification of the plastic moment load test and FHWA breakaway requirement test of the model of base being furnished shall be submitted with the shop drawings. Shop drawings shall show breakaway base model number, and manufacturer's name and logo. Manufacturer's shop drawings shall include the ASTM designations for all materials to be used.
   3. Mast Arm Attachments. All poles and attachments shall be structurally designed to support two 12-foot mast arms and luminaires. Poles shall be supplied with mast arm combinations as shown in the plans. All mast arms shall be designed for a 60-pound luminaire having an effective projected area of 1.6 square feet.
   4. Anchor Bolt Assembly. Anchor bolt assemblies for optionally designed poles shall be the same as those shown herein.

C. Aluminum Pole Designs. Aluminum pole designs may be allowed, if aluminum poles are permitted or required, pending approval by the Department as outlined below.
   1. Meet all of the requirements stated above for optional steel pole designs and the following:
      a. Aluminum poles shall be fabricated in accordance with "Structural Welding Code-Aluminum" AWS D1.2.
      b. Aluminum pole designs shall use the same anchor bolt assembly and be subject to the same geometric restraints and other requirements for steel poles specified herein.
      C. Aluminum poles shall be equipped with vibration mitigation devices, as approved by the engineer.
      d. Pole components shall be constructed using the following material:
      Shaft: ASTM B221 or B241 Alloy 6063-T6, ASTM B209 Alloy 5086-H34, ASTM B221 Alloy 6005-T5.
      Base Flange: ASTM B26 Alloy 356.0-T6 or ASTM B108 Alloy 356.0-T6 (Yield strength test required).
      Mast Arm Fitting: ASTM B209 Alloy 6061-T6 or ASTM B221 Alloy 6005-T5.
      Mast Arms: ASTM B241 Alloy 6061-T6 or Alloy 6063-T6.
      Pole Cap: ASTM B209 Alloy 5086-H32 or ASTM B108 or B26 Alloy 356.0-T6.
      Bolts: Stainless Steel AISI 300 series. Bolts threading into aluminum threads shall be treated with anti-seize compound, Never-Seez Compound, Permatex 133K or equal.

D. Special Designs. Poles with architectural treatments shall meet the requirements shown elsewhere in the plans.

EXPLANATION OF ROADWAY ILLUMINAION ASSEMBLY DESIGNATIONS

(TYPE SA 50 T - X - X) (.4KW) S

SA: Pole and mast arm may be steel or aluminum.
ST: Pole and mast arm must be steel.
AL: Pole and mast arm must be aluminum.
SP: Squashed (ovalized) steel or aluminum pole for installing on CSB or SSCB. See standard sheet CSB (5), or SSCB (4).

Two numerical digits denote mounting height in feet.

Next letter denotes type of base, (S-Shoe Base, T-Transformer Base, or B-Shoe Base Bridge Mount)

First number denotes length of mast arm in feet.

Use of second mast arm is indicated by second dashed number which denotes length in feet.

Next three figures indicate luminaire rating (1 kW= 1000 watts, .4 kW= 400 watts, etc.)
Fixtures for U/P (SPL-CO) (.15KW)S(TYPE 1) and (TYPE 2) as shown on RID(UP) shall be "cobra head" style fixtures that meet the specifications shown on RID(LUM) sheets 1 and 2. Fixtures bid under the descriptive code RDWY ILL ASSEM U/P TYPE IF shall meet the specifications shown on RID(IF). All other fixtures bid under Item 610 shall meet specifications shown elsewhere in the plans.

Last letter indicates the type of lamp (M- Metal Halide, S- High Pressure Sodium, L- Low Pressure Sodium).

SHEET 1 of 4

Texas Department of Transportation
Traffic Operations Division

ROADWAY ILLUMINATION POLES

RIP(1)-11

© TxDOT January 2007

DN: TXDOT	CK: TXDOT	DW: TXDOT	CK: TXDOT
REVISIONS			

CONT	SECT	JOB	HIGHWAY
2452	01	043	SH 151

DIST	COUNTY	SHEET NO.
SA	BEXAR	346

6402B PM
mwm0kfrt

DISCLAIMER:
The use of this standard is governed by the "Texas Engineering Practice Act". No warranty of any kind is made by TxDOT for any purpose whatsoever. TxDOT assumes no responsibility for the conversion of this standard to other formats or for incorrect results or damages resulting from its use.

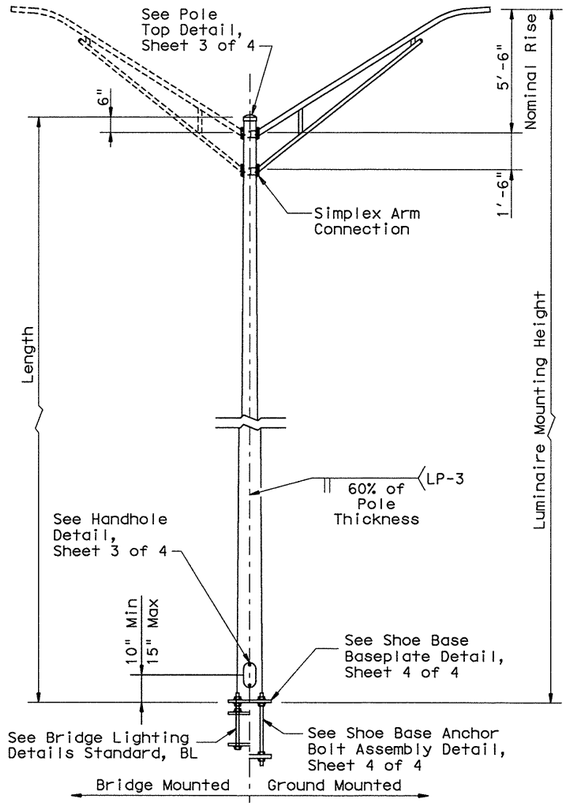

SHOE BASE POLE

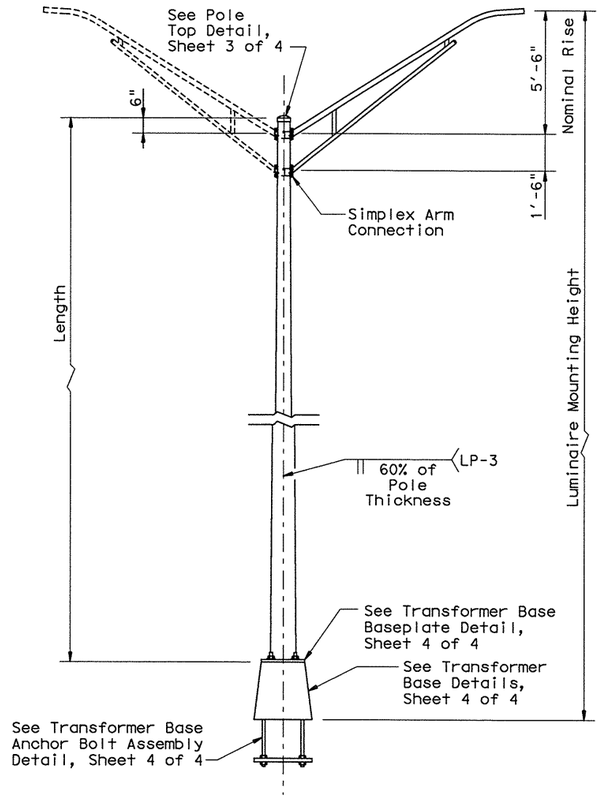

TRANSFORMER BASE POLE

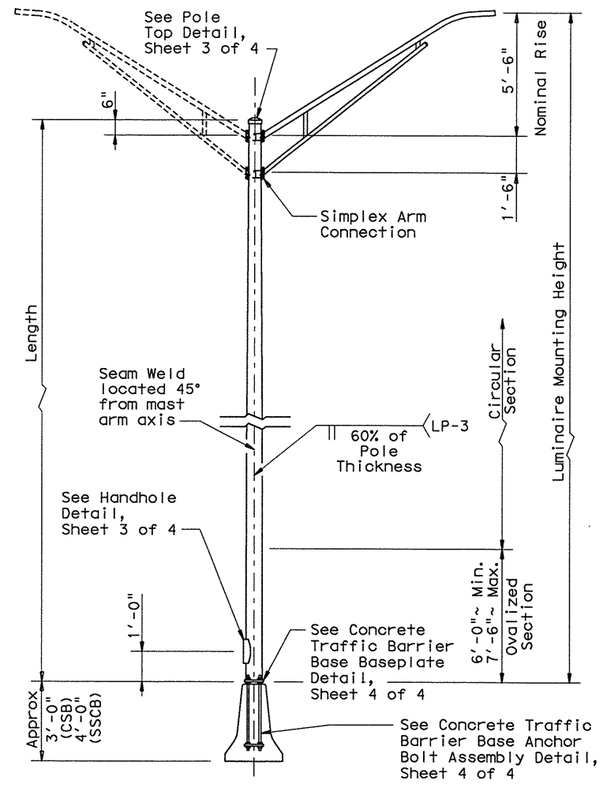

CONCRETE TRAFFIC BARRIER BASE POLE

MATERIAL DATA		
COMPONENT	ASTM DESIGNATION	MIN. YIELD (ksi)
Pole Shaft (0.14"/ft. Taper)	A572 Gr 50, A595 Gr A, A1011 HSLAS Gr 50 Cl 2 ③, or A1008 HSLAS Gr 50 Cl 2	50
Base Plate and Handhole Frame	A572 Gr.50, or A36	36
T-Base Connecting Bolts	A325 ①	92
Anchor Bolts	F1554 Gr 55, A193-B7 or A321	55 105
Anchor Bolt Templates	A36	36
Heavy Hex (H.H.) Nuts	A194 Gr 2H, or A563 Gr DH	
Flat Washers	F436	

① Lubricate in the field if necessary in lieu of the requirements in ASTM A325.

② Before ovalized as shown on Concrete Traffic Barrier Base Baseplate details, Sheet 4 of 4.

③ A1011 SS Gr 50 may be used in lieu of HSLAS, provided the material meets the elongation requirements for HSLAS

POLE ASSEMBLY FABRICATION TOLERANCES TABLE	
DIMENSION	TOLERANCE
Shaft length	+1"
I.D. of outside piece of slip fitting pieces	+1/8", -1/16"
O.D. of inside piece of slip fitting pieces	+1/32", -1/8"
Shaft diameter: other	+3/16"
Out of "round"	1/4"
Straightness of shaft	±1/4" in 10 ft
Twist in shaft	4° in 50 ft
Perpendicular to baseplate	1/8" in 24"
Pole centered on baseplate	±1/4"
Location of Attachments	±1/4"
Bolt hole spacing	±1/16"

SHEET 2 of 4

SHOE BASE POLE

Luminaire Mounting Height (ft)	Base Diameter (in)	Top Diameter (in)	Length (ft)	Pole Thickness (in)	Design Moment (K-ft)
20.00	7.00	4.90	15.00	0.1196	7.1
30.00	7.50	4.00	25.00	0.1196	13.2
31.00-39.00	8.00	4.36-3.24	26.00-34.00	0.1196	20.7
40.00	8.50	3.60	35.00	0.1196	20.7
50.00	10.50	4.20	45.00	0.1196	30.3

TRANSFORMER BASE POLE

Luminaire Mounting Height (ft)	Base Diameter (in)	Top Diameter (in)	Length (ft)	Pole Thickness (in)	Design Moment (K-ft)
20.00	7.00	5.11	13.50	0.1196	7.1
30.00	7.50	4.21	23.50	0.1196	13.2
31.00-39.00	8.00	4.57-3.45	24.50-32.50	0.1196	20.7
40.00	8.50	3.81	33.50	0.1196	20.7
50.00	10.00	3.41	43.50	0.1196	30.3

CONCRETE TRAFFIC BARRIER BASE POLE (CSB/SSCB)

Luminaire Mounting Height (ft)	Base② Diameter (in)	Top Diameter (in)	Length (ft)	Pole Thickness (in)	Design Moment (K-ft) About ℄ of Rail	Design Moment (K-ft) Perp. to Rail
28.00	9.00	5.78	23.00	0.1196	10.3	13.2
38.00	9.00	4.38	33.00	0.1196	16.6	20.8
48.00	10.50	4.48	43.00	0.1345	25.1	30.5

Designs conform to 2001 AASHTO Standard Specifications for Structural Supports for Highway Signs, Luminaires, and Traffic Signals and Interim Specifications. Design 3-Second Gust Wind Speed equal 110 mph with a 1.14 gust factor. A wind importance factor of 0.80 is applied to adjust the wind speed to a 25 year recurrence interval. Design moments listed in tables assume base of pole is less than 25' above natural ground level.

Design structures to support two 12' luminaire mast arms and luminaires. Design mast arms for a 60-pound luminaire having an effective projected area of 1.6 square feet.

Fabrication shall be in accordance with the Specifications and with the details, dimensions, and weld procedures shown herein. Do not submit shop drawings for roadway illumination pole assemblies fabricated in accordance with the details, dimensions, and weld procedures shown herein. Weld references call for preapproved weld procedures which the Fabricator must obtain prior to fabrication. Materials, fabrication tolerances, and shipping practices shall meet the requirements of these sheets and the Specifications. In the absence of specified fabrication tolerances, dimensions shall be within the tolerances generally obtainable in normal fabrication practice.

For mounting heights between values shown in the tables, use base diameter and thickness values for the larger pole.

Unless otherwise noted, all steel parts shall be galvanized in accordance with Item 445, "Galvanizing."

Steel poles shall be fabricated in accordance with Item 441, "Steel Structures." Longitudinal seam welds for pole sections shall have 60% minimum penetration. All welding shall be in accordance with the ANSI/AWS Structural Welding Code D1.1.

Two-section poles joined by circumferential welds will not be permitted, unless otherwise shown on the plans. Poles may be fabricated in two sections and field-assembled by the lap-joint method. The two sections shall telescope together with a lap length of not less than 1-1/2 times the shaft diameter at the lap joint.

Alternate material equal to or better than material specified may be substituted with the approval of the Engineer.

Lubricate and tighten anchor bolts, when erecting shoe base poles and concrete traffic barrier base poles, in accordance with Item 449, "Anchor Bolts."

All poles, except Transformer Base Poles, shall have hand holes with reinforcing frames and covers. Except for poles mounted on a concrete traffic barrier, hand holes shall be placed 90 degrees to mast arm unless otherwise noted on the plans. For poles mounted on a concrete traffic barrier with one luminaire arm, hand holes shall be located 180 degrees from luminaire arm. For poles mounted on a concrete traffic barrier with two luminaire arms, all hand holes shall be on the same side of the barrier.

The finished pole shall have a smooth, uniform finish free of pits, blisters, or other defects. Scratched, chipped, and other damaged galvanized areas on poles and mast arms shall be repaired in accordance with Item 445, "Galvanizing."

Texas Department of Transportation
Traffic Operations Division

ROADWAY ILLUMINATION POLES

RIP(2)-11

© TxDOT January 2007

DN: TXDOT	CK: TXDOT	DW: TXDOT	CK: TXDOT

REVISIONS
MOD 1/11 JSY/TGG Added Aditional M.H. in table and revised Anchor Bolt Assembly

CONT	SECT	JOB	HIGHWAY
2452	01	043	SH 151

DIST	COUNTY	SHEET NO.
SA	BEXAR	347

DATE:
FILE:

DISCLAIMER:
The use of this standard is governed by the "Texas Engineering Practice Act". No warranty of any kind is made by TxDOT for any purpose whatsoever. TxDOT assumes no responsibility for the conversion of this standard to other formats or for incorrect results or damages resulting from its use.

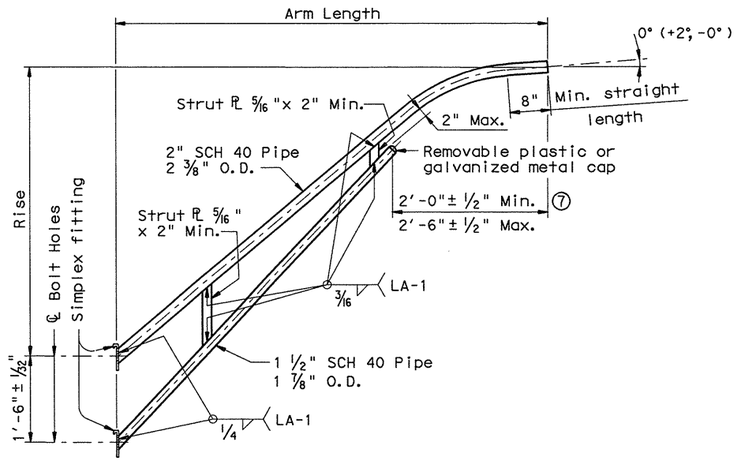

LUMINAIRE ARM

LUMINAIRE ARM DIMENSIONS		
Nominal Arm Length	Arm Length	Rise
4'-0"	3'-6"	2'-6" ⑩
6'-0"	5'-6"	5'-6"
8'-0"	7'-6"	5'-6"
10'-0"	9'-6"	5'-6"
12'-0"	11'-6"	5'-6"

MATERIALS	
Pole or Arm Simplex	ASTM A27 Gr 65-35, A148 Gr 80-50, A576 Gr 1021 ⑤, or A36 (Arm only)
Arm Pipes	ASTM A53 Gr A or B, A500 Gr B, A501, A 1008 HSLAS-F Gr 50 ⑥, or A1011 HSLAS-F Gr 50 ⑥
Arm Struts and Gusset Plates ④	ASTM A36, A572 Gr 50 ⑥, or A588
Misc.	ASTM designations as noted

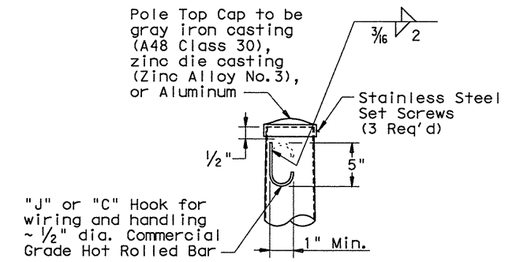

POLE TOP

ARM ASSEMBLY FABRICATION TOLERANCES TABLE	
DIMENSION	TOLERANCE
Arm Length	±3"
Arm Rise	+1 3/4" in 10 ft
Arm Diameter	+3/16"
Overall length or width	+1/4"
Thickness	+1/4", -1/16"
Deviation from flat	1/8" in 12"
Spacing between holes	+3/32"
Bolt hole size	±1/16"
Strut location in truss arms	±1 1/2"

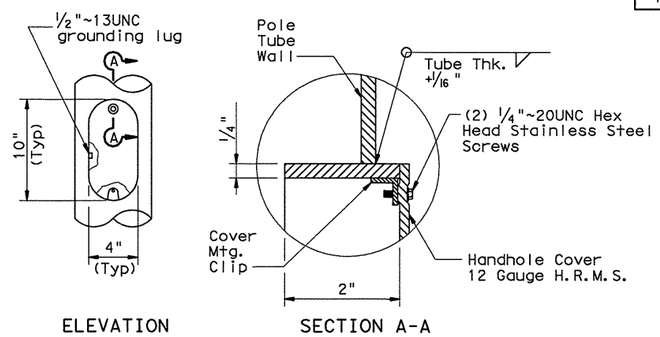

HANDHOLE

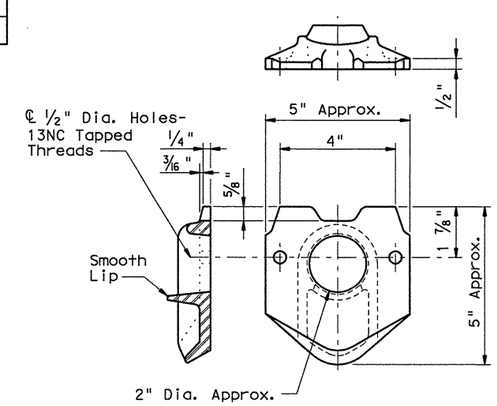

POLE SIMPLEX DETAIL⑨

④ Any of the materials listed for plates may be used where the drawings do not specify a particular ASTM designation.

⑤ A576 must be suitable for forging and also meet minimum tensile strength of 65 ksi, minimum yield of 35 ksi, and elongation in 2 inches of 22 percent.

⑥ A572, A1008 HSLAS-F, and A1011 HSLAS-F materials may have higher yield strengths but shall not have less elongation than the grade indicated.

⑦ Dimensional limits are given to show acceptable variation in design. All of a Fabricator's production of a particular arm length shall have the same dimensions within specified tolerances.

⑧ Each pole simplex fitting shall be supplied with 2 bolts and 2 lock washers of the size specified. The bolts and lock washers shall be secured to the pole with the other hardware items called for in the plans.

⑨ Proposed deviations in arm simplex dimensions or materials must be submitted to the Department for approval.

⑩ Luminaire mounting heights are based on assumed 5'-6" luminaire arm rise.

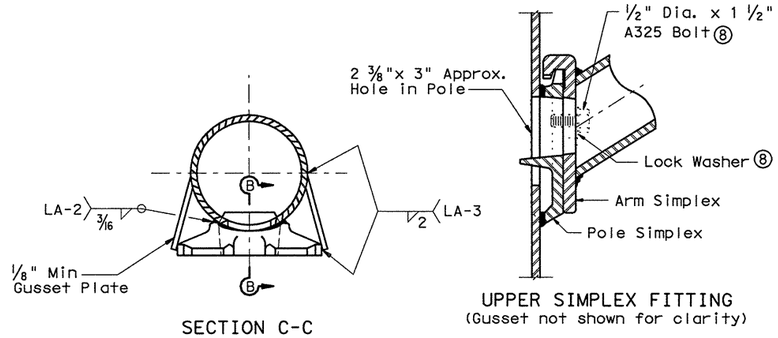

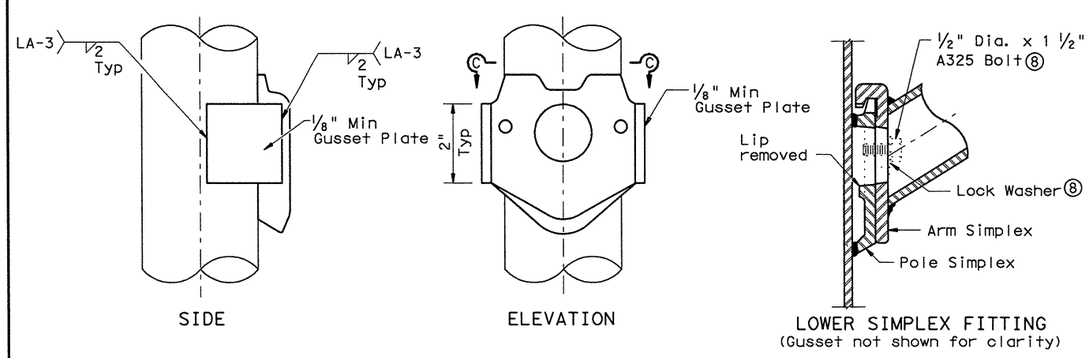

SIMPLEX ATTACHMENT DETAIL

SECTION B-B

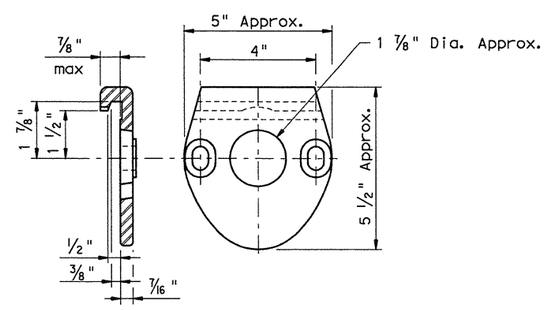

ARM SIMPLEX DETAIL⑨

SHEET 3 of 4

Texas Department of Transportation
Traffic Operations Division

ROADWAY ILLUMINATION POLES

RIP(3)-11

© TxDOT January 2007

REVISIONS

DN: TXDOT	CK: TXDOT	DW: TXDOT	CK: TXDOT
CONT	SECT	JOB	HIGHWAY
2452	01	043	SH 151
DIST		COUNTY	SHEET NO.
SA		BEXAR	348

6:40:20 PM
mwilde1f1

DATE:
FILE:

DISCLAIMER: The use of this standard is governed by the "Texas Engineering Practice Act". No warranty of any kind is made by TxDOT for any purpose whatsoever. TxDOT assumes no responsibility for the conversion of this standard to other formats or for incorrect results or damages resulting from its use.

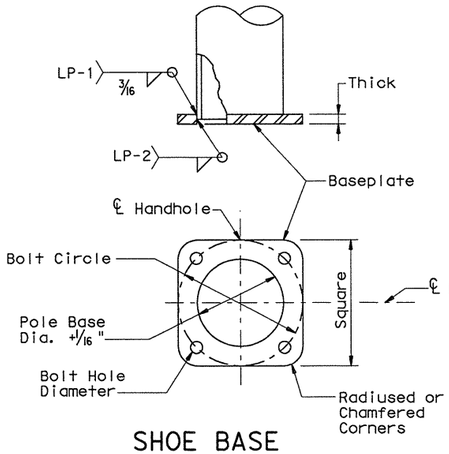

SHOE BASE BASEPLATE

SHOE BASE BASEPLATE TABLE				
MOUNTING HEIGHTS	BOLT CIRCLE	SQUARE	THICK	BOLT HOLE DIAMETER
20′ - 39′	13"	13"	1 ¼"	1 ¼"
40′	15"	15"	1 ¼"	1 ½"
50′	15"	15"	1 ½"	1 ½"

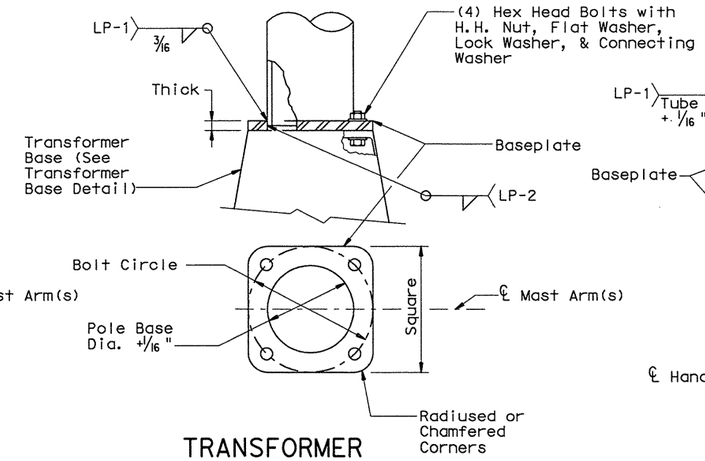

TRANSFORMER BASE BASEPLATE

TRANSFORMER BASE BASEPLATE TABLE						
MOUNTING HEIGHTS	BOLT CIRCLE	SQUARE	THICK	CONNECTING BOLT DIA.	BOLT HOLE DIAMETER	TRANSFOMER BASE TYPE
20′ - 39′	13"	13"	1 ¼"	1"	1 ¼"	A
40′	15"	15"	1 ¼"	1 ¼"	1 ½"	B
50′	15"	15"	1 ½"	1 ¼"	1 ½"	B

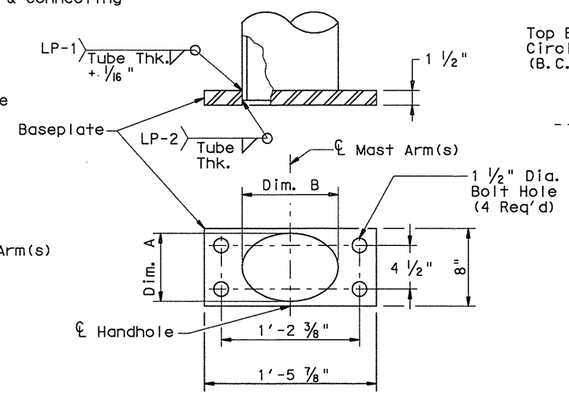

CONCRETE TRAFFIC BARRIER BASE BASEPLATE

CONCRETE TRAFFIC BARRIER BASE BASEPLATE TABLE			
MOUNTING HEIGHTS	POLE DIA.②	DIM. A	DIM. B
28′ - 38′	9"	7"± ¼"	10"± ¼"
48′	10 ½"	7"± ¼"	13"± ¼"

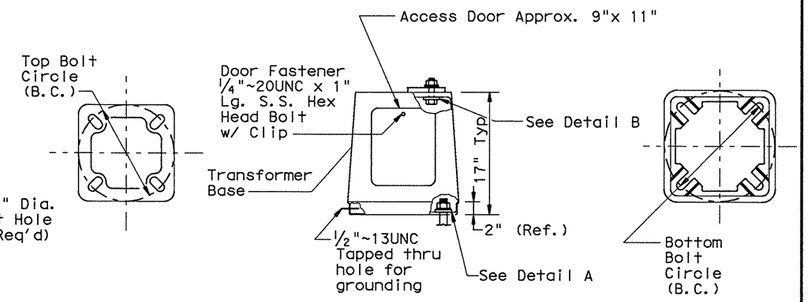

TOP PLAN

ELEVATION

BOTTOM PLAN

TRANSFORMER BASE TABLE		
TYPE	TOP B.C.	BTM. B.C.
A	13"	14"
B	15"	17 ¼"

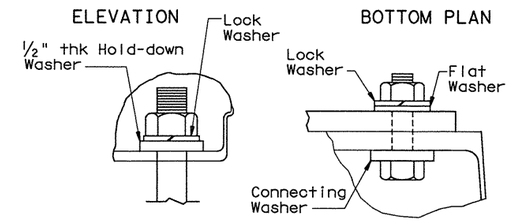

DETAIL A

DETAIL B

TRANSFORMER BASE DETAILS

For mounting heights between those shown in the table, use the values in the table for the larger mounting height.

All breakaway bases shall meet the breakaway requirements of the 2001 Edition of the AASHTO "Standard Specifications for Structural Supports for Highway Signs, Luminaires and Traffic Signals," and shall have been tested by FHWA-approved methods. All bases shall have been structurally tested to resist 150% of the design moment.

Transformer bases shall be cast from aluminum, ASTM B108 or B26 Alloy 356.0-T6, or other material approved by the Engineer. Four hex head bolts with four H.H. nuts, four lock washers, four flat washers, and connecting and hold-down washers as recommended by the manufacturer, galvanized to ASTM A153 Class C or D, or B695 Class 50, shall be provided with each transformer base for connecting the pole. Bolts shall be ASTM A325 or approved equal. Nuts shall be ASTM A563 grade DH galvanized.

Bases shall be stamped, incised or by other approved permanent means, marked to show fabricator's name or logo, and model number. Such information shall be placed in a readily seen location, inside or outside the base, but shall not be placed on the door.

Doors for transformer bases shall be made of plastic, fiberglass or other non-metallic material approved by the Engineer and shall be attached with stainless steel screws or bolts. Transformer bases shall be cleaned by grit blast cleaning after heat treatment. Certification by the manufacturer of heat treatment shall be furnished with transformer bases. The certification shall show the metal alloy and temper and that the base meets those requirements, chemical and physical. The certification shall also show the material ASTM specification. Transformer bases shall be cast with a removable tab bar for material testing. Some bars may have been removed by the manufacturer for testing.

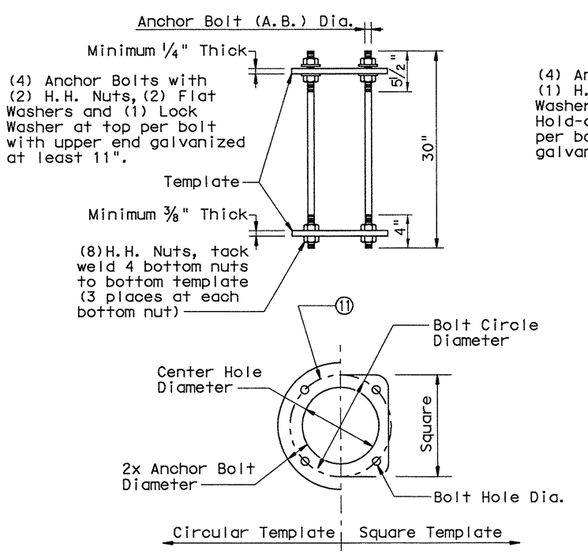

SHOE BASE ANCHOR BOLT ASSEMBLY

SHOE BASE ANCHOR BOLT ASSEMBLY TABLE					
MOUNTING HEIGHTS	A.B. Dia.	BOLT CIRCLE DIAMETER	SQUARE	CTR. HOLE DIAMETER	BOLT HOLE DIAMETER
20′ - 39′	1"	13"	13"	11"	1 1/16"
40′ - 50′	1 ¼"	15"	14 ½"	12 ½"	1 5/16"

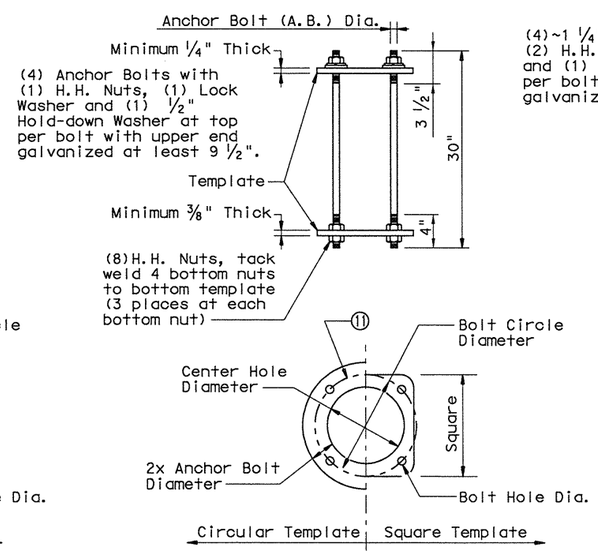

TRANSFORMER BASE ANCHOR BOLT ASSEMBLY

TRANSFORMER BASE ANCHOR BOLT ASSEMBLY TABLE					
MOUNTING HEIGHTS	A.B. Dia.	BOLT CIRCLE DIAMETER	SQUARE	CTR. HOLE DIAMETER	BOLT HOLE DIAMETER
20′ - 39′	1"	14"	14"	12"	1 1/16"
40′ - 50′	1 ¼"	17 ¼"	16 ¾"	14 ¾"	1 5/16"

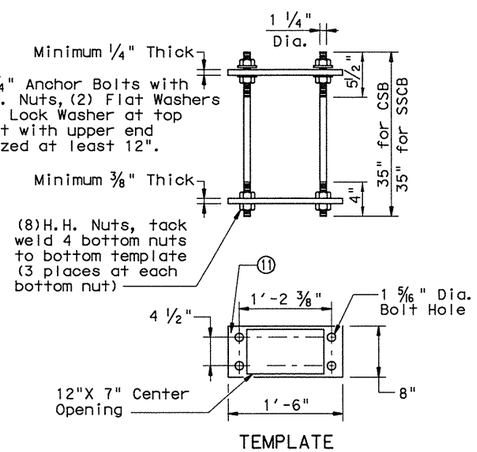

CONCRETE TRAFFIC BARRIER BASE ANCHOR BOLT ASSEMBLY

⑪ Anchor Bolt Templates need not be galvanized.

ANCHOR BOLT FABRICATION TOLERANCES TABLE	
DIMENSION	TOLERANCE
Length	± ½"
Threaded length	± ½"
Galvanized length (if required)	- ¼"

SHEET 4 of 4

Texas Department of Transportation
Traffic Operations Division

ROADWAY ILLUMINATION POLES

RIP(4)-11

© TxDOT January 2007

DN: TXDOT	CK: TXDOT	DW: TXDOT	CK: TXDOT

REVISIONS
MOD 1/11 JSY/TGG Revised Anchor Bolt Assemblies

CONT	SECT	JOB	HIGHWAY
2452	01	043	SH 151

DIST	COUNTY	SHEET NO.
SA	BEXAR	349

DATE:
FILE:

SHEET SUMMARY OF ESTIMATED QUANTITIES			
ITEM#	DESCRIPTION	UNIT	QTY
0666	REFL PAV MRK TY I (W) 4" (BRK)	LF	670
0666	REFL PAV MRK TY I (W) 4" (SLD)	LF	670
0666	REFL PAV MRK TY I (W) 8" (SLD)	LF	1120
0666	REFL PAV MRK TY I (W) 12" (SLD)	LF	112
0666	REFL PAV MRK TY I (Y) 4" (SLD)	LF	670
0666	REF PAV MRK TY II (W) 4" (BRK)	LF	670
0666	REF PAV MRK TY II (W) 4" (SLD)	LF	670
0666	REF PAV MRK TY II (W) 8" (SLD)	LF	1120
0666	REF PAV MRK TY II (W) 12" (SLD)	LF	112
0666	REF PAV MRK TY II (Y) 4" (SLD)	LF	670
0672	REFL PAV MRKR TY II-C-R	EA	69

PAVEMENT MARKING LEGEND

- A REFL PAV MRK (W) (4") (SLD) (100 MIL)
- B REFL PAV MRK (W) (4") (BKN) (100 MIL)
- C REFL PAV MRK (W) (4") (DOT) (100 MIL)
- D REFL PAV MRK (W) (8") (SLD) (100 MIL)
- E REFL PAV MRK (W) (12") (LNDP) (100 MIL)
- G REFL PAV MRK (W) (24") (SLD) (100 MIL)
- H REFL PAV MRK (W) (ARROW) (100 MIL)
- I REFL PAV MRK (W) (WORD) (100 MIL)
- J REFL PAV MRK (Y) (4") (SLD) (100 MIL)
- L REFL PAV MRK (Y) (24") (SLD) (100 MIL)
- M REFL PAV MRKR TY II-C-R
- N REFL PAV MRK (W) (12") (SLD) (100 MIL)
- EXISTING TRAFFIC FLOW ARROW
- PROPOSED TRAFFIC FLOW ARROW

N

0 25 50 100
SCALE IN FEET

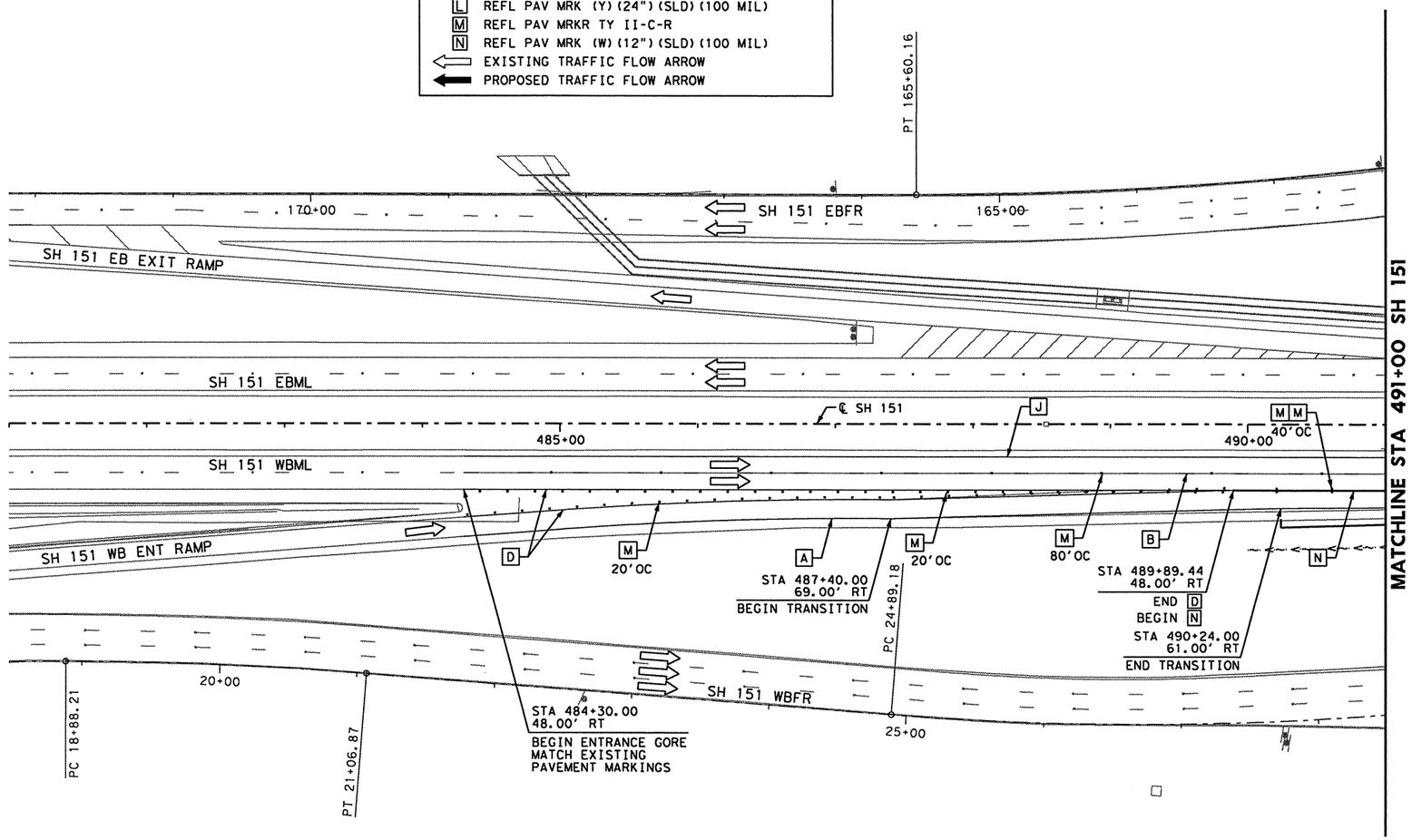

STATE OF TEXAS
MICHAEL W. MIDKIFF
75435
REGISTERED PROFESSIONAL ENGINEER
2/21/11

NO.	DATE	REVISION DESCRIPTION	APP. BY

© 2011

Texas Department of Transportation

MACTEC
3520 EXECUTIVE CENTER DRIVE
SUITE 200
AUSTIN, TEXAS 78731
(512) 795-0360
REGISTRATION NUMBER: F-1784

SH 151
PAVEMENT MARKING LAYOUT
SH 151
BEGIN PROJECT TO STA 491+00
(SHEET 1 OF 14)

FED. RD. DIV. NO.			SHEET NO.
			350
STATE	DIST.	COUNTY	
TEXAS	SA	BEXAR	
CONT.	SECT.	JOB	HIGHWAY NO.
2452	01	043	SH 151

p:\4760\0-0125\cad\sheet\151pm01.dgn 2/21/2011 7:05:59 PM mwmidkiff

PAVEMENT MARKING LEGEND

- [A] REFL PAV MRK (W)(4")(SLD)(100 MIL)
- [B] REFL PAV MRK (W)(4")(BKN)(100 MIL)
- [C] REFL PAV MRK (W)(4")(DOT)(100 MIL)
- [D] REFL PAV MRK (W)(8")(SLD)(100 MIL)
- [E] REFL PAV MRK (W)(12")(LNDP)(100 MIL)
- [G] REFL PAV MRK (W)(24")(SLD)(100 MIL)
- [H] REFL PAV MRK (W)(ARROW)(100 MIL)
- [I] REFL PAV MRK (W)(WORD)(100 MIL)
- [J] REFL PAV MRK (Y)(4")(SLD)(100 MIL)
- [L] REFL PAV MRK (Y)(24")(SLD)(100 MIL)
- [M] REFL PAV MRKR TY II-C-R
- [N] REFL PAV MRK (W)(12")(SLD)(100 MIL)
- EXISTING TRAFFIC FLOW ARROW
- PROPOSED TRAFFIC FLOW ARROW

N

0 25 50 100
SCALE IN FEET

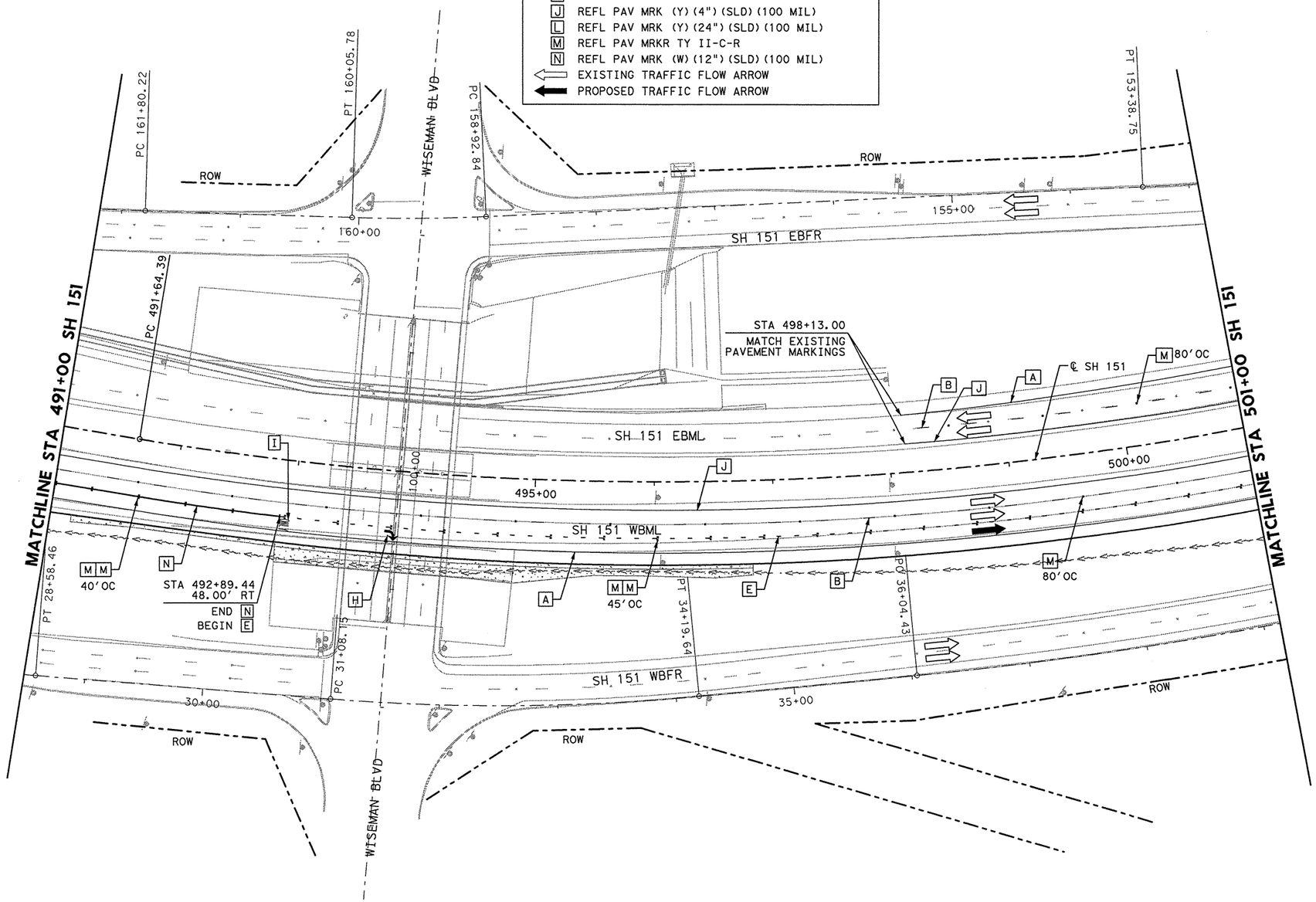

SHEET SUMMARY OF ESTIMATED QUANTITIES			
ITEM#	DESCRIPTION	UNIT	QTY
0666	REFL PAV MRK TY I (W) 4" (BRK)	LF	1083
0666	REFL PAV MRK TY I (W) 4" (SLD)	LF	1303
0666	REFL PAV MRK TY I (W) 12"(LNDP)	LF	825
0666	REFL PAV MRK TY I (W) 12"(SLD)	LF	192
0666	REFL PAV MRK TY I (W) (ARROW)	EA	1
0666	REFL PAV MRK TY I (W) (WORD)	EA	1
0666	REFL PAV MRK TY I (Y) 4" (SLD)	LF	1290
0666	REF PAV MRK TY II (W) 4" (BRK)	LF	1083
0666	REF PAV MRK TY II (W) 4" (SLD)	LF	1303
0666	REF PAV MRK TY II (W) 12" (LNDP)	LF	825
0666	REF PAV MRK TY II (W) 12" (SLD)	LF	192
0666	REF PAV MRK TY II (W) (ARROW)	EA	1
0666	REF PAV MRK TY II (W) (WORD)	EA	1
0666	REF PAV MRK TY II (Y) 4" (SLD)	LF	1290
0672	REFL PAV MRKR TY II-C-R	EA	64

STATE OF TEXAS
MICHAEL W. MIDKIFF
75435
REGISTERED PROFESSIONAL ENGINEER
12/5/11

NO.	DATE	REVISION DESCRIPTION	APP. BY

© 2011

Texas Department of Transportation

MACTEC
3520 EXECUTIVE CENTER DRIVE
SUITE 200
AUSTIN, TEXAS 78731
(512) 795-0360

REGISTRATION NUMBER: F-1784

SH 151
PAVEMENT MARKING LAYOUT
SH 151
STA 491+00 TO STA 501+00
(SHEET 2 OF 14)

FED. RD. DIV. NO.			SHEET NO.
			351
STATE	DIST.	COUNTY	
TEXAS	SA	BEXAR	
CONT.	SECT.	JOB	HIGHWAY NO.
2452	01	043	SH 151

12/6/2011 10:00:33 AM mwmidkiff
p:\4161\0-0129\cad\sheet\15\pm02.dgn

PAVEMENT MARKING LEGEND

A	REFL PAV MRK (W)(4")(SLD)(100 MIL)
B	REFL PAV MRK (W)(4")(BKN)(100 MIL)
C	REFL PAV MRK (W)(4")(DOT)(100 MIL)
D	REFL PAV MRK (W)(8")(SLD)(100 MIL)
E	REFL PAV MRK (W)(12")(LNDP)(100 MIL)
G	REFL PAV MRK (W)(24")(SLD)(100 MIL)
H	REFL PAV MRK (W)(ARROW)(100 MIL)
I	REFL PAV MRK (W)(WORD)(100 MIL)
J	REFL PAV MRK (Y)(4")(SLD)(100 MIL)
L	REFL PAV MRK (Y)(24")(SLD)(100 MIL)
M	REFL PAV MRKR TY II-C-R
N	REFL PAV MRK (W)(12")(SLD)(100 MIL)
⇦	EXISTING TRAFFIC FLOW ARROW
⬅	PROPOSED TRAFFIC FLOW ARROW

N

0 25 50 100
SCALE IN FEET

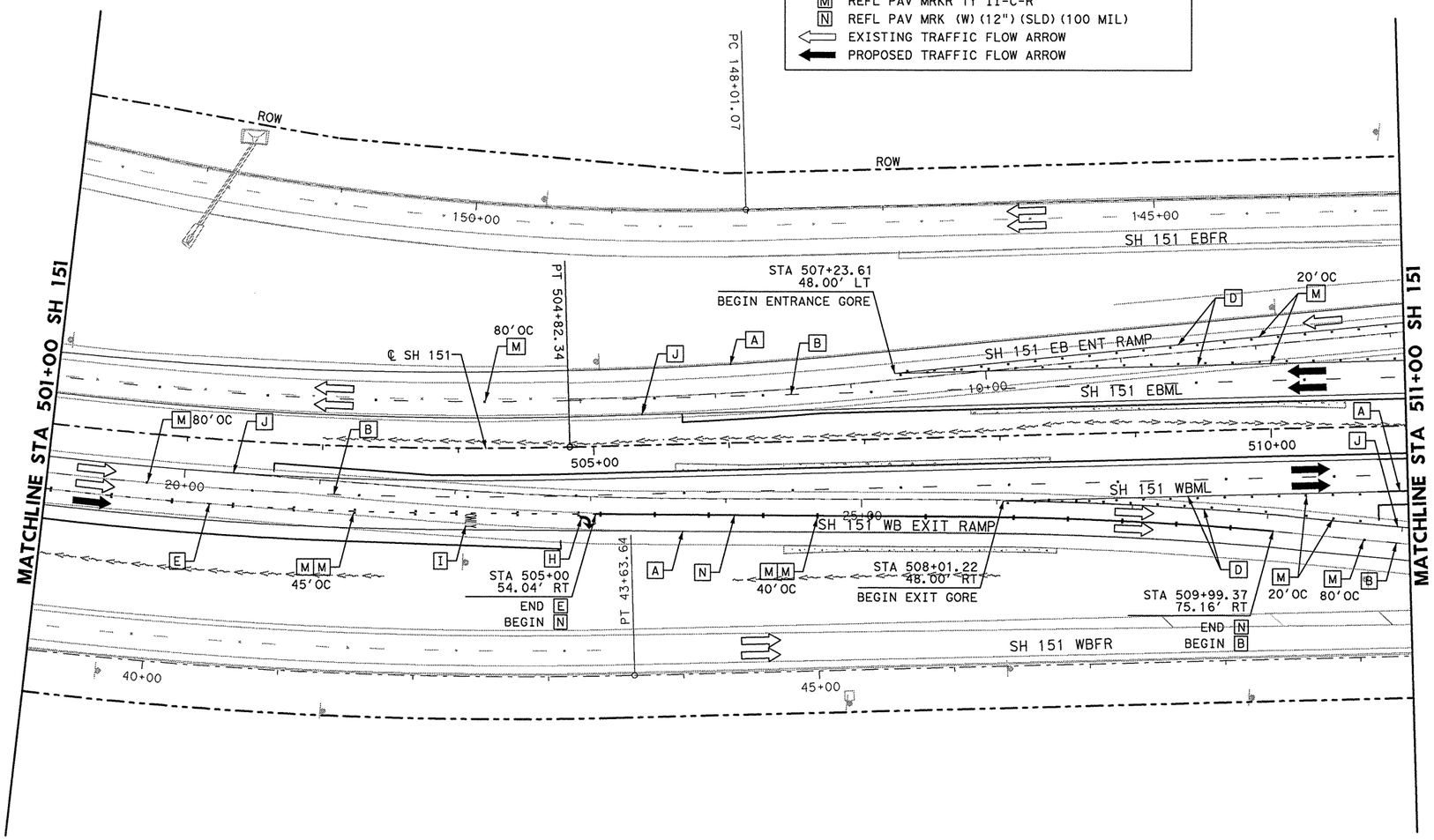

SHEET SUMMARY OF ESTIMATED QUANTITIES

ITEM#	DESCRIPTION	UNIT	QTY
0666	REFL PAV MRK TY I (W) 4" (BRK)	LF	1780
0666	REFL PAV MRK TY I (W) 4" (SLD)	LF	2024
0666	REFL PAV MRK TY I (W) 8" (SLD)	LF	1243
0666	REFL PAV MRK TY I (W) 12" (LNDP)	LF	407
0666	REFL PAV MRK TY I (W) 12" (SLD)	LF	500
0666	REFL PAV MRK TY I (W) (ARROW)	EA	1
0666	REFL PAV MRK TY I (W) (WORD)	EA	1
0666	REFL PAV MRK TY I (Y) 4" (SLD)	LF	2026
0666	REF PAV MRK TY II (W) 4" (BRK)	LF	1780
0666	REF PAV MRK TY II (W) 4" (SLD)	LF	2024
0666	REF PAV MRK TY II (W) 8" (SLD)	LF	1243
0666	REF PAV MRK TY II (W) 12" (LNDP)	LF	407
0666	REF PAV MRK TY II (W) 12" (SLD)	LF	500
0666	REF PAV MRK TY II (W) (ARROW)	EA	1
0666	REF PAV MRK TY II (W) (WORD)	EA	1
0666	REF PAV MRK TY II (Y) 4" (SLD)	LF	2026
0672	REFL PAV MRKR TY II-C-R	EA	132

STATE OF TEXAS
MICHAEL W. MIDKIFF
75435
REGISTERED PROFESSIONAL ENGINEER
12/5/11

NO.	DATE	REVISION DESCRIPTION	APP. BY

© 2011

Texas Department of Transportation

MACTEC
3520 EXECUTIVE CENTER DRIVE
SUITE 200
AUSTIN, TEXAS 78731
(512) 795-0360

REGISTRATION NUMBER: F-1784

SH 151
PAVEMENT MARKING LAYOUT
SH 151
STA 501+00 TO STA 511+00
(SHEET 3 OF 14)

FED. RD. DIV. NO.		SHEET NO.
		352

STATE	DIST.	COUNTY	
TEXAS	SA	BEXAR	
CONT.	SECT.	JOB	HIGHWAY NO.
2452	01	043	SH 151

p:\4160\10-01\29\cad\sheet\15\pm03.dgn 12/6/2011 10:00:39 AM mwmidkiff

PAVEMENT MARKING LEGEND

A	REFL PAV MRK (W)(4")(SLD)(100 MIL)
B	REFL PAV MRK (W)(4")(BKN)(100 MIL)
C	REFL PAV MRK (W)(4")(DOT)(100 MIL)
D	REFL PAV MRK (W)(8")(SLD)(100 MIL)
E	REFL PAV MRK (W)(12")(LNDP)(100 MIL)
G	REFL PAV MRK (W)(24")(SLD)(100 MIL)
H	REFL PAV MRK (W)(ARROW)(100 MIL)
I	REFL PAV MRK (W)(WORD)(100 MIL)
J	REFL PAV MRK (Y)(4")(SLD)(100 MIL)
L	REFL PAV MRK (Y)(24")(SLD)(100 MIL)
M	REFL PAV MRKR TY II-C-R
N	REFL PAV MRK (W)(12")(SLD)(100 MIL)
⇦	EXISTING TRAFFIC FLOW ARROW
⬅	PROPOSED TRAFFIC FLOW ARROW

N

0 25 50 100
SCALE IN FEET

SHEET SUMMARY OF ESTIMATED QUANTITIES

ITEM#	DESCRIPTION	UNIT	QTY
0666	REFL PAV MRK TY I (W) 4" (BRK)	LF	2549
0666	REFL PAV MRK TY I (W) 4" (SLD)	LF	3015
0666	REFL PAV MRK TY I (W) 8" (SLD)	LF	969
0666	REFL PAV MRK TY I (Y) 4" (SLD)	LF	3016
0666	REF PAV MRK TY II (W) 4" (BRK)	LF	2549
0666	REF PAV MRK TY II (W) 4" (SLD)	LF	3015
0666	REF PAV MRK TY II (W) 8" (SLD)	LF	969
0666	REF PAV MRK TY II (Y) 4" (SLD)	LF	3016
0672	REFL PAV MRKR TY II-C-R	EA	60

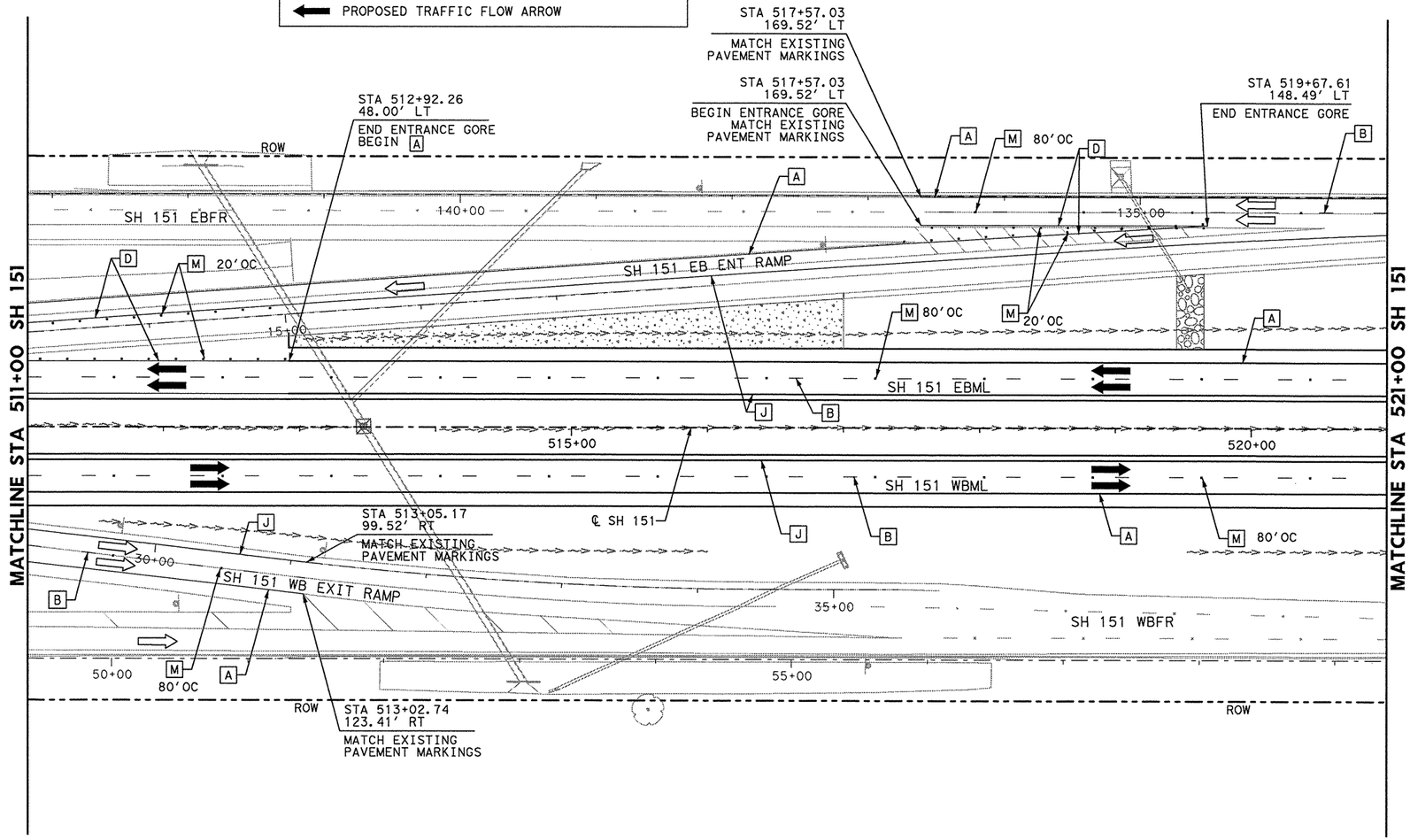

STATE OF TEXAS
MICHAEL W. MIDKIFF
75435
REGISTERED
PROFESSIONAL ENGINEER
12/5/11

NO.	DATE	REVISION DESCRIPTION	APP. BY

© 2011

Texas Department of Transportation

MACTEC
3520 EXECUTIVE CENTER DRIVE
SUITE 200
AUSTIN, TEXAS 78731
(512) 795-0360
REGISTRATION NUMBER: F-1784

SH 151
PAVEMENT MARKING LAYOUT
SH 151
STA 511+00 TO STA 521+00
(SHEET 4 OF 14)

FED. RD. DIV. NO.			SHEET NO.
			353
STATE	DIST.	COUNTY	
TEXAS	SA	BEXAR	
CONT.	SECT.	JOB	HIGHWAY NO.
2452	01	043	SH 151

p:\4760\0-0129\cad\sheet\15\pm04.dgn 12/6/2011 10:00:45 AM mwmidkiff

PAVEMENT MARKING LEGEND

- [A] REFL PAV MRK (W)(4")(SLD)(100 MIL)
- [B] REFL PAV MRK (W)(4")(BKN)(100 MIL)
- [C] REFL PAV MRK (W)(4")(DOT)(100 MIL)
- [D] REFL PAV MRK (W)(8")(SLD)(100 MIL)
- [E] REFL PAV MRK (W)(12")(LNDP)(100 MIL)
- [G] REFL PAV MRK (W)(24")(SLD)(100 MIL)
- [H] REFL PAV MRK (W)(ARROW)(100 MIL)
- [I] REFL PAV MRK (W)(WORD)(100 MIL)
- [J] REFL PAV MRK (Y)(4")(SLD)(100 MIL)
- [L] REFL PAV MRK (Y)(24")(SLD)(100 MIL)
- [M] REFL PAV MRKR TY II-C-R
- [N] REFL PAV MRK (W)(12")(SLD)(100 MIL)
- EXISTING TRAFFIC FLOW ARROW
- PROPOSED TRAFFIC FLOW ARROW

SHEET SUMMARY OF ESTIMATED QUANTITIES

ITEM#	DESCRIPTION	UNIT	QTY
0666	REFL PAV MRK TY I (W) 4" (BRK)	LF	2989
0666	REFL PAV MRK TY I (W) 4" (SLD)	LF	2984
0666	REFL PAV MRK TY I (Y) 4" (SLD)	LF	2994
0666	REF PAV MRK TY II (W) 4" (BRK)	LF	2989
0666	REF PAV MRK TY II (W) 4" (SLD)	LF	2984
0666	REF PAV MRK TY II (Y) 4" (SLD)	LF	2994
0672	REFL PAV MRKR TY II-C-R	EA	36

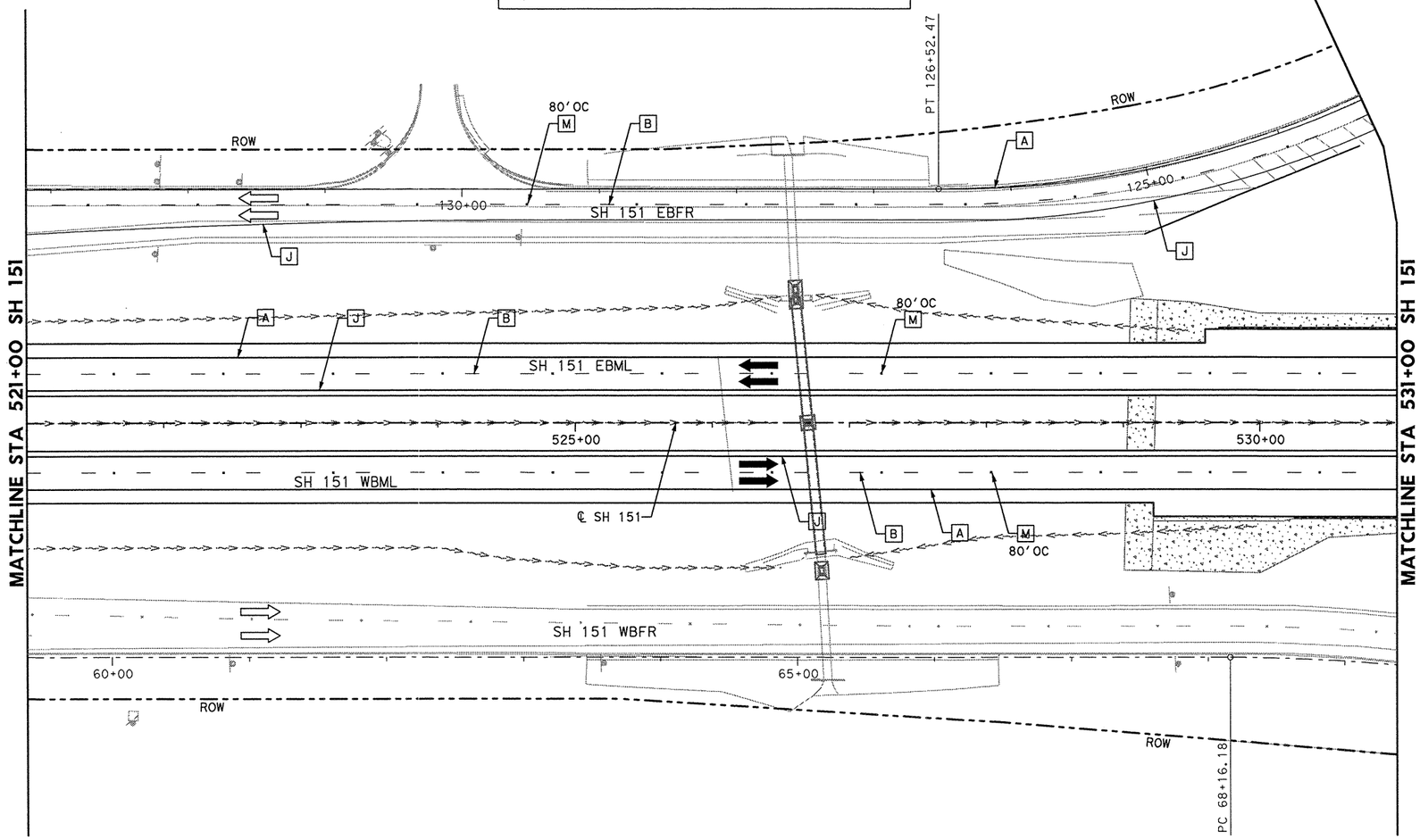

STATE OF TEXAS
MICHAEL W. MIDKIFF
75435
REGISTERED PROFESSIONAL ENGINEER
12/5/11

NO.	DATE	REVISION DESCRIPTION	APP. BY

© 2011

Texas Department of Transportation

MACTEC
3520 EXECUTIVE CENTER DRIVE
SUITE 200
AUSTIN, TEXAS 78731
(512) 795-0360

REGISTRATION NUMBER: F-1784

SH 151
PAVEMENT MARKING LAYOUT
SH 151
STA 521+00 TO STA 531+00
(SHEET 5 OF 14)

FED. RD. DIV. NO.			SHEET NO.
			354
STATE	DIST.	COUNTY	
TEXAS	SA	BEXAR	
CONT.	SECT.	JOB	HIGHWAY NO.
2452	01	043	SH 151

12/3/2011 6:43:29 PM mwmidkiff
p:\4760\0-0129\cad\sheet\15pm05.dgn

SHEET SUMMARY OF ESTIMATED QUANTITIES			
ITEM#	DESCRIPTION	UNIT	QTY
0666	REFL PAV MRK TY I (W) 4" (BRK)	LF	2527
0666	REFL PAV MRK TY I (W) 4" (SLD)	LF	2519
0666	REFL PAV MRK TY I (Y) 4" (SLD)	LF	2536
0666	REF PAV MRK TY II (W) 4" (BRK)	LF	2527
0666	REF PAV MRK TY II (W) 4" (SLD)	LF	2519
0666	REF PAV MRK TY II (Y) 4" (SLD)	LF	2536
0672	REFL PAV MRKR TY II-C-R	EA	32

PAVEMENT MARKING LEGEND

- A REFL PAV MRK (W)(4")(SLD)(100 MIL)
- B REFL PAV MRK (W)(4")(BKN)(100 MIL)
- C REFL PAV MRK (W)(4")(DOT)(100 MIL)
- D REFL PAV MRK (W)(8")(SLD)(100 MIL)
- E REFL PAV MRK (W)(12")(LNDP)(100 MIL)
- G REFL PAV MRK (W)(24")(SLD)(100 MIL)
- H REFL PAV MRK (W)(ARROW)(100 MIL)
- I REFL PAV MRK (W)(WORD)(100 MIL)
- J REFL PAV MRK (Y)(4")(SLD)(100 MIL)
- L REFL PAV MRK (Y)(24")(SLD)(100 MIL)
- M REFL PAV MRKR TY II-C-R
- N REFL PAV MRK (W)(12")(SLD)(100 MIL)
- EXISTING TRAFFIC FLOW ARROW
- PROPOSED TRAFFIC FLOW ARROW

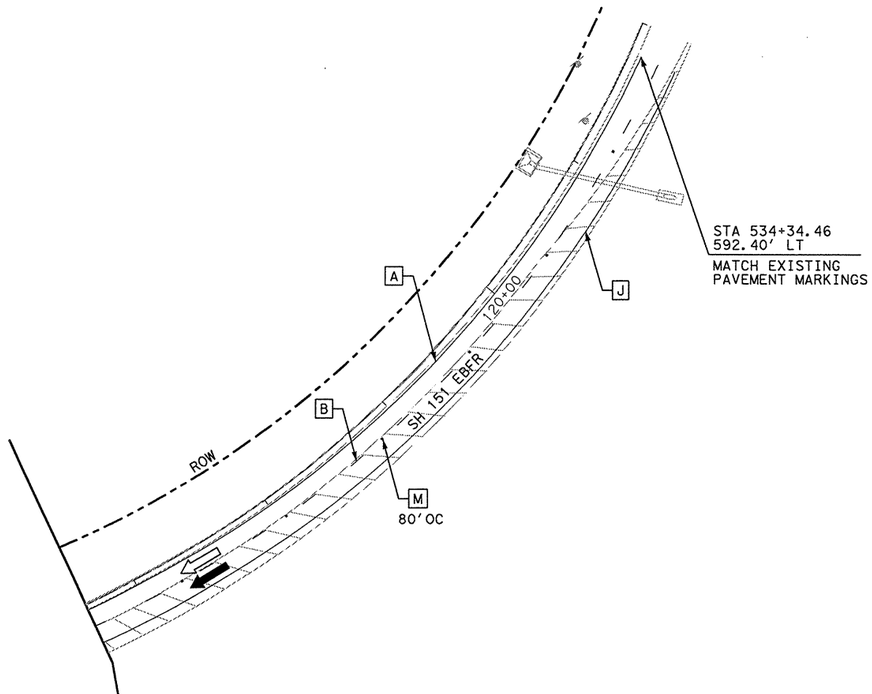

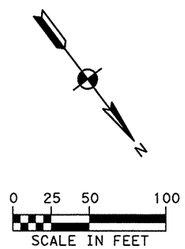

STATE OF TEXAS
MICHAEL W. MIDKIFF
75435
REGISTERED
PROFESSIONAL ENGINEER
12/5/11

NO.	DATE	REVISION DESCRIPTION	APP. BY

© 2011

Texas Department of Transportation

MACTEC
3520 EXECUTIVE CENTER DRIVE
SUITE 200
AUSTIN, TEXAS 78731
(512) 795-0360
REGISTRATION NUMBER: F-1784

SH 151
PAVEMENT MARKING LAYOUT
SH 151
STA 531+00 TO STA 541+00
(SHEET 6 OF 14)

FED. RD. DIV. NO.			SHEET NO.
			355
STATE	DIST.	COUNTY	
TEXAS	SA	BEXAR	
CONT.	SECT.	JOB	HIGHWAY NO.
2452	01	043	SH 151

p:\4760\0-01\29\cad\sheet\15\pm06.dgn 12/3/2011 6:43:35 PM mwmidkiff

PAVEMENT MARKING LEGEND

- [A] REFL PAV MRK (W)(4")(SLD)(100 MIL)
- [B] REFL PAV MRK (W)(4")(BKN)(100 MIL)
- [C] REFL PAV MRK (W)(4")(DOT)(100 MIL)
- [D] REFL PAV MRK (W)(8")(SLD)(100 MIL)
- [E] REFL PAV MRK (W)(12")(LNDP)(100 MIL)
- [G] REFL PAV MRK (W)(24")(SLD)(100 MIL)
- [H] REFL PAV MRK (W)(ARROW)(100 MIL)
- [I] REFL PAV MRK (W)(WORD)(100 MIL)
- [J] REFL PAV MRK (Y)(4")(SLD)(100 MIL)
- [L] REFL PAV MRK (Y)(24")(SLD)(100 MIL)
- [M] REFL PAV MRKR TY II-C-R
- [N] REFL PAV MRK (W)(12")(SLD)(100 MIL)
- EXISTING TRAFFIC FLOW ARROW
- PROPOSED TRAFFIC FLOW ARROW

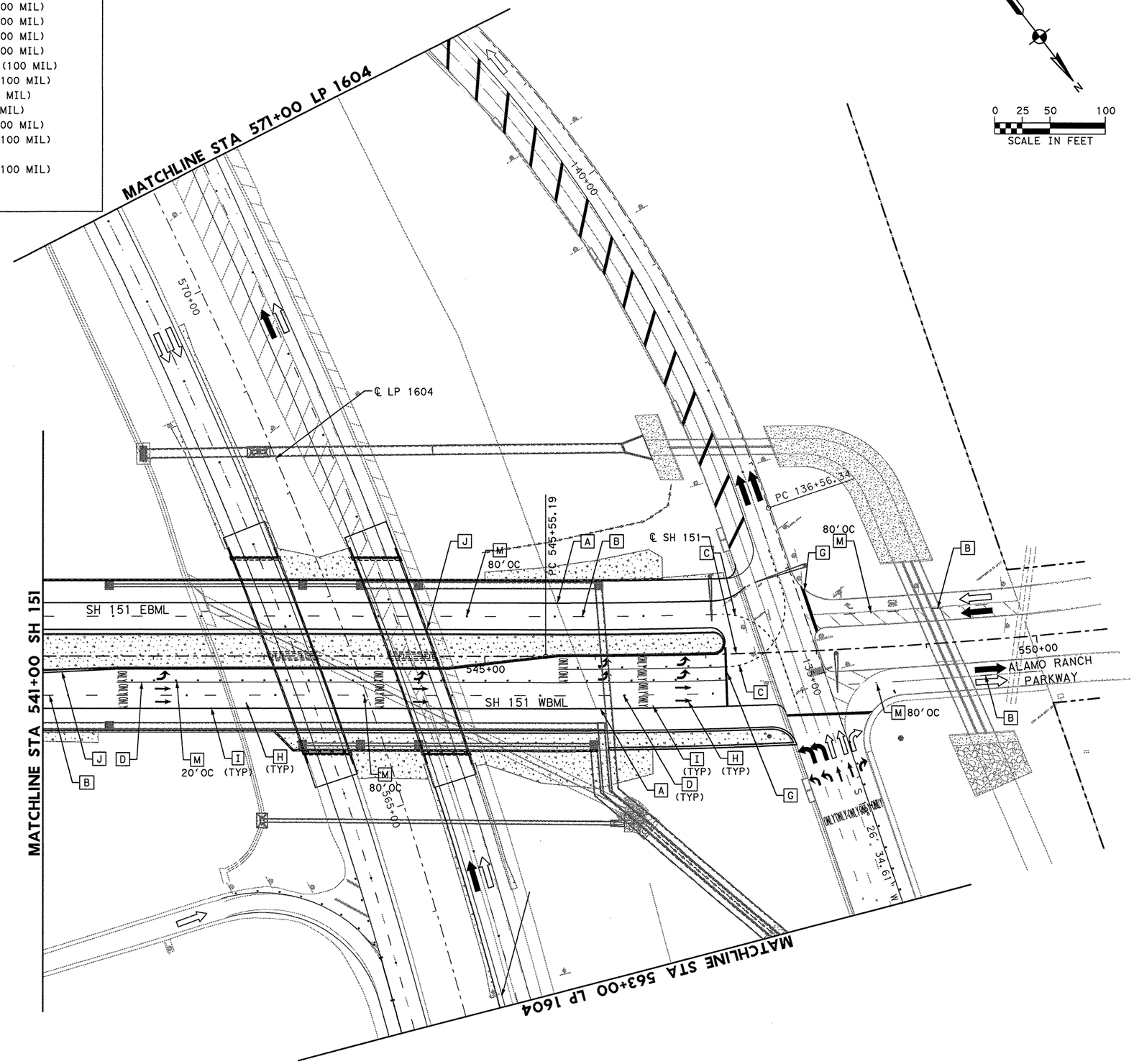

N

0 25 50 100
SCALE IN FEET

SHEET SUMMARY OF ESTIMATED QUANTITIES			
ITEM#	DESCRIPTION	UNIT	QTY
0666	REFL PAV MRK TY I (W) 4" (BRK)	LF	1566
0666	REFL PAV MRK TY I (W) 4" (DOT)	LF	269
0666	REFL PAV MRK TY I (W) 4" (SLD)	LF	1267
0666	REFL PAV MRK TY I (W) 8" (SLD)	LF	702
0666	REFL PAV MRK TY I (W) 24"(SLD)	LF	96
0666	REFL PAV MRK TY I (W) (ARROW)	EA	12
0666	REFL PAV MRK TY I (W) (WORD)	EA	12
0666	REFL PAV MRK TY I (Y) 4" (SLD)	LF	1249
0666	REF PAV MRK TY II (W) 4" (BRK)	LF	1566
0666	REF PAV MRK TY II (W) 4" (DOT)	LF	269
0666	REF PAV MRK TY II (W) 4" (SLD)	LF	1267
0666	REF PAV MRK TY II (W) 8" (SLD)	LF	702
0666	REF PAV MRK TY II (W) 24" (SLD)	LF	96
0666	REF PAV MRK TY II (W) (ARROW)	EA	12
0666	REF PAV MRK TY II (W) (WORD)	EA	12
0666	REF PAV MRK TY II (Y) 4" (SLD)	LF	1249
0672	REFL PAV MRKR TY II-C-R	EA	55

STATE OF TEXAS
MICHAEL W. MIDKIFF
75435
REGISTERED PROFESSIONAL ENGINEER
12/5/11

NO.	DATE	REVISION DESCRIPTION	APP. BY

© 2011

Texas Department of Transportation

MACTEC
3520 EXECUTIVE CENTER DRIVE
SUITE 200
AUSTIN, TEXAS 78731
(512) 795-0360

REGISTRATION NUMBER: F-1784

SH 151
PAVEMENT MARKING LAYOUT
SH 151
STA 541+00 TO END PROJECT
(SHEET 7 OF 14)

FED. RD. DIV. NO.			SHEET NO.
			356

STATE	DIST.	COUNTY	
TEXAS	SA	BEXAR	
CONT.	SECT.	JOB	HIGHWAY NO.
2452	01	043	SH 151

P:\47160\0-01\Pscad\sheet\15\pm07.dgn 12/6/2011 9:33:21 AM mwmidkiff

PAVEMENT MARKING LEGEND

- [A] REFL PAV MRK (W)(4")(SLD)(100 MIL)
- [B] REFL PAV MRK (W)(4")(BKN)(100 MIL)
- [C] REFL PAV MRK (W)(4")(DOT)(100 MIL)
- [D] REFL PAV MRK (W)(8")(SLD)(100 MIL)
- [E] REFL PAV MRK (W)(12")(LNDP)(100 MIL)
- [G] REFL PAV MRK (W)(24")(SLD)(100 MIL)
- [H] REFL PAV MRK (W)(ARROW)(100 MIL)
- [I] REFL PAV MRK (W)(WORD)(100 MIL)
- [J] REFL PAV MRK (Y)(4")(SLD)(100 MIL)
- [L] REFL PAV MRK (Y)(24")(SLD)(100 MIL)
- [M] REFL PAV MRKR TY II-C-R
- [N] REFL PAV MRK (W)(12")(SLD)(100 MIL)
- EXISTING TRAFFIC FLOW ARROW
- PROPOSED TRAFFIC FLOW ARROW

N

0 25 50 100
SCALE IN FEET

SHEET SUMMARY OF ESTIMATED QUANTITIES			
ITEM#	DESCRIPTION	UNIT	QTY
0666	REFL PAV MRK TY I (W) 4" (BRK)	LF	600
0666	REFL PAV MRK TY I (W) 4" (SLD)	LF	600
0666	REFL PAV MRK TY I (Y) 4" (SLD)	LF	600
0666	REF PAV MRK TY II (W) 4" (BRK)	LF	600
0666	REF PAV MRK TY II (W) 4" (SLD)	LF	600
0666	REF PAV MRK TY II (Y) 4" (SLD)	LF	600
0672	REFL PAV MRKR TY II-C-R	EA	8

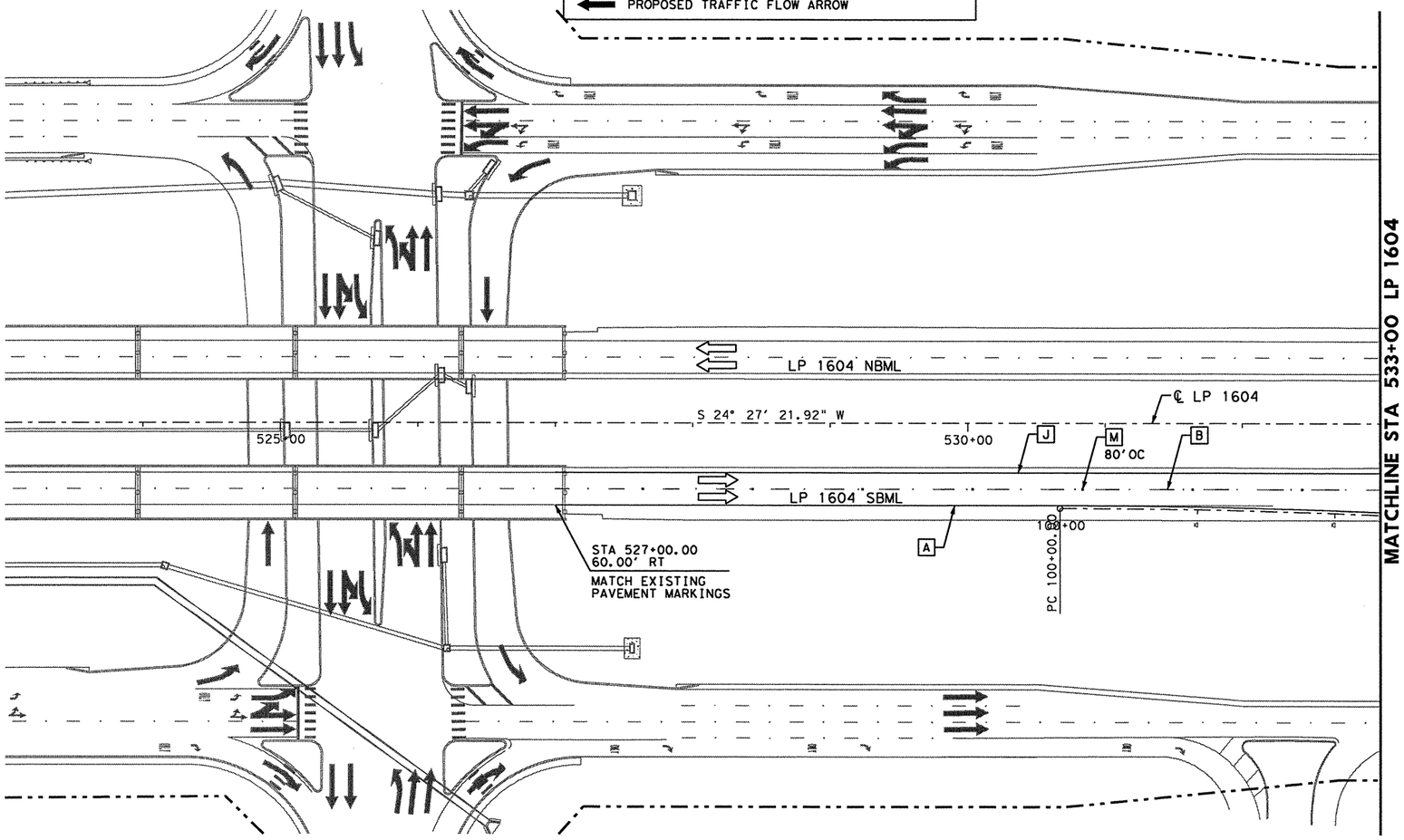

STATE OF TEXAS
MICHAEL W. MIDKIFF
75435
REGISTERED
PROFESSIONAL ENGINEER
2/21/11

NO.	DATE	REVISION DESCRIPTION	APP. BY

© 2011

Texas Department of Transportation

MACTEC
3520 EXECUTIVE CENTER DRIVE
SUITE 200
AUSTIN, TEXAS 78731
(512) 795-0360

REGISTRATION NUMBER: F-1784

SH 151
PAVEMENT MARKING LAYOUT
LP 1604
BEGIN TO
STA 533+00
(SHEET 8 OF 14)

FED. RD. DIV. NO.			SHEET NO.
			357
STATE	DIST.	COUNTY	
TEXAS	SA	BEXAR	
CONT.	SECT.	JOB	HIGHWAY NO.
2452	01	043	SH 151

P:\4760\0-0129\cad\sheet\15jpm08.dgn 2/21/2011 7:06:36 PM mwmidkiff

PAVEMENT MARKING LEGEND

A	REFL PAV MRK (W)(4")(SLD)(100 MIL)
B	REFL PAV MRK (W)(4")(BKN)(100 MIL)
C	REFL PAV MRK (W)(4")(DOT)(100 MIL)
D	REFL PAV MRK (W)(8")(SLD)(100 MIL)
E	REFL PAV MRK (W)(12")(LNDP)(100 MIL)
G	REFL PAV MRK (W)(24")(SLD)(100 MIL)
H	REFL PAV MRK (W)(ARROW)(100 MIL)
I	REFL PAV MRK (W)(WORD)(100 MIL)
J	REFL PAV MRK (Y)(4")(SLD)(100 MIL)
L	REFL PAV MRK (Y)(24")(SLD)(100 MIL)
M	REFL PAV MRKR TY II-C-R
N	REFL PAV MRK (W)(12")(SLD)(100 MIL)
⇦	EXISTING TRAFFIC FLOW ARROW
⬅	PROPOSED TRAFFIC FLOW ARROW

N

0 25 50 100
SCALE IN FEET

SHEET SUMMARY OF ESTIMATED QUANTITIES

ITEM#	DESCRIPTION	UNIT	QTY
0666	REFL PAV MRK TY I (W) 4" (BRK)	LF	795
0666	REFL PAV MRK TY I (W) 4" (SLD)	LF	796
0666	REFL PAV MRK TY I (W) 8" (SLD)	LF	1129
0666	REFL PAV MRK TY I (Y) 4" (SLD)	LF	1223
0666	REF PAV MRK TY II (W) 4" (BRK)	LF	795
0666	REF PAV MRK TY II (W) 4" (SLD)	LF	796
0666	REF PAV MRK TY II (W) 8" (SLD)	LF	1129
0666	REF PAV MRK TY II (Y) 4" (SLD)	LF	1223
0672	REFL PAV MRKR TY II-C-R	EA	65

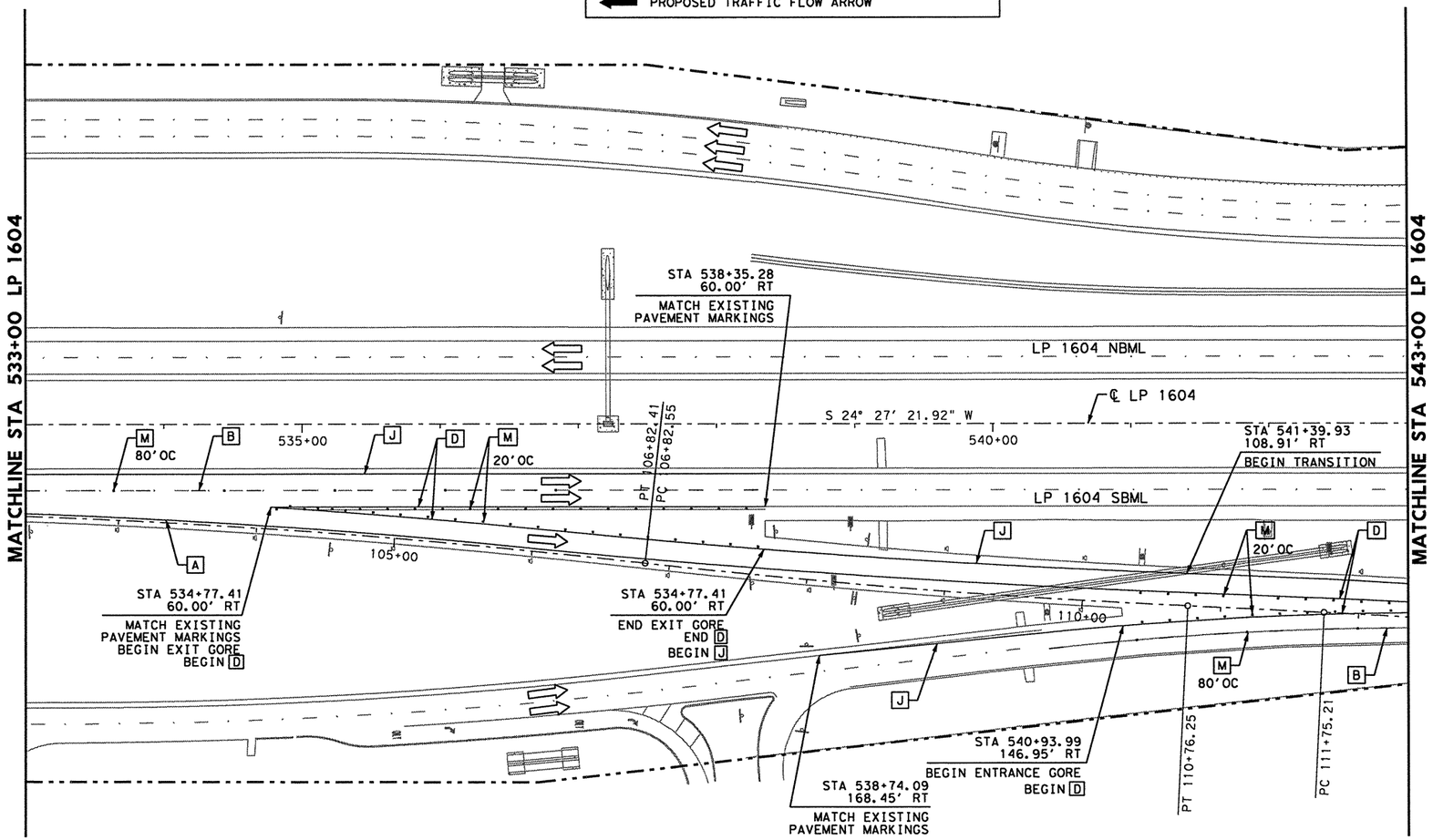

STATE OF TEXAS
MICHAEL W. MIDKIFF
75435
REGISTERED
PROFESSIONAL ENGINEER
2/21/11

NO.	DATE	REVISION DESCRIPTION	APP. BY

© 2011

Texas Department of Transportation

MACTEC
3520 EXECUTIVE CENTER DRIVE
SUITE 200
AUSTIN, TEXAS 78731
(512) 795-0360
REGISTRATION NUMBER: F-1784

SH 151
PAVEMENT MARKING LAYOUT
LP 1604
STA 533+00 TO STA 543+00
(SHEET 9 OF 14)

FED. RD. DIV. NO.			SHEET NO.
			358
STATE	DIST.	COUNTY	
TEXAS	SA	BEXAR	
CONT.	SECT.	JOB	HIGHWAY NO.
2452	01	043	SH 151

p:\4760\0-0129\cad\sheet\Slpm09.dgn 2/21/2011 7:06:41 PM mwmidkiff

PAVEMENT MARKING LEGEND

A	REFL PAV MRK (W) (4") (SLD) (100 MIL)
B	REFL PAV MRK (W) (4") (BKN) (100 MIL)
C	REFL PAV MRK (W) (4") (DOT) (100 MIL)
D	REFL PAV MRK (W) (8") (SLD) (100 MIL)
E	REFL PAV MRK (W) (12") (LNDP) (100 MIL)
G	REFL PAV MRK (W) (24") (SLD) (100 MIL)
H	REFL PAV MRK (W) (ARROW) (100 MIL)
I	REFL PAV MRK (W) (WORD) (100 MIL)
J	REFL PAV MRK (Y) (4") (SLD) (100 MIL)
L	REFL PAV MRK (Y) (24") (SLD) (100 MIL)
M	REFL PAV MRKR TY II-C-R
N	REFL PAV MRK (W) (12") (SLD) (100 MIL)
⇦	EXISTING TRAFFIC FLOW ARROW
⬅	PROPOSED TRAFFIC FLOW ARROW

0 25 50 100
SCALE IN FEET

SHEET SUMMARY OF ESTIMATED QUANTITIES

ITEM#	DESCRIPTION	UNIT	QTY
0666	REFL PAV MRK TY I (W) 4" (BRK)	LF	476
0666	REFL PAV MRK TY I (W) 8" (SLD)	LF	464
0666	REFL PAV MRK TY I (Y) 4" (SLD)	LF	356
0666	REF PAV MRK TY II (W) 4" (BRK)	LF	476
0666	REF PAV MRK TY II (W) 8" (SLD)	LF	464
0666	REF PAV MRK TY II (Y) 4" (SLD)	LF	356
0672	REFL PAV MRKR TY II-C-R	EA	28

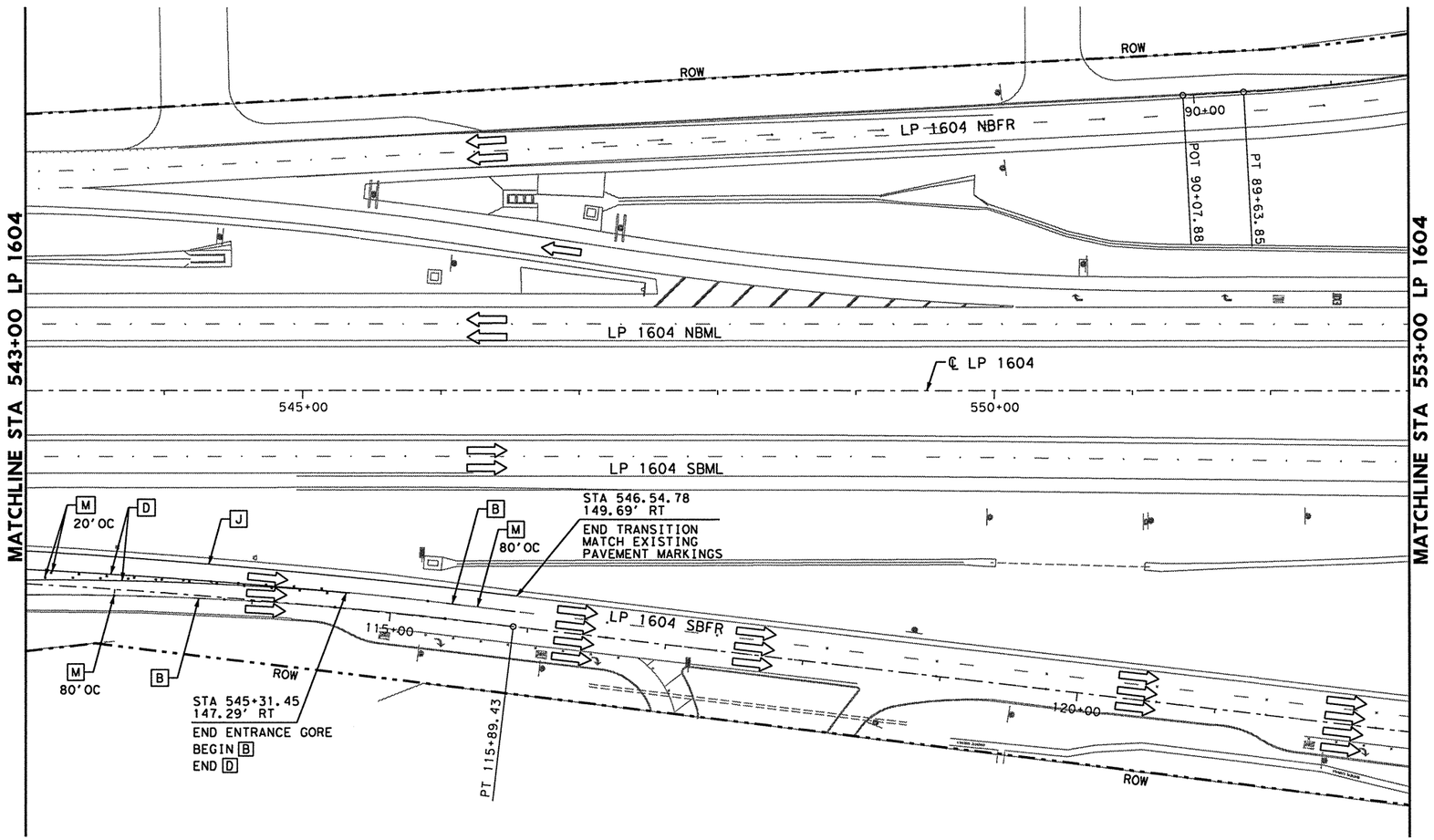

STATE OF TEXAS
MICHAEL W. MIDKIFF
75435
REGISTERED PROFESSIONAL ENGINEER

Michael W. Midkiff
2/21/11

NO.	DATE	REVISION DESCRIPTION	APP. BY

© 2011

Texas Department of Transportation

MACTEC
3520 EXECUTIVE CENTER DRIVE
SUITE 200
AUSTIN, TEXAS 78731
(512) 795-0360

REGISTRATION NUMBER: F-1784

SH 151
PAVEMENT MARKING LAYOUT
LP 1604
STA 543+00 TO STA 553+00
(SHEET 10 OF 14)

FED. RD. DIV. NO.			SHEET NO.
			359
STATE	DIST.	COUNTY	
TEXAS	SA	BEXAR	
CONT.	SECT.	JOB	HIGHWAY NO.
2452	01	043	SH 151

p:\4760\0-0129\cad\sheet\151pm10.dgn 2/21/2011 7:06:46 PM mwmidkiff

PAVEMENT MARKING LEGEND

A	REFL PAV MRK (W)(4")(SLD)(100 MIL)
B	REFL PAV MRK (W)(4")(BKN)(100 MIL)
C	REFL PAV MRK (W)(4")(DOT)(100 MIL)
D	REFL PAV MRK (W)(8")(SLD)(100 MIL)
E	REFL PAV MRK (W)(12")(LNDP)(100 MIL)
G	REFL PAV MRK (W)(24")(SLD)(100 MIL)
H	REFL PAV MRK (W)(ARROW)(100 MIL)
I	REFL PAV MRK (W)(WORD)(100 MIL)
J	REFL PAV MRK (Y)(4")(SLD)(100 MIL)
L	REFL PAV MRK (Y)(24")(SLD)(100 MIL)
M	REFL PAV MRKR TY II-C-R
N	REFL PAV MRK (W)(12")(SLD)(100 MIL)
⇦	EXISTING TRAFFIC FLOW ARROW
⬅	PROPOSED TRAFFIC FLOW ARROW

0 25 50 100
SCALE IN FEET

SHEET SUMMARY OF ESTIMATED QUANTITIES

ITEM#	DESCRIPTION	UNIT	QTY
0666	REFL PAV MRK TY I (W) 4" (BRK)	LF	1425
0666	REFL PAV MRK TY I (W) 4" (SLD)	LF	1425
0666	REFL PAV MRK TY I (W) 8" (SLD)	LF	105
0666	REFL PAV MRK TY I (W) 12"(LNDP)	LF	670
0666	REFL PAV MRK TY I (W) 12"(SLD)	LF	228
0666	REFL PAV MRK TY I (W) (ARROW)	EA	7
0666	REFL PAV MRK TY I (W) (WORD)	EA	7
0666	REFL PAV MRK TY I (Y) 4" (SLD)	LF	1425
0666	REF PAV MRK TY II (W) 4" (BRK)	LF	1425
0666	REF PAV MRK TY II (W) 4" (SLD)	LF	1425
0666	REF PAV MRK TY II (W) 8" (SLD)	LF	105
0666	REF PAV MRK TY II (W) 12" (LNDP)	LF	670
0666	REF PAV MRK TY II (W) 12" (SLD)	LF	228
0666	REF PAV MRK TY II (W) (ARROW)	EA	7
0666	REF PAV MRK TY II (W) (WORD)	EA	7
0666	REF PAV MRK TY II (Y) 4" (SLD)	LF	1425

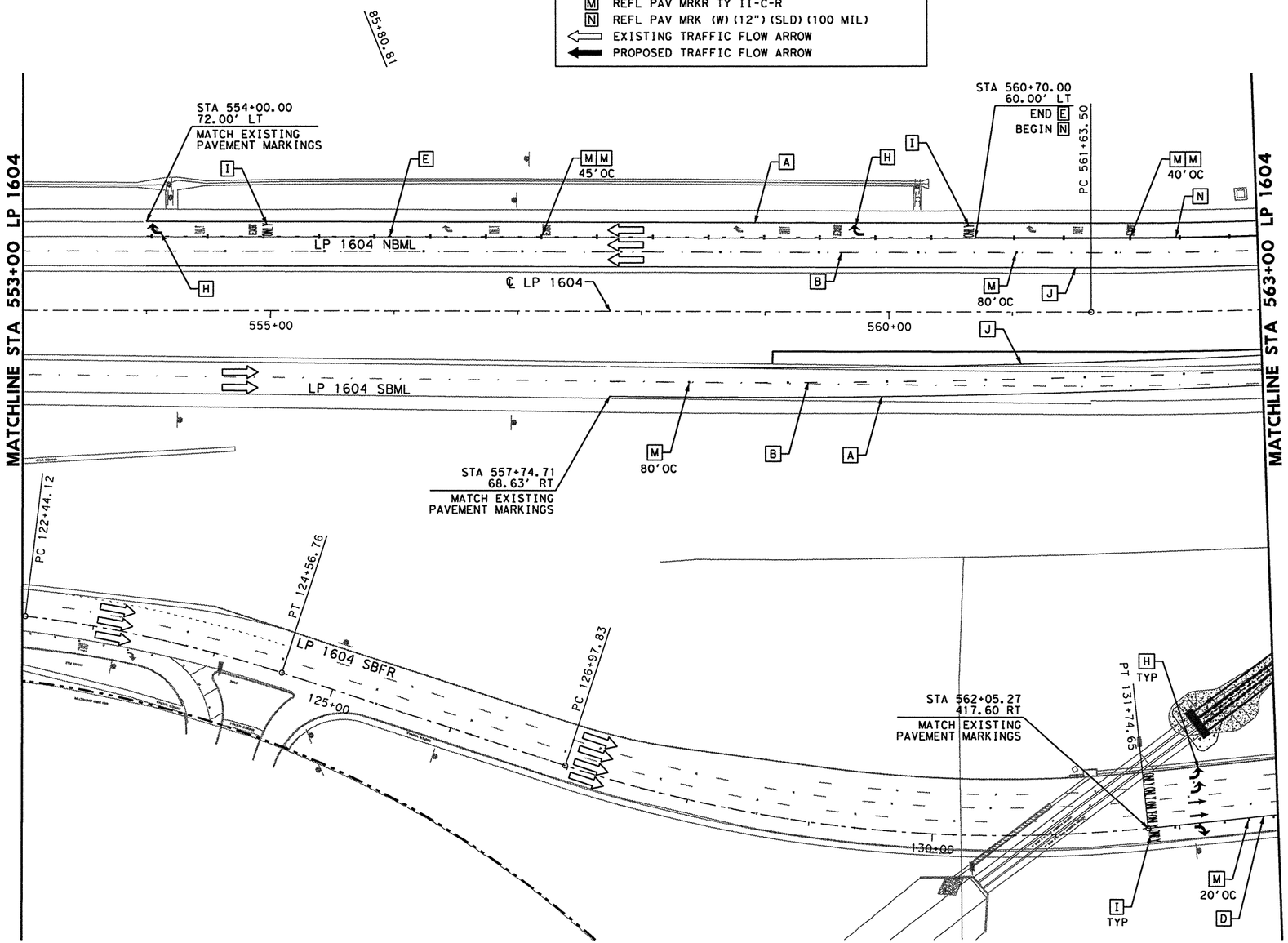

STATE OF TEXAS
MICHAEL W. MIDKIFF
75435
REGISTERED
PROFESSIONAL ENGINEER
2/21/11

NO.	DATE	REVISION DESCRIPTION	APP. BY

© 2011

Texas Department of Transportation

MACTEC
3520 EXECUTIVE CENTER DRIVE
SUITE 200
AUSTIN, TEXAS 78731
(512) 795-0360

REGISTRATION NUMBER: F-1784

SH 151
PAVEMENT MARKING LAYOUT
LP 1604
STA 553+00 TO
STA 563+00
(SHEET 11 OF 14)

FED. RD. DIV. NO.			SHEET NO.
			360
STATE	DIST.	COUNTY	
TEXAS	SA	BEXAR	
CONT.	SECT.	JOB	HIGHWAY NO.
2452	01	043	SH 151

P:\4760\0-0125\cad\Sheet\15pmlt.dgn 2/21/2011 7:06:52 PM mwmidkiff

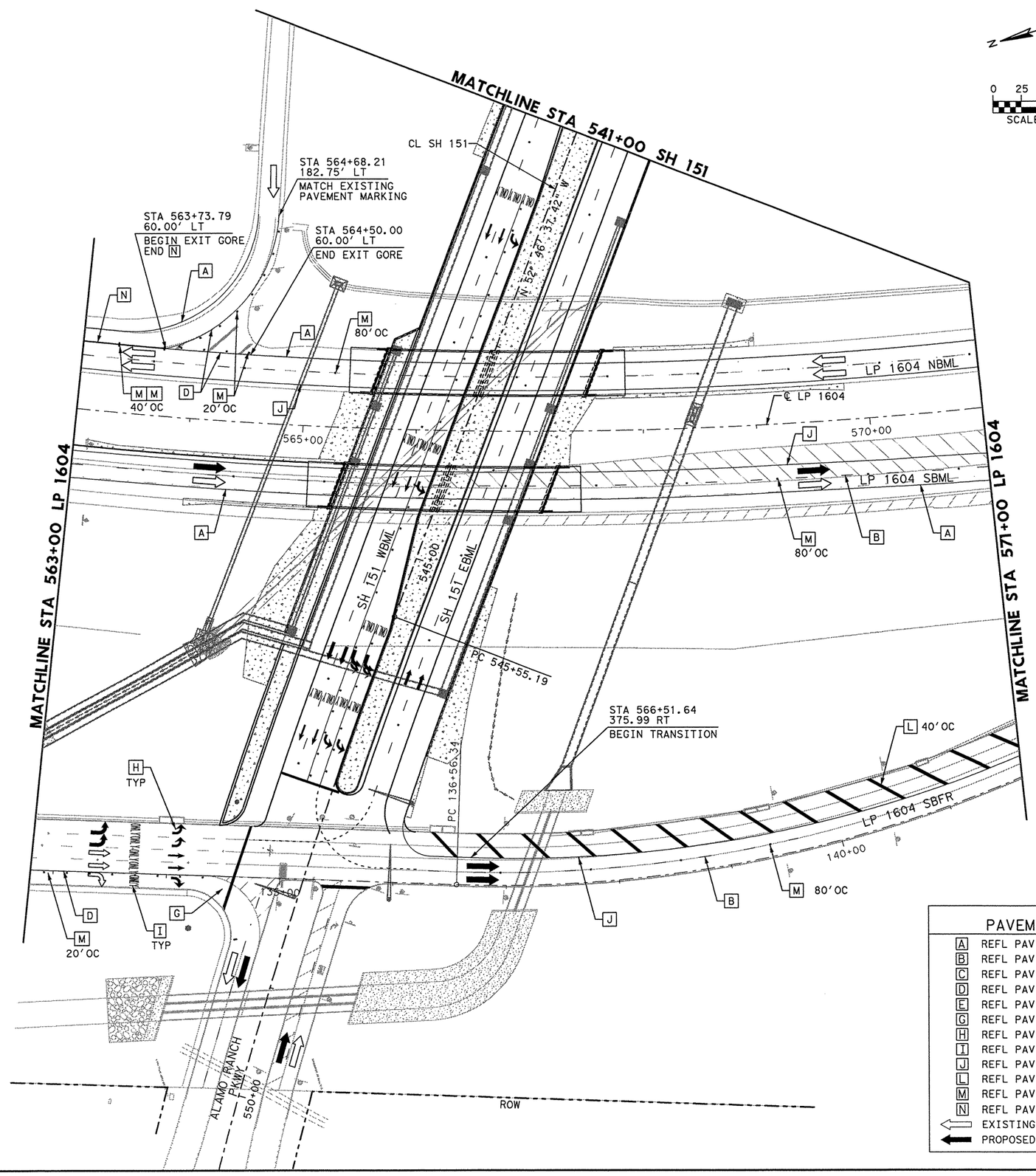

0 25 50 100
SCALE IN FEET

SHEET SUMMARY OF ESTIMATED QUANTITIES			
ITEM#	DESCRIPTION	UNIT	QTY
0666	REFL PAV MRK TY I (W) 4" (BRK)	LF	1929
0666	REFL PAV MRK TY I (W) 4" (SLD)	LF	1661
0666	REFL PAV MRK TY I (W) 8" (SLD)	LF	409
0666	REFL PAV MRK TY I (W) 12" (SLD)	LF	73
0666	REFL PAV MRK TY I (W) 24" (SLD)	LF	75
0666	REFL PAV MRK TY I (W) (ARROW)	EA	5
0666	REFL PAV MRK TY I (W) (WORD)	EA	5
0666	REFL PAV MRK TY I (Y) 4" (SLD)	LF	2180
0666	REFL PAV MRK TY I (Y) 24" (SLD)	LF	460
0666	REF PAV MRK TY II (W) 4" (BRK)	LF	1929
0666	REF PAV MRK TY II (W) 4" (SLD)	LF	1661
0666	REF PAV MRK TY II (W) 8" (SLD)	LF	409
0666	REF PAV MRK TY II (W) 12" (SLD)	LF	73
0666	REF PAV MRK TY II (W) 24" (SLD)	LF	75
0666	REF PAV MRK TY II (W) (ARROW)	EA	5
0666	REF PAV MRK TY II (W) (WORD)	EA	5
0666	REF PAV MRK TY II (Y) 4" (SLD)	LF	2180
0666	REF PAV MRK TY II (Y) 24" (SLD)	LF	460
0672	REFL PAV MRKR TY II-C-R	EA	48

PAVEMENT MARKING LEGEND

A	REFL PAV MRK (W) (4") (SLD) (100 MIL)
B	REFL PAV MRK (W) (4") (BKN) (100 MIL)
C	REFL PAV MRK (W) (4") (DOT) (100 MIL)
D	REFL PAV MRK (W) (8") (SLD) (100 MIL)
E	REFL PAV MRK (W) (12") (LNDP) (100 MIL)
G	REFL PAV MRK (W) (24") (SLD) (100 MIL)
H	REFL PAV MRK (W) (ARROW) (100 MIL)
I	REFL PAV MRK (W) (WORD) (100 MIL)
J	REFL PAV MRK (Y) (4") (SLD) (100 MIL)
L	REFL PAV MRK (Y) (24") (SLD) (100 MIL)
M	REFL PAV MRKR TY II-C-R
N	REFL PAV MRK (W) (12") (SLD) (100 MIL)
⇦	EXISTING TRAFFIC FLOW ARROW
⬅	PROPOSED TRAFFIC FLOW ARROW

STATE OF TEXAS
MICHAEL W. MIDKIFF
75435
REGISTERED PROFESSIONAL ENGINEER
12/5/11

NO.	DATE	REVISION DESCRIPTION	APP. BY

© 2011

Texas Department of Transportation

MACTEC
3520 EXECUTIVE CENTER DRIVE
SUITE 200
AUSTIN, TEXAS 78731
(512) 795-0360

REGISTRATION NUMBER: F-1784

SH 151
PAVEMENT MARKING LAYOUT LP 1604 STA 563+00 TO STA 571+00
(SHEET 12 OF 14)

FED. RD. DIV. NO.			SHEET NO.
			361
STATE	DIST.	COUNTY	
TEXAS	SA	BEXAR	
CONT.	SECT.	JOB	HIGHWAY NO.
2452	01	043	SH 151

p:\4760\0-0129\cad\sheet\51pm12.dgn 12/6/2011 8:58:12 AM mwmidkiff

PAVEMENT MARKING LEGEND

A	REFL PAV MRK (W)(4")(SLD)(100 MIL)
B	REFL PAV MRK (W)(4")(BKN)(100 MIL)
C	REFL PAV MRK (W)(4")(DOT)(100 MIL)
D	REFL PAV MRK (W)(8")(SLD)(100 MIL)
E	REFL PAV MRK (W)(12")(LNDP)(100 MIL)
G	REFL PAV MRK (W)(24")(SLD)(100 MIL)
H	REFL PAV MRK (W)(ARROW)(100 MIL)
I	REFL PAV MRK (W)(WORD)(100 MIL)
J	REFL PAV MRK (Y)(4")(SLD)(100 MIL)
L	REFL PAV MRK (Y)(24")(SLD)(100 MIL)
M	REFL PAV MRKR TY II-C-R
N	REFL PAV MRK (W)(12")(SLD)(100 MIL)
⇦	EXISTING TRAFFIC FLOW ARROW
⬅	PROPOSED TRAFFIC FLOW ARROW

SHEET SUMMARY OF ESTIMATED QUANTITIES

ITEM#	DESCRIPTION	UNIT	QTY
0666	REFL PAV MRK TY I (W) 4" (BRK)	LF	1446
0666	REFL PAV MRK TY I (W) 4" (SLD)	LF	1663
0666	REFL PAV MRK TY I (W) 8" (SLD)	LF	429
0666	REFL PAV MRK TY I (Y) 4" (SLD)	LF	2002
0666	REFL PAV MRK TY I (Y) 24"(SLD)	LF	560
0666	REF PAV MRK TY II (W) 4" (BRK)	LF	1446
0666	REF PAV MRK TY II (W) 4" (SLD)	LF	1663
0666	REF PAV MRK TY II (W) 8" (SLD)	LF	429
0666	REF PAV MRK TY II (Y) 4" (SLD)	LF	2002
0666	REF PAV MRK TY II (Y) 24" (SLD)	LF	560
0672	REFL PAV MRKR TY II-C-R	EA	37

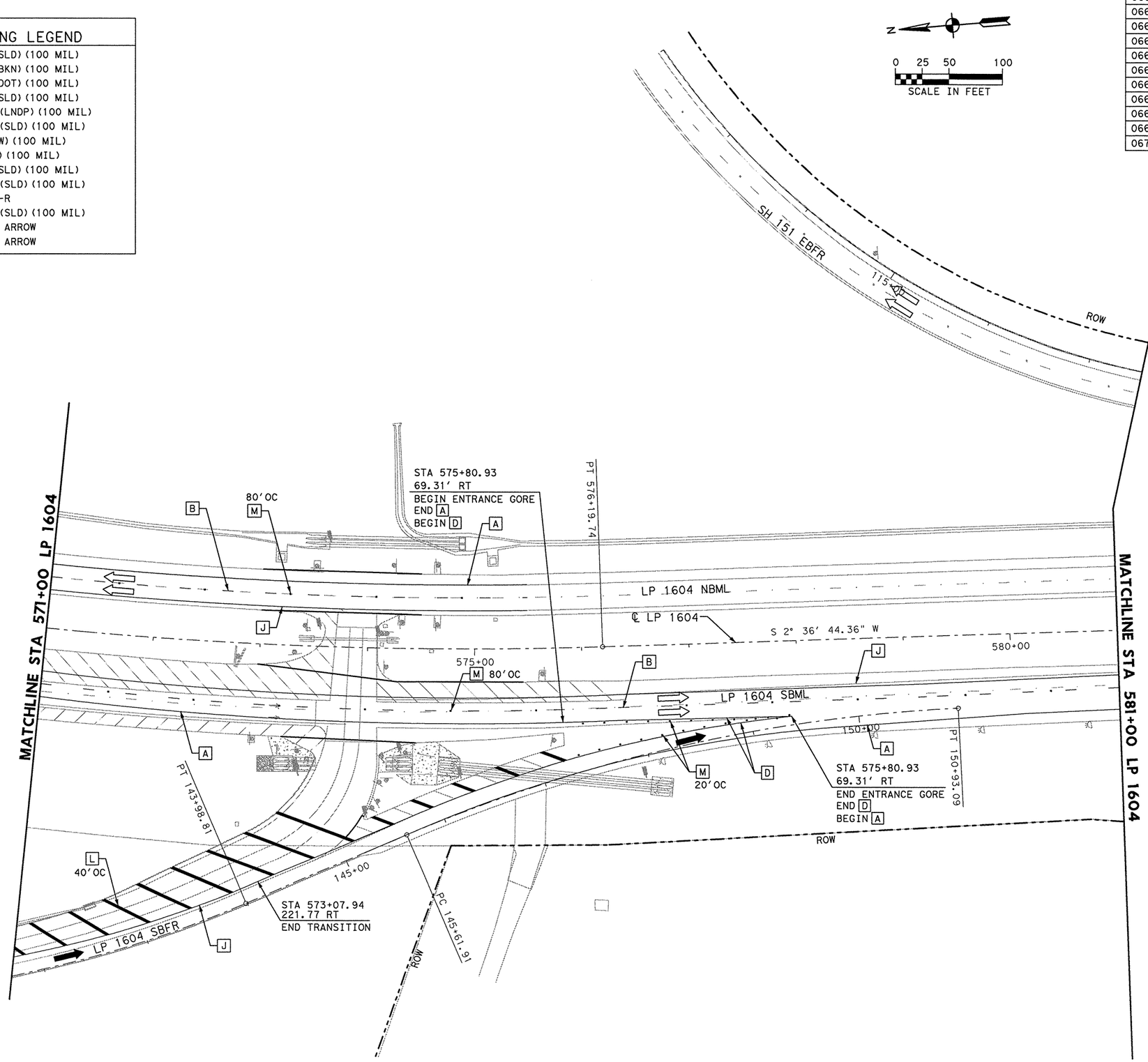

STATE OF TEXAS
MICHAEL W. MIDKIFF
75435
REGISTERED PROFESSIONAL ENGINEER
12/5/11

NO.	DATE	REVISION DESCRIPTION	APP. BY

© 2011

Texas Department of Transportation

MACTEC
3520 EXECUTIVE CENTER DRIVE
SUITE 200
AUSTIN, TEXAS 78731
(512) 795-0360
REGISTRATION NUMBER: F-1784

SH 151
PAVEMENT MARKING LAYOUT LP 1604 STA 571+00 TO STA 581+00
(SHEET 13 OF 14)

FED. RD. DIV. NO.			SHEET NO.
			362
STATE	DIST.	COUNTY	
TEXAS	SA	BEXAR	
CONT.	SECT.	JOB	HIGHWAY NO.
2452	01	043	SH 151

p:\4760\0-0129\cad\sheet\15\pm13.dgn 12/3/2011 6:43:56 PM mwmidkiff

PAVEMENT MARKING LEGEND

- [A] REFL PAV MRK (W)(4")(SLD)(100 MIL)
- [B] REFL PAV MRK (W)(4")(BKN)(100 MIL)
- [C] REFL PAV MRK (W)(4")(DOT)(100 MIL)
- [D] REFL PAV MRK (W)(8")(SLD)(100 MIL)
- [E] REFL PAV MRK (W)(12")(LNDP)(100 MIL)
- [G] REFL PAV MRK (W)(24")(SLD)(100 MIL)
- [H] REFL PAV MRK (W)(ARROW)(100 MIL)
- [I] REFL PAV MRK (W)(WORD)(100 MIL)
- [J] REFL PAV MRK (Y)(4")(SLD)(100 MIL)
- [L] REFL PAV MRK (Y)(24")(SLD)(100 MIL)
- [M] REFL PAV MRKR TY II-C-R
- [N] REFL PAV MRK (W)(12")(SLD)(100 MIL)
- EXISTING TRAFFIC FLOW ARROW
- PROPOSED TRAFFIC FLOW ARROW

N

0 25 50 100
SCALE IN FEET

SHEET SUMMARY OF ESTIMATED QUANTITIES

ITEM#	DESCRIPTION	UNIT	QTY
0666	REFL PAV MRK TY I (W) 4" (BRK)	LF	50
0666	REFL PAV MRK TY I (W) 4" (SLD)	LF	50
0666	REFL PAV MRK TY I (Y) 4" (SLD)	LF	50
0666	REF PAV MRK TY II (W) 4" (BRK)	LF	50
0666	REF PAV MRK TY II (W) 4" (SLD)	LF	50
0666	REF PAV MRK TY II (Y) 4" (SLD)	LF	50
0672	REFL PAV MRKR TY II-C-R	EA	1

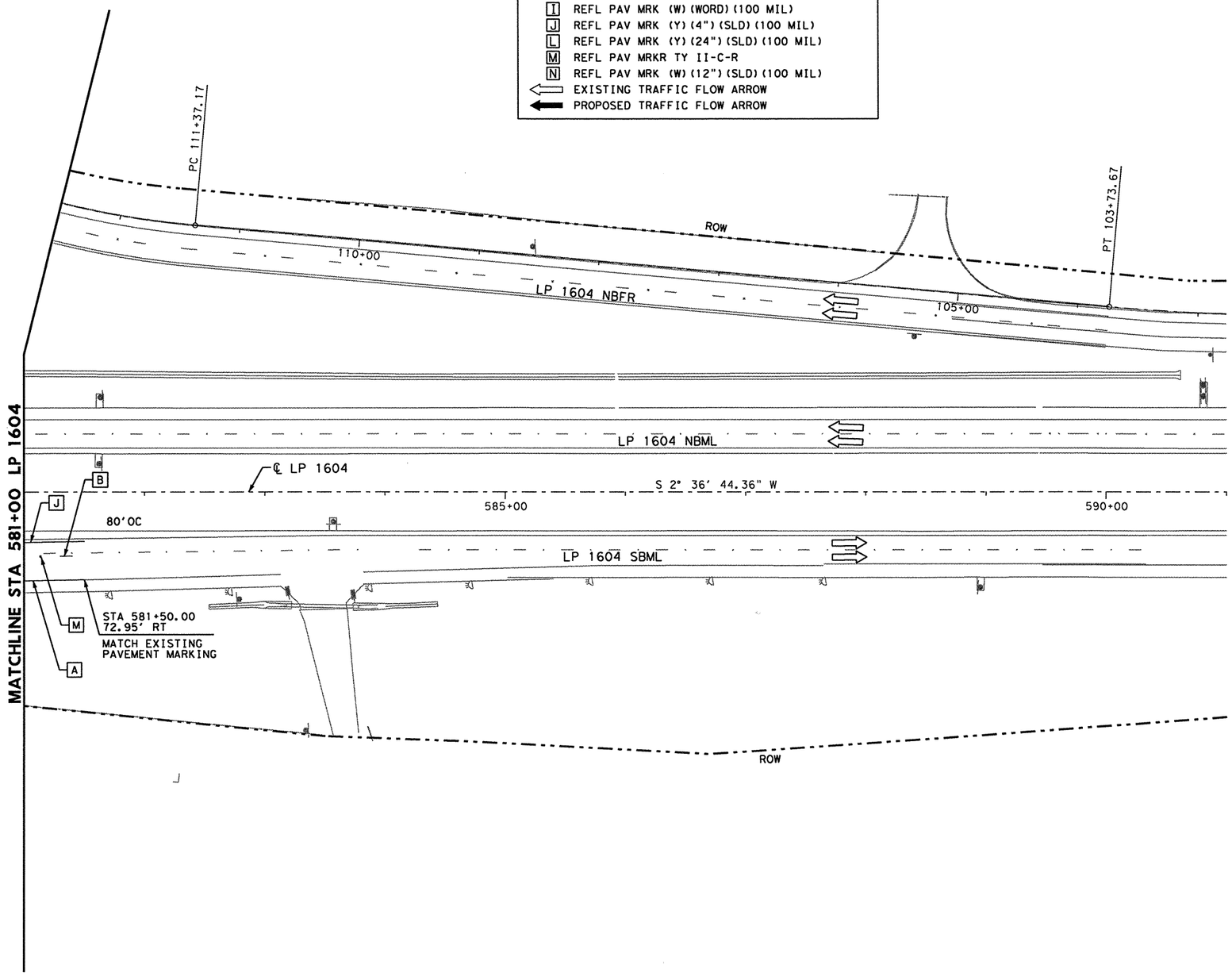

STATE OF TEXAS
MICHAEL W. MIDKIFF
75435
REGISTERED
PROFESSIONAL ENGINEER
2/21/11

NO.	DATE	REVISION DESCRIPTION	APP. BY

© 2011

Texas Department of Transportation

MACTEC
3520 EXECUTIVE CENTER DRIVE
SUITE 200
AUSTIN, TEXAS 78731
(512) 795-0360

REGISTRATION NUMBER: F-1784

SH 151
PAVEMENT MARKING LAYOUT
LP 1604
STA 581+00 TO END
(SHEET 14 OF 14)

FED. RD. DIV. NO.			SHEET NO.
			363
STATE	DIST.	COUNTY	
TEXAS	SA	BEXAR	
CONT.	SECT.	JOB	HIGHWAY NO.
2452	01	043	SH 151

p:\4760\0-0129\cad\sheet\151pm14.dgn 2/21/2011 7:07:09 PM mwmidkiff

DISCLAIMER: The use of this standard is governed by the "Texas Engineering Practice Act". No warranty of any kind is made by TxDOT for any purpose whatsoever. TxDOT assumes no responsibility for the conversion of this standard to other formats or for incorrect results or damages resulting from its use.

p:\4760\0-0129\ standard\0ldstd_pm01.dgn 2/21/2011 7:07:41 PM mwmldatt1

TWO LANE TWO-WAY ROADWAY WITH OR WITHOUT SHOULDERS

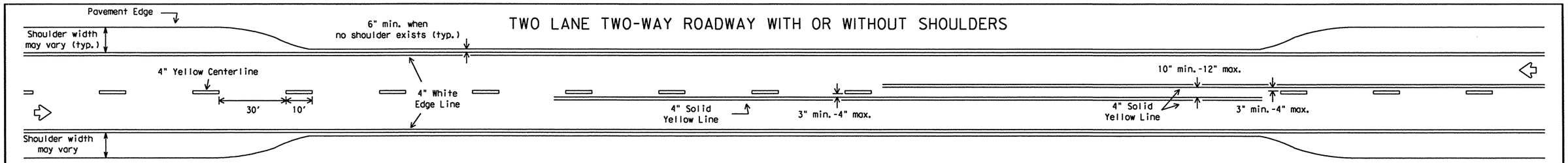

CENTERLINE AND LANE LINES FOUR LANE TWO-WAY ROADWAY WITH OR WITHOUT SHOULDERS

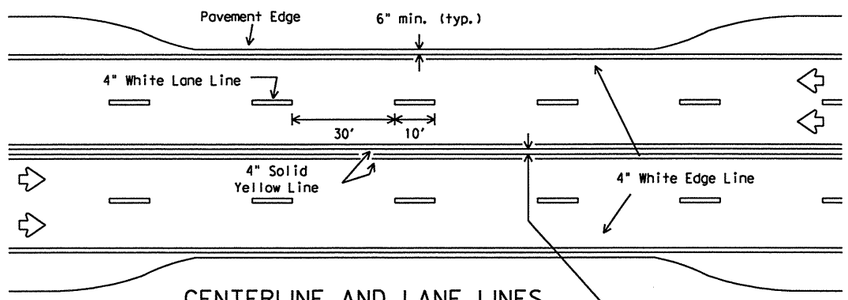

EDGE LINE AND LANE LINES ONE-WAY ROADWAY WITH OR WITHOUT SHOULDERS

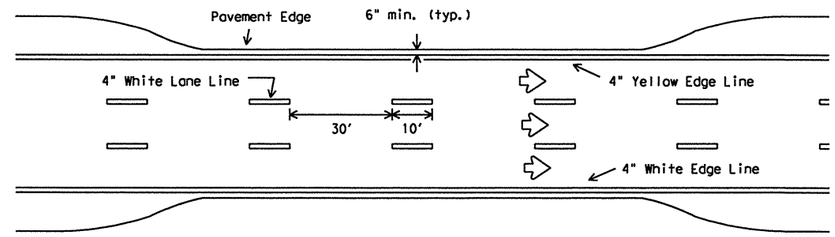

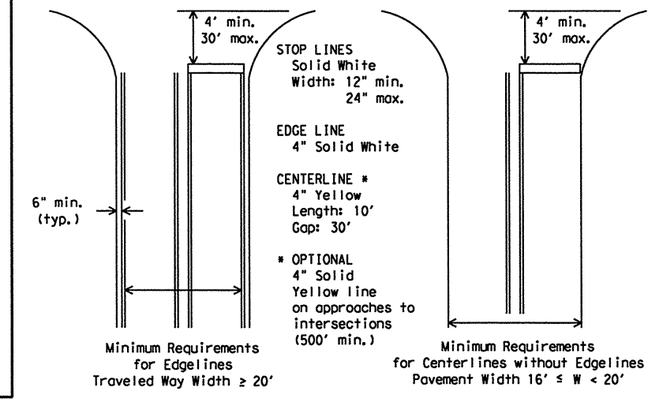

GUIDE FOR PLACEMENT OF STOP LINES, EDGE LINE & CENTERLINE

Based on Traveled Way and Pavement Widths for Undivided Highways

FOUR LANE DIVIDED ROADWAY INTERSECTIONS

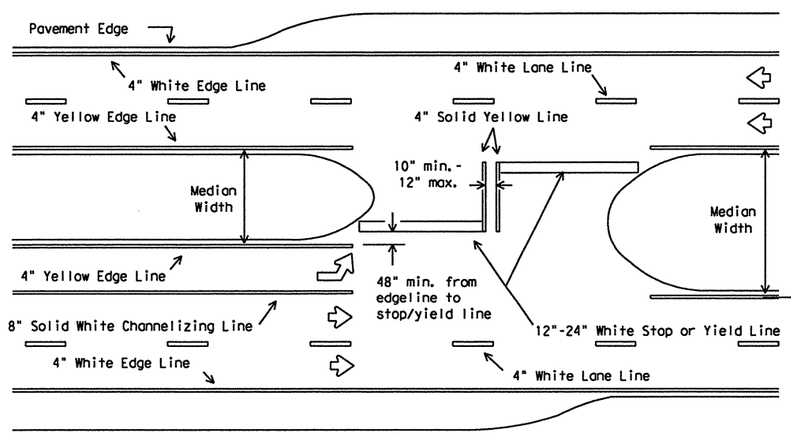

All medians shall be field measured to determine the location of necessary striping. Stop/Yield bars and centerlines shall be placed when the median width is greater than 30 ft. The median width is defined as the area between two roadways of a divided highway measured from edge of traveled way to edge of traveled way. The median excludes turn lanes. The median width might be different between intersections, interchanges and of opposite approaches of the same intersection. The narrow median width will be the controlling width to determine if markings are required.

ROADWAYS WITH REDUCED SHOULDER WIDTHS ACROSS BRIDGE OR CULVERT

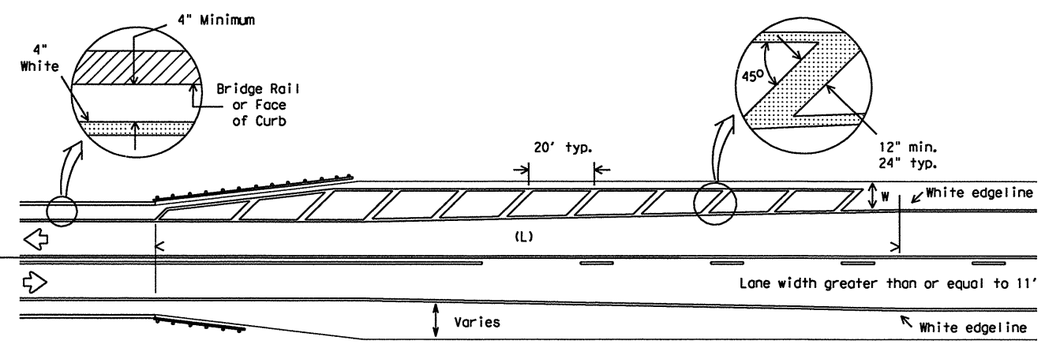

NOTES:

1. No-passing zone on bridge approach is optional but if used, it shall be a minimum 500 feet long.
2. For crosshatching length (L) see Table 1.
3. The width of the offset (W) and the required crosshatching width is the full shoulder width in advance of the bridge.
4. The crosshatching should be required if the shoulder width in advance of the bridge is 4 foot or wider and any reduction in shoulder width across the bridge occurs.
5. For guard fence details, refer elsewhere in the plans.

TABLE 1 - TYPICAL LENGTH (L)

Posted Speed *	Formula
30, 35, 40	$L = \frac{WS^2}{60}$
45, 50, 55, 60, 65, 70	L=WS

* 85th Percentile Speed may be used on roads where traffic speeds normally exceed the posted speed limit. Crosshatching length should be rounded up to nearest 5 foot increment.

L=Length of Crosshatching (FT.) W=Width of Offset (FT.)
S=Posted Speed (MPH)

EXAMPLES:

An 8 foot shoulder in advance of a bridge reduces to 4 feet on a 70 MPH roadway. The length of the crosshatching should be:

$L = 8 \times 70 = 560$ ft.

A 4 foot shoulder in advance of a bridge reduces to 2 feet on a 40 MPH roadway. The length of the crosshatching should be:

$L = 4(40)^2 / 60 = 106.67$ ft. rounded to 110 ft.

GENERAL NOTES:

Edgeline striping shall be as shown in the plans or as directed by the Engineer. The edgeline should typically be placed a minimum of 6 inches from the edge of pavement. This distance may vary due to pavement raveling or other conditions. Edgelines are not required in curb and gutter sections of roadways.

The traveled way includes only that portion of the roadway used for vehicular travel and not the parking lanes, sidewalks, berms and shoulders. The traveled ways shall be measured from the inside of edgeline to inside of edgeline of a two lane roadway.

All pavement marking materials shall meet the required Departmental Material Specifications as specified by the plans.

SPECIFICATION REFERENCE TABLE

MATERIAL SPECIFICATIONS	
PAVEMENT MARKERS (REFLECT.)	DMS-4200
EPOXY	DMS-6100
BITUMINOUS ADHESIVE FOR PAVEMENT MARKERS	DMS-6130

YIELD LINES

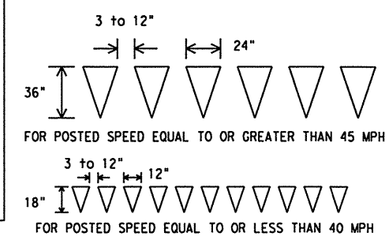

Texas Department of Transportation
Traffic Operations Division

TYPICAL STANDARD PAVEMENT MARKINGS

PM(1)-03

© TxDOT November 1978

REVISIONS: 8-95, 5-00, 8-00, 3-03

DN: TXDOT	CK: TXDOT	DW: TXDOT	CK: TXDOT
CONT	SECT	JOB	HIGHWAY
2452	01	043	SH 151
DIST		COUNTY	SHEET NO.
SA		BEXAR	364

DISCLAIMER: The use of this standard is governed by the "Texas Engineering Practice Act". No warranty of any kind is made by TxDOT for any purpose whatsoever. TxDOT assumes no responsibility for the conversion of this standard to other formats or for incorrect results or damages resulting from its use.

p:\4760\0-0129\pdf
standard\dlsl\rd_pm02.dgn
2/21/2011
7:07:11 PM
mwmldklft

REFLECTIVE RAISED PAVEMENT MARKERS FOR VEHICLE POSITIONING GUIDANCE

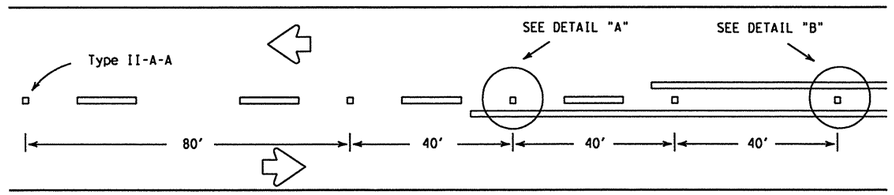

CENTERLINE FOR ALL TWO LANE ROADWAYS

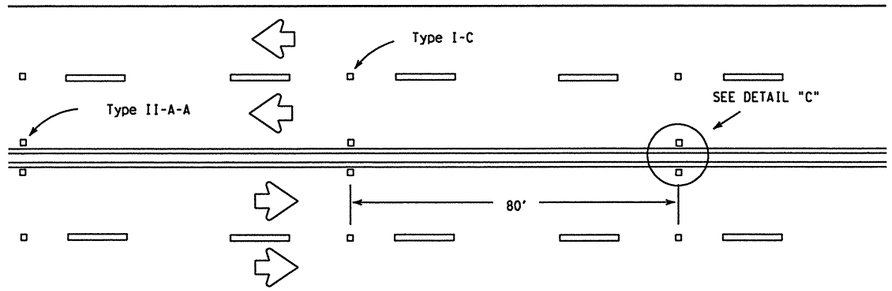

CENTERLINE & LANE LINES FOR FOUR LANE TWO-WAY HIGHWAYS

Raised pavement marker Type I-C, clear face toward normal traffic, shall be placed on 80-foot centers.

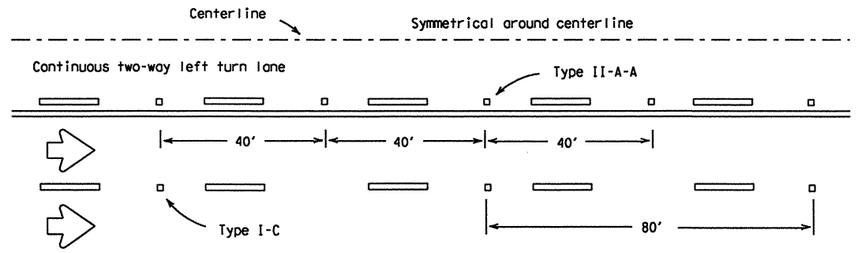

CENTERLINE AND LANE LINES FOR TWO-WAY LEFT TURN LANE

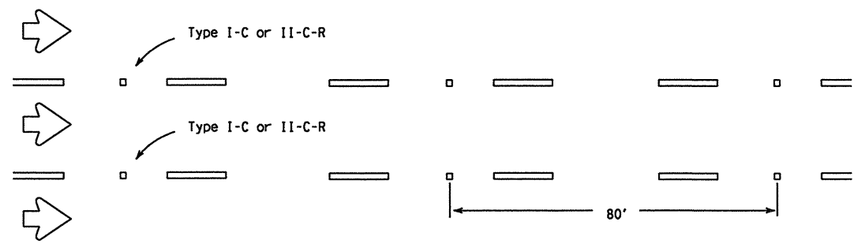

LANE LINES FOR ONE-WAY ROADWAY (NON-FREEWAY FACILITIES)

Raised pavement markers Type II-C-R shall have clear face toward normal traffic and red face toward wrong-way traffic.

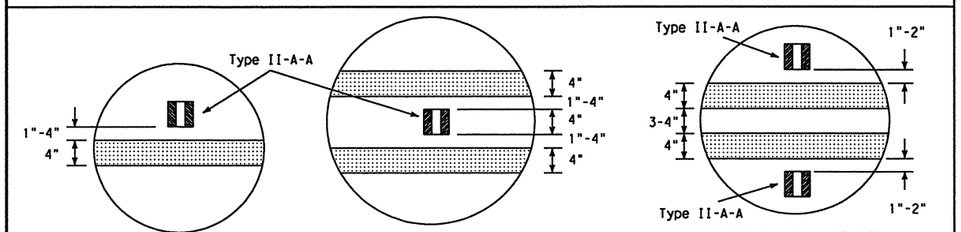

DETAIL "A" DETAIL "B" DETAIL "C"

RAISED PAVEMENT MARKERS

(REFLECTORIZED)

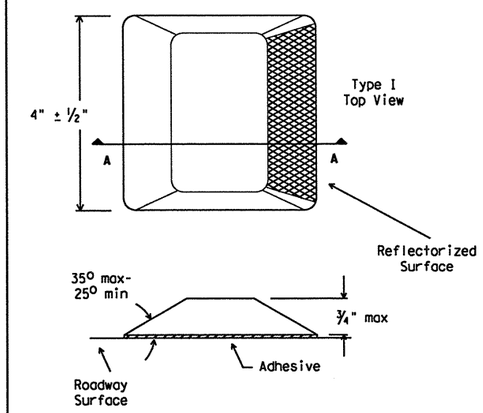

SECTION A

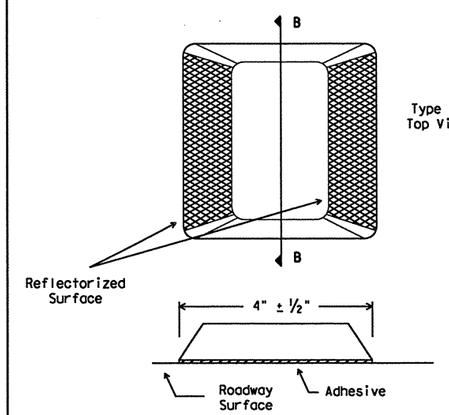

SECTION B

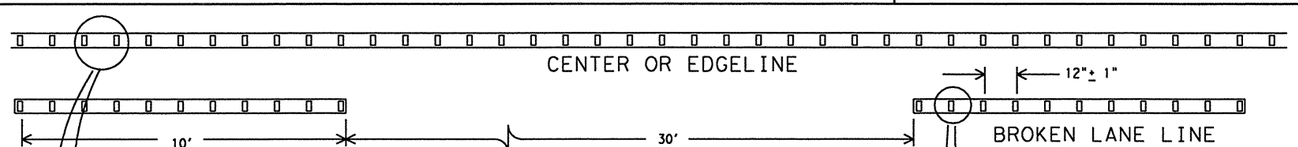

REFLECTORIZED PROFILE PATTERN DETAIL

USING REFLECTIVE PROFILE PAVEMENT MARKINGS

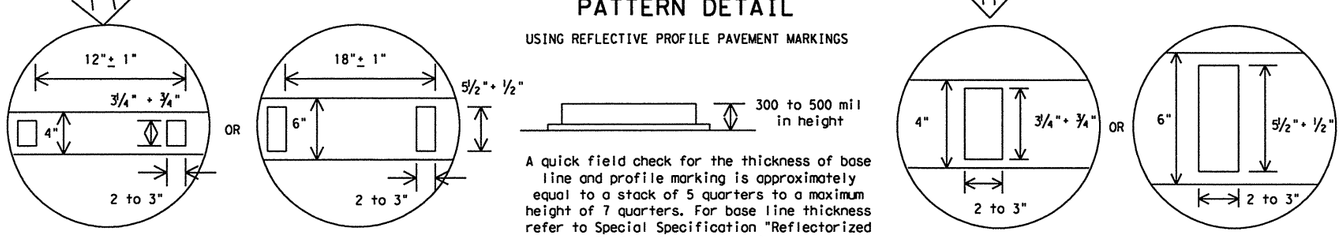

4" EDGE LINE OR CENTERLINE — OPTIONAL 6" EDGE LINE OR CENTERLINE — 4" LANE LINE — OPTIONAL 6" LANE LINE

A quick field check for the thickness of base line and profile marking is approximately equal to a stack of 5 quarters to a maximum height of 7 quarters. For base line thickness refer to Special Specification "Reflectorized Profile Pavement Markings."

NOTE:

Profile markings shall not be placed on roadways with a posted speed limit of 45 MPH or less.

GENERAL NOTES:

All raised pavement markers placed in broken lines shall be placed in line with and midway between the stripes.

On concrete pavements the raised pavement markers should be placed to one side of the longitudinal joints.

All pavement marking materials shall meet the required Departmental Material Specifications as specified by the plans.

SPECIFICATION REFERENCE TABLE

MATERIAL SPECIFICATIONS	
PAVEMENT MARKERS (REFLECT.)	DMS-4200
EPOXY	DMS-6100
BITUMINOUS ADHESIVE FOR PAVEMENT MARKERS	DMS-6130

Texas Department of Transportation
Traffic Operations Division

POSITION GUIDANCE USING RAISED MARKERS
REFLECTORIZED PROFILE MARKINGS

PM(2)-10

© TxDOT April 1977

REVISIONS	DN: TXDOT	CK: TXDOT	DW: TXDOT	CK: TXDOT
4-92 2-10	CONT	SECT	JOB	HIGHWAY
5-00	2452	01	043	SH 151
8-00	DIST		COUNTY	SHEET NO.
2-08	SA		BEXAR	365

DISCLAIMER: The use of this standard is governed by the "Texas Engineering Practice Act". No warranty of any kind is made by TxDOT for any purpose whatsoever. TxDOT assumes no responsibility for the conversion of this standard to other formats or for incorrect results or damages resulting from its use.

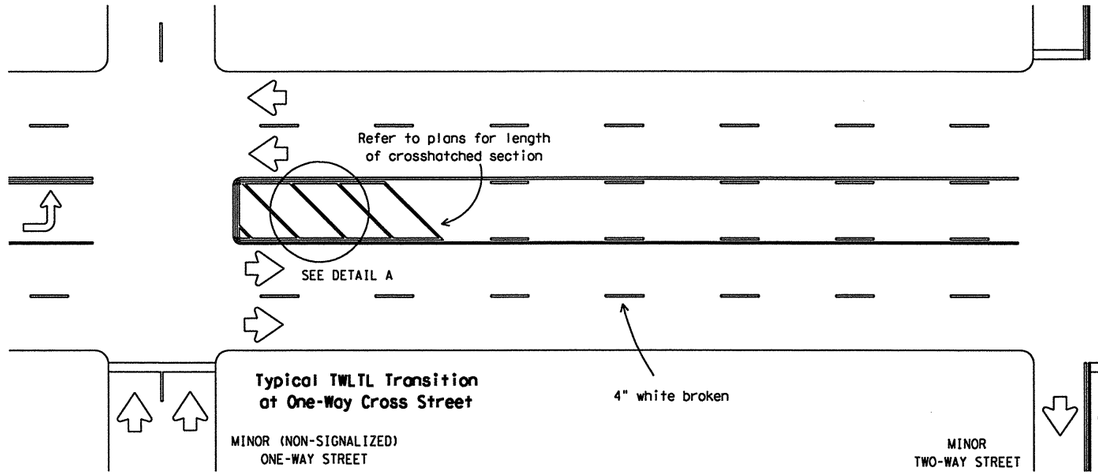

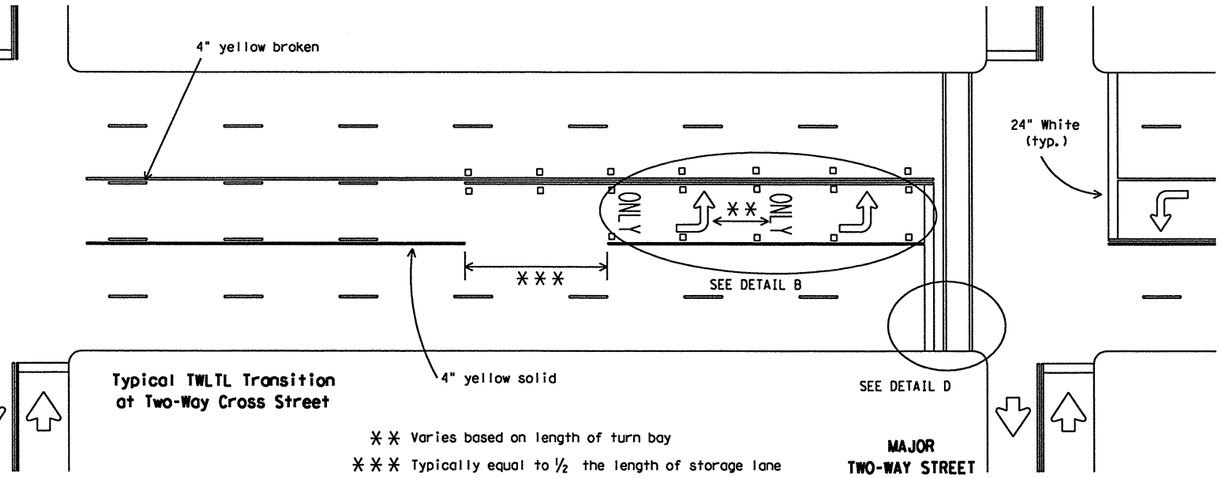

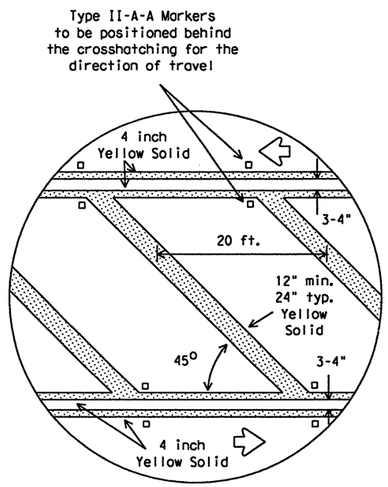

DETAIL A

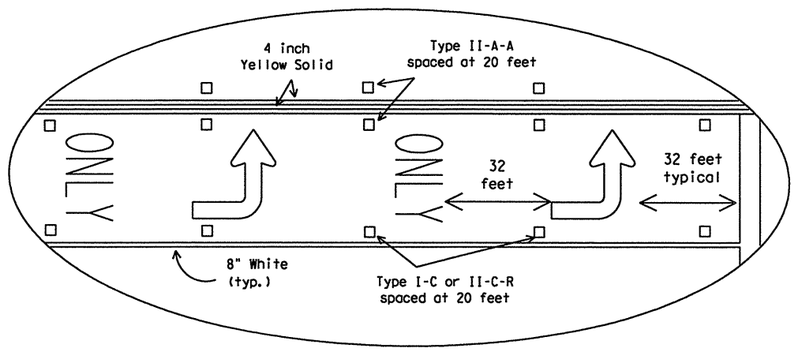

DETAIL B

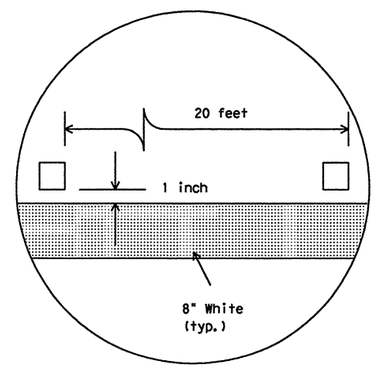

DETAIL C

Raised pavement marker Type I-C with undivided highways, flush medians and two way left turn lanes. Raised pavement marker Type II-C-R with divided highways and raised medians.

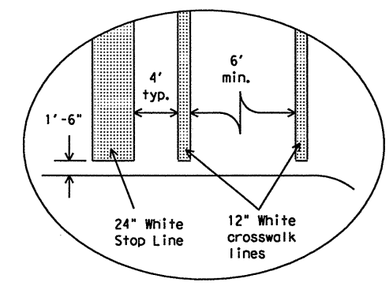

DETAIL D

Final placement of Stop Bar and Crosswalk shall be approved by the Engineer in the field.

GENERAL NOTES

Refer elsewhere in plans for additional RPM placement and details.

Details for words and arrows as shown on other sheets.

All pavement marking materials shall meet the required Departmental Material Specifications as specified by the plans.

For a left turn bay, two sets of words and arrows shall be used if the length of the bay is equal to or greater than 180 feet. The bottom of the first ONLY shall be placed at the beginning of the turn bay lane line as shown above.

Other crosswalk paterns as shown in the "Texas Manual on Uniform Traffic Control Devices" may be used.

SPECIFICATION REFERENCE TABLE

MATERIAL SPECIFICATIONS	
PAVEMENT MARKERS (REFLECT.)	DMS-4200
EPOXY	DMS-6100
BITUMINOUS ADHESIVE FOR PAVE. MKS.	DMS-6130

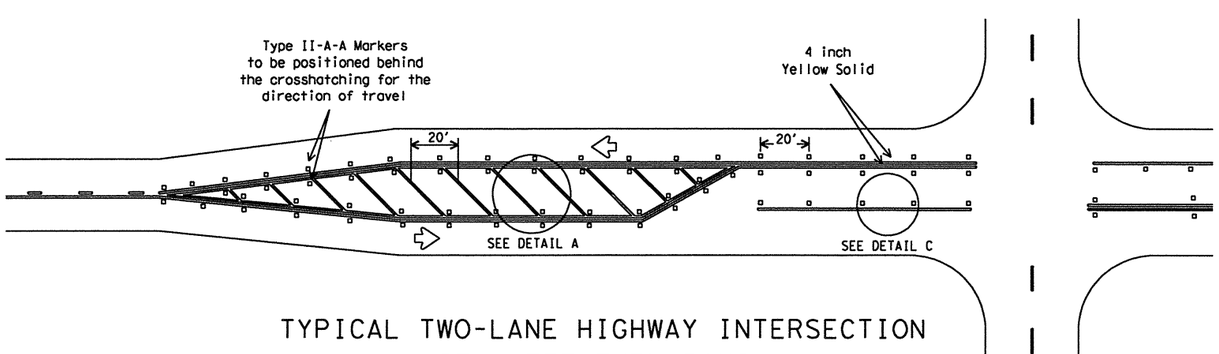

TYPICAL TWO-LANE HIGHWAY INTERSECTION WITH LEFT TURN BAYS

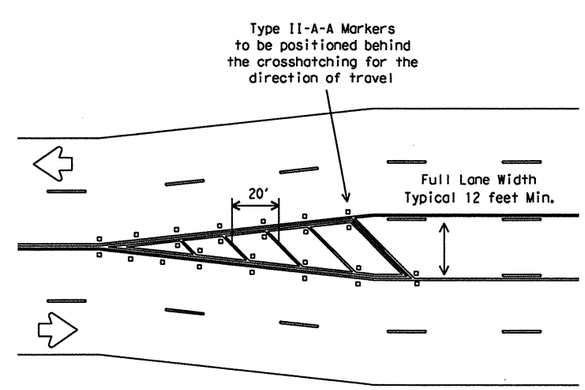

TYPICAL TRANSITION FOR TWLTL AND DIVIDED HIGHWAY

Texas Department of Transportation
Traffic Operations Division

PAVEMENT MARKINGS FOR TWO-WAY LEFT TURN LANES DIVIDED HIGHWAYS AND RURAL LEFT TURN BAYS

PM(4)-10

© TxDOT April 1998

DN: TXDOT	CK: TXDOT	DW: TXDOT	CK: TXDOT

REVISIONS
5-00
8-00
3-03
2-10

CONT	SECT	JOB	HIGHWAY
2452	01	043	SH 151

DIST	COUNTY	SHEET NO.
SA	BEXAR	366

d:\4r160\0-0129.cad \standard\ts1sfd_pm03.dgn 2/21/2011 7:01:12 PM mwmldkitt

DISCLAIMER: The use of this standard is governed by the "Texas Engineering Practice Act". No warranty of any kind is made by TxDOT for any purpose whatsoever. TxDOT assumes no responsibility for the conversion of this standard to other formats or for incorrect results or damages resulting from its use.

DATE:
FILE:

Texas Department of Transportation
Traffic Operations Division

STANDARD
PAVEMENT MARKINGS
(WORDS)

PM(5)-01

© TxDOT March 2001

DN: TXDOT	CK: TXDOT	DW: TXDOT	CK: TXDOT

REVISIONS

CONT	SECT	JOB	HIGHWAY
2452	01	043	SH 151

DIST	COUNTY	SHEET NO.
SA	BEXAR	367

22G

pw4760ud-0129cor standardv15std_pm04.dgn 2/21/2011 1:07:13 PM mwmiddt1

DISCLAIMER: The use of this standard is governed by the "Texas Engineering Practice Act". No warranty of any kind is made by TxDOT for any purpose whatsoever. TxDOT assumes no responsibility for the conversion of this standard to other formats or for incorrect results or damages resulting from its use.

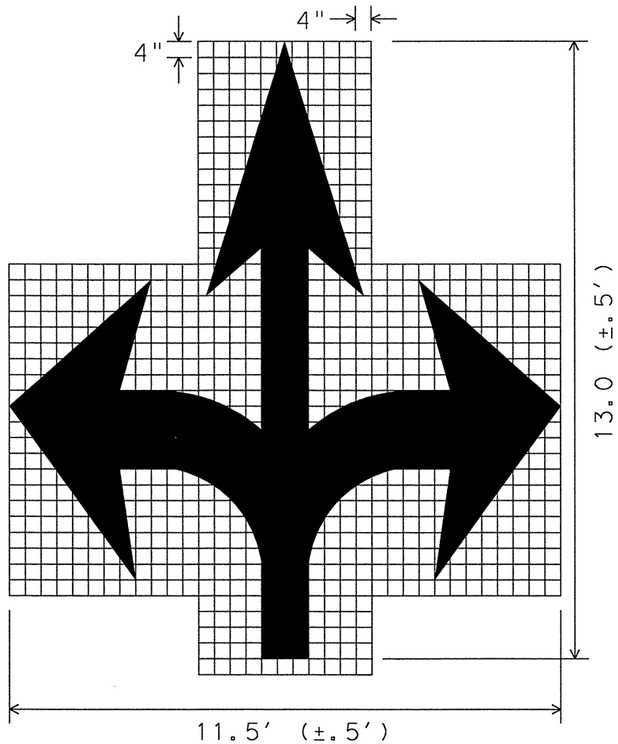

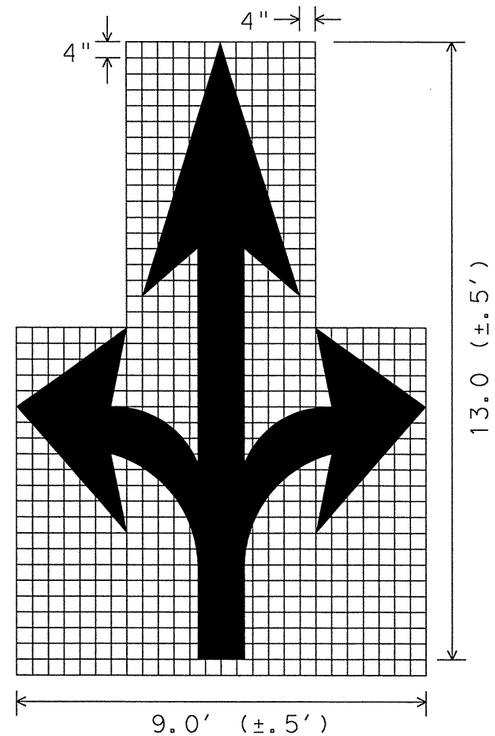

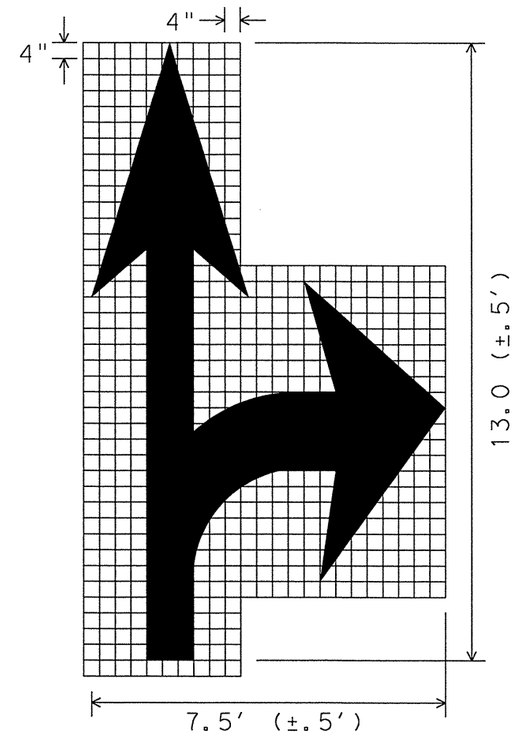

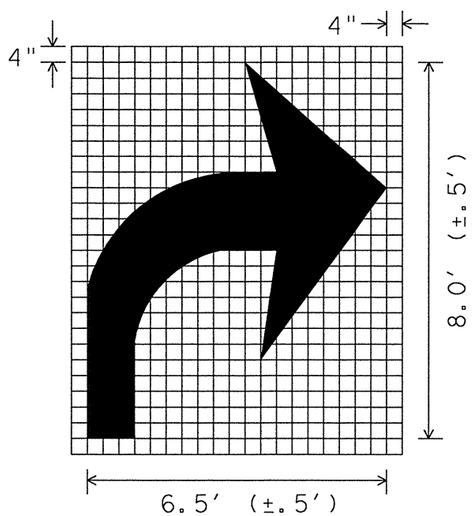

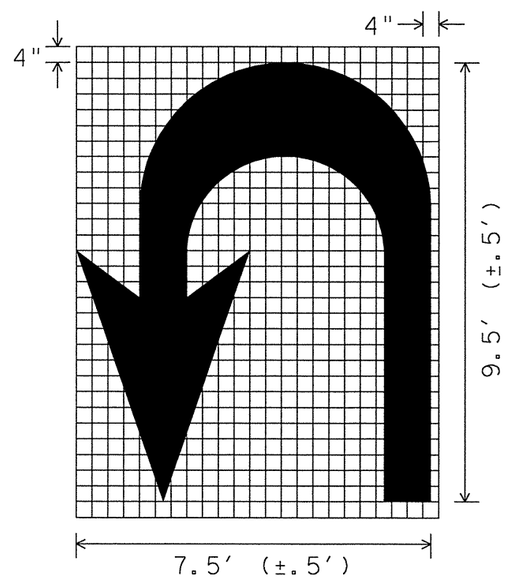

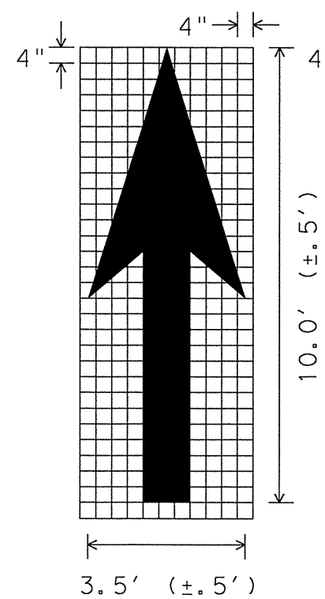

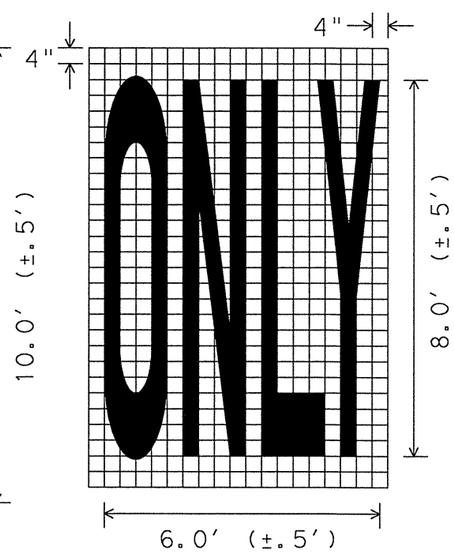

GENERAL NOTES;

1. Minimum 8 foot white markings should be used, unless otherwise noted. If message consists of more than one word, it should be placed with first word nearest the driver.
2. These details are standard size for normal installation; sizes may be reduced approximately one-third for low speed urban conditions; larger sizes may be needed for freeways, above average speed conditions or other critical locations.
3. The longitudinal space between markings should be at least four times the height of the markings, on low speed roads, but should not exceed ten times the height under any condition.
4. Markings considered appropriate for use when warranted include the following:
   A. Regulatory
      STOP
      RIGHT (LEFT) TURN ONLY
      25 MPH
      SYMBOL ARROWS
   B. Warning
      STOP AHEAD
      SIGNAL AHEAD
      SCHOOL
      SCHOOL X-ING
      PED X-ING
      R X R (see RCPM standard)
   C. Guide
      US XXX
      ROUTE XXX
      STATE XXX
      Other words or symbols may be necessary under certain conditions
5. Uncontrolled use of pavement markings can result in driver confusion. Word and symbol markings should be no more than three lines.
6. The word "STOP" shall not be used on the pavement unless accompanied by a Stop line and Stop sign. The word "STOP" shall not be placed on the pavement in advance to a stop line, unless every vehicle is required to stop at all times.
7. Pavement markings should generally be no more than one lane in width, with School messages being the exception. For details of School and School crossing pavement markings, refer to Part VII of the "Texas Manual on Uniform Traffic Control Devices".
8. Spacing between letters should be approximately 4 inches. The width of letters may vary depending on the width of the travel lanes.
9. Lane-Use arrow markings may be used to convey either guidance or mandatory messages. Arrows used to convey a mandatory movement must be accompanied by standard signs and the pavement marking word "ONLY".
10. Pavement markings are to be located as specified elsewhere in the plans.

SPACING BETWEEN LINES OF PAVEMENT MARKINGS	
MPH	SPACING
≤45	MINIMUM 4 TIMES THE LETTER HEIGHT
>45	MINIMUM - 4 TIMES THE LETTER HEIGHT MAXIMUM - 10 TIMES THE LETTER HEIGHT

Texas Department of Transportation
Traffic Operations Division

STANDARD PAVEMENT MARKINGS (ARROWS)

PM(6)-01

©TxDOT March 2001

DN: TXDOT	CK: TXDOT	DW: TXDOT	CK: TXDOT
CONT	SECT	JOB	HIGHWAY
2452	01	043	SH 151
DIST		COUNTY	SHEET NO.
SA		BEXAR	368

REVISIONS

DATE:
FILE:

pw4760u0-0129cor standard15ield_pm05.dgn 2/21/2011 1:01:13 PM mwmldk11

DISCLAIMER: The use of this standard is governed by the "Texas Engineering Practice Act". No warranty of any kind is made by TxDOT for any purpose whatsoever. TxDOT assumes no responsibility for the conversion of this standard to other formats or for incorrect results or damages resulting from its use.

pk4160\0\0129cad \standard\15lsfd_pm05.dgn 2/21/2011 1:07:14 PM mwmldkh1

TRAFFIC LANE LINES PAVEMENT MARKING DETAILS

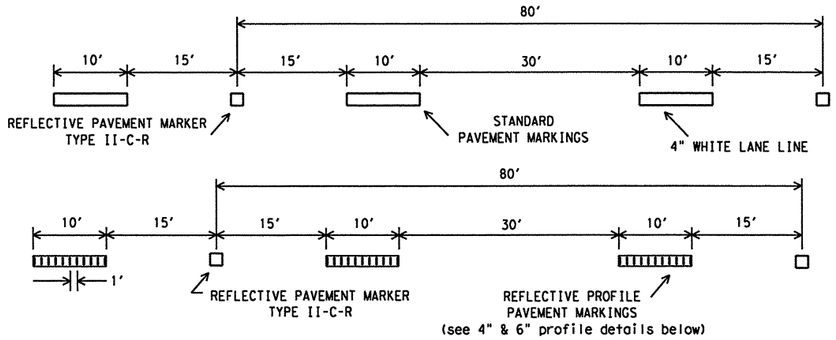

PAVEMENT MARKERS (REFL) TYPE II-C-R SHALL BE SPACED ON 80' CENTERS WITH THE CLEAR FACE TOWARD NORMAL TRAFFIC AND THE RED FACE TOWARD WRONG WAY TRAFFIC.

EDGELINE PAVEMENT MARKINGS

EDGELINES SHOULD TYPICALLY BE 4" WIDE AND THE MATERIALS SHALL BE AS SPECIFIED IN THE PLANS. IF RAISED PROFILE PAVEMENT MARKINGS ARE USED SEE DETAILS BELOW.

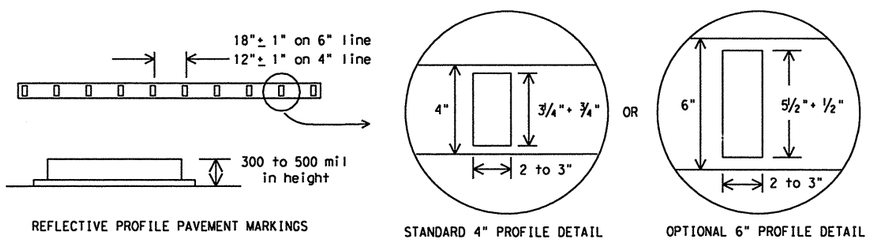

WRONG WAY ARROW DETAIL

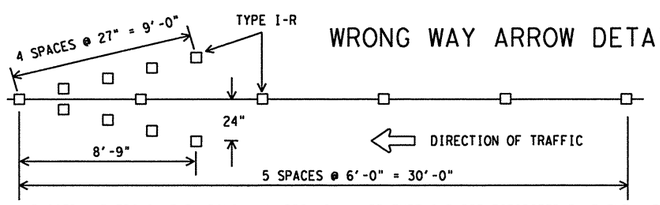

ALL RAISED MARKERS IN THE WRONG WAY ARROW SHALL BE TYPE I-R REFLECTORIZED PAVEMENT MARKERS WITH THE REFLECTORIZED SURFACE FACING THE WRONG WAY TRAFFIC. TYPE II-C-R SHALL NOT BE USED.

REFLECTORIZED WRONG WAY ARROWS, NOT TO EXCEED TWO, MAY BE PLACED ON EXIT RAMPS. LOCATION OF THE ARROWS SHALL BE AS SHOWN IN THE PLANS OR AS DIRECTED BY THE ENGINEER.

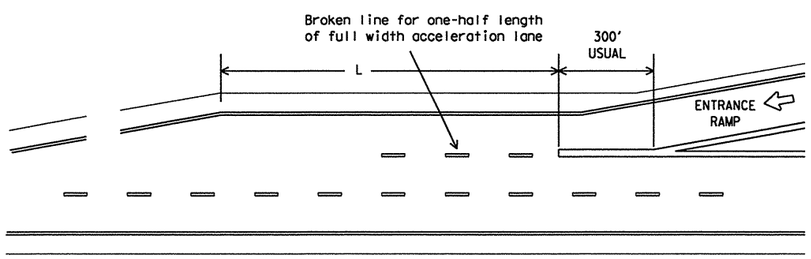

PARALLEL ACCELERATION LANE

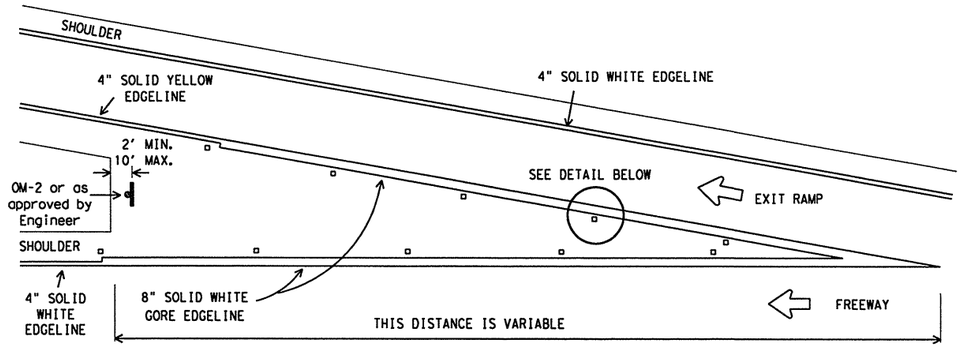

THE SHAPE OF THE GORE MARKING WILL VARY DEPENDING ON THE RAMP DESIGN AND WILL BE AS SHOWN IN THE PLANS OR AS DIRECTED BY THE ENGINEER. OM-2 OR SURFACE MOUNT OBJECT MARKER MOUNTING HEIGHT IS 36 INCHES.

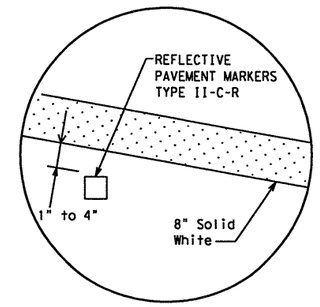

TYPICAL EXIT RAMP GORE MARKING

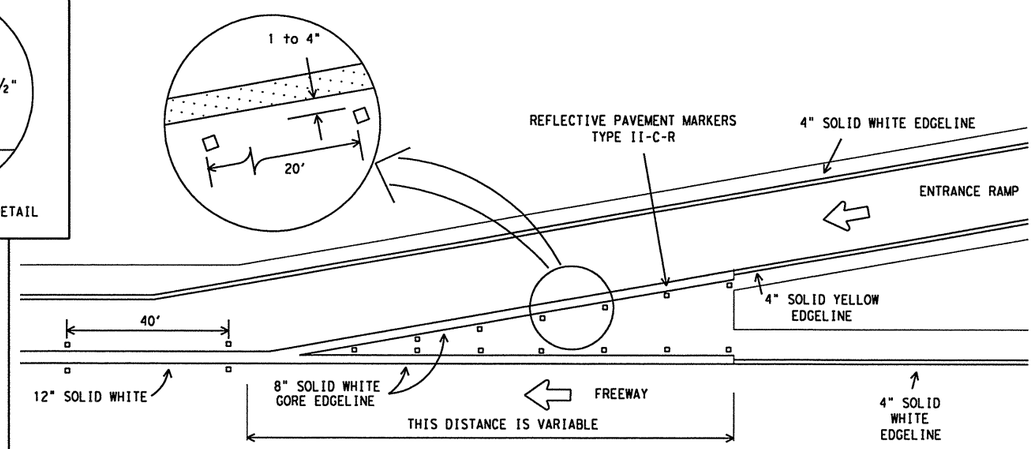

TYPICAL ENTRANCE RAMP GORE MARKING

EXTEND THE EDGELINE FROM RAMP UNTIL IT INTERSECTS WITH EDGELINE FROM MAIN LANES

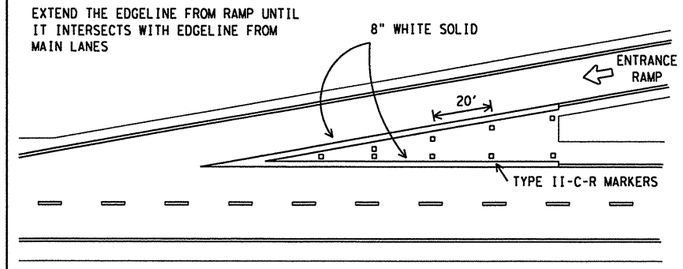

TAPERED ACCELERATION LANE

All pavement marking materials shall meet the required Departmental Material Specifications as specified by the plans.

SPECIFICATION REFERENCE TABLE

MATERIAL SPECIFICATIONS	
PAVEMENT MARKERS (REFLECT.)	DMS-4200
EPOXY	DMS-6100
BITUMINOUS ADHESIVE FOR PAVE. MKS.	DMS-6130

RAISED PAVEMENT MARKERS

(REFLECTORIZED)

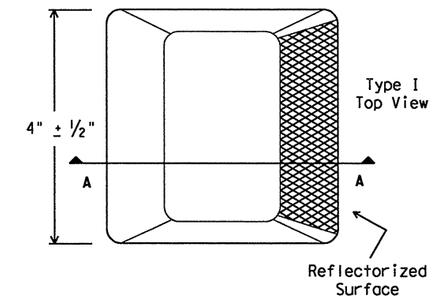

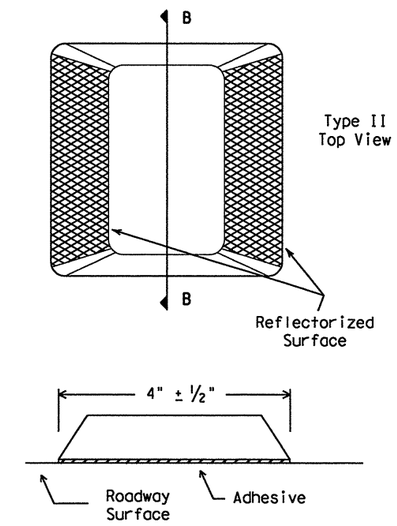

Texas Department of Transportation
Traffic Operations Division

TYPICAL STANDARD FREEWAY PAVEMENT MARKINGS WITH RAISED PAVEMENT MARKERS

FPM(1)-10

© TxDOT May 1974

DN: TXDOT	CK: TXDOT	DW: TXDOT	CK: TXDOT

REVISIONS	CONT	SECT	JOB	HIGHWAY
4-92 2-10	2452	01	043	SH 151
5-00	DIST		COUNTY	SHEET NO.
8-00	SA		BEXAR	369
2-08				

DISCLAIMER: The use of this standard is governed by the "Texas Engineering Practice Act". No warranty of any kind is made by TxDOT for any purpose whatsoever. TxDOT assumes no responsibility for the conversion of this standard to other formats or for incorrect results or damages resulting from its use.

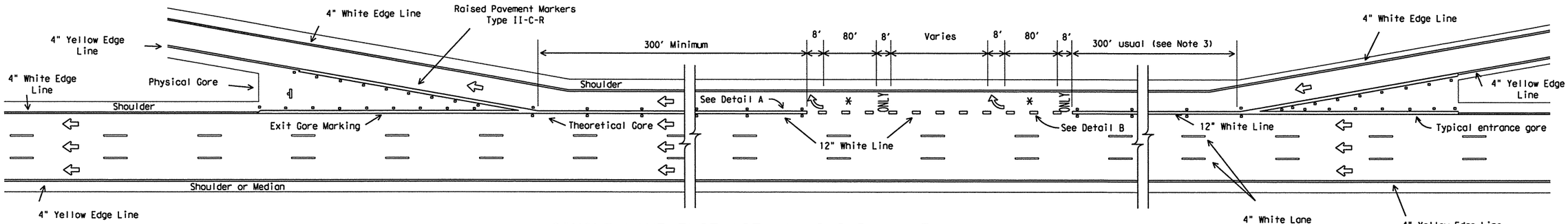

SINGLE LANE EXIT WITH AUXILIARY LANE

(See Note 5)

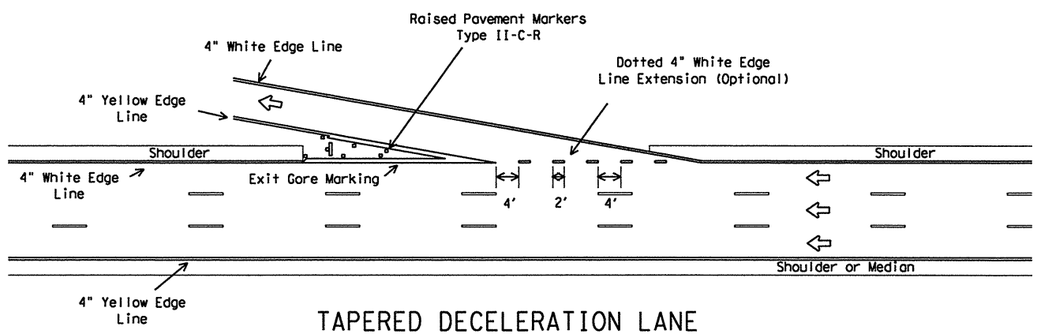

TAPERED DECELERATION LANE

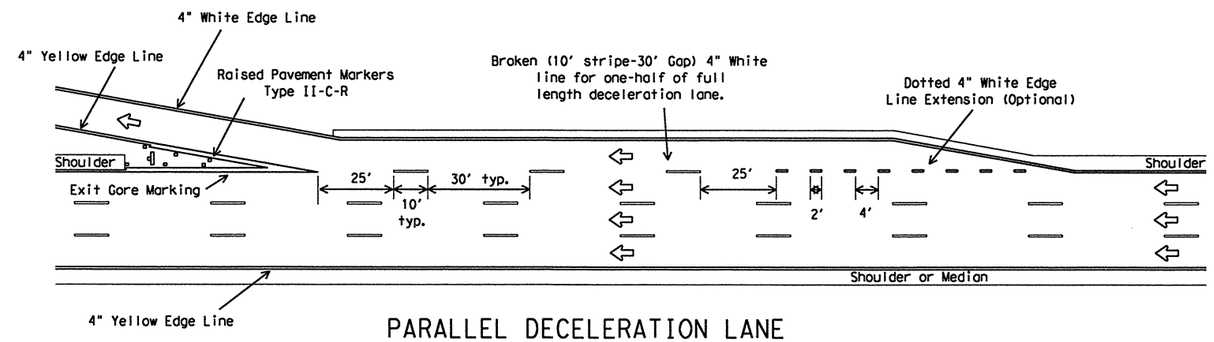

PARALLEL DECELERATION LANE

LEGEND

- OM-2, or approved surface mount object marker installed 2 to 10 feet from Physical Gore. Mounting height is approximately 36 inches.
- Denotes direction of traffic.
- Pavement marking arrows (white).
- Arrow markings are optional, however "ONLY" is required if arrow is used.

GENERAL NOTES:

1. Pavement markings shall be white except as otherwise noted.
2. Length of 12" white line may vary depending on location.
3. Lane drop markings are to be used to separate lanes that are required to go in different directions.
4. A lane drop (EXIT ONLY) condition is typically when the nearest entrance ramp is greater than 2000 feet upstream of the exit ramp, measured from theoretical gore of entrance ramp to theoretical gore of exit ramp.
5. All pavement marking materials shall meet the required Departmental Material Specifications as specified by the plans.

SPECIFICATION REFERENCE TABLE

MATERIAL SPECIFICATIONS	
PAVEMENT MARKERS (REFLECT.)	DMS-4200
EPOXY	DMS-6100
BITUMINOUS ADHESIVE FOR PAVE. MKS.	DMS-6130

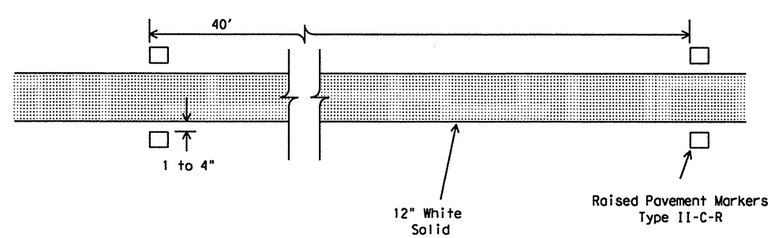

DETAIL A

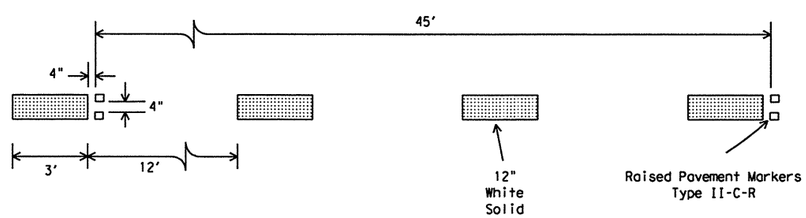

DETAIL B

Texas Department of Transportation
Traffic Operations Division

TYPICAL STANDARD FREEWAY PAVEMENT MARKINGS ENTRANCE AND EXIT RAMPS

FPM(2)-10

©TxDOT February 1977

DN: TXDOT	CK: TXDOT	DW: TXDOT	CK: TXDOT

REVISIONS
4-92 2-10
8-95
5-00
8-00

CONT	SECT	JOB	HIGHWAY
2452	01	043	SH 151
DIST		COUNTY	SHEET NO.
SA		BEXAR	370

pw:\\TxDOT-01\Prod\standards\dgns\fpm07.dgn
2/21/2011
7:07:15 PM
mwmldatt1

p:\4760\0-0129\cad standard\5lstd_pm08.dgn 2/21/2011 7:07:15 PM mwmldkiff

DISCLAIMER: The use of this standard is governed by the "Texas Engineering Practice Act". No warranty of any kind is made by TxDOT for any purpose whatsoever. TxDOT assumes no responsibility for the conversion of this standard to other formats or for incorrect results or damages resulting from its use.

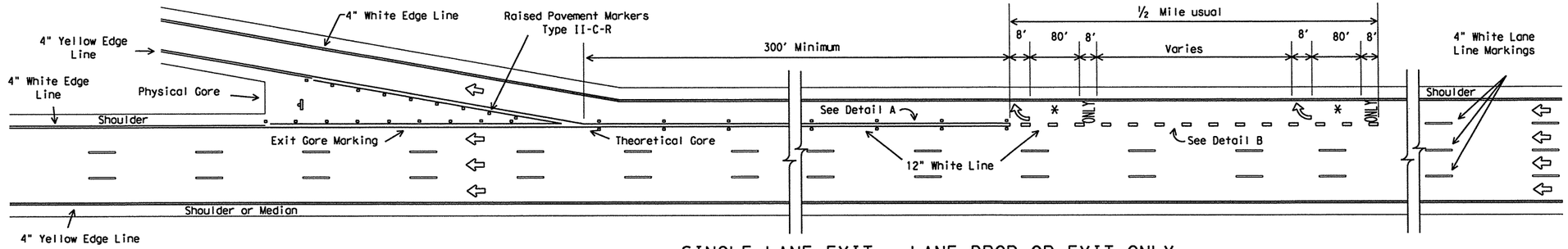

SINGLE LANE EXIT - LANE DROP OR EXIT ONLY

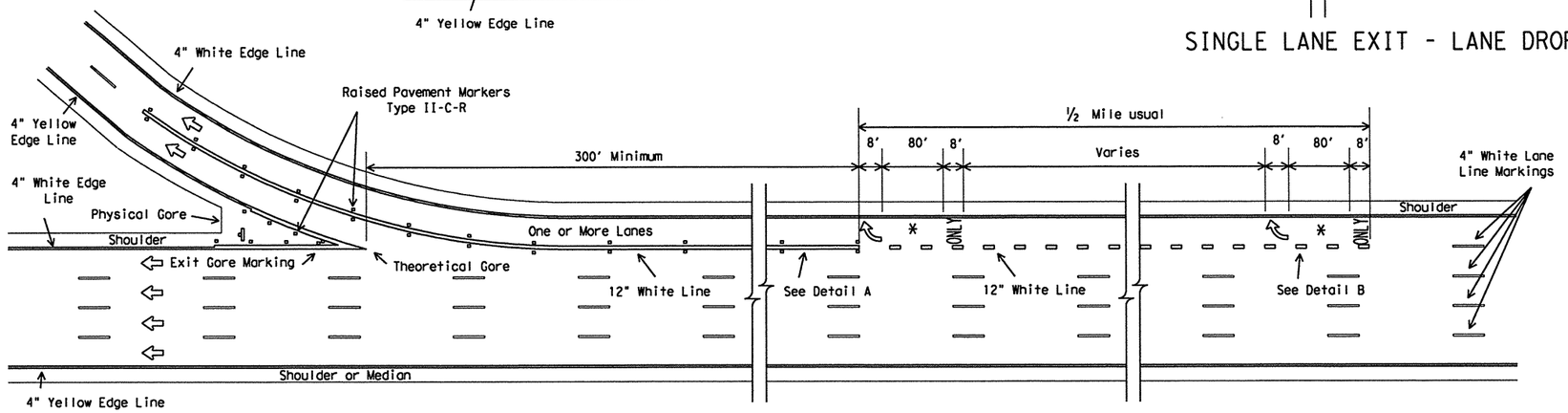

MULTIPLE LANE EXIT - EXIT ONLY WITH OPTION LANE

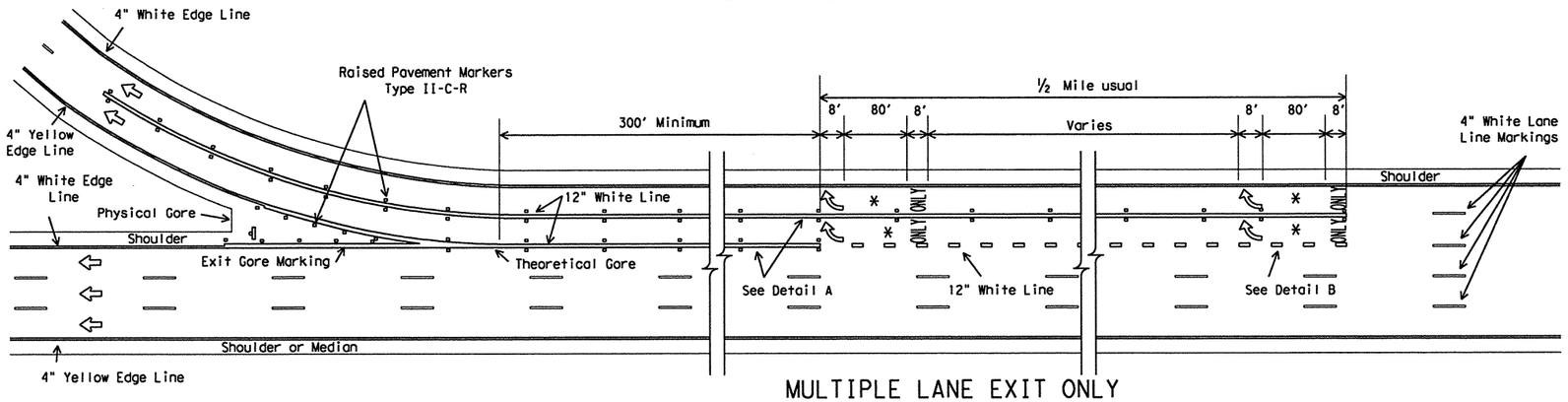

MULTIPLE LANE EXIT ONLY

LEGEND

- OM-2, or approved surface mount object marker installed 2 to 10 feet from Physical Gore. Mounting height is approximately 36 inches.
- Denotes direction of traffic.
- Pavement marking arrows (white).
- Arrow markings are optional, however "ONLY" is required if arrow is used.

GENERAL NOTES:

1. Pavement markings shall be white except as otherwise noted.
2. Length of 12" white line may vary depending on location.
3. Lane drop markings are to be used to separate lanes that are required to go in different directions.
4. A lane drop (EXIT ONLY) condition is typically when the nearest entrance ramp is greater than 2000 feet upstream of the exit ramp, measured from theoretical gore of entrance ramp to theoretical gore of exit ramp.
5. All pavement marking materials shall meet the required Departmental Material Specifications as specified by the plans.

SPECIFICATION REFERENCE TABLE

MATERIAL SPECIFICATIONS	
PAVEMENT MARKERS (REFLECT.)	DMS-4200
EPOXY	DMS-6100
BITUMINOUS ADHESIVE FOR PAVE. MKS.	DMS-6130

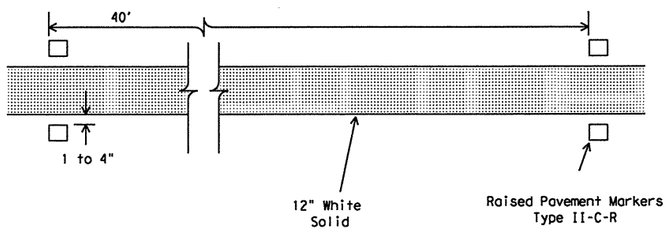

DETAIL A

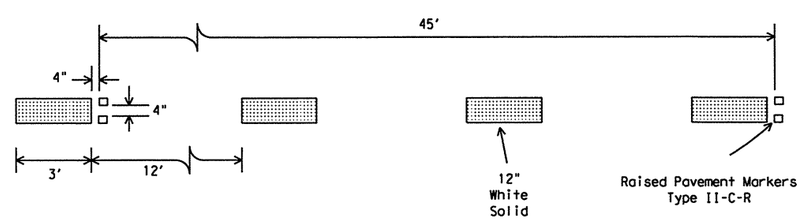

DETAIL B

Texas Department of Transportation
Traffic Operations Division

TYPICAL STANDARD FREEWAY PAVEMENT MARKINGS LANE DROP (EXIT ONLY) EXIT RAMPS

FPM(3)-10

© TxDOT April 1992

REVISIONS	DN: TXDOT	CK: TXDOT	DW: TXDOT	CK: TXDOT
5-00	CONT	SECT	JOB	HIGHWAY
8-00	2452	01	043	SH 151
2-10	DIST		COUNTY	SHEET NO.
	SA		BEXAR	371

standard\fpm(4)-10.dgn
2/21/2011
7:07:16 PM
mwmldt11
pw:\\FBONO-0129\oo

DISCLAIMER: The use of this standard is governed by the "Texas Engineering Practice Act". No warranty of any kind is made by TxDOT for any purpose whatsoever. TxDOT assumes no responsibility for the conversion of this standard to other formats or for incorrect results or damages resulting from its use.

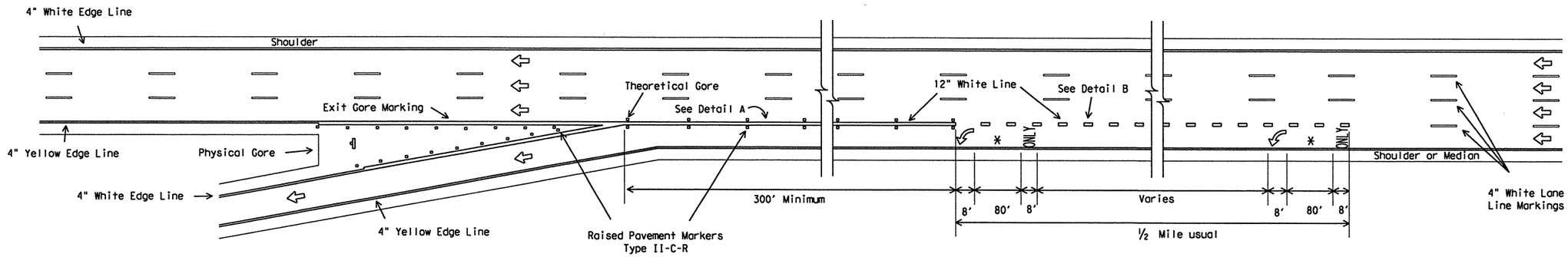

SINGLE LANE EXIT - LANE DROP OR EXIT ONLY (LEFTHAND)

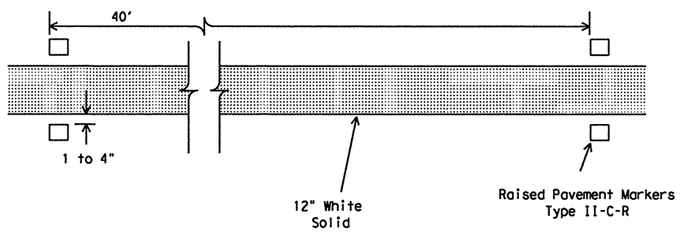

DETAIL A

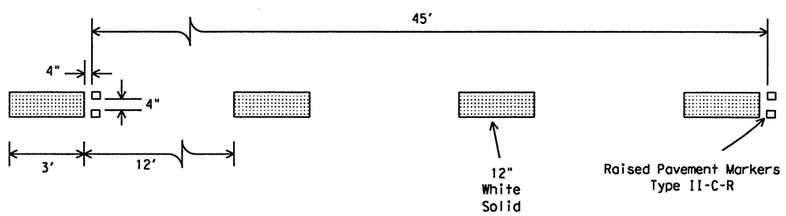

DETAIL B

LEGEND

- OM-2, or approved surface mount object marker installed 2 to 10 feet from Physical Gore. Mounting height is approximately 36 inches.
- Denotes direction of traffic.
- Pavement marking arrows (white).
- Arrow markings are optional, however "ONLY" is required if arrow is used.

GENERAL NOTES:

1. Pavement markings shall be white except as otherwise noted.
2. Length of 12" white line may vary depending on location.
3. Lane drop markings are to be used to separate lanes that are required to go in different directions.
4. A lane drop (EXIT ONLY) condition is typically when the nearest entrance ramp is greater than 2000 feet upstream of the exit ramp, measured from theoretical gore of entrance ramp to theoretical gore of exit ramp.
5. All pavement marking materials shall meet the required Departmental Material Specifications as specified by the plans.

SPECIFICATION REFERENCE TABLE

MATERIAL SPECIFICATIONS	
PAVEMENT MARKERS (REFLECT.)	DMS-4200
EPOXY	DMS-6100
BITUMINOUS ADHESIVE FOR PAVE. MKS.	DMS-6130

Texas Department of Transportation
Traffic Operations Division

TYPICAL STANDARD FREEWAY PAVEMENT MARKINGS LANE DROP (EXIT ONLY) DETAILS

FPM(4)-10

© TxDOT April 1992

DN: TXDOT	CK: TXDOT	DW: TXDOT	CK: TXDOT

REVISIONS
5-00
8-00
2-10

CONT	SECT	JOB	HIGHWAY
2452	01	043	SH 151
DIST		COUNTY	SHEET NO.
SA		BEXAR	372

SHEET SUMMARY OF ESTIMATED QUANTITIES			
ITEM#	DESCRIPTION	UNIT	QTY
0644	REMOVE SM RD SN SUP & AM	EA	2

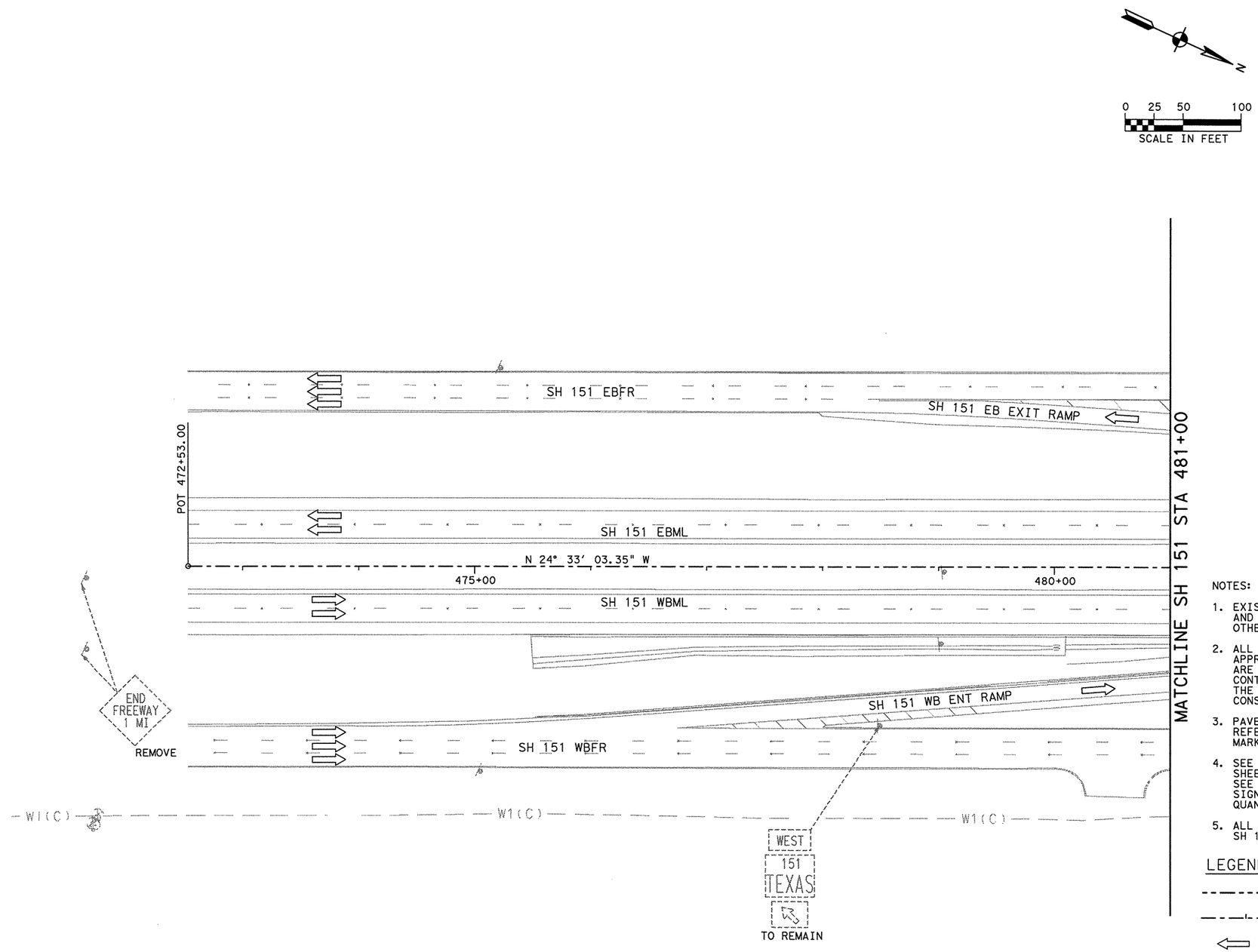

RIP-RAP APRONS			
TYPE OF MOUNT	EA	MULTIPLIED BY C.Y.	TOTAL C.Y.
SINGLE POST		0.8	—
MULTI-POST		1.5	—
CLASS "B" CONCRETE GRAND TOTAL			—

NOTES:

1. EXISTING SIGNS ARE SCREENED BACK AND ARE TO REMAIN AS IS UNLESS OTHERWISE NOTED.
2. ALL SIGN LOCATIONS ARE APPROXIMATE. EXACT LOCATIONS ARE TO BE STAKED BY THE CONTRACTOR AND APPROVED BY THE ENGINEER PRIOR TO CONSTRUCTION.
3. PAVEMENT MARKINGS ARE SHOWN FOR REFERENCE ONLY. SEE PAVEMENT MARKING SHEETS FOR DETAILS.
4. SEE LARGE SIGN SUMMARY AND THIS SHEET FOR LARGE SIGN QUANTITIES. SEE SMALL SIGN SUMMARY AND SMALL SIGN TALLY FOR SMALL SIGN QUANTITIES.
5. ALL STATIONING REFERENCES SH 151 ℄.

LEGEND

- RIGHT OF WAY LINE
- PROPOSED ALIGNMENT
- EXIST TRAFFIC FLOW ARROW
- PROP TRAFFIC FLOW ARROW
- PROP SIGN POST
- EXIST SIGN POST
- XX-X SMALL ROAD AND GUIDE SIGN DESINATION
- XX-X LARGE GUIDE SIGN DESIGNATION
- DELINEATORS
- OBJECT MARKERS
- SOLAR POWERED ROADSIDE FLASHING BEACON ASSEMBLY (SPRFBA)

STATE OF TEXAS
MICHAEL W. MIDKIFF
75435
REGISTERED PROFESSIONAL ENGINEER
12/5/11

NO.	DATE	REVISION DESCRIPTION	APP. BY

© 2011

Texas Department of Transportation

MACTEC
3520 EXECUTIVE CENTER DRIVE
SUITE 200
AUSTIN, TEXAS 78731
(512) 795-0360

REGISTRATION NUMBER: F-1784

SH 151
SIGNING LAYOUT
SH 151
BEGIN PROJECT TO STA 481+00
(SHEET 1 OF 14)

FED. RD. DIV. NO.			SHEET NO.
			373
STATE	DIST.	COUNTY	
TEXAS	SA	BEXAR	
CONT.	SECT.	JOB	HIGHWAY NO.
2452	01	043	SH 151

p:\4760\0-0129\cad\sheet\151sgn01.dgn 12/3/2011 6:45:33 PM mwmidkiff

SHEET SUMMARY OF ESTIMATED QUANTITIES			
ITEM#	DESCRIPTION	UNIT	QTY

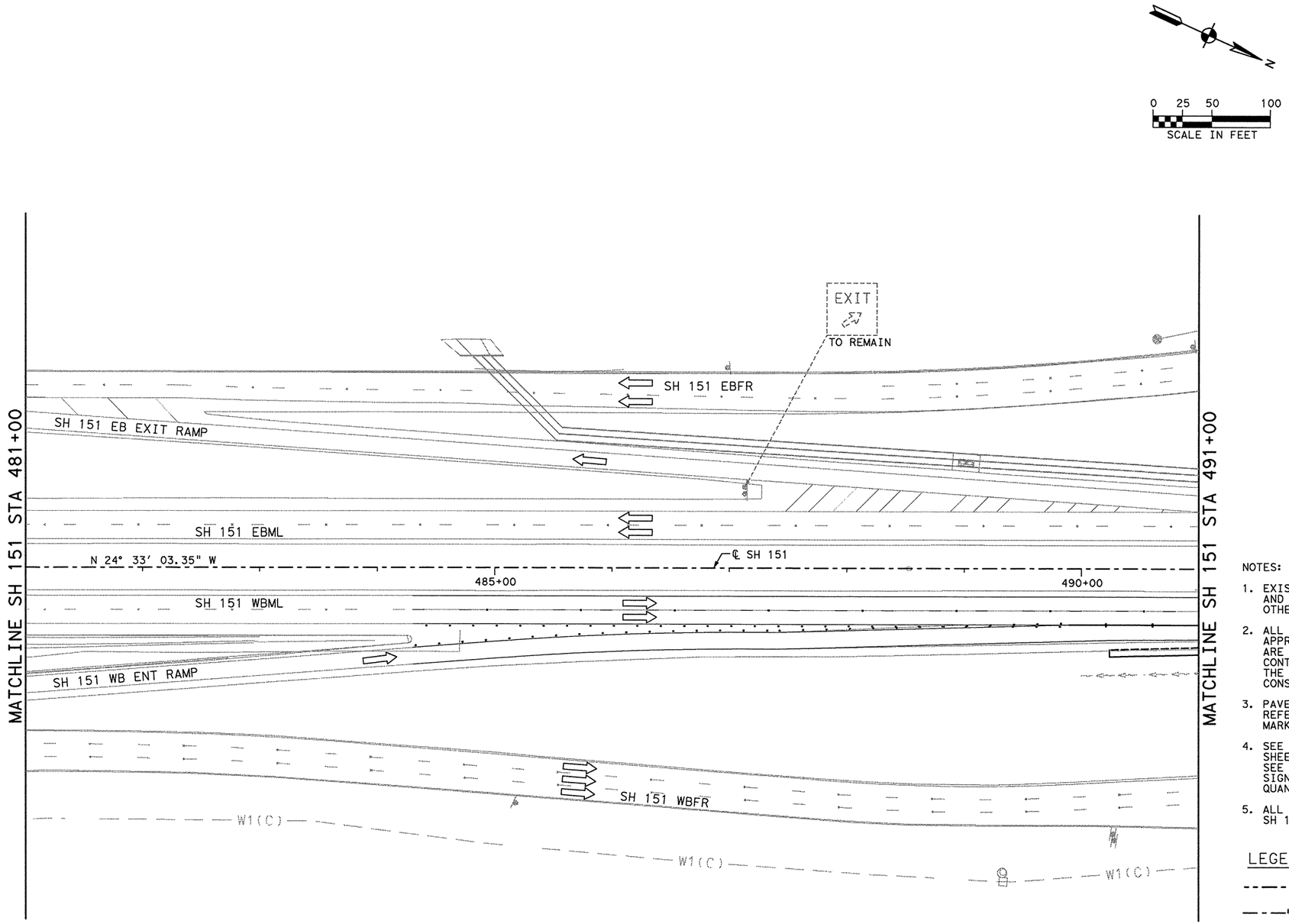

RIP-RAP APRONS			
TYPE OF MOUNT	EA	MULTIPLIED BY C.Y.	TOTAL C.Y.
SINGLE POST		0.8	—
MULTI-POST		1.5	—
CLASS "B" CONCRETE GRAND TOTAL			—

NOTES:

1. EXISTING SIGNS ARE SCREENED BACK AND ARE TO REMAIN AS IS UNLESS OTHERWISE NOTED.
2. ALL SIGN LOCATIONS ARE APPROXIMATE. EXACT LOCATIONS ARE TO BE STAKED BY THE CONTRACTOR AND APPROVED BY THE ENGINEER PRIOR TO CONSTRUCTION.
3. PAVEMENT MARKINGS ARE SHOWN FOR REFERENCE ONLY. SEE PAVEMENT MARKING SHEETS FOR DETAILS.
4. SEE LARGE SIGN SUMMARY AND THIS SHEET FOR LARGE SIGN QUANTITIES. SEE SMALL SIGN SUMMARY AND SMALL SIGN TALLY FOR SMALL SIGN QUANTITIES.
5. ALL STATIONING REFERENCES SH 151 ℄.

LEGEND

- RIGHT OF WAY LINE
- PROPOSED ALIGNMENT
- EXIST TRAFFIC FLOW ARROW
- PROP TRAFFIC FLOW ARROW
- PROP SIGN POST
- EXIST SIGN POST
- XX-X SMALL ROAD AND GUIDE SIGN DESINATION
- XX-X LARGE GUIDE SIGN DESIGNATION
- DELINEATORS
- OBJECT MARKERS
- SOLAR POWERED ROADSIDE FLASHING BEACON ASSEMBLY (SPRFBA)

STATE OF TEXAS
MICHAEL W. MIDKIFF
75435
REGISTERED PROFESSIONAL ENGINEER
12/5/11

NO.	DATE	REVISION DESCRIPTION	APP. BY

© 2011

Texas Department of Transportation

MACTEC
3520 EXECUTIVE CENTER DRIVE
SUITE 200
AUSTIN, TEXAS 78731
(512) 795-0360

REGISTRATION NUMBER: F-1784

SH 151
SIGNING LAYOUT
SH 151
STA 481+00 TO STA 491+00
(SHEET 2 OF 14)

FED. RD. DIV. NO.			SHEET NO.
			374
STATE	DIST.	COUNTY	
TEXAS	SA	BEXAR	
CONT.	SECT.	JOB	HIGHWAY NO.
2452	01	043	SH 151

p:\4760\0-0129\cad\sheet\5lsgn02.dgn 12/3/2011 6:45:39 PM mwmidkiff

SHEET SUMMARY OF ESTIMATED QUANTITIES			
ITEM#	DESCRIPTION	UNIT	QTY
0416	DRILL SHAFT (SIGN MTS) (36 IN)	LF	72
0432	RIPRAP (CONC) (CL B) (4")	CY	3
0636	ALUMINUM SIGNS (TY A)	SF	60.50
0636	ALUMINUM SIGNS (TY O)	SF	290.25
0644	INS SM RD SN SUP&AM TY S80(1) SA(T)	EA	2
0644	REMOVE SM RD SN SUP & AM	EA	2
0650	INS OH SN SUP(80 FT BRDG)	EA	1
0658	INSTL DEL ASSM (D-SW)SZ 1(FLX)GND	EA	4

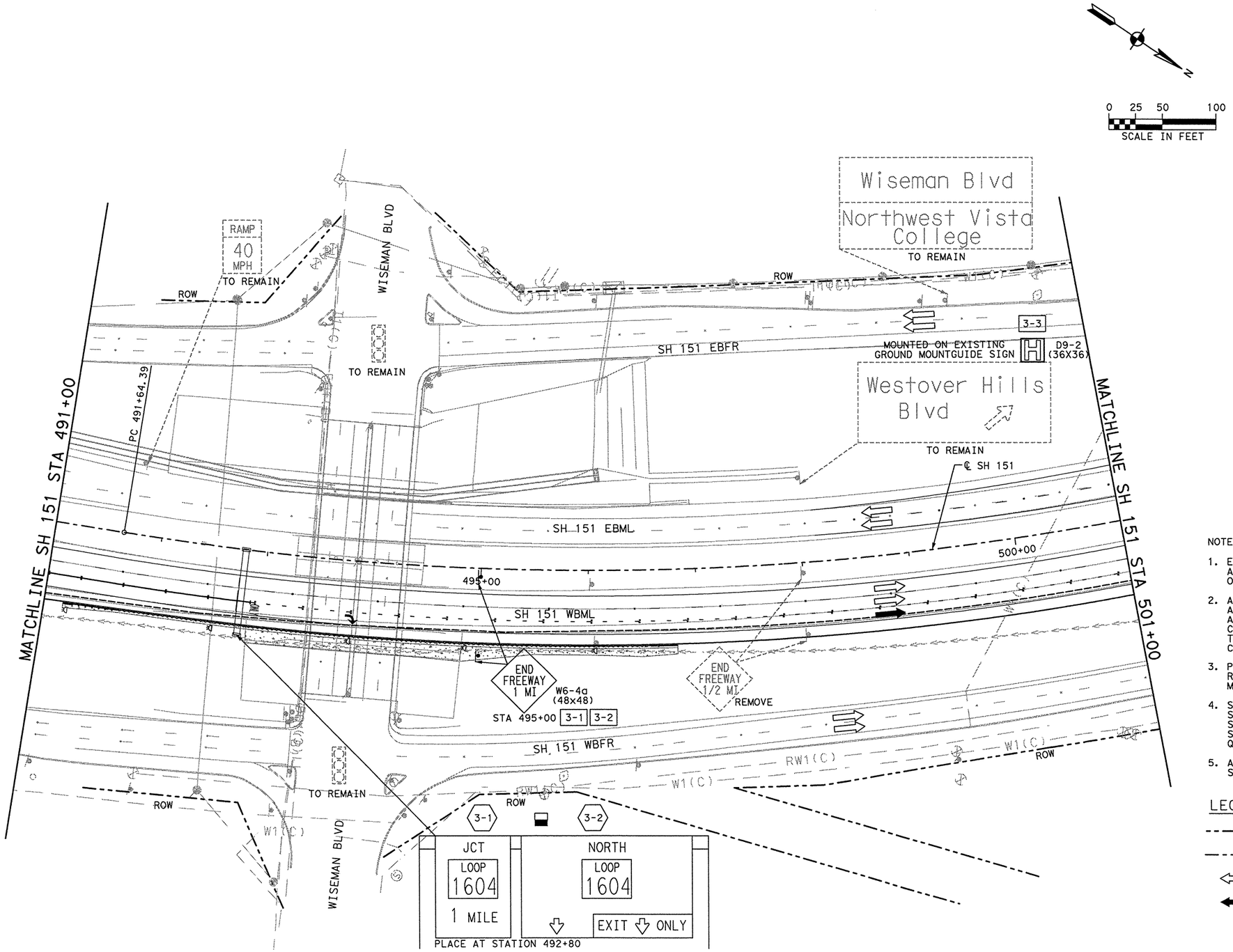

RIP-RAP APRONS			
TYPE OF MOUNT	EA	MULTIPLIED BY C.Y.	TOTAL C.Y.
SINGLE POST		0.8	—
MULTI-POST	2	1.5	3.0
CLASS "B" CONCRETE GRAND TOTAL			3.0

NOTES:

1. EXISTING SIGNS ARE SCREENED BACK AND ARE TO REMAIN AS IS UNLESS OTHERWISE NOTED.
2. ALL SIGN LOCATIONS ARE APPROXIMATE. EXACT LOCATIONS ARE TO BE STAKED BY THE CONTRACTOR AND APPROVED BY THE ENGINEER PRIOR TO CONSTRUCTION.
3. PAVEMENT MARKINGS ARE SHOWN FOR REFERENCE ONLY. SEE PAVEMENT MARKING SHEETS FOR DETAILS.
4. SEE LARGE SIGN SUMMARY AND THIS SHEET FOR LARGE SIGN QUANTITIES. SEE SMALL SIGN SUMMARY AND SMALL SIGN TALLY FOR SMALL SIGN QUANTITIES.
5. ALL STATIONING REFERENCES SH 151 ℄.

LEGEND

- RIGHT OF WAY LINE
- PROPOSED ALIGNMENT
- EXIST TRAFFIC FLOW ARROW
- PROP TRAFFIC FLOW ARROW
- PROP SIGN POST
- EXIST SIGN POST
- XX-X SMALL ROAD AND GUIDE SIGN DESINATION
- XX-X LARGE GUIDE SIGN DESIGNATION
- DELINEATORS
- OBJECT MARKERS
- SOLAR POWERED ROADSIDE FLASHING BEACON ASSEMBLY (SPRFBA)

STATE OF TEXAS
MICHAEL W. MIDKIFF
75435
REGISTERED PROFESSIONAL ENGINEER
12/5/11

NO.	DATE	REVISION DESCRIPTION	APP. BY

© 2011

Texas Department of Transportation

MACTEC
3520 EXECUTIVE CENTER DRIVE
SUITE 200
AUSTIN, TEXAS 78731
(512) 795-0360

REGISTRATION NUMBER: F-1784

SH 151
SIGNING LAYOUT
SH 151
STA 491+00 TO STA 501+00
(SHEET 3 OF 14)

FED. RD. DIV. NO.			SHEET NO.
			375
STATE	DIST.	COUNTY	
TEXAS	SA	BEXAR	
CONT.	SECT.	JOB	HIGHWAY NO.
2452	01	043	SH 151

p:\4760\0-0129\cad\sheet\151sgn03.dgn 12/6/2011 8:58:30 AM mwmidkiff

SHEET SUMMARY OF ESTIMATED QUANTITIES			
ITEM#	DESCRIPTION	UNIT	QTY
0416	DRILL SHAFT (NON- REINFORCED) (12 IN)	LF	7
0416	DRILL SHAFT (SIGN MTS) (36 IN)	LF	72
0432	RIPRAP (CONC) (CL B) (4")	CY	6.0
0636	ALUMINUM SIGNS (TY A)	SF	60.50
0636	ALUMINUM SIGNS (TY G)	SF	30
0636	ALUMINUM SIGNS (TY O)	SF	290.25
0644	INS SM RD SN SUP&AM TY S80(1) SA(T)	EA	1
0644	REMOVE SM RD SN SUP & AM	EA	1.0
0644	INS SM RD SN SUP&AM (RAIL MOUNT)	EA	0.00
0647	INSTALL LRSS (STRUCT STEEL)	LB	223
0650	INS OH SN SUP(92 FT BRDG)	EA	1
0658	INSTL DEL ASSM (D-SY)SZ 1(FLX)GND	EA	7
0658	INSTL OM ASSM (OM-2Z) (FLX)GND	EA	1
0658	INSTL DEL ASSM (D-SW)SZ 1(FLX)GND	EA	4

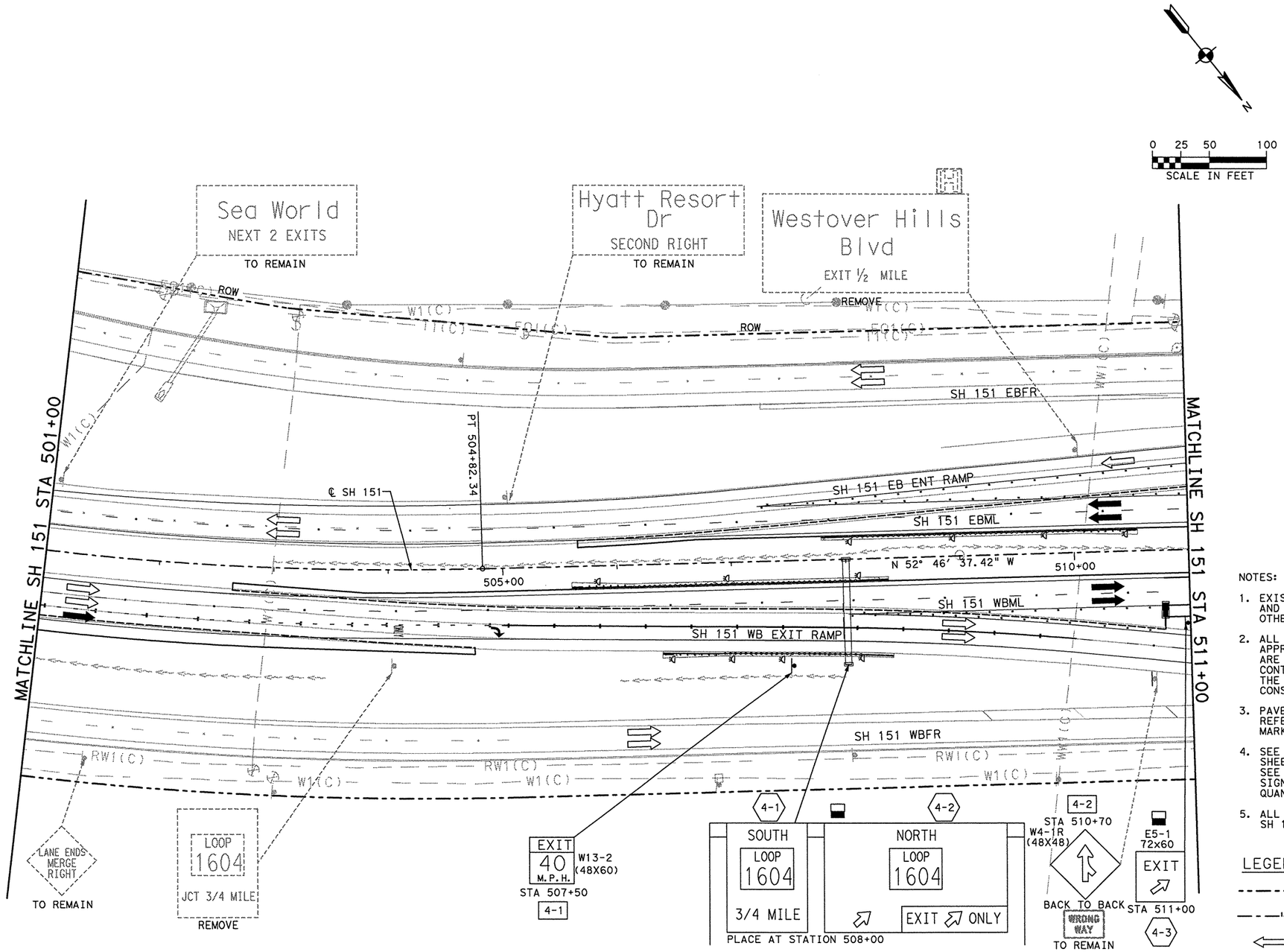

RIP-RAP APRONS			
TYPE OF MOUNT	EA	MULTIPLIED BY C.Y.	TOTAL C.Y.
SINGLE POST		0.8	——
MULTI-POST	4	1.5	6.0
CLASS "B" CONCRETE GRAND TOTAL			6.0

NOTES:

1. EXISTING SIGNS ARE SCREENED BACK AND ARE TO REMAIN AS IS UNLESS OTHERWISE NOTED.
2. ALL SIGN LOCATIONS ARE APPROXIMATE. EXACT LOCATIONS ARE TO BE STAKED BY THE CONTRACTOR AND APPROVED BY THE ENGINEER PRIOR TO CONSTRUCTION.
3. PAVEMENT MARKINGS ARE SHOWN FOR REFERENCE ONLY. SEE PAVEMENT MARKING SHEETS FOR DETAILS.
4. SEE LARGE SIGN SUMMARY AND THIS SHEET FOR LARGE SIGN QUANTITIES. SEE SMALL SIGN SUMMARY AND SMALL SIGN TALLY FOR SMALL SIGN QUANTITIES.
5. ALL STATIONING REFERENCES SH 151 ℄.

LEGEND

- RIGHT OF WAY LINE
- PROPOSED ALIGNMENT
- EXIST TRAFFIC FLOW ARROW
- PROP TRAFFIC FLOW ARROW
- PROP SIGN POST
- EXIST SIGN POST
- XX-X SMALL ROAD AND GUIDE SIGN DESINATION
- XX-X LARGE GUIDE SIGN DESIGNATION
- DELINEATORS
- OBJECT MARKERS
- SOLAR POWERED ROADSIDE FLASHING BEACON ASSEMBLY (SPRFBA)

STATE OF TEXAS
MICHAEL W. MIDKIFF
75435
REGISTERED PROFESSIONAL ENGINEER
12/5/11

NO.	DATE	REVISION DESCRIPTION	APP. BY

© 2011

Texas Department of Transportation

MACTEC
3520 EXECUTIVE CENTER DRIVE
SUITE 200
AUSTIN, TEXAS 78731
(512) 795-0360
REGISTRATION NUMBER: F-1784

SH 151
SIGNING LAYOUT SH 151 STA 501+00 TO STA 511+00
(SHEET 4 OF 14)

FED. RD. DIV. NO.			SHEET NO.
			376
STATE	DIST.	COUNTY	
TEXAS	SA	BEXAR	
CONT.	SECT.	JOB	HIGHWAY NO.
2452	01	043	SH 151

P:\4760\00-0129\cad\sheet\v5\sgn04.dgn 12/6/2011 8:58:36 AM mwmidkiff

SHEET SUMMARY OF ESTIMATED QUANTITIES			
ITEM#	DESCRIPTION	UNIT	QTY
0644	INS SM RD SN SUP&AM TY S80(1) SA(T)	EA	3
0658	INSTL OM ASSM (OM-2Z) (FLX)GND	EA	2

N

0 25 50 100
SCALE IN FEET

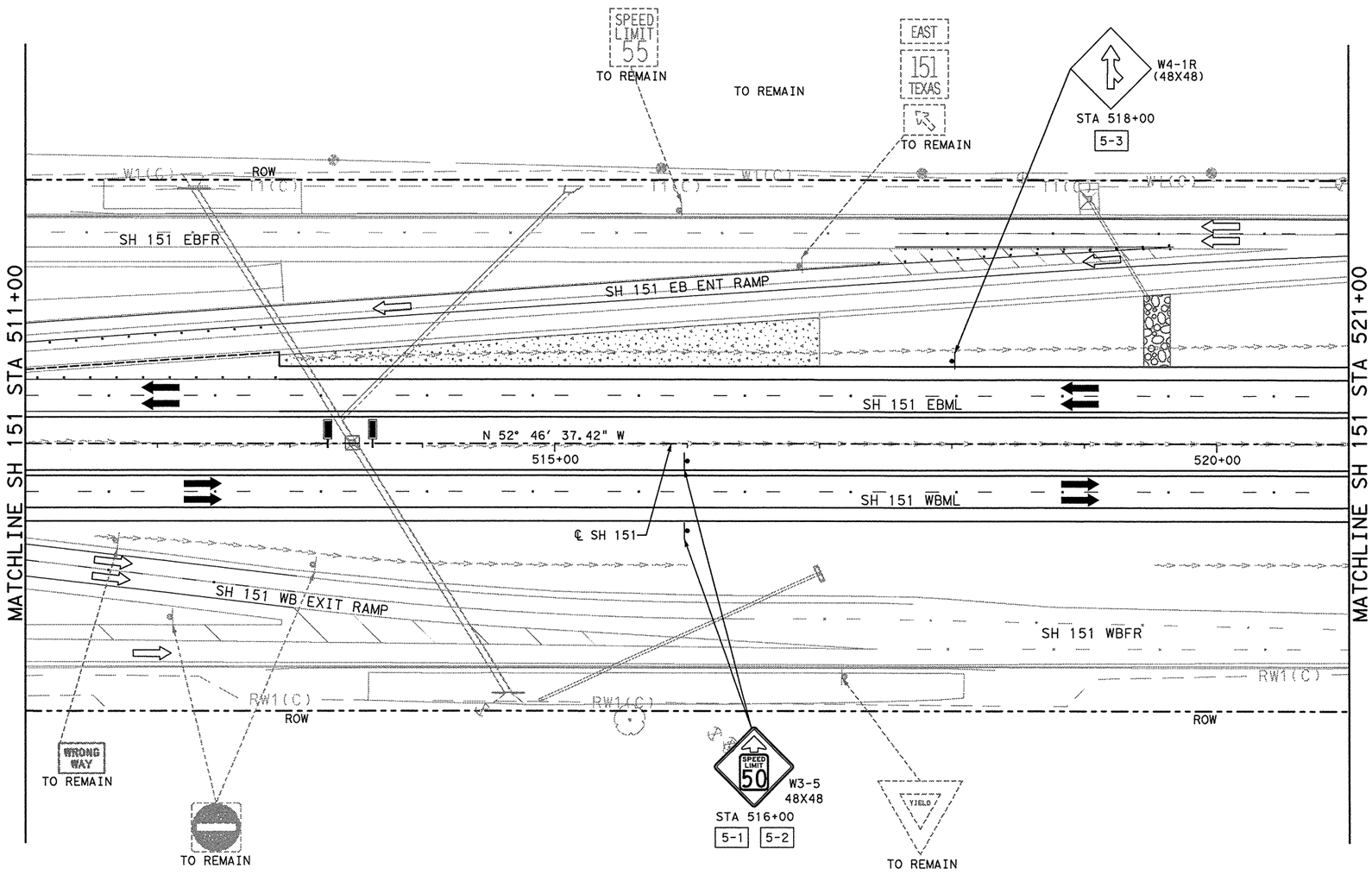

RIP-RAP APRONS			
TYPE OF MOUNT	EA	MULTIPLIED BY C.Y.	TOTAL C.Y.
SINGLE POST		0.8	—
MULTI-POST		1.5	—
CLASS "B" CONCRETE GRAND TOTAL			—

NOTES:

1. EXISTING SIGNS ARE SCREENED BACK AND ARE TO REMAIN AS IS UNLESS OTHERWISE NOTED.
2. ALL SIGN LOCATIONS ARE APPROXIMATE. EXACT LOCATIONS ARE TO BE STAKED BY THE CONTRACTOR AND APPROVED BY THE ENGINEER PRIOR TO CONSTRUCTION.
3. PAVEMENT MARKINGS ARE SHOWN FOR REFERENCE ONLY. SEE PAVEMENT MARKING SHEETS FOR DETAILS.
4. SEE LARGE SIGN SUMMARY AND THIS SHEET FOR LARGE SIGN QUANTITIES. SEE SMALL SIGN SUMMARY AND SMALL SIGN TALLY FOR SMALL SIGN QUANTITIES.
5. ALL STATIONING REFERENCES SH 151 ℄.

LEGEND

- RIGHT OF WAY LINE
- PROPOSED ALIGNMENT
- EXIST TRAFFIC FLOW ARROW
- PROP TRAFFIC FLOW ARROW
- PROP SIGN POST
- EXIST SIGN POST
- XX-X SMALL ROAD AND GUIDE SIGN DESINATION
- XX-X LARGE GUIDE SIGN DESIGNATION
- DELINEATORS
- OBJECT MARKERS
- SOLAR POWERED ROADSIDE FLASHING BEACON ASSEMBLY (SPRFBA)

STATE OF TEXAS
MICHAEL W. MIDKIFF
75435
REGISTERED PROFESSIONAL ENGINEER
12/5/11

NO.	DATE	REVISION DESCRIPTION	APP. BY

© 2011

Texas Department of Transportation

MACTEC
3520 EXECUTIVE CENTER DRIVE
SUITE 200
AUSTIN, TEXAS 78731
(512) 795-0360

REGISTRATION NUMBER: F-1784

SH 151
SIGNING LAYOUT
SH 151
STA 511+00 TO STA 521+00
(SHEET 5 OF 14)

FED. RD. DIV. NO.			SHEET NO.
			377
STATE	DIST.	COUNTY	
TEXAS	SA	BEXAR	
CONT.	SECT.	JOB	HIGHWAY NO.
2452	01	043	SH 151

p:\4760\0-0129\cad\sheet\151sgn05.dgn 12/6/2011 8:58:43 AM mwmidkiff

SHEET SUMMARY OF ESTIMATED QUANTITIES			
ITEM#	DESCRIPTION	UNIT	QTY
0416	DRILL SHAFT (NON- REINFORCED) (12 IN)	LF	11
0432	RIPRAP (CONC) (CL B) (4")	CY	4.5
0636	ALUMINUM SIGNS (TY G)	SF	148
0644	INS SM RD SN SUP&AM TY S80(1) SA(T)	EA	6
0644	REMOVE SM RD SN SUP & AM	EA	3
0644	INS SM RD SN SUP&AM (RAIL MOUNT)	EA	0.00
0647	INSTALL LRSS (STRUCT STEEL)	LB	436
0658	INSTL OM ASSM (OM-2Z) (FLX)GND	EA	6
0658	INSTL OM ASSM (OM-2Z) (FLX)SRF	EA	1
0658	INSTL DEL ASSM (D-SW)SZ 1(FLX)GND	EA	2

N

0 25 50 100
SCALE IN FEET

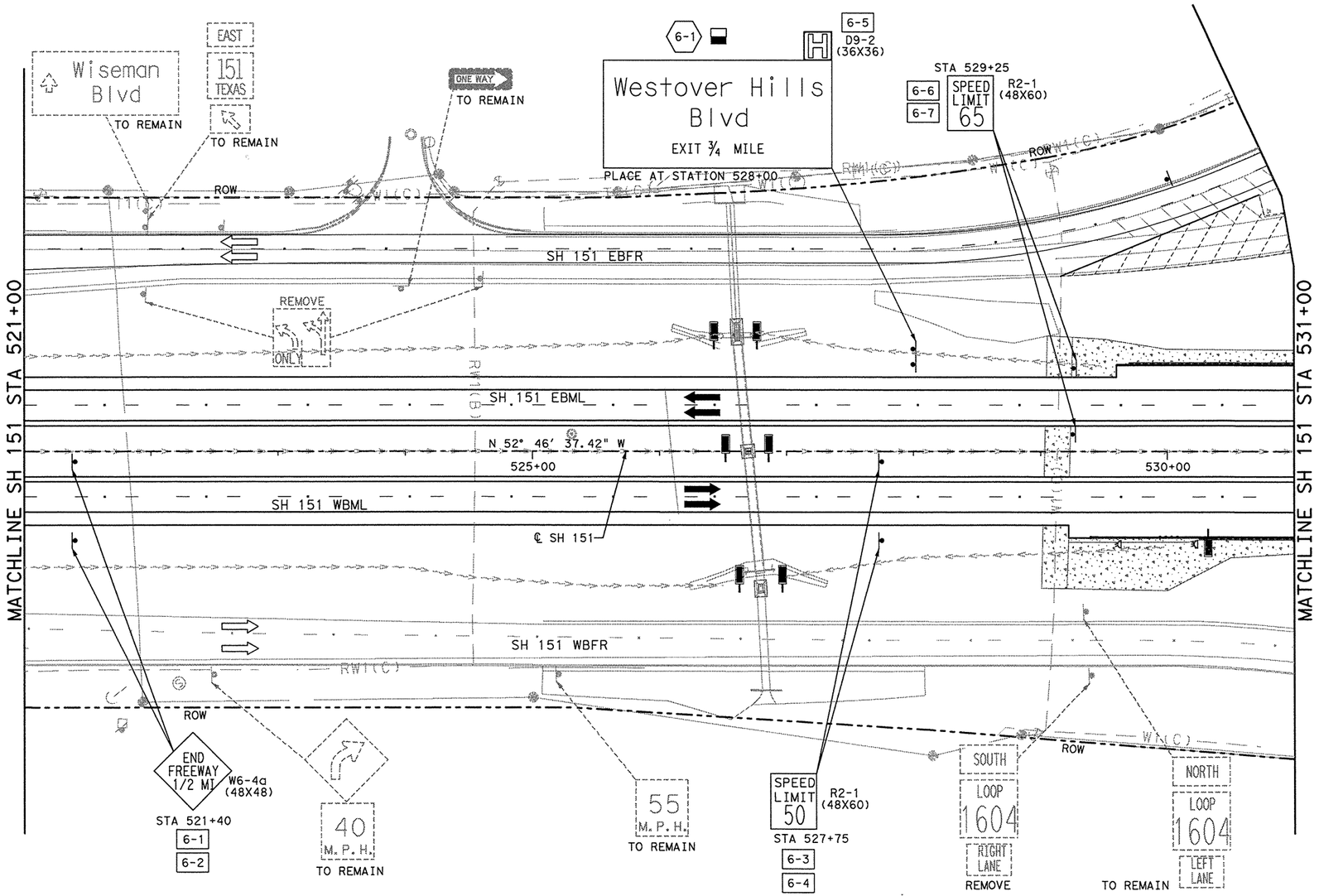

RIP-RAP APRONS			
TYPE OF MOUNT	EA	MULTIPLIED BY C.Y.	TOTAL C.Y.
SINGLE POST		0.8	——
MULTI-POST	3	1.5	4.5
CLASS "B" CONCRETE GRAND TOTAL			4.5

NOTES:

1. EXISTING SIGNS ARE SCREENED BACK AND ARE TO REMAIN AS IS UNLESS OTHERWISE NOTED.
2. ALL SIGN LOCATIONS ARE APPROXIMATE. EXACT LOCATIONS ARE TO BE STAKED BY THE CONTRACTOR AND APPROVED BY THE ENGINEER PRIOR TO CONSTRUCTION.
3. PAVEMENT MARKINGS ARE SHOWN FOR REFERENCE ONLY. SEE PAVEMENT MARKING SHEETS FOR DETAILS.
4. SEE LARGE SIGN SUMMARY AND THIS SHEET FOR LARGE SIGN QUANTITIES. SEE SMALL SIGN SUMMARY AND SMALL SIGN TALLY FOR SMALL SIGN QUANTITIES.
5. ALL STATIONING REFERENCES SH 151 ℄.

LEGEND

- RIGHT OF WAY LINE
- PROPOSED ALIGNMENT
- EXIST TRAFFIC FLOW ARROW
- PROP TRAFFIC FLOW ARROW
- PROP SIGN POST
- EXIST SIGN POST
- XX-X SMALL ROAD AND GUIDE SIGN DESINATION
- XX-X LARGE GUIDE SIGN DESIGNATION
- DELINEATORS
- OBJECT MARKERS
- SOLAR POWERED ROADSIDE FLASHING BEACON ASSEMBLY (SPRFBA)

STATE OF TEXAS
MICHAEL W. MIDKIFF
75435
REGISTERED PROFESSIONAL ENGINEER
12/5/11

NO.	DATE	REVISION DESCRIPTION	APP. BY

© 2011

Texas Department of Transportation

MACTEC
3520 EXECUTIVE CENTER DRIVE
SUITE 200
AUSTIN, TEXAS 78731
(512) 795-0360
REGISTRATION NUMBER: F-1784

SH 151
SIGNING LAYOUT SH 151 STA 521+00 TO STA 531+00
(SHEET 6 OF 14)

FED. RD. DIV. NO.			SHEET NO.
			378
STATE	DIST.	COUNTY	
TEXAS	SA	BEXAR	
CONT.	SECT.	JOB	HIGHWAY NO.
2452	01	043	SH 151

p:\4760\0-01259\cad\sheet\15lsgn06.dgn 12/6/2011 8:58:50 AM mwmidkiff

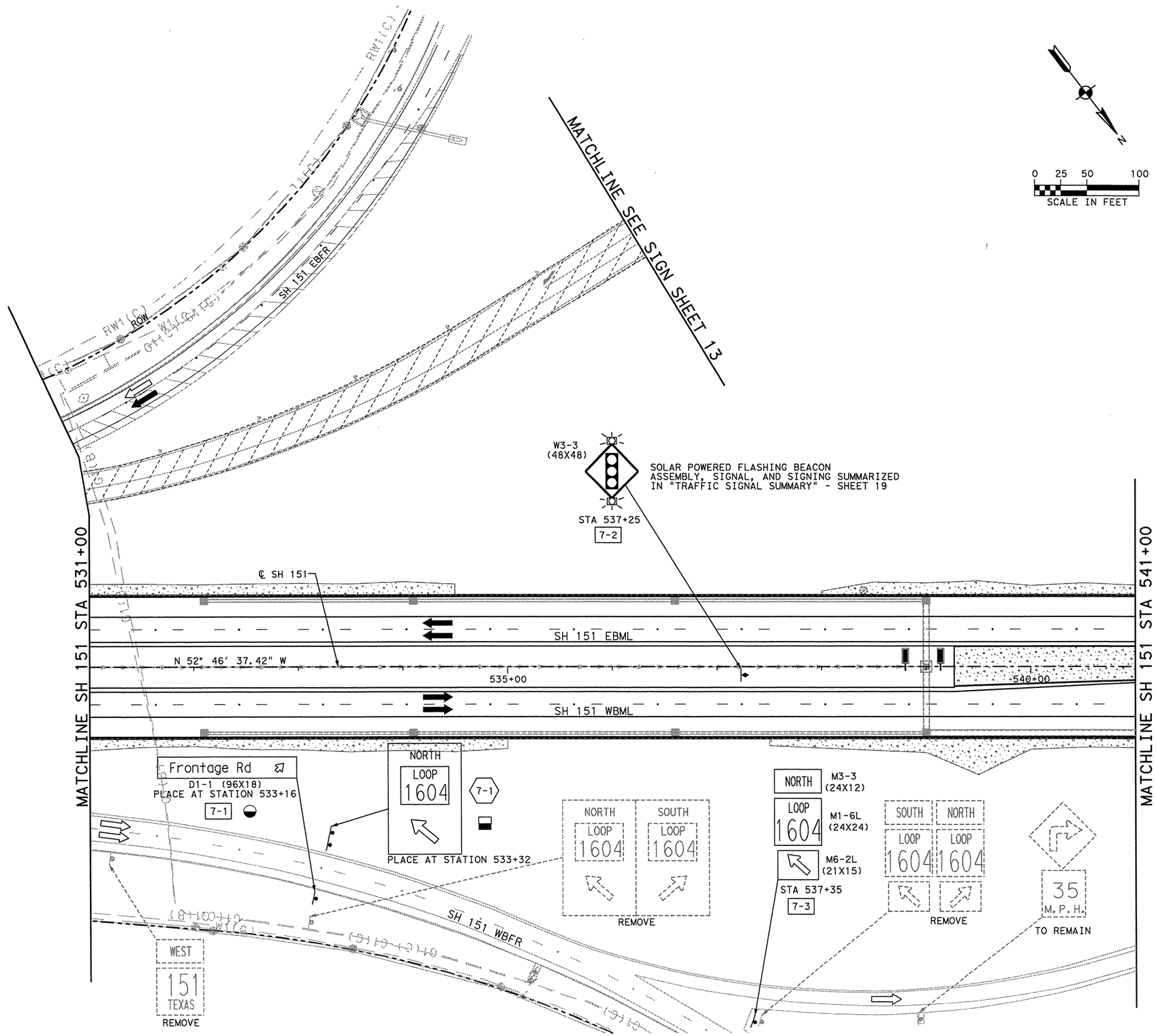

SHEET SUMMARY OF ESTIMATED QUANTITIES			
ITEM#	DESCRIPTION	UNIT	QTY
0416	DRILL SHAFT (NON- REINFORCED) (12 IN)	LF	7
0432	RIPRAP (CONC) (CL B) (4")	CY	3.8
0636	ALUMINUM SIGNS (TY A)	SF	15.25
0636	ALUMINUM SIGNS (TY G)	SF	89.25
0644	INS SM RD SN SUP&AM TY 10BWG(1) SA(P)	EA	1
0644	INS SM RD SN SUP&AM TY 10BWG(1) SA(T)	EA	1
0644	REMOVE SM RD SN SUP & AM	EA	3
0644	INS SM RD SN SUP&AM (RAIL MOUNT)	EA	0.00
0647	INSTALL LRSS (STRUCT STEEL)	LB	369
0658	INSTL OM ASSM (OM-2Z) (FLX)GND	EA	2
0682	VEH SIG SEC (12 IN) LED (YEL)	EA	4
0685	INSTL RDSD FLSH BEACON ASSM(SOLAR PWRD)	EA	1

RIP-RAP APRONS			
TYPE OF MOUNT	EA	MULTIPLIED BY C.Y.	TOTAL C.Y.
SINGLE POST	1	0.8	0.8
MULTI-POST	2	1.5	3.0
CLASS "B" CONCRETE GRAND TOTAL			3.8

NOTES:

1. EXISTING SIGNS ARE SCREENED BACK AND ARE TO REMAIN AS IS UNLESS OTHERWISE NOTED.
2. ALL SIGN LOCATIONS ARE APPROXIMATE. EXACT LOCATIONS ARE TO BE STAKED BY THE CONTRACTOR AND APPROVED BY THE ENGINEER PRIOR TO CONSTRUCTION.
3. PAVEMENT MARKINGS ARE SHOWN FOR REFERENCE ONLY. SEE PAVEMENT MARKING SHEETS FOR DETAILS.
4. SEE LARGE SIGN SUMMARY AND THIS SHEET FOR LARGE SIGN QUANTITIES. SEE SMALL SIGN SUMMARY AND SMALL SIGN TALLY FOR SMALL SIGN QUANTITIES.
5. ALL STATIONING REFERENCES SH 151 ℄.

LEGEND

- RIGHT OF WAY LINE
- PROPOSED ALIGNMENT
- EXIST TRAFFIC FLOW ARROW
- PROP TRAFFIC FLOW ARROW
- PROP SIGN POST
- EXIST SIGN POST
- XX-X SMALL ROAD AND GUIDE SIGN DESINATION
- XX-X LARGE GUIDE SIGN DESIGNATION
- DELINEATORS
- OBJECT MARKERS
- SOLAR POWERED ROADSIDE FLASHING BEACON ASSEMBLY (SPRFBA)

STATE OF TEXAS
MICHAEL W. MIDKIFF
75435
REGISTERED PROFESSIONAL ENGINEER
12/5/11

NO.	DATE	REVISION DESCRIPTION	APP. BY

© 2011

Texas Department of Transportation

MACTEC
3520 EXECUTIVE CENTER DRIVE
SUITE 200
AUSTIN, TEXAS 78731
(512) 795-0360
REGISTRATION NUMBER: F-1784

SH 151
SIGNING LAYOUT SH 151 STA 531+00 TO STA 541+00
(SHEET 7 OF 14)

FED. RD. DIV. NO.			SHEET NO.
			379
STATE	DIST.	COUNTY	
TEXAS	SA	BEXAR	
CONT.	SECT.	JOB	HIGHWAY NO.
2452	01	043	SH 151

p:\4716010-01\29\cad\sheet\151sgn07.dgn 12/6/2011 8:58:57 AM mwmidkiff

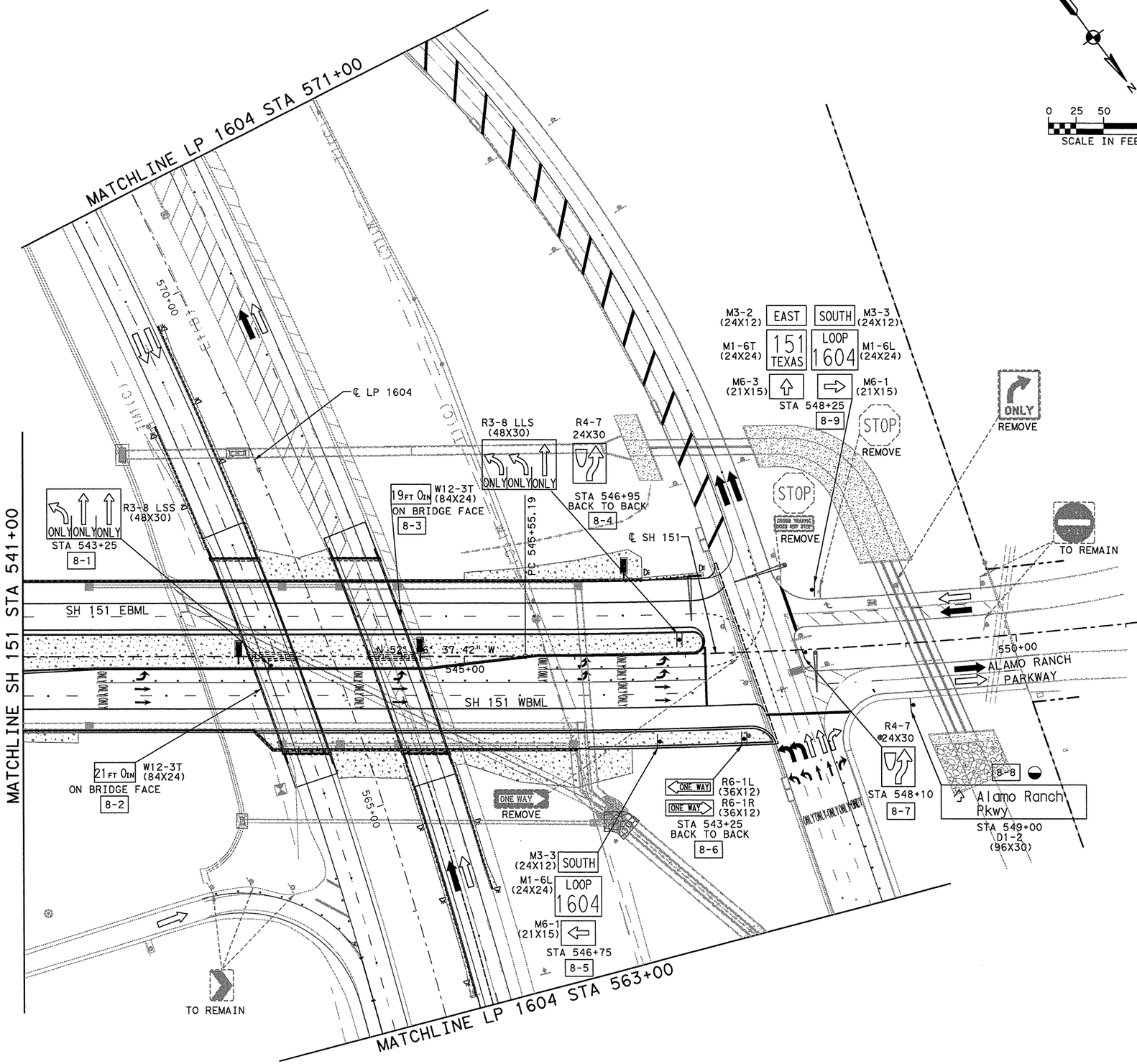

SHEET SUMMARY OF ESTIMATED QUANTITIES			
ITEM#	DESCRIPTION	UNIT	QTY
0432	RIPRAP (CONC) (CL B) (4")	CY	0.80
0644	INS SM RD SN SUP&AM TY 10BWG(1) SA(P)	EA	2
0644	INS SM RD SN SUP&AM TY 10BWG(1) SA(T)	EA	3
0644	INS SM RD SN SUP&AM TY 10BWG(1) SA(U)	EA	1
0644	INS SM RD SN SUP&AM TY S80(1) SA(U-WC)	EA	1
0644	REMOVE SM RD SN SUP & AM	EA	4
0658	INSTL DEL ASSM (D-SY)SZ 1(FLX)GND	EA	6
0658	INSTL OM ASSM (OM-2Z) (FLX)SRF	EA	3
0658	INSTL DEL ASSM (D-SW)SZ 1(FLX)GND	EA	6

RIP-RAP APRONS			
TYPE OF MOUNT	EA	MULTIPLIED BY C.Y.	TOTAL C.Y.
SINGLE POST	1	0.8	0.8
MULTI-POST		1.5	—
CLASS "B" CONCRETE GRAND TOTAL			0.8

NOTES:

1. EXISTING SIGNS ARE SCREENED BACK AND ARE TO REMAIN AS IS UNLESS OTHERWISE NOTED.
2. ALL SIGN LOCATIONS ARE APPROXIMATE. EXACT LOCATIONS ARE TO BE STAKED BY THE CONTRACTOR AND APPROVED BY THE ENGINEER PRIOR TO CONSTRUCTION.
3. PAVEMENT MARKINGS ARE SHOWN FOR REFERENCE ONLY. SEE PAVEMENT MARKING SHEETS FOR DETAILS.
4. SEE LARGE SIGN SUMMARY AND THIS SHEET FOR LARGE SIGN QUANTITIES. SEE SMALL SIGN SUMMARY AND SMALL SIGN TALLY FOR SMALL SIGN QUANTITIES.
5. ALL STATIONING REFERENCES SH 151 ℄.

LEGEND

- RIGHT OF WAY LINE
- PROPOSED ALIGNMENT
- EXIST TRAFFIC FLOW ARROW
- PROP TRAFFIC FLOW ARROW
- PROP SIGN POST
- EXIST SIGN POST
- XX-X SMALL ROAD AND GUIDE SIGN DESINATION
- XX-X LARGE GUIDE SIGN DESIGNATION
- DELINEATORS
- OBJECT MARKERS
- SOLAR POWERED ROADSIDE FLASHING BEACON ASSEMBLY (SPRFBA)

STATE OF TEXAS
MICHAEL W. MIDKIFF
75435
REGISTERED PROFESSIONAL ENGINEER
12/5/11

NO.	DATE	REVISION DESCRIPTION	APP. BY

© 2011

Texas Department of Transportation

MACTEC
3520 EXECUTIVE CENTER DRIVE
SUITE 200
AUSTIN, TEXAS 78731
(512) 795-0360
REGISTRATION NUMBER: F-1784

SH 151
SIGNING LAYOUT SH 151 STA 541+00 TO END
(SHEET 8 OF 14)

FED. RD. DIV. NO.			SHEET NO.
			380
STATE	DIST.	COUNTY	
TEXAS	SA	BEXAR	
CONT.	SECT.	JOB	HIGHWAY NO.
2452	01	043	SH 151

p:\4760\0-0\29\cad\sheet\151sgn14.dgn 12/6/2011 8:59:04 AM mwmidk117

SHEET SUMMARY OF ESTIMATED QUANTITIES			
ITEM#	DESCRIPTION	UNIT	QTY
0644	REMOVE SM RD SN SUP & AM	EA	1

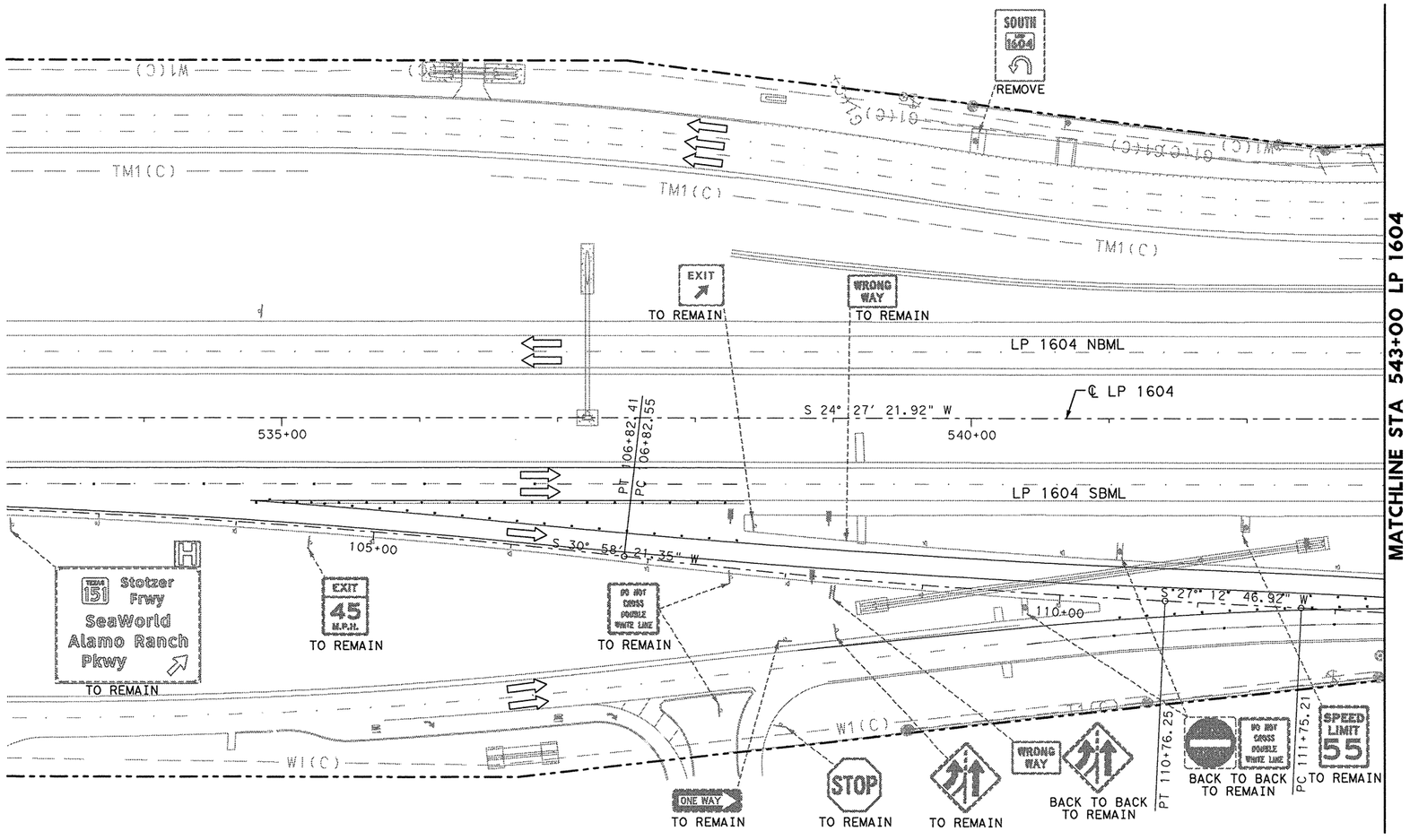

N

0 25 50 100
SCALE IN FEET

RIP-RAP APRONS			
TYPE OF MOUNT	EA	MULTIPLIED BY C.Y.	TOTAL C.Y.
SINGLE POST		0.8	—
MULTI-POST		1.5	—
CLASS "B" CONCRETE GRAND TOTAL			—

NOTES:

1. EXISTING SIGNS ARE SCREENED BACK AND ARE TO REMAIN AS IS UNLESS OTHERWISE NOTED.
2. ALL SIGN LOCATIONS ARE APPROXIMATE. EXACT LOCATIONS ARE TO BE STAKED BY THE CONTRACTOR AND APPROVED BY THE ENGINEER PRIOR TO CONSTRUCTION.
3. PAVEMENT MARKINGS ARE SHOWN FOR REFERENCE ONLY. SEE PAVEMENT MARKING SHEETS FOR DETAILS.
4. SEE LARGE SIGN SUMMARY AND THIS SHEET FOR LARGE SIGN QUANTITIES. SEE SMALL SIGN SUMMARY AND SMALL SIGN TALLY FOR SMALL SIGN QUANTITIES.
5. ALL STATIONING REFERENCES LP 1604 ℄.

LEGEND

- RIGHT OF WAY LINE
- PROPOSED ALIGNMENT
- EXIST TRAFFIC FLOW ARROW
- PROP TRAFFIC FLOW ARROW
- PROP SIGN POST
- EXIST SIGN POST
- XX-X — SMALL ROAD AND GUIDE SIGN DESINATION
- XX-X — LARGE GUIDE SIGN DESIGNATION
- DELINEATORS
- OBJECT MARKERS
- SOLAR POWERED ROADSIDE FLASHING BEACON ASSEMBLY (SPRFBA)

STATE OF TEXAS
MICHAEL W. MIDKIFF
75435
REGISTERED
PROFESSIONAL ENGINEER
12/5/11

NO.	DATE	REVISION DESCRIPTION	APP. BY

© 2011

Texas Department of Transportation

MACTEC
3520 EXECUTIVE CENTER DRIVE
SUITE 200
AUSTIN, TEXAS 78731
(512) 795-0360
REGISTRATION NUMBER: F-1784

SH 151
SIGNING LAYOUT LP 1604 BEGIN TO STA 543+00
(SHEET 9 OF 14)

FED. RD. DIV. NO.			SHEET NO.
			381
STATE	DIST.	COUNTY	
TEXAS	SA	BEXAR	
CONT.	SECT.	JOB	HIGHWAY NO.
2452	01	043	SH 151

p:\4760\0-0129\cad\sheet\15signl6.dgn 12/3/2011 6:46:29 PM mwmidkiff

SHEET SUMMARY OF ESTIMATED QUANTITIES			
ITEM#	DESCRIPTION	UNIT	QTY

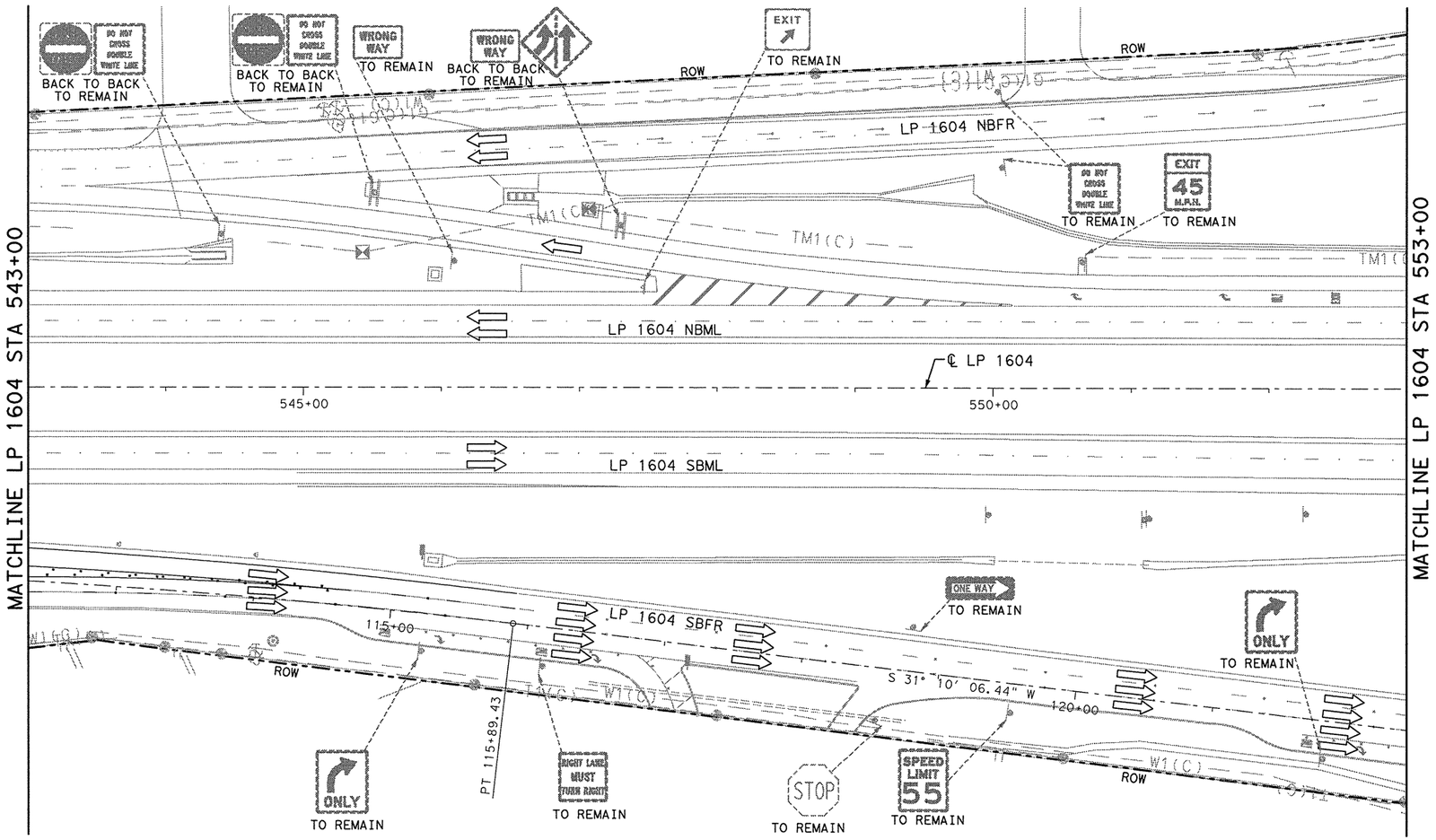

RIP-RAP APRONS			
TYPE OF MOUNT	EA	MULTIPLIED BY C.Y.	TOTAL C.Y.
SINGLE POST		0.8	—
MULTI-POST		1.5	—
CLASS "B" CONCRETE GRAND TOTAL			—

NOTES:

1. EXISTING SIGNS ARE SCREENED BACK AND ARE TO REMAIN AS IS UNLESS OTHERWISE NOTED.
2. ALL SIGN LOCATIONS ARE APPROXIMATE. EXACT LOCATIONS ARE TO BE STAKED BY THE CONTRACTOR AND APPROVED BY THE ENGINEER PRIOR TO CONSTRUCTION.
3. PAVEMENT MARKINGS ARE SHOWN FOR REFERENCE ONLY. SEE PAVEMENT MARKING SHEETS FOR DETAILS.
4. SEE LARGE SIGN SUMMARY AND THIS SHEET FOR LARGE SIGN QUANTITIES. SEE SMALL SIGN SUMMARY AND SMALL SIGN TALLY FOR SMALL SIGN QUANTITIES.
5. ALL STATIONING REFERENCES LP 1604 ℄.

LEGEND

- RIGHT OF WAY LINE
- PROPOSED ALIGNMENT
- EXIST TRAFFIC FLOW ARROW
- PROP TRAFFIC FLOW ARROW
- PROP SIGN POST
- EXIST SIGN POST
- XX-X — SMALL ROAD AND GUIDE SIGN DESINATION
- XX-X — LARGE GUIDE SIGN DESIGNATION
- DELINEATORS
- OBJECT MARKERS
- SOLAR POWERED ROADSIDE FLASHING BEACON ASSEMBLY (SPRFBA)

STATE OF TEXAS
MICHAEL W. MIDKIFF
75435
REGISTERED PROFESSIONAL ENGINEER
12/5/11

NO.	DATE	REVISION DESCRIPTION	APP. BY

© 2011

Texas Department of Transportation

MACTEC
3520 EXECUTIVE CENTER DRIVE
SUITE 200
AUSTIN, TEXAS 78731
(512) 795-0360
REGISTRATION NUMBER: F-1784

SH 151
SIGNING LAYOUT
LP 1604
STA 543+00 TO STA 553+00
(SHEET 10 OF 14)

FED. RD. DIV. NO.			SHEET NO.
			382
STATE	DIST.	COUNTY	
TEXAS	SA	BEXAR	
CONT.	SECT.	JOB	HIGHWAY NO.
2452	01	043	SH 151

p:\f160\0-0129\cad\sheet\15signs15.dgn 12/3/2011 6:46:36 PM mwmidk01f

SHEET SUMMARY OF ESTIMATED QUANTITIES			
ITEM#	DESCRIPTION	UNIT	QTY
0416	DRILL SHAFT (NON- REINFORCED) (12 IN)	LF	7
0432	RIPRAP (CONC) (CL B) (4")	CY	3.0
0636	ALUMINUM SIGNS (TY G)	SF	36.00
0644	INS SM RD SN SUP&AM TY 10BWG(1) SA(P)	EA	4
0644	INS SM RD SN SUP&AM TY 10BWG(1) SA(T)	EA	1
0644	INS SM RD SN SUP&AM TY S80(1) SA(T)	EA	1
0644	REMOVE SM RD SN SUP & AM	EA	1
0647	INSTALL LRSS (STRUCT STEEL)	LB	284
0658	INSTL OM ASSM (OM-2Z) (FLX)GND	EA	1

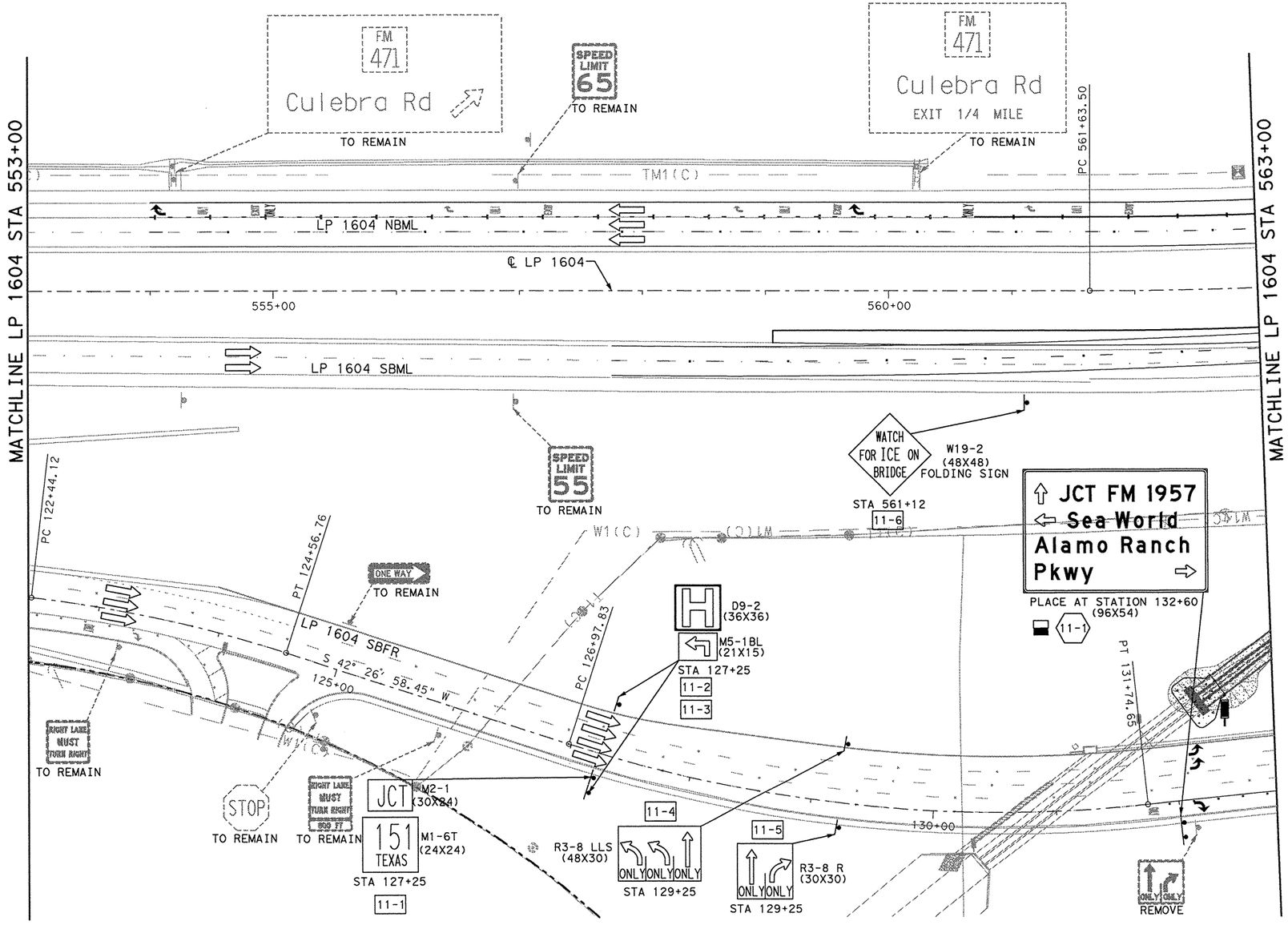

RIP-RAP APRONS			
TYPE OF MOUNT	EA	MULTIPLIED BY C.Y.	TOTAL C.Y.
SINGLE POST		0.8	—
MULTI-POST	2	1.5	3.0
CLASS "B" CONCRETE GRAND TOTAL			3.0

NOTES:

1. EXISTING SIGNS ARE SCREENED BACK AND ARE TO REMAIN AS IS UNLESS OTHERWISE NOTED.
2. ALL SIGN LOCATIONS ARE APPROXIMATE. EXACT LOCATIONS ARE TO BE STAKED BY THE CONTRACTOR AND APPROVED BY THE ENGINEER PRIOR TO CONSTRUCTION.
3. PAVEMENT MARKINGS ARE SHOWN FOR REFERENCE ONLY. SEE PAVEMENT MARKING SHEETS FOR DETAILS.
4. SEE LARGE SIGN SUMMARY AND THIS SHEET FOR LARGE SIGN QUANTITIES. SEE SMALL SIGN SUMMARY AND SMALL SIGN TALLY FOR SMALL SIGN QUANTITIES.
5. ALL STATIONING REFERENCES LP 1604 ℄.

LEGEND

- RIGHT OF WAY LINE
- PROPOSED ALIGNMENT
- EXIST TRAFFIC FLOW ARROW
- PROP TRAFFIC FLOW ARROW
- PROP SIGN POST
- EXIST SIGN POST
- XX-X SMALL ROAD AND GUIDE SIGN DESINATION
- XX-X LARGE GUIDE SIGN DESIGNATION
- DELINEATORS
- OBJECT MARKERS
- SOLAR POWERED ROADSIDE FLASHING BEACON ASSEMBLY (SPRFBA)

STATE OF TEXAS
MICHAEL W. MIDKIFF
75435
REGISTERED PROFESSIONAL ENGINEER
12/5/11

NO.	DATE	REVISION DESCRIPTION	APP. BY

© 2011

Texas Department of Transportation

MACTEC
3520 EXECUTIVE CENTER DRIVE
SUITE 200
AUSTIN, TEXAS 78731
(512) 795-0360

REGISTRATION NUMBER: F-1784

SH 151
SIGNING LAYOUT
LP 1604
STA 553+00 TO STA 563+00
(SHEET 11 OF 14)

FED. RD. DIV. NO.			SHEET NO.
			383
STATE	DIST.	COUNTY	
TEXAS	SA	BEXAR	
CONT.	SECT.	JOB	HIGHWAY NO.
2452	01	043	SH 151

p:\4750\0-0129\cad\sheet\15lsgn12.dgn 12/6/2011 8:59:12 AM mwmidkiff

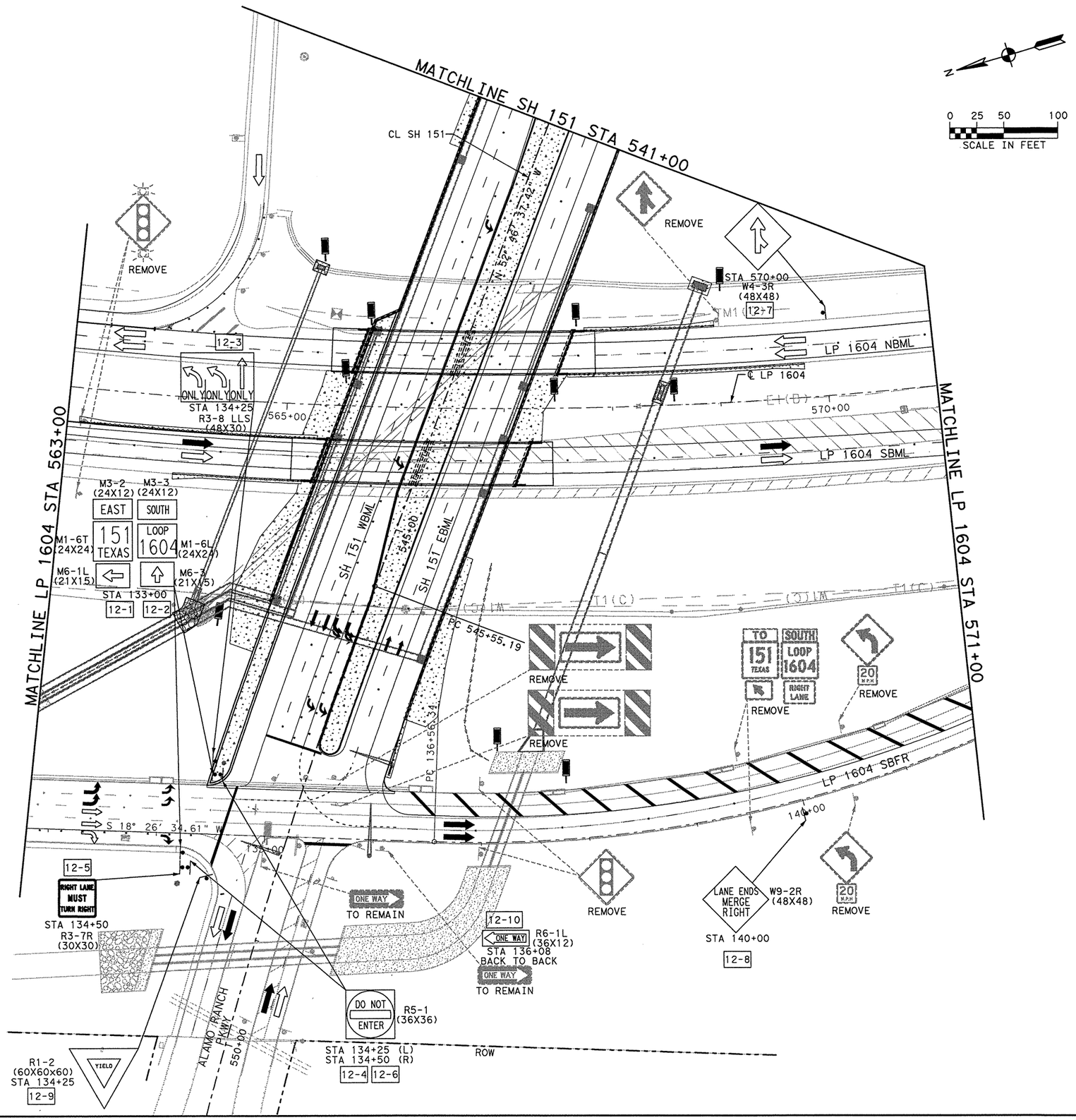

SHEET SUMMARY OF ESTIMATED QUANTITIES			
ITEM#	DESCRIPTION	UNIT	QTY
0644	INS SM RD SN SUP&AM TY 10BWG(1) SA(P)	EA	1
0644	INS SM RD SN SUP&AM TY 10BWG(1) SA(T)	EA	3
0644	INS SM RD SN SUP&AM TY 10BWG(1) SA(U)	EA	2
0644	INS SM RD SN SUP&AM TY S80(1) SA(T)	EA	3
0644	REMOVE SM RD SN SUP & AM	EA	11
0658	INSTL OM ASSM (OM-2Z) (FLX)GND	EA	6
0658	INSTL OM ASSM (OM-2Z) (FLX)SRF	EA	4

RIP-RAP APRONS			
TYPE OF MOUNT	EA	MULTIPLIED BY C.Y.	TOTAL C.Y.
SINGLE POST		0.8	—
MULTI-POST		1.5	—
CLASS "B" CONCRETE GRAND TOTAL			—

NOTES:

1. EXISTING SIGNS ARE SCREENED BACK AND ARE TO REMAIN AS IS UNLESS OTHERWISE NOTED.
2. ALL SIGN LOCATIONS ARE APPROXIMATE. EXACT LOCATIONS ARE TO BE STAKED BY THE CONTRACTOR AND APPROVED BY THE ENGINEER PRIOR TO CONSTRUCTION.
3. PAVEMENT MARKINGS ARE SHOWN FOR REFERENCE ONLY. SEE PAVEMENT MARKING SHEETS FOR DETAILS.
4. SEE LARGE SIGN SUMMARY AND THIS SHEET FOR LARGE SIGN QUANTITIES. SEE SMALL SIGN SUMMARY AND SMALL SIGN TALLY FOR SMALL SIGN QUANTITIES.
5. ALL STATIONING REFERENCES LP 1604 ℄.

LEGEND

- RIGHT OF WAY LINE
- PROPOSED ALIGNMENT
- EXIST TRAFFIC FLOW ARROW
- PROP TRAFFIC FLOW ARROW
- PROP SIGN POST
- EXIST SIGN POST
- XX-X SMALL ROAD AND GUIDE SIGN DESINATION
- XX-X LARGE GUIDE SIGN DESIGNATION
- DELINEATORS
- OBJECT MARKERS
- SOLAR POWERED ROADSIDE FLASHING BEACON ASSEMBLY (SPRFBA)

STATE OF TEXAS
MICHAEL W. MIDKIFF
75435
REGISTERED PROFESSIONAL ENGINEER
12/5/11

NO.	DATE	REVISION DESCRIPTION	APP. BY

© 2011

Texas Department of Transportation

MACTEC
3520 EXECUTIVE CENTER DRIVE
SUITE 200
AUSTIN, TEXAS 78731
(512) 795-0360

REGISTRATION NUMBER: F-1784

SH 151
SIGNING LAYOUT
LP 1604
STA 563+00 TO STA 571+00
(SHEET 12 OF 14)

FED. RD. DIV. NO.			SHEET NO.
			384
STATE	DIST.	COUNTY	
TEXAS	SA	BEXAR	
CONT.	SECT.	JOB	HIGHWAY NO.
2452	01	043	SH 151

p:\4760\0-0129\cad\sheet\151sgn08.dgn 12/6/2011 8:59:20 AM mwmidkiff

SHEET SUMMARY OF ESTIMATED QUANTITIES			
ITEM#	DESCRIPTION	UNIT	QTY
0644	INS SM RD SN SUP&AM TY 10BWG(1) SA(T)	EA	1
0644	REMOVE SM RD SN SUP & AM	EA	24
6007	REMOVING TRAFFIC SIGNALS	EA	2

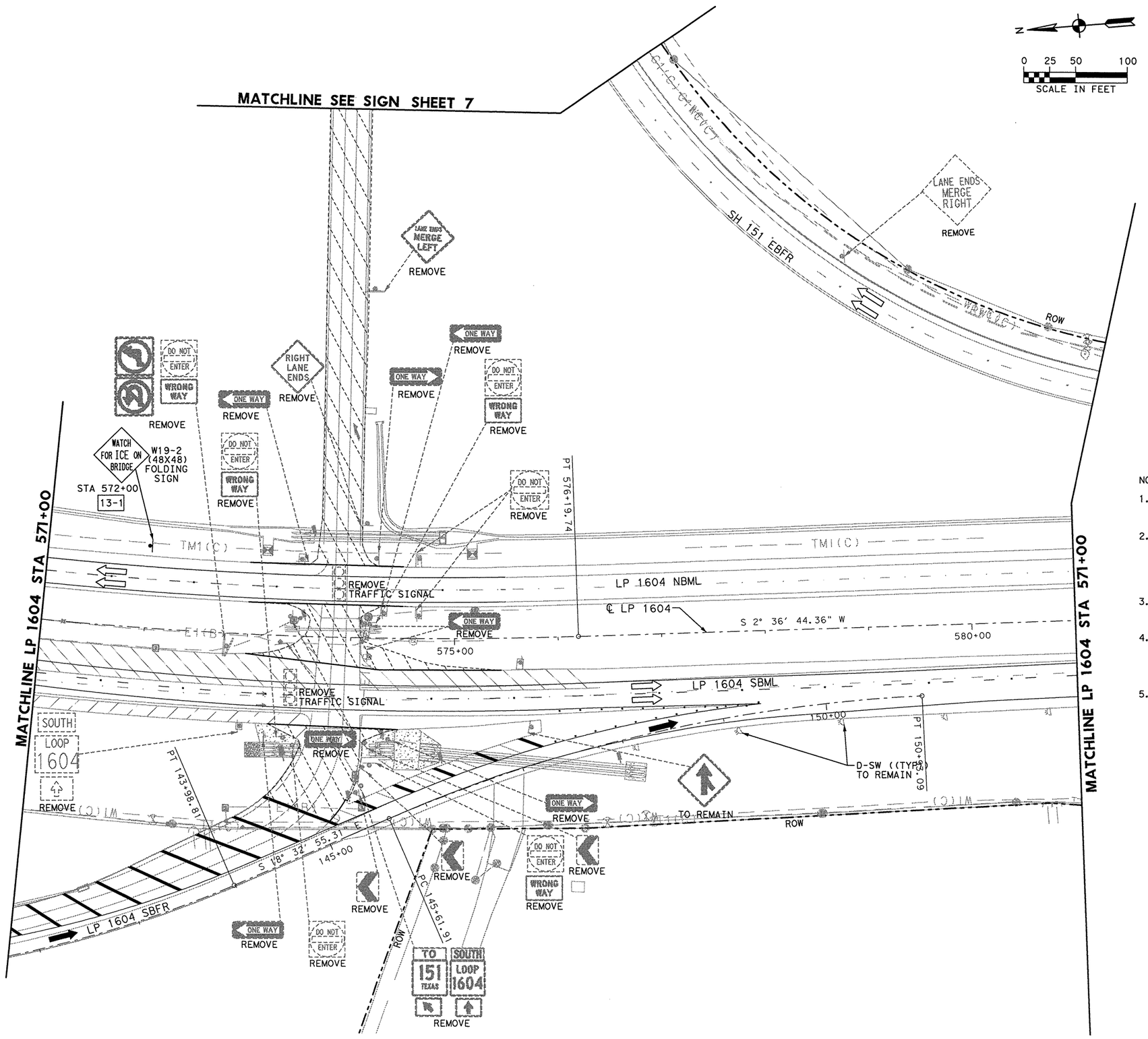

RIP-RAP APRONS			
TYPE OF MOUNT	EA	MULTIPLIED BY C.Y.	TOTAL C.Y.
SINGLE POST		0.8	—
MULTI-POST		1.5	—
CLASS "B" CONCRETE GRAND TOTAL			—

NOTES:

1. EXISTING SIGNS ARE SCREENED BACK AND ARE TO REMAIN AS IS UNLESS OTHERWISE NOTED.
2. ALL SIGN LOCATIONS ARE APPROXIMATE. EXACT LOCATIONS ARE TO BE STAKED BY THE CONTRACTOR AND APPROVED BY THE ENGINEER PRIOR TO CONSTRUCTION.
3. PAVEMENT MARKINGS ARE SHOWN FOR REFERENCE ONLY. SEE PAVEMENT MARKING SHEETS FOR DETAILS.
4. SEE LARGE SIGN SUMMARY AND THIS SHEET FOR LARGE SIGN QUANTITIES. SEE SMALL SIGN SUMMARY AND SMALL SIGN TALLY FOR SMALL SIGN QUANTITIES.
5. ALL STATIONING REFERENCES LP 1604 ℄.

LEGEND

- RIGHT OF WAY LINE
- PROPOSED ALIGNMENT
- EXIST TRAFFIC FLOW ARROW
- PROP TRAFFIC FLOW ARROW
- PROP SIGN POST
- EXIST SIGN POST
- XX-X SMALL ROAD AND GUIDE SIGN DESINATION
- XX-X LARGE GUIDE SIGN DESIGNATION
- DELINEATORS
- OBJECT MARKERS
- SOLAR POWERED ROADSIDE FLASHING BEACON ASSEMBLY (SPRFBA)

STATE OF TEXAS
MICHAEL W. MIDKIFF
75435
REGISTERED PROFESSIONAL ENGINEER
12/5/11

NO.	DATE	REVISION DESCRIPTION	APP. BY

© 2011

Texas Department of Transportation

MACTEC
3520 EXECUTIVE CENTER DRIVE
SUITE 200
AUSTIN, TEXAS 78731
(512) 795-0360

REGISTRATION NUMBER: F-1784

SH 151
SIGNING LAYOUT
LP 1604
STA 571+00 TO STA 581+00
(SHEET 13 OF 14)

FED. RD. DIV. NO.			SHEET NO.
			385
STATE	DIST.	COUNTY	
TEXAS	SA	BEXAR	
CONT.	SECT.	JOB	HIGHWAY NO.
2452	01	043	SH 151

p:\4760\0-0129\cad\sheet\151sgn09.dgn 12/3/2011 6:51:40 PM mwmidkiff

SHEET SUMMARY OF ESTIMATED QUANTITIES			
ITEM#	DESCRIPTION	UNIT	QTY
0644	INS SM RD SN SUP&AM TY 10BWG(1) SA(P)	EA	2
0644	REMOVE SM RD SN SUP & AM	EA	2

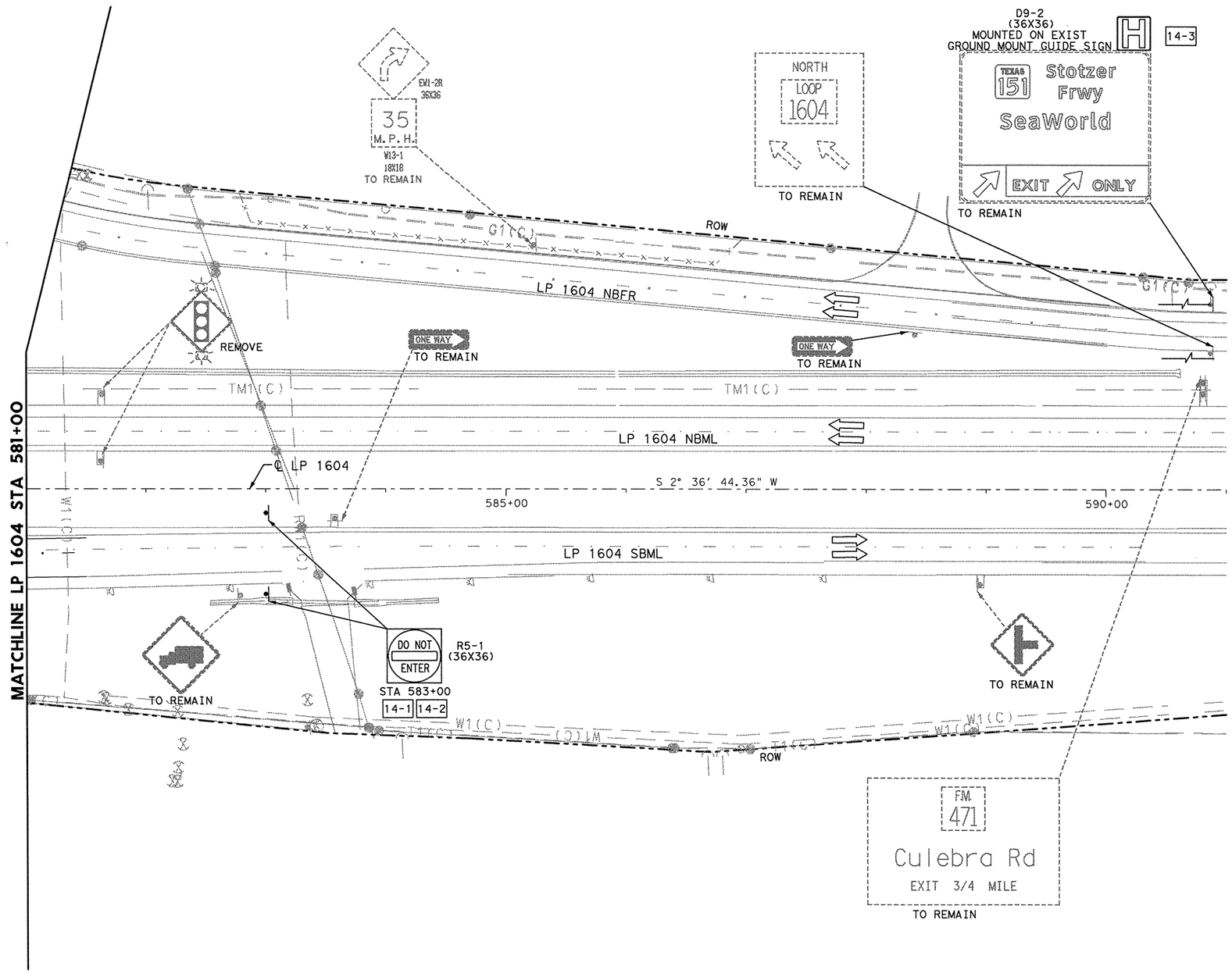

0 25 50 100
SCALE IN FEET

RIP-RAP APRONS			
TYPE OF MOUNT	EA	MULTIPLIED BY C.Y.	TOTAL C.Y.
SINGLE POST		0.8	—
MULTI-POST		1.5	—
CLASS "B" CONCRETE GRAND TOTAL			—

NOTES:

1. EXISTING SIGNS ARE SCREENED BACK AND ARE TO REMAIN AS IS UNLESS OTHERWISE NOTED.
2. ALL SIGN LOCATIONS ARE APPROXIMATE. EXACT LOCATIONS ARE TO BE STAKED BY THE CONTRACTOR AND APPROVED BY THE ENGINEER PRIOR TO CONSTRUCTION.
3. PAVEMENT MARKINGS ARE SHOWN FOR REFERENCE ONLY. SEE PAVEMENT MARKING SHEETS FOR DETAILS.
4. SEE LARGE SIGN SUMMARY AND THIS SHEET FOR LARGE SIGN QUANTITIES. SEE SMALL SIGN SUMMARY AND SMALL SIGN TALLY FOR SMALL SIGN QUANTITIES.
5. ALL STATIONING REFERENCES LP 1604 ℄.

LEGEND

- RIGHT OF WAY LINE
- PROPOSED ALIGNMENT
- EXIST TRAFFIC FLOW ARROW
- PROP TRAFFIC FLOW ARROW
- PROP SIGN POST
- EXIST SIGN POST
- XX-X SMALL ROAD AND GUIDE SIGN DESINATION
- XX-X LARGE GUIDE SIGN DESIGNATION
- DELINEATORS
- OBJECT MARKERS
- SOLAR POWERED ROADSIDE FLASHING BEACON ASSEMBLY (SPRFBA)

STATE OF TEXAS
MICHAEL W. MIDKIFF
75435
REGISTERED PROFESSIONAL ENGINEER
12/5/11

NO.	DATE	REVISION DESCRIPTION	APP. BY

© 2011

Texas Department of Transportation

MACTEC
3520 EXECUTIVE CENTER DRIVE
SUITE 200
AUSTIN, TEXAS 78731
(512) 795-0360
REGISTRATION NUMBER: F-1784

SH 151
SIGNING LAYOUT
LP 1604
STA 581+00 TO END
(SHEET 14 OF 14)

FED. RD. DIV. NO.			SHEET NO.
			386
STATE	DIST.	COUNTY	
TEXAS	SA	BEXAR	
CONT.	SECT.	JOB	HIGHWAY NO.
2452	01	043	SH 151

p:\4760ND-0129\cad\sheet\51sgn13.dgn 12/3/2011 6:51:47 PM mwmidkiff

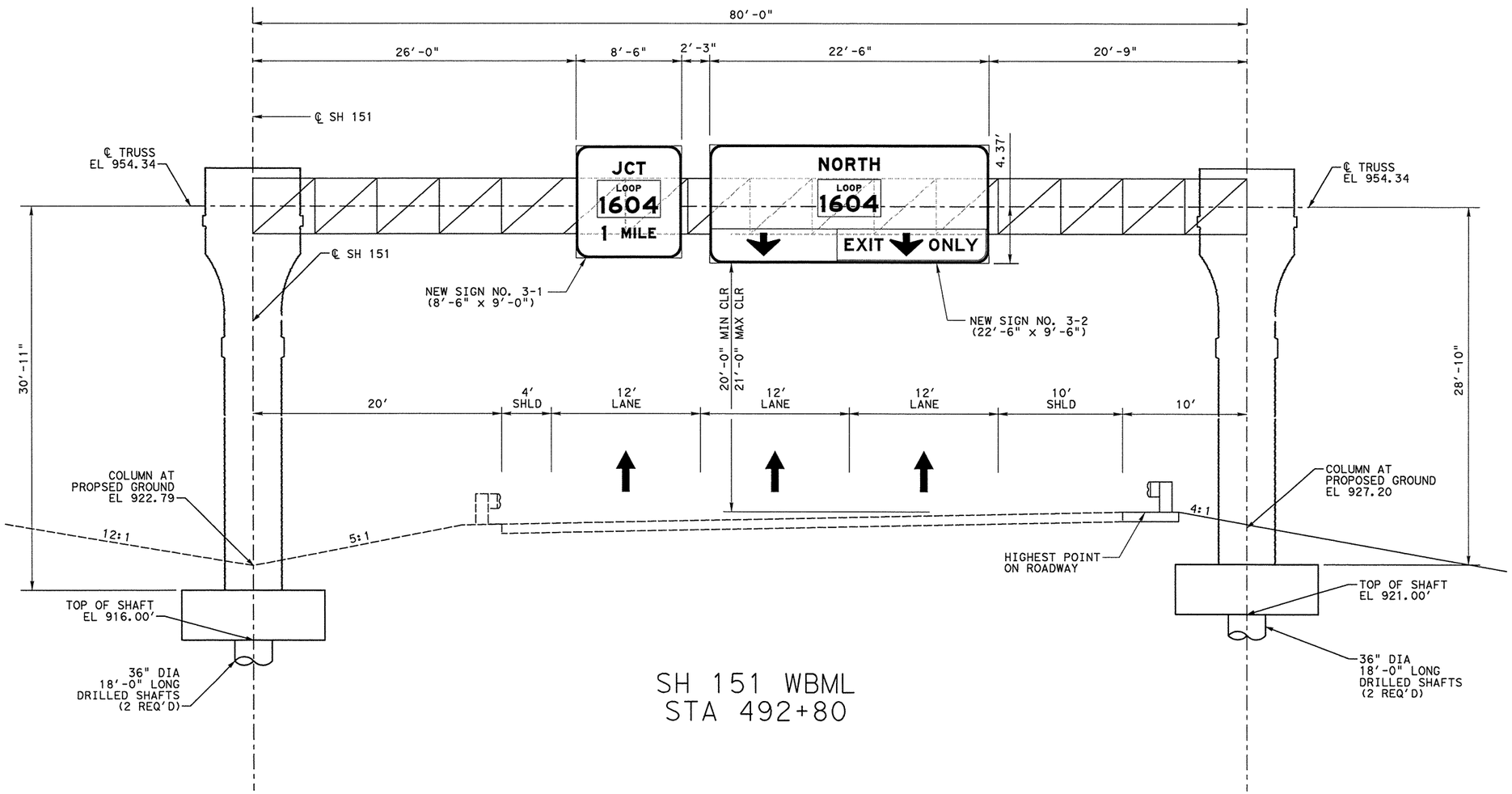

STATE OF TEXAS
MICHAEL W. MIDKIFF
75435
REGISTERED PROFESSIONAL ENGINEER

12/5/11

NO.	DATE	REVISION DESCRIPTION	APP. BY

© 2011

Texas Department of Transportation

MACTEC
3520 EXECUTIVE CENTER DRIVE
SUITE 200
AUSTIN, TEXAS 78731
(512) 795-0360

REGISTRATION NUMBER: F-1784

SH 151

SIGNING STRUCTURE ELEVATIONS

(SHEET 1 OF 2)

FED. RD. DIV. NO.			SHEET NO.
			387
STATE	DIST.	COUNTY	
TEXAS	SA	BEXAR	
CONT.	SECT.	JOB	HIGHWAY NO.
2452	01	043	SH 151

12/3/2011 6:47:10 PM mwmidkiff

p:\4760\0-0129\cad\sheet\151sgn10.dgn

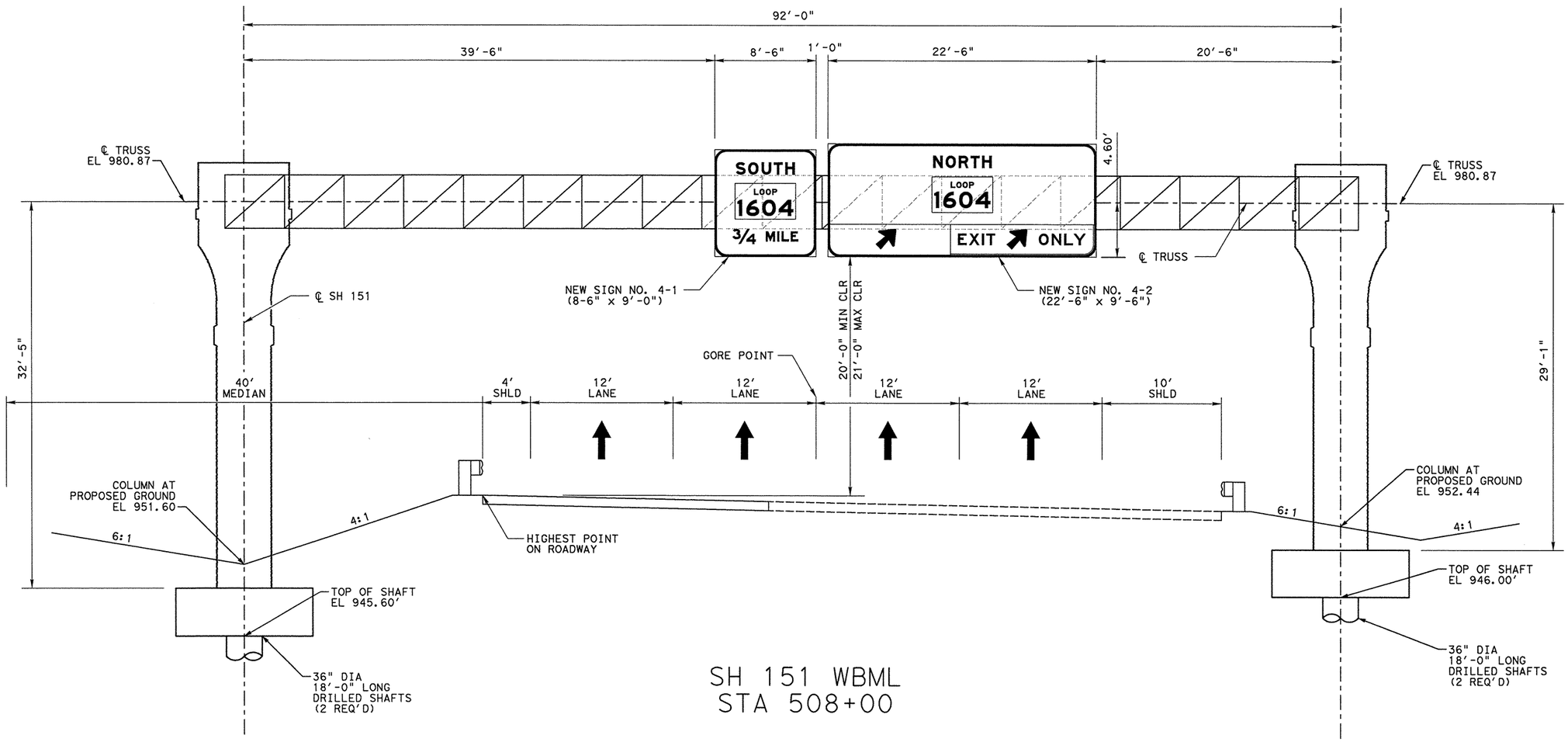

SH 151 WBML
STA 508+00

STATE OF TEXAS
MICHAEL W. MIDKIFF
75435
REGISTERED
PROFESSIONAL ENGINEER
12/5/11

NO.	DATE	REVISION DESCRIPTION	APP. BY

© 2011

Texas Department of Transportation

MACTEC
3520 EXECUTIVE CENTER DRIVE
SUITE 200
AUSTIN, TEXAS 78731
(512) 795-0360

REGISTRATION NUMBER: F-1784

SH 151

SIGNING STRUCTURE ELEVATIONS

(SHEET 2 OF 2)

FED. RD. DIV. NO.			SHEET NO.
			388
STATE	DIST.	COUNTY	
TEXAS	SA	BEXAR	
CONT.	SECT.	JOB	HIGHWAY NO.
2452	01	043	SH 151

12/3/2011 6:47:12 PM mwmidkiff

p:\4760\10-0129\cad\sheet\151signii.dgn

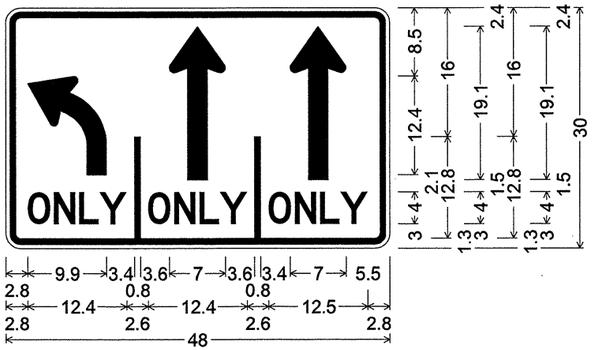

R3-8LSS_48x30;
1.9" Radius, 0.8" Border, 0.5" Indent, Black on White;
L ir=4.25, s=2.5; [ONLY] D 50% spacing;
S h=19.125, s=2.5;
[ONLY] D 50% spacing;
S h=19.125, s=2.5;
[ONLY] D 50% spacing;

SIGN NO. 8-1

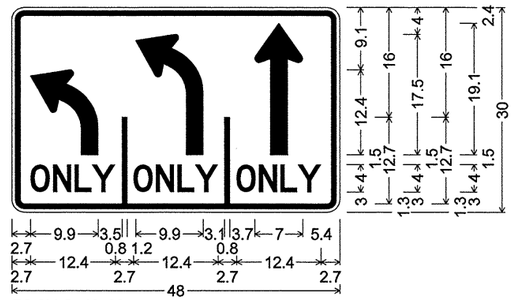

R3-8LLS_48x30;
1.9" Radius, 0.8" Border, 0.5" Indent, Black on White;
L ir=4.25, s=2.5; [ONLY] D 50% spacing;
L ir=4.25, s=2.5; [ONLY] D 50% spacing;
S h=19.125, s=2.5;
[ONLY] D 50% spacing;

SIGN NOS. 8-4, 11-4, 12-3

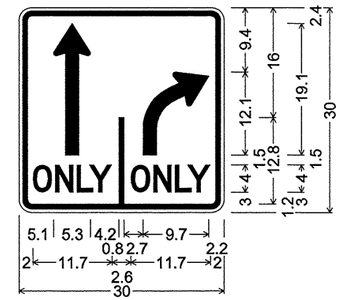

R3-8LS(1)_30x30;
1.9" Radius, 0.8" Border, 0.5" Indent, Black on White;
L ir=4.5, s=2;
[ONLY] D 50% spacing;
S h=19.125, s=2;
[ONLY] D 50% spacing;

SIGN NO. 11-5

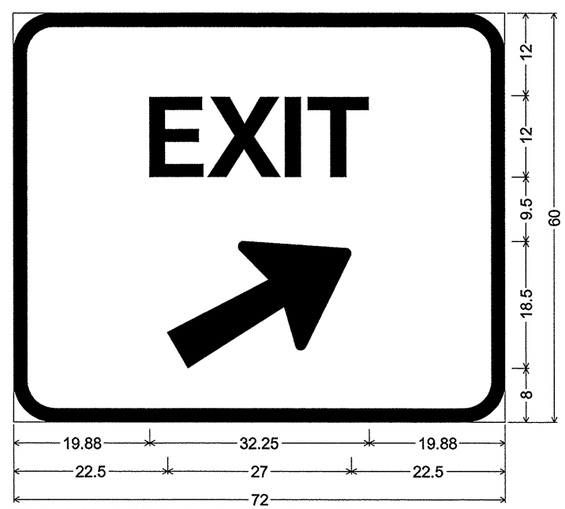

E5-1_72x60; 6.00" Radius, 2.00" Border, White on Green;
[EXIT] ClearviewHwy-6-W; Arrow A-2 - 29.25" 30°;

LARGE SIGN NO. 4-3

STATE OF TEXAS
MICHAEL W. MIDKIFF
75435
REGISTERED
PROFESSIONAL ENGINEER
12/5/11

NO.	DATE	REVISION DESCRIPTION	APP. BY

© 2011

Texas Department of Transportation

MACTEC
3520 EXECUTIVE CENTER DRIVE
SUITE 200
AUSTIN, TEXAS 78731
(512) 795-0360

REGISTRATION NUMBER: F-1784

SH 151

SIGN DETAILS

(SHEET 1 OF 3)

FED. RD. DIV. NO.			SHEET NO.
			389
STATE	DIST.	COUNTY	
TEXAS	SA	BEXAR	
CONT.	SECT.	JOB	HIGHWAY NO.
2452	01	043	SH 151

p:\4760\0-0129\cad\sheet\15det_sgn01a.dgn 12/6/2011 9:10:50 AM mwmidkiff

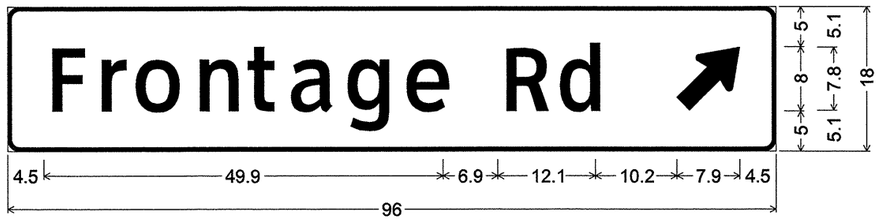

D1-1 6in 45 RT; 1.5" Radius, 0.5" Border, White on Green;
[Frontage Rd] ClearviewHwy-3-W; Standard Arrow Custom 10.0" X 6.1" 45°;
SIGN NO. 7-1

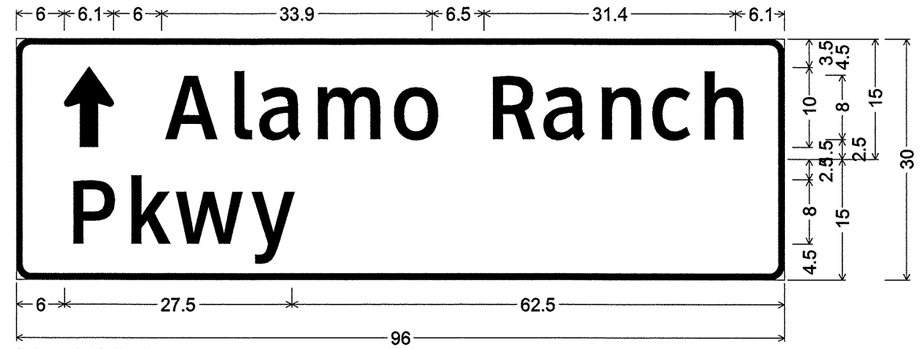

D1-2; 1.9" Radius, 0.8" Border, White on Green;
Standard Arrow Custom 10.0" X 6.1" 90°;
[Alamo Ranch] ClearviewHwy-3-W 79% spacing;
[Pkwy] ClearviewHwy-3-W 79% Spacing;
SIGN NO. 8-3

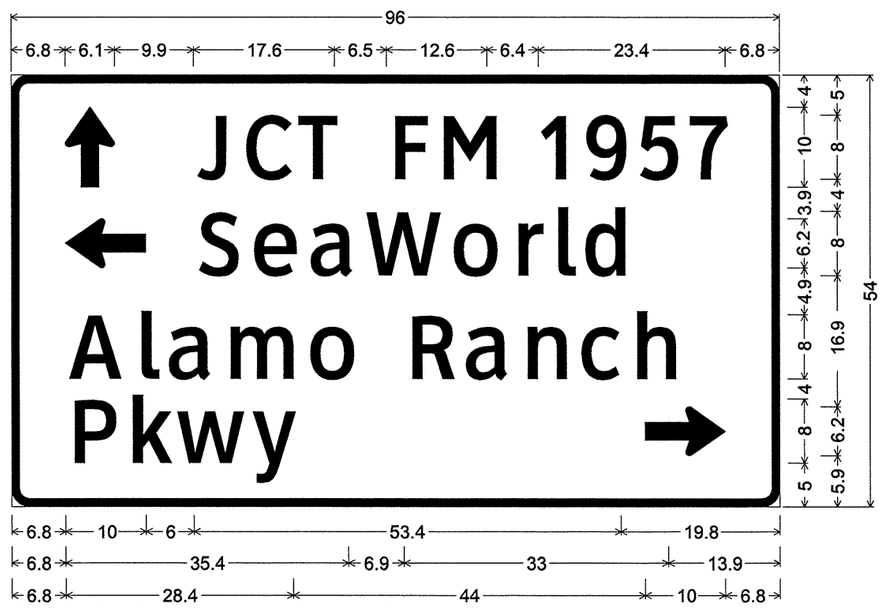

D1-3; 2.3" Radius, 1.0" Border, White on Green;
Standard Arrow Custom 10.0" X 6.1" 90°; [JCT FM 1957] ClearviewHwy-3-W;
Standard Arrow Custom 10.0" X 6.1" 180°; [SeaWorld] ClearviewHwy-3-W;
[Alamo Ranch] ClearviewHwy-3-W;
[Pkwy] ClearviewHwy-3-W specified length; Standard Arrow Custom 10.0" X 6.1" 0°;
LARGE SIGN NO. 11-1

STATE OF TEXAS
MICHAEL W. MIDKIFF
75435
REGISTERED
PROFESSIONAL ENGINEER
12/5/11

NO.	DATE	REVISION DESCRIPTION	APP. BY

© 2011

Texas Department of Transportation

MACTEC
3520 EXECUTIVE CENTER DRIVE
SUITE 200
AUSTIN, TEXAS 78731
(512) 795-0360

REGISTRATION NUMBER: F-1784

SH 151

SIGN DETAILS

(SHEET 2 OF 3)

FED. RD. DIV. NO.			SHEET NO.
			389A
STATE	DIST.	COUNTY	
TEXAS	SA	BEXAR	
CONT.	SECT.	JOB	HIGHWAY NO.
2452	01	043	SH 151

12/6/2011 9:10:53 AM mwmidkiff
p:\4160\0-0129\cad\sheet\15det_sgn01.dgn

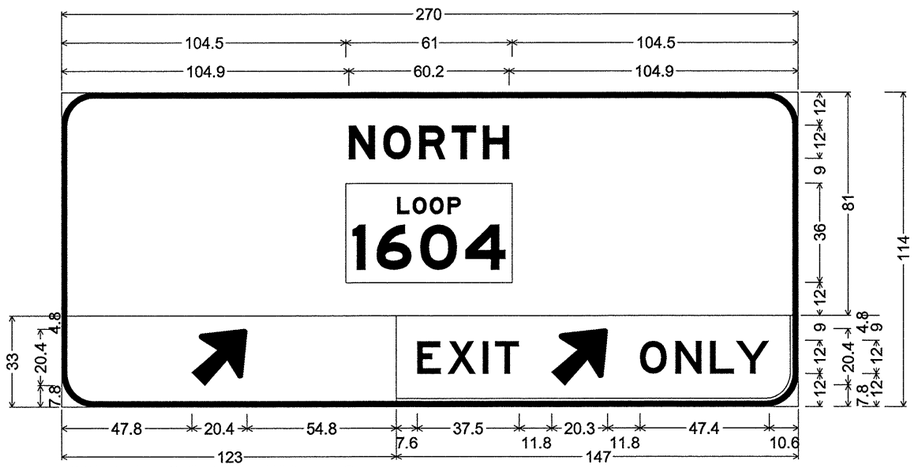

12.0" Radius, 2.0" Border, White on Green;
[NORTH] ClearviewHwy-5-W-R; State Highway 1604 M1-6L4B;
12.0" Radius, 2.0" Border, White on Green;
Arrow B-3 - 25.0" 45°;
E11-1e; 1.0" Inner border Green, 12.0" Radius, 2.0" Outer border, White on Yellow;
[EXIT] Black ClearviewHwy-5-W-R; Arrow B-3 - 25.0" 45° Black; [ONLY] Black ClearviewHwy-5-W-R;

LARGE SIGN NO. 4-2

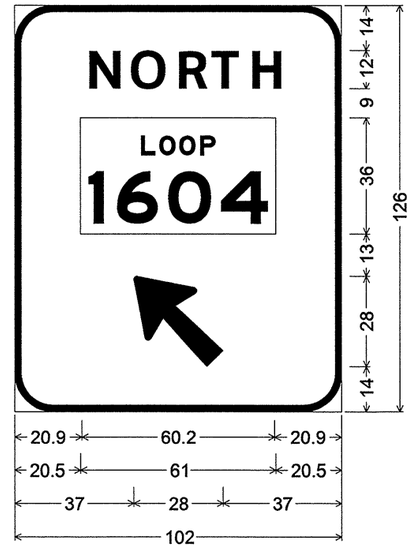

12.0" Radius, 2.0" Border, White on Green;
[NORTH] ClearviewHwy-5-W specified length;
State Highway 1604 M1-6L4B;
Arrow A-3 - 35.6" 135°;

LARGE SIGN NO. 7-1

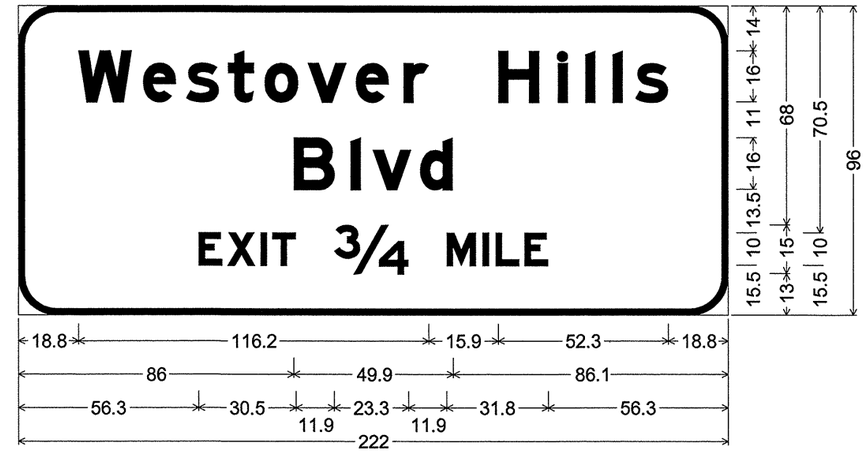

12.0" Radius, 2.0" Border, White on Green;
[Westover Hills] ClearviewHwy-5-W-R; [Blvd] ClearviewHwy-5-W-R;
[EXIT ¾ MILE] ClearviewHwy-5-W-R;

LARGE SIGN NO. 6-1

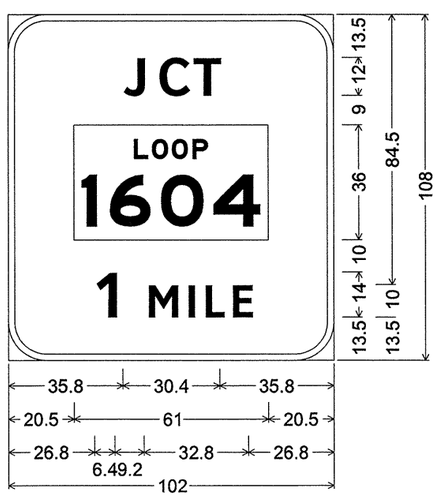

12.0" Radius, 2.0" Border, White on Green;
[JCT] ClearviewHwy-5-W-R;
State Highway 1604 M1-6L4B;
[1 MILE] ClearviewHwy-5-W-R;

LARGE SIGN NO. 3-1

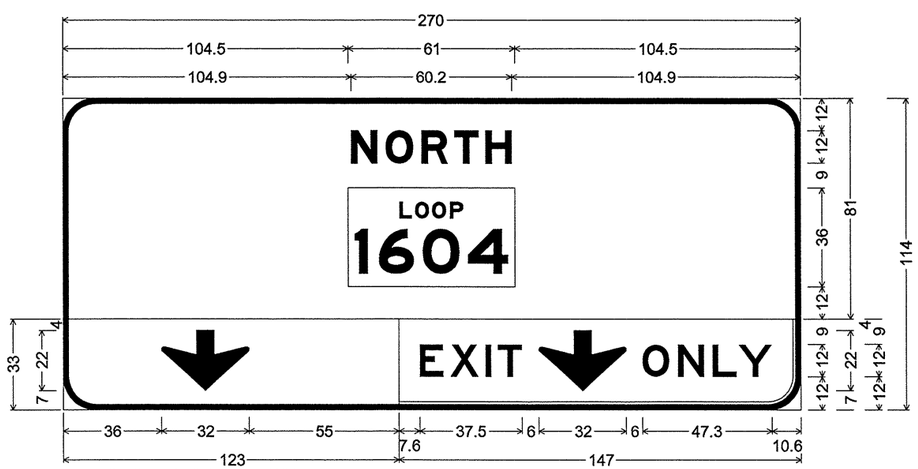

12.0" Radius, 2.0" Border, White on Green;
[NORTH] ClearviewHwy-5-W-R; State Highway 1604 M1-6L4B;
12.0" Radius, 2.0" Border, White on Green;
Down Arrow C - 22.0" 270°;
E11-1d; 1.0" Inner border Green, 12.0" Radius, 2.0" Outer border, White on Yellow;
[EXIT] Black ClearviewHwy-3-R; Down Arrow C - 22.0" 270° Black; [ONLY] Black ClearviewHwy-3-R;

LARGE SIGN NO. 3-2

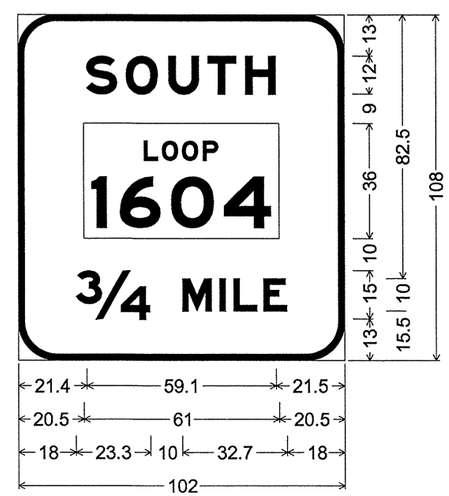

12.0" Radius, 2.0" Border, White on Green;
[SOUTH] ClearviewHwy-5-W-R; State Highway 1604 M1-6L4B;
[¾] ClearviewHwy-5-W-R;
[MILE] ClearviewHwy-5-W-R;

LARGE SIGN NO. 4-1

STATE OF TEXAS
MICHAEL W. MIDKIFF
75435
REGISTERED
PROFESSIONAL ENGINEER
12/5/11

NO.	DATE	REVISION DESCRIPTION	APP. BY

© 2011

Texas Department of Transportation

MACTEC
3520 EXECUTIVE CENTER DRIVE
SUITE 200
AUSTIN, TEXAS 78731
(512) 795-0360
REGISTRATION NUMBER: F-1784

SH 151

SIGN DETAILS

(SHEET 3 OF 3)

FED. RD. DIV. NO.			SHEET NO.
			390
STATE	DIST.	COUNTY	
TEXAS	SA	BEXAR	
CONT.	SECT.	JOB	HIGHWAY NO.
2452	01	043	SH 151

p:\4780\0-0129\cad\sheet\15\det_sgn02.dgn 12/6/2011 9:10:55 AM mwmidkiff

K\12452-01-043\UTILITY\Slide1_SEA.dgn 16 Feb 2011 10:58:53 AM T:xDOT Projects

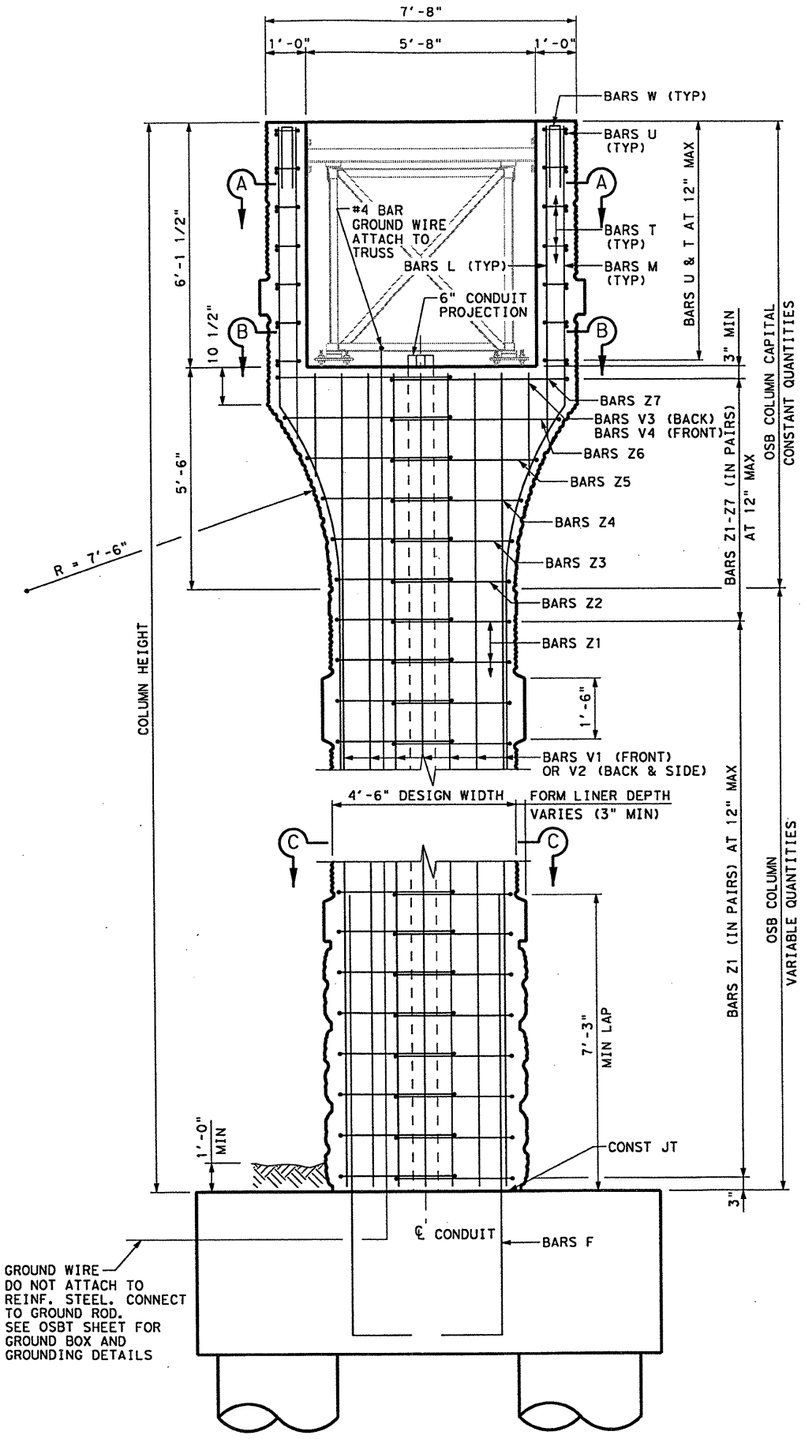

BACK ELEVATION

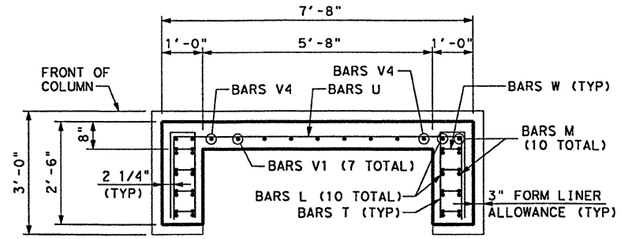

SECTION A-A

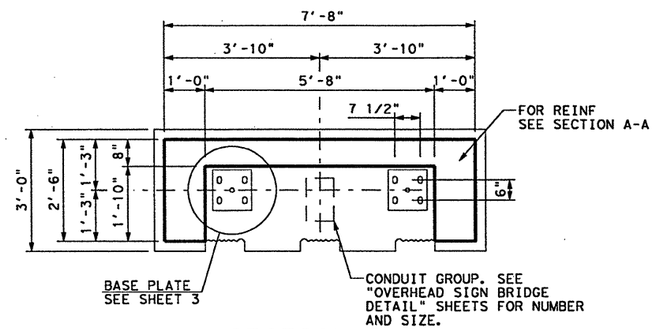

SECTION B-B

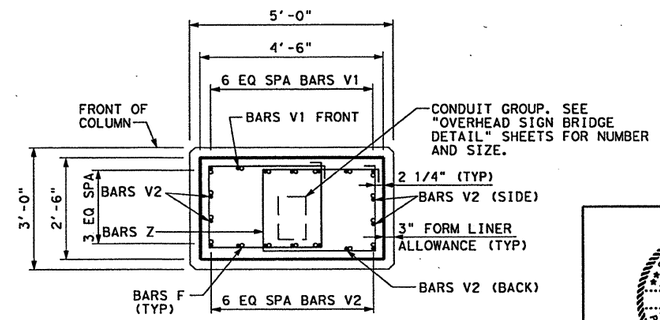

SECTION C-C

NOTES:

1. COLUMN AND FOUNDATION DESIGN IS BASED ON STANDARD TxDOT OSB DESIGN SHOWN ON OSB-Z3 FOR 95'-0" SPAN. OVERHEAD SIGN BRIDGES TRUSS SHALL BE 4'-6" x 4'-6".
2. ALL REINFORCING STEEL SHALL BE ASTM A615 GRADE 60.
3. ALL CONCRETE SHALL BE CLASS "C" F'c=3,600 psi, 2" CLEAR COVER UNLESS OTHERWISE NOTED.
4. IT IS THE CONTRACTORS RESPONSIBILITY TO VERIFY ALL DIMENSIONS AND ELEVATIONS IN THE FIELD PRIOR TO ORDERING MATERIALS.
5. SEE HILL COUNTRY REGION OVERHEAD SIGN COLUMN AESTHETIC TREATMENT SHEETS HC28 FOR AESTHETIC DETAILS.
6. ALL DIMENSIONS OF THE REINFORCING BARS ARE TO ℄ OF BARS UNLESS OTHERWISE NOTED.
7. CHAMFER ALL EXPOSED CORNERS 3/4".
8. ANCHOR BOLT ASSEMBLIES AND ALL STEEL HARDWARE, INCLUDING CONDUIT GROUNDING DEVICES ARE INCIDENTAL TO ITEM 650 OVERHEAD SIGN SUPPORTS.
9. ALL ANCHOR BOLTS SHALL BE A193-B7.
10. ALL STEEL HARDWARE SHALL BE GALVANIZED.
11. COMPONENTS OF THE STRUCTURE DESIGNED ACCORDING TO AASHTO LRFD BRIDGE DESIGN SPECIFICATIONS AND/OR AASHTO STANDARD SPECIFICATIONS FOR STRUCTURAL SUPPORTS FOR HIGHWAY SIGNS, LUMINAIRES AND TRAFFIC SIGNALS.
12. CONCRETE COLUMNS ARE DESIGNED FOR THE EQUIVALENT AREA OF A 10'-0" DEEP SIGN PANEL OVER 100% OF THE SPAN LENGTH. DESIGN INCLUDES 3 POUNDS PER FOOT SQUARED FOR SIGN PANEL AND 20 POUNDS PER FOOT FOR LIGHTS AND 50 POUNDS PER FOOT FOR WALKWAYS OVER 100% OF THE SPAN LENGTH.

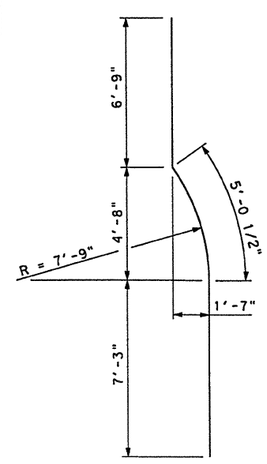

BARS M (#10)

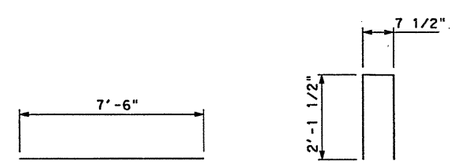

BARS L (#10) BARS T (#5)

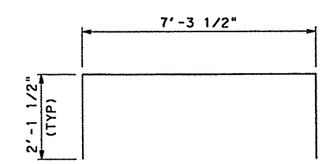

BARS U (#5)

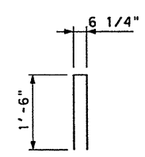

BARS W (#4)

COLUMN HEIGHT-(0'-2")	BARS V1
COLUMN HEIGHT-(6'-3 1/2")	BARS V2
2'-7 1/2"	BARS V3
8'-9"	BARS V4

BARS V (#10)

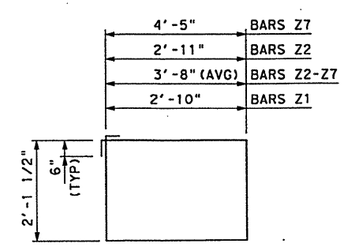

BARS Z (#5)

MD NURUL AMIN
100962
LICENSED PROFESSIONAL ENGINEER
STATE OF TEXAS
SEA REG NO. F-199
02/16/2011

NO.	DATE	REVISION DESCRIPTION	APP. BY

© 2011

Texas Department of Transportation

MACTEC
3520 EXECUTIVE CENTER DRIVE
SUITE 200
AUSTIN, TEXAS 78731
(512) 795-0360
REGISTRATION NUMBER: F-1784

STRUCTURAL ENGINEERING ASSOCIATES, INC.
CONSULTING ENGINEERS
SAN ANTONIO, TEXAS
REGISTRATION NUMBER: F-199

SH 151

OVERHEAD SIGN BRIDGE COLUMN DETAILS

(SHEET 1 OF 4)

FED. RD. DIV. NO.			SHEET NO. 341
STATE	DIST.	COUNTY	
TEXAS	SA	BEXAR	
CONT.	SECT.	JOB	HIGHWAY NO.
2452	01	043	SH 151

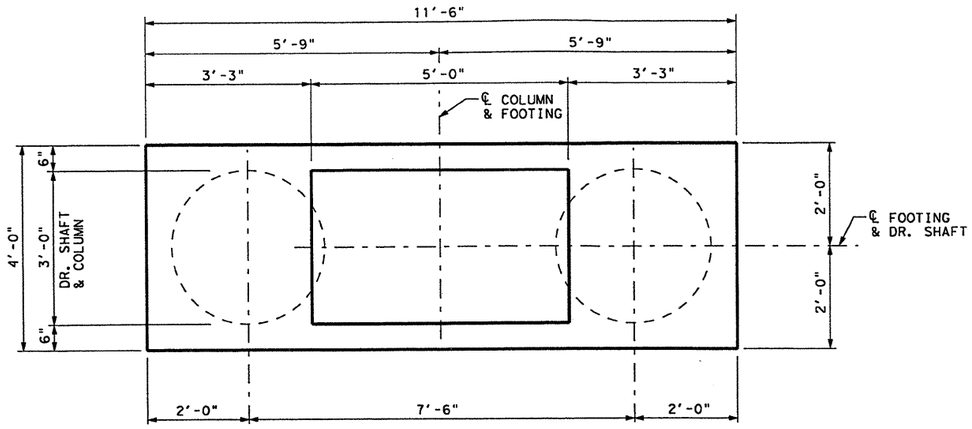

FOOTING PLAN

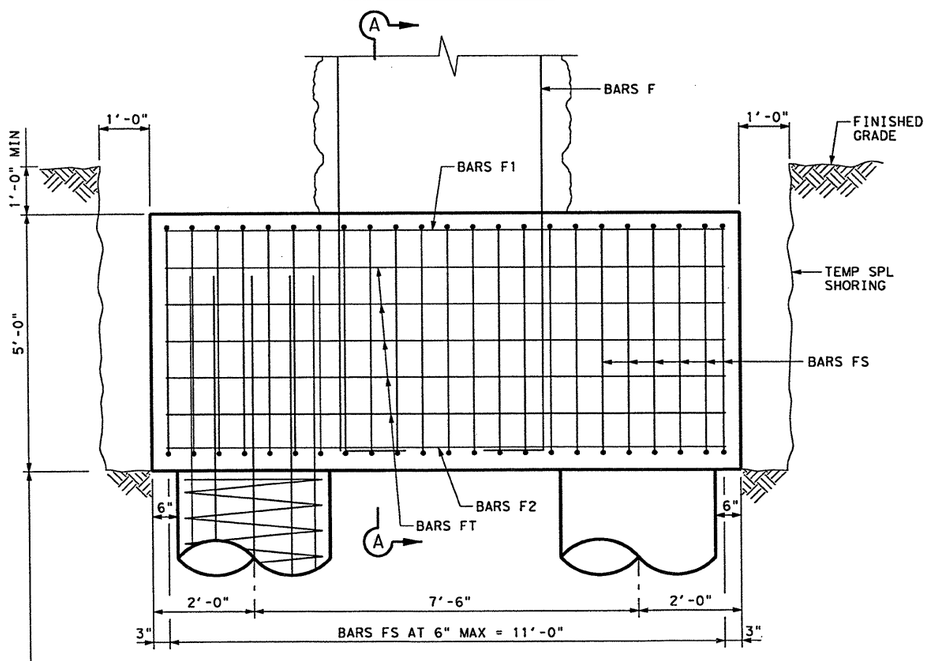

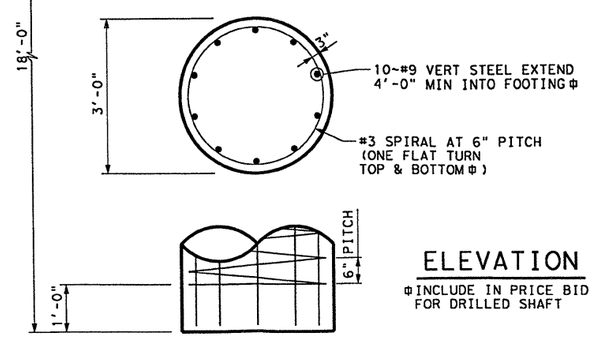

ELEVATION

⌀ INCLUDE IN PRICE BID FOR DRILLED SHAFT

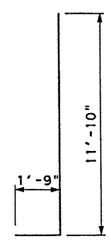

BARS F (#10)

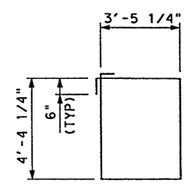

BARS FS (#5)

ESTIMATED QUANTITIES FOR ONE FOOTING				
BARS	NO.	SIZE	LENGTH	WEIGHT (LBS)
F	18	#10	13'-7"	1052
F1	6	#11	11'-2"	356
F2	6	#11	11'-2"	356
FS	23	#5	16'-8"	400
FT	10	#5	11'-2"	116
REINF. STEEL (LBS)*				2,280
CL C CONC. (SIGN FOOTING) (CY)*				8.6
TEMPORARY SPL SHORING (SF)*				234

* FOR CONTRACTORS INFORMATION ONLY.

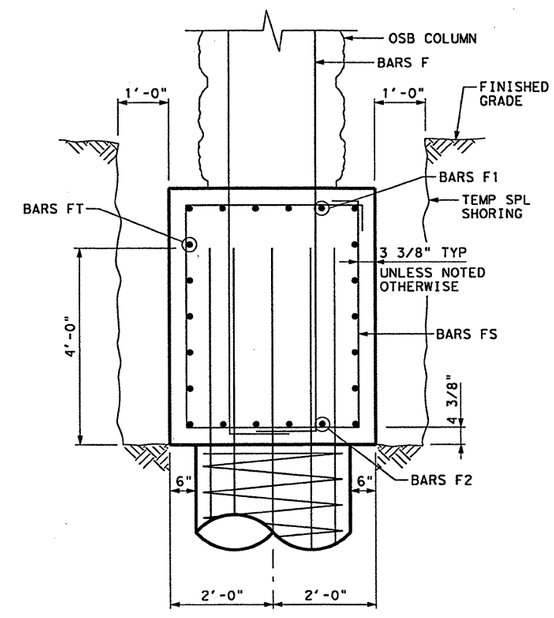

SECTION A-A

STATE OF TEXAS
MD NURUL AMIN
100962
LICENSED PROFESSIONAL ENGINEER
SEA REG NO. F-199
02/16/2011

NO.	DATE	REVISION DESCRIPTION	APP. BY

© 2011

Texas Department of Transportation

MACTEC
3520 EXECUTIVE CENTER DRIVE
SUITE 200
AUSTIN, TEXAS 78731
(512) 795-0360
REGISTRATION NUMBER: F-1784

SEA STRUCTURAL ENGINEERING ASSOCIATES, INC.
CONSULTING ENGINEERS
SAN ANTONIO, TEXAS
REGISTRATION NUMBER: F-199

SH 151

OVERHEAD SIGN BRIDGE COLUMN DETAILS

(SHEET 2 OF 4)

FED. RD. DIV. NO.			SHEET NO.
			392
STATE	DIST.	COUNTY	
TEXAS	SA	BEXAR	
CONT.	SECT.	JOB	HIGHWAY NO.
2452	01	043	SH 151

K:\2452-01-043\UTILITY\15idel_SEA02.dgn 16 Feb 2011 10:58:35 AM TxDOT Projects

K\2452-01-043\UTILITY\Sidel_SEA03.dgn 16 Feb 2011 10:58:12 AM TxDOT Projects

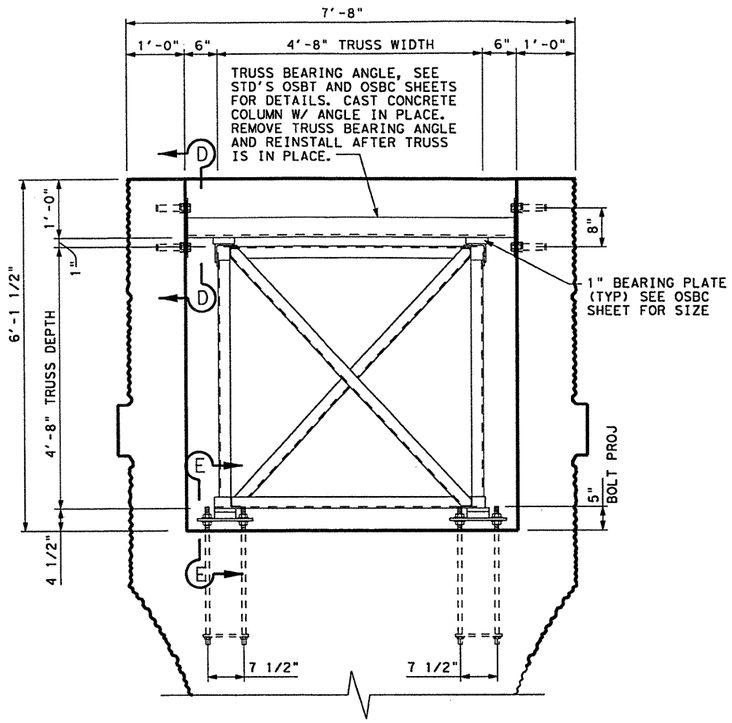

TRUSS ELEVATION

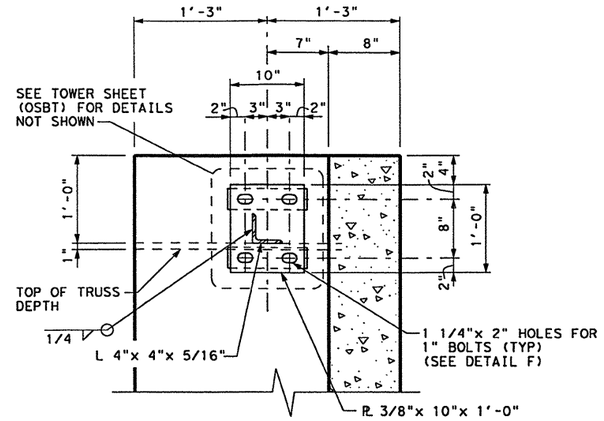

SECTION D-D

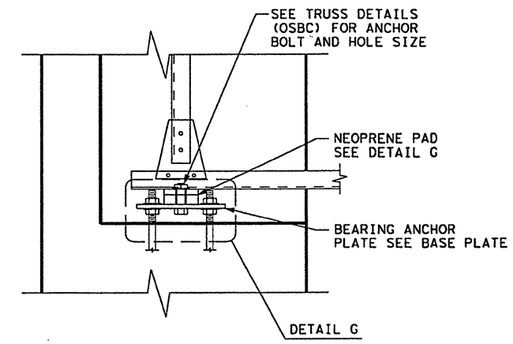

SECTION E-E

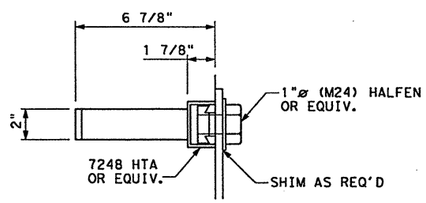

DETAIL F

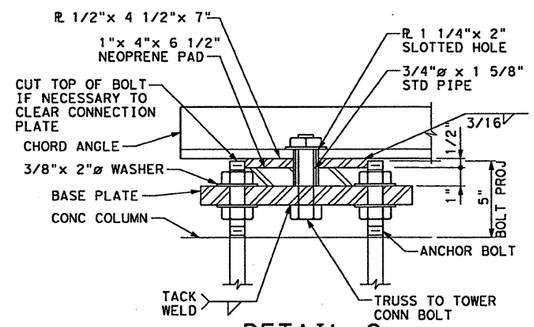

DETAIL G

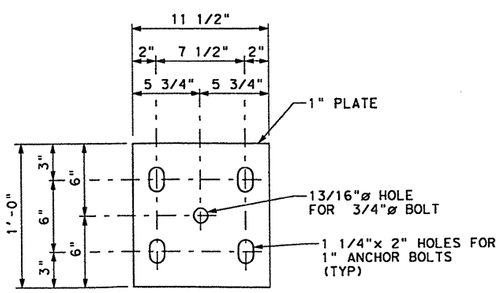

BASE PLATE

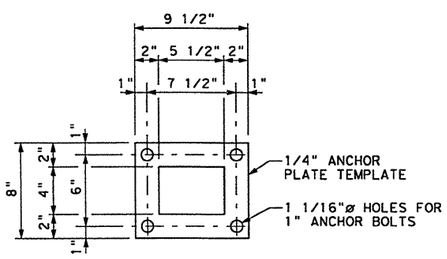

ANCHOR PLATE TEMPLATE

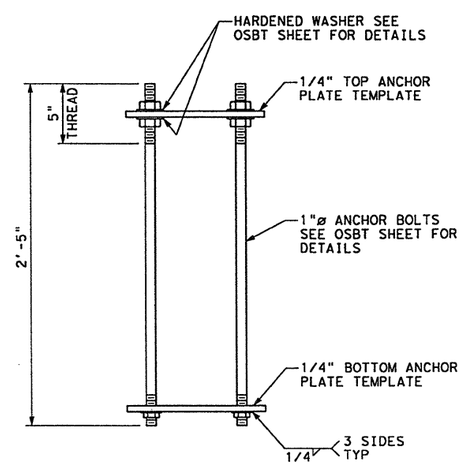

ANCHOR BOLT ASSEMBLY

(PRIOR TO INSTALLATION) ①

① ANCHOR BOLTS SHALL BE RIGIDLY HELD IN POSTION DURING CONCRETE PLACEMENT BY USING STEEL TEMPLATES AT THE TOP AND BOTTOM. THE BOTTOM TEMPLATE AND ANCHOR PLATE ASSEMBLY SHALL REMAIN IN PLACE AND SHALL NOT BE DAMAGED DURING CONCRETE PLACEMENT. THE TOP TEMPLATE SHALL BE REMOVED AFTER CONCRETE HAS SET.

STATE OF TEXAS
MD NURUL AMIN
100962
LICENSED
PROFESSIONAL ENGINEER

SEA REG NO. F-199

02/16/2011

NO.	DATE	REVISION DESCRIPTION	APP. BY

© 2011

Texas Department of Transportation

MACTEC
3520 EXECUTIVE CENTER DRIVE
SUITE 200
AUSTIN, TEXAS 78731
(512) 795-0360
REGISTRATION NUMBER: F-1784

STRUCTURAL ENGINEERING ASSOCIATES, INC.
CONSULTING ENGINEERS
SAN ANTONIO, TEXAS
REGISTRATION NUMBER: F-199

SH 151

OVERHEAD SIGN BRIDGE COLUMN DETAILS

(SHEET 3 OF 4)

FED. RD. DIV. NO.			SHEET NO.
			393

STATE	DIST.	COUNTY	
TEXAS	SA	BEXAR	
CONT.	SECT.	JOB	HIGHWAY NO.
2452	01	043	SH 151

K\2452-01-043\UTILITY\Sidel_SEA03.dgn 16 Feb 2011 10:58:12 AM TxDOT Projects

K:\2452-01-043\U
det_SEA04.dgn
16 Feb 2011
10:57:54 AM
TxDOT Projects

TABLE OF CONSTANT QUANTITIES FOR ONE OSB COLUMN CAPITAL

BARS	NO.	SIZE	LENGTH	WEIGHT (LBS)
L	10	#10	7'-6"	323
M	10	#10	19'-1"	821
T	14	#5	4'-11"	72
U	14	#5	11'-7"	169
V3	2	#10	2'-8"	23
V4	2	#10	8'-9"	75
W	8	#4	3'-6"	19
Z2-Z7	12	#5	12'-7" (AVG)	157
REINF. STEEL (LBS)*				1,659
CL C CONC. (SIGN COLUMN) (CY)*				5.3

* FOR CONTRACTORS INFORMATION ONLY.

TABLE OF VARIABLE QUANTITIES FOR ONE OSB COLUMN BARS V1, V2 AND Z1

OSB	COLUMN	COLUMN HEIGHT	7 BARS V1 (#10)		11 BARS V2 (#10)		BARS Z1 (#5) LENGTH= 10'-11"		REINF. STEEL WEIGHT	CL C CONC. (SIGN COLUMN)
			LENGTH	WEIGHT	LENGTH	WEIGHT				
NO.	EA	FT	FT.	(LBS)*	FT.	(LBS)*	NO.	WEIGHT (LBS)*	(LBS)*	(CY)*
1	RT	32'-3"	32'-1"	966	26'-0"	1,231	42	478	2,675	11.5
1	LT	34'-4"	34'-2"	1029	28'-1"	1,329	46	524	2,882	12.7
2	RT	32'-6"	32'-4"	974	26'-3"	1,242	42	478	2,694	11.6
2	LT	35'-10"	35'-8"	1074	29'-7"	1,400	50	569	3,043	13.5

* FOR CONTRACTORS INFORMATION ONLY.

NOTE

THE COST TO CONSTRUCT THE CONCRETE FOOTING, CONCRETE COLUMNS FOR THE CONCRETE COLUMN SIGN BRIDGES, INCLUDING FURNISHING ALL EQUIPMENT, MATERIALS, LABOR, TOOLS, INCIDENTALS AND ANY TEMPORARY SHORING NECESSARY WILL NOT BE PAID FOR DIRECTLY, BUT SHALL BE CONSIDERED INCIDENTAL TO THE UNIT PRICE BID FOR ITEM 650, FOR EACH CONCRETE SIGN BRIDGE, COMPLETE IN PLACE.

SUMMARY OF OVERHEAD SIGN BRIDGE COLUMN AND FOUNDATION

OVERHEAD SIGN BRIDGE NO.	ITEM NO.		0403-2001	0416-2004	0420-2010	0420-2117
	STATION	SPAN LF	TEMPORARY SPL SHORING (SF)*	DRILL SHAFT (36 IN) (LF)	CL C CONC (SIGN COLUMN) (CY)*	CL C CONC (SIGN FOOTING) (CY)*
1	492+80.00	80'-0"	468	72	34.8	17.2
2	508+00.00	92'-0"	468	72	35.7	17.2
TOTAL			936	144	70.5	34.4

* FOR CONTRACTORS INFORMATION ONLY.

STATE OF TEXAS
MD NURUL AMIN
100962
LICENSED
PROFESSIONAL ENGINEER
SEA REG NO. F-199
02/16/2011

NO.	DATE	REVISION DESCRIPTION	APP. BY

© 2011

Texas Department of Transportation

MACTEC
3520 EXECUTIVE CENTER DRIVE
SUITE 200
AUSTIN, TEXAS 78731
(512) 795-0360
REGISTRATION NUMBER: F-1784

STRUCTURAL ENGINEERING ASSOCIATES, INC.
CONSULTING ENGINEERS
SAN ANTONIO, TEXAS
REGISTRATION NUMBER: F-199

SH 151

OVERHEAD SIGN BRIDGE COLUMN DETAILS

(SHEET 4 OF 4)

FED. RD. DIV. NO. | SHEET NO. 344

STATE	DIST.	COUNTY	
TEXAS	SA	BEXAR	
CONT.	SECT.	JOB	HIGHWAY NO.
2452	01	043	SH 151

K:\2452-01-043\UTILITY\Utilde_SEA04.dgn
16 Feb 2011 10:57:53 AM TxDOT Projects

p:\4760\0-0\29v-...\standard\Visld_hc28.dgn
2/21/2011
7:08:45 PM
mmmdt11

NOTES:
1. COLUMN SIZES SHOWN ARE FOR AESTHETIC PURPOSES ONLY. THE STRUCTURAL ENGINEER IS RESPONSIBLE FOR THE DESIGN OF THE COLUMNS. SEE STRUCTURAL DETAILS FOR STRUCTURAL REQUIREMENTS.
2. IF COLUMN SIZES VARY FROM WHAT IS SHOWN, MAINTAIN DESIGN WIDTH TO DESIGN DEPTH RATIO (5'X3')

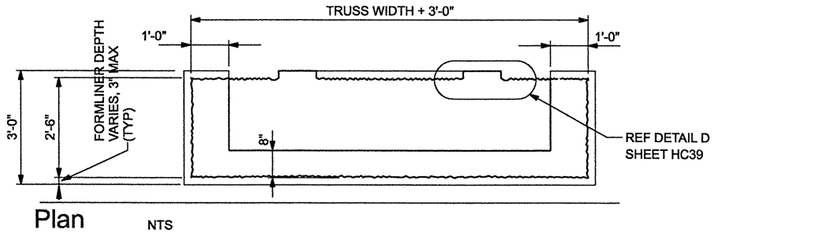

Plan NTS

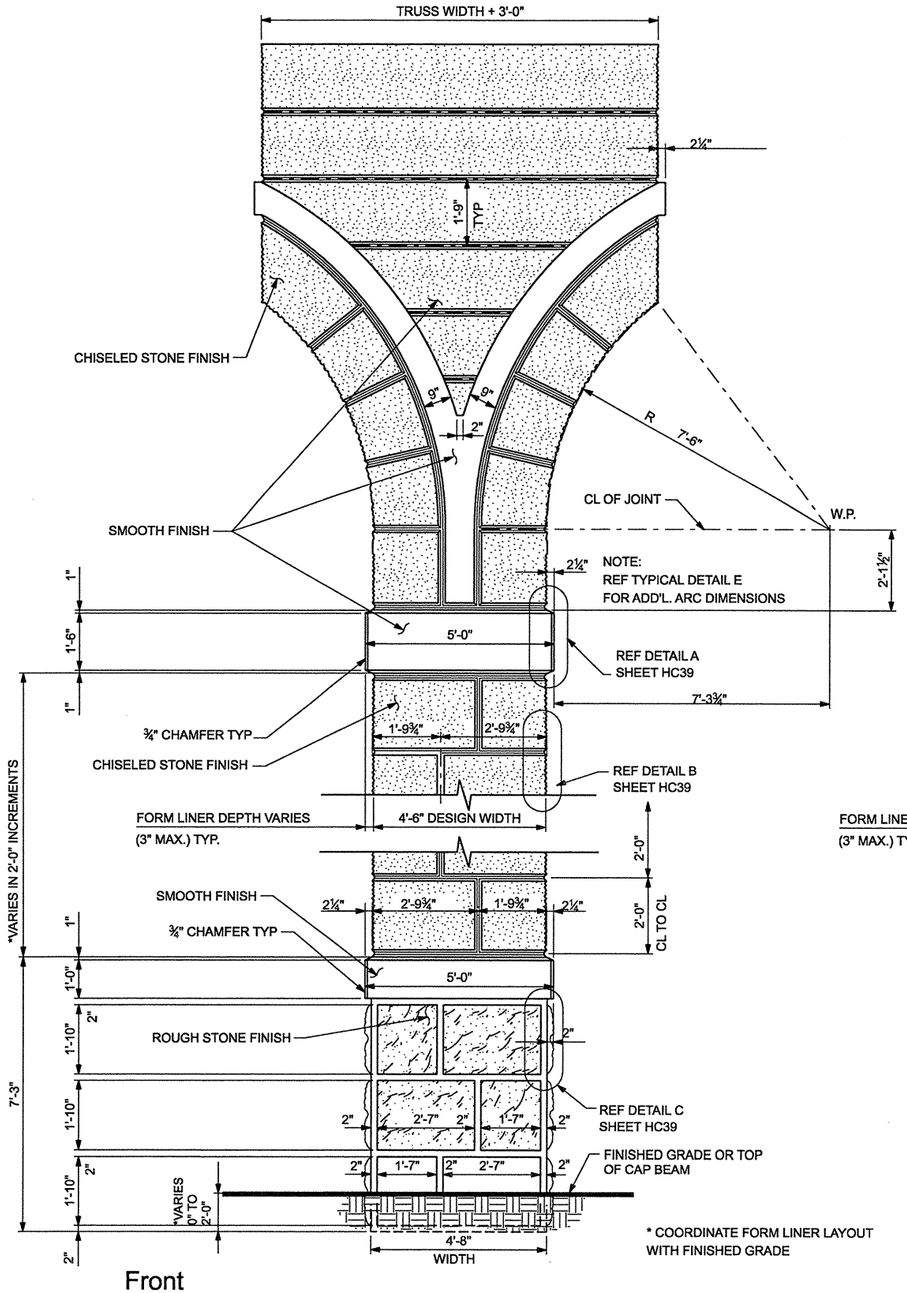

Front Elevation NTS

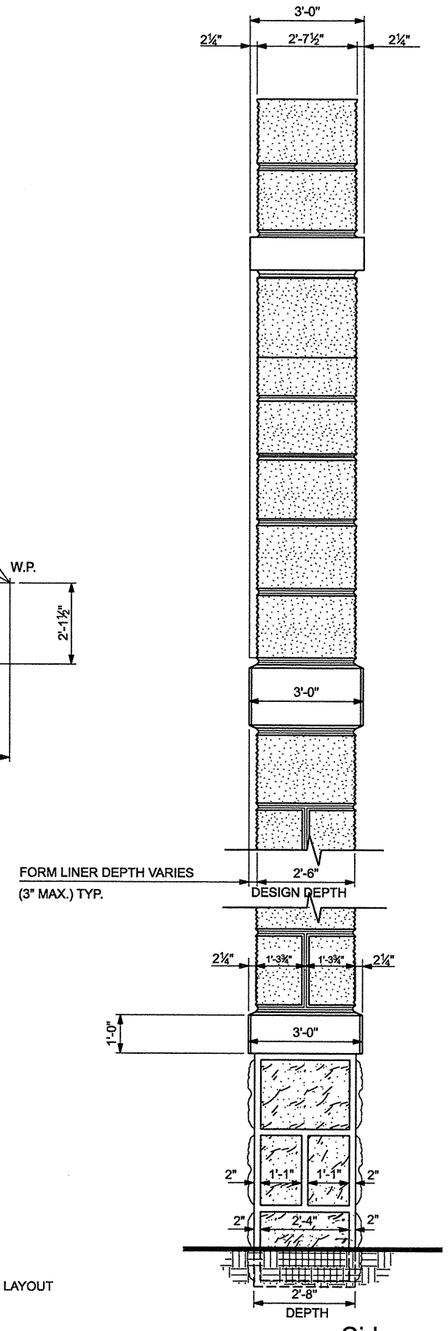

Side

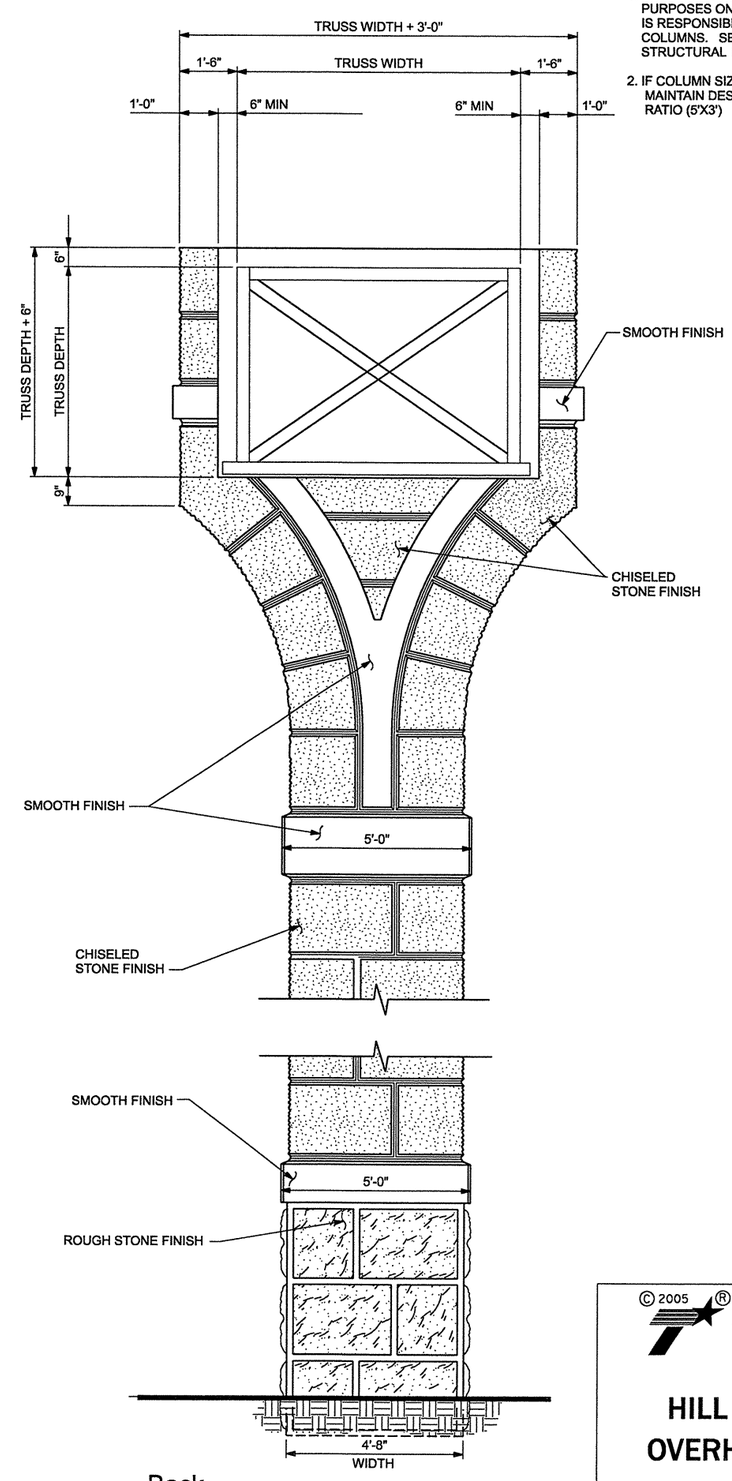

Back Elevation NTS

HDR
HDR Engineering, Inc.

© 2005
Texas Department of Transportation
SAN ANTONIO DISTRICT
AESTHETIC GUIDELINES

HILL COUNTRY REGION OVERHEAD SIGN COLUMN

HIGHWAY NO. SH 151
SHEET NO. 395

HC28

p:\4760\0\0129
\standard\lsfd_bc39.dgn
2/21/2011
7:08:56 PM
mwmldkll1

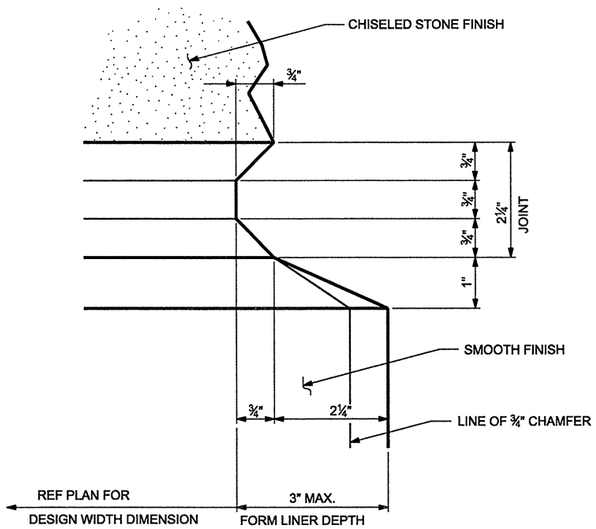

JOINT

Detail A

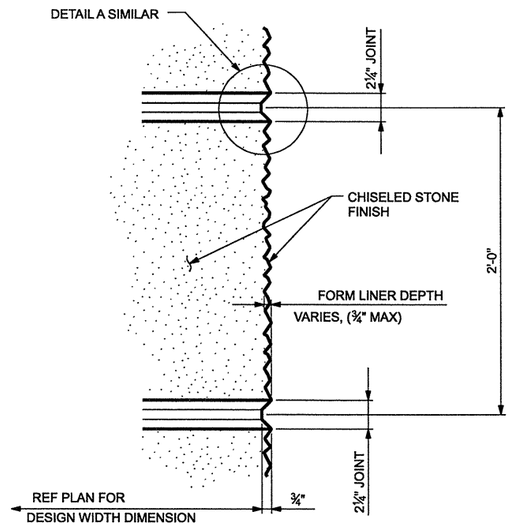

CHISELED STONE FINISH

Detail B

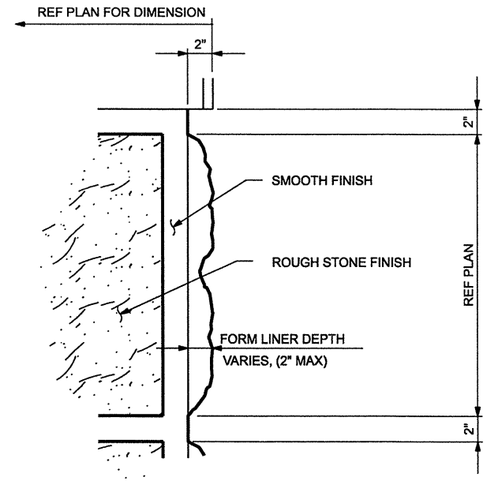

ROUGH STONE FINISH

Detail C

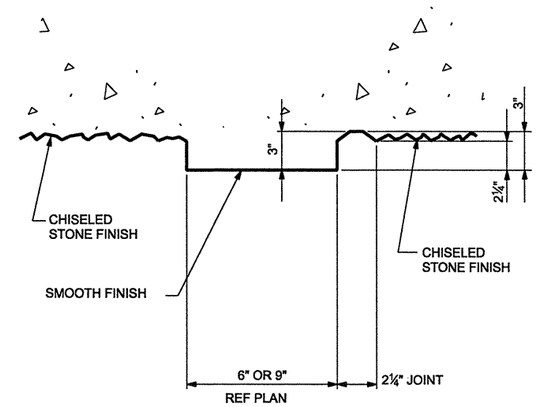

Detail D

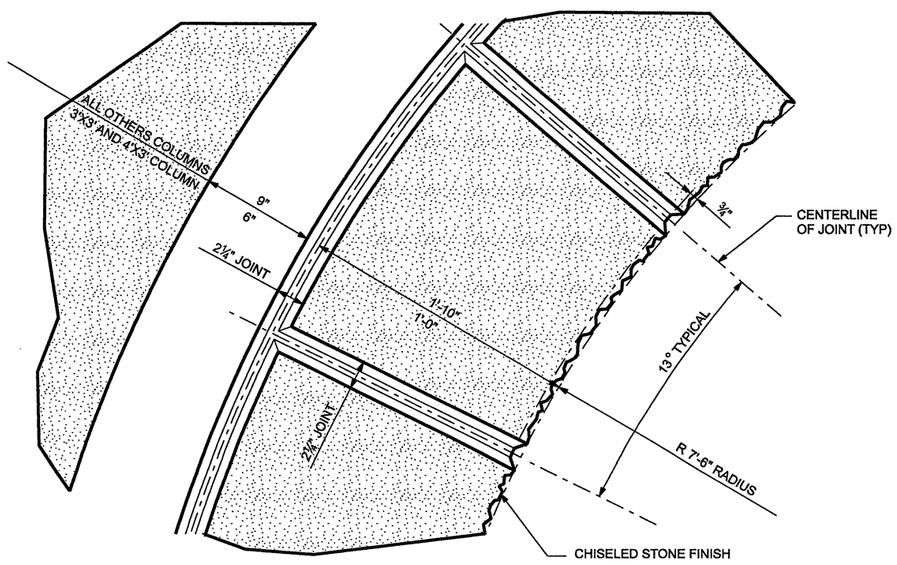

Detail E

CHISELED STONE FINISH

Detail F

ROUGH STONE FINISH

Detail G

HDR
HDR Engineering, Inc.

© 2005
Texas Department of Transportation

SAN ANTONIO DISTRICT
AESTHETIC GUIDELINES

HILL COUNTRY REGION

FORM LINER AND JOINT DETAILS

HIGHWAY NO. SH 151 | SHEET NO. 39

HC39

NOTE: CLASS "B" CONCRETE RIPRAP TO BE PLACED AS SHOWN IN DETAILS AND APPROVED BY THE ENGINEER. THIS WORK SHALL BE DONE IN ACCORDANCE WITH ITEM 432.

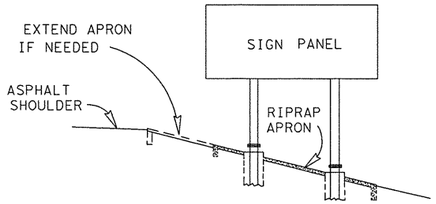

TYPICAL ELEVATION
MULTIPLE POST

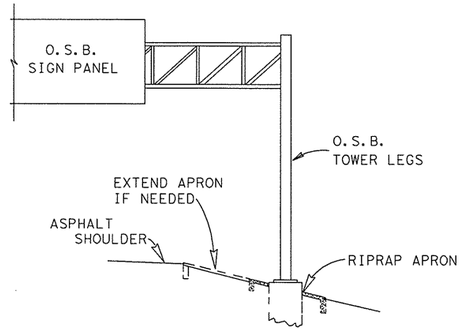

TYPICAL ELEVATION
OVERHEAD SIGN BRIDGE

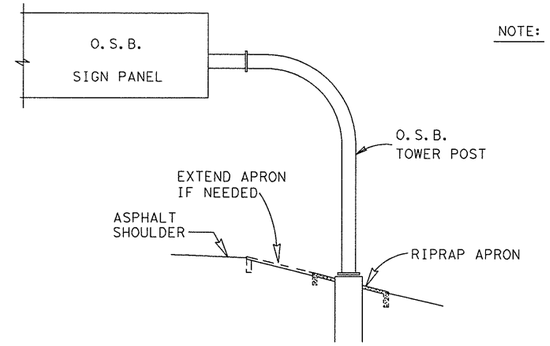

TYPICAL ELEVATION
MONOTUBE SIGN STRUCTURE

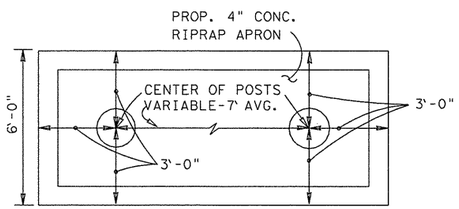

TOP VIEW

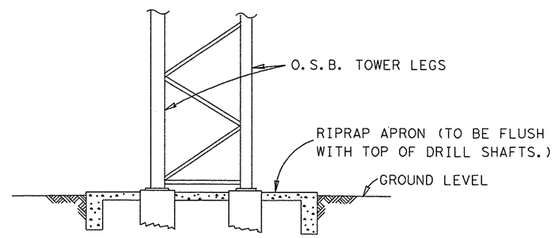

SIDE VIEW ELEVATION

OVERHEAD SIGN BRIDGE
ESTIMATED AT 1.5 CU. YDS. PER SITE

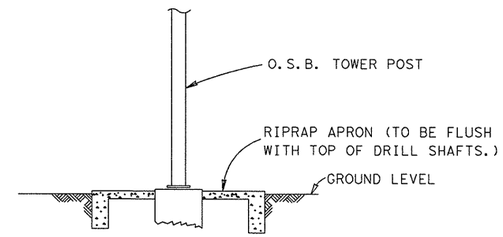

SIDE VIEW ELEVATION

OVERHEAD SIGN BRIDGE
ESTIMATED AT 1.2 CU. YDS. PER SITE

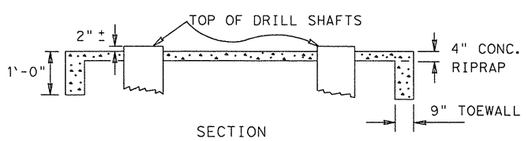

SECTION

MULTIPLE POST GROUND MOUNT
ESTIMATED AT 2.0 CU. YDS. PER SITE

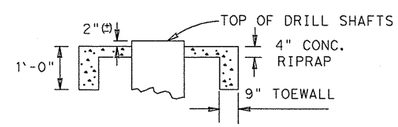

SECTION

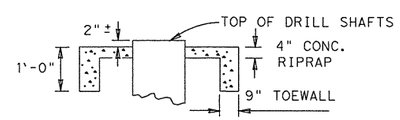

SECTION

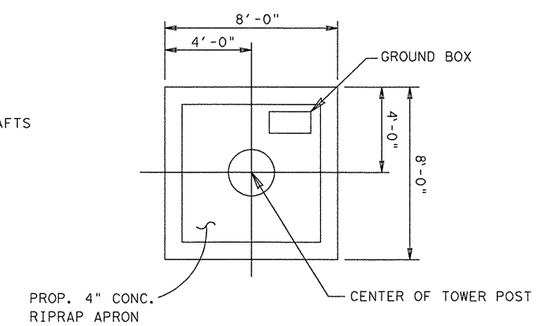

TOP VIEW

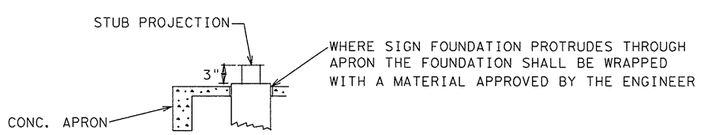

SECTION DETAIL

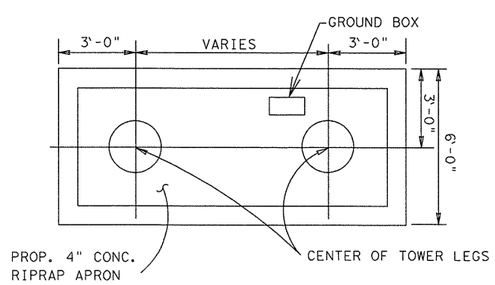

TOP VIEW

RIPRAP APRON DETAILS
FOR SIGN FOUNDATIONS

San Antonio District Standard

RIP-RAP APRON DETAILS

© 2007 Texas Department of Transportation

REVISIONS	FED. RD. DIV. NO.	FEDERAL AID PROJECT NO.		SHEET NO.
9-99 1-03 4-06 10-07	6			401
	STATE	DIST.	COUNTY	
	TEXAS	SAT	BEXAR	
	CONT.	SECT.	JOB	HIGHWAY NO.
	2452	01	043	SH 151

DISCLAIMER: The use of this standard is governed by the "Texas Engineering Practice Act". No warranty of any kind is made by TxDOT for any purpose whatsoever. TxDOT assumes no responsibility for the conversion of this standard to other formats or for incorrect results or damages resulting from its use.

pw:\\FBOVJO-01P3r standardV5\std_sgn18.dgn 2/21/2011 7:09:01 PM mwmldstff

SIGN SUPPORT DESCRIPTIVE CODES

(Descriptive Codes correspond to project estimate and quantities sheets)

SM RD SGN ASSM TY XXXXX(X)XX(X-XXXX)

Post Type

FRP = Fiberglass Reinforced Plastic Pipe (see SMD(FRP))
TWT = Thin-Walled Tubing (see SMD(TWT))
10BWG = 10 BWG Tubing (see SMD(SLIP-1) to (SLIP-3))
S80 = Schedule 80 Pipe (see SMD(SLIP-1) to (SLIP-3))

Number of Posts (1 or 2)

Anchor Type

UA = Universal Anchor - Concreted (see SMD(FRP) and (TWT))
UB = Universal Anchor - Bolted down (see SMD(FRP) and (TWT))
WS = Wedge Anchor Steel - (see SMD(TWT))
WP = Wedge Anchor Plastic (see SMD(TWT))
SA = Slipbase - Concreted (see SMD(SLIP-1) to (SLIP-3))
SB = Slipbase - Bolted Down (see SMD(SLIP-1) to (SLIP-3))

Sign Mounting Designation

P = Prefab. "Plain" (see SMD(SLIP-1) to (SLIP-3), (TWT), (FRP))
T = Prefab. "T" (see SMD(SLIP-1) to (SLIP-3), (TWT))
U = Prefab. "U" (see SMD(SLIP-1) to (SLIP-3))
IF REQUIRED
1EXT or 2EXT = Number of Extensions (see SMD(SLIP-1) to (SLIP-3), (TWT))
BM = Extruded Wind Beam (see SMD(SLIP-1) to (SLIP-3))
WC = 1.12 #/ft Wing Channel (see SMD(SLIP-1) to (SLIP-3))
EXAL = Extruded Aluminum Sign Panels (see SMD(SLIP-3))

REQUIRED CLEARANCE FOR BREAKAWAY SUPPORT

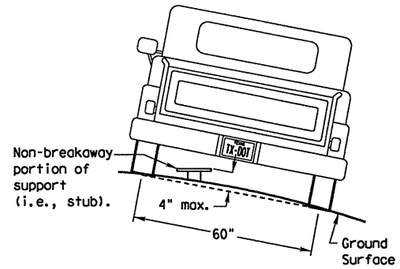

To avoid vehicle undercarriage snagging, any substantial remains of a breakaway support, when it is broken away, should not project more than 4 inches above a 60-inch chord (i.e., typical space between wheel paths).

No more than 2 sign posts should be located within a 7 ft. circle.

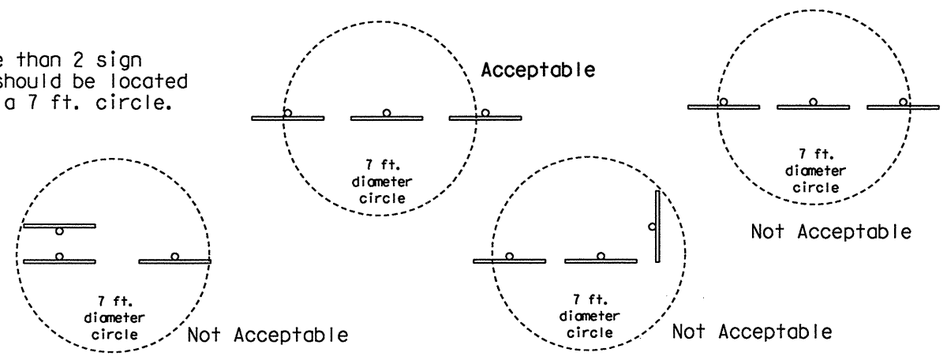

SIGN LOCATION

PAVED SHOULDERS

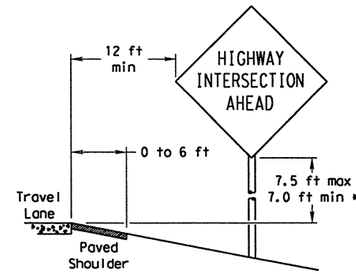

LESS THAN 6 FT. WIDE

When the shoulder is 6 ft. or less in width, the sign must be placed at least 12 ft. from the edge of the travel lane.

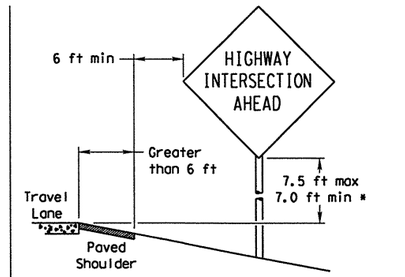

GREATER THAN 6 FT. WIDE

When the shoulder is greater than 6 ft in width, the sign must be placed at least 6 ft. from the edge of the shoulder.

T-INTERSECTION

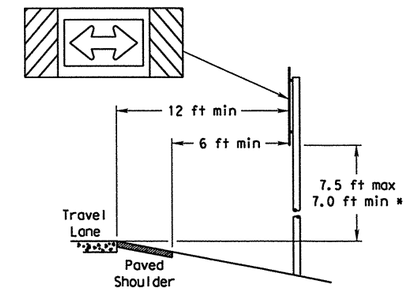

When this sign is needed at the end of a two-lane, two way roadway, the right edge of the sign should be in line with the centerline of the roadway. Place as close to ROW as practical.

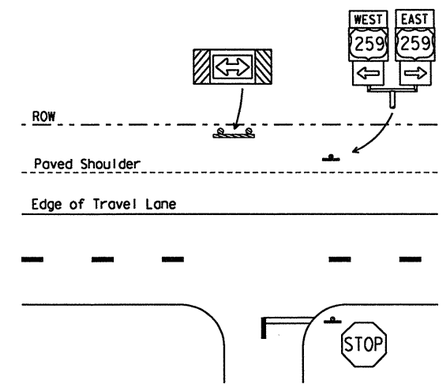

BEHIND BARRIER

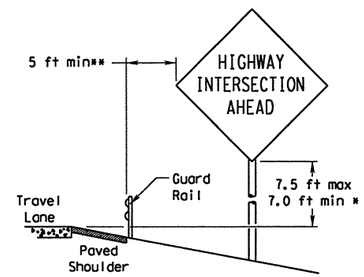

BEHIND GUARDRAIL

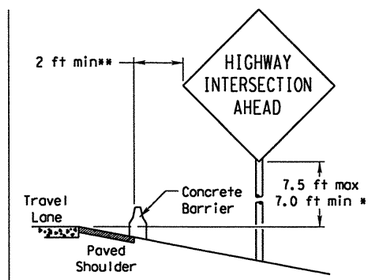

BEHIND CONCRETE BARRIER

**Sign clearance based on distance required for proper guard rail or concrete barrier performance.

* Signs shall be mounted using the following condition that results in the greatest sign elevation:

(1) a minimum of 7 to a maximum of 7.5 feet above the edge of the travel lane or

(2) a minimum of 7 to a maximum of 7.5 feet above the grade at the base of the support when sign is installed on the backslope.

The maximum values may be increased when directed by the Engineer.

See the Traffic Operations Division website for detailed drawings of sign clamps, Triangular Slipbase System components and Wedge Anchor System components.

The website address is:
http://www.txdot.gov/publications/traffic.htm

TYPICAL SIGN ATTACHMENT DETAIL

Single Signs

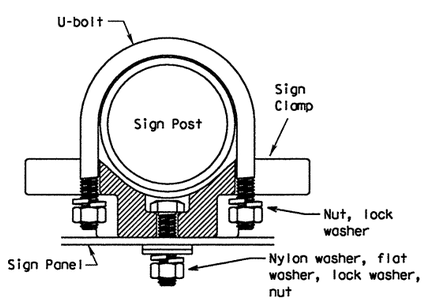

Bolts used to mount sign panels to the clamp are 5/16-18 UNC galvanized square head with nut, nylon washer, flat washer and lock washer. The bolt length is 1 inch for aluminum.

When two sign clamps are used to mount signs back-to-back, use a 5/16-18 UNC galvanized hex head per ASTM A307 with nut and helical-spring lock washer. The approximate bolt lengths for various post sizes and sign clamp types are given in the table at right. The bolt length may need to be adjusted depending upon field conditions.

Sign clamps may be either the specific size clamp or the universal clamp.

Back-to-Back Signs

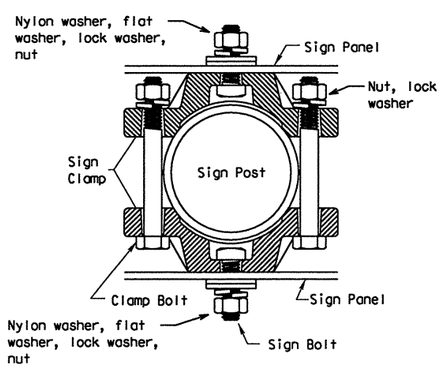

Pipe Diameter	Approximate Bolt Length	
	Specific Clamp	Universal Clamp
2" nominal	3"	3 or 3 1/2"
2 1/2" nominal	3 or 3 1/2"	3 1/2 or 4"
3" nominal	3 1/2 or 4"	4 1/2"

SIGNS WITH PLAQUES

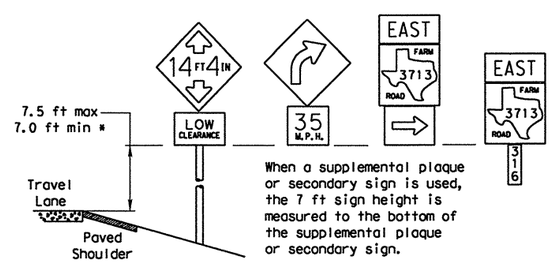

When a supplemental plaque or secondary sign is used, the 7 ft sign height is measured to the bottom of the supplemental plaque or secondary sign.

CURB & GUTTER OR RAISED ISLAND

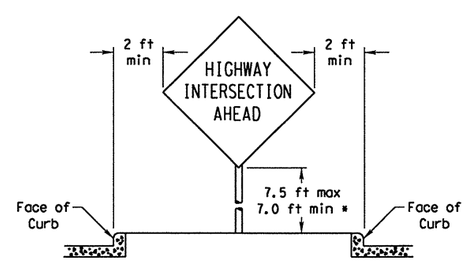

RESTRICTED RIGHT-OF-WAY

(When 6 ft min. is not possible.)

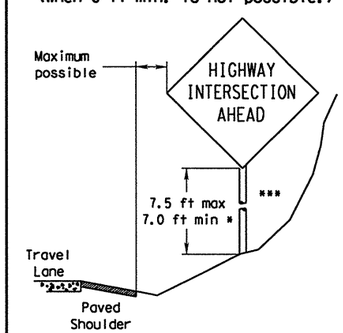

Right-of-way restrictions may be created by rocks, water, vegetation, forest, buildings, a narrow island, or other factors.

In situations where a lateral restriction prevents the minimum horizontal clearance from the edge of the travel lane, signs should be placed as far from the travel lane as practical.

*** Post may be shorter if protected by guardrail or if Engineer determines the post could not be hit due to extreme slope.

Texas Department of Transportation
Traffic Operations Division

SIGN MOUNTING DETAILS SMALL ROADSIDE SIGNS GENERAL NOTES & DETAILS

SMD(GEN)-08

©TxDOT July 2002

9-08 REVISIONS

DN: TXDOT	CK: TXDOT	DW: TXDOT	CK: TXDOT
CONT	SECT	JOB	HIGHWAY
2452	01	043	SH 151
DIST		COUNTY	SHEET NO.
SA		BEXAR	402

DISCLAIMER: The use of this standard is governed by the "Texas Engineering Practice Act". No warranty of any kind is made by TxDOT for any purpose whatsoever. TxDOT assumes no responsibility for the conversion of this standard to other formats or for incorrect results or damages resulting from its use.

standard\USlsd_sgn9.dgn 2/21/2011 7:08:02 PM mwmldstff
pw:\\FTSO\D-01\29c

TRIANGULAR SLIPBASE INSTALLATION GENERAL REQUIREMENTS

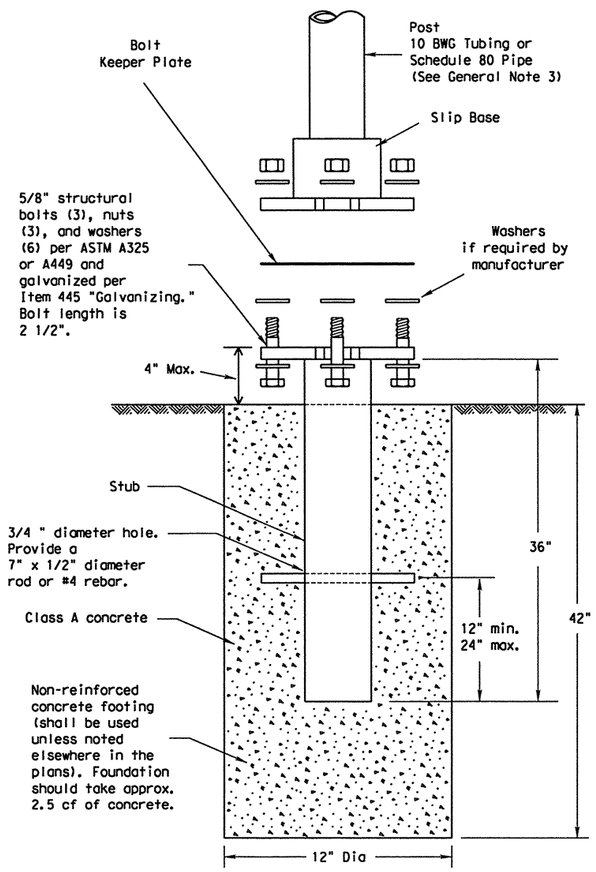

SM RD SGN ASSM TY XXXXX(X)SA(X-XXXX)

NOTE

There are various devices approved for the Triangular Slipbase System. Please reference the Material Producer List for approved slip base systems. http://www.txdot.gov/business/producer_list.htm The devices shall be installed per manufacturers' recommendations. Installation procedures shall be provided to the Engineer by Contractor.

GENERAL NOTES:

1. Slip base shall be permanently marked to indicate manufacturer. Method, design, and location of marking are subject to approval of the TxDOT Traffic Standards Engineer.
2. Material used as post with this system shall conform to the following specifications:
   10 BWG Tubing (2.875" outside diameter)
   - 0.134" nominal wall thickness
   - Seamless or electric-resistance welded steel tubing or pipe
   - Steel shall be HSLAS Gr 55 per ASTM A1011 or ASTM A1008
   - Other steels may be used if they meet the following:
     - 55,000 PSI minimum yield strength
     - 70,000 PSI minimum tensile strength
     - 20% minimum elongation in 2"
   - Wall thickness (uncoated) shall be within the range of 0.122" to 0.138"
   - Outside diameter (uncoated) shall be within the range of 2.867" to 2.883"
   - Galvanization per ASTM A123 or ASTM A653 G210. For precoated steel tubing (ASTM A653), recoat tube outside diameter weld seam by metallizing with zinc wire per ASTM B833.

   Schedule 80 Pipe (2.875" outside diameter)
   - 0.276" nominal wall thickness
   - Steel tubing per ASTM A500 Gr C
   - Other seamless or electric-resistance welded steel tubing or pipe with equivalent outside diameter and wall thickness may be used if they meet the following:
     - 46,000 PSI minimum yield strength
     - 62,000 PSI minimum tensile strength
     - 21% minimum elongation in 2"
   - Wall thickness (uncoated) shall be within the range of 0.248" to 0.304"
   - Outside diameter (uncoated) shall be within the range of 2.855" to 2.895"
   - Galvanization per ASTM A123
3. See the Traffic Operations Division website for detailed drawings of sign clamps and Texas Universal Triangular Slipbase System components. The website address is:
   http://www.txdot.gov/publications/traffic.htm
4. Sign supports shall not be spliced except where shown. Sign support posts shall not be spliced.

ASSEMBLY PROCEDURE

Foundation

1. Prepare 12-inch diameter by 42-inch deep hole. If solid rock is encountered, the depth of the foundation may be reduced such that it is embedded a minimum of 18 inches into the solid rock.
2. The Engineer may permit batches of concrete less than 2 cubic yards to be mixed with a portable, motor-driven concrete mixer. For small placements less than 0.5 cubic yards, hand mixing in a suitable container may be allowed by Engineer. Concrete shall be Class A.
3. Push the pipe end of the slip base stub into the center of the concrete. Rotate the stub back and forth while pushing it down into the concrete to assure good contact between the concrete and stub. Continue to work the stub into the concrete until it is between 2 to 4 inches above the ground.
4. Plumb the stub. Allow a minimum of 4 days to set, unless otherwise directed by the Engineer.
5. The triangular slipbase system is multidirectional and is designed to release when struck from any direction.

Support

1. Cut support so that the bottom of the sign will be 7 to 7.5 feet above the edge of the travelway (i.e., edge of the closest lane) when slip plate is below the edge of pavement or 7 to 7.5 feet above slip plate when the slip plate is above the edge of the travelway. The cut shall be plumb and straight.
2. Attach sign to support using connections shown. When multiple signs are installed on the same support, ensure the minimum clearance between each sign is maintained. See SMD(SLIP-2) for clearances based on sign types.

CONCRETE ANCHOR

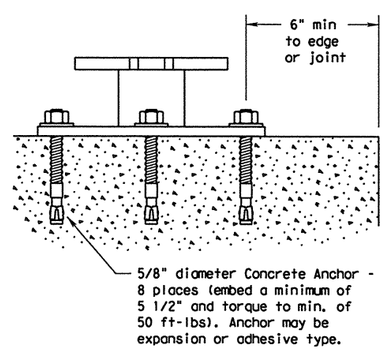

SM RD SGN ASSM TY XXXXX(X)SB(X-XXXX)

Concrete anchor consists of 5/8" diameter stud bolt with UNC series bolt threads on the upper end. Heavy hex nut per ASTM A563, and hardened washer per ASTM F436. The stud bolt shall have a minimum yield and ultimate tensile strength of 50 and 75 KSI, respectively. Nuts, bolts and washers shall be galvanized per Item 445, "Galvanizing." Adhesive type anchors shall have stud bolts installed with Type III epoxy per DMS-6100, "Epoxies and Adhesives." Adhesive anchors may be loaded after adequate epoxy cure time per the manufacturer's recommendations. Top of bolt shall extend at least flush with top of the nut when installed. The anchor, when installed in 4000 psi normal-weight concrete with a 5 1/2" minimum embedment, shall have a minimum allowable tension and shear of 3900 and 3100 psi, respectively.

Texas Department of Transportation
Traffic Operations Division

SIGN MOUNTING DETAILS
SMALL ROADSIDE SIGNS
TRIANGULAR SLIPBASE SYSTEM

SMD(SLIP-1)-08

©TxDOT July 2002

9-08 REVISIONS	DN: TXDOT	CK: TXDOT	DW: TXDOT	CK: TXDOT
	CONT	SECT	JOB	HIGHWAY
	2452	01	043	SH 151
	DIST		COUNTY	SHEET NO.
	SA		BEXAR	403

DISCLAIMER: The use of this standard is governed by the "Texas Engineering Practice Act". No warranty of any kind is made by TxDOT for any purpose whatsoever. TxDOT assumes no responsibility for the conversion of this standard to other formats or for incorrect results or damages resulting from its use.

standard\MSLsd_sgn20.dgn 2/21/2011 7:09:03 PM mwmldktlt
pw4160\0-0129cr

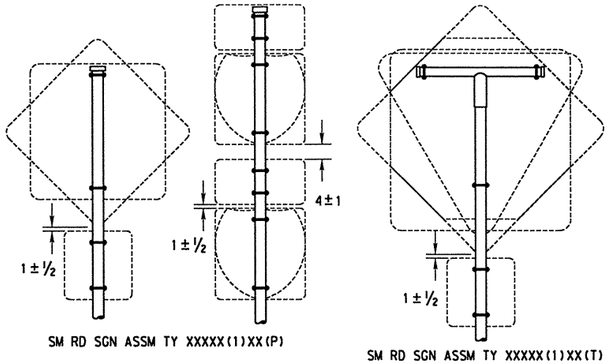

SM RD SGN ASSM TY XXXXX(1)XX(P)

SM RD SGN ASSM TY XXXXX(1)XX(T)

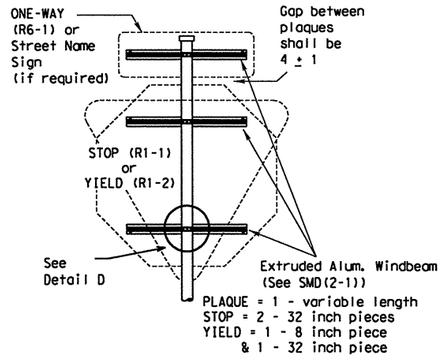

SM RD SGN ASSM TY XXXXX(1)XX(P-BM)

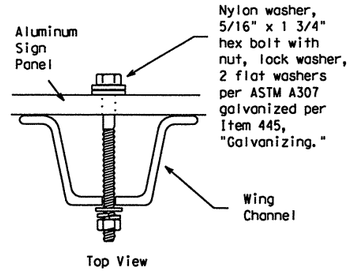

Detail A

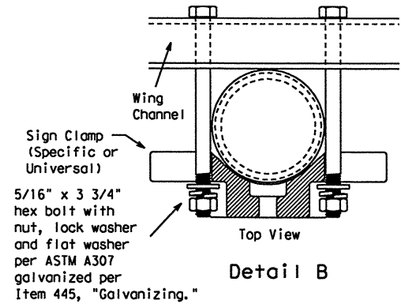

Detail B

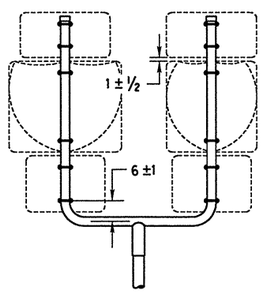

SM RD SGN ASSM TY XXXXX(1)XX(U)

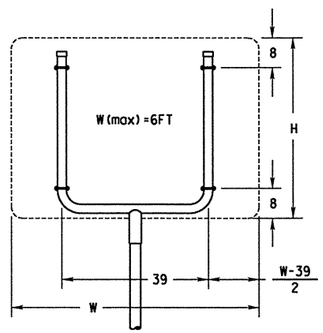

SM RD SGN ASSM TY XXXXX(1)XX(U)

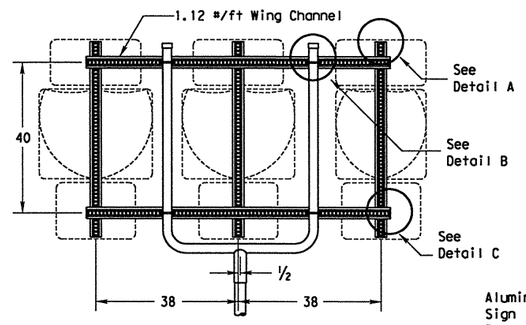

SM RD SGN ASSM TY XXXXX(1)XX(U-WC)
(See Note 11)

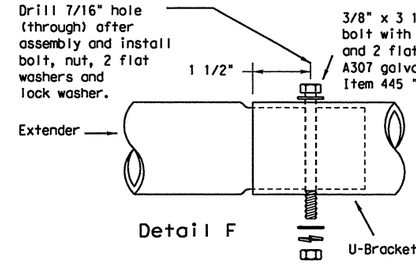

Detail F

Splices shall only be allowed behind the sign substrate.

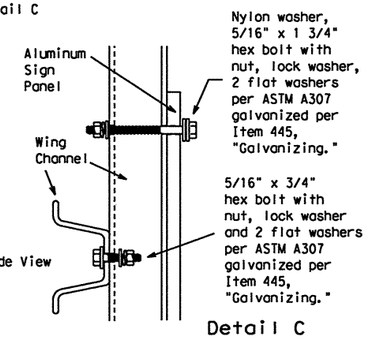

SIDE VIEW

Detail C

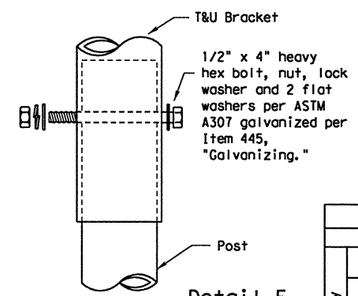

Detail E

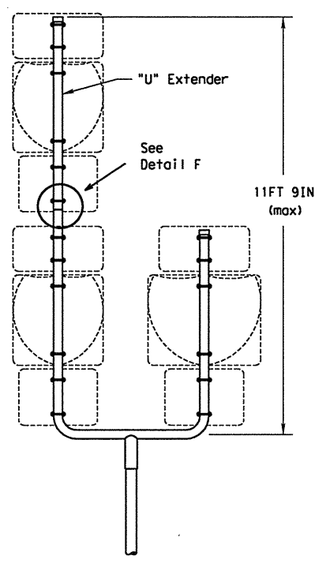

SM RD SGN ASSM TY S80(1)XX(U-1EXT)

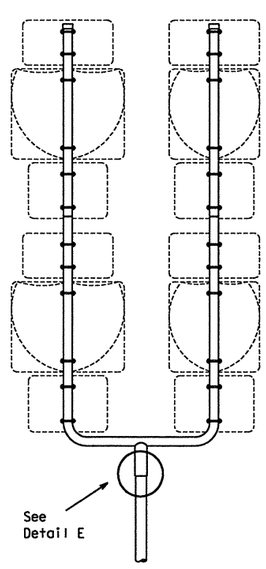

SM RD SGN ASSM TY S80(1)XX(U-2EXT)

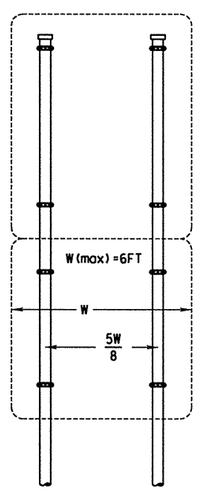

SM RD SGN ASSYM TY XXXXX(2)XX(P)

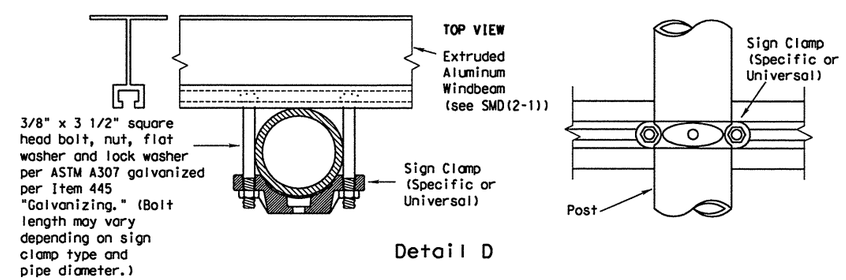

Detail D

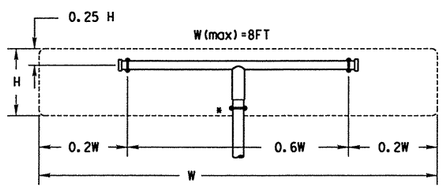

All dimensions are in english
unless detailed otherwise.

SM RD SGN ASSM TY XXXXX(1)XX(T)
(* - See Note 12)

FRICTION CAP DETAIL

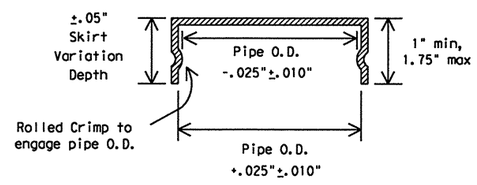

Friction caps may be manufactured from hot rolled or cold rolled steel sheets. The minimum sheet metal thickness shall be 24 gauge for all cap sizes.

The rim edges shall be reasonably straight and smooth. Caps shall be sized and formed in such a manner as to produce a drive-on friction fit and have no tendency to rock when seated on the pipe. The depth shall be sufficient to give positive protection against entrance of rainwater. They shall be free of sharp creases or indentations and show no evidence of metal fracture.

Caps shall have an electrodeposited coating of zinc in accordance with the requirements of ASTM B633 Class FE/ZN 8.

GENERAL NOTES:

1.

SIGN SUPPORT	# OF POSTS	MAX. SIGN AREA
10 BWG	1	16 SF
10 BWG	2	32 SF
Sch 80	1	32 SF
Sch 80	2	64 SF

2. The Engineer may require that a Schedule 80 post be used in place of a 10 BWG where a sign height is abnormally high due to a fill slope.
3. Sign supports shall not be spliced except where shown. Sign support posts shall not be spliced.
4. Aluminum sign blanks shall conform to Departmental Material Specifications DMS-7110 and shall have the following minimum thicknesses: 0.080 for signs less than 7.5 sq. ft., 0.100 for signs 7.5 to 15 sq. ft., and 0.125 for signs greater than 15 sq. ft.
5. Signs that require specific supports due to reasons in addition to windloading are indicated on the "REQUIRED SUPPORT" table on this sheet.
6. For horizontal rectangular signs fabricated from flat aluminum, T-brackets are used for signs 24 inches or less in height. U-brackets are used for signs of greater height.
7. When two triangular slipbase supports are used to support a single sign, they shall not be "rigidly" connected to each other except through the sign panel. This will allow each support to act independently when impacted by an errant vehicle.
8. Wing channel shall meet ASTM A 1011 SS Gr 50 and be galvanized per ASTM A 123.
9. Excess pipe, wing channel, or windbeam shall be cut off so that it does not extend beyond the sign panel (i.e., excess support shall not be visible when the sign is viewed from the front.) Repair galvanized coating at cut support ends per Item 445, "Galvanizing."
10. Additional route markers may be added vertically, provided the total sign area does not exceed the maximum allowable amount per Note 1.
11. Additional sign clamp required on the "T-bracket" post for 24 inch height signs. Place the clamp 3 inches above bottom of sign when possible.
12. Post open ends shall be fitted with Friction Caps.
13. Sign blanks shall be the sizes and shapes shown on the plans.

REQUIRED SUPPORT

	SIGN DESCRIPTION	SUPPORT
Regulatory	48-inch STOP sign (R1-1)	TY 10BWG(1)XX(T) TY 10BWG(1)XX(P-BM)
Regulatory	60-inch YIELD sign (R1-2)	TY 10BWG(1)XX(T) TY 10BWG(1)XX(P-BM)
Regulatory	48x16-inch ONE-WAY sign (R6-1)	TY 10BWG(1)XX(T) TY 10BWG(1)XX(P-BM)
Regulatory	36x48, 48x36, and 48x48-inch signs	TY 10BWG(1)XX(T)
Regulatory	48x60-inch signs	TY S80(1)XX(T)
Warning	48x48-inch signs (diamond or square)	TY 10BWG(1)XX(T)
Warning	48x60-inch signs	TY S80(1)XX(T)
Warning	48-inch Advance School X-ing sign (S1-1)	TY 10BWG(1)XX(T)
Warning	48-inch School X-ing sign (S2-1)	TY 10BWG(1)XX(T)
Warning	Large Arrow sign (W1-6 & W1-7)	TY 10BWG(1)XX(T)

Texas Department of Transportation
Traffic Operations Division

SIGN MOUNTING DETAILS
SMALL ROADSIDE SIGNS
TRIANGULAR SLIPBASE SYSTEM

SMD(SLIP-2)-08

©TxDOT July 2002

DN: TXDOT	CK: TXDOT	DW: TXDOT	CK: TXDOT

REVISIONS 9-08

CONT	SECT	JOB	HIGHWAY
2452	01	043	SH 151
DIST		COUNTY	SHEET NO.
SA		BEXAR	404

standard/slsd_sgn21.dgn
2/21/2011
1:09:04 PM
mwilde11T
pw:\\f160\0-0129c

DISCLAIMER: The use of this standard is governed by the "Texas Engineering Practice Act". No warranty of any kind is made by TxDOT for any purpose whatsoever. TxDOT assumes no responsibility for the conversion of this standard to other formats or for incorrect results or damages resulting from its use.

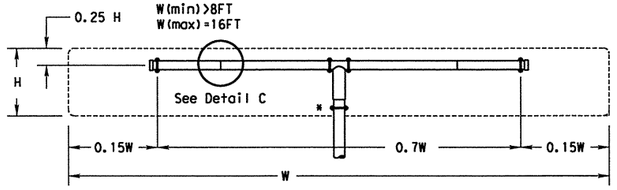

SM RD SGN ASSM TY XXXXX(1)XX(T-2EXT)
(* - See Note 12)

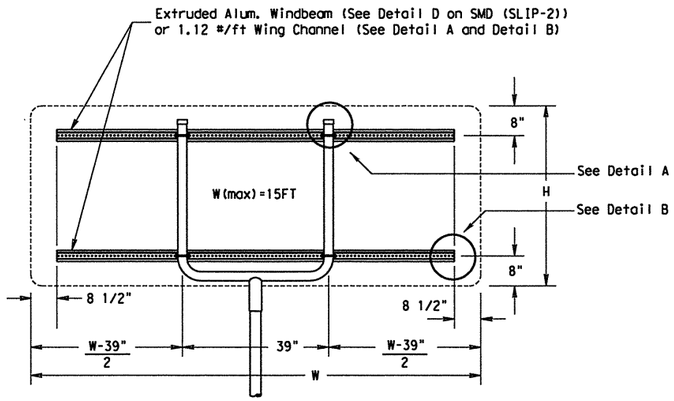

SM RD SGN ASSM TY XXXXX(1)XX(U-XX)

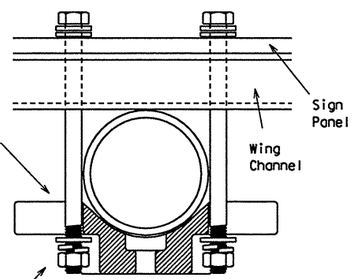

Detail A

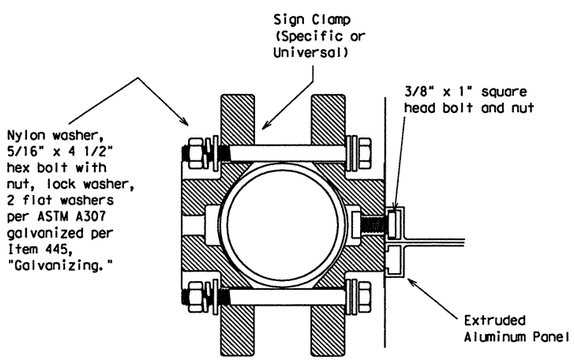

Detail D
EXTRUDED ALUMINUM SIGN WITH T BRACKET

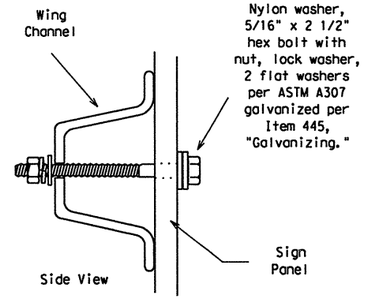

Detail B

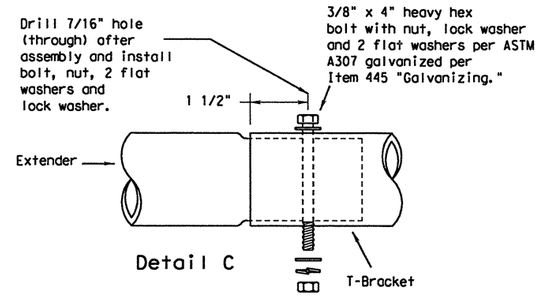

Detail C

Splices shall only be allowed behind the sign substrate.

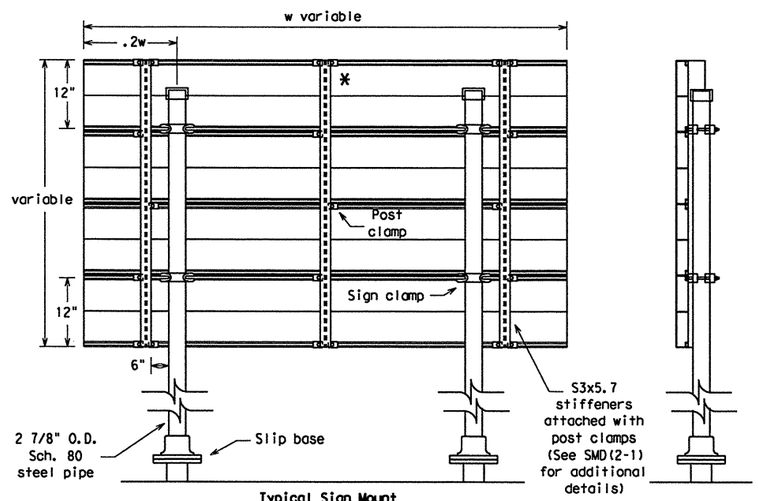

Typical Sign Mount

SM RD SGN ASSM TY S80(2)XX(P-EXAL)

* Additional stiffener placed at approximate center of signs when sign width is greater than 10'.

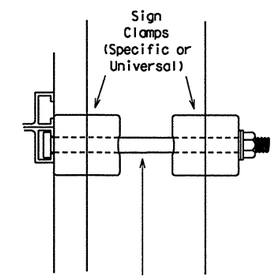

3/8" x 4 1/2"
square head
bolt, nut,
flat washer
and lock washer per
ASTM A307 galvanized
per Item 445,
"Galvanizing."

Detail E

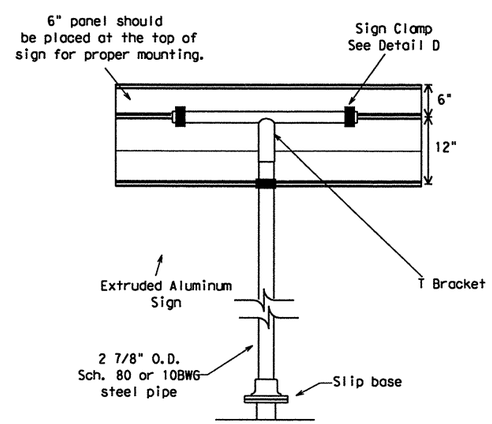

Extruded Aluminum Sign
With T Bracket

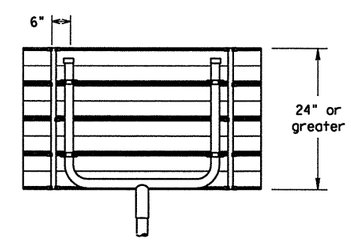

Use Extruded Alum. Windbeam as stiffeners
See SMD (2-1) for additional details

See Detail E
for clamp installation

GENERAL NOTES:

1.

SIGN SUPPORT	# OF POSTS	MAX. SIGN AREA
10 BWG	1	16 SF
10 BWG	2	32 SF
Sch 80	1	32 SF
Sch 80	2	64 SF

2. The Engineer may require that a Schedule 80 post be used in place of a 10 BWG where a sign height is abnormally high due to a fill slope.
3. Sign supports shall not be spliced except where shown. Sign support posts shall not be spliced.
4. Aluminum sign blanks shall conform to Departmental Material Specifications DMS-7110 and shall have the following minimum thicknesses: 0.080 for signs less than 7.5 sq. ft., 0.100 for signs 7.5 to 15 sq. ft., and 0.125 for signs greater than 15 sq. ft.
5. Signs that require specific supports due to reasons in addition to windloading are indicated on the "REQUIRED SUPPORT" table on this sheet.
6. For horizontal rectangular signs fabricated from flat aluminum, T-brackets are used for signs 24 inches or less in height. U-brackets are used for signs of greater height.
7. When two triangular slipbase supports are used to support a single sign, they shall not be "rigidly" connected to each other except through the sign panel. This will allow each support to act independently when impacted by an errant vehicle.
8. Wing channel shall meet ASTM A 1011 SS Gr 50 and be galvanized per ASTM A 123.
9. Excess pipe, wing channel, or windbeam shall be cut off so that it does not extend beyond the sign panel (i.e., excess support shall not be visible when the sign is viewed from the front.) Repair galvanized coating at cut support ends per Item 445, "Galvanizing."
10. Sign blanks shall be the sizes and shapes shown on the plans.
11. Additional sign clamp required on the "T-bracket" post for 24 inch high signs. Place the clamp 3 inches above bottom of sign when possible.
12. Post open ends shall be fitted with Friction Caps.

REQUIRED SUPPORT

	SIGN DESCRIPTION	SUPPORT
Regulatory	48-inch STOP sign (R1-1)	TY 10BWG(1)XX(T) TY 10BWG(1)XX(P-BM)
Regulatory	60-inch YIELD sign (R1-2)	TY 10BWG(1)XX(T) TY 10BWG(1)XX(P-BM)
Regulatory	48x16-inch ONE-WAY sign (R6-1)	TY 10BWG(1)XX(T) TY 10BWG(1)XX(P-BM)
Regulatory	36x48, 48x36, and 48x48-inch signs	TY 10BWG(1)XX(T)
Regulatory	48x60-inch signs	TY S80(1)XX(T)
Warning	48x48-inch signs (diamond or square)	TY 10BWG(1)XX(T)
Warning	48x60-inch signs	TY S80(1)XX(T)
Warning	48-inch Advance School X-ing sign (S1-1)	TY 10BWG(1)XX(T)
Warning	48-inch School X-ing sign (S2-1)	TY 10BWG(1)XX(T)
Warning	Large Arrow sign (W1-6 & W1-7)	TY 10BWG(1)XX(T)

Texas Department of Transportation
Traffic Operations Division

SIGN MOUNTING DETAILS
SMALL ROADSIDE SIGNS
TRIANGULAR SLIPBASE SYSTEM

SMD(SLIP-3)-08

©TxDOT July 2002

DN: TXDOT	CK: TXDOT	DW: TXDOT	CK: TXDOT

9-08 REVISIONS

CONT	SECT	JOB	HIGHWAY
2452	01	043	SH 151

DIST	COUNTY	SHEET NO.
SA	BEXAR	405

DISCLAIMER: The use of this standard is governed by the "Texas Engineering Practice Act". No warranty of any kind is made by TxDOT for any purpose whatsoever. TxDOT assumes no responsibility for the conversion of this standard to other formats or for incorrect results or damages resulting from its use.

DATE: 2/21/2011 7:09:06 PM
FILE: pw:\\FTSDVNO01P9c:standard\Usfstd_sgn38.dgn
mwmldstff

NOTE: centerline of hole for 3/8" diameter squarehead bolt x 2 1/4" long with a flat washer and self-locking nut, or lock washer and hex. nut. Bolt head dimensions shall be in accordance with ANSI B 18.2.1 as referred to in the AISC Manual of steel construction. Bolt assembly shall be galvanized.

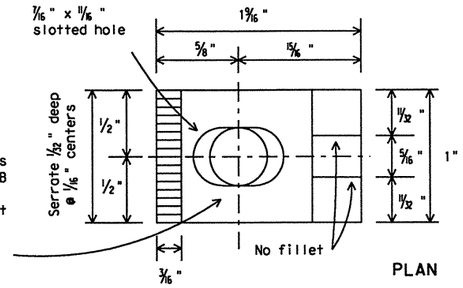

PLAN

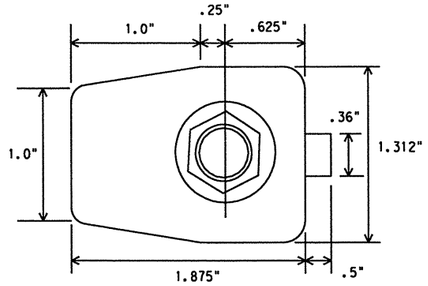

PLAN

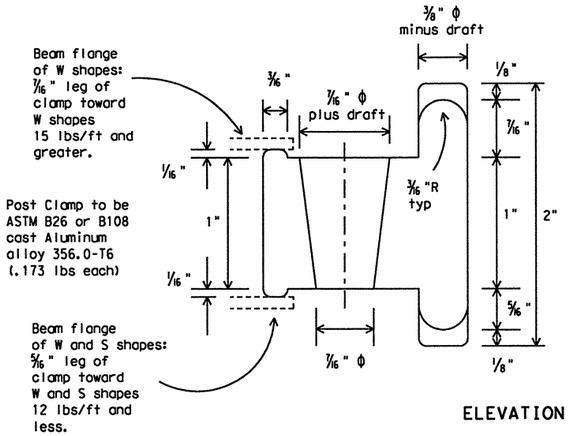

ELEVATION

POST CLAMP DETAIL

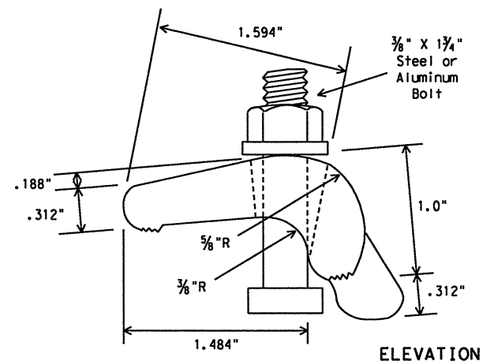

ELEVATION

ALTERNATE POST CLAMP DETAIL

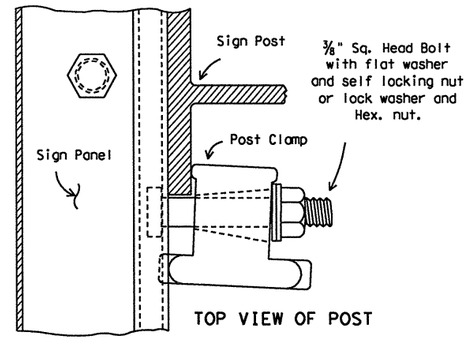

TOP VIEW OF POST

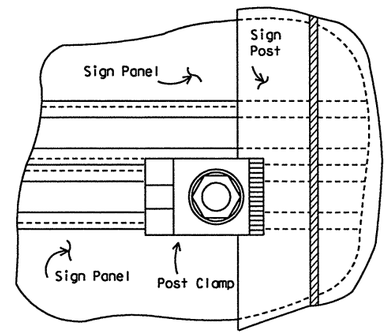

TOP VIEW OF CLAMP

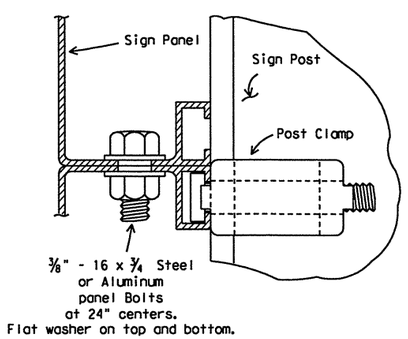

SIDE VIEW OF PANELS

CONNECTION DETAILS

DEPARTMENTAL MATERIAL SPECIFICATIONS

SIGN HARDWARE DMS-7120

GENERAL NOTES:

1. Design conforms with AASHTO Specifications for the design and construction of structural supports for highway signs.
2. Materials and fabrication shall conform to the requirements of the Department material specifications.
3. Structural steel shall be "low-alloy steel" for non-bridge structures per Item 442, "Metal For Structures."
4. For fiberglass substrate connection details, see manufacturer's recommendations.

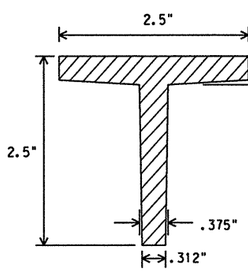

1.912 lbs/ft

ALUMINUM T SECTION OR APPROVED ALTERNATIVE

WINDBEAM CROSS SECTION

Windbeam to be extruded aluminum (1.175 lbs/ft) or approved alternative

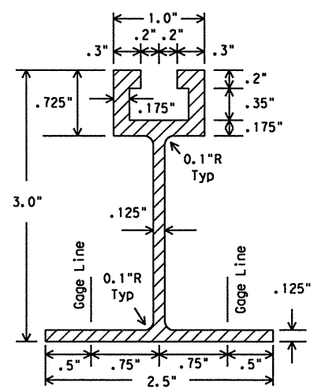

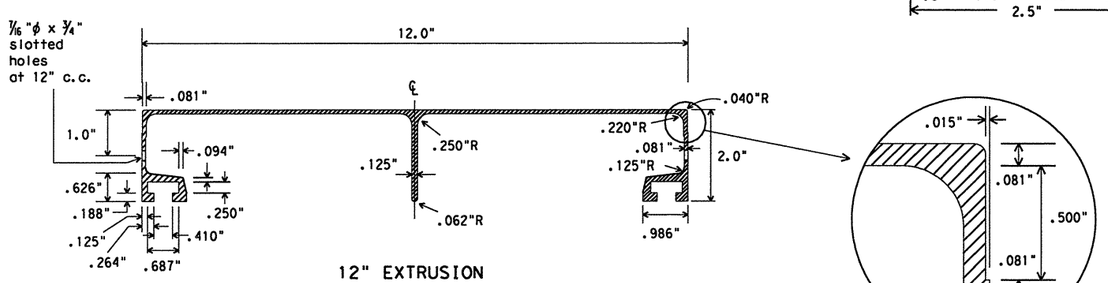

12" EXTRUSION

ALUMINUM SIGN PANEL EXTRUSION DETAILS

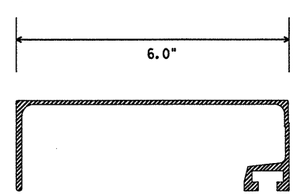

6" EXTRUSION

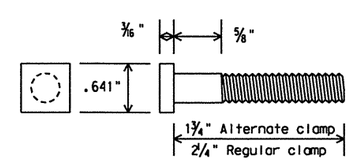

POST CLAMP BOLT DETAIL

Texas Department of Transportation
Traffic Operations Division

SIGN MOUNTING DETAILS- EXTRUDED ALUMINUM SIGN PANELS & HARDWARE

SMD(2-1)-08

© TxDOT 2001

9-08 REVISIONS	DN: TXDOT	CK: TXDOT	DW: TXDOT	CK: TXDOT
SA	CONT	SECT	JOB	HIGHWAY 408
	DIST	COUNTY		SHEET NO.
	BEXAR		2452 01	043 SH 151

DISCLAIMER: The use of this standard is governed by the "Texas Engineering Practice Act". No warranty of any kind is made by TxDOT for any purpose whatsoever. TxDOT assumes no responsibility for the conversion of this standard to other formats or for incorrect results or damages resulting from its use.

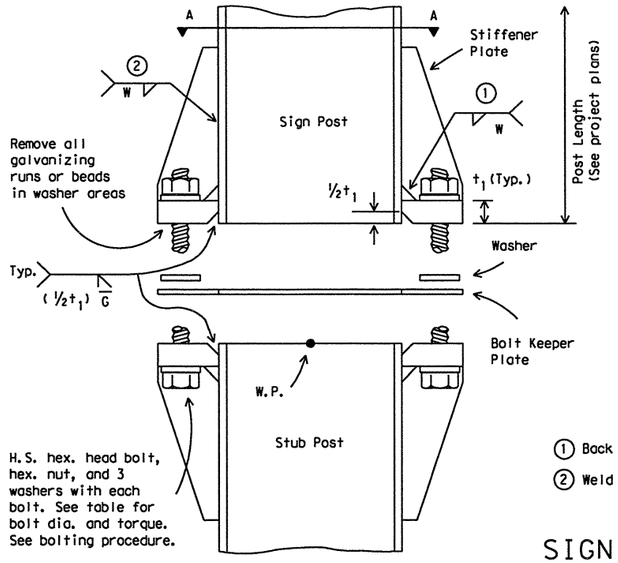

ELEVATION

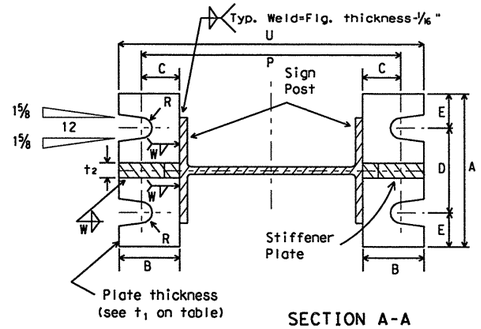

SECTION A-A

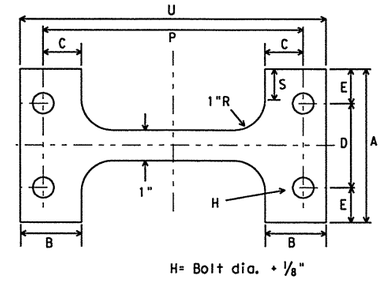

BOLT KEEPER PLATE

30 Ga galv. sheet steel

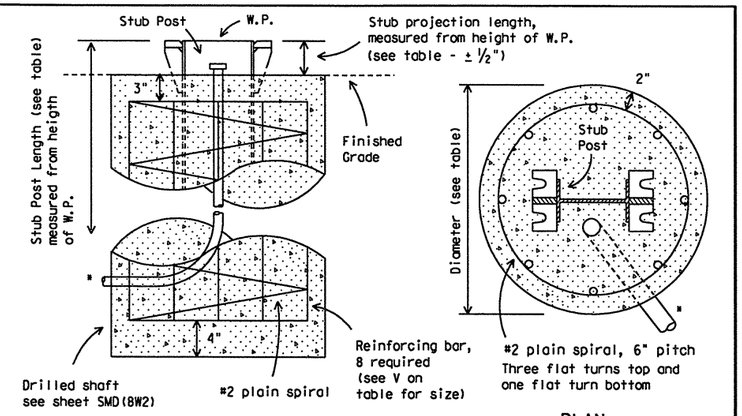

ELEVATION

PLAN

FOUNDATION DETAIL

*Note: For signs with electrical apparatus, see ED(10) for conduit required in founation.

① Back up weld to be made before installing stiffener plate

② Weld W may be continued across clips to seal joint

SIGN POST AND STUB POST

(For W Shapes)

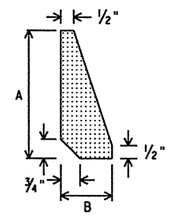

STIFFENER PLATE DETAIL

Steel Plate (thickness = t_2)

(See table for dimensions)

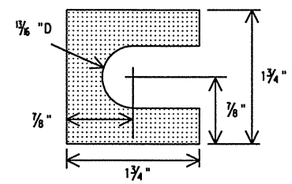

SHIM DETAIL

Furnish two .012"+ thick and two .032"+ thick shims per post. Shims shall be fabricated from brass shim stock or strip conforming to ASTM B36.

BOLTING PROCEDURE FOR ASSEMBLY OF BASE CONNECTION:

1. Assemble sign post, BOLT KEEPER PLATE and stub post with bolts and three flat washers per bolt as shown.
2. Shim as required to plumb post.
3. Tighten all bolts the maximum possible with a 12 to 15 inch wrench to clean bolt threads and to bed washers and shims.
4. Loosen each bolt in sequence and retighten bolts in a systematic order to the prescribed torque. Do not overtighten.
5. To prevent nut loosening, burr threads of bolt at junction with nut using a center punch.

Dimensions / Post Size	Base Connection Data Table: Bolt Size & Torque	A	B	C	D	E	t_1	t_2	W	R	Perforated Fuse Plate Data Table: F	G	J	K	M	d_1	d_2	t_3	Bolt Dia.	Wt. (ea.) (lbs.)	Bolt length	Bolt Keeper Data: P	S	U	Foundation Data: Stub length	Stub projection	Dr. Shaft diameter	Bar V Size
W6x9	⅝"ϕ x 2¾" 440-450 inch pounds 36-38 foot pounds	5"	2"	1¼"	2¾"	1⅛"	¾"	½"	¼"	11/32"	4¼"	2"	4"	2¼"	1"	9/16"	¾"	¼"	½"	1.01	1½"	8⅜"	1"	9⅞"	2'-0"	3"	24"	#5
W6x12																						8½"		10"	2'-0"	3"		#5
W6x15											5"	2½"	6"	3½"	1½"	11/16"	1¼"	⅜"	⅝"	2.51	2¼"	8½"		10"	2'-6"	3"		#6
W8x18											5"	2½"	5¼"	2¾"	1¼"	11/16"	1 1/16"	⅜"	⅝"	2.26	2¼"	10⅝"		12⅛"	2'-6"	3"		#7
W8x21	¾"ϕ x 3½" 740-750 inch pounds 62-63 foot pounds	6"	2¼"	1⅜"	3½"	1¼"	1"	¾"	5/16"	13/32"	5½"	2½"	5¼"	2¾"	1¼"	13/16"	1"	½"	¾"	3.35	2¼"	11"	1½"	12¾"	3'-0"	2½"		#8
W10x22											6"	3"	5¾"	2¾"	1⅜"	13/16"	1⅛"	½"	¾"	4.03	2¼"	12⅞"		14⅝"	3'-0"	2½"		#9
W10x26																						13⅛"		14⅞"	3'-0"	2½"		#10
W12x26											6"	3"	6½"	3½"	1⅝"	13/16"	1 5/16"	½"	¾"	4.47	2¼"	15"		16¾"	3'-0"	2½"		#11
S3x5.7	½"ϕ x 2½" 440-450 inch pounds 36-38 foot pounds	See Detail Below									3¾"	1½"	2⅝"	1½"	⅝"	9/16"	⅜"	¼"	½"	0.60	1½"	See Detail Below			3'-3½"	3½"	12"	Non-reinforced ③
S4x7.7																												

③ Foundation design shall be Type G Mount, see SMD (TY G).

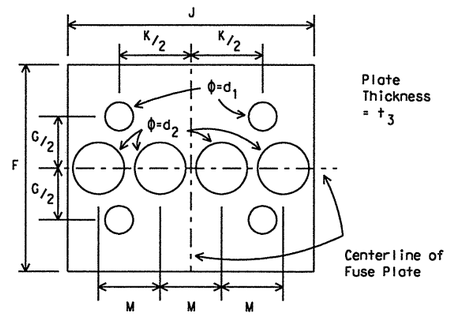

PERFORATED FUSE PLATE DETAIL

Use H.S. hex head bolts, hex head nut and bevel or flat washer (where req'd) under nut. All holes shall be drilled, sub-punched and reamed. All plate cuts shall preferably be saw cuts. However, flame cutting will be permitted provided all edges are ground. Metal projecting beyond the plane of the plate face will not be permitted. Steel fuse plates shall conform to the requirements of ASTM A36. ASTM A572 Grade 50 or ASTM A588 may be substituted for A36 at the option of the fabricator. Mill test reports shall be submitted for Fuse Plates. Steel used shall have an ultimate tensile strength not to exceed 80 KSI. For alternative Fuse Plate contact Traffic Operations Division.

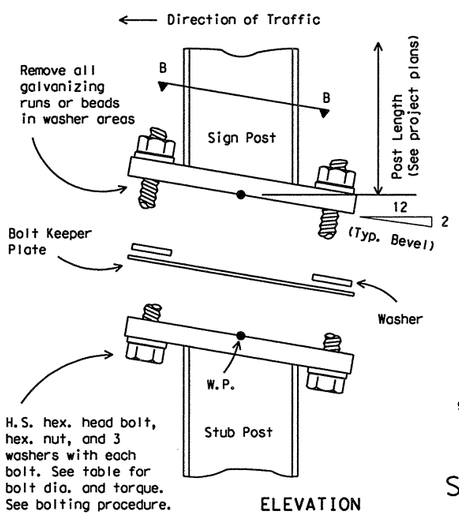

ELEVATION

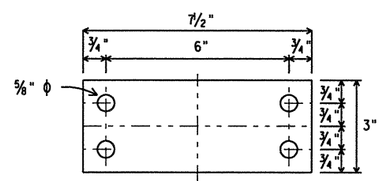

BOLT KEEPER PLATE

30 Ga galv. sheet steel

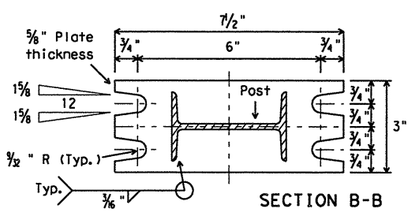

SECTION B-B

SIGN POST AND STUB POST

(For S4x7.7 and S3x5.7)

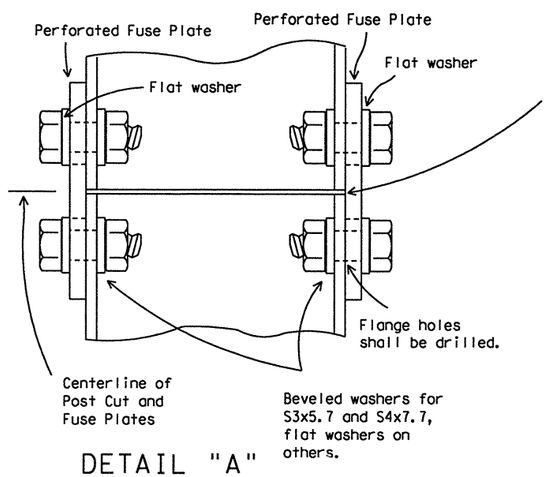

DETAIL "A"

Parts shall be saw cut either before galvanizing and the galvanized cut cleaned of zinc build-up, or saw cut after galvanizing and the cut surface repaired per Item 445, "Galvanizing."

Texas Department of Transportation
Traffic Operations Division

SIGN MOUNTING DETAILS- LARGE ROADSIDE SIGNS FOUNDATION & STUB

SMD(2-2)-08

©TxDOT August 1995

DN: TXDOT	CK: TXDOT	DW: TXDOT	CK: TXDOT

REVISIONS 4-98 9-08

CONT	SECT	JOB	HIGHWAY
SA			409
DIST		COUNTY	SHEET NO.
		BEXAR 2452 01	043 SH 151

p:\4760\0\0129cr \standard\ts1sld_sgn39.dgn 2/21/2011 7:03:08 PM mwmdu11

DATE:
FILE:

DISCLAIMER: The use of this standard is governed by the "Texas Engineering Practice Act". No warranty of any kind is made by TxDOT for any purpose whatsoever. TxDOT assumes no responsibility for the conversion of this standard to other formats or for incorrect results or damages resulting from its use.

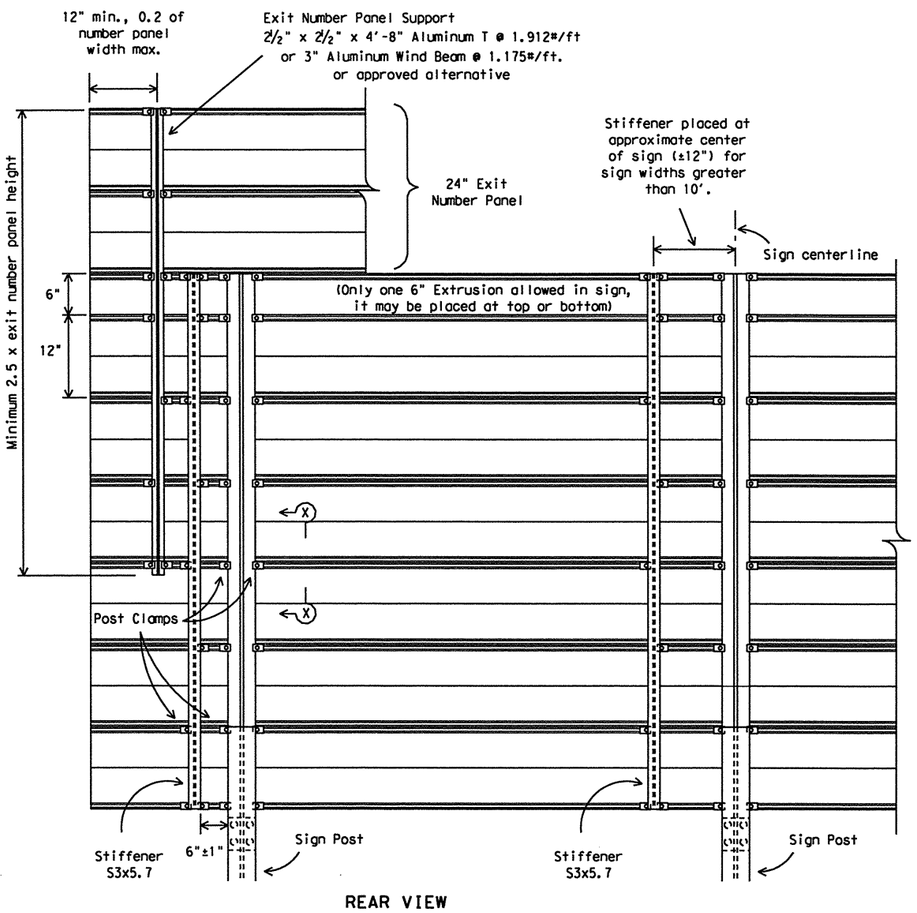

REAR VIEW

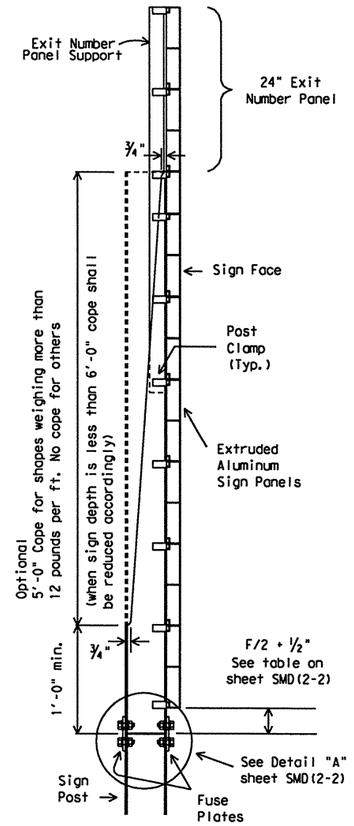

SIDE VIEW

ALUMINUM PARENT SIGN & EXIT NUMBER PANEL MOUNTING DETAILS

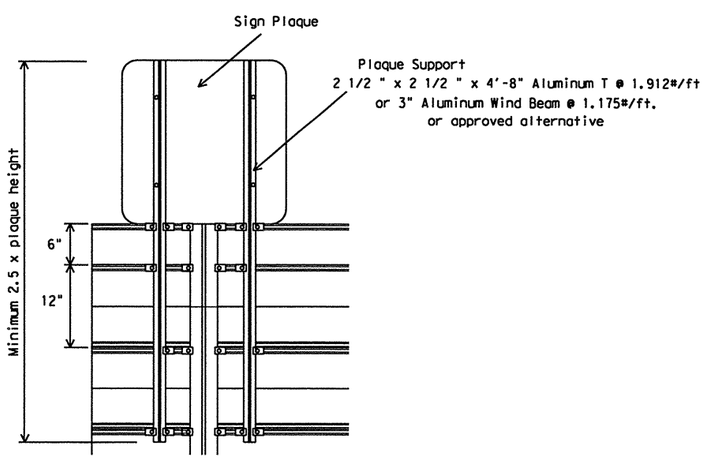

SIGN PLAQUE MOUNTING DETAIL TO ALUMINUM PARENT SIGN

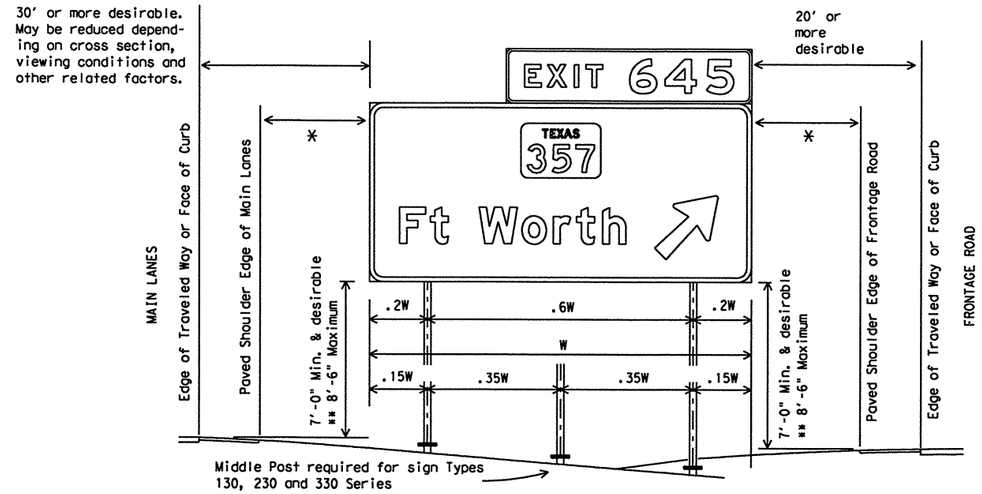

TYPICAL SIGN INSTALLATION AND LOCATION

LATERAL CLEARANCE NOTES:

Lateral clearances of signs mounted on median side of main lanes are the same as shown above where space will permit.

Where a sign is to be located behind guardrail, an allowable minimum clearance of five feet may be used, measured from the face of the guardrail to the near edge of sign.

* - 6' minimum and desirable may be used only in areas of limited lateral clearance and when approved by the Engineer.

POST SPACING NOTES:

Post spacing on a two post sign may vary a maximum of plus or minus 10% of total sign width to fit field conditions.

Post spacing on a three post sign may vary a maximum of plus or minus 5% of total sign width to fit field conditions.

SIGN HEIGHT NOTES:

** The 8' 6" maximum may be exceeded when placing signs on extreme slopes. In these conditions, a 7' minimum from natural ground to bottom of sign must be maintained.

DEPARTMENTAL MATERIAL SPECIFICATIONS

ALUMINUM SIGN BLANKS	DMS-7110
SIGN HARDWARE	DMS-7120

GENERAL NOTES:

1. Exit number panel shall be mounted to the right hand side of the parent sign for right exits and to the left hand side for left exits. The number panel shall be mounted with two uprights so its right edge is even with the right edge of the parent sign or vice-versa for left hand exits.
2. Exit number panel support shall be symmetrical about number panel centerline.
3. Exit number panel support shall be ASTM A36 structural steel galvanized after fabrication, or ASTM B221 aluminum alloy 6061-T6 or approved alternative.
4. All bolts, nuts and washers shall be galvanized per ASTM Designation: B695 Class 50, or A153 Class C or D.
5. Posts, parent sign panels, and exit number panels shall comply with notes on sheets SMD(2-1) and SMD(2-2).
6. Signs (such as exit number panels) attached above a parent sign shall be made of the same type material as the parent sign. General Service and Routing signs may be fabricated from flat sheet aluminum.
7. Exit number panel support and other connection hardware required to fasten exit number panel to parent sign shall be subsidiary to "Aluminum Signs" or "Fiberglass Signs."
8. For fiberglass sign installation details, see manufacturer's recommendations.

Texas Department of Transportation
Traffic Operations Division

SIGN MOUNTING DETAILS-LARGE ROADSIDE SIGNS

SMD(2-3)-08

©TxDOT August 1995

REVISIONS	DN: TXDOT	CK: TXDOT	DW: TXDOT	CK: TXDOT
9-08	CONT	SECT	JOB	HIGHWAY
SA				410
	DIST		COUNTY	SHEET NO.
	BEXAR		2452 01	043 SH 151

standardv15sld_sgn40.dgn 2/21/2011 7:09:09 PM mwmldstl1 pw:\\FTSDVD\DI29c

DATE:
FILE:

DISCLAIMER:
The use of this standard is governed by the "Texas Engineering Practice Act". No liability of any kind is made by TxDOT for any purpose whatsoever. TxDOT assumes no responsibility for the conversion of this standard to other formats or for incorrect results or damages resulting from its use.

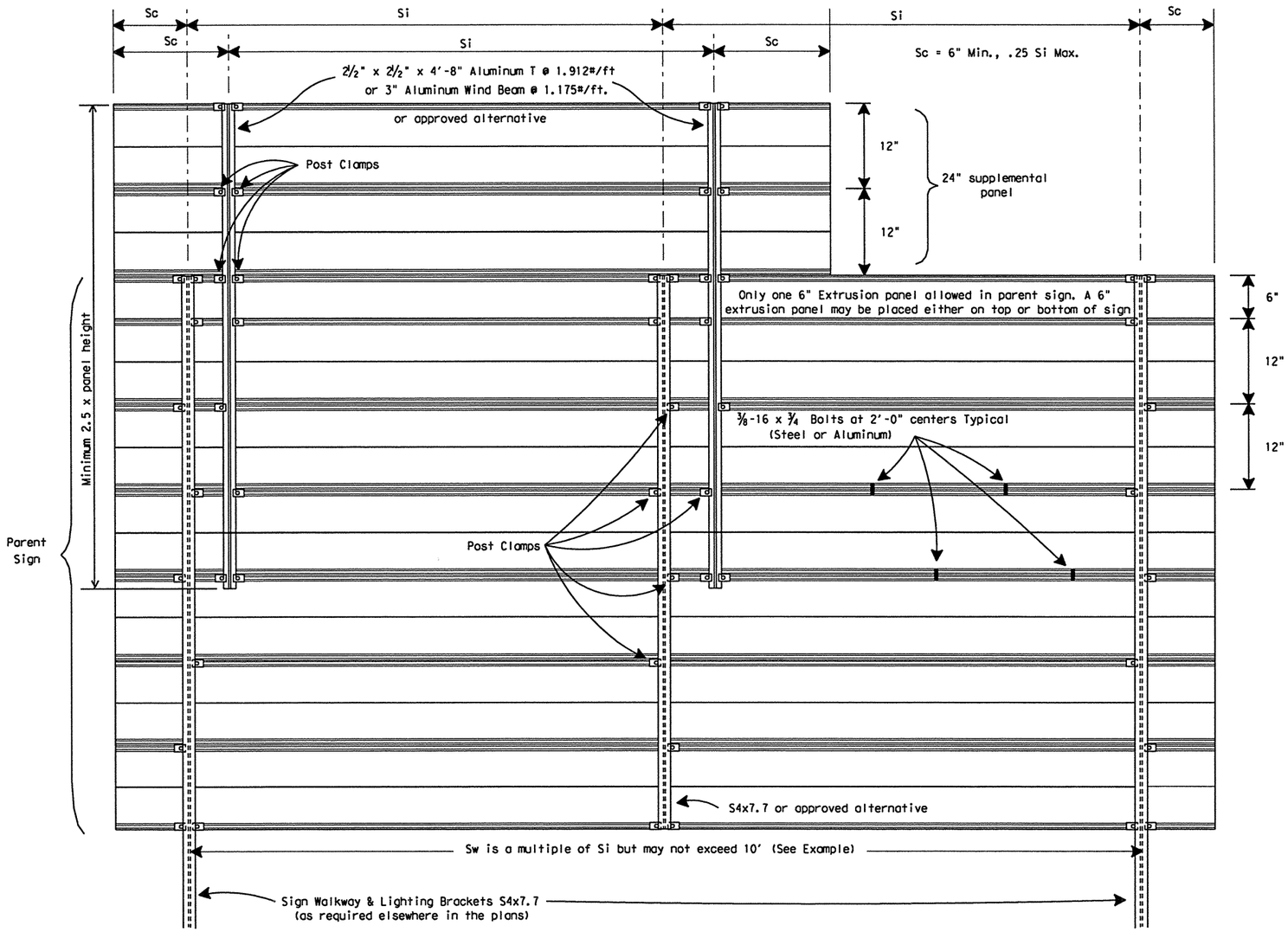

REAR VIEW

EXAMPLES (FOR DETERMINING Si and Sw)

NO.	ZONE	"d"	EXIT PANEL	WALKWAY	Si	Sw	COMMENT
1	1	15.0	YES	YES	4.5	9.0	Sw=2x(Si)
2	2	14.0	YES	NO	7.5	7.5	Sw = Si
3	1	15.0	NO	NO	8.5	8.5	Sw = Si
4	3	14.0	NO	YES	10.0	10.0	Sw = Si

Values shown for Si are maximum values. Si may be varied for different sign lengths and Truss mounting conditions. Sw should not exceed two times Si(Max.) or 10 feet.

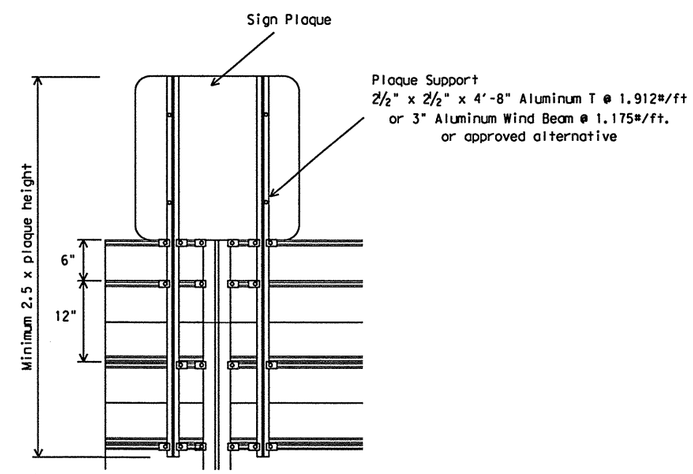

SIGN PLAQUE MOUNTING DETAIL

MAXIMUM SIGN SUPPORT SPACING "Si" (FEET)

"d" Deepest Sign in Group (Ft.)	EXTRUDED ALUMINUM SIGN PANELS															
	WITH EXIT NUMBER PANELS								WITHOUT EXIT NUMBER PANELS							
	WITH WALKWAYS				WITHOUT WALKWAYS				WITH WALKWAYS				WITHOUT WALKWAYS			
	WIND ZONE				WIND ZONE				WIND ZONE				WIND ZONE			
	1	2	3	4	1	2	3	4	1	2	3	4	1	2	3	4
15	4.5	7	8	10	5	7	8	10	7	8	9	10	8.5	10	10	10
14	6	7.5	9.5	10	6	7.5	9.5	10	8	9	10	10	10	10	10	10
13	7.5	9	10	10	7.5	9	10	10	9	10	10	10	10	10	10	10
12	8.5	10	10	10	8.5	10	10	10	10	10	10	10	10	10	10	10
11 or less	10	10	10	10	10	10	10	10	10	10	10	10	10	10	10	10

For fiberglass sign installations, see manufacturer's recommendations.

Texas Department of Transportation
Traffic Operations Division

SIGN MOUNTING DETAILS- OVERHEAD SIGNS EXTRUDED ALUMINUM

SMD(2-4)-08

©TxDOT December 1995

DN: TXDOT	CK: TXDOT	DW: TXDOT	CK: TXDOT
CONT	SECT	JOB	HIGHWAY
			411
DIST	COUNTY		SHEET NO.
BEXAR		2452 01	043 SH 151

REVISIONS
9-08
SA

DATE:
FILE:

DISCLAIMER: The use of this standard is governed by the "Texas Engineering Practice Act". No warranty of any kind is made by TxDOT for any purpose whatsoever. TxDOT assumes no responsibility for the conversion of this standard to other formats or for incorrect results or damages resulting from its use.

standard05sld_sgn42.dgn 2/21/2011 7:05:10 PM mwmldstf1 p:\4760\0-0129cr
DATE:
FILE:

WING CHANNEL CLAMP DETAIL FOR TYPE G MOUNT

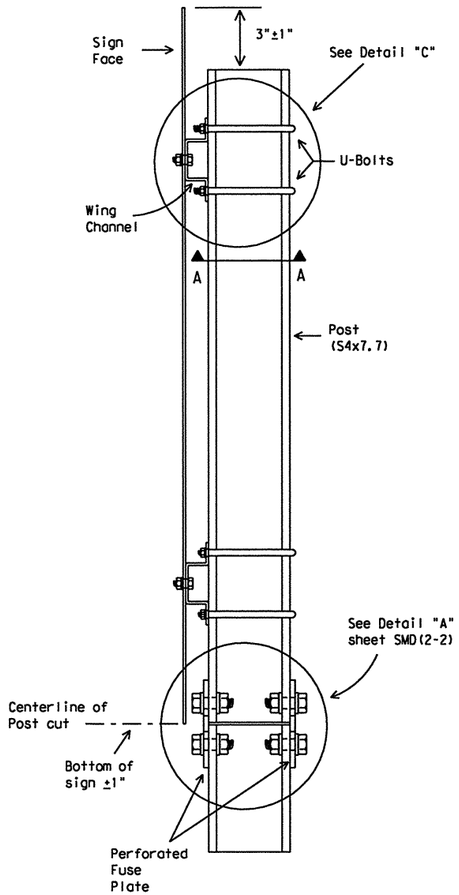

SIDE VIEW

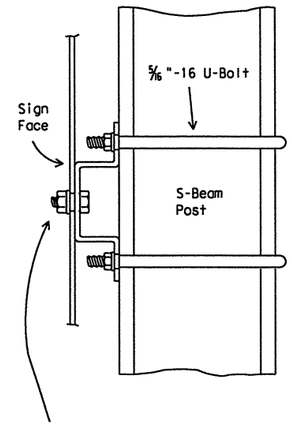

Galvanized steel or aluminum self-locking hex. head nut. 3/8 " - 16 x 3/4 " hex. head bolt for sheet metal. 3/8 " - 16 x 1 1/4 " hex. head bolt for plywood. 3/8 " galvanized medium washer.

DETAIL "C"

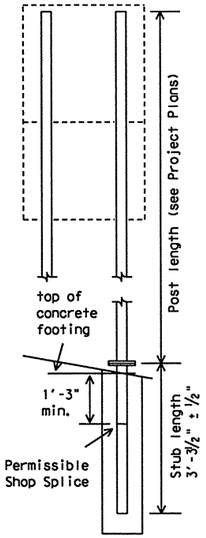

The weight of one S4x7.7 post is equal to 112.2 lbs. plus 7.7 lbs./ft x (post length in feet minus 10 ft). The weight of 112.2 lbs. includes 10 feet of post length, post foundation stub, related connection plates, friction fuse plate, and all high strength bolts, nuts and washers.

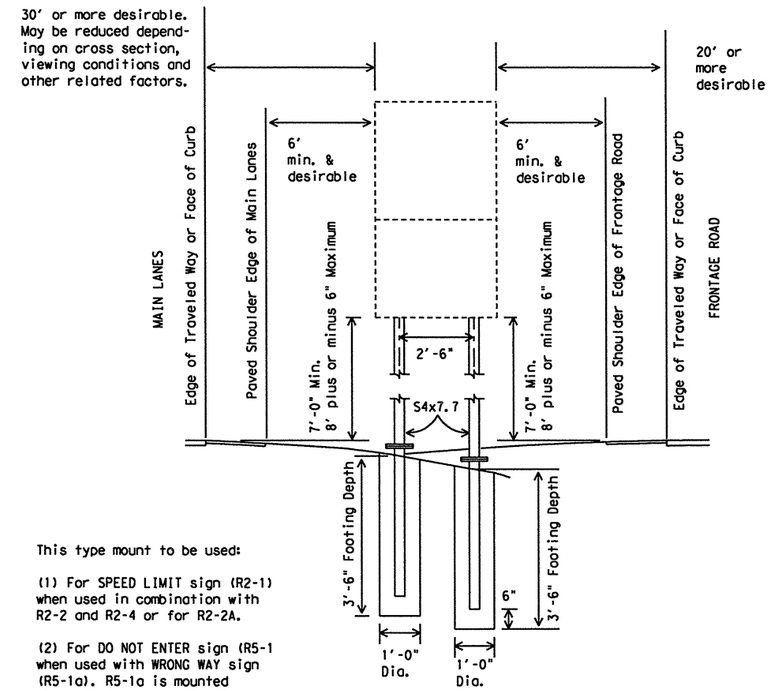

This type mount to be used:

(1) For SPEED LIMIT sign (R2-1) when used in combination with R2-2 and R2-4 or for R2-2A.

(2) For DO NOT ENTER sign (R5-1 when used with WRONG WAY sign (R5-1a). R5-1a is mounted above R5-1.

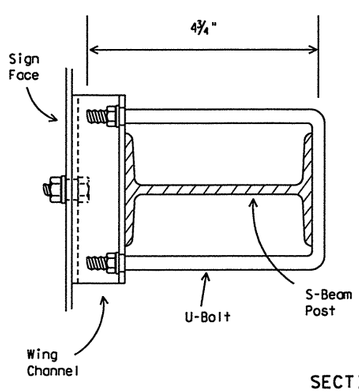

SECTION A-A

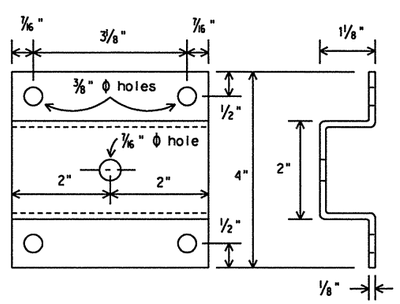

WING CHANNEL

Wing channel, 4" width x 1 1/8" depth x 1/8" thickness, shall be aluminum (ASTM B221 6061-T6 or B308 6061-T6), galvanized steel (ASTM A36) or stainless steel (ASTM A167 type 304, No. 2B finish).

DEPARTMENTAL MATERIAL SPECIFICATIONS
SIGN HARDWARE — DMS-7120

GENERAL NOTES:

1. Design conforms with AASHTO Specifications for the design and construction of structural supports for highway signs.
2. Materials and fabrication shall conform to the requirements of the Department material specifications.
3. Structural steel shall be "Low-Alloy Steel" for non-bridge structures per Item 442, "Metal For Structures."
4. Parts shall be saw cut either before galvanizing and the galvanized cut cleaned of zinc build-up, or saw cut after galvanizing and the cut surface repaired per Item 445, "Galvanizing." (Cut surface will not be treated until plate is installed and all bolts fully tightened.)

Texas Department of Transportation
Traffic Operations Division

SIGN MOUNTING DETAILS, TYPE G SUPPORT

SMD(TY G)-08

©TxDOT August 1995

REVISIONS		DN: TXDOT	CK: TXDOT	DW: TXDOT	CK: TXDOT
1-97	SA	CONT	SECT	JOB	HIGHWAY
9-08					412
		DIST	COUNTY		SHEET NO.
		BEXAR		2452 01	043 SH 151

DISCLAIMER: The use of this standard is governed by the "Texas Engineering Practice Act". No warranty of any kind is made by TxDOT for any purpose whatsoever. TxDOT assumes no responsibility for the conversion of this standard to other formats or for incorrect results or damages resulting from its use.

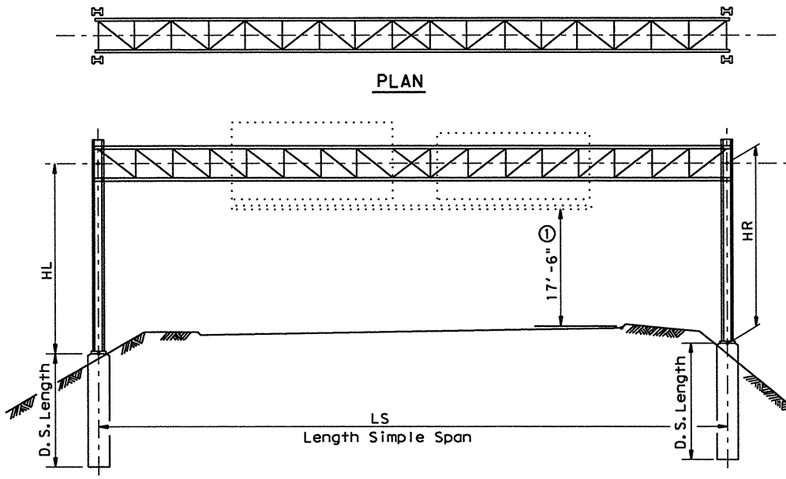

SIMPLE SPAN

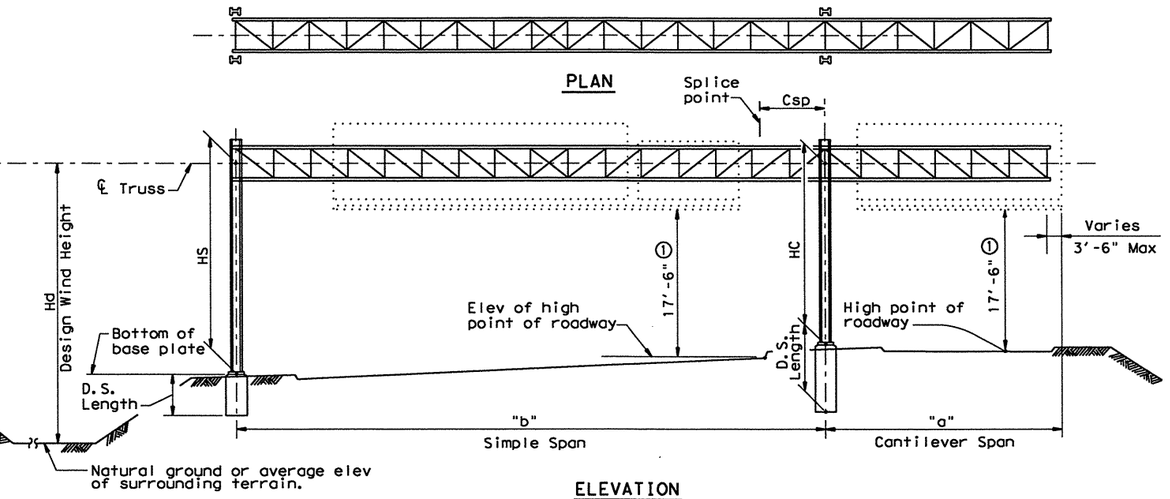

CANTILEVER SPAN

① Minimum vertical clearance

② "Low-Alloy Steel" for non-bridge structures per Item 442, "Metal For Structures".

③ "Carbon Steel" for non-bridge structures per Item 442, "Metal For Structures".

SIMPLE SPAN PROCEDURE:

Given: Span, Ls = 93.0'; Left Tower Height, H_L = 26.3'; Right Tower Height, H_R = 22.6'; Design Height, Hd = 27.0'; Avg. Penetrometer Value, N = 25; Dawson County.

Step 1: Select applicable OSB standard. From Wind Velocity and Ice Zone sheet (WV&IZ-96) determine that Dawson County is in Zone 2 (90 mph) and ice above the ice line. Since Design Height, Hd = 27.0', use standard OSB-Z2I. If the Design Height were more than 30.0', the applicable standard would be HOSB-Z2I.

Step 2: Determine truss details and tower size from OSB-Z2I. For our 93.0' span go to the next larger span, i.e. 95.0'. Truss members are:
Chord ~ L 4"x 4"x 3/8"② w/ 10 bolt splice
D.L. Diag. ~ L 3"x 2 1/2"x 3/16"③w/ 2 bolt connection
W.L. Diag. ~ L 3"x 3"x 1/4" ③ w/ 3 bolt connection
D.L. Vert. ~ L 3"x 2"x 3/16" ③ w/ 2 bolt connection
W.L. Strut ~ 2 1/2"x 2 1/2"x 3/16"③w/ 1 bolt connection
Bolts are 3/4" Dia high strength. Truss W x D = 4.5'x 4.5'. Required truss camber to compensate for dead load deflection is 1.46". Dead load of truss is 77 lb/ft. Avg. Tower Height = (26.3'+ 22.6')÷2 = 24.45'. Use 25.0' to determine column size and spacing for both towers, i.e. W14 x 34 spaced at 7.0'. Use actual tower heights for drilled shaft uplift as follows. For H_L = 26.3' use 26.0' to determine design uplift at the left tower = 79.8^k. For H_R = 22.6' use 23.0' to determine design uplift at the right tower = 69.9^k.

Step 3: Determine tower and anchor bolt details. Use OSBT standard.
From OSBT with W14 x 34 columns spaced at 7'-0":
Anchor Bolts = 1 3/4" Dia x 3'-10"
Base Plate = 11 1/2"x 2 1/4"x 2'-1"
X, Y, and Z = 9 1/2", 3", and 2 3/4" respectively
Tower Bracing = 2Ls ~ 3"x 2 1/2"x 1/4"
Foundation = 36" Dia shafts with 8 ~ #9 Bars.

Step 4: Determine drilled shaft length from OSB-FD. Enter chart for 36" Dia drilled shafts at N = 25.
Left Tower Uplift = 79.8^k, therefore, L = 9'+ 3'= 12'
Right Tower Uplift = 69.9^k, therefore, L = 8'+ 3'= 11'.

Step 5: Determine maximum spacing of tower bracing. The maximum spacing would normally be the same as the column spacing, i.e. 7.0'. However, the special note for tower bracing on Sheet 1 of the OSBT standard makes provision for an increase in spacing as follows: On OSB-Z2I under 95.0' span, the W14 x 34 column is shown for 25.0' and 26.0' column heights. Thus, the W14 x 34 is shown one time for heights greater than the design height of 25'-0". The special note for tower bracing allows a 1'-0" increase in the maximum spacing from 7.0' to 8.0'.

CANTILEVER SPAN PROCEDURE:

Given: Simple Span, b = 80.0'; Cantilever Span, a = 30.0'; Left Tower Height, H_L= 20.0'; Right Tower Height, H_R= 28.0'; Design Wind Height, H = 30.0'; Avg. Penetrometer Value, N = 25.0'; Duval County.

Step 1: Calculate the following:
Equiv. Simple Span, E_{SS}= b + 2a + (a^2÷ b)
= 151.30', Use 155.0'.

If E_{SS} exceeds 155.0' a special tower design is required. Cantilever Equiv. Simple Span, Cess = 2a = 60.0'; Splice Point, Csp = (a^2÷ b) = 11.30'; Equiv. Simple Span for Truss Web, Essw = b + (a^2÷ b) = 91.0', Use 95.0'.

Step 2: Select applicable OSB standard. From Wind Velocity and Ice Zone sheet determine that Duval County is in Zone 4 (70 mph) and is below the ice line. Since Design Wind Height, H = 30.0', Use standard OSB-Z4. If the Design Height were more than 30.0' the applicable standard would be HOSB-Z4.

Step 3: Determine truss details and tower size from OSB-Z4.
Cantilever Truss: For Ccss= 60.0' truss members are:
Chord L 3"x 3"x 1/4"② with 6 bolt splice
D.L. Diag. L 2"x 2"x 3/16" with 2 bolt connection
W.L. Diag. L 2 1/2"x 2 1/2"x 3/16" with 2 bolt connection
D.L. Vert. L 2"x 2"x 3/16" with 2 bolt connection
W.L. Strut L 2"x 2"x 3/16" with 1 bolt connection
Bolts are 5/8" Dia High Strength. Truss WxD = 4.0'x 4.0'. Required cantilever truss camber to compensate for dead load deflection is 0.49".

Simple Span Truss: For b = 80.0' truss members are:
Chord L 3"x 3"x 3/8"② with 9 bolt splice
D.L. Diag. L 2"x 2"x 3/16" with 2 bolt connection
W.L. Diag. L 3"x 3"x 3/16" with 2 bolt connection
D.L. Vert. L 2"x 2"x 3/16" with 2 bolt connection
W.L. Strut L 2"x 2"x 3/16" with 1 bolt connection
Bolts are 5/8" Dia High Strength. Truss WxD = 4.0'x 4.0'. If W and D for the cantilever and simple spans are different, increase smaller W and D to match the larger truss. Required simple span camber to compensate for dead load deflection is 1.12".

Truss from cantilever tower to splice point: Extend cantilever chords past the tower a distance, Csp= 11.2' which falls in the third panel. The splice is permissible at any point within the third panel. Web members from the tower out to and including the splice panel, i.e. the third panel, shall be modified as follows. For Essw= 95.0' web members are:
D.L. Diag. L 2 1/2"x 2 1/2"x 3/16" with 2 bolt connection
W.L. Diag. L 3"x 2 1/2"x 1/4" with 2 bolt connection
D.L. Vert. L 2"x 2"x 3/16" with 2 bolt connection
W.L. Strut L 2"x 2"x 3/16" with 1 bolt connection
Ignore W and D dimensions. Instead, use W and D as required for cantilever and simple span trusses. Use 5/8" Dia high strength bolts as required for 95.0' span.

Tower Size: Avg. Tower Height = (20.0'+ 28.0')÷2 = 24.0'. Use 24.0' height and 155.0' equivalent simple span to determine column size and spacing for both towers, i.e. W14 x 34 spaced at 7.5'
Use spans and actual tower heights for uplift as follows:
For H_S= 20.0', and b = 80.0' determine uplift = 31.7^k.
For H_C= 28.0', and E_{SS}= 155.0' determine uplift = 77.9^k.

Step 4: Determine tower and anchor bolt details. Use standard OSBT.
From OSBT with W14 x 34 columns spaced at 7.5':
Anchor Bolts = 1 3/4" Dia x 3'-10"
Base Plate = 11 1/2"x 2 1/4"x 2'-1"
X, Y, and Z = 9 1/2", 3", and 2 3/4" respectively
Tower Bracing = 2Ls ~ 3"x 2 1/2"x 1/4"
Foundation = 36" Dia shafts with 8~#9 bars.

Step 5: Determine drilled shaft length from OSB-FD.
Enter chart for 36" Dia drilled shaft at N = 25.0'
Left Tower Uplift = 31.7^k, therefore L = 6'+ 3'= 9'
Right Tower Uplift = 77.9^k, therefore L = 8'+ 3'= 11'.

Step 6: Determine maximum spacing of tower bracing. The maximum spacing would normally be the same as the column spacing, i.e. 7.5'. However, the special note for tower bracing on Sheet 1 of the OSBT standard makes provision for an increase in spacing as follows:
On OSB-Z4 under 155.0' span, the W14 x 34 column is shown for 23.0' through 26.0' column heights. Thus, the W14 x 34 column is shown two times for heights greater than 24.0'. The special note allows a 2.0' increase from 7.5' to 9.5'.

Texas Department of Transportation
Traffic Operations Division

OVERHEAD SIGN BRIDGE SELECTION EXAMPLES

OSB-SE

©TxDOT November 2007

DN: TXDOT	CK: TXDOT	DW: TXDOT	CK: TXDOT
REVISIONS			

CONT	SECT	JOB	HIGHWAY
2452	01	043	SH 151
DIST		COUNTY	SHEET NO.
SA		BEXAR	413

standard\v5std_sgn24.dgn 2/21/2011 7:09:41 PM mwmtdkt1t
pw476DU0-0129cr
DATE:
FILE:

DISCLAIMER: The use of this standard is governed by the "Texas Engineering Practice Act". No warranty of any kind is made by TxDOT for any purpose whatsoever. TxDOT assumes no responsibility for the conversion of this standard to other formats or for incorrect results or damages resulting from its use.

p:\4760\0-0129\ot standard\d5\std_sgn35.dgn 2/21/2011 7:08:12 PM mwmldstff

ZONE 3 NO ICE 80 M.P.H. WIND

TRUSS DETAILS

5/8" Dia. H.S. Bolts — Spans 40' Thru 95'

SPAN	40'	45'	50'	55'	60'	65'	70'	75'
W x D = WIDTH x DEPTH	4.0 x 4.0	4.0 x 4.0	4.0 x 4.0	4.0 x 4.0	4.0 x 4.0	4.0 x 4.0	4.5 x 4.5	4.5 x 4.5
CHORD -②, Unless Otherwise Shown	L 3 x 3 x 3/16 ③ [3]	L 3 x 3 x 3/16 ③ [3]	L 3 x 3 x 1/4 ③ [4]	L 3 x 3 x 1/4 ③ [4]	L 3 x 3 x 1/4 [6]	L 3 x 3 x 5/16 [7]	L 3 x 3 x 5/16 [7]	L 3 1/2 x 3 1/2 x 5/16 [9]
DEAD LOAD DIAGONAL -③	L 2 x 2 x 3/16 [2]	L 2 x 2 x 3/16 [2]	L 2 x 2 x 3/16 [2]	L 2 x 2 x 3/16 [2]	L 2 x 2 x 3/16 [2]	L 2 x 2 x 3/16 [2]	L 2 x 2 x 3/16 [2]	L 2 x 2 x 3/16 [2]
WIND LOAD DIAGONAL -③	L 2 1/2 x 2 1/2 x 3/16 [2]	L 2 1/2 x 2 1/2 x 3/16 [2]	L 2 1/2 x 2 1/2 x 3/16 [2]	L 3 x 3 x 3/16 [2]	L 3 x 3 x 3/16 [2]	L 3 x 3 x 3/16 [2]	L 3 x 3 x 3/16 [2]	L 3 x 3 x 3/16 [3]
DEAD LOAD VERTICAL -③	L 2 x 2 x 3/16 [2]	L 2 x 2 x 3/16 [2]	L 2 x 2 x 3/16 [2]	L 2 x 2 x 3/16 [2]	L 2 x 2 x 3/16 [2]	L 2 x 2 x 3/16 [2]	L 2 x 2 x 3/16 [2]	L 2 x 2 x 3/16 [2]
WIND LOAD STRUT - ③	L 2 x 2 x 3/16 [1]	L 2 x 2 x 3/16 [1]	L 2 x 2 x 3/16 [1]	L 2 x 2 x 3/16 [1]	L 2 x 2 x 3/16 [1]	L 2 x 2 x 3/16 [1]	L 2 x 2 x 3/16 [1]	L 2 x 2 x 3/16 [1]
TOTAL DEFL. & TRUSS D.L.	DEFL=0.14" L=38 lb/ft	DEFL=0.21" L=38 lb/ft	DEFL=0.25" L=43 lb/ft	DEFL=0.36" L=45 lb/ft	DEFL=0.50" L=45 lb/ft	DEFL=0.58" L=50 lb/ft	DEFL=0.63" L=52 lb/ft	DEFL=0.73" L=57 lb/ft

TOWER DETAILS

COLUMN SIZE & UPLIFT (kips); Tower Height = (HL + HR)/2

S = COLUMN SPACING	6.0'	6.0'	6.0'	6.0'	6.0'	6.5'	6.5'	6.5'
TOWER HEIGHT								
15'	W 10 x 15 (18.0)	W 10 x 15 (20.1)	W 10 x 15 (22.1)	W 10 x 15 (24.2)	W 10 x 15 (26.2)	W 10 x 17 (25.8)	W 10 x 17 (27.9)	W 10 x 22 (29.8)
16'	W 10 x 15 (19.3)	W 10 x 15 (21.5)	W 10 x 15 (23.7)	W 10 x 15 (25.9)	W 10 x 15 (28.1)	W 10 x 17 (27.6)	W 10 x 22 (29.9)	W 10 x 22 (31.9)
17'	W 10 x 15 (20.6)	W 10 x 15 (23.0)	W 10 x 15 (25.3)	W 10 x 17 (27.6)	W 10 x 17 (29.9)	W 10 x 22 (29.4)	W 10 x 22 (31.8)	W 10 x 22 (34.0)
18'	W 10 x 15 (21.9)	W 10 x 15 (24.4)	W 10 x 17 (26.9)	W 10 x 17 (29.3)	W 10 x 17 (31.8)	W 10 x 22 (31.3)	W 10 x 22 (33.8)	W 10 x 22 (36.1)
19'	W 10 x 15 (23.3)	W 10 x 17 (25.9)	W 10 x 17 (28.5)	W 10 x 22 (31.1)	W 10 x 22 (33.7)	W 10 x 22 (33.1)	W 10 x 22 (35.7)	W 10 x 22 (38.2)
20'	W 10 x 15 (24.6)	W 10 x 17 (27.4)	W 10 x 17 (30.1)	W 10 x 22 (32.8)	W 10 x 22 (35.5)	W 10 x 22 (35.0)	W 10 x 22 (37.7)	W 10 x 22 (40.3)
21'	W 10 x 17 (25.9)	W 10 x 17 (28.9)	W 10 x 22 (31.7)	W 10 x 22 (34.6)	W 10 x 22 (37.1)	W 10 x 22 (36.9)	W 10 x 26 (39.7)	W 10 x 26 (42.5)
22'	W 10 x 17 (27.3)	W 10 x 17 (30.4)	W 10 x 22 (33.3)	W 10 x 22 (36.4)	W 10 x 22 (39.0)	W 10 x 22 (38.7)	W 10 x 26 (41.8)	W 10 x 26 (44.6)
23'	W 10 x 22 (28.7)	W 10 x 22 (31.9)	W 10 x 22 (35.0)	W 10 x 22 (38.4)	W 10 x 26 (41.3)	W 10 x 26 (40.6)	W 10 x 26 (43.8)	W 12 x 26 (47.1)
24'	W 10 x 22 (30.1)	W 10 x 22 (33.4)	W 10 x 22 (36.6)	W 10 x 22 (39.9)	W 10 x 26 (43.2)	W 10 x 26 (42.5)	W 10 x 26 (45.8)	W 12 x 26 (49.3)
25'	W 10 x 22 (31.4)	W 10 x 22 (34.9)	W 10 x 22 (38.3)	W 10 x 26 (41.7)	W 10 x 26 (44.6)	W 10 x 26 (44.5)	W 12 x 26 (48.3)	W 12 x 26 (51.5)
26'	W 10 x 22 (32.9)	W 10 x 22 (36.5)	W 10 x 26 (40.0)	W 10 x 26 (43.5)	W 10 x 26 (46.6)	W 12 x 26 (46.4)	W 12 x 26 (50.4)	W 12 x 26 (53.7)
27'	W 10 x 22 (33.7)	W 10 x 26 (38.0)	W 10 x 26 (41.8)	W 10 x 26 (45.4)	W 12 x 26 (49.6)	W 12 x 26 (48.8)	W 12 x 26 (52.5)	W 12 x 26 (56.0)
28'	W 10 x 22 (35.1)	W 10 x 26 (39.6)	W 10 x 26 (43.4)	W 12 x 26 (47.2)	W 12 x 26 (51.6)	W 12 x 26 (50.8)	W 12 x 26 (54.6)	W 14 x 30 (58.2)
29'	W 10 x 26 (37.1)	W 10 x 26 (41.6)	W 12 x 26 (45.7)	W 12 x 26 (50.0)	W 12 x 26 (53.6)	W 12 x 26 (52.7)	W 12 x 26 (56.7)	W 14 x 30 (61.5)
30'	W 10 x 26 (38.6)	W 10 x 26 (42.8)	W 12 x 26 (47.4)	W 12 x 26 (51.6)	W 12 x 26 (55.6)	W 12 x 26 (54.7)	W 12 x 26 (58.8)	W 14 x 30 (63.8)

ZONE 3 NO ICE 80 M.P.H. WIND

TRUSS DETAILS

5/8" Dia. H.S. Bolts — Spans 40' Thru 95'

SPAN	80'	85'	90'	95'
W x D = WIDTH x DEPTH	4.5 x 4.5	4.5 x 4.5	4.5 x 4.5	4.5 x 4.5
CHORD -②, Unless Otherwise Shown	L 3 1/2 x 3 1/2 x 5/16 [9]	L 3 1/2 x 3 1/2 x 5/16 [9]	L 3 1/2 x 3 1/2 x 3/8 [10]	L 3 1/2 x 3 1/2 x 3/8 [11]
DEAD LOAD DIAGONAL -③	L 2 x 2 x 3/16 [2]	L 2 x 2 x 3/16 [2]	L 2 x 2 x 3/16 [2]	L 2 x 2 x 3/16 [2]
WIND LOAD DIAGONAL -③	L 3 x 3 x 1/4 [3]	L 3 x 3 x 1/4 [3]	L 3 x 3 x 1/4 [3]	L 3 x 3 x 1/4 [3]
DEAD LOAD VERTICAL -③	L 2 x 2 x 3/16 [2]	L 2 x 2 x 3/16 [2]	L 3 x 2 x 3/16 [2]	L 3 x 2 x 3/16 [2]
WIND LOAD STRUT - ③	L 2 x 2 x 3/16 [1]	L 2 x 2 x 3/16 [1]	L 2 x 2 x 3/16 [1]	L 2 x 2 x 3/16 [1]
TOTAL DEFL. & TRUSS D.L.	DEFL=0.95" L=61 lb/ft	DEFL=1.19" L=61 lb/ft	DEFL=1.32" L=67 lb/ft	DEFL=1.61" L=67 lb/ft

TOWER DETAILS

COLUMN SIZE & UPLIFT (kips); Tower Height = (HL + HR)/2

S = COLUMN SPACING	6.5'	6.5'	6.5'	6.5'
TOWER HEIGHT				
15'	W 10 x 22 (31.7)	W 10 x 22 (33.6)	W 10 x 22 (35.5)	W 10 x 22 (37.5)
16'	W 10 x 22 (33.9)	W 10 x 22 (36.0)	W 10 x 22 (38.0)	W 10 x 22 (40.1)
17'	W 10 x 22 (36.1)	W 10 x 22 (38.3)	W 10 x 22 (40.5)	W 10 x 26 (42.8)
18'	W 10 x 22 (38.4)	W 10 x 22 (40.7)	W 10 x 26 (43.0)	W 10 x 26 (45.4)
19'	W 10 x 26 (40.6)	W 10 x 26 (43.1)	W 10 x 26 (45.8)	W 10 x 26 (47.8)
20'	W 10 x 26 (42.9)	W 10 x 26 (45.5)	W 10 x 26 (48.4)	W 10 x 26 (50.4)
21'	W 10 x 26 (45.1)	W 12 x 26 (48.2)	W 12 x 26 (50.9)	W 12 x 26 (53.7)
22'	W 10 x 26 (47.4)	W 12 x 26 (50.6)	W 12 x 26 (53.5)	W 12 x 26 (56.4)
23'	W 12 x 26 (50.0)	W 12 x 26 (52.7)	W 12 x 26 (56.1)	W 12 x 26 (59.7)
24'	W 12 x 26 (52.4)	W 12 x 26 (55.2)	W 12 x 26 (58.7)	W 12 x 26 (61.8)
25'	W 12 x 26 (54.7)	W 12 x 26 (58.0)	W 14 x 30 (62.1)	W 14 x 30 (65.4)
26'	W 12 x 26 (57.1)	W 14 x 30 (60.5)	W 14 x 30 (64.7)	W 14 x 30 (68.2)
27'	W 14 x 30 (60.3)	W 14 x 30 (63.9)	W 14 x 30 (67.4)	W 14 x 34 (71.0)
28'	W 14 x 30 (62.8)	W 14 x 30 (66.5)	W 14 x 30 (70.1)	W 14 x 34 (73.8)
29'	W 14 x 30 (65.2)	W 14 x 30 (69.0)	W 14 x 34 (72.9)	W 14 x 34 (76.7)
30'	W 14 x 30 (67.8)	W 14 x 34 (71.6)	W 14 x 34 (75.8)	W 14 x 34 (79.5)

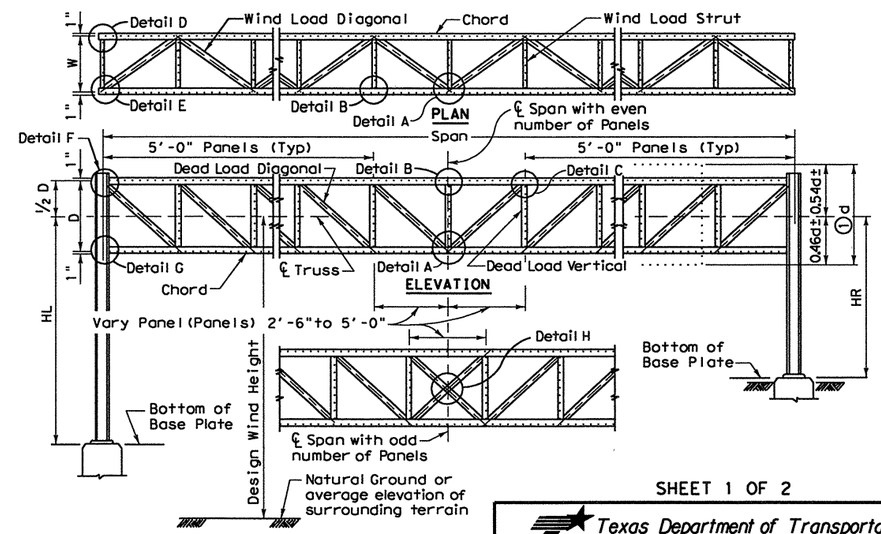

① d = Sign Depth
Where signs of different depths are used, the bottom edges of all signs may be placed in line. Where this is done, all signs should be so positioned that the bottom edges are approximately 0.46 of the depth of the deepest sign below the ℄ of the truss.

② "Low-Alloy Steel" for non-bridge structures per Item 442, "Metal For Structures".

③ "Carbon Steel" for non-bridge structures per Item 442, "Metal For Structures".

SHEET 1 OF 2

Texas Department of Transportation
Traffic Operations Division

OVERHEAD SIGN BRIDGE DETAILS

OSB-Z3

© TxDOT November 2007

DN: TXDOT	CK: TXDOT	DW: TXDOT	CK: TXDOT
REVISIONS			

CONT	SECT	JOB	HIGHWAY
2452	01	043	SH 151
DIST		COUNTY	SHEET NO.
SA		BEXAR	414

DATE:
FILE:

standardv5istd_sgn37.dgn
2/21/2011
1:09:13 PM
mwmldx11
pw476000-0129cc

DISCLAIMER: The use of this standard is governed by the "Texas Engineering Practice Act". No warranty of any kind is made by TxDOT for any purpose whatsoever. TxDOT assumes no responsibility for the conversion of this standard to other formats or for incorrect results or damages resulting from its use.

ZONE 3 NO ICE 80 M.P.H. WIND

TRUSS DETAILS

(¾" Dia. H.S. Bolts Spans 96' Thru 155')

SPAN	100'	105'	110'	115'	120'	125'	130'	135'
W x D = WIDTH x DEPTH	4.5 x 4.5	4.5 x 4.5	4.5 x 4.5	4.5 x 4.5	5.0 x 5.0	5.0 x 5.0	5.0 x 5.0	5.0 x 5.0
CHORD -②, Unless Otherwise Shown	L 4 x 4 x 3/8 [9]	L 4 x 4 x 3/8 [10]	L 4 x 4 x 7/16 [11]	L 4 x 4 x 1/2 [12]	L 4 x 4 x 1/2 [12]	L 4 x 4 x 1/2 [13]	L 5 x 5 x 7/16 [14]	L 5 x 5 x 7/16 [15]
DEAD LOAD DIAGONAL -③	L 3 x 2 x 3/16 [2]	L 3 x 2 x 3/16 [2]	L 3 x 2 x 3/16 [2]	L 3 x 2 1/2 x 3/16 [2]	L 3 x 2 1/2 x 3/16 [2]	L 3 x 3 x 3/16 [2]	L 3 x 3 x 3/16 [2]	L 3 x 3 x 3/16 [2]
WIND LOAD DIAGONAL -③	L 3 x 3 x 1/4 [2]	L 3 x 3 x 1/4 [3]	L 3 x 3 x 1/4 [3]	L 3 x 3 x 1/4 [3]	L 3 1/2 x 3 1/2 x 1/4 [3]	L 3 1/2 x 3 1/2 x 1/4 [3]	L 3 1/2 x 3 1/2 x 1/4 [3]	L 3 1/2 x 3 1/2 x 1/4 [3]
DEAD LOAD VERTICAL -③	L 3 x 2 x 3/16 [2]	L 3 x 2 x 3/16 [2]	L 3 x 2 x 3/16 [2]	L 3 x 2 x 3/16 [2]	L 3 x 2 x 3/16 [2]	L 3 x 2 1/2 x 3/16 [2]	L 3 x 2 1/2 x 3/16 [2]	L 3 x 2 1/2 x 3/16 [2]
WIND LOAD STRUT - ③	L 2 1/2 x 2 1/2 x 3/16 [1]	L 2 1/2 x 2 1/2 x 3/16 [1]	L 2 1/2 x 2 1/2 x 3/16 [1]	L 2 1/2 x 2 1/2 x 3/16 [1]	L 2 1/2 x 2 1/2 x 3/16 [1]	L 2 1/2 x 2 1/2 x 3/16 [1]	L 2 1/2 x 2 1/2 x 3/16 [1]	L 2 1/2 x 2 1/2 x 3/16 [1]
TOTAL DEFL. & TRUSS D.L.	DEFL=1.77" L=76 lb/ft	DEFL=2.13" L=76 lb/ft	DEFL=2.32" L=82 lb/ft	DEFL=2.54" L=90 lb/ft	DEFL=2.54" L=95 lb/ft	DEFL=3.03" L=97 lb/ft	DEFL=3.22" L=103 lb/ft	DEFL=3.72" L=103 lb/ft

TOWER DETAILS

S = COLUMN SPACING	7.0'	7.0'	7.0'	7.0'	7.5'	7.5'	7.5'	7.5'
TOWER HEIGHT (Tower Height = (HL + HR)/2) — COLUMN SIZE & UPLIFT (kips)								
15'	W 10 x 22 (36.0)	W 10 x 26 (37.8)	W 10 x 26 (39.5)	W 10 x 26 (41.1)	W 12 x 26 (39.9)	W 12 x 26 (41.5)	W 12 x 26 (43.1)	W 12 x 26 (44.7)
16'	W 10 x 22 (38.6)	W 10 x 26 (40.5)	W 10 x 26 (42.3)	W 10 x 26 (44.0)	W 12 x 26 (42.7)	W 12 x 26 (44.5)	W 12 x 26 (46.2)	W 12 x 26 (48.0)
17'	W 10 x 26 (40.9)	W 10 x 26 (43.2)	W 10 x 26 (45.1)	W 12 x 26 (47.1)	W 12 x 26 (45.6)	W 12 x 26 (47.4)	W 12 x 26 (49.3)	W 12 x 26 (51.2)
18'	W 10 x 26 (43.5)	W 10 x 26 (45.9)	W 12 x 26 (47.9)	W 12 x 26 (50.1)	W 12 x 26 (48.5)	W 12 x 26 (50.4)	W 12 x 26 (52.4)	W 12 x 26 (54.4)
19'	W 12 x 26 (46.5)	W 12 x 26 (48.8)	W 12 x 26 (51.0)	W 12 x 26 (53.1)	W 12 x 26 (51.4)	W 12 x 26 (53.4)	W 14 x 30 (56.0)	W 14 x 30 (58.1)
20'	W 12 x 26 (49.1)	W 12 x 26 (51.5)	W 12 x 26 (53.8)	W 12 x 26 (56.0)	W 12 x 26 (54.3)	W 14 x 30 (56.9)	W 14 x 30 (59.2)	W 14 x 30 (61.4)
21'	W 12 x 26 (51.7)	W 12 x 26 (54.3)	W 12 x 26 (56.7)	W 14 x 30 (59.6)	W 14 x 30 (57.7)	W 14 x 30 (60.0)	W 14 x 30 (62.3)	W 14 x 30 (64.7)
22'	W 12 x 26 (54.3)	W 12 x 26 (57.0)	W 14 x 30 (59.6)	W 14 x 30 (62.6)	W 14 x 30 (60.7)	W 14 x 30 (63.1)	W 14 x 30 (65.5)	W 14 x 34 (68.0)
23'	W 14 x 30 (57.7)	W 14 x 30 (60.4)	W 14 x 30 (63.1)	W 14 x 30 (65.7)	W 14 x 30 (63.7)	W 14 x 34 (66.2)	W 14 x 34 (68.8)	W 14 x 34 (71.3)
24'	W 14 x 30 (60.4)	W 14 x 30 (63.3)	W 14 x 30 (66.0)	W 14 x 30 (67.8)	W 14 x 30 (66.6)	W 14 x 34 (69.3)	W 14 x 34 (72.0)	W 14 x 34 (74.7)
25'	W 14 x 30 (63.1)	W 14 x 30 (66.3)	W 14 x 34 (69.8)	W 14 x 34 (71.8)	W 14 x 34 (69.6)	W 14 x 34 (72.4)	W 16 x 36 (76.0)	W 16 x 36 (78.8)
26'	W 14 x 30 (65.8)	W 14 x 30 (68.9)	W 14 x 34 (72.8)	W 14 x 34 (74.9)	W 14 x 34 (72.6)	W 14 x 34 (75.5)	W 16 x 36 (79.3)	W 16 x 36 (82.2)
27'	W 14 x 34 (68.6)	W 14 x 34 (72.0)	W 14 x 34 (74.9)	W 16 x 36 (78.9)	W 16 x 36 (76.5)	W 16 x 36 (79.5)	W 16 x 36 (82.6)	W 16 x 40 (85.6)
28'	W 14 x 34 (71.3)	W 14 x 34 (74.7)	W 14 x 34 (77.9)	W 16 x 36 (82.1)	W 16 x 36 (79.6)	W 16 x 36 (82.7)	W 16 x 36 (85.9)	W 16 x 40 (89.1)
29'	W 14 x 34 (74.1)	W 16 x 36 (78.6)	W 16 x 36 (82.0)	W 16 x 36 (85.3)	W 16 x 36 (82.7)	W 16 x 40 (85.9)	W 16 x 40 (89.2)	W 16 x 40 (92.5)
30'	W 14 x 34 (76.9)	W 16 x 36 (81.5)	W 16 x 36 (85.0)	W 16 x 36 (88.5)	W 16 x 40 (85.8)	W 16 x 40 (89.1)	W 16 x 40 (92.6)	W 16 x 40 (96.0)

ZONE 3 NO ICE 80 M.P.H. WIND

TRUSS DETAILS

(¾" Dia. H.S. Bolts Spans 96' Thru 155')

SPAN	140'	145'	150'	155'
W x D = WIDTH x DEPTH	5.0 x 5.0	5.0 x 5.0	5.0 x 5.0	5.0 x 5.0
CHORD -②, Unless Otherwise Shown	L 5 x 5 x 1/2 [17]	L 5 x 5 x 1/2 [18]	L 6 x 6 x 1/2 [20]	L 6 x 6 x 1/2 [21]
DEAD LOAD DIAGONAL -③	L 3 x 2 1/2 x 1/4 [2]	L 3 x 2 1/2 x 1/4 [2]	L 3 x 2 1/2 x 1/4 [2]	L 3 x 3 x 1/4 [2]
WIND LOAD DIAGONAL -③	L 3 1/2 x 3 1/2 x 1/4 [3]	L 3 1/2 x 3 1/2 x 1/4 [3]	L 3 1/2 x 3 1/2 x 1/4 [3]	L 3 1/2 x 3 1/2 x 1/4 [3]
DEAD LOAD VERTICAL -③	L 3 x 3 x 3/16 [2]	L 3 x 3 x 3/16 [2]	L 3 x 3 x 3/16 [2]	L 3 x 3 x 3/16 [2]
WIND LOAD STRUT - ③	L 2 1/2 x 2 1/2 x 3/16 [1]	L 2 1/2 x 2 1/2 x 3/16 [1]	L 2 1/2 x 2 1/2 x 3/16 [1]	L 2 1/2 x 2 1/2 x 3/16 [1]
TOTAL DEFL. & TRUSS D.L.	DEFL=3.96" L=114 lb/ft	DEFL=4.53" L=114 lb/ft	DEFL=4.65" L=129 lb/ft	DEFL=5.27" L=131 lb/ft

TOWER DETAILS

S = COLUMN SPACING	7.5'	7.5'	7.5'	7.5'
TOWER HEIGHT (Tower Height = (HL + HR)/2) — COLUMN SIZE & UPLIFT (kips)				
15'	W 12 x 26 (46.1)	W 12 x 26 (47.9)	W 12 x 26 (49.3)	W 12 x 26 (51.1)
16'	W 12 x 26 (49.4)	W 12 x 26 (51.3)	W 12 x 26 (52.9)	W 12 x 26 (54.7)
17'	W 12 x 26 (52.7)	W 14 x 30 (55.2)	W 14 x 30 (56.9)	W 14 x 30 (58.8)
18'	W 14 x 30 (56.1)	W 14 x 30 (58.7)	W 14 x 30 (60.5)	W 14 x 30 (62.6)
19'	W 14 x 30 (59.9)	W 14 x 30 (62.2)	W 14 x 30 (64.2)	W 14 x 34 (66.4)
20'	W 14 x 30 (63.3)	W 14 x 30 (65.8)	W 14 x 34 (67.9)	W 14 x 34 (70.2)
21'	W 14 x 34 (66.7)	W 14 x 34 (69.3)	W 14 x 34 (71.5)	W 16 x 36 (74.0)
22'	W 14 x 34 (70.2)	W 14 x 34 (72.9)	W 14 x 34 (75.2)	W 16 x 36 (77.9)
23'	W 14 x 34 (73.6)	W 16 x 36 (77.1)	W 16 x 36 (79.6)	W 16 x 36 (81.7)
24'	W 16 x 36 (77.1)	W 16 x 36 (80.7)	W 16 x 36 (83.4)	W 16 x 36 (85.6)
25'	W 16 x 36 (81.3)	W 16 x 36 (84.4)	W 16 x 40 (87.2)	W 16 x 40 (90.2)
26'	W 16 x 36 (84.8)	W 16 x 40 (88.0)	W 16 x 40 (91.0)	W 16 x 40 (94.1)
27'	W 16 x 40 (88.4)	W 16 x 40 (91.7)	W 16 x 40 (94.8)	W 18 x 46 (98.9)
28'	W 16 x 40 (91.9)	W 16 x 40 (95.4)	W 18 x 46 (98.6)	W 18 x 46 (102.9)
29'	W 18 x 46 (97.9)	W 18 x 46 (100.1)	W 18 x 46 (103.4)	W 18 x 46 (106.9)
30'	W 18 x 46 (101.6)	W 18 x 46 (103.9)	W 18 x 46 (107.3)	W 18 x 46 (110.9)

KEY TO TRUSS AND TOWER DETAILS

Truss members are all angles.
Truss columns are all wide flange shapes.

W 10 x 26 (44.2) ← 44.2 kips Uplift at base plate
- 26 Pounds per foot.
- 10" Nominal size
- Wide Flange

DEFL = 0.12" = inches Deflection due to dead load of truss, walkway, signs and lights.
DL = 42 lb/ft = pounds per foot dead load of truss members only; does not include walkway, signs, and lights.

NOTE: Details on these sheets are for Design Wind Heights up to 30 feet.

GENERAL NOTES

Design conforms to AASHTO 1994 Standard Specifications for Structural Supports for Highway Signs, Luminaires, and Traffic Signals and Interim Revisions thereto.

For overhead sign bridges with different tower heights, average the height of the two towers and use the tabulated height nearest the calculated average. For average heights falling midway between the two tabulated heights use the larger height.

For truss lengths falling between those shown in the tables use the sizes called for in the next longer span.

Overhead sign bridges are designed for the equivalent area of a 10 foot deep sign panel over 75 percent of the span length, located as necessary to produce maximum stress. Design includes 3 pounds per square foot for sign panel, 20 pounds per linear foot for lights, and 50 pounds per linear foot for walkway, all placed as specified for the design sign panel.

Refer to "Overhead Sign Bridge Truss Details" for details called out in plan and elevation views.

The number of High Strength Bolts required in truss connection or splice are indicated in brackets, e.g. [3], after the member size.

SHEET 2 OF 2

Texas Department of Transportation
Traffic Operations Division

OVERHEAD SIGN BRIDGE DETAILS

OSB-Z3

© TxDOT November 2007

DN: TXDOT	CK: TXDOT	DW: TXDOT	CK: TXDOT
CONT	SECT	JOB	HIGHWAY
2452	01	043	SH 151
DIST		COUNTY	SHEET NO.
SA		BEXAR	415

REVISIONS
8/08 add missing HS bolt dia (select spans); applicability note; noted design specifications

DATE:
FILE:

DISCLAIMER: The use of this standard is governed by the "Texas Engineering Practice Act". No warranty of any kind is made by TxDOT for any purpose whatsoever. TxDOT assumes no responsibility for the conversion of this standard to other formats or for incorrect results or damages resulting from its use.

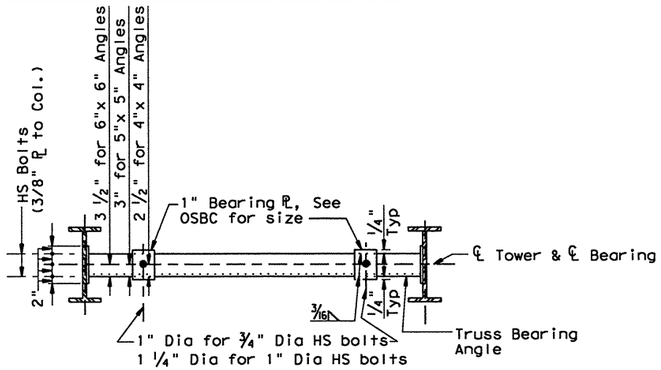

PLAN AT TRUSS BEARING ANGLE

COLUMN SPA. "S"	TRUSS BEARING ANGLE	HS BOLTS (DIA)
6'-0"	L 4 x 4 x 5/16	5/8"
6'-6"	L 5 x 5 x 3/8	5/8"
7'-0"	L 5 x 5 x 1/2	3/4"
7'-6" to 8'-6"	L 6 x 6 x 5/8	3/4"
9'-0"	L 6 x 6 x 3/4	3/4"
9'-6"	L 6 x 6 x 7/8	3/4"

② Nominal Dia. x 1 1/2" slots in plate. (Top ℙ only) Use washer on plate side of HS bolt. (See table above for size of bolts.)

GENERAL NOTES:

Design conforms to 1994 AASHTO Standard Specifications for Structural Supports for Highway Signs, Luminaires and Traffic Signals and Interim revisions thereto for design heights up to 50 feet.

For size and spacing of columns see sheets, "Overhead Sign Bridge Details."

At contractor's option tower bracing connections may be high strength (HS) bolted or welded. If welded connections are used, length of connection shall be taken from the table shown on sheet, "Overhead Sign Bridge Truss Details-OSBC."

All connection bolts shall conform to ASTM A325 Type 1. Washers shall conform to ASTM F436. Bolts, nuts and washers shall be galvanized per Item 445, "Galvanizing".

All structural steel shall conform to ASTM A36 except where noted. Structural steel shall be galvanized after fabrication per Item 445, "Galvanizing".

Anchor bolts and nuts for anchor bolts shall be "Alloy steel" per Item 449, "Anchor Bolts".

Anchor bolts shall be rigidly held in position during concrete placement by using steel templates at the top and bottom. The bottom template and anchor plate assembly shall remain in place and shall not be damaged during concrete placement. The top template shall be removed after concrete has set.

Exposed nuts and washers shall be galvanized in accordance with Item 449, "Galvanizing". Embedded nuts and top and bottom templates need not be galvanized.

Lubricate and tighten the anchor bolts when erecting the structure per Item 449, "Anchor Bolts". After the structure has been aligned in its final position and the anchor bolts have been properly tightened, tack weld anchor bolt nuts to washers, and tack weld washers to base plates. Galvanizing in tack welded areas shall be repaired per Item 445, "Galvanizing".

Concrete shall be Class "C".

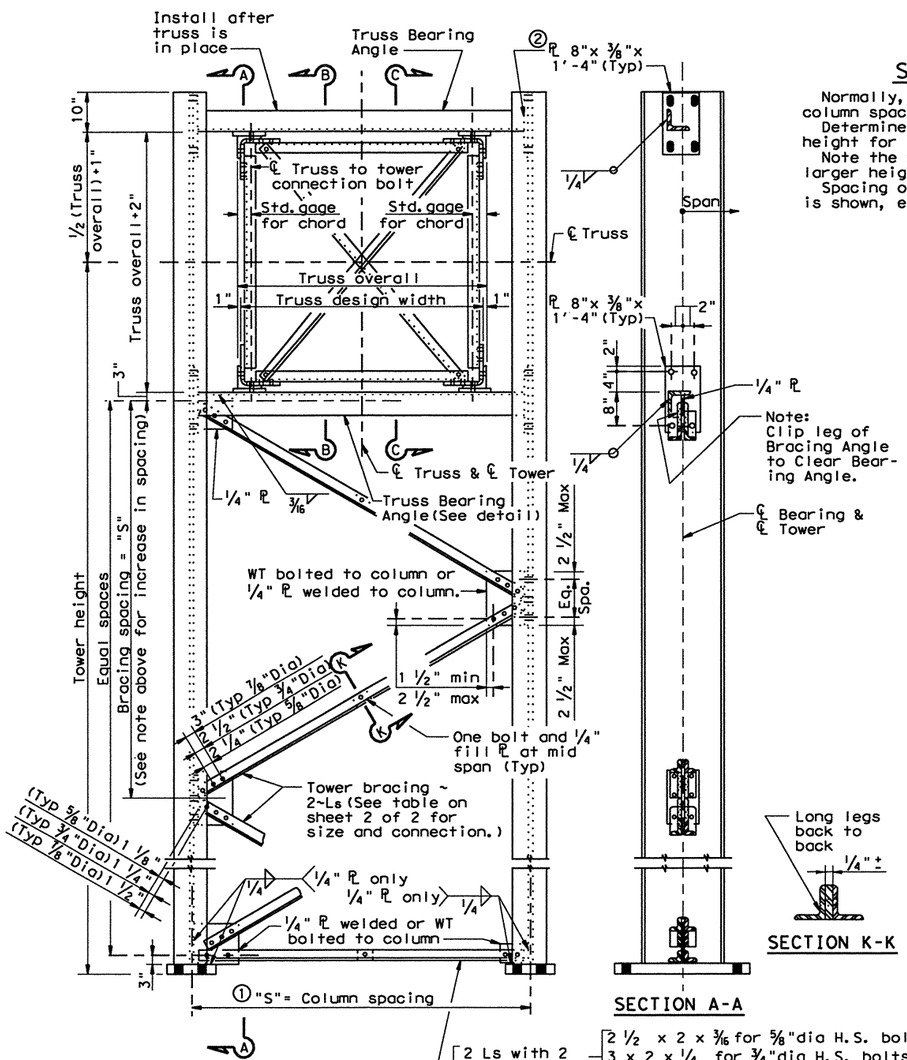

TRUSS DETAILS

① For column spacing see standard drawing, "Overhead Sign Bridge Details"

SPECIAL NOTE FOR TOWER BRACING

Normally, the maximum spacing for tower bracing is the same as column spacing; However, this spacing may be increased as follows:

Determine required column size and spacing to satisfy height for the wind zone and truss span being used. Height=$(H_L + H_R)/2$.

Note the number of times this column size is shown for larger heights for the same span and wind zone.

Spacing of bracing may be increased 1'-0" for each time height is shown, except the increase shall not exceed 5'-0".

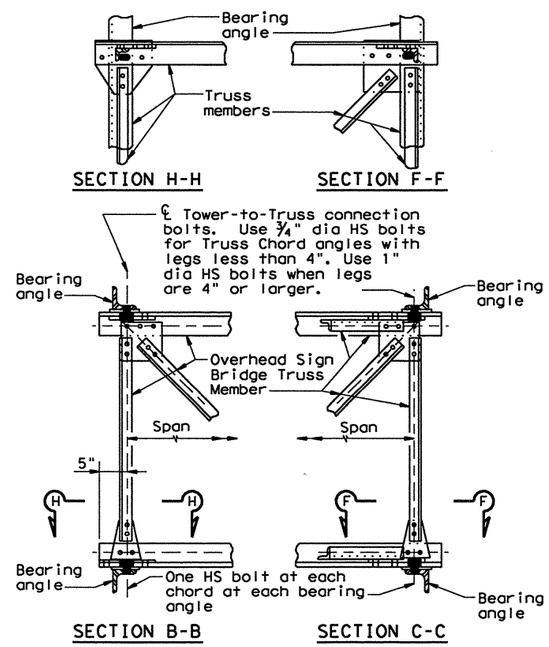

TRUSS-TO-TOWER CONNECTION DETAILS

SHEET 1 OF 2

Texas Department of Transportation
Traffic Operations Division

OVERHEAD SIGN BRIDGE TOWER DETAILS

OSBT

© TxDOT November 2007

REVISIONS

DN: TXDOT	CK: TXDOT	DW: TXDOT	CK: TXDOT
CONT	SECT	JOB	HIGHWAY
2452	01	043	SH 151
DIST		COUNTY	SHEET NO.
SA		BEXAR	416

pw4760\0\0129cor standard\ISlrd_sgn34.dgn 2/21/2011 7:09:4 PM mwmldkt11

DATE:
FILE:

DISCLAIMER: The use of this standard is governed by the "Texas Engineering Practice Act". No warranty of any kind is made by TxDOT for any purpose whatsoever. TxDOT assumes no responsibility for the conversion of this standard to other formats or for incorrect results or damages resulting from its use.

BRACING FOR 9'-0" TO 9'-6" COLUMN SPACING				
SIZE DOUBLE ANGLES	BOLTS REQUIRED			
	BRACING		WT to W	
	3/4"	7/8"	3/4"	7/8"
2 Ls 4 x 4 x 5/16	6	4	10	8
2 Ls 4 x 4 x 5/16	6	4	10	8
2 Ls 4 x 4 x 5/16	6	4	10	8
2 Ls 4 x 4 x 5/16	6	4	10	8
2 Ls 4 x 3 1/2 x 5/16	5	4	10	8
2 Ls 4 x 3 1/2 x 5/16	5	4	10	8
2 Ls 4 x 3 1/2 x 5/16	5	4	10	8
2 Ls 4 x 3 x 5/16	5	4	10	8
2 Ls 4 x 3 x 5/16	5	4	10	8
2 Ls 4 x 3 x 5/16	5	4	10	8
2 Ls 4 x 3 x 5/16	5	4	10	8

BRACING FOR 8'-0" TO 8'-6" COLUMN SPACING.				
SIZE DOUBLE ANGLES	BOLTS REQUIRED			
	BRACING		WT to W	
	3/4"	7/8"	3/4"	7/8"
2 Ls 4 x 3 x 5/16	5	4	10	8
2 Ls 4 x 3 x 5/16	5	4	10	8
2 Ls 4 x 3 x 5/16	5	4	10	8
2 Ls 4 x 3 x 5/16	5	4	10	8
2 Ls 3 1/2 x 3 x 5/16	5	4	8	6
2 Ls 3 1/2 x 3 x 5/16	5	4	8	6
2 Ls 3 1/2 x 3 x 5/16	5	4	8	6
2 Ls 3 1/2 x 3 x 5/16	5	4	8	6
2 Ls 4 x 3 x 1/4	4	3	8	6
2 Ls 4 x 3 x 1/4	4	3	8	6
2 Ls 4 x 3 x 1/4	4	3	8	6
2 Ls 3 1/2 x 3 x 1/4	4	3	8	6

BRACING FOR 7'-0" TO 7'-6" COLUMN SPACING.						
SIZE DOUBLE ANGLES	BOLTS REQUIRED					
	BRACING			WT to W		
	5/8"	3/4"	7/8"	5/8"	3/4"	7/8"
2 Ls 4 x 3 x 5/16	7	5	4	12	10	8
2 Ls 4 x 3 x 5/16	7	5	4	12	10	8
2 Ls 3 1/2 x 3 x 5/16	6	5	4	12	8	6
2 Ls 3 1/2 x 3 x 1/4	6	4	3	10	8	6
2 Ls 3 1/2 x 3 x 1/4	6	4	3	10	8	6
2 Ls 3 1/2 x 3 x 1/4	6	4	3	10	8	6
2 Ls 3 1/2 x 3 x 1/4	6	4	3	10	8	6
2 Ls 3 1/2 x 3 x 1/4	5	4	3	10	6	4
2 Ls 3 1/2 x 2 1/2 x 1/4	5	4	3	8	6	4
2 Ls 3 1/2 x 2 1/2 x 1/4	4	3	~	8	6	4
2 Ls 3 x 2 1/2 x 1/4	4	3	~	8	6	4
2 Ls 3 x 2 1/2 x 1/4	4	3	~	8	6	4
2 Ls 3 x 2 1/2 x 1/4	3	2	~	6	4	4
2 Ls 3 x 3 x 3/16	2	2	~	4	4	4
2 Ls 3 x 3 x 3/16	2	2	~	4	4	4
2 Ls 2 1/2 x 2 1/2 x 3/16	2	~	~	4	4	4
2 Ls 2 1/2 x 2 x 3/16	2	~	~	4	4	4

BRACING FOR 6'-0" TO 6'-6" COLUMN SPACING.					"X"	"Y"	"Z"	BASE PLATE SIZE	ANCHOR BOLT SIZE	FOUNDATION DATA	COLUMN SIZE
SIZE DOUBLE ANGLES	BOLTS REQUIRED										
	BRACING		WT to W								
	5/8"	3/4"	5/8"	3/4"				L x W x T	DIA. x LENGTH	DIA. DRILL SHAFT/W REINF.	
					15 1/4"	5"	4"	18"x 3 1/4"x 3'-4 1/2"	2 3/4"x 5'-8"	48" Dr Shaft with 18~#11	W24 x 117
					15 1/4"	5"	4"	18"x 3 1/8"x 3'-4 1/2"	2 3/4"x 5'-8"	48" Dr Shaft with 18~#11	W24 x 104
					15 1/4"	5"	4"	18"x 3"x 3'-4 1/2"	2 3/4"x 5'-8"	48" Dr Shaft with 18~#11	W24 x 94
					15"	4 1/2"	3 3/4"	16 1/2"x 3"x 3'-3"	2 1/2"x 5'-2"	48" Dr Shaft with 14~#11	W24 x 84
					14 3/4"	4 1/2"	3 3/4"	16 1/2"x 2 3/4"x 3'-2 1/2"	2 1/2"x 5'-2"	48" Dr Shaft with 14~#11	W24 x 76
					14 3/4"	4 1/2"	3 3/4"	16 1/2"x 2 3/4"x 3'-2 1/2"	2 1/2"x 5'-2"	48" Dr Shaft with 14~#11	W24 x 68
					13 1/2"	4 1/2"	3 3/4"	16 1/2"x 2 3/4"x 3'-0"	2 1/2"x 5'-2"	42" Dr Shaft with 12~#11	W21 x 68
2 Ls 3 x 3 x 1/4	4	3	8	6	13 1/2"	4 1/2"	3 3/4"	16 1/2"x 2 1/2"x 3'-0"	2 1/2"x 5'-2"	42" Dr Shaft with 12~#11	W21 x 62
2 Ls 3 x 3 x 1/4	4	3	8	6	13"	4"	3 1/2"	15"x 2 1/2"x 2'-10"	2 1/4"x 4'-9"	42" Dr Shaft with 10~#11	W21 x 57
2 Ls 3 x 2 1/2 x 1/4	4	3	8	6	11 3/4"	4"	3 1/2"	15"x 2 1/2"x 2'-7 1/2"	2 1/4"x 4'-9"	42" Dr Shaft with 10~#11	W18 x 55
2 Ls 3 x 2 1/2 x 1/4	4	3	6	4	11 3/4"	4"	3 1/2"	15"x 2 1/2"x 2'-7 1/2"	2 1/4"x 4'-9"	42" Dr Shaft with 10~#11	W18 x 50
2 Ls 3 x 2 1/2 x 1/4	4	3	6	4	11 1/2"	3 1/2"	3"	13"x 2 1/2"x 2'-6"	2"x 4'-3"	42" Dr Shaft with 8~#10	W18 x 46
2 Ls 3 x 2 1/2 x 1/4	4	3	6	4	10 1/2"	3 1/2"	3"	13"x 2 1/4"x 2'-4"	2"x 4'-3"	36" Dr Shaft with 8~#10	W16 x 40
2 Ls 3 x 2 1/2 x 1/4	4	3	6	4	10 1/4"	3"	2 3/4"	11 1/2"x 2 1/4"x 2'-2 1/2"	1 3/4"x 3'-10"	36" Dr Shaft with 8~#9	W16 x 36
2 Ls 3 x 2 1/2 x 1/4	4	3	6	4	9 1/2"	3"	2 3/4"	11 1/2"x 2 1/4"x 2'-1"	1 3/4"x 3'-10"	36" Dr Shaft with 8~#9	W14 x 34
2 Ls 2 1/2 x 2 1/2 x 3/16	3	~	4	4	9 1/4"	3"	2 3/4"	11 1/2"x 2"x 2'-0 1/2"	1 3/4"x 3'-10"	36" Dr Shaft with 8~#9	W14 x 30
2 Ls 2 1/2 x 2 x 3/16	2	~	4	4	8"	2 3/4"	2 1/8"	9 3/4"x 1 3/4"x 1'-9 1/2"	1 1/2"x 3'-4"	30" Dr Shaft with 8~#8	W12 x 26
2 Ls 2 1/2 x 2 x 3/16	2	~	4	4	7"	2 1/2"	2"	9"x 1 3/4"x 1'-7"	1 3/8"x 3'-1"	30" Dr Shaft with 8~#8	W10 x 26
2 Ls 2 1/2 x 2 x 3/16	2	~	4	4	6 3/4"	2 1/4"	1 7/8"	8 1/4"x 1 1/2"x 1'-6"	1 1/4"x 2'-11"	30" Dr Shaft with 8~#8	W10 x 22
2 Ls 2 1/2 x 2 x 3/16	2	~	4	4	6 3/4"	2"	1 5/8"	7 1/4"x 1 3/8"x 1'-5 1/2"	1 1/8"x 2'-8"	24" Dr Shaft with 8~#7	W10 x 17
2 Ls 2 1/2 x 2 x 3/16	2	~	4	4	6 1/2"	1 3/4"	1 1/2"	6 1/2"x 1 1/4"x 1'-4 1/2"	1"x 2'-5"	24" Dr Shaft with 8~#7	W10 x 15

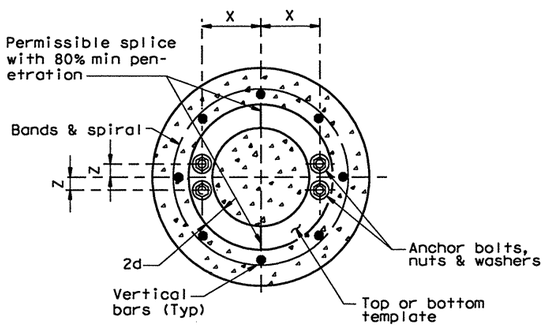

TOP VIEW

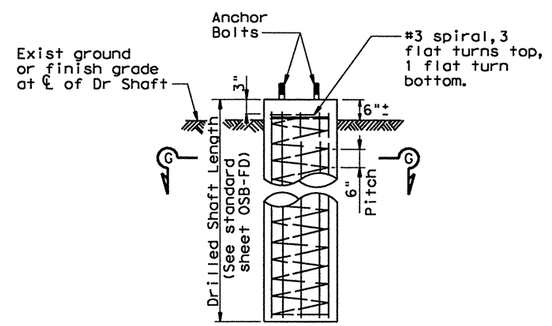

FOUNDATION DETAIL

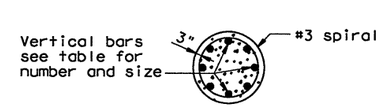

SECTION G-G

Anchor Bolt Dia. (d)	Washer Dimensions				Hole in Base Plate
	Outside Diameter	Hole Diameter	Thickness		
			Min	Max	
1 1/2" or less	2d	d + 1/8"	0.136"	0.177"	d + 1/4"
1 3/4"	2d - 1/8"	d + 1/8"	0.178"	0.280"	d + 5/16"
2"	2d - 1/4"	d + 1/8"	0.178"	0.280"	d + 5/16"
over 2"	2d - 1/2"	d + 1/8"	0.240"	0.340"	d + 5/16"

ANCHOR BOLT SIZE				
DIA	BOLT ③ LENGTH	THREAD ③ LENGTH	PROJECTION LENGTH	GALVAN. ③ LENGTH
1"	2'-5"	4"	4 1/2"	10"
1 1/8"	2'-8"	4 1/2"	5"	10 1/2"
1 1/4"	2'-11"	5"	5 1/2"	11"
1 3/8"	3'-1"	5 1/2"	6"	11 1/2"
1 1/2"	3'-4"	6"	6 1/2"	1'-0"
1 3/4"	3'-10"	7"	7 1/2"	1'-1"
2"	4'-3"	8"	8 1/2"	1'-2"
2 1/4"	4'-9"	9"	9 1/2"	1'-3"
2 1/2"	5'-2"	10"	10 1/2"	1'-4"
2 3/4"	5'-8"	11"	11 1/2"	1'-5"

③ Anchor Bolt Fabrication Tolerances:
Bolt Length ~ ±1/2"
Thread Length ~ ±1/2"
Galvanized Length ~ -1/4"

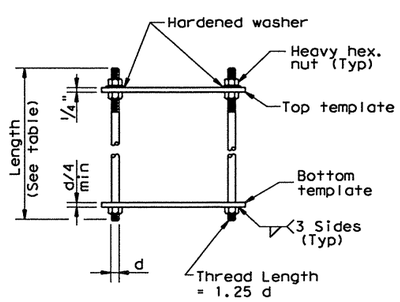

SIDE VIEW
(PRIOR TO INSTALLATION)

ANCHOR BOLT ASSEMBLY

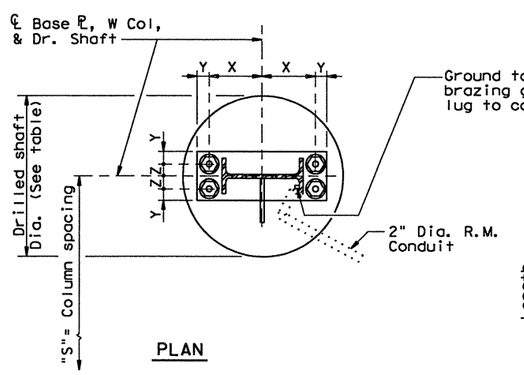

PLAN

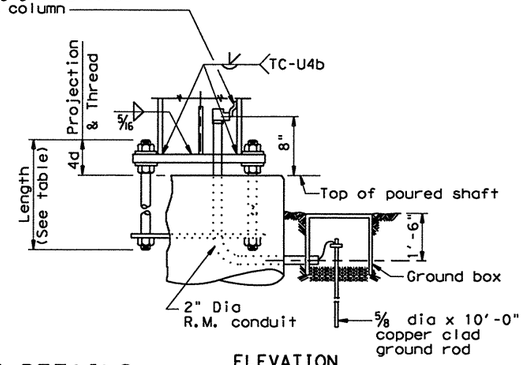

ELEVATION

BEARING SEAT DETAILS

(See table for base plate size anchor bolt size, dimensions X, Y, Z and drilled shaft diameter.)

SHEET 2 OF 2

Texas Department of Transportation
Traffic Operations Division

OVERHEAD SIGN BRIDGE TOWER DETAILS

OSBT

©TxDOT November 2007

REVISIONS

DN: TXDOT	CK: TXDOT	DW: TXDOT	CK: TXDOT
CONT	SECT	JOB	HIGHWAY
2452	01	043	SH 151
DIST		COUNTY	SHEET NO.
SA		BEXAR	417

DATE:
FILE:
pw:\\ftb00-01259\ocr standard\Vfield_sgn35.dgn
7/20/2011 1:20:15 PM mmmdurff

DISCLAIMER: The use of this standard is governed by the "Texas Engineering Practice Act". No warranty of any kind is made by TxDOT for any purpose whatsoever. TxDOT assumes no responsibility for the conversion of this standard to other formats or for incorrect results or damages resulting from its use.

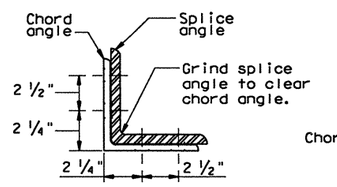

SECTION ON ℄ SPLICE
(6" L Shown)

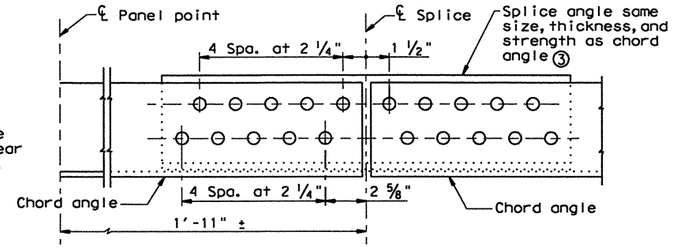

CHORD SPLICE USING ANGLES (SINGLE SHEAR)
(Place splice angle on inside of truss)
(6" L Shown)

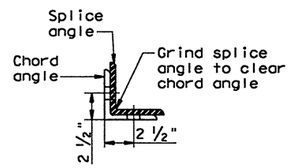

SECTION ON ℄ SPLICE
(4" L Shown)

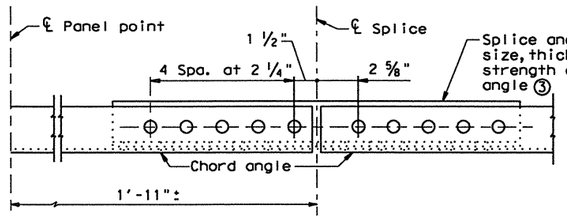

CHORD SPLICE USING ANGLES (SINGLE SHEAR)
(Place splice angle on inside of truss)
(4" L Shown)

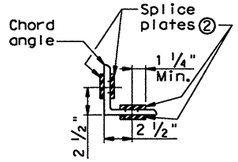

SECTION ON ℄ SPLICE
(4" L Shown)

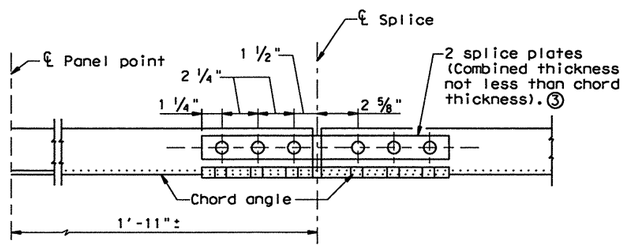

CHORD SPLICE USING PLATES (DOUBLE SHEAR) ④

SPLICE DETAILS

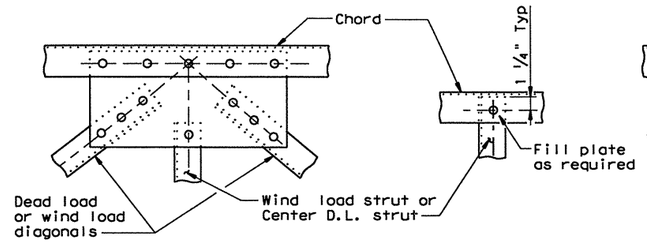

DETAIL A DETAIL B

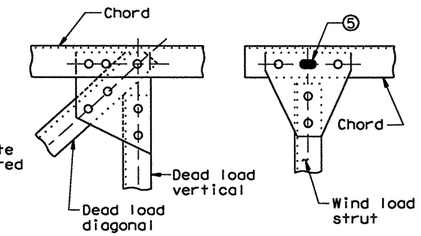

DETAIL C DETAIL D

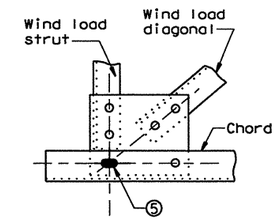

DETAIL E

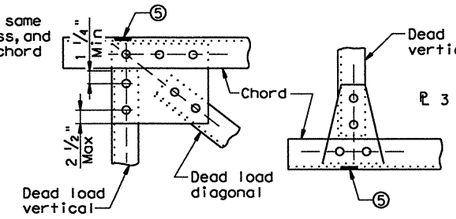

DETAIL F DETAIL G

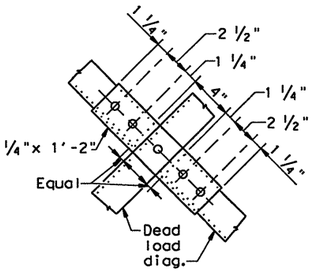

DETAIL H

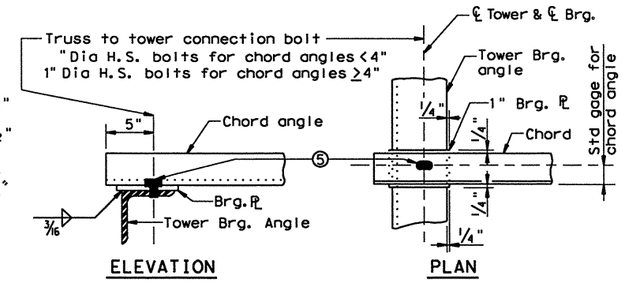

ELEVATION PLAN

BEARING PLATE DETAILS ⑥

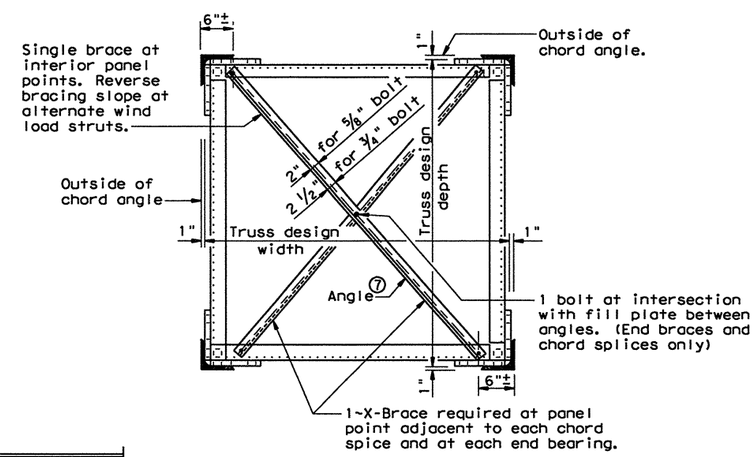

TRUSS SECTION
(Diagonals not shown)

		No. of Bolts required in Gusset PL at Chord Connection
Total No. of Bolts in Diagonals at Joints	0	2
	2	2
	3	3
	4	3
	5	4
	6	4
	8	5
	10	6
	12	6

GENERAL NOTES:

All bolts shall be in accordance with Item 447, "Structural Bolting".

The truss shall have an upward camber not less than the dead load deflections shown in the table on standard drawings "Overhead Sign Bridge Details" when blocked at the ends under dead load of the truss only.

Chord angles may be spliced in convenient lengths for galvanizing. Connection and splice details are typical only. Actual size of member and number of bolts will vary. The details shown on this sheet are intended as a guide only. See standard drawings "Overhead Sign Bridge Details" for number of bolts and size of members. Number of bolts shown for chord splice is based on single shear.

Gusset plates to be same thickness as thickest web member in connection.

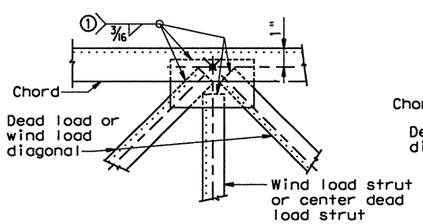

DETAIL A

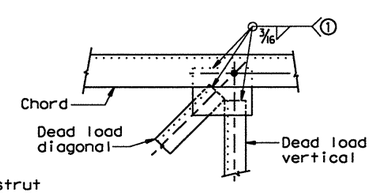

DETAIL C
Gussets plates in details "E" & "F" to be similar.

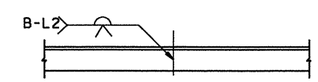

FOR L'S OVER ¼" IN THICKNESS

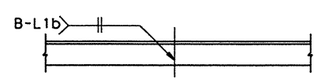

FOR L'S ¼" OR LESS IN THICKNESS

ALTERNATE WELDED SPLICE AND CONNECTION DETAILS

TABLE OF MINIMUM WELD LENGTHS		
Number of bolts	3/16" Fillet Weld Replaces:	
	⅝" Dia. Bolt	¾" Dia. Bolt
1	2"	3"
2	4"	6"
3	6"	9"
4	8"	11 ½"
5	10"	14 ½"
6	12"	17 ½"
7	14"	20"

① See "TABLE OF MINIMUM WELD LENGTHS" for the length of welds.

② Area of splice plates shall be equal to or greater than area of chord angle.

③ When chord angles of different thickness are spliced, use shim plate and number of bolts required for thinner angle. For splice angle use thickness of the thinner angle.

④ When splice plates are used on both sides of chord angle (double shear) only half the number of bolts shown in the table on standard drawing "OVERHEAD SIGN BRIDGE DETAILS" are required.

⑤ Slotted hole in Gusset PL and chord angle 1"x 1 ½" slot for ¾" dia. bolts, 1 ¼"x 2" slot for 1" dia. bolts. Use PL washer on Gusset PL side.

⑥ Bearing plate may be omitted if welded connections are used on wind truss.

⑦ 2"x 1 ½"x 3/16" angle for ⅝" Dia bolts [1]
2 ½"x 2"x 3/16" angle for ¾" Dia bolts [1]

Texas Department of Transportation
Traffic Operations Division

OVERHEAD SIGN BRIDGE TRUSS DETAILS

OSBC

© TxDOT November 2007

REVISIONS

DN: TXDOT	CK: TXDOT	DW: TXDOT	CK: TXDOT
CONT	SECT	JOB	HIGHWAY
2452	01	043	SH 151
DIST		COUNTY	SHEET NO.
SA		BEXAR	418

pxv760v0-0129cr standardVSlsrd_sgn31.dgn 2/21/2011 7:09:15 PM mwmldrff

DATE:
FILE:

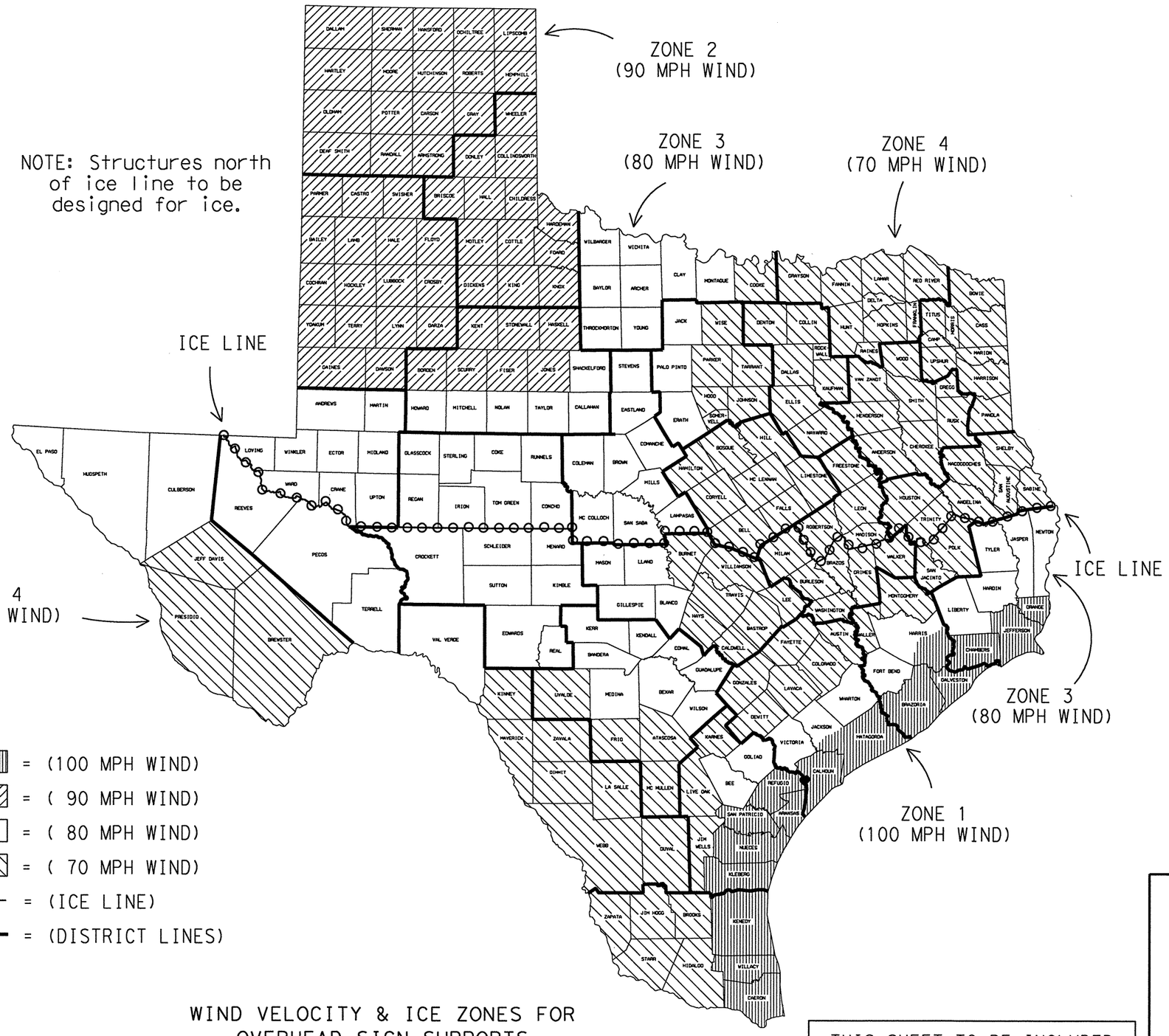

NOTE: Structures north of ice line to be designed for ice.

LEGEND

ZONE 1 - = (100 MPH WIND)

ZONE 2 - = (90 MPH WIND)

ZONE 3 - = (80 MPH WIND)

ZONE 4 - = (70 MPH WIND)

= (ICE LINE)

= (DISTRICT LINES)

FOR HARRIS CO. ONLY
Zone line is just North of US 90, around on the North, West and South sides of IH 610 and down the West side of SH 288.

FOR JACKSON CO. ONLY
Zone line is just North of SH 616.

WIND VELOCITY & ICE ZONES FOR OVERHEAD SIGN SUPPORTS

Based on 50 Year Mean Recurrence Interval of Fastest Mile Wind Velocity at 33 feet height.

THIS SHEET TO BE INCLUDED IN ALL P.S.&E.'s WITH OVERHEAD SIGN SUPPORTS

Texas Department of Transportation
Traffic Operations Division

WIND VELOCITY AND ICE ZONES

WV & IZ-96

©TxDOT April 1996

REVISIONS	DN: TXDOT	CK: TXDOT	DW: TXDOT	CK: TXDOT
	CONT	SECT	JOB	HIGHWAY
	2452	01	043	SH 151
	DIST		COUNTY	SHEET NO.
	SA		BEXAR	419

DISCLAIMER: The use of this standard is governed by the "Texas Engineering Practice Act". No warranty of any kind is made by TxDOT for any purpose whatsoever. TxDOT assumes no responsibility for the conversion of this standard to other formats or for incorrect results or damages resulting from its use.

DATE:
FILE:

DISCLAIMER: The use of this standard is governed by the "Texas Engineering Practice Act". No warranty of any kind is made by TxDOT for any purpose whatsoever. TxDOT assumes no responsibility for the conversion of this standard to other formats or for incorrect results or damages resulting from its use.

p:\4760\0-0129\sor standard\TSR\std_sgn07.dgn 2/21/2011 7:09:20 PM mwmldt11

REQUIREMENTS FOR OVERHEAD GUIDE SIGNS

TYPICAL EXAMPLES

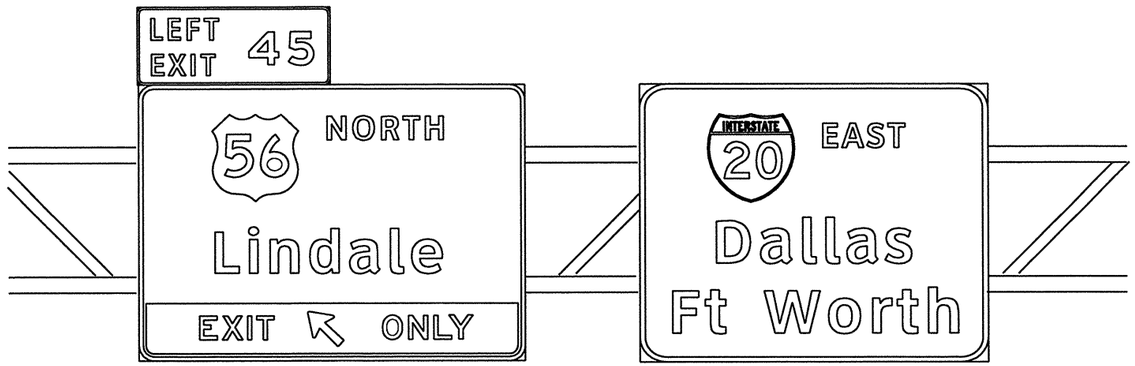

DEPARTMENTAL MATERIAL SPECIFICATIONS	
ALUMINUM SIGN BLANKS	DMS-7110
SIGN FACE MATERIALS	DMS-8300
FIBERGLASS SIGN SUBSTRATE	DMS-8305

OVERHEAD GUIDE SIGNS AND EXIT NUMBER PANELS

USAGE	COLOR	SIGN FACE MATERIAL
BACKGROUND	ALL	TYPE D SHEETING
LEGEND & BORDERS	WHITE	TYPE D SHEETING
LEGEND & BORDERS	BLACK	ACRYLIC NON-REFLECTIVE FILM

REQUIREMENTS FOR LARGE GROUND-MOUNTED GUIDE SIGNS

TYPICAL EXAMPLES

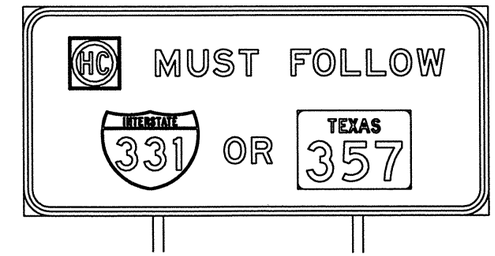

DEPARTMENTAL MATERIAL SPECIFICATIONS	
ALUMINUM SIGN BLANKS	DMS-7110
SIGN FACE MATERIALS	DMS-8300
FIBERGLASS SIGN SUBSTRATE	DMS-8305

LARGE GROUND-MOUNTED SIGNS AND EXIT NUMBER PANELS

USAGE	COLOR	SIGN FACE MATERIAL
BACKGROUND	ALL	TYPE C SHEETING
LEGEND & BORDERS	WHITE	TYPE D SHEETING
LEGEND & BORDERS	BLACK	ACRYLIC NON-REFLECTIVE FILM

GENERAL NOTES:

1. Signs to be furnished shall be as detailed elsewhere in the plans and/or as shown on sign summary sheet. Standard sign designs and arrow dimensions can be found in the "Standard Highway Sign Designs for Texas" (SHSD).
2. Black legend shall use the Federal Highway Administration (FHWA) Standard Highway Alphabets (B, C, D, E, Emod, or F).
   White legend shall use the Clearview Alphabet.
   The following Clearview fonts shall be used to replace the existing white FHWA lettering, when not specified in the SHSD or in the plans.
   - B CV-1W
   - C CV-2W
   - D CV-3W
   - E CV-4W
   - Emod CV-5WR
   - F CV-6W
3. Lateral spacing between letters and numerals shall conform with the SHSD, and any approved changes thereto. Lateral spacing of legend shall provide a balanced appearance when spacing is not shown.
4. Black legend shall be applied by screening process or cut-out acrylic non-reflective black film to background sheeting, or combination thereof.
5. White legend and borders for overhead guide signs shall be applied by screening process with transparent colored ink, transparent colored overlay film to white background sheeting or cut-out white sheeting to colored background sheeting, or combination thereof.
6. White legend and borders for large ground mounted guide signs shall be cut-out white sheeting applied to colored background sheeting.
7. Information regarding borders and radii for signs is found in the "Standard Highway Sign Designs for Texas". Dimensions shown and described for borders and corner radii on parent sign are nominal. Borders may vary in width as much as 1/2 inch. Corner radii above 3 inches may vary in width as much as 1 inch. Borders and corner radii within a parent sign must be of matching widths. The sign area outside the corner radius need not be trimmed or rounded if fabricated from an extruded material.
8. Sign substrate shall be any material that meets the Departmental Material Specification requirements of DMS-7110 or DMS-8305. Exit Number Panels attached above the parent sign shall be made with the same substrate and sheeting as the parent sign.
9. Mounting details of attachments to parent sign face are shown on Standard Plan Sheet TSR(5). Mounting details of exit number panels above parent sign are shown in the "SMD series" Standard Plan Sheets.
10. Background sheeting shall be applied to the substrate per sheeting manufacturer's recommendations. Sheeting will not be allowed to bridge the horizontal gap between panels.
11. Cut all legend, symbols, borders, and direct applied sign attachments at panel joints.

The Standard Highway Sign Designs for Texas (SHSD) can be found at the following website.

http://www.txdot.gov/publications/traffic.htm

Texas Department of Transportation
Traffic Operations Division

TYPICAL SIGN REQUIREMENTS

TSR(1)-08

©TxDOT October 2003

REVISIONS
12-03
9-08

DN: TXDOT	CK: TXDOT	DW: TXDOT	CK: TXDOT
CONT	SECT	JOB	HIGHWAY
2452	01	043	SH 151
DIST		COUNTY	SHEET NO.
SA		BEXAR	423

DISCLAIMER: The use of this standard is governed by the "Texas Engineering Practice Act". No warranty of any kind is made by TxDOT for any purpose whatsoever. TxDOT assumes no responsibility for the conversion of this standard to other formats or for incorrect results or damages resulting from its use.

p:\4760\0-01259\cc standardV5\std_sgn08.dgn 2/21/2011 7:09:21 PM mwmldkff1

REQUIREMENTS FOR ATTACHMENTS TO GUIDE SIGNS

TYPICAL EXAMPLES

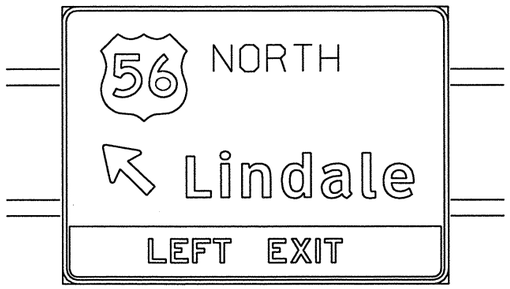

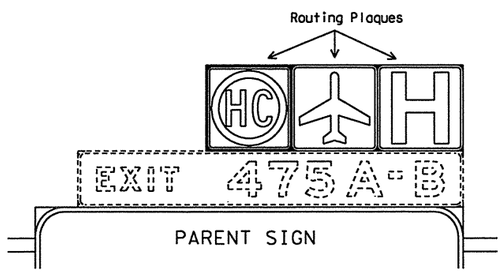

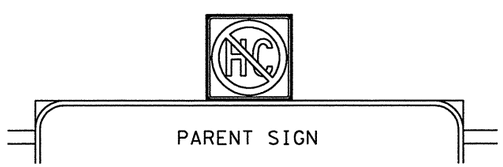

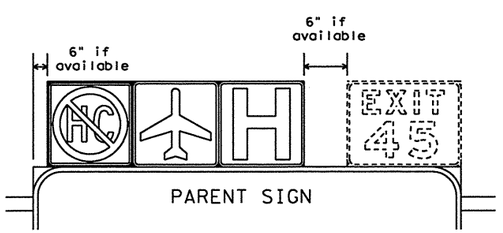

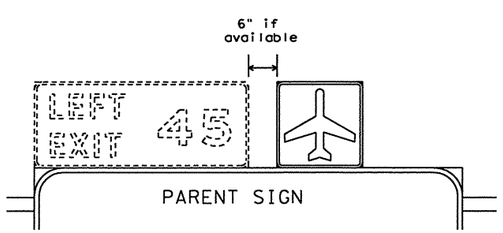

DEPARTMENTAL MATERIAL SPECIFICATIONS		
ALUMINUM SIGN BLANKS		DMS-7110
SIGN FACE MATERIALS		DMS-8300
USAGE	COLOR	SIGN FACE MATERIAL
BACKGROUND	ALL	TYPE D SHEETING
LEGEND & BORDERS	WHITE	TYPE D SHEETING
LEGEND & BORDERS	BLACK	ACRYLIC NON-REFLECTIVE FILM

GENERAL NOTES:

1. Signs to be furnished shall be as detailed elsewhere in the plans and/or as shown on sign tabulation sheet. Standard sign designs and arrow dimensions can be found in the "Standard Highway Sign Designs for Texas" (SHSD).
2. Route Marker legends (ie. IH, US, SH and FM shields) shall use the Federal Highway Administration (FHWA) Standard Highway Alphabets (B, C, D, E, Emod, or F).
3. Lateral spacing between letters and numerals shall conform with the SHSD, and any approved changes thereto. Lateral spacing of legend shall provide a balanced appearance when spacing is not shown.
4. Black legend and borders shall be applied by screening process or cut-out acrylic non-reflective black film to background sheeting, or combination thereof.
5. White legend and borders shall be applied by screening process with transparent colored ink, transparent colored overlay film to white background sheeting or cut-out white sheeting to colored background sheeting, or combination thereof.
6. Colored legend and borders shall be applied by screening process with transparent colored ink, transparent colored overlay film or colored sheeting to white background sheeting, or combination thereof.
7. Route markers and other attachments within the parent sign face shall be direct applied unless otherwise specified in the plans. Attachments not direct applied shall use 0.063 inch thick one piece sheet aluminum signs (Type A).
8. General Service Plaques shall be 0.080 inch thick and Routing Plaques shall be 0.100 inch thick.
9. The priority for Routing Plaques shall be (left to right) Hazardous Cargo, Airport then Hospital. See examples for mounting location.
10. Mounting details of attachments to parent signs face are shown on Standard Plan Sheet TSR(5). Mounting details of sign plaque attachments above and below parent sign are shown in the "SMD series" Standard Plan Sheets.
11. Plaques shall be horizontally centered at the top of the parent sign. If an exit number panel exists, the plaque shall be centered between the edge of the parent sign and the edge of the exit number panel. The plaque may be placed above the exit number panel when there is insufficient space.

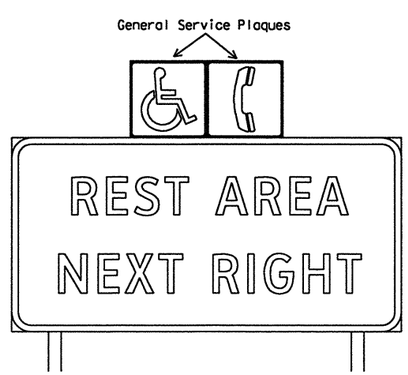

REQUIREMENTS FOR EXIT ONLY AND LEFT EXIT PANELS

TYPICAL EXAMPLES

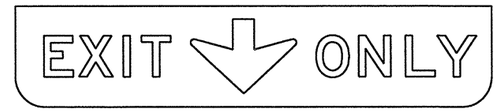

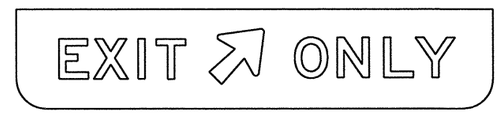

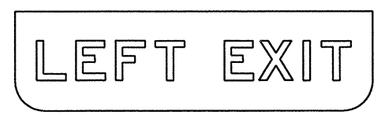

DEPARTMENTAL MATERIAL SPECIFICATIONS		
ALUMINUM SIGN BLANKS		DMS-7110
SIGN FACE MATERIALS		DMS-8300
OVERHEAD EXIT PANELS		
USAGE	COLOR	SIGN FACE MATERIAL
BACKGROUND	YELLOW	TYPE E SHEETING
LEGEND	BLACK	ACRYLIC NON-REFLECTIVE FILM

GENERAL NOTES:

1. Signs to be furnished shall be as detailed elsewhere in the plans and/or as shown on sign tabulation sheet. Standard sign designs and arrow dimensions can be found in the "Standard Highway Sign Designs for Texas" (SHSD). Individual panel sizes shown in the plans may be adjusted to fit actual parent sign sizes if necessary.
2. Exit Panel legend shall use the Federal Highway Administration (FHWA) Standard Highway Alphabets E Series.
3. Lateral spacing between letters and numerals shall conform with the SHSD, and any approved changes thereto. Lateral spacing of legend shall provide a balanced appearance when spacing is not shown.
4. Black legend shall be applied by screening process or cut-out acrylic non-reflective black film to yellow background sheeting, or combination thereof.
5. Exit Only and Left Exit panels within the parent sign face shall be direct applied unless otherwise specified in the plans. Panels not direct applied shall use 0.063 inch thick one piece sheet aluminum signs (Type A).
6. Mounting details of Exit Only and Left Exit panel attachments to parent signs face are shown on Standard Plan Sheet TSR(5).

The Standard Highway Sign Designs for Texas (SHSD) can be found at the following website.

http://www.txdot.gov/publications/traffic.htm

Texas Department of Transportation
Traffic Operations Division

TYPICAL SIGN REQUIREMENTS

TSR(2)-08

©TxDOT October 2003

REVISIONS	DN: TXDOT	CK: TXDOT	DW: TXDOT	CK: TXDOT
12-03	CONT	SECT	JOB	HIGHWAY
9-08	2452	01	043	SH 151
	DIST		COUNTY	SHEET NO.
	SA		BEXAR	424

P:\4760\0-0129\ca standard\SIsfd_sp009.dgn 2/22/2011 3:26:46 PM mwmlckff

DISCLAIMER: The use of this standard is governed by the "Texas Engineering Practice Act". No warranty of any kind is made by TxDOT for any purpose whatsoever. TxDOT assumes no responsibility for the conversion of this standard to other formats or for incorrect results or damages resulting from its use.

REQUIREMENTS FOR E SERIES STANDARD GUIDE SIGNS

TYPICAL EXAMPLES

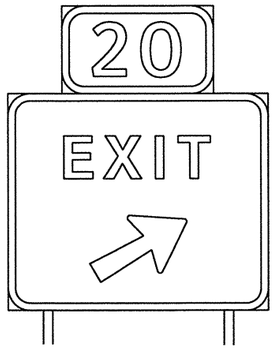

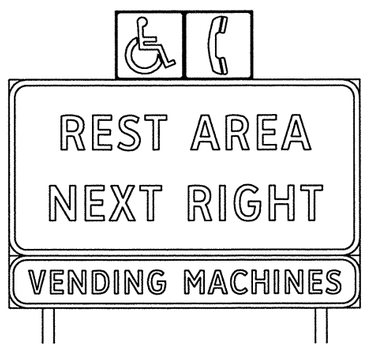

DEPARTMENTAL MATERIAL SPECIFICATIONS

ALUMINUM SIGN BLANKS	DMS-7110
SIGN FACE MATERIALS	DMS-8300
FIBERGLASS SIGN SUBSTRATE	DMS-8305

GROUND-MOUNTED SIGNS

USAGE	COLOR	SIGN FACE MATERIAL
BACKGROUND	ALL	TYPE C SHEETING
LEGEND & BORDERS	WHITE	TYPE D SHEETING

GENERAL NOTES:

1. Signs to be furnished shall be as detailed elsewhere in the plans and/or as shown on sign tabulation sheet. Standard sign designs and arrow dimensions can be found in the "Standard Highway Sign Designs for Texas" (SHSD). Individual panel sizes shown in the plans may be adjusted to fit actual parent sign sizes if necessary.
2. White legend shall use the Clearview Alphabet.
   The following Clearview fonts shall be used to replace the existing white Federal Highway Administration (FHWA) Standard Highway Alphabets, when not specified in the SHSD, or in the plans.
   - B CV-1W
   - C CV-2W
   - D CV-3W
   - E CV-4W
   - Emod CV-5WR
   - F CV-6W
3. Lateral spacing between letters and numerals shall conform with the SHSD, and any approved changes thereto. Lateral spacing of legend shall provide a balanced appearance when spacing is not shown.
4. White legend, symbols and borders shall be cut-out white sheeting applied to colored background sheeting.
5. Information regarding borders and radii for signs is found in the "Standard Highway Sign Designs for Texas". Dimensions shown and described for borders and corner radii on parent sign are nominal. Borders may vary in width as much as 1/2 inch. Corner radii above 3 inches may vary in width as much as 1 inch. Borders and corner radii within a parent sign must be of matching widths. The sign area outside the corner radius need not be trimmed or rounded if fabricated from an extruded material.
6. Sign substrate shall be any material that meets the Departmental Material Specification requirements of DMS-7110, or DMS-8305. Exit Number Panels attached above the parent sign shall be made with the same substrate and sheeting as the parent sign.
7. Mounting details of attachments above and below parent sign are shown in the "SMD series" Standard Plan Sheets. Mounting details of roadside signs are shown in the "SMD series" Standard Plan Sheets.
8. Cut all legend, symbols, and borders at panel joints.

REQUIREMENTS FOR BLUE, BROWN & GREEN D AND I SERIES GUIDE SIGNS

TYPICAL EXAMPLES

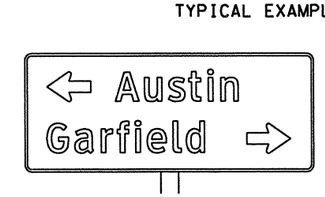

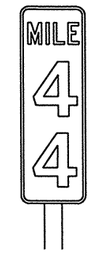

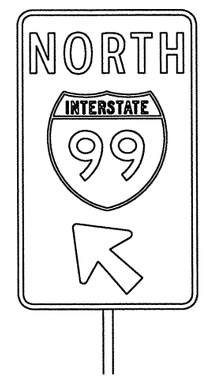

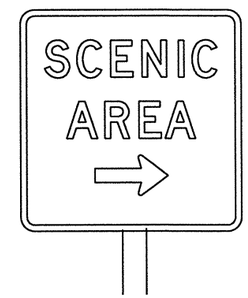

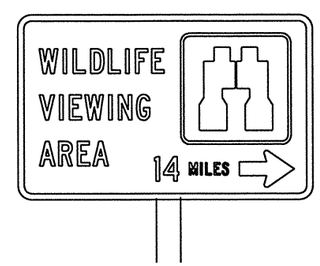

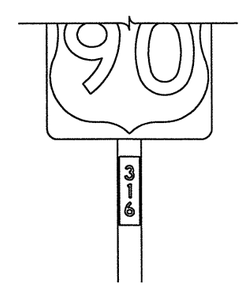

DEPARTMENTAL MATERIAL SPECIFICATIONS

ALUMINUM SIGN BLANKS DMS-7110

Square Ft.	Min. Thickness
Less than 7.5	0.080
7.5 to 15	0.100
Greater than 15	0.125

SIGN FACE MATERIALS	DMS-8300
FIBERGLASS SIGN SUBSTRATE	DMS-8305

GROUND-MOUNTED SIGNS

USAGE	COLOR	SIGN FACE MATERIAL
BACKGROUND	ALL	TYPE C SHEETING
LEGEND & BORDERS	WHITE	TYPE D SHEETING

GENERAL NOTES:

1. Signs to be furnished shall be as detailed elsewhere in the plans and/or as shown on sign tabulation sheet. Standard sign designs and arrow dimensions can be found in the "Standard Highway Sign Designs for Texas" (SHSD).
2. White legend shall use the Clearview Alphabet.
   The following Clearview fonts shall be used to replace the existing white Federal Highway Administration (FHWA) Standard Highway Alphabets, when not specified in the SHSD, or in the plans.
   - B CV-1W
   - C CV-2W
   - D CV-3W
   - E CV-4W
   - Emod CV-5WR
   - F CV-6W
3. Lateral spacing between letters and numerals shall conform with the SHSD, and any approved changes thereto. Lateral spacing of legend shall provide a balanced appearance when spacing is not shown.
4. White legend, symbols and borders shall be cut-out white sheeting applied to colored background sheeting.
5. Information regarding borders and radii for signs is found in the "Standard Highway Sign Designs for Texas". Dimensions shown and described for borders and corner radii on parent sign are nominal. Borders may vary in width as much as 1/2 inch. Corner radii above 3 inches may vary in width as much as 1 inch. Borders and corner radii within a parent sign must be of matching widths. The sign area outside the corner radius should be trimmed or rounded.
6. Sign substrate shall be any material that meets the Departmental Material Specification requirements of DMS-7110 or DMS 8305.
7. Mounting details of roadside signs are shown in the "SMD series" Standard Plan Sheets.

REQUIREMENTS FOR INDEPENDENT MOUNTED ROUTE MARKERS

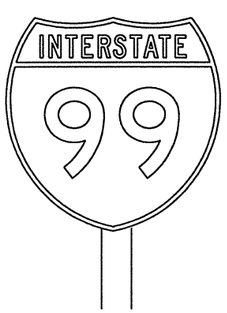

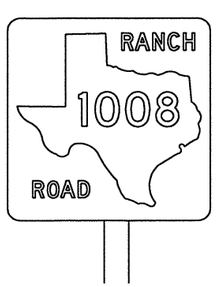

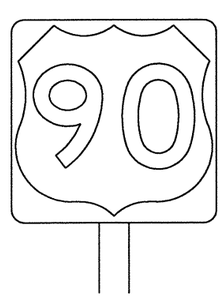

DEPARTMENTAL MATERIAL SPECIFICATIONS

ALUMINUM SIGN BLANKS	DMS-7110
SIGN FACE MATERIALS	DMS-8300

USAGE	COLOR	SIGN FACE MATERIAL
BACKGROUND	ALL	TYPE C SHEETING
LEGEND & BORDERS	WHITE	TYPE C SHEETING
LEGEND & BORDERS	BLACK	ACRYLIC NON-REFLECTIVE FILM

GENERAL NOTES:

1. Signs to be furnished shall be as detailed elsewhere in the plans and/or as shown on sign tabulation sheet. Standard sign designs and arrow dimensions can be found in the "Standard Highway Sign Designs for Texas" (SHSD).
2. Route Marker legend (ie. IH, US, SH and FM shields) shall use the Federal Highway Administration (FHWA) Standard Highway Alphabets (B, C, D, E, Emod or F).
3. Lateral spacing between letters and numerals shall conform with the SHSD, and any approved changes thereto. Lateral spacing of legend shall provide a balanced appearance when spacing is not shown.
4. Black legend and borders shall be applied by screening process or cut-out acrylic non-reflective black film to white background sheeting, or combination thereof.
5. White legend and borders shall be applied by screening process with transparent colored ink, transparent colored overlay film to white background sheeting or cut-out white sheeting to colored background sheeting, or combination thereof.
6. Independent mounted Route Marker sign blanks, for 24 inch markers shall be 0.080 inch thick, and for 36 inch markers shall be 0.100 inch thick one piece sheet aluminum signs(Type A).
7. Mounting details for roadside mounted signs are shown in the "SMD series" Standard Plan Sheets.

The Standard Highway Sign Designs for Texas (SHSD) can be found at the following website.

http://www.txdot.gov/publications/traffic.htm

Texas Department of Transportation
Traffic Operations Division

TYPICAL SIGN REQUIREMENTS

TSR(3)-08

©TxDOT October 2003

REVISIONS	DN: TXDOT	CK: TXDOT	DW: TXDOT	CK: TXDOT
12-03	CONT	SECT	JOB	HIGHWAY
9-08	2452	01	043	SH 151
	DIST		COUNTY	SHEET NO.
	SA		BEXAR	425

DISCLAIMER: The use of this standard is governed by the "Texas Engineering Practice Act". No warranty of any kind is made by TxDOT for any purpose whatsoever. TxDOT assumes no responsibility for the conversion of this standard to other formats or for incorrect results or damages resulting from its use.

p:\4760\0-0129\sr standardVSlstd_sgnlO.dgn 2/21/2011 7:08:23 PM mwmldkfff

REQUIREMENTS FOR REGULATORY SIGNS

TYPICAL EXAMPLES

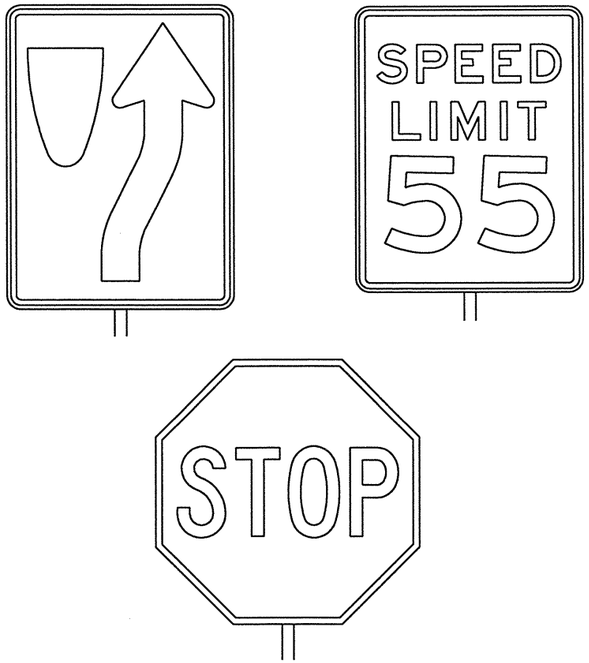

DEPARTMENTAL MATERIAL SPECIFICATIONS

ALUMINUM SIGN BLANKS DMS-7110

Square Ft.	Min. Thickness
Less than 7.5	0.080
7.5 to 15	0.100
Greater than 15	0.125

SIGN FACE MATERIALS DMS-8300

USAGE	COLOR	SIGN FACE MATERIAL
BACKGROUND	ALL	TYPE C SHEETING
LEGEND & BORDERS	WHITE	TYPE C SHEETING
LEGEND & BORDERS	BLACK	ACRYLIC NON-REFLECTIVE FILM

GENERAL NOTES:

1. Signs to be furnished shall be as detailed elsewhere in the plans and/or as shown on sign tabulation sheet. Standard sign designs and arrow dimensions can be found in the "Standard Highway Sign Designs for Texas" (SHSD).
2. Regulatory sign legend shall use the Federal Highway Administration (FHWA) Standard Highway Alphabets (B, C, D, E, Emod or F).
3. Lateral spacing between letters and numerals shall conform with the SHSD, and any approved changes thereto. Lateral spacing of legend shall provide a balanced appearance when spacing is not shown.
4. Black legend and borders shall be applied by screening process or cut-out acrylic non-reflective black film to white background sheeting, or combination thereof.
5. White legend and borders shall be applied by screening process with transparent colored ink, transparent colored overlay film to white background sheeting or cut-out white sheeting to colored background sheeting, or combination thereof.
6. Colored legend shall be applied by screening process with transparent colored ink, transparent colored overlay film or colored sheeting to background sheeting, or combination thereof.
7. Sign substrate shall be any material that meets the Departmental Material Specification requirements of DMS-7110.
8. Mounting details for roadside mounted signs are shown in the "SMD series" Standard Plan Sheets.

REQUIREMENTS FOR SCHOOL SIGNS

TYPICAL EXAMPLES

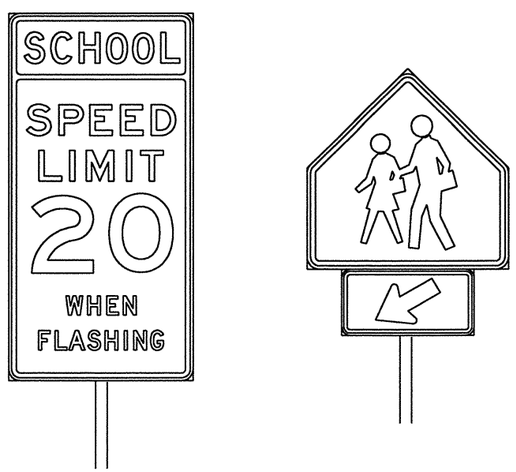

DEPARTMENTAL MATERIAL SPECIFICATIONS

ALUMINUM SIGN BLANKS DMS-7110

Square Ft.	Min. Thickness
Less than 7.5	0.080
7.5 to 15	0.100
Greater than 15	0.125

SIGN FACE MATERIALS DMS-8300

USAGE	COLOR	SIGN FACE MATERIAL
BACKGROUND	WHITE	TYPE C SHEETING
BACKGROUND	FLOR. YEL. GRN.	TYPE E SHEETING
LEGEND & BORDERS	BLACK	ACRYLIC NON-REFLECTIVE FILM

GENERAL NOTES:

1. Signs to be furnished shall be as detailed elsewhere in the plans and/or as shown on sign tabulation sheet. Standard sign designs and arrow dimensions can be found in the "Standard Highway Sign Designs for Texas" (SHSD).
2. School sign legend shall use the Federal Highway Administration (FHWA) Standard Highway Alphabets (B, C, D, E, Emod or F).
3. Lateral spacing between letters and numerals shall conform with the SHSD, and any approved changes thereto. Lateral spacing of legend shall provide a balanced appearance when spacing is not shown.
4. Black legend and borders shall be applied by screening process or cut-out acrylic non-reflective black film to background sheeting, or combination thereof.
5. Sign substrate shall be any material that meets the Departmental Material Specification requirements of DMS-7110.
6. Mounting details for roadside mounted signs are shown in the "SMD series" Standard Plan Sheets.

REQUIREMENTS FOR WARNING SIGNS

TYPICAL EXAMPLES

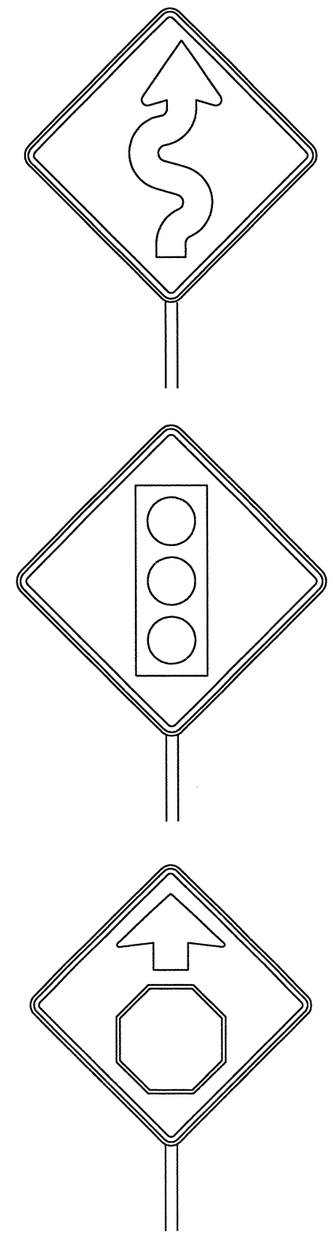

DEPARTMENTAL MATERIAL SPECIFICATIONS

ALUMINUM SIGN BLANKS DMS-7110

Square Ft.	Min. Thickness
Less than 7.5	0.080
7.5 to 15	0.100
Greater than 15	0.125

SIGN FACE MATERIALS DMS-8300

USAGE	COLOR	SIGN FACE MATERIAL
BACKGROUND	YELLOW	TYPE E SHEETING
LEGEND & BORDERS	BLACK	ACRYLIC NON-REFLECTIVE FILM
LEGEND & SYMBOLS	ALL OTHER	TYPE D SHEETING

GENERAL NOTES:

1. Signs to be furnished shall be as detailed elsewhere in the plans and/or as shown on sign tabulation sheet. Standard sign designs and arrow dimensions can be found in the "Standard Highway Sign Designs for Texas" (SHSD).
2. Warning sign legend shall use the Federal Highway Administration (FHWA) Standard Highway Alphabets (B, C, D, E, Emod, or F).
3. Lateral spacing between letters and numerals shall conform with the SHSD, and any approved changes thereto. Lateral spacing of legend shall provide a balanced appearance when spacing is not shown.
4. Black legend and borders shall be applied by screening process or cut-out acrylic non-reflective black film to yellow background sheeting, or combination thereof.
5. Colored legend and symbols shall be applied by screening process with transparent colored ink, transparent colored overlay film, or colored sheeting to white sheeting, or combination thereof. The colored legend or symbol is then applied to the yellow background sheeting.
6. Sign substrate shall be any material that meets the Departmental Material Specification requirements of DMS-7110.
7. Mounting details for roadside mounted signs are shown in the "SMD series" Standard Plan Sheets.

The Standard Highway Sign Designs for Texas (SHSD) can be found at the following website.

http://www.txdot.gov/publications/traffic.htm

Texas Department of Transportation
Traffic Operations Division

TYPICAL SIGN REQUIREMENTS

TSR(4)-08

© TxDOT October 2003

DN: TXDOT	CK: TXDOT	DW: TXDOT	CK: TXDOT

REVISIONS
12-03
9-08

CONT	SECT	JOB	HIGHWAY
2452	01	043	SH 151

DIST	COUNTY	SHEET NO.
SA	BEXAR	426

DISCLAIMER: The use of this standard is governed by the "Texas Engineering Practice Act". No warranty of any kind is made by TxDOT for any purpose whatsoever. TxDOT assumes no responsibility for the conversion of this standard to other formats or for incorrect results or damages resulting from its use.

p:\4760\0-0129c \standard\0Sistd_sgnl1.dgn 2/21/2011 7:09:23 PM mwmldkfl1

MOUNTING DETAILS OF ATTACHMENTS TO GUIDE SIGN FACE ("EXIT ONLY" AND "LEFT EXIT" PANELS, ROUTE MARKERS AND OTHER ATTACHMENTS)

DIRECT APPLIED ATTACHMENT

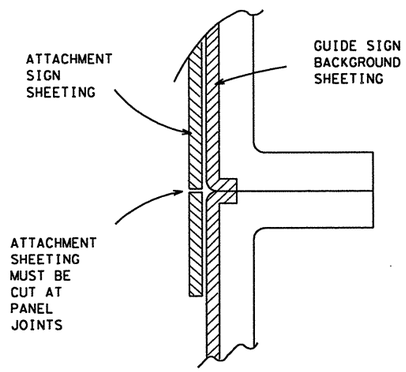

Sheeting for legend, symbols, and borders must be cut at panel joints.

Direct applied attachment signs will be subsidiary to "Aluminum Signs" or "Fiberglass Signs".

SCREW ATTACHMENT

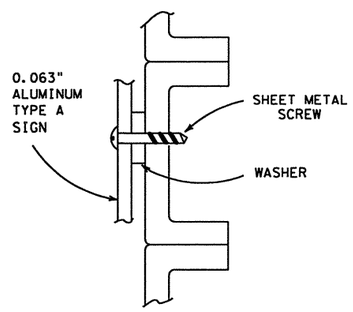

NUT/BOLT ATTACHMENT

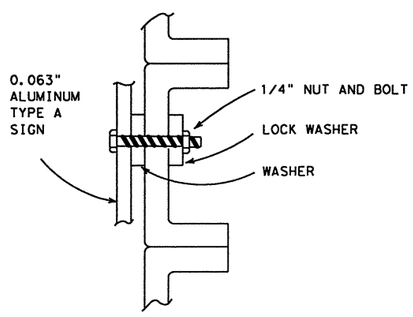

Furnish Type A aluminum sign attachments only when specified in the plans. These signs will be paid for under "Aluminum Signs".

SIGN BLANK PUNCHING DETAILS FOR ATTACHMENTS WHEN SPECIFIED TO BE TYPE A ALUMINUM SIGNS (FOR MOUNTING TO GUIDE SIGN FACE)

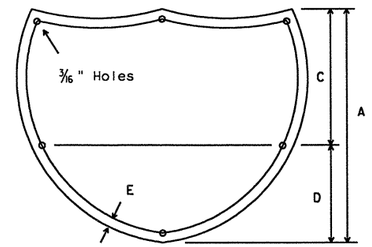

INTERSTATE ROUTE MARKERS

A	C	D	E
36	21	15	1 1/2
48	28	20	1 3/4

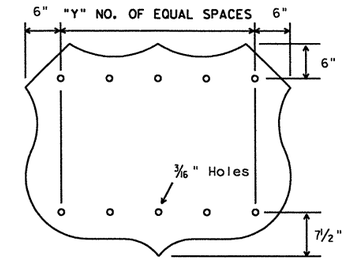

U.S. ROUTE MARKERS

Sign Size	"Y"
24x24	2
30x24	3
36x36	3
45x36	4
48x48	4
60x48	5

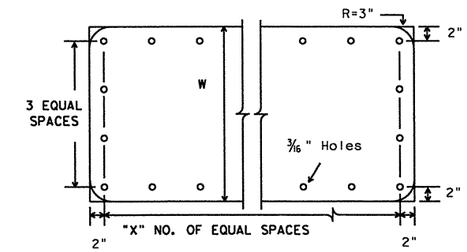

STATE ROUTE MARKERS

No. of Digits	W	X
4	24	4
4	36	5
4	48	6
3	24	3
3	36	4
3	48	5

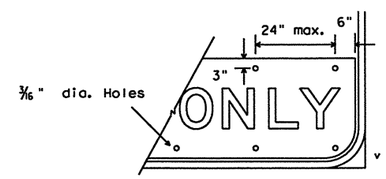

EXIT ONLY PANEL

ARROW DETAILS

for Large Ground-Mounted and Overhead Guide Signs

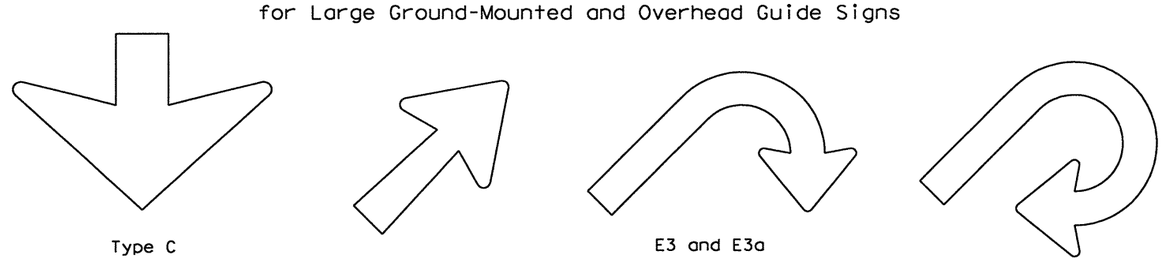

Type C "Down" arrow

E3 and E3a

E4 and E4a

TYPE	LETTER SIZE
A-1	10.67" U/L and 10" Caps
A-2	13.33" U/L and 12" Caps
A-3	16" U/L
B-1	10.67" U/L and 10" Caps
B-2	13.33" U/L and 12" Caps
B-3	16" U/L

CODE	USED ON SIGN NO.
E-3 & E-4	E5-3 and E5-4
E-3a & E-4a	E5-3a and E5-4a

Arrow dimensions are shown in the "Standard Highway Sign Designs for Texas" manual.

The Standard Highway Sign Designs for Texas (SHSD) can be found at the following website.

http://www.txdot.gov/publications/traffic.htm

ARROW DETAILS

for Destination Signs

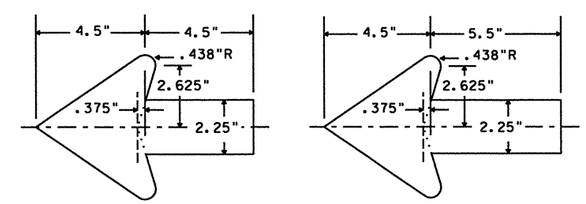

Standard arrow to be used with 6 inch letters.

Standard arrow to be used with 8 inch letters.

Texas Department of Transportation
Traffic Operations Division

TYPICAL SIGN REQUIREMENTS

TSR(5)-08

©TxDOT October 2003

REVISIONS
12-03
9-08

DN: TXDOT	CK: TXDOT	DW: TXDOT	CK: TXDOT
CONT	SECT	JOB	HIGHWAY
2452	01	043	SH 151
DIST		COUNTY	SHEET NO.
SA		BEXAR	427

DISCLAIMER: The use of this standard is governed by the "Texas Engineering Practice Act". No warranty of any kind is made by TxDOT for any purpose whatsoever. TxDOT assumes no responsibility for the conversion of this standard to other formats or for incorrect results or damages resulting from its use.

standard05ield_sign01.dgn 2/21/2011 7:09:24 PM mwmldkitt
pw4760ud-01e29cr

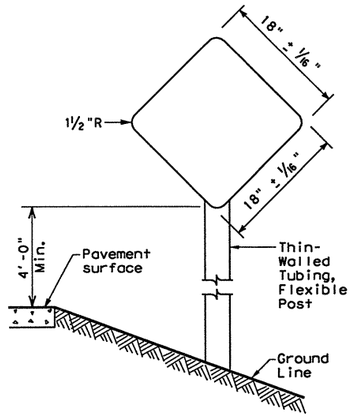

TYPE 1
18" x 18"
Yellow
Type E Sheeting

TYPE 4
18" x 18"
Red
Type D Sheeting

Use Sign blank 0.080" thick sheet aluminum conforming to ASTM B-209 Alloy 6061-T6. Use reflective sheeting in accordance with DMS 8300.

TYPES 1 and 4

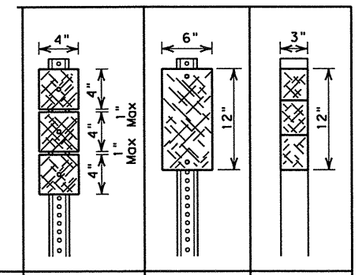

Number of Reflectors	X	Y	Z
Post	WC	WC	FLX

NOTES
1. All type 2 object markers are yellow
2. WC-wing channel post, 1.12 lbs/ft steel per ASTM A 1011 SS Gr 50, or ASTM A499
3. FLX-flexible post (embedded and surface mount)

Typically used on bridge rail approach ends, some bridge abutments and at bridge rail exits on two-lane, two-way roadways

TYPE 2

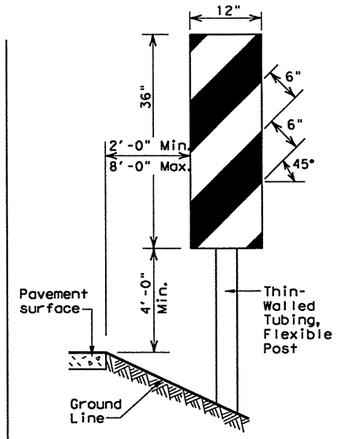

OM-3 Directions
L - Placed on Left Side
R - Placed on Right Side
C - Placed on Center

Use Sign blank .080" thick sheet aluminum conforming to ASTM B-209 Alloy 6061-T6. Use reflective sheeting in accordance with DMS 8300, Type E. Use at bridges with no approach rails.

TYPE 3

OBJECT MARKERS

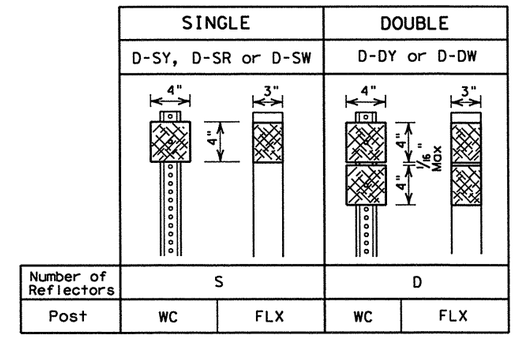

	SINGLE		DOUBLE	
	D-SY, D-SR or D-SW		D-DY or D-DW	
Number of Reflectors	S		D	
Post	WC	FLX	WC	FLX

NOTES
1. Reflector Units: W-White, R-Red, Y-Yellow
2. Length of post may vary to meet field conditions.
3. WC-wing channel post, 1.12 lbs/ft Steel per ASTM A 1011 SS Gr 50, or ASTM A499
4. FLX-flexible post (embedded and surface mount)

DELINEATORS

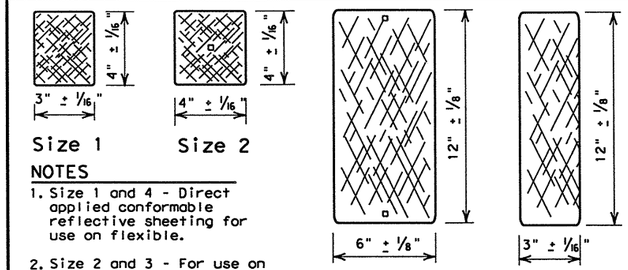

NOTES
1. Size 1 and 4 - Direct applied conformable reflective sheeting for use on flexible.
2. Size 2 and 3 - For use on Wing Channel post only. Use approved metal, plastic or fiberglass backplate with 17/64" square mounting holes.
3. Yellow, White & Red: Conformable Reflective Sheeting as per DMS 8300.

REFLECTOR UNIT SIZES

NOTES
1. A reflector unit or sheeting (per DMS 8600) attached to a bracket to facilitate the mounting of the reflector on concrete traffic barrier, railing, metal beam guard fence (MBGF) or other locations shown on the plans. A list of appoved barrier reflectors can be found at: www.txdot.gov
2. Yellow, White and Red: Conformable Reflective Sheeting as per DMS 8300.

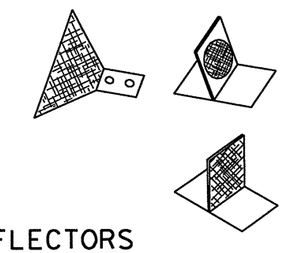

BARRIER REFLECTORS

D & OM DESCRIPTIVE CODES

INSTL DEL ASSM (D-XX) SZ X (XXX) XXX (XX)

NUMBER OF REFLECTORS
S = Single
D = Double

COLOR OF REFLECTORS
W = White
Y = Yellow
R = Red

REFLECTOR UNIT SIZE
1 or 2

TYPE OF POST OR DELINEATOR
WC = Wing Channel Post
FLX = Flexible Post
TYC = Barrier Reflector

TYPE OF MOUNT
GND = Embedded (drivable or set in concrete)
CTB = Concrete Barrier Mount
GF1 or GF2 = Guard Fence Attachment
SRF = Surface Mount

DIRECTION
If Required
BI = Bi-Directional
BR = Bi-Directional with red on back

INSTL OM ASSM (OM-XX) (XXX) XXX (XX)

TYPE OF OBJECT MARKER
1, 2, 3, or 4

NUMBER OF REFLECTORS OR DIRECTION
X = 3-Size 2 reflector units (Type 2 only)
Y = 1-Size 3 reflector unit (Type 2 only)
Z = 3-Size 1 or 1-Size 4 reflector unit(s) (Type 2 only)
L = Left Side (Type 3 Object Marker only)
R = Right Side (Type 3 Object Marker only)
C = Center (Type 3 Object Marker only)

TYPE OF POST
WC = Wing Channel Post
FLX = Flexible Post
TWT = Thin Walled Tubing

TYPE OF MOUNT
GND = Embedded (drivable or set in concrete)
SRF = Surface Mount

DIRECTION
If Required
BI = Bi-Directional

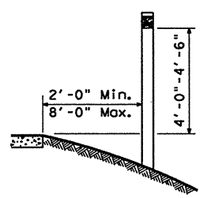

TYPICAL INSTALLATION

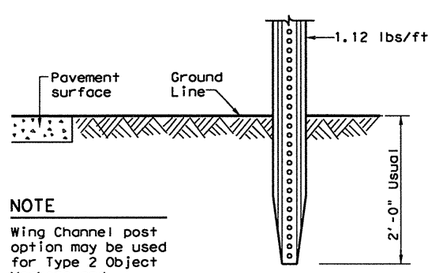

NOTE
Wing Channel post option may be used for Type 2 Object Markers and delineators only.

WING CHANNEL

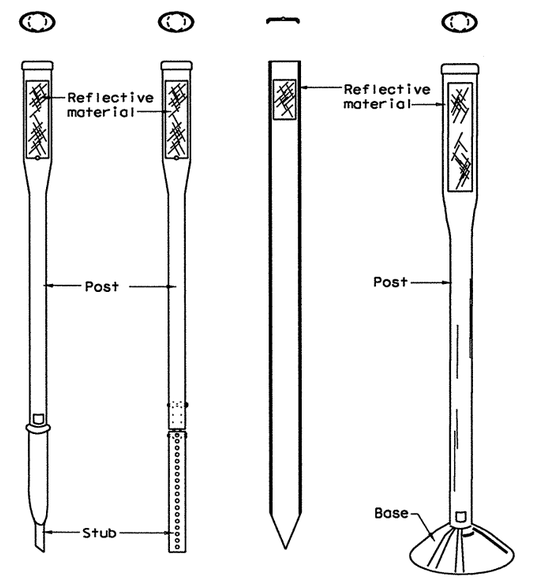

EMBEDDED

SURFACE MOUNT

NOTES
1. See Material Producer List for approved devices.
2. Install to manufacturer's recommenations.

FLEXIBLE POSTS

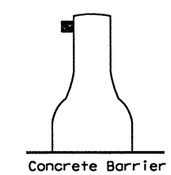

CTB

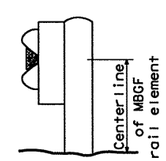

GF1

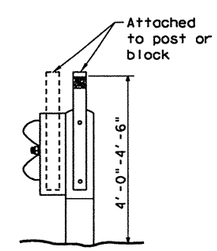

GF2

BARRIER REFLECTORS

GENERAL NOTES
1. Place delineators on a section of roadway the same distance from the edge of pavement.
2. Where a restriction prevents consistent placement from the pavement edge, place the affected object markers in line with the innermost edge of the obstruction.
3. When object markers are more than 8'-0" from the edge of the pavement, it may not be possible to maintain a height of 4'-0"-4'-6". If this is the case, place the object markers as close to the desired height as possible.
4. Install all delineators, object markers and barrier reflectors in accordance with the manufacturer's recommendation.

DEPARTMENTAL MATERIAL SPECIFICATIONS	
FLEXIBLE DELINEATOR & OBJECT MARKER POSTS (EMBEDDED & SURFACE MOUNT TYPES)	DMS-4400
SIGN FACE MATERIALS	DMS-8300
DELINEATORS AND OBJECT MARKERS	DMS-8600

Texas Department of Transportation
Traffic Operations Division

DELINEATOR & OBJECT MARKER INSTALLATION AND MATERIAL DESCRIPTION D & OM(1)-10

© TxDOT August 2004

DN: TXDOT	CK: TXDOT	DW: TXDOT	CK: TXDOT

REVISIONS
10-09
4-10

CONT	SECT	JOB	HIGHWAY
2452	01	043	SH 151
DIST		COUNTY	SHEET NO.
SA		BEXAR	428

DISCLAIMER: The use of this standard is governed by the "Texas Engineering Practice Act". No warranty of any kind is made by TxDOT for any purpose whatsoever. TxDOT assumes no responsibility for the conversion of this standard to other formats or for incorrect results or damages resulting from its use.

standard\USisld_sgn02.dgn 8/21/2011 7:09:25 PM mwmlstff1
pw:\\FTSDWD\0129cc

Type of Road or Condition		Condition for use: Required (shall be used)	Recommended (should be used)	Optional (may be used)	Prohibited (cannot be used)	Delineator Spacing
Freeways or Expressways	Tangent	D-SW on right or raised pavement markers				200-530 ft
	Curve	D-SW on right				see Table
	Ramp	D-SW on one side See Note 1 *	On outside of interchange ramp curves			
Other Than Freeways or Expressways	Tangent			D-SW on right or left side	D-SY or D-DY on left side of two-way roads	200-530 ft
	Curve					see Table
Acceleration and Deceleration Lanes			D-DW or D-DY			100 ft spacing
Crossovers			D-DY on left side of through road on far side of crossover			
Wrong-way				D-SR for wrong-way traffic		
Pavement Narrowing (lane merge)				D-SW (right) or D-SY (left) adjacent to affected lane for full length of transition See Note 2 **		
Truck escape ramps			D-SR on both sides of ramp			50 ft spacing
With guard fence, bridge rail, or concrete barrier						100 ft use min. of 3

General Notes: Unless indicated otherwise, the color of a delineators must conform to the color of the pavement edge line on the side of the road where the delineators are placed. Barrier markers can be used to replace required delineators. DS-R can be mounted on the back side of existing delineator posts.

* 1. Delineation required on one side either SY or SW.

** 2. Minimum of 3.

When degree of curve or radius is not known

Advisory Speed (MPH)	Spacing in Curve	Spacing in Strtawy	Chevron Spacing in Curve
	A	2xA	B
65	130	260	
60	110	220	
55	100	200	160
50	85	170	160
45	75	150	160
40	70	140	120
35	60	120	120
30	55	110	80
25	50	100	80
20	40	80	80
15	35	70	40

If the degree of curve is not known, delineator spacing may be determined based on the Advisory Speed of the curve. Use the delineator curve spacing for each Advisory Speed (MPH).

When degree of curve or radius is known

Degree of Curve	Feet: Radius of Curve	Spacing in Curve	Spacing in Strtawy	Chevron Spacing in Curve
		A	2A	B
1	5730	225	450	
2	2865	160	320	
3	1910	130	260	
4	1433	110	220	
5	1146	100	200	160
6	955	90	180	160
7	819	85	170	160
8	716	75	150	160
9	637	75	150	120
10	573	70	140	120
11	521	65	130	120
12	478	60	120	120
13	441	60	120	120
14	409	55	110	80
15	382	55	110	80
16	358	55	110	80
19	302	50	100	80
23	249	40	80	80
29	198	35	70	40
38	151	30	60	40
57	101	20	40	40

Curve delineator approach and departure spacing should include 3 delineators spaced at 2A. This spacing should be used during design preparation or when the degree of curve is known.

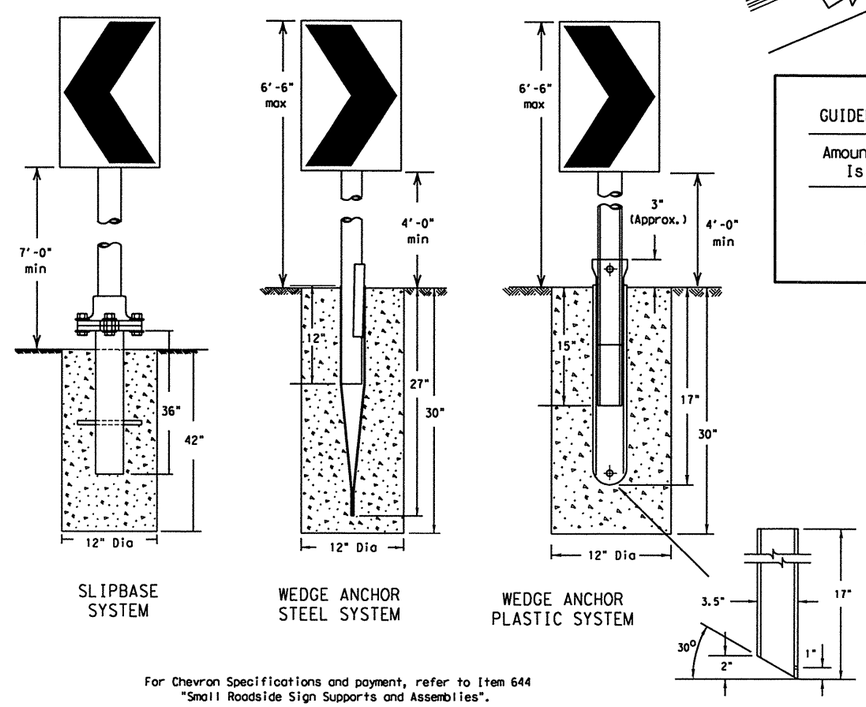

For Chevron Specifications and payment, refer to Item 644 "Small Roadside Sign Supports and Assemblies".

Suggested Spacing for Highway Delineators on Horizontal Curves △

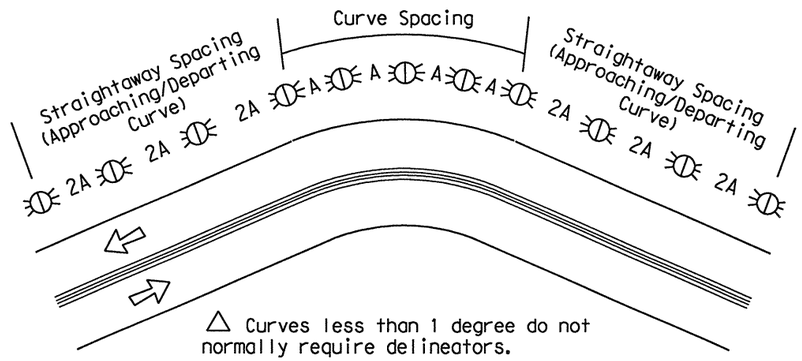

△ Curves less than 1 degree do not normally require delineators.

Suggested Spacing for Chevrons on Horizontal Curves △

The Chevron may be used to provide additional emphasis and guidance for a change in horizontal alignment. A Chevron may be used as a supplement to delineation.

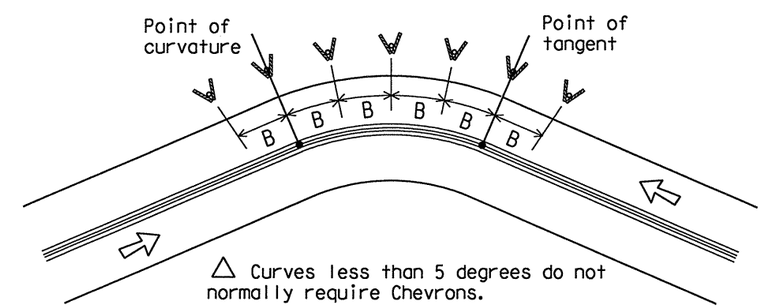

△ Curves less than 5 degrees do not normally require Chevrons.

GUIDELINES FOR USE OF WARNING DEVICES AT CURVES WITH ADVISORY SPEED LIMITS

Amount by which Advisory Speed Is less than Posted Speed	Warning Devices Needed
0 to 14 MPH	RPMs
15 to 24 MPH	RPMs and Delineators
25 MPH or greater	RPMs and Chevrons

Texas Department of Transportation
Traffic Operations Division

TYPICAL DELINEATOR & OBJECT MARKER PLACEMENT DETAILS

D & OM(2)-04

©TxDOT August 2004
REVISIONS

DN: TXDOT	CK: TXDOT	DW: TXDOT	CK: TXDOT
CONT	SECT	JOB	HIGHWAY
2452	01	043	SH 151
DIST		COUNTY	SHEET NO.
SA		BEXAR	429

DISCLAIMER: The use of this standard is governed by the "Texas Engineering Practice Act". No warranty of any kind is made by TxDOT for any purpose whatsoever. TxDOT assumes no responsibility for the conversion of this standard to other formats or for incorrect results or damages resulting from its use.

p:\4760\0-0129cr standard\DSlstd_sgn03.dgn 8/21/2011 7:09:26 PM mwmldkff1

Two-way, Two lane Roadway with Reduced Width Approach Rail

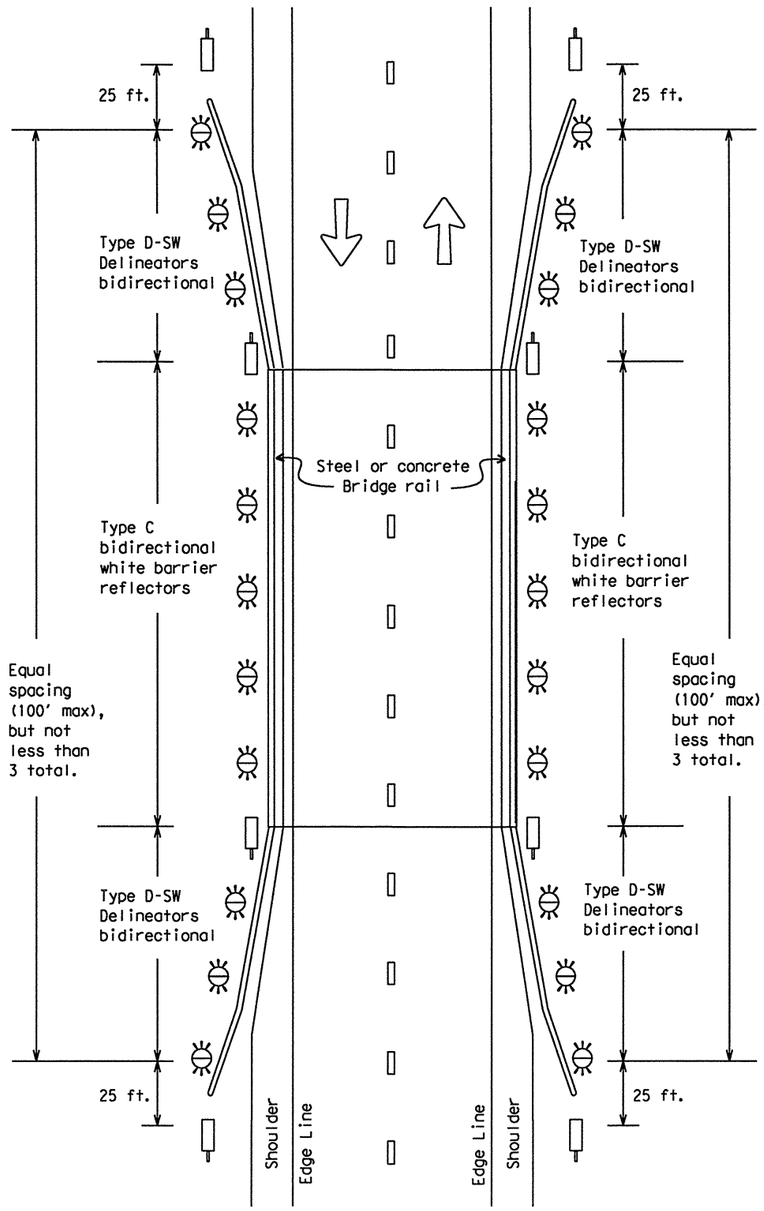

Two-way, Two lane Roadway with Metal Beam Guard Fence (MBGF)

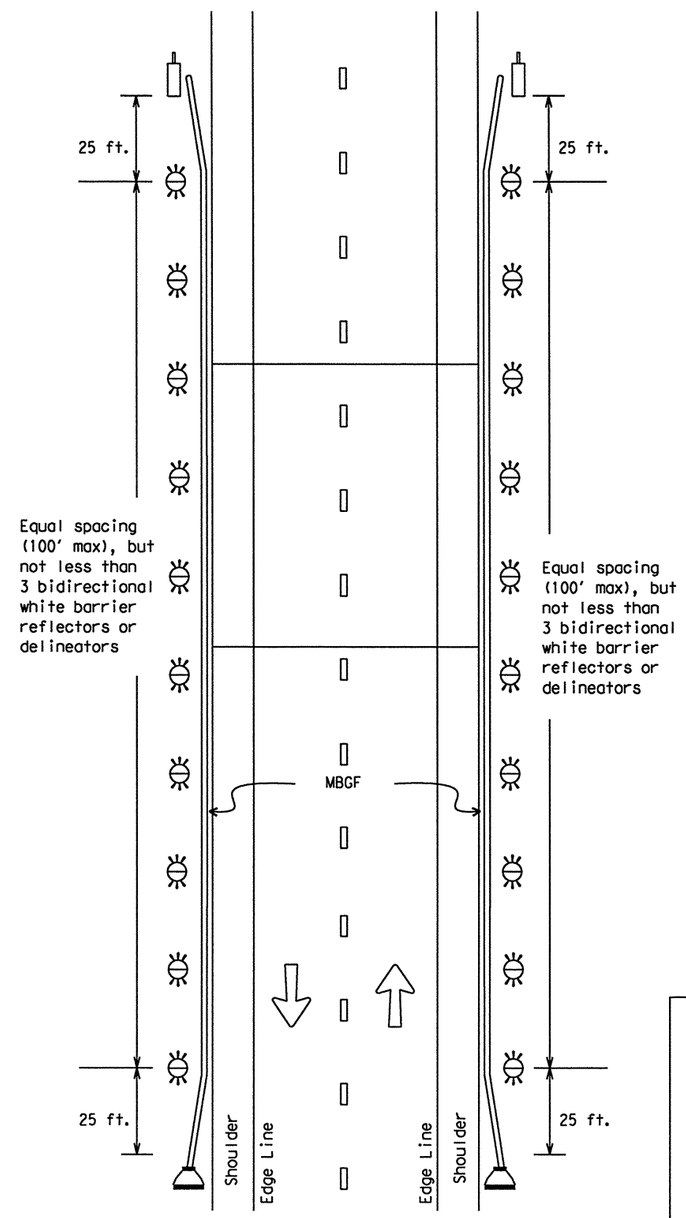

Terminal Ends include OB-3F. There is no need to install an OM-2 in front of terminal.

Two-way, Two lane Roadway Bridge with No Approach Rail

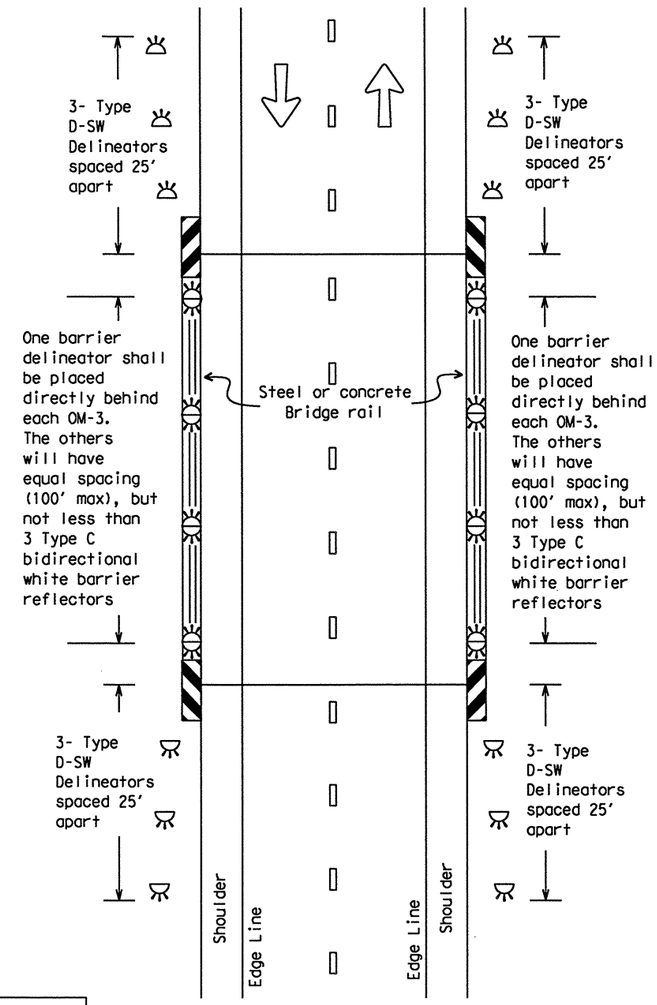

LEGEND

- Bidirectional Delineator
- Delineator
- OM-3
- OM-2
- Terminal End

Texas Department of Transportation
Traffic Operations Division

DELINEATOR & OBJECT MARKER PLACEMENT DETAILS

D & OM(3)-04

©TxDOT August 2004

REVISIONS

DN: TXDOT	CK: TXDOT	DW: TXDOT	CK: TXDOT
CONT	SECT	JOB	HIGHWAY
2452	01	043	SH 151
DIST		COUNTY	SHEET NO.
SA		BEXAR	430

DISCLAIMER: The use of this standard is governed by the "Texas Engineering Practice Act". No warranty of any kind is made by TxDOT for any purpose whatsoever. TxDOT assumes no responsibility for the conversion of this standard to other formats or for incorrect results or damages resulting from its use.

p:\4760\0-0129\cr standard\51std_sgn04.dgn 2/21/2011 7:09:27 PM mwmldkff

Continuous Concrete Barrier

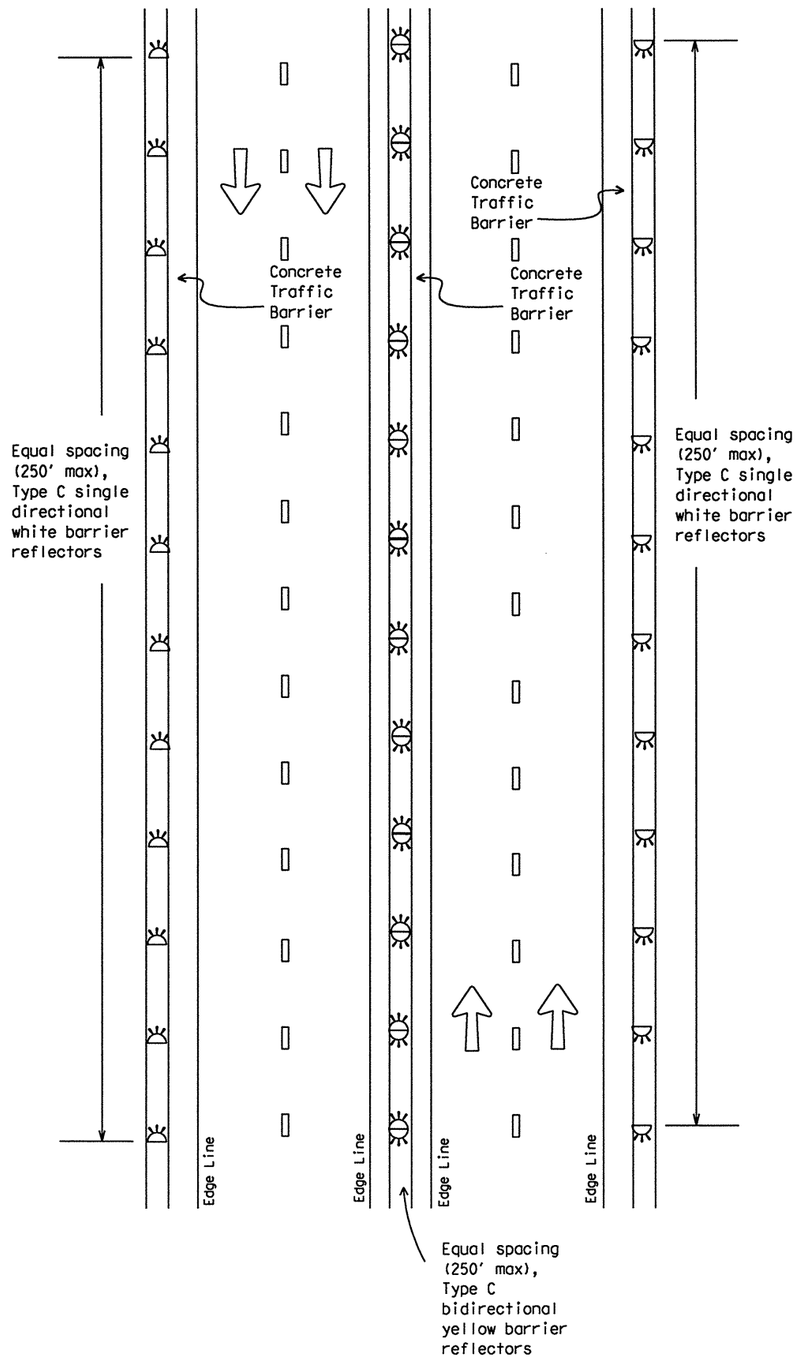

Multi-lane Undivided, Two-way Roadway with Metal Beam Guard Fence (MBGF)

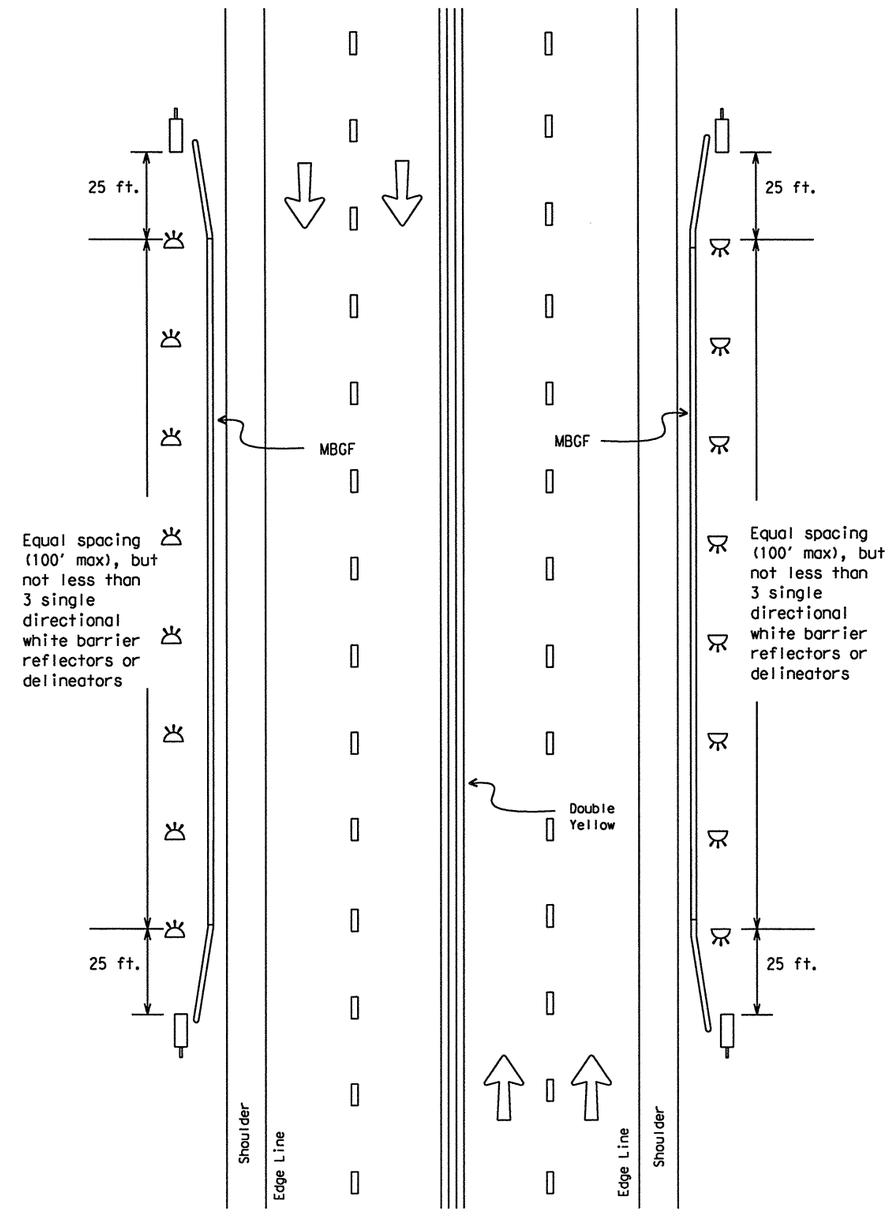

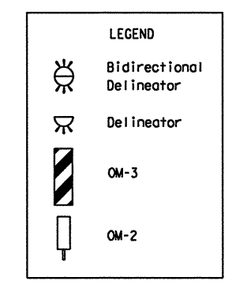

Texas Department of Transportation
Traffic Operations Division

DELINEATOR & OBJECT MARKER PLACEMENT DETAILS

D & OM(4)-04

© TxDOT August 2004

REVISIONS	DN: TxDOT	CK: TxDOT	DW: TxDOT	CK: TxDOT
	CONT	SECT	JOB	HIGHWAY
	2452	01	043	SH 151
	DIST		COUNTY	SHEET NO.
	SA		BEXAR	431

standardV5std_sgn05.dgn
2/21/2011
7:09:27 PM
mwmldstf1
pw:M:\TSOVD-01259cr

DISCLAIMER: The use of this standard is governed by the "Texas Engineering Practice Act". No warranty of any kind is made by TxDOT for any purpose whatsoever. TxDOT assumes no responsibility for the conversion of this standard to other formats or for incorrect results or damages resulting from its use.

Divided Roadway with Metal Beam Guard Fence

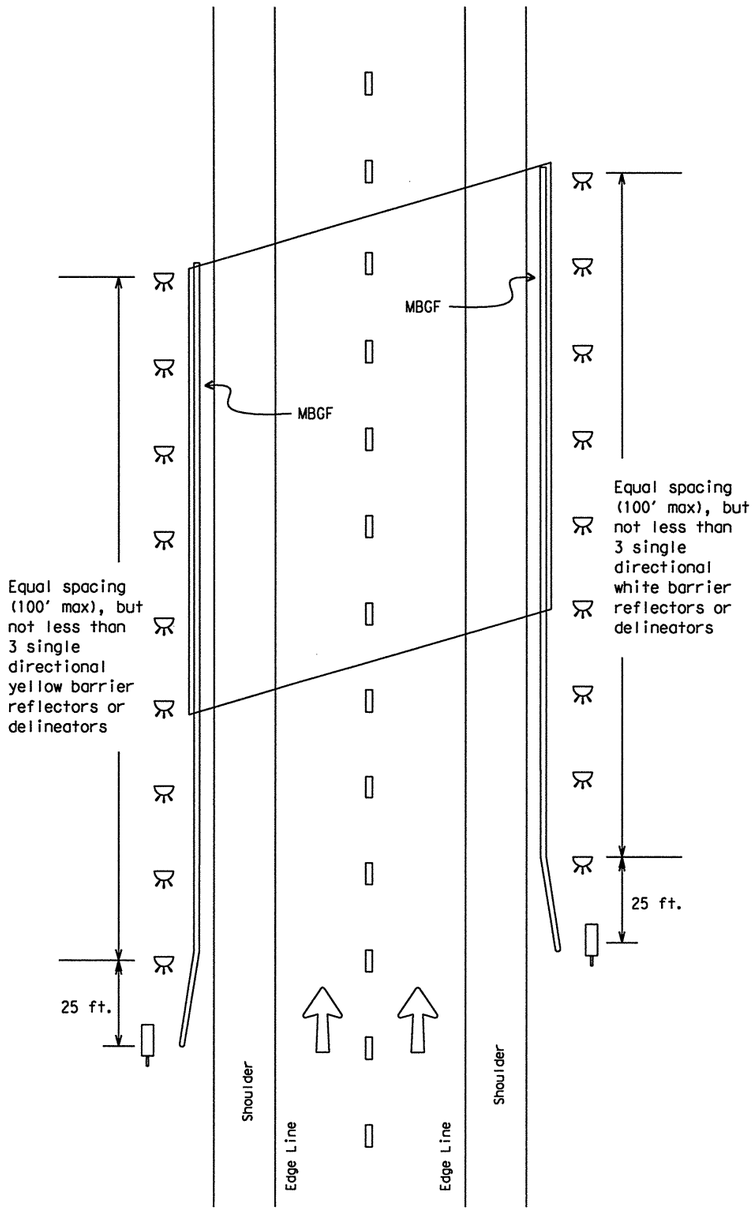

Freeway Delineation including Ramps

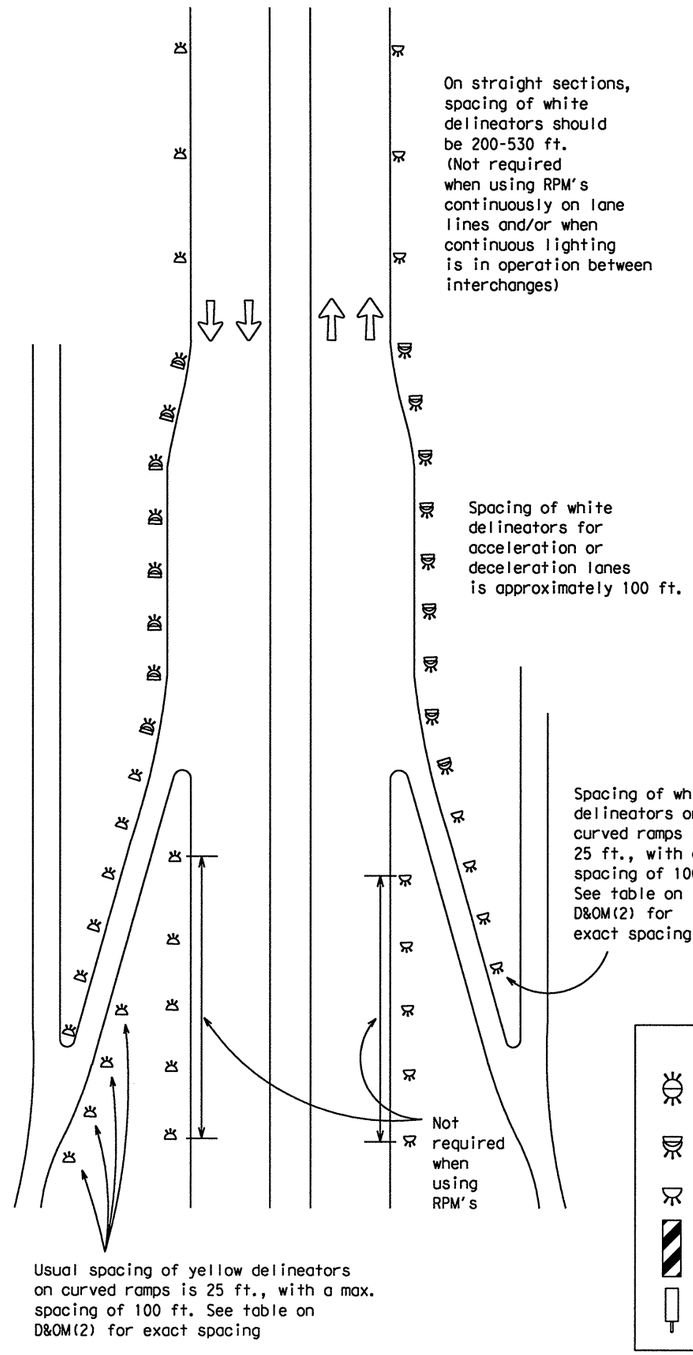

For Culverts without MBGF

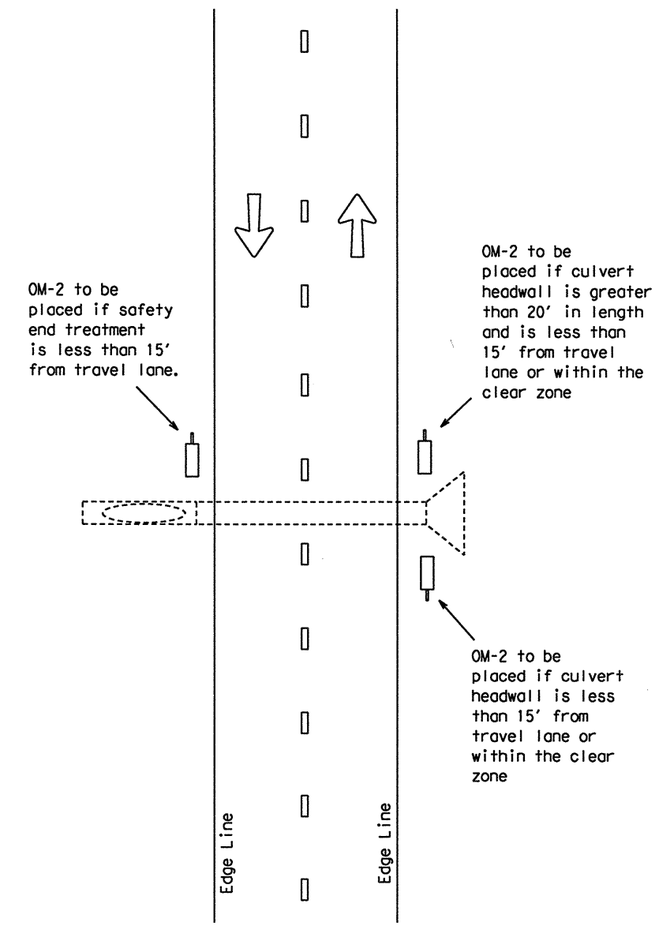

LEGEND

- Bidirectional Delineator
- Double Delineator
- Delineator
- OM-3
- OM-2

Texas Department of Transportation
Traffic Operations Division

DELINEATOR & OBJECT MARKER PLACEMENT DETAILS

D & OM(5)-04

©TxDOT August 2004

REVISIONS

DN: TXDOT	CK: TXDOT	DW: TXDOT	CK: TXDOT

CONT	SECT	JOB	HIGHWAY
2452	01	043	SH 151

DIST	COUNTY	SHEET NO.
SA	BEXAR	432

pi-4760\0-0129c standard\5std_sgn05.dgn 8/21/2011 7:09:28 PM mwmldstl1

DISCLAIMER: The use of this standard is governed by the "Texas Engineering Practice Act". No warranty of any kind is made by TxDOT for any purpose whatsoever. TxDOT assumes no responsibility for the conversion of this standard to other formats or for incorrect results or damages resulting from its use.

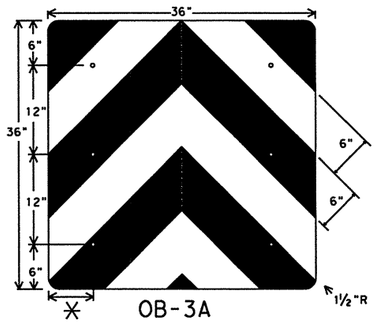

OB-3A

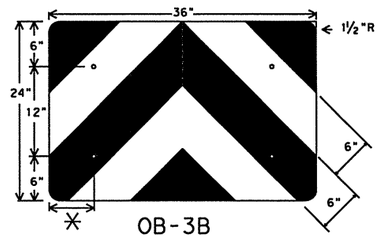

OB-3B

✳ adjust to fit attenuator per manufacturer's recommendation, or as directed by the Engineer.

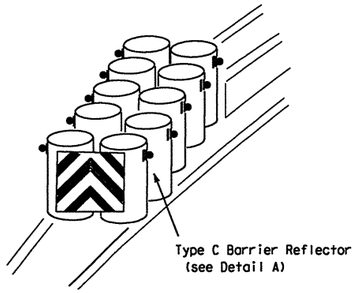

Object Marker blank to be 0.08" thick sheet aluminum conforming to ASTM B-209 Alloy 6061-T6 aluminum as per Specification DMS 7110.

Mounting should be flush with top of VIA. Minimum size 36" x 24".

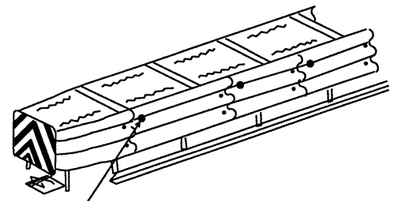

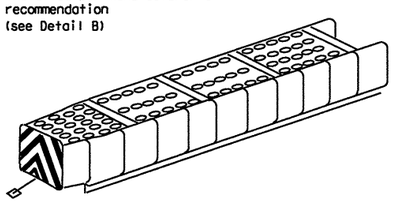

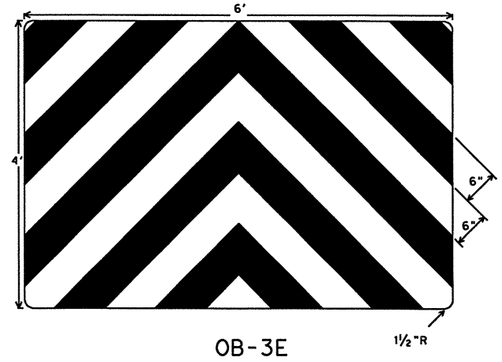

OB-3E

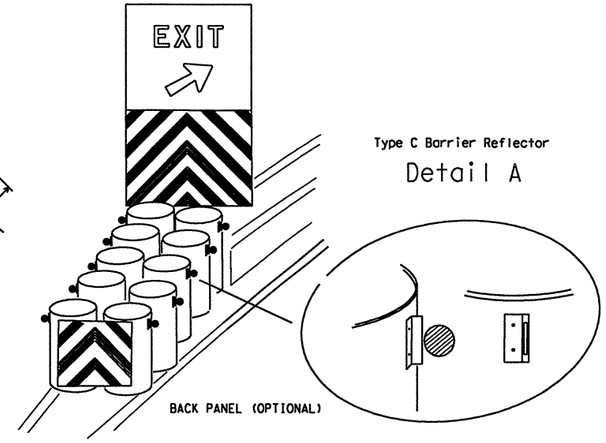

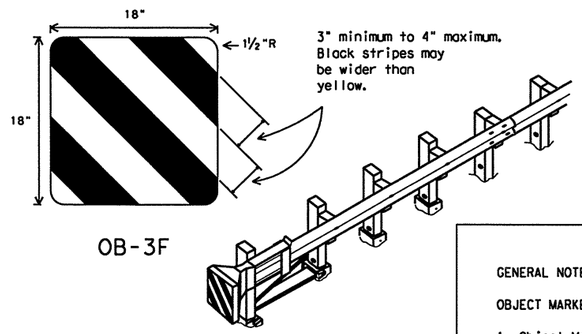

OB-3F

TYPICAL GUARDRAIL
END TREATMENT

GENERAL NOTES:

1. Back panel will be mounted independent of the attenuator. The minimum mounting height is flush with the top of the attenuator.
2. Attenuator may have additional yellow reflective and black striping, and/or reflectors placed on sides. CHEVRONS (W1-8) may be erected to delineate roadway curvature beyond the attenuator. These additional devices will be installed if required elsewhere in the plans.
3. Mount Back Panel per details on SMD Standards, or as detailed elsewhere in the plans.

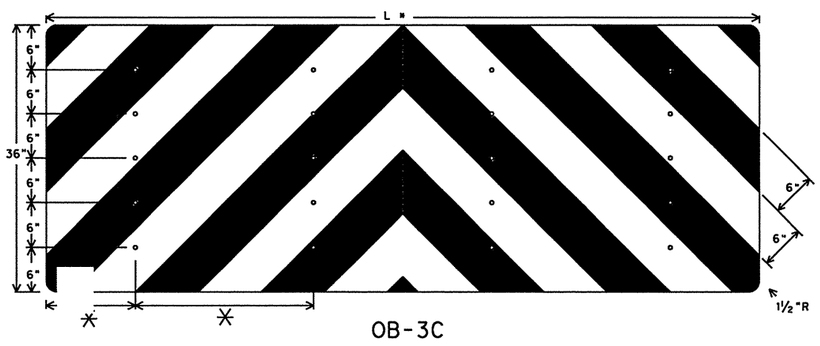

OB-3C

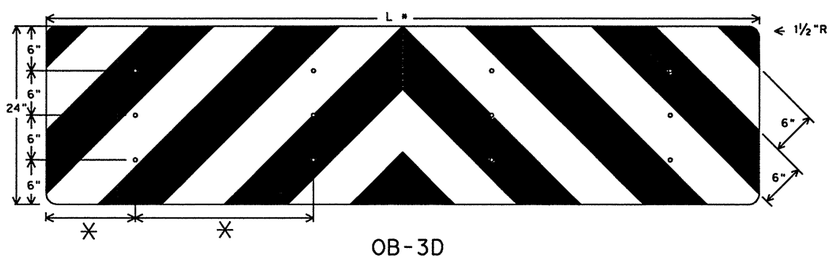

OB-3D

✳ spacing adjusted to attach through centerline of drum, per attenuator manufacturers recommendation, or as directed by the Engineer.

Mounting should be flush with top of attenuator. Minimum size 96" x 24".

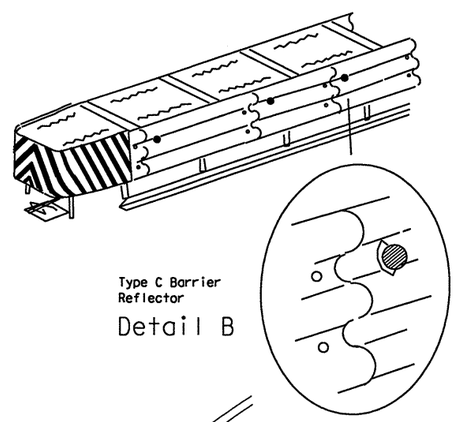

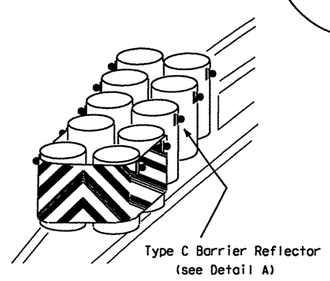

GENERAL NOTES:

OBJECT MARKERS

1. Object Markers shall conform to the Texas MUTCD and meet the color and reflectivity requirement of Department Material Specification DMS 8300, Type C. Background shall be yellow reflective and Chevron shall be black.
2. OB-3F is intended for use only with guardrail terminal ends. OM-BF may be fabricated from adhesive backed reflective sheeting applied directly to guardrail end treatment, or applied directly to an "end cap" as per the manufacturer's recommendation. Direct applied sheeting shall provide a smooth surface and have no wrinkles, air bubbles, cuts or tears.
3. Size may be reduced to fit smaller devices, however, the minimum size shall be:
   (a) 24 x 24 inch for attenuators, and
   (b) 18 x 18 inches for guardrail end treatments.
4. Pop rivets, screws, or nuts and bolts may be used to attach object markers and reflectors. Holes, slots or other openings may be cut or drilled through object markers to allow cable or other attachments.
5. When traffic passes only on one side of attenuator, only the OM-3 marker should be installed. OM-3 should be installed per the requirements of D & OM Standards with a minimum mounting height of 18 inches.

TYPE C REFLECTORS

1. Type C delineators shall consist of a Type A or Type B reflector unit (per DMS 8600) attached to a bracket to facilitate delineator mounting on attenuators, guardrails and concrete traffic barriers.
2. Type C reflectors may also be used to delineate side of attenuator, guardrail and concrete traffic barrier.
3. Type C reflectors shall meet the requirements of DMS 8600.

A list of approved Type C Delineators can be found at:

ftp//ftp.dot.state.tx.us/pub/txdot-info/cmd/mpl/typecdeln.pdf

Texas Department of Transportation
Traffic Operations Division

DELINEATORS & OBJECT MARKERS FOR VEHICLE IMPACT ATTENUATORS

D & OM(VIA)-04

© TxDOT December 1989

DN: TXDOT	CK: TXDOT	DW: TXDOT	CK: TXDOT

REVISIONS
4-92
8-95
4-98
8-04

CONT	SECT	JOB	HIGHWAY
2452	01	043	SH 151
DIST		COUNTY	SHEET NO.
SA		BEXAR	433

QUALITY LEVELS

FHWA QUALITY LEVELS

QUALITY LEVEL D - THE MOST BASIC LEVEL, BASED SOLELY ON EXISTING RECORDS AND SCHEMATICS, OFTEN INACCURATE OR OUT-OF-DATE. MAY PROVIDE ADEQUATE INFORMATION FOR RUDIMENTARY PLANNING OR BACKGROUND PURPOSES.

QUALITY LEVEL C - COMBINES LEVEL D INFORMATION WITH GROUND SURVEY OF UTILITY SURFACE FEATURES SUCH AS PEDESTALS, POWER POLES, VENT PIPES, MANHOLES, VALVE BOXES, ETC. USE OF THIS DATA ALONE TENDS TO RESULT WITH 15 TO 30 PERCENT OF UNDERGROUND UTILITIES OMITTED OR PLOTTED WITH MORE THAN TWO FEET OF ERROR.

QUALITY LEVEL B - OBTAINED BY PERFORMING A PHASE I (DESIGNATING) SURVEY TO MAP THE HORIZONTAL LOCATION (WITH AN ACCURACY OF LESS THAN +/- 1.0 FOOT) OF UNDERGROUND UTILITIES. THIS LEVEL ADDRESSES PROBLEMS CAUSED BY INACCURATE UTILITY RECORDS, ABANDONED OR UNRECORDED FACILITIES, AND LOST REFERENCES. THE DATA IS EXTREMELY USEFUL FOR PLANNING AND DESIGN USE, MAKING IT POSSIBLE TO AVOID COSTLY UTILITY RELOCATES AND PREVENT EXPENSIVE CONSTRUCTION DOWN TIME AND CHANGE ORDERS. LIMITED VERTICAL DATA

QUALITY LEVEL A - OBTAINED BY PERFORMING A PHASE II (LOCATING) VACUUM EXCAVATION AND SURVEY TO PRECISELY MAP THE TRUE HORIZONTAL AND VERTICAL LOCATION OF THE UNDERGROUND UTILITIES AT A SELECTED POINT. THIS DATA PROVIDES THE HIGHEST ACCURACY PRESENTLY AVAILABLE, PERMITTING THE DEVELOPMENT OF PRECISE PLAN AND PROFILE SHEETS USEFUL IN MAKING FINAL DESIGN DECISIONS. ADDITIONAL INFORMATION SUCH AS UTILITY MATERIAL, CONDITION, SIZE, OWNER, OBVIOUS SOIL CONTAMINATION, AND PAVEMENT THICKNESS AND TYPE ARE ALSO MADE AVAILABLE TO ASSIST THE DESIGNER AND UTILITY OWNERS IN THEIR DECISIONS.

COMPANY	CONTACT	PHONE NUMBER
SAN ANTONIO WATER	JUAN G. RODRIGUEZ	210-233-3598
CITY PUBLIC SERVICE ENERGY	RICHARD RODRIGUEZ	210-353-2226
AT&T	DAVID TERAN	210-283-1935
TIME WARNER	STEPHEN ROBERTSON	210-352-4306
TXDOT	RICK HANKS	210-615-6230

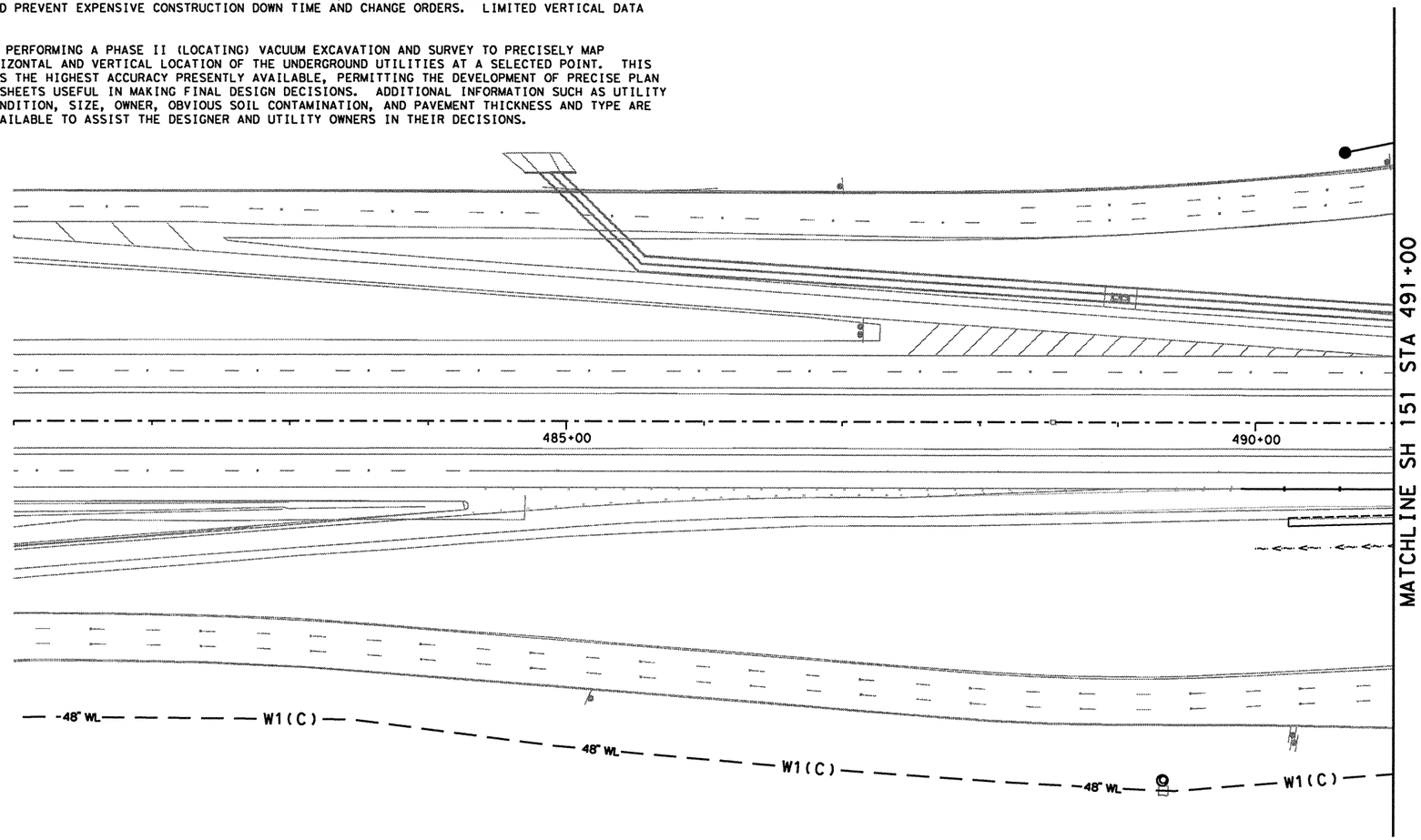

NOTES:
1. UTILITIES ON THESE DRAWINGS THAT HAVE BEEN IDENTIFIED TO FHWA LEVEL D ARE SHOWN WITH THE LETTER "D" IN PARENTHESES IN THE LINESTYLE.

2. UTILITIES ON THESE DRAWINGS THAT HAVE BEEN IDENTIFIED TO FHWA LEVEL C ARE SHOWN WITH THE LETTER "C" IN PARENTHESES IN THE LINE STYLE.

3. UTILITIES ON THESE DRAWINGS THAT HAVE BEEN IDENTIFIED TO FHWA LEVEL B ARE SHOWN WITH THE LETTER "B" IN PARENTHESES IN THE LINE STYLE.

4. ALL UTILITIES NOT ASSIGNED A QUALITY LEVEL HAVE BEEN PROVIDED BY TXDOT AND SHOULD BE TREATED AS QUALITY LEVEL D

0 25 50 100
SCALE IN FEET

LEGEND

PROPOSED ROW
EXISTING ROW
PROPOSED EDGE OF PAVEMENT

FIBER OPTICS
AT&T ---FO1----

TELEPHONE
AT&T --- T1----

GAS LINES
CPS --- G1----

ELECTRIC
CPS --- E1----

CATV
TIME WARNER ---CATV---

WASTEWATER
SAWS ---WW1----

WATER
SAWS ----W1----

RAW WATER
SAWS ----RW1---

POWER POLE
LIGHT POLE
ELECTRIC BOX
SANITARY MH
FIRE HYDRANT
WATER VALVE
WATER METER
TEL PED
CATV POLE

STATE OF TEXAS
CHRISTOPHER M. PROSPERI
94617
LICENSED
PROFESSIONAL ENGINEER
2-22-11

NO.	DATE	REVISION DESCRIPTION	APP. BY

© 2011

Texas Department of Transportation

MACTEC
3520 EXECUTIVE CENTER DRIVE
SUITE 200
AUSTIN, TEXAS 78731
(512) 795-0360

REGISTRATION NUMBER: F-1784

SH 151
UTILITY LAYOUT
SH 151
BEGIN PROJECT TO STA 491+00
(SHEET 1 OF 7)

FED. RD. DIV. NO.			SHEET NO.
			434
STATE	DIST.	COUNTY	
TEXAS	SA	BEXAR	
CONT.	SECT.	JOB	HIGHWAY NO.
2452	01	043	SH 151

p:\4760\0-0125\cad\sheet\Sul01.dgn 2/21/2011 7:09:34 PM mwmldktT

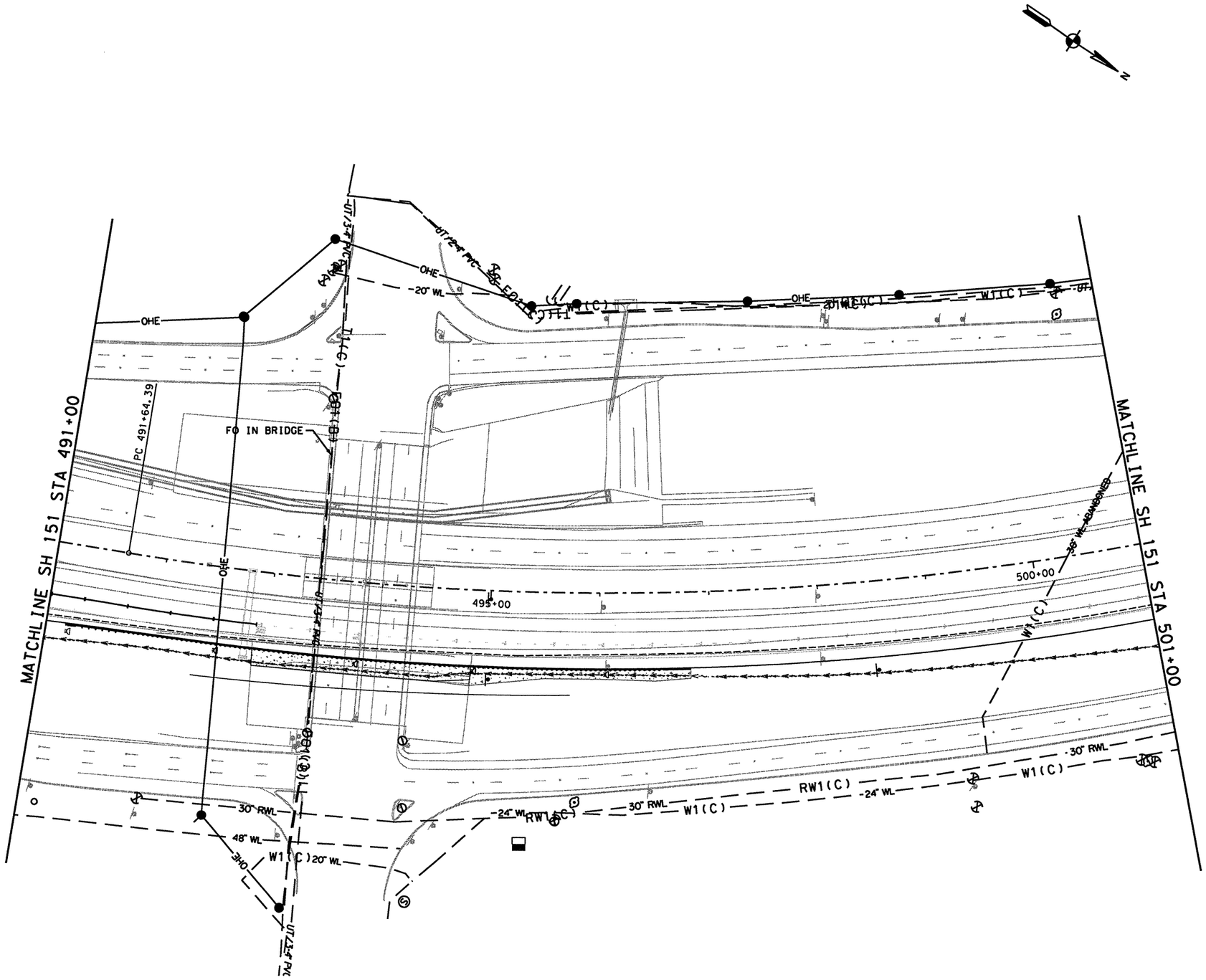

0 25 50 100
SCALE IN FEET

LEGEND

PROPOSED ROW
EXISTING ROW
PROPOSED EDGE OF PAVEMENT

FIBER OPTICS
AT&T ---FO1----

TELEPHONE
AT&T --- T1----

GAS LINES
CPS --- G1----

ELECTRIC
CPS --- E1----

CATV
TIME WARNER ---CATV---

WASTEWATER
SAWS ---WW1----

WATER
SAWS ----W1----

RAW WATER
SAWS ----RW1---

POWER POLE
LIGHT POLE
ELECTRIC BOX
SANITARY MH
FIRE HYDRANT
WATER VALVE
WATER METER
TEL PED
CATV POLE

STATE OF TEXAS
CHRISTOPHER M. PROSPERI
94617
LICENSED
PROFESSIONAL ENGINEER

Christopher M. Prosperi
2-22-11

NO.	DATE	REVISION DESCRIPTION	APP. BY

© 2011

Texas Department of Transportation

MACTEC
3520 EXECUTIVE CENTER DRIVE
SUITE 200
AUSTIN, TEXAS 78731
(512) 795-0360

REGISTRATION NUMBER: F-1784

SH 151
UTILITY LAYOUT SH 151 STA 491+00 TO STA 501+00
(SHEET 2 OF 7)

FED. RD. DIV. NO.			SHEET NO.
			435
STATE	DIST.	COUNTY	
TEXAS	SA	BEXAR	
CONT.	SECT.	JOB	HIGHWAY NO.
2452	01	043	SH 151

p:\4760\0-0129\cad\sheet\5lut102.dgn 2/21/2011 7:09:37 PM mwmldkiff

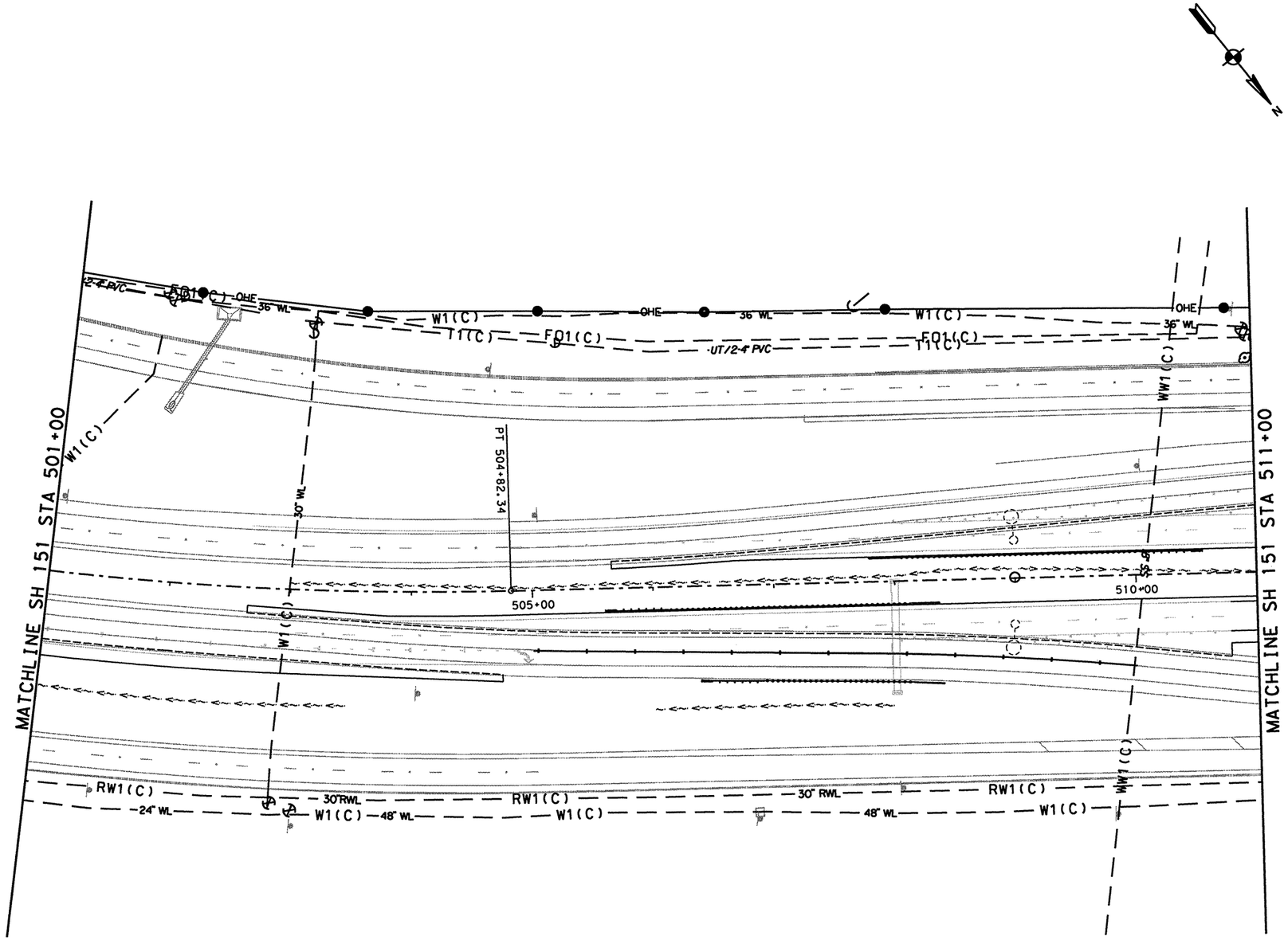

0 25 50 100
SCALE IN FEET

LEGEND

PROPOSED ROW
EXISTING ROW
PROPOSED EDGE OF PAVEMENT

FIBER OPTICS
AT&T ---FO1----

TELEPHONE
AT&T --- T1----

GAS LINES
CPS --- G1----

ELECTRIC
CPS --- E1----

CATV
TIME WARNER ---CATV---

WASTEWATER
SAWS ---WW1----

WATER
SAWS ----W1----

RAW WATER
SAWS ---RW1---

POWER POLE
LIGHT POLE
ELECTRIC BOX
SANITARY MH
FIRE HYDRANT
WATER VALVE
WATER METER
TEL PED
CATV POLE

STATE OF TEXAS
CHRISTOPHER M. PROSPERI
94617
LICENSED
PROFESSIONAL ENGINEER

2-22-11

NO.	DATE	REVISION DESCRIPTION	APP. BY

© 2011

Texas Department of Transportation

MACTEC
3520 EXECUTIVE CENTER DRIVE
SUITE 200
AUSTIN, TEXAS 78731
(512) 795-0360

REGISTRATION NUMBER: F-1784

SH 151
UTILITY LAYOUT SH 151 STA 501+00 TO STA 511+00
(SHEET 3 OF 7)

FED. RD. DIV. NO.			SHEET NO.
			436
STATE	DIST.	COUNTY	
TEXAS	SA	BEXAR	
CONT.	SECT.	JOB	HIGHWAY NO.
2452	01	043	SH 151

p:\4760\0-0129\cad\sheet\51ut103.dgn 2/21/2011 7:09:41 PM mwmldkiff

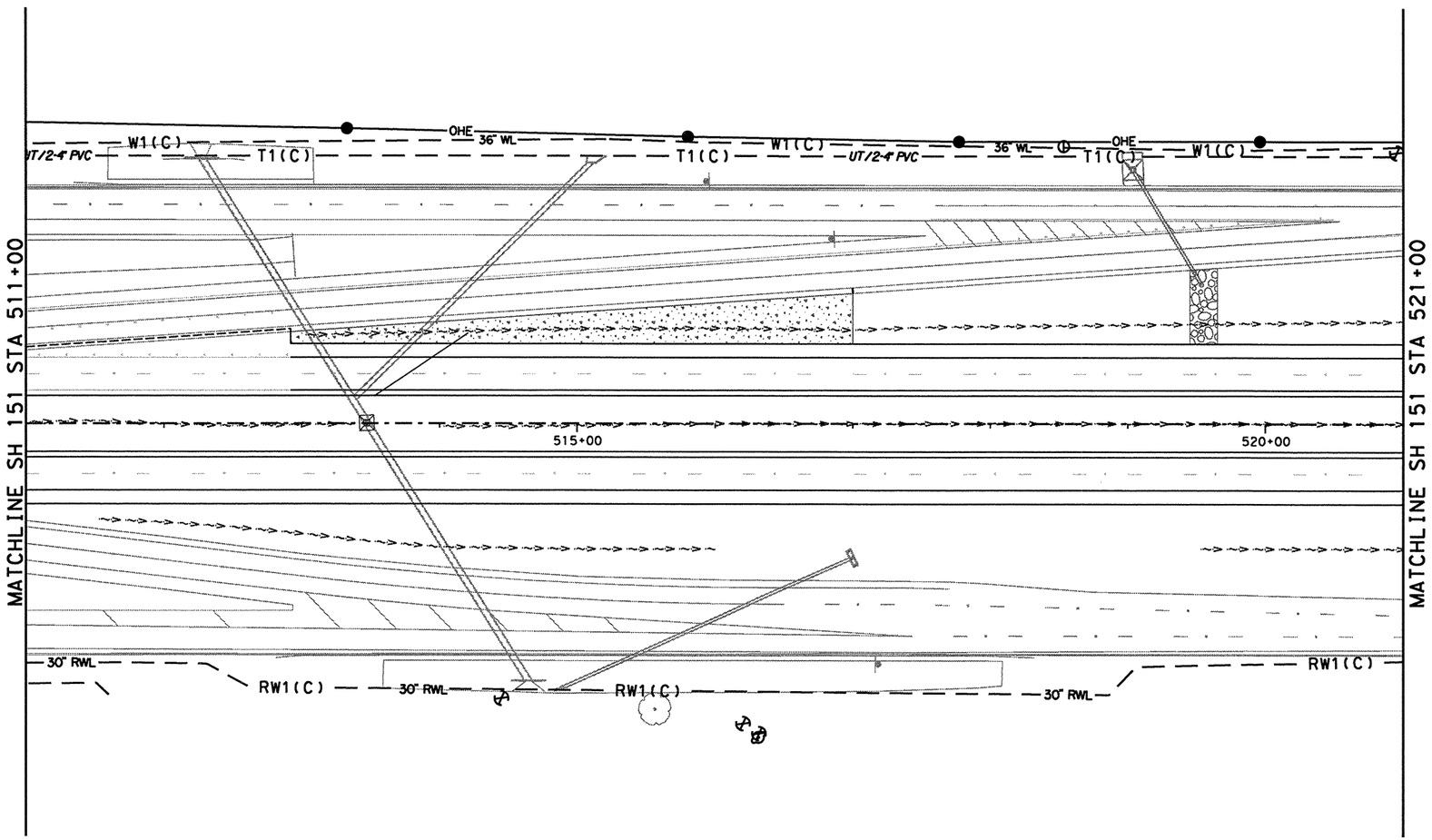

0 25 50 100
SCALE IN FEET

LEGEND

PROPOSED ROW
EXISTING ROW
PROPOSED EDGE OF PAVEMENT

FIBER OPTICS
AT&T ---FO1----

TELEPHONE
AT&T --- T1----

GAS LINES
CPS --- G1----

ELECTRIC
CPS --- E1----

CATV
TIME WARNER ---CATV---

WASTEWATER
SAWS ---WW1----

WATER
SAWS ----W1----

RAW WATER
SAWS ----RW1---

POWER POLE
LIGHT POLE
ELECTRIC BOX
SANITARY MH
FIRE HYDRANT
WATER VALVE
WATER METER
TEL PED
CATV POLE

STATE OF TEXAS
CHRISTOPHER M. PROSPERI
94617
LICENSED
PROFESSIONAL ENGINEER
2-22-11

NO.	DATE	REVISION DESCRIPTION	APP. BY

© 2011

Texas Department of Transportation

MACTEC
3520 EXECUTIVE CENTER DRIVE
SUITE 200
AUSTIN, TEXAS 78731
(512) 795-0360

REGISTRATION NUMBER: F-1784

SH 151
UTILITY LAYOUT SH 151 STA 511+00 TO STA 521+00
(SHEET 4 OF 7)

FED. RD. DIV. NO.			SHEET NO.
			437
STATE	DIST.	COUNTY	
TEXAS	SA	BEXAR	
CONT.	SECT.	JOB	HIGHWAY NO.
2452	01	043	SH 151

p:\4760\0-0129\cad\sheet\51ut04.dgn 2/21/2011 7:09:45 PM mwmldt11

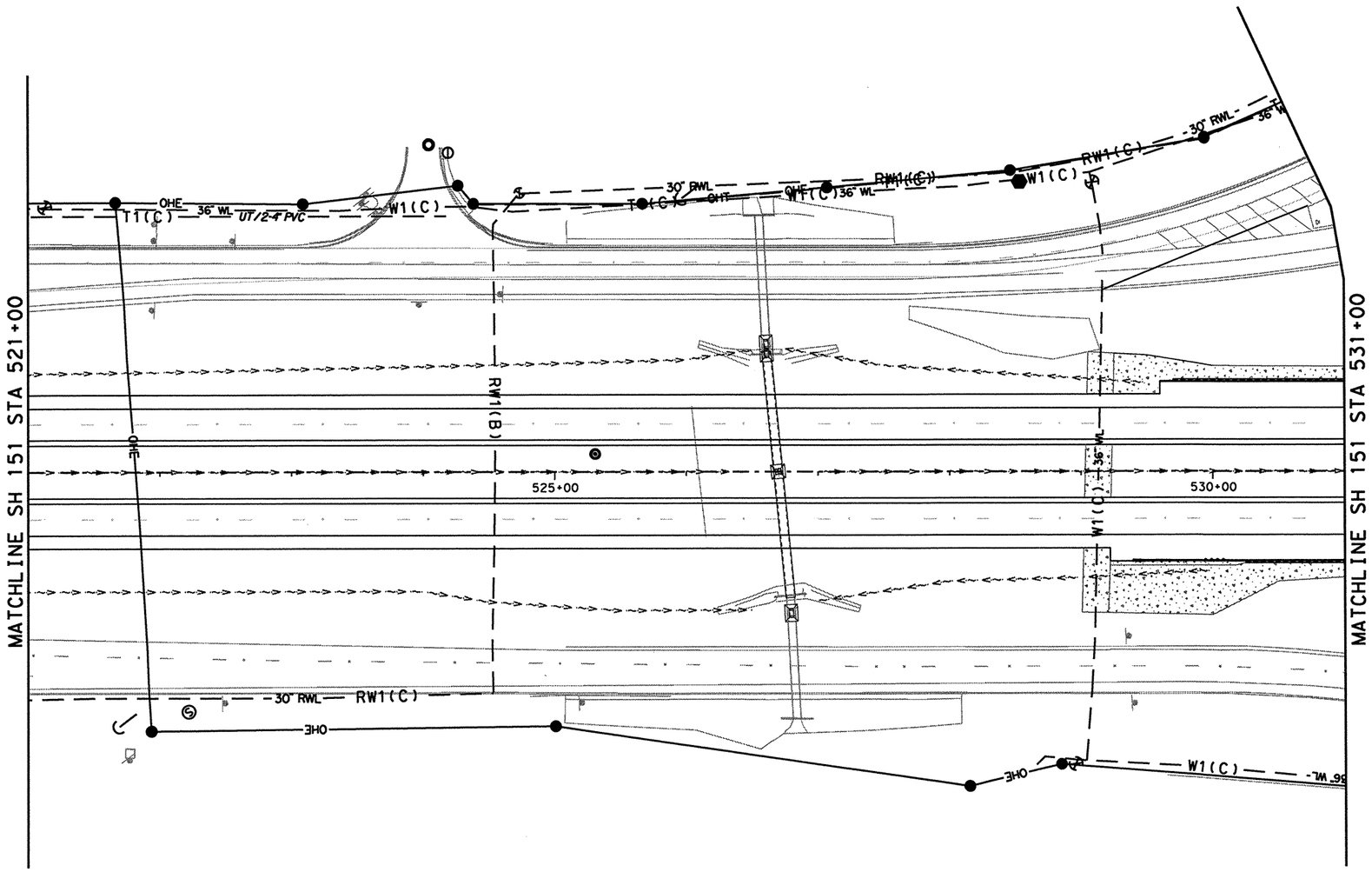

0 25 50 100
SCALE IN FEET

LEGEND

PROPOSED ROW
EXISTING ROW
PROPOSED EDGE OF PAVEMENT

FIBER OPTICS
AT&T ---FO1----

TELEPHONE
AT&T --- T1----

GAS LINES
CPS --- G1----

ELECTRIC
CPS --- E1----

CATV
TIME WARNER ---CATV---

WASTEWATER
SAWS ---WW1---

WATER
SAWS ----W1---

RAW WATER
SAWS ---RW1---

- POWER POLE
- LIGHT POLE
- ELECTRIC BOX
- SANITARY MH
- FIRE HYDRANT
- WATER VALVE
- WATER METER
- TEL PED
- CATV POLE

STATE OF TEXAS
CHRISTOPHER M. PROSPERI
94617
LICENSED
PROFESSIONAL ENGINEER
2-22-11

NO.	DATE	REVISION DESCRIPTION	APP. BY

© 2011

Texas Department of Transportation

MACTEC
3520 EXECUTIVE CENTER DRIVE
SUITE 200
AUSTIN, TEXAS 78731
(512) 795-0360

REGISTRATION NUMBER: F-1784

SH 151
UTILITY LAYOUT SH 151 STA 521+00 TO STA 531+00
(SHEET 5 OF 7)

FED. RD. DIV. NO.			SHEET NO.
			438

STATE	DIST.	COUNTY	
TEXAS	SA	BEXAR	
CONT.	SECT.	JOB	HIGHWAY NO.
2452	01	043	SH 151

p:\4760\0-0129\cad\sheet\15ut105.dgn 2/21/2011 7:08:48 PM mwmldk117

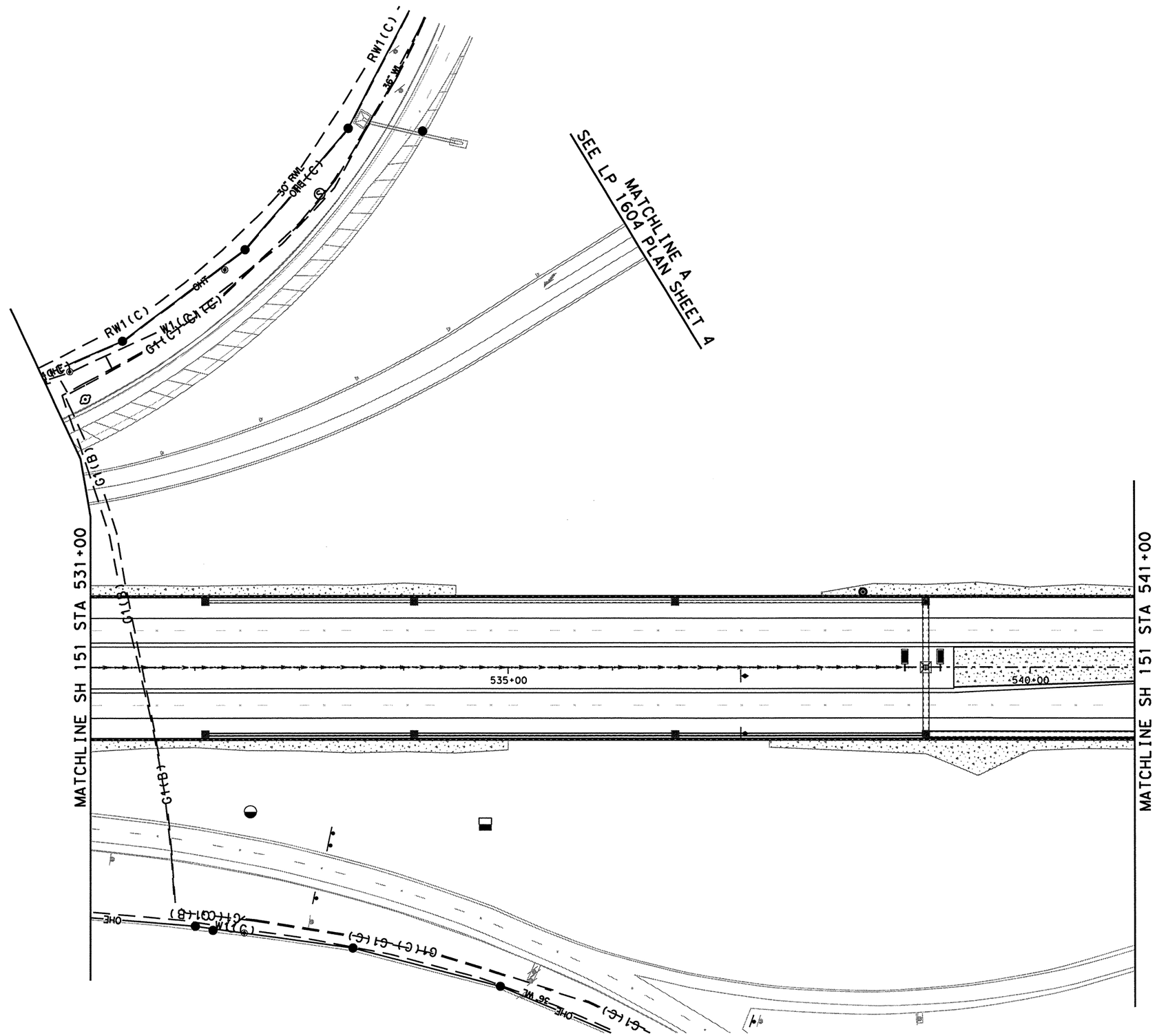

0 25 50 100
SCALE IN FEET

LEGEND

PROPOSED ROW
EXISTING ROW
PROPOSED EDGE OF PAVEMENT

FIBER OPTICS
AT&T ---FO1----

TELEPHONE
AT&T --- T1----

GAS LINES
CPS --- G1----

ELECTRIC
CPS --- E1----

CATV
TIME WARNER ---CATV---

WASTEWATER
SAWS ---WW1----

WATER
SAWS ----W1----

RAW WATER
SAWS ---RW1---

POWER POLE
LIGHT POLE
ELECTRIC BOX
SANITARY MH
FIRE HYDRANT
WATER VALVE
WATER METER
TEL PED
CATV POLE

STATE OF TEXAS
CHRISTOPHER M. PROSPERI
94617
LICENSED
PROFESSIONAL ENGINEER
2-22-11

NO.	DATE	REVISION DESCRIPTION	APP. BY

© 2011

Texas Department of Transportation

MACTEC
3520 EXECUTIVE CENTER DRIVE
SUITE 200
AUSTIN, TEXAS 78731
(512) 795-0360

REGISTRATION NUMBER: F-1784

SH 151
UTILITY LAYOUT SH 151 STA 531+00 TO STA 541+00
(SHEET 6 OF 7)

FED. RD. DIV. NO.			SHEET NO.
			439
STATE	DIST.	COUNTY	
TEXAS	SA	BEXAR	
CONT.	SECT.	JOB	HIGHWAY NO.
2452	01	043	SH 151

p:\4760\10-0129\cad\sheet\151ut106.dgn 2/21/2011 7:09:53 PM mwmldkiff

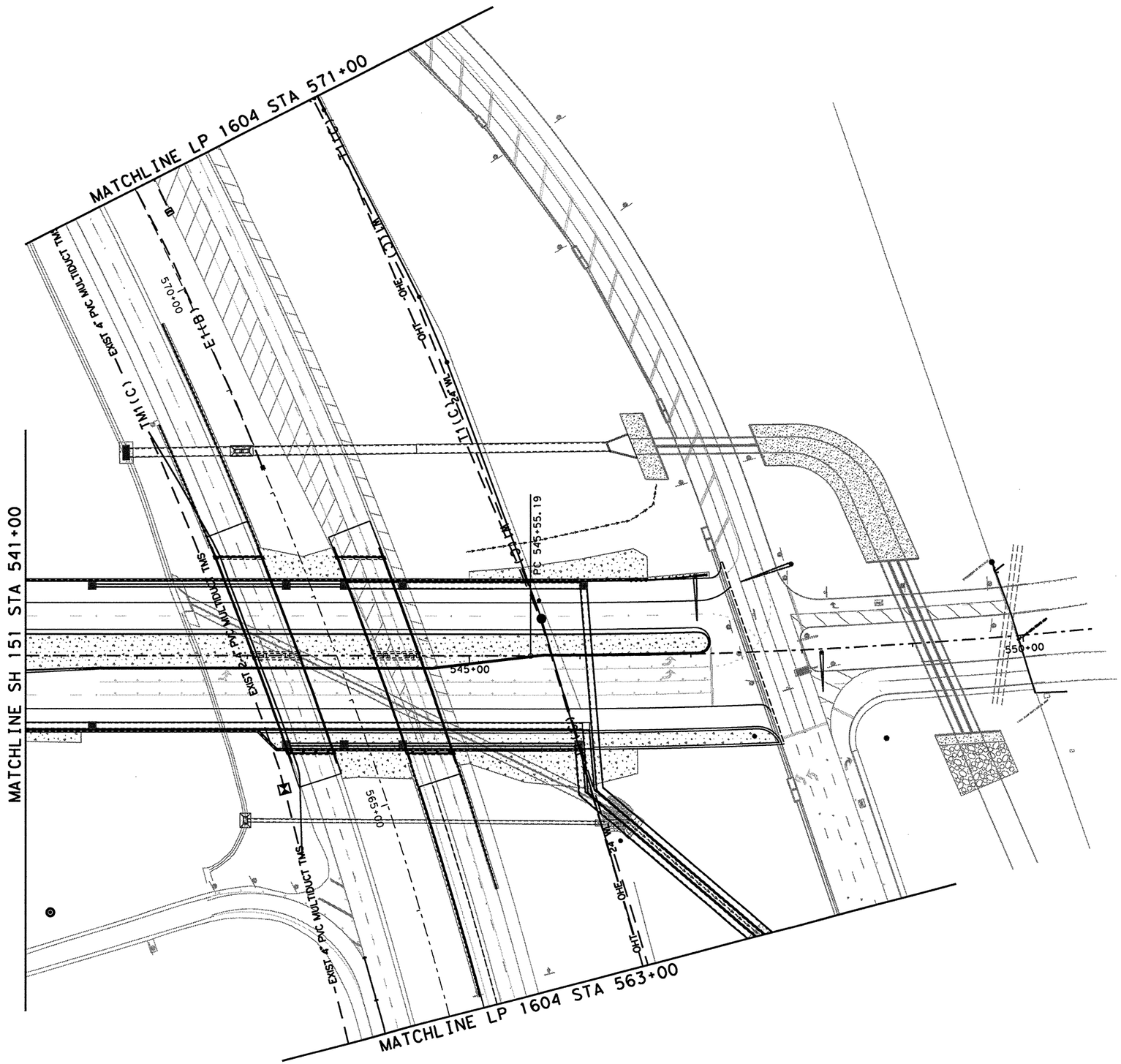

0 25 50 100
SCALE IN FEET

LEGEND

PROPOSED ROW
EXISTING ROW
PROPOSED EDGE OF PAVEMENT

FIBER OPTICS
AT&T ---FO1----

TELEPHONE
AT&T --- T1----

GAS LINES
CPS --- G1----

ELECTRIC
CPS --- E1----

CATV
TIME WARNER ---CATV---

WASTEWATER
SAWS ---WW1----

WATER
SAWS ----W1----

RAW WATER
SAWS ---RW1---

POWER POLE
LIGHT POLE
ELECTRIC BOX
SANITARY MH
FIRE HYDRANT
WATER VALVE
WATER METER
TEL PED
CATV POLE

STATE OF TEXAS
CHRISTOPHER M. PROSPERI
9461
LICENSED
PROFESSIONAL ENGINEER
2-22-11

NO.	DATE	REVISION DESCRIPTION	APP. BY

© 2011

Texas Department of Transportation

MACTEC
3520 EXECUTIVE CENTER DRIVE
SUITE 200
AUSTIN, TEXAS 78731
(512) 795-0360

REGISTRATION NUMBER: F-1784

SH 151
UTILITY LAYOUT SH 151 STA 541+00 TO END PROJECT
(SHEET 7 OF 7)

FED. RD. DIV. NO.			SHEET NO.
			440
STATE	DIST.	COUNTY	
TEXAS	SA	BEXAR	
CONT.	SECT.	JOB	HIGHWAY NO.
2452	01	043	SH 151

p:\4760\0-0129\cad\sheet\51ut107.dgn 2/21/2011 7:09:58 PM mwmidkiff

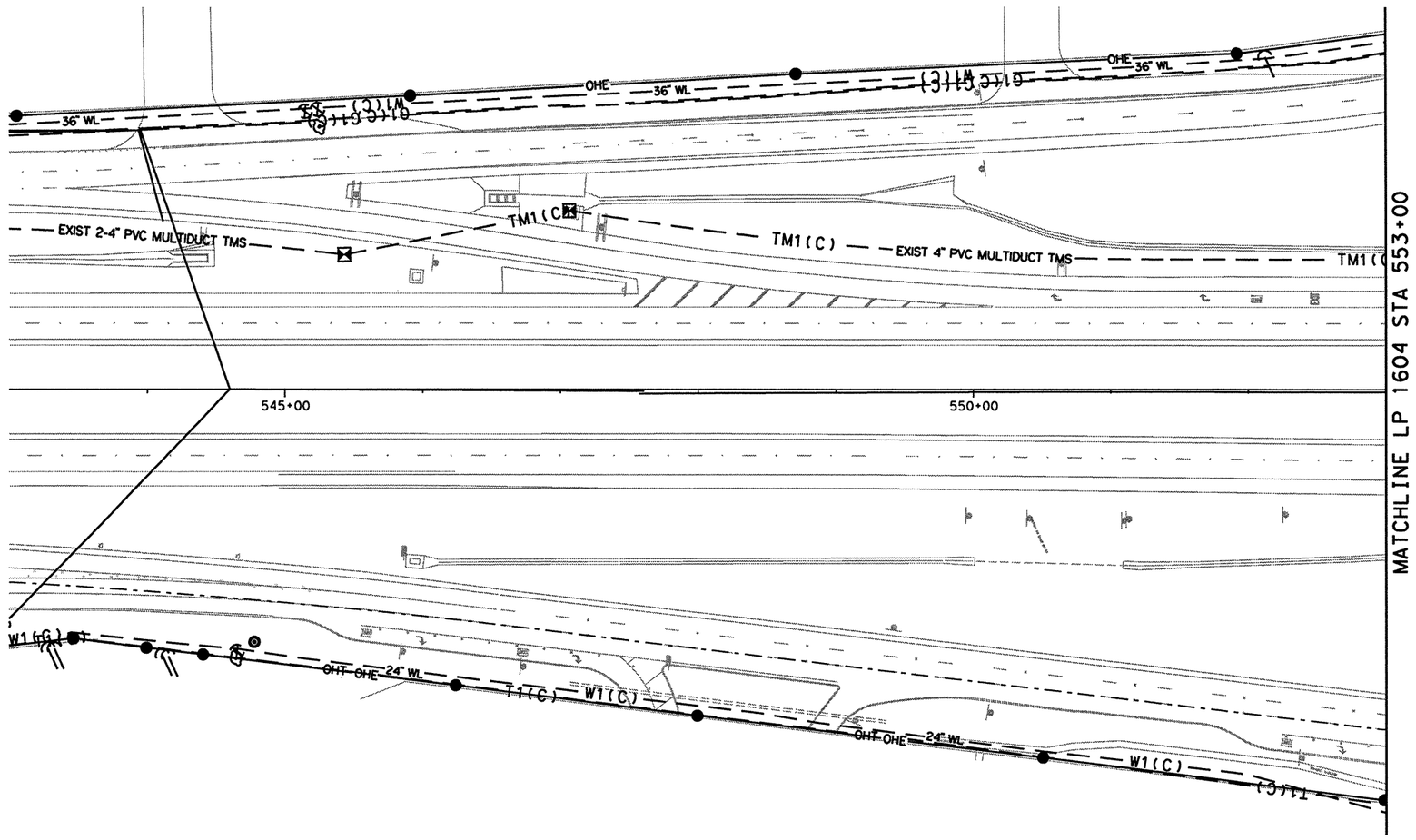

0 25 50 100
SCALE IN FEET

LEGEND

PROPOSED ROW
EXISTING ROW
PROPOSED EDGE OF PAVEMENT

FIBER OPTICS
AT&T ---FO1----

TELEPHONE
AT&T --- T1----

GAS LINES
CPS --- G1----

ELECTRIC
CPS --- E1----

CATV
TIME WARNER ---CATV---

WASTEWATER
SAWS ---WW1----

WATER
SAWS ----W1----

RAW WATER
SAWS ---RW1---

POWER POLE
LIGHT POLE
ELECTRIC BOX
SANITARY MH
FIRE HYDRANT
WATER VALVE
WATER METER
TEL PED
CATV POLE

STATE OF TEXAS
CHRISTOPHER M. PROSPERI
94610
LICENSED
PROFESSIONAL ENGINEER

2-22-11

NO.	DATE	REVISION DESCRIPTION	APP. BY

© 2011

Texas Department of Transportation

MACTEC
3520 EXECUTIVE CENTER DRIVE
SUITE 200
AUSTIN, TEXAS 78731
(512) 795-0360

REGISTRATION NUMBER: F-1784

SH 151
UTILITY LAYOUT LP 1604 BEGIN PROJECT TO STA 553+00
(SHEET 1 OF 4)

FED. RD. DIV. NO.			SHEET NO.
			441
STATE	DIST.	COUNTY	
TEXAS	SA	BEXAR	
CONT.	SECT.	JOB	HIGHWAY NO.
2452	01	043	SH 151

p:\4760\0-0129\cad\sheet\51ut108.dgn 2/21/2011 7:10:02 PM mwmldkiff

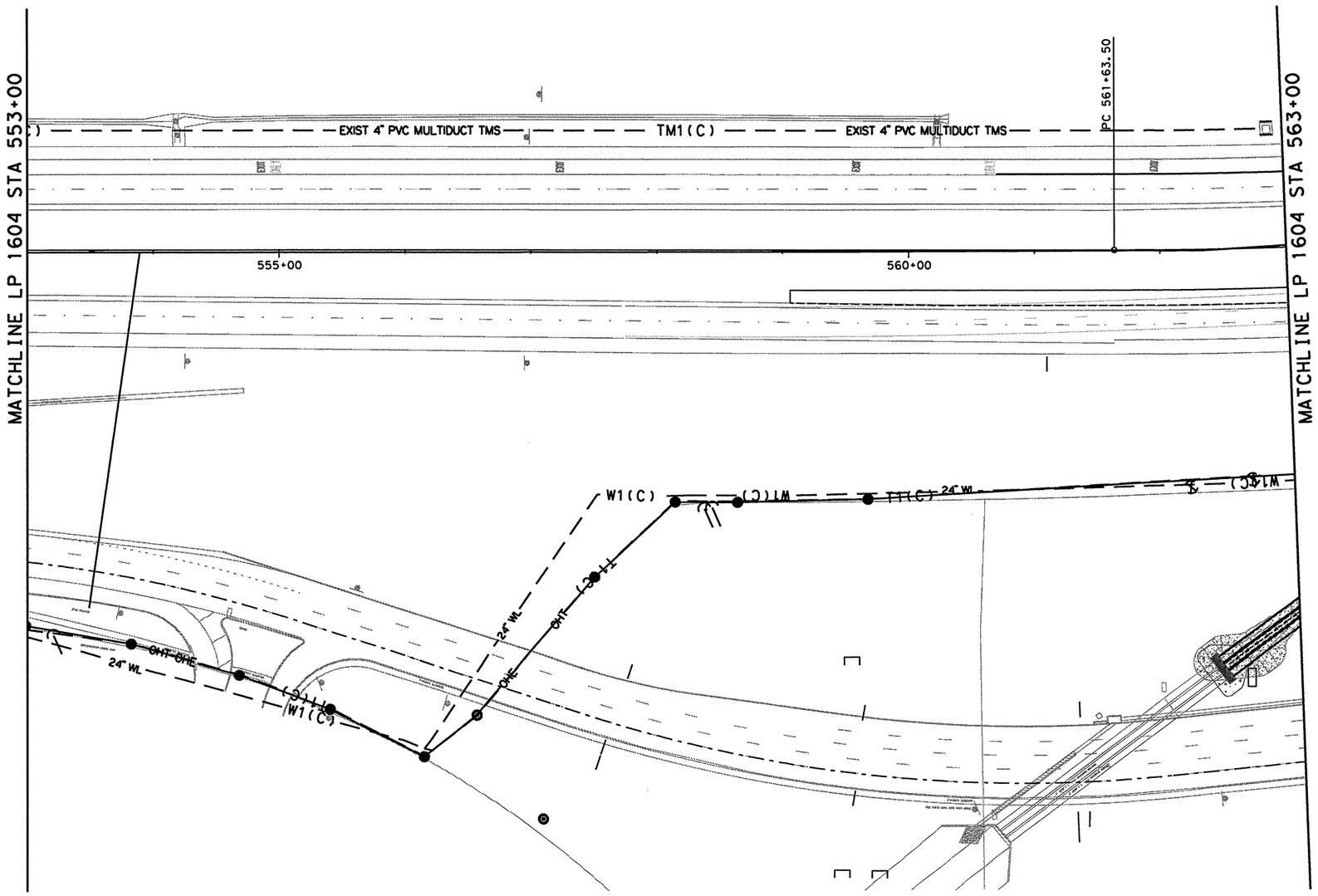

0 25 50 100
SCALE IN FEET

LEGEND

PROPOSED ROW
EXISTING ROW
PROPOSED EDGE OF PAVEMENT

FIBER OPTICS
AT&T ---FO1----

TELEPHONE
AT&T --- T1----

GAS LINES
CPS --- G1----

ELECTRIC
CPS --- E1----

CATV
TIME WARNER ---CATV---

WASTEWATER
SAWS ---WW1----

WATER
SAWS ----W1----

RAW WATER
SAWS ---RW1---

POWER POLE
LIGHT POLE
ELECTRIC BOX
SANITARY MH
FIRE HYDRANT
WATER VALVE
WATER METER
TEL PED
CATV POLE

STATE OF TEXAS
CHRISTOPHER M. PROSPERI
94617
LICENSED
PROFESSIONAL ENGINEER
2-22-11

NO.	DATE	REVISION DESCRIPTION	APP. BY

© 2011

Texas Department of Transportation

MACTEC
3520 EXECUTIVE CENTER DRIVE
SUITE 200
AUSTIN, TEXAS 78731
(512) 795-0360

REGISTRATION NUMBER: F-1784

SH 151
UTILITY LAYOUT LP 1604 STA 553+00 TO STA 563+00
(SHEET 2 OF 4)

FED. RD. DIV. NO.			SHEET NO.
			442
STATE	DIST.	COUNTY	
TEXAS	SA	BEXAR	
CONT.	SECT.	JOB	HIGHWAY NO.
2452	01	043	SH 151

p:\4760\0-0129\cad\sheet\51ut109.dgn 2/21/2011 7:10:07 PM mwmldkliff

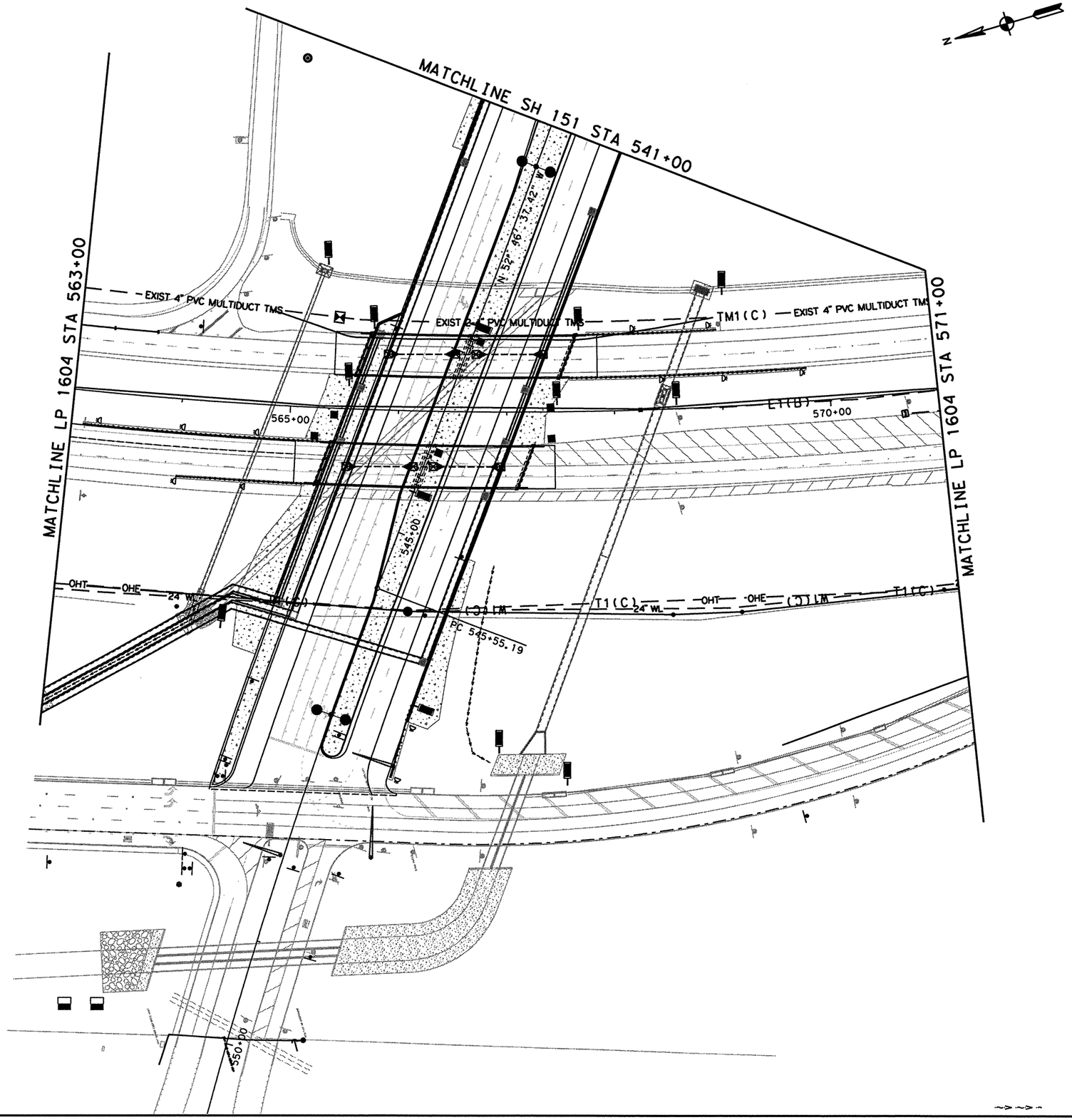

0 25 50 100
SCALE IN FEET

LEGEND

PROPOSED ROW
EXISTING ROW
PROPOSED EDGE OF PAVEMENT

FIBER OPTICS
AT&T ---FO1----

TELEPHONE
AT&T --- T1----

GAS LINES
CPS --- G1----

ELECTRIC
CPS --- E1----

CATV
TIME WARNER ---CATV---

WASTEWATER
SAWS ---WW1----

WATER
SAWS ----W1----

RAW WATER
SAWS ---RW1---

POWER POLE
LIGHT POLE
ELECTRIC BOX
SANITARY MH
FIRE HYDRANT
WATER VALVE
WATER METER
TEL PED
CATV POLE

STATE OF TEXAS
CHRISTOPHER M. PROSPERI
94617
LICENSED
PROFESSIONAL ENGINEER

2-22-11

NO.	DATE	REVISION DESCRIPTION	APP. BY

© 2011

Texas Department of Transportation

MACTEC
3520 EXECUTIVE CENTER DRIVE
SUITE 200
AUSTIN, TEXAS 78731
(512) 795-0360

REGISTRATION NUMBER: F-1784

SH 151
UTILITY LAYOUT LP 1604 STA 563+00 TO STA 571+00
(SHEET 3 OF 4)

FED. RD. DIV. NO.			SHEET NO.
			443
STATE	DIST.	COUNTY	
TEXAS	SA	BEXAR	
CONT.	SECT.	JOB	HIGHWAY NO.
2452	01	043	SH 151

p:\4760\0-0129\cad\sheet\51ut110.dgn 2/21/2011 7:10:12 PM mwmldkiff

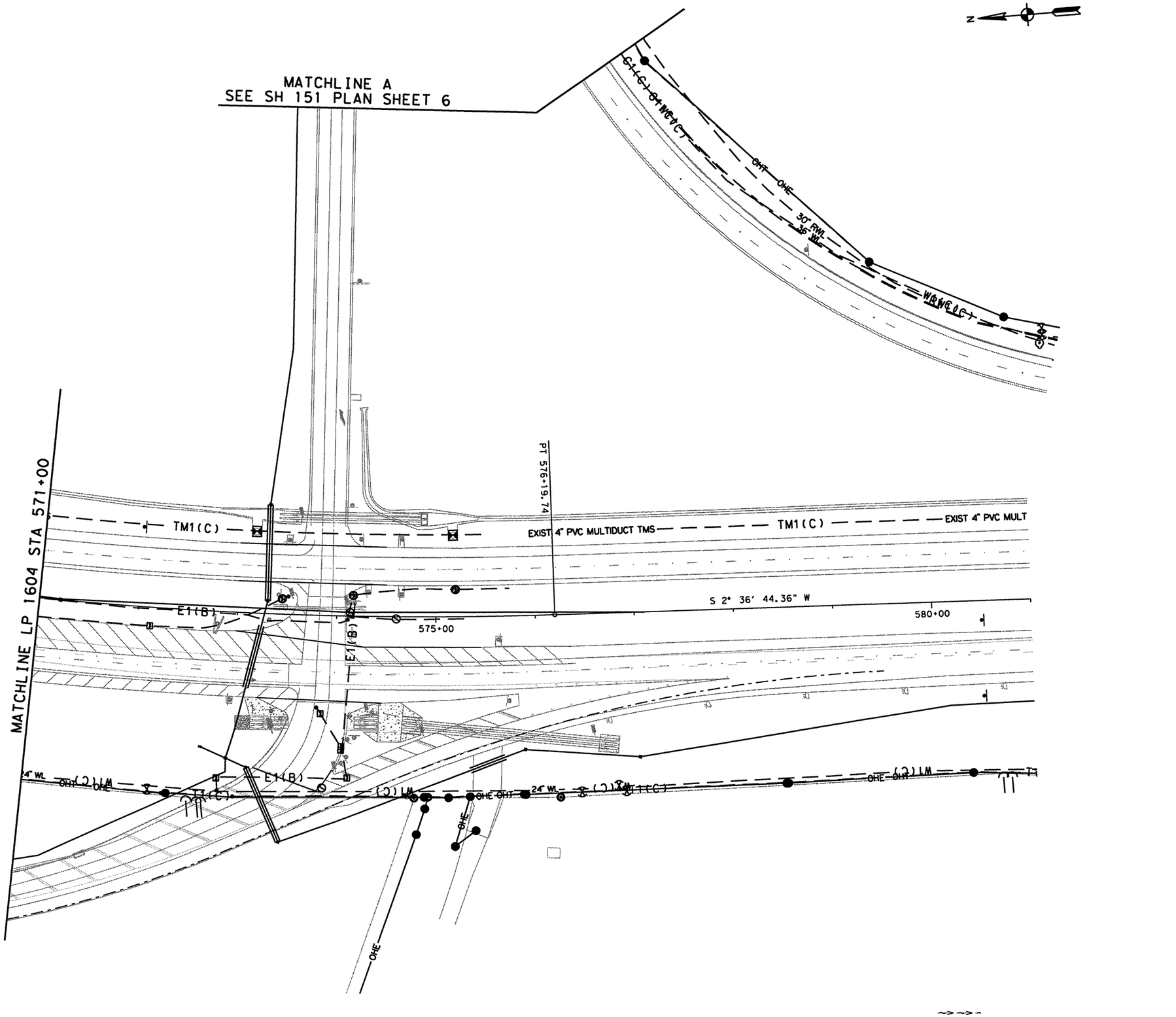

0 25 50 100
SCALE IN FEET

LEGEND

PROPOSED ROW
EXISTING ROW
PROPOSED EDGE OF PAVEMENT

FIBER OPTICS
AT&T ---FO1----

TELEPHONE
AT&T --- T1----

GAS LINES
CPS --- G1----

ELECTRIC
CPS --- E1----

CATV
TIME WARNER ---CATV---

WASTEWATER
SAWS ---WW1----

WATER
SAWS ----W1----

RAW WATER
SAWS ---RW1---

POWER POLE
LIGHT POLE
ELECTRIC BOX
SANITARY MH
FIRE HYDRANT
WATER VALVE
WATER METER
TEL PED
CATV POLE

STATE OF TEXAS
CHRISTOPHER M. PROSPERI
94617
LICENSED
PROFESSIONAL ENGINEER
2-22-11

NO.	DATE	REVISION DESCRIPTION	APP. BY

© 2011

Texas Department of Transportation

MACTEC
3520 EXECUTIVE CENTER DRIVE
SUITE 200
AUSTIN, TEXAS 78731
(512) 795-0360

REGISTRATION NUMBER: F-1784

SH 151
UTILITY LAYOUT LP 1604 STA 571+00 TO END PROJECT
(SHEET 4 OF 4)

FED. RD. DIV. NO.			SHEET NO.
			444
STATE	DIST.	COUNTY	
TEXAS	SA	BEXAR	
CONT.	SECT.	JOB	HIGHWAY NO.
2452	01	043	SH 151

p:\4760\0-0129\cad\sheet\151utlll.dgn 2/21/2011 7:10:17 PM mwmidkiff

Civic Improvement Project

Contract Exhibit SKT–2

Upstream Pressure Test
Department of Transportation
Section 192.507
Proposed M.A.O.P. 274 P.S.I.G

Pipe Size: 12"
Test Medium: Air & Nitrogen
Minimum Test Pressure: 411 P.S.I.G.
Minimum Test Duration: 1 Hour
C.P.S. Required Duration: 2 Hours
Tested By: _____
Date Tested: _____

	Pressure	Ambient Temperature	Pipe Temperature
Start Test			
15 minutes			
30 minutes			
45 minutes			
60 minutes			
75 minutes			
90 minutes			
105 minutes			
End Test			

Upstream Pressure Test
Department of Transportation
Section 192.507
Proposed M.A.O.P. 59 P.S.I.G

Pipe Size: 4P
Test Medium: Air & Nitrogen
Minimum Test Pressure: 90 P.S.I.G.
Minimum Test Duration: 1 Hour
C.P.S. Required Duration: 2 Hours
Tested By: _____
Date Tested: _____

	Pressure	Ambient Temperature	Pipe Temperature
Start Test			
15 minutes			
30 minutes			
45 minutes			
60 minutes			
75 minutes			
90 minutes			
105 minutes			
End Test			

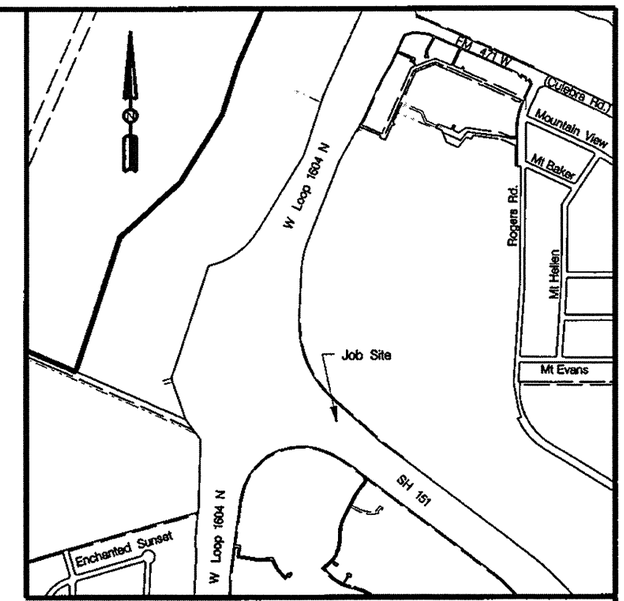

Location Map
NTS

General Notes

1. All proposed gas mains are to be installed at 5'–0" of cover, unless otherwise indicated on the Location Data Table or as directed by the CPS Inspector or Field Representative. All proposed gas mains and services are to be installed at the elevations indicated on the Location Data Table.
2. Gas main is to be abandoned in sections no longer than 300 feet. Each section is to be purged of gas with compressed air, then the ends are to be sealed with concrete. All abandoned services are to be plugged. All valve boxes on abandoned mains are to be removed.
3. The location of underground utilities indicated on the job sketch are taken from the best records available and are not guaranteed to be accurate. Foreman shall verify location and depth of all existing utilities, whether shown on the plans or not, and shall be responsible for the protection of existing utilities during construction.
4. 48 hours before excavating, notify One – Call at 1–800–545–6005. This number should notify all utilities of locates. For Emergency gas locates only – call 353–HELP.
5. All gas facilities will require proper connection for cathodic protection and locating purposes as indicated by CPS. Call Corrosion Control at 353–3237 prior to installing, adjusting, or abandoning gas lines and before connecting or disconnecting wires to any CPTLB.
6. All new polyethylene gas services and mains are to be joined by butt fusion. Compression couplings must not be used on new gas line construction.
7. TRENCH EXCAVATION PROTECTION: Contractor and/or Contractor's independently retained employee or structural design/geotechnical/safety/equipment consultant, if any, shall review these plans and any available geotechnical information and the anticipated installation site(s) in order to develop the Contractor's plans to implement the project described in the Contract Documents. The Contractor's plans shall provide for adequate trench safety systems that comply with, as a minimum, OSHA standards for trench safety consultant shall develop and implement a trench safety program in accordance with OSHA standards governing the presence and activities of individuals working in and around trench excavation.

Legend

- Center Line
- Existing Property Line
- Proposed Property Line
- Easement Line
- Existing Gas Service
- Existing Gas Main
- Install Gas Service
- Install Gas Main
- Abandon Gas
- Cable TV
- Telephone
- Sanitary Sewer
- Proposed Drainage
- Existing Drainage
- Electric
- Water

Steel Material Specifications

Pipe: 12.75" O.D. x 0.250" W.T. Grade X–42
Coating: Fusion Bond Epoxy
Fittings: 12" Nominal Size 12.75" O.D. x 0.375" W.T. Grade B

Forman must verify that all of the 12–SP pipe installed in this job shall be of Grade X42 or greater.

Construction Points		Install		Abandon	
From	To	Pipe Size	Length	Pipe Size	Length
1	2	12–SP	849'	12–SP	506'
3	4	4PA–SPD	185'		
5	6	4PA–SPD	434'		
7	8	4PA–SPD	124'		
9	10			4PA–SPD	510'
		Total 4PA–SPD	743'	Total 4PA–SPD	510'
		Total 12–SP	849'	Total 12–SP	506'

Thomas Narendorf 1/6/11
STATE OF TEXAS
THOMAS LEO NARENDORF
95289
LICENSED
PROFESSIONAL ENGINEER

445

Pressure Test	Construction	No.	Drawing Revision	Date
Minimum Test 90 PSIG	Contractor	0	Planning Completed	1–5–11
Tested To _____ PSIG	Center			
By	By			
Date	Start Date			
	Comp. Date			

Checked By: _____ Date Approved 1-6-11
Manager Approval: Susan Lothian Smith Date Approved 1-6-11

Designed By: Phone Number 353–2430
Susan Lothian Smith

Job Title
LP 1604 @ SH 151
CITY PUBLIC SERVICE
P.O. BOX 1771
SAN ANTONIO, TX 78296

Map Quadrant: 092 – 598
Project No.: G – 0309

Job No.: 3446337

Page 1 of 3

Texas Department of Transportation

PROJ. SUFFIX	PROJECT NO.	SHEET NO.
6		589

STATE	DIST.	COUNTY
TEXAS	SAT	BEXAR

CONT.	SECT.	JOB	HIGHWAY NO.
2452	01	043	SH 151

...\data\ustation\1604@151.dgn Jan. 06, 2011 13:47:41

All proposed gas mains and services are to be installed at the planned Gas Top of Pipe Elevation indicated on the Location Data Table.

Contract Exhibit SKT-2

12" Steel Trench Detail *

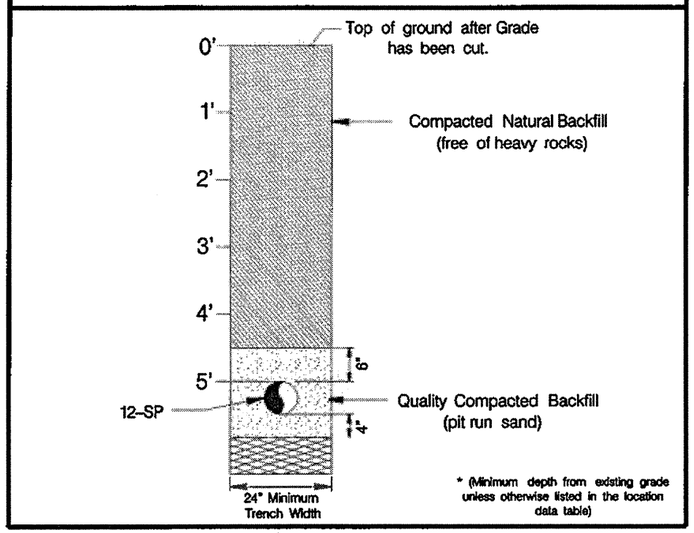

* (Minimum depth from existing grade unless otherwise listed in the location data table)

4" Plastic Trench Detail *

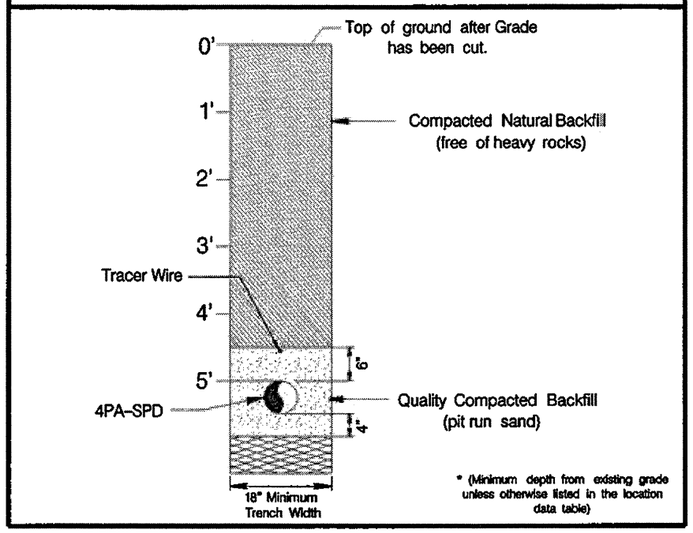

* (Minimum depth from existing grade unless otherwise listed in the location data table)

Trench & Backfill

(for joint trench areas)

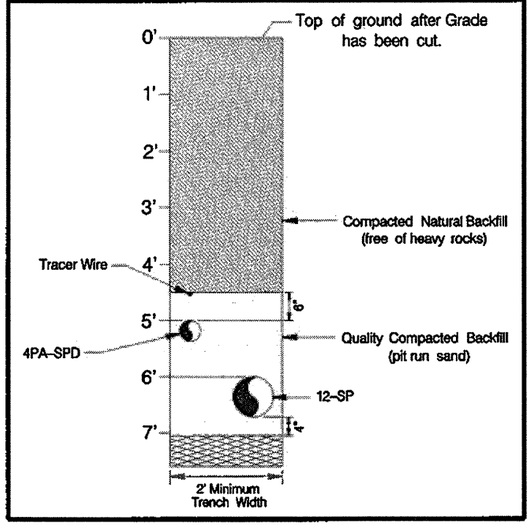

Quantities

Item No.	Description	Unit	Qty.
	NGP Gas Mains.		
5950	a.) NGP (Main)(Plastic W/Tracer Wire)(4"))(JT Trench W/12" STL)	foot	601'
5950	b.) NGP (Main)(Plastic W/Tracer Wire)(4")(Bore)	foot	126'
5950	c.) NGP (Main) (Steel)(12")(Bore)	foot	126'
5950	d.) NGP (Main)(Plastic W/Tracer Wire)(4")	foot	16'
5950	e.) NGP (Main) (Steel)(12")	foot	122'
0402	(Trench Excavation Protection), "Trench Excavation Protection."	foot	739'
5950	"NGP Mobilization"	LS	1

POINT SPAN	PIPE PRINT LINE DATA (EXAMPLE SHOWN)
	" IPS DR GAS PE3408/PE100 CEE ASTM D2513
	" IPS DR GAS PE3408/PE100 CEE ASTM D2513
	" IPS DR GAS PE3408/PE100 CEE ASTM D2513
	" IPS DR GAS PE3408/PE100 CEE ASTM D2513
	" IPS DR GAS PE3408/PE100 CEE ASTM D2513

Example: 1 to 2 2" IPS DR11 DRISCOPIPE 8100 GAS PE3408/PE100 CEE ASTM D2513 WTO15 R NR 0356 A1-043 072706 COIL 0152

STATE OF TEXAS
THOMAS LEO NARENDORF
95289
LICENSED
PROFESSIONAL ENGINEER
1/6/11

446

No.	Drawing Revision	Date
0	Planning Completed	1-5-11

Checked By: Date Approved 1-6-11

Manager Approval: Date Approved 1-6-11

Designed By: Ext. 2430 Susan Lothian Smith

Map Quadrant 092 - 598

Project No. G - 0309

Job Title LP 1604 @ SH 151

CITY PUBLIC SERVICE
P.O. BOX 1771
SAN ANTONIO, TX 78296

Job No. 3446337

Page 2 of 3

Texas Department of Transportation

STATE	DIST.	COUNTY
TEXAS	SAT	BEXAR
CONT. 2452	SECT. 01	JOB 043
HIGHWAY NO. SH 151		

...\data\ustation\1604@151.dgn Jan. 06, 2011 13:47:27

All proposed gas mains and services are to be installed at the planned Gas Top of Pipe Elevation indicated on the Location Data Table.

Contract Exhibit SKT-2

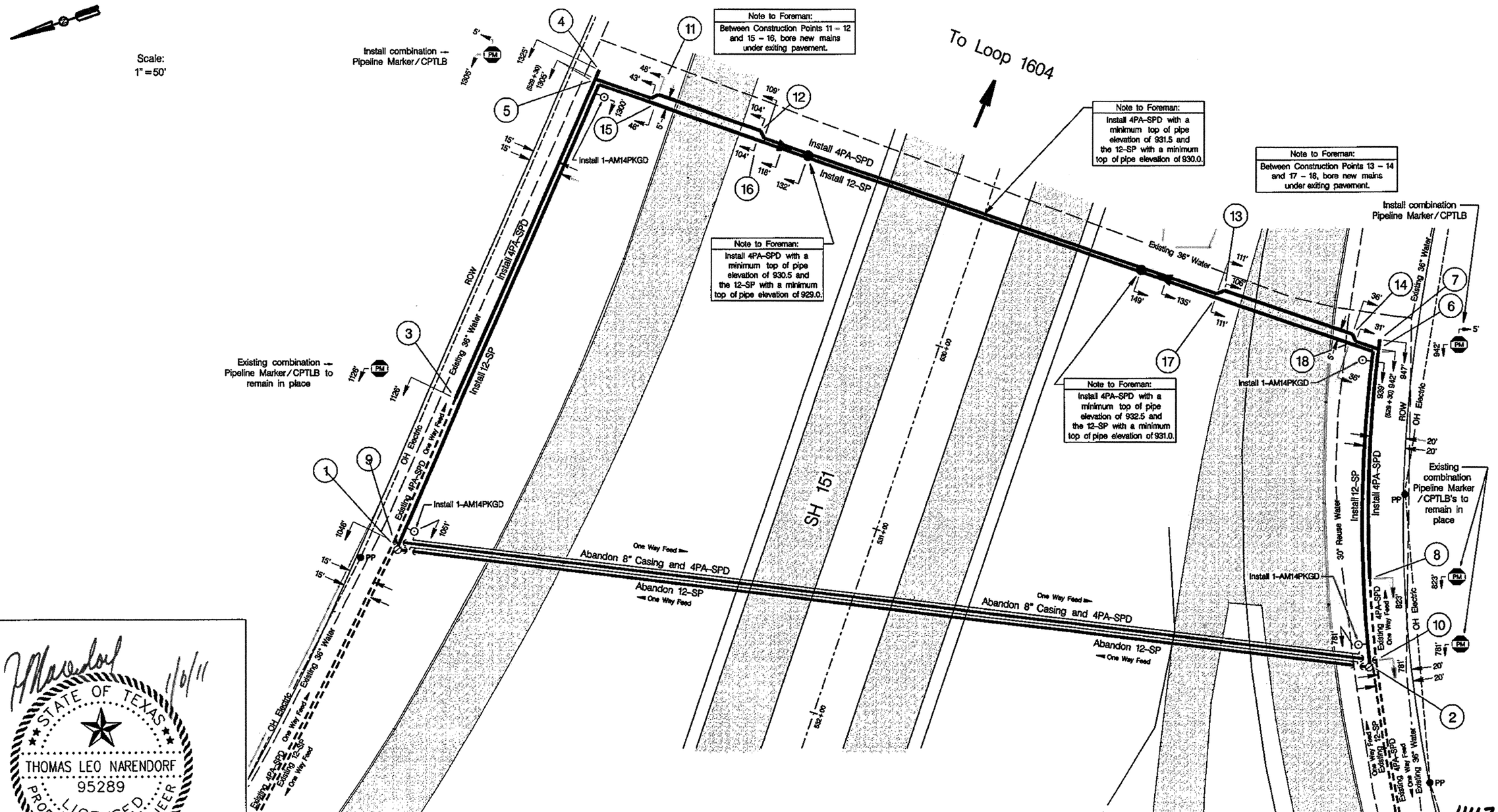

447

No.	Drawing Revision	Date
0	Planning Completed	1-5-11

Checked By: Date Approved 1-6-11

Manager Approval: Date Approved 1-6-11

Designed By: Ext. 2430 Susan Lothian Smith

Map Quadrant 092 – 598

Project No. G – 0309

Job Title LP 1604 @ SH 151

CITY PUBLIC SERVICE
P.O. BOX 1771
SAN ANTONIO, TX 78296

Job No. 3446337

Page 3 of 3

Texas Department of Transportation

PROJ. DIV.	PROJECT NO.	SHEET NO.
6		589

STATE	DIST.	COUNTY
TEXAS	SAT	BEXAR

CONT	SECT.	JOB	HIGHWAY NO.
2452	01	043	SH 151

...\data\ustation\1604@151.dgn Jan. 06, 2011 13:47:16

SAN ANTONIO WATER SYSTEM

JOB NO: 10-5104-000

LOOP 1604 AT SH 151 WATER PLANS

FINAL DESIGN

TABLE OF CONTENTS

SHT NO.	DESCRIPTION
1	TITLE SHEET
2	WATER GENERAL NOTES & QUANTITIES
3	EXISTING 36" WATER PLAN AND PROFILE SHEET

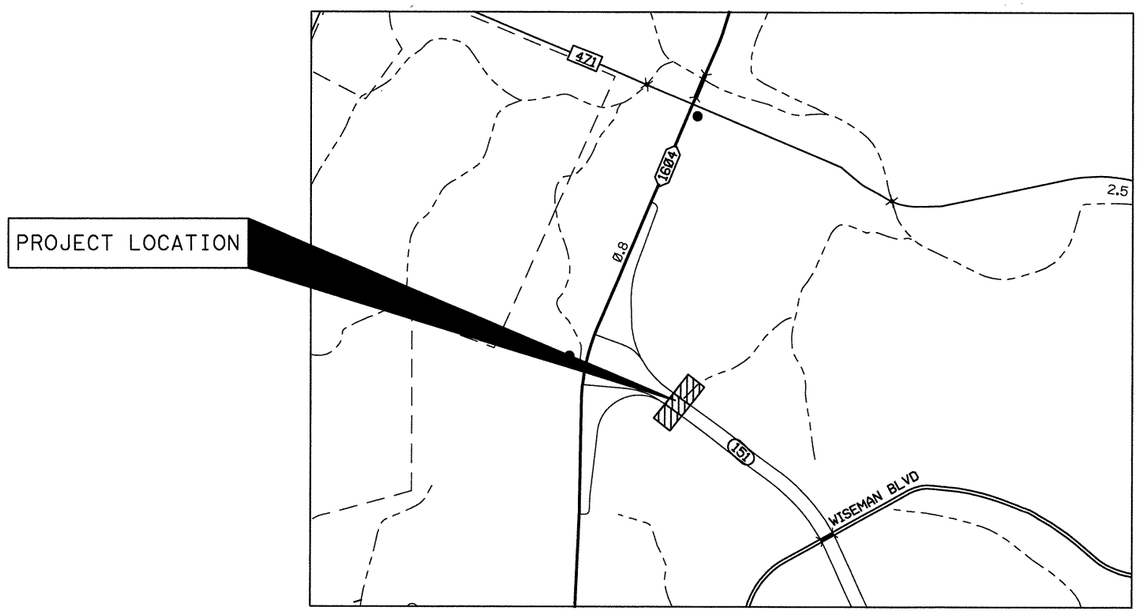

LOCATION MAP
N.T.S.

FEBRUARY 2011

STATE OF TEXAS
CARL BAIN
56996
REGISTERED
PROFESSIONAL ENGINEER

The seal appearing on this document was authorized by CARL BAIN P.E. 56996 ON 2/23/2011

NO.	REVISION	BY	DATE

BMB PROJECT NO. C-1263.03
SAWS WATER PROJECT NO. 10-5104-000

BAIN MEDINA BAIN, INC.
ENGINEERS & SURVEYORS
TBPE F-001718
7073 San Pedro, San Antonio, Texas 78216
Phone: 210-494-7223 Fax: 210-490-5120 WWW.BMBI.COM

SAN ANTONIO WATER SYSTEM

LOOP 1604 AT SH 151

TITLE SHEET

SHEET 1 OF 3

©2010 Texas Department of Transportation
© 2009 by Texas Department of Transportation: (512)416-2055; all rights reserved

DESIGNED:	FED.RD. DIV.NO.	STATE	PROJECT NO.			HIGHWAY NO.
CHECKED:	6	TEXAS	STP 2011(210)ES			SH-151
DRAWN:	STATE DIST.	COUNTY	CONTROL NO.	SECTION NO.	JOB NO.	SHEET NO.
CHECKED:	SAT	BEXAR	2452	01	043	448

THIS DRAWING IS THE PROPERTY OF BAIN MEDINA BAIN, INC. AND SHALL NOT BE USED FOR ANY PURPOSE WITHOUT THE WRITTEN CONSENT OF AN AUTHORIZED AGENT OF BAIN MEDINA BAIN, INC.; BAIN MEDINA BAIN INC. ACCEPTS NO RESPONSIBILITY FOR THE USE OF THIS DRAWING FOR ANY PURPOSE AFTER SIX MONTHS FROM THE DATE INDICATED ON THIS DRAWING. ALL RIGHTS RESERVED. COPYRIGHT 2003. BAIN MEDINA BAIN, INC. ©

W:\Work\C-126_ LOOP 1604 and SH 151\Design\Civil\Exhibits\FINAL SUBMITTAL SHEETS\1604_151cover.dgn

General Notes

1. Contractor agrees that he shall assume sole and complete responsibility for job site conditions during the construction of the project, including safety of all persons and property; that this requirement shall apply continuously and not be limited to normal working hours; and that the contractor shall defend, indemnify and hold the department, SAWS and the consultant harmless from any and all liability, real or alleged, in connection with the performance of the work on this project, excepting from liability arising from sole negligence of the department, SAWS or consultant.

2. Contractor is required to verify project elevations. "Match existing" shall be understood to signify vertical and horizontal alignment.

3. Any discrepancy or conflict within the drawings and specifications shall be brought to the attention of the engineer. Discrepancies or conflicts not brought to the engineer's attention and clarified during the bidding of the project will be deemed to have been bid or proposed in the more costly or difficult manner, and the better quality or greater quantity of the work shall be provided by the contractor in accordance with the engineer's interpretation. All items, work, and improvements shown or indicated in the construction documents shall be completed for the prices bid, whether or not a separate pay item is included in the contract.

4. The contractor shall furnish all assistance required of him by all inspectors in obtaining samples at the expense of the contractor.

5. The contractor shall maintain service to existing water services at all times during construction.

6. SAWS shall machine chlorinate new water mains if the water main length is greater than 750 feet. Contractor shall chlorinate new mains with HTH if water main length is 750 feet or less.

7. Proposed water main shall be a restrained system. Restrained system shall be inclusive to the water main installation pay item. (No separate pay item for restraint system or thrust blocking.)

8. See roadway project layout for benchmark information.

9. All elevations for San Antonio Water System facility adjustments shall be referenced from bench marks established for this project by the Texas Department of Transportation.

10. Electrical lines are located in the project area. The attention of the contractor is directed to state law (Vernon's Annotated Texas Statutes, Article 1436 (c)) concerning construction operations in the vicinity of electrical lines and the need for effective precautionary measures.

11. These plans, prepared by Bain Medina Bain, Inc. Do not extend to or include designs or systems pertaining to the safety of the construction contractor or its employees, agents, or representatives in the performance of the work. The seal of Bain Medina Bain, Inc's licensed professional engineer(s) heron does not extend to any such safety systems that may nor or hereafter be incorporated into the work. The construction contractor shall prepare or obtain the appropriate safety systems.

12. Contractor shall maintain access to public and private facilities during construction. Construction activities shall be coordinated with owner's representative and engineer.

13. Contractor to assure himself that all construction permits have been obtained prior to commencement or work. Required permits that can only be issued to contractor are to be obtained at the contractor's expense.

14. Contractor shall coordinate interruptions of all utilities and services with applicable utility company or companies. All work to be in accordance with the requirements of the applicable utility company or agency involved.

15. Contractor shall locate, protect, and maintain benchmarks, monument, and control points. Re-establish disturbed or destroyed items by registered public surveyor in the state of Texas at no additional cost to saws.

16. Existing paving, buildings, and other items shown on plans not specifically related to the work of the contract are for informational purposes only.

17. Project is located entirely outside of the Edwards Aquifer recharge zone.

18. No separate pay for items required by notes on this sheet, unless included on proposal form.

19. Contractor shall mechanically restrain ductile iron fitting connections to all pipe, unless otherwise noted (no separate pay).

20. With the exception of temporary and permanent blow-offs, concrete thrust blocking shall be constructed only where specifically shown on the plans or plan & profile sheets, regardless of conflicting information shown on details (no separate pay).

21. Existing thrust blocking for existing valves and fittings not proposed to be removed or replaced shall be protected. Any thrust blocking disturbed or destroyed at these locations shall be replaced to its original or better condition and at contractor's own expense.

22. Flowable backfill shall be used when the proposed pipe trench is within 3 feet of the proposed TxDOT pavement, or when the proposed pipe trench crosses/existing proposed driveways or proposed/existing pavement within TxDOT/city right-of-way.

23. Due to federal regulations title 49, part 192.181, CPS Energy must maintain access to gas valves at all times. The contractor must protect and work around gas valves that are in the project area.

24. On all manholes to be abandoned, the rings and covers shall be salvaged in accordance with the special specifications. The hole should be backfilled to the satisfaction of the inspector.

Water Line/Sewer Line Separation

25. Where the minimum 9 foot separation distance between sewer lines and water lines/mains cannot be maintained, the installation of sewer lines and water lines shall be in strict accordance with the Texas Commission on Environmental Quality (30 TAC 217.53(d)).

Excavation

26. Contractor and/or contractor's independently retained employee or structural design/geotechnical/safety/equipment consultant, if any, shall review these plans and available geotechnical information and the anticipated installation site(s) within the project work areas in order to implement contractor's trench excavation safety protection systems, programs and/or procedures. The contractor's implementation of the systems, programs and/or procedures shall provide for adequate trench excavation safety protection, that complies with as a minimum, OSHA standards for trench excavations. Specifically, contractor and/or contractor's independently retained employee or safety consultant shall implement a trench safety program in accordance with OSHA standards governing the presence and activities of individuals working in and around trench excavation.

Traffic Control

27. Barricades and warning signs shall conform to the current Texas manual on uniform traffic control devices and are to be generally located to afford maximum protection to the public as well as construction personnel and equipment and to assure an expeditious traffic flow at all times. During the progress of work, the contractor shall provide access for local traffic.

Records

28. The contractor shall maintain a neat and accurate record of construction for the engineer's records. The contractor shall provide the engineer with full size reproducible markups that record all construction deviating from the plans.

29. No extra-payment shall be allowed for work called for on the plans but not included on the bid schedule. This incidental work will be required and shall be included under the pay item to which it relates.

30. Work completed by the contractor which has not received a work order or the notice to proceed from the San Antonio water system construction inspection division will be subject to removal and replacement by and at the expense of the contractor.

31. No more than 400 linear feet of trench excavation in advance of the utility will be allowed at a time.

32. Inspectors must call for backfill inspections.

33. Density reports must be submitted to the right-of-way inspector within 24 hours of testing.

Abandonment of Old Mains and Valves

34. The contractor is to accomplish all cutting, capping, plugging, and blocking necessary to isolate those existing mains retained in service from those abandoned. The open ends of abandoned mains and all other openings or holes in such mains occasioned by cutting or removal of outlets are to be blocked off by manually forcing cement grout or concrete into and around the openings in sufficient quantity to provide a permanent substantially watertight seal.

Valves abandoned in the execution of the work are to have the valve box and extension packed with sand to within 8-in. of the finished surface. The remaining 8-in. are to be filled with 2,500 psi concrete or an equivalent sand-cement mix and finished flush with the adjacent pavement or ground surface. The valve covers are to be salvaged and returned to the water system company.

Abandoning old mains and valves is to be considered subsidiary to the installation and will not be paid for directly.

Working Hours

35. No additional compensation will be allowed for work outside of standard working hours. Work outside of standard working hours shall be considered subsidiary to the project.

GENERAL NOTES

1. All materials and construction procedures within the scope of this contract shall be approved by the San Antonio Water System (SAWS) and comply with the following as applicable:

A. Current Texas Commission on Environmental Quality (TCEQ) "Design Criteria for Domestic Wastewater System", Texas Administrative Code (TAC) Title 30 Part 1 Chapter 217 and "Public Drinking Water", TAC Title 30 Part 1 Chapter 290.
B. Current TXDOT "Standard Specifications for Construction of Highways, Streets and Drainage."
C. Current "San Antonio Water System Standard Specifications for Water and Sanitary Sewer Construction."
SEE SAWS WEBSITE FOR CURRENT INFORMATION (WWW.SAWS.ORG).
D. Current City of San Antonio "Standard Specifications for Public Works Construction."

2. The Contractor is to notify and make arrangements with the SAWS Construction Inspection Division at 233-3500, and affected home residents and/or property owners 48 hours prior to excavation.

3. Locations and depths of existing utilities and service laterals shown on the plans are understood to be approximate. Actual locations and depths must be field verified by the Contractor 48 hours prior to construction. It shall be the Contractor's responsibility to locate utility service lines as required for construction and to protect them during construction.

4. The Contractor shall verify the exact location of underground utilities and drainage structures at least 48 hours prior to construction whether shown on plans or not. The following contact information is supplied for verification purposes:

San Antonio Water System:
Utility Relocates 233-2010
Production Control Center 233-2016
COSA Drainage 207-8048
COSA Traffic Signal Operations 207-7720
Texas State Wide One Call Locator 1-800-545-6005 or 811
Bexar Metropolitan Water District 354-6536

5. The Contractor shall be responsible for restoring existing fences, curbs, streets, driveways, sidewalks, landscaping and structures to its original or better condition as a result of damages done by the project's construction.

6.The Contractor shall avoid cutting roots larger than 1- inch in diameter when excavating near existing trees. Excavation in vicinity of trees shall proceed with caution. The Contractor shall contact the City Arborist at 207-8053 for guidance. SAWS Construction Inspector shall also be notified.

7.The Contractor shall not place any waste materials in the 100-year Flood Plain without first obtaining an approved Flood Plain Permit.

8.Prior to tie-ins, any shutdowns of existing mains of any size must be coordinated with the SAWS Inspection and/or SAWS Production groups at least one week or more in advance of the shutdown. The Contractor must also provide a sequence of work as related to the tie-ins; this is at no additional cost to SAWS or the project and it is the responsibility of the Contractor to sequence the work accordingly.

ITEM	DESCRIPTION	UNIT	QUANTITY
432 2085	RIPRAP (CONC)(CLB) (6")	CY	48

20 10 0 20 40
HORIZ. SCALE FEET
5 0 5 10
VERT SCALE FEET

STATE OF TEXAS
CARL BAIN
56996
REGISTERED
PROFESSIONAL ENGINEER

The seal appearing on this document was authorized by CARL BAIN P.E. 56996 ON 2/23/2011

NO.	REVISION	BY	DATE
		CB	
		CB	02-01-11

BMB PROJECT NO. C-1263.03
SAWS WATER PROJECT NO. 10-5104-000

BAIN MEDINA BAIN, INC.
ENGINEERS & SURVEYORS
TBPE F-001712
7073 San Pedro, San Antonio, Texas 78216
Phone: 210-494-7223 Fax: 210-490-5120 WWW.BMBI.COM

SAN ANTONIO WATER SYSTEM

LOOP 1604 AT SH 151

WATER GENERAL NOTES AND QUANTITIES

SHEET 2 OF 3

©2010 Texas Department of Transportation
© 2009 by Texas Department of Transportation; (512)416-2055; all rights reserved

DESIGNED:	FED.RD. DIV.NO.	STATE	PROJECT NO.			HIGHWAY NO.
CHECKED:	6	TEXAS	STP 2011 (210)ES			SH-151
DRAWN:	STATE DIST.	COUNTY	CONTROL NO.	SECTION NO.	JOB NO.	SHEET NO.
CHECKED:	SAT	BEXAR	2452	01	043	449

W:\Work\C-126. LOOP 1604 and SH 151\Design\Civil\Exhibits\FINAL SUBMITTAL SHEETS\1604_151_WTR_GEN_NOTES & QU. .dgn

ITEM	DESCRIPTION	UNIT	QUANTITY
432 2085	RIPRAP (CONC)(CLB)(6")	CY	48

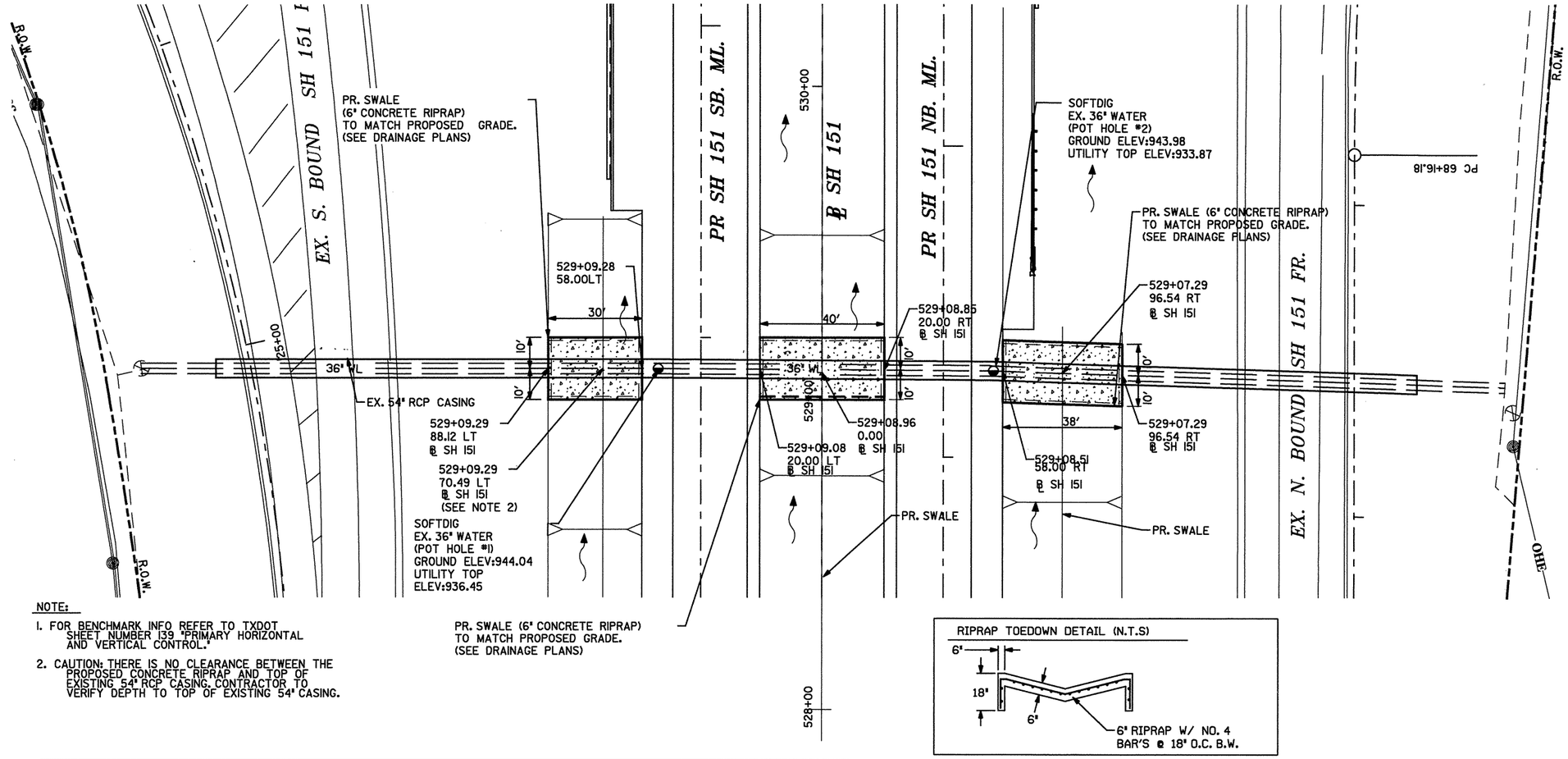

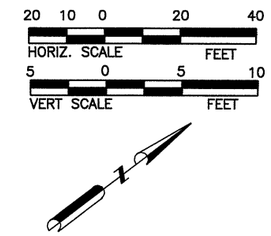

LEGEND

NOTE:

1. FOR BENCHMARK INFO REFER TO TXDOT SHEET NUMBER 139 "PRIMARY HORIZONTAL AND VERTICAL CONTROL."
2. CAUTION: THERE IS NO CLEARANCE BETWEEN THE PROPOSED CONCRETE RIPRAP AND TOP OF EXISTING 54" RCP CASING. CONTRACTOR TO VERIFY DEPTH TO TOP OF EXISTING 54" CASING.

RIPRAP TOEDOWN DETAIL (N.T.S)

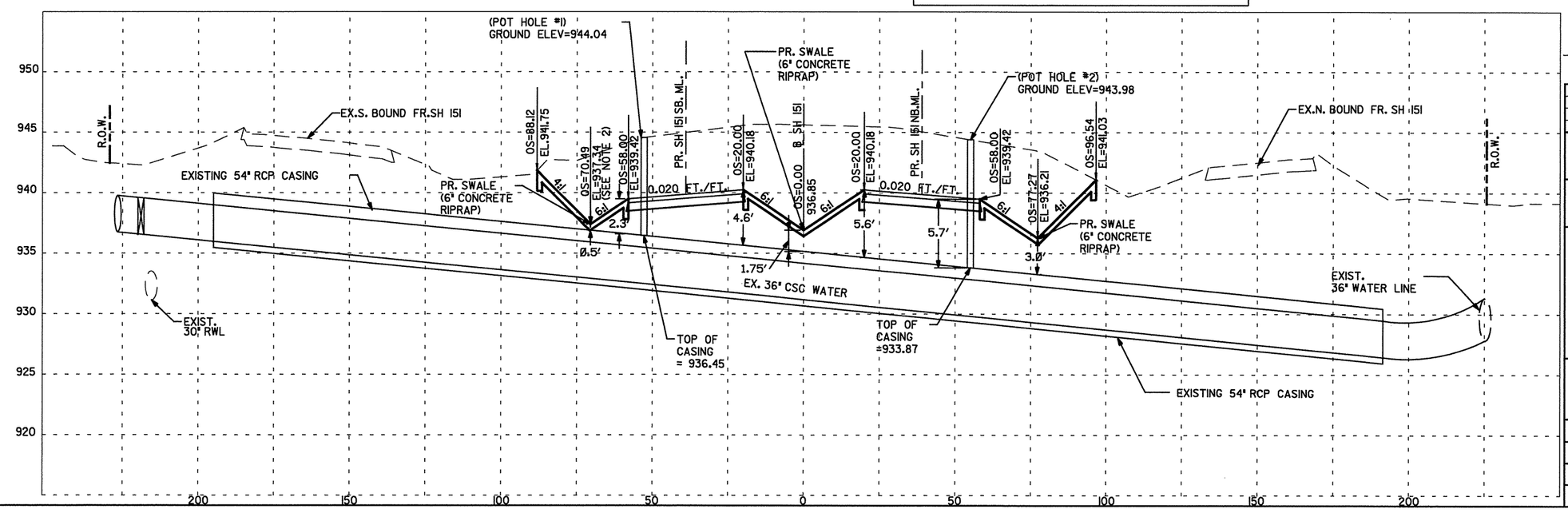

STATE OF TEXAS
CARL BAIN
56996
REGISTERED PROFESSIONAL ENGINEER

The seal appearing on this document was authorized by CARL BAIN P.E. 56996 ON 2/23/2011

Carl Bain PE

LEGEND

- EX. 36" WATER LINE BY TXDOT
- EX. 36" WATER LINE BY BMB
- OS OFFSET

NO.	REVISION	BY	DATE

BMB PROJECT NO. C-1263.03
SAWS WATER PROJECT NO. 10-5104-000

BAIN MEDINA BAIN, INC.
ENGINEERS & SURVEYORS
TBPE F-001712
7073 San Pedro, San Antonio, Texas 78216
Phone: 210-494-7223 Fax: 210-490-6130 WWW.BMBI.COM

SAN ANTONIO WATER SYSTEM

LOOP 1604 AT SH 151

EXISTING 36" WATER PLAN AND PROFILE

SHEET 3 OF 3

©2010 Texas Department of Transportation
© 2009 by Texas Department of Transportation; (512)416-2055; all rights reserved

DESIGNED:	FED.RD. DIV.NO.	STATE	PROJECT NO.			HIGHWAY NO.
CHECKED:	6	TEXAS	STP 2011 (210)ES			SH-151
DRAWN:	STATE DIST.	COUNTY	CONTROL NO.	SECTION NO.	JOB NO.	SHEET NO.
CHECKED:	SAT	BEXAR	2452	01	043	450

W:\Work\C-1263_LOOP 1604 and SH 151\Design\Civil\Exhibits\FINAL SUBMITTAL SHEETS\1604_151_PR_UTIL_RELOCATION_A...

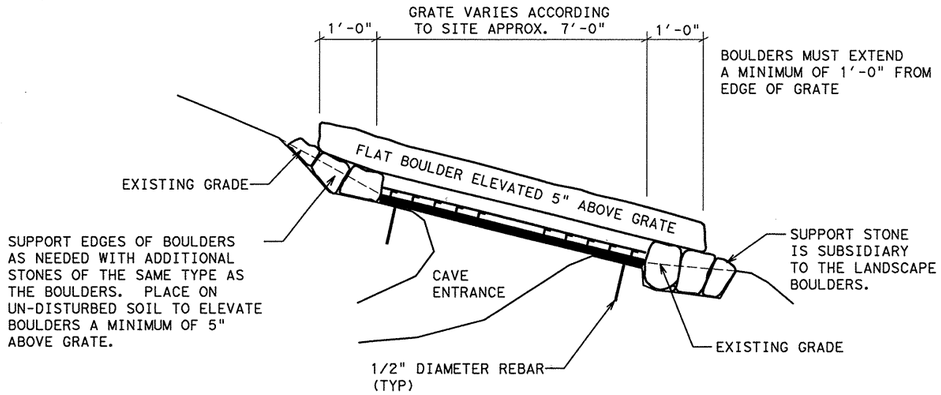

SECTION A-A

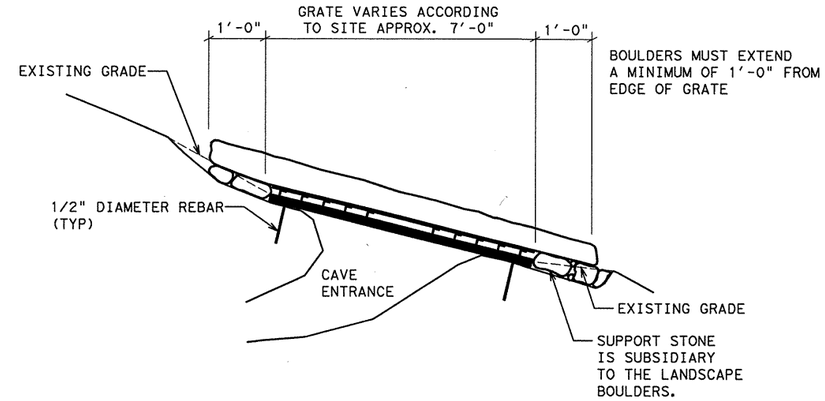

SECTION B-B

NOTES:

LANDSCAPE BOULDERS SHALL BE "HILL COUNTRY FIELDSTONE" AS AVAILABLE THROUGH GARZA MASONRY STONE, INC., 40200 IH 10 W, BOERNE, TX, 78006, (830) 816-1722 OR APPROVED EQUAL.

BOULDERS SHOULD MATCH AS CLOSELY AS POSSIBLE TO OTHER ROCKS NEAR THE CAVE. USE ROCKS EXISTING ON THE SITE AS NEEDED.

BOULDER QUANTITY BASED ON 12" THICK BOULDERS COVERING 90 SF @ 150 LB/CF.

DRAWINGS ARE APPROXIMATE. FIT ALL ELEMENTS TO ACTUAL FIELD CONDITIONS.

MAXIMUM WEIGHT OF BOULDERS IS 160 LBS PER CUBIC FOOT.

SECTION/ELEVATION - BOULDERS OVER GRATE

SCALE: 1/8" = 1'-0"

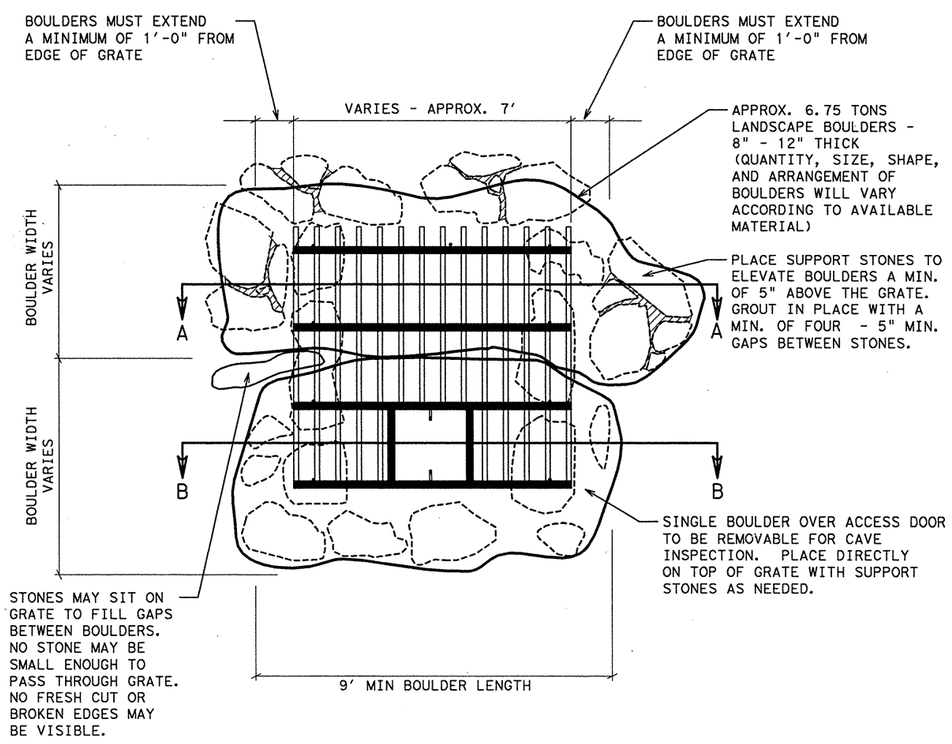

PLAN - BOULDERS OVER GRATE

SCALE: 1/2" = 1'-0"

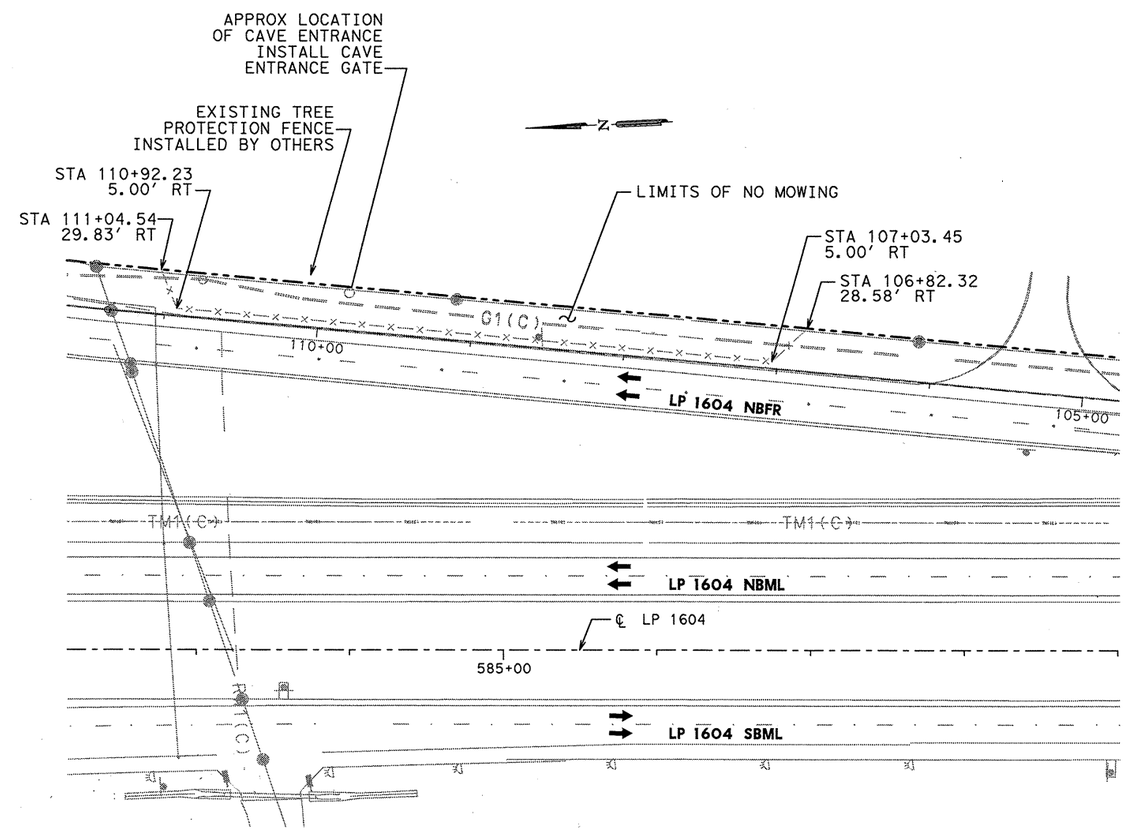

PLAN - PROTECTED AREA

SCALE: 1" = 100'-0"

STATE OF TEXAS
MICHAEL W. MIDKIFF
75435
REGISTERED PROFESSIONAL ENGINEER
12/5/11

NO.	DATE	REVISION DESCRIPTION	APP. BY

© 2011

Texas Department of Transportation

MACTEC
3520 EXECUTIVE CENTER DRIVE
SUITE 200
AUSTIN, TEXAS 78731
(512) 795-0360

REGISTRATION NUMBER: F-1784

SH 151

CAVE GATE LAYOUT

(SHEET 1 OF 2)

FED. RD. DIV. NO.			SHEET NO.
			451
STATE	DIST.	COUNTY	
TEXAS	SA	BEXAR	
CONT.	SECT.	JOB	HIGHWAY NO.
2452	01	043	SH 151

p:\4760\0-0129\cad\sheet\standard\5lstd_cave01.dgn 12/3/2011 6:55:50 PM mwmidkiff

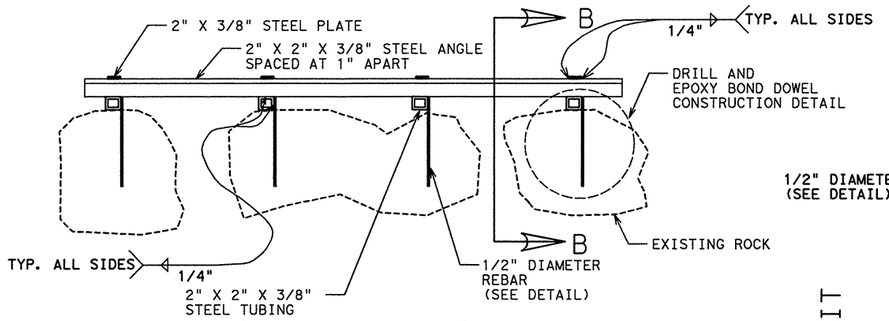

A – A

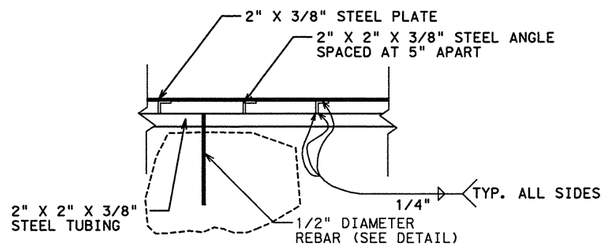

B – B

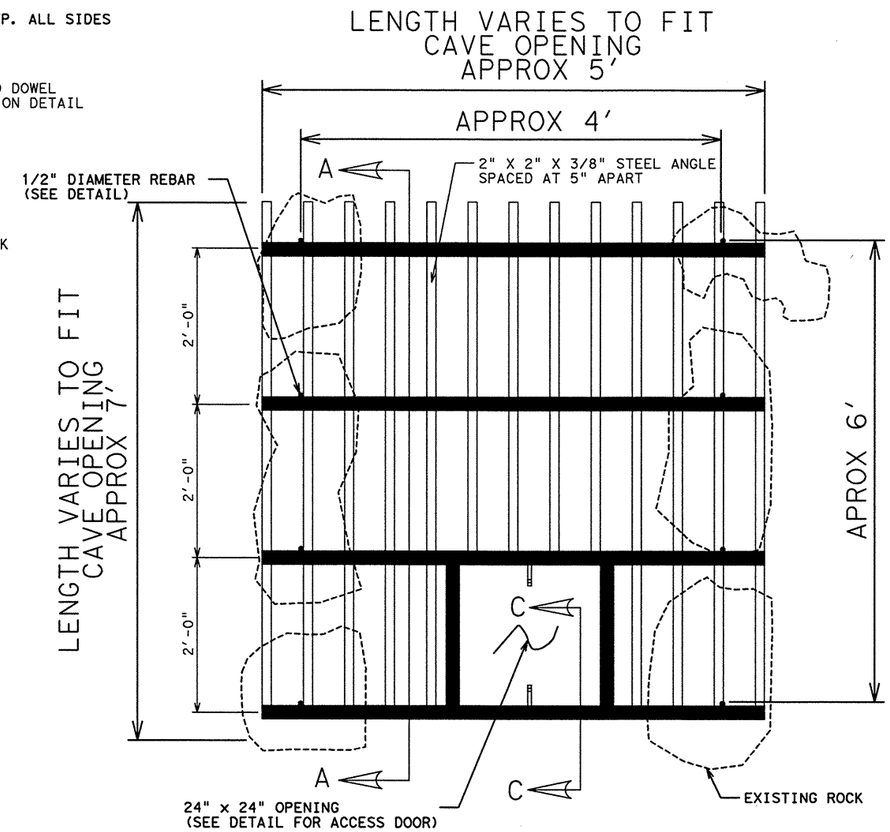

DRILL AND EPOXY BOND DOWEL

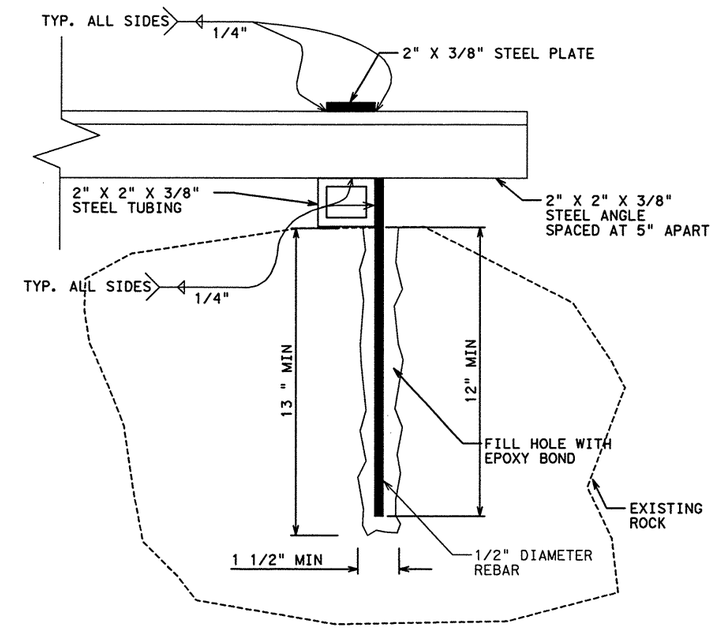

DRILL AND EPOXY BOND DOWEL CONSTRUCTION DETAIL

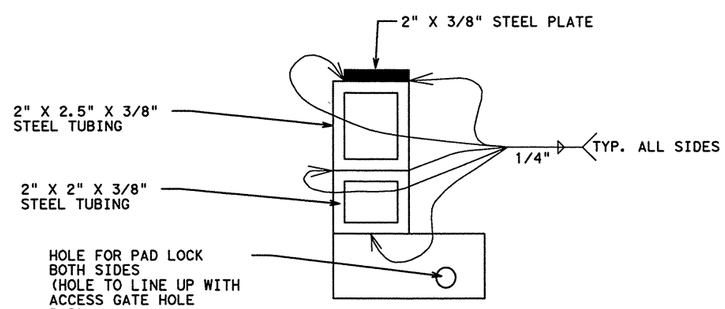

C – C

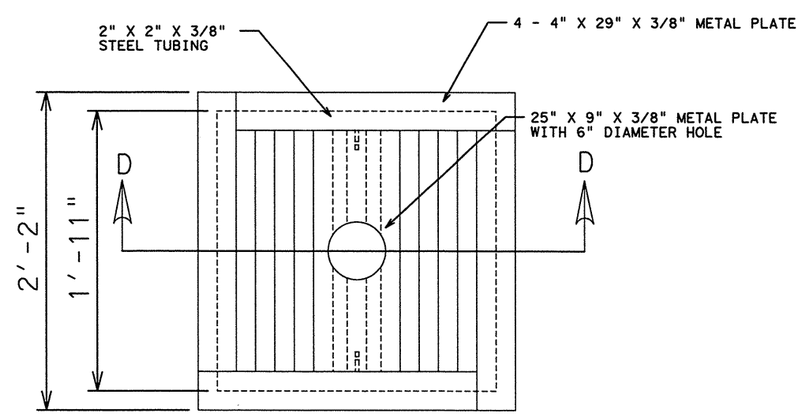

ACCESS DOOR DETAIL

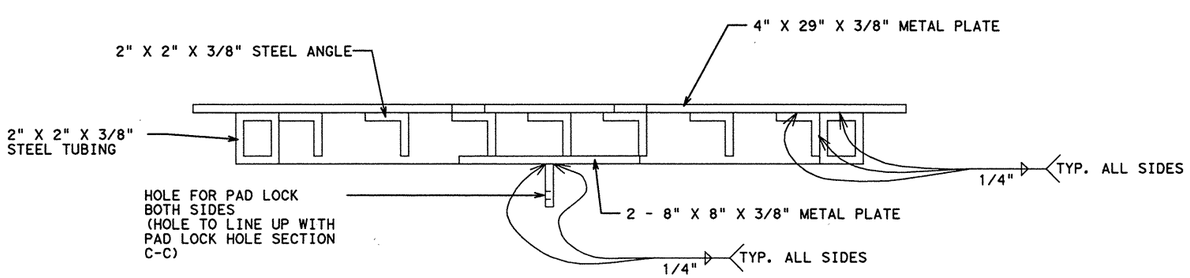

D – D

STATE OF TEXAS
MICHAEL W. MIDKIFF
75435
REGISTERED PROFESSIONAL ENGINEER
12/5/11

NO.	DATE	REVISION DESCRIPTION	APP. BY

© 2011

Texas Department of Transportation

MACTEC
3520 EXECUTIVE CENTER DRIVE
SUITE 200
AUSTIN, TEXAS 78731
(512) 795-0360

REGISTRATION NUMBER: F-1784

SH 151

CAVE GATE DETAILS

(SHEET 2 OF 2)

FED. RD. DIV. NO.			SHEET NO.
			452
STATE	DIST.	COUNTY	
TEXAS	SA	BEXAR	
CONT.	SECT.	JOB	HIGHWAY NO.
2452	01	043	SH 151

p:\4760\0-0129\cad\sheet\standard\5lstd_cave02.dgn 12/3/2011 6:55:53 PM mwmidkiff