Plotted on: 6/23/2010

BEXAR STP 2011(210)ES

FED.RD. DIV.NO.	FEDERAL AID PROJECT NO.		SHEET NO.
6	STP 2011(210)ES		1
STATE	STATE DIST.	COUNTY	
TEXAS	SAT	BEXAR	
CONT.	SECT.	JOB	HIGHWAY NO.
2452	01	050	LP 1604

BEXAR COUNTY

ALAMO REGIONAL MOBILITY AUTHORITY

PLANS OF PROPOSED

STATE HIGHWAY IMPROVEMENT

FEDERAL AID PROJECT STP 2011(210)ES
CSJ 2452-01-050

BEXAR COUNTY

LOOP 1604

LIMITS: FROM SH 16 TO 0.4 MI S OF SH 151
LENGTH: 14780 FT = 2.799 MILES
ROADWAY: 14756 FT = 2.795 MILES
BRIDGE: 24 FT = 0.004 MILES

FOR WORK CONSISTING OF OPERATIONAL IMPROVEMENTS AND RECONFIGURE INTERSECTIONS AT NEW GUILBEAU, SHAENFIELD, AND SH 151

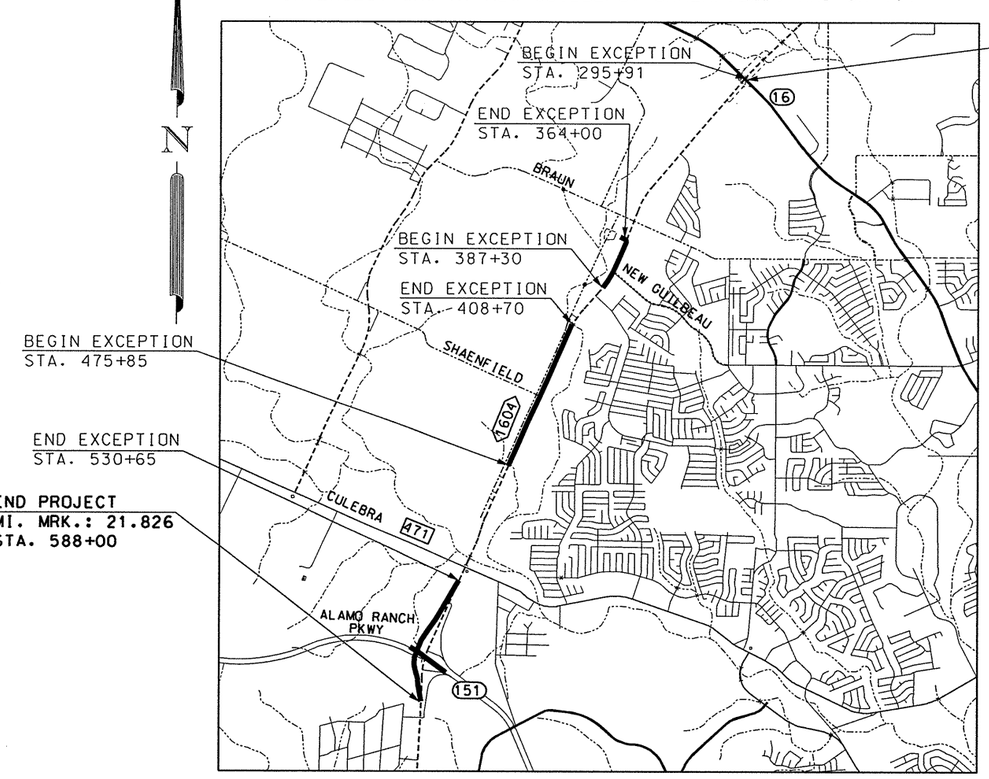

BEGIN PROJECT
MI. MRK.: 27.737
STA. 295+91

END PROJECT
MI. MRK.: 21.826
STA. 588+00

N.T.S.

EXCEPTIONS: STA 295+91 TO STA 364+00
STA 387+30 TO STA 408+70
STA 475+85 TO STA 530+65

EQUATIONS: NONE

RR X-ING'S: NONE

DESIGN SPEED

MAINLANES	55mph
RAMPS	45mph
FRONTAGE RD	45mph
CROSS STREETS	30mph

AREA OF DISTURBED SOIL = 8.15 ACRE
ADT: 74,555

"TDLR INSPECTION REQUIRED"
"TDLR NO. EABPRJA_____"

FINAL PLANS

LETTING DATE: _____

DATE CONTRACTOR BEGAN WORK: _____

DATE WORK WAS ACCEPTED: _____

FINAL CONTRACT COST: $ _____

CONTRACTOR: _____

FINAL PLANS STATEMENT:

THE CONSTRUCTION WORK WAS PERFORMED IN ACCORDANCE WITH THE PLANS AND SPECIFICATIONS.

_____ P.E. _____
AREA ENGINEER DATE

ALAMO REGIONAL MOBILITY AUTHORITY

CONCURRENCE 07/14/2010
DIRECTOR, ENGINEERING AND OPERATIONS

TEXAS DEPARTMENT OF TRANSPORTATION

SUBMITTED FOR LETTING 7-14-2010
AREA ENGINEER

APPROVED FOR LETTING _____
DIRECTOR, TRAFFIC OPERATIONS DIVISION

RECOMMENDED FOR LETTING 7/16/10
DISTRICT ENGINEER

APPROVED FOR LETTING 9/3/10
DIRECTOR, DESIGN DIVISION

STATE OF TEXAS
K. STEPHEN BONNETTE
60928
LICENSED PROFESSIONAL ENGINEER

K. STEPHEN BONNETTE P.E. 6/23/2010
DATE

SPECIFICATIONS ADOPTED BY THE TEXAS DEPARTMENT OF TRANSPORTATION, JUNE 1, 2004 AND SPECIFICATION ITEMS LISTED AND DATED AS FOLLOWS, SHALL GOVERN ON THIS PROJECT: REQUIRED CONTRACT PROVISIONS FOR ALL FEDERAL-AID CONSTRUCTION CONTRACTS (FORM FHWA 1273, MARCH, 1994).

LEVELS DED 1

PROJ. NO.
LETTING DATE
COUNTY
HWY. NO.
DATE ACCEPTED

©2010 by Texas Department of Transportation; all rights reserved

Plotted on: 7/7/2010

Design Filename: p:\74\00\04\design\civil\General\740004INDEX01.dgn

	SHEET NO.	DESCRIPTION
		MISC
	1	TITLE SHEET
	2	INDEX OF SHEETS
	3, 3A-3I	PROJECT GENERAL NOTES
	4, 4A-4D	ESTIMATE & QUANTITY SHEETS
	5-6	PROJECT LAYOUT
	7-11	HORIZONTAL & VERTICAL CONTROL DATA
	12-13	EXISTING TYPICAL SECTION
	14-18	PROPOSED TYPICAL SECTION
		SUMMARIES
	19-21	TCP SUMMARY SHEETS
	22-23	ROADWAY SUMMARY SHEETS
	24	DRAINAGE SUMMARY SHEET
	25-27	SIGNAL SUMMARY SHEETS
	28	ILLUMINATION SUMMARY SHEET
	29-31	PAVEMENT MARKING SUMMARY SHEETS
	32	SW3P SUMMARY SHEET
	33-39	SIGN SUMMARY SHEETS
		TCP
	40-41	TCP NARRATIVE
	42-43	TCP HORIZONTAL ALIGNMENT DATA
	44-45	TRAFFIC CONTROL OVERALL PLAN
	46-60	TCP - PHASE 1
	61-82	TCP - PHASE 2
	83-125	TCP - PHASE 3
#	126-137	BC(1)-(12)-07
#	138-141	WZ(TD)-03, WZ(STPM)-03, WZ(UL)-03, WZ(BRK)-03
#	142-147	TCP(2-1)-98, TCP(2-4)-03, TCP(2-6)-98, TCP(3-2)-98, TCP(3-3)-98, TCP(7-1)-98
#	148	LPCB (1)-92
#	149	LPCB (2)-92
		ROADWAY
	150	EXISTING HORIZONTAL & VERTICAL ALIGN DATA
	151-154	HORIZONTAL ALIGNMENT DATA
	155-181	PROPOSED PLAN SHEETS
	182-184	ROADWAY PROFILE SHEETS
	185-187	HMAC OVERLAY SHEET
	188-190	MISC ROADWAY DETAILS
#	191	PCF-05
#	192-195	PED-05
#	196	MBGF-09
#	197	MBGF (MS)-10
#	198	SGT(7)-09
#	199	SGT(8)-09
		DRAINAGE
	200-204	CROSS CULVERT DRAINAGE AREA MAPS
	205	STORM DRAIN DRAINAGE AREA MAPS
	206-216	HYDRAULIC DATA SHEET CULVERT CALCULATIONS
	217-219	HYDRAULIC DATA SHEET STORM DRAIN
	220	CULVERT 1 & 2
	221	CULVERT 3
	222	CULVERT 3A & 4
	223	CULVERT 4A & 7
	224	CULVERT 5 & 8
	225	INLET 1
	226-227	CULVERT 6
	228-230	CULVERT 9 & 10
	231-232	STORM DRAIN LINE "A"
	233-234	STORM DRAIN LINE "B"
	235	MISCELLANEOUS DRAINAGE DETAILS
#	236	SETP-PD
#	237-238	SETB-PD
#	239	SCP-MD
#	240	SCP-3
#	241	SCP-5
#	242	SCP-6
#	243	PW
	244	BCS
#	245-246	CURB INLET TY C WITH EXT TY C-E
#	247-249	CURB INLET WITH EXT TY I-II-E
#	250-251	IL-H-G

	SHEET NO.	DESCRIPTION
		TRAFFIC SIGNALS
	252-256	TRAFFIC SIGNAL LAYOUT - NEW GUILBEAU TURNAROUND 1
	257-263	TRAFFIC SIGNAL LAYOUT - NEW GUILBEAU
	264-268	TRAFFIC SIGNAL LAYOUT - SHAENFIELD TURNAROUND 2
	269-277	TRAFFIC SIGNAL LAYOUT - SHAENFIELD
	278-282	TRAFFIC SIGNAL LAYOUT - SHAENFIELD TURNAROUND 3
	283-290	TRAFFIC SIGNAL LAYOUT - LP 1604 & SH 151
	291	PROPOSED CONDUIT LAYOUT
	292-306	ILLUMINATION LAYOUT
	307	ILLUMINATION POLE SCHEDULE
	308	ILLUMINATION ELECTRICAL SERVICE SUMMARY
	309-310	ILLUMINATION SCHEDULE TABLE
*	311-319	ED (1-5)-03, ED (7-8)-03, ED (10)-03, ED (13)-03
*	320-321	SP-80 (1 & 2)-96
*	322-323	SMA-80 (1)-99 & SMA-80(2)-96
*	324-327	LMA (1-4)-01
*	328	MA-C-09
*	329	MA-D-07
*	330	TS-FD-99
*	331	SHS (1)-06
*	332	VD(2)-06
*	333	TM-VIVDS-08
*	334	METRO STREET NAME SIGN
	335	UPS LAYOUT
*	336-339	RIP (1-4)-07
*	340-342	RID (LUM1-2)-07 & RID (FND)-07
*	343	LUM-A-99
		PAVEMENT MARKING
	344-375	PAVEMENT MARKING LAYOUT
*	376	TPMD(1)
*	377	FPM(1)-10
*	378	TCD-05
*	379-380	PM(5)-01, PM(6)-01
		SIGNING & DELINEATION
	381-406	LARGE AND SMALL SIGN LAYOUT
	407-410	LARGE AND OVERHEAD SIGN DETAIL
	411	RIP RAP APRON DETAIL
*	412	SPRFB-06
*	413-417	TSR (1-5)-08
*	418-423	D&OM(1)-10, D&OM(2-5)-04, D&OM(VIA)-04
*	424-432	SMD (GEN)(SLIP-1)(SLIP-2)(SLIP-3)(2-1)(2-2)(2-3)(2-4)(TY-G)-08
*	433	WV & IZ-96
		SW3P
	434	ENVIRONMENTAL PERMITS, ISSUES & COMMENTS (EPIC)
	435	SW3P NARRATIVE
	436-447	SW3P LAYOUTS
#	448-450	EC (1)-09, EC(2)-93 & EC(3)-93

STATE OF TEXAS
SCOTT D. ARMSTRONG
69320
LICENSED
PROFESSIONAL ENGINEER

THE STANDARD SHEETS SPECIFICALLY IDENTIFIED ABOVE (#) SELECTED BY ME OR UNDER MY RESPONSIBLE SUPERVISION AS BEING APPLICABLE TO THIS PROJECT.

SCOTT D. ARMSTRONG, P.E. — 7/7/2010 DATE

STATE OF TEXAS
GILMER D. GASTON
80472
LICENSED
PROFESSIONAL ENGINEER

THE STANDARD SHEETS SPECIFICALLY IDENTIFIED ABOVE (*) SELECTED BY ME OR UNDER MY RESPONSIBLE SUPERVISION AS BEING APPLICABLE TO THIS PROJECT.

/ GILMER D. GASTON P.E. — 7/7/2010 DATE

REV. NO.	DATE	DESCRIPTION	BY

ALAMO RMA

PAPE-DAWSON ENGINEERS

555 EAST RAMSEY | SAN ANTONIO, TEXAS 78216 | PHONE: 210.375.9000 FAX: 210.375.9010

TEXAS BOARD OF PROFESSIONAL ENGINEERS, FIRM REGISTRATION # 470

Texas Department of Transportation ©2010

LOOP 1604

INDEX OF SHEETS

SHEET 1 OF 1

DGN:	FED. RD. DIV. NO.	STATE	FEDERAL AID PROJECT NO.			HIGHWAY NO.
CHK DGN:	6	TEXAS	STP 2011(210)ES			LP 1604
DWG:	DIST.	COUNTY	CONT. NO.	SECT. NO.	JOB NO.	SHEET NO.
CHK DWG:	SAT	BEXAR	2452	01	050	2

**********GENERAL NOTES**********

Basis of Estimate

Item	Description	Rate/Area	Quant-Tons
168	Vegetative watering (Perm seeding)	15.6 Gal/47570 SY	742 MG
168	Vegetative watering (Temp seeding)	15.6 Gal/11893 SY	186 MG

Asphalt Concrete Pavement

Type	Location	Depth	Rate/Area	Quant-Tons
D-GR HMA (Ty B)	All Rdwy	8"	880 lbs/47,806 SY	21,035 Tons
D-GR HMA (Ty C)	All Rdwy	2"	220 lbs/44,842 SY	4,933 Tons
D-GR HMA (Ty C)(Surf)	All Rdwy	2"	220 lbs/119,983 SY	13,198 Tons

Surface Treatment Data

Description	1st Course
Under all D-GR HMA (Ty C)(Surf)	119,983 SY

-----See Bid Item-----

asphalt--rate(gal/sy)	0.34/1 = 40,794 gal
aggregate--type/gr	Ty PE/Gr 4
aggregate--rate(cy/sy)	1/130 = 923 cy

Steel Wrapped or Asbestos Utility Lines:

Existing steel wrapped natural gas and/or asbestos cement (AC) water lines that will no longer be in service are usually abandoned in place (AIP). However, if any of these lines have to be removed for whatever reason (in the way of other construction, to make tie-ins, etc.) comply with all federal, state and local laws, ordinances and regulations regarding the management of these materials. At a minimum:

1. Contact the Engineer.

2. Remove the minimum amount of pipe needed to perform the proposed work.

3. Cover and secure the ends of the pipe with a double layer of 6 mil plastic. If the pipe is damaged, cover the entire pipe.

4. Move the pipe to an approved temporary site within the project.

County: Bexar **Sheet**

Highway: Loop 1604 **Control: 2452-01-050**

5. The Engineer will determine the owner (utility company) of the pipe and will coordinate removal from the project. The contractor will load the pipe onto the removal vehicles but will NOT be responsible for removing the pipe from the project.

6. Removal of the pipe from the trench is subsidiary to the work that created the need for the removal (excavation for structures, roadway, a new line, tie-ins, etc.). The work performed in handling the pipe after it has been removed from the trench (covering with plastic, hauling to the temporary site and later loading on to the disposal vehicles will be paid for through the Force Account procedure.

Contact the Engineer or the City when construction operations are within 400 feet of a signalized intersection to determine/verify the location of loop detectors, conduit, ground-boxes, etc. Repair or replace any signal equipment damaged by construction operations. The method of repair or replacement shall be pre-approved and inspected. Depending on the type and extent of the damage, the Engineer reserves the right to perform the repair or replacement work and the Contractor will be billed for this work.

Remove existing raised pavement markings as the work progresses or as approved. This work is subsidiary to the various bid items. Properly dispose materials removed.

To better fit field conditions, the cross sections may be varied when approved.

If there are waste areas or material source areas, follow the Texas Aggregate Quarry and Pit Safety Act requirements.

Any materials removed and not reused and determined to be salvageable shall be stored within the project limits at an approved location or delivered undamaged to the storage yard as directed. Properly dispose unsalvageable materials in accordance with local, state, and federal regulations. Deface traffic signs so that they will not reappear in public as signs.

Any sign panels that are adjusted or removed and replaced, shall be done the same workday unless otherwise approved.

Notify the Engineer at least two weeks prior to a proposed traffic pattern change(s) that will require a revision to traffic signals.

Hurricane Evacuation

Hurricane Season is from June 1 thru November 30. As the closest metropolitan city inland from the Texas Coast, the City of San Antonio is a major shelter destination during mandatory hurricane evacuations. As such, planned work zone lane or road closures may be restricted and/or suspended during mandatory hurricane evacuation operations. The District will coordinate these restrictions at a minimum H-120 from any projected impact to the Texas Coast.

No time charges will be made if the Engineer determines that work on the project was impacted by the hurricane.

The Engineer may order changes in the Traffic Control Plan to accommodate evacuation traffic, and may suspend the work, all or in part, to ensure timely completion of this work. All work to implement changes in the Traffic Control Plan will be paid through existing bid prices or through Item 9.5, Force Account. However, the Department will not entertain any request for delay damages, loss of efficiency that may be attributed to the restriction or suspension of road or lane closures, or to changes in the Traffic Control Plan.

Various utilities will be adjusted by others within the project right of way throughout the course of this contract. The Contractor does not have exclusive use of the right of way and is required to cooperate with others performing the utility adjustments.

--Item 5--
Reference all existing striping and other pavement markings to allow these markings to be re-established. Ensure the markings (lane lines, edge lines, ramp gores, etc.) are in line with signs, TMS arrows, etc. located on overhead sign supports.

Taper ACP placed at curb inlets, traffic inlets and slotted drains.

Prior to letting, bidders may obtain a free computer diskette or a computerized transfer of files (from the Engineer's office) that contains the earthwork information. If copies of the cross-sections in addition to, or instead of, the CD are requested, they will be available at the Engineer's office for borrowing by copying companies at the bidder's expense.

When working near aerial electrical lines or utility poles, comply with Federal, State and local regulations. For electrical lines and poles shown in the plans, if the lines need to be de-energized or if poles need to be braced, contact the electrical company. Work pertaining to de-energizing lines, bracing poles and other protective measures will not be paid by TxDOT.

Prevention of Migratory Bird Nesting

It is anticipated that migratory birds, a protected group of species, may try to nest on bridges, culverts, vegetation, or gravel substrate, at any time of the year. The preferred nesting season for migratory birds is from February 15 through October 1. When practicable, schedule construction operations outside of the preferred nesting season. Otherwise, nests containing migratory birds must be avoided and no work will be performed in the nesting areas until the young birds have fledged.

Structures

Bridge and culvert construction operations can not begin until swallow nesting prevention is implemented, until after October 1 if it's determined that swallow nesting is actively occurring, or until it's determined swallow nests have been abandoned. If the State installed nesting

deterrent on the bridges and culverts, maintain the existing nesting deterrent to prevent swallow nesting until October 1 or completion of the bridge and culvert work, whichever occurs earlier. If new nests are built and occupied after the beginning of the work, do not perform work that can interfere with or discourage swallows from returning to their nests. Prevention of swallow nesting can be performed by one of the following methods:

1. By February 15 begin the removal of any existing mud nests and all other mud placed by swallows for the construction of nests on any portion of the bridge and culverts. The Engineer will inspect the bridges and culverts for nest building activity. If swallows begin nest building, scrape or wash down all nest sites. Perform these activities daily unless the Engineer determines the need to do this work more frequently. Remove nests and mud through October 1 or until bridge and culvert construction operations are completed.

2. By February 15 place a nesting deterrent (which prevents access to the bridge and culvert by swallows) on the entire bridge (except deck and railing) and culverts.

No extension of time or compensation payment will be granted for a delay or suspension of work caused by nesting swallows. This work is subsidiary to the various bid items.

--Item 6--
Show the stockpile lot and/or sub lot numbers on all tickets for all materials.

--Item 7--
The project's total disturbed area is 8.15 Ac. The disturbed area in all project locations and Contractor project specific locations (PSL's), within 1 mile of the project limits, will further establish the authorization requirements for storm water discharges. The department will obtain an authorization to discharge storm water from the Texas Commission on Environmental Quality (TCEQ) for the construction activities shown on the plans. Obtain any required authorization from the TCEQ for any PSL's on or off the ROW. When the total area disturbed on the project and PSL's within 1 mile of the project exceeds 5 acres, provide a copy of the Contractor NOI for PSL's to the Engineer (to the appropriate MS4 operator when the project is on an off-state system route).

--Item 8--
Working days will be computed and charged in accordance with Article 8.3.A.4 Standard Workweek.

The number of working days and interim milestones, if any, were calculated using a conceptual time determination schedule that assumes generic resources, production rates, sequences of construction and average weather conditions based on historic data. If requested, the Engineer will supply bidders a CD of the time determination schedule compatible with Primavera Project Planner software. The time determination schedule is provided for informational use only and is not intended for bidding or construction purposes. If the schedule is used for bidding or construction purposes, the bidder accepts the schedule and assumes the responsibility for verifying all aspects of the schedule. The department will not adjust the number of working days

and milestones, if any, due to differences in opinion regarding any assumptions made in the preparation of the schedule or for errors, omissions or discrepancies found in the schedule.

Locate and reference with station and offset all manholes and valves within the construction area. Each manhole and valve shall be identified by its owner (SAWS, CPS, etc.). No roadwork will begin until this list has been submitted. Gas valves have to be accessible at all times, therefore; temp. CTB, material stock piles, etc. can not be placed over these valves.

Construct all manholes and valves to final pavement elevations prior to the final mat of ACP. If, between the final elevation adjustment and the final mat of ACP, the manholes and valves are going to be exposed to traffic, place temporary asphalt around the manhole and valve to provide a +/- 50:1 taper. The cost of elevation adjustment will be part of the manhole and valve work, and asphalt tapers are part of the ACP work.

--Item 9--
When approved, provide uniformed, off-duty law enforcement officers with marked vehicles during work that requires a lane closure. The officer in marked vehicles shall be located as approved to monitor or direct traffic during the closure. The method used to direct traffic at signalized intersections shall be as approved. Additional officers and vehicles may be provided when approved or directed.

Complete the daily tracking form provided by the department and submit invoices that agree with the tracking form for payment at the end of each month approved services were provided.

Minimums, scheduling fees, etc. will not be paid; TxDOT will consider paying cancellation fees on a case by case basis.

--Item 100--
Begin clearing operations after trees and other areas of vegetation to be protected have been identified and approved. Install fencing around features to be protected as shown in the plans or directed. Coordinate all right of way clearing operations with the SW3P.

Trim and remove brush and trees as needed for construction operations. Obtain approval for proposed method of tree and brush trimming and removal. Vertical flailing equipment is not allowed. Treat damaged or cut branches, roots and/or stumps of all oak trees with a commercial tree wound dressing. Disinfect all pruning tools with a solution of 70% alcohol before moving from one tree to another. Unless otherwise approved remove all resulting vegetative debris from the ROW within 24 hours. The Engineer can stop all construction operations if the dressing, cut and removal requirements are not followed.

--Item 110--
Where excavation extends beyond a right of way fence, remove and replace the fence to a comparable condition.

County: Bexar **Sheet**

Highway: Loop 1604 **Control: 2452-01-050**

--Item 164--
Drill seeding of permanent grasses requires the use of approved grass seeding equipment capable of properly storing and metering the release of small seeds (such as Bermuda grass) separately from fluffy type seeds (such as bluestems). Equipment manufactured for planting grain crops is acceptable for planting temporary cool season seeds, but not for planting the permanent seed mix.

When drill seeding is required, cultivate the area to a depth of 4 in. after the fertilizer has been applied and before placing the seed.

If performing a permanent seeding in an area with established temporary grass cover and mowing is performed instead of tilling, seed and fertilizer may be distributed simultaneously during "Broadcast Seeding" operations, provided each component is applied at the specified rate.

--Item 166--
Use a fertilizer with an analysis of 13-13-13 (50% of the total N must be sulfur coated urea) to apply 60 lbs of actual N per acre. This requires 460 lbs of 13-13-13 per acre or .095 lbs per SY of area.

--Item 168--
Apply vegetative watering as needed to supplement natural rainfall during the vegetation establishment period. Plan quantity of irrigation water is based on the application of a total of 1.3 gal of water each week for each sq. yd. of area that is sodded or seeded. Establishment time is estimated to be 12 weeks for both sod and permanent seed mixes. Temporary seeding will require less time for establishment. Provide a schedule and coordinate watering cycles and rates per cycle with the Engineer. Obtain approval if the quantity of water to be applied is expected to exceed the plan quantity. Adjust the amount of water applied with each cycle and the number of cycles each wk. according to actual site conditions. Drought or other conditions, as determined by the Engineer, may require the application of supplemental irrigation during hours other than normal working hours.

--Item 169--
Do not use soil retention blankets made from carpet backing material.

--Item 300--
The asphalt binder used in the manufacture of the non-surface layers of hot mix asphalt concrete, shall be PG 64-22.

The asphalt binder used in the manufacture of the hot mix asphalt concrete surface layer shall be PG 76-22.

--Item 302--
Previously tested aggregates found to contain excessive quantities of dust (more than 0.5 percent passing the No. 40 sieve) during precoating, stockpiling or hauling operations, may be rejected. Use Test Method Tex-200-F, Part I for testing.

Precoated Aggregate Type PE shall consist of crushed slag, crushed stone or natural limestone rock asphalt.

The Engineer will utilize the Ignition Oven Method (Tex 236-F) for aggregate gradation, with the option of utilizing belt or vacuum extraction gradation in the event the ignition oven malfunctions.

--Item 316--
When using latex asphalt, avoid drifting of asphalt onto traffic and adjacent properties.

Asphalt season will be year around, but meet sections 316.4.D.1 through 3.

Ensure that the asphalt for precoating the aggregate and the asphalt used for the surface treatment will not result in a reaction that may adversely affect the bonding of the aggregate and asphalt during the surface treatment operation.

Do not add bag house fines in the production of precoated material.

Clean all concrete curbs, islands, medians, etc. that get coated with asphalt.

--Item 320--
Construct all longitudinal ACP joints adjacent to a travel lane with a joint maker device that will create a 3:1 to 6:1 taper. For placement of 2 inches or more, the device shall provide a maximum ½ inch vertical edge. Taper outside edges (next to the grass) or backfill (shoulder-up) the same day.

Use a material transfer device capable of transferring mix from the haul truck to the paver. Material transfer devices can include a pick up machine, such as a Lincoln 660 or similar.

--Item 341--
Table 6, in Item 340, Table 8 in Item 341 and Table 8 in Item 344, Hamburg Wheel Test Requirements tested in accordance with Tex-242-F are changed for PG 64-22 or lower and PG 70-22. Minimum number of passes at 0.5" Rut Depth, Tested at 122 degrees F will be 5,000 and 10,000 respectively.

Design all mixture types using a target laboratory-molded density of 96.5%.

The asphalt plant shall have truck scales as defined in Item 520. Give three weight tickets bearing the date, the truck number, the gross, net & tare weights to the truck driver for the State inspector at the spreading and finishing operation. Trucks may be required to weigh on public scales or portable platform scales to verify the weight of the ticket.

Submit a copy of the Tex 233-F production charts on a weekly basis. At the end of the ACP work, provide all originals.

County: Bexar **Sheet**

Highway: Loop 1604 **Control: 2452-01-050**

Crushing of aggregate for hot mix and immediate use for production of the mix is not allowed. Stockpile the aggregate until enough material is available for five days of production unless prior approval is provided. Hold a pre-placement meeting one month prior to the placement of the hot mix.

The main purpose of hot mix cores taken by the State are for payment calculations. If (for quality control purposes) the core information is needed sooner, take additional cores.

Do not use diesel or solvents as asphalt release agents in production, transportation, or construction. A list of approved asphalt release agents is available from the District Laboratory.

No more than one hot mix lot will be open for any specific type of hot mix, unless authorized. After a lot is open and the Contractor gets approval to change plants, the previous lot will be closed and a new lot will be opened. The numbering for the lots produced at the new plant will start with No. 1. If allowed to switch back to the original or previous plant, the next lot from that plant will resume numbering sequentially from the last lot produced by that plant.

Schedule lay-down placement where uneven travel lanes are minimized and eliminated weekly.

If asphalt material is obtained from other than a commercial source presently inspected by TxDOT, furnish a Type D structure for the asphalt mix control laboratory for the Engineer's use. Provide a minimum height of 8 feet and a minimum of 400 square feet of gross floor area for permanently located asphalt plants or 200 square feet for a temporary plant. The floor area will be partitioned into a minimum of two rooms, with a minimum of two windows per room. The floor shall have an impervious cover and sufficient strength to support the testing equipment. Portable structures shall be support blocked for stability and shall be tied down.

--Item 354--
Retain planed material.

--Item 416--
Prior to drilling foundations, the engineer shall approve all locations for poles, Contractor shall stake locations before contacting Engineer for approval.

Each pole foundation shall have one additional 2 inch conduit stubbed out 2 feet from the foundation and capped. Furnishing of this conduit shall be paid for under Item 618.

Contractor shall uncover and locate all marked underground facilities prior to excavating for drilled shaft foundations.

--Item 421--
Use an automated ticket that contains the same information as TxDOT's ticket. Submit the ticket for approval prior to use. The concrete producer will contact the District Laboratory or the Engineer's Office (outside the San Antonio area) to inform TxDOT of scheduled structural

concrete batching. Structural concrete includes bridge drill shafts, columns, caps, abutments, deck or top slabs of direct traffic culverts.

Air-entrained concrete is not required.

--Item 432--
In all riprap slopes, provide 3 inch diameter weep holes at 10 foot maximum spacing and backed with loose graded gravel or crushed stone and galvanized hardware cloth.

In areas where guard fence posts are to be placed in riprap, the riprap shall have an 18 inch +/- blocked out area (round or square).

Match the slope of the Riprap (Mow Strip) to the slope of the adjacent roadway.

--Item 462--
Use concrete aggregate with two sacks of Portland cement per cubic yard for fill between pre-cast boxes.

The following structures shall be pre-cast:
Culvert 6, Culvert 9, and Culvert 10.

--Item 465--
Concrete Class B invert shaping is required at all inlets, manholes and junction boxes in order to insure positive flow. The material and work performed for the placement of the inverts shall be considered subsidiary to this item.

--Item 500--
"Materials on Hand" payments will not be considered in determining percentages for mobilization payments.

--Item 502--
When advanced warning flashing arrow panels and/or changeable message sign is specified, have one standby unit in good condition at the job site.

Treat the pavement drop-offs as shown in the TCP.

After written notification, the time frame to provide properly maintained signs and barricades before considered in non-compliance is 48 hours from receipt of the notification.

There are traffic signals at the intersection of New Guilbeau, Shaenfield, and SH 151. Keep the signals in operation except when necessary for specific installation operations.

Moving an existing sign to a temporary location is subsidiary to this Item. Installations with permanent supports at permanent locations will be paid for under the applicable bid item (s).

Mount temporary mailboxes on plastic drum in accordance with Compliant Work Zone Traffic Control Devices, Section K. Mounting and moving the mailbox as needed for the various construction phases is subsidiary to this Item.

Notify the Engineer 5 business days in advance of any temporary or permanent lane, ramp, connector, etc. closures/detours, restrictions to lane widths, alterations to vertical clearances, or modifications to radii. Any other modifications to the roadway that may adversely affect the mobility of oversized/overweight trucks also require 5 business days advance notice to the Engineer. Unless shown in the TCP, no lane, ramp, connector, etc. closures are allowed during special events. At least one lane has to remain open at all times. For all lane closures, provide written closure information by 1:00PM on the business day prior to the closure. For closures on a Monday or following a Holiday, furnish the information the workday prior to the closure. Lane closures will not be allowed if this reporting requirement is not met.

Avoid placing stockpiles within the roadway's horizontal clear zone. If a stockpile is placed within the clear zone, address in accordance with the TMUTCD.

Do not place barricades, signs, or any other traffic control devices where they interfere with sight distance at driveways or side streets.

In addition to providing a Contractor's Responsible Person and a phone number for emergency contact, have and employee(s) available to respond on the project for emergencies and for taking corrective measures within 2 hours or within a reasonable time frame as specified by the Engineer.

--Item 529--
Class "C" concrete is required for machine extruded curb.

Curb inlets and extensions are based on an exposed curb height of 7 inches. The roadway curb height and shape will be transitioned to the inlet's curb with a 40:1 taper.

--Item 531--
The curb ramp truncated domes will be terra cotta.

The curb ramp locations shown in the plans have taken into account the geometric features of the intersection, traffic signals, and the pavement markings. If anything changes during construction, the location of curb ramps must be adjusted to ensure they meet TAS requirements.

--Item 540--
MBGF posts shall be round with domed tops, and not painted. If 10 or less timber posts are needed, they may be purchased locally and will be accepted by visual inspection.

Guard fence posts placed in proposed and/or existing areas of riprap, sidewalks or other concrete shall have an 18 inch +/- (square or round) block out in the concrete. After the posts are

installed, the blocked out area shall be topped off with 4 inches of low strength grout/mortar consisting of about 1 sack of cement per cubic yard of mix.

--Item 585--
Use Surface Test Type B pay adjustment schedule 2 to evaluate ride quality of travel lanes.

--Item 610--
Fabricate steel roadway illumination poles in accordance with TxDOT standards RIP-07 (Roadway Illumination Poles -2007). Poles fabricated according to RIP-07 require no shop drawings.

Alternate designs to RIP-07 or the use of aluminum to fabricate poles will require the submission of shop drawings electronically.

For instructions on submitting shop drawings electronically go to: http://www.dot.state.tx.us/publications/bridge.htm. File is titled: Guide to Electronic Shop Drawing Submittal.

Provide lamps from the pre-qualified Materials Producers List, Category is "Roadway Illumination and Electrical Supplies" located on the Construction Divisions (CST) web site.

Ballast/capacitors removed from the light assembly, will remain the property of the State. Assume all ballast/capacitors contain Polychlorinated Biphenyl (PCB), unless a notation appears on the outside of the unit that specifies it does not contain PCB's. All ballast/capacitors with PCB's shall be placed in 55 gallon open top drum in accordance with Department of Transportation (DOT) specifications. Place six (6) inches of sawdust or other absorbent material in the bottom of the drum. Furnish and place a DOT approved PCB warning label on the outside of the drum. Do not fill a drum more than ¾ of capacity. Avoid rupturing the ballast/capacitor(s). If a ballast/capacitor is ruptured, use proper procedures, specialist trained staff and personal protective equipment for the clean-up operations.

The lamps in light fixtures may contain hazardous levels of mercury, halide, and sodium vapors. Observe and comply with all federal, state and local laws, ordinances and regulations regarding the management of these lamps. Prevent the breakage of the lamps. At a minimum, package all lamps removed from the light fixture(s) in a container that minimizes the breakage of the lamps. Broken lamps shall be collected in a sealed plastic bag (i.e. Ziploc). Broken lamps shall be stored in separate containers from unbroken lamps. Furnish a suitable container and attach a label stating "Universal Waste Lamps" on the container. Write the date the first lamp was placed in the container on the "Universal Waste Lamp" label. Within one (1) week after the first lamp is placed in a container, notify the Engineer. The lamps and PCB containing ballast/capacitors, placed in properly labeled containers, will remain the property of the State. Place the container in an area where it is protected from damage and the elements. The Engineer will make arrangements to collect, transport, and dispose/recycle the container. The ballast/capacitor and lamp's removal and storage is subsidiary to this item.

County: Bexar **Sheet**

Highway: Loop 1604 **Control: 2452-01-050**

Stencil each illumination assembly with the circuit, light and relay numbers in black paint on the roadway side of the pole at a 45 degree angle. The numbers shall be in 3" tall and begin 6' from the top of the foundation. This work will be considered subsidiary to this item.

--Item 618--
It might be necessary to cut concrete for placement of conduit. Saw cut existing concrete, remove the concrete from the steel reinforcement (bars or fabric) and bend the steel to install the conduit. After the conduit has been placed, bend the steel back to its original position and back-fill the trench with an approved concrete. This work is subsidiary to this Item.

The conduit depth for illumination under the City of San Antonio streets is 36 inches.

Do not use cast iron junction boxes in single slope traffic barriers.

Use materials from Material Producers list as shown on the Construction Division's (CST) web site. Category is "Roadway Illumination and Electrical Supplies."

The polymer concrete barrier box will not be paid for separately, but will be considered subsidiary to ITEM 618, "CONDUIT".

--Item 620--
For both transformer and shoe-base type illumination poles, provide double-pole breakaway fuse holder as shown on the Construction Division's (CST) materials producers list Category is "Roadway Illumination and Electrical Supplies." Fuse holder is shown on list under Items 610 & 620.

Provide 10 amp time delay fuses.

--Item 624--
Legibly imprint the ground box cover with the words "Danger High Voltage" as required by the "Electrical Details" State Standard Sheet(s). In addition, imprint "Traffic Signal", "TMS", "Illumination", or whatever other system will be housed in the ground box. The ground box locations shown on the plans are approximate and can be adjusted to better fit field conditions when approved.

Ground box covers shall be polymer concrete.

The ground box in the controller foundations are subsidiary to Item 680 and are not paid for separately.

--Item 628--
Make all arrangements for electrical service, and compliance with local standards and practices for proper installations.

Electric service details are provided in the traffic signal plan sheets for each new electric service.

--Item 644--
The wedge anchor system shown on State Standard Sheet SMD (TWT)-08 are not allowed.

--Item 666 & 8251--
If TY II material is used (vs. an acrylic or epoxy) as the sealer for the TY I markings, place the TY II a minimum of 14 calendar days (to provide adequate curing) before placing the TY I markings.

Type II reflectorized pavement markings, in the configuration of the permanent pavement markings, shall be used as the pavement sealer, prior to placing the permanent TY I pavement markings.

--Item 672--
Place all adhesive material directly from the heated dispenser to the pavement. Do not use portable or non-heated containers. Use adhesive of sufficient thickness so that when the marker is pressed into the adhesive, 1/8" or more adhesive will remain under 100% of the marker. The adhesive should extend not less than 1/2" but not more than 1 1/2" beyond the perimeter of the marker.

--Item 677--
Obtain approval before using the mechanical method for the elimination of existing thermoplastic pavement markings.

--Item 680--
Furnish and install all required materials and equipment necessary for the complete and operating traffic signal installation at the following intersections:

Location	Re-Use Existing Controller	New BBS System	New 332 Cabinet	New 2070 Controller
Turnaround #1 – New Guilbeau	0	1	1	1
Loop 1604 at New Guilbeau	1	1	1	0
Turnaround #2 N. of Shaenfield	0	1	1	1
Loop 1604 at Shaenfield	1	1	2	1
Turnaround #3 S. of Shaenfield	0	1	1	1
Loop 1604 at SH 151	0	1	1	1
Totals	**2**	**6**	**7**	**5**

The locations shown on the plans for signal pole foundations, controller foundations, conduit and other items may be adjusted to better fit field conditions as approved.

Use 250 W High Pressure Sodium fixtures from the prequalified material producer lists as shown on the Texas Department of Transportation (TxDOT) – Construction Division's (CST) material producer list. Category is "Roadway Illumination and Electrical Supplies."

Demonstrate that the field wiring is properly installed, install the controller assembly, connect the wiring and turn on the controller.

Contractor shall deliver all new 2070 controllers and 332 cabinets to City Traffic Operations Center for testing four weeks prior to install in the field. City Traffic Operations Center is located at 223 S. Cherry Street in San Antonio. Equipment is specified under other items but is subsidiary to this item.

Existing 2070 controllers at New Guilbeau and Shaenfield shall be re-programmed and re-used in the final intersection operation and configuration. Contractor shall provide one spare 2070 controller unit to rotate through the traffic signal activations to minimize intersection downtime during testing and activation. Furnishing this spare controller shall not be paid for separately and is subsidiary to the various Item 680 items.

Furnish all interconnection communication equipment, as specified on the Plans, to the City of San Antonio Traffic Operations Center a minimum of four weeks prior to install in the field. Interconnection equipment subsidiary to this item.

Contractor shall furnish and install all permanent signs mounted on traffic signal equipment. The contractor shall provide all necessary hardware for mounting. The costs of furnishing and installing these signs shall be subsidiary to item 680.

Three (3) copies of equipment submittals for all traffic signal and cctv components shall be sent to the engineer for approval. Submittals shall consist of the appropriate combination of catalog sheets, material lists, manufacturer's brochures, technical bulletins, specifications, diagrams, or product samples necessary to describe a system, product, or item. Specific item numbers and product codes will be clearly identified when multiple products are listed on the same sheet.

Contractor shall be responsible for acquiring all permits, tests, approvals and acceptances required to complete construction of this project.

Prior to construction, the engineer shall approve all locations for controller foundation and electrical service meter. Contractor shall stake locations before contacting engineer for approval.

All electrical work shall comply with the national electric code.

Existing traffic controls shall remain in operation until new controls are ready. Contractor shall coordinate "turn-on" of the new traffic signal with the engineer.

When necessary to turn off an existing signal, contractor shall provide an off-duty uniformed officer to control traffic until the traffic signal is back in satisfactory operation.

For each cable terminating in the controller cabinet an extra 10 feet length shall be provided. All cables shall be continuous without splices from terminal point to terminal point or as

directed/approved by the engineer. All proposed signal cable shall be awg #14 solid copper. The number of conductors required shall be as shown on the plans.

A preconstruction meeting with COSA personnel will be required prior to contractor initiating any traffic signal related work.

Contractor shall provide 3m opticom certified technician to install opticom equipment. Contractor shall be fully responsible for set-up and installation of opticom equipment. Opticom equipment is subsidiary to this item.

--Item 682--
Provide all signal heads from the same manufacturer. Pedestrian signals may be by a different manufacturer than the vehicle signal heads.

Final adjustment of traffic signal heads (vehicle and pedestrian), as required by the engineer, shall be done by the contractor and shall be subsidiary to furnishing and installing traffic signal heads or sections.

All Vehicle Traffic Signal Sections shall be made of Polycarbonate resin.

Cover all signal faces until placed in operation.

All pedestrian signal faces shall be single section LED Type. Die cast polycarbonate is acceptable in lieu of die cast aluminum. All mounting attachments shall be constructed of steel pipe and mounted as shown on the plans.

For all proposed mast arm pole assemblies, use mounting bracket assembly Option "C" as shown on the State Standard Sheet(s) "Single Mast Arm Assemblies".

--Item 684--
Provide an extra 10' for each cable terminating in the controller cabinet. All cables shall be continuous without splices from terminal point to terminal point. All proposed signal cable shall be #12 AWG stranded copper.

--Item 686 & 687--
Provide all signal poles from the same manufacturer. Pedestrian poles may be from a different manufacturer.

Contractor shall supply caps in place of the mast arm tenon ends.

--Item 688--
The sealant used must be approved.

The pedestrian push button shall be raised or flush and a minimum of 2 inches in the smallest dimension. The force to activate the control shall be no greater than 5 lb/f. The button

placement has to be coordinated with the concrete pad to access the button. The concrete pad (if required) shall be paid separately.

The pedestrian push button and pedestrian signals shall be wired with a 9/C#14 AWG as shown on the plans.

Pedestrian pushbutton shall be a pressure activated, non-moving button with tone audible beep and visible momentary led light to indicate switch activation, polara part# bdlm-x or approved equal.

--Item 1018--
Protective fencing shall be erected at all locations where trees are to be protected as shown on the plans or as directed by the Engineer. Tree protection shall be placed at the drip line of trees (Root Protection Zone). The protective fencing shall be erected before site work commences and shall remain in place during the entire construction phase.

The installation posts will be placed every 6 ft. around the drip line or RPZ and embedded to 18 in. deep. Fabric attachment shall be attached to the installation posts by the use of sufficient wire ties to securely fasten the fabric to the "T" posts as to hold the fabric in a stable and upright position.

The Root Protection Zone (RPZ) shall be equal to 1/2 ft. radius from the tree trunk for each diameter inch measured at 4.5 ft. above ground level.

Where construction activity must take place within the drip line (RPZ) of trees to be preserved, trees shall be protected by one of the two methods described below;

- Place 4 "T" posts located equally spaced (cardinal directions) around tree trunk at a minimum of 4 ft. from the trunk and embedded 18 in. deep. Attach chain link fabric as per above.

- Place a protective sleeve of 2 in. x 4 in. x 4 ft. lumber around the trunk, above the crown/flares of the tree. Protective lumber shall not be directly nailed to the tree, but held securely in place with minimum No. 10 gauge wire wrapped over the lumber and around the tree at a minimum of two locations. The gap between the boards is to be 4 in. or less.

A vertical ground barrier shall be provided at the back of sidewalks or concrete structures to prevent roots from damaging concrete flatwork or curbs as the trees grow. Vertical barrier shall be placed a minimum of 2 ft. deep in a 6 in. vertical trench backfilled with sand.

RPZ shall be mulched with 6 in. of mulch as approved by the City Arborist.

RPZ shall not be cleared, filled or graded unless approved by the City Arborist.

No equipment, supplies or materials shall be stored in the RPZ.

Contractor shall not set up any construction operations under the canopy of the trees (e.g. pipe cutting and threading, mortar mixing, painting or lumber cutting).

Nothing is to be nailed or attached to the trees, including temporary signs, meters, switches, wires, bracing, etc.

Contractor shall not permit runoff from waste materials including solvents, concrete washouts, asphalt tack coats (MC-30 oil), etc. to enter the RPZ. Barriers are to be provided to prevent such runoff substances from entering the RPZ whenever necessary, including in an area where rain or surface water could carry such materials to the root system of the tree.

Trees damaged or lost due to contractor's negligence during construction shall be repaired or mitigated at the contractor's expense to the director of public work's satisfaction.

Fabric used as protective fencing shall be 4 ft. in height and shall consist of steel wires woven with 2-in. mesh openings such that in a vertical dimension of 23 in. along the diagonals of the openings there shall be at least 7 meshes. The top and bottom selvages shall have a twisted and barbed finish, the barbing to be done by cutting the wire at an angle to create sharp points. The wire in the fabric shall have a tensile strength of not less than 75,000 pounds per square inch, after galvanizing or aluminum coating is applied. Fabric shall conform to the least requirements of the ASTM A 392, Class1, or ASTM A 491.

Installation posts shall be a minimum of 60 in. long and steel "T" shaped with a minimum weight of 1.3 pounds per linear foot with painted on finish for rust protection.

Tie Wire for attaching the fabric to the t-posts shall be not less than No. 12 gauge galvanized wire. Sufficient fastening material shall be furnished to provide for the securing of the fabric to the "T" line posts.

Previously-used materials, meeting the above requirements and when approved by the Engineer, may be used.

--Item 6007--
All equipment salvaged at New Guilbeau and Shaenfield shall be delivered to the City of San Antonio Traffic Operations Center located at 223 S. Cherry Street, or as directed by the Engineer.

The existing traffic signal equipment salvaged at SH 151 shall be delivered to the TxDOT Signal shop, located at 4615 NW Loop 410 (corner of IH 410 and Callaghan Road) in San Antonio, Texas or to the Area Office as directed.

Contractor will be directed to dispose of certain traffic signal items identified as unsalvageable by the Engineer.

--CCTV Field Equipment--
Two CCTV cameras with PTZ capability will be installed at each of the following intersections:

Loop 1604 at New Guilbeau Turnaround
Loop 1604 at New Guilbeau
Loop 1604 at Shaenfield N. Turnaround
Loop 1604 at Shaenfield
Loop 1604 at Shaenfield S. Turnaround

Contractor shall mount video equipment in on of the controller cabinets at each intersection and provide connections and cabling for sending video signals to the City Traffic Management Center via the Traffic Signal Interconnection Equipment furnished under Item 680. All items to provide fully functioning video system shall be provided.

--Battery Back-Up System for Signal Cabinets--
Battery Back-Up System (BBU) is used interchangeably with Battery Backup System (BBS) in the plans. One Battery Backup System is provided for up to two traffic signal controller cabinets located in close proximity. All wiring necessary to power the second cabinet shall be provided as subsidiary to this item.

--Model 2070 Controller Unit--
The traffic signal controllers, Model 2070 shall be Model 2070L and shall be delivered with the following options:

- 2070-1B Central Processing Unit (CPU) module.
- 2070-2A Field Input/Output (I/O) module (C1 and C11 connectors).
- 2070-3B front panel (8 line display).
- 2070-4B (3.5 Amp) power supply.

The model 2070L controller shall come equipped with 8MB of DRAM and 8 MB of Flash memory as per the specification.

The Contractor shall supply a conflict monitor that conforms to the TEES specification for the Model 2070L controller. The conflict monitor shall be EDI, Model 2018 KCLiP, or approved equivalent.

The Model 2070L controllers and conflict monitors shall be paid for under Item 680.

--LED Countdown Pedestrian Signal Module--
Provide all pedestrian countdown signal modules from the same manufacturer. Pedestrian signal housings may be by a different manufacturer than the vehicle signal heads.

Cover all pedestrian signal faces until placed in operation.

--Radar Advance Detection Devices--
Contractor shall install RADD for vehicle detection as indicated on the permanent signal layouts for temporary signal vehicle detection along Loop 1604. Contractor shall adjust RADD units for permanent detection when traffic signals are placed in the permanent operational mode, as needed.

--Radar Presence Detection System--
Contractor shall install RPD for vehicle presence detection as indicated on the permanent signal layouts and temporary signal layouts for left-turn, cross-street, and stopbar detection. Contractor shall install RPD units for use with the temporary signals and shall relocate and adjust RPD units for use with the permanent traffic signals when traffic signals are placed in permanent operational mode, as needed.

ESTIMATE SUMMARY

						BEXAR COUNTY CSJ 2452-01-050 LP 1604 BRIDGE ITEMS		BEXAR COUNTY CSJ 2452-01-050 LP 1604 ROADWAY ITEMS		ALT.	ITEM-CODE			DESCRIPTION	UNIT	TOTAL	
EST.	FINAL	EST.	FINAL	EST.	FINAL	EST.	FINAL	EST.	FINAL		ITEM NO	DESC CODE	SP NO			EST.	FINAL
								137.500			100	2002	002	PREPARING ROW	STA	137.500	
								3316.000			106	2002		OBLITERATING ABANDONED ROAD	SY	3316.000	
								12630.000			110	2001		EXCAVATION (ROADWAY)	CY	12630.000	
								9216.000			110	2002		EXCAVATION (CHANNEL)	CY	9216.000	
								11694.000			132	2003		EMBANKMENT (FINAL) (ORD COMP) (TY B)	CY	11694.000	
								127.000			132	2007		EMBANKMENT (FINAL) (ORD COMP) (TY D)	CY	127.000	
								47570.000			161	2002	001	COMPOST MANUF TOPSOIL (BOS) (4")	SY	47570.000	
								11893.000			164	2029	002	CELL FBR MLCH SEED (TEMP) (WARM)	SY	11893.000	
								11893.000			164	2031	002	CELL FBR MLCH SEED (TEMP) (COOL)	SY	11893.000	
								47570.000			164	2039	002	DRILL SEEDING (PERM) (URBAN) (CLAY)	SY	47570.000	
								928.000			168	2001		VEGETATIVE WATERING	MG	928.000	
								47570.000			169	2001	002	SOIL RETENTION BLANKETS (CL 1) (TY A)	SY	47570.000	
								40794.000			316	2366	016	ASPH (AC-15P OR CRS-2P)	GAL	40794.000	
								923.000			316	2645	016	AGGR (TY-PE GR-4)	CY	923.000	
								21035.000			341	2011	024	D-GR HMA (QCQA) TY-B PG64-22	TON	21035.000	
								4933.000			341	2034	024	D-GR HMA (QCQA) TY-C PG64-22	TON	4933.000	
								13198.000			341	2064	024	D-GR HMA (QCQA) TY-C SAC-B PG76-22	TON	13198.000	
								2628.000			351	2006		FLEXIBLE PAVEMENT STRUCTURE REPAIR (10")	SY	2628.000	
								7875.000			354	2021		PLANE ASPH CONC PAV (0" TO 2")	SY	7875.000	
								111.000			400	2006		CUT & RESTORING PAV	SY	111.000	
						170.790		579.130			402	2001		TRENCH EXCAVATION PROTECTION	LF	749.920	
						588.000		188.000			403	2001		TEMPORARY SPL SHORING	SF	776.000	
								63.000			416	2016	001	DRILL SHAFT (SIGN MTS) (12 IN)	LF	63.000	
								40.000			416	2018	001	DRILL SHAFT (SIGN MTS) (24 IN)	LF	40.000	
								512.000			416	2029	001	DRILL SHAFT (RDWY ILL POLE) (30 IN)	LF	512.000	
								11.300			416	2031	001	DRILL SHAFT (TRF SIG POLE) (30 IN)	LF	11.300	
								13.200			416	2032	001	DRILL SHAFT (TRF SIG POLE) (36 IN)	LF	13.200	
								70.000			416	2056	001	DRILL SHAFT (TRF SIG POLE) (36 IN) (ROCK)	LF	70.000	
								117.000			416	2064	001	DRILL SHAFT (TRF SIG POLE) (48 IN) (ROCK)	LF	117.000	
								137.700			432	2001		RIPRAP (CONC) (4 IN)	CY	137.700	
								158.000			432	2019		RIPRAP (STONE PROTECTION) (12 IN)	CY	158.000	
								12.000			432	2039		RIPRAP (MOW STRIP) (4 IN)	CY	12.000	
								179.200			432	2050		RIPRAP (CONC) (CL B) (5 IN)	CY	179.200	
								15.000			432	2066		RIPRAP (CONC) (CL B)	CY	15.000	
						9.000					460	2004		CMP (GAL STL 24 IN)	LF	9.000	
								123.000			460	2007		CMP (GAL STL 36 IN)	LF	123.000	
								640.000			462	2001		CONC BOX CULV (3 FT X 2 FT)	LF	640.000	
								189.000			462	2006		CONC BOX CULV (5 FT X 2 FT)	LF	189.000	
						512.370		126.260			462	2011		CONC BOX CULV (6 FT X 4 FT)	LF	638.630	
								91.000			464	2003	003	RC PIPE (CL III) (18 IN)	LF	91.000	
								810.000			464	2005	003	RC PIPE (CL III) (24 IN)	LF	810.000	
								998.000			464	2007	003	RC PIPE (CL III) (30 IN)	LF	998.000	
								15.000			464	2009	003	RC PIPE (CL III) (36 IN)	LF	15.000	
								264.000			464	2035	003	RC PIPE (CL V) (18 IN)	LF	264.000	
								6.000			465	2001	001	INLET (COMPL) (TY C)	EA	6.000	
								1.000			465	2003	001	INLET (COMPL) (TY H)	EA	1.000	
						2.000		5.000			465	2020	001	INLET (COMPL) (CURB) (TY II)	EA	7.000	
								1.000			465	2106	001	INLET EXT (TYII)	EA	1.000	
						2.000		2.000			466	2050		WINGWALL (PW) (HW=6 FT)	EA	4.000	
								4.000			467	2172		SET (TY I) (S= 3 FT) (HW= 3 FT) (6: 1) (P)	EA	4.000	

ESTIMATE & QUANTITY SHEET

STATE DIST. NO.	COUNTY	PROJECT NO.	SHEET NO.
15	BEXAR	CSJ 2452-01-050	4

ESTIMATE SUMMARY

						BEXAR COUNTY		BEXAR COUNTY		ALT.	ITEM-CODE			DESCRIPTION	UNIT	TOTAL	
						CSJ 2452-01-050		CSJ 2452-01-050									
						LP 1604 BRIDGE ITEMS		LP 1604 ROADWAY ITEMS									
EST.	FINAL	EST.	FINAL	EST.	FINAL	EST.	FINAL	EST.	FINAL		ITEM NO	DESC CODE	SP NO			EST.	FINAL
								1.000			467	2209		SET (TY II) (18 IN) (RCP) (3: 1) (C)	EA	1.000	
								1.000			467	2211		SET (TY II) (24 IN) (RCP) (3: 1) (C)	EA	1.000	
								1.000			467	2227		SET (TY II) (36 IN) (RCP) (4: 1) (C)	EA	1.000	
								1.000			467	2234		SET (TY II) (18 IN) (RCP) (6: 1) (C)	EA	1.000	
								6.000			467	2286		SET (TY II) (18 IN) (RCP) (6: 1) (P)	EA	6.000	
								2.000			467	2288		SET (TY II) (24 IN) (RCP) (6: 1) (P)	EA	2.000	
								7.000			467	2290		SET (TY II) (30 IN) (RCP) (6: 1) (P)	EA	7.000	
								6.000			467	2307		SET (TY II) (36 IN) (CMP) (6: 1) (P)	EA	6.000	
								80.000			476	2003		JACK BOR OR TUN PIPE (30 IN) (RC) (CL III)	LF	80.000	
								1.000			479	2002		ADJ INLETS	EA	1.000	
								1.000			500	2001	005	MOBILIZATION	LS	1.000	
								9.000			502	2001	033	BARRICADES, SIGNS AND TRAFFIC HANDLING	MO	9.000	
								705.000			506	2002	011	ROCK FILTER DAMS (INSTALL) (TY 2)	LF	705.000	
								705.000			506	2009	011	ROCK FILTER DAMS (REMOVE)	LF	705.000	
								480.000			506	2016	011	CONSTRUCTION EXITS (INSTALL) (TY 1)	SY	480.000	
								480.000			506	2019	011	CONSTRUCTION EXITS (REMOVE)	SY	480.000	
								447.000			506	2024	011	BACKHOE WORK (EROSION & SEDM CONT)	HR	447.000	
								447.000			506	2026	011	FRNT END LOADER WORK (ERSN & SEDM CONT)	HR	447.000	
								3802.000			506	2034	011	TEMPORARY SEDIMENT CONTROL FENCE	LF	3802.000	
								220.000			506	2036	011	SANDBAGS FOR EROSION CONTROL (6 IN)	LF	220.000	
								460.000			512	2008	002	PORT CTB (FUR & INST) (LOW PROF) (TY 1)	LF	460.000	
								40.000			512	2009	002	PORT CTB (FUR & INST) (LOW PROF) (TY 2)	LF	40.000	
								1100.000			512	2026	002	PORT CTB (MOVE) (LOW PROF) (TY 1)	LF	1100.000	
								160.000			512	2027	002	PORT CTB (MOVE) (LOW PROF) (TY 2)	LF	160.000	
								460.000			512	2044	002	PORT CTB (REMOVE) (LOW PROF) (TY 1)	LF	460.000	
								40.000			512	2045	002	PORT CTB (REMOVE) (LOW PROF) (TY 2)	LF	40.000	
								4255.000			529	2014		CONC CURB (TY C)	LF	4255.000	
								455.000			531	2003		CONC SIDEWALKS (5') (6")	LF	455.000	
								4.000			531	2006		CURB RAMPS (TY 2)	EA	4.000	
								6.500			531	2017		CURB RAMPS (TY 21)	EA	6.500	
								1697.000			536	2004		CONC DIRECTIONAL ISLAND	SY	1697.000	
								225.000			540	2001	023	MTL W-BEAM GD FEN (TIM POST)	LF	225.000	
								1.000			540	2005	023	TERMINAL ANCHOR SECTION	EA	1.000	
								1.000			544	2001		GUARDRAIL END TREATMENT (INSTALL)	EA	1.000	
								46.000			610	2025	010	INS RD IL AM (TY SA) 40T-8 (.25 KW) S	EA	46.000	
								18.000			610	2026	010	INS RD IL AM (TY SA) 40T-8-8 (.25 KW) S	EA	18.000	
								4.000			610	2068	010	REMOVE RD IL ASM (TRANS-BASE)	EA	4.000	
								13125.000			618	2018		CONDT (PVC) (SCHD 40) (2")	LF	13125.000	
								1226.000			618	2035		CONDT (PVC) (SCHD 80) (2") (BORE)	LF	1226.000	
								1.000			618	2049		CONDT (RM) (1 1/4") (BORE)	LF	1.000	
								680.000			618	2086		CONDT (PVC) (SCHD 80) (2") (TRENCH) (ROCK)	LF	680.000	
								135.000			618	2087		CONDT (PVC) (SCHD 80) (2") (BORE) (ROCK)	LF	135.000	
								2330.000			618	2088		CONDT (PVC) (SCHD 80) (3") (TRENCH) (ROCK)	LF	2330.000	
								3275.000			618	2089		CONDT (PVC) (SCHD 80) (3") (BORE) (ROCK)	LF	3275.000	
								5895.000			620	2009	001	ELEC CONDR (NO. 6) BARE	LF	5895.000	
								12240.000			620	2010	001	ELEC CONDR (NO. 6) INSULATED	LF	12240.000	
								11670.000			620	2011	001	ELEC CONDR (NO. 8) BARE	LF	11670.000	
								11300.000			620	2012	001	ELEC CONDR (NO. 8) INSULATED	LF	11300.000	
								4546.000			620	2015	001	ELEC CONDR (NO.12) BARE	LF	4546.000	
								9152.000			620	2016	001	ELEC CONDR (NO.12) INSULATED	LF	9152.000	

ESTIMATE & QUANTITY SHEET

STATE DIST. NO.	COUNTY	PROJECT NO.	SHEET NO.
15	BEXAR	CSJ 2452-01-050	4A

ESTIMATE SUMMARY

						BEXAR COUNTY CSJ 2452-01-050 LP 1604 BRIDGE ITEMS		BEXAR COUNTY CSJ 2452-01-050 LP 1604 ROADWAY ITEMS		ALT.	ITEM-CODE			DESCRIPTION	UNIT	TOTAL	
EST.	FINAL	EST.	FINAL	EST.	FINAL	EST.	FINAL	EST.	FINAL		ITEM NO	DESC CODE	SB NO			EST.	FINAL
								1040.000			620	2023	001	ELEC CONDR (NO.3/0) BARE	LF	1040.000	
								2080.000			620	2024	001	ELEC CONDR (NO.3/0) INSULATED	LF	2080.000	
								35.000			624	2008		GROUND BOX TY A (122311) W/APRON	EA	35.000	
								27.000			624	2014		GROUND BOX TY D (162922) W/APRON	EA	27.000	
								1.000			628	2036	001	ELC SRV TY A 240/480 100 (NS) SS (E) TP (O)	EA	1.000	
								4.000			628	2089	001	ELC SRV TY D 120/240 070 (NS) GS (N) TP (O)	EA	4.000	
								1.000			628	2129	001	ELC SRV TY D 120/240 125 (NS) GS (N) EX (O)	EA	1.000	
								2.000			628	2158	001	REMOVE ELECTRICAL SERVICES	EA	2.000	
								3.000			628	2174	001	ELC SRV TY A 240/480 060 (NS) AL (E) TP (O)	EA	3.000	
								88.750			636	2001	014	ALUMINUM SIGNS (TY A)	SF	88.750	
								833.500			636	2002	014	ALUMINUM SIGNS (TY G)	SF	833.500	
								63.000			636	2003	014	ALUMINUM SIGNS (TY O)	SF	63.000	
								4.000			644	2001		INS SM RD SN SUP&AM TY 10BWG (1) SA (P)	EA	4.000	
								47.000			644	2004		INS SM RD SN SUP&AM TY 10BWG (1) SA (T)	EA	47.000	
								3.000			644	2006		INS SM RD SN SUP&AM TY 10BWG (1) SA (U)	EA	3.000	
								2.000			644	2007		INS SM RD SN SUP&AM TY 10BWG (1) SB (P)	EA	2.000	
								8.000			644	2010		INS SM RD SN SUP&AM TY 10BWG (1) SB (T)	EA	8.000	
								19.000			644	2013		INS SM RD SN SUP&AM TY 10BWG (2) SA (P)	EA	19.000	
								4.000			644	2015		INS SM RD SN SUP&AM TY 10BWG (2) SB (P)	EA	4.000	
								4.000			644	2022		INS SM RD SN SUP&AM TY S80 (1) SA (P)	EA	4.000	
								9.000			644	2025		INS SM RD SN SUP&AM TY S80 (1) SA (T)	EA	9.000	
								3.000			644	2027		INS SM RD SN SUP&AM TY S80 (1) SA (U)	EA	3.000	
								2.000			644	2035		INS SM RD SN SUP&AM TY S80 (1) SB (T)	EA	2.000	
								4.000			644	2058		RELOCATE SM RD SN SUP & AM TY S80	EA	4.000	
								77.000			644	2060		REMOVE SM RD SN SUP & AM	EA	77.000	
								4942.200			647	2001		INSTALL LASS (STRUCT STEEL)	LB	4942.200	
								4.000			647	2003		REMOVE LASA	EA	4.000	
								6.000			658	2263		INSTL DEL ASSM (D-SY) SZ 1 (FLX) GND	EA	6.000	
								41.000			658	2316		INSTL OM ASSM (OM-2Z) (FLX) GND	EA	41.000	
								12.000			658	2318		INSTL OM ASSM (OM-2Z) (FLX) SRF	EA	12.000	
								16.000			658	2329		INSTL DEL ASSM (D-SW) SZ 1 (FLX) GND	EA	16.000	
								290.000			662	2001		WK ZN PAV MRK NON-REMOV (W) 4" (BRK)	LF	290.000	
								3565.000			662	2004		WK ZN PAV MRK NON-REMOV (W) 4" (SLD)	LF	3565.000	
								292.000			662	2012		WK ZN PAV MRK NON-REMOV (W) 8" (SLD)	LF	292.000	
								2.000			662	2017		WK ZN PAV MRK NON-REMOV (W) (ARROW)	EA	2.000	
								2.000			662	2027		WK ZN PAV MRK NON-REMOV (W) (WORD)	EA	2.000	
								3675.000			662	2032		WK ZN PAV MRK NON-REMOV (Y) 4" (SLD)	LF	3675.000	
								56.000			662	2039		WK ZN PAV MRK NON-REMOV (Y) 24" (SLD)	LF	56.000	
								260.000			662	2064		WK ZN PAV MRK REMOV (W) 4" (BRK)	LF	260.000	
								1996.000			662	2067		WK ZN PAV MRK REMOV (W) 4" (SLD)	LF	1996.000	
								200.000			662	2075		WK ZN PAV MRK REMOV (W) 8" (SLD)	LF	200.000	
								79.000			662	2079		WK ZN PAV MRK REMOV (W) 24" (SLD)	LF	79.000	
								1.000			662	2084		WK ZN PAV MRK REMOV (W) (ARROW)	EA	1.000	
								1.000			662	2094		WK ZN PAV MRK REMOV (W) (WORD)	EA	1.000	
								5690.000			662	2099		WK ZN PAV MRK REMOV (Y) 4" (SLD)	LF	5690.000	
								3774.000			662	2113		WK ZN PAV MRK SHT TERM (TAB) TY W	EA	3774.000	
								2494.000			666	2003		REFL PAV MRK TY I (W) 4" (BRK) (100MIL)	LF	2494.000	
								610.000			666	2006		REFL PAV MRK TY I (W) 4" (DOT) (100MIL)	LF	610.000	
								2603.000			666	2012		REFL PAV MRK TY I (W) 4" (SLD) (100MIL)	LF	2603.000	
								17858.000			666	2036		REFL PAV MRK TY I (W) 8" (SLD) (100MIL)	LF	17858.000	

ESTIMATE & QUANTITY SHEET

STATE DIST. NO.	COUNTY	PROJECT NO.	SHEET NO.
15	BEXAR	CSJ 2452-01-050	4B

ESTIMATE SUMMARY

						BEXAR COUNTY		BEXAR COUNTY		ALT.	ITEM-CODE			DESCRIPTION	UNIT	TOTAL	
						CSJ 2452-01-050		CSJ 2452-01-050									
						LP 1604 BRIDGE ITEMS		LP 1604 ROADWAY ITEMS									
EST.	FINAL	EST.	FINAL	EST.	FINAL	EST.	FINAL	EST.	FINAL		ITEM NO	DESC CODE	SP NO			EST.	FINAL
								2359.000			666	2048		REFL PAV MRK TY I (W) 24" (SLD) (100MIL)	LF	2359.000	
								48.000			666	2054		REFL PAV MRK TY I (W) (ARROW) (100MIL)	EA	48.000	
								20.000			666	2093		REFL PAV MRK TY I (W) (UTURN ARW) (100MIL)	EA	20.000	
								55.000			666	2096		REFL PAV MRK TY I (W) (WORD) (100MIL)	EA	55.000	
								123.000			666	2108		REFL PAV MRK TY I (Y) 4" (DOT) (100MIL)	LF	123.000	
								3266.000			666	2111		REFL PAV MRK TY I (Y) 4" (SLD) (100MIL)	LF	3266.000	
								2154.000			666	2123		REFL PAV MRK TY I (Y) 8" (SLD) (100MIL)	LF	2154.000	
								2908.000			666	2132		REFL PAV MRK TY I (Y) 24" (SLD) (100MIL)	LF	2908.000	
								9096.000			666	2189		PAVEMENT SEALER 4"	LF	9096.000	
								19912.000			666	2191		PAVEMENT SEALER 8"	LF	19912.000	
								5267.000			666	2195		PAVEMENT SEALER 24"	LF	5267.000	
								48.000			666	2219		PAVEMENT SEALER (ARROW)	EA	48.000	
								55.000			666	2220		PAVEMENT SEALER (WORD)	EA	55.000	
								20.000			666	2230		PAVEMENT SEALER UTURN ARROW	EA	20.000	
								168.000			672	2014	034	REFL PAV MRKR TY I-R	EA	168.000	
								108.000			672	2015	034	REFL PAV MRKR TY II-A-A	EA	108.000	
								1315.000			672	2017	034	REFL PAV MRKR TY II-C-R	EA	1315.000	
								12950.000			677	2001		ELIM EXT PAV MRK & MRKS (4")	LF	12950.000	
								4624.000			677	2003		ELIM EXT PAV MRK & MRKS (8")	LF	4624.000	
								870.000			677	2007		ELIM EXT PAV MRK & MRKS (24")	LF	870.000	
								18.000			677	2008		ELIM EXT PAV MRK & MRKS (ARROW)	EA	18.000	
								18.000			677	2018		ELIM EXT PAV MRK & MRKS (WORD)	EA	18.000	
								3092.000			678	2001		PAV SURF PREP FOR MRK (4")	LF	3092.000	
								2449.000			678	2002		PAV SURF PREP FOR MRK (6")	LF	2449.000	
								2830.000			678	2003		PAV SURF PREP FOR MRK (8")	LF	2830.000	
								2566.000			678	2006		PAV SURF PREP FOR MRK (24")	LF	2566.000	
								8.000			678	2007		PAV SURF PREP FOR MRK (ARROW)	EA	8.000	
								2.000			678	2018		PAV SURF PREP FOR MRK (WORD)	EA	2.000	
								6.000			680	2003		INSTALL HWY TRF SIG (SYSTEM)	EA	6.000	
								3.000			681	2001		TEMP TRAF SIGNALS	EA	3.000	
								57.000			682	2001	001	BACK PLATE (12 IN) (3 SEC)	EA	57.000	
								18.000			682	2012	001	LOUVER (12 IN) (ADJUSTABLE)	EA	18.000	
								22.000			682	2022	001	VEH SIG SEC (12 IN) LED (GRN ARW)	EA	22.000	
								35.000			682	2023	001	VEH SIG SEC (12 IN) LED (GRN)	EA	35.000	
								22.000			682	2024	001	VEH SIG SEC (12 IN) LED (YEL ARW)	EA	22.000	
								35.000			682	2025	001	VEH SIG SEC (12 IN) LED (YEL)	EA	35.000	
								22.000			682	2026	001	VEH SIG SEC (12 IN) LED (RED ARW)	EA	22.000	
								35.000			682	2027	001	VEH SIG SEC (12 IN) LED (RED)	EA	35.000	
								10.000			682	2043	001	PED SIG SEC (12") (2 IND) (HOUSING ONLY)	EA	10.000	
								12015.000			684	2035		TRF SIG CBL (TY A) (14 AWG) (9 CONDR)	LF	12015.000	
								2.000			685	2004	014	INSTL RDSD FLSH BEACON ASSM (SOLAR PWRD)	EA	2.000	
								1.000			686	2031		INS TRF SIG PL AM (S) 1 ARM (32')	EA	1.000	
								3.000			686	2039		INS TRF SIG PL AM (S) 1 ARM (40')	EA	3.000	
								1.000			686	2041		INS TRF SIG PL AM (S) 1 ARM (40') LUM	EA	1.000	
								1.000			686	2043		INS TRF SIG PL AM (S) 1 ARM (44')	EA	1.000	
								1.000			686	2045		INS TRF SIG PL AM (S) 1 ARM (44') LUM	EA	1.000	
								1.000			686	2049		INS TRF SIG PL AM (S) 1 ARM (48') LUM	EA	1.000	
								2.000			686	2213		INS TRF SIG PL AM (S) 2 ARM (55-36') LUM	EA	2.000	
								1.000			686	2249		INS TRF SIG PL AM (S) 2 ARM (60-44') LUM	EA	1.000	
								2.000			686	2277		INS TRF SIG PL AM (S) 2 ARM (65-44') LUM	EA	2.000	

ESTIMATE & QUANTITY SHEET

STATE DIST. NO.	COUNTY	PROJECT NO.	SHEET NO.
15	BEXAR	CSJ 2452-01-050	4C

ESTIMATE SUMMARY

BEXAR COUNTY CSJ 2452-01-050 LP 1604 BRIDGE ITEMS				BEXAR COUNTY CSJ 2452-01-050 LP 1604 ROADWAY ITEMS		ALT	ITEM-CODE			DESCRIPTION	UNIT	TOTAL	
EST.	FINAL	EST.	FINAL	EST.	FINAL		ITEM NO	DESC CODE	SP NO			EST.	FINAL
							687	2001	004	PED POLE ASSEMBLY	EA	21.000	
							772	2004		POST AND CABLE FENCE (NEW CONC ANCHOR)	EA	1.000	
							1018	2002		TREE PROTECTION	AC	5.820	
							6007	2001		REMOVING TRAFFIC SIGNALS	EA	3.000	
							6834	2001		PORTABLE CHANGEABLE MESSAGE SIGN	DAY	221.000	
							8020	2005		REF PROF PAV MRK TY I (W) 6" (SLD) (100MIL)	LF	18089.000	
							8020	2009		REF PROF PAV MRK TY I (Y) 6" (SLD) (100MIL)	LF	14341.000	
							8251	2009	005	RE PM W/RET REQ TY I (W) 6" (BRK) (100MIL)	LF	6760.000	
							8251	2034	005	PAVEMENT SEALER 6"	LF	39190.000	
							8627	2001		LED COUNTDOWN PEDESTRIAN MODULE	EA	10.000	
							8628	2001		RADAR ADVANCE DETECTION DEVICE	EA	13.000	
							8642	2001		AUDIBLE PEDESTRIAN SIGNAL UNITS	EA	10.000	
							8662	2001		RADAR PRESENCE DETECTION DEVICE *	EA	16.000	
							8666	2001		CCTV FIELD EQUIPMENT *	EA	6.000	
							8667	2001		BBU SYSTEM (EXTERNAL BATT CABINET) *	EA	7.000	
										CONTRACTOR FORCE ACCOUNT WORK (PART)			
										ELEC SVC FEES (CPS)	LS	1.000	
										OFF-DUTY LAW ENFORCEMENT	LS	1.000	
										TESTING	LS	1.000	
										SW3P MAINTENANCE	LS	1.000	
										TRAF SIG CONTROLLER SET-UP & INSPECTION	LS	1.000	

ESTIMATE & QUANTITY SHEET

*REVISED 10/19/10

STATE DIST. NO.	COUNTY	PROJECT NO.	SHEET NO.
15	BEXAR	CSJ 2452-01-050	4D

Plotted on: 8/18/2010

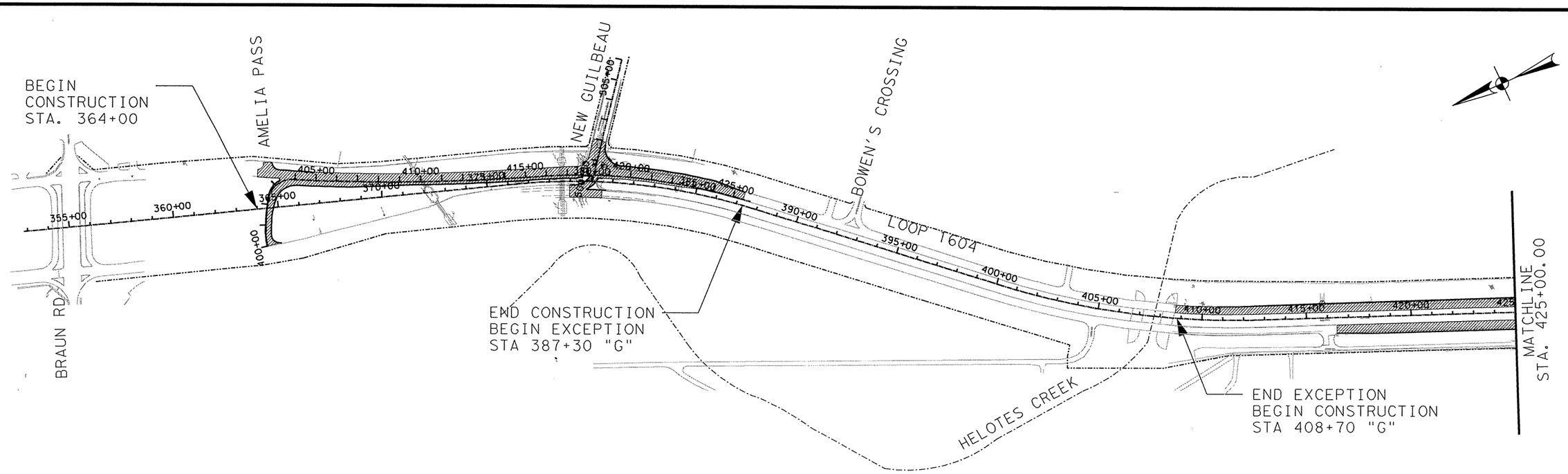

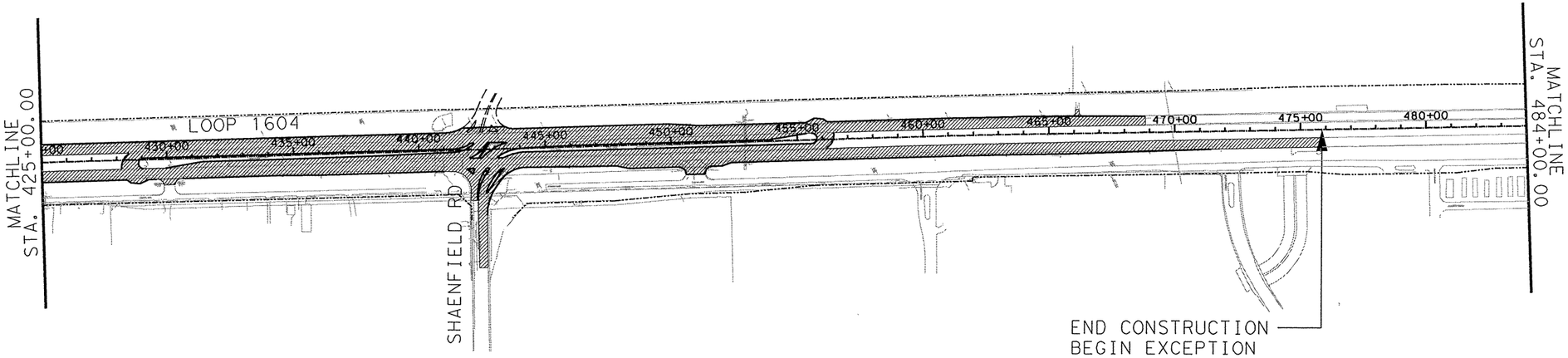

SCOTT D. ARMSTRONG
69320
LICENSED PROFESSIONAL ENGINEER
STATE OF TEXAS
SCOTT D. ARMSTRONG, P.E.
8/18/2010
DATE

SCALE: PLAN - 1":500'

REV. NO.	DATE	DESCRIPTION	BY

ALAMO RMA

PAPE-DAWSON ENGINEERS
555 EAST RAMSEY | SAN ANTONIO, TEXAS 78216 | PHONE: 210.375.9000 FAX: 210.375.9010
TEXAS BOARD OF PROFESSIONAL ENGINEERS, FIRM REGISTRATION # 470

Texas Department of Transportation
© 2010

LOOP 1604
PROJECT LAYOUT

SHEET 1 OF 2

DGN:	FED. RD. DIV. NO.	STATE	FEDERAL AID PROJECT NO.			HIGHWAY NO.
CHK DGN:	6	TEXAS	STP 2011(210)ES			LP 1604
DWG:	DIST.	COUNTY	CONT. NO.	SECT. NO.	JOB NO.	SHEET NO.
CHK DWG:	SAT	BEXAR	2452	01	050	5

Design Filename: p:\74\00\04\design\civil\general\740004PRJ01.dgn

Plotted on: 8/18/2010

Design Filename: p:\74\00\04\design\civil\general\740004PRJ02.dgn

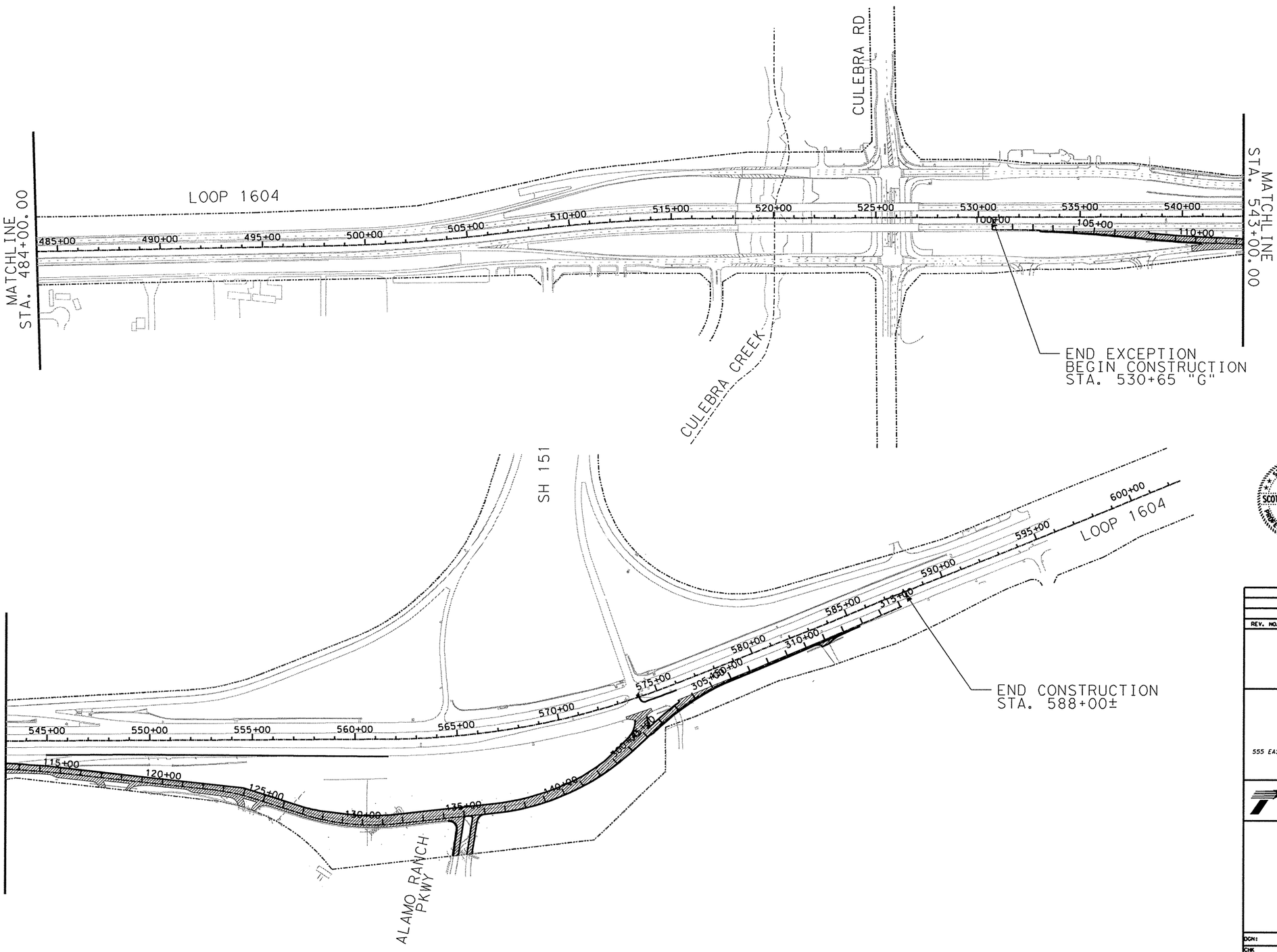

SCOTT D. ARMSTRONG
69320
LICENSED PROFESSIONAL ENGINEER
STATE OF TEXAS

SCOTT D. ARMSTRONG, P.E. — 8/18/2010 DATE

SCALE: PLAN - 1":500'

REV. NO.	DATE	DESCRIPTION	BY

ALAMO RMA

PAPE-DAWSON ENGINEERS

555 EAST RAMSEY | SAN ANTONIO, TEXAS 78216 | PHONE: 210.375.9000 FAX: 210.375.9010

TEXAS BOARD OF PROFESSIONAL ENGINEERS, FIRM REGISTRATION # 470

Texas Department of Transportation
© 2010

LOOP 1604

PROJECT LAYOUT

SHEET 2 OF 2

DGN:	FED. RD. DIV. NO.	STATE	FEDERAL AID PROJECT NO.			HIGHWAY NO.
CHK DGN:	6	TEXAS	STP 2011(210)ES			LP 1604
DWG:	DIST.	COUNTY	CONT. NO.	SECT. NO.	JOB NO.	SHEET NO.
CHK DWG:	SAT	BEXAR	2452	01	050	6

Plotted on: 06/30/2010

Design Filename: P:\7400\04\Design\Civil\Survey\7400-04 CONTROL SKETCHES.dgn

NOTES:

1. COORDINATES AND DISTANCES SHOWN ARE U.S. SURVEY FEET, DISPLAYED IN SURFACE VALUES USING THE RECIPROCAL COMBINED SCALE FACTOR OF 1.00017.

2. HORIZONTAL COORDINATE VALUES FOR CONTROL POINTS 14 THROUGH 17 WERE DERIVED USING RTK SURVEY METHODS HOLDING THE NAD83(1986) HORIZONTAL SURFACE VALUES FOR THE FOLLOWING CONTROL POINTS PREVIOUSLY ESTABLISHED BY SURVCON INC.

SURVCON CONTROL POINT 30
NAD83 (1986)
N 13726088.8490
E 2061074.4540

SURVCON CONTROL POINT 5002
NAD 83 (1986)
N 13725766.2130
E 2061827.2760

3. VERTICAL VALUES FOR CONTROL POINTS 14 THROUGH 17 WERE DERIVED USING A DOUBLE RUN LEVEL LOOP HOLDING THE NAVD 88 VERTICAL VALUE FOR THE FOLLOWING CONTROL POINT PREVIOUSLY ESTABLISHED BY SURVCON INC.

SURVCON CONTROL POINT 30
NAVD88
ELEVATION = 935.30'

NOT TO SCALE

REV. NO.	DATE	DESCRIPTION	BY

STATE OF TEXAS
REGISTERED
ANGELA MARIE CARLIN
5981
PROFESSIONAL
LAND SURVEYOR

6/30/2010

ALAMO RMA

PAPE-DAWSON ENGINEERS
555 EAST RAMSEY | SAN ANTONIO, TEXAS 78216 | PHONE: 210.375.9000 FAX: 210.375.9010
TEXAS BOARD OF PROFESSIONAL ENGINEERS, FIRM REGISTRATION # 470

Texas Department of Transportation © 2010

LOOP 1604 AT S.H. 151

PRIMARY HORIZONTAL AND VERTICAL CONTROL

SHEET 1 OF 2

DGN:	FED. RD. DIV. NO.	STATE	FEDERAL AID PROJECT NO.			HIGHWAY NO.
CHK DGN:	6	TEXAS	STP 2011(210)ES			LP 1604
DWG:	DIST.	COUNTY	CONT. NO.	SECT. NO.	JOB NO.	SHEET NO.
CHK DWG:	SAT	BEXAR	2452	01	050	7

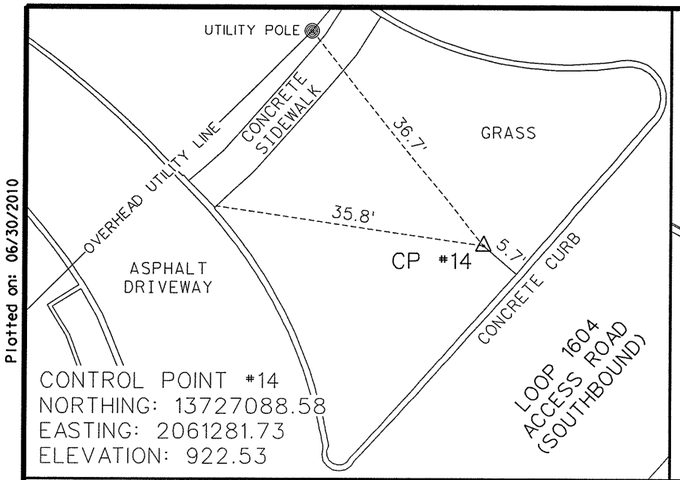

BERNTSEN ROD WITH ALUMINUM CAP STAMPED "PD-14" LOCATED ALONG LOOP 1604 SOUTHBOUND ACCESS ROAD APPROXIMATELY 1100 FEET NORTHEASTERLY FROM THE INTERSECTION OF ALAMO RANCH PARKWAY AND LOOP 1604 SOUTHBOUND ACCESS ROAD.

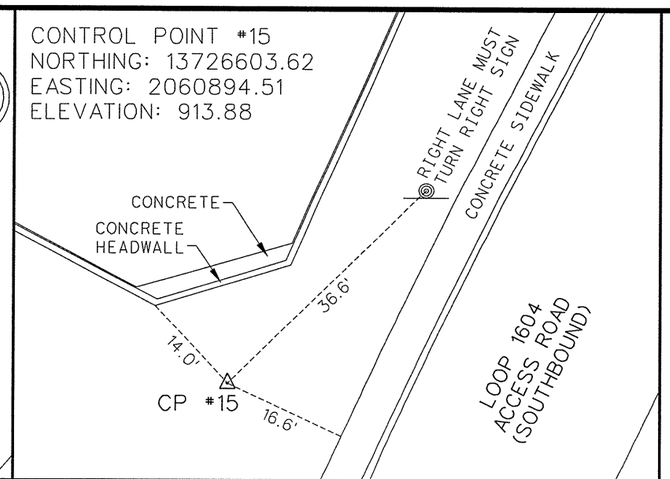

BERNTSEN ROD WITH ALUMINUM CAP STAMPED "PD-15" LOCATED ALONG LOOP 1604 SOUTHBOUND ACCESS ROAD APPROXIMATELY 500 FEET NORTHEASTERLY FROM THE INTERSECTION OF ALAMO RANCH PARKWAY AND LOOP 1604 SOUTHBOUND ACCESS ROAD.

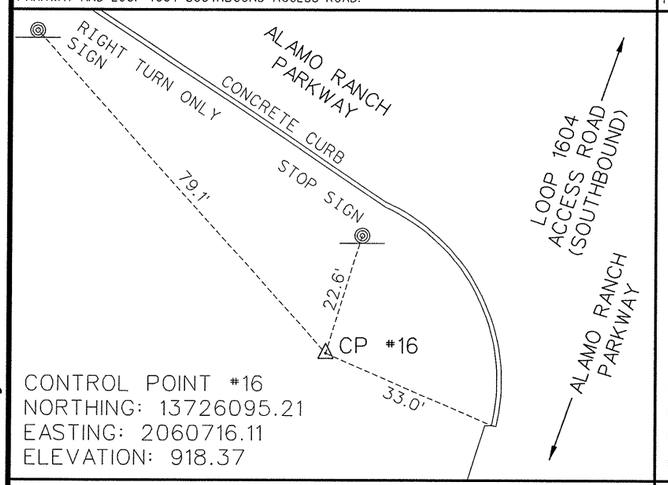

BERNTSEN ROD WITH ALUMINUM CAP STAMPED "PD-16" LOCATED ALONG ALAMO RANCH PARKWAY AT THE INTERSECTION OF ALAMO RANCH PARKWAY AND THE SOUTHBOUND LOOP 1604 ACCESS ROAD.

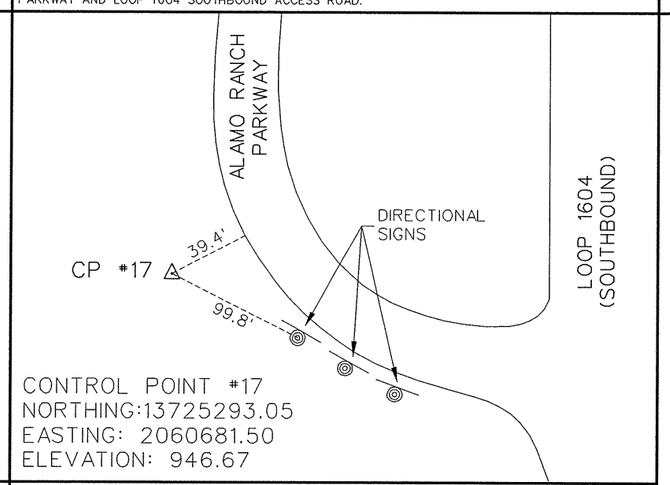

MAG NAIL WITH SHINER IN ROCK LOCATED ALONG ALAMO RANCH PARKWAY APPROXIMATELY 0.10 MILES NORTHWEST OF INTERSECTION OF ALAMO RANCH PARKWAY AND HIGHWAY 1604 SOUTHBOUND.

NOTES:

1. COORDINATES AND DISTANCES SHOWN ARE U.S. SURVEY FEET, DISPLAYED IN SURFACE VALUES USING THE RECIPROCAL COMBINED SCALE FACTOR OF 1.00017.

2. HORIZONTAL COORDINATE VALUES FOR CONTROL POINTS 14 THROUGH 17 WERE DERIVED USING RTK SURVEY METHODS HOLDING THE NAD83(1986) HORIZONTAL SURFACE VALUES FOR THE FOLLOWING CONTROL POINTS PREVIOUSLY ESTABLISHED BY SURVCON INC.

SURVCON CONTROL POINT 30
NAD83 (1986)
N 13726088.8490
E 2061074.4540

SURVCON CONTROL POINT 5002
NAD 83 (1986)
N 13725766.2130
E 2061827.2760

3. VERTICAL VALUES FOR CONTROL POINTS 14 THROUGH 17 WERE DERIVED USING A DOUBLE RUN LEVEL LOOP HOLDING THE NAVD 88 VERTICAL VALUE FOR THE FOLLOWING CONTROL POINT PREVIOUSLY ESTABLISHED BY SURVCON INC.

SURVCON CONTROL POINT 30
NAVD88
ELEVATION = 935.30'

STATE OF TEXAS REGISTERED ANGELA MARIE CARLIN 5981 PROFESSIONAL LAND SURVEYOR

6/30/2010

NOT TO SCALE

REV. NO.	DATE	DESCRIPTION	BY

ALAMO RMA

PAPE-DAWSON ENGINEERS

555 EAST RAMSEY | SAN ANTONIO, TEXAS 78216 | PHONE: 210.375.9000 FAX: 210.375.9010

TEXAS BOARD OF PROFESSIONAL ENGINEERS, FIRM REGISTRATION # 470

Texas Department of Transportation
© 2010

LOOP 1604 AT S.H. 151

PRIMARY HORIZONTAL AND VERTICAL CONTROL

SHEET 2 OF 2

DGN:	FED. RD. DIV. NO.	STATE	FEDERAL AID PROJECT NO.			HIGHWAY NO.
CHK DGN:	6	TEXAS	STP 2011(210)ES			LP 1604
DWG:	DIST.	COUNTY	CONT. NO.	SECT. NO.	JOB NO.	SHEET NO.
CHK DWG:	SAT	BEXAR	2452	01	050	8

Plotted on: 06/30/2010

Design Filename: P:\7400\04\Design\Civil\Survey\7400-04 CONTROL SKETCHES.dgn

NOTES:

1. COORDINATES AND DISTANCES SHOWN ARE U.S. SURVEY FEET, DISPLAYED IN SURFACE VALUES USING THE RECIPROCAL COMBINED SCALE FACTOR OF 1.00017.

2. HORIZONTAL COORDINATE VALUES ARE BASED ON THE NORTH AMERICAN DATUM OF 1983 (1996), FROM THE TEXAS COORDINATE SYSTEM ESTABLISHED FOR THE SOUTH CENTRAL ZONE.

3. VERTICAL VALUES ARE BASED ON NAVD88.

STATE OF TEXAS
REGISTERED
ANGELA MARIE CARLIN
5981
PROFESSIONAL
LAND SURVEYOR

6/30/2010

NOT TO SCALE

REV. NO.	DATE	DESCRIPTION	BY

ALAMO RMA

PAPE-DAWSON ENGINEERS

555 EAST RAMSEY | SAN ANTONIO, TEXAS 78216 | PHONE: 210.375.9000 FAX: 210.375.9010

TEXAS BOARD OF PROFESSIONAL ENGINEERS, FIRM REGISTRATION # 470

Texas Department of Transportation
© 2010

LOOP 1604

PRIMARY HORIZONTAL AND VERTICAL CONTROL

SHEET 1 OF 3

DGN:	FED. RD. DIV. NO.	STATE	FEDERAL AID PROJECT NO.			HIGHWAY NO.
CHK DGN:	6	TEXAS	STP 2011(210)ES			LP 1604
DWG:	DIST.	COUNTY	CONT. NO.	SECT. NO.	JOB NO.	SHEET NO.
CHK DWG:	SAT	BEXAR	2452	01	050	9

Plotted on: 06/30/2010

Design Filename: P:\74\00\04\Design\Civil\Survey\7400-04 CONTROL SKETCHES.dgn

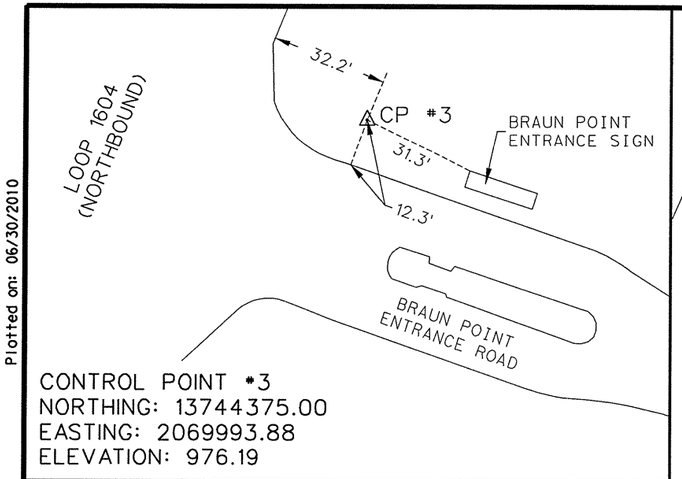

CONTROL POINT #3
NORTHING: 13744375.00
EASTING: 2069993.88
ELEVATION: 976.19

BERNTSEN ROD WITH ALUMINUM CAP STAMPED "PD-3" LOCATED ALONG LOOP 1604 NORTHBOUND APPROXIMATELY 0.4 MILES NORTH OF THE INTERSECTION OF NEW GUILBEAU ROAD AND LOOP 1604.

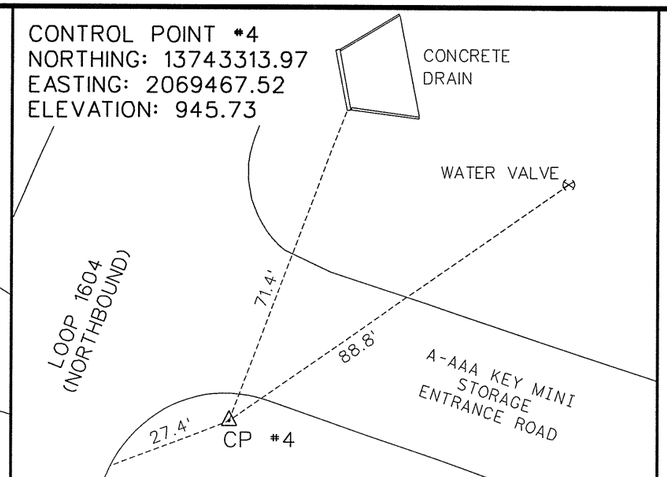

CONTROL POINT #4
NORTHING: 13743313.97
EASTING: 2069467.52
ELEVATION: 945.73

BERNTSEN ROD WITH ALUMINUM CAP STAMPED "PD-4" LOCATED ALONG LOOP 1604 NORTHBOUND APPROXIMATELY 0.1 MILES NORTH OF THE INTERSECTION OF NEW GUILBEAU ROAD AND LOOP 1604.

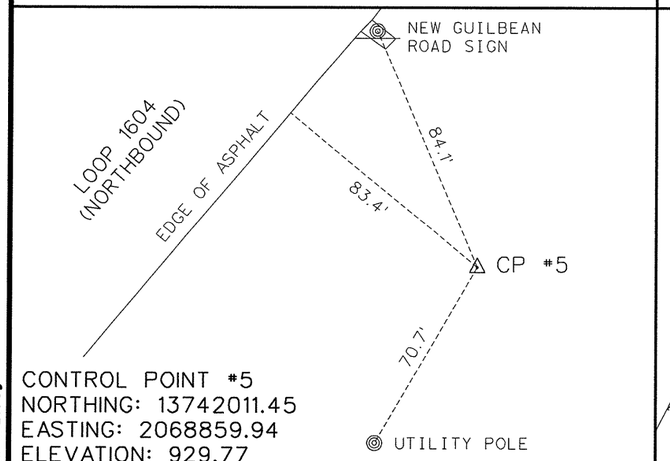

CONTROL POINT #5
NORTHING: 13742011.45
EASTING: 2068859.94
ELEVATION: 929.77

BERNTSEN ROD WITH ALUMINUM CAP STAMPED "PD-5" LOCATED ALONG LOOP 1604 NORTHBOUND APPROXIMATELY 0.1 MILES NORTH FROM THE INTERSECTION OF BOWENS CROSSING AND LOOP 1604.

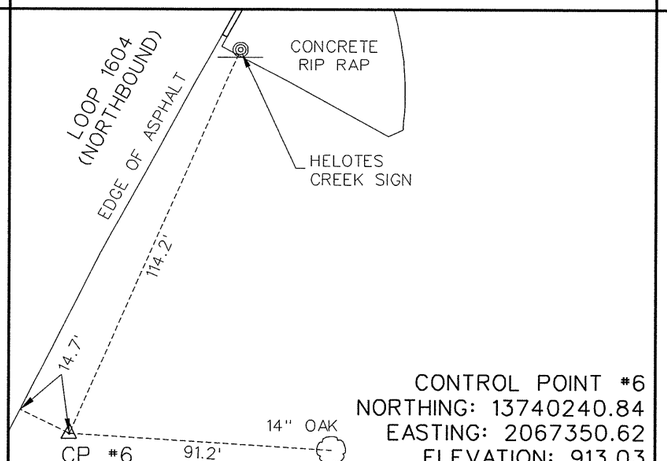

CONTROL POINT #6
NORTHING: 13740240.84
EASTING: 2067350.62
ELEVATION: 913.03

BERNTSEN ROD WITH ALUMINUM CAP STAMPED "PD-6" LOCATED ALONG LOOP 1604 NORTHBOUND APPROXIMATELY 0.6 MILES NORTH OF THE INTERSECTION OF SHAENFIELD ROAD AND LOOP 1604.

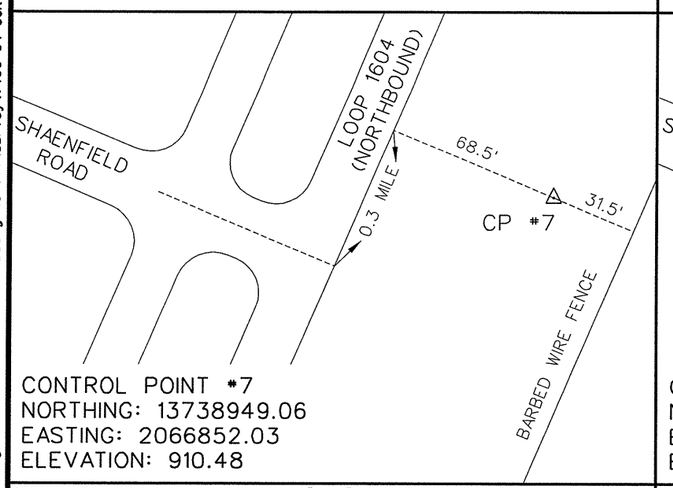

CONTROL POINT #7
NORTHING: 13738949.06
EASTING: 2066852.03
ELEVATION: 910.48

BERNTSEN ROD WITH ALUMINUM CAP STAMPED "PD-7" LOCATED ALONG LOOP 1604 NORTHBOUND APPROXIMATELY 0.3 MILES NORTH OF THE INTERSECTION OF SHAENFIELD ROAD AND LOOP 1604.

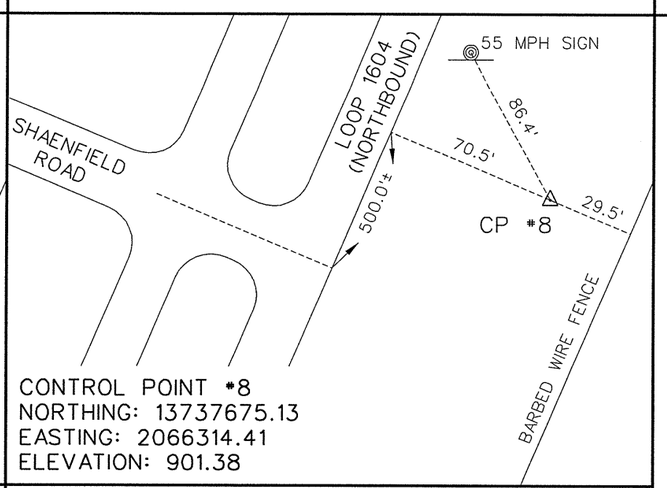

CONTROL POINT #8
NORTHING: 13737675.13
EASTING: 2066314.41
ELEVATION: 901.38

BERNTSEN ROD WITH ALUMINUM CAP STAMPED "PD-8" LOCATED ALONG LOOP 1604 NORTHBOUND APPROXIMATELY 500 FEET NORTH OF THE INTERSECTION OF SHAENFIELD ROAD AND LOOP 1604.

NOTES:

1. COORDINATES AND DISTANCES SHOWN ARE U.S. SURVEY FEET, DISPLAYED IN SURFACE VALUES USING THE RECIPROCAL COMBINED SCALE FACTOR OF 1.00017.

2. HORIZONTAL COORDINATE VALUES ARE BASED ON THE NORTH AMERICAN DATUM OF 1983 (1996), FROM THE TEXAS COORDINATE SYSTEM ESTABLISHED FOR THE SOUTH CENTRAL ZONE.

3. VERTICAL VALUES ARE BASED ON NAVD88.

STATE OF TEXAS
REGISTERED
ANGELA MARIE CARLIN
5981
PROFESSIONAL
LAND SURVEYOR

6/30/2010

NOT TO SCALE

REV. NO.	DATE	DESCRIPTION	BY

ALAMO RMA

PAPE-DAWSON ENGINEERS
555 EAST RAMSEY | SAN ANTONIO, TEXAS 78216 | PHONE: 210.375.9000 FAX: 210.375.9010
TEXAS BOARD OF PROFESSIONAL ENGINEERS, FIRM REGISTRATION # 470

Texas Department of Transportation
© 2010

LOOP 1604

PRIMARY
HORIZONTAL
AND VERTICAL
CONTROL

SHEET 2 OF 3

DGN:	FED. RD. DIV. NO.	STATE	FEDERAL AID PROJECT NO.			HIGHWAY NO.
CHK DGN:	6	TEXAS	STP 2011(210)ES			LP 1604
DWG:	DIST.	COUNTY	CONT. NO.	SECT. NO.	JOB NO.	SHEET NO.
CHK DWG:	SAT	BEXAR	2452	01	050	10

Plotted on: 06/30/2010

Design Filename: P:\7400\04\Design\Civil\Survey\7400-04 CONTROL SKETCHES.dgn

Plotted on: 06/30/2010

CONTROL POINT #9
NORTHING: 13737143.65
EASTING: 2065787.87
ELEVATION: 905.27

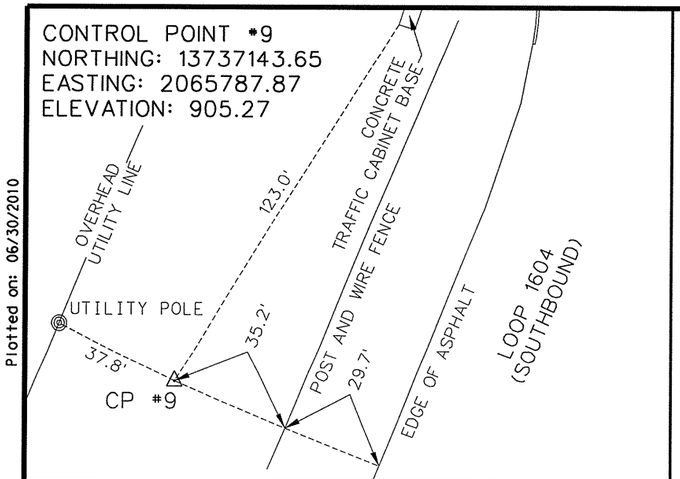

BERNTSEN ROD WITH ALUMINUM CAP STAMPED "PD-9" LOCATED ALONG LOOP 1604 SOUTHBOUND APPROXIMATELY 200 FEET SOUTH OF THE INTERSECTION OF SHAENFIELD ROAD AND LOOP 1604.

CONTROL POINT #10
NORTHING: 13735906.65
EASTING: 2065286.06
ELEVATION: 903.25

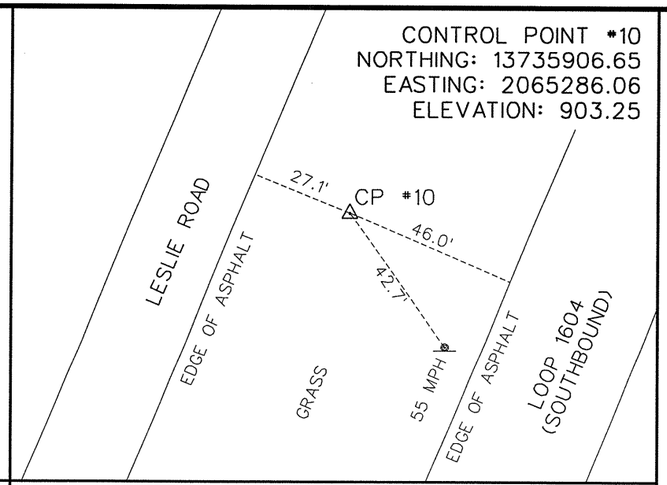

BERNTSEN ROD WITH ALUMINUM CAP STAMPED "PD-10" LOCATED BETWEEN LOOP 1604 SOUTHBOUND AND LESLIE ROAD, APPROXIMATELY 220 FEET NORTH OF THE INTERSECTION OF OSCAR WOOD PLACE AND LESLIE ROAD.

CONTROL POINT #11
NORTHING: 13735038.31
EASTING: 2064915.79
ELEVATION: 898.66

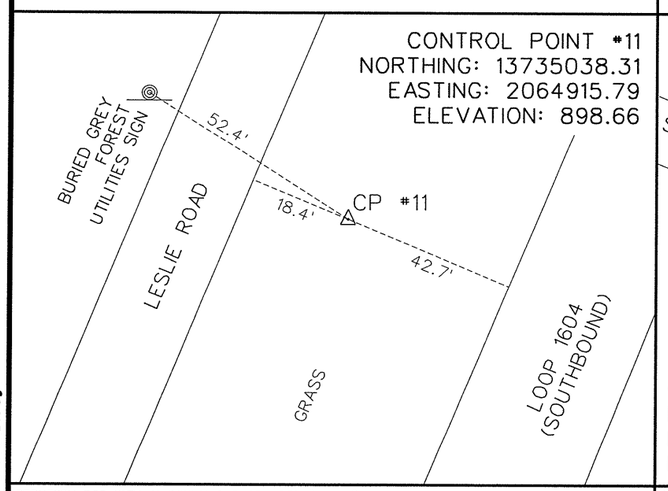

BERNTSEN ROD WITH ALUMINUM CAP STAMPED "PD-11" LOCATED BETWEEN LOOP 1604 SOUTHBOUND AND LESLIE ROAD, APPROXIMATELY 720 FEET SOUTH OF THE INTERSECTION OF OSCAR WOOD PLACE AND LESLIE ROAD.

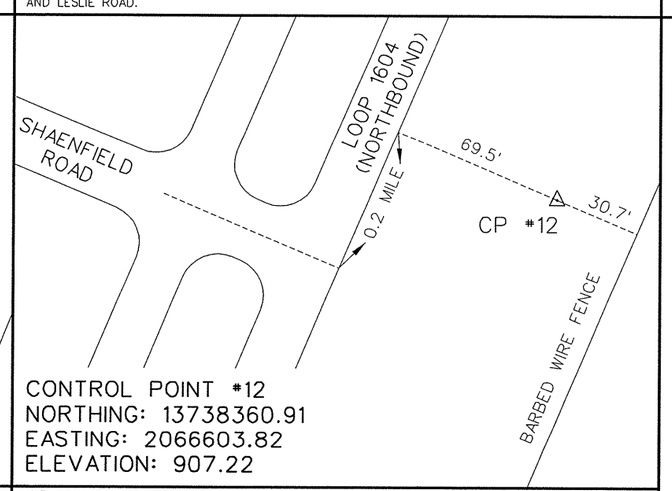

CONTROL POINT #12
NORTHING: 13738360.91
EASTING: 2066603.82
ELEVATION: 907.22

1/2" IRON ROD WITH RED CAP LOCATED ALONG LOOP 1604 NORTHBOUND APPROXIMATELY 500 FEET NORTH OF THE INTERSECTION OF SHAENFIELD ROAD AND LOOP 1604.

NOTES:

1. COORDINATES AND DISTANCES SHOWN ARE U.S. SURVEY FEET, DISPLAYED IN SURFACE VALUES USING THE RECIPROCAL COMBINED SCALE FACTOR OF 1.00017.

2. HORIZONTAL COORDINATE VALUES ARE BASED ON THE NORTH AMERICAN DATUM OF 1983 (1996), FROM THE TEXAS COORDINATE SYSTEM ESTABLISHED FOR THE SOUTH CENTRAL ZONE.

3. VERTICAL VALUES ARE BASED ON NAVD88.

STATE OF TEXAS
REGISTERED
ANGELA MARIE CARLIN
5981
PROFESSIONAL
LAND SURVEYOR

6/30/2010

NOT TO SCALE

REV. NO.	DATE	DESCRIPTION	BY

ALAMO RMA

PAPE-DAWSON ENGINEERS
555 EAST RAMSEY | SAN ANTONIO, TEXAS 78216 | PHONE: 210.375.9000 FAX: 210.375.9010
TEXAS BOARD OF PROFESSIONAL ENGINEERS, FIRM REGISTRATION # 470

Texas Department of Transportation ©2010

LOOP 1604

PRIMARY HORIZONTAL AND VERTICAL CONTROL

SHEET 3 OF 3

DGN:	FED. RD. DIV. NO.	STATE	FEDERAL AID PROJECT NO.			HIGHWAY NO.
CHK DGN:	6	TEXAS	STP 2011(210)ES			LP 1604
DWG:	DIST.	COUNTY	CONT. NO.	SECT. NO.	JOB NO.	SHEET NO.
CHK DWG:	SAT	BEXAR	2452	01	050	11

Design Filename: P:\7400\04\Design\Civil\Survey\7400-04 CONTROL SKETCHES.dgn

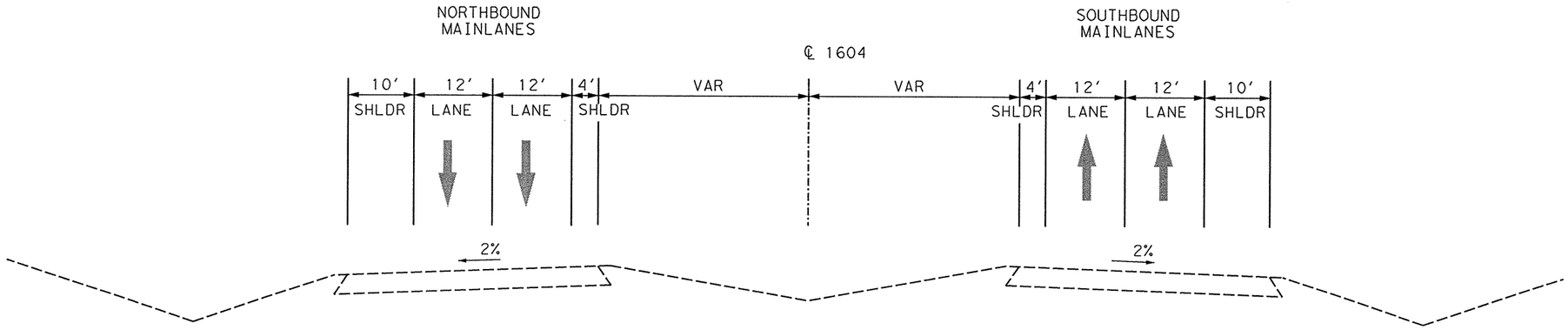

TYPICAL SECTION
STA. 364+00 TO STA. 466+00±
(N. OF NEW GUILBEAU TO S. OF SHAENFIELD)

NOTE: STA. 364+00 TO STA. 372+00± SB
TO BE RESTRIPED TO 3 LANES
BY OTHERS.

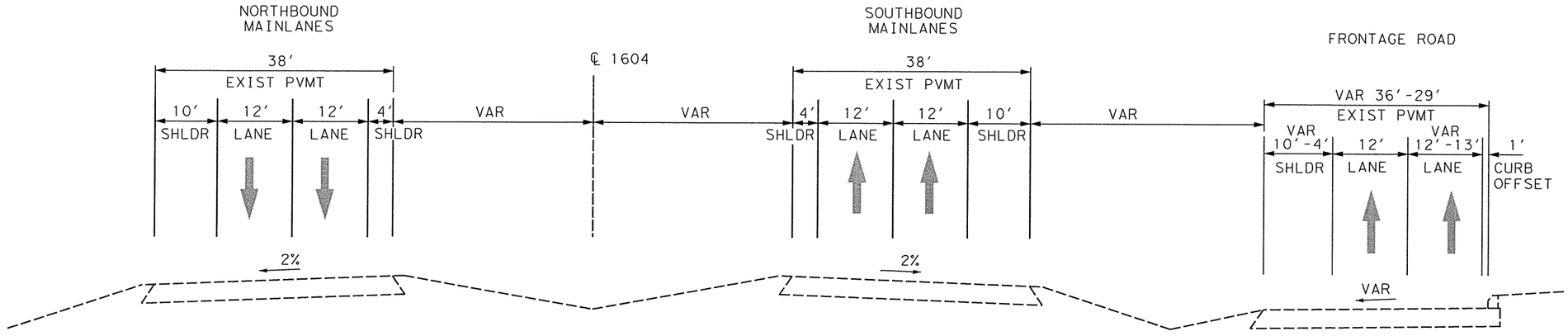

TYPICAL SECTION
STA. 530+00± TO STA. 574+00±
(CULEBRA RD TO S. OF ALAMO RANCH PKWY/SH 151)

STATE OF TEXAS
SCOTT D. ARMSTRONG
69320
LICENSED PROFESSIONAL ENGINEER

SCOTT D. ARMSTRONG, P.E. — 6/25/2010 DATE

NOT TO SCALE

REV. NO.	DATE	DESCRIPTION	BY

ALAMO RMA

PAPE-DAWSON ENGINEERS
555 EAST RAMSEY | SAN ANTONIO, TEXAS 78216 | PHONE: 210.375.9000 FAX: 210.375.9010
TEXAS BOARD OF PROFESSIONAL ENGINEERS, FIRM REGISTRATION # 470

Texas Department of Transportation
© 2010

LOOP 1604
EXISTING TYPICAL SECTIONS

SHEET 1 OF 2

DGN:	FED. RD. DIV. NO.	STATE	FEDERAL AID PROJECT NO.			HIGHWAY NO.
CHK DGN:	6	TEXAS	STP 2011(210)ES			LP 1604
DWG:	DIST.	COUNTY	CONT. NO.	SECT. NO.	JOB NO.	SHEET NO.
CHK DWG:	SAT	BEXAR	2452	01	050	12

Plotted on: 6/25/2010

Design Filename: p:\74\00\04\design\civil\general\740004TYP01.dgn

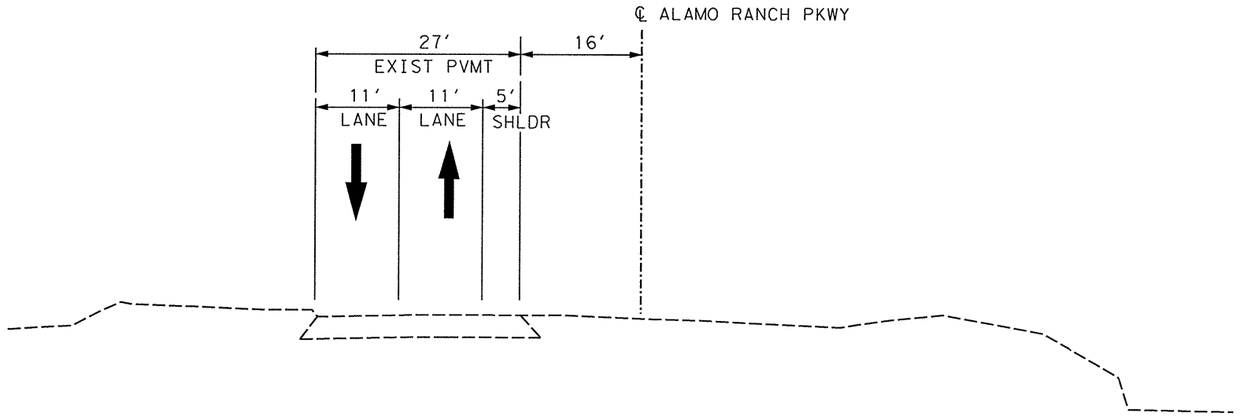

TYPICAL SECTION
ALAMO RANCH PARKWAY

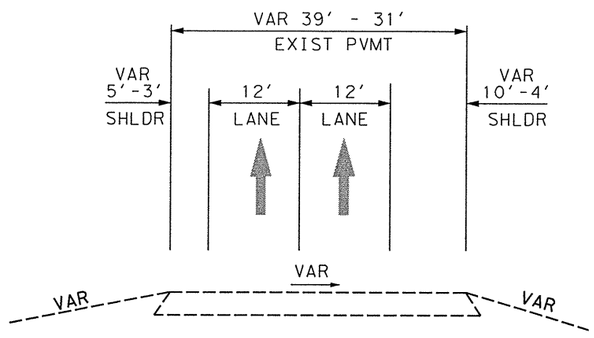

TYPICAL SECTION
EB SH 151
(FROM LP 1604 TO CONNECTOR)

STATE OF TEXAS
SCOTT D. ARMSTRONG
69320
LICENSED
PROFESSIONAL ENGINEER

SCOTT D. ARMSTRONG, P.E. — 6/25/2010 DATE

NOT TO SCALE

REV. NO.	DATE	DESCRIPTION	BY

ALAMO RMA

PAPE-DAWSON ENGINEERS

555 EAST RAMSEY | SAN ANTONIO, TEXAS 78216 | PHONE: 210.375.9000 FAX: 210.375.9010

TEXAS BOARD OF PROFESSIONAL ENGINEERS, FIRM REGISTRATION # 470

Texas Department of Transportation
© 2010

LOOP 1604

EXISTING TYPICAL SECTIONS

SHEET 2 OF 2

DGN:	FED. RD. DIV. NO.	STATE	FEDERAL AID PROJECT NO.			HIGHWAY NO.
CHK DGN:	6	TEXAS	STP 2011(210)ES			LP 1604
DWG:	DIST.	COUNTY	CONT. NO.	SECT. NO.	JOB NO.	SHEET NO.
CHK DWG:	SAT	BEXAR	2452	01	050	13

Plotted on: 6/25/2010

Design filename: p:\74\00\04\design\civil\general\740004TYP02.dgn

Plotted on: 7/7/2010

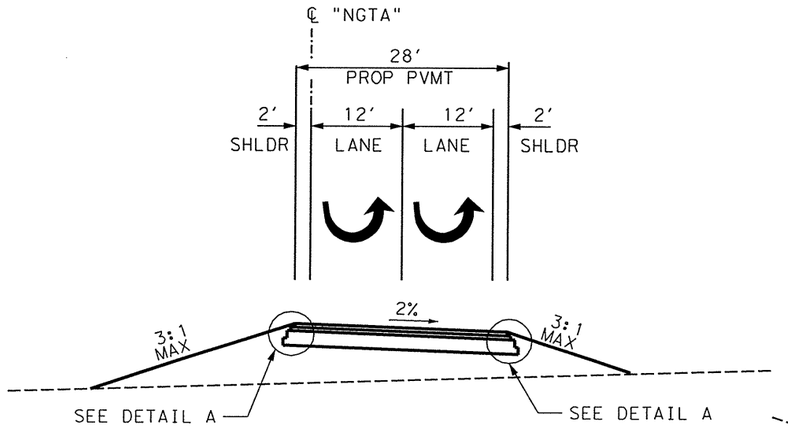

TYPICAL SECTION
TURN AROUND
(N. OF NEW GUILBEAU)

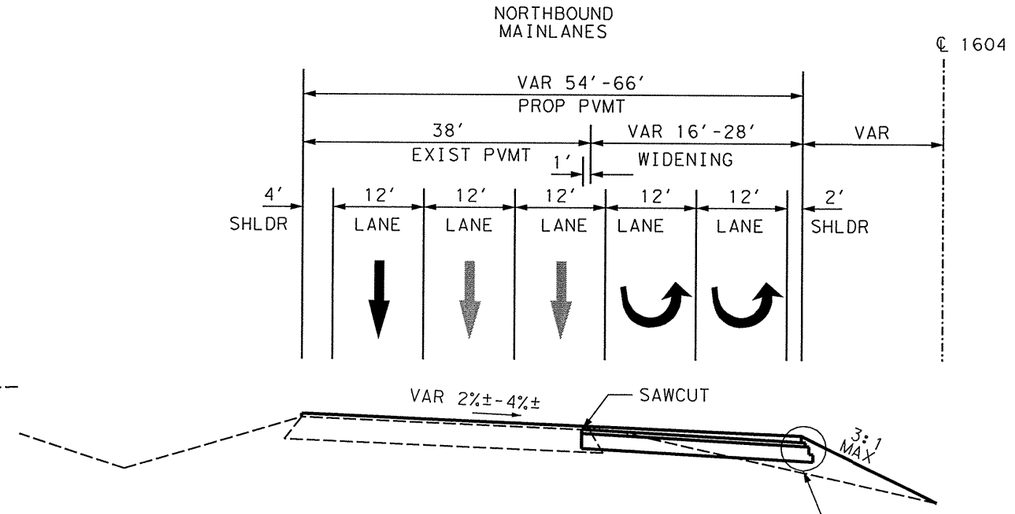

TYPICAL SECTION
STA. 365+00.00 TO STA. 380+00.00
(N. OF NEW GUILBEAU)

LEGEND

- Ⓐ 2" HMAC (TY C)(SURF) ON ONE COURSE SURFACE TREATMENT
- Ⓑ 2" HMAC (TY C)
- Ⓒ 8" HMAC (TY B) (TO BE PLACED IN TWO EQUAL LIFTS)
- Ⓓ 4" HMAC (TY B)

NOTE
PAVEMENT WIDENING TO MATCH EXISTING CROSS-SLOPE UNLESS SHOWN OTHERWISE ON ROADWAY PLAN SHEETS.

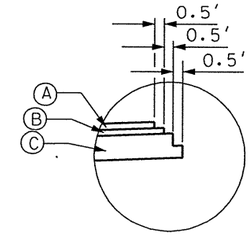

DETAIL A

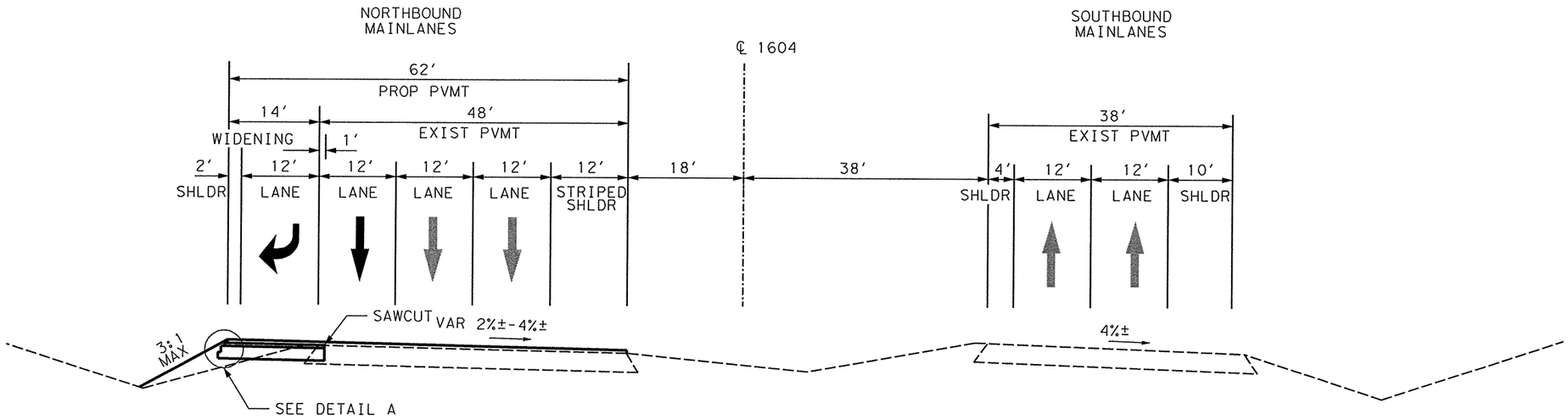

TYPICAL SECTION
STA. 380+00.00 TO STA. 386+00.00
(S. OF NEW GUILBEAU)

SCOTT D. ARMSTRONG
69320
LICENSED PROFESSIONAL ENGINEER
STATE OF TEXAS

SCOTT D. ARMSTRONG, P.E.

7/7/2010
DATE

NOT TO SCALE

REV. NO.	DATE	DESCRIPTION	BY

ALAMO RMA

PAPE-DAWSON ENGINEERS

555 EAST RAMSEY | SAN ANTONIO, TEXAS 78216 | PHONE: 210.375.9000 FAX: 210.375.9010

TEXAS BOARD OF PROFESSIONAL ENGINEERS, FIRM REGISTRATION # 470

Texas Department of Transportation
© 2010

LOOP 1604

PROPOSED TYPICAL SECTIONS

SHEET 1 OF 5

DGN:	FED. RD. DIV. NO.	STATE	FEDERAL AID PROJECT NO.			HIGHWAY NO.
CHK DGN:	6	TEXAS	STP 2011(210)ES			LP 1604
DWG:	DIST.	COUNTY	CONT. NO.	SECT. NO.	JOB NO.	SHEET NO.
CHK DWG:	SAT	BEXAR	2452	01	050	14

Design Filename: p:\74\00\04\design\civil\general\740004TYP03.dgn

Plotted on: 7/7/2010

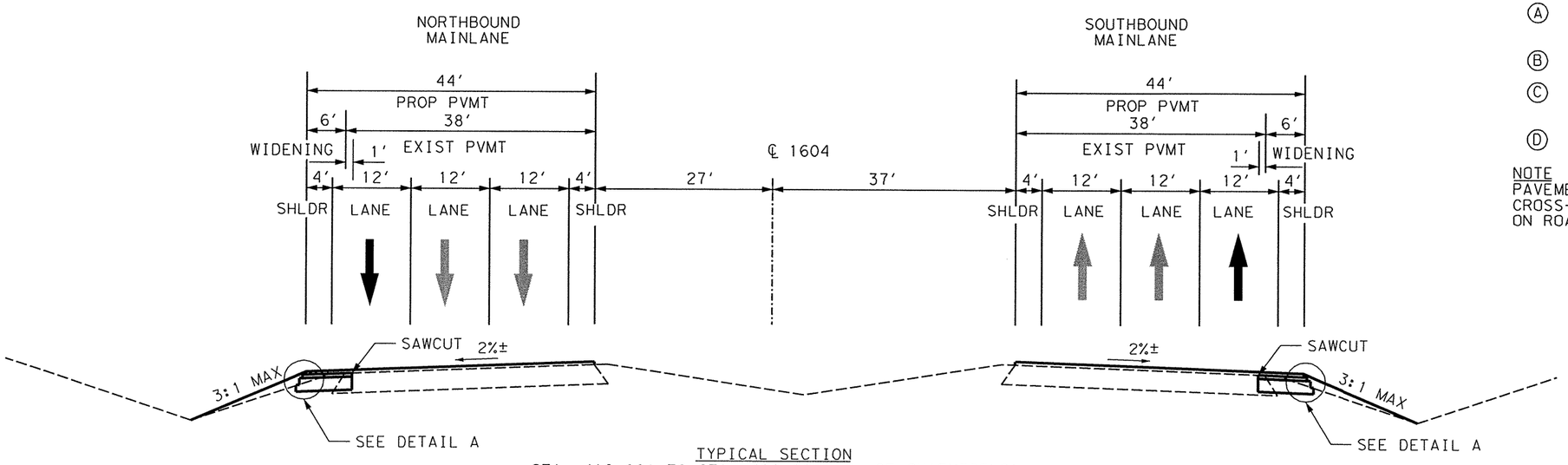

TYPICAL SECTION
STA. 418+00± TO STA. 428+00± (N. OF SHAENFIELD)
STA. 457+00± TO STA. 466+00± (S. OF SHAENFIELD)

LEGEND

- (A) 2" HMAC (TY C)(SURF) ON ONE COURSE SURFACE TREATMENT
- (B) 2" HMAC (TY C)
- (C) 8" HMAC (TY B) (TO BE PLACED IN TWO EQUAL LIFTS)
- (D) 4" HMAC (TY B)

NOTE
PAVEMENT WIDENING TO MATCH EXISTING CROSS-SLOPE UNLESS SHOWN OTHERWISE ON ROADWAY PLAN SHEETS.

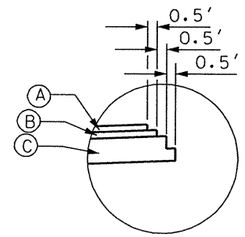

DETAIL A

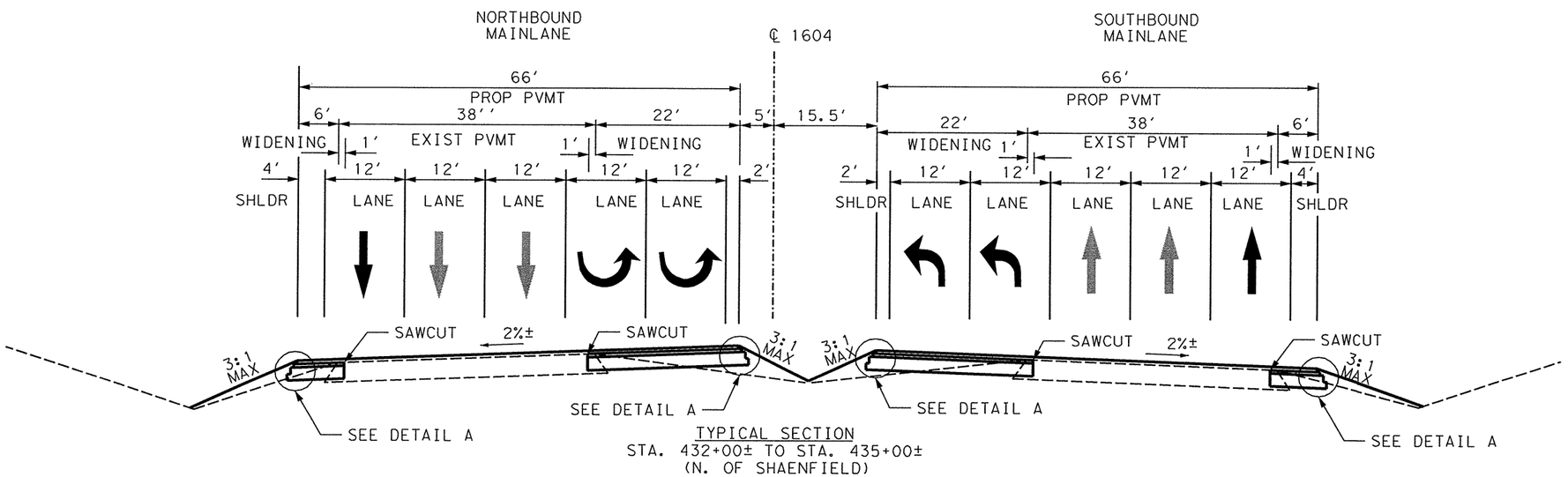

TYPICAL SECTION
STA. 432+00± TO STA. 435+00±
(N. OF SHAENFIELD)

STATE OF TEXAS
SCOTT D. ARMSTRONG
69320
LICENSED
PROFESSIONAL ENGINEER

SCOTT D. ARMSTRONG, P.E. 7/7/2010 DATE

NOT TO SCALE

REV. NO.	DATE	DESCRIPTION	BY

ALAMO RMA

PAPE-DAWSON ENGINEERS
555 EAST RAMSEY | SAN ANTONIO, TEXAS 78216 | PHONE: 210.375.9000 FAX: 210.375.9010
TEXAS BOARD OF PROFESSIONAL ENGINEERS, FIRM REGISTRATION # 470

Texas Department of Transportation © 2010

LOOP 1604

PROPOSED TYPICAL SECTIONS

SHEET 2 OF 5

DGN:	FED. RD. DIV. NO.	STATE	FEDERAL AID PROJECT NO.			HIGHWAY NO.
CHK DGN:	6	TEXAS	STP 2011(210)ES			LP 1604
DWG:	DIST.	COUNTY	CONT. NO.	SECT. NO.	JOB NO.	SHEET NO.
CHK DWG:	SAT	BEXAR	2452	01	050	15

Design Filename: p:\74\00\04\design\civil\general\740004TYP04.dgn

Plotted on: 7/7/2010

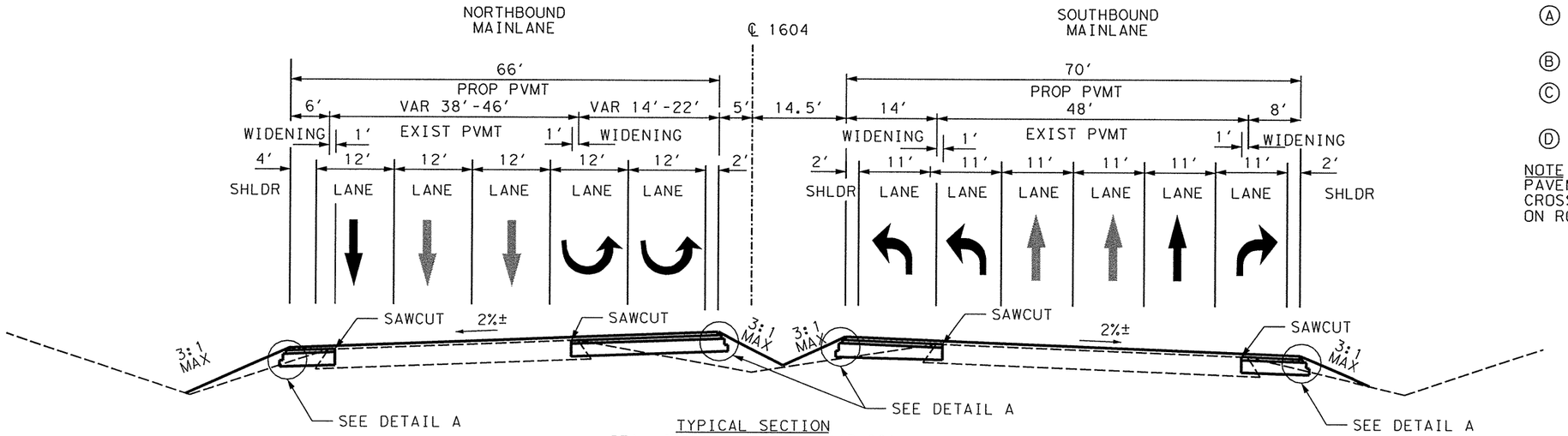

TYPICAL SECTION
STA. 435+00± TO STA. 443+00±
(N. OF SHAENFIELD)

LEGEND

Ⓐ 2″ HMAC (TY C)(SURF)
ON ONE COURSE SURFACE TREATMENT

Ⓑ 2″ HMAC (TY C)

Ⓒ 8″ HMAC (TY B)
(TO BE PLACED IN TWO EQUAL LIFTS)

Ⓓ 4″ HMAC (TY B)

NOTE
PAVEMENT WIDENING TO MATCH EXISTING CROSS-SLOPE UNLESS SHOWN OTHERWISE ON ROADWAY PLAN SHEETS.

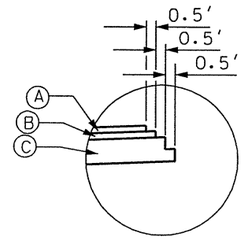

DETAIL A

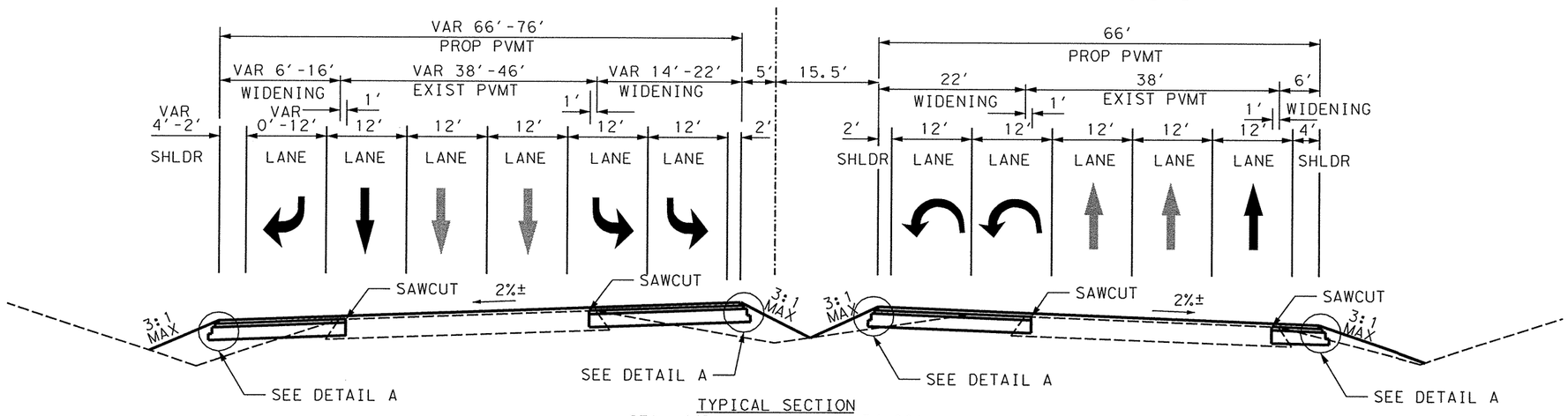

TYPICAL SECTION
STA. 443+00± TO STA. 454+00±
(S. OF SHAENFIELD)

NOT TO SCALE

REV. NO.	DATE	DESCRIPTION	BY

ALAMO RMA

PAPE-DAWSON ENGINEERS
555 EAST RAMSEY | SAN ANTONIO, TEXAS 78216 | PHONE: 210.375.9000 FAX: 210.375.9010
TEXAS BOARD OF PROFESSIONAL ENGINEERS, FIRM REGISTRATION # 470

Texas Department of Transportation
© 2010

STATE OF TEXAS — SCOTT D. ARMSTRONG — 69320 — LICENSED PROFESSIONAL ENGINEER

SCOTT D. ARMSTRONG, P.E. — 7/7/2010 DATE

LOOP 1604

PROPOSED TYPICAL SECTIONS

SHEET 3 OF 5

DGN:	FED. RD. DIV. NO.	STATE	FEDERAL AID PROJECT NO.			HIGHWAY NO.
CHK DGN:	6	TEXAS	STP 2011(210)ES			LP 1604
DWG:	DIST.	COUNTY	CONT. NO.	SECT. NO.	JOB NO.	SHEET NO.
CHK DWG:	SAT	BEXAR	2452	01	050	16

Design Filename: p:\74\00\04\design\civil\general\740004TYP05.dgn

Plotted on: 7/7/2010

Design Filename: p:\74\00\04\design\civil\general\740004TYP06.dgn

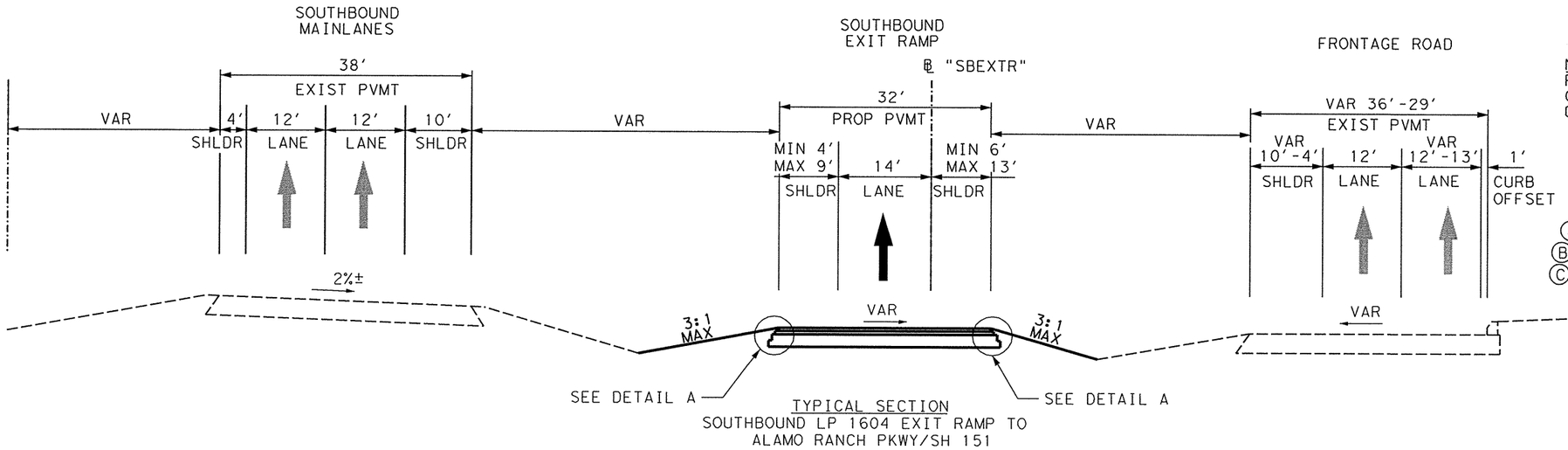

TYPICAL SECTION
SOUTHBOUND LP 1604 EXIT RAMP TO
ALAMO RANCH PKWY/SH 151

LEGEND

Ⓐ 2" HMAC (TY C)(SURF)
ON ONE COURSE SURFACE TREATMENT

Ⓑ 2" HMAC (TY C)

Ⓒ 8" HMAC (TY B)
(TO BE PLACED IN TWO EQUAL LIFTS)

Ⓓ 4" HMAC (TY B)

NOTE
PAVEMENT WIDENING TO MATCH EXISTING CROSS-SLOPE UNLESS SHOWN OTHERWISE ON ROADWAY PLAN SHEETS.

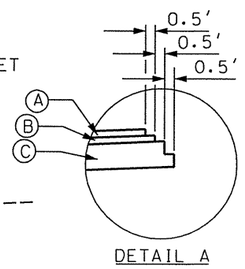

DETAIL A

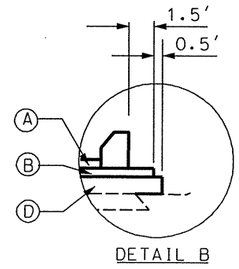

DETAIL B

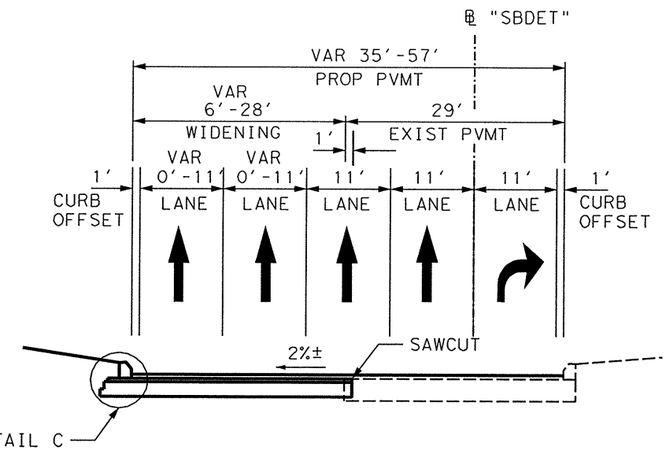

TYPICAL SECTION
SOUTHBOUND FRONTAGE RD
STA. 122+42± TO STA. 135+00±

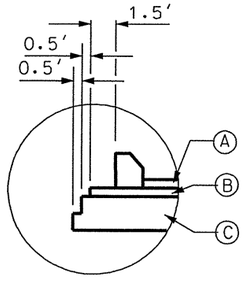

DETAIL C

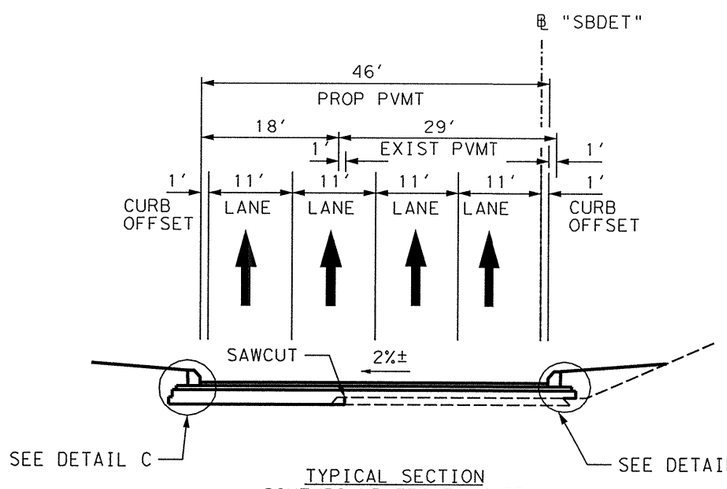

TYPICAL SECTION
SOUTHBOUND FRONTAGE RD
STA. 135+00± TO STA. 144+00±

STATE OF TEXAS
SCOTT D. ARMSTRONG
69320
LICENSED PROFESSIONAL ENGINEER

SCOTT D. ARMSTRONG, P.E. — 7/7/2010 DATE

NOT TO SCALE

REV. NO.	DATE	DESCRIPTION	BY

ALAMO RMA

PAPE-DAWSON ENGINEERS

555 EAST RAMSEY | SAN ANTONIO, TEXAS 78216 | PHONE: 210.375.9000 FAX: 210.375.9010

TEXAS BOARD OF PROFESSIONAL ENGINEERS, FIRM REGISTRATION # 470

Texas Department of Transportation
© 2010

LOOP 1604

PROPOSED TYPICAL SECTIONS

SHEET 4 OF 5

DGN:	FED. RD. DIV. NO.	STATE	FEDERAL AID PROJECT NO.			HIGHWAY NO.
CHK DGN:	6	TEXAS	STP 2011(210)ES			LP 1604
DWG:	DIST.	COUNTY	CONT. NO.	SECT. NO.	JOB NO.	SHEET NO.
CHK DWG:	SAT	BEXAR	2452	01	050	17

Plotted on: 7/7/2010

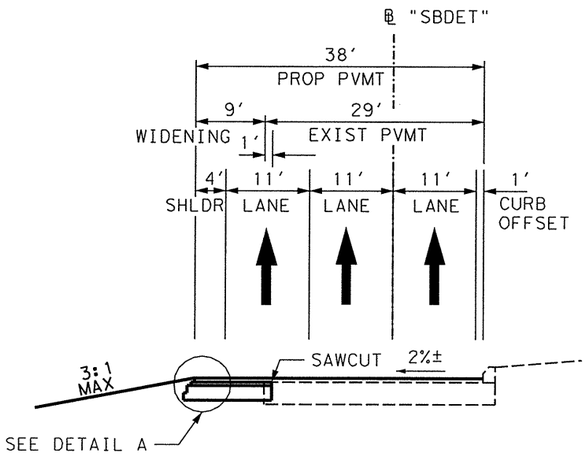

TYPICAL SECTION
SOUTHBOUND FRONTAGE RD
STA. 116+25± TO STA. 122+42±

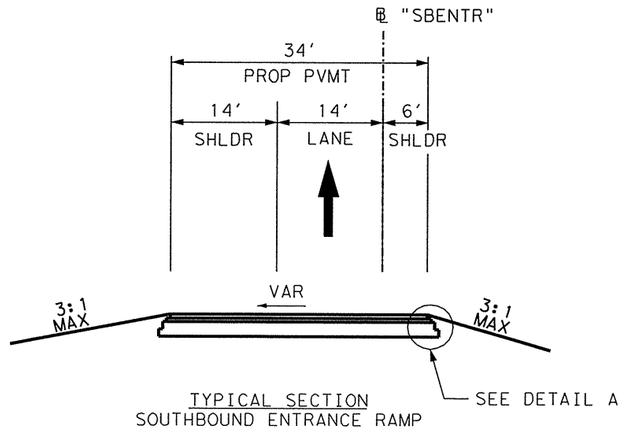

TYPICAL SECTION
SOUTHBOUND ENTRANCE RAMP

LEGEND

- Ⓐ 2" HMAC (TY C)(SURF) ON ONE COURSE SURFACE TREATMENT
- Ⓑ 2" HMAC (TY C)
- Ⓒ 8" HMAC (TY B) (TO BE PLACED IN TWO EQUAL LIFTS)
- Ⓓ 4" HMAC (TY B)

NOTE
PAVEMENT WIDENING TO MATCH EXISTING CROSS-SLOPE UNLESS SHOWN OTHERWISE ON ROADWAY PLAN SHEETS.

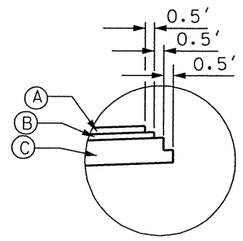

DETAIL A

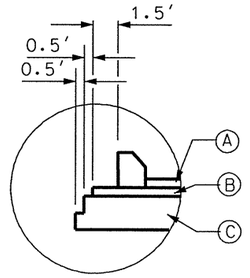

DETAIL C

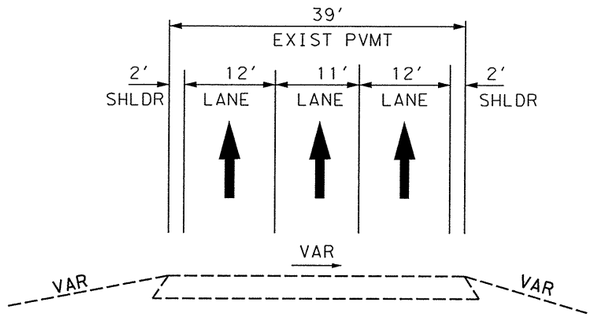

TYPICAL SECTION
EB SH 151
(FROM LP 1604 TO CONNECTOR)

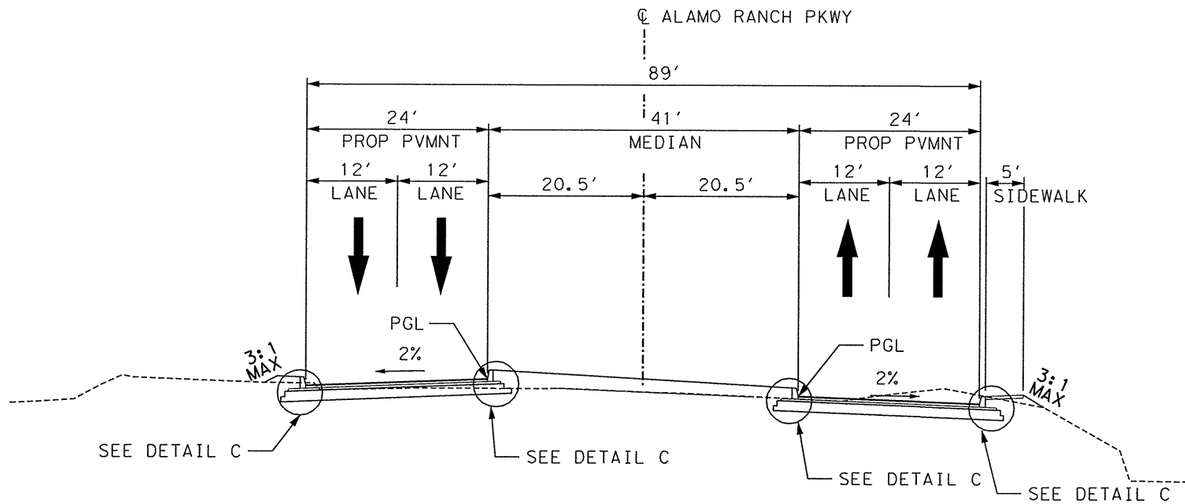

TYPICAL SECTION
ALAMO RANCH PARKWAY

SCOTT D. ARMSTRONG
69320
LICENSED PROFESSIONAL ENGINEER
STATE OF TEXAS

Scott D. Armstrong
SCOTT D. ARMSTRONG, P.E.

7/7/2010
DATE

NOT TO SCALE

REV. NO.	DATE	DESCRIPTION	BY

ALAMO RMA

PAPE-DAWSON ENGINEERS
555 EAST RAMSEY | SAN ANTONIO, TEXAS 78216 | PHONE: 210.375.9000 FAX: 210.375.9010
TEXAS BOARD OF PROFESSIONAL ENGINEERS, FIRM REGISTRATION # 470

Texas Department of Transportation
© 2010

LOOP 1604

PROPOSED TYPICAL SECTIONS

SHEET 5 OF 5

DGN:	FED. RD. DIV. NO.	STATE	FEDERAL AID PROJECT NO.			HIGHWAY NO.
CHK DGN:	6	TEXAS	STP 2011(210)ES			LP 1604
DWG:	DIST.	COUNTY	CONT. NO.	SECT. NO.	JOB NO.	SHEET NO.
CHK DWG:	SAT	BEXAR	2452	01	050	18

Design Filename: p:\74\00\04\design\civil\general\740004TYP07.dgn

Plotted on: 7/1/2010 3:45:22 PM

Design Filename: p:\8380407\dlv\planSht's\summaries\740004TCPSUM01.dgn

TRAFFIC CONTROL PLAN SUMMARY - LOOP 1604

TRAFFIC CONTROL PLAN SHEET LIMITS	0512-2008 PORT CTB (FUR & INST) (LOW PROF) (TY 1) (LF)	0512-2009 PORT CTB (FUR & INST) (LOW PROF) (TY 2) (LF)	0512-2026 PORT CTB (MOVE) (LOW PROF) (TY 1) (LF)	0512-2027 PORT CTB (MOVE) (LOW PROF) (TY 2) (LF)	0512-2044 PORT CTB (REMOVE) (LOW PROF) (TY 1) (LF)	0512-2045 PORT CTB (REMOVE) (LOW PROF) (TY 2) (LF)	0662-2001 WK ZN PAV MRK (NON-REMOV) (W) 4" (BRK) (EA)	0662-2004 WK ZN PAV MRK (NON-REMOV) (W) 4" (SLD) (EA)	0662-2012 WK ZN PAV MRK (NON-REMOV) (W) 8" (SLD) (EA)	0662-2017 WK ZN PAV MRK (NON-REMOV) (W) (ARROW) (EA)	0662-2027 WK ZN PAV MRK (NON-REMOV) (W) (WORD) (EA)	0662-2032 WK ZN PAV MRK (NON-REMOV) (Y) 4" (SLD) (EA)	0662-2039 WK ZN PAV MRK (NON-REMOV) (W) 24" (SLD) (LF)	0662-2064 WK ZN PAV MRK (REMOV) (W) 4" (BRK) (LF)	0662-2067 WK ZN PAV MRK (REMOV) (W) 4" (SLD) (LF)	0662-2075 WK ZN PAV MRK (REMOV) (W) 8" (SLD) (LF)	0662-2079 WK ZN PAV MRK (REMOV) (W) 24" (SLD) (LF)	0662-2084 WK ZN PAV MRK (REMOV) (W) (ARROW) (EA)	0662-2094 WK ZN PAV MRK (REMOV) (W) (WORD) (EA)
PHASE 1 STAGE 2																			
CSJ 2452-01-050																			
STATION - STATION																			
BEGIN - 368+00																			
368+00 - 379+00																			
379+00 - 390+00																			
TOTAL PHASE 1 STAGE 2	0	0	0	0	0	0	0	0	0	0	0	0	0	0	0	0	0	0	0
PHASE 2 STAGE 1																			
CSJ 2452-01-050																			
STATION - STATION																			
434+00 - 445+00																			
TOTAL PHASE 2 STAGE 1	0	0	0	0	0	0	0	0	0	0	0	0	0	0	0	0	0	0	0
PHASE 2 STAGE 2																			
CSJ 2452-01-050																			
STATION - STATION																			
BEGIN - 412+00																			
412+00 - 423+00																			
423+00 - 434+00																			
434+00 - 445+00																			
445+00 - 456+00																			
456+00 - 467+00																			
467+00 - 478+00																			
478+00 - END																			
TOTAL PHASE 2 STAGE 2	0	0	0	0	0	0	0	0	0	0	0	0	0	0	0	0	0	0	0
LOOP 1604 SHEET TOTALS	0	0	0	0	0	0	0	0	0	0	0	0	0	0	0	0	0	0	0

TRAFFIC CONTROL PLAN SUMMARY - LOOP 1604

TRAFFIC CONTROL PLAN SHEET LIMITS	0662-2099 WK ZN PAV MRK (REMOV) (Y) 4" (SLD) (LF)	0662-2113 WK ZN PAV MRK (SH TRM) (TAB) (TY W) (EA)	0677-2001 ELIM EXT PAV MRK & MRKR (4") (LF)	0677-2003 ELIM EXT PAV MRK & MRKR (8") (LF)	0677-2007 ELIM EXT PAV MRK & MRKR (24") (LF)	0677-2008 ELIM EXT PAV MRK & MRKR (ARROW) (EA)	0677-2018 ELIM EXT PAV MRK & MRKR (WORD) (EA)	6834-2001 PORTABLE CHANGEABLE MESSAGE SIGN (DAY)
PHASE 1 STAGE 2								
CSJ 2452-01-050								
STATION - STATION								
BEGIN - 368+00		120						
368+00 - 379+00		336						
379+00 - 390+00		258						
TOTAL PHASE 1 STAGE 2	0	714	0	0	0	0	0	49
PHASE 2 STAGE 1								
CSJ 2452-01-050								
STATION - STATION								
434+00 - 445+00								
TOTAL PHASE 2 STAGE 1	0	0	0	0	0	0	0	56
PHASE 2 STAGE 2								
CSJ 2452-01-050								
STATION - STATION								
BEGIN - 412+00								
412+00 - 423+00		378						
423+00 - 434+00		324						
434+00 - 445+00		474						
445+00 - 456+00		660						
456+00 - 467+00		630						
467+00 - 478+00		162						
478+00 - END								
TOTAL PHASE 2 STAGE 2	0	2,628	0	0	0	0	0	2
LOOP 1604 SHEET TOTALS	0	3,342	0	0	0	0	0	107

REV. NO.	DATE	DESCRIPTION	BY

ALAMO RMA

RODRIGUEZ TRANSPORTATION GROUP
CONSULTING ENGINEERS

Texas Department of Transportation
© 2010

LOOP 1604
TRAFFIC CONTROL PLAN SUMMARY

SHEET 1 OF 3

DGN:	FED. RD. DIV. NO.	STATE	FEDERAL AID PROJECT NO.			HIGHWAY NO.
CHK DGN:	6	TEXAS	STP 2011(210)ES			LP 1604
DWG:	DIST.	COUNTY	CONT. NO.	SECT. NO.	JOB NO.	SHEET NO.
CHK DWG:	SAT	BEXAR	2452	01	050	19

Plotted on: 7/1/2010 3:45:25 PM

TRAFFIC CONTROL PLAN SUMMARY - LOOP 1604

TRAFFIC CONTROL PLAN SHEET LIMITS	0512-2008	0512-2009	0512-2026	0512-2027	0512-2044	0512-2045	0662-2001	0662-2004	0662-2012	0662-2017	0662-2027	0662-2032	0662-2039	0662-2064	0662-2067	0662-2075	0662-2079	0662-2084	0662-2094
	PORT CTB (FUR & INST) (LOW PROF) (TY 1)	PORT CTB (FUR & INST) (LOW PROF) (TY 2)	PORT CTB (MOVE) (LOW PROF) (TY 1)	PORT CTB (MOVE) (LOW PROF) (TY 2)	PORT CTB (REMOVE) (LOW PROF) (TY 1)	PORT CTB (REMOVE) (LOW PROF) (TY 2)	WK ZN PAV MRK (NON-REMOV) (W) 4" (BRK)	WK ZN PAV MRK (NON-REMOV) (W) 4" (SLD)	WK ZN PAV MRK (NON-REMOV) (W) 8" (SLD)	WK ZN PAV MRK (NON-REMOV) (W) (ARROW)	WK ZN PAV MRK (NON-REMOV) (W) (WORD)	WK ZN PAV MRK (NON-REMOV) (Y) 4" (SLD)	WK ZN PAV MRK (NON-REMOV) (W) 24" (SLD)	WK ZN PAV MRK (REMOV) (W) 4" (BRK)	WK ZN PAV MRK (REMOV) (W) 4" (SLD)	WK ZN PAV MRK (REMOV) (W) 8" (SLD)	WK ZN PAV MRK (REMOV) (W) 24" (SLD)	WK ZN PAV MRK (REMOV) (W) (ARROW)	WK ZN PAV MRK (REMOV) (W) (WORD)
	(LF)	(LF)	(LF)	(LF)	(LF)	(LF)	(EA)	(EA)	(EA)	(EA)	(EA)	(EA)	(LF)	(LF)	(LF)	(LF)	(LF)	(EA)	(EA)
PHASE 3 STAGE 1																			
CSJ 2452-01-050																			
STATION - STATION																			
BEGIN - 103+00																			
103+00 - 114+00	460	40	460	40															
114+00 - 125+00																			
125+00 - 136+00																			
136+00 - 576+00																			
576+00 - 587+00																			
TOTAL PHASE 3 STAGE 1	460	40	460	40	0	0	0	0	0	0	0	0	0	0	0	0	0	0	0
PHASE 3 STAGE 2																			
CSJ 2452-01-050																			
STATION - STATION																			
BEGIN - 103+00																			
103+00 - 114+00							30		130										
114+00 - 125+00								210	2			863		60					
125+00 - 136+00														200		200			
136+00 - 576+00								162				166			990				
576+00 - 587+00								943				316							
TOTAL PHASE 3 STAGE 2	0	0	0	0	0	0	30	1,315	132	0	0	1,345	0	260	990	200	0	0	0
PHASE 3 STAGE 3A & 3B																			
CSJ 2452-01-050																			
STATION - STATION																			
BEGIN - 103+00																			
103+00 - 114+00																			
114+00 - 125+00							60	287				241							
125+00 - 136+00			140	40			200	1,091	160	1	1	1,156	22		65			1	1
136+00 - 576+00															941				
576+00 - 587+00																			
TOTAL PHASE 3 STAGE 3	0	0	140	40	0	0	260	1,378	160	1	1	1,397	22	0	1,006	0	0	1	1
LOOP 1604 SHEET TOTALS	460	40	600	80	0	0	290	2,693	292	1	1	2,742	22	260	1,996	200	0	1	1

TRAFFIC CONTROL PLAN SUMMARY - LOOP 1604

TRAFFIC CONTROL PLAN SHEET LIMITS	0662-2099	0662-2113	0677-2001	0677-2003	0677-2007	0677-2008	0677-2018	6834-2001
	WK ZN PAV MRK (REMOV) (Y) 4" (SLD)	WK ZN PAV MRK (SH TRM) (TAB) (TY W)	ELIM EXT PAV MRK & MRKR (4")	ELIM EXT PAV MRK & MRKR (8")	ELIM EXT PAV MRK & MRKR (24")	ELIM EXT PAV MRK & MRKR (ARROW)	ELIM EXT PAV MRK & MRKR (WORD)	PORTABLE CHANGEABLE MESSAGE SIGN
	(LF)	(EA)	(LF)	(LF)	(LF)	(EA)	(EA)	(DAY)
PHASE 3 STAGE 1								
CSJ 2452-01-050								
STATION - STATION								
BEGIN - 103+00								
103+00 - 114+00								
114+00 - 125+00								
125+00 - 136+00								
136+00 - 576+00								
576+00 - END								
TOTAL PHASE 3 STAGE 1	0	0	0	0	0	0	0	0
PHASE 3 STAGE 2								
CSJ 2452-01-050								
STATION - STATION								
BEGIN - 103+00								
103+00 - 114+00			30	130				
114+00 - 125+00	239		1,362					
125+00 - 136+00	988		190	200				
136+00 - 576+00	973		3,016			3	3	
576+00 - END			628					
TOTAL PHASE 3 STAGE 2	2,200	0	5,226	330	0	3	3	42
PHASE 3 STAGE 3A & 3B								
CSJ 2452-01-050								
STATION - STATION								
BEGIN - 103+00								
103+00 - 114+00								
114+00 - 125+00								
125+00 - 136+00	105		667		265			
136+00 - 576+00	957							
576+00 - END								
TOTAL PHASE 3 STAGE 3	1,062	0	667	0	265	0	0	30
LOOP 1604 SHEET TOTALS	3,262	0	5,893	330	265	3	3	72

REV. NO.	DATE	DESCRIPTION	BY

ALAMO RMA

RODRIGUEZ TRANSPORTATION GROUP
CONSULTING ENGINEERS

Texas Department of Transportation
© 2010

LOOP 1604
TRAFFIC CONTROL PLAN SUMMARY

SHEET 2 OF 3

DGN:	FED. RD. DIV. NO.	STATE	FEDERAL AID PROJECT NO.			HIGHWAY NO.
CHK DGN:	6	TEXAS	STP 2011(210)ES			LP 1604
DWG:	DIST.	COUNTY	CONT. NO.	SECT. NO.	JOB NO.	SHEET NO.
CHK DWG:	SAT	BEXAR	2452	01	050	20

Design Filename: p:\8380407\dlvlplanSht s\summaries\740004TCPSUM02.dgn

Plotted on: 7/1/2010 3:45:27 PM

TRAFFIC CONTROL PLAN SUMMARY - LOOP 1604

TRAFFIC CONTROL PLAN SHEET LIMITS	0512-2008 PORT CTB (FUR & INST) (LOW PROF) (TY 1) (LF)	0512-2009 PORT CTB (FUR & INST) (LOW PROF) (TY 2) (LF)	0512-2026 PORT CTB (MOVE) (LOW PROF) (TY 1) (LF)	0512-2027 PORT CTB (MOVE) (LOW PROF) (TY 2) (LF)	0512-2044 PORT CTB (REMOVE) (LOW PROF) (TY 1) (LF)	0512-2045 PORT CTB (REMOVE) (LOW PROF) (TY 2) (LF)	0662-2001 WK ZN PAV MRK (NON-REMOV) (W) 4" (BRK) (EA)	0662-2004 WK ZN PAV MRK (NON-REMOV) (W) 4" (SLD) (EA)	0662-2012 WK ZN PAV MRK (NON-REMOV) (W) 8" (SLD) (EA)	0662-2017 WK ZN PAV MRK (NON-REMOV) (W) (ARROW) (EA)	0662-2027 WK ZN PAV MRK (NON-REMOV) (W) (WORD) (EA)	0662-2032 WK ZN PAV MRK (NON-REMOV) (Y) 4" (SLD) (EA)	0662-2039 WK ZN PAV MRK (NON-REMOV) (W) 24" (SLD) (LF)	0662-2064 WK ZN PAV MRK (REMOV) (W) 4" (BRK) (LF)	0662-2067 WK ZN PAV MRK (REMOV) (W) 4" (SLD) (LF)	0662-2075 WK ZN PAV MRK (REMOV) (W) 8" (SLD) (LF)	0662-2079 WK ZN PAV MRK (REMOV) (W) 24" (SLD) (LF)	0662-2084 WK ZN PAV MRK (REMOV) (W) (ARROW) (EA)	0662-2094 WK ZN PAV MRK (REMOV) (W) (WORD) (EA)
PHASE 3 STAGE 4A & 4B																			
CSJ 2452-01-050																			
STATION - STATION																			
BEGIN - 103+00 (4A)																			
103+00 - 114+00 (4A)																			
114+00 - 125+00 (4A)																			
125+00 - 136+00 (4A)			60	20						1	1		34				34		
136+00 - 576+00 (4A)			140	20															
576+00 - 587+00 (4A)																			
ADVANCE WARNING SIGNS(4A)																	45		
125+00 - 136+00 (4B)			98	20				90				157							
136+00 - 576+00 (4B)			202	20				782				776							
TOTAL PHASE 3 STAGE 4	0	0	500	80	0	0	0	872	0	1	1	933	34	0	0	0	79	0	0
PHASE 3 STAGE 5																			
CSJ 2452-01-050																			
STATION - STATION																			
BEGIN - 103+00																			
103+00 - 114+00					160														
114+00 - 125+00																			
125+00 - 136+00					98	20													
136+00 - 576+00					202	20													
576+00 - 587+00																			
TOTAL PHASE 3 STAGE 5	0	0	0	0	460	40	0	0	0	0	0	0	0	0	0	0	0	0	0
LOOP 1604 SHEET TOTALS	0	0	500	80	460	40	0	872	0	1	1	933	34	0	0	0	79	0	0
LOOP 1604 TOTALS	460	40	1,100	160	460	40	290	3,565	292	2	2	3,675	56	260	1,996	200	79	1	1

TRAFFIC CONTROL PLAN SUMMARY - LOOP 1604

TRAFFIC CONTROL PLAN SHEET LIMITS	0662-2099 WK ZN PAV MRK (REMOV) (Y) 4" (SLD) (LF)	0662-2113 WK ZN PAV MRK (SH TRM) (TAB) (TY W) (EA)	0677-2001 ELIM EXT PAV MRK & MRKR (4") (LF)	0677-2003 ELIM EXT PAV MRK & MRKR (8") (LF)	0677-2007 ELIM EXT PAV MRK & MRKR (24") (LF)	0677-2008 ELIM EXT PAV MRK & MRKR (ARROW) (EA)	0677-2018 ELIM EXT PAV MRK & MRKR (WORD) (EA)	6834-2001 PORTABLE CHANGEABLE MESSAGE SIGN (DAY)
PHASE 3 STAGE 4A & 4B								
CSJ 2452-01-050								
STATION - STATION								
BEGIN - 103+00								
103+00 - 114+00								
114+00 - 125+00		243						
125+00 - 136+00	680	189						
136+00 - 576+00								
576+00 - END								
ADVANCE WARNING SIGNS(4A)	1,748							
125+00 - 136+00 (4B)								
136+00 - 576+00 (4B)								
TOTAL PHASE 3 STAGE 4	2,428	432	0	0	0	0	0	42
PHASE 3 STAGE 5								
CSJ 2452-01-050								
STATION - STATION								
BEGIN - 103+00								
103+00 - 114+00								
114+00 - 125+00								
125+00 - 136+00			90					
136+00 - 576+00			1,231	1,527	368	6	6	
576+00 - END			371	1,152	97			
TOTAL PHASE 3 STAGE 5	0	0	1,692	2,679	465	6	6	0
LOOP 1604 SHEET TOTALS	2,428	432	1,692	2,679	465	6	6	42
LOOP 1604 TOTALS	5,690	3,774	7,585	3,009	730	9	9	221

REV. NO.	DATE	DESCRIPTION	BY

ALAMO RMA

RODRIGUEZ TRANSPORTATION GROUP
CONSULTING ENGINEERS

Texas Department of Transportation
© 2010

LOOP 1604
TRAFFIC CONTROL PLAN SUMMARY

SHEET 3 OF 3

DGN:	FED. RD. DIV. NO.	STATE	FEDERAL AID PROJECT NO.			HIGHWAY NO.
CHK DGN:	6	TEXAS	STP 2011(210)ES			LP 1604
DWG:	DIST.	COUNTY	CONT. NO.	SECT. NO.	JOB NO.	SHEET NO.
CHK DWG:	SAT	BEXAR	2452	01	050	21

Design Filename: p:\8380407\dlv\planSht\summaries\740004TCPSUM03.dgn

ITEM-DESC	0100-2002	0104-2009 **	0104-2015 **	0104-2021 **	0104-2024 **	0106-2002	0110-2001	0132-2003	0161-2002	0164-2039	0168-2001 *	0169-2001
	PREPARING ROW	REMOVING CONC (RIPRAP)	REMOVING CONC (SIDEWALKS)	REMOVING CONC (CURB)	REMOVING CONC (RETAINING WALLS)	OBLITERATING ABANDONED ROAD	EXCAVATION (ROADWAY)	EMBANKMENT (FINAL) (ORD COMP) (TY B)	COMPOST MANUF TOPSOIL (BOS) (4")	DRILL SEEDING (PERM) (URBAN) (CLAY)	VEGETATIVE WATERING	SOIL RETENTION BLANKETS (CL 1) (TY A)
	STA	SY	SY	LF	CY	SY	CY	CY	SY	SY	SY	SY
1 OF 26	2.5						3088	198	3398	3398	3398	3398
2 OF 26	3.5						379	191	1180	1180	1180	1180
3 OF 26	5	9					148	168	590	590	590	590
4 OF 26	5	37	25	191			100	212	1285	1285	1285	1285
5 OF 26	5	6		38			618	175	1409	1409	1409	1409
6 OF 26	2						175	77	794	794	794	794
7 OF 26	4						59	1	64	64	64	64
8 OF 26	5	14					122	52	617	617	617	617
9 OF 26	5	8					164	298	1700	1700	1700	1700
10 OF 26	5	7					340	381	2438	2438	2438	2438
11 OF 26	5	36					565	510	2376	2376	2376	2376
12 OF 26	5	14					323	686	1897	1897	1897	1897
13 OF 26	5	127					435	1230	1830	1830	1830	1830
14 OF 26	5	7					393	1082	2291	2291	2291	2291
15 OF 26	5	26					351	997	2521	2521	2521	2521
16 OF 26	5	7					202	364	1785	1785	1785	1785
17 OF 26	5	14					166	182	1207	1207	1207	1207
18 OF 26	5						129	120	1196	1196	1196	1196
19 OF 26	1.5						1	1	50	50	50	50
20 OF 26	8						257	121	400	400	400	400
21 OF 26	10					1800	900	1983	3518	3518	3518	3518
22 OF 26	10					1330	764	107	2535	2535	2535	2535
23 OF 26	8	77		125	4.3	41	1251	453	7336	7336	7336	7336
24 OF 26	9	248		442		145	1154	1363	2954	2954	2954	2954
25 OF 26	9	16					504	733	1536	1536	1536	1536
26 OF 26		7	23	15			42	9	663	663	663	663
OVR 1 OF 3												
OVR 2 OF 3												
OVR 3 OF 3												
TOTALS	137.5	660	48	811	4.3	3316	12630	11694	47570	47570	47570	47570

* AREA OF APPLICATION. SEE GENERAL NOTES FOR PAY QUANTITY.

** FOR CONTRACTOR INFORMATION ONLY. ITEMS ARE SUBSIDIARY TO PREP ROW (ITEM 0100-2002).

*** LOCATION TO BE DETERMINED BY THE ENGINEER UNLESS OTHERWISE NOTED IN PLANS.

ITEM-DESC	0316-2366 *	0316-2645 *	0341-2011 *	0341-2034 *	0341-2064 *	0351-2006 ***	0354-2021	0432-2001	0432-2039	0464-2007
	ASPH (AC-15P OR CRS-2P)	AGGR (TY-PE GR-4)	D-GR HMA (QCQA) TY-B PG64-22	D-GR HMA (QCQA) TY-C PG64-22	D-GR HMA (QCQA) TY-C SAC-B PG76-22	FLEXIBLE PAVEMENT STRUCTURE REPAIR (10")	PLANE ASPH CONC PAV (0" TO 2")	RIPRAP (CONC) (4 IN)	RIPRAP (MOW STRIP) (4 IN)	RC PIPE (CL III) (30 IN)
	SY	SY	SY	SY	SY	SY	SY	CY	CY	LF
1 OF 26			1892	1787						
2 OF 26			1155	1116						
3 OF 26			1111	1055				4	12	
4 OF 26			900	842						
5 OF 26			722	680						
6 OF 26			315	290						
7 OF 26			220	173						
8 OF 26			768	669						
9 OF 26			961	850						
10 OF 26			1926	1788						
11 OF 26			3630	3410						
12 OF 26			3570	3347						
13 OF 26			3818	3609						
14 OF 26			4343	4120						
15 OF 26			4044	3826						
16 OF 26			1768	1630						
17 OF 26			962	851						
18 OF 26			699	598						
19 OF 26			55	39						
20 OF 26			1388	1320						
21 OF 26			1764	1653						
22 OF 26			1766	1654						
23 OF 26			4712	4489						
24 OF 26			3704	3543		78		36		
25 OF 26			1316	1220						26
26 OF 26			297	283						
OVR 1 OF 3	18213	18213			18213		1331			
OVR 2 OF 3	75953	75953			75953		402			
OVR 3 OF 3	25817	25817			25817		6142			
						2550				
TOTALS	119983	119983	47806	44842	119983	2628	7875	40	12	26

REV. NO.	DATE	DESCRIPTION	BY

ALAMO RMA

PAPE-DAWSON ENGINEERS

555 EAST RAMSEY | SAN ANTONIO, TEXAS 78216 | PHONE: 210.375.9000 FAX: 210.375.9010

TEXAS BOARD OF PROFESSIONAL ENGINEERS, FIRM REGISTRATION # 470

Texas Department of Transportation © 2010

LOOP 1604

ROADWAY QUANTITY SUMMARY

SHEET 1 OF 2

DGN:	FED. RD. DIV. NO.	STATE	FEDERAL AID PROJECT NO.			HIGHWAY NO.
CHK DGN:	6	TEXAS	STP 2011(210)ES			LP 1604
DWG:	DIST.	COUNTY	CONT. NO.	SECT. NO.	JOB NO.	SHEET NO.
CHK DWG:	SAT	BEXAR	2452	01	050	22

Plotted on: 8/31/2010

Design Filename: p:\74\00\04\design\civil\summaries\740004RDWYSUM01.dgn

ITEM-DESC	0467-2290	0496-2051 **	0529-2014	0531-2003	0531-2006	0531-2017	0536-2004	0540-2001	0540-2005	0544-2001	0772-2001 **	0772-2002 **
	SET (TY II) (30 IN) (RCP) (6:1) (P)	REMOV STR (DRIVEWAY CULVERT)	CONC CURB (TY C)	CONC SIDEWALKS (5') (6")	CURB RAMPS (TY 2)	CURB RAMPS (TY 21)	CONC DIRECTIONAL ISLAND	MTL W-BEAM GD FEN (TIM POST)	TERMINAL ANCHOR SECTION	GUARDRAIL END TREATMENT (INSTALL)	POST AND CABLE FENCE (REMOVAL)	POST AND CABLE FENCE (REMV CONC ANCHOR)
	EA	EA	LF	LF	EA	EA	SY	LF	EA	EA	LF	EA
1 OF 26												
2 OF 26												
3 OF 26								225	1	1		
4 OF 26							373					
5 OF 26					1	1	362					
6 OF 26												
7 OF 26												
8 OF 26												
9 OF 26												
10 OF 26											416	1
11 OF 26											160	1
12 OF 26												
13 OF 26			274	167	1	4.5	906				50	1
14 OF 26											113	1
15 OF 26		1									500	
16 OF 26											184	1
17 OF 26												
18 OF 26												
19 OF 26												
20 OF 26												
21 OF 26												
22 OF 26			411									
23 OF 26			2020	288								
24 OF 26			1414									
25 OF 26	1											
26 OF 26			136		2	1	56					
OVR 1 OF 3												
OVR 2 OF 3												
OVR 3 OF 3												
TOTALS	1	1	4255	455	4	6.5	1697	225	1	1	1423	5

* AREA OF APPLICATION. SEE GENERAL NOTES FOR PAY QUANTITY.

** FOR CONTRACTOR INFORMATION ONLY. ITEMS ARE SUBSIDIARY TO PREP ROW (ITEM 0100-2002).

*** LOCATION TO BE DETERMINED BY THE ENGINEER UNLESS OTHERWISE NOTED IN PLANS.

ITEM-DESC	0772-2004	1018-2002
	POST AND CABLE FENCE (NEW CONC ANCHOR)	TREE PROTECTION
	EA	AC
1 OF 26		
2 OF 26		
3 OF 26		
4 OF 26		
5 OF 26		
6 OF 26		
7 OF 26		
8 OF 26		
9 OF 26		
10 OF 26		
11 OF 26		
12 OF 26		
13 OF 26	1	
14 OF 26		
15 OF 26		
16 OF 26		
17 OF 26		
18 OF 26		
19 OF 26		
20 OF 26		
21 OF 26		
22 OF 26		0.57
23 OF 26		3.47
24 OF 26		1.56
25 OF 26		0.22
26 OF 26		
OVR 1 OF 3		
OVR 2 OF 3		
OVR 3 OF 3		
TOTALS	1	5.82

REV. NO.	DATE	DESCRIPTION	BY

ALAMO RMA

PAPE-DAWSON ENGINEERS

555 EAST RAMSEY | SAN ANTONIO, TEXAS 78216 | PHONE: 210.375.9000 FAX: 210.375.9010

TEXAS BOARD OF PROFESSIONAL ENGINEERS, FIRM REGISTRATION # 470

Texas Department of Transportation
© 2010

LOOP 1604

ROADWAY QUANTITY SUMMARY

SHEET 2 OF 2

DGN:	FED. RD. DIV. NO.	STATE	FEDERAL AID PROJECT NO.			HIGHWAY NO.
CHK DGN:	6	TEXAS	STP 2011(210)ES			LP 1604
DWG:	DIST.	COUNTY	CONT. NO.	SECT. NO.	JOB NO.	SHEET NO.
CHK DWG:	SAT	BEXAR	2452	01	050	23

Plotted on: 8/31/2010

Design Filename: p:\74\00\04\design\civil\summaries\740004RDWYSUM02.dgn

Plotted on: 6/29/2010

	0110-2002	0132-2007	0400-2001 ✳	0400-2006	0402-2001	0403-2001	0432-2001	0432-2019	0432-2050	0460-2004	0460-2007	0462-2001	0462-2006	0462-2011	0464-2003	0464-2005	0464-2007	0464-2009	0464-2035
	EXCAVATION (CHANNEL)	EMBANKMENT (FINAL)(ORD COMP) (TY D)	STRUCT EXCAV	CUT & RESTORING PAV	TRENCH EXCAVATION PROTECTION	TEMPORARY SPL SHORING	RIPRAP (CONC)(4 IN)	RIPRAP (STONE PROTECTION)(12 IN)	RIPRAP (CONC) (CL B)(5 IN)	CMP (GAL STL) (24 IN)	CMP (GAL STL) (36 IN)	CONC BOX CULV (3 FT X 2 FT)	CONC BOX CULV (5 FT X 2 FT)	CONC BOX CULV (6 FT X 4 FT)	RC PIPE (CL III)(18 IN)	RC PIPE (CL III)(24 IN)	RC PIPE (CL III)(30 IN)	RC PIPE (CL III)(36 IN)	RC PIPE (CL V)(18 IN)
	CY	CY	CY	SY	CY	SF	CY	CY	CY	LF	LF	LF	LF	LF	LF	LF	LF	LF	LF
CULVERT 1			23				3	5											77
CULVERT 2			59				3	5							91				
CULVERT 3			39	15			3	5											89
CULVERT 3A			27				3												98
CULVERT 4			13				2	7										15	
CULVERT 4A			80				3	5								99			
CULVERT 5			163				2	5				640							
BRIDGE CLASS CULVERT 6	1469	104	286				51						189						
CHANNEL 1 (CULVERT 6)	570	23						19											
CULVERT 7			37					9			123								
CULVERT 8			221				5										579		
INLET 1			21				1	5								52			
INLET 2																			
Line "A" (SHEET 1 OF 2)			214		18			8									315		
Line "A" (SHEET 2 OF 2)			239		122			0								218	78		
Line "B" (SHEET 1 OF 2)			231		218			0								218			
Line "B" (SHEET 2 OF 2)			169		128			0								223			
Culvert 9			501	96	93.13	188								186.26					
Culvert 10			1678		170.79	588				9				512.37					
Outfall	7177							85	179.2										
Totals	**9216**	**127**	**4001**	**111**	**749.92**	**776**	**76**	**158**	**179.2**	9	**123**	**640**	**189**	**698.63**	**91**	**810**	**972**	**15**	**264**

✳ FOR CONTRACTOR'S USE ONLY

	0465-2001	0465-2003	0465-2020	0465-2106	0466-2050	0467-2172	0467-2209	0467-2211	0467-2227	0467-2234	0467-2286	0467-2288	0467-2290	0467-2307	0476-2003	0479-2002
	INLET (COMPL)(TY C)	INLET (COMPL)(TY H)	INLET (COMPL)(CURB) (TY II)	INLET EXT (TY II)	WINGWALL (PW)(HW=6 FT)	SET (TY I)(S=3 FT) (HW=3 FT)(6:1)(P)	SET (TY II)(18 IN) (RCP)(3:1)(C)	SET (TY II)(24 IN) (RCP)(3:1)(C)	SET (TY II)(36 IN) (RCP)(4:1)(C)	SET (TY II)(18 IN) (RCP)(6:1)(C)	SET (TY II)(18 IN) (RCP)(6:1)(P)	SET (TY II)(24 IN) (RCP)(6:1)(P)	SET (TY II)(30 IN) (RCP)(6:1)(P)	SET (TY II)(36 IN) (CMP)(6:1)(P)	JACK BORE OR TUN PIPE (30 IN)(RCP) (CL III)	ADJ INLETS
	EA	EA	EA	EA	EA	EA	EA	EA	EA	EA	EA	EA	EA	EA	LF	EA
CULVERT 1											2					
CULVERT 2											2					
CULVERT 3							1			1						
CULVERT 3A											2					
CULVERT 4									1							
CULVERT 4A												2				
CULVERT 5						4										
BRIDGE CLASS CULVERT 6																
CHANNEL 1 (CULVERT 6)																
CULVERT 7														6		
CULVERT 8													6			
INLET 1		1						1								
INLET 2																1
Line "A" (SHEET 1 OF 2)			1	1											80	
Line "A" (SHEET 2 OF 2)			4													
Line "B" (SHEET 1 OF 2)	4															
Line "B" (SHEET 2 OF 2)	2															
Culvert 9					2											
Culvert 10			2		2											
Outfall																
Totals	**6**	**1**	**7**	**1**	**4**	**4**	**1**	**1**	**1**	**1**	**6**	**2**	**6**	**6**	**80**	**1**

STATE OF TEXAS
KENNETH E. ROGERS
89448
LICENSED PROFESSIONAL ENGINEER
6/30/10

REV. NO.	DATE	DESCRIPTION	BY

ALAMO RMA

VICKREY & ASSOCIATES, INC.
CONSULTING ENGINEERS
CIVIL / ENVIRONMENTAL / SURVEY
12940 Country Parkway San Antonio, Texas 78216
Voice:(210) 349-3271 Fax:(210) 349-2561 www.vickreynet.com
Texas Board of Professional Engineers Registration No: F-159

©2010

Texas Department of Transportation
© 2010

LOOP 1604 SUPER STREET

DRAINAGE SUMMARY

SHEET 1 OF 1

DGN:	FED. RD. DIV. NO.	STATE	FEDERAL AID PROJECT NO.			HIGHWAY NO.
CHK DGN:	6	TEXAS	STP 2011(210)ES			LP 1604
DWG:	DIST.	COUNTY	CONT. NO.	SECT. NO.	JOB NO.	SHEET NO.
CHK DWG:	SAT	BEXAR	2452	01	050	24

Design Filename: N:\2294-001\dgn\GENERAL\LP1604sum01.dgn

Plotted on: 8/31/2010

ESTIMATE OF TRAFFIC SIGNAL QUANTITIES

LOOP 1604 SUPERSTREET

Item No.	Desc. Code	Item Description	Unit	Turnaround #1	1604 & New Guilbeau	Turnaround #2	1604 & Shaenfield	Turnaround #3	1604 & 151	1604 & Alamo Ranch	Approx. Total Quantities
0416	2056	DRILL SHAFT (TRF SIG POLE)(36 IN)(ROCK)	LF	0	0	0	13.2	0	56.8	0	70
0416		DRILL SHAFT (TRF SIG POLE) (48 IN) (ROCK)	LF	21.9	0	24.9	43.8	26.4	0	0	117
0618	2086	CONDT (PVC)(SCHD 80)(2")(TRENCH)(ROCK)	LF	680	0	0	0	0	0	0	680
0618	2087	CONDT (PVC)(SCHD 80)(2")(BORE) (ROCK)	LF	135	0	0	0	0	0	0	135
0618	2088	CONDT (PVC)(SCHD 80)(3")(TRENCH)(ROCK)	LF	215	435	120	960	225	115	260	2330
0618	2089	CONDT (PVC)(SCHD 80)(3")(BORE) (ROCK)	LF	0	490	130	1260	285	680	430	3275
0620	2009	ELEC CONDR (NO. 6) BARE	LF	0	160	20	45	370	20	0	615
0620	2010	ELEC CONDR (NO. 6) INSULATED	LF	0	320	40	110	740	40	0	1250
0620	2011	ELEC CONDR (NO. 8) BARE	LF	130	1475	360	2710	360	1010	0	6045
0620	2023	ELEC CONDR (NO.3/0) BARE	LF	1040	0	0	0	0	0	0	1040
0620	2024	ELEC CONDR (NO.3/0) INSULATED	LF	2080	0	0	0	0	0	0	2080
0624	2008	GROUND BOX TY A (122311) W/APRON	EA	6	2	0	1	4	0	0	13
0624	2014	GROUND BOX TY D (162922) W/APRON	EA	0	3	1	10	2	6	5	27
0628	2089	ELC SRV TY D 120/240 070 (NS)GS(N)TP(O)	EA	1	0	1	0	1	1	0	4
0628	2129	ELC SRV TY D 120/240 125 (NS)GS(N)EX(O)	EA	0	0	0	1	0	0	0	1
0680	2003	INSTALL HWY TRF SIG (SYSTEM)	EA	1	1	1	1	1	1	0	6
0681	2001	TEMP TRAF SIGNALS	EA	0	1	0	1	0	1	0	3
0682	2001	BACK PLATE (12 IN) (3 SEC)	EA	5	9	8	14	8	13	0	57
0682	2012	LOUVER (12 IN) (ADJUSTABLE)	EA	0	0	0	6	0	12	0	18
0682	2022	VEH SIG SEC (12 IN) LED (GRN ARW)	EA	2	4	5	6	5	0	0	22
0682	2023	VEH SIG SEC (12 IN) LED (GRN)	EA	3	5	3	8	3	13	0	35
0682	2024	VEH SIG SEC (12 IN) LED (YEL ARW)	EA	2	4	5	6	5	0	0	22
0682	2025	VEH SIG SEC (12 IN) LED (YEL)	EA	3	5	3	8	3	13	0	35
0682	2026	VEH SIG SEC (12 IN) LED (RED ARW)	EA	2	4	5	6	5	0	0	22
0682	2027	VEH SIG SEC (12 IN) LED (RED)	EA	3	5	3	8	3	13	0	35
0682	2043	PED SIG SEC (12")(2 IND)(HOUSING ONLY)	EA	0	2	0	8	0	0	0	10
0684	2035	TRF SIG CBL (TY A) (14 AWG) (9 CONDR)	LF	595	2450	960	4375	960	2675	0	12015
0686	2039	INS TRF SIG PL AM(S) 1 ARM (40')	EA	0	0	0	0	0	1	0	1
0686	2041	INS TRF SIG PL AM(S) 1 ARM (40') LUM	EA	0	0	0	1	0	0	0	1
0686	2043	INS TRF SIG PL AM(S) 1 ARM (44')	EA	0	0	0	0	0	1	0	1
0686	2045	INS TRF SIG PL AM(S) 1 ARM (44') LUM	EA	0	0	0	0	0	1	0	1
0686	2049	INS TRF SIG PL AM(S) 1 ARM (48') LUM	EA	0	0	0	0	0	1	0	1
0686	2213	INS TRF SIG PL AM(S) 2 ARM (55-36') LUM	EA	0	0	0	2	0	0	0	2
0686	2249	INS TRF SIG PL AM(S) 2 ARM (60-44') LUM	EA	1	0	0	0	0	0	0	1
0686	2277	INS TRF SIG PL AM(S) 2 ARM (65-44') LUM	EA	0	0	1	0	1	0	0	2
0687	2001	PED POLE ASSEMBLY	EA	0	5	3	8	3	2	0	21
8642	XXXX	AUDIBLE PEDESTRIAN SIGNAL UNIT	EA	0	2	0	8	0	0	0	10
6007	2001	REMOVING TRAFFIC SIGNALS	EA	0	1	0	1	0	1	0	3
		INSTALL CCTV FIELD EQUIPMENT$	EA	1	1	1	1	1	1	0	6
		BATTERY BACK-UP SYSTEM	EA	1	1	1	2	1	1	0	7
		LED COUNTDOWN PEDESTRIAN SIGNAL MODULE	EA	0	2	0	8	0	0	0	10

* SUBSIDIARY TO ITEM 680

** SUBSIDIARY TO ITEM 682

*** SUBSIDIARY TO ITEM 687

$ TO BE INSTALLED PER MANUFACTURERS SPECIFICATION

REV. NO.	DATE	DESCRIPTION	BY

ALAMO RMA

PAPE-DAWSON ENGINEERS

555 EAST RAMSEY | SAN ANTONIO, TEXAS 78216 | PHONE: 210.375.9000 FAX: 210.375.9010

TEXAS BOARD OF PROFESSIONAL ENGINEERS, FIRM REGISTRATION # 470

Texas Department of Transportation © 2010

LOOP 1604

TRAFFIC SIGNAL QUANTITY SUMMARY

SHEET 1 OF 3

DGN:	FED. RD. DIV. NO.	STATE	FEDERAL AID PROJECT NO.			HIGHWAY NO.
CHK DGN:	6	TEXAS	STP 2011(210)ES			LP 1604
DWG:	DIST.	COUNTY	CONT. NO.	SECT. NO.	JOB NO.	SHEET NO.
CHK DWG:	SAT	BEXAR	2452	01	050	25

Design Filename: p:\74\00\04\design\civil\summaries\740004SUMSIG01.dgn

Plotted on: 8/31/2010

ESTIMATE OF TRAFFIC SIGNAL QUANTITIES

LOOP 1604 SUPERSTREET

Item No.	Desc. Code	Item Description	Unit	Turnaround #1	1604 & New Guilbeau	Turnaround #2	1604 & Shaenfield	Turnaround #3	1604 & 151	1604 & Alamo Ranch	Approx. Total Quantities
		RADAR ADVANCE DETECTION DEVICE$	EA	1	2	2	3	2	3	0	13
		RADAR PRESENCE DETECTION DEVICE $	EA	2	3	2	3	2	4	0	16
*		TRAFFIC SIGNAL CONTROLLER ASSEMBLY (TYPE 332 CABINET)	EA	1	1	1	2	1	1	0	7
*		MODEL 2070 CONTROLLER WITH NEXTPHASE SOFTWARE	EA	1	0	1	1	1	1	0	5
*		TYPE 332 CONTROLLER FOUNDATION WITH BBS BOX	EA	1	1	1	2	1	1	0	7
*		R3-1 (36"X36") NO RIGHT-TURN	EA	1	0	1	0	1	3	0	6
*		R3-2 (36"X36") NO LEFT-TURN	EA	1	1	1	0	1	4	0	8
*		R3-5R (30"X36") RIGHT-TURN ONLY	EA	0	2	0	3	0	0	0	5
*		R6-1L (48"X16") ONE-WAY	EA	1	0	1	0	1	0	0	3
*		R10-5 (SPL) (30"X36") TURN ON GREEN ARROW ONLY	EA	1	2	3	2	3	0	0	11
*		R10-11T (24"X30") NO RIGHT TURN ON RED	EA	0	1	0	1	0	0	0	2
*		METRO STREET NAME SIGN	EA	0	3	0	3	0	0	0	6
*		3M MODEL 138 OPTICOM CABLE $	LF	345	710	310	935	310	890	0	3500
*		3M MODEL 752 PHASE SELECTORS $	EA	1	1	1	2	1	1	0	7
*		3M OPTICOM MODEL 722 DETECTOR $	EA	2	3	2	3	2	3	0	15
*		PELCO ASTRO-BRAC MAST ARM WIND DAMPER ASSY(AB-0178) $	EA	2	1	2	4	2	4	0	15
*		CAT 5 ETHERNET CABLE	LF	0	0	0	40	0	0	0	40
*		ZINC-COAST STL WIRE STRAND (5/16 IN)	LF	0	765	0	0	0	0	0	765
*		ZINC-COAST STL WIRE STRAND (3/16 IN)	LF	0	325	0	0	0	0	0	325
*		R10-4BL (5"X9") PEDESTRIAN SIGN	EA	0	1	0	4	0	0	0	5
*		R10-4BR (5"X9") PEDESTRIAN SIGN	EA	0	1	0	4	0	0	0	5
**		ASTRO-BRAC SIGNAL MOUNT ASSEMBLIES	EA	5	10	8	14	8	13	0	58
**		BRACKET ASSY (SYMBOLIC PEDESTRIAN HEAD)	EA	0	2	0	8	0	0	0	10
***		DRILL SHAFT (TRF SIG POLE) (24 IN) (ROCK)	LF	0	28.5	17.1	45.6	17.1	11.4	0	119.7

* SUBSIDIARY TO ITEM 680
** SUBSIDIARY TO ITEM 682
*** SUBSIDIARY TO ITEM 687
$ TO BE INSTALLED PER MANUFACTURERS SPECIFICATION

REV. NO.	DATE	DESCRIPTION	BY

ALAMO RMA

PAPE-DAWSON ENGINEERS
555 EAST RAMSEY | SAN ANTONIO, TEXAS 78216 | PHONE: 210.375.9000 FAX: 210.375.9010
TEXAS BOARD OF PROFESSIONAL ENGINEERS, FIRM REGISTRATION # 470

Texas Department of Transportation
© 2010

LOOP 1604

TRAFFIC SIGNAL QUANTITY SUMMARY

SHEET 2 OF 3

DGN:	FED. RD. DIV. NO.	STATE	FEDERAL AID PROJECT NO.			HIGHWAY NO.
CHK DGN:	6	TEXAS	STP 2011(210)ES			LP 1604
DWG:	DIST.	COUNTY	CONT. NO.	SECT. NO.	JOB NO.	SHEET NO.
CHK DWG:	SAT	BEXAR	2452	01	050	26

Design Filename: p:\74\00\04\design\civil\summaries\740004SUMSIG02.dgn

Plotted on: 7/6/2010

QUANTITIES OF INTERCONNECTION EQUIPMENT

US 281 SUPERSTREET

Component	Part No.	Item Description	Unit	Turnaround #1	1604 & New Guilbeau	Turnaround #2	1604 & Shaenfield	Turnaround #3	1604 & 151	1604 & Alamo Ranch	Total
Wireless Access Point	AIR-LAP1522AG-AK9	802.11a, b/g Outdoor Mesh AP, FCC Cfg	EA	1	1	1	1	1	1	0	6
	AIR-ANT2480V-N	2400-2483.5 MHz, 8.0 dBi Omni Ant, with N Connect	EA	3	3	3	3	3	3	0	18
	AIR-CORD-R3P-40NA	Aironet 1520 Series AC Power Cord, 40 ft, N. Amer Plug	EA	1	1	1	1	1	1	0	6
	AIR-ANT5180V-N	4900-5850 MHz, 8.0Dbi OMNI with N Connect	EA	1	1	1	1	1	1	0	6
	AIR-ACCPMK1520	1520 Series Pole Mount Kit	EA	1	1	1	1	1	1	0	6
	SMARTNET 8X5XNBD	802.11a, b/g Outdoor Mesh AP, FCC Cfg	EA	1	1	1	1	1	1	0	6
	VNTC 16-3-R10K-BED	27331A 01010000 BELDEN (Power Cable)	LF	180	365	330	250	165	720	0	2010
	7919A 01001000	IND ETH 5E4P24 HLD (Ethernet Cable)	LF	180	365	165	250	165	360	0	1485
Ethernet Switch	WS-C2955S-12	2955 12 TX W/SM UPLINKS	EA	1	1	1	1	1	1	0	6
	CISCO STK-RACKMNT-2955	19 IN RACK MOUNT KIT	EA	1	1	1	1	1	1	0	6
	PWR-2955-AC	CISCO, AC TO 24 V DC DIN RAIL PW	EA	1	1	1	1	1	1	0	6
	CON-SNTWSC2955S	SMARTNET 8X5XNBD 2955 12 TX w/Single Mode Uplinks	EA	1	1	1	1	1	1	0	6
Wireless Bridge Backhaul	ALV-853197	Su-a-5.3-6-bd-vI	EA	0	0	1	0	0	1	0	2
	AB-3004-29	ASTRO BRACKET	EA	0	0	1	0	0	1	0	2
	AB-2003-23	ALUMINUM TUBE	EA	0	0	1	0	0	1	0	2
	7919A 01001000	IND ETH 5E4P24 HLD (Ethernet Cable)	LF	0	0	165	0	0	360	0	525

ALL INTERCONNECTION EQUIPMENT SHALL BE SUBSIDIARY TO ITEM 680

REV. NO.	DATE	DESCRIPTION	BY

ALAMO RMA

PAPE-DAWSON ENGINEERS

555 EAST RAMSEY | SAN ANTONIO, TEXAS 78216 | PHONE: 210.375.9000 FAX: 210.375.9010

TEXAS BOARD OF PROFESSIONAL ENGINEERS, FIRM REGISTRATION # 470

Texas Department of Transportation © 2010

LOOP 1604

TRAFFIC SIGNAL QUANTITY SUMMARY

SHEET 3 OF 3

DGN:	FED. RD. DIV. NO.	STATE	FEDERAL AID PROJECT NO.			HIGHWAY NO.
CHK DGN:	6	TEXAS	STP 2011(210)ES			LP 1604
DWG:	DIST.	COUNTY	CONT. NO.	SECT. NO.	JOB NO.	SHEET NO.
CHK DWG:	SAT	BEXAR	2452	01	050	27

Design Filename: p:\74\00\04\design\civil\Summaries\T40004SUMSIG03.dgn

ITEM-DESC	0416-2029	0432-2001	0610-2025	0610-2026	0610-2068	0618-2018	0618-2035	0620-2009	0620-2010
SHEET	DRILL SHAFT (RDWY ILL POLE) (30 IN)	RIPRAP (CONC) (4 IN)	INS RD IL AM (TY SA) 40T-8 (.25 KW)S	INS RD IL AM (TY SA) 40T-8-8 (.25 KW)S	REMOVE RD IL ASM (TRANS-BASE)	CONDT (PVC) (SCHD 40) (2")	CONDT (PVC) (SCHD 80) (2") (BORE)	ELEC CONDR (NO. 6) BARE	ELEC CONDR (NO. 6) INSULATED
	LF	CY	EA	EA	EA	LF	LF	LF	LF
1 OF 15									
2 of 15	40	1.75	5			775			
3 of 15	40	1.4	1	4		899	136		
4 of 15	16	0.7		2		865	80	1500	3000
5 of 15	88	3.85	9	2		2250	65	2315	4630
6 of 15	80	3.15	4	6	3	1960	435	1465	3360
7 of 15	80	3.5	6	4	1	2005	110		
8 of 15	16	0.7	2			225			
9 of 15	32	1.4	4			792	71		
10 of 15									
11 of 15									
12 of 15									
13 of 15	32	1.4	4			937	281		
14 of 15	32	1.4	4			931	48		
15 of 15	56	2.45	7			1486			
TOTALS	512	21.7	46	18	4	13125	1226	5280	10990

ITEM-DESC	0620-2011	0620-2012	0624-2008	0628-2036	0628-2158	0628-2174
SHEET	ELEC CONDR (NO. 8) BARE	ELEC CONDR (NO. 8) INSULATED	GROUND BOX TY A (122311) W/APRON	ELC SRV TY A 240/480 100 (NS)SS(E)TP(O)	REMOVE ELECTRICAL SERVICES	ELC SRV TY A 240/480 060(NS)AL(E)TP(O)
	LF	LF	EA	EA	EA	EA
1 OF 15						
2 of 15	775	1550				
3 of 15	1035	2070				
4 of 15	545	1090	5		1	1
5 of 15			1			
6 of 15	930	1910	7	1	1	
7 of 15	2115	4230	1			
8 of 15	225	450				
9 of 15	863	1726	1			1
10 of 15						
11 of 15						
12 of 15						
13 of 15	1218	2496	6			1
14 of 15	979	1958	1			
15 of 15	1486	2972				
TOTALS	10171	20452	22	1	2	3

REV. NO.	DATE	DESCRIPTION	BY

ALAMO RMA

PAPE-DAWSON ENGINEERS

555 EAST RAMSEY | SAN ANTONIO, TEXAS 78216 | PHONE: 210.375.9000 FAX: 210.375.9010

TEXAS BOARD OF PROFESSIONAL ENGINEERS, FIRM REGISTRATION # 470

Texas Department of Transportation © 2010

LOOP 1604

ILLUMINATION SUMMARY

SHEET 1 OF 1

DGN:	FED. RD. DIV. NO.	STATE	FEDERAL AID PROJECT NO.			HIGHWAY NO.
CHK DGN:	6	TEXAS	STP 2011(210)ES			LP 1604
DWG:	DIST.	COUNTY	CONT. NO.	SECT. NO.	JOB NO.	SHEET NO.
CHK DWG:	SAT	BEXAR	2452	01	050	28

Plotted on: 8/2/2010

Design Filename: p:\74\00\04\design\civil\Summaries\7400041LUMSUM01.dgn

ITEM-DESC	0666-2003	0666-2006	0666-2012	0666-2036	0666-2048	0666-2054	0666-2093	0666-2096	0666-2108	0666-2111	0666-2123	0666-2132
SHEET NO.	REFL PAV MRK TY I (W) 4" (BRK) (100MIL)	REFL PAV MRK TY I (W) 4" (DOT) (100MIL)	REFL PAV MRK TY I (W) 4" (SLD) (100MIL)	REFL PAV MRK TY I (W) 8" (SLD) (100MIL)	REFL PAV MRK TY I (W) 24" (SLD) (100MIL)	REFL PAV MRK TY I (W) (ARROW) (100MIL)	REFL PAV MRK TY I (W) (UTURN ARW) (100MIL)	REFL PAV MRK TY I (W) (WORD) (100MIL)	REFL PAV MRK TY I (Y) 4" (DOT) (100MIL)	REFL PAV MRK TY I (Y) 4" (SLD) (100MIL)	REFL PAV MRK TY I (Y) 8" (SLD) (100MIL)	REFL PAV MRK TY I (Y) 24" (SLD) (100MIL)
	LF	LF	LF	LF	LF	EA	EA	EA	LF	LF	LF	LF
Sheet 1		45		837	177	2	2	4				
Sheet 2				700			2	2				
Sheet 3				501			2	2				
Sheet 4				327			1	1				
Sheet 5		88		556	263	5	1	3	45		250	125
Sheet 6				358		1		2			354	287
Sheet 7				81		1		1			20	7
Sheet 8												
Sheet 9						1						
Sheet 10						1						
Sheet 11		23		489	187	1	2	2				56
Sheet 12				1000		1						
Sheet 13				1291		2	2	4				
Sheet 14				630			4	3				
Sheet 15		200		618	548	3		4	78			
Sheet 17				2277		3		6				
Sheet 18				2020	103	3	2	2				
Sheet 19		23		420	187	1	2	2				47
Sheet 20						1						
Sheet 21						1						
Sheet 22												
Sheet 23			645	660						33		
Sheet 24	272		478	1125	40	2		2		1056		
Sheet 25	586	109		404	40	2		2		663		
Sheet 26	842			670	210	3		3			388	343
Sheet 27	367	104	299	1768	604	4				319	1064	2010
Sheet 28				281								
Sheet 29				201		2		4			78	33
Sheet 30	427		1181			2				1195		
Sheet 31		18		644		6		6				
TOTALS	2494	610	2603	17858	2359	48	20	55	123	3266	2154	2908

ITEM-DESC	0666-2189	0666-2189	0666-2189	0666-2189	0666-2189	0666-2191	0666-2191	0666-2195	0666-2195	0666-2219
SHEET NO.	PAVEMENT SEALER (4") (W) (DOT)	PAVEMENT SEALER (4") (Y) (DOT)	PAVEMENT SEALER (4") (W) (SLD)	PAVEMENT SEALER (4") (W) (BRK)	PAVEMENT SEALER (4") (Y) (SLD)	PAVEMENT SEALER (8") (W) (SLD)	PAVEMENT SEALER (8") (Y) (SLD)	PAVEMENT SEALER (24") (W) (SLD)	PAVEMENT SEALER (24") (Y) (SLD)	PAVEMENT SEALER (ARROW)
	LF	LF	LF	LF	LF	LF	LF	LF	LF	EA
Sheet 1	45					837		177		2
Sheet 2						700				
Sheet 3						501				
Sheet 4						327				
Sheet 5	88	45				556	250	263	125	5
Sheet 6						358	354		287	1
Sheet 7						81	20		7	1
Sheet 8										
Sheet 9										1
Sheet 10										1
Sheet 11	23					489		187	56	1
Sheet 12						1000				1
Sheet 13						1291				2
Sheet 14						630				
Sheet 15	200	78				618		548		3
Sheet 17						2277				3
Sheet 18						2020		103		3
Sheet 19	23					420		187	47	1
Sheet 20										1
Sheet 21										1
Sheet 22										
Sheet 23			645		33	660				
Sheet 24			478	272	1056	1125		40		2
Sheet 25	109			586	663	404		40		2
Sheet 26				842		670	388	210	343	3
Sheet 27	104		299	367	319	1768	1064	604	2010	4
Sheet 28						281				
Sheet 29						201	78		33	2
Sheet 30			1181	427	1195					2
Sheet 31	18					544				6
TOTALS	610	123	2603	2494	3266	17758	2154	2359	2908	48

REV. NO.	DATE	DESCRIPTION	BY

ALAMO RMA

PAPE-DAWSON ENGINEERS

555 EAST RAMSEY | SAN ANTONIO, TEXAS 78216 | PHONE: 210.375.9000 FAX: 210.375.9010

TEXAS BOARD OF PROFESSIONAL ENGINEERS, FIRM REGISTRATION # 470

Texas Department of Transportation © 2010

LOOP 1604

PAVEMENT MARKING QUANTITY SUMMARY

SHEET 1 OF 3

DGN:	FED. RD. DIV. NO.	STATE	FEDERAL AID PROJECT NO.			HIGHWAY NO.
CHK DGN:	6	TEXAS	STP 2011(210)ES			LP 1604
DWG:	DIST.	COUNTY	CONT. NO.	SECT. NO.	JOB NO.	SHEET NO.
CHK DWG:	SAT	BEXAR	2452	01	050	29

Plotted on: 7/6/2010

Design Filename: p:\74\00\04\design\civil\Summaries\740004MRKSUM01.dgn

ITEM-DESC	0666-2220	0666-2230	0672-2014	0672-2015	0672-2017	0677-2001	0677-2003	0677-2007	0677-2008	0677-2018	0678-2001	0678-2002
SHEET NO.	PAVEMENT SEALER (WORD)	PAVEMENT SEALER UTURN ARROW	REFL PAV MRKR TY I-R	REFL PAV MRKR TY II-A-A	REFL PAV MRKR TY II-C-R	ELIM EXT PAV MRK & MRKS (4")	ELIM EXT PAV MRK & MRKS (8")	ELIM EXT PAV MRK & MRKS (24")	ELIM EXT PAV MRK & MRKS (ARROW)	ELIM EXT PAV MRK & MRKS (WORD)	PAV SURF PREP FOR MRK (4")	PAV SURF PREP FOR MRK (6")
	EA	EA	EA	EA	EA	LF	LF	LF	EA	EA	LF	LF
Sheet 1	4	2	28		55							
Sheet 2	2	2			43							
Sheet 3	2	2			38							
Sheet 4	1	1			25							
Sheet 5	3	1	28	8	38							
Sheet 6	2			18	27							
Sheet 7	1			1	10							
Sheet 8					8							
Sheet 9					14							
Sheet 10					25							
Sheet 11	2	2	28	4	53							
Sheet 12					75							
Sheet 13	4	2			90							
Sheet 14	3	4			40							
Sheet 15	4		28		42							
Sheet 17	6				133							
Sheet 18	2	2			134							
Sheet 19	2	2	28	4	54							
Sheet 20					25							
Sheet 21					14							
Sheet 22					7							
Sheet 23					33	284					200	
Sheet 24	2		28		75							382
Sheet 25	2				46							1034
Sheet 26	3			20	84	370						252
Sheet 27				50	53	1260	1615	140	9	9	89	360
Sheet 28					14	771						421
Sheet 29	4			3	11							
Sheet 30					21	2680					2803	
Sheet 31	6				28							
TOTALS	55	20	168	108	1315	5365	1615	140	9	9	3092	2449

ITEM-DESC	0678-2003	0678-2006	0678-2007	0678-2018	8020-2005	8020-2009	8251-2009
SHEET NO.	PAV SURF PREP FOR MRK (8")	PAV SURF PREP FOR MRK (24")	PAV SURF PREP FOR MRK (ARROW)	PAV SURF PREP FOR MRK (WORD)	REF PROF PAV MRK TY I (W) 6" (SLD)(100 MIL)	REF PROF PAV MRK TY I (Y) 6" (SLD)(100 MIL)	RE PM W / RET REQ TY I (W) 6" (BRK) (100MIL)
	LF	LF	EA	EA	LF	LF	LF
Sheet 1					356	528	113
Sheet 2					353	352	176
Sheet 3					502	501	251
Sheet 4					329	326	164
Sheet 5					439	383	146
Sheet 6					360		178
Sheet 7					233	209	115
Sheet 8					621	624	156
Sheet 9					855	855	282
Sheet 10					1000	1000	500
Sheet 11					1068	948	500
Sheet 12					1000	1000	500
Sheet 13					1000	1000	500
Sheet 14					340	340	170
Sheet 15					812	623	183
Sheet 17					1001	1000	500
Sheet 18					973	1001	500
Sheet 19					1066	948	500
Sheet 20					1000	1000	500
Sheet 21					884	883	274
Sheet 22					581	581	145
Sheet 23	418						
Sheet 24					382		
Sheet 25					1034		
Sheet 26	393	287			252		
Sheet 27	1670	2279	4		322	146	367
Sheet 28	213				1108		
Sheet 29	136		2	2	29		16
Sheet 30			2				
Sheet 31					189	93	24
TOTALS	2830	2566	8	2	18089	14341	6760

REV. NO.	DATE	DESCRIPTION	BY

ALAMO RMA

PAPE-DAWSON ENGINEERS

555 EAST RAMSEY | SAN ANTONIO, TEXAS 78216 | PHONE: 210.375.9000 FAX: 210.375.9010

TEXAS BOARD OF PROFESSIONAL ENGINEERS, FIRM REGISTRATION # 470

Texas Department of Transportation © 2010

LOOP 1604

PAVEMENT MARKING QUANTITY SUMMARY

SHEET 2 OF 3

DGN:	FED. RD. DIV. NO.	STATE	FEDERAL AID PROJECT NO.			HIGHWAY NO.
CHK DGN:	6	TEXAS	STP 2011(210)ES			LP 1604
DWG:	DIST.	COUNTY	CONT. NO.	SECT. NO.	JOB NO.	SHEET NO.
CHK DWG:	SAT	BEXAR	2452	01	050	30

Plotted on: 8/10/2010

Design Filename: p:\74\00\04\design\civil\Summaries\740004MRKSUM02.dgn

ITEM-DESC	8251-2034	8251-2034	8251-2034
SHEET NO.	PAVEMENT SEALER (6") (W) (SLD)	PAVEMENT SEALER (6") (Y) (SLD)	PAVEMENT SEALER (6") (W) (BRK)
	LF	LF	LF
Sheet 1	356	528	113
Sheet 2	353	352	176
Sheet 3	502	501	251
Sheet 4	329	326	164
Sheet 5	439	383	146
Sheet 6	360		178
Sheet 7	233	209	115
Sheet 8	621	624	156
Sheet 9	855	855	282
Sheet 10	1000	1000	500
Sheet 11	1068	948	500
Sheet 12	1000	1000	500
Sheet 13	1000	1000	500
Sheet 14	340	340	170
Sheet 15	812	623	183
Sheet 17	1001	1000	500
Sheet 18	973	1001	500
Sheet 19	1066	948	500
Sheet 20	1000	1000	500
Sheet 21	884	883	274
Sheet 22	581	581	145
Sheet 23			
Sheet 24	382		
Sheet 25	1034		
Sheet 26	252		
Sheet 27	322	146	367
Sheet 28	1108		
Sheet 29	29		16
Sheet 30			
Sheet 31	189	93	24
TOTALS	18089	14341	6760

Plotted on: 8/10/2010

Design Filename: p:\74\00\04\design\civil\summaries\740004MRKSUM03.dgn

REV. NO.	DATE	DESCRIPTION	BY

ALAMO RMA

PAPE-DAWSON ENGINEERS

555 EAST RAMSEY | SAN ANTONIO, TEXAS 78216 | PHONE: 210.375.9000 FAX: 210.375.9010

TEXAS BOARD OF PROFESSIONAL ENGINEERS, FIRM REGISTRATION # 470

Texas Department of Transportation © 2010

LOOP 1604

PAVEMENT MARKING QUANTITY SUMMARY

SHEET 3 OF 3

DGN:	FED. RD. DIV. NO.	STATE	FEDERAL AID PROJECT NO.			HIGHWAY NO.
CHK DGN:	6	TEXAS	STP 2011(210)ES			LP 1604
DWG:	DIST.	COUNTY	CONT. NO.	SECT. NO.	JOB NO.	SHEET NO.
CHK DWG:	SAT	BEXAR	2452	01	050	31

ITEM-DESC	0164-2029	0164-2031	0168-2001	0506-2002	0506-2009	0506-2016	0506-2019	0506-2024	0506-2026	0506-2034	0506-2036
	** CELL FBR MLCH SEED(TEMP)(WARM)	** CELL FBR MLCH SEED(TEMP)(COOL)	* VEGETATIVE WATERING	ROCK FILTER DAMS (INSTALL) (TY 2)	ROCK FILTER DAMS (REMOVE)	CONSTRUCTION EXITS (INSTALL) (TY 1)	CONSTRUCTION EXITS (REMOVE)	BACKHOE WORK (EROSION & SEDM CONT)	FRNT END LOADER WORK (ERSN & SEDM CONT)	TEMPORARY SEDIMENT CONTROL FENCE	SANDBAGS FOR EROSION CONTROL (6 IN)
	SY	SY	SY	LF	LF	SY	SY	HR	HR	LF	LF
1 of 12				50	50	80	80	5	5		
2 of 12				40	40	80	80	4	4		
3 of 12				50	50	80	80	85	85	800	
4 of 12				60	60			164	164	1574	
5 of 12				60	60	80	80	27	27	210	
6 of 12				20	20	80	80	2	2		
7 of 12				15	15			10	10	78	
8 of 12				10	10			1	1		
9 pf 12				300	300			28	28	32	160
10 of 12				20	20			2	2		60
11 of 12				20	20	80	80	20	20	180	
12 of 12				60	60			99	99	928	
	11893	11893	11893								
TOTALS	11893	11893	11893	705	705	480	480	447	447	3802	220

* AREA OF APPLICATION. SEE GENERAL NOTES FOR PAY QUANTITY.

** TOTAL AREA FOR TEMPORARY CELL FBR MULCH IS ASSUMED TO BE EQUAL TO HALF OF THE OVERALL AREA FOR PERMANENT SEEDING, DIVIDED EQUALLY BETWEEN "WARM AND COOL". ACTUAL AREAS ARE TO BE COORDINATED IN THE FIELD.

Plotted on: 7/7/2010

Design Filename: p:\74\00\04\design\civil\summaries\740004SW3PSUM01.dgn

REV. NO.	DATE	DESCRIPTION	BY

ALAMO RMA

PAPE-DAWSON ENGINEERS

555 EAST RAMSEY | SAN ANTONIO, TEXAS 78216 | PHONE: 210.375.9000 FAX: 210.375.9010

TEXAS BOARD OF PROFESSIONAL ENGINEERS, FIRM REGISTRATION # 470

Texas Department of Transportation © 2010

LOOP 1604

SW3P QUANTITY SUMMARY

SHEET 1 OF 1

DGN:	FED. RD. DIV. NO.	STATE	FEDERAL AID PROJECT NO.			HIGHWAY NO.
CHK DGN:	6	TEXAS	STP 2011(210)ES			LP 1604
DWG:	DIST.	COUNTY	CONT. NO.	SECT. NO.	JOB NO.	SHEET NO.
CHK DWG:	SAT	BEXAR	2452	01	050	32

LEVELS DISPLAYED
1 2 3 4 5 6 7 8 9 10 11 12 13 14 15 16
17 18 19 20 21 22 23 24 25 26 27 28 29 30 31 32
33 34 35 36 37 38 39 40 41 42 43 44 45 46 47 48
49 50 51 52 53 54 55 56 57 58 59 60 61 62 63

ACC:

DISCLAIMER
The use of this standard is governed by the "Texas Engineering Practice Act". No warranty of any kind is made by TxDOT for any purpose whatsoever. TxDOT assumes no responsibility for the conversion of this standard to other formats or for incorrect results or damages resulting from its use.

SUMMARY OF SMALL SIGNS

SM RD SGN ASSM TY XXXXX(X)XX(X-XXXX)

- Post Type: FRP = Fiberglass; TWT = Thin-Wall; 10BWG = 10 BWG; S80 = Sch 80
- Posts: (1 or 2)
- Anchor Type: UA=Univer-Conc; UB=Univer-Bolt; SA=Slip-Conc; SB=Slip-Bolt; WS=Wedge Steel; WP=Wedge Plastic
- Mounting Designation: P = Prefab. "Plain"; T = Prefab. "T"; U = Prefab. "U"
- 1EXT or 2EXT = # of Ext.; BM = Extruded Wind Beam; WC = 1.12 #/ft Wing Chan.; EXAL= Extruded Aluminum

PLAN SHEET NO.	SIGN NO.	SIGN NOMENCLATURE	SIGN TEXT	DIMENSIONS	ALUMINUM TYPE A	ALUMINUM TYPE G	Post Type	Posts	Anchor Type	Mounting Designation	
1	1	R5-1	DO NOT ENTER	36X36	X		10BWG	2	SA	P	
		R5-1a	WRONG WAY	36X24							
	2	R3-2	NO LEFT TURN SYMBOL	36X36	X		10BWG	2	SA	P	
			MOUNTED BACK TO BACK								
		R5-1	DO NOT ENTER	36X36							
		R5-1a	WRONG WAY	36X24							
	3	R3-8LL	LT ARROW-ONLY, LT ARROW-ONLY	30X30	X		10BWG	1	SA	T	
	4	W3-3	SIGNAL AHEAD SYMBOL	48X48	X		10BWG	1	SA	T	
	5	W3-3	SIGNAL AHEAD SYMBOL	48X48	X		10BWG	1	SA	T	
	6	M3-1	NORTH	30X15	X		10BWG	1	SA	P	
		M1-6L	LOOP 1604	36X36							
	7		NOT USED								
	8	R5-1	DO NOT ENTER	36X36	X		10BWG	2	SA	P	
		R5-1a	WRONG WAY	36X24							
	9	R5-1	DO NOT ENTER	36X36	X		10BWG	2	SA	P	
		R5-1a	WRONG WAY	36X24							
	10	M3-3	SOUTH	30X15	X		S80	1	SA	P	
		M1-6L	LOOP 1604	36X36							
		M6-1	HORIZONTAL ARROW	30X24							
3	1	M3-3	SOUTH	30X15	X		S80	1	SA	P	
		M1-6L	LOOP 1604	36X36							
		M53L	U TURN ARROW	30X24							
	2	R3-8LL	LT ARROW-ONLY, LT ARROW-ONLY	30X30	X		10BWG	1	SA	T	
4	1	R9-3A	NO PEDESTRIAN CROSSING SYMBOL	24X24	X		10BWG	1	SB	P	
	2		NOT USED								
	3	R6-1R	ONE WAY	48X16	X		10BWG	1	SA	T	
	4	R6-1R	ONE WAY	48X16	X		10BWG	1	SB	T	
	5	R3-4	NO U TURN SYMBOL	36X36	X		10BWG	1	SB	T	
			MOUNTED BACK TO BACK								
		R5-1	DO NOT ENTER	36X36							
	6	SPL	NEW GUILBEAU RD	90X30	X		S80	1	SA	T	
5	1	R4-7	KEEP RIGHT SYMBOL	36X48	X		10BWG	1	SB	T	
	2	R5-1	DO NOT ENTER	36X36	X		10BWG	2	SA	P	
		R5-1a	WRONG WAY	36X24							
			MOUNTED BACK TO BACK								
		R3-7R	RIGHT LANE MUST TURN RIGHT	30X30							
	3	R3-2	NO LEFT TURN SYMBOL	36X36	X		10BWG	1	SB	T	
	4	R9-3A	NO PEDESTRIAN CROSSING SYMBOL	24X24	X		10BWG	1	SB	P	
	5	SPL	NEW GUILBEAU RD	90X30	X		S80	1	SA	T	
	6	R5-1	DO NOT ENTER	36X36	X		S80	1	SB	T	
	7	R1-2	YIELD	48X48X48	X		S80	1	SA	T	
6	1	R3-5R	RIGHT ARROW ONLY	30X36	X		10BWG	1	SA	T	
8	1	W3-3	SIGNAL AHEAD SYMBOL	48X48	X		10BWG	1	SA	T	
	2	W3-3	SIGNAL AHEAD SYMBOL	48X48	X		10BWG	1	SA	T	
9	1	W9-2L	LANE ENDS MERGE LEFT	48x48	X		10BWG	1	SA	T	
10	3	R3-1	NO RIGHT TURN SYMBOL	36X36	X		10BWG	2	SA	P	
			MOUNTED BACK TO BACK								
		R5-1	DO NOT ENTER	36X36							
		R5-1a	WRONG WAY	36X24							
	4	R5-1	DO NOT ENTER	36X36	X		10BWG	2	SA	P	
		R5-1a	WRONG WAY	36X24							
	5	R3-2	NO LEFT TURN SYMBOL	36X36	X		10BWG	2	SA	P	
			MOUNTED BACK TO BACK								
		R5-1	DO NOT ENTER	36X36							

ALUMINUM SIGN BLANKS (TYPE A)

Square Ft.	Min. Thickness
Less than 7.5	0.080"
7.5 to 15	0.100"
Greater than 15	0.125"

Sign supports shall be located as shown on the plans, except that the Engineer may shift the sign supports, within design guidelines, where necessary to secure a more desirable location or to avoid conflict with utilities. Unless otherwise shown on the plans, the Contractor shall stake and the Engineer will verify all sign support locations.

©TxDOT May 1987

DN:-TxDOT 11-93 7-07
DN:-TxDOT 8-95 2-07
DN:-TxDOT 1-02 9-08
DN:-TxDOT
DN:-TxDOT

SUMMARY OF SMALL SIGNS

DISTRICT	COUNTY	CONTROL	SECTION	JOB	HIGHWAY
SAT	-	-	-	-	LP1604

FEDERAL AID PROJECT

SHEET: 1 OF 4

33

LEVELS DISPLAYED
1 2 3 4 5 6 7 8 9 10 11 12 13 14 15 16 17 18 19 20 21 22 23 24 25 26 27 28 29 30 31 32 33 34 35 36 37 38 39 40 41 42 43 44 45 46 47 48 49 50 51 52 53 54 55 56 57 58 59 60 61 62 63

ACC:

DISCLAIMER
The use of this s[illegible]ord is governed by the "Texas Engineering Practice Act". No warrant[illegible]any kind is made by [illegible] for any purpose whatsoever. TxDOT assumes no responsibility for the [illegible]iversion of this standard to other formats or for incorrect results or damages resulting from its use.

SUMMARY OF SMALL SIGNS

SM RD SGN ASSM TY XXXXX(X)XX(X-XXXX)

- Post Type: FRP = Fiberglass; TWT = Thin-Wall; 10BWG = 10 BWG; S80 = Sch 80
- Posts (1 or 2)
- Anchor Type: UA=Univer-Conc; UB=Univer-Bolt; SA=Slip-Conc; SB=Slip-Bolt; WS=Wedge Steel; WP=Wedge Plastic
- Mounting Designation: P = Prefab. "Plain"; T = Prefab. "T"; U = Prefab. "U"
- [1EXT or 2EXT = # of Ext. BM = Extruded Wind Beam; WC = 1.12 #/ft Wing Chan.; EXAL= Extruded Aluminum

PLAN SHEET NO.	SIGN NO.	SIGN NOMENCLATURE	SIGN TEXT	DIMENSIONS	ALUMINUM TYPE A	ALUMINUM TYPE G	Post Type	Posts	Anchor Type	Mounting Designation	
	6	R5-1	DO NOT ENTER	36X36	X		10BWG	2	SA	P	
		R5-1a	WRONG WAY	36X24							
	7	R7-1D	NO PARKING ANY TIME	12X18	X		10BWG	1	SA	P	
11	1	R3-8LL	LT ARROW-ONLY, LT ARROW-ONLY	30X30							FUTURE
	2	SPL	SHAENFIELD RD	72X30	X		S80	1	SA	T	
	3	W9-1R	RIGHT LANE ENDS	48X48	X		10BWG	1	SA	T	
12	1	R3-8(SPL)	NO TRUCKS U ARROW, U ARROW	48X36	X		10BWG	1	SA	T	
	2	M3-3	SOUTH	30X15	X		S80	1	SA	P	
		M1-6L	LOOP 1604	36X36							
		M5-3L	U TURN ARROW	30X24							
	3	R3-8(SPL)	THRU ARROW ONLY (X3), RT ARROW ONLY	60X30	X		10BWG	1	SA	U	
13	2	R3-4	NO U TURN SYMBOL	36X36							FUTURE
	3	R6-1R	ONE WAY	48X16							FUTURE
	4	R4-7	KEEP RIGHT SYMBOL	36X48							FUTURE
	5	R5-1	DO NOT ENTER	36X36	X		10BWG	2	SB	P	
		R5-1a	WRONG WAY	36X24							
	6	R5-1	DO NOT ENTER	36X36	X		10BWG	2	SB	P	
		R5-1a	WRONG WAY	36X24							
	7	R5-1	DO NOT ENTER	36X36	X		10BWG	2	SA	P	
		R5-1a	WRONG WAY	36X24							
	8	R5-1	DO NOT ENTER	36X36	X		10BWG	2	SA	P	
		R5-1a	WRONG WAY	36X24							
			MOUNTED BACK TO BACK								
		R3-7R	RIGHT LANE MUST TURN RIGHT	30X30							
	9	R5-1	DO NOT ENTER	36X36	X		10BWG	2	SB	P	
		R5-1a	WRONG WAY	36X24							
	11	R3-4	NO U TURN SYMBOL	36X36	X		S80	1	SB	T	
			MOUNTED BACK TO BACK								
		R4-7	KEEP RIGHT SYMBOL	36X48							
	12	R4-7	KEEP RIGHT SYMBOL	36X48	X		10BWG	1	SB	T	
	13	R6-1R	ONE WAY	48X16	X		10BWG	1	SB	T	
	14	R6-1R	ONE WAY	48X16	X		10BWG	1	SB	T	
	15	R6-1R	ONE WAY	48X16	X		10BWG	1	SB	T	
	16	R3-7R	RIGHT LANE MUST TURN RIGHT	30X30	X		10BWG	2	SB	P	
			MOUNTED BACK TO BACK								
		R5-1	DO NOT ENTER	36X36							
		R5-1a	WRONG WAY	36X24							
	17	R1-2	YIELD	48X48X48	X		S80	1	SA	T	
	18	R1-2	YIELD	48X48X48							FUTURE
14	1	R3-8(SPL)	THRU ARROW ONLY (X3), RT ARROW ONLY	60X30	X		10BWG	1	SA	U	
	2	R3-8(SPL)	THRU ARROW ONLY (X3), RT ARROW ONLY	60X30	X		10BWG	1	SA	U	
	3	R3-8(SPL)	NO TRUCKS U ARROW, U ARROW	48X36	X		10BWG	1	SA	T	
	4	M3-1	NORTH	30X15	X		S80	1	SA	P	
		M1-6L	LOOP 1604	36X36							
		M5-3L	U TURN ARROW	30X24							
15	1	SPL	SHAENFIELD ROAD	72X30	X		S80	1	SA	T	
	3	R3-8LL	LT ARROW-ONLY, LT ARROW-ONLY	30X30	X		10BWG	1	SA	T	
	4	R3-7R	RIGHT LANE MUST TURN RIGHT	30X30	X		10BWG	1	SA	T	
	5	W9-1R	RIGHT LANE ENDS	48X48	X		10BWG	1	SA	T	
	6	R6-1R	ONE WAY	48X16	X		10BWG	1	SA	T	

ALUMINUM SIGN BLANKS (TYPE A)

Square Ft.	Min. Thickness
Less than 7.5	0.080"
7.5 to 15	0.100"
Greater than 15	0.125"

Sign supports shall be located as shown on the plans, except that the Engineer may shift the sign supports, within design guidelines, where necessary to secure a more desirable location or to avoid conflict with utilities. Unless otherwise shown on the plans, the Contractor shall stake and the Engineer will verify all sign support locations.

©TxDOT May 1987

REVISIONS
DN: TxDOT 11-93 7-02
CK: TxDOT 8-95 2-07
DW: TxDOT 1-02 9-08
CK: TxDOT

FEDERAL AID PROJECT

DISTRICT	COUNTY	CONTROL	SECTION	JOB	HIGHWAY
SAT	BEXAR	-	-	-	LP1604

SHEET 2 OF 4

SUMMARY OF SMALL SIGNS

34

LEVELS DISPLAYED
1 2 3 4 [illegible] 9 10 11 12 13 14 15 16
17 18 19 20 21 [illegible] 25 26 27 28 29 30 31 32
33 34 35 36 37, 41 42 43 44 45 46 47 48
49 50 51 52 53 54 55 56 57 58 59 60 61 62 63

ACC:

DISCLAIMER
The use of this s[illegible]rd is governed by the "Texas Engineering Practice Act". No warrant[illegible]any kind is made by T[illegible]for any purpose whatsoever. TxDOT assumes no responsibility for the [illegible]iversion of this standard to other formats or for incorrect results or damages resulting from its use.

SUMMARY OF SMALL SIGNS

SM RD SGN ASSM TY XXXXX(X)XX(X-XXXX)

Post Type: FRP = Fiberglass; TWT = Thin-Wall; 10BWG = 10 BWG; S80 = Sch 80

Posts (1 or 2)

Anchor Type: UA=Univer-Conc; UB=Univer-Bolt; SA=Slip-Conc; SB=Slip-Bolt; WS=Wedge Steel; WP=Wedge Plastic

Mounting Designation: P = Prefab. "Plain"; T = Prefab. "T"; U = Prefab. "U"

1EXT or 2EXT = # of Ext.; BM = Extruded Wind Beam; WC = 1.12 #/ft Wing Chan.; EXAL= Extruded Aluminum

PLAN SHEET NO.	SIGN NO.	SIGN NOMENCLATURE	SIGN TEXT	DIMENSIONS	ALUMINUM TYPE A	ALUMINUM TYPE G	Post Type	Posts	Anchor Type	Mounting Designation	
16	1	R7-1D	NO PARKING ANY TIME	12X18	X		10BWG	1	SA	P	
	3	R5-1	DO NOT ENTER	36X36	X		10BWG	2	SA	P	
		R5-1a	WRONG WAY	36X24							
	4	R5-1	DO NOT ENTER	36X36	X		10BWG	2	SA	P	
		R5-1a	WRONG WAY	36X24							
	5	R5-1	DO NOT ENTER	36X36	X		10BWG	2	SA	P	
		R5-1a	WRONG WAY	36X24							
			MOUNTED BACK TO BACK								
		R3-1	NO RIGHT TURN SYMBOL	36X36							
	6	R5-1	DO NOT ENTER	36X36	X		10BWG	2	SA	P	
		R5-1a	WRONG WAY	36X24							
			MOUNTED BACK TO BACK								
		R3-2	NO LEFT TURN SYMBOL	36X36							
17	1	R2-1	SPEED LIMIT 55	36X48	X		10BWG	1	SA	T	
	2	R2-1	SPEED LIMIT 55	36X48	X		10BWG	1	SA	T	
	3	W9-2L	LANE ENDS MERGE LEFT	48x48	X		10BWG	1	SA	T	
18	1	W3-3	SIGNAL AHEAD SYMBOL	48X48	X		10BWG	1	SA	T	
	2	W3-3	SIGNAL AHEAD SYMBOL	48X48	X		10BWG	1	SA	T	
20	1	W13-2	EXIT - 45 MPH	48X60	X		10BWG	1	SA	T	
	2	R4-3B	DO NOT CROSS DOUBLE WHITE LINE	48X48	X		10BWG	1	SA	T	
	3	R4-3B	DO NOT CROSS DOUBLE WHITE LINE	48X48	X		10BWG	1	SA	T	
21	1	W4-3L	LANES MERGING SYMBOL	48X48	X		S80	1	SA	T	
			MOUNTED BACK TO BACK								
		R5-1A	WRONG WAY	48X36							
	2	R5-1A	WRONG WAY	48X36	X		10BWG	1	SA	T	
	3	R5-1	DO NOT ENTER	48X48	X		S80	1	SA	T	
			MOUNTED BACK TO BACK								
		R4-3B	DO NOT CROSS DOUBLE WHITE LINE	48X48							
	4	R5-1	DO NOT ENTER	48X48	X		S80	1	SA	T	
			MOUNTED BACK TO BACK								
		R4-3B	DO NOT CROSS DOUBLE WHITE LINE	48X48							
22	1	R6-1R	ONE WAY	48X16	X		10BWG	1	SA	T	
	2	R2-1	SPEED LIMIT 55	24X30	X		10BWG	1	SA	P	
	3	R3-1R	RIGHT LANE MUST TURN RIGHT	30X30	X		10BWG	1	SA	T	
		PLAQUE	800 FT	30X8							
	4	R6-1R	ONE WAY	48X16	X		10BWG	1	SA	T	
23	1	R5-1	DO NOT ENTER	36X36	X		10BWG	1	SA	T	
	2	R6-1R	ONE WAY	48X16	X		10BWG	1	SA	T	
	3	W3-3	SIGNAL AHEAD SYMBOL	48X48	X		10BWG	1	SA	T	
	4	W3-3	SIGNAL AHEAD SYMBOL	48X48	X		10BWG	1	SA	T	
	5	R6-1R	ONE WAY	48X16	X		10BWG	1	SA	T	
	6	R6-1R	ONE WAY	48X16	X		10BWG	1	SA	T	
	7	R6-1L	ONE WAY	48X16	X		10BWG	1	SA	T	
	8	R1-5b	CROSS TRAFFIC DOES NOT STOP	36X15	X		INSTALL ON RELOCATED SIGN. PAID FOR UNDER ITEM 636				
24	1	R3-2	NO LEFT TURN SYMBOL	36X36	X		10BWG	2	SA	P	
		R3-4	NO U TURN SYMBOL	36X36							
			MOUNTED BACK TO BACK								
		R5-1	DO NOT ENTER	36X36							
		R5-1a	WRONG WAY	36X24							
	2	R5-1	DO NOT ENTER	36X36	X		10BWG	2	SA	P	
		R5-1a	WRONG WAY	36X24							
	3	R5-1	DO NOT ENTER	36X36	X		10BWG	2	SA	P	
		R5-1a	WRONG WAY	36X24							

ALUMINUM SIGN BLANKS (TYPE A)

Square Ft.	Min. Thickness
Less than 7.5	0.080"
7.5 to 15	0.100"
Greater than 15	0.125"

Sign supports shall be located as shown on the plans, except that the Engineer may shift the sign supports, within design guidelines, where necessary to secure a more desirable location or to avoid conflict with utilities. Unless otherwise shown on the plans, the Contractor shall stake and the Engineer will verify all sign support locations.

© TxDOT May 1987

REVISIONS
DN: TxDOT 11-93
DN: TxDOT 7-02
DN: TxDOT 2-02
DN: TxDOT 8-95
CK: TxDOT 1-02
DW: TxDOT 9-08

SUMMARY OF SMALL SIGNS

DISTRICT	COUNTY	CONTROL	SECTION	JOB	HIGHWAY
SAT	BEXAR	-	-	-	LP1604

FEDERAL AID PROJECT

SHEET 35 | 3 OF 4

LEVELS DISPLAYED ACC:

DISCLAIMER
The use of this s[...]ard is governed by the "Texas Engineering Practice Act". No warrant[...] any kind is made by [...] for any purpose whatsoever. TxDOT assumes no responsibility for the [...]version of this standard to other formats or for incorrect results or damages resulting from its use.

SUMMARY OF SMALL SIGNS

SM RD SGN ASSM TY XXXXX(X)XX(X-XXXX)

PLAN SHEET NO.	SIGN NO.	SIGN NOMENCLATURE	SIGN TEXT	DIMENSIONS	ALUMINUM TYPE A	ALUMINUM TYPE G	Post Type: FRP = Fiberglass, TWT = Thin-Wall, 10BWG = 10 BWG, S80 = Sch 80	Posts (1 or 2)	Anchor Type: UA=Univer-Conc, UB=Univer-Bolt, SA=Slip-Conc, SB=Slip-Bolt, WS=Wedge Steel, WP=Wedge Plastic	Mounting Designation: P = Prefab. "Plain", T = Prefab. "T", U = Prefab. "U"	1EXT or 2EXT = # of Ext., BM = Extruded Wind Beam, WC = 1.12 #/ft Wing Chan., EXAL= Extruded Aluminum
	4	R5-1	DO NOT ENTER	36X36	X		10BWG	2	SA	P	
		R5-1a	WRONG WAY	36X24							
	5	R6-1L	ONE WAY	48X16	X		10BWG	1	SA	T	
	6	W9-1R	RIGHT LANE ENDS	36X36	X		10BWG	1	SA	T	
	7	W4-1R	MERGING LANE SYMBOL	48X48	X		10BWG	1	SA	T	
	8	M4-5	TO	24X12	X		S80	1	SA	U	
		M1-6T	151 TEXAS	24X24							
		M6-2L	UPWARD DIAGONAL LEFT ARROW	21X15							
		M3-3	SOUTH	24X12							
		M1-6L	LOOP 1604	24X24							
		M6-3	UPWARD ARROW	21X15							
	9	M4-5	TO	24X12	X		S80	1	SA	U	
		M1-6T	151 TEXAS	24X24							
		M6-2L	UPWARD DIAGONAL LEFT ARROW	21X15							
		M3-3	SOUTH	24X12							
		M1-6L	LOOP 1604	24X24							
		M6-8R	RIGHT LANE	24X18							
	10	M4-5	TO	24X12	X		S80	1	SA	U	
		M1-6T	151 TEXAS	24X24							
		M6-2L	UPWARD DIAGONAL LEFT ARROW	21X15							
		M3-3	SOUTH	24X12							
		M1-6L	LOOP 1604	24X24							
		M6-8R	RIGHT LANE	24X18							
	11	R6-1R	ONE WAY	48X16	X		10BWG	1	SA	T	
	12	R6-1R	ONE WAY	48X16	X		10BWG	1	SA	T	
	13	R6-1R	ONE WAY	48X16	X		10BWG	1	SA	T	
	14	R6-1L	ONE WAY	48X16	X		10BWG	1	SA	T	
	15	R6-1L	ONE WAY	48X16	X		10BWG	1	SA	T	
	16	R6-1L	ONE WAY	48X16	X		10BWG	1	SA	T	
	17	R6-1R	ONE WAY	48X16	X		10BWG	1	SA	T	
25	1	W11-10L	TRUCK CROSSING SYMBOL	48X48	X		10WBG	1	SA	T	
26	1	W9-2L	LANE ENDS MERGE LEFT	36X36	X		10WBG	2	SA	T	

ALUMINUM SIGN BLANKS (TYPE A)

Square Ft.	Min. Thickness
Less than 7.5	0.080"
7.5 to 15	0.100"
Greater than 15	0.125"

Sign supports shall be located as shown on the plans, except that the Engineer may shift the sign supports, within design guidelines, where necessary to secure a more desirable location or to avoid conflict with utilities. Unless otherwise shown on the plans, the Contractor shall stake and the Engineer will verify all sign support locations.

SUMMARY OF SMALL SIGNS

©TxDOT May 1987

DN: TxDOT	REVISIONS			
CK: TxDOT	11-93	7-02		
DW: TxDOT	8-95	2-07		
CK: TxDOT	1-02	9-08		
STATE DISTRICT	FEDERAL REGION	FEDERAL AID PROJECT		SHEET
SAT	-	[illegible]		OF 4
COUNTY	CONTROL	SECTION	JOB	HIGHWAY
BEXAR	-	-	-	LP1604

SUMMARY OF LARGE SIGNS

PLAN SHEET NO.	SIGN NO.	SIGN BACK-GROUND COLOR	SIGN TEXT	SIGN DIMENSIONS	PLAQUES, & OTHER ATTACHMENTS		BACKGROUND SUBSTRATE (SQ FT)		TYPE OF MOUNT	"X" DIMENSION ◒			GALVANIZED STRUCTURAL STEEL					DRILLED SHAFT			
					DIRECT APPLY	✕ ALUMINUM (TYPE A)	GROUND MOUNT (TYPE G)	OVERHEAD (TYPE O)		post ①	post ②	post ③	SIZE	LINEAR FEET post ①	post ②	post ③	TOTAL WEIGHT LBS.	NON-REINF 12"ϕ	LINEAR FEET REINFORCED 24"ϕ	30"ϕ	36"ϕ
382	2-1	GREEN	SOUTH LOOP 1604 ONLY ONLY	6'0"X6'6"		6.9	39.00		221	2.4	3.6		S4X7.7	15.9	17.1		324.5	7			
391	11-1	GREEN	SOUTH LOOP 1604 ONLY ONLY	6'0"X6'6"		6.9	39.00		221	2.4	3.6		S4X7.7	15.9	17.1		324.5	7			
395	15-1	GREEN	NORTH LOOP 1604 ONLY ONLY	6'0"X6'6"		6.9	39.00		221	2.4	3.6		S4X7.7	15.9	17.1		324.5	7			
400	20-1	GREEN	H Stotzer Frwy SeaWorld Alamo Ranch Pkwy EXIT ½ MILE	3'0"X3'0"			9.0		221	3.15	6.55		W10X22	25.65	29.05		1295.4		20		
				17'0"X15'0"		9.25	255.0														
400	20-2	GREEN	H Stotzer Frwy SeaWorld Alamo Ranch Pkwy	3'0"X3'0"			9.0		221	3.15	6.55		W10X22	24.15	27.55		1229.4		20		
				17'0"X13'6"		9.25	229.5														
381	1-1	GREEN	TURNAROUND	8'0"X4'0"			32.0		221	1.4	1.4		S3X5.7	12.4	12.4		222	7			
384	4-1	GREEN	SOUTH LOOP 1604 NORTH	10'6"X4'0"		6.9	42.0		221	0.0	0.0		S4X7.7	11.0	11.0		270.6	7			
390	10-1	GREEN	TURNAROUND	8'0"X4'0"			32.0		221	2.5	2.5		S3X5.7	13.5	13.5		234.5	7			
393	13-1	GREEN FUTURE	SOUTH LOOP 1604 NORTH	10'6"X4'0"		-6.9-	-42.0-		-221-	0.0	0.0		S4X7.7	-11.0-	-11.0-		-270.6-	-7-		FUTURE	
393	13-2	GREEN	NORTH LOOP 1604 SOUTH	10'6"X4'0"		6.9	42.0		221	0.0	0.0		S4X7.7	11.0	11.0		270.6	7			
396	16-1	GREEN	TURNAROUND	8'0"X4'0"			32.0		221	2.5	2.5		S3X5.7	13.5	13.5		234.5	7			
400	20-3	GREEN	EXIT	6'0"X5'0"			30.0		221	0.5	0.5		S3X5.7	12.5	12.5		211.7	7			
-NOTE: FUTURE SIGNS NOT INCLUDED IN TOTALS-				TOTALS	0.0	53.0	795.5	0.0							TOTALS		4942.2	63.0	40.0		

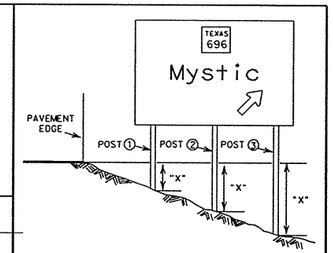

◒ The "X" dimension is the elevation difference at the post between the ground and the edge of pavement or top of curb.

Sign supports shall be located as shown on the plans, except that the Engineer may shift the sign supports, within design guidelines, where necessary to secure a more desirable location or to avoid conflict with utilities. Unless otherwise shown on the plans, the Contractor shall stake and the Engineer will verify all sign support locations.

The post lengths listed here are approximations, The corrected post lengths will be furnished by the Contractor after the stud posts are placed.

Tower heights shall be verified with the Engineer before fabrication.

✕ This column is for aluminum Type A and not direct apply. Direct apply is subsidiary to the sign.

SIGN TYPE

SIGN TYPE 1 3 0
- 1 — Wind Design Zone
- 3 — No. of Posts
- 0 — Series No. (0 Aluminum/Fiberglass, 1 Aluminum, 2 Fiberglass)

See sheet SMD(8W1)

SUMMARY OF LARGE SIGNS

©TxDOT May 1987

	REVISIONS	
DN.: TxDOT		
CK.: TxDOT	11-93	1-04
DW.: TxDOT	8-95	9-08
CK.: TxDOT	5-01	

STATE DISTRICT	FEDERAL REGION	FEDERAL AID PROJECT	SHEET
SAT	6	2452-01-050	37
COUNTY		CONTROL SECTION JOB	HIGHWAY
BEXAR		- - -	LP1604

19A

Plotted on: 8/10/2010
Design Filename: p:\741\00\04\design\civil\summaries\741004SUMLGSGN01.DGN

ITEM-DESC	0416-2016	0416-2018	0416-2031	0416-2032	0432-2066	0636-2001	0636-2002	0644-2058	0644-2060	0647-2001	0647-2003	0658-2263	0658-2316
PLAN SHEET NO	DRILL SHAFT (SIGN MTS) (12 IN)	DRILL SHAFT (SIGN MTS) (24 IN)	DRILL SHAFT (TRF SIG POLE) (30 IN)	DRILL SHAFT (TRF SIG POLE) (36 IN)	RIPRAP (CONC) (CL B)	ALUMINUM SIGNS (TY A)	ALUMINUM SIGNS (TY G)	RELOCATE SM RD SN SUP & AM TY S80	REMOVE SM RD SN SUP & AM	INSTALL LRSS (STRUCT STEEL)	REMOVE LRSA	INSTL DEL ASSM (D-SY) SZ 1 (FLX) GND	INSTL OM ASSM (OM-2Z) (FLX) GND
	LF	LF	LF	LF	CY	SF	SF	EA	EA	LB	EA	EA	EA
1 OF 26	7				1.5		32		1	222			5
2 OF 26	7				1.5	6.9	39			324.5			
3 OF 26													4
4 OF 26	7					32.9	42		7	270.6			2
5 OF 26			11.3			37.5			7				
6 OF 26									1				
7 OF 26													
8 OF 26													
9 OF 26													
10 OF 26	7				1.5		32			234.5			4
11 OF 26	7				1.5	6.9	39		2	324.5			1
12 OF 26									3				
13 OF 26	7			13.2		48.9	42		19	270.6			2
14 OF 26									2				
15 OF 26	7				1.5	6.9	39	1	4	324.5			6
16 OF 26	7				1.5		32	1	1	234.5			1
17 OF 26													
18 OF 26													
19 OF 26													
20 OF 26	7	40			4.5	18.5	502.5			2736.5			
21 OF 26									4		2	6	5
22 OF 26									2				
23 OF 26						3.75		2	10		2		2
24 OF 26					1.5				14				7
25 OF 26													2
26 OF 26													
TOTALS	63	40	11.3	13.2	15	162.25	799.5	4	77	4942.2	4	6	41

ITEM-DESC	0658-2318	0658-2329	0682-2025	0685-2004	0686-2031	0686-2039	0686-SUB1
PLAN SHEET NO	INSTL OM ASSM (OM-2Z) (FLX) SRF	INSTL DEL ASSM (D-SW) SZ 1 (FLX) GND	VEH SIG SEC (12 IN) LED (YEL)	INSTL RDSD FLSH BEACON ASSM (SOLAR PWRD)	INS TRF SIG PL AM(S) 1 ARM (32')	INS TRF SIG PL AM(S) 1 ARM (40')	ASTRO-BRAC MAST ARM WIND DAMPENER ASSM (AB-0178)
	EA	EA	EA	EA	EA	EA	EA
1 OF 26							
2 OF 26							
3 OF 26							
4 OF 26	1						
5 OF 26	1				1		
6 OF 26							
7 OF 26							
8 OF 26							
9 OF 26							
10 OF 26							
11 OF 26							
12 OF 26							
13 OF 26	3					1	1
14 OF 26							
15 OF 26	3						
16 OF 26							
17 OF 26							
18 OF 26							
19 OF 26							
20 OF 26	1	8					
21 OF 26	1	2					
22 OF 26	1						
23 OF 26	1		4	2			
24 OF 26							
25 OF 26							
26 OF 26		6					
TOTALS	12	16	4	2	1	1	1

0686-SUB1 IS SUBSIDIARY TO ITEM 686 TRAFFIC SIGNAL POLE ASSEMBLIES (STEEL)

REV. NO.	DATE	DESCRIPTION	BY

ALAMO RMA

PAPE-DAWSON ENGINEERS

555 EAST RAMSEY | SAN ANTONIO, TEXAS 78216 | PHONE: 210.375.9000 FAX: 210.375.9010

TEXAS BOARD OF PROFESSIONAL ENGINEERS, FIRM REGISTRATION # 470

Texas Department of Transportation © 2010

LOOP 1604

MISCELANEOUS SIGN SUMMARY

SHEET 1 OF 1

DGN:	FED. RD. DIV. NO.	STATE	FEDERAL AID PROJECT NO.			HIGHWAY NO.
CHK DGN:	6	TEXAS	STP 2011(210)ES			LP 1604
DWG:	DIST.	COUNTY	CONT. NO.	SECT. NO.	JOB NO.	SHEET NO.
CHK DWG:	SAT	BEXAR	2452	01	050	38

Plotted on: 8/10/2010

Design Filename: p:\74\00\04\design\civil\summaries\74004MISCSIGN.dgn

ITEM-DESC	0644-2001	0644-2004	0644-2006	0644-2007	0644-2010	0644-2013	0644-2015	0644-2022	0644-2025	0644-2027	0644-2035
	INS SM RD SN SUP&AM TY 10BWG(1) SA(P)	INS SM RD SN SUP&AM TY 10BWG(1) SA(T)	INS SM RD SN SUP&AM TY 10BWG(1) SA(U)	INS SM RD SN SUP&AM TY 10BWG(1) SB(P)	INS SM RD SN SUP&AM TY 10BWG(1) SB(T)	INS SM RD SN SUP&AM TY 10BWG(2) SA(P)	INS SM RD SN SUP&AM TY 10BWG(2) SB(P)	INS SM RD SN SUP&AM TY S80(1) SA(P)	INS SM RD SN SUP&AM TY S80(1) SA(T)	INS SM RD SN SUP&AM TY S80(1) SA(U)	INS SM RD SN SUP&AM TY S80(1) SB(T)
	EA	EA	EA	EA	EA	EA	EA	EA	EA	EA	EA
1 OF 26	1	3				4		1			
2 OF 26											
3 OF 26		1						1			
4 OF 26		1		1	2				1		
5 OF 26				1	2	1			2		1
6 OF 26		1									
7 OF 26											
8 OF 26		2									
9 OF 26		1									
10 OF 26	1					4					
11 OF 26		1							1		
12 OF 26		1	1					1			
13 OF 26					4	2	4		1		1
14 OF 26		1	2					1			
15 OF 26		4							1		
16 OF 26	1					4					
17 OF 26		3									
18 OF 26		2									
19 OF 26											
20 OF 26		3									
21 OF 26		1							3		
22 OF 26	1	3									
23 OF 26		7									
24 OF 26		10				4				3	
25 OF 26		1									
26 OF 26		1									
TOTALS	4	47	3	2	8	19	4	4	9	3	2

Plotted on: 7/7/2010

Design Filename: p:\74\00\04\design\civil\Summaries\740004SGNTALLY.dgn

REV. NO.	DATE	DESCRIPTION	BY

ALAMO RMA

PAPE-DAWSON ENGINEERS

555 EAST RAMSEY | SAN ANTONIO, TEXAS 78216 | PHONE: 210.375.9000 FAX: 210.375.9010

TEXAS BOARD OF PROFESSIONAL ENGINEERS, FIRM REGISTRATION # 470

Texas Department of Transportation ©2010

LOOP 1604

SMALL SIGN TALLY

SHEET 1 OF 1

DGN:	FED. RD. DIV. NO.	STATE	FEDERAL AID PROJECT NO.			HIGHWAY NO.
CHK DGN:	6	TEXAS	STP 2011(210)ES			LP 1604
DWG:	DIST.	COUNTY	CONT. NO.	SECT. NO.	JOB NO.	SHEET NO.
CHK DWG:	SAT	BEXAR	2452	01	050	39

Plotted on: 7/1/2010 3:45:30 PM

Design Filename: p:\8380407\div\planShts\top\740004TCPNARR(1).dgn

GENERAL

(1) Cooperate in the use of the right-of-way with the State of Texas, the City of San Antonio, and various public utility companies, their contractors and other TxDOT roadway contractors, as required to allow for utility adjustments and road construction to be done by others.

(2) Provide and maintain access to properties and businesses adjacent to the right-of-way at all times unless otherwise directed.

(3) Ensure adequate drainage during all phases of construction.

(4) No equipment shall be permitted to remain in a position after working hours that will endanger the traveling public.

(5) The Contractor will be required to have weekly meetings with the Engineer concerning planned work for the upcoming week.

(6) The provision for routing traffic during construction and the sequence of construction operations shall be in general conformity with the details shown on the plans and as required by these specifications. All traffic handling shall be in accordance with the T.M.U.T.C.D. and applicable TxDOT TCP and Work Zone Standards throughout the duration of the construction of the project.

(7) No lane closures of the through lanes on Loop 1604 will be permitted between the hours of 5:30 AM to 9:00 PM unless otherwise approved in writing.

(8) No lane closures for the turn lanes on Loop 1604 or the adjacent side streets will be permitted between the hours of 5:30 AM to 9:00 AM and 4:00 PM to 9:00 PM unless otherwise approved in writing. Turning lane closures for daytime work will be permitted between the hours of 9:00 AM to 4:00 PM. The Traffic Control Plan identifies areas of work that require the closure of shoulders. Shoulders may remain closed at all times until the work is completed for that stage of construction. However, any work in these locations that require either the partial or complete closure of a travel lane or turn lane are subject to the limitations defined above.

(9) The Traffic Control Plans identify areas of work that may need to be performed at night or for the duration of a weekend. Night work is understood to mean between the hours of 9:00 PM to 5:30 AM. When night work is required, the lane or lanes adjacent to the work will be permitted to be closed. In no case will the complete closure of either the northbound or southbound Loop 1604 through lanes be permitted.

(10) Weekend work is defined as follows: Friday, 9:00 PM to Monday, 5:30 AM. Weekend work may be required to complete the construction of directional islands in the existing crossovers at New Guilbeau Road and Shaenfield Road. The contractor will be required to have the resources and manpower necessary to expedite the completion of the island construction at the intersections so as to have Loop 1604 and the side streets open to traffic by 5:30 AM Monday morning. Any public events shall be taken into consideration when scheduling weekend work and written approval must be received from the Engineer.

(11) A minimum 3:1 (H:V) temporary safety slope of stable compacted material will be required to protect all drop-offs greater than 2" at all times during non-working hours.

(12) Notify the Engineer in writing of impending/upcoming lane closures at least:

a. Two (2) working days in advance of closures involving one (1) lane on either mainlanes or side streets.

b. Seven (7) working days in advance of multiple lane closures or weekend work.

(13) Install changeable message boards to notify the traveling public of impending/upcoming lane closures and detours as directed depending on traffic conditions.

(14) Off-duty police officers will be required, as directed below, to assist with traffic handling during the various construction operations.

SEQUENCE OF CONSTRUCTION

PHASE 1: CONSTRUCT THE TURNAROUND AND INTERSECTION IMPROVMENTS AT NEW GUILBEAU ROAD.

PHASE 1 GENERAL

(1) Install Advance Warning Signs at beginning and end of project and on side streets throughout the limits of the project in accordance with the Barricades and Construction Standards.

(2) Cover any existing signs that are in conflict with the traffic control signing placed during this phase of construction.

(3) Use 48" x 48" CW21-1T "Give Us A Brake" signs on north and south ends of project.

(4) See Phase 1 Traffic Control Plans for locations of work and configurations of traffic lanes and traffic handling devices this phase.

(5) It may be permissible to begin Phase 2 before the completion of Phase 1, if approved by the TxDOT Area Engineer.

New Guilbeau Road, Stage 1

(1) Install work zone signing and traffic control devices as shown on the TCP Phase 1, Stage 1 layouts.

(2) Install SW3P measures.

(3) Construct the temporary signal modifications as shown on the Temporary Traffic Signal Layout Sheets.

(4) Construct the outside widening of the northbound Loop 1604 mainlanes (Station 364+92.25, 212.62' LT to Station 366+79.87, 152.65' LT). This widening section along the northbound Loop 1604 mainlanes shall be opened to traffic in Phase 1, Stage 2.

(5) Construct the outside widening of the northbound Loop 1604 mainlanes (Station 380+50.00 to Station 387+25.00). The new widening section along the northbound Loop 1604 mainlanes shall remain closed to traffic with plastic drums or vertical panels until Phase 1, Stage 3.

(6) Construct the proposed traffic signal modifications at New Guilbeau Road. Cover the proposed signal heads and continue to operate the existing traffic signals until the end of Phase 1, Stage 2. Portions of the proposed traffic signal modification will require lane closures along Loop 1604 and will therefore be required to be performed at night. Appropriate construction signing and traffic control devices in accordance with the TMUTCD and TxDOT BC, TCP, and WZ standards shall be utilized during the lane closures for this work. Utilize off-duty police officers to assist with traffic handling during this work.

New Guilbeau Road, Stage 2

(1) The work shown in this stage of construction shall be constructed as a night time operation, however, there are elements that may be constructed during the day with the written approval of the Engineer.

(2) Install work zone signing and traffic control devices as shown on the TCP Phase 1, Stage 2 layouts. Maintain Stage 1 barricades and traffic control devices that are not in conflict with Stage 2.

(3) Install SW3P measures.

(4) Construct the proposed Culverts No. 1 and 2.

(5) Construct the proposed traffic signal at T.A. #1. Cover the proposed signal heads until the end of Phase 1, Stage 2.

(6) Construct the proposed inside widening of the northbound Loop 1604 mainlanes and turnaround (Station 400+00.00, NGTA to Station 379+62.45, 1604 and Station 380+23.74, 1604 to Station 380+53.00, 1604). One week prior to this construction, place PCMS along Loop 1604 Northbound and Southbound mainlanes advising traffic of upcoming nighttime lane closures. Actual location of PCMS and specific message(s) to be displayed will be as shown on BC (6)-07 and as directed by the Engineer.

(7) The south turnaround at Braun Road will be closed only when the southbound inside mainlane is closed for widening the inside shoulder for the tie-in of the proposed Superstreet turnaround for New Guilbeau Road. If the sountbound mainlane does not need to be closed then a standard 100' departure taper shall be used at the end of the northbound mainlane closure as shown on the TCP standards.

(8) Construct Flexible Pavement Repair at locations to be determined by the Engineer. Areas of flexible pavement repair construction located on the Loop 1604 mainlanes will be required to be performed as nighttime work. The contractor shall use the appropriate construction signing, in accordance with the TMUTCD and TxDOT BC, TCP & WZ standards for the necessary lane closures for this work. The contractor shall utilize off-duty police officers to assist with traffic handling during this work.

(9) Construct the illumination along Loop 1604 center median from approximate Station 364+80.00 to Station 383+50.00.

(10) Install and cover proposed sign assemblies. See Large and Small Sign Layouts for details.

(11) After completion of the Stage 2 work at New Guilbeau Road, place one course surface treatment within the limits of work for New Guilbeau Road as shown on the HMAC OVERLAY SHEETS. Re-establish lane lines with short term tabs in the configuration of the existing pavement markings as per TCP (7-1)-98. Existing pavement markings are understood to mean any original plus any WZPM's placed previously this phase. Utilize off-duty police officers to assist with the traffic handling during this work.

(12) Perform asphalt milling and place final ACP overlay within the limits of work for New Guilbeau Road as shown on the HMAC OVERLAY SHEETS. Re-establish lane lines with short term tabs in the configuration of the existing pavement markings (as defined in Step 8). Utilize off-duty police officers to assist with the traffic handling during this work.

New Guilbeau Road, Stage 2 (Continued)

(13) Convert operations to superstreet configuration. Utilize off-duty police officers to assist with the traffic handling during the conversion to the superstreet operation.

a. Place TY II permanent pavement markings.
b. Remove any existing signs and uncover all proposed signs.
c. Activate all proposed traffic signals.
d. For any directional islands that are not constructed (see Stage 3 TCP layouts for portions of islands remaining to be built), place vertical panels in the configuration of the proposed islands.
e. Switch traffic to superstreet configuration.

Note: One week in advance of switching the traffic to the superstreet configuration, use 3 changeable message signs at the intersection (one for each approach) to notify the traveling public of the upcoming change. After the traffic switch at the intersection keep the CMS's in place for an additional week to notify the traveling public of the permanent change. The actual messages used shall be as directed by the Engineer.

New Guilbeau Road, Stage 3:

(1) Install work zone signing and traffic control devices as shown on the TCP Phase 1, Stage 3 layouts. Maintain Stage 2 barricades and traffic control devices that are not in conflict with Stage 3.

(2) Complete all remaining traffic signals and directional islands. This work will require various lane closures on Loop 1604 at New Guilbeau Road and shall be performed at night. The Phase 1, Stage 3 TCP layouts indicate anticipated lane closures, channelization devices and temporary lane locations that may be required for the construction of this work. Appropriate construction signing, in accordance with the TMUTCD and TxDOT BC, TCP & WZ standards shall be utilized during this work. Utilize off-duty police officers to assist with traffic handling during this work.

(3) Place permanent TY I pavement markings. Utilize off-duty police officers to assist with traffic handling during this work.

(4) Perform final clean-up.

PHASE 2

CONSTRUCT THE TURNAROUND AND INTERSECTION IMPROVEMENTS AT SHAENFIELD ROAD.

PHASE 2 GENERAL

(1) See Phase 2 Traffic Control Plans for locations of work and configurations of traffic lanes and traffic handling devices this phase.

(2) Cover any existing signs that are in conflict with the traffic control signing placed during this phase of construction.

Shaenfield Road, Stage 1

(1) Install work zone signing and traffic control devices as shown on the TCP Phase 2, Stage 1 layouts.

(2) Install SW3P measures.

(3) Construct the proposed Culvert No. 3 and the Flexible Pavement Repair associated with the Culvert No. 3 construction. This work will be performed during night time working hours (as described above). The contractor will be required to maintain at least one lane of traffic on the Loop 1604 northbound lanes. Appropriate construction signing, in accordance with the TMUTCD and TxDOT BC, TCP & WZ standards shall be utilized during this work. Utilize off-duty police officers to assist with traffic handling during this work. When work commences at this location the contractor shall have the necessary material and resources to complete the construction of Culvert No. 3 and the Flexible Pavement Repair items so that the Loop 1604 northbound mainlanes can be opened to traffic by 5:30 AM the following day. Multiple night time operations may be required to complete the construction of Culvert No. 3.

(4) Construct the proposed widening of Culvert No. 4 and the proposed of Culvert No. 4A.

(5) Construct the temporary signal modifications as shown on the Temporary Traffic Signal Layout Sheets.

(6) Construct the outside widening of the northbound Loop 1604 mainlanes (Station 410+69.80, LT to Station 468+83.26, LT).

(7) Construct the outside widening of the southbound Loop 1604 mainlanes (Station 416+44.96, RT to Station 442+04.97, RT and Station 442+64.58, RT to Station 471+43.24, RT). One week prior to this construction, place PCMS along Loop 1604 Northbound and Southbound mainlanes advising traffic of upcoming nighttime lane closures. Actual location of PCMS and specific message(s) to be displayed will be as shown on BC (6)-07 and as directed by the Engineer.

Note: The Loop 1604 access to Leslie Road at Station 450+90.00 (1604), RT. shall be constructed during the night work operation. When work commences at this location the contractor shall have the necessary material and resources to complete the Leslie Road access as soon as possible.

Shaenfield Road, Stage 2

(1) The work shown in this stage of construction shall be constructed as a night time operation, however, there are elements that may be constructed during the day with the written approval of the Engineer.

(2) Install work zone signing and traffic control devices as shown on the TCP Phase 2, Stage 2 layouts. Maintain Stage 2 barricades and traffic control devices that are not in conflict with Stage 2.

(3) Install SW3P measures.

(4) Construct proposed Culvert No. 3A and the proposed Area Inlet No. 2 (Culvert No. 4).

(5) Construct the proposed inside widening of the northbound and southbound Loop 1604 mainlanes and turnarounds (Station 428+19 to Station 441+95.40 and Station 442+65.75 to Station 456+44.87). One week prior to this construction, place PCMS along Loop 1604 Northbound and Southbound mainlanes advising traffic of upcoming nighttime lane closures. Actual location of PCMS and specific message(s) to be displayed will be as shown on BC (6)-07 and as directed by the Engineer.

(6) Construct Flexible Pavement Repair at locations to be determined by the Engineer. Areas of flexible pavement repair construction located on the Loop 1604 mainlanes will be required to be performed as nighttime work. The contractor shall use the appropriate construction signing, in accordance with the TMUTCD and TxDOT BC, TCP & WZ standards for the necessary lane closures for this work. The contractor shall utilize off-duty police officers to assist with traffic handling during this work.

(7) Construct the proposed traffic signals at T.A. #2 and T.A. #3. The traffic signals at T.A. #2 shall not be constructed until the completion of Culvert 3A. Cover the proposed signal heads until the end of Phase 2, Stage 2.

(8) Construct the illumination along Loop 1604 northbound mainlanes (outside) from Station 410+00.00 to Station 428+00.00 and Station 436+25.00 to Station 443+50.00. Construct the illumination along the Loop 1604 center median from Station 428+00.00 to Station 434+00.00 and Station 445+00.00 to Station 456+50.00. Construct the illumination southbound mainlanes (outside) Station 456+50.00 to Station 473+00.00 and at Station 427+50.00.

(9) Install and cover proposed signs assemblies. See Large and Small Sign Layouts for details.

Chris D. Kelarek, P.E. 7/1/2010

REV. NO.	DATE	DESCRIPTION	BY

ALAMO RMA

RODRIGUEZ TRANSPORTATION GROUP
CONSULTING ENGINEERS

Texas Department of Transportation
© 2010

LOOP 1604
TRAFFIC CONTROL PLAN NARRATIVE

SHEET 1 OF 2

DGN:	FED. RD. DIV. NO.	STATE	FEDERAL AID PROJECT NO.			HIGHWAY NO.
CHK DGN:	6	TEXAS	STP 2011(210)ES			LP 1604
DWG:	DIST.	COUNTY	CONT. NO.	SECT. NO.	JOB NO.	SHEET NO.
CHK DWG:	SAT	BEXAR	2452	01	050	40

Plotted on: 7/1/2010 3:45:33 PM

Design Filename: p:\8380407\div\planSht\stop\7400047CPNARR(2).dgn

Shaenfield Road, Stage 2 (Continued)

(10) After completion of the Phase 2, Stage 2 work at Shaenfield Road, place the TCP devices on the completed pavement widening performed this stage. Place one course surface treatment within the limits of work for Shaenfield Road as shown on the HMAC OVERLAY SHEETS. Re-establish lane lines with short term tabs in the configuration of the existing pavement markings as per TCP (7-1)-98. Existing pavement markings are understood to mean any original pavement markings plus WZPM's placed previously this phase. Utilize off-duty police officers to assist with the traffic handling during this work.

(11) Perform asphalt milling and place final ACP overlay within the limits of work for Shaenfield Road as shown on the HMAC OVERLAY SHEETS. Re-establish lane lines with short term tabs in the configuration of the existing pavement markings (as defined in Step 8). Utilize off-duty police officers to assist with the traffic handling during this work.

(12) Convert operations to superstreet configuration. Utilize off-duty police officers to assist with the traffic handling during the conversion to the superstreet operation.

a. Place TY II permanent pavement markings.
b. Remove any existing signs and uncover all proposed signs.
c. Activate all proposed traffic signals.
d. For any directional islands that are not constructed (see Stage 3 TCP layouts for portions of islands remaining to be built), place vertical panels in the configuration of the proposed islands.
e. Switch traffic to superstreet configuration.

Note: One week in advance of switching the traffic to the superstreet configuration, use 3 changeable message signs at the intersection (one for each approach) to notify the traveling public of the upcoming change. After the traffic switch at the intersection keep the CMS's in place for an additional week to notify the traveling public of the permanent change. The actual messages used shall be as directed by the Engineer.

Shaenfield Road, Stage 3

(1) Install work zone signing and traffic control devices as shown on the TCP Phase 2, Stage 3 layouts. Maintain Stage 2 barricades and traffic control devices that are not in conflict with Stage 3.

(2) Complete all remaining traffic signals and directional islands (See note below). This work will require various lane closures on Loop 1604 at Shaenfield Road and shall be performed at night. The Phase 2, Stage 3 TCP layouts indicate anticipated lane closures, channelization devices, and temporary lane locations that may be required for the construction of this work. Appropriate construction signing, in accordance with the TMUTCD and TxDOT BC, TCP & WZ standards shall be utilized during this work. Utilize off-duty police officers to assist with the traffic handling during this work.

Note: Construction associated with the center median modification located along Shaenfield shall be completed prior to beginning work on other directional islands.

(3) Place permanent TY I pavement markings. Utilize off-duty police officers to assist with the traffic handling during this work.

(4) Perform final clean-up.

PHASE 3

CONSTRUCTION OF SB FRONTAGE ROAD, RAMPS & INTERSECTIONS.

PHASE 3 GENERAL

(1) The work scheduled for Phase 3 may commence at the same time as construction begins on Phase 1.

(2) See Phase 3 Traffic Control Plans for locations of work and configurations of traffic lanes and traffic handling devices this phase.

(3) Cover any existing signs that are in conflict with the traffic control signing placed during this phase of construction.

Phase 3 Stage 1

(1) Install work zone signing and traffic control devices as shown on the TCP Phase 3, Stage 1 layouts.

(2) Install SW3P measures.

(3) Construct the proposed Culverts No. 5 and 8. Construct Inlet No. 1 and Outfall. North driveway to SAWS entrance shall remain open until the construction at South SAWS driveway at Station 583+49.16 (Rt) is completed this stage.

(4) Install Storm Sewer Line "A" from the proposed Curb Inlet A-1 to the Line "A" Outfall. The portion of this section of Line "A" underneath the existing roadway shall be completed by Jack & Bore method. Place temporary plug on upstream end of pipe.

(5) Complete Southbound Exit Ramp Construction from approximate Station 102+31.77 (SBDET) to Station 112+33.70 (SBDET) at least through the 2" HMAC (TY C).

Phase 3 Stage 1 (Continued)

(6) Complete Southbound Entrance Ramp Construction from approximate Southbound Frontage Road Station 301+13.99 (SBDET2) to Station 312+83.90 (SBDET2) at least through the 2" HMAC (TY C). Provide a HMAC taper as needed to transition from the existing frontage to the proposed entrance ramp.

(7) Construct the proposed illumination Circuits 301 and 800 as shown on the Illumination Layouts sheets 9, 13 and 14 of 15.

(8) Construct the temporary signal modifications at Loop 1604 and SH 151 as shown on the Temporary Signal Layout Sheets. Signal heads shall remained covered until Phase 3, Stage 2.

Phase 3 Stage 2

(1) Install Detour signing along Loop 1604 southbound mainlanes and frontage road as shown in the TCP Phase 3, Stage 2 layouts to exit Alamo Ranch Parkway traffic at FM 471. Cover the detour signs until the implementation of the Alamo Ranch Parkway detour. Changeable Message Signs shall be placed two weeks in advance of the detour implementation and the closure of the existing Alamo Ranch Parkway access to notify the traveling public of the impending detour and access closure. Actual location of PCMS and specific message(s) to be displayed will be as shown on BC (6)-07 and as directed by the Engineer.

(2) Install work zone signing, traffic control devices and work zone pavement markings as shown on the TCP Phase 3, Stage 2 layouts.

(3) Implement the Alamo Ranch Parkway detour, open the Loop 1604 southbound entrance ramp (Station 574+00 to Station 585+50) and close the existing Loop 1604 southbound "Right In/Right Out" access intersection for Alamo Ranch Parkway and permanently close north driveway entrance to SAWS. Remove Changeable Message Sign that notified traveling public of access intersection closure and replace Portable Changeable Message Sign with ground mounted sign at FM 471 exit ramp detour to Alamo Ranch Parkway.

(4) Remove Existing Signs No Longer Required at Alamo Ranch Parkway Intersection. Southbound Frontage Road will be converted to One Way Traffic during this Stage of Construction and will be striped as such.

(5) Remove the existing concrete island at the intersection of Loop 1604 and SH 151. This work will require cutting & restoring pavement, concrete removal and temporary striping. All work requiring lane closure shall be performed at night.

(6) Construct the proposed Culverts No. 6 and 7.

(7) Construct the remaining portion of the Storm Sewer System Line "A" and all of Line "B" along the Loop 1604 Southbound Frontage Road. Place temporary plug on pipe outfall of Line "B".

(8) Complete Southbound Frontage Road widening construction from approximate Southbound Frontage Road Station 115+00.00 to Station 145+09.94. Refer to specific limits shown below for hot mix paving operations.

A. SBFR Widening Station 115+00.00 to Station 134+72.00: 8" TY B
B. SBFR Widening Station 134+72.00 to Station 134+97.00: Transition from 8" to 4" to match existing.
C. SBFR Widening Station 134+97.00 to Station 145+09.94: 4" TY B
SBFR Widening Station 115+00.00 to Station 134+05.00: 2" TY C

(9) Construct the proposed illumination Circuits 600 and 700 as shown on the Illumination Layouts sheets 13 and 15 of 15.

Phase 3 Stage 3A

(1) Install work zone signing, traffic control devices, low profile concrete barrier, and work zone pavement markings as shown on the TCP Phase 3, Stage 3A layouts.

(2) Construct the portion of proposed Culvert 10 to the limits shown on TCP Phase 3, Stage 3A layouts and Curb Inlet C-1.

(3) Complete 1st Stage of Alamo Ranch Parkway Intersection Construction to the limits shown on the TCP Phase 3, Stage 3A layouts.

Phase 3 Stage 3B

(1) Install Detour signing along Alamo Ranch Parkway as shown in the TCP Phase 3, Stage 3B to switch traffic to two-way operation along South side of Alamo Ranch Parkway. Cover the detour signs until the implementation of the Alamo Ranch Parkway detour. Changeable Message Signs shall be placed two weeks in advance of the detour implementation to notify the traveling public of the impending detour. Actual location of PCMS and specific message(s) to be displayed will be as shown on BC (6)-07 and as directed by the Engineer.

(2) Utilizing Opposing Traffic Lane Dividers, switch traffic to two-way operation along South side of Alamo Ranch Parkway. After traffic has been switched, complete remainder of 1st Stage tie-in with existing pavement and obliterate existing median crossover. This work shall be completed during one (1) nighttime operation.

Phase 3 Stage 4A

(1) Install Detour signing along Alamo Ranch Parkway as shown in the TCP Phase 3, Stage 4 to switch traffic to two-way operation along North side of Alamo Ranch Parkway. Cover the detour signs until the implementation of the Alamo Ranch Parkway detour. Changeable Message Signs shall be placed two weeks in advance of the detour implementation to notify the traveling public of the impending detour. Actual location of PCMS and specific message(s) to be displayed will be as shown on BC (6)-07 and as directed by the Engineer.

(2) Install work zone signing, traffic control devices and work zone pavement markings as shown on the TCP Phase 3, Stage 4 layouts.

(3) After Alamo Ranch Parkway detour has been implemented, revise Changeable Message Signs to notify traveling public of detour and roadway closure. When work commences in this stage of construction the contractor shall have the necessary material and resources to complete the work along the south side of Alamo Ranch Parkway as soon as possible.

(4) Construct remaining portion of Culvert 10 to the limits shown on TCP Phase 3, Stage 4 layouts and Curb Inlet D-1.

(5) Complete 2nd Stage of Alamo Ranch Parkway Intersection Construction to the limits shown on the TCP Phase 3, Stage 4A layouts.

(6) Construct the portion of the proposed Culvert 9 and the Flexible Pavement Repair associated with the construction of Culvert No. 9 to the limits shown on TCP Phase 3, Stage 4A layouts.

Phase 3 Stage 4B

(1) Install work zone signing, traffic control devices, low profile concrete barrier, and work zone pavement markings as shown on the TCP Phase 3, Stage 4B layouts.

(2) Construct remaining portion of Culvert 9 and the Flexible Pavement Repair associated with the construction of Culvert No. 9 to the limits shown on TCP Phase 3, Stage 4B layouts.

(3) Construct Flexible Pavement Repair at locations to be determined by the Engineer. Areas of flexible pavement repair construction located on the Loop 1604 mainlanes will be required to be performed as nighttime work. Areas of flexible pavement repair located on the Loop 1604 southbound frontage may require nighttime lane closures as determined by the Engineer. The contractor shall use the appropriate construction signing, in accordance with the TMUTCD and TxDOT BC, TCP & WZ standards for the necessary lane closures for this work. The contractor shall utilize off-duty police officers to assist with traffic handling during this work.

(4) Construct proposed traffic signal at Loop 1604/SH 151 interseotion. Cover proposed signal heads and continue to operate the existing signal until the end of Stage 4. Portions of the traffic signal installation will require lane closures along Loop 1604. Appropriate construction signing and traffic control devices, in accordance with the T.M.U.T.C.D. and TxDOT BC, TCP & WZ standards shall be utilized during the lane closures for this work.

(5) Install and cover proposed sign assemblies. See Large and Small Sign Layouts for details.

(6) Complete Southbound Frontage Road pavement construction from approximate Southbound Frontage Road Station 134+05.00 to Station 145+09.94. Work for HMAC (TY B) within area of Alamo Ranch Parkway shall be done at night. Refer to specific limits shown below for hot mix paving operations.

A. SBFR Station 134+72.00 to Station 145+09.94: 4" TY B (2nd Lift)
B. SBFR Station 134+05.00 to Station 145+09.94: 2" TY C
C. 2nd Stage of Alamo Ranch Parkway: 2" TY C

Note: Drums and/or vertical panels shall be utilized to maintain the number of traffic lanes shown in Stage 4 at the end of each day's paving operation.

(7) Complete curb construction along Southbound Frontage Road Construction from approximate Southbound Frontage Road Station 134+96.48 to Proposed Ramp Tie-in constructed in Stage 1.

(8) Complete curb construction along 2nd Stage of Alamo Ranch Parkway.

(9) Perform asphalt milling and place One Course Surface Treatment and 2" HMAC (TY C) (SURF) Overlay on the proposed exit and entrance ramps, the Loop 1604 southbound frontage road and Alamo Ranch Parkway to the limits as shown on the HAMC Overlay Sheets.

Note: Drums and/or vertical panels shall be utilized to maintain the number of traffic lanes shown in Stage 4 at the end of each day's paving operation. This lane arrangement shall be in force until the permanent (TY II) pavement markings are completed.

(10) Place permanent TY I & II pavement markings. Utilize off-duty police officers to assist with the traffic handling during this work.

Phase 3 Stage 5

(1) Obliterate Existing Pavement Markings & Markers along SB Loop 1604 mainlanes. Install Proposed Pavement Markings & Markers along SB Loop 1604 mainlanes as shown on Pavement Marking Layouts.

(2) Uncover proposed signal heads and make proposed signal operational at this time.

(3) Uncover all proposed signs.

(4) Open proposed Exit Ramp and obliterate existing Entrance Ramp pavement.

(5) Perform final clean-up.

STATE OF TEXAS
CHRIS D. KELAREK
83300
LICENSED PROFESSIONAL ENGINEER

Chris D. Kelarek, P.E. 7/1/2010

REV. NO.	DATE	DESCRIPTION	BY

ALAMO RMA

RODRIGUEZ TRANSPORTATION GROUP
CONSULTING ENGINEERS

Texas Department of Transportation
© 2010

LOOP 1604
TRAFFIC CONTROL PLAN NARRATIVE

SHEET 2 OF 2

DGN:	FED. RD. DIV. NO.	STATE	FEDERAL AID PROJECT NO.			HIGHWAY NO.
CAD DGN:	6	TEXAS	STP 2011(210)ES			LP 1604
DWG:	DIST.	COUNTY	CONT. NO.	SECT. NO.	JOB NO.	SHEET NO.
CAD DWG:	SAT	BEXAR	2452	01	050	41

Plotted on: 7/1/2010 3:45:35 PM

<* 1 Describe Chain WZPM3-2

Chain WZPM3-2 contains:
 CUR WZPM3-2-1 CUR WZPM3-2-2 CUR WZPM3-2-3 WZPM3202

Beginning chain WZPM3-2 description

				Curve Data				
Curve WZPM3-2-1								
P.I. Station				114+19.68	X	2,061,848.63	Y	13,727,930.33
Delta	=	6°	36′ 21.23"	(RT)				
Degree	=	2°	12′ 51.60"					
Tangent	=			149.33				
Length	=			298.32				
Radius	=			2,587.50				
External	=			4.31				
Long Chord	=			298.16				
Mid. Ord.	=			4.30				
P.C. Station				112+70.35	X	2,061,911.10	Y	13,728,065.97
P.T. Station				115+68.67	X	2,061,770.98	Y	13,727,802.78
C.C.					X	2,059,560.87	Y	13,729,148.36
Back	= S	24°	43′ 41.82"	W				
Ahead	= S	31°	20′ 03.05"	W				
Chord Bear	= S	28°	01′ 52.44"	W				

Course from PT WZPM3-2-1 to PC WZPM3-2-2 S 31° 20′ 03.05" W Dist 695.46

				Curve Data				
Curve WZPM3-2-2								
P.I. Station				123+56.07	X	2,061,361.51	Y	13,727,130.23
Delta	=	11°	06′ 04.92"	(RT)				
Degree	=	6°	03′ 23.89"					
Tangent	=			91.93				
Length	=			183.29				
Radius	=			946.00				
External	=			4.46				
Long Chord	=			183.01				
Mid. Ord.	=			4.44				
P.C. Station				122+64.14	X	2,061,409.31	Y	13,727,208.76
P.T. Station				124+47.43	X	2,061,299.47	Y	13,727,062.38
C.C.					X	2,060,601.29	Y	13,727,700.70
Back	= S	31°	20′ 03.05"	W				
Ahead	= S	42°	26′ 07.97"	W				
Chord Bear	= S	36°	53′ 05.51"	W				

Course from PT WZPM3-2-2 to PC WZPM3-2-3 S 42° 26′ 07.97" W Dist 251.97

				Curve Data				
Curve WZPM3-2-3								
P.I. Station				129+40.99	X	2,060,966.44	Y	13,726,698.11
Delta	=	23°	59′ 25.28"	(LT)				
Degree	=	5°	02′ 20.40"					
Tangent	=			241.59				
Length	=			476.09				
Radius	=			1,137.05				
External	=			25.38				
Long Chord	=			472.62				
Mid. Ord.	=			24.83				
P.C. Station				126+99.40	X	2,061,129.45	Y	13,726,876.41
P.T. Station				131+75.50	X	2,060,890.00	Y	13,726,468.94
C.C.					X	2,061,968.63	Y	13,726,109.18
Back	= S	42°	26′ 07.97"	W				
Ahead	= S	18°	26′ 42.69"	W				
Chord Bear	= S	30°	26′ 25.33"	W				

Course from PT WZPM3-2-3 to WZPM3202 S 18° 26′ 42.69" W Dist 315.48

Point WZPM3202 X 2,060,790.18 Y 13,726,169.67 Sta 134+90.98

Ending chain WZPM3-2 description

<* 2 Describe Chain WZPM3-22

Chain WZPM3-22 contains:
 WZPM3210 CUR WZPM3-22-1 CUR WZPM3-22-2 CUR WZPM3-22-3 WZPM3211

Beginning chain WZPM3-22 description

Point WZPM3210 X 2,060,747.19 Y 13,726,076.92 Sta 135+94.00

Course from WZPM3210 to PC WZPM3-22-1 S 18° 30′ 10.38" W Dist 68.08

				Curve Data				
Curve WZPM3-22-1								
P.I. Station				137+37.48	X	2,060,701.66	Y	13,725,940.86
Delta	=	8°	33′ 14.51"	(LT)				
Degree	=	5°	40′ 59.67"					
Tangent	=			75.40				
Length	=			150.51				
Radius	=			1,008.15				
External	=			2.82				
Long Chord	=			150.37				
Mid. Ord.	=			2.81				
P.C. Station				136+62.08	X	2,060,725.59	Y	13,726,012.36
P.T. Station				138+12.59	X	2,060,688.63	Y	13,725,866.60
C.C.					X	2,061,681.63	Y	13,725,692.42
Back	= S	18°	30′ 10.38"	W				
Ahead	= S	9°	56′ 55.87"	W				
Chord Bear	= S	14°	13′ 33.12"	W				

Course from PT WZPM3-22-1 to PC WZPM3-22-2 S 3° 55′ 40.77" E Dist 584.78

				Curve Data				
Curve WZPM3-22-2								
P.I. Station				144+20.55	X	2,060,736.15	Y	13,725,261.24
Delta	=	2°	34′ 20.84"	(LT)				
Degree	=	5°	33′ 00.35"					
Tangent	=			23.18				
Length	=			46.35				
Radius	=			1,032.34				
External	=			0.26				
Long Chord	=			46.35				
Mid. Ord.	=			0.26				
P.C. Station				143+97.37	X	2,060,728.69	Y	13,725,283.19
P.T. Station				144+43.72	X	2,060,744.59	Y	13,725,239.66
C.C.					X	2,061,706.14	Y	13,725,615.33
Back	= S	18°	46′ 04.07"	E				
Ahead	= S	21°	20′ 24.91"	E				
Chord Bear	= S	20°	03′ 14.49"	E				

Course from PT WZPM3-22-2 to PC WZPM3-22-3 S 21° 51′ 03.08" E Dist 131.60

				Curve Data				
Curve WZPM3-22-3								
P.I. Station				147+74.20	X	2,060,854.32	Y	13,724,928.14
Delta	=	18°	50′ 07.10"	(RT)				
Degree	=	4°	46′ 42.57"					
Tangent	=			198.88				
Length	=			394.17				
Radius	=			1,199.04				
External	=			16.38				
Long Chord	=			392.40				
Mid. Ord.	=			16.16				
P.C. Station				145+75.32	X	2,060,793.56	Y	13,725,117.51
P.T. Station				149+69.49	X	2,060,850.69	Y	13,724,729.30
C.C.					X	2,059,651.85	Y	13,724,751.21
Back	= S	17°	47′ 18.22"	E				
Ahead	= S	1°	02′ 48.88"	W				
Chord Bear	= S	8°	22′ 14.67"	E				

Course from PT WZPM3-22-3 to WZPM3211 S 1° 02′ 48.88" W Dist 709.35

Point WZPM3211 X 2,060,837.73 Y 13,724,020.07 Sta 156+78.84

Ending chain WZPM3-22 description

STATE OF TEXAS
CHRIS D. KELAREK
83300
PROFESSIONAL ENGINEER
Chris D. Kelarek, P.E. 7/1/2010

REV. NO.	DATE	DESCRIPTION	BY

ALAMO RMA

RODRIGUEZ TRANSPORTATION GROUP
CONSULTING ENGINEERS

Texas Department of Transportation
© 2010

LOOP 1604

TRAFFIC CONTROL HORIZONRAL ALIGNMENT DATA SHEET

SHEET 1 OF 2

DGN:	FED. RD. DIV. NO.	STATE	FEDERAL AID PROJECT NO.			HIGHWAY NO.
CKK DGN:	6	TEXAS	STP 2011(210)ES			LP 1604
DWG:	DIST.	COUNTY	CONT. NO.	SECT. NO.	JOB NO.	SHEET NO.
CKK DWG:	SAT	BEXAR	2452	01	050	42

Design Filename: p:\8380407\div\planShts\top\740004TCPHA001.dgn

Plotted on: 7/1/2010 3:45:38 PM

<* 4 Describe Chain WZPM3-4B

Chain WZPM3-4B contains:
CUR WZPM3-4B-1 CUR WZPM3-4B-2 CUR WZPM3-4B-3 CUR WZPM3-4B-4

Beginning chain WZPM3-4B description

Curve Data

Curve WZPM3-4B-1						
P.I. Station		134+53.23	X	2,060,826.54	Y	13,726,187.11
Delta =	9°	15′ 16.52"	(RT)			
Degree =	22°	55′ 05.92"				
Tangent =		20.23				
Length =		40.38				
Radius =		250.00				
External =		0.82				
Long Chord =		40.34				
Mid. Ord. =		0.81				
P.C. Station		134+33.00	X	2,060,832.94	Y	13,726,206.31
P.T. Station		134+73.38	X	2,060,817.14	Y	13,726,169.20
C.C.			X	2,060,595.78	Y	13,726,285.40
Back = S	18°	26′ 34.61"	W			
Ahead = S	27°	41′ 51.13"	W			
Chord Bear = S	23°	04′ 12.87"	W			

Course from PT WZPM3-4B-1 to PC WZPM3-4B-2 S 27° 41′ 51.13" W Dist 138.75

Curve Data

Curve WZPM3-4B-2						
P.I. Station		136+32.06	X	2,060,743.38	Y	13,726,028.70
Delta =	9°	06′ 51.95"	(LT)			
Degree =	22°	55′ 05.92"				
Tangent =		19.93				
Length =		39.77				
Radius =		250.00				
External =		0.79				
Long Chord =		39.73				
Mid. Ord. =		0.79				
P.C. Station		136+12.14	X	2,060,752.64	Y	13,726,046.34
P.T. Station		136+51.90	X	2,060,737.03	Y	13,726,009.81
C.C.			X	2,060,974.00	Y	13,725,930.14
Back = S	27°	41′ 51.13"	W			
Ahead = S	18°	34′ 59.18"	W			
Chord Bear = S	23°	08′ 25.16"	W			

Curve Data

Curve WZPM3-4B-3						
P.I. Station		137+46.26	X	2,060,706.96	Y	13,725,920.38
Delta =	10°	50′ 22.61"	(LT)			
Degree =	5°	45′ 40.43"				
Tangent =		94.36				
Length =		188.15				
Radius =		994.51				
External =		4.47				
Long Chord =		187.87				
Mid. Ord. =		4.45				
P.C. Station		136+51.90	X	2,060,737.03	Y	13,726,009.81
P.T. Station		138+40.05	X	2,060,694.25	Y	13,725,826.88
C.C.			X	2,061,679.68	Y	13,725,692.88
Back = S	18°	34′ 59.18"	W			
Ahead = S	7°	44′ 36.57"	W			
Chord Bear = S	13°	09′ 47.88"	W			

Curve Data

Curve WZPM3-4B-4						
P.I. Station		141+07.47	X	2,060,658.22	Y	13,725,561.90
Delta =	26°	09′ 48.53"	(LT)			
Degree =	4°	58′ 43.43"				
Tangent =		267.42				
Length =		525.51				
Radius =		1,150.81				
External =		30.66				
Long Chord =		520.95				
Mid. Ord. =		29.87				
P.C. Station		138+40.05	X	2,060,694.25	Y	13,725,826.88
P.T. Station		143+65.56	X	2,060,742.71	Y	13,725,308.19
C.C.			X	2,061,834.56	Y	13,725,671.82
Back = S	7°	44′ 36.57"	W			
Ahead = S	18°	25′ 11.96"	E			
Chord Bear = S	5°	20′ 17.69"	E			

Ending chain WZPM3-4B description

<* 3 Describe Chain WZPM3-3A

Chain WZPM3-3A contains:
WZPM3301 CUR WZPM3-3A-1 CUR WZPM3-3A-2 CUR WZPM3-3A-3 CUR WZPM3-3A-4 CUR WZPM3-3A-5 WZPM3302

Beginning chain WZPM3-3A description

Point WZPM3301 X 2,061,409.31 Y 13,727,208.76 Sta 122+63.23

Course from WZPM3301 to PC WZPM3-3A-1 S 31° 20′ 03.05" W Dist 134.33

Curve Data

Curve WZPM3-3A-1						
P.I. Station		124+48.55	X	2,061,312.95	Y	13,727,050.47
Delta =	11°	06′ 55.40"	(RT)			
Degree =	10°	56′ 03.51"				
Tangent =		50.99				
Length =		101.66				
Radius =		524.00				
External =		2.47				
Long Chord =		101.50				
Mid. Ord. =		2.46				
P.C. Station		123+97.56	X	2,061,339.46	Y	13,727,094.02
P.T. Station		124+99.21	X	2,061,278.53	Y	13,727,012.85
C.C.			X	2,060,891.89	Y	13,727,366.51
Back = S	31°	20′ 03.05"	W			
Ahead = S	42°	26′ 58.45"	W			
Chord Bear = S	36°	53′ 30.75"	W			

Course from PT WZPM3-3A-1 to PC WZPM3-3A-2 S 42° 26′ 58.45" W Dist 196.68

Curve Data

Curve WZPM3-3A-2						
P.I. Station		127+41.69	X	2,061,114.88	Y	13,726,833.93
Delta =	10°	21′ 45.27"	(LT)			
Degree =	11°	20′ 44.52"				
Tangent =		45.79				
Length =		91.33				
Radius =		505.00				
External =		2.07				
Long Chord =		91.21				
Mid. Ord. =		2.06				
P.C. Station		126+95.89	X	2,061,145.78	Y	13,726,867.72
P.T. Station		127+87.23	X	2,061,090.55	Y	13,726,795.14
C.C.			X	2,061,518.41	Y	13,726,526.88
Back = S	42°	26′ 58.45"	W			
Ahead = S	32°	05′ 13.19"	W			
Chord Bear = S	37°	16′ 05.82"	W			

Course from PT WZPM3-3A-2 to PC WZPM3-3A-3 S 32° 05′ 13.19" W Dist 114.93

Curve Data

Curve WZPM3-3A-3						
P.I. Station		130+33.52	X	2,060,959.72	Y	13,726,586.47
Delta =	13°	38′ 38.58"	(LT)			
Degree =	5°	13′ 05.50"				
Tangent =		131.36				
Length =		261.47				
Radius =		1,098.00				
External =		7.83				
Long Chord =		260.85				
Mid. Ord. =		7.77				
P.C. Station		129+02.16	X	2,061,029.50	Y	13,726,697.76
P.T. Station		131+63.63	X	2,060,918.16	Y	13,726,461.86
C.C.			X	2,061,959.77	Y	13,726,114.49
Back = S	32°	05′ 13.19"	W			
Ahead = S	18°	26′ 34.61"	W			
Chord Bear = S	25°	15′ 53.90"	W			

Course from PT WZPM3-3A-3 to PC WZPM3-3A-4 S 18° 26′ 34.61" W Dist 480.99

<* 3 Describe Chain WZPM3-3A - CONTINUED

Curve Data

Curve WZPM3-3A-4						
P.I. Station		139+01.29	X	2,060,684.80	Y	13,725,762.09
Delta =	26°	05′ 03.99"	(LT)			
Degree =	5°	10′ 15.96"				
Tangent =		256.66				
Length =		504.43				
Radius =		1,108.00				
External =		29.34				
Long Chord =		500.08				
Mid. Ord. =		28.58				
P.C. Station		136+44.63	X	2,060,766.00	Y	13,726,005.57
P.T. Station		141+49.05	X	2,060,718.93	Y	13,725,507.71
C.C.			X	2,061,817.09	Y	13,725,655.04
Back = S	18*	26′ 34.61"	W			
Ahead = S	7°	38′ 29.38"	E			
Chord Bear = S	5°	24′ 02.62"	W			

Course from PT WZPM3-3A-4 to PC WZPM3-3A-5 S 7° 38′ 29.38" E Dist 169.27

Curve Data

Curve WZPM3-3A-5						
P.I. Station		143+65.50	X	2,060,747.71	Y	13,725,293.19
Delta =	10°	46′ 42.58"	(LT)			
Degree =	11°	27′ 32.96"				
Tangent =		47.17				
Length =		94.06				
Radius =		500.00				
External =		2.22				
Long Chord =		93.92				
Mid. Ord. =		2.21				
P.C. Station		143+18.33	X	2,060,741.44	Y	13,725,339.94
P.T. Station		144+12.39	X	2,060,762.62	Y	13,725,248.43
C.C.			X	2,061,237.00	Y	13,725,406.42
Back = S	7°	38′ 29.38"	E			
Ahead = S	18°	25′ 11.96"	E			
Chord Bear = S	13°	01′ 50.67"	E			

Course from PT WZPM3-3A-5 to WZPM3302 S 18° 25′ 11.96" E Dist 133.65

Point WZPM3302 X 2,060,804.85 Y 13,725,121.63 Sta 145+46.04

Ending chain WZPM3-3A description

Chris D. Kelarek, P.E. 7/1/2010

REV. NO.	DATE	DESCRIPTION	BY

ALAMO RMA

RODRIGUEZ TRANSPORTATION GROUP
CONSULTING ENGINEERS

Texas Department of Transportation
© 2010

LOOP 1604

TRAFFIC CONTROL HORIZONTAL ALIGNMENT DATA SHEET

SHEET 2 OF 2

DGN:	FED. RD. DIV. NO.	STATE	FEDERAL AID PROJECT NO.			HIGHWAY NO.
CHK DGN:	6	TEXAS	STP 2011(210)ES			LP 1604
DWG:	DIST.	COUNTY	CONT. NO.	SECT. NO.	JOB NO.	SHEET NO.
CHK DWG:	SAT	BEXAR	2452	01	050	43

Design Filename: p:\8380407\dlv\planSht\tcp\740004TCPHA001A.dgn

Plotted on: 7/1/2010 4:06:55 PM

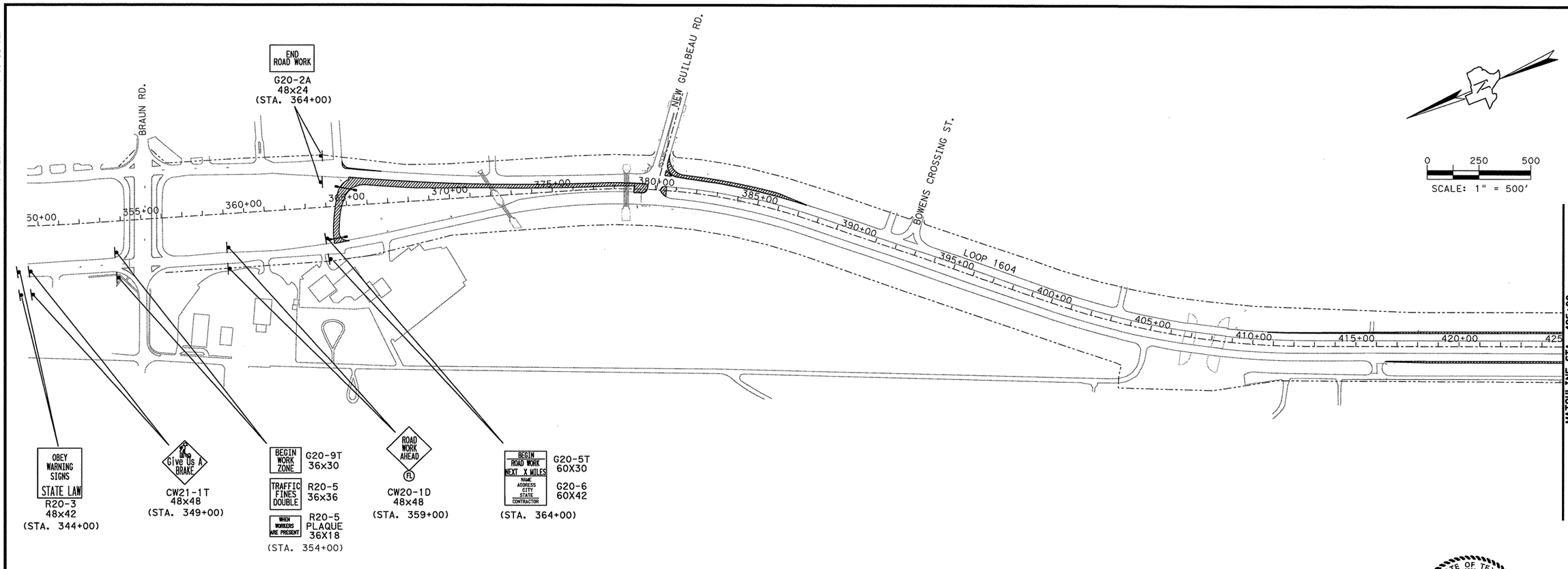

Design Filename: p:\8380407\dlv\planSht\top\740004TCP*OVERALL*01.dgn

STATE OF TEXAS
CHRIS D. KELAREK
83300
LICENSED
PROFESSIONAL ENGINEER

Chris D. Kelarek, P.E. 7/1/2010

SCALE: PLAN - 1":500'

REV. NO.	DATE	DESCRIPTION	BY

ALAMO RMA

RODRIGUEZ TRANSPORTATION GROUP
CONSULTING ENGINEERS

Texas Department of Transportation
© 2010

LOOP 1604

TRAFFIC CONTROL OVERALL PLAN

BEGINNING TO STA. 484+00

SHEET 1 OF 2

DGN:	FED. RD. DIV. NO.	STATE	FEDERAL AID PROJECT NO.			HIGHWAY NO.
CHK DGN:	6	TEXAS	STP 2011(210)ES			LP 1604
DWG:	DIST.	COUNTY	CONT. NO.	SECT. NO.	JOB NO.	SHEET NO.
CHK DWG:	SAT	BEXAR	2452	01	050	44

Plotted on: 8/19/2010 2:23:04 PM

Design Filename: p:\8380407\dlv\planSheets\top\7400041TCP*OVERALL*02.dgn

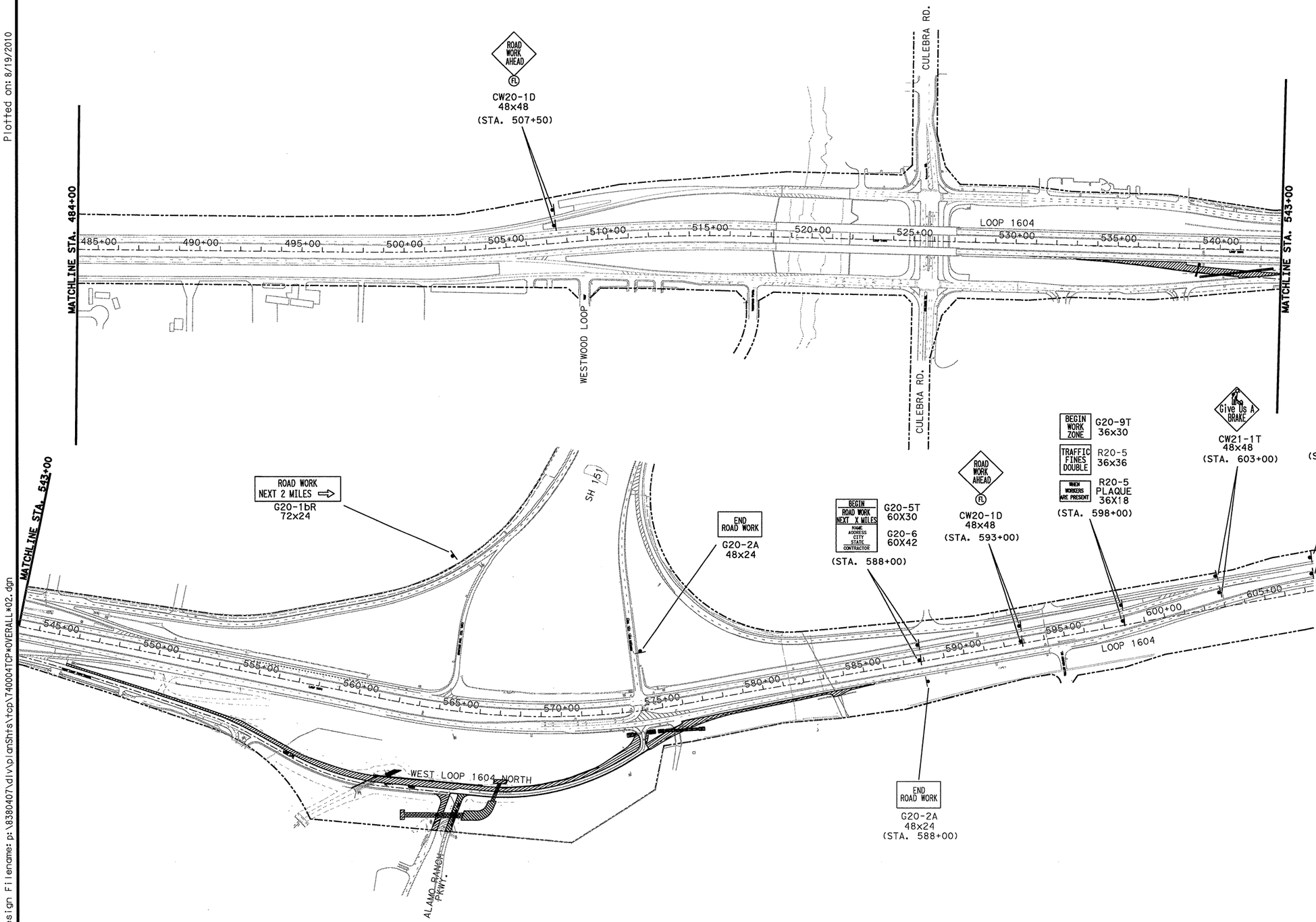

0 250 500

SCALE: 1" = 500'

STATE OF TEXAS
CHRIS D. KELAREK
83300
LICENSED PROFESSIONAL ENGINEER

Chris D. Kelarek, P.E. 8/19/2010

SCALE: PLAN - 1":500'

REV. NO.	DATE	DESCRIPTION	BY

ALAMO RMA

RODRIGUEZ TRANSPORTATION GROUP
CONSULTING ENGINEERS

Texas Department of Transportation
© 2010

LOOP 1604
TRAFFIC CONTROL OVERALL PLAN

STA. 484+00 TO STA. 608+00

SHEET 2 OF 2

DGN:	FED. RD. DIV. NO.	STATE	FEDERAL AID PROJECT NO.			HIGHWAY NO.
CKK DSN:	6	TEXAS	STP 2011(210)ES			LP 1604
DWG:	DIST.	COUNTY	CONT. NO.	SECT. NO.	JOB NO.	SHEET NO.
CKK DWG:	SAT	BEXAR	2452	01	050	45

Plotted on: 7/1/2010 3:45:53 PM

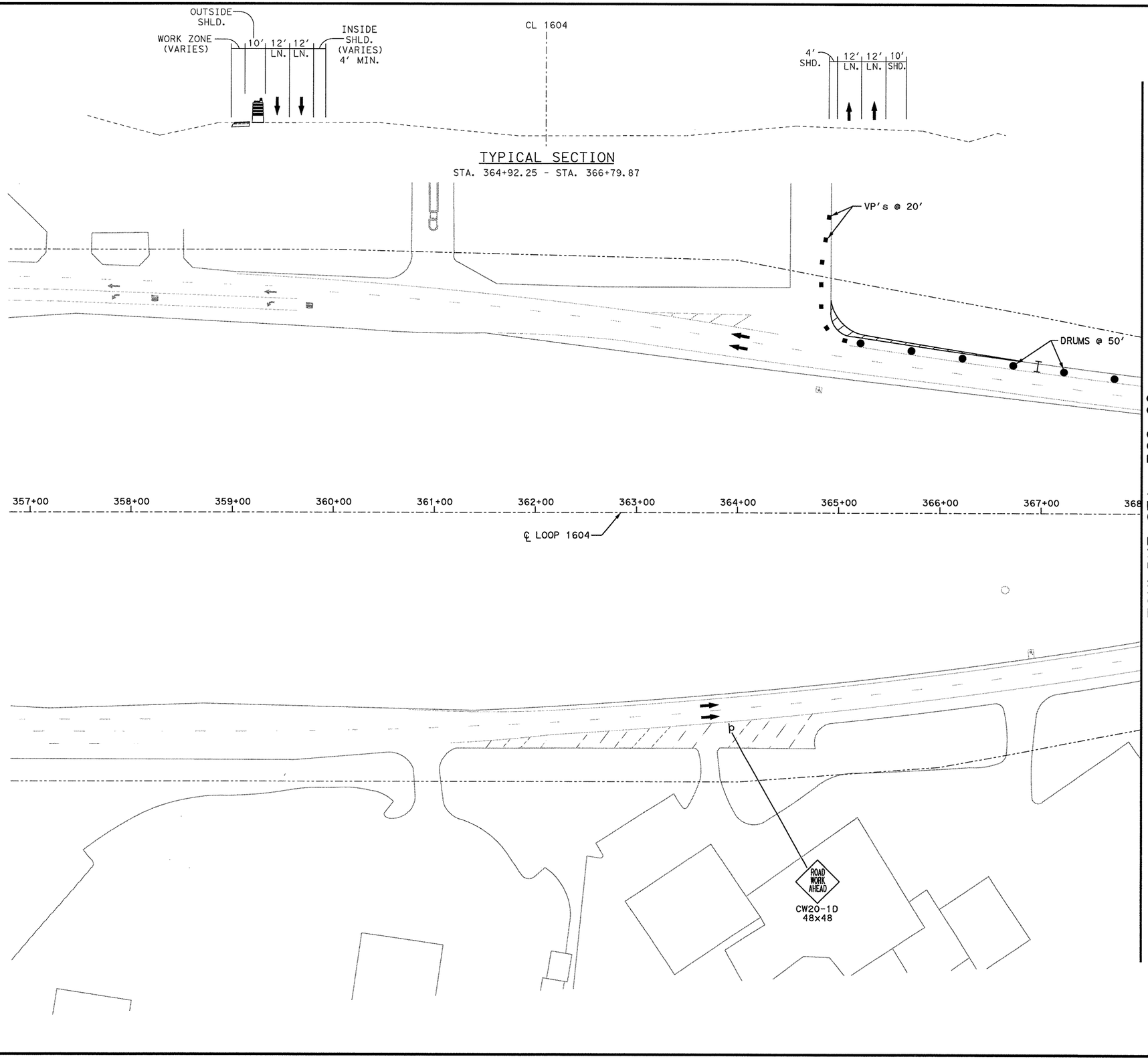

0 50 100

SCALE: 1" = 100′

LEGEND

- = NEW CONSTRUCTION THIS STAGE
- = 10" FLEXIBLE PAVEMENT REPAIR
- = PAVEMENT OBLITERATED THIS STAGE
- = CONSTRUCTED IN PREVIOUS STAGE
- M = CHANGABLE MESSAGE SIGN
- = ARROW BOARD
- = TRAFFIC FLOW ARROW
- = PLASTIC DRUMS
- = VERTICAL PANELS
- þ = TRAFFIC SIGNS
- I = TYPE III BARRICADE
- = LCTB

STATE OF TEXAS
CHRIS D. KELAREK
83300
LICENSED PROFESSIONAL ENGINEER

Chris D. Kelarek, P.E. 7/1/2010

SCALE: PLAN - 1":100′

REV. NO.	DATE	DESCRIPTION	BY

ALAMO RMA

RODRIGUEZ TRANSPORTATION GROUP
CONSULTING ENGINEERS

Texas Department of Transportation © 2010

LOOP 1604
TRAFFIC CONTROL PLAN

PHASE 1, STAGE 1

357+00 TO STA. 368+00

SHEET 1 OF 15

DGN:	FED. RD. DIV. NO.	STATE	FEDERAL AID PROJECT NO.			HIGHWAY NO.
CHK DGN:	6	TEXAS	STP 2011(210)ES			LP 1604
DWG:	DIST.	COUNTY	CONT. NO.	SECT. NO.	JOB NO.	SHEET NO.
CHK DWG:	SAT	BEXAR	2452	01	050	46

Design Filename: p:\8380407\dlv\planSht s\tcp\PHASE 1\740004TCP1101.dgn

Plotted on: 7/1/2010 3:45:56 PM

Design Filename: p:\8380407\dlv\planSht's\top\PHASE 1\740004TCP1102.dgn

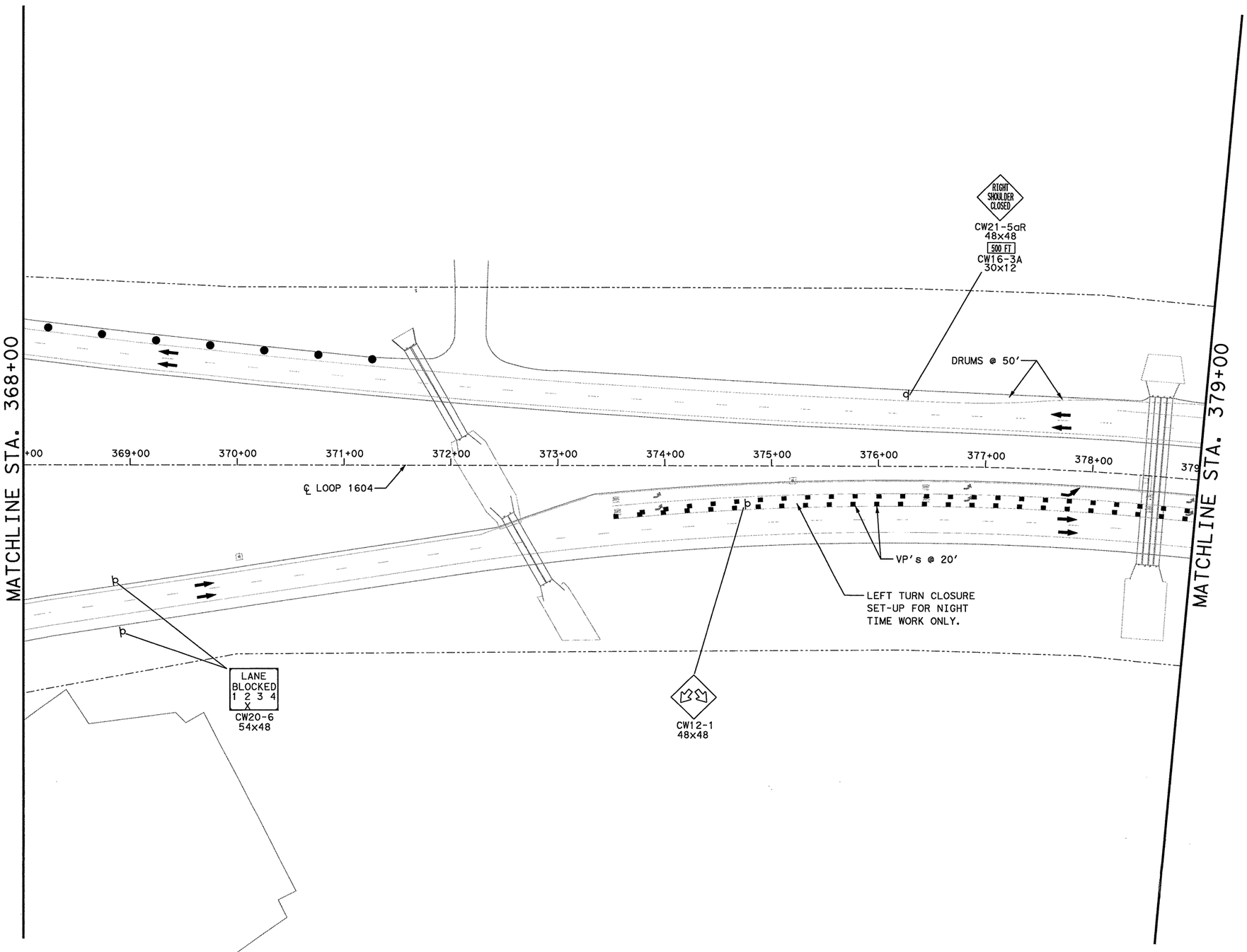

0 50 100

SCALE: 1" = 100'

LEGEND

- = NEW CONSTRUCTION THIS STAGE
- = 10" FLEXIBLE PAVEMENT REPAIR
- = PAVEMENT OBLITERATED THIS STAGE
- = CONSTRUCTED IN PREVIOUS STAGE
- M = CHANGABLE MESSAGE SIGN
- = ARROW BOARD
- = TRAFFIC FLOW ARROW
- = PLASTIC DRUMS
- = VERTICAL PANELS
- = TRAFFIC SIGNS
- = TYPE III BARRICADE
- = LCTB

STATE OF TEXAS
CHRIS D. KELAREK
83300
LICENSED PROFESSIONAL ENGINEER

Chris D. Kelarek, P.E. 7/1/2010

SCALE: PLAN - 1":100'

REV. NO.	DATE	DESCRIPTION	BY

ALAMO RMA

RODRIGUEZ TRANSPORTATION GROUP
CONSULTING ENGINEERS

Texas Department of Transportation
© 2010

LOOP 1604
TRAFFIC CONTROL PLAN

PHASE 1, STAGE 1

STA. 368+00 TO STA. 379+00

SHEET 2 OF 15

DGN:	FED. RD. DIV. NO.	STATE	FEDERAL AID PROJECT NO.			HIGHWAY NO.
CKD DGN:	6	TEXAS	STP 2011(210)ES			LP 1604
DWG:	DIST.	COUNTY	CONT. NO.	SECT. NO.	JOB NO.	SHEET NO.
CKD DWG:	SAT	BEXAR	2452	01	050	47

Plotted on: 7/1/2010 3:45:59 PM
Design Filename: p:\8380407\dlv\planSht's\tcp\PHASE 1\740004TCP1103.dgn

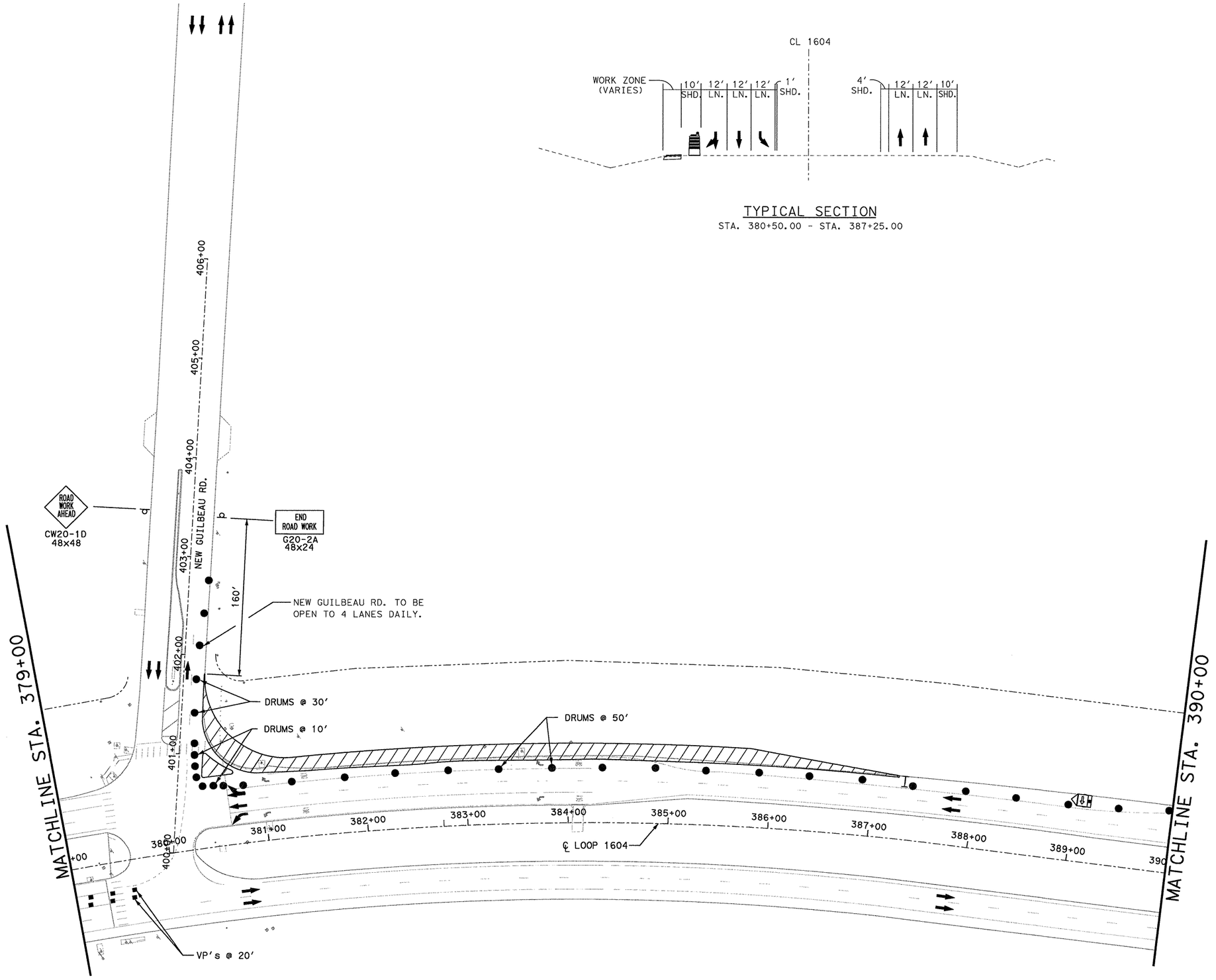

TYPICAL SECTION
STA. 380+50.00 - STA. 387+25.00

0 50 100
SCALE: 1" = 100'

LEGEND

- = NEW CONSTRUCTION THIS STAGE
- = 10" FLEXIBLE PAVEMENT REPAIR
- = PAVEMENT OBLITERATED THIS STAGE
- = CONSTRUCTED IN PREVIOUS STAGE
- M = CHANGABLE MESSAGE SIGN
- = ARROW BOARD
- = TRAFFIC FLOW ARROW
- = PLASTIC DRUMS
- = VERTICAL PANELS
- þ = TRAFFIC SIGNS
- I = TYPE III BARRICADE
- = LCTB

STATE OF TEXAS
CHRIS D. KELAREK
83300
LICENSED PROFESSIONAL ENGINEER
Chris D. Kelarek, P.E. 7/1/2010

SCALE: PLAN - 1":100'

REV. NO.	DATE	DESCRIPTION	BY

ALAMO RMA

RODRIGUEZ TRANSPORTATION GROUP
CONSULTING ENGINEERS

Texas Department of Transportation © 2010

LOOP 1604
TRAFFIC CONTROL PLAN
PHASE 1, STAGE 1

STA. 379+00 TO STA. 390+00

SHEET 3 OF 15

DGN:	FED. RD. DIV. NO.	STATE	FEDERAL AID PROJECT NO.			HIGHWAY NO.
CKK DGN:	6	TEXAS	STP 2011(210)ES			LP 1604
DWG:	DIST.	COUNTY	CONT. NO.	SECT. NO.	JOB NO.	SHEET NO.
CKK DWG:	SAT	BEXAR	2452	01	050	48

Plotted on: 7/1/2010 3:46:02 PM

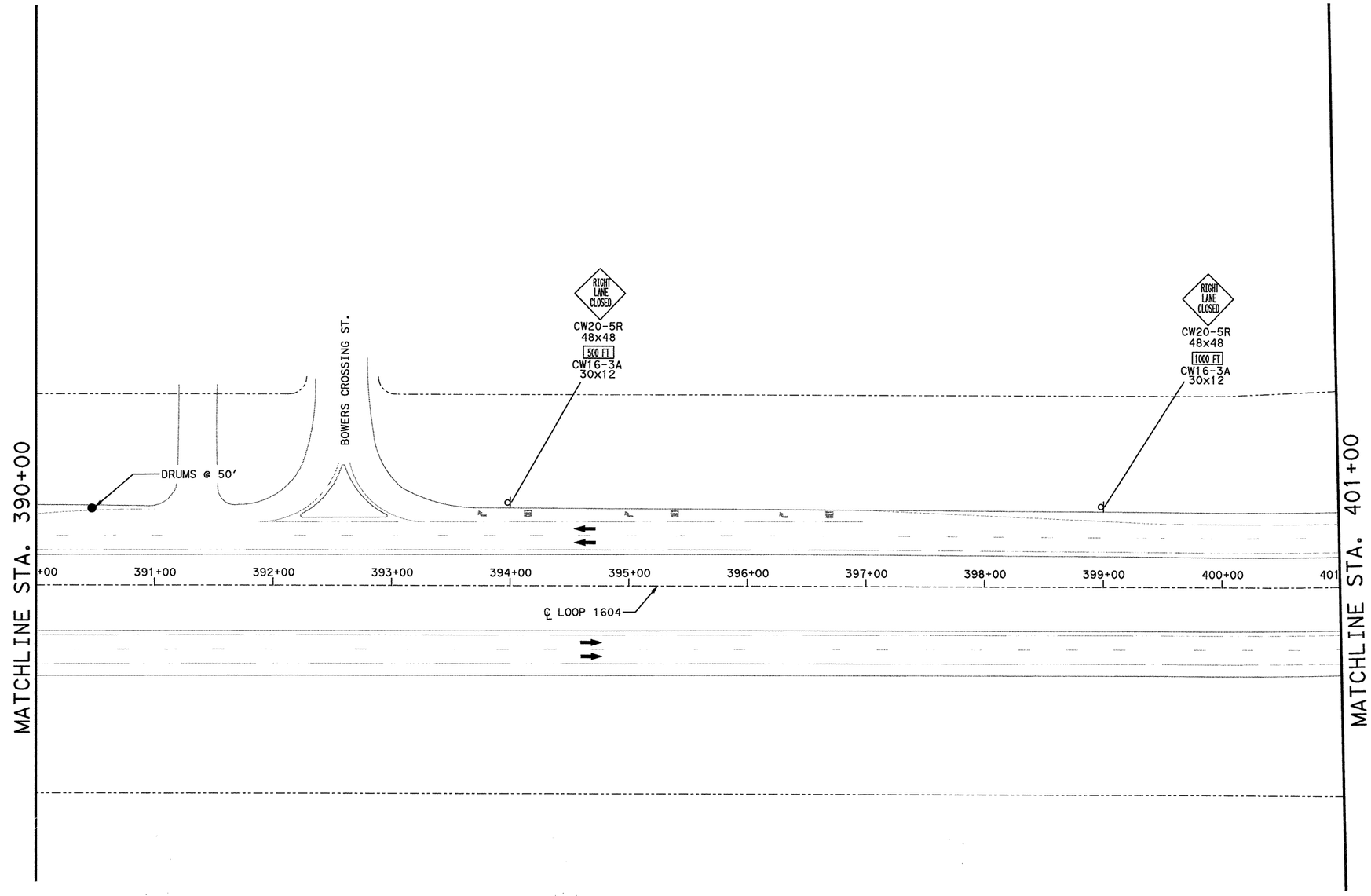

0 50 100

SCALE: 1" = 100'

LEGEND

- = NEW CONSTRUCTION THIS STAGE
- = 10" FLEXIBLE PAVEMENT REPAIR
- = PAVEMENT OBLITERATED THIS STAGE
- = CONSTRUCTED IN PREVIOUS STAGE
- M = CHANGABLE MESSAGE SIGN
- = ARROW BOARD
- = TRAFFIC FLOW ARROW
- = PLASTIC DRUMS
- = VERTICAL PANELS
- = TRAFFIC SIGNS
- = TYPE III BARRICADE
- = LCTB

STATE OF TEXAS
CHRIS D. KELAREK
83300
LICENSED PROFESSIONAL ENGINEER

Chris D. Kelarek, P.E. 7/1/2010

SCALE: PLAN - 1":100'

REV. NO.	DATE	DESCRIPTION	BY

ALAMO RMA

RODRIGUEZ TRANSPORTATION GROUP
CONSULTING ENGINEERS

Texas Department of Transportation ©2010

LOOP 1604
TRAFFIC CONTROL PLAN

PHASE 1, STAGE 1

STA. 390+00 TO STA. 401+00

SHEET 4 OF 15

DGN:	FED. RD. DIV. NO.	STATE	FEDERAL AID PROJECT NO.			HIGHWAY NO.
CHK DGN:	6	TEXAS	STP 2011(210)ES			LP 1604
DWG:	DIST.	COUNTY	CONT. NO.	SECT. NO.	JOB NO.	SHEET NO.
CHK DWG:	SAT	BEXAR	2452	01	050	49

Design Filename: p:\8380407\div\plansheets\top\PHASE 1\7400041CP1104.dgn

Plotted on: 7/1/2010 3:46:05 PM

Design Filename: p:\8380407\dlv\plansht s\top\PHASE 1\740004TCP1105.dgn

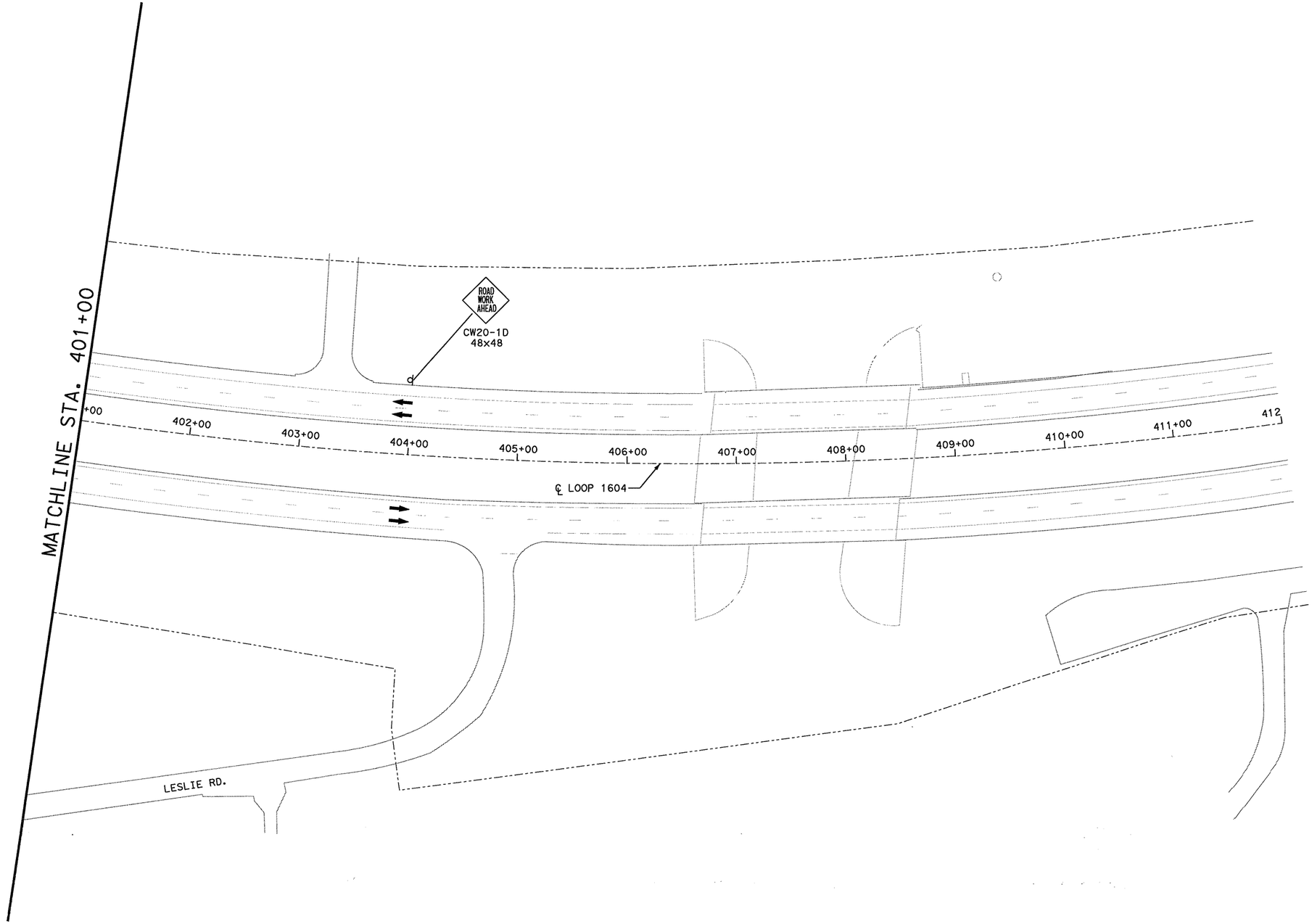

0 50 100

SCALE: 1" = 100'

LEGEND

- = NEW CONSTRUCTION THIS STAGE
- = 10" FLEXIBLE PAVEMENT REPAIR
- = PAVEMENT OBLITERATED THIS STAGE
- = CONSTRUCTED IN PREVIOUS STAGE
- M = CHANGABLE MESSAGE SIGN
- = ARROW BOARD
- = TRAFFIC FLOW ARROW
- = PLASTIC DRUMS
- = VERTICAL PANELS
- = TRAFFIC SIGNS
- = TYPE III BARRICADE
- = LCTB

STATE OF TEXAS
CHRIS D. KELAREK
83300
LICENSED
PROFESSIONAL ENGINEER

Chris D. Kelarek, P.E. 7/1/2010

SCALE: PLAN - 1":100'

REV. NO.	DATE	DESCRIPTION	BY

ALAMO RMA

RODRIGUEZ TRANSPORTATION GROUP
CONSULTING ENGINEERS

Texas Department of Transportation
© 2010

LOOP 1604
TRAFFIC CONTROL PLAN

PHASE 1, STAGE 1

STA. 401+00 TO STA. 412+00

SHEET 5 OF 15

DGN:	FED. RD. DIV. NO.	STATE	FEDERAL AID PROJECT NO.			HIGHWAY NO.
CHK DGN:	6	TEXAS	STP 2011(210)ES			LP 1604
DWG:	DIST.	COUNTY	CONT. NO.	SECT. NO.	JOB NO.	SHEET NO.
CHK DWG:	SAT	BEXAR	2452	01	050	50

Plotted on: 7/1/2010 3:46:09 PM

Design Filename: p:\8380407\dlv\planSht$vtop\PHASE 1\740004TCP1201.dgn

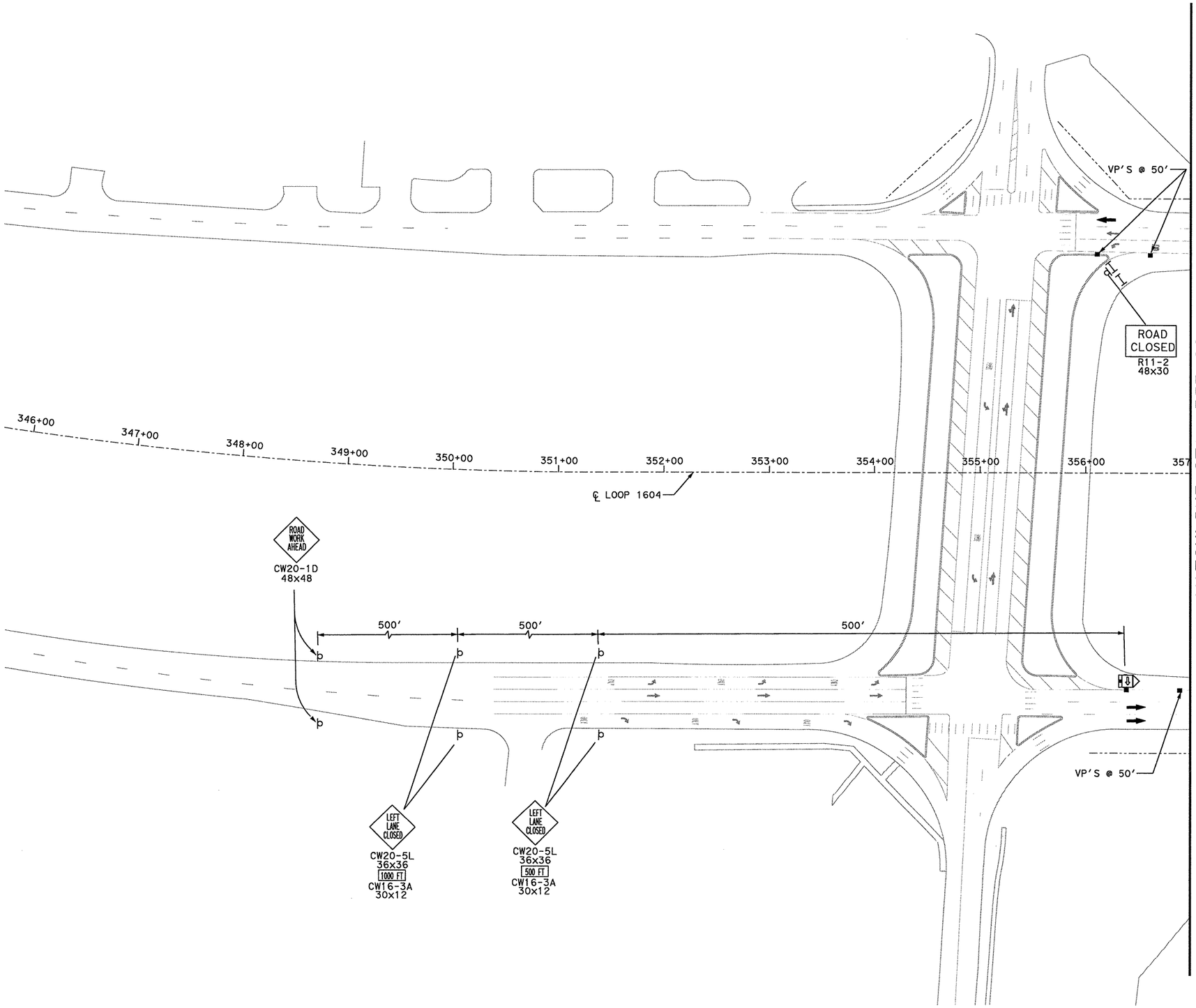

0 50 100

SCALE: 1" = 100'

LEGEND

- = NEW CONSTRUCTION THIS STAGE
- = 10" FLEXIBLE PAVEMENT REPAIR
- = PAVEMENT OBLITERATED THIS STAGE
- = CONSTRUCTED IN PREVIOUS STAGE
- M = CHANGABLE MESSAGE SIGN
- = ARROW BOARD
- = TRAFFIC FLOW ARROW
- = PLASTIC DRUMS
- = VERTICAL PANELS
- þ = TRAFFIC SIGNS
- I = TYPE III BARRICADE
- = LCTB

STATE OF TEXAS
CHRIS D. KELAREK
83300
LICENSED
PROFESSIONAL ENGINEER

Chris D. Kelarek, P.E. 7/1/2010

SCALE: PLAN - 1":100'

REV. NO.	DATE	DESCRIPTION	BY

ALAMO RMA

RODRIGUEZ TRANSPORTATION GROUP
CONSULTING ENGINEERS

Texas Department of Transportation
© 2010

LOOP 1604

TRAFFIC CONTROL PLAN

PHASE 1, STAGE 2

BEGINNING TO STA. 357+00

SHEET 6 OF 15

DGN:	FED. RD. DIV. NO.	STATE	FEDERAL AID PROJECT NO.			HIGHWAY NO.
CAD DGN:	6	TEXAS	STP 2011(210)ES			LP 1604
DWG:	DIST.	COUNTY	CONT. NO.	SECT. NO.	JOB NO.	SHEET NO.
CAD DWG:	SAT	BEXAR	2452	01	050	51

Plotted on: 7/1/2010 3:46:12 PM

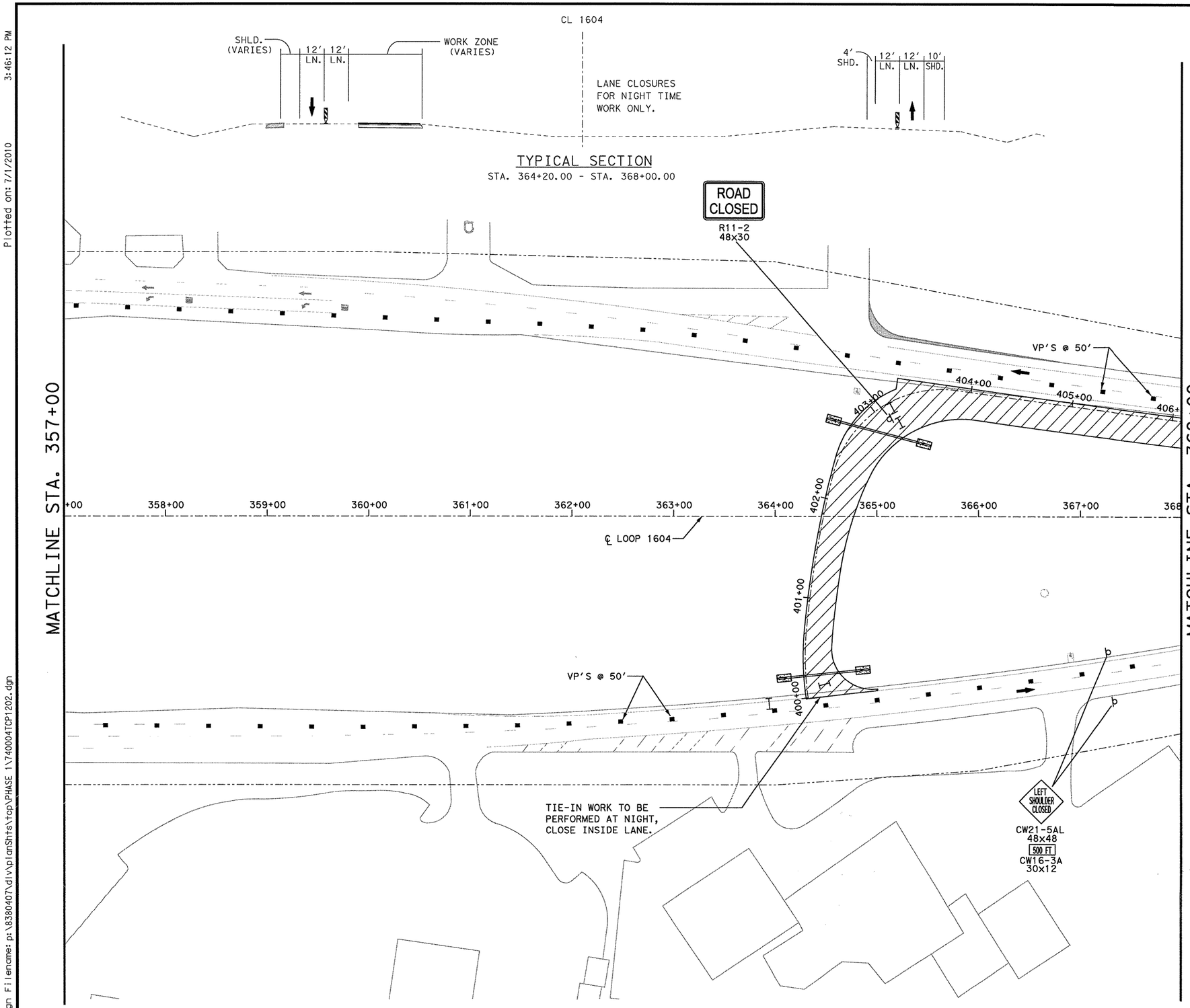

0 50 100
SCALE: 1" = 100'

LEGEND

- = NEW CONSTRUCTION THIS STAGE
- = 10" FLEXIBLE PAVEMENT REPAIR
- = PAVEMENT OBLITERATED THIS STAGE
- = CONSTRUCTED IN PREVIOUS STAGE
- M = CHANGABLE MESSAGE SIGN
- = ARROW BOARD
- = TRAFFIC FLOW ARROW
- = PLASTIC DRUMS
- = VERTICAL PANELS
- = TRAFFIC SIGNS
- = TYPE III BARRICADE
- = LCTB

STATE OF TEXAS
CHRIS D. KELAREK
83300
LICENSED
PROFESSIONAL ENGINEER

Chris D. Kelarek, P.E. 7/1/2010

SCALE: PLAN - 1": 100'

REV. NO.	DATE	DESCRIPTION	BY

ALAMO RMA

RODRIGUEZ TRANSPORTATION GROUP
CONSULTING ENGINEERS

Texas Department of Transportation
© 2010

LOOP 1604
TRAFFIC CONTROL PLAN

PHASE 1, STAGE 2

357+00 TO STA. 368+00

SHEET 7 OF 15

DGN:	FED. RD. DIV. NO.	STATE	FEDERAL AID PROJECT NO.			HIGHWAY NO.
CHK DSN:	6	TEXAS	STP 2011(210)ES			LP 1604
DWG:	DIST.	COUNTY	CONT. NO.	SECT. NO.	JOB NO.	SHEET NO.
CHK DWG:	SAT	BEXAR	2452	01	050	52

Design Filename: p:\8380407\dlv\planSht's\top\PHASE 1\740004TCP1202.dgn

Plotted on: 7/1/2010 3:46:15 PM
Design Filename: p:\8380407\dlv\planSht's\top\PHASE 1\7400047CP1203.dgn

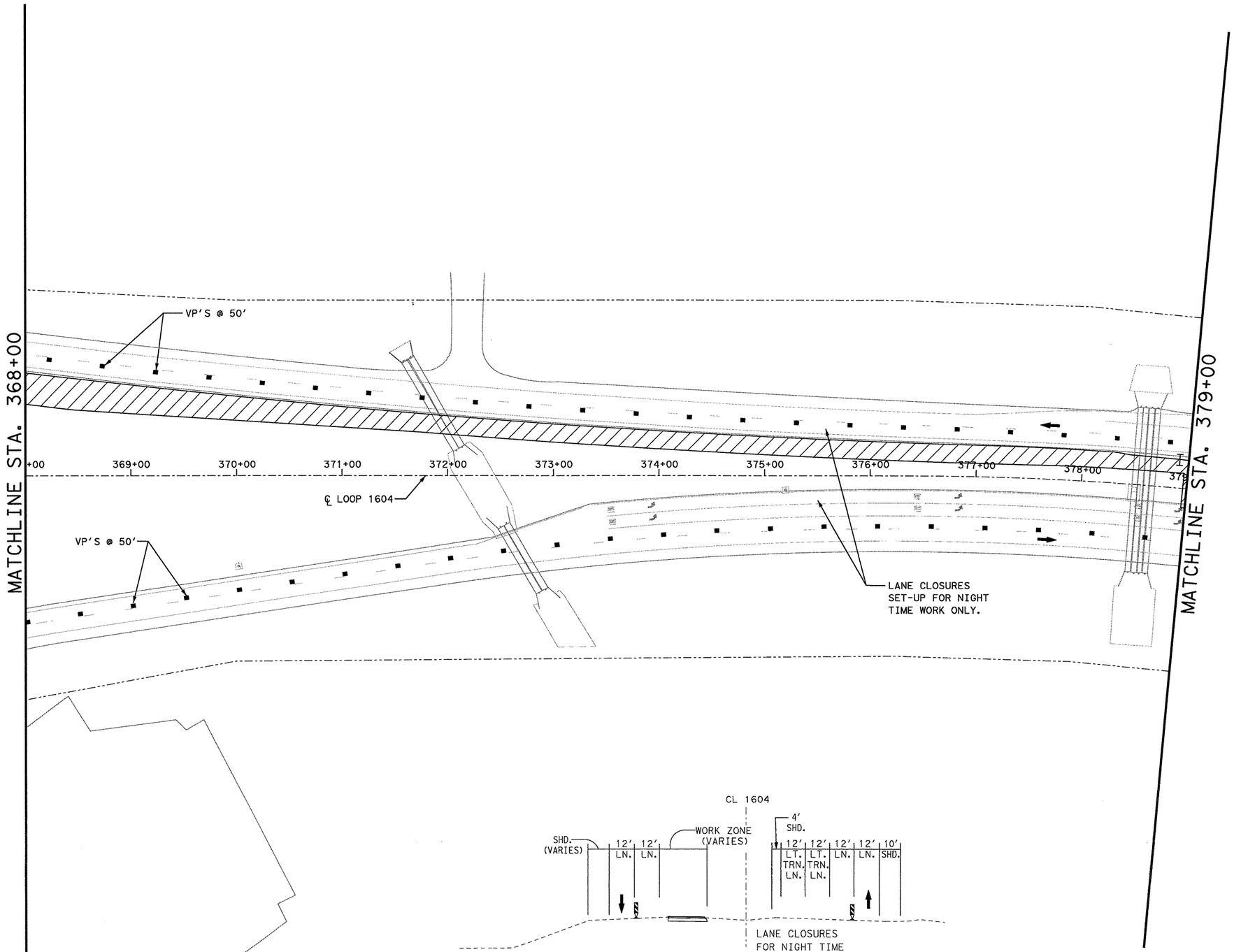

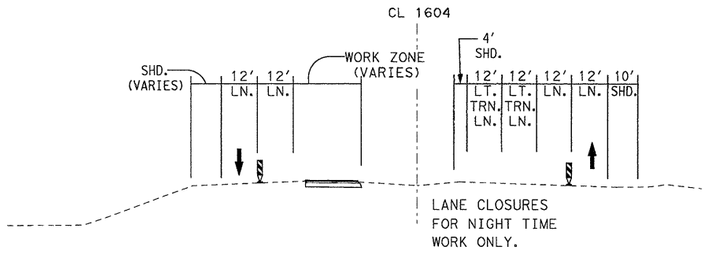

TYPICAL SECTION
STA. 368+00.00 - 379+00.00

0 50 100
SCALE: 1" = 100'

LEGEND

- = NEW CONSTRUCTION THIS STAGE
- = 10" FLEXIBLE PAVEMENT REPAIR
- = PAVEMENT OBLITERATED THIS STAGE
- = CONSTRUCTED IN PREVIOUS STAGE
- M = CHANGABLE MESSAGE SIGN
- = ARROW BOARD
- = TRAFFIC FLOW ARROW
- = PLASTIC DRUMS
- = VERTICAL PANELS
- þ = TRAFFIC SIGNS
- I = TYPE III BARRICADE
- = LCTB

STATE OF TEXAS
CHRIS D. KELAREK
83300
LICENSED
PROFESSIONAL ENGINEER

Chris D. Kelarek, P.E. 7/1/2010

SCALE: PLAN - 1":100'

REV. NO.	DATE	DESCRIPTION	BY

ALAMO RMA

RODRIGUEZ TRANSPORTATION GROUP
CONSULTING ENGINEERS

Texas Department of Transportation
© 2010

LOOP 1604
TRAFFIC CONTROL PLAN
PHASE 1, STAGE 2
STA. 368+00 TO STA. 379+00

SHEET 8 OF 15

DGN:	FED. RD. DIV. NO.	STATE	FEDERAL AID PROJECT NO.			HIGHWAY NO.
CAK DGN:	6	TEXAS	STP 2011(210)ES			LP 1604
DWG:	DIST.	COUNTY	CONT. NO.	SECT. NO.	JOB NO.	SHEET NO.
CAK DWG:	SAT	BEXAR	2452	01	050	53

Plotted on: 7/1/2010 3:46:18 PM
Design Filename: p:\8380407\dlvplan\Shts\tcp\PHASE 1\740004TCP1204.dgn

TYPICAL SECTION
STA. 379+00.00 - 380+53.00

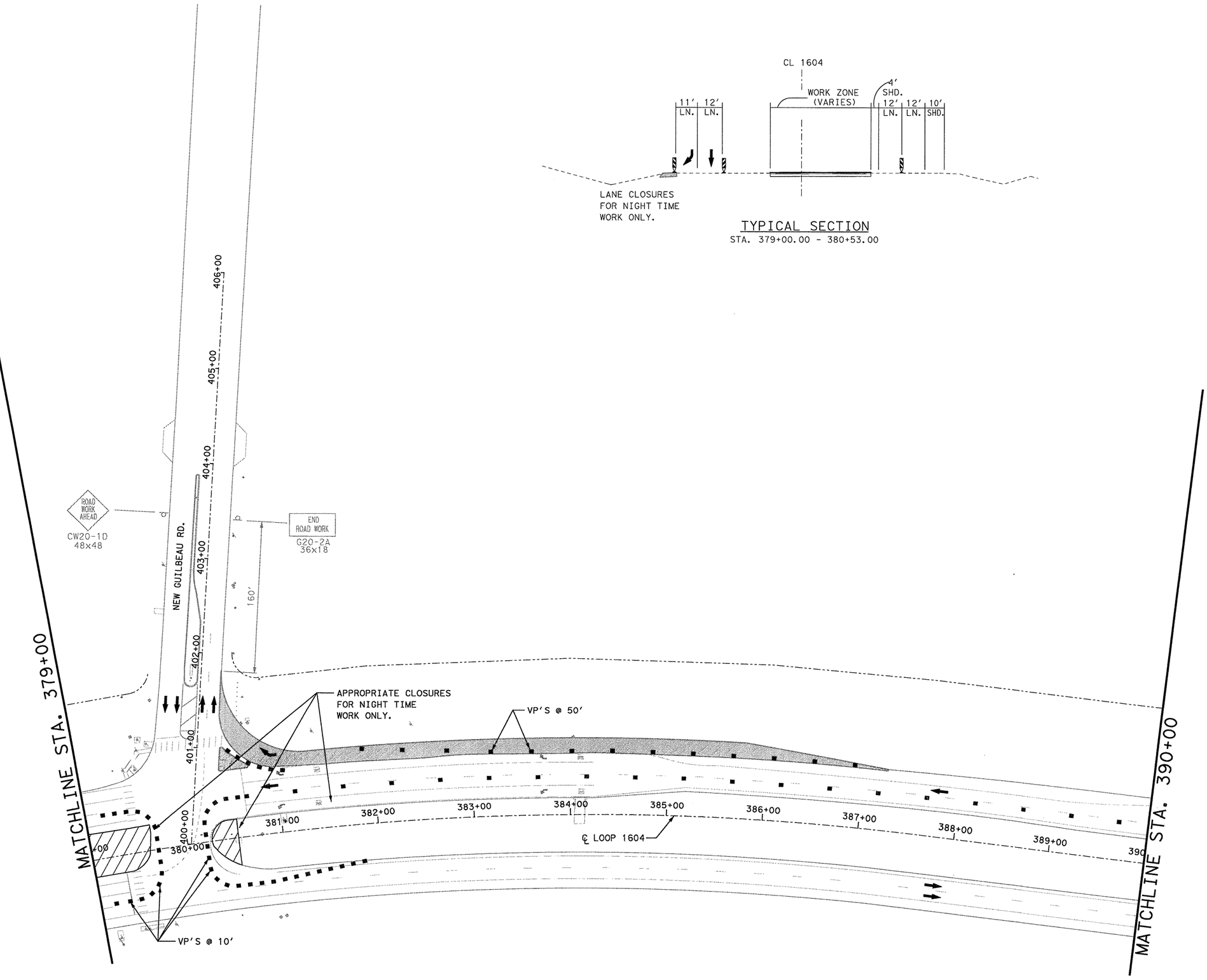

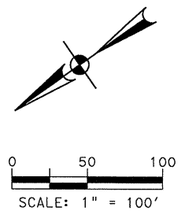

LEGEND

- = NEW CONSTRUCTION THIS STAGE
- = 10" FLEXIBLE PAVEMENT REPAIR
- = PAVEMENT OBLITERATED THIS STAGE
- = CONSTRUCTED IN PREVIOUS STAGE
- M = CHANGABLE MESSAGE SIGN
- = ARROW BOARD
- = TRAFFIC FLOW ARROW
- = PLASTIC DRUMS
- = VERTICAL PANELS
- = TRAFFIC SIGNS
- = TYPE III BARRICADE
- = LCTB

STATE OF TEXAS
CHRIS D. KELAREK
83300
LICENSED
PROFESSIONAL ENGINEER

Chris D. Kelarek, P.E. 7/1/2010

SCALE: PLAN - 1":100'

REV. NO.	DATE	DESCRIPTION	BY

ALAMO RMA

RODRIGUEZ TRANSPORTATION GROUP
CONSULTING ENGINEERS

Texas Department of Transportation
© 2010

LOOP 1604
TRAFFIC CONTROL PLAN

PHASE 1, STAGE 2

STA. 379+00 TO STA. 390+00

SHEET 9 OF 15

DGN:	FED. RD. DIV. NO.	STATE	FEDERAL AID PROJECT NO.			HIGHWAY NO.
CK:	6	TEXAS	STP 2011(210)ES			LP 1604
DSN:	DIST.	COUNTY	CONT. NO.	SECT. NO.	JOB NO.	SHEET NO.
DWG:	SAT	BEXAR	2452	01	050	54
CK: DWG:						

Plotted on: 7/1/2010 3:46:21 PM

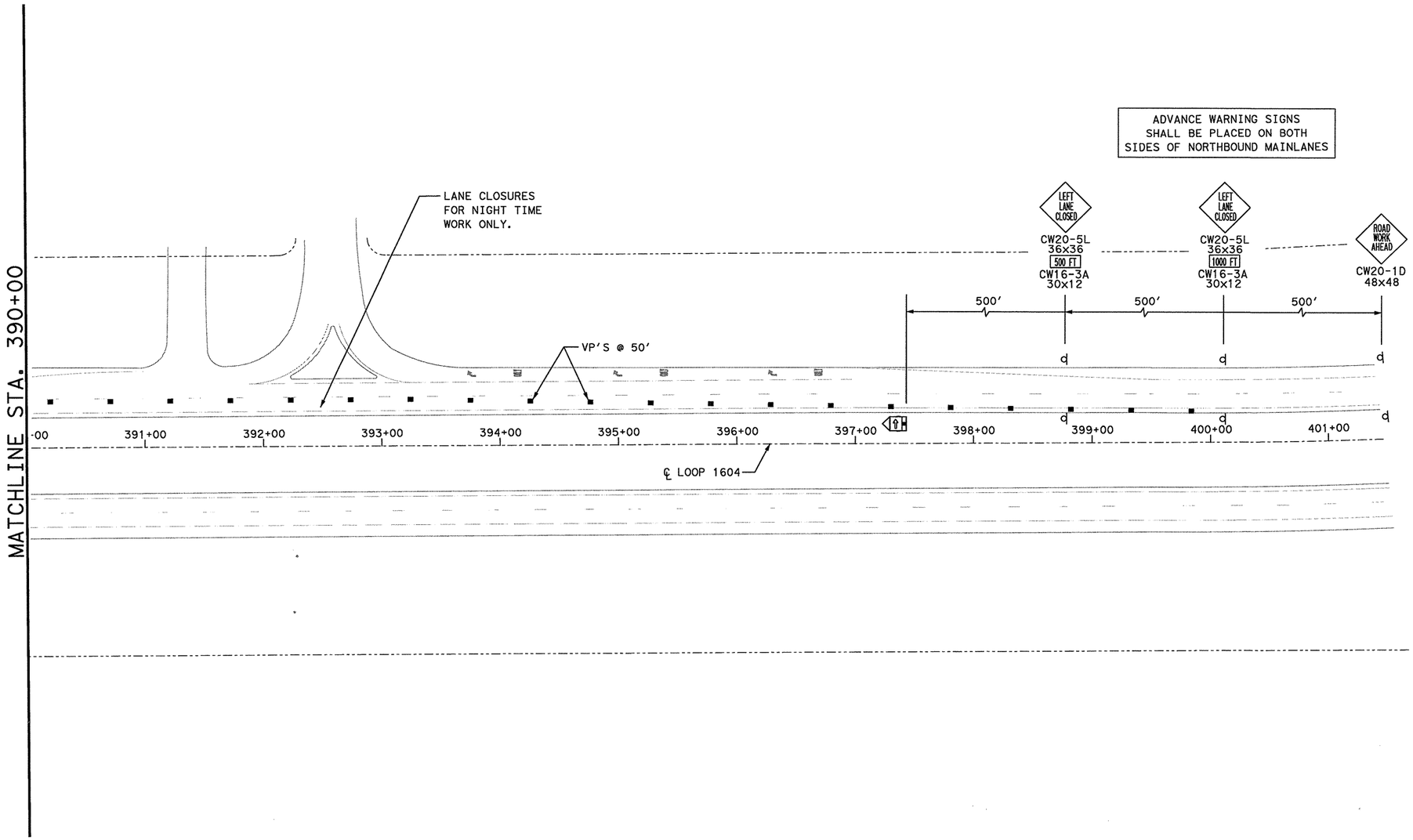

LEGEND

- = NEW CONSTRUCTION THIS STAGE
- = 10" FLEXIBLE PAVEMENT REPAIR
- = PAVEMENT OBLITERATED THIS STAGE
- = CONSTRUCTED IN PREVIOUS STAGE
- M = CHANGABLE MESSAGE SIGN
- = ARROW BOARD
- = TRAFFIC FLOW ARROW
- = PLASTIC DRUMS
- = VERTICAL PANELS
- = TRAFFIC SIGNS
- = TYPE III BARRICADE
- = LCTB

STATE OF TEXAS
CHRIS D. KELAREK
83300
LICENSED
PROFESSIONAL ENGINEER

Chris D. Kelarek, P.E. 7/1/2010

SCALE: PLAN - 1":100'

REV. NO.	DATE	DESCRIPTION	BY

ALAMO RMA

RODRIGUEZ TRANSPORTATION GROUP
CONSULTING ENGINEERS

Texas Department of Transportation
© 2010

LOOP 1604
TRAFFIC CONTROL PLAN

PHASE 1, STAGE 2

STA. 390+00 TO STA. 401+00

SHEET 10 OF 15

DGN:	FED. RD. DIV. NO.	STATE	FEDERAL AID PROJECT NO.			HIGHWAY NO.
CHK DGN:	6	TEXAS	STP 2011(210)ES			LP 1604
DWG:	DIST.	COUNTY	CONT. NO.	SECT. NO.	JOB NO.	SHEET NO.
CHK DWG:	SAT	BEXAR	2452	01	050	55

Design Filename: p:\8380407\dlv\planSht s\tcp\PHASE 1\740004TCP1205.dgn

Plotted on: 7/1/2010 3:46:24 PM

Design Filename: p:\8380407\dlv\planSht's\top\PHASE 1\T40004TCP1301.dgn

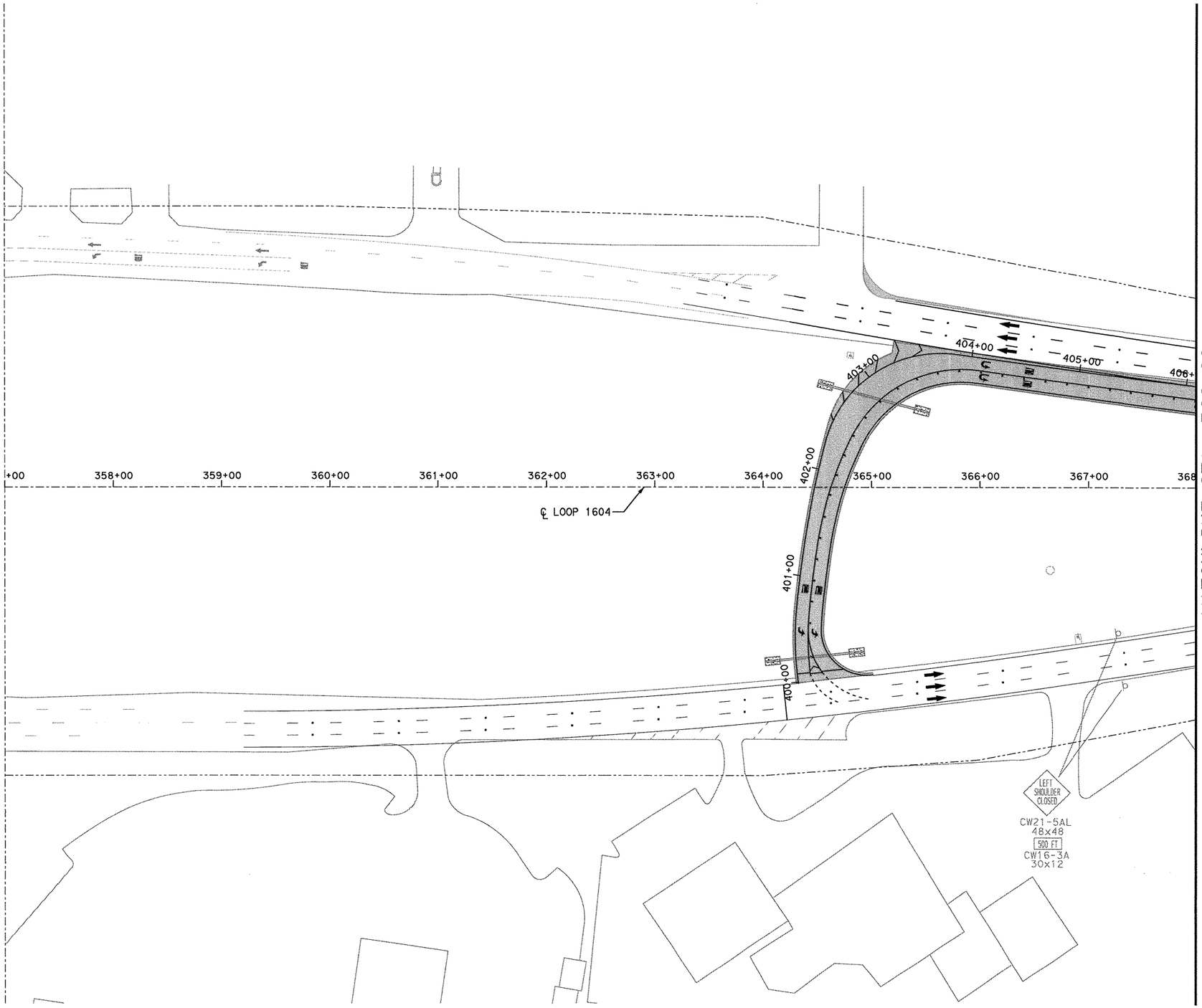

MATCHLINE STA. 368+00

0 50 100

SCALE: 1" = 100'

LEGEND

- = NEW CONSTRUCTION THIS STAGE
- = 10" FLEXIBLE PAVEMENT REPAIR
- = PAVEMENT OBLITERATED THIS STAGE
- = CONSTRUCTED IN PREVIOUS STAGE
- M = CHANGABLE MESSAGE SIGN
- = ARROW BOARD
- = TRAFFIC FLOW ARROW
- = PLASTIC DRUMS
- = VERTICAL PANELS
- = TRAFFIC SIGNS
- = TYPE III BARRICADE
- = LCTB

STATE OF TEXAS
CHRIS D. KELAREK
83300
LICENSED
PROFESSIONAL ENGINEER

Chris D. Kelarek, P.E. 7/1/2010

SCALE: PLAN - 1":100'

REV. NO.	DATE	DESCRIPTION	BY

ALAMO RMA

RODRIGUEZ TRANSPORTATION GROUP
CONSULTING ENGINEERS

Texas Department of Transportation
© 2010

LOOP 1604
TRAFFIC CONTROL PLAN

PHASE 1, STAGE 3A

BEGINNING TO STA. 368+00

SHEET 11 OF 15

DGN:	FED. RD. DIV. NO.	STATE	FEDERAL AID PROJECT NO.			HIGHWAY NO.
CK: DSN:	6	TEXAS	STP 2011(210)ES			LP 1604
DWG:	DIST.	COUNTY	CONT. NO.	SECT. NO.	JOB NO.	SHEET NO.
CK: DWG:	SAT	BEXAR	2452	01	050	56

Plotted on: 7/1/2010 3:46:27 PM

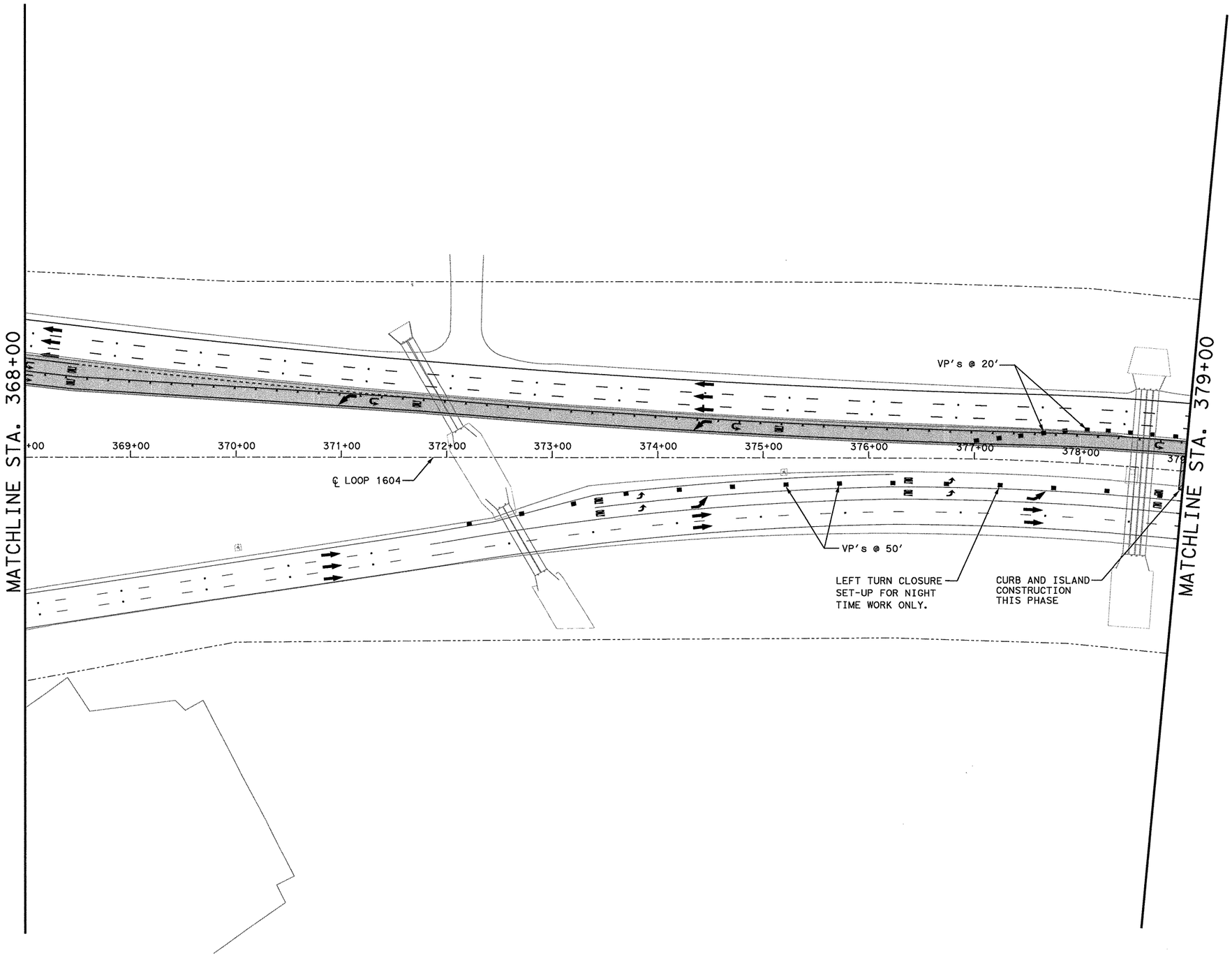

0 50 100
SCALE: 1" = 100'

LEGEND

- = NEW CONSTRUCTION THIS STAGE
- = 10" FLEXIBLE PAVEMENT REPAIR
- = PAVEMENT OBLITERATED THIS STAGE
- = CONSTRUCTED IN PREVIOUS STAGE
- M = CHANGABLE MESSAGE SIGN
- = ARROW BOARD
- = TRAFFIC FLOW ARROW
- = PLASTIC DRUMS
- = VERTICAL PANELS
- = TRAFFIC SIGNS
- = TYPE III BARRICADE
- = LCTB

STATE OF TEXAS
CHRIS D. KELAREK
83300
LICENSED PROFESSIONAL ENGINEER

Chris D. Kelarek, P.E. 7/1/2010

SCALE: PLAN - 1":100'

REV. NO.	DATE	DESCRIPTION	BY

ALAMO RMA

RODRIGUEZ TRANSPORTATION GROUP
CONSULTING ENGINEERS

Texas Department of Transportation
© 2010

LOOP 1604

TRAFFIC CONTROL PLAN

PHASE 1, STAGE 3A

STA. 368+00 TO STA. 379+00

SHEET 12 OF 15

DGN:	FED. RD. DIV. NO.	STATE	FEDERAL AID PROJECT NO.			HIGHWAY NO.
CHK DGN:	6	TEXAS	STP 2011(210)ES			LP 1604
DWG:	DIST.	COUNTY	CONT. NO.	SECT. NO.	JOB NO.	SHEET NO.
CHK DWG:	SAT	BEXAR	2452	01	050	57

Design Filename: p:\8380407\dlv\planShts\top\PHASE 1\7400041CP1302.dgn

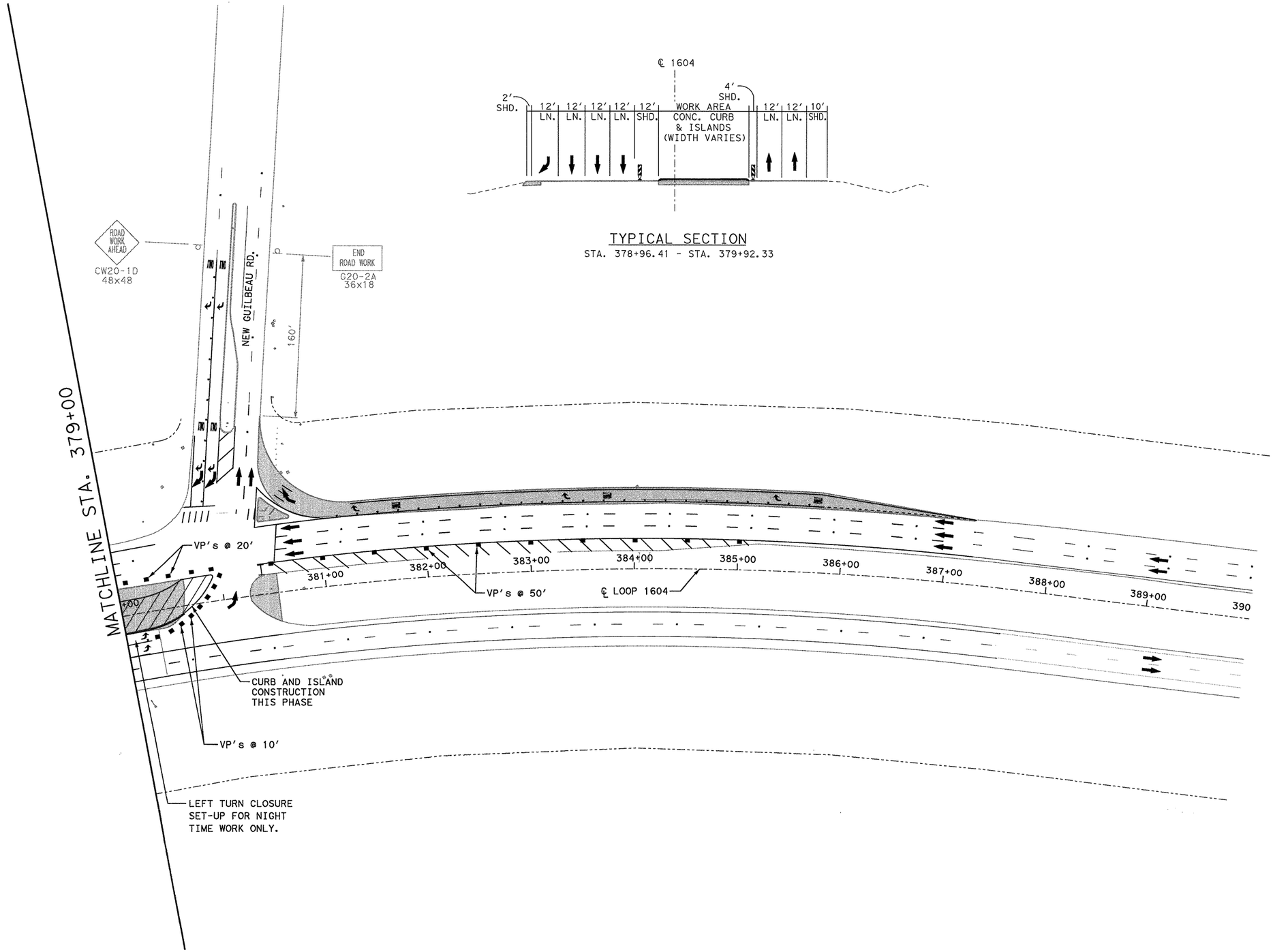

TYPICAL SECTION

STA. 378+96.41 - STA. 379+92.33

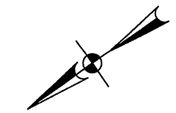

0 50 100

SCALE: 1" = 100'

LEGEND

- = NEW CONSTRUCTION THIS STAGE
- = 10" FLEXIBLE PAVEMENT REPAIR
- = PAVEMENT OBLITERATED THIS STAGE
- = CONSTRUCTED IN PREVIOUS STAGE
- M = CHANGABLE MESSAGE SIGN
- = ARROW BOARD
- = TRAFFIC FLOW ARROW
- = PLASTIC DRUMS
- = VERTICAL PANELS
- = TRAFFIC SIGNS
- = TYPE III BARRICADE
- = LCTB

STATE OF TEXAS
CHRIS D. KELAREK
83300
LICENSED PROFESSIONAL ENGINEER

Chris D. Kelarek, P.E. 7/1/2010

SCALE: PLAN - 1":100'

REV. NO.	DATE	DESCRIPTION	BY

ALAMO RMA

RODRIGUEZ TRANSPORTATION GROUP
CONSULTING ENGINEERS

Texas Department of Transportation
© 2010

LOOP 1604

TRAFFIC CONTROL PLAN

PHASE 1, STAGE 3A

STA. 379+00 TO STA. 390+00

SHEET 13 OF 15

DGN:	FED. RD. DIV. NO.	STATE	FEDERAL AID PROJECT NO.			HIGHWAY NO.
CHK DGN:	6	TEXAS	STP 2011(210)ES			LP 1604
DWG:	DIST.	COUNTY	CONT. NO.	SECT. NO.	JOB NO.	SHEET NO.
CHK DWG:	SAT	BEXAR	2452	01	050	58

Design Filename: p:\8380407\dlv\planShts\tcp\PHASE 1\740004TCP1303.dgn

Plotted on: 7/1/2010 3:46:30 PM

Plotted on: 7/1/2010 3:46:33 PM

Design Filename: p:\8380407\dlv\planSht\stop\PHASE 1\740004TCP1311.dgn

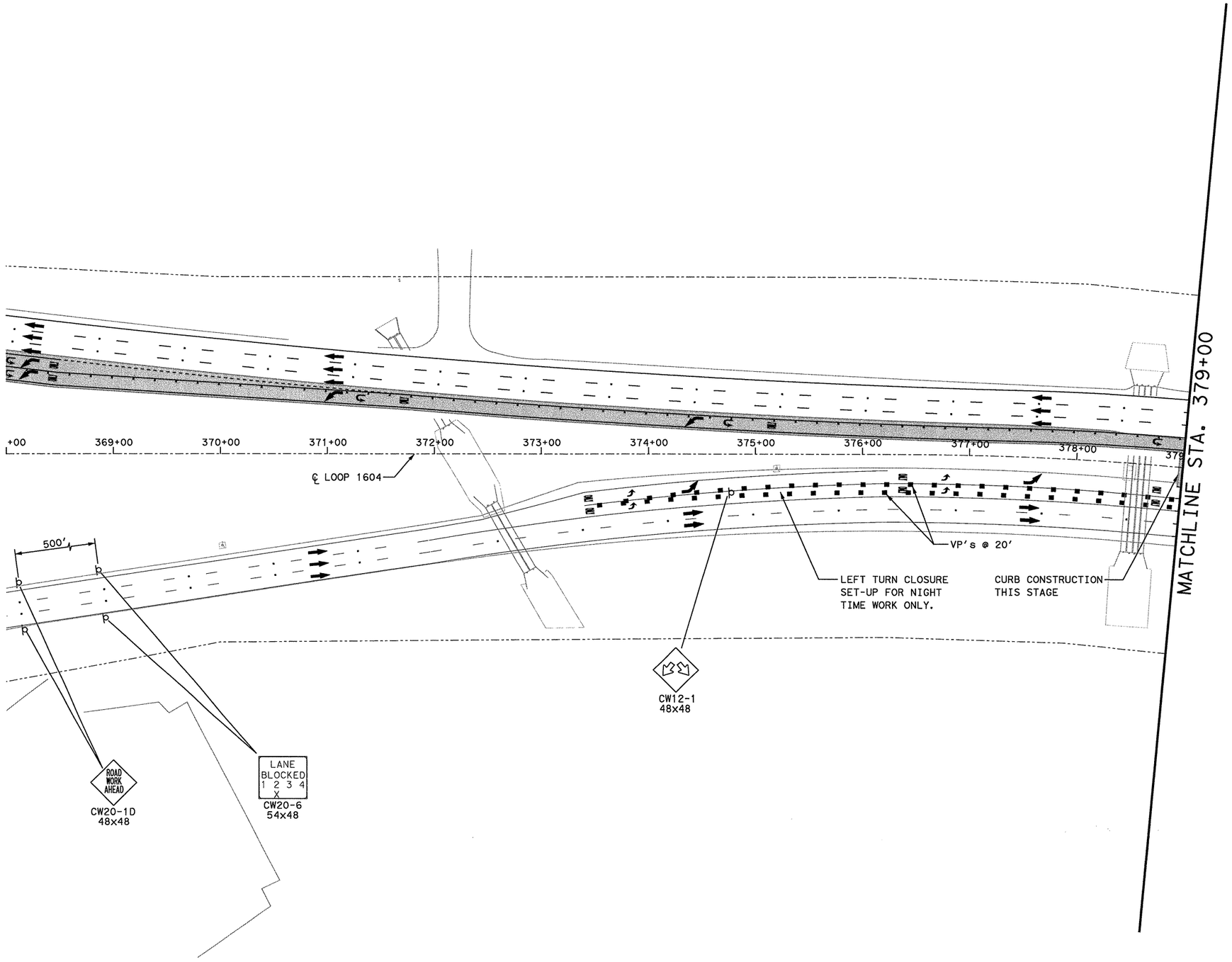

LEGEND

- = NEW CONSTRUCTION THIS STAGE
- = 10" FLEXIBLE PAVEMENT REPAIR
- = PAVEMENT OBLITERATED THIS STAGE
- = CONSTRUCTED IN PREVIOUS STAGE
- M = CHANGABLE MESSAGE SIGN
- = ARROW BOARD
- = TRAFFIC FLOW ARROW
- = PLASTIC DRUMS
- = VERTICAL PANELS
- = TRAFFIC SIGNS
- = TYPE III BARRICADE
- = LCTB

STATE OF TEXAS
CHRIS D. KELAREK
83300
LICENSED
PROFESSIONAL ENGINEER

Chris D. Kelarek, P.E. 7/1/2010

SCALE: PLAN - 1":100'

REV. NO.	DATE	DESCRIPTION	BY

ALAMO RMA

RODRIGUEZ TRANSPORTATION GROUP
CONSULTING ENGINEERS

Texas Department of Transportation
© 2010

LOOP 1604
TRAFFIC CONTROL PLAN

PHASE 1, STAGE 3B

STA. 368+00 TO STA. 379+00

SHEET 14 OF 15

DGN:	FED. RD. DIV. NO.	STATE	FEDERAL AID PROJECT NO.			HIGHWAY NO.
CHK DGN:	6	TEXAS	STP 2011(210)ES			LP 1604
DWG:	DIST.	COUNTY	CONT. NO.	SECT. NO.	JOB NO.	SHEET NO.
CHK DWG:	SAT	BEXAR	2452	01	050	59

Plotted on: 7/1/2010 3:46:37 PM
Design Filename: p:\8380407\dlv\planSht s\tcp\PHASE 1\T40004TCP1312.dgn

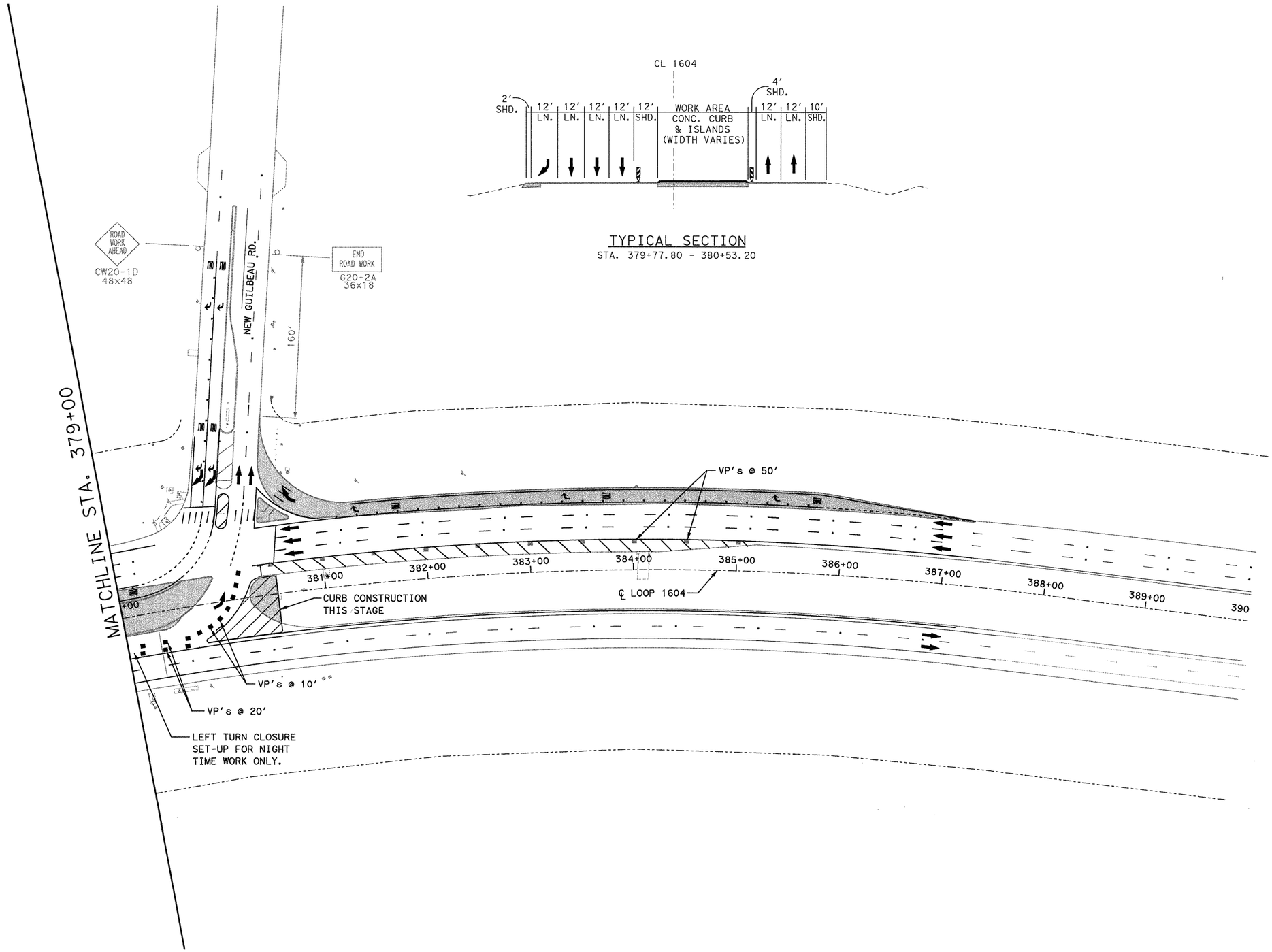

TYPICAL SECTION
STA. 379+77.80 - 380+53.20

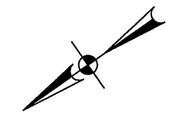

LEGEND

- = NEW CONSTRUCTION THIS STAGE
- = 10" FLEXIBLE PAVEMENT REPAIR
- = PAVEMENT OBLITERATED THIS STAGE
- = CONSTRUCTED IN PREVIOUS STAGE
- M = CHANGABLE MESSAGE SIGN
- = ARROW BOARD
- = TRAFFIC FLOW ARROW
- = PLASTIC DRUMS
- = VERTICAL PANELS
- = TRAFFIC SIGNS
- = TYPE III BARRICADE
- = LCTB

STATE OF TEXAS
CHRIS D. KELAREK
83300
LICENSED
PROFESSIONAL ENGINEER
Chris D. Kelarek, P.E. 7/1/2010

SCALE: PLAN - 1":100'

REV. NO.	DATE	DESCRIPTION	BY

ALAMO RMA

RODRIGUEZ TRANSPORTATION GROUP
CONSULTING ENGINEERS

Texas Department of Transportation
© 2010

LOOP 1604
TRAFFIC CONTROL PLAN

PHASE 1, STAGE 3B

STA. 379+00 TO STA. 390+00

SHEET 15 OF 15

DSN:	FED. RD. DIV. NO.	STATE	FEDERAL AID PROJECT NO.			HIGHWAY NO.
CHK DSN:	6	TEXAS	STP 2011(210)ES			LP 1604
DWG:	DIST.	COUNTY	CONT. NO.	SECT. NO.	JOB NO.	SHEET NO.
CHK DWG:	SAT	BEXAR	2452	01	050	60

Plotted on: 7/1/2010 3:46:40 PM

Design Filename: p:\8380407\dlv\planShts\top\PHASE 2\T40004TCP2101.dgn

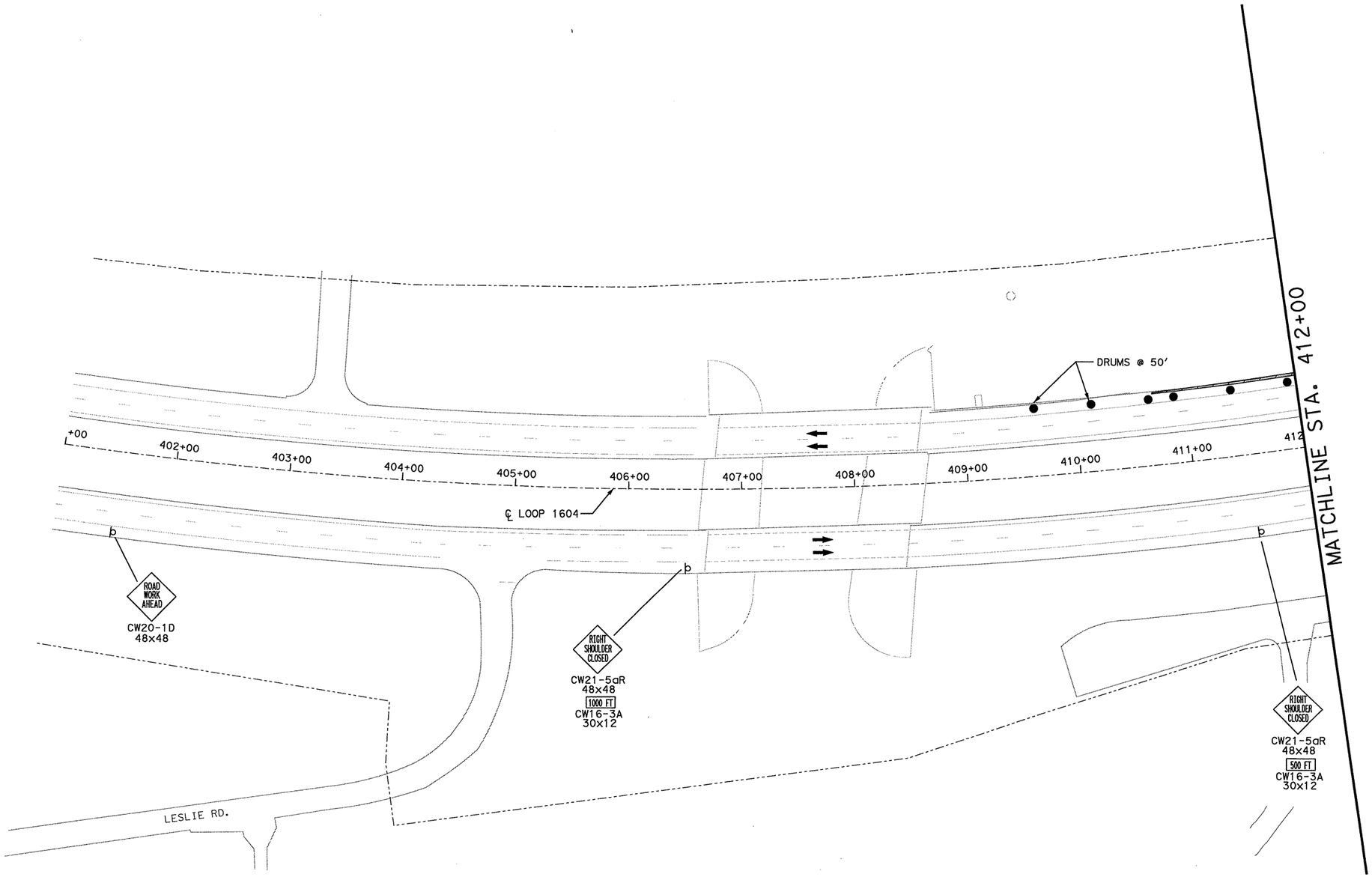

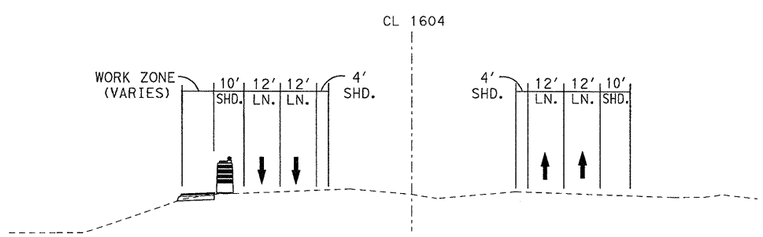

TYPICAL SECTION

STA. 410+69.80 - STA. 416+44.96

0 50 100

SCALE: 1" = 100'

LEGEND

- = NEW CONSTRUCTION THIS STAGE
- = 10" FLEXIBLE PAVEMENT REPAIR
- = PAVEMENT OBLITERATED THIS STAGE
- = CONSTRUCTED IN PREVIOUS STAGE
- M = CHANGABLE MESSAGE SIGN
- = ARROW BOARD
- = TRAFFIC FLOW ARROW
- = PLASTIC DRUMS
- = VERTICAL PANELS
- = TRAFFIC SIGNS
- = TYPE III BARRICADE
- = LCTB

STATE OF TEXAS
CHRIS D. KELAREK
83300
LICENSED
PROFESSIONAL ENGINEER

Chris D. Kelarek, P.E. 7/1/2010

SCALE: PLAN - 1":100'

REV. NO.	DATE	DESCRIPTION	BY

ALAMO RMA

RODRIGUEZ TRANSPORTATION GROUP
CONSULTING ENGINEERS

Texas Department of Transportation
© 2010

LOOP 1604
TRAFFIC CONTROL PLAN

PHASE 2, STAGE 1

STA. 401+00 TO STA. 412+00

SHEET 1 OF 22

DGN:	FED. RD. DIV. NO.	STATE	FEDERAL AID PROJECT NO.			HIGHWAY NO.
CHK DGN:	6	TEXAS	STP 2011(210)ES			LP 1604
DWG:	DIST.	COUNTY	CONT. NO.	SECT. NO.	JOB NO.	SHEET NO.
CHK DWG:	SAT	BEXAR	2452	01	050	61

Plotted on: 7/1/2010 3:46:43 PM
Design Filename: p:\8380407\div\planSht's\top\PHASE 2\T40004TCP2102.dgn

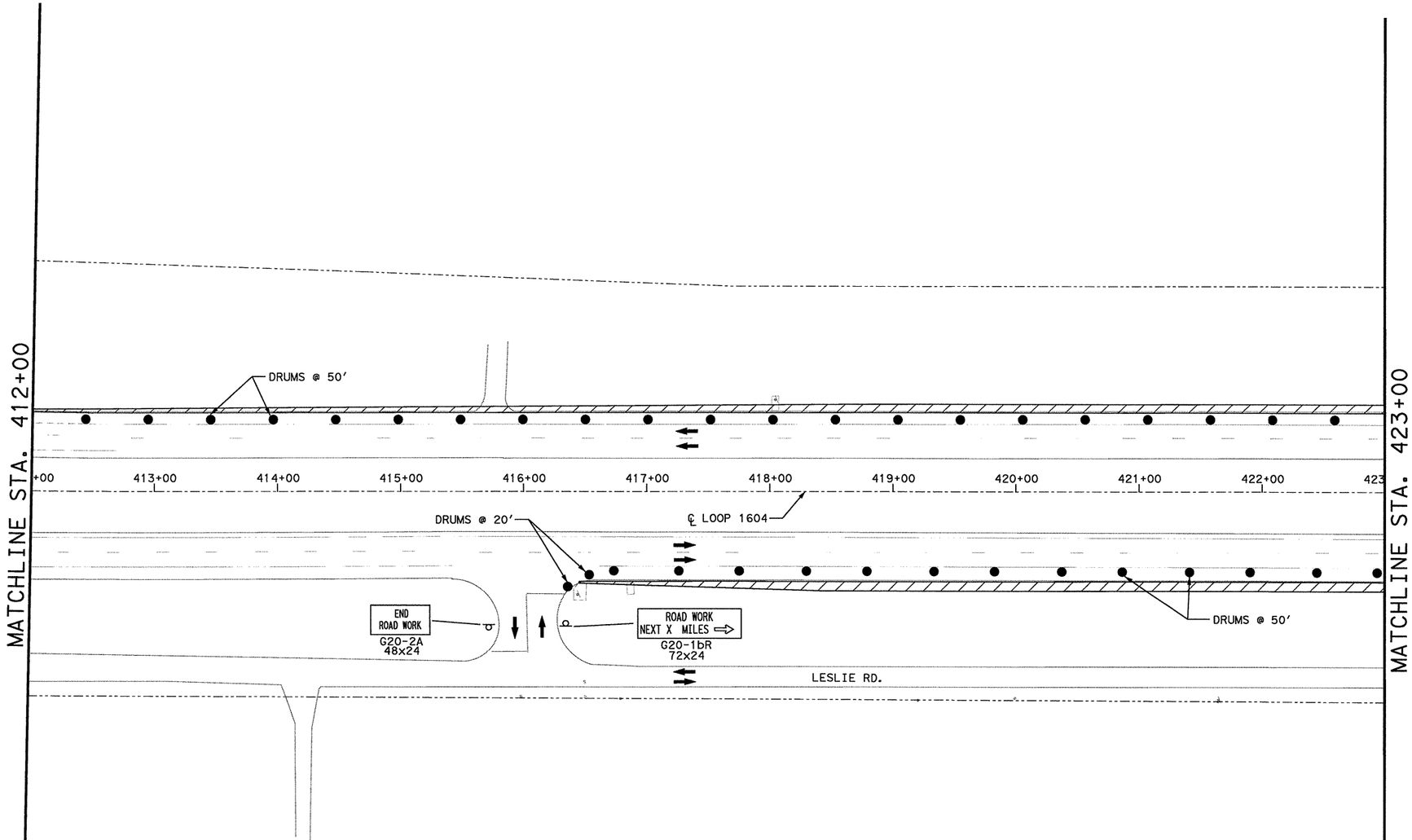

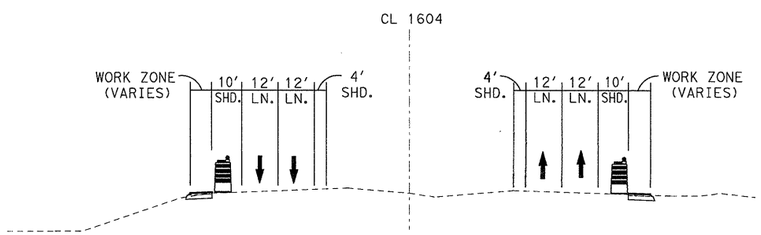

TYPICAL SECTION

STA. 416+44.96 - STA. 423+00.00

0 50 100

SCALE: 1" = 100'

LEGEND

- = NEW CONSTRUCTION THIS STAGE
- = 10" FLEXIBLE PAVEMENT REPAIR
- = PAVEMENT OBLITERATED THIS STAGE
- = CONSTRUCTED IN PREVIOUS STAGE
- M = CHANGABLE MESSAGE SIGN
- = ARROW BOARD
- = TRAFFIC FLOW ARROW
- = PLASTIC DRUMS
- = VERTICAL PANELS
- = TRAFFIC SIGNS
- = TYPE III BARRICADE
- = LCTB

STATE OF TEXAS
CHRIS D. KELAREK
83300
LICENSED PROFESSIONAL ENGINEER

Chris D. Kelarek, P.E. 7/1/2010

SCALE: PLAN - 1":100'

REV. NO.	DATE	DESCRIPTION	BY

ALAMO RMA

RODRIGUEZ TRANSPORTATION GROUP
CONSULTING ENGINEERS

Texas Department of Transportation
© 2010

LOOP 1604
TRAFFIC CONTROL PLAN

PHASE 2, STAGE 1

STA. 412+00 TO STA. 423+00

SHEET 2 OF 22

DGN:	FED. RD. DIV. NO.	STATE	FEDERAL AID PROJECT NO.			HIGHWAY NO.
CHK DGN:	6	TEXAS	STP 2011(210)ES			LP 1604
DWG:	DIST.	COUNTY	CONT. NO.	SECT. NO.	JOB NO.	SHEET NO.
CHK DWG:	SAT	BEXAR	2452	01	050	62

Plotted on: 7/1/2010 3:46:46 PM

Design Filename: p:\8380407\div\planShts\tcp\PHASE 2\T40004TCP2103.dgn

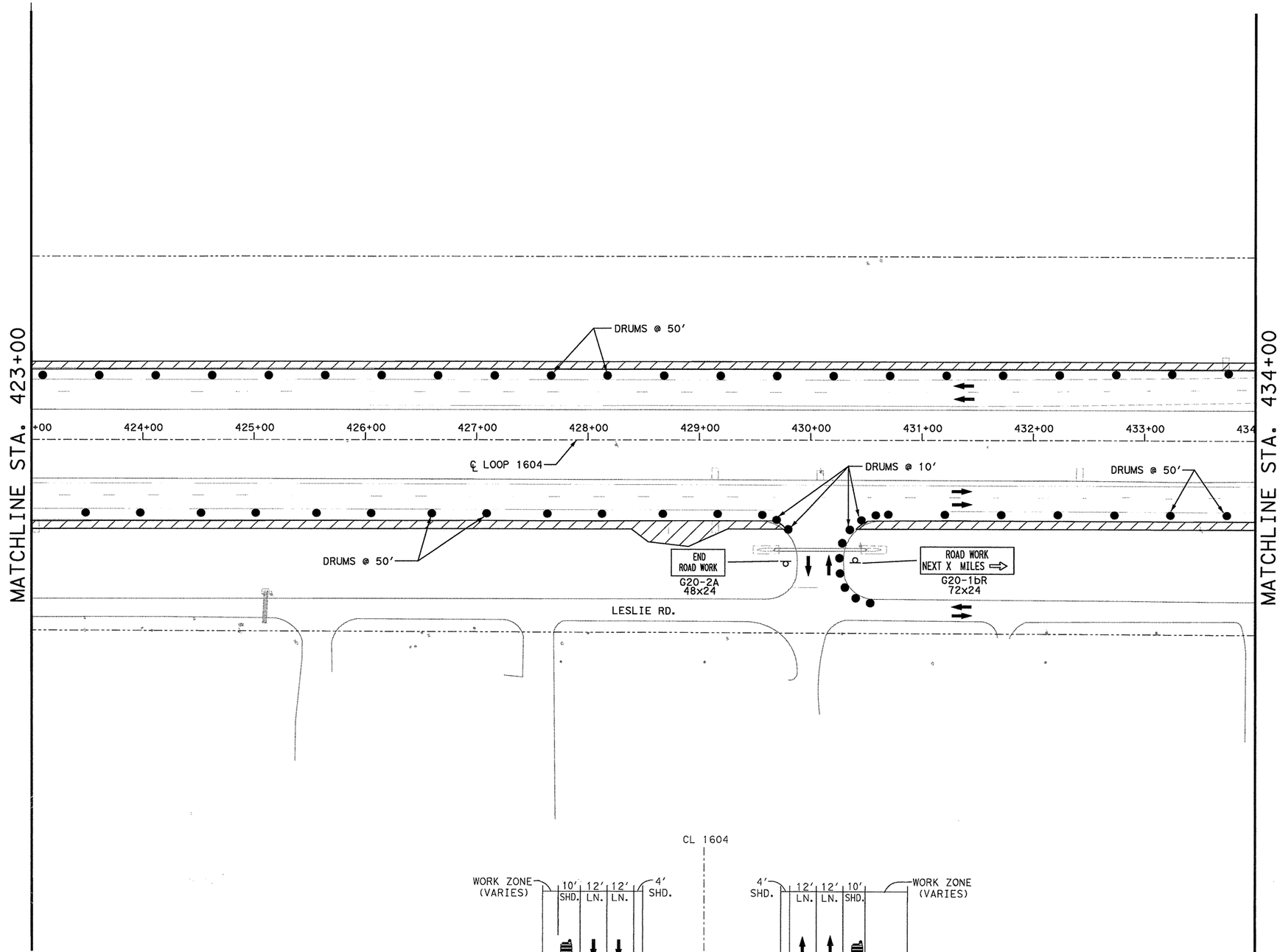

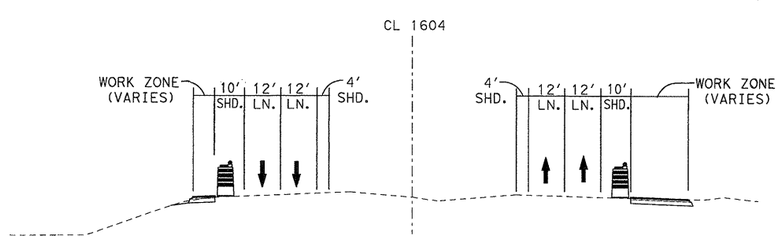

TYPICAL SECTION
STA. 423+00.00 - 435+12.57

0 50 100
SCALE: 1" = 100′

LEGEND

- = NEW CONSTRUCTION THIS STAGE
- = 10" FLEXIBLE PAVEMENT REPAIR
- = PAVEMENT OBLITERATED THIS STAGE
- = CONSTRUCTED IN PREVIOUS STAGE
- M = CHANGABLE MESSAGE SIGN
- = ARROW BOARD
- = TRAFFIC FLOW ARROW
- = PLASTIC DRUMS
- = VERTICAL PANELS
- = TRAFFIC SIGNS
- = TYPE III BARRICADE
- = LCTB

STATE OF TEXAS
CHRIS D. KELAREK
83300
LICENSED
PROFESSIONAL ENGINEER
Chris D. Kelarek, P.E. 7/1/2010

SCALE: PLAN - 1":100′

REV. NO.	DATE	DESCRIPTION	BY

ALAMO RMA

RODRIGUEZ TRANSPORTATION GROUP
CONSULTING ENGINEERS

Texas Department of Transportation
© 2010

LOOP 1604
TRAFFIC CONTROL PLAN

PHASE 2, STAGE 1

STA. 423+00 TO STA. 434+00

SHEET 3 OF 22

DGN:	FED. RD. DIV. NO.	STATE	FEDERAL AID PROJECT NO.			HIGHWAY NO.
CK DGN:	6	TEXAS	STP 2011(210)ES			LP 1604
DWG:	DIST.	COUNTY	CONT. NO.	SECT. NO.	JOB NO.	SHEET NO.
CK DWG:	SAT	BEXAR	2452	01	050	63

Plotted on: 7/1/2010 3:46:49 PM
Design Filename: p:\8380407\dlv\planSht's\tcp\PHASE 2\7400004TCP2104.dgn

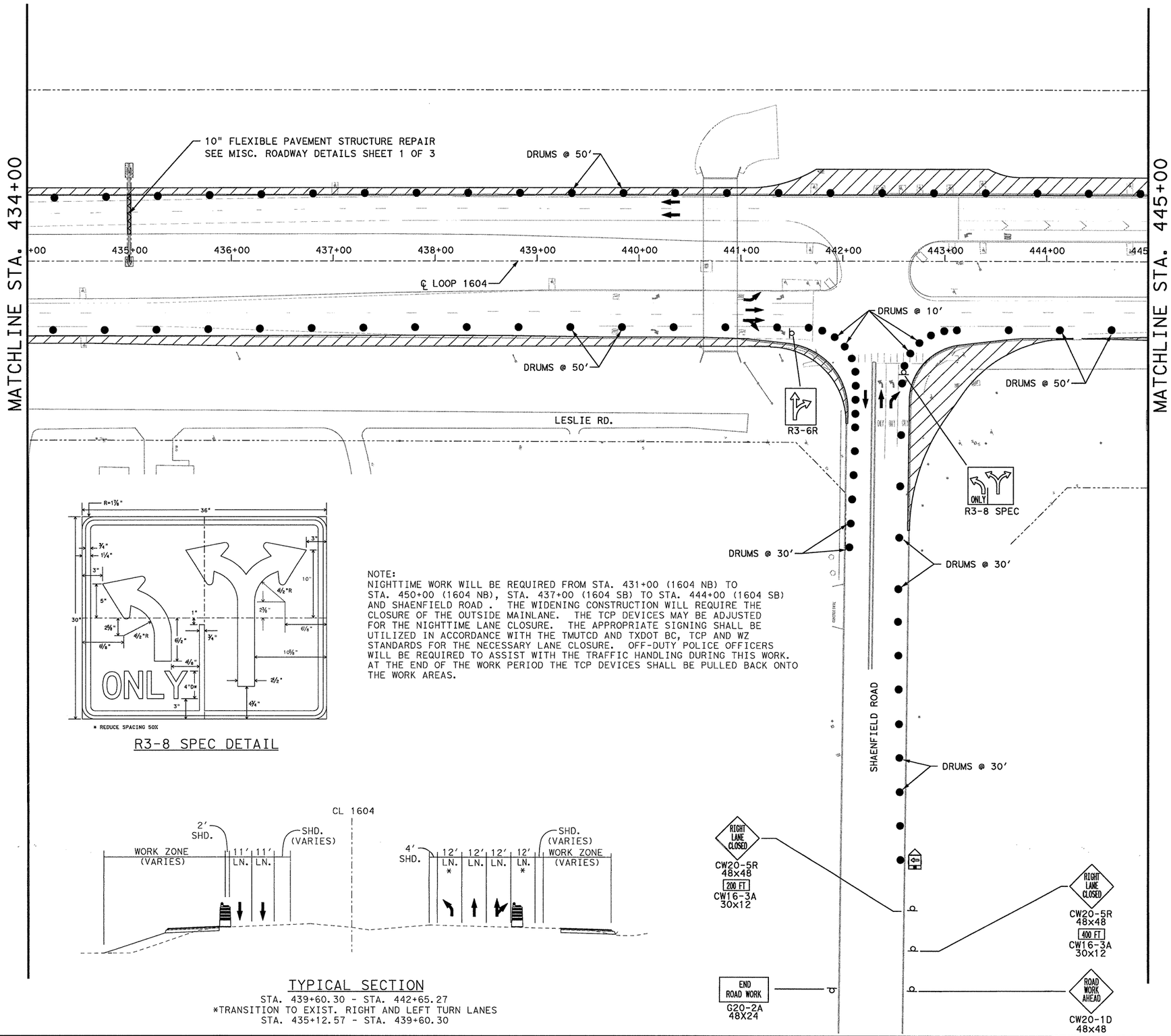

R3-8 SPEC DETAIL

NOTE:
NIGHTTIME WORK WILL BE REQUIRED FROM STA. 431+00 (1604 NB) TO STA. 450+00 (1604 NB), STA. 437+00 (1604 SB) TO STA. 444+00 (1604 SB) AND SHAENFIELD ROAD . THE WIDENING CONSTRUCTION WILL REQUIRE THE CLOSURE OF THE OUTSIDE MAINLANE. THE TCP DEVICES MAY BE ADJUSTED FOR THE NIGHTTIME LANE CLOSURE. THE APPROPRIATE SIGNING SHALL BE UTILIZED IN ACCORDANCE WITH THE TMUTCD AND TXDOT BC, TCP AND WZ STANDARDS FOR THE NECESSARY LANE CLOSURE. OFF-DUTY POLICE OFFICERS WILL BE REQUIRED TO ASSIST WITH THE TRAFFIC HANDLING DURING THIS WORK. AT THE END OF THE WORK PERIOD THE TCP DEVICES SHALL BE PULLED BACK ONTO THE WORK AREAS.

TYPICAL SECTION
STA. 439+60.30 - STA. 442+65.27
*TRANSITION TO EXIST. RIGHT AND LEFT TURN LANES
STA. 435+12.57 - STA. 439+60.30

0 50 100
SCALE: 1" = 100'

LEGEND

- = NEW CONSTRUCTION THIS STAGE
- = 10" FLEXIBLE PAVEMENT REPAIR
- = PAVEMENT OBLITERATED THIS STAGE
- = CONSTRUCTED IN PREVIOUS STAGE
- M = CHANGABLE MESSAGE SIGN
- = ARROW BOARD
- = TRAFFIC FLOW ARROW
- = PLASTIC DRUMS
- = VERTICAL PANELS
- þ = TRAFFIC SIGNS
- = TYPE III BARRICADE
- = LCTB

STATE OF TEXAS
CHRIS D. KELAREK
83300
LICENSED PROFESSIONAL ENGINEER
Chris D. Kelarek, P.E. 7/1/2010

SCALE: PLAN - 1":100'

REV. NO.	DATE	DESCRIPTION	BY

ALAMO RMA

RODRIGUEZ TRANSPORTATION GROUP
CONSULTING ENGINEERS

Texas Department of Transportation
© 2010

LOOP 1604
TRAFFIC CONTROL PLAN

PHASE 2, STAGE 1

STA. 434+00 TO STA. 445+00

SHEET 4 OF 22

DGN:	FED. RD. DIV. NO.	STATE	FEDERAL AID PROJECT NO.			HIGHWAY NO.
CKK DGN:	6	TEXAS	STP 2011(210)ES			LP 1604
DWG:	DIST.	COUNTY	CONT. NO.	SECT. NO.	JOB NO.	SHEET NO.
CKK DWG:	SAT	BEXAR	2452	01	050	64

Plotted on: 7/1/2010 3:46:52 PM
Design Filename: p:\8380407\dlv\plansht\stp\PHASE 2\740004TCP2105.dgn

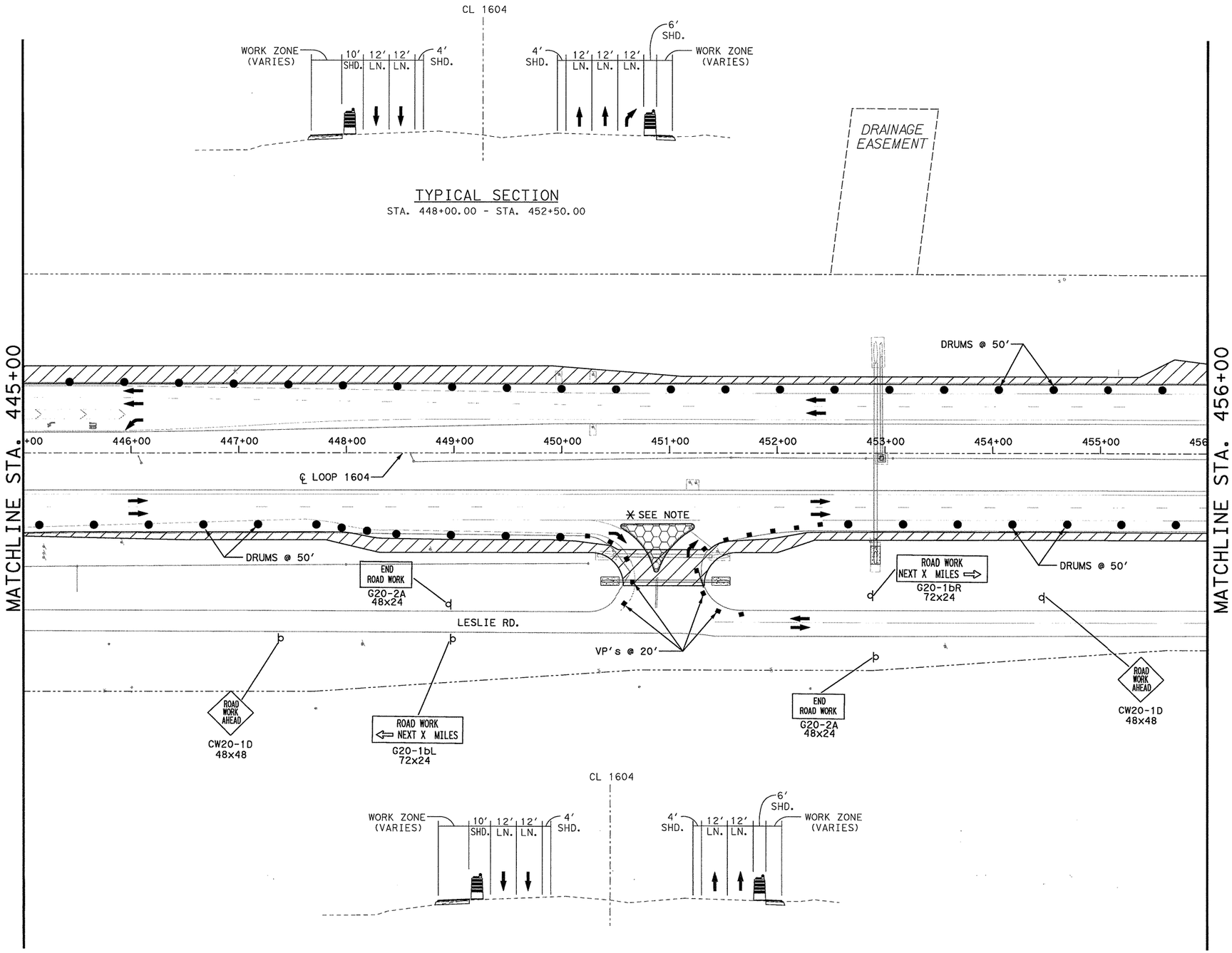

TYPICAL SECTION
STA. 448+00.00 - STA. 452+50.00

TYPICAL SECTION
STA. 442+65.27 - STA. 448+00.00
STA. 452+50.00 - STA. 468+83.26 (LT)
STA. 471+43.24 (RT)

✳ NOTE:

Note: The Loop 1604 access to Leslie Road at Station 450+90.00 (1604), RT. shall be constructed during the night work operation. When work commences at this location the contractor shall have the necessary material and resources to complete the Leslie Road access as soon as possible.

0 50 100
SCALE: 1" = 100′

LEGEND

- = NEW CONSTRUCTION THIS STAGE
- = 10" FLEXIBLE PAVEMENT REPAIR
- = PAVEMENT OBLITERATED THIS STAGE
- = CONSTRUCTED IN PREVIOUS STAGE
- M = CHANGABLE MESSAGE SIGN
- = ARROW BOARD
- = TRAFFIC FLOW ARROW
- = PLASTIC DRUMS
- = VERTICAL PANELS
- = TRAFFIC SIGNS
- = TYPE III BARRICADE
- = LCTB

STATE OF TEXAS
CHRIS D. KELAREK
83300
LICENSED
PROFESSIONAL ENGINEER

Chris D. Kelarek, P.E. 7/1/2010

SCALE: PLAN - 1":100′

REV. NO.	DATE	DESCRIPTION	BY

ALAMO RMA

RODRIGUEZ TRANSPORTATION GROUP
CONSULTING ENGINEERS

Texas Department of Transportation
© 2010

LOOP 1604
TRAFFIC CONTROL PLAN

PHASE 2, STAGE 1

STA. 445+00 TO STA. 456+00

SHEET 5 OF 22

DGN:	FED. RD. DIV. NO.	STATE	FEDERAL AID PROJECT NO.			HIGHWAY NO.
CHK DGN:	6	TEXAS	STP 2011(210)ES			LP 1604
DWG:	DIST.	COUNTY	CONT. NO.	SECT. NO.	JOB NO.	SHEET NO.
CHK DWG:	SAT	BEXAR	2452	01	050	65

Plotted on: 7/1/2010 3:46:55 PM
Design Filename: p:\8380407\dlvplanSht$vtop\PHASE 2\740004TCP2106.dgn

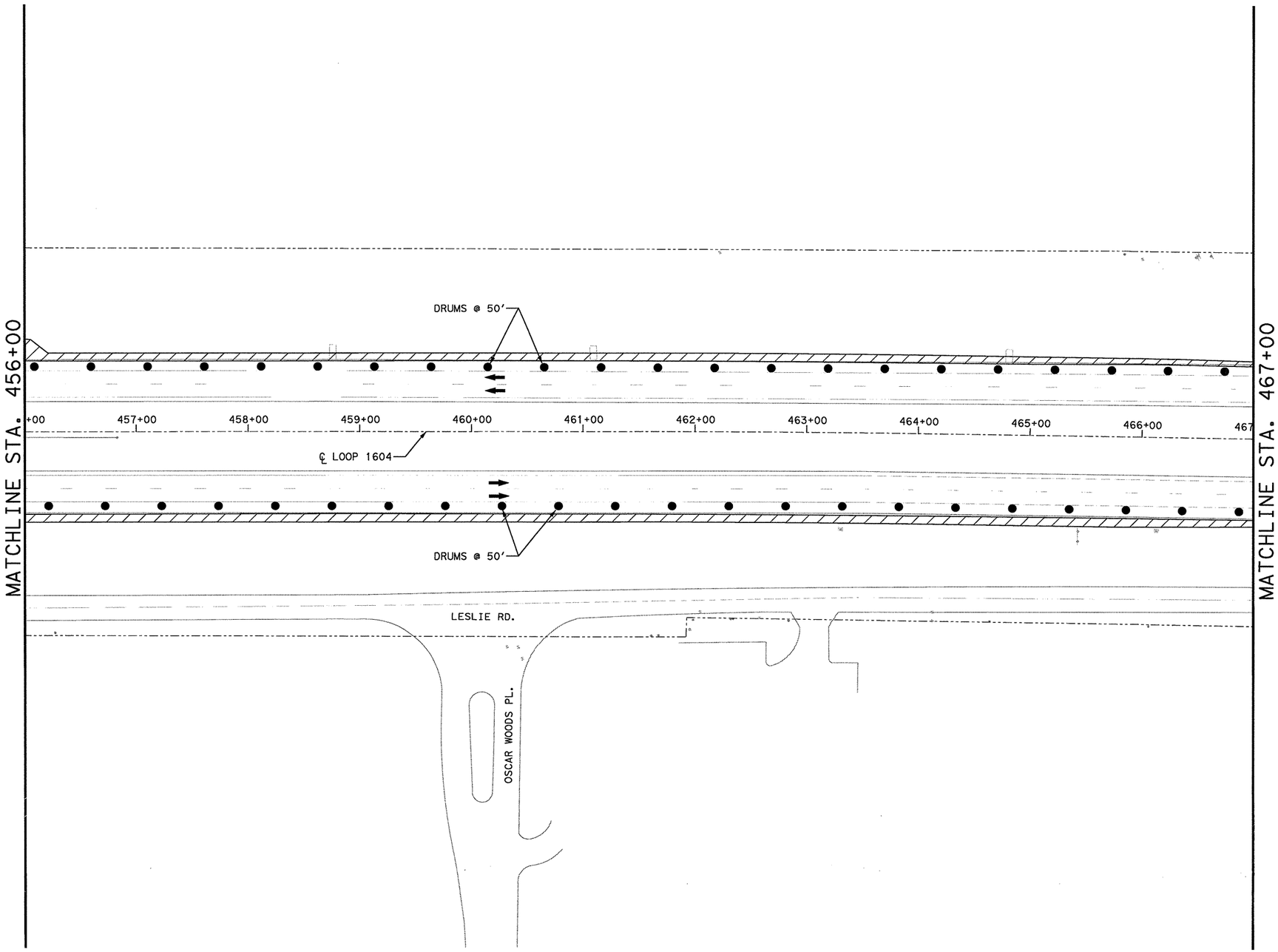

0 50 100
SCALE: 1" = 100'

LEGEND

- = NEW CONSTRUCTION THIS STAGE
- = 10" FLEXIBLE PAVEMENT REPAIR
- = PAVEMENT OBLITERATED THIS STAGE
- = CONSTRUCTED IN PREVIOUS STAGE
- M = CHANGABLE MESSAGE SIGN
- = ARROW BOARD
- = TRAFFIC FLOW ARROW
- = PLASTIC DRUMS
- = VERTICAL PANELS
- = TRAFFIC SIGNS
- = TYPE III BARRICADE
- = LCTB

STATE OF TEXAS
CHRIS D. KELAREK
83300
PROFESSIONAL ENGINEER
Chris D. Kelarek, P.E. 7/1/2010

SCALE: PLAN - 1":100'

REV. NO.	DATE	DESCRIPTION	BY

ALAMO RMA

RODRIGUEZ TRANSPORTATION GROUP
CONSULTING ENGINEERS

Texas Department of Transportation
© 2010

LOOP 1604
TRAFFIC CONTROL PLAN

PHASE 2, STAGE 1

STA. 456+00 TO STA. 467+00

SHEET 6 OF 22

DGN:	FED. RD. DIV. NO.	STATE	FEDERAL AID PROJECT NO.			HIGHWAY NO.
CHK DGN:	6	TEXAS	STP 2011(210)ES			LP 1604
DWG:	DIST.	COUNTY	CONT. NO.	SECT. NO.	JOB NO.	SHEET NO.
CHK DWG:	SAT	BEXAR	2452	01	050	66

Plotted on: 7/1/2010 3:46:57 PM

Design Filename: p:\8380407\dlv\planSht\top\PHASE 2\7400041CP2107.dgn

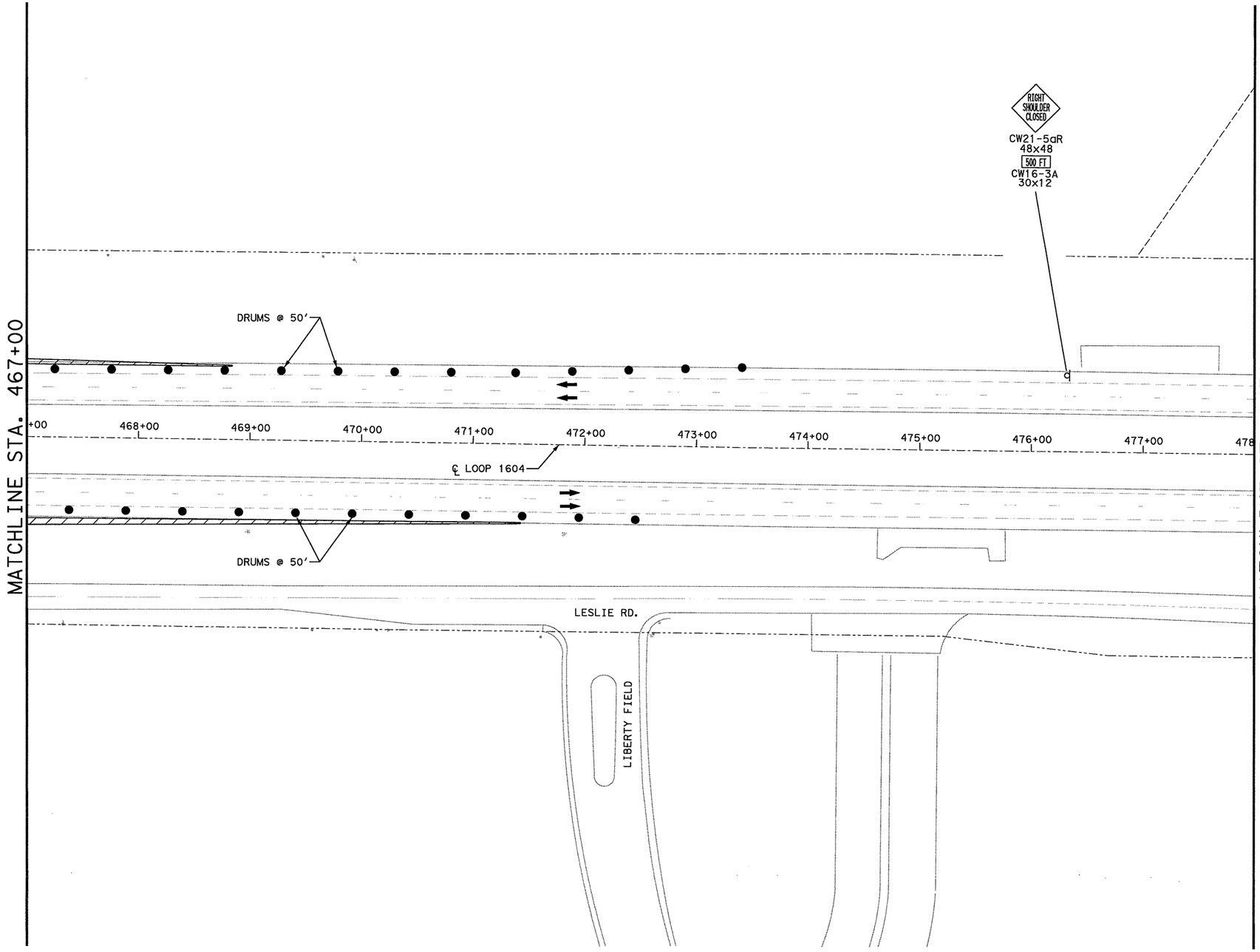

0 50 100

SCALE: 1" = 100'

LEGEND

- = NEW CONSTRUCTION THIS STAGE
- = 10" FLEXIBLE PAVEMENT REPAIR
- = PAVEMENT OBLITERATED THIS STAGE
- = CONSTRUCTED IN PREVIOUS STAGE
- M = CHANGABLE MESSAGE SIGN
- = ARROW BOARD
- = TRAFFIC FLOW ARROW
- = PLASTIC DRUMS
- = VERTICAL PANELS
- = TRAFFIC SIGNS
- = TYPE III BARRICADE
- = LCTB

STATE OF TEXAS
CHRIS D. KELAREK
83300
LICENSED PROFESSIONAL ENGINEER

Chris D. Kelarek, P.E. 7/1/2010

SCALE: PLAN - 1":100'

REV. NO.	DATE	DESCRIPTION	BY

ALAMO RMA

RODRIGUEZ TRANSPORTATION GROUP
CONSULTING ENGINEERS

Texas Department of Transportation
© 2010

LOOP 1604

TRAFFIC CONTROL PLAN

PHASE 2, STAGE 1

STA. 467+00 TO STA. 478+00

SHEET 7 OF 22

DGN:	FED. RD. DIV. NO.	STATE	FEDERAL AID PROJECT NO.			HIGHWAY NO.
CHK DGN:	6	TEXAS	STP 2011(210)ES			LP 1604
DWG:	DIST.	COUNTY	CONT. NO.	SECT. NO.	JOB NO.	SHEET NO.
CHK DWG:	SAT	BEXAR	2452	01	050	67

Plotted on: 7/1/2010 3:47:00 PM
Design Filename: p:\8380407\dlv\planSht s\top\PHASE 2\740004TCP2108.dgn

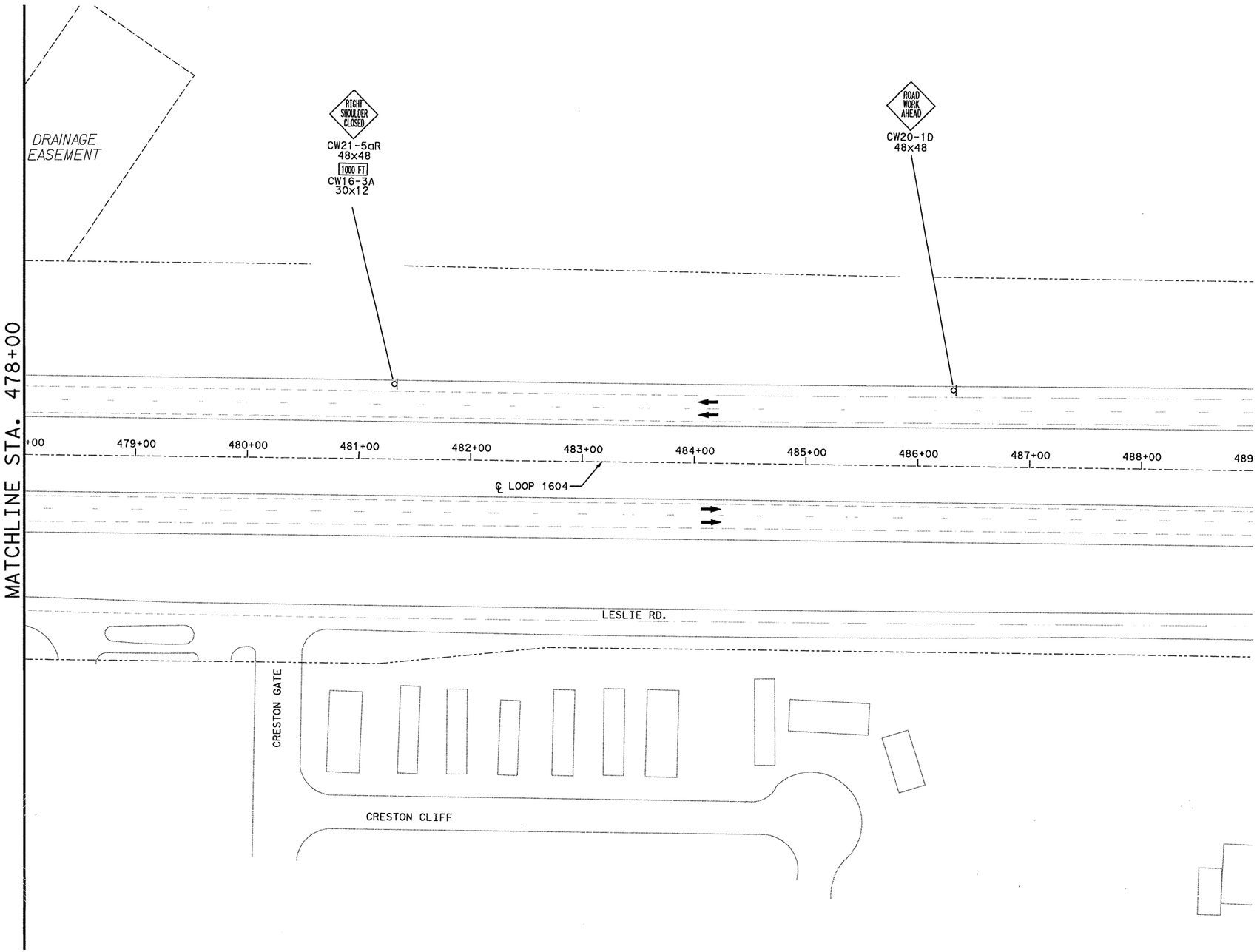

0 50 100
SCALE: 1" = 100'

LEGEND

- = NEW CONSTRUCTION THIS STAGE
- = 10" FLEXIBLE PAVEMENT REPAIR
- = PAVEMENT OBLITERATED THIS STAGE
- = CONSTRUCTED IN PREVIOUS STAGE
- M = CHANGABLE MESSAGE SIGN
- = ARROW BOARD
- = TRAFFIC FLOW ARROW
- = PLASTIC DRUMS
- = VERTICAL PANELS
- = TRAFFIC SIGNS
- = TYPE III BARRICADE
- = LCTB

STATE OF TEXAS
CHRIS D. KELAREK
83300
LICENSED PROFESSIONAL ENGINEER
Chris D. Kelarek, P.E. 7/1/2010

SCALE: PLAN - 1":100'

REV. NO.	DATE	DESCRIPTION	BY

ALAMO RMA

RODRIGUEZ TRANSPORTATION GROUP
CONSULTING ENGINEERS

Texas Department of Transportation
© 2010

LOOP 1604
TRAFFIC CONTROL PLAN

PHASE 2, STAGE 1

STA. 478+00 TO STA. 489+00

SHEET 8 OF 22

DGN:	FED. RD. DIV. NO.	STATE	FEDERAL AID PROJECT NO.			HIGHWAY NO.
CHK DGN:	6	TEXAS	STP 2011(210)ES			LP 1604
DWG:	DIST.	COUNTY	CONT. NO.	SECT. NO.	JOB NO.	SHEET NO.
CHK DWG:	SAT	BEXAR	2452	01	050	68

Plotted on: 7/1/2010 3:47:03 PM

Design Filename: p:\8380407\dlv\planSht's\tcp\PHASE 2\T40004TCP22201.dgn

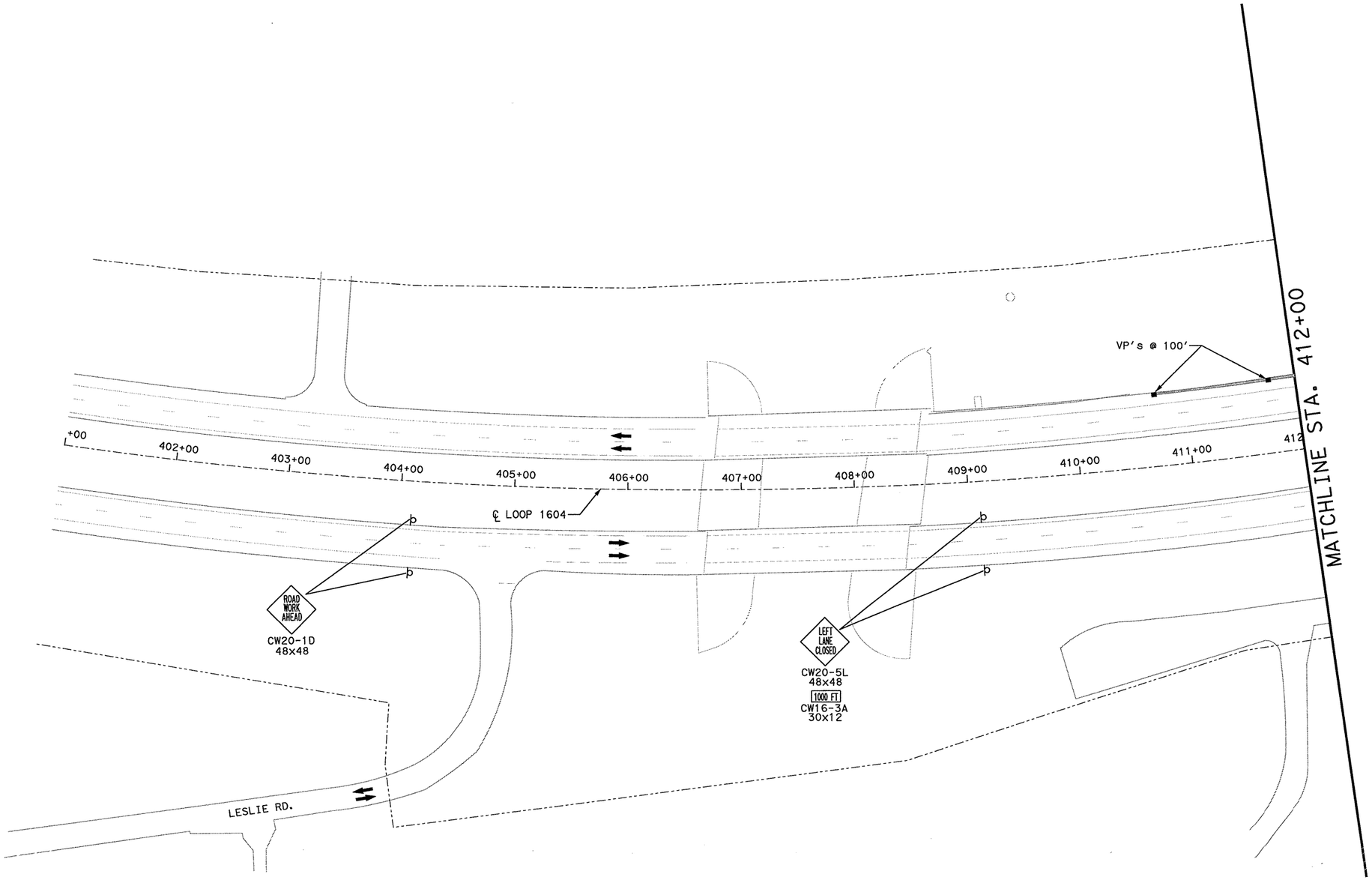

0 50 100

SCALE: 1" = 100'

LEGEND

- = NEW CONSTRUCTION THIS STAGE
- = 10" FLEXIBLE PAVEMENT REPAIR
- = PAVEMENT OBLITERATED THIS STAGE
- = CONSTRUCTED IN PREVIOUS STAGE
- M = CHANGABLE MESSAGE SIGN
- = ARROW BOARD
- = TRAFFIC FLOW ARROW
- = PLASTIC DRUMS
- = VERTICAL PANELS
- þ = TRAFFIC SIGNS
- I = TYPE III BARRICADE
- = LCTB

STATE OF TEXAS
CHRIS D. KELAREK
83300
LICENSED
PROFESSIONAL ENGINEER

Chris D. Kelarek, P.E. 7/1/2010

SCALE: PLAN - 1":100'

REV. NO.	DATE	DESCRIPTION	BY

ALAMO RMA

RODRIGUEZ TRANSPORTATION GROUP
CONSULTING ENGINEERS

Texas Department of Transportation
© 2010

LOOP 1604
TRAFFIC CONTROL PLAN

PHASE 2, STAGE 2

STA. 401+00 TO STA. 412+00

SHEET 9 OF 22

DGN:	FED. RD. DIV. NO.	STATE	FEDERAL AID PROJECT NO.			HIGHWAY NO.
CK: DSN:	6	TEXAS	STP 2011(210)ES			LP 1604
DWG:	DIST.	COUNTY	CONT. NO.	SECT. NO.	JOB NO.	SHEET NO.
CK: DWG:	SAT	BEXAR	2452	01	050	69

Plotted on: 7/1/2010 3:47:06 PM
Design Filename: p:\8380407\div\planSht\vttop\PHASE 2\740004TCP2202.dgn

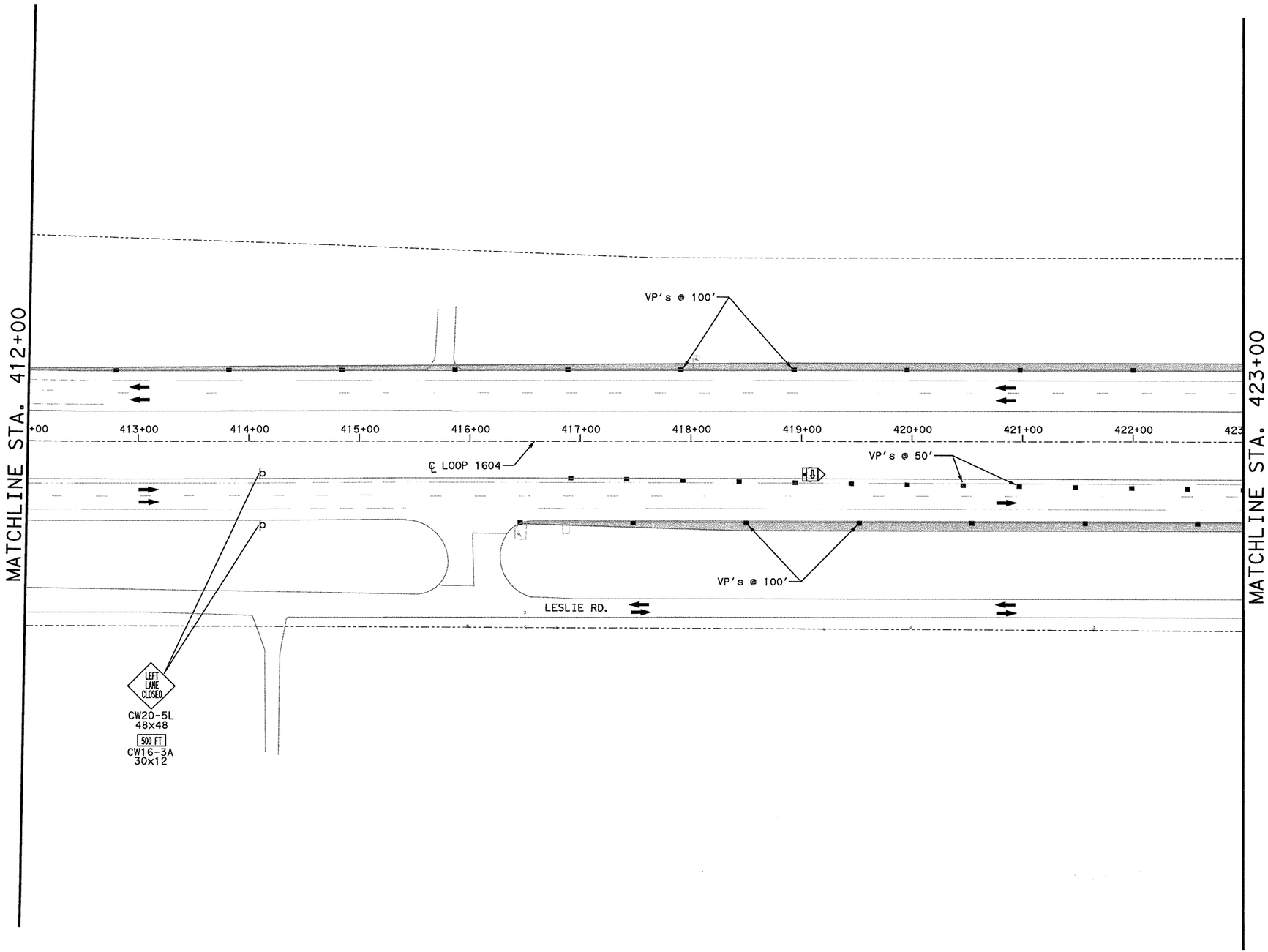

0 50 100
SCALE: 1" = 100'

LEGEND

- = NEW CONSTRUCTION THIS STAGE
- = 10" FLEXIBLE PAVEMENT REPAIR
- = PAVEMENT OBLITERATED THIS STAGE
- = CONSTRUCTED IN PREVIOUS STAGE
- M = CHANGABLE MESSAGE SIGN
- = ARROW BOARD
- = TRAFFIC FLOW ARROW
- = PLASTIC DRUMS
- = VERTICAL PANELS
- þ = TRAFFIC SIGNS
- I = TYPE III BARRICADE
- = LCTB

STATE OF TEXAS
CHRIS D. KELAREK
83300
LICENSED PROFESSIONAL ENGINEER
Chris D. Kelarek, P.E. 7/1/2010

SCALE: PLAN - 1":100'

REV. NO.	DATE	DESCRIPTION	BY

ALAMO RMA

RODRIGUEZ TRANSPORTATION GROUP
CONSULTING ENGINEERS

Texas Department of Transportation
© 2010

LOOP 1604
TRAFFIC CONTROL PLAN
PHASE 2, STAGE 2
STA. 412+00 TO STA. 423+00

SHEET 10 OF 22

DGN:	FED. RD. DIV. NO.	STATE	FEDERAL AID PROJECT NO.			HIGHWAY NO.
CAK DGN:	6	TEXAS	STP 2011(210)ES			LP 1604
DWG:	DIST.	COUNTY	CONT. NO.	SECT. NO.	JOB NO.	SHEET NO.
CAK DWG:	SAT	BEXAR	2452	01	050	70

Plotted on: 7/1/2010 3:47:09 PM
Design Filename: p:\838040T\div\planSht's\top\PHASE 2\740004TCP2203.dgn

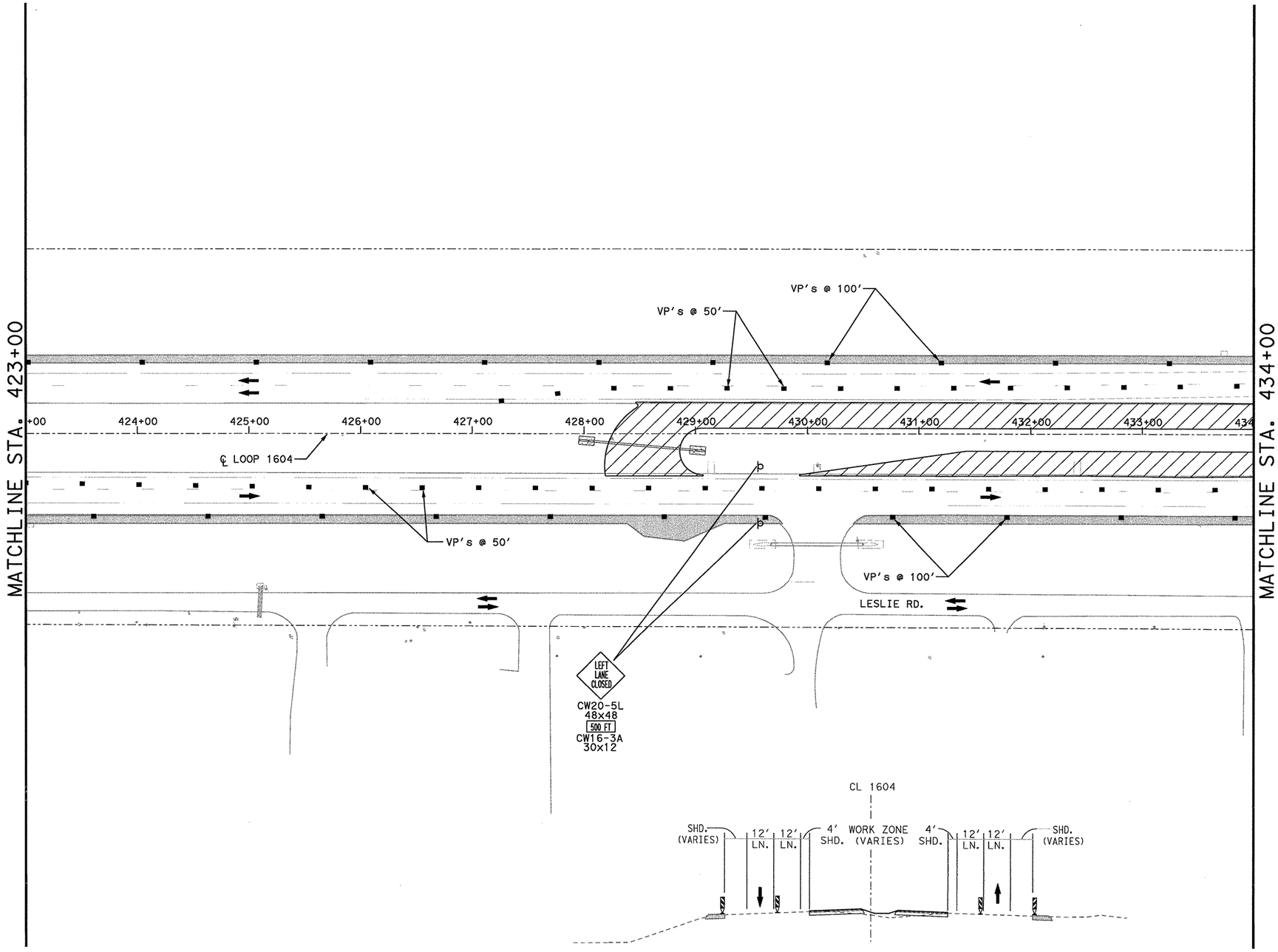

TYPICAL SECTION

STA. 428+19.00 - STA. 440+89.52

0 50 100

SCALE: 1" = 100'

LEGEND

- = NEW CONSTRUCTION THIS STAGE
- = 10" FLEXIBLE PAVEMENT REPAIR
- = PAVEMENT OBLITERATED THIS STAGE
- = CONSTRUCTED IN PREVIOUS STAGE
- M = CHANGABLE MESSAGE SIGN
- = ARROW BOARD
- = TRAFFIC FLOW ARROW
- = PLASTIC DRUMS
- = VERTICAL PANELS
- þ = TRAFFIC SIGNS
- = TYPE III BARRICADE
- = LCTB

STATE OF TEXAS
CHRIS D. KELAREK
83300
PROFESSIONAL ENGINEER

Chris D. Kelarek, P.E. 7/1/2010

SCALE: PLAN - 1":100'

REV. NO.	DATE	DESCRIPTION	BY

ALAMO RMA

RODRIGUEZ TRANSPORTATION GROUP
CONSULTING ENGINEERS

Texas Department of Transportation
© 2010

LOOP 1604
TRAFFIC CONTROL PLAN

PHASE 2, STAGE 2

STA. 423+00 TO STA. 434+00

SHEET 11 OF 22

DGN:	FED. RD. DIV. NO.	STATE	FEDERAL AID PROJECT NO.			HIGHWAY NO.
CAD DGN:	6	TEXAS	STP 2011(210)ES			LP 1604
DWG:	DIST.	COUNTY	CONT. NO.	SECT. NO.	JOB NO.	SHEET NO.
CAD DWG:	SAT	BEXAR	2452	01	050	71

Plotted on: 7/1/2010 3:47:12 PM
Design Filename: p:\8380407\div\planShts\top\PHASE 2\740004TCP2204.dgn

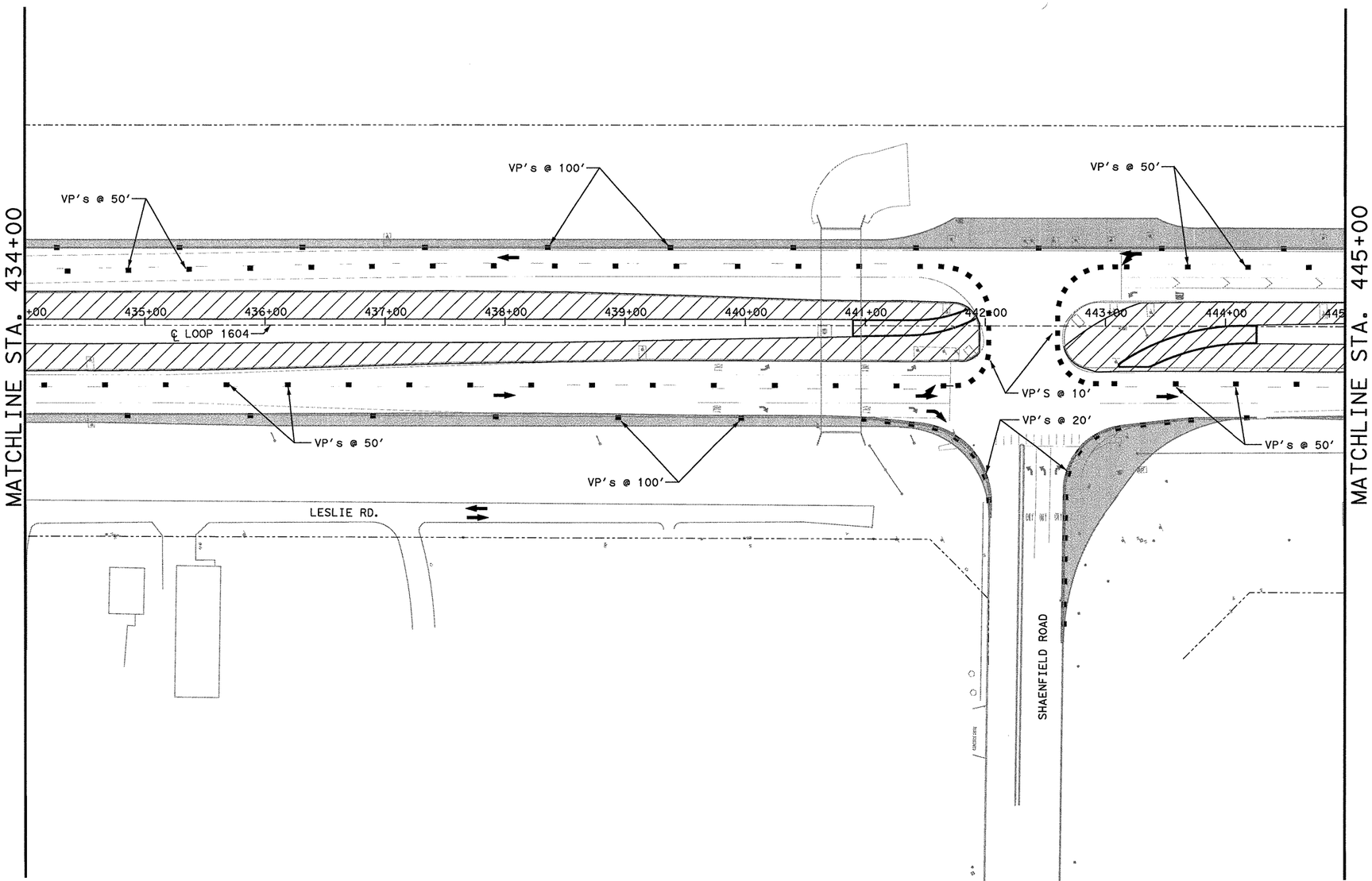

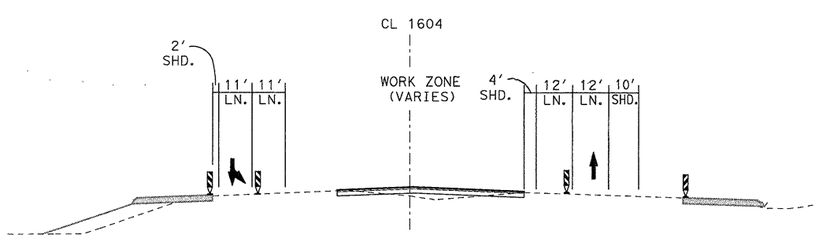

TYPICAL SECTION
STA. 440+89.52 - STA. 444+26.70

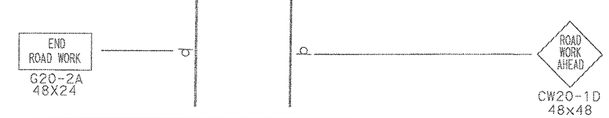

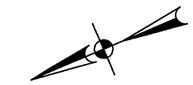

0 50 100
SCALE: 1" = 100'

LEGEND

- = NEW CONSTRUCTION THIS STAGE
- = 10" FLEXIBLE PAVEMENT REPAIR
- = PAVEMENT OBLITERATED THIS STAGE
- = CONSTRUCTED IN PREVIOUS STAGE
- = CHANGABLE MESSAGE SIGN
- = ARROW BOARD
- = TRAFFIC FLOW ARROW
- = PLASTIC DRUMS
- = VERTICAL PANELS
- = TRAFFIC SIGNS
- = TYPE III BARRICADE
- = LCTB

STATE OF TEXAS
CHRIS D. KELAREK
83300
LICENSED PROFESSIONAL ENGINEER

Chris D. Kelarek, P.E. 7/1/2010

SCALE: PLAN - 1":100'

REV. NO.	DATE	DESCRIPTION	BY

ALAMO RMA

RODRIGUEZ TRANSPORTATION GROUP
CONSULTING ENGINEERS

Texas Department of Transportation
© 2010

LOOP 1604
TRAFFIC CONTROL PLAN
PHASE 2, STAGE 2
STA. 434+00 TO STA. 445+00

SHEET 12 OF 22

DGN:	FED. RD. DIV. NO.	STATE	FEDERAL AID PROJECT NO.			HIGHWAY NO.
CHK DGN:	6	TEXAS	STP 2011(210)ES			LP 1604
DWG:	DIST.	COUNTY	CONT. NO.	SECT. NO.	JOB NO.	SHEET NO.
CHK DWG:	SAT	BEXAR	2452	01	050	72

Plotted on: 7/1/2010 3:47:16 PM
Design Filename: p:\8380407\dlv\plan Shts\top\PHASE 2\7400041CP2205.dgn

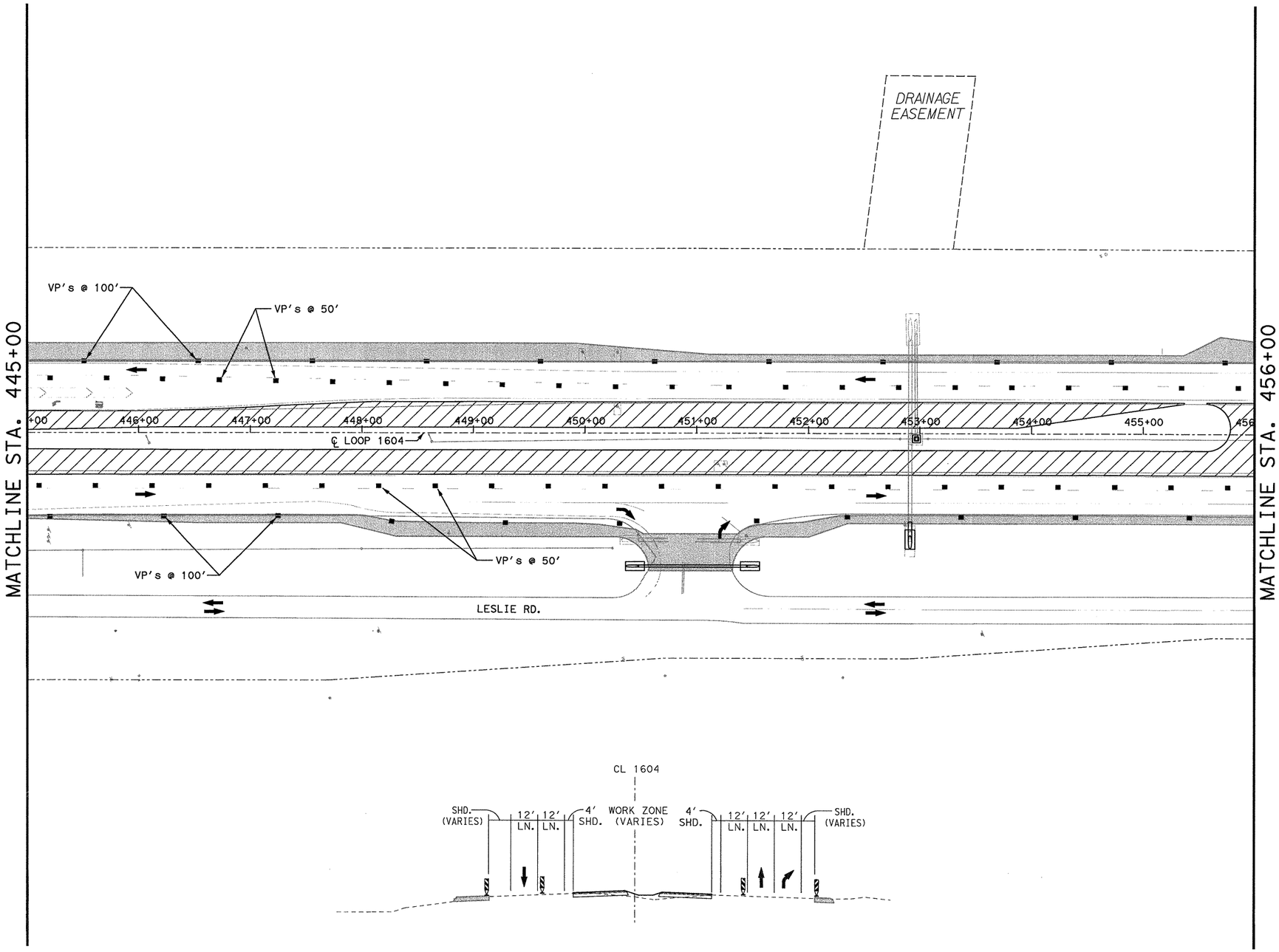

TYPICAL SECTION

STA. 444+26.70 - STA. 456+44.87

0 50 100

SCALE: 1" = 100'

LEGEND

- = NEW CONSTRUCTION THIS STAGE
- = 10" FLEXIBLE PAVEMENT REPAIR
- = PAVEMENT OBLITERATED THIS STAGE
- = CONSTRUCTED IN PREVIOUS STAGE
- M = CHANGABLE MESSAGE SIGN
- = ARROW BOARD
- = TRAFFIC FLOW ARROW
- = PLASTIC DRUMS
- = VERTICAL PANELS
- þ = TRAFFIC SIGNS
- I = TYPE III BARRICADE
- = LCTB

STATE OF TEXAS
CHRIS D. KELAREK
83300
PROFESSIONAL ENGINEER

Chris D. Kelarek, P.E. 7/1/2010

SCALE: PLAN - 1":100'

REV. NO.	DATE	DESCRIPTION	BY

ALAMO RMA

RODRIGUEZ TRANSPORTATION GROUP
CONSULTING ENGINEERS

Texas Department of Transportation
© 2010

LOOP 1604
TRAFFIC CONTROL PLAN

PHASE 2, STAGE 2

STA. 445+00 TO STA. 456+00

SHEET 13 OF 22

DGN:	FED. RD. DIV. NO.	STATE	FEDERAL AID PROJECT NO.			HIGHWAY NO.
CHK DGN:	6	TEXAS	STP 2011(210)ES			LP 1604
DWG:	DIST.	COUNTY	CONT. NO.	SECT. NO.	JOB NO.	SHEET NO.
CHK DWG:	SAT	BEXAR	2452	01	050	73

Plotted on: 7/1/2010 3:47:19 PM
Design Filename: p:\8380407\dlv\plansht s\trap\PHASE 2\7400047CP2206.dgn

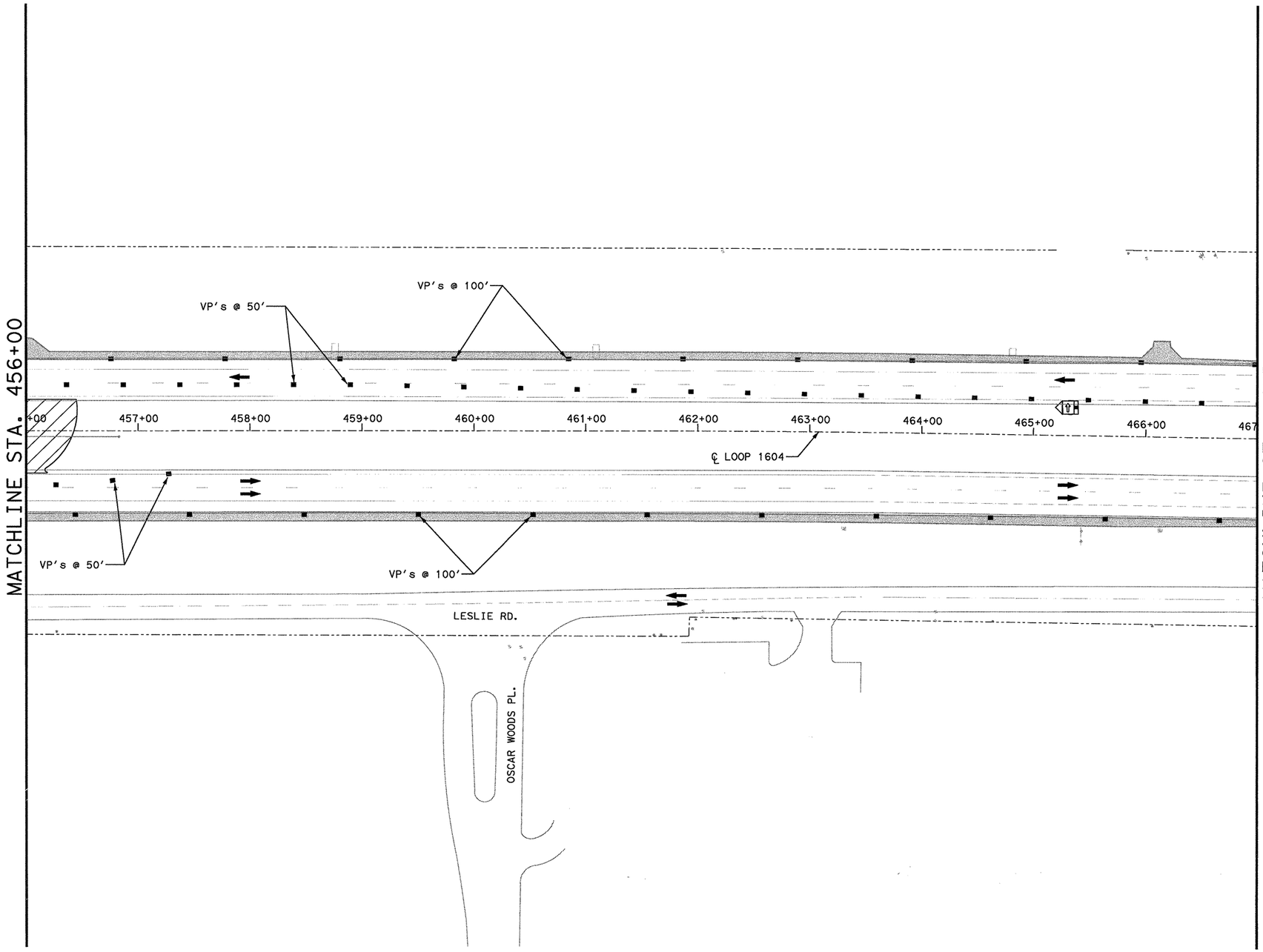

0 50 100
SCALE: 1" = 100'

LEGEND

- = NEW CONSTRUCTION THIS STAGE
- = 10" FLEXIBLE PAVEMENT REPAIR
- = PAVEMENT OBLITERATED THIS STAGE
- = CONSTRUCTED IN PREVIOUS STAGE
- M = CHANGABLE MESSAGE SIGN
- = ARROW BOARD
- = TRAFFIC FLOW ARROW
- = PLASTIC DRUMS
- = VERTICAL PANELS
- = TRAFFIC SIGNS
- = TYPE III BARRICADE
- = LCTB

STATE OF TEXAS
CHRIS D. KELAREK
83300
LICENSED
PROFESSIONAL ENGINEER

Chris D. Kelarek, P.E. 7/1/2010

SCALE: PLAN - 1":100'

REV. NO.	DATE	DESCRIPTION	BY

ALAMO RMA

RODRIGUEZ TRANSPORTATION GROUP
CONSULTING ENGINEERS

Texas Department of Transportation
© 2010

LOOP 1604

TRAFFIC CONTROL PLAN

PHASE 2, STAGE 2

STA. 456+00 TO STA. 467+00

SHEET 14 OF 22

DGN:	FED. RD. DIV. NO.	STATE	FEDERAL AID PROJECT NO.			HIGHWAY NO.
CHK DGN:	6	TEXAS	STP 2011(210)ES			LP 1604
DWG:	DIST.	COUNTY	CONT. NO.	SECT. NO.	JOB NO.	SHEET NO.
CHK DWG:	SAT	BEXAR	2452	01	050	74

Plotted on: 7/1/2010 3:47:21 PM

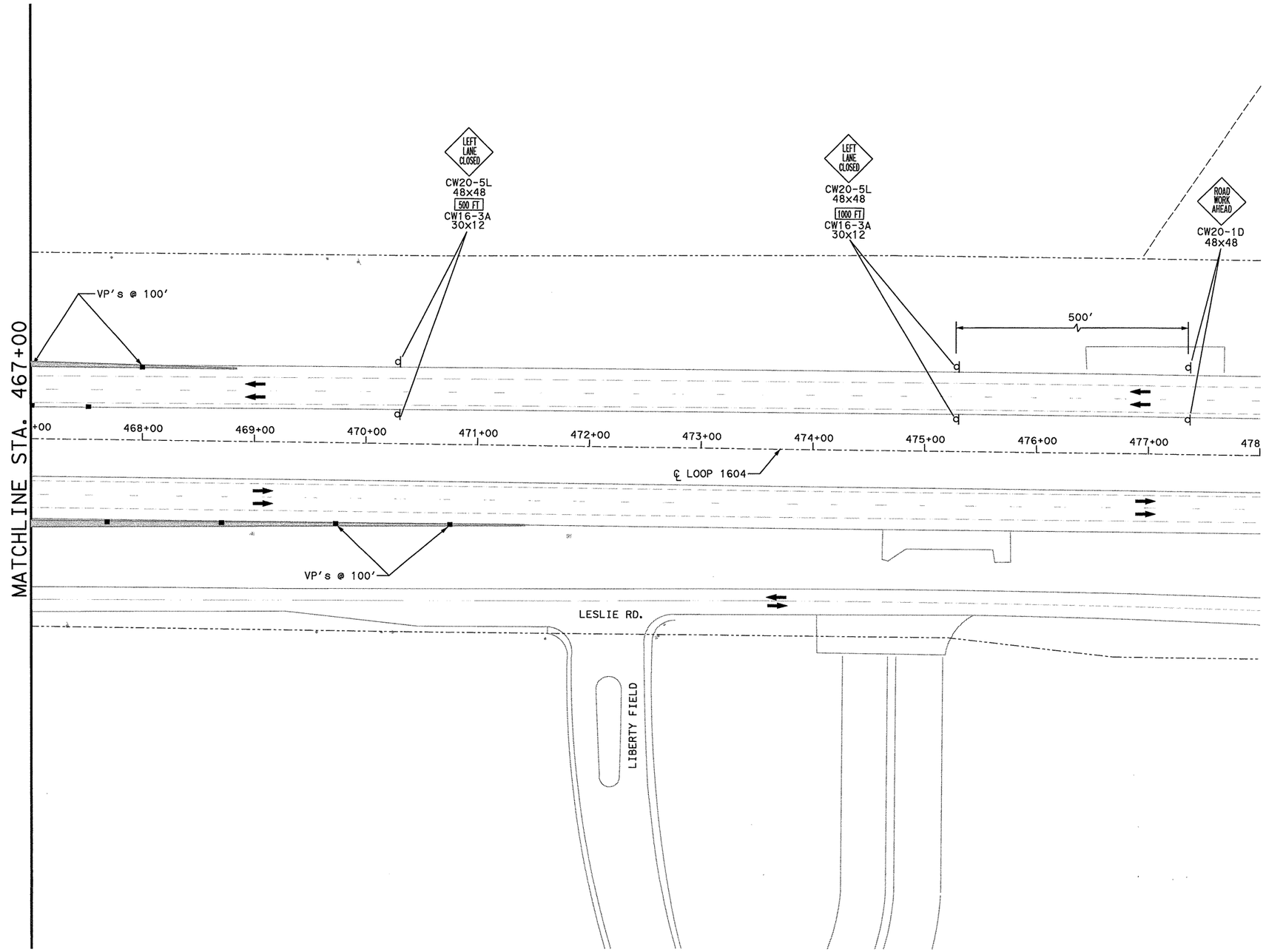

0 50 100

SCALE: 1" = 100'

LEGEND

- = NEW CONSTRUCTION THIS STAGE
- = 10" FLEXIBLE PAVEMENT REPAIR
- = PAVEMENT OBLITERATED THIS STAGE
- = CONSTRUCTED IN PREVIOUS STAGE
- M = CHANGABLE MESSAGE SIGN
- = ARROW BOARD
- = TRAFFIC FLOW ARROW
- = PLASTIC DRUMS
- = VERTICAL PANELS
- þ = TRAFFIC SIGNS
- I = TYPE III BARRICADE
- = LCTB

STATE OF TEXAS
CHRIS D. KELAREK
83300
LICENSED
PROFESSIONAL ENGINEER

Chris D. Kelarek, P.E. 7/1/2010

SCALE: PLAN - 1":100'

REV. NO.	DATE	DESCRIPTION	BY

ALAMO RMA

RODRIGUEZ TRANSPORTATION GROUP
CONSULTING ENGINEERS

Texas Department of Transportation
© 2010

LOOP 1604
TRAFFIC CONTROL PLAN

PHASE 2, STAGE 2

STA. 467+00 TO STA. 478+00

SHEET 15 OF 22

DGN:	FED. RD. DIV. NO.	STATE	FEDERAL AID PROJECT NO.			HIGHWAY NO.
CHK DSN:	6	TEXAS	STP 2011(210)ES			LP 1604
DWG:	DIST.	COUNTY	CONT. NO.	SECT. NO.	JOB NO.	SHEET NO.
CHK DWG:	SAT	BEXAR	2452	01	050	75

Design Filename: p:\8380407\dlv\planSht's\top\PHASE 2\T40004TCP2207.dgn

Plotted on: 7/1/2010 3:47:24 PM
Design Filename: p:\8380407\div\planShts\top\PHASE 2\740004TCP2301.dgn

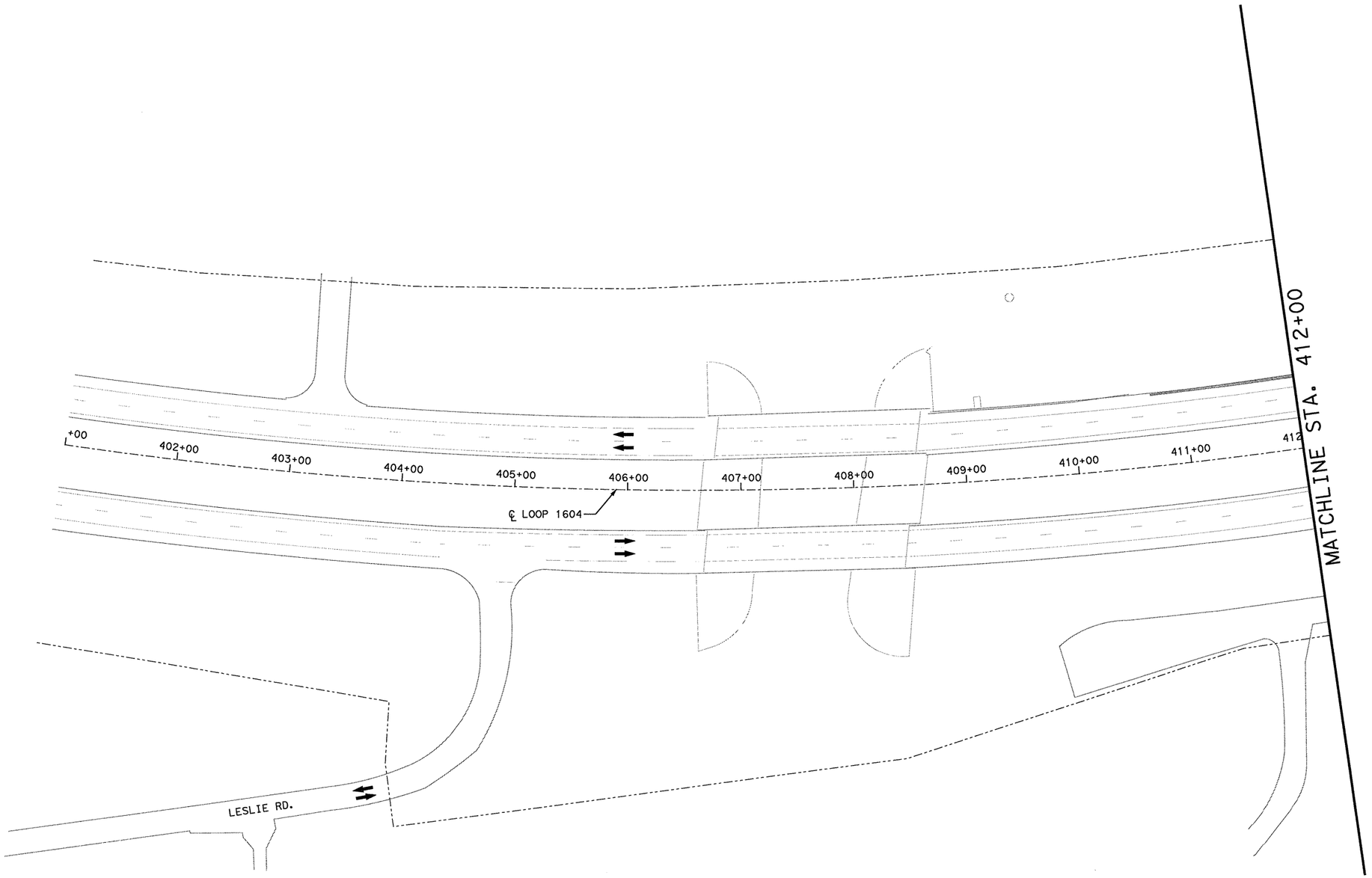

0 50 100
SCALE: 1" = 100'

LEGEND

- = NEW CONSTRUCTION THIS STAGE
- = 10" FLEXIBLE PAVEMENT REPAIR
- = PAVEMENT OBLITERATED THIS STAGE
- = CONSTRUCTED IN PREVIOUS STAGE
- M = CHANGABLE MESSAGE SIGN
- = ARROW BOARD
- = TRAFFIC FLOW ARROW
- = PLASTIC DRUMS
- = VERTICAL PANELS
- = TRAFFIC SIGNS
- = TYPE III BARRICADE
- = LCTB

STATE OF TEXAS
CHRIS D. KELAREK
83300
LICENSED PROFESSIONAL ENGINEER

Chris D. Kelarek, P.E. 7/1/2010

SCALE: PLAN - 1":100'

REV. NO.	DATE	DESCRIPTION	BY

ALAMO RMA

RODRIGUEZ TRANSPORTATION GROUP
CONSULTING ENGINEERS

Texas Department of Transportation
© 2010

LOOP 1604
TRAFFIC CONTROL PLAN

PHASE 2, STAGE 3

STA. 401+00 TO STA. 412+00

SHEET 16 OF 22

DGN:	FED. RD. DIV. NO.	STATE	FEDERAL AID PROJECT NO.			HIGHWAY NO.
CHK DGN:	6	TEXAS	STP 2011(210)ES			LP 1604
DWG:	DIST.	COUNTY	CONT. NO.	SECT. NO.	JOB NO.	SHEET NO.
CHK DWG:	SAT	BEXAR	2452	01	050	76

Plotted on: 7/1/2010 3:47:28 PM

Design Filename: p:\8380407\div\planShts\top\PHASE 2\T40004TCP2302.dgn

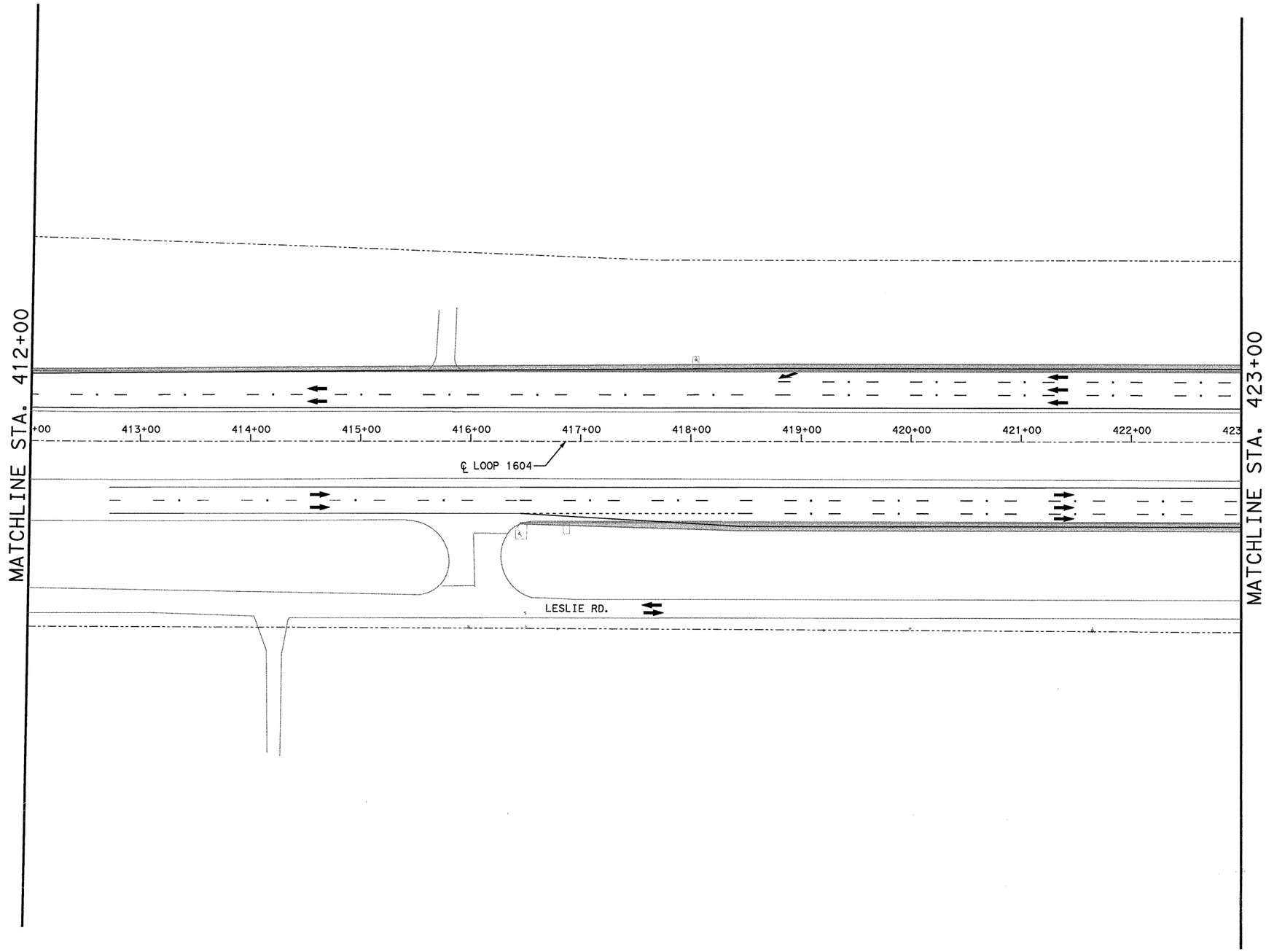

0 50 100

SCALE: 1" = 100'

LEGEND

- = NEW CONSTRUCTION THIS STAGE
- = 10" FLEXIBLE PAVEMENT REPAIR
- = PAVEMENT OBLITERATED THIS STAGE
- = CONSTRUCTED IN PREVIOUS STAGE
- M = CHANGABLE MESSAGE SIGN
- = ARROW BOARD
- = TRAFFIC FLOW ARROW
- = PLASTIC DRUMS
- = VERTICAL PANELS
- = TRAFFIC SIGNS
- = TYPE III BARRICADE
- = LCTB

STATE OF TEXAS
CHRIS D. KELAREK
83300
LICENSED
PROFESSIONAL ENGINEER

Chris D. Kelarek, P.E. 7/1/2010

SCALE: PLAN - 1":100'

REV. NO.	DATE	DESCRIPTION	BY

ALAMO RMA

RODRIGUEZ TRANSPORTATION GROUP
CONSULTING ENGINEERS

Texas Department of Transportation
© 2010

LOOP 1604
TRAFFIC CONTROL PLAN

PHASE 2, STAGE 3

STA. 412+00 TO STA. 423+00

SHEET 17 OF 22

DGN:	FED. RD. DIV. NO.	STATE	FEDERAL AID PROJECT NO.			HIGHWAY NO.
CHK DGN:	6	TEXAS	STP 2011(210)ES			LP 1604
DWG:	DIST.	COUNTY	CONT. NO.	SECT. NO.	JOB NO.	SHEET NO.
CHK DWG:	SAT	BEXAR	2452	01	050	77

Plotted on: 7/1/2010 3:47:30 PM
Design Filename: p:\8380407\div\planSht s\tcp\PHASE 2\7400041TCP2303.dgn

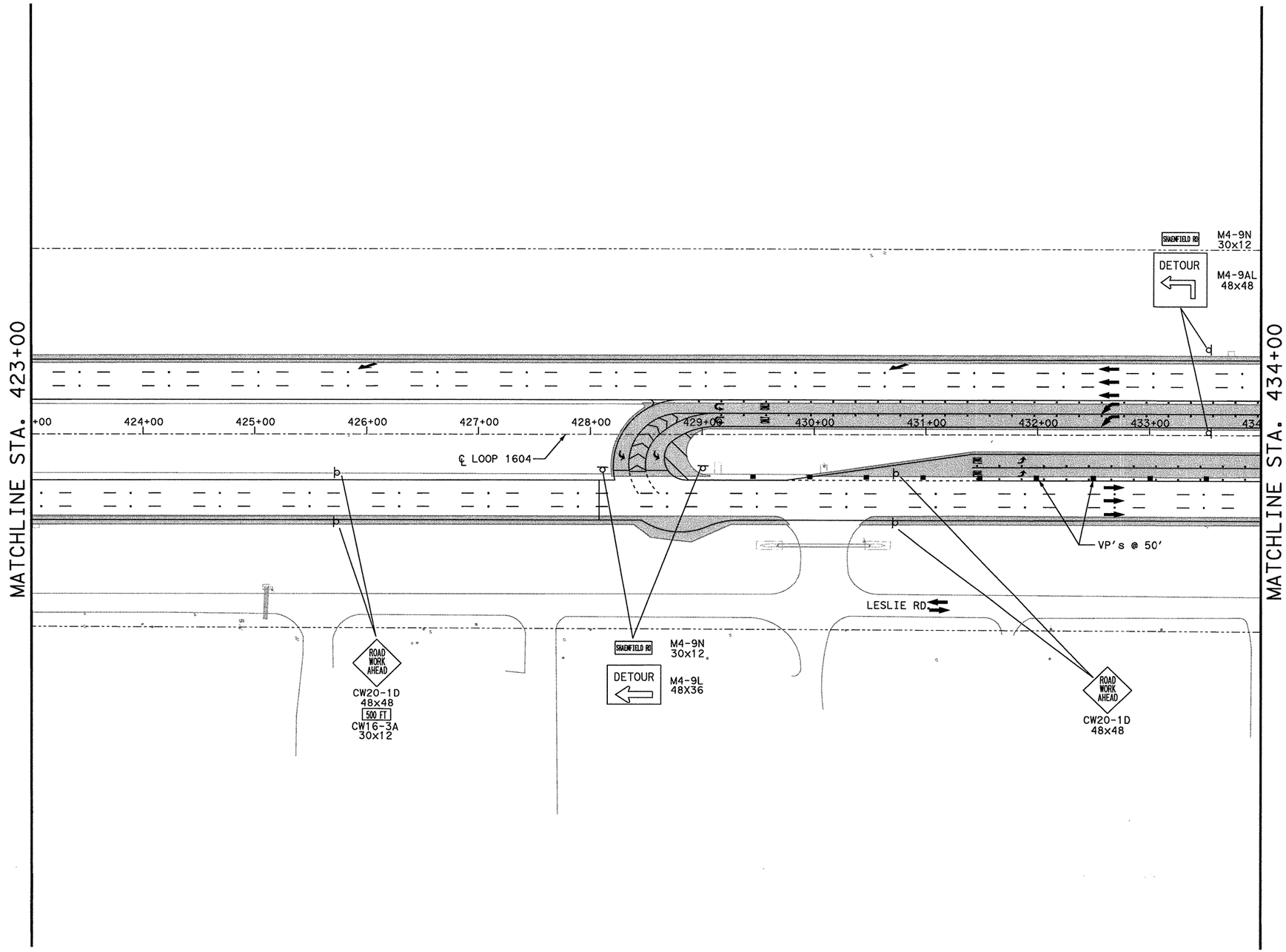

0 50 100
SCALE: 1" = 100'

LEGEND

- = NEW CONSTRUCTION THIS STAGE
- = 10" FLEXIBLE PAVEMENT REPAIR
- = PAVEMENT OBLITERATED THIS STAGE
- = CONSTRUCTED IN PREVIOUS STAGE
- M = CHANGABLE MESSAGE SIGN
- = ARROW BOARD
- = TRAFFIC FLOW ARROW
- = PLASTIC DRUMS
- = VERTICAL PANELS
- = TRAFFIC SIGNS
- = TYPE III BARRICADE
- = LCTB

STATE OF TEXAS
CHRIS D. KELAREK
83300
LICENSED
PROFESSIONAL ENGINEER

Chris D. Kelarek, P.E. 7/1/2010

SCALE: PLAN - 1":100'

REV. NO.	DATE	DESCRIPTION	BY

ALAMO RMA

RODRIGUEZ TRANSPORTATION GROUP
CONSULTING ENGINEERS

Texas Department of Transportation
© 2010

LOOP 1604
TRAFFIC CONTROL PLAN

PHASE 2, STAGE 3

STA. 423+00 TO STA. 434+00

SHEET 18 OF 22

DSN:	FED. RD. DIV. NO.	STATE	FEDERAL AID PROJECT NO.			HIGHWAY NO.
CHK DSN:	6	TEXAS	STP 2011(210)ES			LP 1604
DWG:	DIST.	COUNTY	CONT. NO.	SECT. NO.	JOB NO.	SHEET NO.
CHK DWG:	SAT	BEXAR	2452	01	050	78

Plotted on: 7/1/2010 3:47:33 PM
Design Filename: p:\8380407\dlv\planShts\top\PHASE 2\7400041CP2304.dgn

MATCHLINE STA. 434+00

MATCHLINE STA. 445+00

SHAENFIELD RD
M4-9N
30x12
DETOUR
M4-9AL
48x48

R3-2
48x48

SHAENFIELD RD
M4-9N
30x12
DETOUR
M4-9L
48X36

R3-2
48x48

VP's @ 50'

435+00 436+00 437+00 438+00 439+00 440+00 441+00 442+00 443+00 444+00

℄ LOOP 1604

VP's @ 50'

LESLIE RD.

SHAENFIELD RD
M4-9N
30x12
DETOUR
M4-9R
48X36

VP's @ 50'

END DETOUR M4-8A

FINISH ISLANDS THIS STAGE

VP's @ 50'

SHAENFIELD ROAD

LEFT LANE CLOSED
CW20-5L
48x48
200 FT
CW16-3A
30x12

LEFT LANE CLOSED
CW20-5L
48x48
400 FT
CW16-3A
30x12

END ROAD WORK
G20-2A
48x24

ROAD WORK AHEAD
CW20-1D
48x48

0 50 100
SCALE: 1" = 100'

LEGEND

- = NEW CONSTRUCTION THIS STAGE
- = 10" FLEXIBLE PAVEMENT REPAIR
- = PAVEMENT OBLITERATED THIS STAGE
- = CONSTRUCTED IN PREVIOUS STAGE
- M = CHANGABLE MESSAGE SIGN
- = ARROW BOARD
- = TRAFFIC FLOW ARROW
- = PLASTIC DRUMS
- = VERTICAL PANELS
- = TRAFFIC SIGNS
- = TYPE III BARRICADE
- = LCTB

STATE OF TEXAS
CHRIS D. KELAREK
83300
LICENSED
PROFESSIONAL ENGINEER

Chris D. Kelarek, P.E. 7/1/2010

SCALE: PLAN - 1":100'

REV. NO.	DATE	DESCRIPTION	BY

ALAMO RMA

RODRIGUEZ TRANSPORTATION GROUP
CONSULTING ENGINEERS

Texas Department of Transportation
© 2010

LOOP 1604
TRAFFIC CONTROL PLAN

PHASE 2, STAGE 3

STA. 434+00 TO STA. 445+00

SHEET 19 OF 22

DGN:	FED. RD. DIV. NO.	STATE	FEDERAL AID PROJECT NO.			HIGHWAY NO.
CHK DGN:	6	TEXAS	STP 2011(210)ES			LP 1604
DWG:	DIST.	COUNTY	CONT. NO.	SECT. NO.	JOB NO.	SHEET NO.
CHK DWG:	SAT	BEXAR	2452	01	050	79

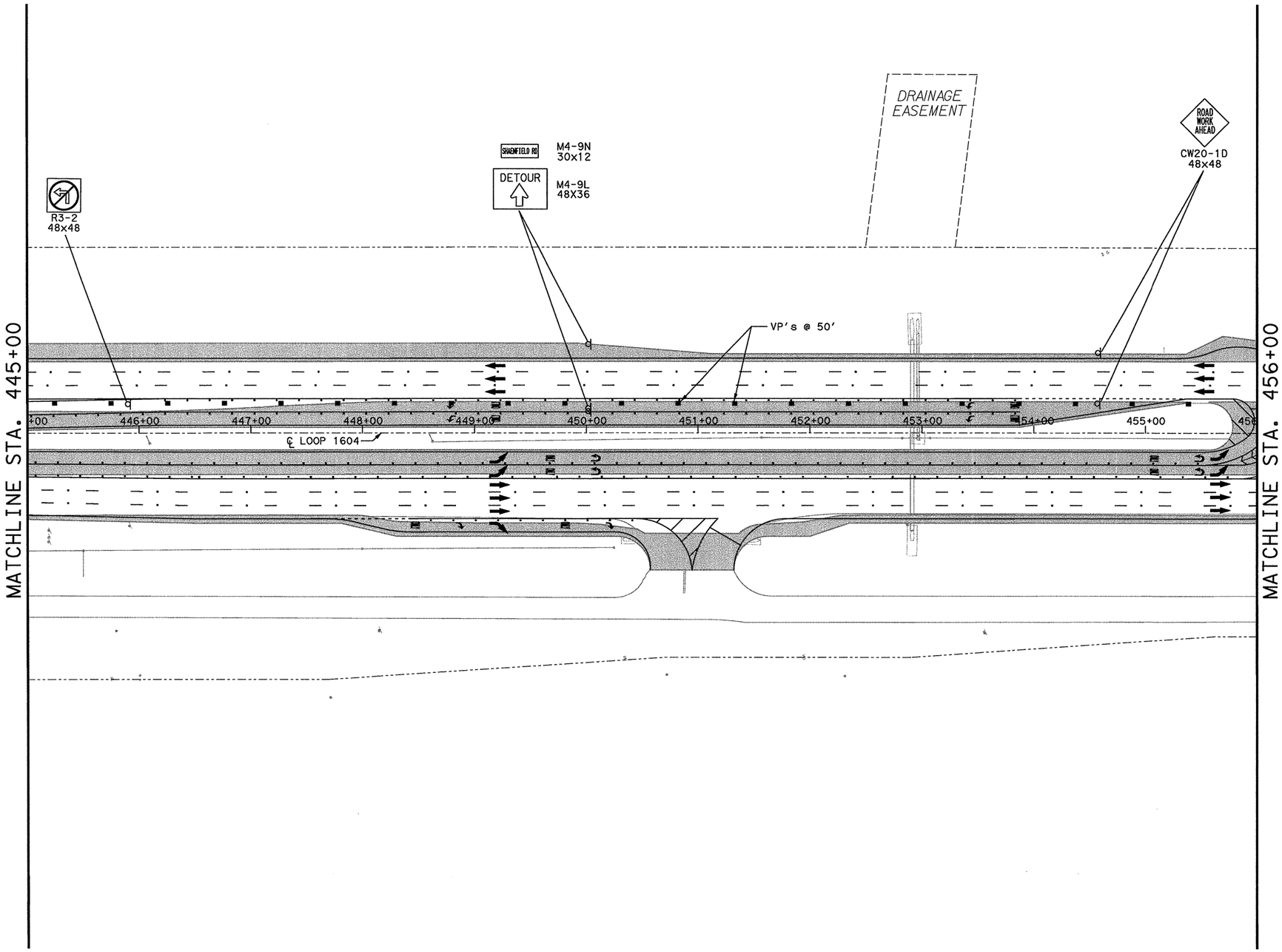

0 50 100

SCALE: 1" = 100'

LEGEND

- = NEW CONSTRUCTION THIS STAGE
- = 10" FLEXIBLE PAVEMENT REPAIR
- = PAVEMENT OBLITERATED THIS STAGE
- = CONSTRUCTED IN PREVIOUS STAGE
- M = CHANGABLE MESSAGE SIGN
- = ARROW BOARD
- = TRAFFIC FLOW ARROW
- = PLASTIC DRUMS
- = VERTICAL PANELS
- = TRAFFIC SIGNS
- = TYPE III BARRICADE
- = LCTB

STATE OF TEXAS
CHRIS D. KELAREK
83300
LICENSED PROFESSIONAL ENGINEER

Chris D. Kelarek, P.E. 7/1/2010

SCALE: PLAN - 1":100'

REV. NO.	DATE	DESCRIPTION	BY

ALAMO RMA

RODRIGUEZ TRANSPORTATION GROUP
CONSULTING ENGINEERS

Texas Department of Transportation
© 2010

LOOP 1604

TRAFFIC CONTROL PLAN

PHASE 2, STAGE 3

STA. 445+00 TO STA. 456+00

SHEET 20 OF 22

DGN:	FED. RD. DIV. NO.	STATE	FEDERAL AID PROJECT NO.			HIGHWAY NO.
CAE DGN:	6	TEXAS	STP 2011(210)ES			LP 1604
DWG:	DIST.	COUNTY	CONT. NO.	SECT. NO.	JOB NO.	SHEET NO.
CAE DWG:	SAT	BEXAR	2452	01	050	80

Plotted on: 7/1/2010 3:47:36 PM

Design Filename: p:\8380407\dlv\plansht\vtop\PHASE 2\7400041CP2305.dgn

Plotted on: 7/1/2010 3:47:39 PM

Design Filename: p:\8380407\dlv\plansshts\top\PHASE 2\7400047CP2306.dgn

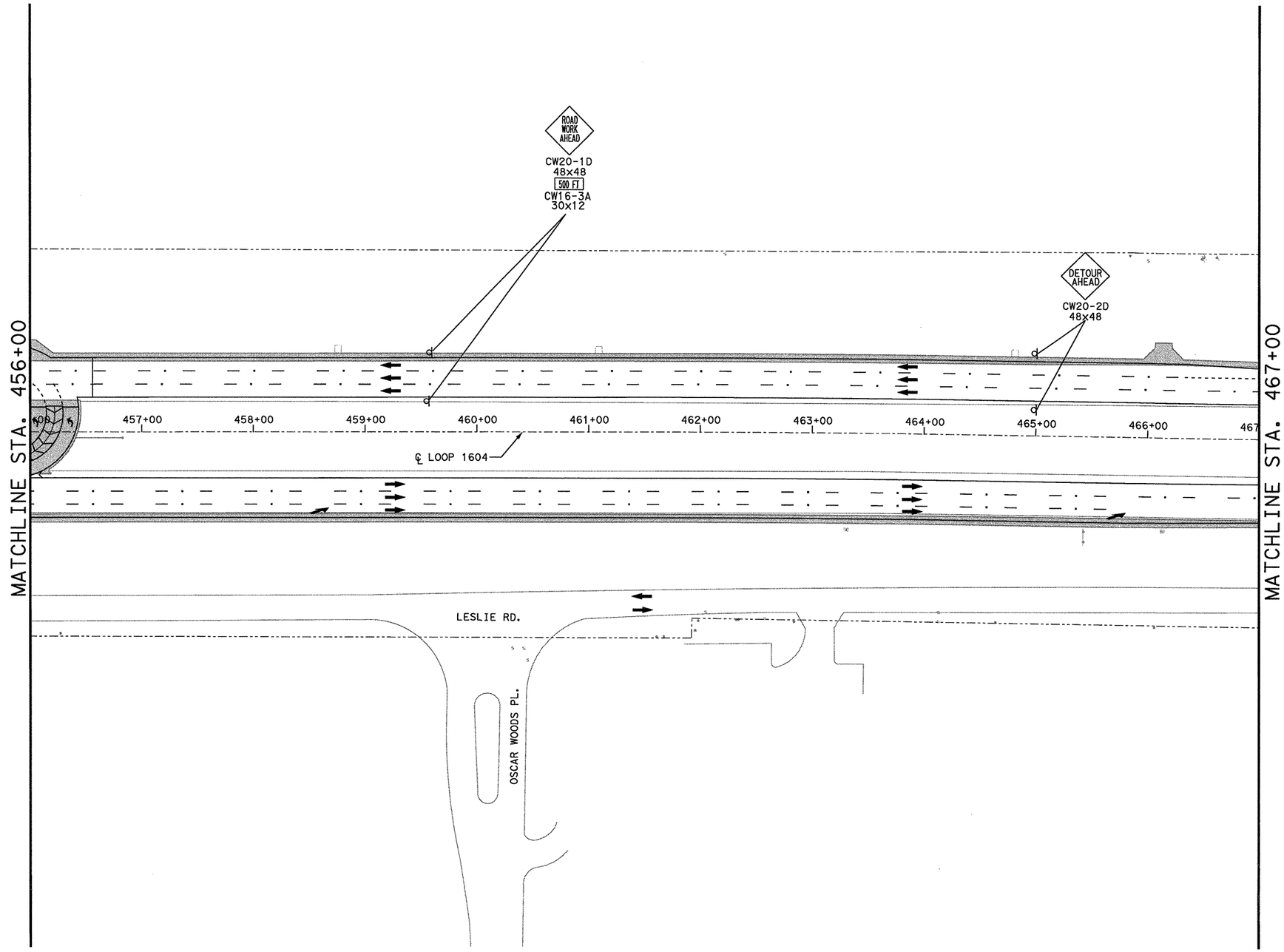

LEGEND

- = NEW CONSTRUCTION THIS STAGE
- = 10" FLEXIBLE PAVEMENT REPAIR
- = PAVEMENT OBLITERATED THIS STAGE
- = CONSTRUCTED IN PREVIOUS STAGE
- M = CHANGABLE MESSAGE SIGN
- = ARROW BOARD
- = TRAFFIC FLOW ARROW
- = PLASTIC DRUMS
- = VERTICAL PANELS
- = TRAFFIC SIGNS
- = TYPE III BARRICADE
- = LCTB

STATE OF TEXAS
CHRIS D. KELAREK
83300
LICENSED PROFESSIONAL ENGINEER

Chris D. Kelarek, P.E. 7/1/2010

SCALE: PLAN - 1":100'

REV. NO.	DATE	DESCRIPTION	BY

ALAMO RMA

RODRIGUEZ TRANSPORTATION GROUP
CONSULTING ENGINEERS

Texas Department of Transportation
© 2010

LOOP 1604
TRAFFIC CONTROL PLAN

PHASE 2, STAGE 3

STA. 456+00 TO STA. 467+00

SHEET 21 OF 22

DGN:	FED. RD. DIV. NO.	STATE	FEDERAL AID PROJECT NO.			HIGHWAY NO.
CHK DGN:	6	TEXAS	STP 2011(210)ES			LP 1604
DWG:	DIST.	COUNTY	CONT. NO.	SECT. NO.	JOB NO.	SHEET NO.
CHK DWG:	SAT	BEXAR	2452	01	050	81

Plotted on: 7/1/2010 3:47:42 PM

Design Filename: p:\8380407\dlv\planShts\top\PHASE 2\740004TCP2307.dgn

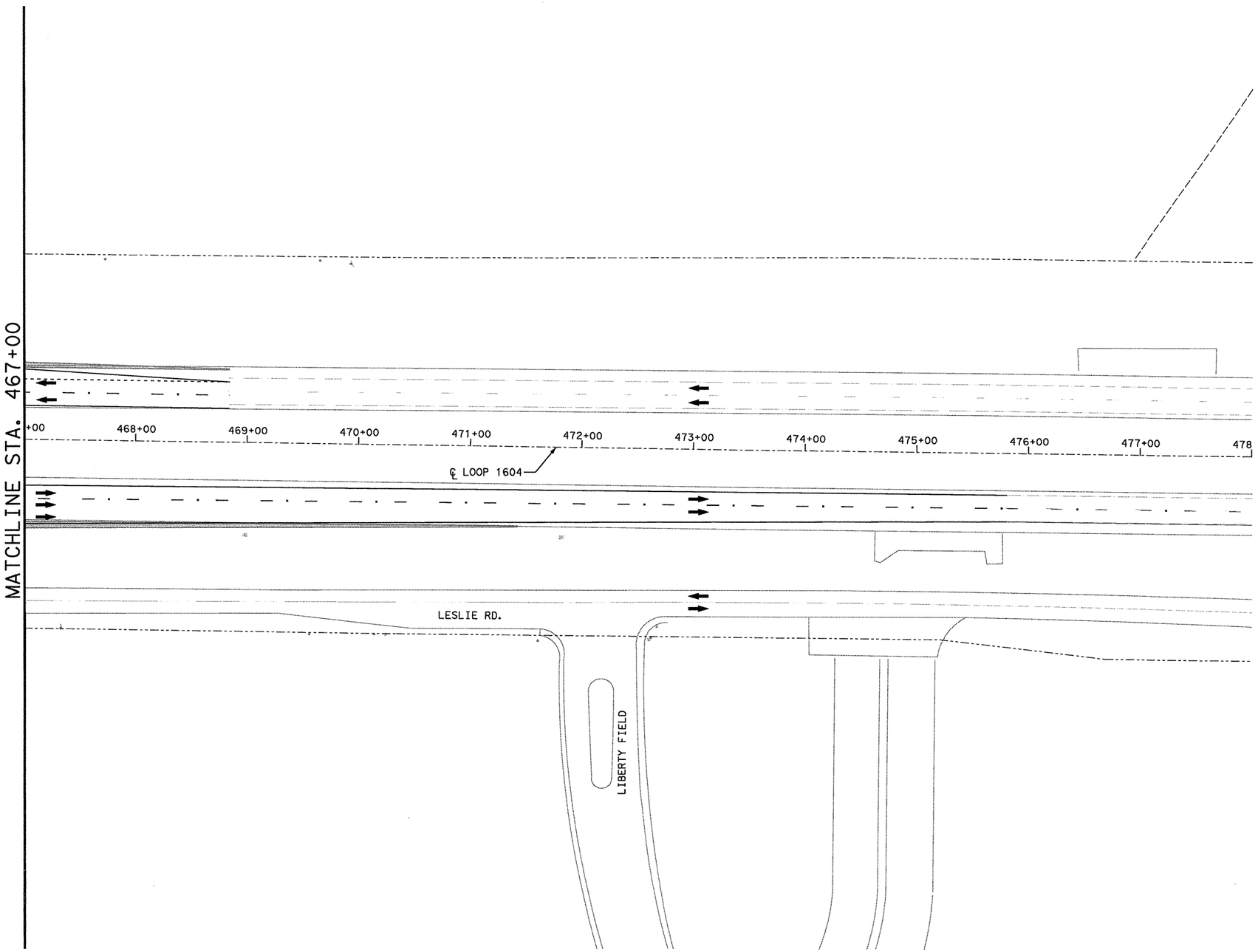

0 50 100

SCALE: 1" = 100'

LEGEND

- = NEW CONSTRUCTION THIS STAGE
- = 10" FLEXIBLE PAVEMENT REPAIR
- = PAVEMENT OBLITERATED THIS STAGE
- = CONSTRUCTED IN PREVIOUS STAGE
- M = CHANGABLE MESSAGE SIGN
- = ARROW BOARD
- = TRAFFIC FLOW ARROW
- = PLASTIC DRUMS
- = VERTICAL PANELS
- þ = TRAFFIC SIGNS
- I = TYPE III BARRICADE
- = LCTB

STATE OF TEXAS
CHRIS D. KELAREK
83300
LICENSED PROFESSIONAL ENGINEER

Chris D. Kelarek, P.E. 7/1/2010

SCALE: PLAN - 1":100'

REV. NO.	DATE	DESCRIPTION	BY

ALAMO RMA

RODRIGUEZ TRANSPORTATION GROUP
CONSULTING ENGINEERS

Texas Department of Transportation ©2010

LOOP 1604
TRAFFIC CONTROL PLAN

PHASE 2, STAGE 3

STA. 467+00 TO STA. 478+00

SHEET 22 OF 22

DGN:	FED. RD. DIV. NO.	STATE	FEDERAL AID PROJECT NO.			HIGHWAY NO.
CHK DGN:	6	TEXAS	STP 2011(210)ES			LP 1604
DWG:	DIST.	COUNTY	CONT. NO.	SECT. NO.	JOB NO.	SHEET NO.
CHK DWG:	SAT	BEXAR	2452	01	050	82

Plotted on: 7/1/2010 3:47:46 PM

Design Filename: p:\8380407\dlv\plansht\stap\PHASE 3\740004TCP3104.dgn

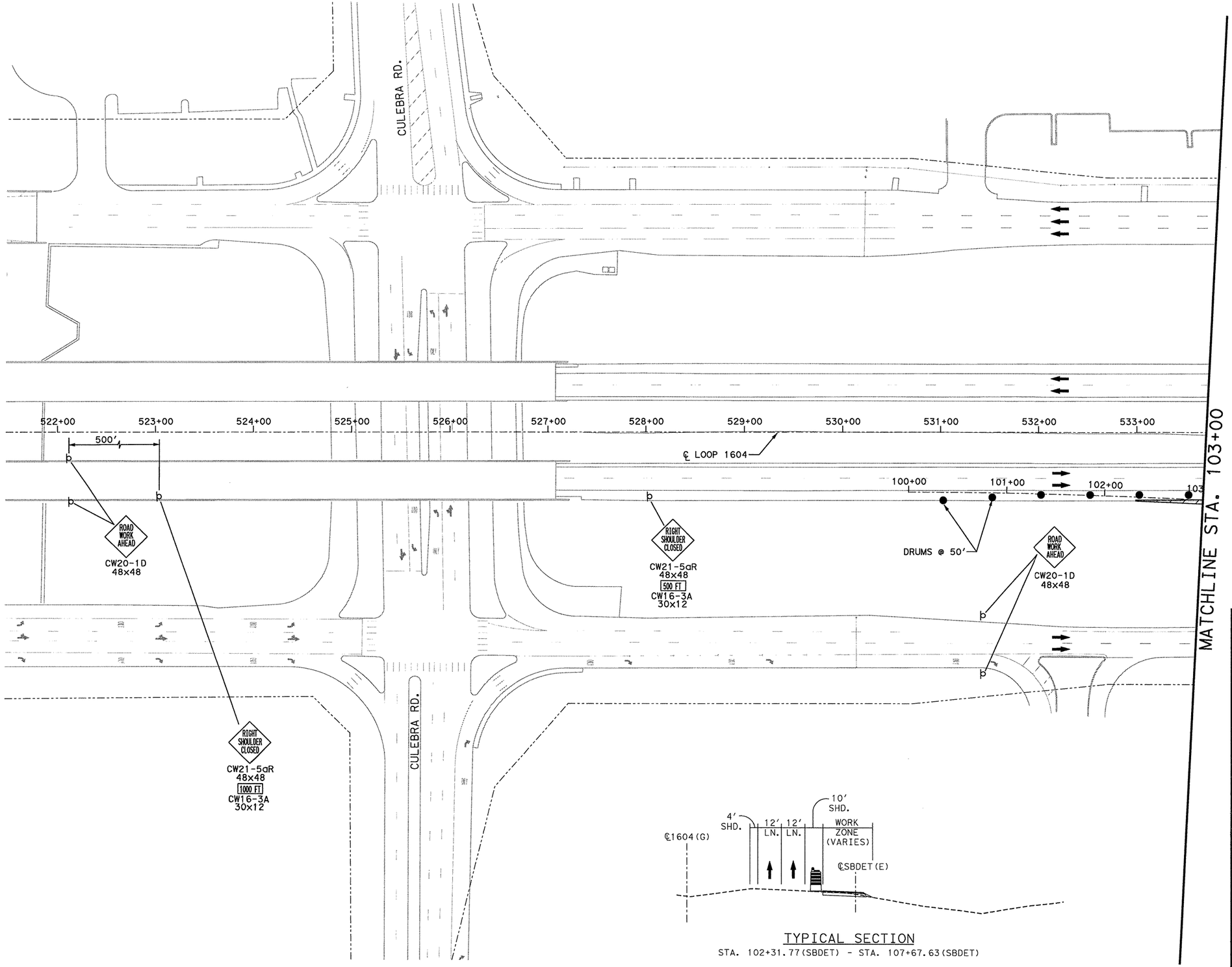

TYPICAL SECTION

STA. 102+31.77(SBDET) - STA. 107+67.63(SBDET)

0 50 100

SCALE: 1" = 100′

LEGEND

- = NEW CONSTRUCTION THIS STAGE
- = 10" FLEXIBLE PAVEMENT REPAIR
- = PAVEMENT OBLITERATED THIS STAGE
- = CONSTRUCTED IN PREVIOUS STAGE
- M = CHANGABLE MESSAGE SIGN
- = ARROW BOARD
- = TRAFFIC FLOW ARROW
- = PLASTIC DRUMS
- = VERTICAL PANELS
- þ = TRAFFIC SIGNS
- I = TYPE III BARRICADE
- = LCTB

STATE OF TEXAS
CHRIS D. KELAREK
83300
LICENSED
PROFESSIONAL ENGINEER

Chris D. Kelarek, P.E. 7/1/2010

SCALE: PLAN - 1":100′

REV. NO.	DATE	DESCRIPTION	BY

ALAMO RMA

RODRIGUEZ TRANSPORTATION GROUP
CONSULTING ENGINEERS

Texas Department of Transportation
© 2010

LOOP 1604
TRAFFIC CONTROL PLAN

PHASE 3, STAGE 1

BEGINNING TO STA. 103+00(E)

SHEET 1 OF 43

DGN:	FED. RD. DIV. NO.	STATE	FEDERAL AID PROJECT NO.			HIGHWAY NO.
CHK DGN:	6	TEXAS	STP 2011(210)ES			LP 1604
DWG:	DIST.	COUNTY	CONT. NO.	SECT. NO.	JOB NO.	SHEET NO.
CHK DWG:	SAT	BEXAR	2452	01	050	83

Plotted on: 7/1/2010 3:47:49 PM
Design Filename: p:\8380407\div\planShts\top\PHASE 3\T40004TCP3105.dgn

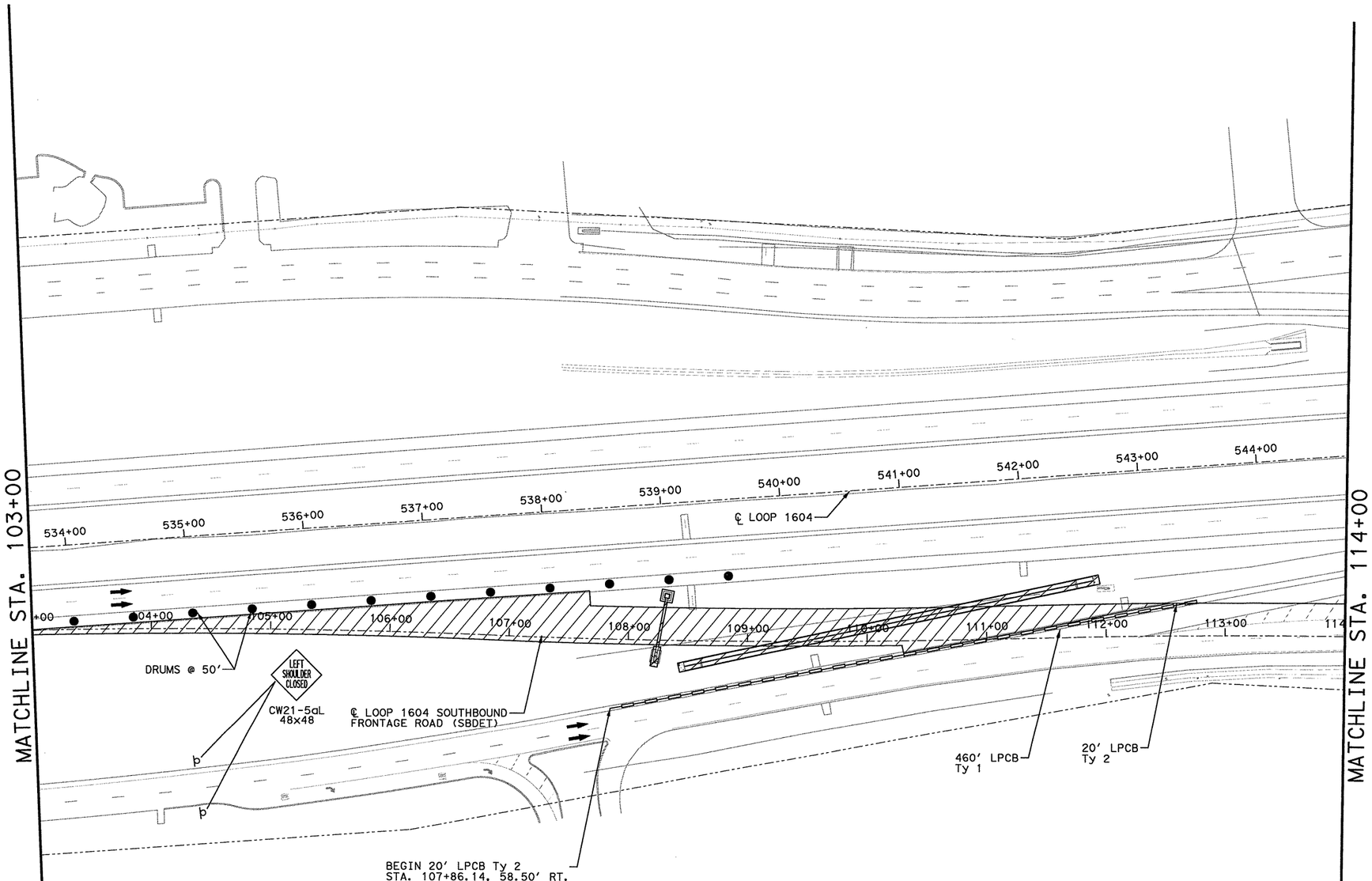

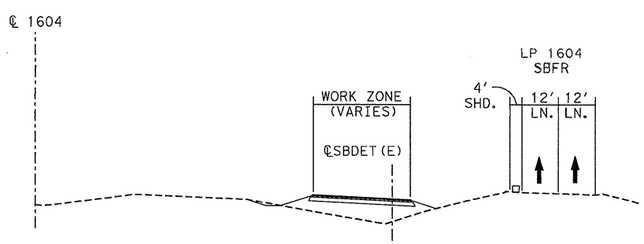

TYPICAL SECTION
STA. 107+67.63(SBDET) - STA. 110+28.98(SBDET)

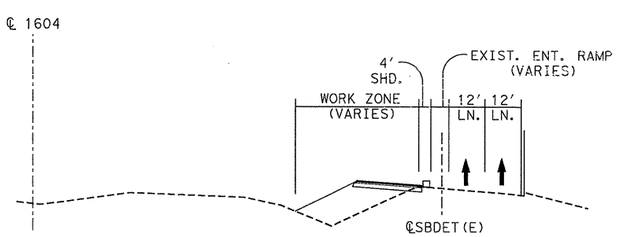

TYPICAL SECTION
STA. 110+28.98(SBDET) - STA. 112+53.70(SBDET)

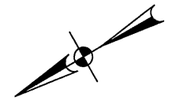

SCALE: 1" = 100'

LEGEND

- = NEW CONSTRUCTION THIS STAGE
- = 10" FLEXIBLE PAVEMENT REPAIR
- = PAVEMENT OBLITERATED THIS STAGE
- = CONSTRUCTED IN PREVIOUS STAGE
- M = CHANGABLE MESSAGE SIGN
- = ARROW BOARD
- = TRAFFIC FLOW ARROW
- = PLASTIC DRUMS
- = VERTICAL PANELS
- þ = TRAFFIC SIGNS
- I = TYPE III BARRICADE
- = LCTB

STATE OF TEXAS
CHRIS D. KELAREK
83300
LICENSED PROFESSIONAL ENGINEER
Chris D. Kelarek, P.E. 7/1/2010

SCALE: PLAN - 1":100'

REV. NO.	DATE	DESCRIPTION	BY

ALAMO RMA

RODRIGUEZ TRANSPORTATION GROUP
CONSULTING ENGINEERS

Texas Department of Transportation
© 2010

LOOP 1604
TRAFFIC CONTROL PLAN

PHASE 3, STAGE 1

STA. 103+00(E) TO STA. 114+00(E)

SHEET 2 OF 43

DGN:	FED. RD. DIV. NO.	STATE	FEDERAL AID PROJECT NO.			HIGHWAY NO.
CHK DGN:	6	TEXAS	STP 2011(210)ES			LP 1604
DWG:	DIST.	COUNTY	CONT. NO.	SECT. NO.	JOB NO.	SHEET NO.
CHK DWG:	SAT	BEXAR	2452	01	050	84

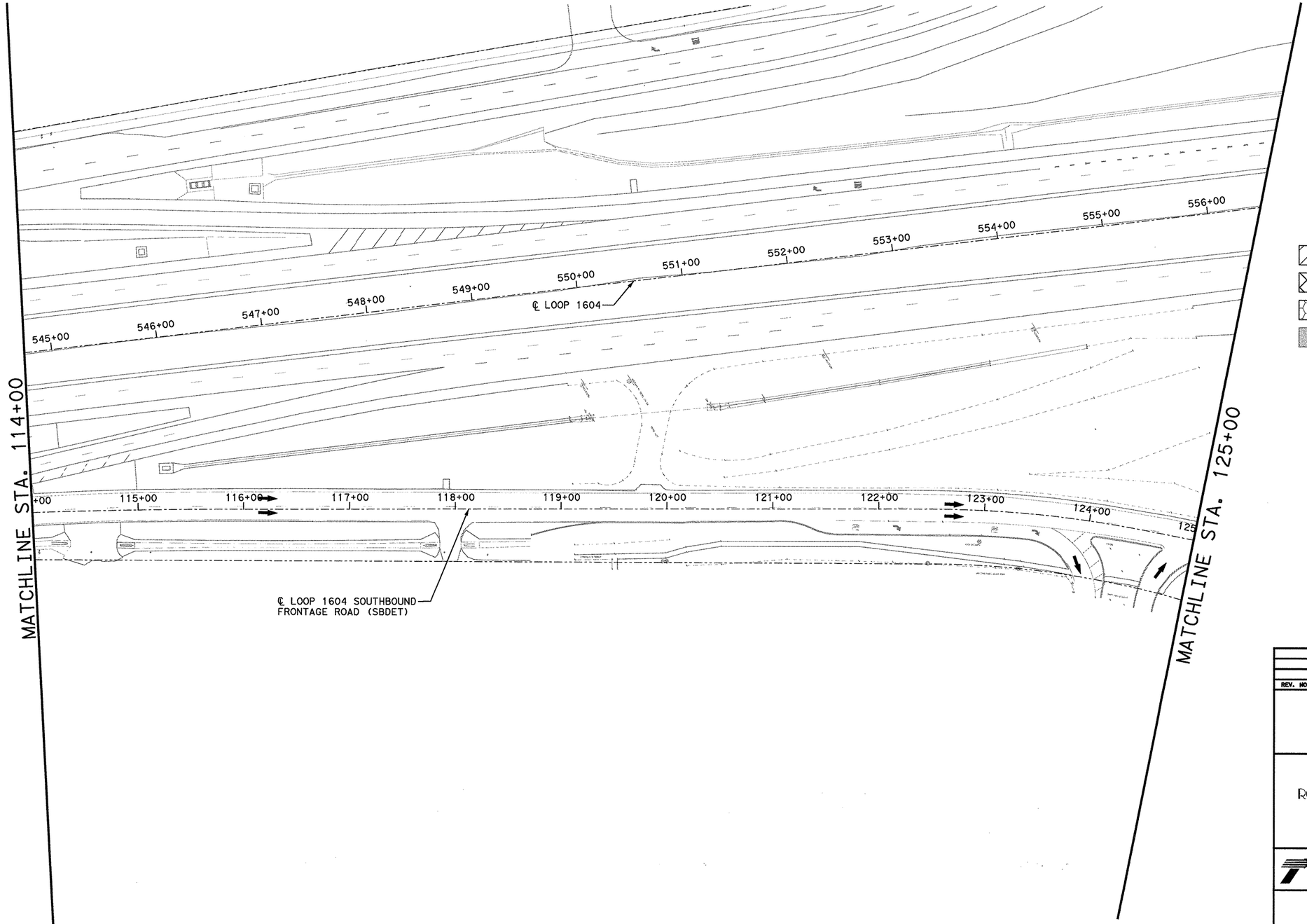

0 50 100
SCALE: 1" = 100'

LEGEND

- = NEW CONSTRUCTION THIS STAGE
- = 10" FLEXIBLE PAVEMENT REPAIR
- = PAVEMENT OBLITERATED THIS STAGE
- = CONSTRUCTED IN PREVIOUS STAGE
- M = CHANGABLE MESSAGE SIGN
- = ARROW BOARD
- = TRAFFIC FLOW ARROW
- = PLASTIC DRUMS
- = VERTICAL PANELS
- = TRAFFIC SIGNS
- = TYPE III BARRICADE
- = LCTB

STATE OF TEXAS
CHRIS D. KELAREK
83300
LICENSED PROFESSIONAL ENGINEER

Chris D. Kelarek, P.E. 7/1/2010

SCALE: PLAN - 1":100'

REV. NO.	DATE	DESCRIPTION	BY

ALAMO RMA

RODRIGUEZ TRANSPORTATION GROUP
CONSULTING ENGINEERS

Texas Department of Transportation © 2010

LOOP 1604
TRAFFIC CONTROL PLAN
PHASE 3, STAGE 1
STA. 114+00(E) TO STA. 125+00(E)

SHEET 3 OF 43

DGN:	FED. RD. DIV. NO.	STATE	FEDERAL AID PROJECT NO.			HIGHWAY NO.
CHK DGN:	6	TEXAS	STP 2011(210)ES			LP 1604
DWG:	DIST.	COUNTY	CONT. NO.	SECT. NO.	JOB NO.	SHEET NO.
CHK DWG:	SAT	BEXAR	2452	01	050	85

Design Filename: p:\8380407\div\planShts\tcp\PHASE 3\740004TCP3106.dgn
Plotted on: 7/1/2010 3:47:52 PM

Plotted on: 7/1/2010 3:47:55 PM
Design Filename: p:\8380407\div\plansht s\tcp\PHASE 3\1740004TCP3107.dgn

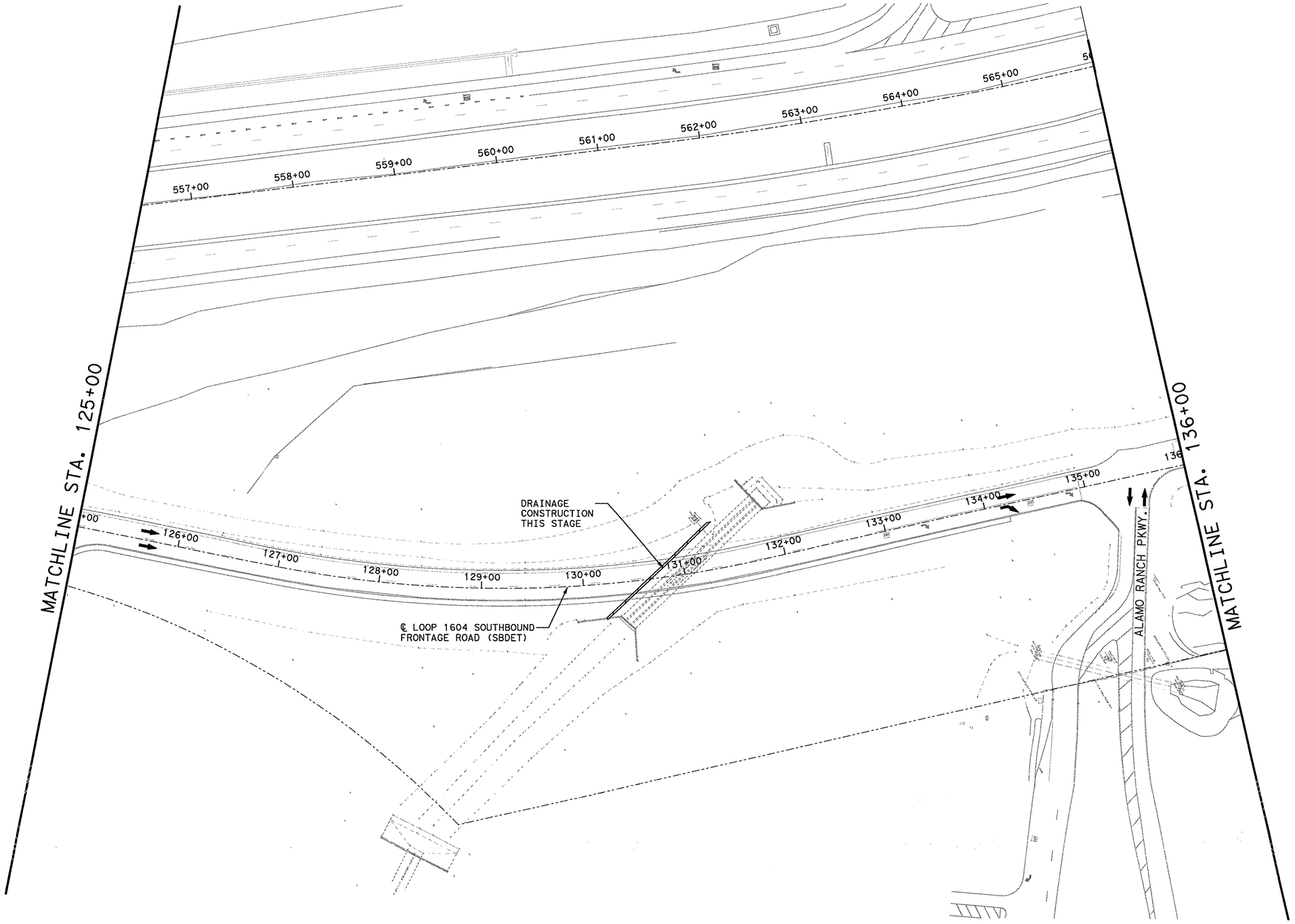

0 50 100
SCALE: 1" = 100'

LEGEND

- = NEW CONSTRUCTION THIS STAGE
- = 10" FLEXIBLE PAVEMENT REPAIR
- = PAVEMENT OBLITERATED THIS STAGE
- = CONSTRUCTED IN PREVIOUS STAGE
- = CHANGABLE MESSAGE SIGN
- = ARROW BOARD
- = TRAFFIC FLOW ARROW
- = PLASTIC DRUMS
- = VERTICAL PANELS
- = TRAFFIC SIGNS
- = TYPE III BARRICADE
- = LCTB

STATE OF TEXAS
CHRIS D. KELAREK
83300
LICENSED
PROFESSIONAL ENGINEER
Chris D. Kelarek, P.E. 7/1/2010

SCALE: PLAN - 1":100'

REV. NO.	DATE	DESCRIPTION	BY

ALAMO RMA

RODRIGUEZ TRANSPORTATION GROUP
CONSULTING ENGINEERS

Texas Department of Transportation
© 2010

LOOP 1604
TRAFFIC CONTROL PLAN

PHASE 3, STAGE 1

STA. 125+00(E) TO STA. 136+00(E)

SHEET 4 OF 43

DGN:	FED. RD. DIV. NO.	STATE	FEDERAL AID PROJECT NO.			HIGHWAY NO.
CK DGN:	6	TEXAS	STP 2011(210)ES			LP 1604
DWG:	DIST.	COUNTY	CONT. NO.	SECT. NO.	JOB NO.	SHEET NO.
CK DWG:	SAT	BEXAR	2452	01	050	86

Plotted on: 7/1/2010 3:47:58 PM

Design Filename: p:\8380407\div\planSht's\top\PHASE 3\7400047CP3108.dgn

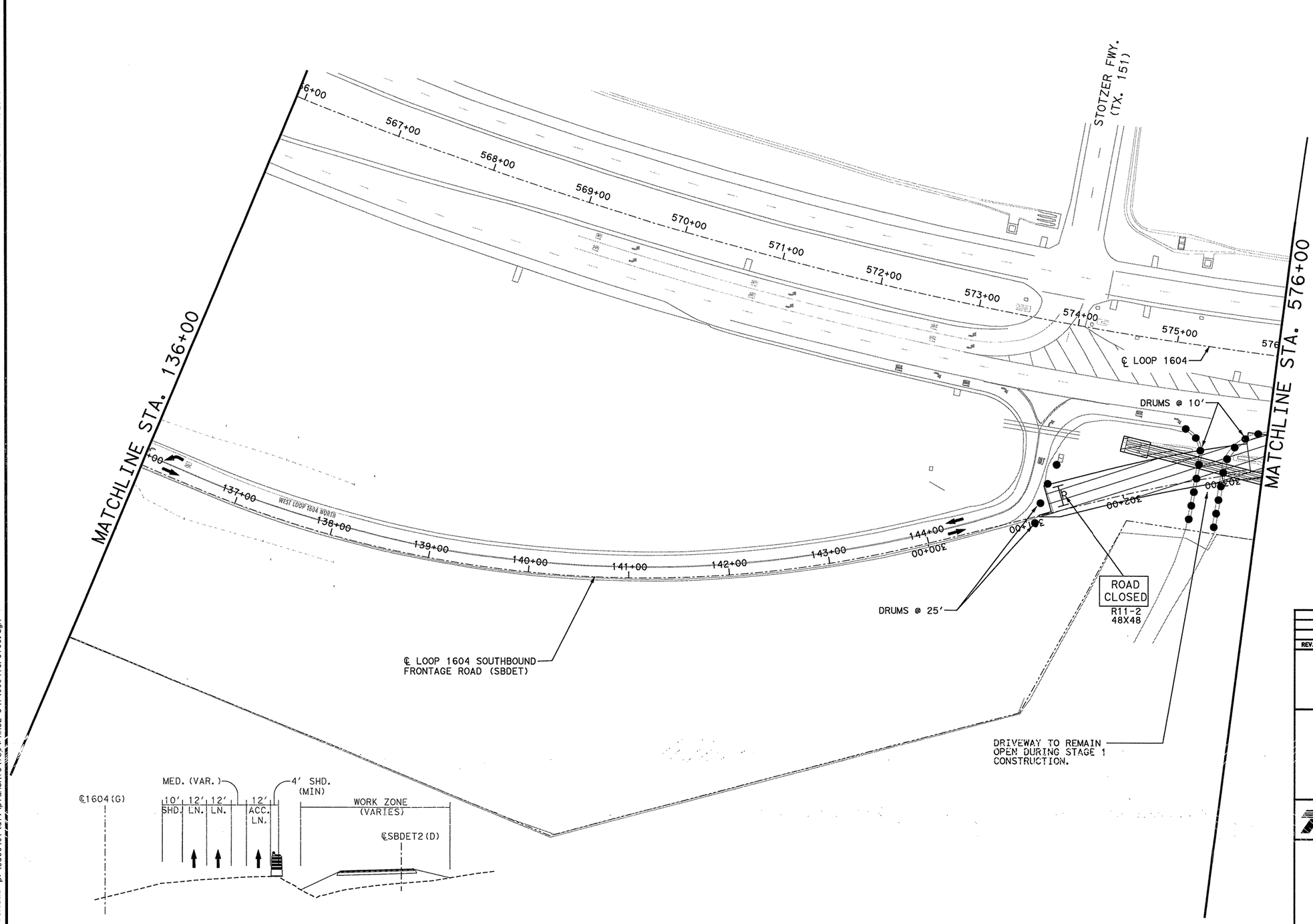

TYPICAL SECTION
STA. 301+13.99 - STA. 303+28.29

0 50 100
SCALE: 1" = 100'

LEGEND

- = NEW CONSTRUCTION THIS STAGE
- = 10" FLEXIBLE PAVEMENT REPAIR
- = PAVEMENT OBLITERATED THIS STAGE
- = CONSTRUCTED IN PREVIOUS STAGE
- M = CHANGABLE MESSAGE SIGN
- = ARROW BOARD
- = TRAFFIC FLOW ARROW
- = PLASTIC DRUMS
- = VERTICAL PANELS
- = TRAFFIC SIGNS
- = TYPE III BARRICADE
- = LCTB

STATE OF TEXAS
CHRIS D. KELAREK
83300
LICENSED
PROFESSIONAL ENGINEER

Chris D. Kelarek, P.E. 7/1/2010

SCALE: PLAN - 1":100'

REV. NO.	DATE	DESCRIPTION	BY

ALAMO RMA

RODRIGUEZ TRANSPORTATION GROUP
CONSULTING ENGINEERS

Texas Department of Transportation ©2010

LOOP 1604
TRAFFIC CONTROL PLAN

PHASE 3, STAGE 1

STA. 136+00(E) TO STA. 576+00(G)

SHEET 5 OF 43

DGN:	FED. RD. DIV. NO.	STATE	FEDERAL AID PROJECT NO.			HIGHWAY NO.
CHK DGN:	6	TEXAS	STP 2011(210)ES			LP 1604
DWG:	DIST.	COUNTY	CONT. NO.	SECT. NO.	JOB NO.	SHEET NO.
CHK DWG:	SAT	BEXAR	2452	01	050	87

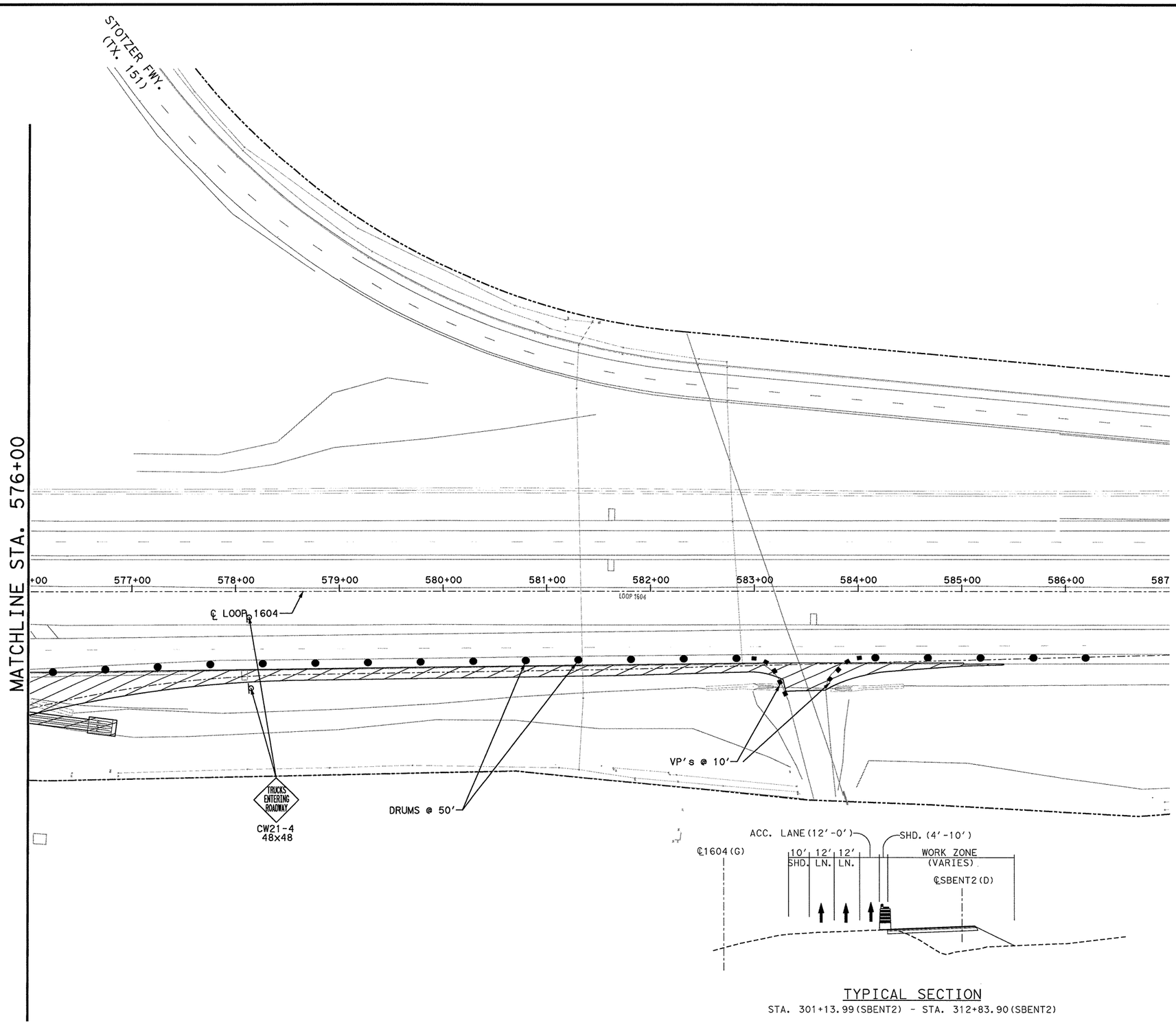

TYPICAL SECTION

STA. 301+13.99(SBENT2) - STA. 312+83.90(SBENT2)

0 50 100

SCALE: 1" = 100'

LEGEND

- = NEW CONSTRUCTION THIS STAGE
- = 10" FLEXIBLE PAVEMENT REPAIR
- = PAVEMENT OBLITERATED THIS STAGE
- = CONSTRUCTED IN PREVIOUS STAGE
- M = CHANGABLE MESSAGE SIGN
- = ARROW BOARD
- = TRAFFIC FLOW ARROW
- = PLASTIC DRUMS
- = VERTICAL PANELS
- = TRAFFIC SIGNS
- = TYPE III BARRICADE
- = LCTB

STATE OF TEXAS
CHRIS D. KELAREK
83300
LICENSED PROFESSIONAL ENGINEER

Chris D. Kelarek, P.E. 8/19/2010

SCALE: PLAN - 1":100'

REV. NO.	DATE	DESCRIPTION	BY

ALAMO RMA

RODRIGUEZ TRANSPORTATION GROUP
CONSULTING ENGINEERS

Texas Department of Transportation
© 2010

LOOP 1604
TRAFFIC CONTROL PLAN

PHASE 3, STAGE 1

STA. 576+00(G) TO STA. 587+00(G)

SHEET 6 OF 43

DGN:	FED. RD. DIV. NO.	STATE	FEDERAL AID PROJECT NO.			HIGHWAY NO.
CHK DGN:	6	TEXAS	STP 2011(210)ES			LP 1604
DWG:	DIST.	COUNTY	CONT. NO.	SECT. NO.	JOB NO.	SHEET NO.
CHK DWG:	SAT	BEXAR	2452	01	050	88

Plotted on: 8/19/2010 2:23:05 PM

Design Filename: p:\8380407\dlv\planShts\tcp\PHASE 3\740004TCP3109.dgn

Plotted on: 7/1/2010 3:48:04 PM

Design Filename: p:\8380407\dlv\planshts\tcp\PHASE 3\740004TCP3201.dgn

70X80 SPL SIGN DETAIL

CW23-1_48x24;
3.0" Radius, 1.3" Border, 0.8" Indent, Black on Orange;
[DETOUR] ClearviewHwy-3-W specified length;
[NEXT EXIT] ClearviewHwy-3-W;
[ALAMO] ClearviewHwy-3-W;
[RANCH] ClearviewHwy-3-W;
[PKWY] ClearviewHwy-3-W;

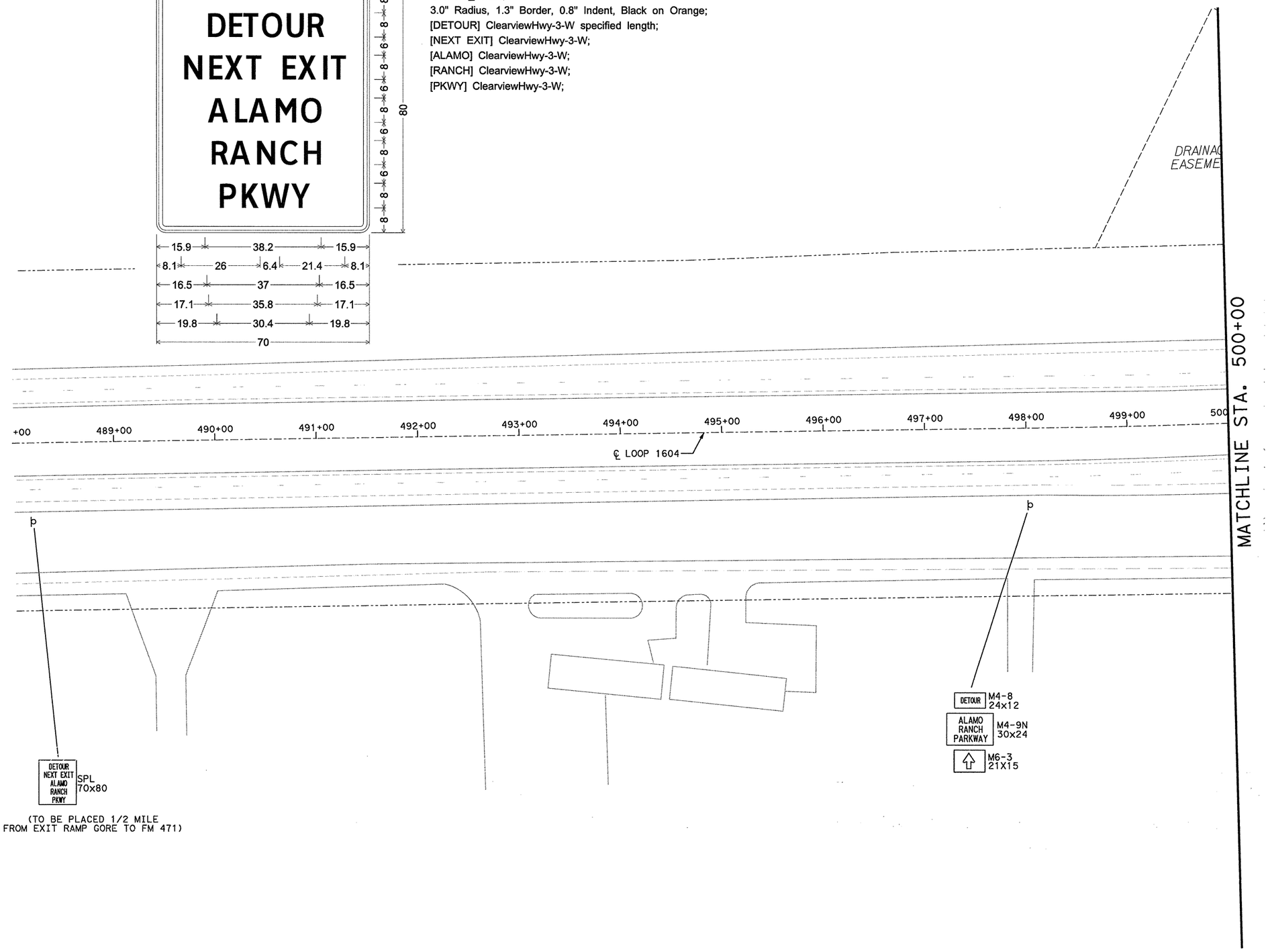

(TO BE PLACED 1/2 MILE
FROM EXIT RAMP GORE TO FM 471)

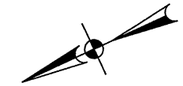

LEGEND

- = NEW CONSTRUCTION THIS STAGE
- = 10" FLEXIBLE PAVEMENT REPAIR
- = PAVEMENT OBLITERATED THIS STAGE
- = CONSTRUCTED IN PREVIOUS STAGE
- M = CHANGABLE MESSAGE SIGN
- = ARROW BOARD
- = TRAFFIC FLOW ARROW
- = PLASTIC DRUMS
- = VERTICAL PANELS
- = TRAFFIC SIGNS
- = TYPE III BARRICADE
- = LCTB

STATE OF TEXAS
CHRIS D. KELAREK
83300
REGISTERED PROFESSIONAL ENGINEER
Chris D. Kelarek, P.E. 7/1/2010

SCALE: PLAN - 1":100'

REV. NO.	DATE	DESCRIPTION	BY

ALAMO RMA

RODRIGUEZ TRANSPORTATION GROUP
CONSULTING ENGINEERS

Texas Department of Transportation
© 2010

LOOP 1604
TRAFFIC CONTROL PLAN

PHASE 3, STAGE 2

BEGINNING TO STA. 499+00(G)

SHEET 7 OF 43

DGN:	FED. RD. DIV. NO.	STATE	FEDERAL AID PROJECT NO.			HIGHWAY NO.
CAD DGN:	6	TEXAS	STP 2011(210)ES			LP 1604
DWG:	DIST.	COUNTY	CONT. NO.	SECT. NO.	JOB NO.	SHEET NO.
CAD DWG:	SAT	BEXAR	2452	01	050	89

Plotted on: 7/1/2010 3:48:07 PM
Design Filename: p:\838040T\d1\vplan\Shts\tcp_PHASE 3\T40004TCP3202.dgn

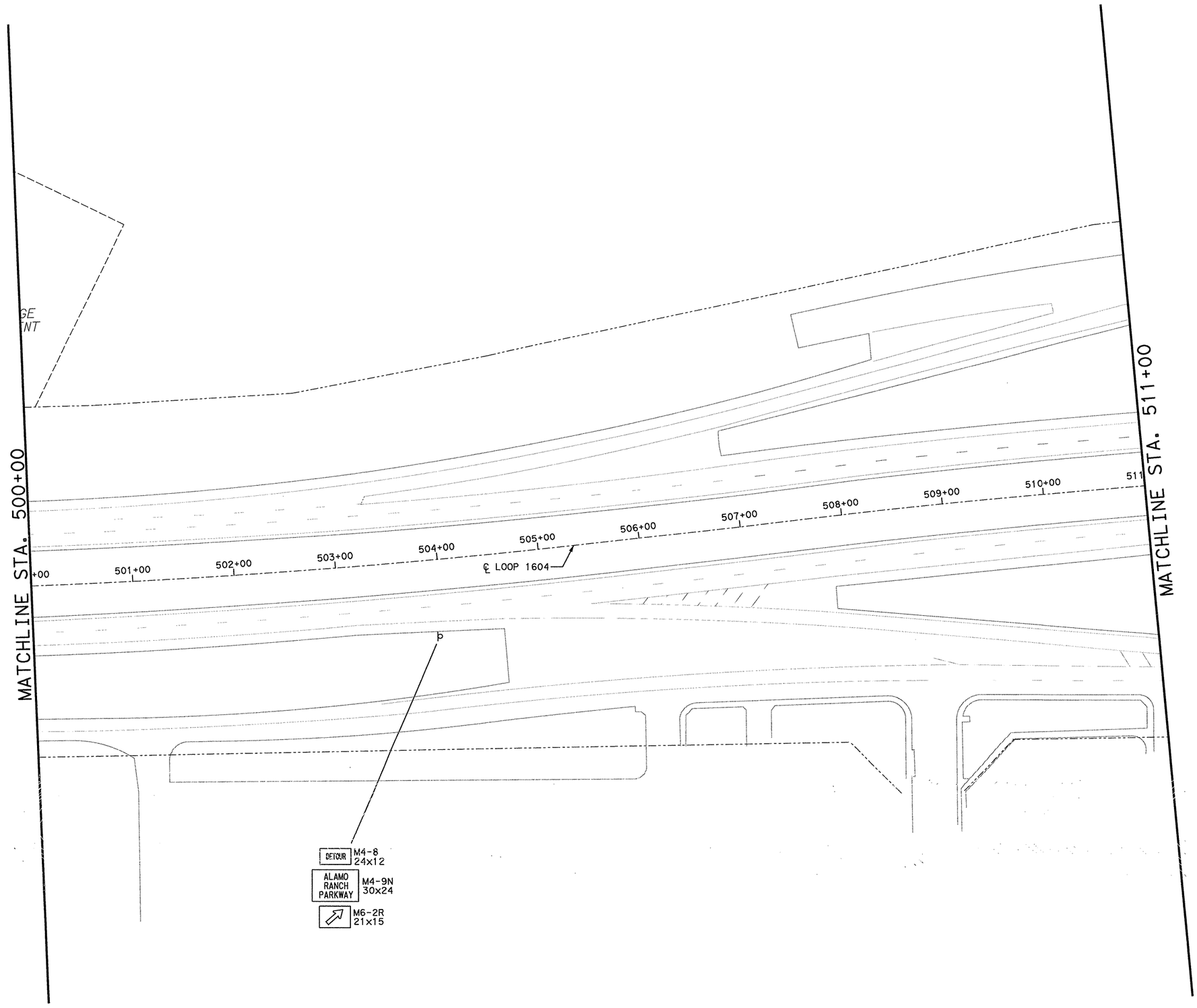

0 50 100
SCALE: 1" = 100'

LEGEND

- = NEW CONSTRUCTION THIS STAGE
- = 10" FLEXIBLE PAVEMENT REPAIR
- = PAVEMENT OBLITERATED THIS STAGE
- = CONSTRUCTED IN PREVIOUS STAGE
- M = CHANGABLE MESSAGE SIGN
- = ARROW BOARD
- = TRAFFIC FLOW ARROW
- = PLASTIC DRUMS
- = VERTICAL PANELS
- þ = TRAFFIC SIGNS
- I = TYPE III BARRICADE
- = LCTB

STATE OF TEXAS
CHRIS D. KELAREK
83300
LICENSED PROFESSIONAL ENGINEER

Chris D. Kelarek, P.E. 7/1/2010

SCALE: PLAN - 1":100'

REV. NO.	DATE	DESCRIPTION	BY

ALAMO RMA

RODRIGUEZ TRANSPORTATION GROUP
CONSULTING ENGINEERS

Texas Department of Transportation
© 2010

LOOP 1604
TRAFFIC CONTROL PLAN

PHASE 3, STAGE 2

STA. 500+00(G) TO STA. 511+00(G)

SHEET 8 OF 43

DGN:	FED. RD. DIV. NO.	STATE	FEDERAL AID PROJECT NO.			HIGHWAY NO.
CHK DSN:	6	TEXAS	STP 2011(210)ES			LP 1604
DWG:	DIST.	COUNTY	CONT. NO.	SECT. NO.	JOB NO.	SHEET NO.
CHK DWG:	SAT	BEXAR	2452	01	050	90

Plotted on: 7/1/2010 3:48:10 PM

Design Filename: p:\8380407\dlv\planSht's\trop\PHASE 3\740004TCP3203.dgn

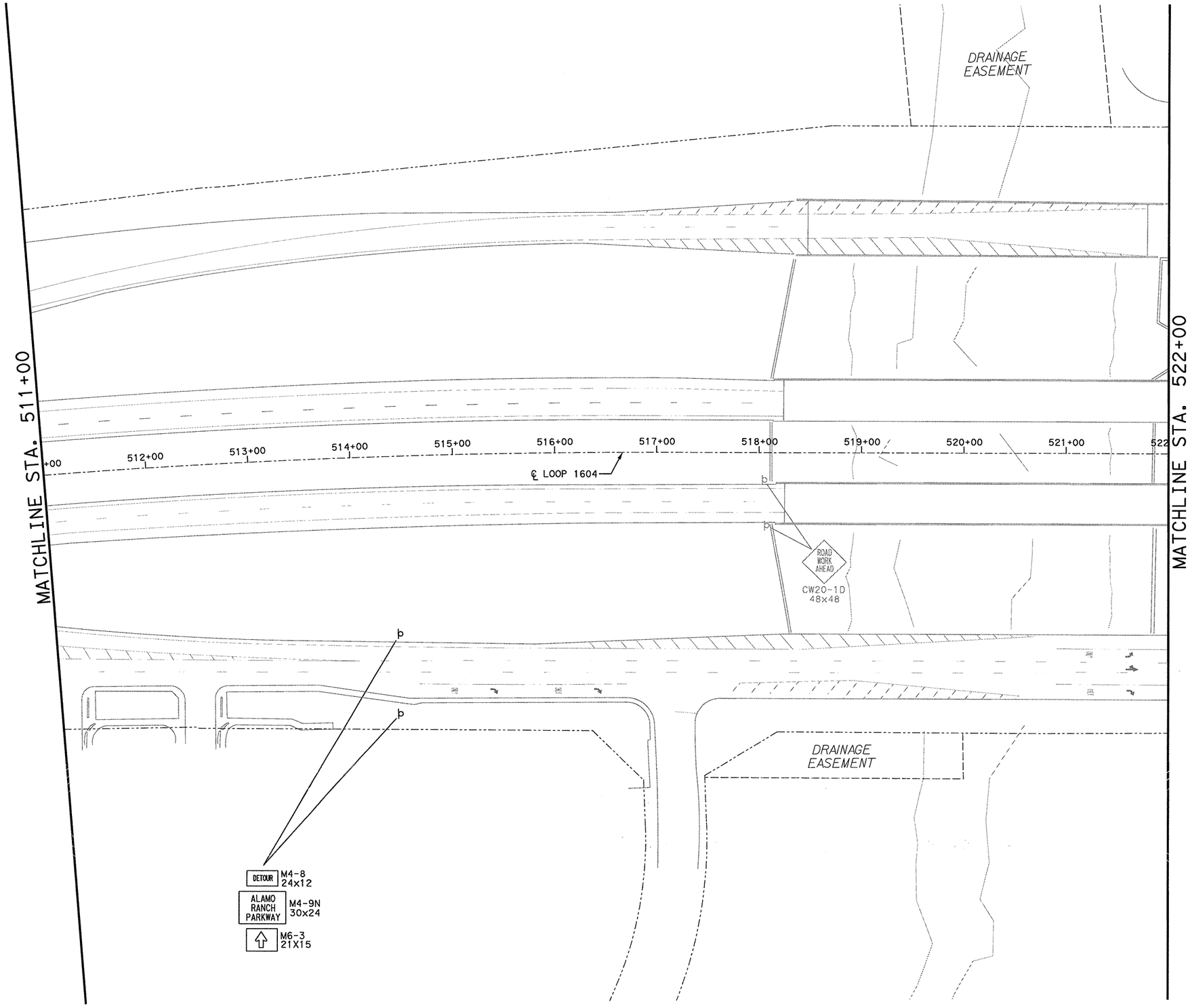

0 50 100

SCALE: 1" = 100'

LEGEND

- = NEW CONSTRUCTION THIS STAGE
- = 10" FLEXIBLE PAVEMENT REPAIR
- = PAVEMENT OBLITERATED THIS STAGE
- = CONSTRUCTED IN PREVIOUS STAGE
- M = CHANGABLE MESSAGE SIGN
- = ARROW BOARD
- = TRAFFIC FLOW ARROW
- = PLASTIC DRUMS
- = VERTICAL PANELS
- = TRAFFIC SIGNS
- = TYPE III BARRICADE
- = LCTB

STATE OF TEXAS
CHRIS D. KELAREK
83300
LICENSED
PROFESSIONAL ENGINEER

Chris D. Kelarek, P.E. 7/1/2010

SCALE: PLAN - 1":100'

REV. NO.	DATE	DESCRIPTION	BY

ALAMO RMA

RODRIGUEZ TRANSPORTATION GROUP
CONSULTING ENGINEERS

Texas Department of Transportation © 2010

LOOP 1604
TRAFFIC CONTROL PLAN

PHASE 3, STAGE 2

STA. 511+00(G) TO STA. 522+00(G)

SHEET 9 OF 43

DGN:	FED. RD. DIV. NO.	STATE	FEDERAL AID PROJECT NO.			HIGHWAY NO.
CHK DSN:	6	TEXAS	STP 2011(210)ES			LP 1604
DWG:	DIST.	COUNTY	CONT. NO.	SECT. NO.	JOB NO.	SHEET NO.
CHK DWG:	SAT	BEXAR	2452	01	050	91

Plotted on: 7/1/2010 3:48:14 PM
Design Filename: p:\8380407\dlv\planSht$\tcp\PHASE 3\740004TCP3204.dgn

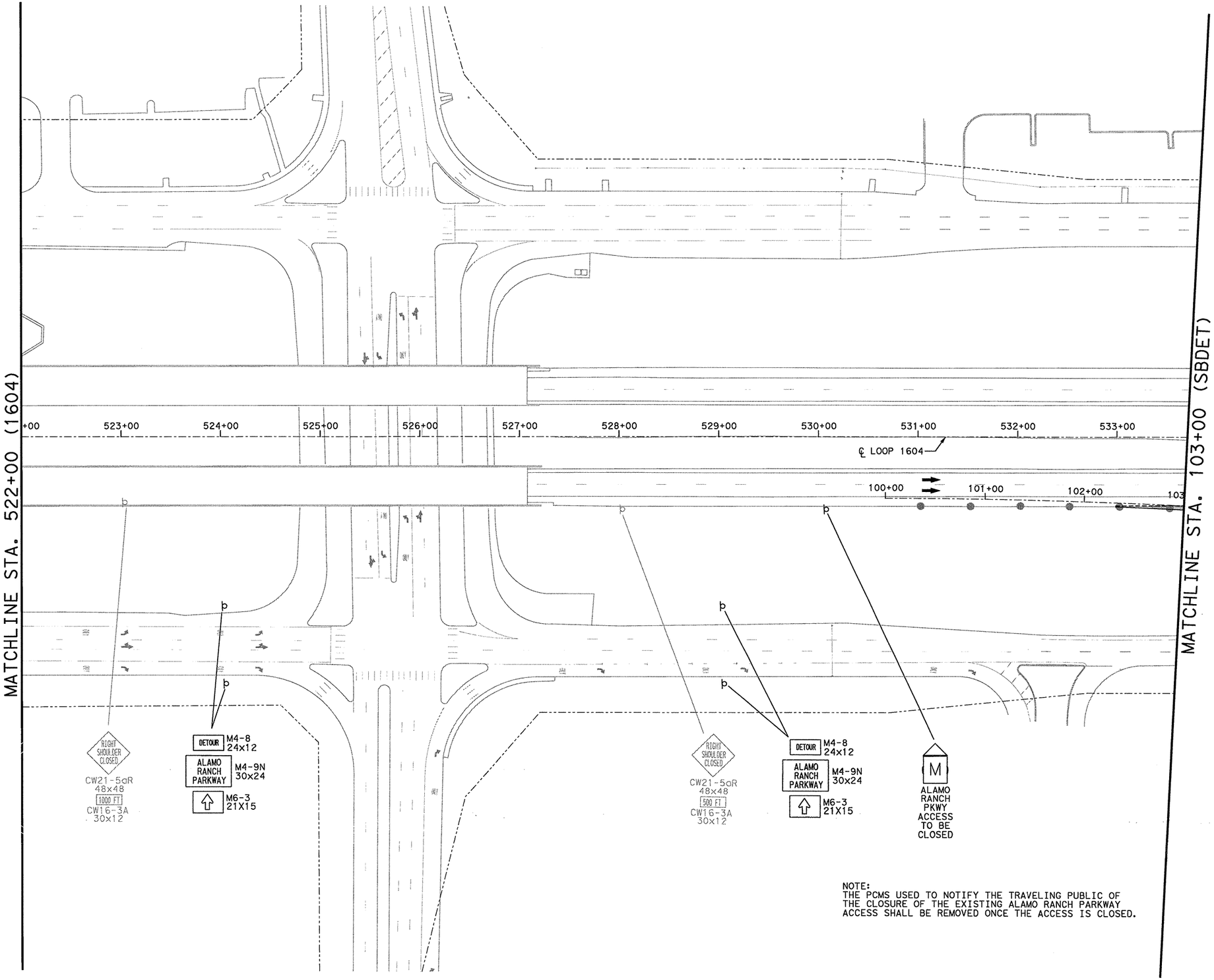

0 50 100
SCALE: 1" = 100'

LEGEND

- = NEW CONSTRUCTION THIS STAGE
- = 10" FLEXIBLE PAVEMENT REPAIR
- = PAVEMENT OBLITERATED THIS STAGE
- = CONSTRUCTED IN PREVIOUS STAGE
- M = CHANGABLE MESSAGE SIGN
- = ARROW BOARD
- = TRAFFIC FLOW ARROW
- ● = PLASTIC DRUMS
- ▪ = VERTICAL PANELS
- þ = TRAFFIC SIGNS
- I = TYPE III BARRICADE
- = LCTB

NOTE:
THE PCMS USED TO NOTIFY THE TRAVELING PUBLIC OF THE CLOSURE OF THE EXISTING ALAMO RANCH PARKWAY ACCESS SHALL BE REMOVED ONCE THE ACCESS IS CLOSED.

STATE OF TEXAS
CHRIS D. KELAREK
83300
LICENSED PROFESSIONAL ENGINEER

Chris D. Kelarek, P.E. 7/1/2010

SCALE: PLAN - 1":100'

REV. NO.	DATE	DESCRIPTION	BY

ALAMO RMA

RODRIGUEZ TRANSPORTATION GROUP
CONSULTING ENGINEERS

Texas Department of Transportation
© 2010

LOOP 1604
TRAFFIC CONTROL PLAN

PHASE 3, STAGE 2

STA. 522+00(G) TO STA. 103+00(E)

SHEET 10 OF 43

	FED. RD. DIV. NO.	STATE	FEDERAL AID PROJECT NO.			HIGHWAY NO.
DGN: CHK DGN:	6	TEXAS	STP 2011(210)ES			LP 1604
DWG:	DIST.	COUNTY	CONT. NO.	SECT. NO.	JOB NO.	SHEET NO.
CHK DWG:	SAT	BEXAR	2452	01	050	92

Plotted on: 7/1/2010 3:48:17 PM

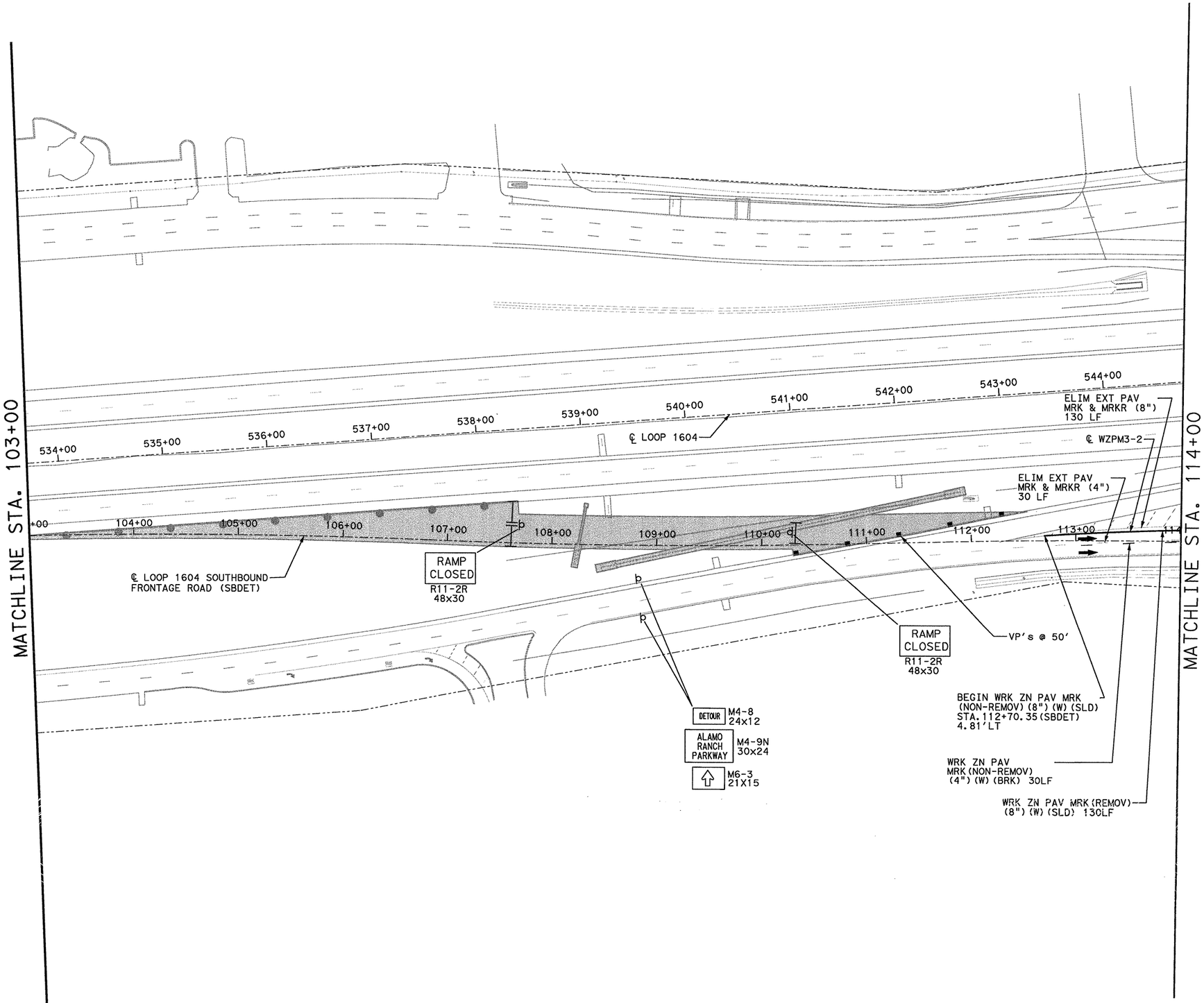

0 50 100

SCALE: 1" = 100'

LEGEND

- = NEW CONSTRUCTION THIS STAGE
- = 10" FLEXIBLE PAVEMENT REPAIR
- = PAVEMENT OBLITERATED THIS STAGE
- = CONSTRUCTED IN PREVIOUS STAGE
- M = CHANGABLE MESSAGE SIGN
- = ARROW BOARD
- = TRAFFIC FLOW ARROW
- = PLASTIC DRUMS
- = VERTICAL PANELS
- þ = TRAFFIC SIGNS
- I = TYPE III BARRICADE
- = LCTB

STATE OF TEXAS
CHRIS D. KELAREK
83300
LICENSED PROFESSIONAL ENGINEER

Chris D. Kelarek, P.E. 7/1/2010

SCALE: PLAN - 1":100'

REV. NO.	DATE	DESCRIPTION	BY

ALAMO RMA

RODRIGUEZ TRANSPORTATION GROUP
CONSULTING ENGINEERS

Texas Department of Transportation © 2010

LOOP 1604

TRAFFIC CONTROL PLAN

PHASE 3, STAGE 2

STA. 103+00(E) TO STA. 114+00(E)

SHEET 11 OF 43

DGN:	FED. RD. DIV. NO.	STATE	FEDERAL AID PROJECT NO.			HIGHWAY NO.
CHK DGN:	6	TEXAS	STP 2011(210)ES			LP 1604
DWG:	DIST.	COUNTY	CONT. NO.	SECT. NO.	JOB NO.	SHEET NO.
CHK DWG:	SAT	BEXAR	2452	01	050	93

Design Filename: p:\8380407\div\planShts\tcp\PHASE 3\7400047CP3205.dgn

Plotted on: 7/1/2010 3:48:20 PM
Design Filename: p:\8380407\div\planSht's\tcp\PHASE 3\740004TCP3206.dgn

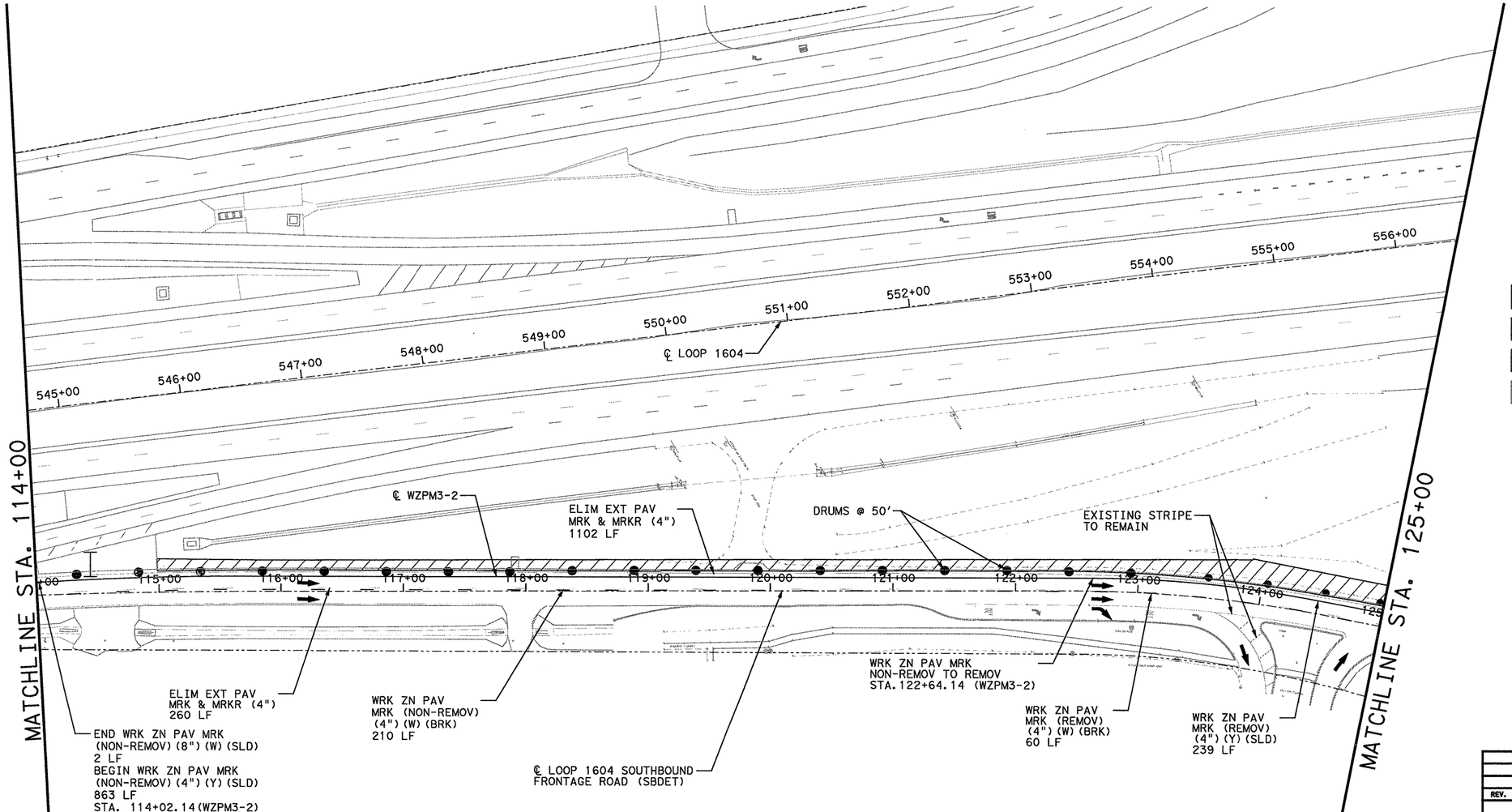

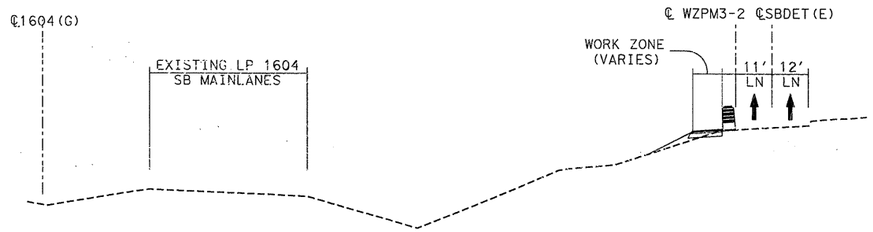

TYPICAL SECTION

STA. 115+00.00 (SBDET) - STA. 131+00.00 (SBDET)

0 50 100

SCALE: 1" = 100'

LEGEND

- = NEW CONSTRUCTION THIS STAGE
- = 10" FLEXIBLE PAVEMENT REPAIR
- = PAVEMENT OBLITERATED THIS STAGE
- = CONSTRUCTED IN PREVIOUS STAGE
- M = CHANGABLE MESSAGE SIGN
- = ARROW BOARD
- = TRAFFIC FLOW ARROW
- = PLASTIC DRUMS
- = VERTICAL PANELS
- þ = TRAFFIC SIGNS
- I = TYPE III BARRICADE
- = LCTB

STATE OF TEXAS
CHRIS D. KELAREK
83300
LICENSED
PROFESSIONAL ENGINEER

Chris D. Kelarek, P.E. 7/1/2010

SCALE: PLAN - 1":100'

REV. NO.	DATE	DESCRIPTION	BY

ALAMO RMA

RODRIGUEZ TRANSPORTATION GROUP
CONSULTING ENGINEERS

Texas Department of Transportation
© 2010

LOOP 1604
TRAFFIC CONTROL PLAN

PHASE 3, STAGE 2

STA. 114+00(E) TO STA. 125+00(E)

SHEET 12 OF 43

DGN:	FED. RD. DIV. NO.	STATE	FEDERAL AID PROJECT NO.			HIGHWAY NO.
CHK DSN:	6	TEXAS	STP 2011(210)ES			LP 1604
DWG:	DIST.	COUNTY	CONT. NO.	SECT. NO.	JOB NO.	SHEET NO.
CHK DWG:	SAT	BEXAR	2452	01	050	94

Plotted on: 7/1/2010 3:48:23 PM

Design Filename: p:\838040\dlvplanSht\stop\PHASE 3\740004TCP3207.dgn

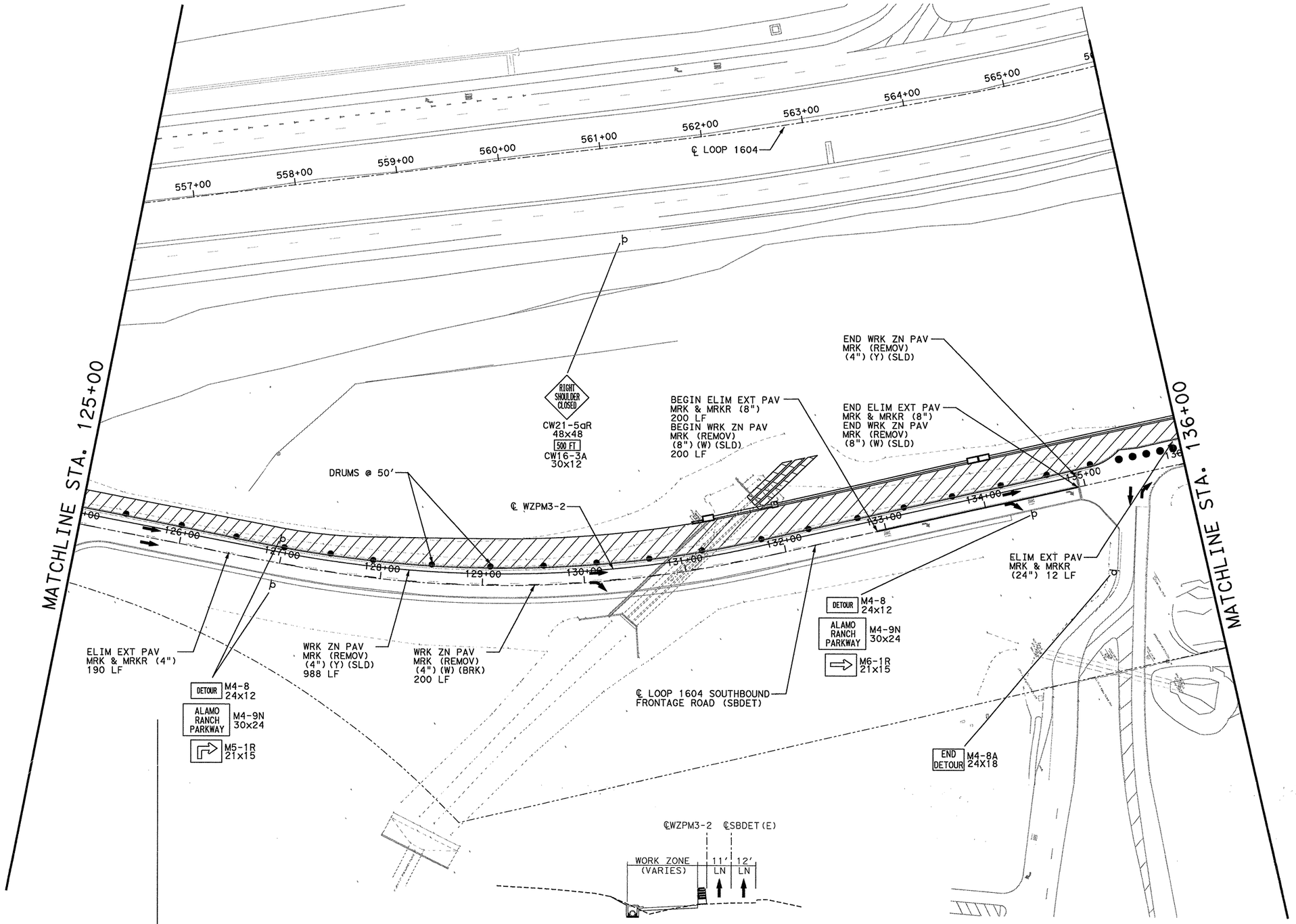

TYPICAL SECTION

STA. 131+00.00 (SBDET) - STA. 134+72.00 (SBDET)
TRANSITION 8" HMAC TY B TO 4" HMAC TY B -
STA. 134+72.00 (SBDET) TO STA. 134+97.00 (SBDET)

0 50 100
SCALE: 1" = 100'

LEGEND

- = NEW CONSTRUCTION THIS STAGE
- = 10" FLEXIBLE PAVEMENT REPAIR
- = PAVEMENT OBLITERATED THIS STAGE
- = CONSTRUCTED IN PREVIOUS STAGE
- M = CHANGABLE MESSAGE SIGN
- = ARROW BOARD
- = TRAFFIC FLOW ARROW
- = PLASTIC DRUMS
- = VERTICAL PANELS
- þ = TRAFFIC SIGNS
- I = TYPE III BARRICADE
- = LCTB

STATE OF TEXAS
CHRIS D. KELAREK
83300
LICENSED
PROFESSIONAL ENGINEER

Chris D. Kelarek, P.E. 7/1/2010

SCALE: PLAN - 1":100'

REV. NO.	DATE	DESCRIPTION	BY

ALAMO RMA

RODRIGUEZ TRANSPORTATION GROUP
CONSULTING ENGINEERS

Texas Department of Transportation
© 2010

LOOP 1604

TRAFFIC CONTROL PLAN

PHASE 3, STAGE 2

STA. 125+00(E) TO STA. 136+00(E)

SHEET 13 OF 43

DGN:	FED. RD. DIV. NO.	STATE	FEDERAL AID PROJECT NO.			HIGHWAY NO.
CHK DGN:	6	TEXAS	STP 2011(210)ES			LP 1604
DWG:	DIST.	COUNTY	CONT. NO.	SECT. NO.	JOB NO.	SHEET NO.
CHK DWG:	SAT	BEXAR	2452	01	050	95

Plotted on: 7/1/2010 3:48:26 PM

Design Filename: p:\8380407\dlv\planSht\tcp\PHASE 3\740004TCP3208.dgn

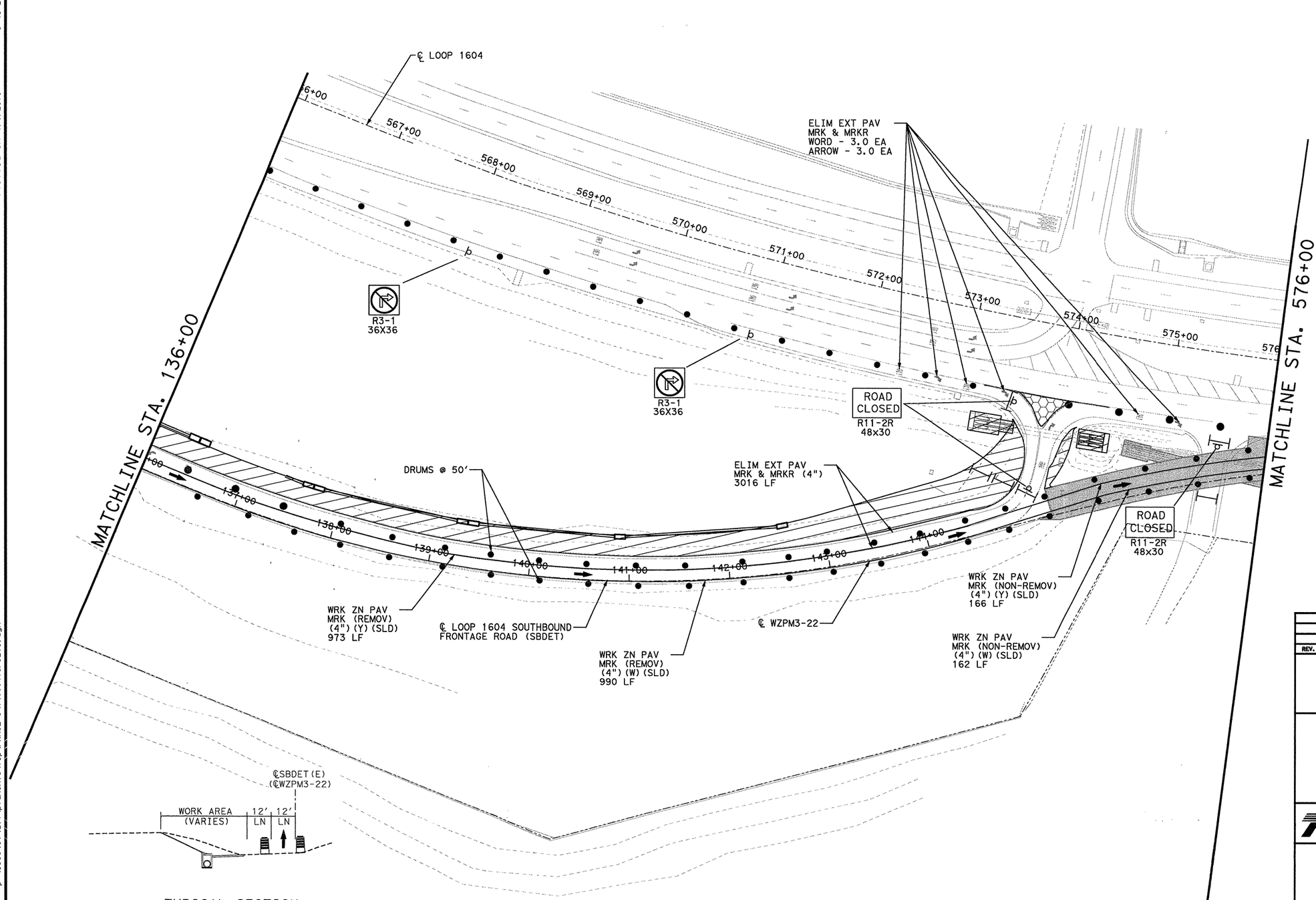

TYPICAL SECTION

STA. 134+97.00 (SBDET) - STA. 145+09.94 (SBDET)
STORM SEWER LINE "B" ENDS AT APPROXIMATE STA. 142+60.00 (SBDET)

0 50 100
SCALE: 1" = 100'

LEGEND

- = NEW CONSTRUCTION THIS STAGE
- = 10" FLEXIBLE PAVEMENT REPAIR
- = PAVEMENT OBLITERATED THIS STAGE
- = CONSTRUCTED IN PREVIOUS STAGE
- M = CHANGABLE MESSAGE SIGN
- = ARROW BOARD
- = TRAFFIC FLOW ARROW
- = PLASTIC DRUMS
- = VERTICAL PANELS
- þ = TRAFFIC SIGNS
- I = TYPE III BARRICADE
- = LCTB

STATE OF TEXAS
CHRIS D. KELAREK
83300
LICENSED
PROFESSIONAL ENGINEER

Chris D. Kelarek, P.E. 7/1/2010

SCALE: PLAN - 1":100'

REV. NO.	DATE	DESCRIPTION	BY

ALAMO RMA

RODRIGUEZ TRANSPORTATION GROUP
CONSULTING ENGINEERS

Texas Department of Transportation
© 2010

LOOP 1604
TRAFFIC CONTROL PLAN

PHASE 3, STAGE 2

STA. 136+00(E) TO STA. 576+00(G)

SHEET 14 OF 43

DGN:	FED. RD. DIV. NO.	STATE	FEDERAL AID PROJECT NO.			HIGHWAY NO.
CHK DSN:	6	TEXAS	STP 2011(210)ES			LP 1604
DWG:	DIST.	COUNTY	CONT. NO.	SECT. NO.	JOB NO.	SHEET NO.
CHK DWG:	SAT	BEXAR	2452	01	050	96

Plotted on: 8/19/2010 2:23:06 PM

Design Filename: p:\838040?\dlv\planSht s\top\PHASE 3\740004TCP3209.dgn

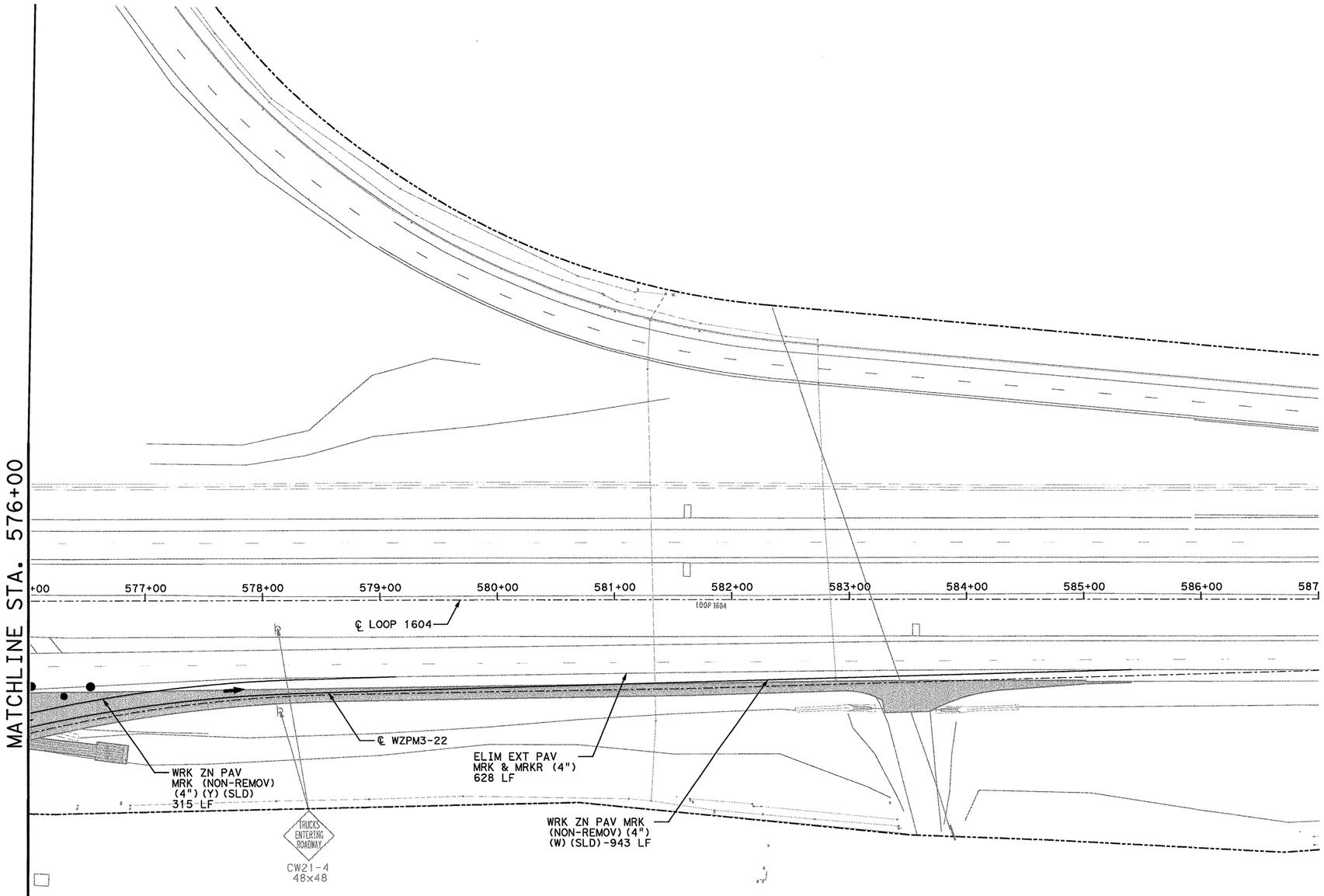

LEGEND

- = NEW CONSTRUCTION THIS STAGE
- = 10" FLEXIBLE PAVEMENT REPAIR
- = PAVEMENT OBLITERATED THIS STAGE
- = CONSTRUCTED IN PREVIOUS STAGE
- M = CHANGABLE MESSAGE SIGN
- = ARROW BOARD
- = TRAFFIC FLOW ARROW
- = PLASTIC DRUMS
- = VERTICAL PANELS
- = TRAFFIC SIGNS
- = TYPE III BARRICADE
- = LCTB

STATE OF TEXAS
CHRIS D. KELAREK
83300
LICENSED PROFESSIONAL ENGINEER

Chris D. Kelarek, P.E. 8/19/2010

SCALE: PLAN - 1":100'

REV. NO.	DATE	DESCRIPTION	BY

ALAMO RMA

RODRIGUEZ TRANSPORTATION GROUP
CONSULTING ENGINEERS

Texas Department of Transportation
© 2010

LOOP 1604

TRAFFIC CONTROL PLAN

PHASE 3, STAGE 2

STA. 576+00(G) TO STA. 587+00(G)

SHEET 15 OF 43

DGN:	FED. RD. DIV. NO.	STATE	FEDERAL AID PROJECT NO.			HIGHWAY NO.
CHK DGN:	6	TEXAS	STP 2011(210)ES			LP 1604
DWG:	DIST.	COUNTY	CONT. NO.	SECT. NO.	JOB NO.	SHEET NO.
CHK DWG:	SAT	BEXAR	2452	01	050	97

Plotted on: 7/1/2010 3:48:32 PM

Design Filename: p:\8380407\dlv\plansshts\top\PHASE 3\740004TCP3301.dgn

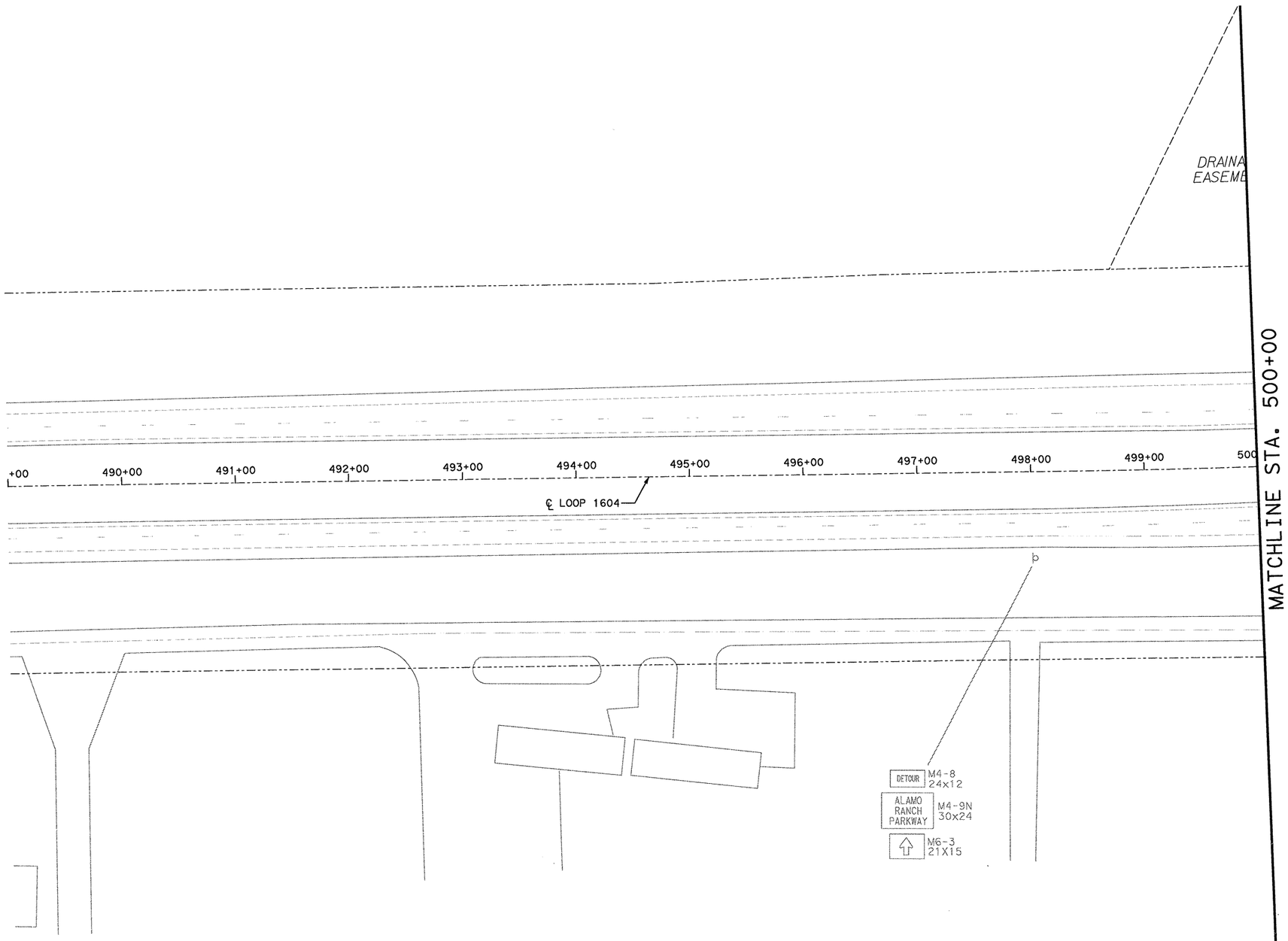

0 50 100

SCALE: 1" = 100'

LEGEND

- = NEW CONSTRUCTION THIS STAGE
- = 10" FLEXIBLE PAVEMENT REPAIR
- = PAVEMENT OBLITERATED THIS STAGE
- = CONSTRUCTED IN PREVIOUS STAGE
- M = CHANGABLE MESSAGE SIGN
- = ARROW BOARD
- = TRAFFIC FLOW ARROW
- = PLASTIC DRUMS
- = VERTICAL PANELS
- þ = TRAFFIC SIGNS
- I = TYPE III BARRICADE
- = LCTB

STATE OF TEXAS
CHRIS D. KELAREK
83300
LICENSED PROFESSIONAL ENGINEER

Chris D. Kelarek, P.E. 7/1/2010

SCALE: PLAN - 1":100'

REV. NO.	DATE	DESCRIPTION	BY

ALAMO RMA

RODRIGUEZ TRANSPORTATION GROUP
CONSULTING ENGINEERS

Texas Department of Transportation
© 2010

LOOP 1604
TRAFFIC CONTROL PLAN

PHASE 3, STAGE 3A

BEGINNING TO STA. 500+00(G)

SHEET 16 OF 43

DGN:	FED. RD. DIV. NO.	STATE	FEDERAL AID PROJECT NO.			HIGHWAY NO.
CHK DGN:	6	TEXAS	STP 2011(210)ES			LP 1604
DWG:	DIST.	COUNTY	CONT. NO.	SECT. NO.	JOB NO.	SHEET NO.
CHK DWG:	SAT	BEXAR	2452	01	050	98

Plotted on: 7/1/2010 3:48:35 PM

Design Filename: p:\8380407\dlv\planSht s\top_PHASE 3\740004TCP3302.dgn

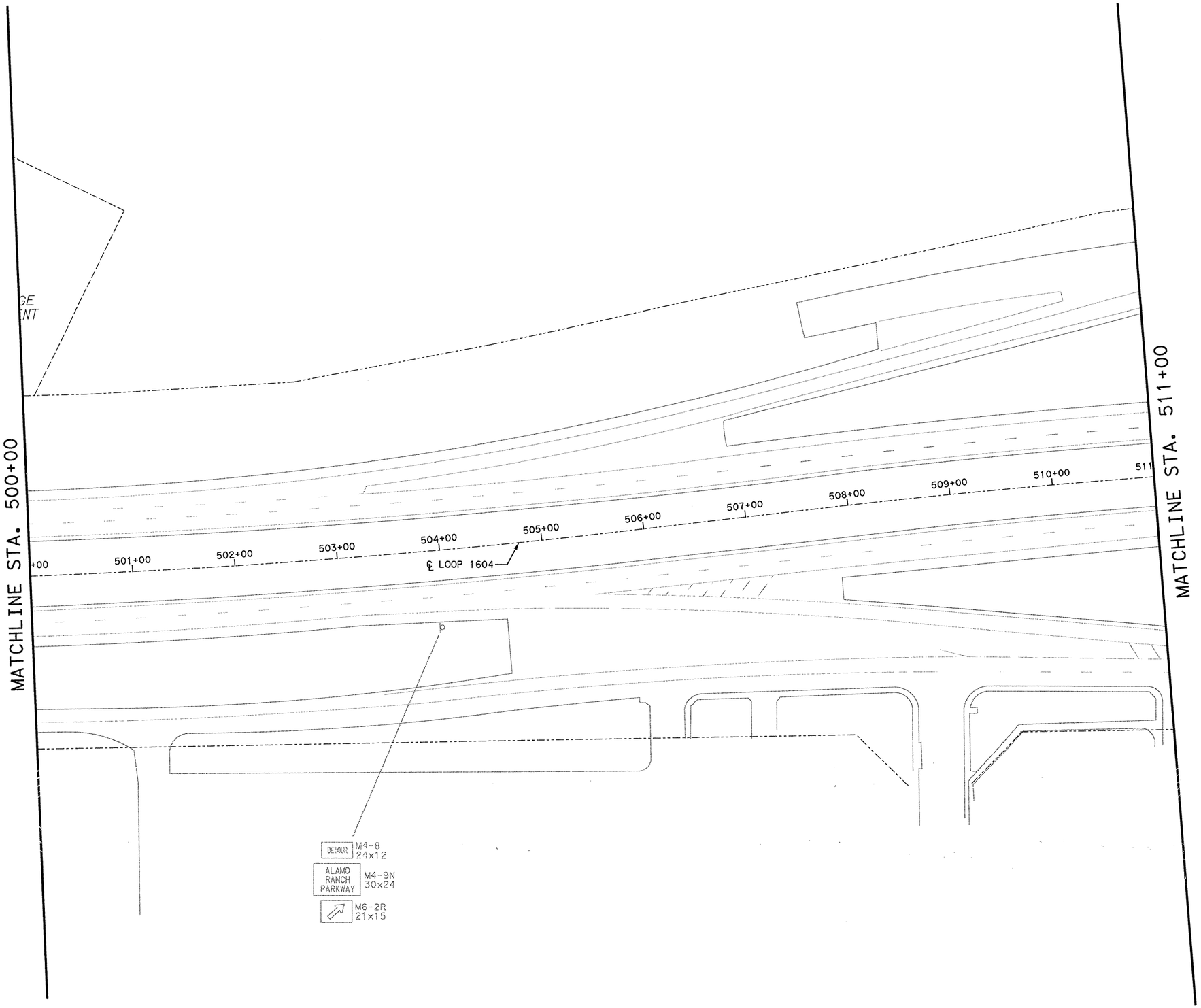

0 50 100

SCALE: 1" = 100'

LEGEND

- = NEW CONSTRUCTION THIS STAGE
- = 10" FLEXIBLE PAVEMENT REPAIR
- = PAVEMENT OBLITERATED THIS STAGE
- = CONSTRUCTED IN PREVIOUS STAGE
- M = CHANGABLE MESSAGE SIGN
- = ARROW BOARD
- = TRAFFIC FLOW ARROW
- = PLASTIC DRUMS
- = VERTICAL PANELS
- = TRAFFIC SIGNS
- = TYPE III BARRICADE
- = LCTB

STATE OF TEXAS
CHRIS D. KELAREK
83300
LICENSED
PROFESSIONAL ENGINEER

Chris D. Kelarek, P.E. 7/1/2010

SCALE: PLAN - 1":100'

REV. NO.	DATE	DESCRIPTION	BY

ALAMO RMA

RODRIGUEZ TRANSPORTATION GROUP
CONSULTING ENGINEERS

Texas Department of Transportation © 2010

LOOP 1604
TRAFFIC CONTROL PLAN

PHASE 3, STAGE 3A

STA. 500+00(G) TO STA. 511+00(G)

SHEET 17 OF 43

DGN:	FED. RD. DIV. NO.	STATE	FEDERAL AID PROJECT NO.			HIGHWAY NO.
CKK DGN:	6	TEXAS	STP 2011(210)ES			LP 1604
DWG:	DIST.	COUNTY	CONT. NO.	SECT. NO.	JOB NO.	SHEET NO.
CKK DWG:	SAT	BEXAR	2452	01	050	99

Plotted on: 7/1/2010 3:48:37 PM

Design Filename: p:\8380407\dlvplanSht's\top\PHASE 3\T40004TCP3303.dgn

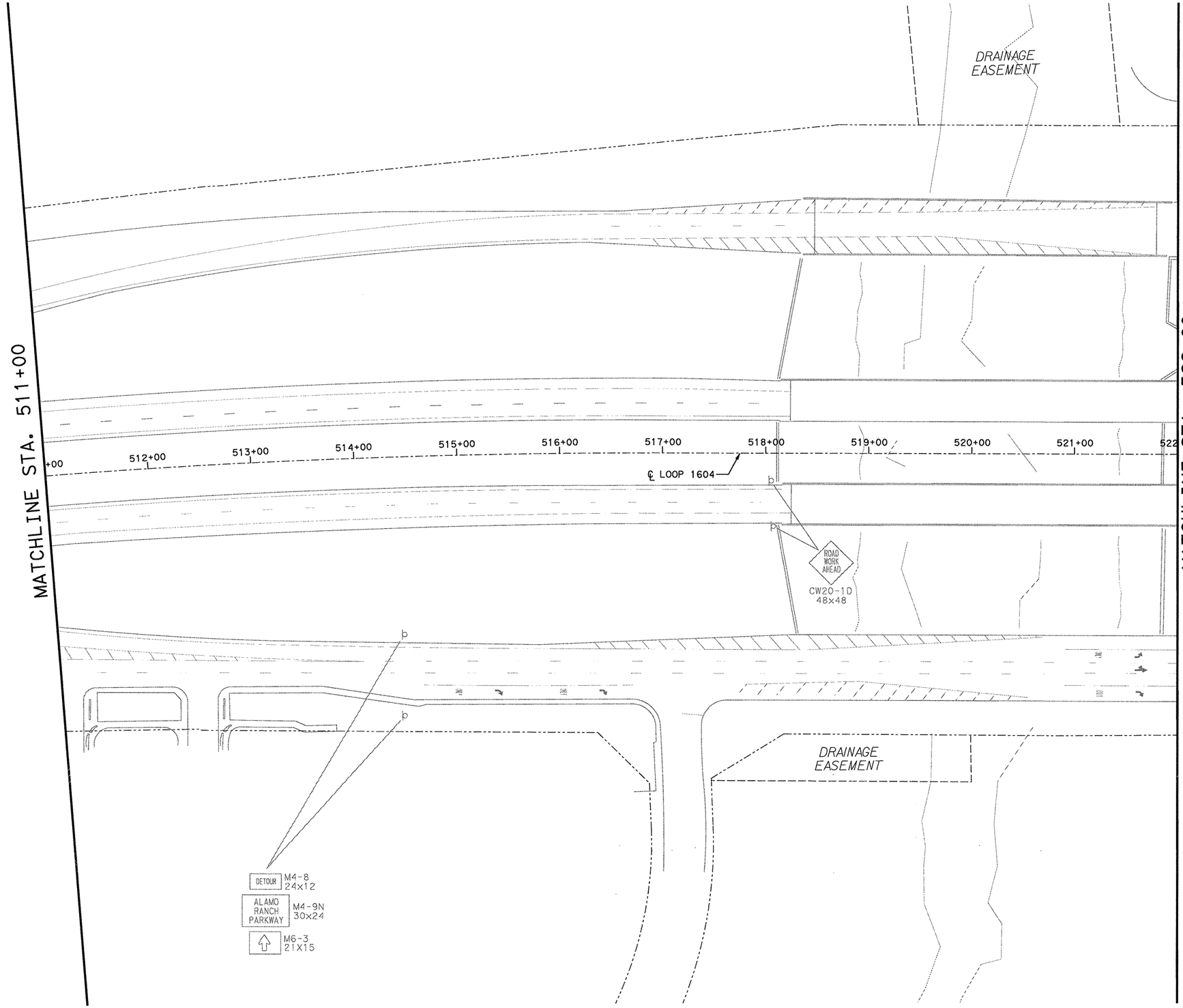

0 50 100

SCALE: 1" = 100'

LEGEND

- = NEW CONSTRUCTION THIS STAGE
- = 10" FLEXIBLE PAVEMENT REPAIR
- = PAVEMENT OBLITERATED THIS STAGE
- = CONSTRUCTED IN PREVIOUS STAGE
- M = CHANGABLE MESSAGE SIGN
- = ARROW BOARD
- = TRAFFIC FLOW ARROW
- = PLASTIC DRUMS
- = VERTICAL PANELS
- = TRAFFIC SIGNS
- = TYPE III BARRICADE
- = LCTB

STATE OF TEXAS
CHRIS D. KELAREK
83300
LICENSED
PROFESSIONAL ENGINEER

Chris D. Kelarek, P.E. 7/1/2010

SCALE: PLAN - 1":100'

REV. NO.	DATE	DESCRIPTION	BY

ALAMO RMA

RODRIGUEZ TRANSPORTATION GROUP
CONSULTING ENGINEERS

Texas Department of Transportation
© 2010

LOOP 1604
TRAFFIC CONTROL PLAN

PHASE 3, STAGE 3A

STA. 511+00(G) TO STA. 522+00(G)

SHEET 18 OF 43

DGN:	FED. RD. DIV. NO.	STATE	FEDERAL AID PROJECT NO.			HIGHWAY NO.
CHK DGN:	6	TEXAS	STP 2011(210)ES			LP 1604
DWG:	DIST.	COUNTY	CONT. NO.	SECT. NO.	JOB NO.	SHEET NO.
CHK DWG:	SAT	BEXAR	2452	01	050	100

Plotted on: 7/1/2010 3:48:40 PM

Design Filename: p:\8380407\dlv\planSht's\tcp\PHASE 3\740004TCP3304.dgn

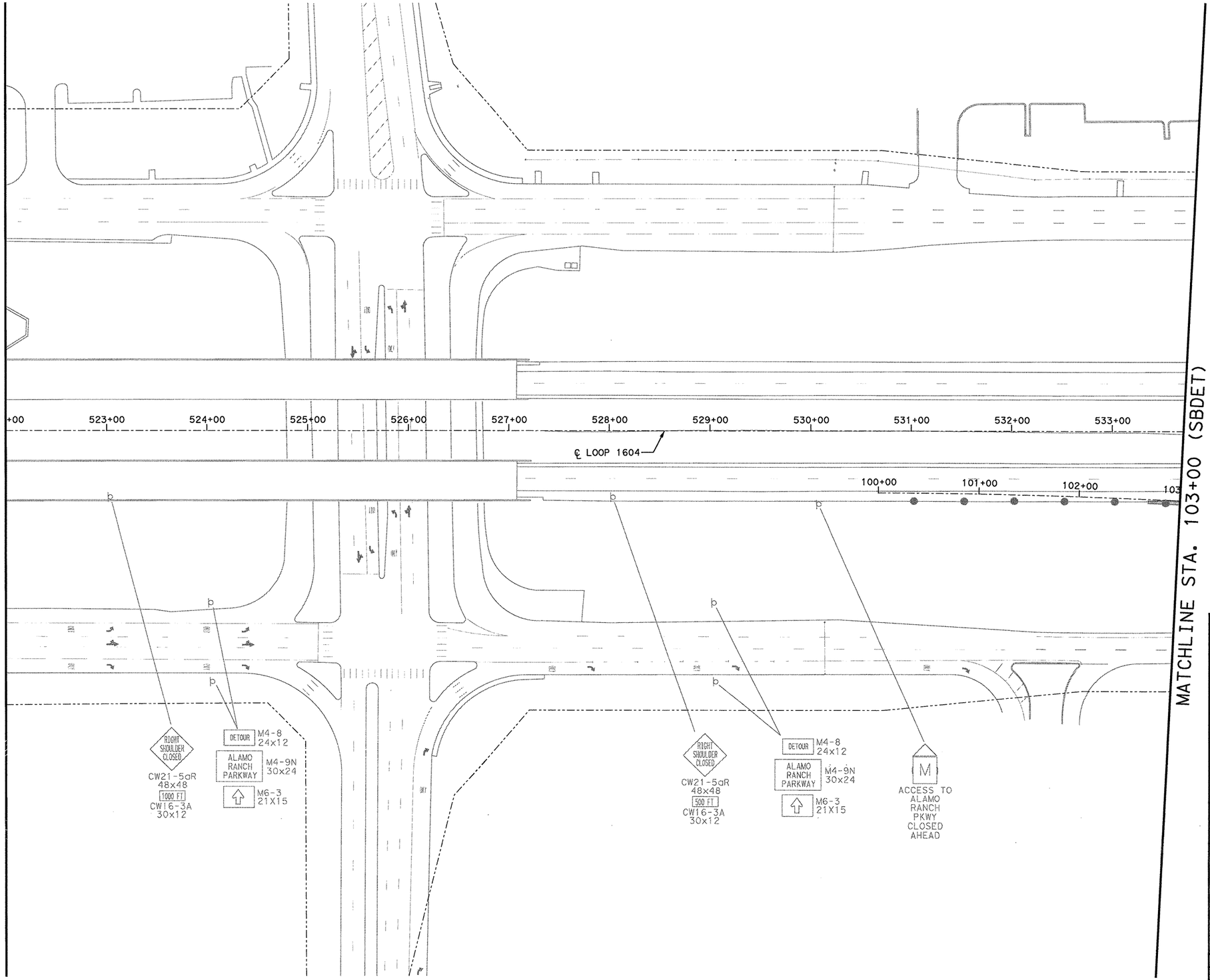

0 50 100

SCALE: 1" = 100'

LEGEND

- = NEW CONSTRUCTION THIS STAGE
- = 10" FLEXIBLE PAVEMENT REPAIR
- = PAVEMENT OBLITERATED THIS STAGE
- = CONSTRUCTED IN PREVIOUS STAGE
- M = CHANGABLE MESSAGE SIGN
- = ARROW BOARD
- = TRAFFIC FLOW ARROW
- = PLASTIC DRUMS
- = VERTICAL PANELS
- þ = TRAFFIC SIGNS
- I = TYPE III BARRICADE
- = LCTB

STATE OF TEXAS
CHRIS D. KELAREK
83300
LICENSED PROFESSIONAL ENGINEER

Chris D. Kelarek, P.E. 7/1/2010

SCALE: PLAN - 1":100'

REV. NO.	DATE	DESCRIPTION	BY

ALAMO RMA

RODRIGUEZ TRANSPORTATION GROUP
CONSULTING ENGINEERS

Texas Department of Transportation © 2010

LOOP 1604
TRAFFIC CONTROL PLAN

PHASE 3, STAGE 3A

STA. 522+00(G) TO STA. 103+00(E)

SHEET 19 OF 43

DGN:	FED. RD. DIV. NO.	STATE	FEDERAL AID PROJECT NO.			HIGHWAY NO.
CHK ISM:	6	TEXAS	STP 2011(210)ES			LP 1604
DWG:	DIST.	COUNTY	CONT. NO.	SECT. NO.	JOB NO.	SHEET NO.
CHK DWG:	SAT	BEXAR	2452	01	050	101

Plotted on: 7/1/2010 3:48:43 PM
Design Filename: p:\8380407\dlv\planSht's\top\PHASE 3\740004TCP3305.dgn

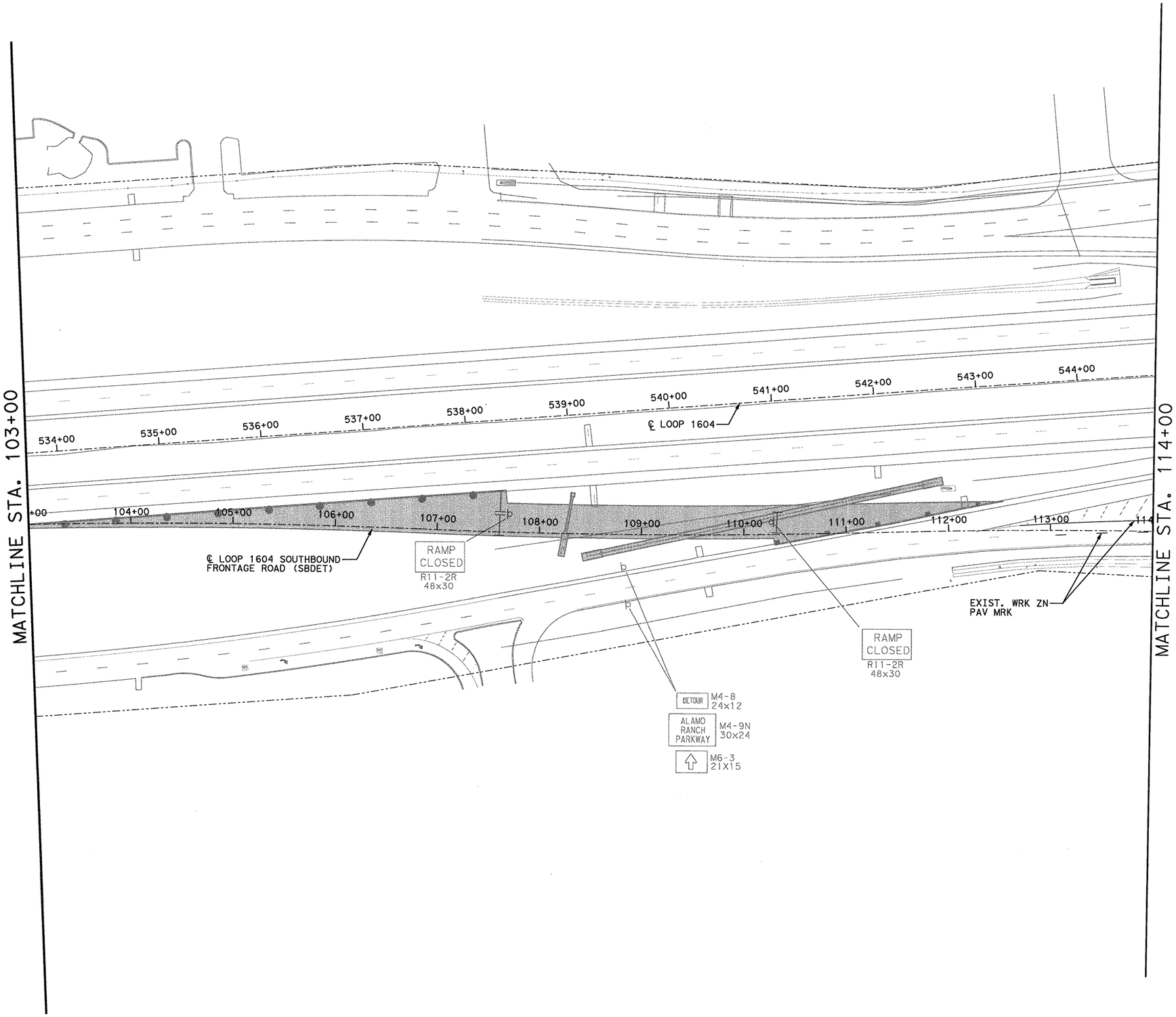

0 50 100
SCALE: 1" = 100'

LEGEND

- = NEW CONSTRUCTION THIS STAGE
- = 10" FLEXIBLE PAVEMENT REPAIR
- = PAVEMENT OBLITERATED THIS STAGE
- = CONSTRUCTED IN PREVIOUS STAGE
- M = CHANGABLE MESSAGE SIGN
- = ARROW BOARD
- = TRAFFIC FLOW ARROW
- = PLASTIC DRUMS
- = VERTICAL PANELS
- þ = TRAFFIC SIGNS
- I = TYPE III BARRICADE
- = LCTB

STATE OF TEXAS
CHRIS D. KELAREK
83300
LICENSED PROFESSIONAL ENGINEER
Chris D. Kelarek, P.E. 7/1/2010

SCALE: PLAN - 1":100'

REV. NO.	DATE	DESCRIPTION	BY

ALAMO RMA

RODRIGUEZ TRANSPORTATION GROUP
CONSULTING ENGINEERS

Texas Department of Transportation
© 2010

LOOP 1604
TRAFFIC CONTROL PLAN

PHASE 3, STAGE 3A

STA. 103+00(E) TO STA. 114+00(E)

SHEET 20 OF 43

DGN:	FED. RD. DIV. NO.	STATE	FEDERAL AID PROJECT NO.			HIGHWAY NO.
CHK DSN:	6	TEXAS	STP 2011(210)ES			LP 1604
DWG:	DIST.	COUNTY	CONT. NO.	SECT. NO.	JOB NO.	SHEET NO.
CHK DWG:	SAT	BEXAR	2452	01	050	102

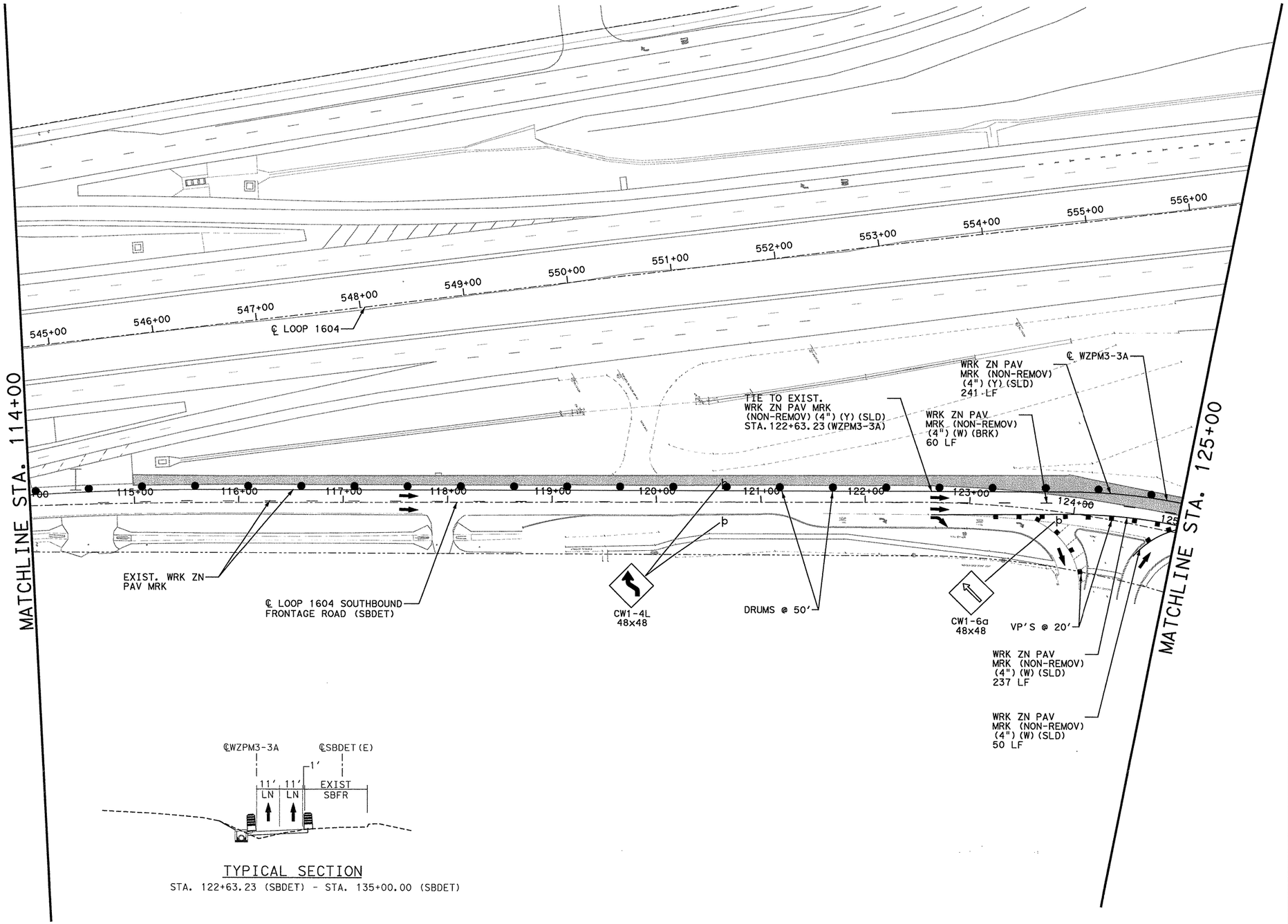

TYPICAL SECTION

STA. 122+63.23 (SBDET) - STA. 135+00.00 (SBDET)

0 50 100

SCALE: 1" = 100'

LEGEND

- = NEW CONSTRUCTION THIS STAGE
- = 10" FLEXIBLE PAVEMENT REPAIR
- = PAVEMENT OBLITERATED THIS STAGE
- = CONSTRUCTED IN PREVIOUS STAGE
- M = CHANGABLE MESSAGE SIGN
- = ARROW BOARD
- = TRAFFIC FLOW ARROW
- = PLASTIC DRUMS
- = VERTICAL PANELS
- = TRAFFIC SIGNS
- = TYPE III BARRICADE
- = LCTB

STATE OF TEXAS
CHRIS D. KELAREK
83300
LICENSED
PROFESSIONAL ENGINEER

Chris D. Kelarek, P.E. 7/1/2010

SCALE: PLAN - 1":100'

REV. NO.	DATE	DESCRIPTION	BY

ALAMO RMA

RODRIGUEZ TRANSPORTATION GROUP
CONSULTING ENGINEERS

Texas Department of Transportation
© 2010

LOOP 1604
TRAFFIC CONTROL PLAN

PHASE 3, STAGE 3A

STA. 114+00(E) TO STA. 125+00(E)

SHEET 21 OF 43

DGN:	FED. RD. DIV. NO.	STATE	FEDERAL AID PROJECT NO.			HIGHWAY NO.
CHK DGN:	6	TEXAS	STP 2011(210)ES			LP 1604
DWG:	DIST.	COUNTY	CONT. NO.	SECT. NO.	JOB NO.	SHEET NO.
CHK DWG:	SAT	BEXAR	2452	01	050	103

Design Filename: p:\8380407\dlv\planShts\tcp\PHASE 3\740004TCP3306.dgn

Plotted on: 7/1/2010 3:48:46 PM

Plotted on: 7/1/2010 3:48:50 PM

Design Filename: p:\8380407\dlv\planShts\top\PHASE 3\T40004TCP3307.dgn

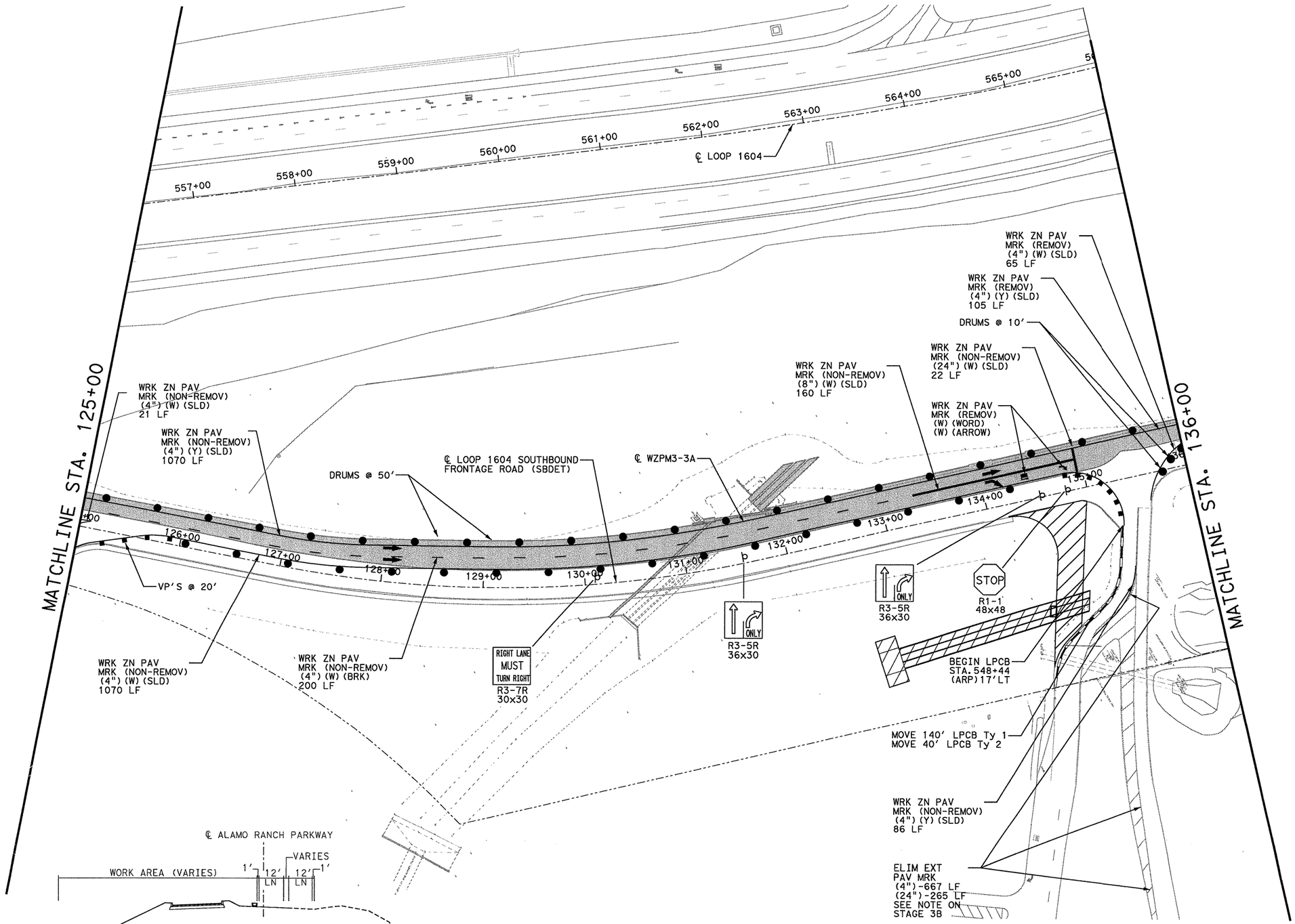

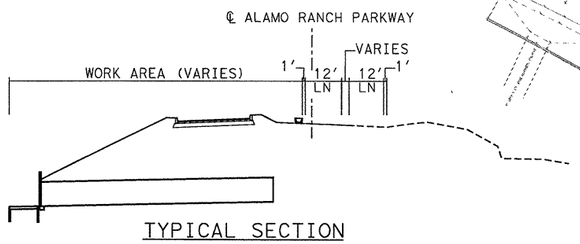

TYPICAL SECTION

STA. 548+13.00 (ARP) - STA. 549+63.00 (ARP)

0 50 100

SCALE: 1" = 100′

LEGEND

- = NEW CONSTRUCTION THIS STAGE
- = 10" FLEXIBLE PAVEMENT REPAIR
- = PAVEMENT OBLITERATED THIS STAGE
- = CONSTRUCTED IN PREVIOUS STAGE
- M = CHANGABLE MESSAGE SIGN
- = ARROW BOARD
- = TRAFFIC FLOW ARROW
- = PLASTIC DRUMS
- = VERTICAL PANELS
- þ = TRAFFIC SIGNS
- I = TYPE III BARRICADE
- = LCTB

STATE OF TEXAS
CHRIS D. KELAREK
83300
LICENSED PROFESSIONAL ENGINEER

Chris D. Kelarek, P.E. 7/1/2010

SCALE: PLAN - 1":100′

REV. NO.	DATE	DESCRIPTION	BY

ALAMO RMA

RODRIGUEZ TRANSPORTATION GROUP
CONSULTING ENGINEERS

Texas Department of Transportation © 2010

LOOP 1604
TRAFFIC CONTROL PLAN

PHASE 3, STAGE 3A

STA. 125+00(E) TO STA. 136+00(E)

SHEET 22 OF 43

DGN:	FED. RD. DIV. NO.	STATE	FEDERAL AID PROJECT NO.			HIGHWAY NO.
CHK DGN:	6	TEXAS	STP 2011(210)ES			LP 1604
DWG:	DIST.	COUNTY	CONT. NO.	SECT. NO.	JOB NO.	SHEET NO.
CHK DWG:	SAT	BEXAR	2452	01	050	104

Plotted on: 7/1/2010 3:48:53 PM
Design Filename: p:\8380407\civ\plansht\tcp\PHASE 3\7400041CP3308.dgn

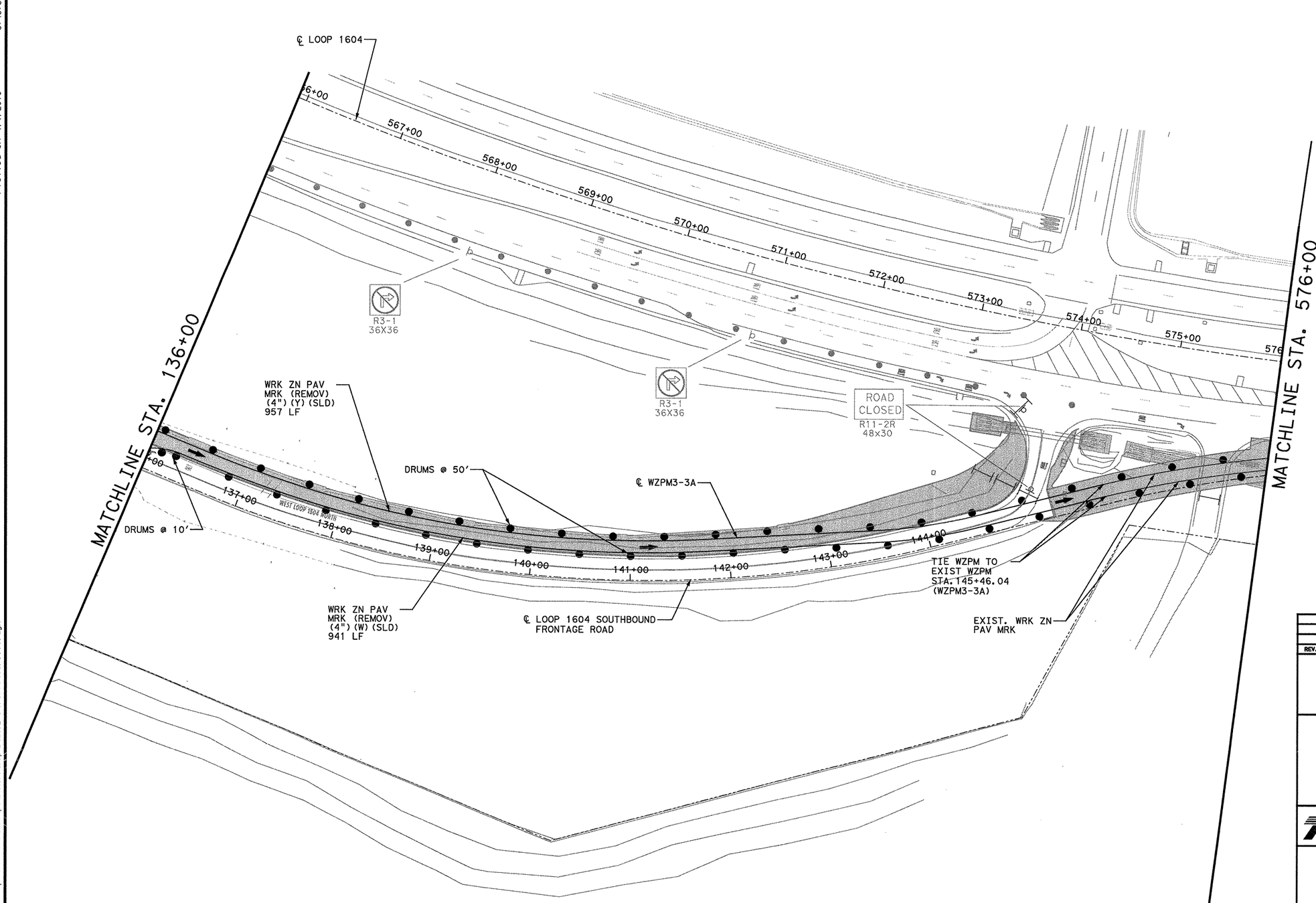

0 50 100
SCALE: 1" = 100'

LEGEND

- = NEW CONSTRUCTION THIS STAGE
- = 10" FLEXIBLE PAVEMENT REPAIR
- = PAVEMENT OBLITERATED THIS STAGE
- = CONSTRUCTED IN PREVIOUS STAGE
- M = CHANGABLE MESSAGE SIGN
- = ARROW BOARD
- = TRAFFIC FLOW ARROW
- = PLASTIC DRUMS
- = VERTICAL PANELS
- = TRAFFIC SIGNS
- = TYPE III BARRICADE
- = LCTB

STATE OF TEXAS
CHRIS D. KELAREK
83300
LICENSED
PROFESSIONAL ENGINEER

Chris D. Kelarek, P.E. 7/1/2010

SCALE: PLAN - 1":100'

REV. NO.	DATE	DESCRIPTION	BY

ALAMO RMA

RODRIGUEZ TRANSPORTATION GROUP
CONSULTING ENGINEERS

Texas Department of Transportation
© 2010

LOOP 1604

TRAFFIC CONTROL PLAN

PHASE 3, STAGE 3A

STA. 136+00(E) TO STA. 576+00(G)

SHEET 23 OF 43

DGN:	FED. RD. DIV. NO.	STATE	FEDERAL AID PROJECT NO.			HIGHWAY NO.
CK:	6	TEXAS	STP 2011(210)ES			LP 1604
DW:	DIST.	COUNTY	CONT. NO.	SECT. NO.	JOB NO.	SHEET NO.
CK:	SAT	BEXAR	2452	01	050	105

Plotted on: 8/19/2010 2:23:08 PM

Design Filename: p:\8380407\dlv\planShts\top\PHASE 3\740004TCP3309.dgn

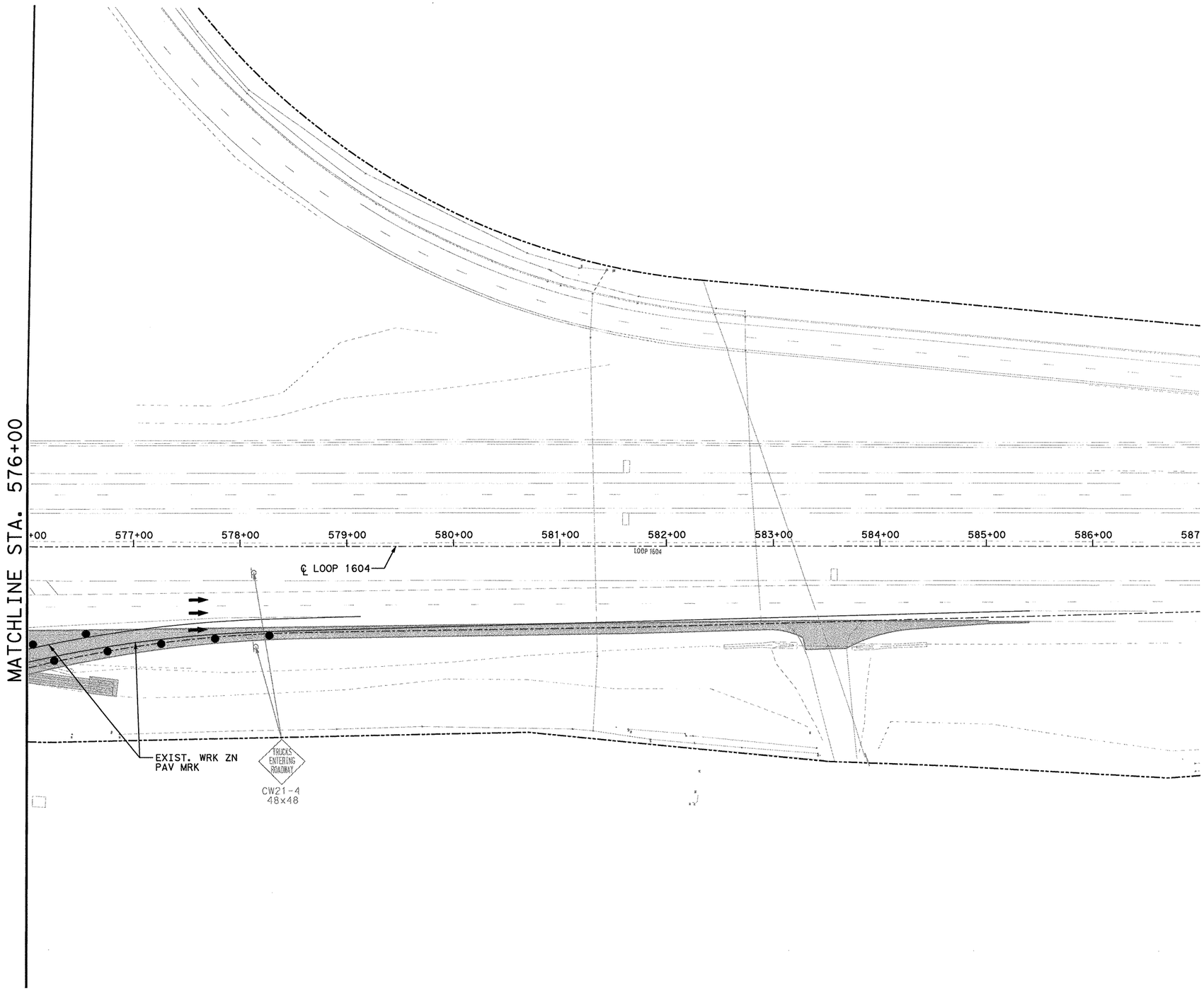

LEGEND

- = NEW CONSTRUCTION THIS STAGE
- = 10" FLEXIBLE PAVEMENT REPAIR
- = PAVEMENT OBLITERATED THIS STAGE
- = CONSTRUCTED IN PREVIOUS STAGE
- (M) = CHANGABLE MESSAGE SIGN
- = ARROW BOARD
- = TRAFFIC FLOW ARROW
- ● = PLASTIC DRUMS
- ■ = VERTICAL PANELS
- þ = TRAFFIC SIGNS
- I = TYPE III BARRICADE
- = LCTB

STATE OF TEXAS
CHRIS D. KELAREK
83300
LICENSED
PROFESSIONAL ENGINEER

Chris D. Kelarek, P.E. 8/19/2010

SCALE: PLAN - 1":100'

REV. NO.	DATE	DESCRIPTION	BY

ALAMO RMA

RODRIGUEZ TRANSPORTATION GROUP
CONSULTING ENGINEERS

Texas Department of Transportation
© 2010

LOOP 1604
TRAFFIC CONTROL PLAN

PHASE 3, STAGE 3A

STA. 576+00(G) TO STA. 587+00(G)

SHEET 24 OF 43

DGN:	FED. RD. DIV. NO.	STATE	FEDERAL AID PROJECT NO.			HIGHWAY NO.
CKE DGN:	6	TEXAS	STP 2011(210)ES			LP 1604
DWG:	DIST.	COUNTY	CONT. NO.	SECT. NO.	JOB NO.	SHEET NO.
CKE DWG:	SAT	BEXAR	2452	01	050	106

Plotted on: 7/1/2010 3:48:58 PM
Design Filename: p:\8380407\div\planSht\stv1cp\PHASE 3\7400047CP3314.dgn

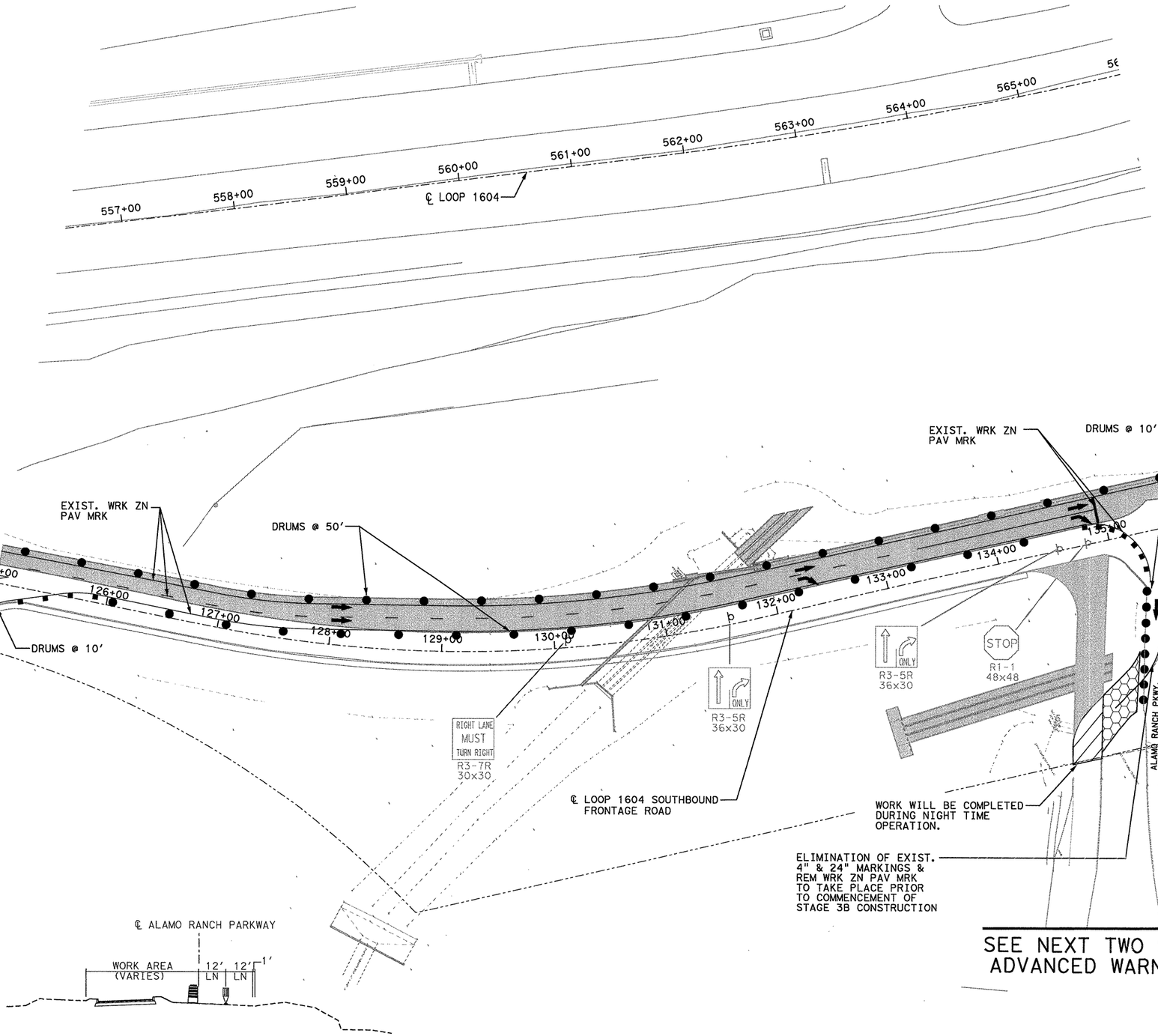

SEE NEXT TWO SHEETS FOR ADVANCED WARNING SIGNS

TYPICAL SECTION

STA. 549+63.00 (ARP) - STA. 550+05.00 (ARP)
STA. 548+13.00 (ARP) - STA. 560+40.00 (ARP) - DETOUR LIMITS

0 50 100
SCALE: 1" = 100'

LEGEND

- = NEW CONSTRUCTION THIS STAGE
- = 10" FLEXIBLE PAVEMENT REPAIR
- = PAVEMENT OBLITERATED THIS STAGE
- = CONSTRUCTED IN PREVIOUS STAGE
- M = CHANGABLE MESSAGE SIGN
- = ARROW BOARD
- = TRAFFIC FLOW ARROW
- = PLASTIC DRUMS
- = VERTICAL PANELS
- þ = TRAFFIC SIGNS
- I = TYPE III BARRICADE
- = LCTB

STATE OF TEXAS
CHRIS D. KELAREK
83300
LICENSED PROFESSIONAL ENGINEER
Chris D. Kelarek, P.E. 7/1/2010

SCALE: PLAN - 1":100'

REV. NO.	DATE	DESCRIPTION	BY

ALAMO RMA

RODRIGUEZ TRANSPORTATION GROUP
CONSULTING ENGINEERS

Texas Department of Transportation
© 2010

LOOP 1604
TRAFFIC CONTROL PLAN

PHASE 3, STAGE 3B

STA. 125+00(E) TO STA. 136+00(E)

SHEET 25 OF 43

DGN:	FED. RD. DIV. NO.	STATE	FEDERAL AID PROJECT NO.			HIGHWAY NO.
CHK DGN:	6	TEXAS	STP 2011(210)ES			LP 1604
DWG:	DIST.	COUNTY	CONT. NO.	SECT. NO.	JOB NO.	SHEET NO.
CHK DWG:	SAT	BEXAR	2452	01	050	107

Plotted on: 7/1/2010 3:49:01 PM

Design Filename: p:\8380407\dlv\plansht\tcp\PHASE 3\7400041CP3315.dgn

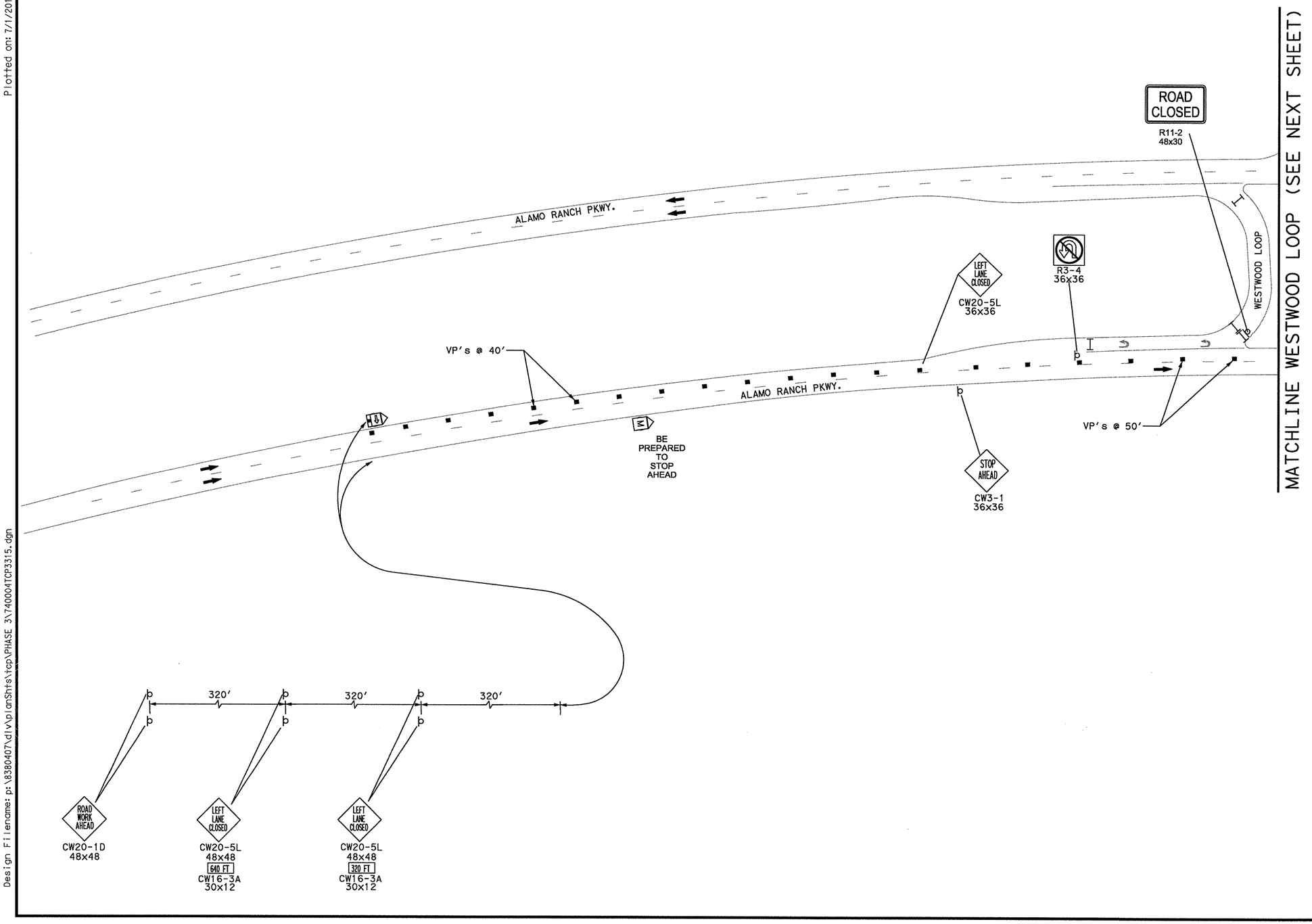

0 50 100

SCALE: 1" = 100'

LEGEND

- = NEW CONSTRUCTION THIS STAGE
- = 10" FLEXIBLE PAVEMENT REPAIR
- = PAVEMENT OBLITERATED THIS STAGE
- = CONSTRUCTED IN PREVIOUS STAGE
- M = CHANGABLE MESSAGE SIGN
- = ARROW BOARD
- = TRAFFIC FLOW ARROW
- = PLASTIC DRUMS
- = VERTICAL PANELS
- þ = TRAFFIC SIGNS
- I = TYPE III BARRICADE
- = LCTB

STATE OF TEXAS
CHRIS D. KELAREK
83300
LICENSED PROFESSIONAL ENGINEER

Chris D. Kelarek, P.E. 7/1/2010

SCALE: PLAN - 1":100'

REV. NO.	DATE	DESCRIPTION	BY

ALAMO RMA

RODRIGUEZ TRANSPORTATION GROUP
CONSULTING ENGINEERS

Texas Department of Transportation © 2010

LOOP 1604
TRAFFIC CONTROL PLAN
PHASE 3, STAGE 3B
ALAMO RANCH DETOUR

SHEET 26 OF 43

DGN:	FED. RD. DIV. NO.	STATE	FEDERAL AID PROJECT NO.			HIGHWAY NO.
CK: DGN:	6	TEXAS	STP 2011(210)ES			LP 1604
DWG:	DIST.	COUNTY	CONT. NO.	SECT. NO.	JOB NO.	SHEET NO.
CK: DWG:	SAT	BEXAR	2452	01	050	108

Plotted on: 7/1/2010 3:49:04 PM

Design Filename: p:\838040?\dlv\planSht's\top\PHASE 3\7400041CP3316.dgn

MATCHLINE WESTWOOD LOOP (SEE PREVIOUS SHEET)

WESTWOOD LOOP

ALAMO RANCH PKWY.

VP's @ 10'

R3-4
36x36

ROAD CLOSED
R11-2
48x30

ONLY
R3-5R
30x36

STOP AHEAD
CW3-1
36x36

ROAD CLOSED

STOP
R1-1
36x36

VP's @ 10'

ALAMO RANCH PKWY.

VP's @ 50'

0 50 100
SCALE: 1" = 100'

LEGEND

- = NEW CONSTRUCTION THIS STAGE
- = 10" FLEXIBLE PAVEMENT REPAIR
- = PAVEMENT OBLITERATED THIS STAGE
- = CONSTRUCTED IN PREVIOUS STAGE
- M = CHANGABLE MESSAGE SIGN
- = ARROW BOARD
- = TRAFFIC FLOW ARROW
- = PLASTIC DRUMS
- = VERTICAL PANELS
- = TRAFFIC SIGNS
- = TYPE III BARRICADE
- = LCTB

STATE OF TEXAS
CHRIS D. KELAREK
83300
LICENSED
PROFESSIONAL ENGINEER

Chris D. Kelarek, P.E. 7/1/2010

SCALE: PLAN - 1":100'

REV. NO.	DATE	DESCRIPTION	BY

ALAMO RMA

RODRIGUEZ TRANSPORTATION GROUP
CONSULTING ENGINEERS

Texas Department of Transportation
© 2010

LOOP 1604
TRAFFIC CONTROL PLAN

PHASE 3, STAGE 3B
ALAMO RANCH DETOUR

SHEET 27 OF 43

DGN:	FED. RD. DIV. NO.	STATE	FEDERAL AID PROJECT NO.			HIGHWAY NO.
CHK DGN:	6	TEXAS	STP 2011(210)ES			LP 1604
DWG:	DIST.	COUNTY	CONT. NO.	SECT. NO.	JOB NO.	SHEET NO.
CHK DWG:	SAT	BEXAR	2452	01	050	109

Plotted on: 7/1/2010 3:49:08 PM
Design Filename: p:\8380407\dlv\plan\hts\top\PHASE 3\7400047CP3404.dgn

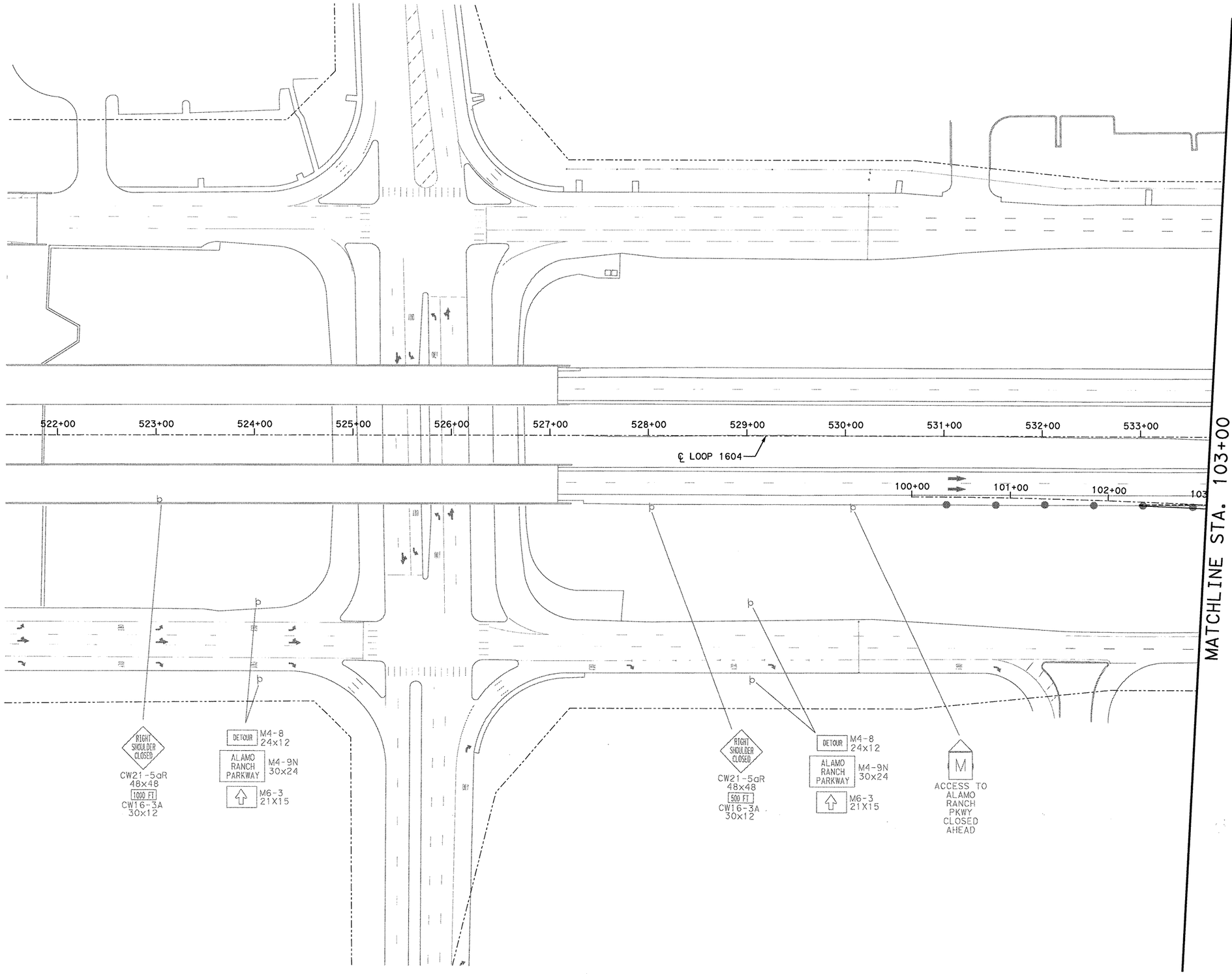

0 50 100
SCALE: 1" = 100'

LEGEND

- = NEW CONSTRUCTION THIS STAGE
- = 10" FLEXIBLE PAVEMENT REPAIR
- = PAVEMENT OBLITERATED THIS STAGE
- = CONSTRUCTED IN PREVIOUS STAGE
- M = CHANGABLE MESSAGE SIGN
- = ARROW BOARD
- = TRAFFIC FLOW ARROW
- ● = PLASTIC DRUMS
- ■ = VERTICAL PANELS
- þ = TRAFFIC SIGNS
- I = TYPE III BARRICADE
- = LCTB

STATE OF TEXAS
CHRIS D. KELAREK
83300
LICENSED PROFESSIONAL ENGINEER

Chris D. Kelarek, P.E. 7/1/2010

SCALE: PLAN - 1":100'

REV. NO.	DATE	DESCRIPTION	BY

ALAMO RMA

RODRIGUEZ TRANSPORTATION GROUP
CONSULTING ENGINEERS

Texas Department of Transportation
© 2010

LOOP 1604
TRAFFIC CONTROL PLAN

PHASE 3, STAGE 4A

BEGINNING TO STA. 103+00(E)

SHEET 28 OF 43

DGN:	FED. RD. DIV. NO.	STATE	FEDERAL AID PROJECT NO.			HIGHWAY NO.
CKD DGN:	6	TEXAS	STP 2011(210)ES			LP 1604
DWG:	DIST.	COUNTY	CONT. NO.	SECT. NO.	JOB NO.	SHEET NO.
CKD DWG:	SAT	BEXAR	2452	01	050	110

Plotted on: 7/1/2010 3:49:11 PM
Design Filename: p:\8380407\dlv\planShts\top\PHASE 3\740004TCP3405.dgn

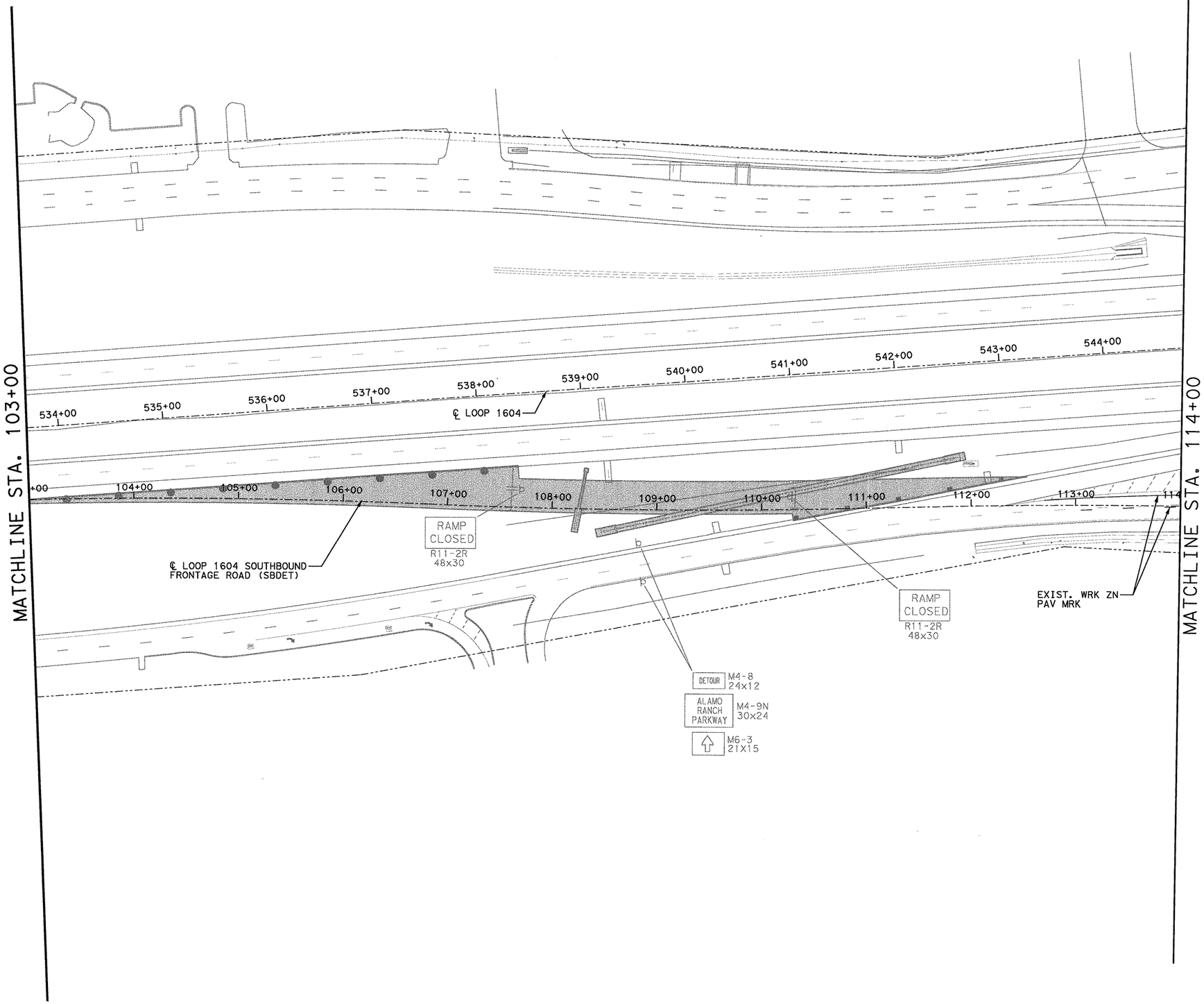

0 50 100
SCALE: 1" = 100'

LEGEND

- = NEW CONSTRUCTION THIS STAGE
- = 10" FLEXIBLE PAVEMENT REPAIR
- = PAVEMENT OBLITERATED THIS STAGE
- = CONSTRUCTED IN PREVIOUS STAGE
- M = CHANGABLE MESSAGE SIGN
- = ARROW BOARD
- = TRAFFIC FLOW ARROW
- = PLASTIC DRUMS
- = VERTICAL PANELS
- þ = TRAFFIC SIGNS
- I = TYPE III BARRICADE
- = LCTB

STATE OF TEXAS
CHRIS D. KELAREK
83300
LICENSED PROFESSIONAL ENGINEER

Chris D. Kelarek, P.E. 7/1/2010

SCALE: PLAN - 1":100'

REV. NO.	DATE	DESCRIPTION	BY

ALAMO RMA

RODRIGUEZ TRANSPORTATION GROUP
CONSULTING ENGINEERS

Texas Department of Transportation
© 2010

LOOP 1604
TRAFFIC CONTROL PLAN

PHASE 3, STAGE 4A

STA. 103+00(E) TO STA. 114+00(E)

SHEET 29 OF 43

DGN:	FED. RD. DIV. NO.	STATE	FEDERAL AID PROJECT NO.			HIGHWAY NO.
CHK DGN:	6	TEXAS	STP 2011(210)ES			LP 1604
DWG:	DIST.	COUNTY	CONT. NO.	SECT. NO.	JOB NO.	SHEET NO.
CHK DWG:	SAT	BEXAR	2452	01	050	111

Plotted on: 7/1/2010 3:49:14 PM

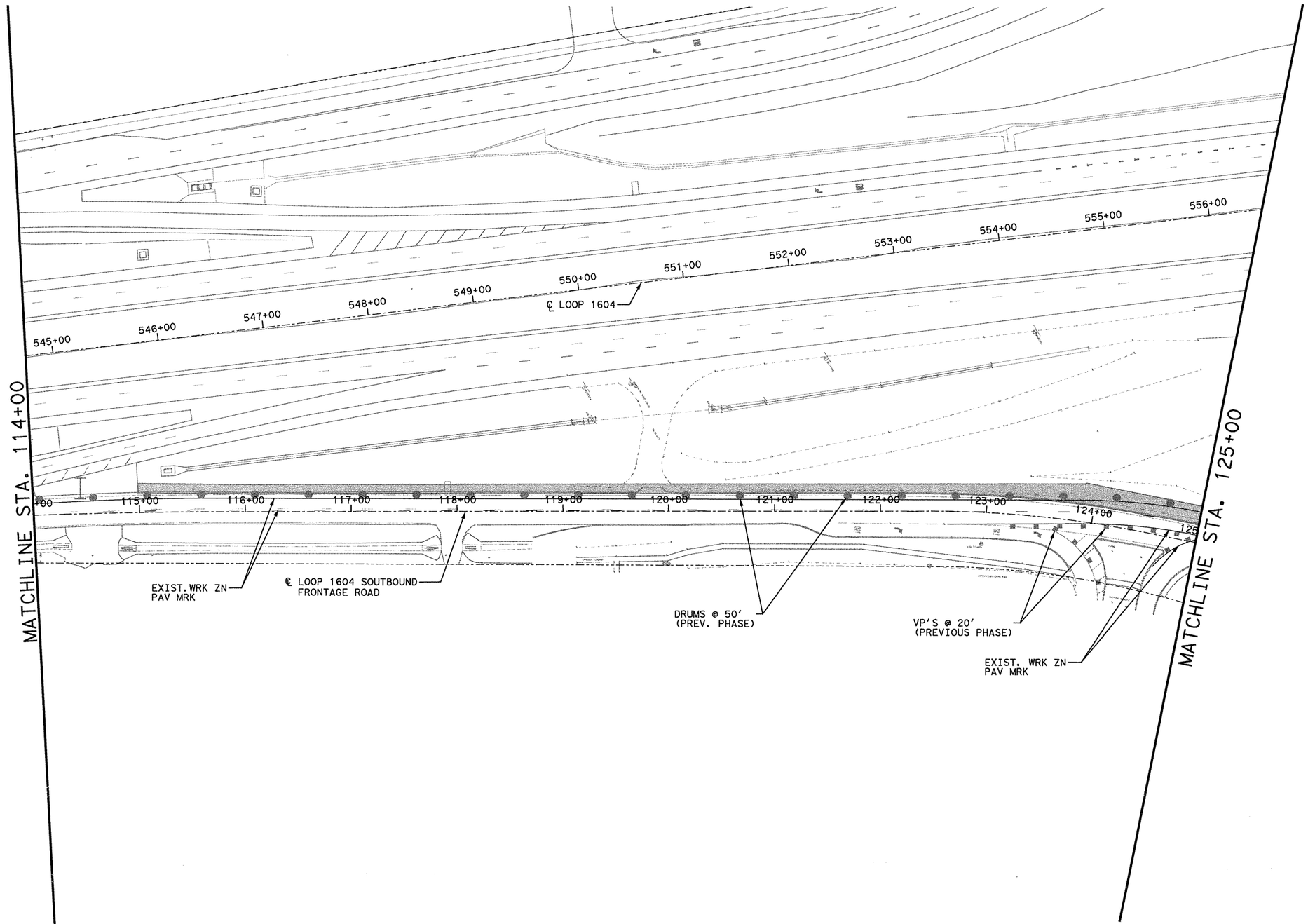

0 50 100
SCALE: 1" = 100'

LEGEND

- = NEW CONSTRUCTION THIS STAGE
- = 10" FLEXIBLE PAVEMENT REPAIR
- = PAVEMENT OBLITERATED THIS STAGE
- = CONSTRUCTED IN PREVIOUS STAGE
- M = CHANGABLE MESSAGE SIGN
- = ARROW BOARD
- = TRAFFIC FLOW ARROW
- = PLASTIC DRUMS
- = VERTICAL PANELS
- = TRAFFIC SIGNS
- = TYPE III BARRICADE
- = LCTB

STATE OF TEXAS
CHRIS D. KELAREK
83300
LICENSED PROFESSIONAL ENGINEER

Chris D. Kelarek, P.E. 7/1/2010

SCALE: PLAN - 1":100'

REV. NO.	DATE	DESCRIPTION	BY

ALAMO RMA

RODRIGUEZ TRANSPORTATION GROUP
CONSULTING ENGINEERS

Texas Department of Transportation
© 2010

LOOP 1604

TRAFFIC CONTROL PLAN

PHASE 3, STAGE 4A

STA. 114+00(E) TO STA. 125+00(E)

SHEET 30 OF 43

DGN:	FED. RD. DIV. NO.	STATE	FEDERAL AID PROJECT NO.			HIGHWAY NO.
CHK DSN:	6	TEXAS	STP 2011(210)ES			LP 1604
DWG:	DIST.	COUNTY	CONT. NO.	SECT. NO.	JOB NO.	SHEET NO.
CHK DWG:	SAT	BEXAR	2452	01	050	112

Design Filename: p:\8380407\dlv\plansh ts\trap\PHASE 3\740004TCP3406.dgn

Plotted on: 7/1/2010 3:49:17 PM

Design Filename: p:\8380407\d1\vplan$hts\top\PHASE 3\T40004TCP3407.dgn

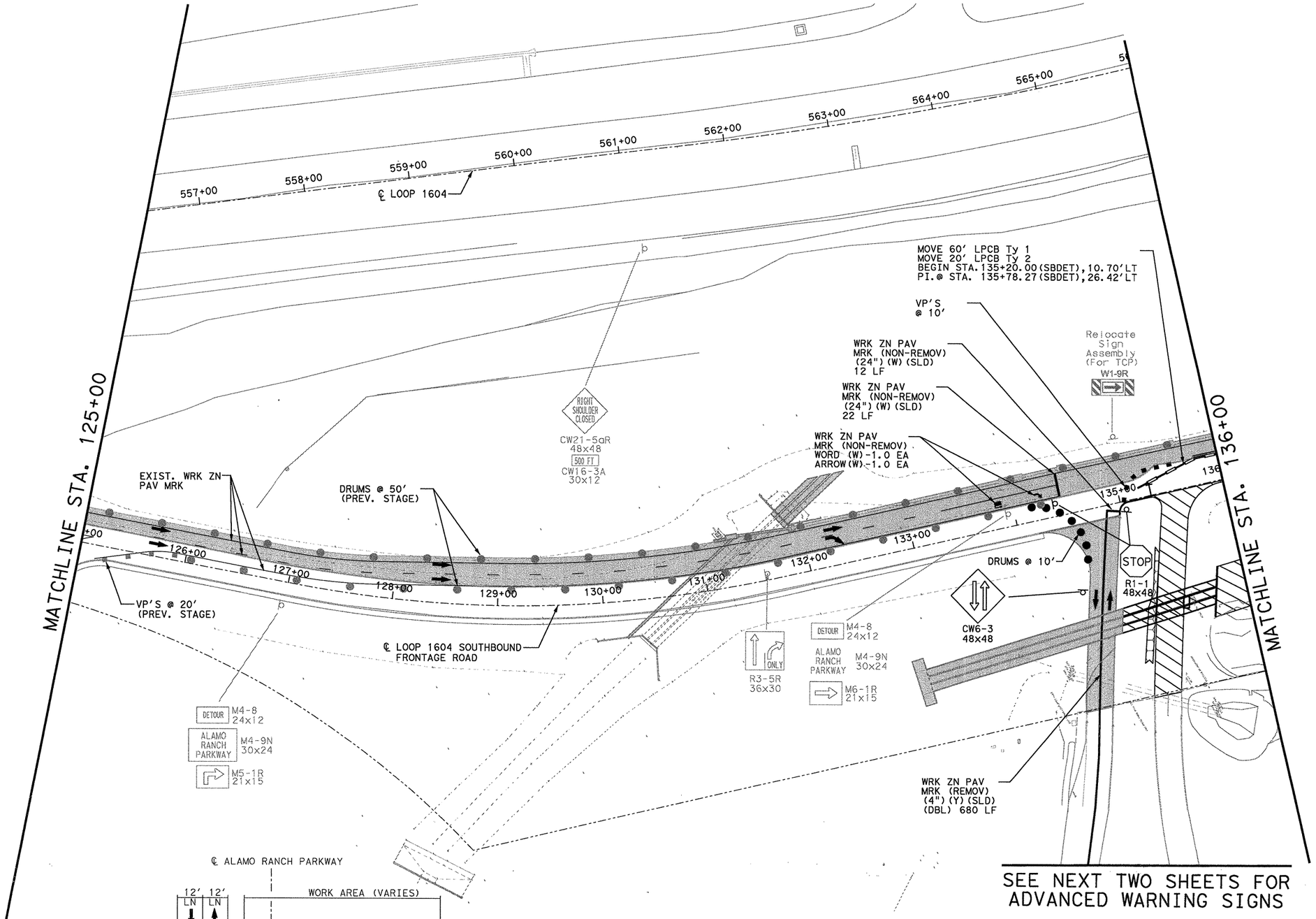

SEE NEXT TWO SHEETS FOR ADVANCED WARNING SIGNS

℄ ALAMO RANCH PARKWAY

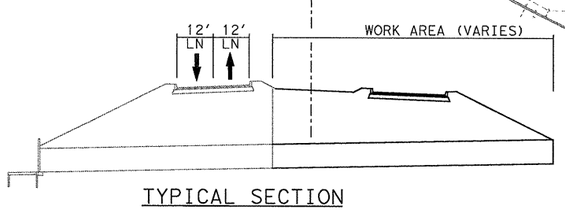

TYPICAL SECTION

STA. 548+13.00 RT (ARP) - STA. 549+89.05 RT (ARP)

0 50 100

SCALE: 1" = 100'

LEGEND

- = NEW CONSTRUCTION THIS STAGE
- = 10" FLEXIBLE PAVEMENT REPAIR
- = PAVEMENT OBLITERATED THIS STAGE
- = CONSTRUCTED IN PREVIOUS STAGE
- M = CHANGABLE MESSAGE SIGN
- = ARROW BOARD
- = TRAFFIC FLOW ARROW
- = PLASTIC DRUMS
- = VERTICAL PANELS
- þ = TRAFFIC SIGNS
- I = TYPE III BARRICADE
- = LCTB

STATE OF TEXAS
CHRIS D. KELAREK
83300
LICENSED PROFESSIONAL ENGINEER

Chris D. Kelarek, P.E. 7/1/2010

SCALE: PLAN - 1":100'

REV. NO.	DATE	DESCRIPTION	BY

ALAMO RMA

RODRIGUEZ TRANSPORTATION GROUP
CONSULTING ENGINEERS

Texas Department of Transportation
© 2010

LOOP 1604
TRAFFIC CONTROL PLAN

PHASE 3, STAGE 4A

STA. 125+00(E) TO STA. 136+00(E)

SHEET 31 OF 43

DGN:	FED. RD. DIV. NO.	STATE	FEDERAL AID PROJECT NO.			HIGHWAY NO.
CHK DGN:	6	TEXAS	STP 2011(210)ES			LP 1604
DWG:	DIST.	COUNTY	CONT. NO.	SECT. NO.	JOB NO.	SHEET NO.
CHK DWG:	SAT	BEXAR	2452	01	050	113

Plotted on: 7/1/2010 3:49:20 PM
Design Filename: p:\8380407\dlvplanSht's\tcp\PHASE 3\T40004TCP3407a.dgn

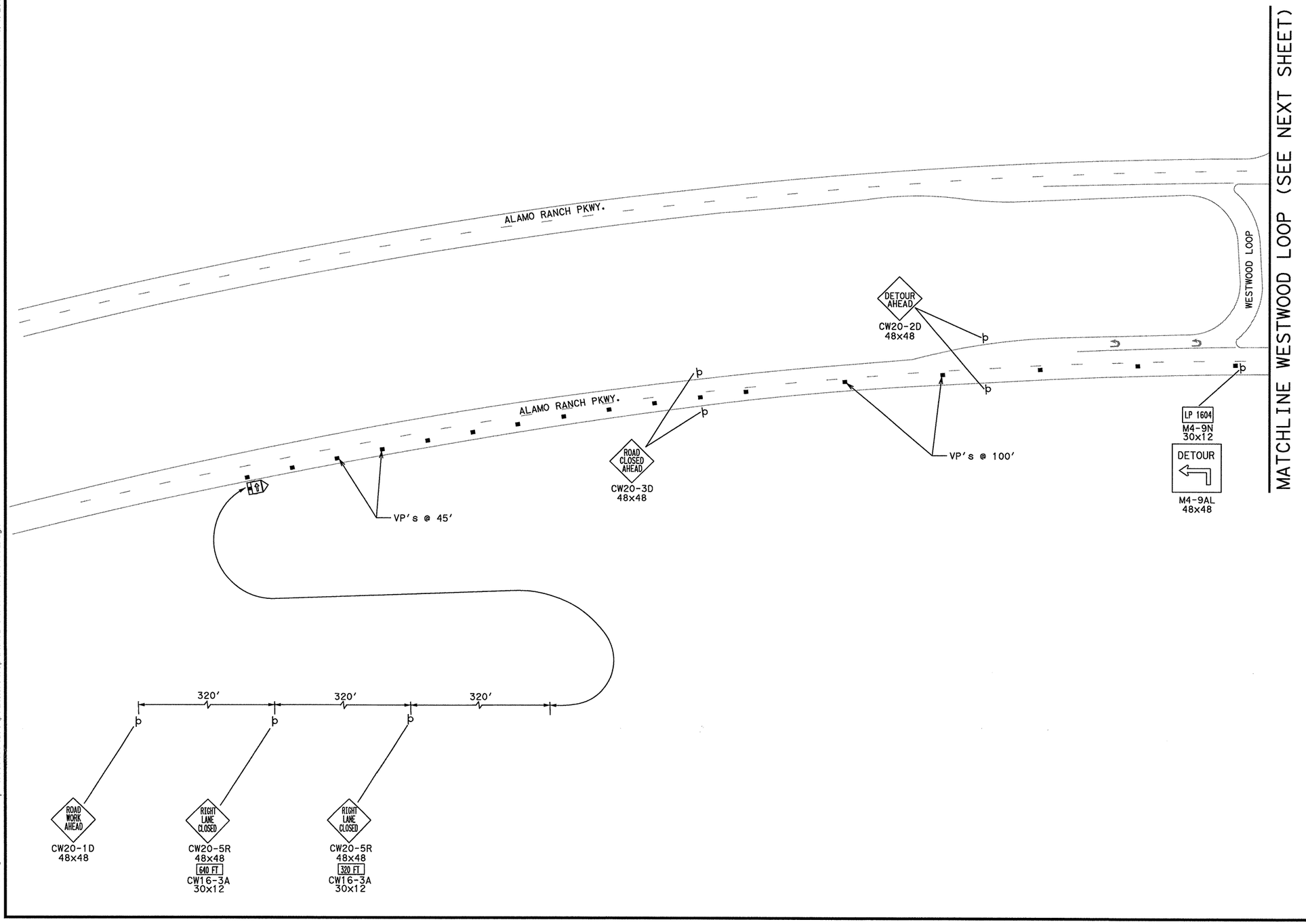

0 50 100
SCALE: 1" = 100'

LEGEND

- = NEW CONSTRUCTION THIS STAGE
- = 10" FLEXIBLE PAVEMENT REPAIR
- = PAVEMENT OBLITERATED THIS STAGE
- = CONSTRUCTED IN PREVIOUS STAGE
- M = CHANGABLE MESSAGE SIGN
- = ARROW BOARD
- = TRAFFIC FLOW ARROW
- = PLASTIC DRUMS
- = VERTICAL PANELS
- þ = TRAFFIC SIGNS
- I = TYPE III BARRICADE
- = LCTB

STATE OF TEXAS
CHRIS D. KELAREK
83300
LICENSED PROFESSIONAL ENGINEER
Chris D. Kelarek, P.E. 7/1/2010

SCALE: PLAN - 1":100'

REV. NO.	DATE	DESCRIPTION	BY

ALAMO RMA

RODRIGUEZ TRANSPORTATION GROUP
CONSULTING ENGINEERS

Texas Department of Transportation
© 2010

LOOP 1604
TRAFFIC CONTROL PLAN
PHASE 3, STAGE 4A
ADVANCED WARNING SIGNS

SHEET 32 OF 43

DGN:	FED. RD. DIV. NO.	STATE	FEDERAL AID PROJECT NO.			HIGHWAY NO.
CHK DGN:	6	TEXAS	STP 2011(210)ES			LP 1604
DWG:	DIST.	COUNTY	CONT. NO.	SECT. NO.	JOB NO.	SHEET NO.
CHK DWG:	SAT	BEXAR	2452	01	050	114

Plotted on: 7/1/2010 3:49:22 PM

Design Filename: p:\8380407\dlv\planSht\stTop\PHASE 3\740004TCP3407b.dgn

MATCHLINE WESTWOOD LOOP (SEE PREVIOUS SHEET)

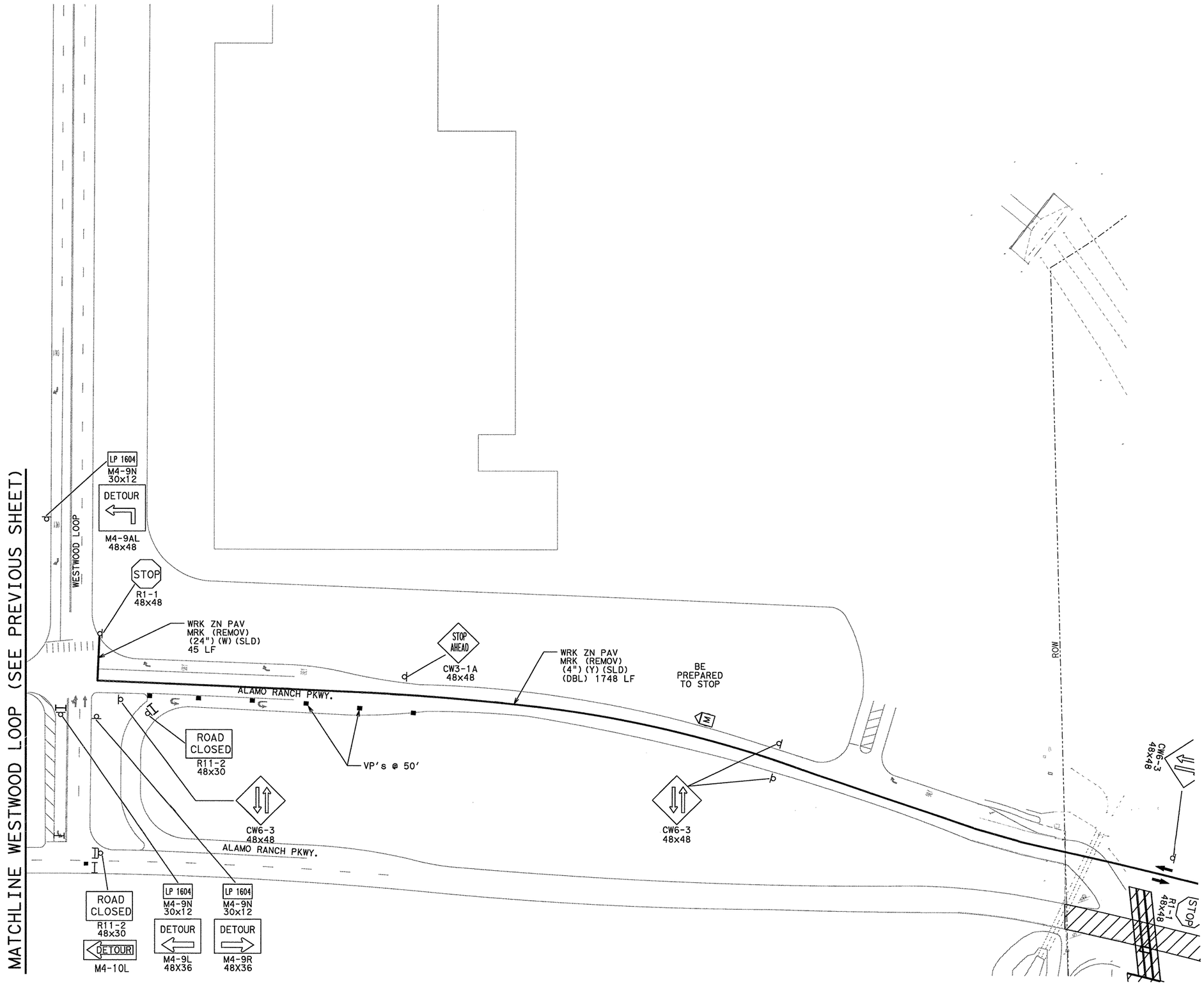

0 50 100

SCALE: 1" = 100'

LEGEND

- = NEW CONSTRUCTION THIS STAGE
- = 10" FLEXIBLE PAVEMENT REPAIR
- = PAVEMENT OBLITERATED THIS STAGE
- = CONSTRUCTED IN PREVIOUS STAGE
- M = CHANGABLE MESSAGE SIGN
- = ARROW BOARD
- = TRAFFIC FLOW ARROW
- = PLASTIC DRUMS
- = VERTICAL PANELS
- = TRAFFIC SIGNS
- = TYPE III BARRICADE
- = LCTB

STATE OF TEXAS
CHRIS D. KELAREK
83300
LICENSED PROFESSIONAL ENGINEER

Chris D. Kelarek, P.E. 7/1/2010

SCALE: PLAN - 1":100'

REV. NO.	DATE	DESCRIPTION	BY

ALAMO RMA

RODRIGUEZ TRANSPORTATION GROUP
CONSULTING ENGINEERS

Texas Department of Transportation
© 2010

LOOP 1604
TRAFFIC CONTROL PLAN

PHASE 3, STAGE 4A
ADVANCED WARNING SIGNS

SHEET 33 OF 43

DGN:	FED. RD. DIV. NO.	STATE	FEDERAL AID PROJECT NO.			HIGHWAY NO.
CK:	6	TEXAS	STP 2011(210)ES			LP 1604
DW:	DIST.	COUNTY	CONT. NO.	SECT. NO.	JOB NO.	SHEET NO.
CK:	SAT	BEXAR	2452	01	050	115
DW:						

Plotted on: 7/1/2010 3:49:25 PM

Design Filename: p:\8380407\dlvplanSht s\tcp\PHASE 3\740004TCP3408.dgn

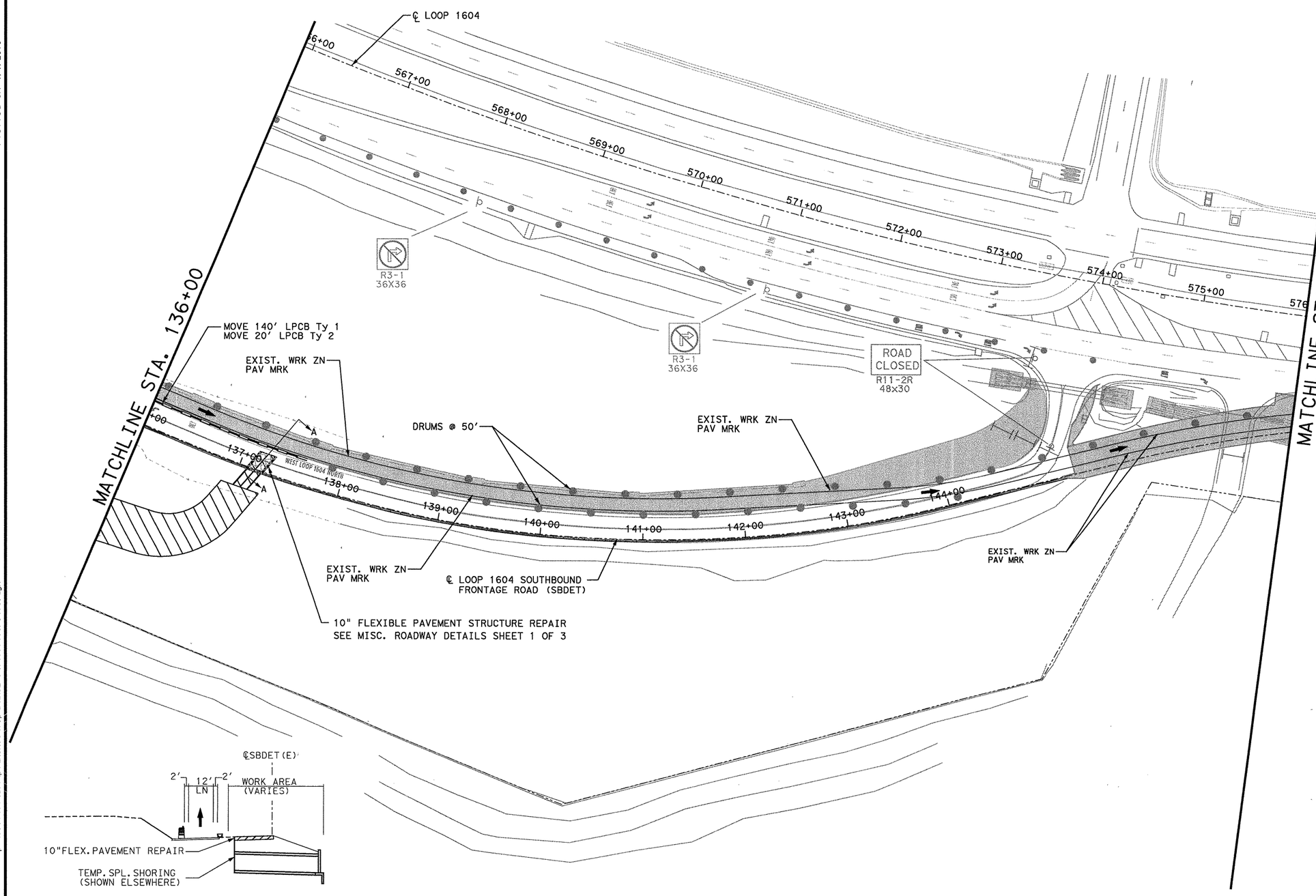

SECTION A-A

0 50 100
SCALE: 1" = 100'

LEGEND

- = NEW CONSTRUCTION THIS STAGE
- = 10" FLEXIBLE PAVEMENT REPAIR
- = PAVEMENT OBLITERATED THIS STAGE
- = CONSTRUCTED IN PREVIOUS STAGE
- M = CHANGABLE MESSAGE SIGN
- = ARROW BOARD
- = TRAFFIC FLOW ARROW
- = PLASTIC DRUMS
- = VERTICAL PANELS
- þ = TRAFFIC SIGNS
- I = TYPE III BARRICADE
- = LCTB

STATE OF TEXAS
CHRIS D. KELAREK
83300
LICENSED
PROFESSIONAL ENGINEER

Chris D. Kelarek, P.E. 7/1/2010

SCALE: PLAN - 1":100'

REV. NO.	DATE	DESCRIPTION	BY

ALAMO RMA

RODRIGUEZ TRANSPORTATION GROUP
CONSULTING ENGINEERS

Texas Department of Transportation
© 2010

LOOP 1604
TRAFFIC CONTROL PLAN

PHASE 3, STAGE 4A

STA. 136+00(E) TO STA. 576+00(G)

SHEET 34 OF 43

DGN:	FED. RD. DIV. NO.	STATE	FEDERAL AID PROJECT NO.			HIGHWAY NO.
CHK DSN:	6	TEXAS	STP 2011(210)ES			LP 1604
DWG:	DIST.	COUNTY	CONT. NO.	SECT. NO.	JOB NO.	SHEET NO.
CHK DWG:	SAT	BEXAR	2452	01	050	116

Plotted on: 8/19/2010 2:23:09 PM
Design Filename: p:\8380407\div\planShts\top\PHASE 3\740004TCP3409.dgn

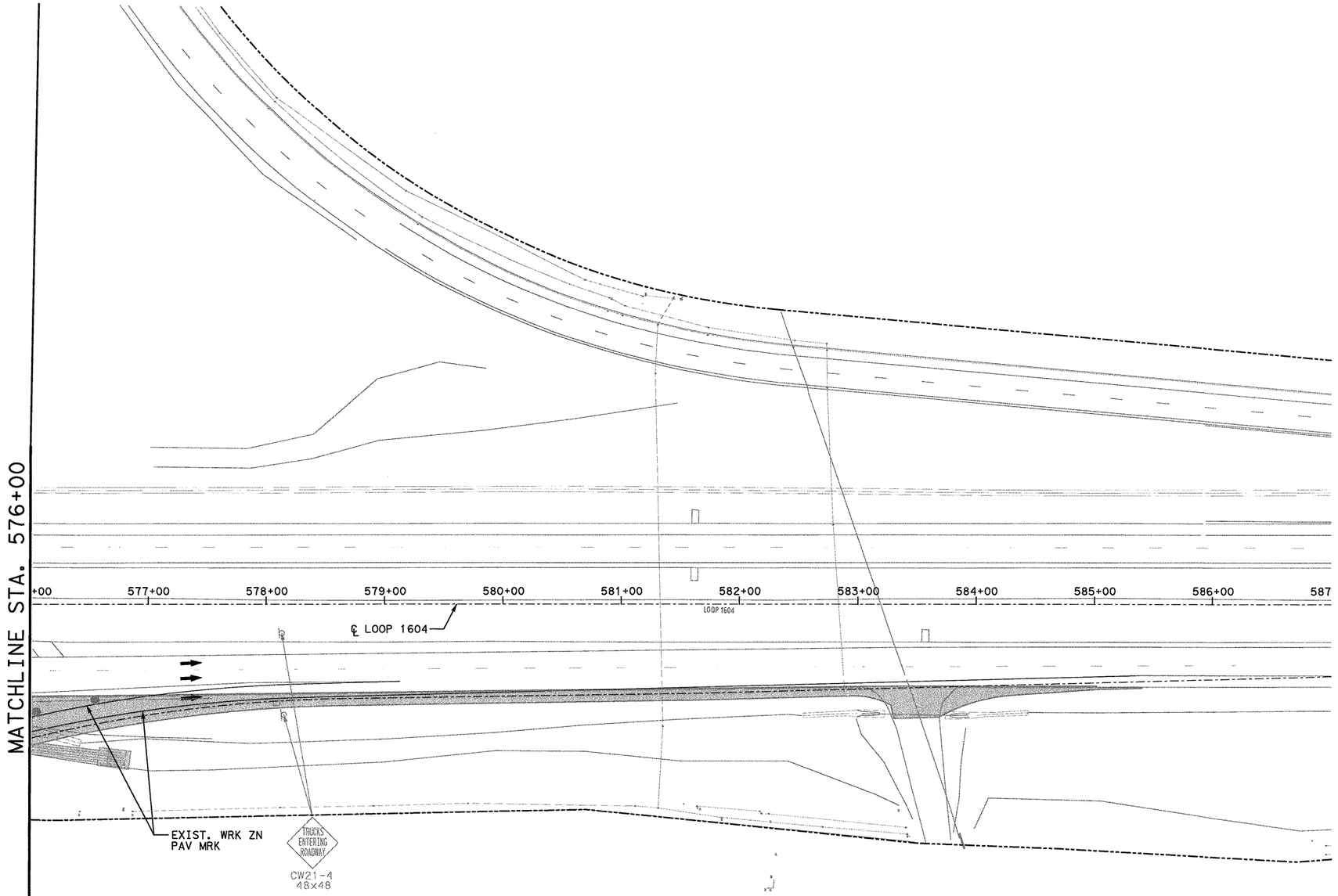

LEGEND

- = NEW CONSTRUCTION THIS STAGE
- = 10" FLEXIBLE PAVEMENT REPAIR
- = PAVEMENT OBLITERATED THIS STAGE
- = CONSTRUCTED IN PREVIOUS STAGE
- M = CHANGABLE MESSAGE SIGN
- = ARROW BOARD
- = TRAFFIC FLOW ARROW
- = PLASTIC DRUMS
- = VERTICAL PANELS
- = TRAFFIC SIGNS
- = TYPE III BARRICADE
- = LCTB

STATE OF TEXAS
CHRIS D. KELAREK
83300
LICENSED
PROFESSIONAL ENGINEER

Chris D. Kelarek, P.E. 8/19/2010

SCALE: PLAN - 1":100'

REV. NO.	DATE	DESCRIPTION	BY

ALAMO RMA

RODRIGUEZ TRANSPORTATION GROUP
CONSULTING ENGINEERS

Texas Department of Transportation
© 2010

LOOP 1604
TRAFFIC CONTROL PLAN

PHASE 3, STAGE 4A

STA. 576+00(G) TO STA. 587+00(G)

SHEET 35 OF 43

DGN:	FED. RD. DIV. NO.	STATE	FEDERAL AID PROJECT NO.			HIGHWAY NO.
CHK DSN:	6	TEXAS	STP 2011(210)ES			LP 1604
DWG:	DIST.	COUNTY	CONT. NO.	SECT. NO.	JOB NO.	SHEET NO.
CHK DWG:	SAT	BEXAR	2452	01	050	117

Plotted on: 7/1/2010 3:49:31 PM

Design Filename: p:\8380407\dlv\planShts\topPHASE 3\740004TCP3417.dgn

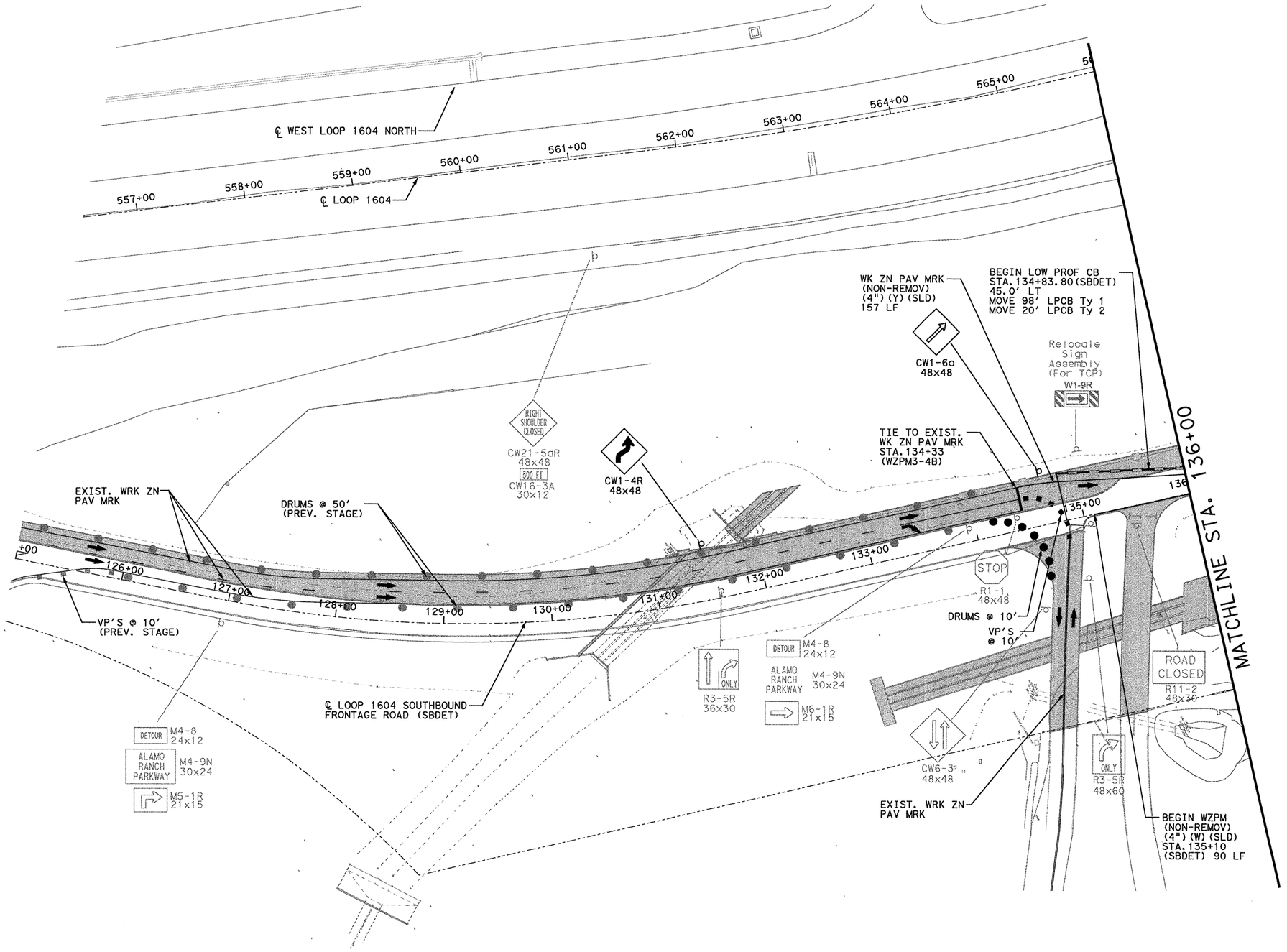

0 50 100

SCALE: 1" = 100'

LEGEND

- = NEW CONSTRUCTION THIS STAGE
- = 10" FLEXIBLE PAVEMENT REPAIR
- = PAVEMENT OBLITERATED THIS STAGE
- = CONSTRUCTED IN PREVIOUS STAGE
- M = CHANGABLE MESSAGE SIGN
- = ARROW BOARD
- = TRAFFIC FLOW ARROW
- = PLASTIC DRUMS
- = VERTICAL PANELS
- þ = TRAFFIC SIGNS
- I = TYPE III BARRICADE
- = LCTB

STATE OF TEXAS
CHRIS D. KELAREK
83300
LICENSED
PROFESSIONAL ENGINEER

Chris D. Kelarek, P.E. 7/1/2010

SCALE: PLAN - 1":100'

REV. NO.	DATE	DESCRIPTION	BY

ALAMO RMA

RODRIGUEZ TRANSPORTATION GROUP
CONSULTING ENGINEERS

Texas Department of Transportation
© 2010

LOOP 1604
TRAFFIC CONTROL PLAN

PHASE 3, STAGE 4B

STA. 125+00(E) TO STA. 136+00(E)

SHEET 36 OF 43

DGN:	FED. RD. DIV. NO.	STATE	FEDERAL AID PROJECT NO.			HIGHWAY NO.
CHK DSN:	6	TEXAS	STP 2011(210)ES			LP 1604
DWG:	DIST.	COUNTY	CONT. NO.	SECT. NO.	JOB NO.	SHEET NO.
CHK DWG:	SAT	BEXAR	2452	01	050	118

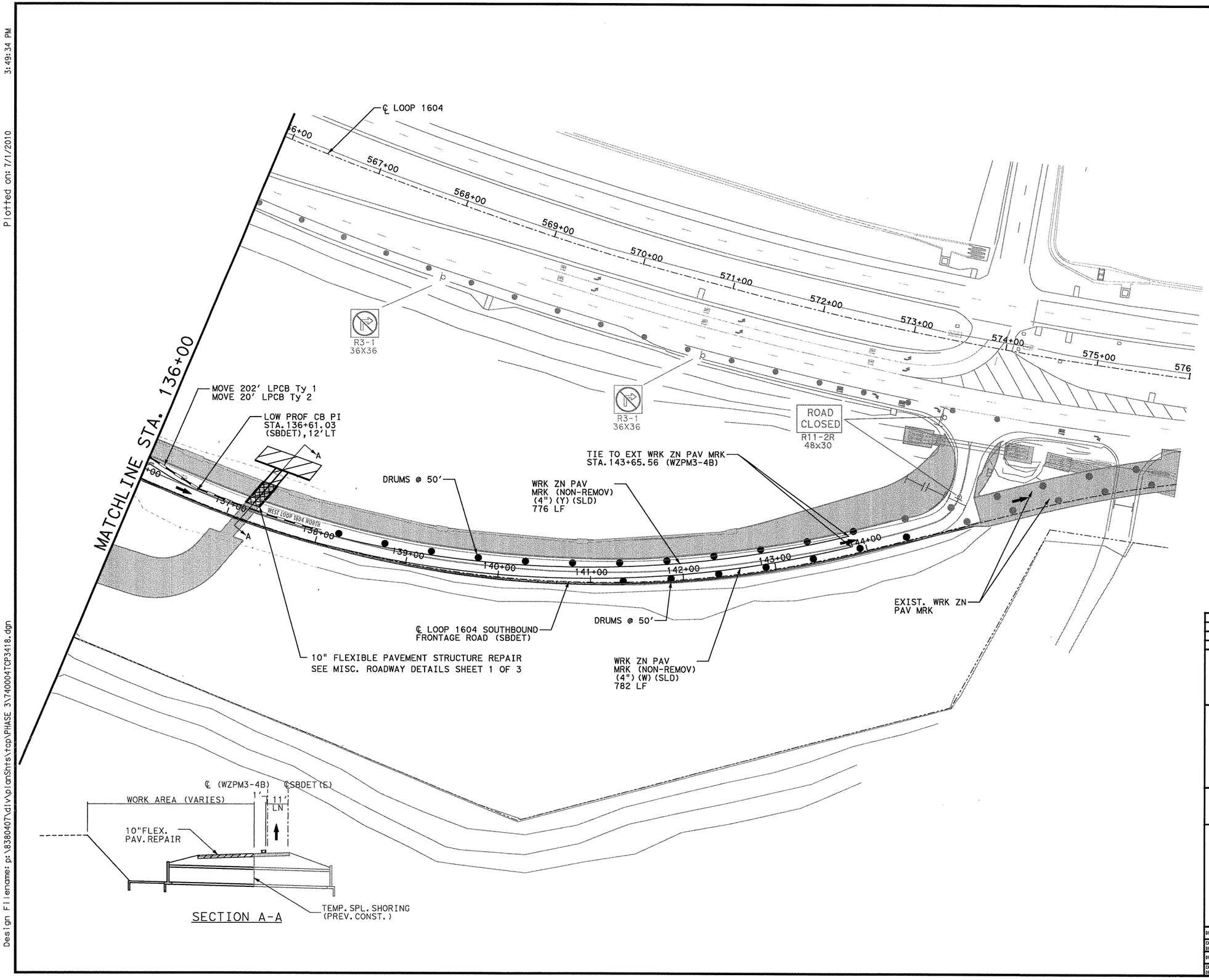

0 50 100
SCALE: 1" = 100'

LEGEND

- = NEW CONSTRUCTION THIS STAGE
- = 10" FLEXIBLE PAVEMENT REPAIR
- = PAVEMENT OBLITERATED THIS STAGE
- = CONSTRUCTED IN PREVIOUS STAGE
- = CHANGABLE MESSAGE SIGN
- = ARROW BOARD
- = TRAFFIC FLOW ARROW
- = PLASTIC DRUMS
- = VERTICAL PANELS
- = TRAFFIC SIGNS
- = TYPE III BARRICADE
- = LCTB

STATE OF TEXAS
CHRIS D. KELAREK
83300
LICENSED
PROFESSIONAL ENGINEER

Chris D. Kelarek, P.E. 7/1/2010

SCALE: PLAN - 1":100'

REV. NO.	DATE	DESCRIPTION	BY

ALAMO RMA

RODRIGUEZ TRANSPORTATION GROUP
CONSULTING ENGINEERS

Texas Department of Transportation
© 2010

LOOP 1604
TRAFFIC CONTROL PLAN

PHASE 3, STAGE 4B

STA. 136+00(E) TO STA. 576+00(G)

SHEET 37 OF 43

DGN:	FED. RD. DIV. NO.	STATE	FEDERAL AID PROJECT NO.			HIGHWAY NO.
CHK DGN:	6	TEXAS	STP 2011(210)ES			LP 1604
DWG:	DIST.	COUNTY	CONT. NO.	SECT. NO.	JOB NO.	SHEET NO.
CHK DWG:	SAT	BEXAR	2452	01	050	119

Design Filename: p:\8380407\div\planShts\tcp\PHASE 3\740004TCP3418.dgn
Plotted on: 7/1/2010 3:49:34 PM

Plotted on: 7/1/2010 3:49:38 PM

Design Filename: p:\8380407\dlv\planSht s\top\PHASE 3\740004TCP3504.dgn

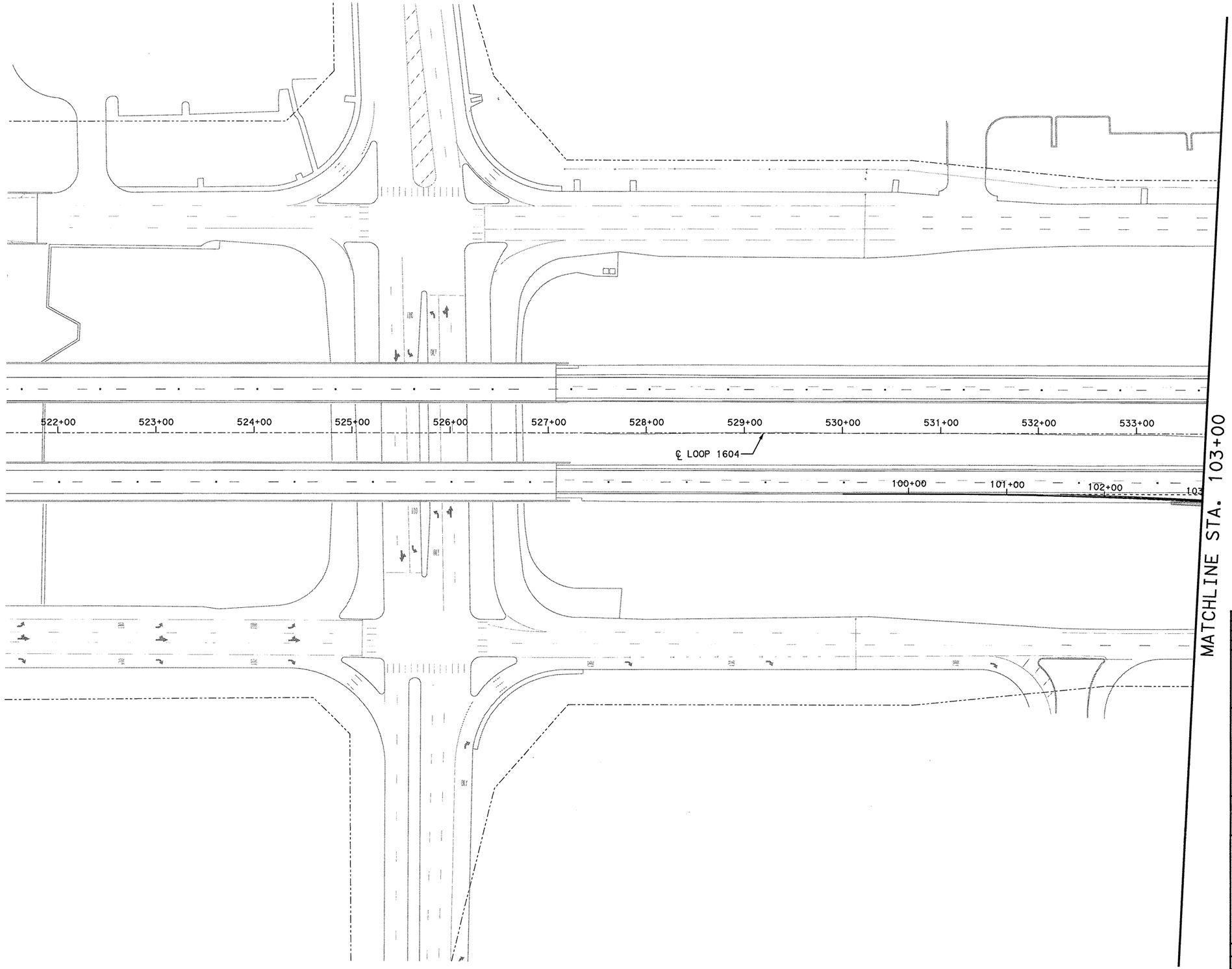

0 50 100

SCALE: 1" = 100'

LEGEND

- = NEW CONSTRUCTION THIS STAGE
- = 10" FLEXIBLE PAVEMENT REPAIR
- = PAVEMENT OBLITERATED THIS STAGE
- = CONSTRUCTED IN PREVIOUS STAGE
- M = CHANGABLE MESSAGE SIGN
- = ARROW BOARD
- = TRAFFIC FLOW ARROW
- = PLASTIC DRUMS
- = VERTICAL PANELS
- þ = TRAFFIC SIGNS
- I = TYPE III BARRICADE
- = LCTB

STATE OF TEXAS
CHRIS D. KELAREK
83300
LICENSED
PROFESSIONAL ENGINEER

Chris D. Kelarek, P.E. 7/1/2010

SCALE: PLAN - 1":100'

REV. NO.	DATE	DESCRIPTION	BY

ALAMO RMA

RODRIGUEZ TRANSPORTATION GROUP
CONSULTING ENGINEERS

Texas Department of Transportation
© 2010

LOOP 1604
TRAFFIC CONTROL PLAN

PHASE 3, STAGE 5

BEGINNING TO STA. 103+00(E)

SHEET 38 OF 43

DGN:	FED. RD. DIV. NO.	STATE	FEDERAL AID PROJECT NO.			HIGHWAY NO.
CHK DGN:	6	TEXAS	STP 2011(210)ES			LP 1604
DWG:	DIST.	COUNTY	CONT. NO.	SECT. NO.	JOB NO.	SHEET NO.
CHK DWG:	SAT	BEXAR	2452	01	050	120

Plotted on: 7/1/2010 3:49:40 PM

Design Filename: p:\8380407\dlv\planSht\stVtop\PHASE 3\740004TCP3505.dgn

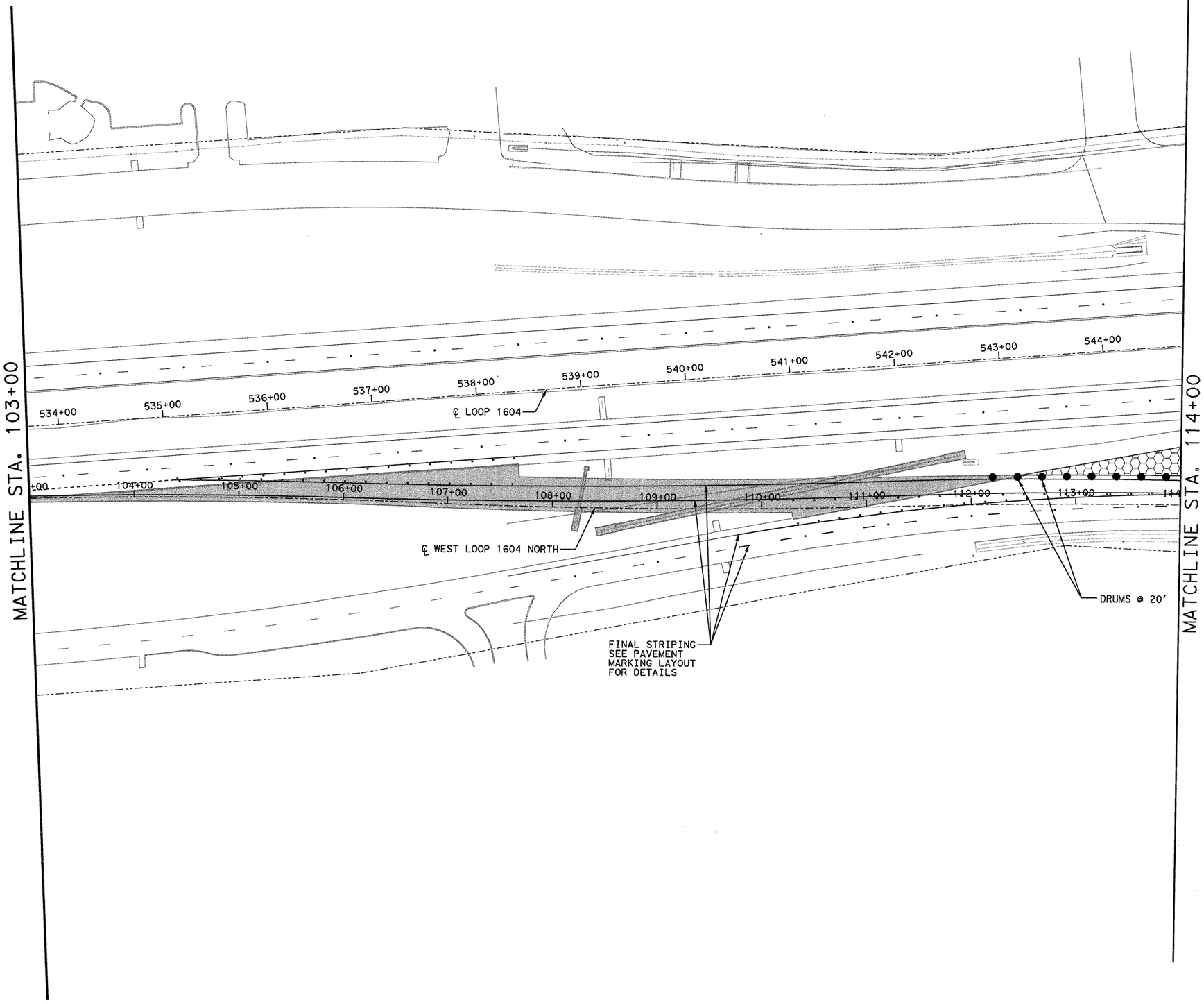

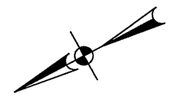

LEGEND

- = NEW CONSTRUCTION THIS STAGE
- = 10" FLEXIBLE PAVEMENT REPAIR
- = PAVEMENT OBLITERATED THIS STAGE
- = CONSTRUCTED IN PREVIOUS STAGE
- M = CHANGABLE MESSAGE SIGN
- = ARROW BOARD
- = TRAFFIC FLOW ARROW
- = PLASTIC DRUMS
- = VERTICAL PANELS
- = TRAFFIC SIGNS
- = TYPE III BARRICADE
- = LCTB

STATE OF TEXAS
CHRIS D. KELAREK
83300
LICENSED
PROFESSIONAL ENGINEER

Chris D. Kelarek, P.E. 7/1/2010

SCALE: PLAN - 1":100'

REV. NO.	DATE	DESCRIPTION	BY

ALAMO RMA

RODRIGUEZ TRANSPORTATION GROUP
CONSULTING ENGINEERS

Texas Department of Transportation
© 2010

LOOP 1604
TRAFFIC CONTROL PLAN

PHASE 3, STAGE 5

STA. 103+00(E) TO STA. 114+00(E)

SHEET 39 OF 43

DGN:	FED. RD. DIV. NO.	STATE	FEDERAL AID PROJECT NO.			HIGHWAY NO.
CHK DGN:	6	TEXAS	STP 2011(210)ES			LP 1604
DWG:	DIST.	COUNTY	CONT. NO.	SECT. NO.	JOB NO.	SHEET NO.
CHK DWG:	SAT	BEXAR	2452	01	050	121

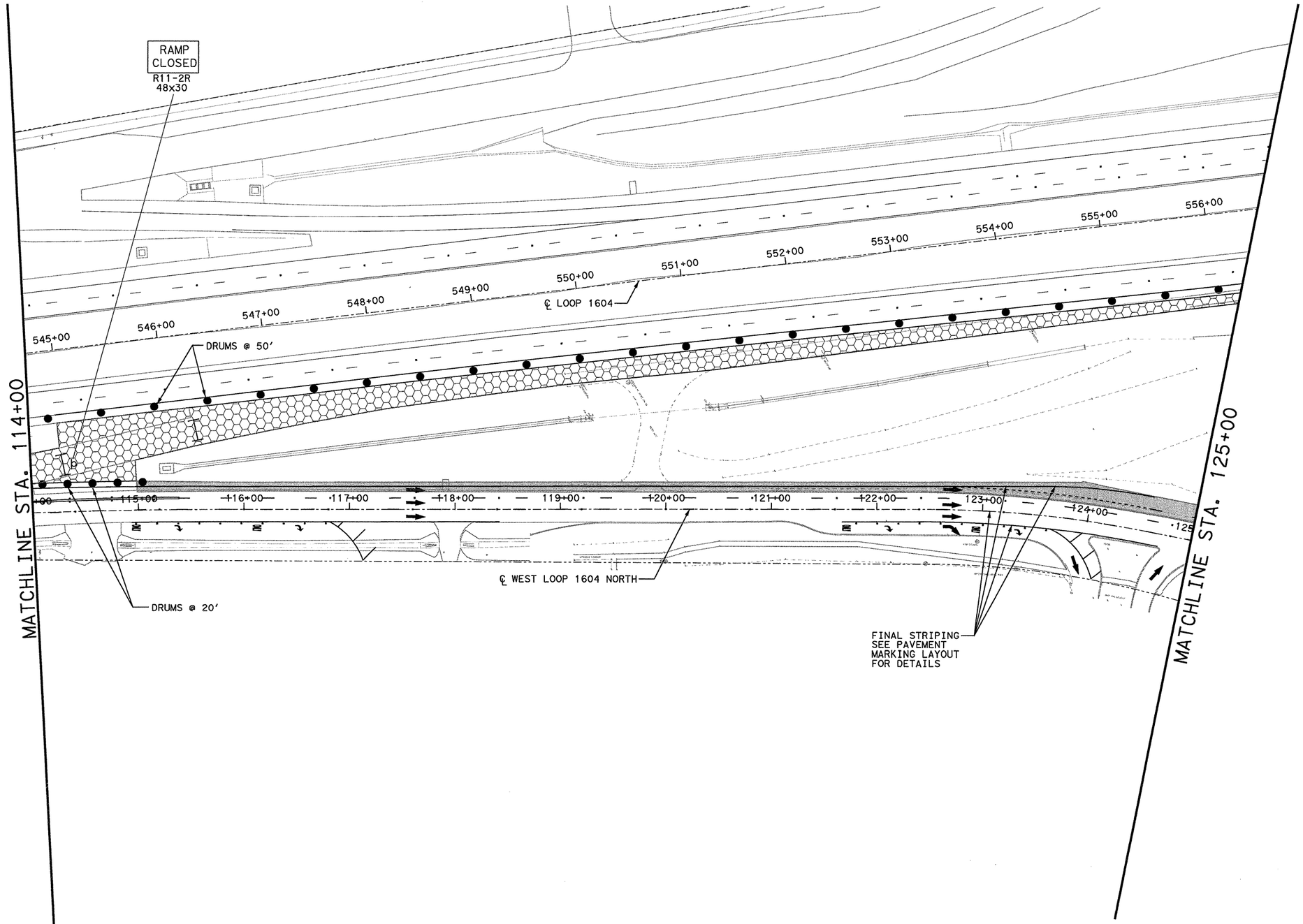

0 50 100
SCALE: 1" = 100'

LEGEND

- = NEW CONSTRUCTION THIS STAGE
- = 10" FLEXIBLE PAVEMENT REPAIR
- = PAVEMENT OBLITERATED THIS STAGE
- = CONSTRUCTED IN PREVIOUS STAGE
- M = CHANGABLE MESSAGE SIGN
- = ARROW BOARD
- = TRAFFIC FLOW ARROW
- = PLASTIC DRUMS
- = VERTICAL PANELS
- = TRAFFIC SIGNS
- = TYPE III BARRICADE
- = LCTB

STATE OF TEXAS
CHRIS D. KELAREK
83300
LICENSED
PROFESSIONAL ENGINEER

Chris D. Kelarek, P.E. 7/1/2010

SCALE: PLAN - 1":100'

REV. NO.	DATE	DESCRIPTION	BY

ALAMO RMA

RODRIGUEZ TRANSPORTATION GROUP
CONSULTING ENGINEERS

Texas Department of Transportation
© 2010

LOOP 1604
TRAFFIC CONTROL PLAN
PHASE 3, STAGE 5
STA. 114+00(E) TO STA. 125+00(E)

SHEET 40 OF 43

DGN:	FED. RD. DIV. NO.	STATE	FEDERAL AID PROJECT NO.			HIGHWAY NO.
CHK DGN:	6	TEXAS	STP 2011(210)ES			LP 1604
DWG:	DIST.	COUNTY	CONT. NO.	SECT. NO.	JOB NO.	SHEET NO.
CHK DWG:	SAT	BEXAR	2452	01	050	122

Design Filename: p:\8380407\dlv\planShts\tcp\PHASE 3\740004TCP3506.dgn
Plotted on: 7/1/2010 3:49:43 PM

Plotted on: 7/1/2010 3:49:47 PM

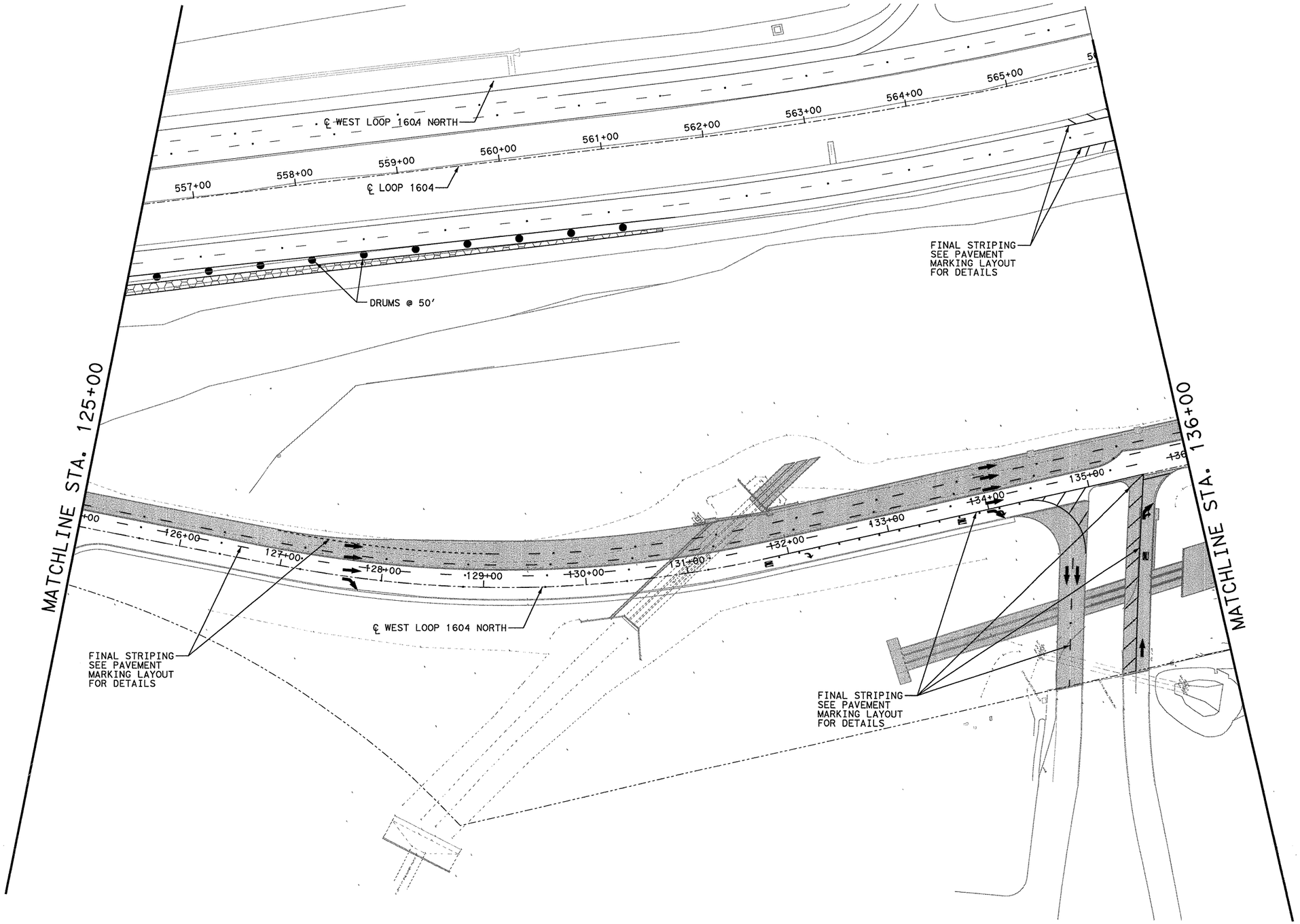

0 50 100
SCALE: 1" = 100'

LEGEND

- = NEW CONSTRUCTION THIS STAGE
- = 10" FLEXIBLE PAVEMENT REPAIR
- = PAVEMENT OBLITERATED THIS STAGE
- = CONSTRUCTED IN PREVIOUS STAGE
- M = CHANGABLE MESSAGE SIGN
- = ARROW BOARD
- = TRAFFIC FLOW ARROW
- = PLASTIC DRUMS
- = VERTICAL PANELS
- = TRAFFIC SIGNS
- = TYPE III BARRICADE
- = LCTB

STATE OF TEXAS
CHRIS D. KELAREK
83300
LICENSED
PROFESSIONAL ENGINEER
Chris D. Kelarek, P.E. 7/1/2010

SCALE: PLAN - 1":100'

REV. NO.	DATE	DESCRIPTION	BY

ALAMO RMA

RODRIGUEZ TRANSPORTATION GROUP
CONSULTING ENGINEERS

Texas Department of Transportation
© 2010

LOOP 1604
TRAFFIC CONTROL PLAN

PHASE 3, STAGE 5

STA. 125+00(E) TO STA. 136+00(E)

SHEET 41 OF 43

DGN:	FED. RD. DIV. NO.	STATE	FEDERAL AID PROJECT NO.			HIGHWAY NO.
CK:	6	TEXAS	STP 2011(210)ES			LP 1604
DW:	DIST.	COUNTY	CONT. NO.	SECT. NO.	JOB NO.	SHEET NO.
CK:	SAT	BEXAR	2452	01	050	123

Design Filename: p:\8380407\dlvplan\Shts\TcpVPHASE 3\740004TCP3507.dgn

Plotted on: 7/1/2010 3:49:50 PM

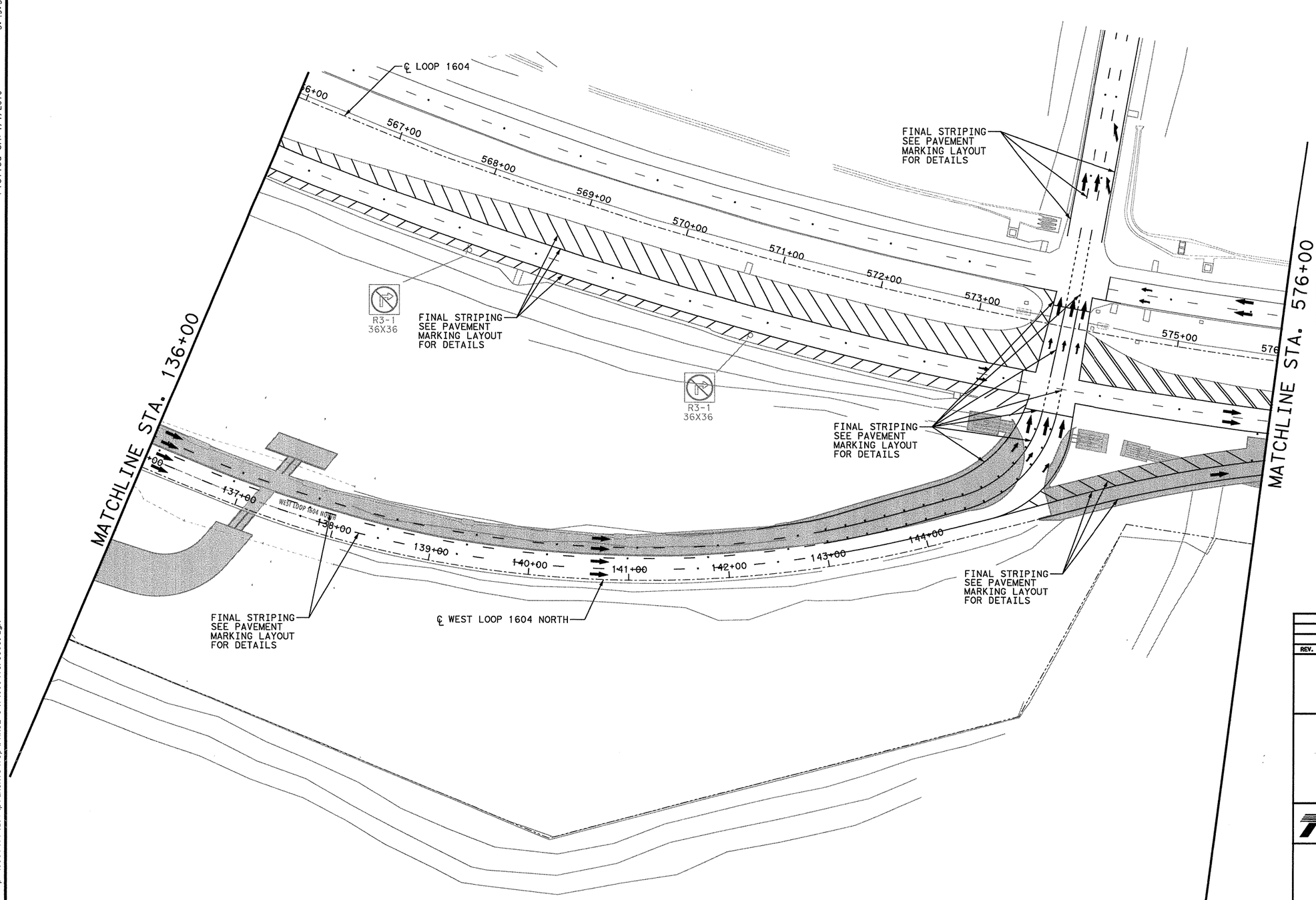

0 50 100
SCALE: 1" = 100'

LEGEND

- = NEW CONSTRUCTION THIS STAGE
- = 10" FLEXIBLE PAVEMENT REPAIR
- = PAVEMENT OBLITERATED THIS STAGE
- = CONSTRUCTED IN PREVIOUS STAGE
- M = CHANGABLE MESSAGE SIGN
- = ARROW BOARD
- = TRAFFIC FLOW ARROW
- = PLASTIC DRUMS
- = VERTICAL PANELS
- = TRAFFIC SIGNS
- = TYPE III BARRICADE
- = LCTB

STATE OF TEXAS
CHRIS D. KELAREK
83300
LICENSED
PROFESSIONAL ENGINEER
Chris D. Kelarek, P.E. 7/1/2010

SCALE: PLAN - 1":100'

REV. NO.	DATE	DESCRIPTION	BY

ALAMO RMA

RODRIGUEZ TRANSPORTATION GROUP
CONSULTING ENGINEERS

Texas Department of Transportation
© 2010

LOOP 1604
TRAFFIC CONTROL PLAN

PHASE 3, STAGE 5

STA. 136+00(E) TO STA. 576+00(G)

SHEET 42 OF 43

DGN:	FED. RD. DIV. NO.	STATE	FEDERAL AID PROJECT NO.			HIGHWAY NO.
CK: DGN:	6	TEXAS	STP 2011(210)ES			LP 1604
DWG:	DIST.	COUNTY	CONT. NO.	SECT. NO.	JOB NO.	SHEET NO.
CK: DWG:	SAT	BEXAR	2452	01	050	124

Design Filename: p:\8380407\dlv\plansht\tcp\PHASE 3\740004TCP3508.dgn

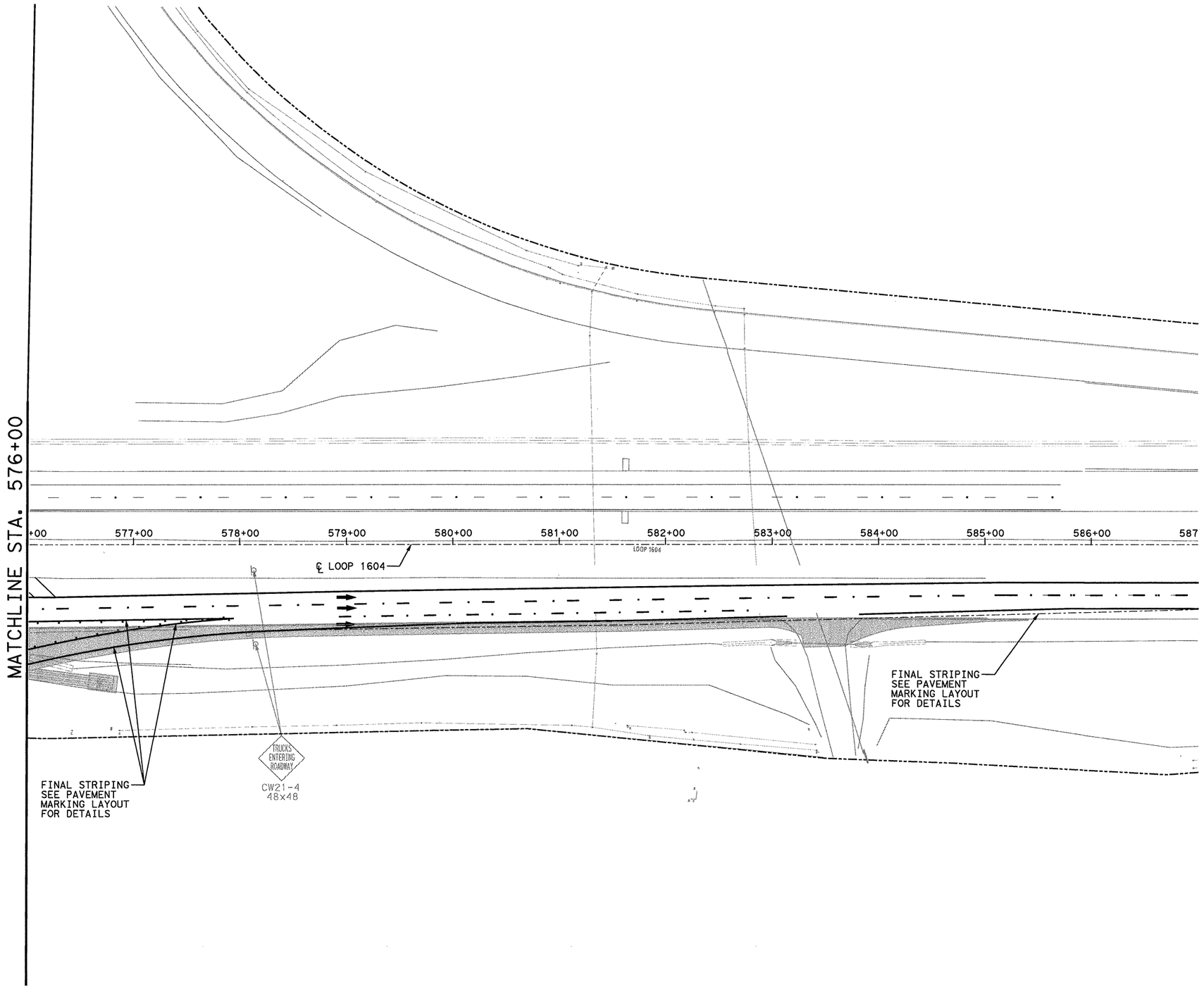

0 50 100
SCALE: 1" = 100'

LEGEND

- = NEW CONSTRUCTION THIS STAGE
- = 10" FLEXIBLE PAVEMENT REPAIR
- = PAVEMENT OBLITERATED THIS STAGE
- = CONSTRUCTED IN PREVIOUS STAGE
- M = CHANGABLE MESSAGE SIGN
- = ARROW BOARD
- = TRAFFIC FLOW ARROW
- = PLASTIC DRUMS
- = VERTICAL PANELS
- = TRAFFIC SIGNS
- = TYPE III BARRICADE
- = LCTB

STATE OF TEXAS
CHRIS D. KELAREK
83300
LICENSED PROFESSIONAL ENGINEER

Chris D. Kelarek, P.E. 8/19/2010

SCALE: PLAN - 1":100'

REV. NO.	DATE	DESCRIPTION	BY

ALAMO RMA

RODRIGUEZ TRANSPORTATION GROUP
CONSULTING ENGINEERS

Texas Department of Transportation
© 2010

LOOP 1604
TRAFFIC CONTROL PLAN
PHASE 3, STAGE 5
STA. 576+00(G) TO STA. 587+00(G)

SHEET 43 OF 43

DGN:	FED. RD. DIV. NO.	STATE	FEDERAL AID PROJECT NO.			HIGHWAY NO.
CHK DGN:	6	TEXAS	STP 2011(210)ES			LP 1604
DWG:	DIST.	COUNTY	CONT. NO.	SECT. NO.	JOB NO.	SHEET NO.
CHK DWG:	SAT	BEXAR	2452	01	050	125

Plotted on: 8/19/2010 2:23:11 PM

Design Filename: p:\8380407\div\planShts\tcp\PHASE 3\740004TCP3509.dgn

DISCLAIMER: The use of this standard is governed by the "Texas Engineering Practice Act". No warranty of any kind is made by TxDOT for any purpose whatsoever. TxDOT assumes no responsibility for the conversion of this standard to other formats or for incorrect results or damages resulting from its use.

DATE:
FILE:

Barricade and Construction (BC) Standard Sheets General Notes:

1. The Barricade and Construction Standard Sheets (BC sheets) are intended to show typical examples for placement of temporary traffic control devices, construction pavement markings, and typical work zone signs. The information contained in these sheets meet or exceed the requirements shown in the "Texas Manual on Uniform Traffic Control Devices" (TMUTCD).
2. The development and design of the Traffic Control Plan (TCP) is the responsibility of the Engineer.
3. The Contractor may propose changes to the TCP that are signed and sealed by a licensed professional engineer for approval. The Engineer may develop, sign and seal Contractor proposed changes.
4. The Contractor is responsible for installing and maintaining the traffic control devices as shown in the plans. The Contractor may not move or change the approximate location of any device without the approval of the Engineer.
5. Geometric design of lane shifts and detours should, when possible, meet the applicable design criteria contained in manuals such as the American Association of State Highway and Transportation Officials (AASHTO), "A Policy on Geometric Design of Highways and Streets", the TxDOT "Roadway Design Manual" or engineering judgment.
6. When projects abut, the Engineer(s) may omit the END ROAD WORK, TRAFFIC FINES DOUBLE, and other advance warning signs if the signing would be redundant and the work areas appear continuous to the motorists. If the adjacent project is completed first, the Contractor shall erect the necessary warning signs as shown on these sheets, the TCP sheets or as directed by the Engineer. The BEGIN ROAD WORK NEXT X MILES sign shall be revised to show appropriate work zone distance.
7. The Engineer may require duplicate warning signs on the median side of divided highways where median width will permit and traffic volumes justify the signing.
8. All signs shall be constructed in accordance with the details found in the "Standard Highway Sign Designs for Texas," latest edition. Sign details not shown in this manual shall be shown in the plans or the Engineer shall provide a detail to the Contractor before the sign is manufactured.
9. The temporary traffic control devices shown in the illustrations of the BC sheets are examples. As necessary, the Engineer will determine the most appropriate traffic control devices to be used.
10. As shown on BC(2), the OBEY WARNING SIGNS STATE LAW sign and the WORK ZONE TRAFFIC FINES DOUBLE sign with plaque shall be erected in advance of the CSJ limits. The BEGIN ROAD WORK NEXT X MILES, CONTRACTOR and END ROAD WORK signs shall be erected at or near the CSJ limits.
11. Except for devices required by Note 10, traffic control devices should be in place only while work is actually in progress or a definite need exists.
12. The Engineer has the final decision on the location of all traffic control devices.
13. Inactive equipment and work vehicles, including workers' private vehicles must be parked away from travel lanes. They should be as close to the right-of-way line as possible, or located behind a barrier or guardrail, or as approved by the Engineer.

Worker Safety Apparel Notes:

1. Workers on foot who are exposed to traffic or to construction equipment within the right-of-way shall wear high-visibility safety apparel meeting the requirements of ISEA "American National Standard for High-Visibility Apparel" labeled as ANSI 107-2004 standard performance for Class 2 or 3 risk exposure. Class 3 garments should be considered for high traffic volume work areas or night time work.

Only pre-qualified products shall be used. The "Compliant Work Zone Traffic Control Devices List" (CWZTCD) describes prequalified products and their sources and may be found on-line at the web address given below or by contacting:

Texas Department of Transportation
Traffic Operations Division - TE
Phone (512) 416-3134

WEB ADDRESSES FOR REFERENCED DOCUMENTS

Compliant Work Zone Traffic Control Devices List (CWZTCD)
http://www.txdot.gov/publications/traffic.htm

Texas Manual on Uniform Traffic Control Devices (TMUTCD)
http://www.txdot.gov/publications/traffic.htm

Standard Highway Sign Designs for Texas (SHSD)
http://www.txdot.gov/publications/traffic.htm

Traffic Engineering Standard Sheets
http://www.txdot.gov/business/disclaim.htm

Material Producer List
http://www.txdot.gov/business/producer*list.htm

Departmental Material Specifications (DMS)
http://www.txdot.gov/services/construction/material*specifications/

Roadway Design Manual
http://www.txdot.gov/services/general*services/manuals.htm

Texas Department of Transportation
Traffic Operations Division

BARRICADE AND CONSTRUCTION GENERAL NOTES AND REQUIREMENTS

1 of 12 BC(1)-07

©TxDOT 11-4-02

DN: TXDOT	CK: TXDOT	DW: TXDOT	CK: TXDOT

REVISIONS
4-03
9-07

CONT	SECT	JOB	HIGHWAY
2452	01	050	LP 1604
DIST	COUNTY		SHEET NO.
SAT	BEXAR		126

DISCLAIMER: The use of this standard is governed by the "Texas Engineering Practice Act". No warranty of any kind is made by TxDOT for any purpose whatsoever. TxDOT assumes no responsibility for the conversion of this standard to other formats or for incorrect results or damages resulting from its use.

TYPICAL LOCATION OF CROSSROAD SIGNS

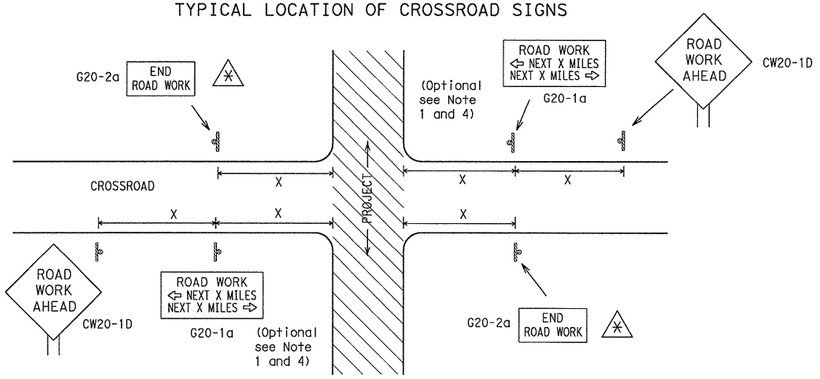

✳ May be mounted on back of CW20-1D sign with approval of engineer. (See note 2 below)

1. The typical minimum signing on a crossroad approach should be a CW20-1D ROAD WORK AHEAD sign and a G20-2a END ROAD WORK sign, unless noted otherwise in plans.
2. The Engineer may use the reduced size 36" x 36" ROAD WORK AHEAD (CW20-1D) sign mounted back to back with the reduced size 36" x 18" END ROAD WORK (G20-2a) sign on low volume crossroads (see Note 4 under "Typical Construction Warning Sign Size and Spacing"). See the "Standard Highway Sign Designs for Texas" manual for sign details. The Engineer may omit the advance warning signs on low volume crossroads. The Engineer will determine whether a road is low volume. This information shall be shown in the plans.
3. Based on existing field conditions, the Engineer/Inspector may require additional signs such as FLAGGER AHEAD, LOOSE GRAVEL, or other appropriate signs. When additional signs are required, these signs will be considered part of the minimum requirements. The Engineer/Inspector will determine the proper location and spacing of any sign not shown on the BC sheets, Traffic Control Plan sheets or the Work Zone Standard Sheets.
4. The G20-1a sign shall be required at high volume crossroads to advise motorists of the length of construction in either direction from the intersection. The Engineer will determine whether a roadway is considered high volume.
5. Additional traffic control devices may be shown elsewhere in the plans for higher volume crossroads.
6. When work occurs in the intersection area, appropriate traffic control devices, as shown elsewhere in the plans or as determined by the Engineer/Inspector, shall be in place.

T-INTERSECTION

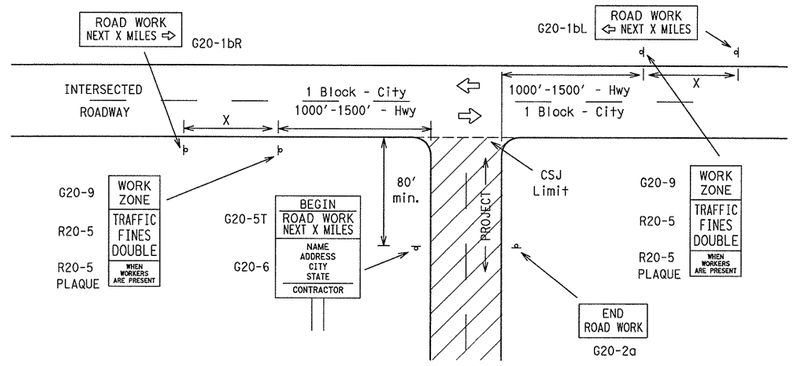

CSJ LIMITS AT T-INTERSECTION

1. The Engineer will determine the types and location of any additional traffic control devices, such as a flagger and accompanying signs, or other signs, that should be used when work is being performed at or near an intersection.
2. If construction closes the road at a T-intersection the Contractor shall place the G20-6 "Contractor Name" sign behind the Type III Barricades for the road closure (see BC(10) also). The G20-1bL and G20-1bR signs shall be replaced by the detour signing called for in the plans.

TYPICAL CONSTRUCTION WARNING SIGN SIZE AND SPACING [1,5,6]

SIZE

Sign Number or Series	Conventional Road	Expressway/ Freeway
CW20 [4], CW21, CW22, CW23, CW25	48" x 48"	48" x 48"
CW1, CW2, CW7, CW8, CW9, CW11, CW14	36" x 36"	48" x 48"
CW3, CW4, CW5, CW6, CW8-3, CW10, CW12	48" x 48"	48" x 48"

SPACING

Posted Speed	Sign Spacing "X" △
MPH	Feet (Apprx.)
30	120
35	160
40	240
45	320
50	400
55	500 [2]
60	600 [2]
65	700 [2]
70	800 [2]
75	900 [2]
80	1000 [2]
✳	✳ [3]

✳ For typical sign spacings on divided highways, expressways and freeways, see Part 6 of the "Texas Manual on Uniform Traffic Control Devices" (TMUTCD) typical application diagrams or TCP Standard Sheets.

△ Minimum distance from work area to first Advance Warning sign nearest the work area and/or distance between each additional sign.

General Notes:

1. Special or larger size signs may be used as necessary.
2. Distance between signs should be increased as required to have 1500 feet advance warning.
3. Distance between signs should be increased as required to have ½ mile or more advance warning.
4. 36" x 36" ROAD WORK AHEAD (CW20-1D) signs may be used on low volume crossroads at the discretion of the Engineer. See Note 2 under "Typical Location of Crossroad Signs".
5. Only diamond shaped warning sign sizes are indicated.
6. See sign size listing in "TMUTCD", Sign Appendix or the "Standard Highway Sign Designs for Texas" manual for complete list of available sign design sizes.

WORK AREAS IN MULTIPLE LOCATIONS WITHIN CSJ LIMITS

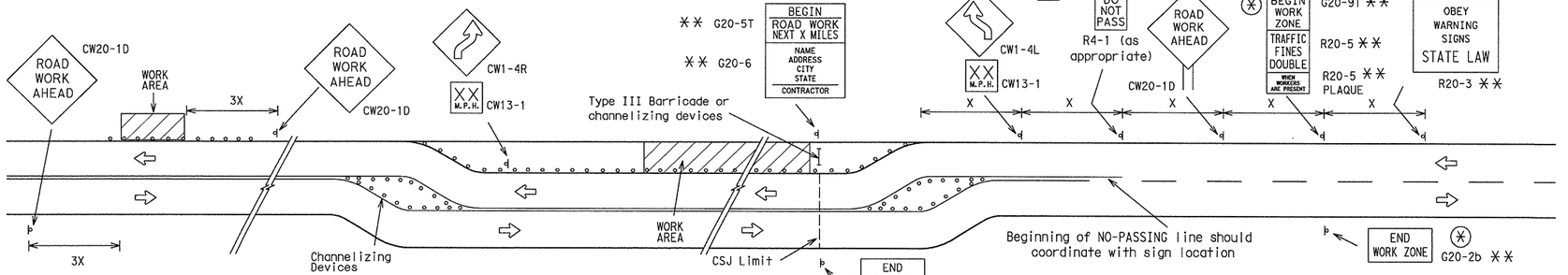

When extended distances occur between minimal work areas, the Engineer/Inspector should ensure additional Road Work Ahead (CW20-1D) signs are placed in advance of these work areas to remind drivers they are still within the project limits. See the applicable TCP sheets for exact location and spacing of signs and channelizing devices.

SAMPLE LAYOUT OF SIGNING FOR WORK BEGINNING AT THE CSJ LIMITS

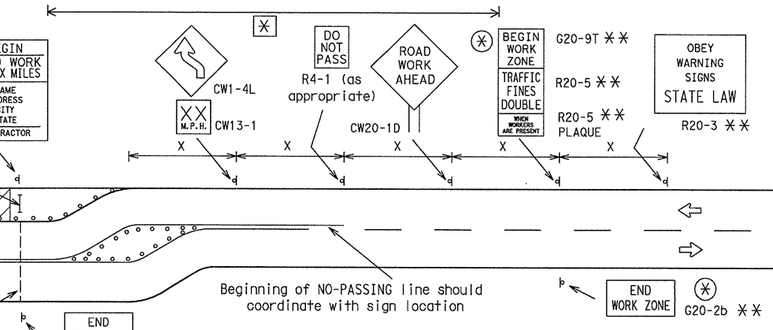

SAMPLE LAYOUT OF SIGNING FOR WORK BEGINNING DOWNSTREAM OF THE CSJ LIMITS

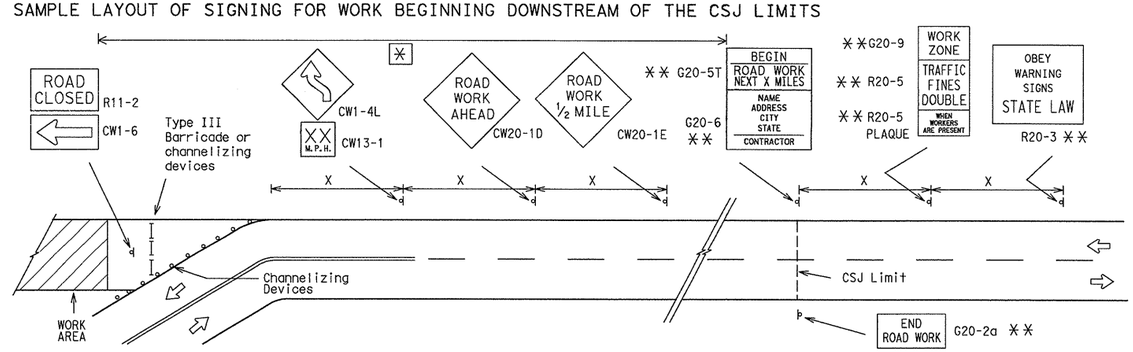

NOTES

The Contractor shall determine the appropriate distance to be placed on the G20-1 series signs and G20-5T sign for each specific project. This distance shall replace the "X" and shall be rounded to the nearest whole mile with the approval of the Engineer. No decimals shall be used.

✳ The G20-9T and G20-2b shall be used when advance signs are required outside the CSJ Limits. They inform the motorist of entering or leaving a work zone where traffic fines may double if workers are present.

✳✳ Required CSJ Limit signing. See Note 10 on BC(1).

✳ Area for placement of "ROAD WORK AHEAD" sign and other signs or devices as called for on the Traffic Control Plan.

LEGEND

- Sign
- ○ ○ Channelizing Devices
- Type III Barricade
- X See Typical Construction Warning Sign Size and Spacing chart or the TMUTCD for sign spacing requirements.

R20-3
Legend/Border - Black
Background - White

Texas Department of Transportation
Traffic Operations Division

BARRICADE AND CONSTRUCTION PROJECT LIMIT STANDARD

2 of 12 BC(2)-07

©TxDOT 11-4-02	DN: TXDOT	CK: TXDOT	DW: TXDOT	CK: TXDOT
9-07 REVISIONS	CONT	SECT	JOB	HIGHWAY
	2452	01	050	LP 1604
	DIST	COUNTY		SHEET NO.
	SAT	BEXAR		127

DATE:
FILE:

DISCLAIMER: The use of this standard is governed by the "Texas Engineering Practice Act". No warranty of any kind is made by TxDOT for any purpose whatsoever. TxDOT assumes no responsibility for the conversion of this standard to other formats or for incorrect results or damages resulting from its use.

TYPICAL APPLICATION OF WORK ZONE SPEED LIMIT SIGNS

Work zone speed limits shall be regulatory, established in accordance with the "Procedures for Establishing Speed Zones," and approved by the Texas Transportation Commission, or by City Ordinance when within Incorporated City Limits.

Reduced speeds should only be posted in the vicinity of work activity and not throughout the entire project.

Regulatory work zone speed signs (R2-1) shall be removed or covered during periods when they are not needed.

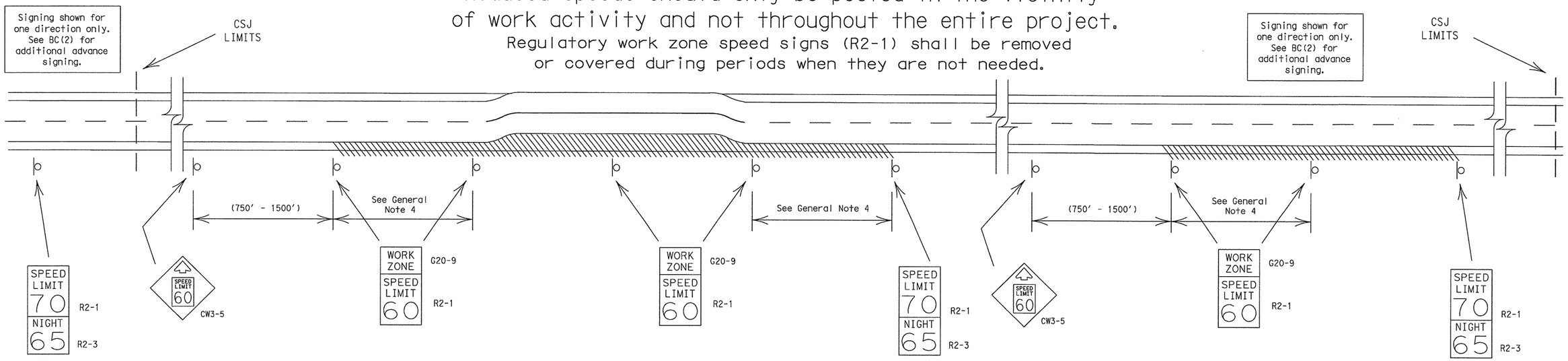

GUIDANCE FOR USE:

LONG/INTERMEDIATE TERM WORK ZONE SPEED LIMITS

This type of work zone speed limit should be included on the design of the traffic control plans when restricted geometrics with a lower design speed are present in the work zone and modification of the geometrics to a higher design speed is not feasible.

Long/Intermediate Term Work Zone Speed Limit signs, when approved as described above, should be posted and visible to the motorist when work activity is present. Work activity may also be defined as a change in the roadway that requires a reduced speed for motorists to safely negotiate the work area, including:

a) rough road or damaged pavement surface
b) substantial alteration of roadway geometrics (diversions)
c) construction detours
d) grade
e) width
f) other conditions readily apparent to the driver

As long as any of these conditions exist, the work zone speed limit signs should remain in place.

SHORT TERM WORK ZONE SPEED LIMITS

This type of work zone speed limit should be included on the design of the traffic control plans when workers or equipment are not behind concrete barrier, when work activity is within 15 feet of pavement edge or actually on the pavement.

Short Term Work Zone Speed Limit signs should be posted and visible to the motorists only when work activity is present. When work activity is not present, signs shall be removed or covered.
(See Removing or Covering on BC(4)).

GENERAL NOTES:

1. Regulatory work zone speed limits should be used only for sections of construction projects where speed control is of major importance.
2. Regulatory work zone speed limit signs shall be placed on supports at a 7 foot minimum mounting height.
3. Speed zone signs are illustrated for one direction of travel and are normally posted for each direction of travel.
4. Frequency of work zone speed limit signs should be:
   40 mph and greater 0.2 to 2 miles
   35 mph and less 0.2 to 1 mile
5. Regulatory speed limit signs shall have black legend and border on a white reflective background (See "Reflective Sheeting" on BC(4)).
6. Fabrication, erection and maintenance of the CW3-5 sign, G20-9 plaque and the R2-1 and R2-3 signs shall not be paid for directly, but shall be considered subsidiary to Item 502.
7. Turning signs from view, laying signs over or down will not be allowed, unless otherwise noted.
8. Techniques that may help reduce traffic speeds include but are not limited to:
   A. Law enforcement.
   B. Flagger stationed next to sign.
   C. Portable changeable message sign (PCMS).
   D. Low-power (drone) radar transmitter.
   E. Speed monitor trailers or signs.
9. Speeds shown on details above are for illustration only. Work Zone Speed Limits should only be posted as approved for each project.

Texas Department of Transportation
Traffic Operations Division

BARRICADE AND CONSTRUCTION WORK ZONE SPEED LIMIT STANDARD

3 of 12 BC(3)-07

©TxDOT 11-4-02	DN: TXDOT	CK: TXDOT	DW: TXDOT	CK: TXDOT
9-07 REVISIONS	CONT	SECT	JOB	HIGHWAY
	2452	01	050	LP 1604
	DIST	COUNTY		SHEET NO.
	SAT	BEXAR		128

DATE:
FILE:

DISCLAIMER: The use of this standard is governed by the "Texas Engineering Practice Act". No warranty of any kind is made by TxDOT for any purpose whatsoever. TxDOT assumes no responsibility for the conversion of this standard to other formats or for incorrect results or damages resulting from its use.

DATE:
FILE:

TYPICAL MINIMUM CLEARANCES FOR LONG TERM AND INTERMEDIATE TERM SIGNS

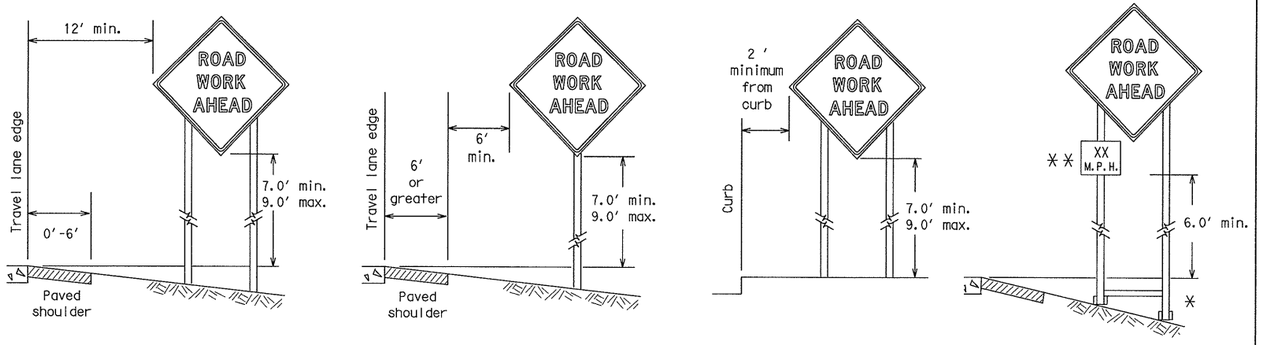

⁂ When placing skid supports on unlevel ground, the leg post lengths must be adjusted so the sign appears straight and plumb. Objects shall NOT be placed under skids as a means of leveling.

⁂⁂ When plaques are placed on dual-leg supports, they should be attached to the upright nearest the travel lane. Supplemental plaques (advisory or distance) should not cover the surface of the parent sign.

ATTACHMENT FOR SIGN SUPPORTS

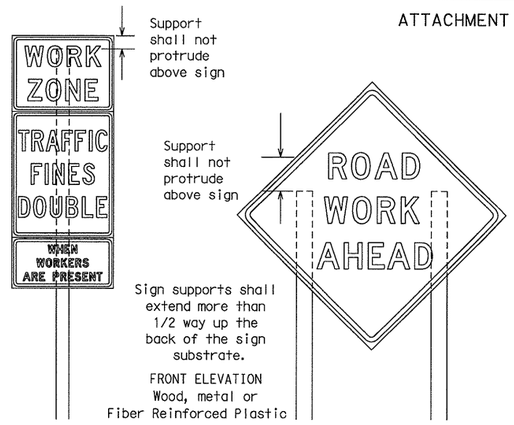

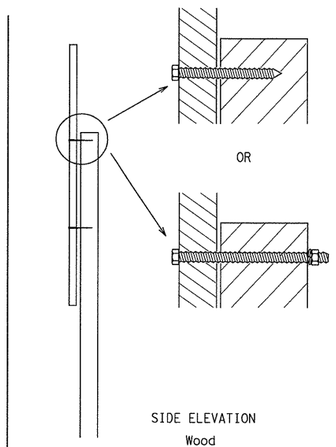

Attachment to wooden supports will be by bolts and nuts or screws. Use TxDOT's or manufacturer's recommended procedures for attaching sign substrates to other types of sign supports

Nails will NOT be allowed.

Each sign shall be attached directly to the sign support. Multiple signs shall not be joined or spliced by any means. Wood supports shall not be extended or repaired by splicing or other means.

Splicing embedded perforated square metal tubing in order to extend post height will only be allowed when the splice is made using four bolts, two above and two below the spice point. Splice must be located entirely behind the sign substrate, not near the base of the support. Splice insert lengths should be at least 5 times nominal post size, centered on the splice and of at least the same guage material.

STOP/SLOW PADDLES

1. STOP/SLOW paddles are the primary method to control traffic by flaggers. The STOP/SLOW paddle size should be 24" x 24" as detailed below.
2. When used at night, the STOP/SLOW paddle shall be retroreflectorized.
3. STOP/SLOW paddles may be attached to a staff with a minimum length of 6′ to the bottom of the sign.
4. Any lights incorporated into the STOP or SLOW paddle faces shall only be as specifically described in Section 6E.03 Hand Signaling Devices in the TMUTCD.

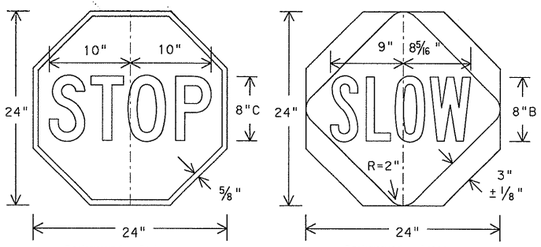

CONTRACTOR REQUIREMENTS FOR MAINTAINING PERMANENT SIGNS WITHIN THE PROJECT LIMITS

1. Permanent signs are used to give notice of traffic laws or regulations, call attention to conditions that are potentially hazardous to traffic operations, show route designations, destinations, directions, distances, services, points of interest, and other geographical, recreational, or cultural information. Drivers proceeding through a work zone need the same, if not better route guidance as normally installed on a roadway without construction.
2. When permanent regulatory or warning signs conflict with work zone conditions, remove or cover the permanent signs until the permanent sign message matches the roadway condition.
3. When existing permanent signs are moved and relocated due to construction purposes, they shall be visible to motorists at all times.
4. If existing signs are to be relocated on their original supports, they shall be installed on crashworthy bases as shown on the SMD Standard sheets. The signs shall meet the required mounting heights shown on the BC Sheets or the SMD Standards. This work should be paid for under the appropriate pay item for relocating existing signs.
5. If permanent signs are to be removed and relocated using temporary supports, the Contractor shall use crashworthy supports as shown on the BC sheets or the CWZTCD. The signs shall meet the required mounting heights shown on the BC Sheets or the SMD Standards during construction. This work should be paid for under the appropriate pay item for relocating existing signs.
6. Any sign or traffic control device that is struck or damaged by the Contractor or his/her construction equipment shall be replaced as soon as possible by the Contractor to ensure proper guidance for the motorists. This will be subsidiary to Item 502.

GENERAL NOTES FOR WORK ZONE SIGNS

1. Contractor shall install and maintain signs in a straight and plumb condition and/or as directed by the Engineer.
2. Wooden sign posts shall be painted white.
3. Barricades shall NOT be used as sign supports.
4. Nails shall NOT be used to attach signs to any support.
5. All signs shall be installed in accordance with the plans or as directed by the Engineer. Signs shall be used to regulate, warn, and guide the traveling public safely through the work zone.
6. The Contractor may furnish either the sign design shown in the plans or in the "Standard Highway Sign Designs for Texas" (SHSD). The Engineer/Inspector may require the Contractor to furnish other work zone signs that are shown in the TMUTCD but may have been omitted from the plans. Any variation in the plans shall be documented by written agreement between the Engineer and the Contractor's Responsible Person. All changes must be documented in writing before being implemented. This can include documenting the changes in the Inspector's TxDOT diary and having both the Inspector and Contractor initial and date the agreed upon changes.
7. The Contractor shall furnish sign supports listed in the "Compliant Work Zone Traffic Control Device List" (CWZTCD). The Contractor shall install the sign support in accordance with the manufacturer's recommendations. If there is a question regarding installation procedures, the Contractor shall furnish the Engineer a copy of the manufacturer's installation recommendations so the Engineer can verify the correct procedures are being followed.
8. The Contractor is responsible for installing signs on approved supports and replacing signs with damaged or cracked substrates and/or damaged or marred reflective sheeting as directed by the Engineer/Inspector.
9. Identification markings may be shown only on the back of the sign substrate. The maximum height of letters and/or company logos used for identification shall be 1 inch.
10. The Contractor shall replace damaged wood posts. New or damaged wood sign posts shall not be spliced.

DURATION OF WORK (as defined by the "Texas Manual on Uniform Traffic Control Devices" Part 6)

1. The types of sign supports, sign mounting height, the size of signs, and the type of sign substrates can vary based on the type of work being performed. The Engineer is responsible for selecting the appropriate size sign for the type of work being performed. The Contractor is responsible for ensuring the sign support, sign mounting height and substrate meets manufacturer's recommendations in regard to crashworthiness and duration of work requirements.
   a. Long-term stationary - work that occupies a location more than 3 days.
   b. Intermediate-term stationary - work that occupies a location more than one daylight period up to 3 days, or nighttime work lasting more than one hour.
   c. Short-term stationary - daytime work that occupies a location for more than 1 hour in a single daylight period.
   d. Short, duration - work that occupies a location up to 1 hour.
   e. Mobile - work that moves continuously or intermittently (stopping for up to approximately 15 minutes.)

SIGN MOUNTING HEIGHT

1. The bottom of Long-term/Intermediate-term signs shall be at least 7 feet, but not more than 9 feet, above the paved surface, except as shown for supplemental plaques mounted below other signs.
2. The bottom of Short-term/Short Duration signs shall be a minimum of 1 foot above the pavement surface but no more than 2 feet above the ground.
3. Long-term/Intermediate-term Signs may be used in lieu of Short-term/Short Duration signing.
4. Short-term/Short Duration signs shall be used only during daylight and shall be removed at the end of the workday. or raised to appropriate Long-term/Intermediate sign height.
5. Regulatory signs shall be mounted at least 7 feet, but not more than 9 feet, above the paved surface regardless of work duration.

SIZE OF SIGNS

1. The Engineer may allow the use of smaller size construction warning signs on secondary roads or city streets where speeds are low if the sign size is listed as an option on the "Typical Construction Warning Sign Size and Spacing" chart shown on BC(2).
2. The Contractor shall furnish the sign sizes shown in plans, the BC Sheets, the TCP sheets or as directed by the Engineer.

SIGN SUBSTRATES

1. The Contractor shall ensure the sign substrate is installed in accordance with the manufacturer's recommendations for the type of sign support that is being used. The CWZTCD lists each substrate that can be used on the different types and models of sign supports.
2. "Mesh" type materials are NOT an approved sign substrate, regardless of the tightness of the weave.
3. All wooden individual sign panels fabricated from 2 or more pieces shall have one or more plywood cleat, 1/2" thick by 6" wide, fastened to the back of the sign and extending fully across the sign. The cleat shall be attached to the back of the sign using wood screws that do not penetrate the face of the sign panel. The screws shall be placed on both sides of the splice and spaced at 6" centers. The Engineer may approve other methods of splicing the sign face.

REFLECTIVE SHEETING

1. All signs shall be retroreflective and constructed of sheeting meeting the color and retro-reflectivity requirements of DMS-8300 for rigid signs or DMS-8310 for roll-up signs. The web address for DMS specifications is shown on BC(1).
2. White sheeting, meeting the requirements of DMS-8300 Type C (High Specific Intensity), shall be used for signs with a white background.
3. Orange sheeting, meeting the requirements of DMS-8300 Type E (Fluorescent Prismatic), shall be used for rigid signs with orange backgrounds.

SIGN LETTERS

1. All sign letters and numbers shall be clear, and open rounded type uppercase alphabet letters as approved by the Federal Highway Administration (FHWA) and as published in the "Standard Highway Sign Design for Texas" manual. Signs, letters and numbers shall be of first class workmanship in accordance with Department Standards and Specifications.

REMOVING OR COVERING

1. When sign messages may be confusing or do not apply, the signs shall be removed or completely covered.
2. Long-term stationary or intermediate stationary signs installed on square metal tubing may be turned away from traffic 90 degrees when the sign message is not applicable. This type of sign support meets the crashworthiness standards regardless of the direction of impact. This technique may not be used for signs installed in the median of divided highways or near any intersections where the sign may be seen from approaching traffic.
3. Signs installed on wooden skids shall not be turned at 90 degree angles to the roadway. These signs should be removed or completely covered when not required.
4. When signs are covered, the material used shall be opaque, such as heavy mil black plastic, or other materials which will cover the entire sign face and maintain their opaque properties under automobile headlights at night, without damaging the sign sheeting.
5. Burlap shall NOT be used to cover signs.
6. Duct tape or other adhesive material shall NOT be affixed to a sign face. These materials can damage the retroreflectivity of sheeting.
7. Signs and anchor stubs shall be removed and holes backfilled upon completion of work.

SIGN SUPPORT WEIGHTS

1. Where sign supports require the use of weights to keep from turning over, the use of sandbags with dry, cohesionless sand is recommended.
2. The sandbags will be tied shut to keep the sand from spilling and to maintain a constant weight.
3. Rock, concrete, iron, steel or other solid objects shall not be permitted for use as sign support weights.
4. Sandbags should weigh a minimum of 35 lbs and a maximum of 50 lbs.
5. Sandbags shall be made of a durable material that tears upon vehicular impact.
6. Rubber (such as tire inner tubes) shall NOT be used for sandbags.
7. Rubber ballasts designed for channelizing devices should not be used for ballast on portable sign supports. Sign supports designed and manufactured with rubber bases may be used when shown on the CWZTCD list.
8. Sandbags shall only be placed along or laid over the base supports of the traffic control device and shall not be suspended above ground level or hung with rope, wire, chains or other fasteners. Sandbags shall be placed along the length of the skids to weigh down the sign support.
9. Sandbags shall NOT be placed under the skid and shall not be used to level sign supports placed on slopes.

Texas Department of Transportation
Traffic Operations Division

BARRICADE AND CONSTRUCTION TEMPORARY SIGN NOTES STANDARD

4 of 12 BC(4)-07

© TxDOT 11-4-02

DN: TXDOT	CK: TXDOT	DW: TXDOT	CK: TXDOT

9-07 REVISIONS	CONT	SECT	JOB	HIGHWAY
	2452	01	050	LP 1604
	DIST	COUNTY		SHEET NO.
	SAT	BEXAR		129

DISCLAIMER:
The use of this standard is governed by the "Texas Engineering Practice Act". No warranty of any kind is made for any purpose whatsoever. TxDOT assumes no responsibility for the conversion of this standard to other formats or for incorrect results or damages resulting from its use.

DATE:
FILE:

SKID MOUNTED WOOD SIGN SUPPORTS

LONG/INTERMEDIATE TERM STATIONARY - PORTABLE SKID MOUNTED SIGN SUPPORTS □

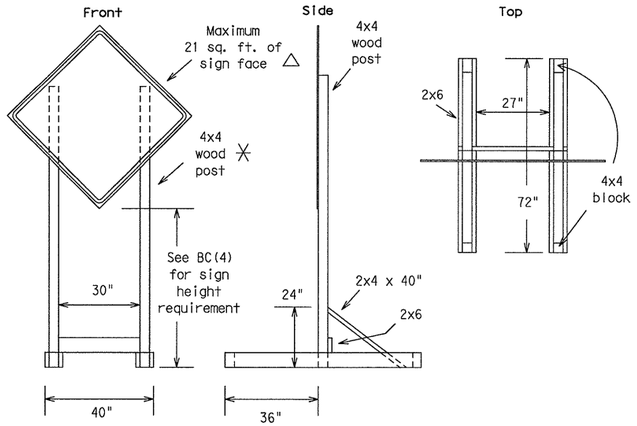

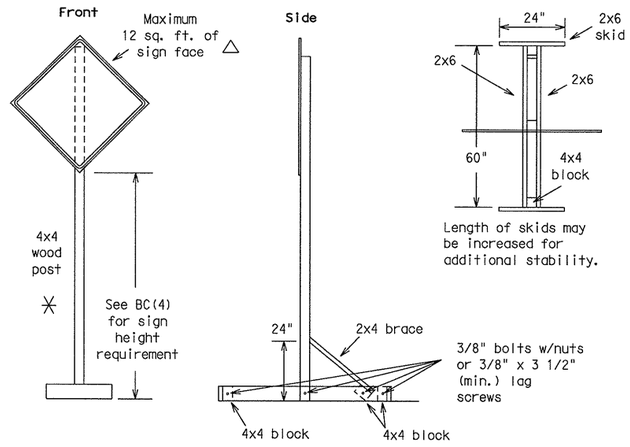

SKID MOUNTED PERFORATED SQUARE STEEL TUBING SIGN SUPPORTS

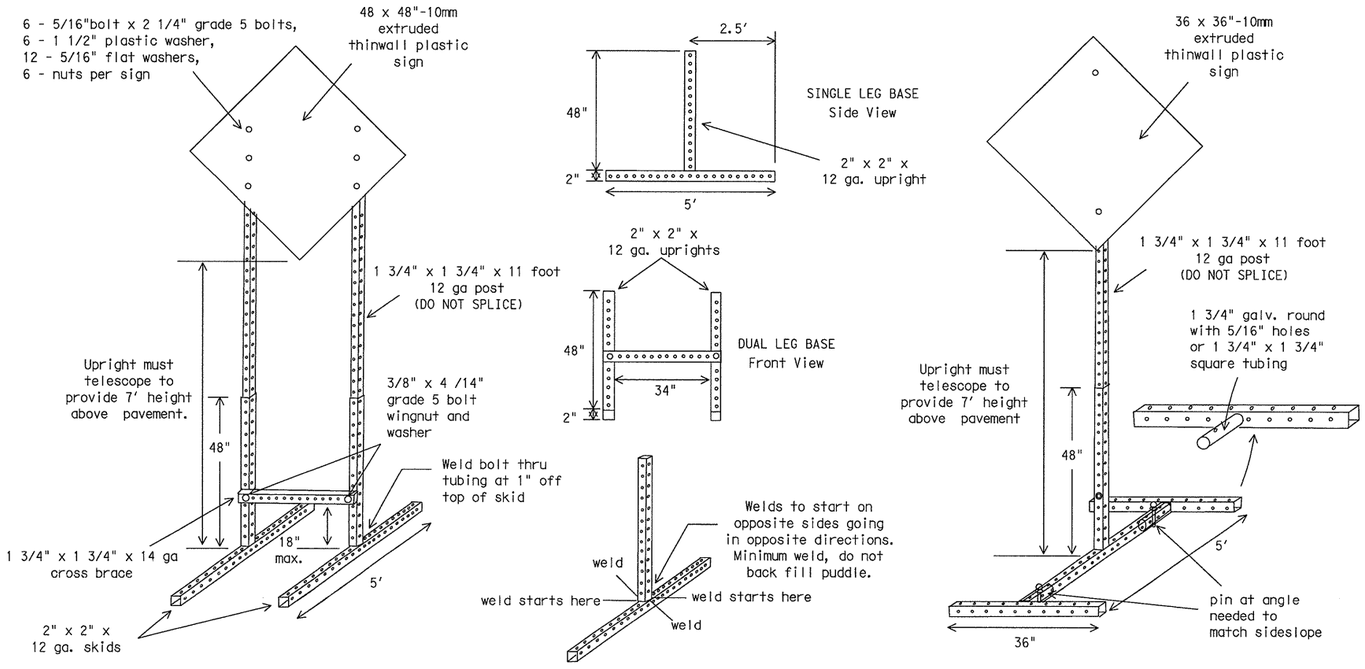

WEDGE ANCHORS

Both steel and plastic Wedge Anchor Systems as shown on the SMD Standard Sheets may be used as temporary sign supports for signs up to 10 square feet of sign face. They may be set in concrete or in sturdy soils if approved by the Engineer. (See web address for "Traffic Engineering Standard Sheets" on BC(1)).

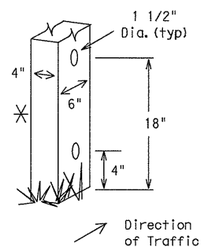

WOOD POST SYSTEM FOR GROUND MOUNTED SIGN SUPPORTS

Nominal Post Size	No. of Posts	Maximum Sq. feet of Sign Face	Minimum Soil Embedment	Drilled Hole(s) Required
4 x 4	1	12	36"	NO
4 x 4	2	21	36"	NO
4 x 6	1	21	36"	YES
4 x 6	2	36	36"	YES

GROUND MOUNTED SIGN SUPPORTS

Refer to the CWZTCD and the manufacturer's installation procedure for each type sign support. The maximum sign square footage shall adhere to the manufacturer's recommendation. Two post installations can be used for larger signs.

PERFORATED SQUARE METAL TUBING

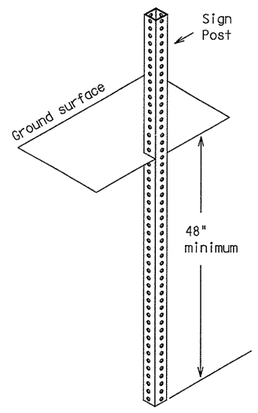

OPTION 1
(Direct Embedment)

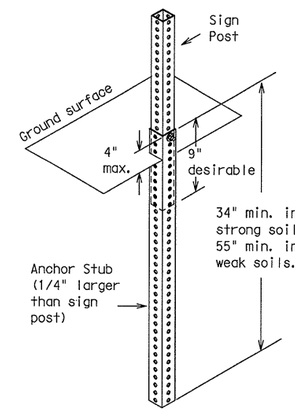

OPTION 2
(Anchor Stub)

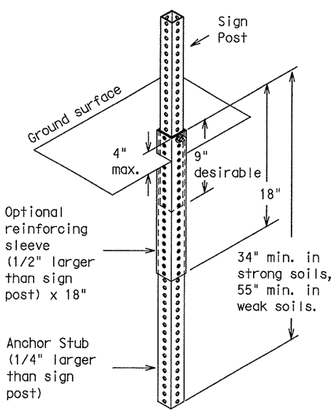

OPTION 3
(Anchor Stub and Reinforcing Sleeve))

WING CHANNEL

Lap-splice/base bolted anchor

GENERAL NOTES

1. Nails may be used in the assembly of wooden sign supports, but 3/8" bolts with nuts or 3/8" x 3 1/2" lag screws must be used on every joint for final connection.
2. More details of approved Long/Intermediate and Short Term supports can be found on the CWZTCD list. See BC(1) for website location.
3. No more than 2 sign posts shall be placed within a 7 ft. circle, except for specific materials noted on the CWZTCD List.
4. When project is completed, all sign supports and foundations shall be removed from the project site. This will be considered subsidiary to Item 502.

□ See BC(4) for definition of "Work Duration."

✳ Wood sign posts MUST be one piece. Splicing will NOT be allowed. Posts shall be painted white.

△ See the CWZTCD for the type of sign substrate that can be used for each approved sign support.

Texas Department of Transportation
Traffic Operations Division

BARRICADE AND CONSTRUCTION TYPICAL SIGN SUPPORT STANDARD

5 of 12 BC(5)-07

©TxDOT 11-4-02

DN: TXDOT	CK: TXDOT	DW: TXDOT	CK: TXDOT

REVISIONS	CONT	SECT	JOB	HIGHWAY
9-07	2452	01	050	LP 1604
	DIST	COUNTY		SHEET NO.
	SAT	BEXAR		130

DISCLAIMER: The use of this standard is governed by the "Texas Engineering Practice Act". No warranty of any kind is made by TxDOT for any purpose whatsoever. TxDOT assumes no responsibility for the conversion of this standard to other formats or for incorrect results or damages resulting from its use.

DATE:
FILE:

PORTABLE CHANGEABLE MESSAGE SIGNS

1. The Engineer/Inspector shall approve all messages used on portable changeable message signs (PCMS).
2. Messages on PCMS should contain no more than 8 words (about four to eight characters per word), not including simple words such as "TO," "FOR," "AT," etc.
3. Messages should consist of a single phase, or two phases that alternate. Three-phase messages are not allowed. Each phase of the message should convey a single thought, and must be understood by itself.
4. Use the word "EXIT" to refer to an exit ramp on a freeway; i.e., "EXIT CLOSED." Do not use the term "RAMP."
5. Always use the route or interstate designation (IH, US, SH, FM) along with the number when referring to a roadway.
6. When in use the bottom of a stationary PCMS message panel should be a minimum 7 feet above the roadway, where possible.
7. The message term "WEEKEND" should be used only if the work is to start on Saturday morning and end by Sunday evening at midnight. Actual days and hours of work should be displayed on the PCMS if work is to begin on Friday evening and/or continue into Monday morning.
8. The Engineer/Inspector may select one of two options which are available for displaying a two-phase message on a PCMS. Each phase may be displayed for either four seconds each or for three seconds each.
9. Do not "flash" messages or words included in a message. The message should be steady burn or continuous while displayed.
10. Do not present redundant information on a two-phase message; i.e., keeping two lines of the message the same and changing the third line.
11. Do not use the word "Danger" in message.
12. Do not display the message "LANES SHIFT LEFT" or "LANES SHIFT RIGHT" on a PCMS. Drivers do not understand the message.
13. Do not display messages that scroll horizontally or vertically across the face of the sign.
14. The following table lists abbreviated words and two-word phrases that are acceptable for use on a PCMS. Both words in a phrase must be displayed together. Words or phrases not on this list should not be abbreviated.
15. PCMS character height should be at least 18 inches for trailer mounted units. They should be visible from at least 1/2 (.5) mile and the text should be legible from at least 720 feet. Truck mounted units must have a character height of 10 inches and must be legible from at least 400 feet.
16. Each line of text should be centered on the message board rather than left or right justified.
17. If disabled, the PCMS should default to an illegible display that will not alarm motorists and will only be used to alert workers that the PCMS has malfunctioned. A pattern such as a series of horizontal solid bars is appropriate.

Word or Phrase	Abb.	Word or Phrase	Abb.
Access Road	ACCS RD	Major	MAJ
Air Quality	AIR QLTY	Miles	MI
Alternate	ALT	Miles Per Hour	MPH
Avenue	AVE	Minor	MNR
Best Route	BEST RTE	Monday	MON
Boulevard	BLVD	Normal	NORM
Bridge	BRDG	North	N
Cannot	CANT	Northbound	(route) N
Center	CNTR	Parking	PKING
Construction Ahead	CONST AHEAD	Parking Lot	PRK LOT
Detour Route	DETOUR RTE	Road	RD
Do Not	DONT	Right Lane	RGT LN
East	E	Saturday	SAT
Eastbound	(route) E	Service Road	SERV RD
Emergency	EMER	Shoulder	SHLDR
Emergency Vehicle	EMER VEH	Slippery	SLIP
Entrance, Enter	ENT	South	S
Express Lanes	EXP LANE	Southbound	(route) S
Expressway	EXPWY	Speed	SPD
XXXX Feet	XXXX FT	Street	ST
Fog Ahead	FOG AHD	Sunday	SUN
Freeway	FRWY, FWY	Telephone	PHONE
Freeway Blocked	FWY BLKD	Temporary	TEMP
Friday	FRI	Thursday	THURS
Hazardous Driving	HAZ DRIVING	To Downtown	TO DWNTN
Hazardous Material	HAZMAT	Traffic	TRAF
High-Occupancy Vehicle	HOV	Travelers	TRVLRS
Highway	HWY	Tuesday	TUES
Hours	HR	Time Minutes	TIME MIN
Information	INFO	Upper Level	UPPR LVL
It Is	ITS	Vehicle	VEH
Junction	JCT	Warning	WARN
Left	LFT	Wednesday	WED
Left Lane	LFT LN	Weight Limit	WT LIMIT
Lane Closed	LN CLSD	West	W
Lower Level	LOWR LVL	Westbound	(route) W
Maintenance	MAINT	Wet Pavement	WET PVMT
		Will Not	WONT

Roadway designation # IH-number, US-number, SH-number, FM-number

WHEN NOT IN USE, REMOVE THE PCMS FROM THE RIGHT-OF-WAY OR PLACE THE PCMS BEHIND BARRIER OR GUARDRAIL WITH SIGN PANEL TURNED PARALLEL TO TRAFFIC

RECOMMENDED PHASES AND FORMATS FOR PCMS MESSAGES DURING ROADWORK ACTIVITIES

(The Engineer may approve other messages not specifically covered here.)

Phase 1: Condition Lists

Road/Lane/Ramp Closure List

- FREEWAY CLOSED X MILE
- FRONTAGE ROAD CLOSED
- ROAD CLOSED AT SH XXX
- SHOULDER CLOSED XXX FT
- ROAD CLSD AT FM XXXX
- RIGHT LN CLOSED XXX FT
- RIGHT X LANES CLOSED
- RIGHT X LANES OPEN
- CENTER LANE CLOSED
- DAYTIME LANE CLOSURES
- NIGHT LANE CLOSURES
- I-XX SOUTH EXIT CLOSED
- VARIOUS LANES CLOSED
- EXIT XXX CLOSED X MILE
- EXIT CLOSED
- RIGHT LN TO BE CLOSED
- MALL DRIVEWAY CLOSED
- X LANES CLOSED TUE - FRI
- XXXXXXXX BLVD CLOSED

Other Condition List

- ROADWORK XXX FT
- ROAD REPAIRS XXXX FT
- FLAGGER XXXX FT
- LANE NARROWS XXXX FT
- RIGHT LN NARROWS XXXX FT
- TWO-WAY TRAFFIC XX MILE
- MERGING TRAFFIC XXXX FT
- CONST TRAFFIC XXX FT
- LOOSE GRAVEL XXXX FT
- UNEVEN LANES XXXX FT
- DETOUR X MILE
- ROUGH ROAD XXXX FT
- ROADWORK PAST SH XXXX
- ROADWORK NEXT FRI-SUN
- BUMP XXXX FT
- US XXX EXIT X MILES
- TRAFFIC SIGNAL XXXX FT
- LANES SHIFT *

* LANES SHIFT in Phase 1 must be used with STAY IN LANE in Phase 2.

Phase 2: Possible Component Lists

Action to Take/Effect on Travel List

- MERGE RIGHT
- FORM X LINES RIGHT
- DETOUR NEXT X EXITS
- USE XXXXX RD EXIT
- USE EXIT XXX
- USE EXIT I-XX NORTH
- STAY ON US XXX SOUTH
- USE I-XX E TO I-XX N
- TRUCKS USE US XXX N
- WATCH FOR TRUCKS
- WATCH FOR TRUCKS
- EXPECT DELAYS
- EXPECT DELAYS
- PREPARE TO STOP
- REDUCE SPEED XXX FT
- END SHOULDER USE
- USE OTHER ROUTES
- WATCH FOR WORKERS
- STAY IN LANE *

Location List

- AT FM XXXX
- BEFORE RAILROAD CROSSING
- NEXT X MILES
- PAST US XXX EXIT
- XXXXXXX TO XXXXXXX
- US XXX TO FM XXXX

Warning List

- SPEED LIMIT XX MPH
- MAXIMUM SPEED XX MPH
- MINIMUM SPEED XX MPH
- ADVISORY SPEED XX MPH
- RIGHT LANE EXIT
- USE CAUTION
- DRIVE SAFELY
- DRIVE WITH CARE

** Advance Notice List

- TUE-FRI XX AM- X PM
- APR XX- XX X PM-X AM
- BEGINS MONDAY
- BEGINS MAY XX
- MAY X-X XX PM - XX AM
- NEXT FRI-SUN
- XX AM TO XX PM
- NEXT TUE AUG XX
- TONIGHT XX PM- XX AM

* LANES SHIFT in Phase 1 must be used with STAY IN LANE in Phase 2.

** See Application Guidelines Note 6.

Application Guidelines

1. Only 1 or 2 phases are to be used on a PCMS.
2. The 1st phase (or both) should be selected from the "Road/Lane/Ramp Closure List" and the "Other Condition List".
3. A 2nd phase can be selected from the "Action to Take/Effect on Travel, Location, General Warning, or Advance Notice Phase Lists".
4. A Location Phase is necessary only if a distance or location is not included in the first phase selected.
5. If two PCMS are used in sequence, they must be separated by a minimum of 1000 ft. Each PCMS shall be limted to two phases, and should be understandable by themselves.
6. For advance notice, when the current date is within seven days of the actual work date, calendar days should be replaced with days of the week. Advance notification should typically be for no more than one week prior to the work

Wording Alternatives

1. The words RIGHT, LEFT and ALL can be interchanged as appropriate.
2. Roadway designations IH, US, SH, FM and LP can be interchanged as appropriate.
3. EAST, WEST, NORTH and SOUTH (or abbreviations E, W, N and S) can be interchanged as appropriate.
4. Highway names and numbers replaced as appropriate.
5. ROAD, HIGHWAY and FREEWAY can be interchanged as needed.
6. AHEAD may be used instead of distances if necessary.
7. FT and MI, MILE and MILES interchanged as appropriate.
8. AT, BEFORE and PAST interchanged as needed.
9. Distances or AHEAD can be eliminated from the message if a location phase is used.

PCMS SIGNS WITHIN THE R.O.W. SHALL BE BEHIND GUARDRAIL OR CONCRETE BARRIER OR SHALL HAVE A MINIMUM OF FOUR (4) PLASTIC DRUMS PLACED PERPENDICULAR TO TRAFFIC ON THE UPSTREAM SIDE OF THE PCMS.

FULL MATRIX PCMS SIGNS

1. When Full Matrix PCMS signs are used, the character height and legibility/visibility requirements shall be maintained as listed in Note 15 under "PORTABLE CHANGEABLE MESSAGE SIGNS" above.
2. When symbol signs, such as the CW20-7a Flagger Symbol, are represented graphically on the Full Matrix PCMS sign and, with the approval of the Engineer, it shall maintain the legibility/visibility requirement listed above.
3. When symbol signs are represented graphically on the Full Matrix PCMS, they shall only supplement the use of the static sign represented, and shall not substitute for, or replace that sign.
4. A full matrix PCMS may be used to simulate a flashing arrow panel provided it meets the visibility, flash rate and dimming requirements on BC(7), for the same size arrow.

Texas Department of Transportation
Traffic Operations Division

BARRICADE AND CONSTRUCTION PORTABLE CHANGEABLE MESSAGE SIGN (PCMS) STANDARD

6 of 12 BC(6)-07

©TxDOT 11-4-02

DN: TXDOT	CK: TXDOT	DW: TXDOT	CK: TXDOT
CONT	SECT	JOB	HIGHWAY
2452	01	050	LP 1604
DIST	COUNTY		SHEET NO.
SAT	BEXAR		131

9-07 REVISIONS

DISCLAIMER: The use of this standard is governed by the "Texas Engineering Practice Act". No warranty of any kind is made by TxDOT for any purpose whatsoever. TxDOT assumes no responsibility for the conversion of this standard to other formats or for incorrect results or damages resulting from its use.

BARRIER REFLECTORS FOR CONCRETE TRAFFIC BARRIER AND ATTENUATORS

1. Barrier Reflectors shall be prequalified, and conform to the color and reflectivity requirements of DMS-8600. A list of prequalified Barrier Reflectors (Type C Delineators) can be found at the Material Producer List web address shown on BC(1).
2. Color of Barrier Reflectors shall be as specified in the TMUTCD. The cost of the reflectors shall be considered subsidiary to Item 502.

CONCRETE TRAFFIC BARRIER (CTB)

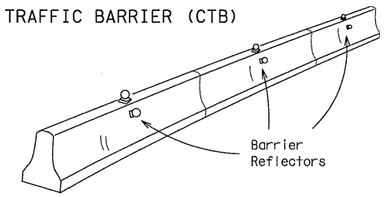

3. Where traffic is on one side of the CTB, two (2) Barrier Reflectors shall be mounted in approximately the midsection of each section of CTB. An alternate mounting location is uniformly spaced at one end of each CTB. This will allow for attachment of a barrier grapple without damaging the reflector. The Barrier Reflector mounted on the side of the CTB shall be located directly below the reflector mounted on top of the barrier, as shown in the detail above.
4. Where CTB separates two-way traffic, three barrier reflectors shall be mounted on each section of CTB. The reflector unit on top shall have two yellow reflective faces (Bi-Directional)while the reflectors on each side of the barrier shall have one yellow reflective face, as shown in the detail above.
5. When CTB separates traffic traveling in the same direction, no barrier reflectors will be required on top of the CTB.
6. Barrier Reflector units shall be yellow or white in color to match the edgeline being supplemented. Yellow Barrier Reflectors shall be made with Type E Fluorescent Prismatic Yellow Retroreflective Sheeting. White reflectors shall be made with Type D White Prismatic sheeting.
7. Maximum spacing of Barrier Reflectors is forty (40) feet.
8. Pavement markers or temporary flexible-reflective roadway marker tabs shall NOT be used as CTB delineation.
9. Attachment of Barrier Reflectors to CTB shall be per manufacturer's recommendations.
10. Missing or damaged Barrier Reflectors shall be replaced as directed by the Engineer.
11. Single slope barriers shall be delineated as shown on the above detail.

LOW PROFILE CONCRETE BARRIER (LPCB)

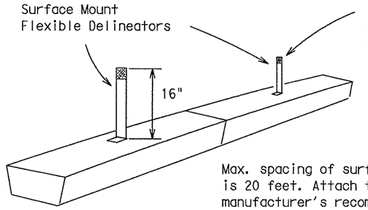

Max. spacing of surface mount flexible delineators is 20 feet. Attach the delineators as per manufacturer's recommendations.

DELINEATION OF END TREATMENTS

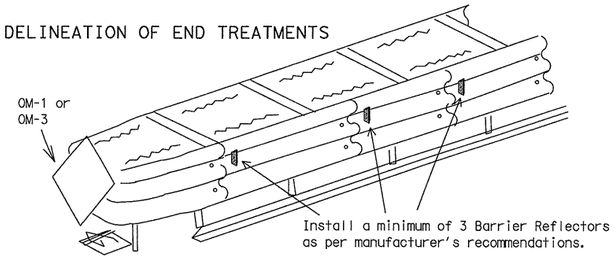

	APPROACHING TRAFFIC	
	BOTH SIDES	ONE SIDE
DELINEATION	OM-1	OM-3 or Vertical Panel

END TREATMENTS FOR CTB'S USED IN WORK ZONES

End treatments used on CTB's in work zones shall meet crashworthy standards as defined in the National Cooperative Highway Research Report 350. Refer to the CWZTCD List for approved end treatments and manufacturers.

TYPICAL FLASHING ARROW PANEL

Arrow Panels may be located behind channelizing devices in place for a shoulder taper or merging taper, otherwise they shall be delineated with four (4) channelizing devices placed perpendicular to traffic on the upstream side of traffic.

1. The Flashing Arrow Panel should be used for all lane closures on multi-lane roadways, or slow moving maintenance or construction activities on the travel lanes.
2. Flashing Arrow Panels should not be used on two-lane, two-way roadways, detours, diversions or work on shoulders unless the "CAUTION" display (see detail below) is used.
3. The Engineer/Inspector shall choose all appropriate signs, barricades and/or other traffic control devices that should be used in conjunction with the Flashing Arrow Panel.
4. The Flashing Arrow Panel should be able to display the following symbols:

Flashing RIGHT (LEFT) ARROW

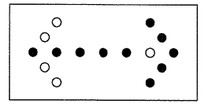

Flashing DOUBLE ARROW

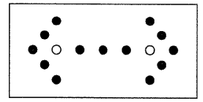

Flashing CAUTION

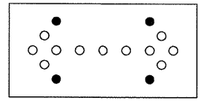

5. The "CAUTION" display consists of four corner lamps flashing simultaneously.
6. The straight line caution display is NOT ALLOWED.
7. The Flashing Arrow Panel shall be capable of minimum 50 percent dimming from rated lamp voltage. The flashing rate of the lamps shall not be less than 25 nor more than 40 flashes per minute.
8. Minimum lamp "on time" shall be approximately 50 percent for the flashing arrow and equal intervals of 25 percent for each sequential phase of the flashing chevron.
9. The sequential arrow display is NOT ALLOWED.
10. The flashing arrow display is the TxDOT standard; however, the sequential Chevron display may be used during daylight operations.

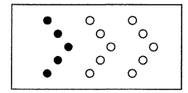

Sequential Chevron

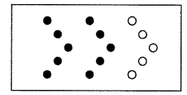

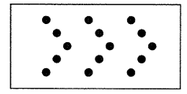

REQUIREMENTS

TYPE	MINIMUM SIZE	MINIMUM NUMBER OF PANEL LAMPS	MINIMUM VISIBILITY DISTANCE
B	30 x 60	13	3/4 mile
C	48 x 96	15	1 mile

ATTENTION: Flashing Arrow Panels shall be equipped with automatic dimming devices.

WHEN NOT IN USE, REMOVE THE ARROW PANEL FROM THE RIGHT-OF-WAY OR PLACE THE ARROW PANEL BEHIND CONCRETE TRAFFIC BARRIER OR GUARDRAIL.

11. The Flashing Arrow Panel shall be mounted on a vehicle, trailer or other suitable support.
12. A Flashing Arrow Panel SHALL NOT BE USED to laterally shift traffic.
13. A full matrix PCMS may be used to simulate a Flashing Arrow Panel provided it meets visibility, flash rate and dimming requirements on this sheet for the same size arrow.
14. Minimum mounting height of trailer mounted arrow panels should be 7 feet from roadway to bottom of panel.

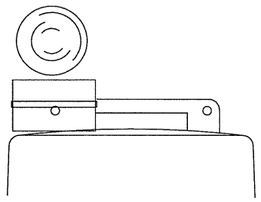

Type C Warning Light or approved substitute mounted adjacent to the travel way.

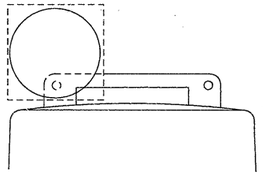

Warning reflector may be round or square. Must have a reflective surface area of at least 30 square inches

WARNING LIGHTS

1. Warning lights shall meet the requirements of the TMUTCD.
2. Warning lights shall NOT be installed on barricades.
3. Type A-Low Intensity Flashing Warning Lights are commonly used with drums. They are intended to warn of or mark a potentially hazardous area. Their use shall be as indicated on this sheet and/or other sheets of the plans by the designation "FL". The Type A Warning Lights shall not be used with signs manufactured with Type E Sheeting (Fluorescent Prismatic) meeting the requirements of Departmental Material Specification DMS-8300.
4. Type-C and Type D 360 degree Steady Burn Lights are intended to be used in a series for delineation to supplement other traffic control devices. Their use shall be as indicated on this sheet and/or other sheets of the plans by the designation "SB".
5. The Engineer/Inspector or the plans shall specify the location and type of warning lights to be installed on the traffic control devices.
6. When required by the Engineer, the Contractor shall furnish a copy of the warning lights certification. The warning light manufacturer will certify the warning lights meet the requirements of the latest ITE Purchase Specifications for Flashing and Steady-Burn Warning Lights.
7. When used to delineate curves, Type-C and Type D Steady Burn Lights should only be placed on the outside of the curve, not the inside.

WARNING LIGHTS MOUNTED ON PLASTIC DRUMS

1. Type A flashing warning lights are intended to warn drivers that they are approaching or are in a potentially hazardous area.
2. Type A random flashing warning lights are not intended for delineation and shall not be used in a series.
3. A series of sequential flashing warning lights placed on channelizing devices to form a merging taper may be used for delineation. If used, the successive flashing of the sequential warning lights should occur from the beginning of the taper to the end of the merging taper in order to identify the desired vehicle path. The rate of flashing for each light shall be 65 flashes per minute, plus or minus 10 flashes.
4. Type C and D steady-burn warning lights are intended to be used in a series to delineate the edge of the travel lane on detours, on lane changes, on lane closures, and on other similar conditions.
5. Type A, Type C and Type D warning lights shall be installed at locations as detailed on other sheets in the plans.
6. Warning lights shall not be installed on a drum that has a sign, chevron or vertical panel.
7. The maximum spacing for warning lights on drums should be identical to the channelizing device spacing.

WARNING REFLECTORS MOUNTED ON PLASTIC DRUMS AS A SUBSTITUTE FOR TYPE C (STEADY BURN) WARNING LIGHTS

1. A warning reflector or approved substitute may be mounted on a plastic drum as a substitute for a Type C, steady burn warning light at the discretion of the Contractor unless otherwise noted in the plans.
2. The warning reflector shall be yellow in color and shall be manufactured using a sign substrate approved for use with plastic drums listed on the CWZTCD.
3. The warning reflector shall have a minimum retroreflective surface area (one-side) of 30 square inches.
4. Round reflectors shall be fully reflectorized, including the area where attached to the drum.
5. Square substrates must have a minimum of 30 square inches of reflectorized sheeting. They do not have to be reflectorized where it attaches to the drum.
6. The side of the warning reflector facing approaching traffic shall have sheeting meeting the color and retroreflectivity requirements for DMS 8300-Type D (Non-fluorescent Prismatic).
7. When used near two-way traffic, both sides of the warning reflector shall be reflectorized.
8. The warning reflector should be mounted on the side of the handle nearest approaching traffic.
9. The maximum spacing for warning reflectors should be identical to the channelizing device spacing requirements.

TRUCK-MOUNTED ATTENUATORS

1. Truck-mounted attenuators (TMA) used on TxDOT facilities must meet the requirements outlined in the National Cooperative Highway Research Report No. 350 (NCHRP 350).
2. Refer to the CWZTCD for the requirements of Level 2 or Level 3 TMAs.
3. Refer to the dates shown in the CWZTCD to ensure that the TMA meets the age requirements and the crashworthiness criteria established by the Federal Highway Administration (FHWA) for TMAs.
4. Refer to the CWZTCD for a list of approved TMAs.
5. TMAs are required on freeways unless otherwise noted in the plans.
6. A TMA should be used anytime that it can be positioned approximately 30 to 100 feet in advance of the area of crew exposure without adversely affecting the work performance.
7. The only reason a TMA should not be required is when a work area is spread down the roadway and the work crew is an extended distance from the TMA.

Texas Department of Transportation
Traffic Operations Division

BARRICADE AND CONSTRUCTION ARROW PANEL, REFLECTORS, WARNING LIGHTS & ATTENUATOR STANDARD

7 of 12 BC(7)-07

©TxDOT 11-4-02	DN: TXDOT		CK: TXDOT	DW: TXDOT	CK: TXDOT
9-07 REVISIONS	CONT	SECT	JOB	HIGHWAY	
	2452	01	050	LP 1604	
	DIST	COUNTY		SHEET NO.	
	SAT	BEXAR		132	

DATE:
FILE:

DISCLAIMER: The use of this standard is governed by the "Texas Engineering Practice Act". No warranty of any kind is made by TxDOT for any purpose whatsoever. TxDOT assumes no responsibility for the conversion of this standard to other formats or for incorrect results or damages resulting from its use.

DATE:
FILE:

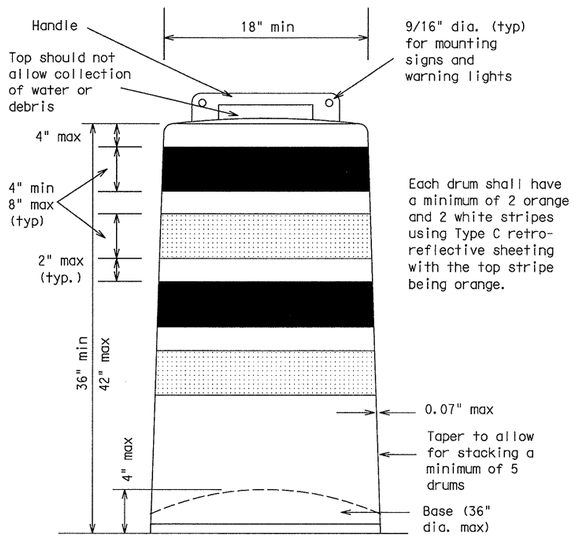

GENERAL NOTES

1. For long term stationary work zones on freeways, drums shall be used as the primary channelizing device.
2. For intermediate term stationary work zones on freeways, drums should be used as the primary channelizing device but may be replaced in tangent sections by vertical panels, or 42" two-piece cones. In tangent sections one-piece cones may be used with the approval of the Engineer but only if personnel are present on the project at all times to maintain the cones in proper position and location.
3. For short term stationary work zones on freeways, drums are the preferred channelizing device but may be replaced in tapers, transitions and tangent sections by vertical panels, two-piece cones ar one-piece cones as approved by the Engineer.
4. Drums and all related items shall comply with the requirements of the current version of the "Texas Manual on Uniform Traffic Control Devices" (TMUTCD) and the "Compliant Work Zone Traffic Control Devices List" (CWZTCD).
5. Drums, bases, and related materials shall exhibit good workmanship and shall be free from objectionable marks or defects that would adversely affect their appearance or serviceability.
6. The Contractor shall have a maximum of 24 hours to replace any plastic drums identified for replacement by the Engineer/Inspector. The replacement device must be an approved device.

GENERAL DESIGN REQUIREMENTS

Prequalified plastic drums shall meet the following requirements:

1. Plastic drums shall be a two-piece design; the "body" of the drum shall be the top portion and the "base" shall be the bottom.
2. The body and base shall lock together in such a manner that the body separates from the base when impacted by a vehicle traveling at a speed of 20 MPH or greater but prevents accidental separation due to normal handling and/or air turbulence created by passing vehicles.
3. Plastic drums shall be constructed of lightweight flexible, and deformable materials. The Contractor shall NOT use metal drums or single piece plastic drums as channelization devices or sign supports.
4. Drums shall present a profile that is a minimum of 18 inches in width at the 36 inch height when viewed from any direction. The height of drum unit (body installed on base) shall be a minimum of 36 inches and a maximum of 42 inches.
5. The top of the drum shall have a built-in handle for easy pickup and shall be designed to drain water and not collect debris. The handle shall have a minimum of two widely spaced 9/16 inch diameter holes to allow attachment of a warning light, warning reflector unit or approved compliant sign.
6. The exterior of the drum body shall have a minimum of four alternating orange and white retroreflective circumferential stripes not less than 4 inches nor greater than 8 inches in width. Any non-reflectorized space between any two adjacent stripes shall not exceed 2 inches in width.
7. Bases shall have a maximum width of 36 inches, a maximum height of 4 inches, and a minimum of two footholds of sufficient size to allow base to be held down while separating the drum body from the base.
8. Plastic drums shall be constructed of ultra-violet stabilized, orange, high-density polyethylene (HDPE) or other approved material.
9. Drum body shall have a minimum unballasted weight of 7.7 lbs. and maximum unballasted weight of 11 lbs. The wall of the drum body shall be a minimum of 0.07 inch in thickness. Weight of any drum supplied shall not vary more than 0.5 lb. from that of the prequalified sample.
10. Drum and base shall be marked with manufacturer's name and model number.

RETROREFLECTIVE SHEETING

1. The stripes used on drums shall be constructed of sheeting meeting the color and retroreflectivity requirements of Departmental Materials Specification DMS-8300, "Flat Surface Reflective Sheeting." High Specific Intensity (Type C) retroreflective sheeting shall be supplied unless otherwise specified in the plans.
2. The sheeting shall be suitable for use on and shall adhere to the drum surface such that, upon vehicular impact, the sheeting shall remain adhered in-place and exhibit no delaminating, cracking, or loss of retroreflectivity other than that loss due to abrasion of the sheeting surface.

BALLAST

1. Unballasted bases shall be large enough to hold up to 50 lbs. of sand. This base, when filled with the ballast material, should weigh between 35 lbs (minimum) and 50 lbs (maximum). The ballast may be sand in one to three sandbags separate from the base, sand in a sand-filled plastic base, or other ballasting devices as approved by the Engineer. Stacking of sandbags will be allowed, however height of sandbags above pavement surface may not exceed 12 inches.
2. Bases with built-in ballast shall weigh between 40 lbs. and 50 lbs. Built-in ballast can be constructed of an integral crumb rubber base or a solid rubber base.
3. The ballast shall not be heavy objects, water, or any material that would become hazardous to motorists, pedestrians, or workers when the drum is struck by a vehicle.
4. When used in regions susceptible to freezing, drums shall have drainage holes in the bottoms so that water will not collect and freeze becoming a hazard when struck by a vehicle.
5. Ballast shall not be placed on top of drums.
6. Adhesives may be used to secure base of drums to pavement.

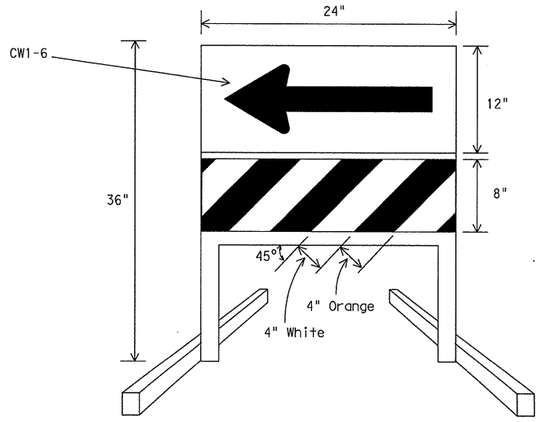

DIRECTION INDICATOR BARRICADE

1. The Direction Indicator Barricade may be used in tapers, transitions, and other areas where specific directional guidance to drivers is necessary.
2. If used, the Direction Indicator Barricade should be used in series to direct the driver through the transition and into the intended travel lane.
3. The Direction Indicator Barricade shall consist of One-Direction Large Arrow (CW1-6) sign in the size shown with a black arrow on a background of Type E Fluopresent Prismatic Orange above a rail with Type C High Specific Intensity retroreflective sheeting in alternation 4" white and orange stripes sloping downward at an angle of 45 degrees in the direction road users are to pass.
4. Double arrows on the Direction Indicator Barricade will not be allowed.
5. Approved manufacturers are shown on the CWZTCD List. Ballast shall be as approved by the manufacturers instructions.

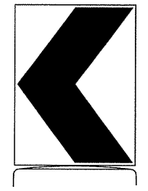

18" x 24" Sign
(Maximum Sign Dimension)
Chevron CW1-8, Opposing Traffic Lane Divider, Driveway sign D70a, Keep Right R4 series or other signs as approved by Engineer

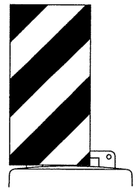

12" x 24"
Vertical Panel
mount with diagonals sloping down towards travel way

Plywood, Aluminum or Metal sign substrates shall NOT be used on plastic drums

SIGNS, CHEVRONS, AND VERTICAL PANELS MOUNTED ON PLASTIC DRUMS

1. Signs used on plastic drums shall be manufactured using substrates listed on the CWZTCD.
2. Chevrons and other work zone signs with an orange background shall be manufactured with Type E (Fluorescent Prismatic) sheeting meeting the color and retroreflectivity requirements of DMS-8300, "Sign Face Material," unless otherwise specified in the plans.
3. Vertical Panels shall be manufactured with orange and white sheeting meeting the requirements of DMS-8300 Type C (High Specific Intensity). Diagonal stripes on Vertical Panels shall slope down toward the intended traveled lane.
4. Other sign messages (text or symbolic) may be used as approved by the Engineer. Sign dimensions shall not exceed 18 inches in width or 24 inches in height.
5. Signs shall be installed using a 1/2 inch bolt (nominal) and nut, two washers, and one locking washer for each connection.
6. Mounting bolts and nuts shall be fully engaged and adequately torqued. Bolts should not extend more than 1/2 inch beyond nuts.
7. Chevrons may be placed on drums on the outside of curves, on merging tapers or on shifting tapers. When used in these locations they may be placed on every drum or spaced not more than on every third drum. A minimum of three (3) should be used at each location called for in the plans.
8. R9-9, R9-10, R9-11 and R9-11a Sidewalk Closed signs which are 24 inches wide may be mounted on plastic drums, with approval of the Engineer.

Texas Department of Transportation
Traffic Operations Division

BARRICADE AND CONSTRUCTION CHANNELIZING DEVICES STANDARD

8 of 12 BC(8)-07

©TxDOT 11-4-02

DN: TXDOT	CK: TXDOT	DW: TXDOT	CK: TXDOT

REVISIONS	CONT	SECT	JOB	HIGHWAY
4-03	2452	01	050	LP 1604
9-07	DIST	COUNTY		SHEET NO.
	SAT	BEXAR		133

DISCLAIMER: The use of this standard is governed by the "Texas Engineering Practice Act". No warranty of any kind is made by TxDOT for any purpose whatsoever. TxDOT assumes no responsibility for the conversion of this standard to other formats or for incorrect results or damages resulting from its use.

CHANNELIZING DEVICES

VERTICAL PANELS (VPs)

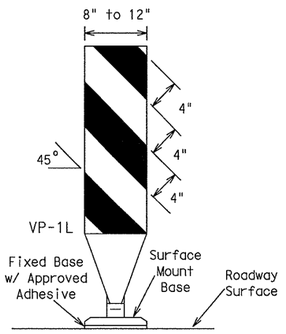

FIXED

(Rigid or self-righting)

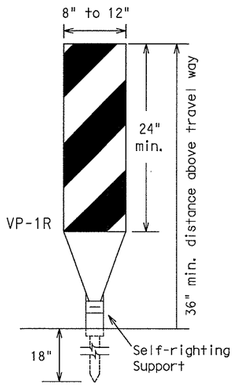

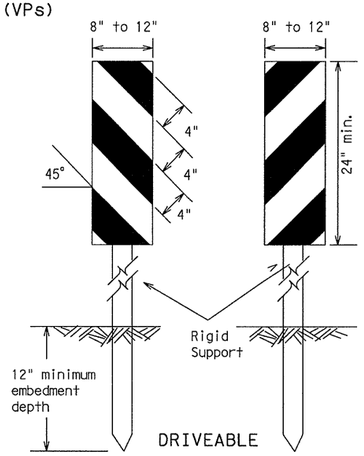

DRIVEABLE

1. Vertical Panels (VP's) are normally used to channelize traffic or divide opposing lanes of traffic.
2. VP's may be used in daytime or nighttime situations. They may be used at the edge of shoulder drop-offs and other areas such as lane transitions where positive daytime and nighttime delineation is required. The Engineer/Inspector shall refer to the Roadway Design Manual Appendix B "Treatment of Pavement Drop-offs in Work Zones" for additional guidelines on the use of VP's for drop-offs.
3. VP's should be mounted back to back if used at the edge of cuts adjacent to two-way two lane roadways. Stripes are to be reflective orange and reflective white and should always slope downward toward the travel lane.
4. VP's used on expressways and freeways or other high speed roadways, shall have a minimum of 270 square inches of retroreflective area facing traffic.
5. Self-righting supports are available with portable base. See "Compliant Work Zone Traffic Control Devices List" (CWZTCD).
6. Sheeting for the VP's shall be retroreflective Type C (High Specific Intensity) conforming to Departmental Material Specification DMS-8300, unless noted otherwise.
7. Where the height of reflective material on the vertical panel is greater than 36 inches, a panel stripe of 6 inches shall be used.

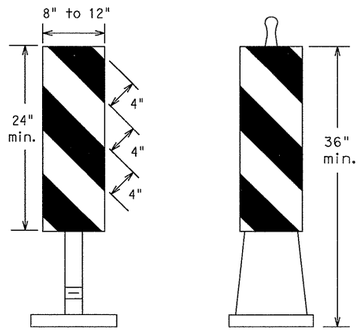

(Rigid or self-righting)

PORTABLE

CHEVRONS

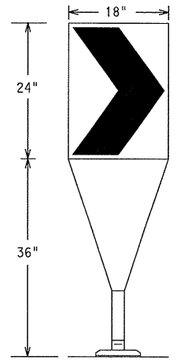

Fixed Base w/ Approved Adhesive (Driveable Base, or Flexible Support can be used)

1. The chevron shall be a vertical rectangle with a minimum size of 12 by 18 inches.
2. Chevrons are intended to give notice of a sharp change of alignment with the direction of travel and provide additional emphasis and guidance for vehicle operators with regard to changes in horizontal alignment of the roadway.
3. Chevrons, when used, shall be erected on the outside of a sharp curve or turn, or on the far side of an intersection. They shall be in line with and at right angles to approaching traffic. Spacing should be such that the motorist always has three in view, until the change in alignment eliminates its need.
4. To be effective, the chevron should be visible for at least 500 feet.
5. Chevrons shall be orange with a black nonreflective legend. Sheeting for the chevron shall be retroreflective Type E (Fluorescent Prismatic) conforming to Departmental Material Specification DMS-8300, unless noted otherwise. The legend shall be black vinyl non-reflective decal sheeting meeting the requirements of DMS-8300.
6. For Long Term Stationary use on tapers or transitions on freeways and divided highways self-righting chevrons may be used to supplement plastic drums but not to replace plastic drums.

OPPOSING TRAFFIC LANE DIVIDERS (OTLD)

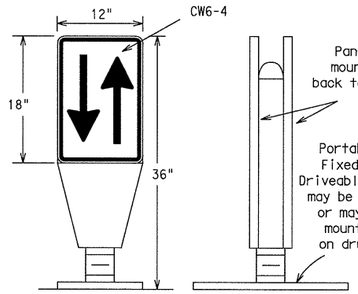

1. Opposing Traffic Lane Dividers (OTLD) are delineation devices designed to convert a normal one-way roadway section to two-way operation. OTLD's are used on temporary centerlines. The upward and downward arrows on the sign's face indicate the direction of traffic on either side of the divider. The base is secured to the pavement with an adhesive or rubber weight to minimize movement caused by a vehicle impact or wind gust.
2. The OTLD may be used in combination with simple tubular markers or VPs.
3. Spacing between the OTLD shall not exceed 500 feet. Tubular markers or VPs placed between the OTLD's should not exceed 100 foot spacing.
4. The OTLD shall be orange with a black non-reflective legend. Sheeting for the OTLD shall be retroreflective Type E (Fluorescent Prismatic) conforming to Departmental Material Specification DMS-8300, unless noted otherwise. The legend shall be black vinyl non-reflective decal sheeting meeting the requirements of DMS-8300.

GENERAL NOTES:

1. Work Zone channelizing devices illustrated on this sheet may be installed in close proximity to traffic and are suitable for use on high or low speed roadways. The Engineer/Inspector shall ensure that spacing and placement is uniform and in accordance with the "Texas Manual on Uniform Traffic Control Devices" (TMUTCD).
2. Channelizing devices shown on this sheet may have a driveable, fixed or portable base. The requirement for self-righting channelizing devices must be specified in the General Notes or other plan sheets.
3. Channelizing devices on self-righting supports should be used in work zone areas where channelizing devices are frequently impacted by errant vehicles or vehicle related wind gusts making alignment of the channelizing devices difficult to maintain. Locations of these devices shall be detailed elsewhere in the plans. These devices shall conform to the TMUTCD and the "Compliant Work Zone Traffic Control Devices List" (CWZTCD).
4. The Contractor shall maintain devices in a clean condition and replace damaged, nonreflective, faded, or broken devices and bases as required by the Engineer/Inspector. The Contractor shall be required to maintain proper device spacing and alignment.
5. Portable bases shall be fabricated from virgin and/or recycled rubber. The portable bases shall weigh approximately 35 lbs.
6. Pavement surfaces shall be prepared in a manner that ensures proper bonding between the adhesives, the fixed mount bases and the pavement surface. Adhesives shall be prepared and applied according to the manufacturer's recommendations.
7. The installation and removal of channelizing devices shall not cause detrimental effects to the final pavement surfaces, including pavement surface discoloration or surface integrity. Driveable bases shall not be permitted on final pavement surfaces. The Engineer/Inspector shall approve all application and removal procedures of fixed bases.
8. Examples on this sheet are commonly used channelizing devices in work zones. For other devices, refer to the CWZTCD.

Posted Speed	Formula	Minimum Desirable Taper Lengths XX 10' Offset	11' Offset	12' Offset	Suggested Maximum Spacing of Channelizing Devices On a Taper	On a Tangent
30	$L=\frac{WS^2}{60}$	150'	165'	180'	30'	60'-75'
35		205'	225'	245'	35'	70'-90'
40		265'	295'	320'	40'	80'-100'
45	L=WS	450'	495'	540'	45'	90'-110'
50		500'	550'	600'	50'	100'-125'
55		550'	605'	660'	55'	110'-140'
60		600'	660'	720'	60'	120'-150'
65		650'	715'	780'	65'	130'-165'
70		700'	770'	840'	70'	140'-175'
75		750'	825'	900'	75'	150'-185'
80		800'	880'	960'	80'	160'-195'

XX Taper lengths have been rounded off.
L=Length of Taper (FT.) W=Width of Offset (FT.)
S=Posted Speed (MPH)

HOLLOW OR WATER BALLASTED SYSTEMS USED AS LONGITUDINAL CHANNELIZING DEVICES OR BARRIERS

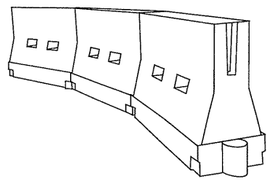

LONGITUDINAL CHANNELIZING DEVICES

1. Longitudinal channelizing devices are crashworthy, lightweight, deformable devices that are highly visible, have good target value and can be connected together. **They are not designed to contain or redirect a vehicle on impact.**
2. Longitudinal channelizing devices may be used instead of a line of cones or drums.
3. Longitudinal channelizing devices shall be placed in accordance to application and installation requirements specific to the device, and used only when shown on the CWZTCD list.
4. Longitudinal channelizing devices should not be used to provide positive protection for obstacles, pedestrians or workers.
5. Longitudinal channelizing devices shall be retroreflective, or supplemented with retroreflective delineation as required for temporary barriers on BC(7)-07.

WATER BALLASTED SYSTEMS USED AS BARRIERS

1. Water ballasted systems used as barriers shall not be used solely to channelize road users, but also to protect the work space per the appropriate NCHRP 350 crashworthiness requirements based on roadway speed and barrier application.
2. Water ballasted systems used to channelize vehicular traffic shall be supplemented with retroreflective delineation or channelizing devices to improve daytime/nighttime visibility. They may also be supplemented with pavement markings.
3. Water ballasted systems used as barriers shall be placed in accordance to application and installation requirements specific to the device, and used only when shown on the CWZTCD list.
4. Water ballasted systems used as barriers should not be used for a merging taper except in low speed (less than 45 MPH) urban areas. When used on a taper in a low speed urban area, the taper shall be delineated and the taper length should be designed to optimize road user operations considering the available geometric conditions.
5. When water ballasted systems used as barriers have blunt ends exposed to traffic, they should be attenuated as per manufacturer recommendations or flared to point outside the clear zone.

If used to channelize pedestrians, longitudinal channelizing devices or water ballasted systems must have a continuous detectable bottom for users of long canes and the top of the unit shall be not less than 32 inches in height.

VERTICAL PANELS & OPPOSING TRAFFIC LANE DIVIDERS SEPARATING TWO-WAY TRAFFIC (Typical application)

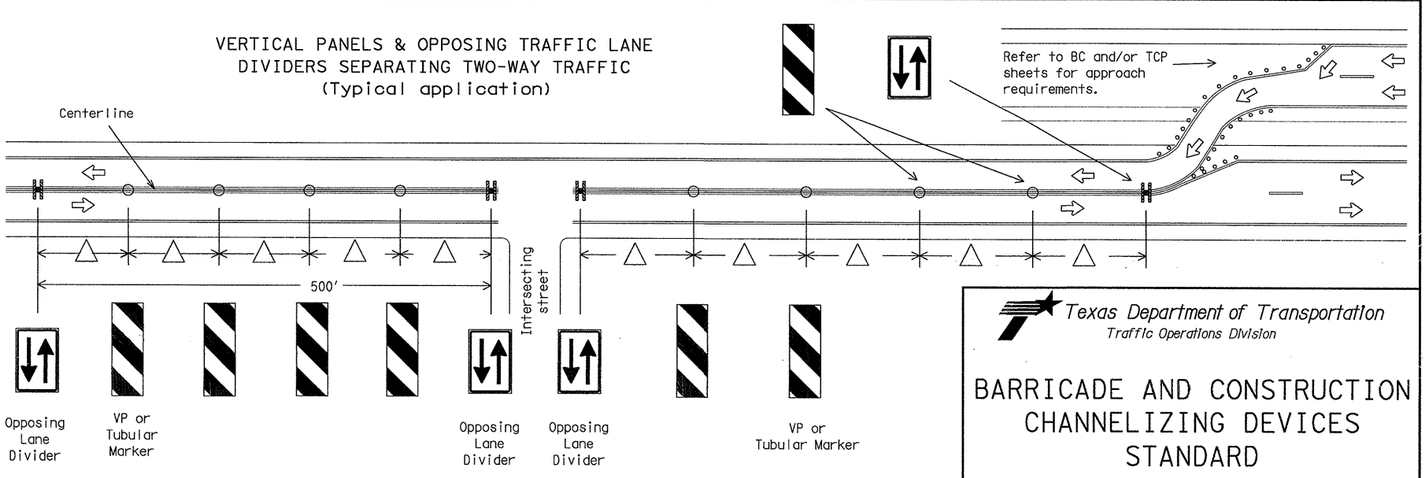

△ Spacing between the VP's or tubular markers shall not exceed 100 feet. On roadways with speeds less than 45 MPH, spacing between the tubular markers or VP's shall be as shown on the channelizing spacing table shown on this page. If the table shows spacing greater than 100 feet based on the roadway speed, then use a maximum of 100 feet spacing between the tubular markers or VP's. Every fifth channelizing device shall be an OTLD, except when the OLTD must be spaced closer to accomodate an intersection. Spacing between the OTLD shall not exceed 500 feet.

Texas Department of Transportation
Traffic Operations Division

BARRICADE AND CONSTRUCTION CHANNELIZING DEVICES STANDARD

9 of 12 BC(9)-07

©TxDOT 11-4-02	DN: TXDOT		CK: TXDOT	DW: TXDOT	CK: TXDOT
9-07 REVISIONS	CONT	SECT	JOB	HIGHWAY	
	2452	01	050	LP 1604	
	DIST	COUNTY		SHEET NO.	
	SAT	BEXAR		134	

DATE:
FILE:

DISCLAIMER:
The use of this standard is governed by the "Texas Engineering Practice Act". No warranty of any kind is made by TxDOT for any purpose whatsoever. TxDOT assumes no responsibility for the conversion of this standard to other formats or for incorrect results or damages resulting from its use.

TYPE III BARRICADES

1. Refer to the Compliant Work Zone Traffic Control Devices List (CWZTCD) for details of the Type III Barricades and a list of all materials used in the construction of Type III Barricades.
2. Type III Barricades shall be used at each end of construction projects closed to all traffic.
3. Barricades extending across a roadway should have stripes that slope downward in the direction toward which traffic must turn in detouring. When both right and left turns are provided, the chevron striping may slope downward in both directions from the center of the barricade. Where no turns are provided at a closed road striping should slope downward in both directions toward the center of roadway.
4. Striping of rails, for the right side of the roadway, should slope downward to the left. For the left side of the roadway, striping should slope downward to the right.
5. Identification markings may be shown only on the back of the barricade rails. The maximum height of letters and/or company logos used for identification shall be 1".
6. Barricades shall not be placed parallel to traffic unless an adequate clear zone is provided.
7. Warning lights shall NOT be installed on barricades.
8. Where barricades require the use of weights to keep from turning over, the use of sandbags with dry, cohesionless sand is recommended. The sandbags will be tied shut to keep the sand from spilling and to maintain a constant weight. Sand bags shall not be stacked in a manner that covers any portion of a barricade rails reflective sheeting. Rock, concrete, iron, steel or other solid objects will NOT be permitted. Sandbags should weigh a minimum of 35 lbs and a maximum of 50 lbs. Sandbags shall be made of a durable material that tears upon vehicular impact. Rubber (such as tire inner tubes) shall not be used for sandbags. Sandbags shall only be placed along or upon the base supports of the device and shall not be suspended above ground level or hung with rope, wire, chains or other fasteners.
9. Sheeting for barricades shall be retroreflective Type C (High Specific Intensity) conforming to Departmental Material Specfication DMS-8300 unless otherwise noted.

Barricades shall NOT be used as a sign support.

TYPICAL STRIPING DETAIL FOR BARRICADE RAIL

TYPICAL PANEL DETAIL FOR SKID OR POST TYPE BARRICADES

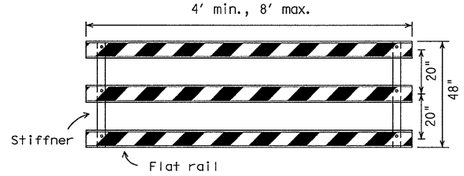

Stiffner may be inside or outside of support, but no more than 2 stiffeners shall be allowed on one barricade.

TRAFFIC CONTROL FOR MATERIAL STOCKPILES

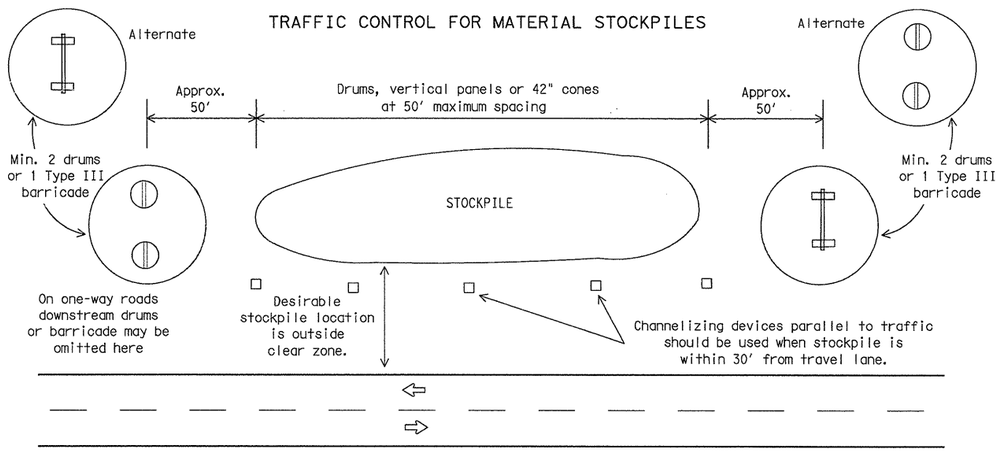

TYPE III BARRICADE (POST AND SKID) TYPICAL APPLICATION

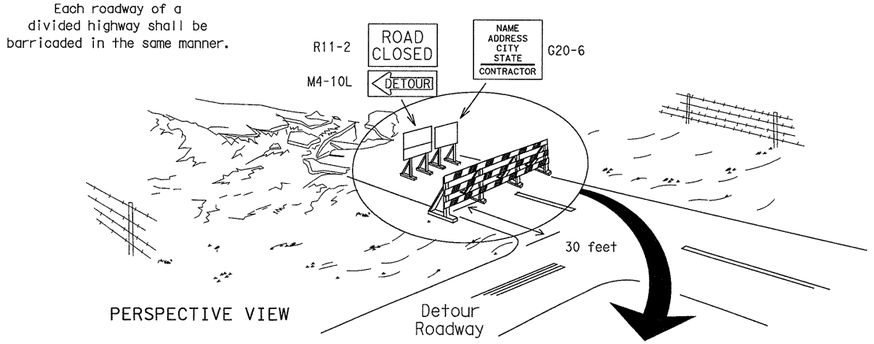

PERSPECTIVE VIEW

The three rails on Type III barricades shall be reflectorized orange and reflective white stripes on one side facing one-way traffic and both sides for two-way traffic.
Barricade striping should slant downward in the direction of detour.

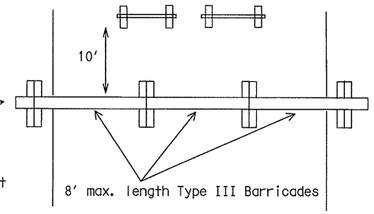

1. Signs should be mounted on independent supports at a 7 foot mounting height in center of roadway. The signs should be a minimum of 10 feet behind Type III Barricades.
2. Advance signing shall be as specified elsewhere in the plans.

PLAN VIEW

CULVERT WIDENING OR OTHER ISOLATED WORK WITHIN THE PROJECT LIMITS

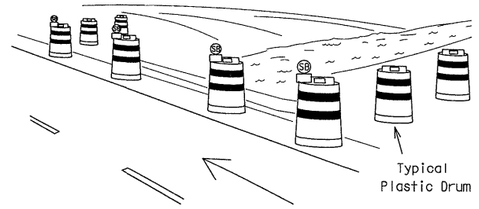

PERSPECTIVE VIEW

1. Where positive redirectional capability is provided, drums may be omitted.
2. Plastic construction fencing may be used with drums for safety as required in the plans.
3. Vertical Panels on flexible support may be substituted for drums when the shoulder width is less than 4 feet.
4. When the shoulder width is greater than 12 feet, steady-burn lights may be omitted if drums are used.
5. Drums must extend the length of the culvert widening.

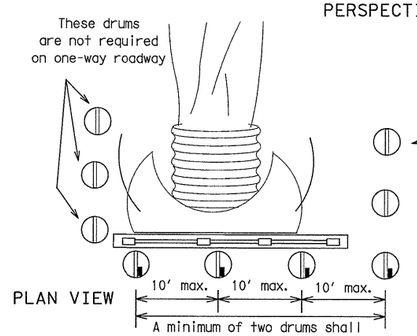

PLAN VIEW

Increase number of plastic drums on the side of approaching traffic if the crown width makes it necessary. (minimum of 2 and maximum of 4 drums)

Legend

- Plastic drum
- Plastic drum with steady burn light or yellow warning reflector
- SB — Steady burn warning light or yellow warning reflector

CONES

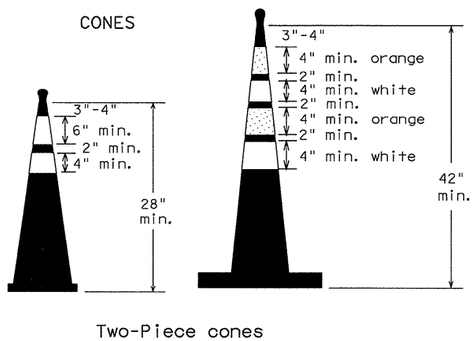

Two-Piece cones

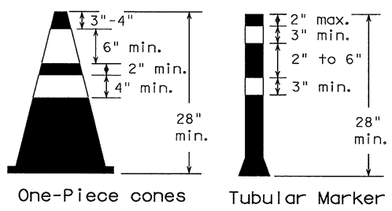

One-Piece cones Tubular Marker

28" Cones shall have a minimum weight of 9 1/2 lbs.

42" 2-piece cones shall have a minimum weight of 30 lbs. including base.

1. Traffic cones and tubular markers shall be a minimum of 28 inches in height when used either on freeways or at nighttime.
2. Cones or tubular markers shall be predominantly orange, fluorescent red-orange, or fluorescent yellow-orange. They should be kept clean and bright for maximum visibility.
3. Cones used only for daytime operations do not require the reflectorized bands.
4. Cones and tubular markers used for nighttime operations shall be reflectorized. Reflectorized material shall have a smooth, sealed outer surface that displays the same approximate color during the day and night. The reflectorized bands shall be retroreflective Type C (High Specific Intensity) conforming to Departmental Material Specification DMS-8300, unless otherwise noted.
5. When used at night, appropriate personnel shall ensure that cones and tubular markers remain in their proper location and in an upright position.
6. Reflectorization of 28"cones shall consist of a minimum 6 inch band placed at least 3 inches but not more than 4 inches from the top, supplemented by a minimum 4 inch band spaced a minimum of 2 inches below the 6 inch band.
7. Reflectorization of 42" cones shall be provided by alternating 4 to 6" orange and white stripes with orange on top.
8. Reflectorization of tubular markers shall be a minimum of two 3 inch bands placed a maximum of 2 inches from the top with a maximum of 6 inches between bands.
9. One-piece cones or tubular markers are generally suitable for temporary usage (up to 8 hours) with other channelization devices such as vertical panels, drums or two-piece cones for long term usage. Care should be taken to ensure they remain in their proper location and in an upright position.
10. Cones or tubular markers used on each project shall be of the same size and shape.
11. The handle may be designed as a hook or other shape, fabricated from non-rigid materials similar to the cone material, and may extend up to a maximum of 8 inches above the top of cone. Length of the handle shall not be considered with regard to the overall height of the cone.

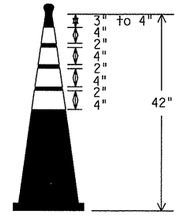

EDGELINE CHANNELIZER

1. This device is intended only for use in place of a vertical panel to channelize traffic by indicating the edge of the travel lane. It is not intended to be used in transitions or tapers.
2. This device shall not be used to separate lanes of traffic (opposing or otherwise) or warn of objects.
3. This device is based on a 42 inch, two-piece cone with an alternate striping pattern: four 4 inch retroreflective bands, with an approximate 2 inch gap between bands. The color of the band should correspond to the color of the edgeline (yellow for left edgeline, white for right edgeline) for which the device is substituted or for which it supplements. The reflectorized bands shall be retroreflective Type C encapsulated bead (High Specific Intensity) conforming to Departmental Material Specification DMS-8300, unless otherwise noted.
4. The base must weigh a minimum of 30 lbs.

Texas Department of Transportation
Traffic Operations Division

BARRICADE AND CONSTRUCTION CHANNELIZING DEVICES STANDARD

10 of 12 BC(10)-07

© TxDOT 11-4-02

DN: TXDOT	CK: TXDOT	DW: TXDOT	CK: TXDOT

9-07 REVISIONS	CONT	SECT	JOB	HIGHWAY
	2452	01	050	LP 1604
	DIST	COUNTY		SHEET NO.
	SAT	BEXAR		135

DATE:
FILE:

DISCLAIMER:
The use of this standard is governed by the "Texas Engineering Practice Act". No warranty of any kind is made by TxDOT for any purpose whatsoever. TxDOT assumes no responsibility for the conversion of this standard to other formats or for incorrect results or damages resulting from its use.

DATE:
FILE:

WORK ZONE PAVEMENT MARKINGS

GENERAL

1. The Contractor shall be responsible for maintaining work zone and existing pavement markings, in accordance with the standard specifications and special provisions, on all roadways open to traffic within the CSJ limits unless otherwise stated in the plans.
2. Color, patterns and dimensions shall be in conformance with the "Texas Manual on Uniform Traffic Control Devices" (TMUTCD).
3. Additional supplemental pavement marking details may be found in the plans or specifications.
4. Pavement markings shall be installed in accordance with the TMUTCD and as shown on the plans.
5. When short term markings are required on the plans, short term markings shall conform with the TMUTCD, the plans and details as shown on the Standard Plan Sheet WZ(STPM).
6. When standard pavement markings are not in place and the roadway is opened to traffic, DO NOT PASS signs shall be erected to mark the beginning of the sections where passing is prohibited and PASS WITH CARE signs at the beginning of sections where passing is permitted.
7. All work zone pavement markings shall be installed in accordance with Item 662, "Work Zone Pavement Markings."

RAISED PAVEMENT MARKERS

1. Raised pavement markers are to be placed according to the patterns on BC(12).
2. All raised pavement markers used for work zone markings shall meet the requirements of Item 672, "RAISED PAVEMENT MARKERS" and Departmental Material Specification DMS-4200 or DMS-4300.

PREFABRICATED PAVEMENT MARKINGS

1. Removable prefabricated pavement markings shall meet the requirements of DMS-8241.
2. Non-removable prefabricated pavement markings (foil back) shall meet the requirements of DMS-8240.

MAINTAINING WORK ZONE PAVEMENT MARKINGS

1. The Contractor will be responsible for maintaining work zone pavement markings within the work limits.
2. Work zone pavement markings shall be inspected in accordance with the frequency and reporting requirements of work zone traffic control device inspections as required by Form 599.
3. The markings should provide a visible reference for a minimum distance of 300 feet during normal daylight hours and 160 feet when illuminated by automobile low-beam headlights at night, unless sight distance is restricted by roadway geometrics.
4. Markings failing to meet this criteria within the first 30 days after placement shall be replaced at the expense of the Contractor as per Specification Item 662.

REMOVAL OF PAVEMENT MARKINGS

1. Pavement markings that are no longer applicable, could create confusion or direct a motorist toward or into the closed portion of the roadway, shall be removed or obliterated before the roadway is opened to traffic.
2. The above shall not apply to detours in place for less than two weeks, where flaggers and/or sufficient channelizing devices are used in lieu of markings to outline the detour route.
3. Pavement markings shall be removed to the fullest extent possible, so as not to leave a discernable marking. This shall be by any method approved by TxDOT Specification Item 677 for "Eliminating Existing Pavement Markings and Markers".
4. The removal of pavement markings may require resurfacing or seal coating portions of the roadway.
5. Subject to the approval of the Engineer, any method that proves to be successful on a particular type pavement may be used.
6. Blast cleaning may be used but will not be required unless specifically shown in the plans.
7. Over-painting of the markings SHALL NOT BE permitted.
8. Removal of raised pavement markers shall be as directed by the Engineer.
9. Removal of existing pavement markings and markers will be paid for directly in accordance with Item 677, "ELIMINATING EXISTING PAVEMENT MARKINGS AND MARKERS," unless otherwise stated in the plans.
10. Black-out marking tape may be used to cover conflicting existing markings for periods less than two weeks when approved by the Engineer.

Temporary Flexible-Reflective Roadway Marker Tabs

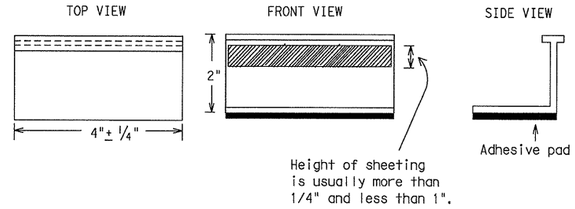

STAPLES OR NAILS SHALL NOT BE USED TO SECURE TEMPORARY FLEXIBLE-REFLECTIVE ROADWAY MARKER TABS TO THE PAVEMENT SURFACE

1. Temporary flexible-reflective roadway marker tabs used as guidemarks shall meet the requirements of DMS-8242.
2. Tabs detailed on this sheet are to be inspected and accepted by the Engineer or designated representative. Sampling and testing is not normally required, however at the option of the Engineer, either "A" or "B" below may be imposed to assure quality before placement on the roadway.
   A. Select five (5) or more tabs at random from each lot or shipment and submit to the Construction Division, Materials and Pavement Section to determine specification compliance.
   B. Select five (5) tabs and perform the following test. Affix five (5) tabs at 24 inch intervals on an asphaltic pavement in a straight line. Using a medium size passenger vehicle or pickup, run over the markers with the front and rear tires at a speed of 35 to 40 miles per hour, four (4) times in each direction. No more than one (1) out of the five (5) reflective surfaces shall be lost or displaced as a result of this test.
3. Small design variances may be noted between tab manufacturers.
4. See Standard Sheet WZ(STPM) for tab placement on new pavements. See Standard Sheet TCP(7-1) for tab placement on seal coat work.

Raised Pavement Markers used as Guidemarks

1. Raised pavement markers used as guidemarks shall be from the approved product list, and meet the requirements of DMS-4200.
2. All temporary construction raised pavement markers provided on a project shall be of the same manufacturer.
3. Adhesive for guidemarks shall be bituminous material hot applied or butyl rubber pad for all surfaces, or thermoplastic for concrete surfaces.

Guidemarks shall be designated as:
YELLOW - (two amber reflective surfaces with yellow body).
WHITE - (one silver reflective surface with white body).

DEPARTMENTAL MATERIAL SPECIFICATIONS

PAVEMENT MARKERS (REFLECTORIZED)	DMS-4200
TRAFFIC BUTTONS	DMS-4300
EPOXY AND ADHESIVES	DMS-6100
BITUMINOUS ADHESIVE FOR PAVEMENT MARKERS	DMS-6130
PREFABRICATED PAVEMENT MARKINGS-PERMANENT	DMS-8240
PREFABRICATED PAVEMENT MARKINGS-REMOVABLE	DMS-8241
TEMPORARY FLEXIBLE-REFLECTIVE ROADWAY MARKER TABS	DMS-8242

A list of prequalified reflective raised pavement markers, non-reflective traffic buttons, roadway marker tabs and other pavement markings can be found at the Material Producer List web address shown on BC(1).

Texas Department of Transportation
Traffic Operations Division

BARRICADE AND CONSTRUCTION PAVEMENT MARKINGS STANDARD

11 of 12 BC(11)-07

© TxDOT February 1998

DN: TXDOT	CK: TXDOT	DW: TXDOT	CK: TXDOT

REVISIONS
2-98
1-02
11-02
9-07

CONT	SECT	JOB	HIGHWAY
2452	01	050	LP 1604

DIST	COUNTY	SHEET NO.
SAT	BEXAR	136

1098

DISCLAIMER:
The use of this standard is governed by the "Texas Engineering Practice Act". No warranty of any kind is made by TxDOT for any purpose whatsoever. TxDOT assumes no responsibility for the conversion of this standard to other formats or for incorrect results or damages resulting from its use.

PAVEMENT MARKING PATTERNS

CENTER LINE & NO-PASSING ZONE BARRIER LINES FOR TWO-LANE, TWO-WAY HIGHWAYS

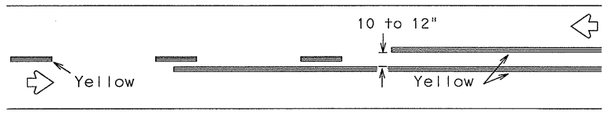

REFLECTORIZED PAVEMENT MARKINGS - PATTERN A

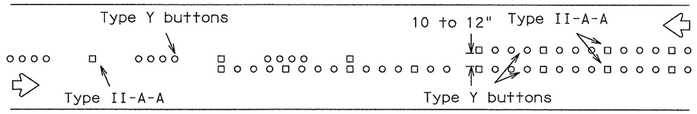

RAISED PAVEMENT MARKERS - PATTERN A

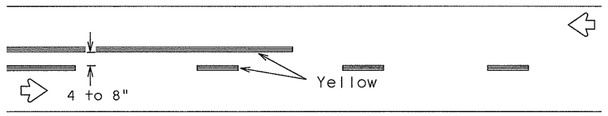

REFLECTORIZED PAVEMENT MARKINGS - PATTERN B

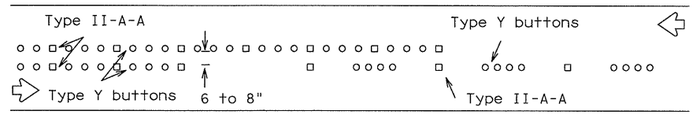

RAISED PAVEMENT MARKERS - PATTERN B

Pattern A is the TXDOT Standard, however Pattern B may be used if approved by the Engineer.
Prefabricated markings may be substituted for reflectorized pavement markings.

EDGE & LANE LINES FOR DIVIDED HIGHWAY

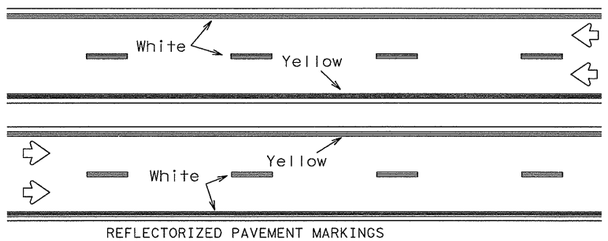

REFLECTORIZED PAVEMENT MARKINGS

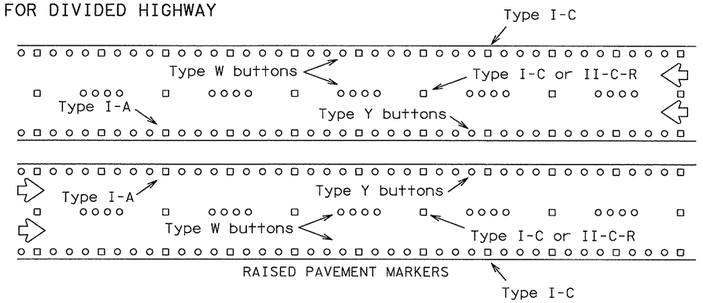

RAISED PAVEMENT MARKERS

Prefabricated markings may be substituted for reflectorized pavement markings.

LANE & CENTER LINES FOR MULTILANE UNDIVIDED HIGHWAYS

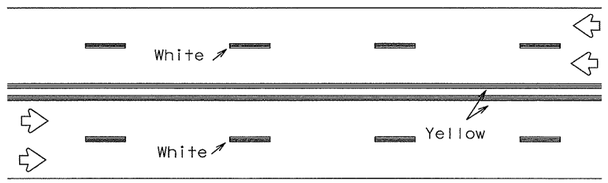

REFLECTORIZED PAVEMENT MARKINGS

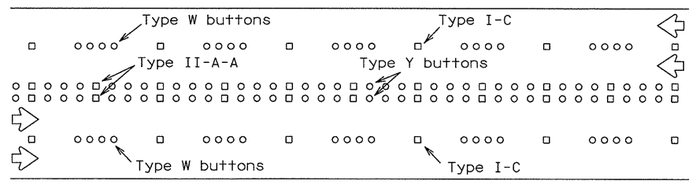

RAISED PAVEMENT MARKERS

Prefabricated markings may be substituted for reflectorized pavement markings.

TWO-WAY LEFT TURN LANE

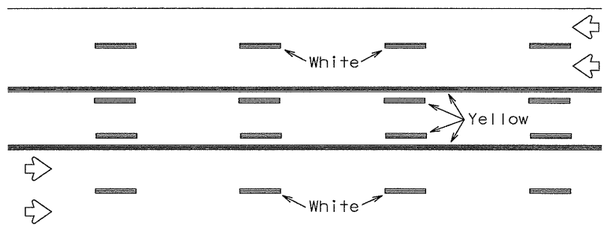

REFLECTORIZED PAVEMENT MARKINGS

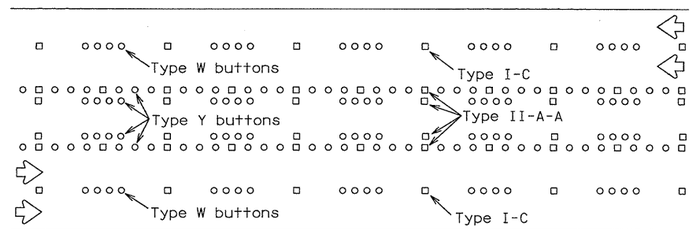

RAISED PAVEMENT MARKERS

Prefabricated markings may be substituted for reflectorized pavement markings.

STANDARD WORK ZONE PAVEMENT MARKINGS DETAILS

SOLID LINES

DOUBLE NO-PASSING LINE

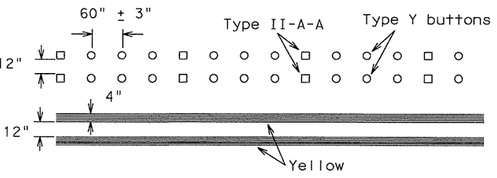

EDGE LINE OR SINGLE NO-PASSING LINE

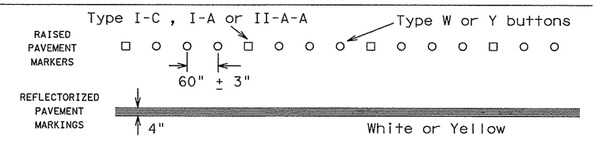

WIDE LINE

(FOR LEFT TURN CHANNELIZING LINE OR CHANNELIZING LINE USED TO DISCOURAGE LANE CHANGING.)

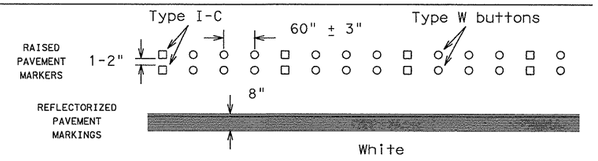

BROKEN LINE

(FOR CENTER LINE OR LANE LINE.)

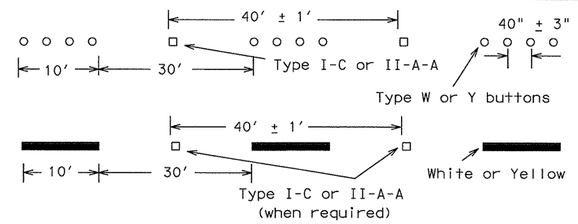

REMOVABLE MARKINGS WITH RAISED PAVEMENT MARKERS

If raised pavement markers are used to supplement REMOVABLE markings, the markers shall be applied to the top of the tape at the approximate mid length of tape used for broken lines or at 20 foot spacing for solid lines. This allows an easier removal of raised pavement markers and tape.

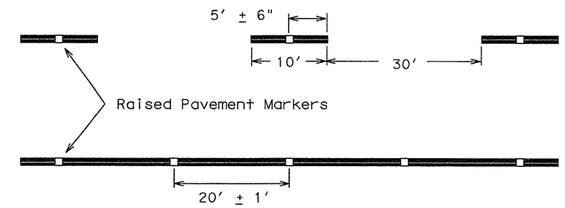

Centerline only - not to be used on edge lines

Raised pavement markers used as standard pavement markings shall be from the approved products list and meet the requirements of Item 672 "RAISED PAVEMENT MARKERS."

Texas Department of Transportation
Traffic Operations Division

BARRICADE AND CONSTRUCTION PAVEMENT MARKING PATTERNS STANDARD

12 of 12 BC(12)-07

©TxDOT February 1998	DN: TXDOT	CK: TXDOT	DW: TXDOT	CK: TXDOT
REVISIONS	CONT	SECT	JOB	HIGHWAY
1-97	2452	01	050	LP 1604
2-98	DIST	COUNTY		SHEET NO.
11-02	SAT	BEXAR		137
9-07				

DATE:
FILE:

109C

DISCLAIMER: The use of this standard is governed by the "Texas Engineering Practice Act". No warranty of any kind is made by TxDOT for any purpose whatsoever. TxDOT assumes no responsibility for the conversion of this standard to other formats or for incorrect results or damages resulting from its use.

DATE:
FILE:

CHANNELIZING DEVICES FOR URBAN ROADWAY TYPE PROJECT

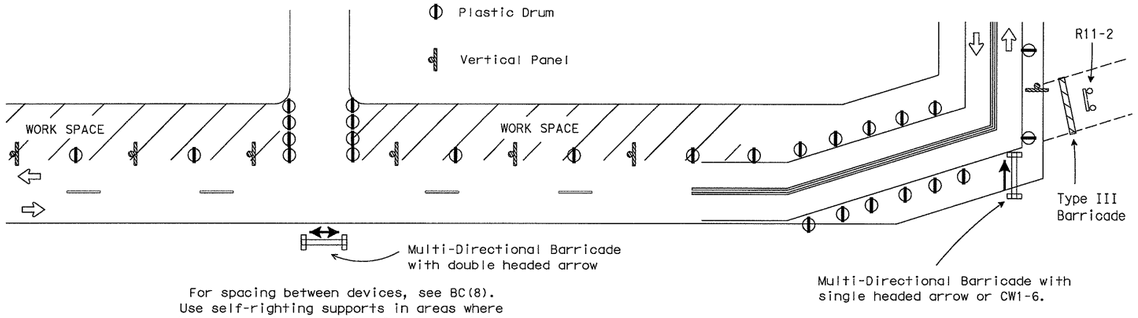

For spacing between devices, see BC(8). Use self-righting supports in areas where there is a high potential for channelizing devices to be struck.

BARRIER DELINEATION WITH SAFETY GLARE FENCE

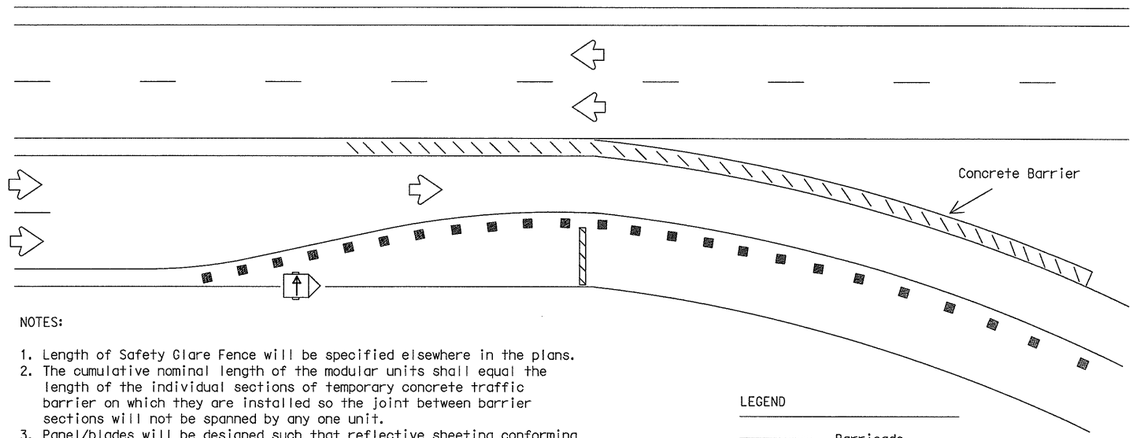

NOTES:

1. Length of Safety Glare Fence will be specified elsewhere in the plans.
2. The cumulative nominal length of the modular units shall equal the length of the individual sections of temporary concrete traffic barrier on which they are installed so the joint between barrier sections will not be spanned by any one unit.
3. Panel/blades will be designed such that reflective sheeting conforming with Departmental Material Specification DMS-8300, Flat Surface Reflective Sheeting, Type C (High Specific Intensity), minimum size of 2 inches by 12 inches can be attached to the edge of the panel/blade. The sheeting shall be attached to one panel/blade per section of concrete barrier not to exceed a spacing of 30 feet. Barrier reflectors are not necessary when panel/blades are installed.
4. Moduler Glare Screens for head light barrier shall meet the requirements of DMS-8610.

LEGEND

- Barricade
- Channelizing devices
- Trailer mounted flashing arrow panel
- Safety glare fence

MULTI-DIRECTIONAL BARRICADE

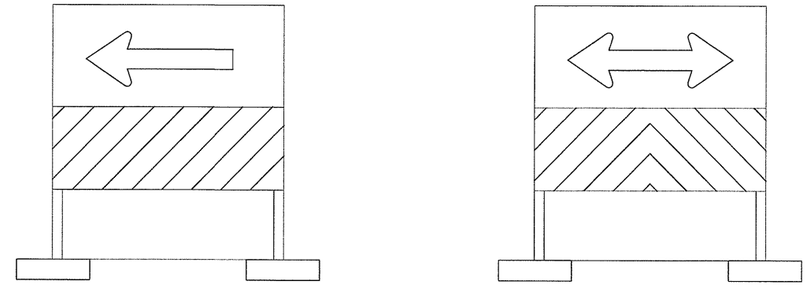

Single Headed Arrow

Double Headed Arrow

1. Multi-directional barricade shall not be used for lane closures.
2. May be used for sharp changes in alignment, or across roadway from stem of "T" intersection.
3. Typically used for Intermediate Term Stationary, Short Term Stationary or Short Duration work zone operations.
4. See the CWZTCD List for approved designs.

USAGE OF CW1-6, ECW1-6a AND CW1-8 SIGNS

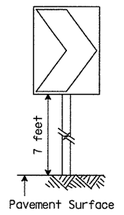

CW1-8

The CHEVRON sign (CW1-8) may be used to replace roadside delineation on curves or used in transitions or tapers.

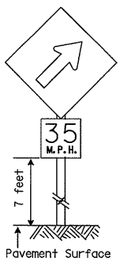

ECW1-6a

An UPWARD SLOPING ARROW sign (ECW1-6a) is intended to be used to indicate the beginning of a curve or transition. It should be preceded with an appropriate curve sign when needed, and should not be used throughout the curve or transition. Advisory speed plaque is optional.

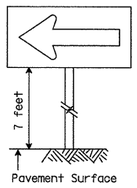

CW1-6

A LARGE ARROW sign (CW1-6) is intended to be used to give notice of a sharp change in alignment (turn) in the direction of travel. It should be preceded with an appropriate advance construction warning turn sign.

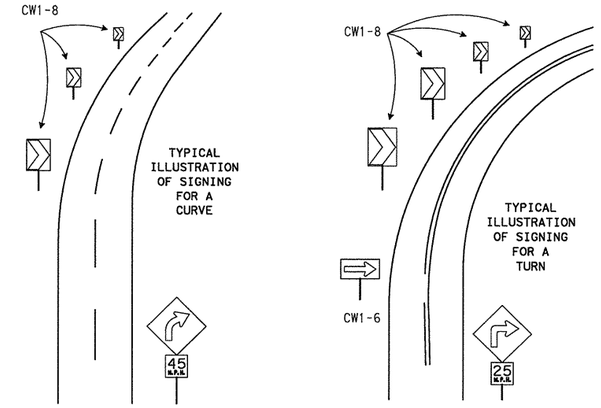

NOTES:

1. CW1-6, ECW1-6a & CW1-8 signs shall be mounted on fixed supports.
2. Chevrons, when used, shall be erected on the outside of a sharp curve or turn, or on the far side of an intersection. They shall be in line with and at right angles to approaching traffic. Spacing should be such that the motorist always has three in view, until the change in alignment eliminates its need.
3. For two-way traffic, use same arrangement of signs on outside of curve for each direction of travel.
4. Appropriate advance warning CURVE or TURN sign with Advisory Speed plaque should be used when needed.

Only pre-qualified products shall be used. A copy of the "Compliant Work Zone Traffic Control Devices List" (CWZTCD) describes pre-qualified products and their sources and may be obtained by contacting:

Standards Engineer
Traffic Operations Division - TE
Texas Department of Transportation
125 East 11th Street
Austin, Texas 78701-2483
Phone (512) 416-3120
Fax (512) 416-3299

Instructions to locate the "CWZTCD" on TxDOT website are:

Start at website - www.dot.state.tx.us
Click on "About TxDOT",
Click on "Organizational Chart",
Click on Traffic Operations Box,
Click on "Compliant Work Zone Traffic Control Devices",
Click on "View PDF".
This site is printable.

PREQUALIFICATION PROCEDURES ARE OBTAINED FROM:

CONSTRUCTION DIVISION-MATERIALS AND TESTS SECTION
TEXAS DEPARTMENT OF TRANSPORTATION (TxDOT)
125 EAST 11th STREET
AUSTIN, TX 78701-2483

DEPARTMENTAL MATERIAL SPECIFICATIONS

FLAT SURFACE REFLECTIVE SHEETING	DMS-8300
DELINEATORS AND OBJECT MARKERS	DMS-8600
MODULER GLARE SCREENS	DMS-8610

COLOR	USAGE	SIGN SHEETING
ORANGE	BACKGROUND	TYPE E (FLUORESCENT PRISMATIC)
WHITE	BACKGROUND	TYPE C (HIGH SPECIFIC INTENSITY)
BLACK	LEGEND & BORDERS	VINYL NON-REFLECTIVE SHEETING

REFER TO THE BC SHEETS FOR SHEETING REQUIREMENT ON CHANNELIZING DEVICES.

The five categories of work duration and their time at a location shall be:

A. Long-term stationary is work that occupies a location more than 3 days.

B. Intermediate-term stationary is work that occupies a location more than one daylight period up to 3 days, or nighttime work lasting more than 1 hour.

C. Short-term stationary is daytime work that occupies a location for more than 1 hour, but less than 12 hours.

D. Short duration is work that occupies a location up to 1 hour.

E. Mobile is work that moves intermittently or continuously.

Texas Department of Transportation
Traffic Operations Division

TRAFFIC CONTROL PLAN TYPICAL DETAILS

WZ(TD)-03

©TxDOT February 1998

REVISIONS	DN: TXDOT	CK: TXDOT	DW: TXDOT	CK: TXDOT
4-98	CONT	SECT	JOB	HIGHWAY
3-03	2452	01	050	LP 1604
	DIST	COUNTY		SHEET NO.
	SAT	BEXAR		138

DISCLAIMER:
The use of this standard is governed by the "Texas Engineering Practice Act". No warranty of any kind is made by TxDOT for any purpose whatsoever. TxDOT assumes no responsibility for the conversion of this standard to other formats or for incorrect results or damages resulting from its use.

DATE:
FILE:

WORK ZONE SHORT TERM PAVEMENT MARKINGS DETAILS

SOLID LINES

DOUBLE NO-PASSING LINE

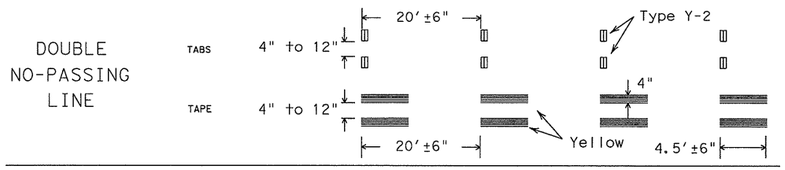

SINGLE NO-PASSING LINE or CHANNELIZATION LINE

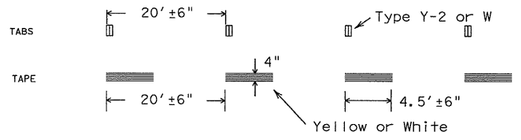

BROKEN LINE

(FOR CENTER LINE OR LANE LINE.)

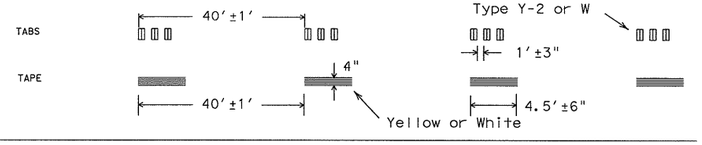

NOTES:

1. Short term pavement markings may be prefabricated markings (stick down tape) or temporary flexible-reflective roadway marker tabs unless otherwise specified elsewhere in plans.
2. Short term pavement markings shall NOT be used to simulate edge lines.
3. Dimensions indicated on this sheet are typical and approximate. Variations in size and height may occur between markers or devices made by manufacturers, by as much as 1/4 inch, unless otherwise noted.
4. Temporary flexible-reflective roadway marker tabs will require normal maintenance replacement when used on roadways with an ADT per lane of up to 7500 vehicles with no more than 10% truck mix. When roadways exceed these values, additional maintenance replacement of devices should be planned.
5. No segment of roadway open to traffic shall remain without permanent pavement markings for a period greater than 14 calendar days. The Contractor will be responsible for maintaining short term pavement markings until permanent pavement markings are in place. When the Contractor is responsible for placement of permanent pavement markings, no segment of roadway shall remain without permanent pavement markings for a period greater than 14 calendar days unless weather conditions prohibit placement. Permanent pavement markings shall be placed as soon as weather permits.
6. For two lane, two-way roadways, DO NOT PASS signs shall be erected to mark the beginning of sections where passing is prohibited and PASS WITH CARE signs shall be erected to mark the beginning of sections where passing is permitted. Signs shall be in accordance with the "Texas Manual on Uniform Traffic Control Devices" (TMUTCD) and may be used to indicate the limits of no-passing zones for up to 14 calendar days. Permanent pavement markings should then be placed.
7. For low volume two lane, two-way roadways of 4000 ADT or less, no-passing lines may be omitted when approved by the Engineer. DO NOT PASS and PASS WITH CARE signs shall be erected (see note 6).

TEMPORARY FLEXIBLE-REFLECTIVE ROADWAY MARKER TABS (TABS)

1. Temporary flexible-reflective roadway marker tabs detailed on this sheet will be designated Type Y-2 (two amber reflective surfaces with yellow body); Type Y (one amber reflective surface with yellow body); and Type W (one white or silver reflective surface with white body). Additional details may be found on BC(10).
2. Tabs shall meet requirements of Departmental Material Specification DMS-8242.
3. When dry, tabs shall be visible for a minimum distance of 200 feet during normal daylight hours and when illuminated by automobile low-beam head light at night, unless sight distance is restricted by roadway geometrics.
4. No two consecutive tabs nor four tabs per 1000 feet of line shall be missing or fail to meet the visual performance requirements of Note 3.

REMOVABLE - PREFABRICATED PAVEMENT MARKINGS

1. Removable prefabricated pavement markings shall meet the requirements of DMS-8241. A list of prequalified products can be found at the following web site:
   ftp://ftp.dot.state.tx.us/pub/txdot-info/gsd/pdf/pavemark.pdf

NON REMOVABLE - PREFABRICATED PAVEMENT MARKINGS

1. Non-removable prefabricated pavement markings (foil back) shall meet the requirements of DMS-8240 or the TXDOT Purchase Specification No. 550-74-89. A list of prequalified products and a copy of the TXDOT Purchase Specifications can be found at web sites:
   ftp://ftp.dot.state.tx.us/pub/txdot-info/gsd/pdf/pavement.pdf
   ftp://ftp.dot.state.tx.us/pub/txdot-info/gsd/pdf/tss/tss377.pdf

RAISED PAVEMENT MARKERS

1. All raised pavement markers used for work zone markings shall meet the requirements of Item 672, "RAISED PAVEMENT MARKERS" and Departmental Material Specification DMS-4200.
2. A list of prequalified reflective raised pavement markers can be found at the following web site:
   ftp://ftp.dot.state.tx.us/pub/txdot-info/gsd/pdf/dms4200preq.pdf

WORK ZONE SHORT TERM PAVEMENT MARKINGS PATTERNS

CENTER LINE & NO-PASSING ZONE BARRIER LINES FOR TWO LANE TWO-WAY HIGHWAYS

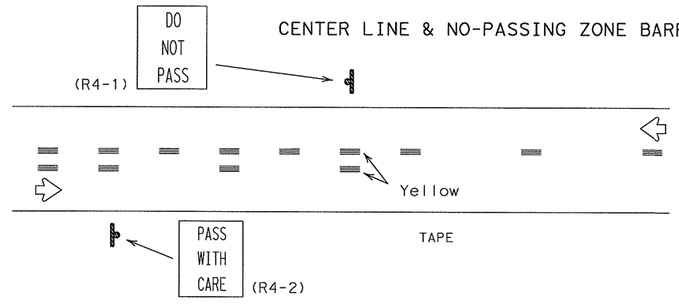

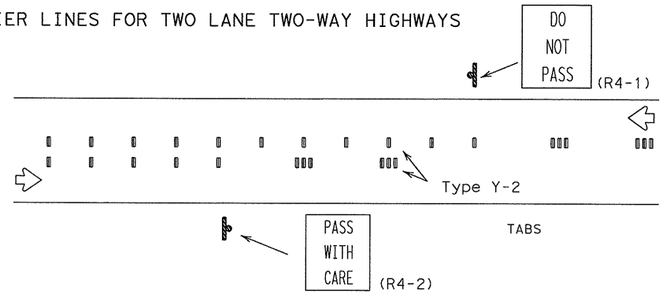

LANE LINES FOR DIVIDED HIGHWAY

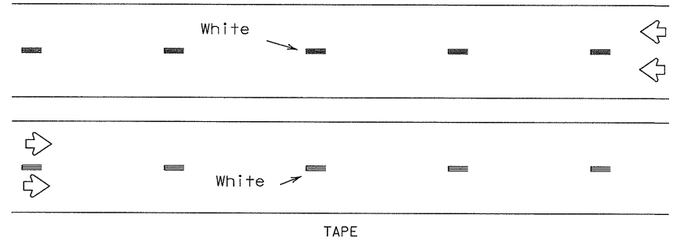

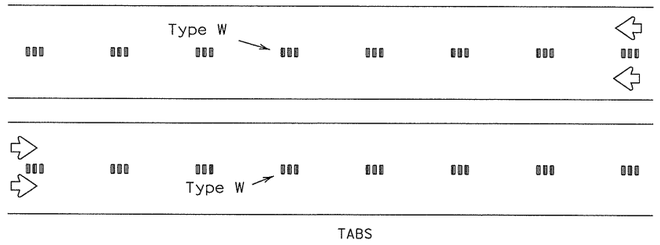

LANE & CENTER LINES FOR MULTILANE UNDIVIDED HIGHWAYS

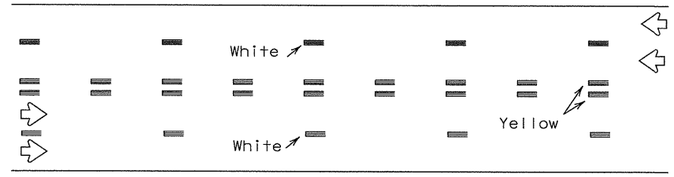

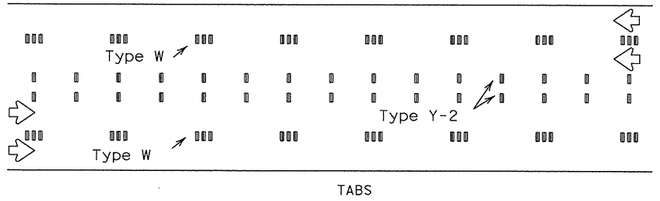

TWO-WAY LEFT TURN LANE

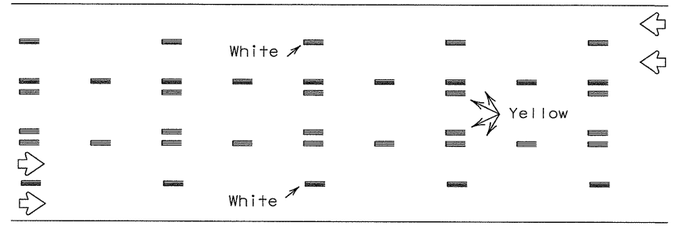

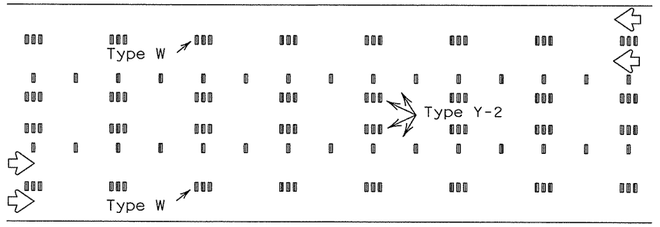

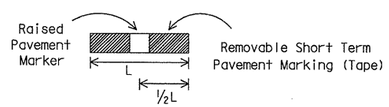

If raised pavement markers are used to supplement REMOVABLE short term markings, the markers shall be applied to the top of the tape at the approximate mid length of the tape. This allows an easier removal of raised markers and tape.

DEPARTMENT MATERIAL SPECIFICATIONS

PREFABRICATED PAVEMENT MARKINGS-PERMANENT	DMS-8240
PREFABRICATED PAVEMENT MARKINGS-REMOVABLE	DMS-8241
TEMPORARY FLEXIBLE-REFLECTIVE ROADWAY MARKER TABS	DMS-8242
PAVEMENT MARKERS (REFLECTORIZED)	DMS-4200

Texas Department of Transportation
Traffic Operations Division

WORK ZONE SHORT TERM PAVEMENT MARKINGS

WZ(STPM)-03

©TxDOT April 1992

DN: TXDOT	CK: TXDOT	DW: TXDOT	CK: TXDOT
REVISIONS	CONT	SECT	JOB	HIGHWAY
1-97	2452	01	050	LP 1604
3-03	DIST	COUNTY		SHEET NO.
	SAT	BEXAR		139

DISCLAIMER:
The use of this standard is governed by the "Texas Engineering Practice Act". No warranty of any kind is made by TxDOT for any purpose whatsoever. TxDOT assumes no responsibility for the conversion of this standard to other formats or for incorrect results or damages resulting from its use.

DATE:
FILE:

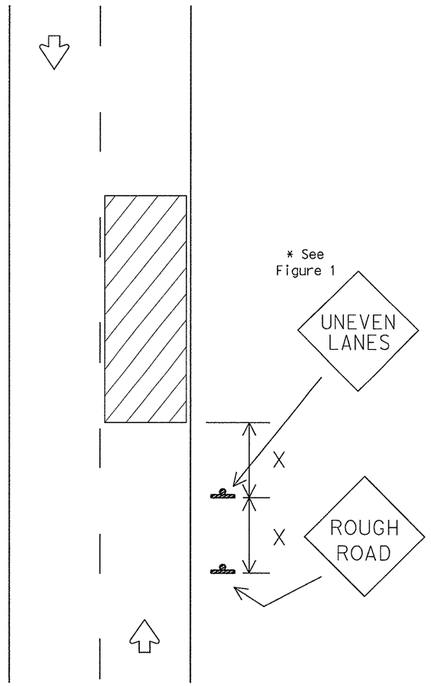

Signing shown for one direction.

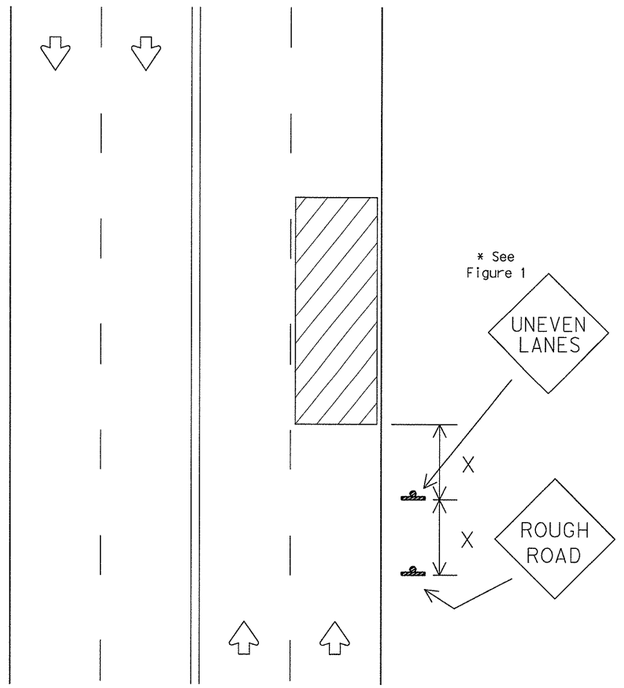

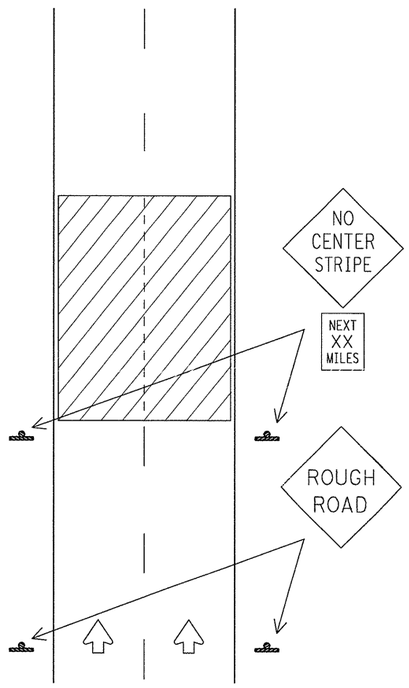

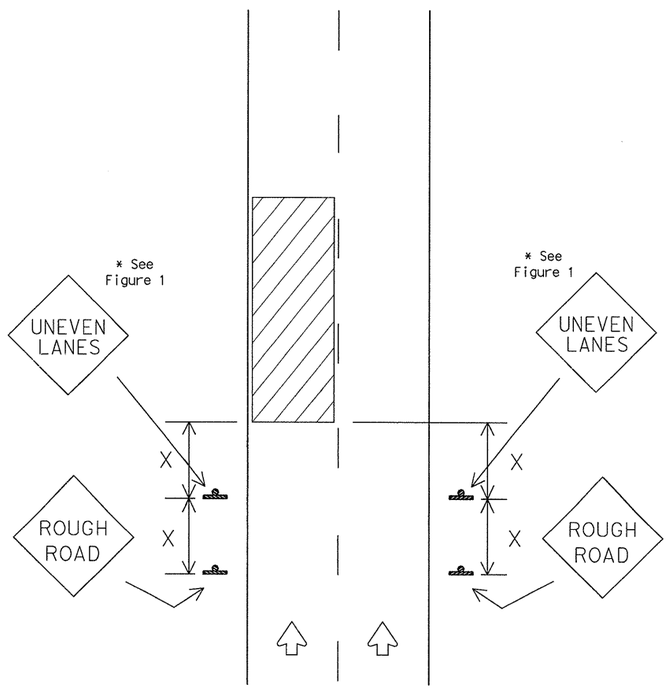

"X" distance - See Note 4 on this page.

DEPARTMENTAL MATERIAL SPECIFICATIONS	
PLYWOOD SIGN BLANKS	DMS-7100
ALUMINUM SIGN BLANKS	DMS-7110
SIGN HARDWARE	DMS-7120
PREFABRICATED PAVEMENT MARKINGS-PERMANENT	DMS-8240
PREFABRICATED PAVEMENT MARKINGS-REMOVABLE	DMS-8241
FLAT SURFACE REFLECTIVE SHEETING	DMS-8300
VINYL NON-REFLECTIVE DECAL SHEETING	DMS-8320

COLOR	USAGE	SHEETING MATERIAL
ORANGE	BACKGROUND	TYPE E (FLUORESCENT PRISMATIC)
BLACK	LEGEND & BORDERS	VINYL NON-REFLECTIVE DECAL SHEETING

GENERAL NOTES:

1. If spalling or holes occur, ROUGH ROAD signs should be placed in advance of the condition and may be repeated throughout the project.
2. UNEVEN LANES sign (CW8-11) should be installed in advance of the condition and repeated every mile. Signs installed along the uneven lane condition may be supplemented with the NEXT XX MILES sign (CW21-16) or Advisory Speed sign (CW13-1).
3. NO CENTER STRIPE signs (CW8-12) should be installed if centerlines or lane lines are obscured or obliterated. The signs should remain in place until permanent pavement markings are installed.
4. Signs shall be spaced at the distances recommended as per BC standards.
5. When operations are completed and final surface treatment will not be applied as part of this project, advance signs shall be left in place and become the property of the State. These signs shall be installed on approved permanent sign supports as per TxDOT standards. Additional signs may be required as directed by the Engineer. Minimum mounting height of signs is 7 feet. Signs shall remain in place until final surface is applied. Signs shall be considered subsidiary to the Item "BARRICADES, SIGNS AND TRAFFIC HANDLING."
6. Pavement markings shall be replaced as operations proceed.
7. Short term markings shall not be used to simulate edge lines.
8. All signs shall be constructed in accordance with the details found in the "Standard Highway Sign Designs for Texas," latest edition. Sign details not shown in this manual shall be shown in the plans or the Engineer shall provide a detail to the Contractor before the sign is manufactured.

TRAFFIC CONTROL DURING PLANING, OVERLAY AND LEVELING OPERATIONS ARE SHOWN ELSEWHERE IN THE PLANS.

FIGURE 1

Edge Condition	Edge Height (D)	Warning Devices
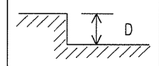	less than or equal to 1" greater than 1" to: 1¼" (maximum-planing) 1½" (typical-overlay)	Signs: ECW8-8 Signs: CW8-11, ECW8-8

Distance "D" may be a maximum of 1¼" for planing operations and 2" for overlay operations if uneven lanes are open to traffic after work operations cease.

Texas Department of Transportation
Traffic Operations Division

SIGNING FOR UNEVEN LANES

WZ(UL)-03

©TxDOT April 1992

REVISIONS
8-95
1-97
2-98
3-03

DN: TXDOT	CK: TXDOT	DW: TXDOT	CK: TXDOT
CONT	SECT	JOB	HIGHWAY
2452	01	050	LP 1604
DIST	COUNTY		SHEET NO.
SAT	BEXAR		140

DISCLAIMER:
The use of this standard is governed by the "Texas Engineering Practice Act". No warranty of any kind is made by TxDOT for any purpose whatsoever. TxDOT assumes no responsibility for the conversion of this standard to other formats or for incorrect results or damages resulting from its use.

DATE:
FILE:

Divided Highway

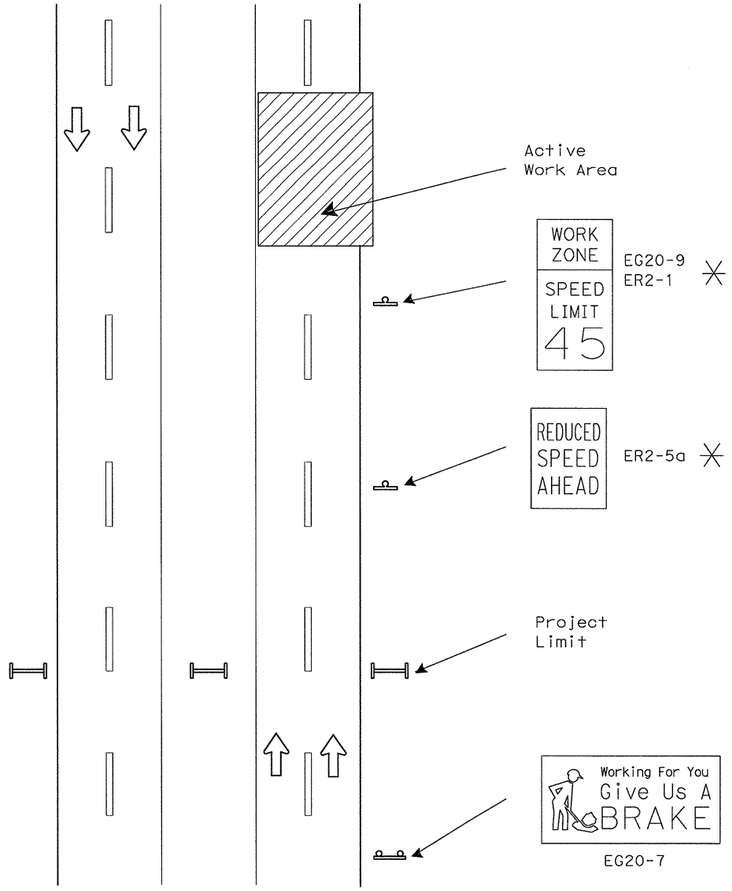

Undivided Highway

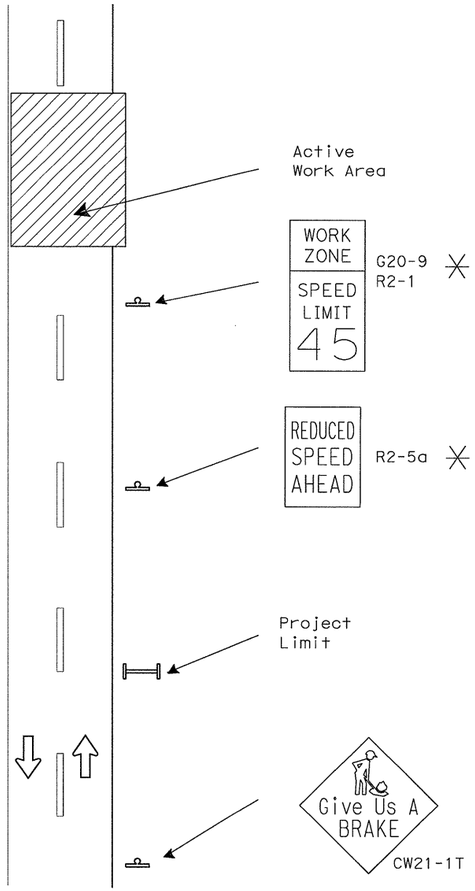

SIGNS ARE SHOWN FOR ONE DIRECTION OF TRAVEL

✳ Posted only when reduced speed is directed by the Engineer

SUMMARY OF LARGE SIGNS

BACKGROUND COLOR	SIGN DESIGNATION	SIGN TEXT	SIGN DIMENSIONS	REFLECTIVE SHEETING	PLY TY A (SQ FT)	GALVANIZED STRUCT STEEL Size	GALVANIZED STRUCT STEEL (LF) ①	GALVANIZED STRUCT STEEL (LF) ②	DRILLED SHAFT 24" DIA. (LF)
Orange	EG20-7	Give Us A BRAKE	16' x 8'	Type E	128	W8x18	16	17	12
Orange	G20-7	Give Us A BRAKE	8' x 4'	Type E	32	S4x7.7	12	13	7✳

✳ 12" Non-reinforced Concrete Footing (LF)

SUMMARY OF SMALL SIGNS

BACKGROUND COLOR	SIGN DESIGNATION	SIGN TEXT	SIGN DIMENSIONS	REFLECTIVE SHEETING	PLY TY A (SQ FT)
Orange	EG20-9	WORK ZONE	36" x 24"	Type E	6
Orange	G20-9	WORK ZONE	24" x 18"	Type E	3
White	ER2-1	SPEED LIMIT	36" x 48"	Type C	12
White	ER2-5a	REDUCED SPEED AHEAD	36" x 48"	Type C	12
Orange	CW21-1T	GIVE US A BRAKE	48" x 48"	Type E	16

DEPARTMENTAL MATERIAL SPECIFICATIONS	
PLYWOOD SIGN BLANKS	DMS-7100
ALUMINUM SIGN BLANKS	DMS-7110
FLAT SURFACE REFLECTIVE SHEETING	DMS-8300
VINYL NON-REFLECTIVE SHEETING	DMS-8320

COLOR	USAGE	SHEETING MATERIAL
WHITE	BACKBROUND	TYPE C (HIGH SPECIFIC INTENSITY)
ORANGE	BACKGROUND	TYPE E (FLUORESCENT PRISMATIC)
BLACK	LEGEND & BORDERS	VINYL NON-REFLECTIVE SHEETING

GENERAL NOTES:

1. See BC and SMD sheets for additional sign support details.
2. Sign locations shall be approved by the Engineer.
3. For projects more than two miles in length, Give Us a BRAKE and WORK ZONE SPEED LIMIT signs should be repeated halfway through the project.
4. The WORK ZONE (G20-9) sign is to be installed in combination with a SPEED LIMIT (R2-1) sign.
5. Speed limits shall be regulatory and approved by the Transportation Commission.
6. EG20-9, G20-9, ER2-1, R2-1, ER2-5a, R2-5a and CW21-1T signs and supports shall be considered subsidiary to Item 502, "Barricades, Signs and Traffic Handling."
7. G20-7 and EG20-7 signs shall be paid for under the following bid items:
   Item 634 Plywood Signs Type A
   Item 647 Large Roadside Sign Supports
   Item 656 Foundations for Signs, Traffic Signals and Roadway Ill. Assem.
8. All signs shall be constructed in accordance with the details found in the "Standard Highway Sign Designs for Texas," latest edition. Sign details not shown in this manual shall be shown in the plans or the Engineer shall provide a detail to the Contractor before the sign is manufactured.

Texas Department of Transportation
Traffic Operations Division

WORK ZONE "GIVE US A BRAKE" SIGNS

WZ(BRK)-03

©TxDOT August 1995

REVISIONS
6-96
8-96
5-98
3-03

DN: TXDOT	CK: TXDOT	DW: TXDOT	CK: TXDOT

CONT	SECT	JOB	HIGHWAY
2452	01	050	LP 1604
DIST	COUNTY		SHEET NO.
SAT	BEXAR		141

DISCLAIMER:
The use of this standard is governed by the "Texas Engineering Practice Act". No warranty of any kind is made by TxDOT for any purpose whatsoever. TxDOT assumes no responsibility for the conversion of this standard to other formats or for incorrect results or damages resulting from its use.

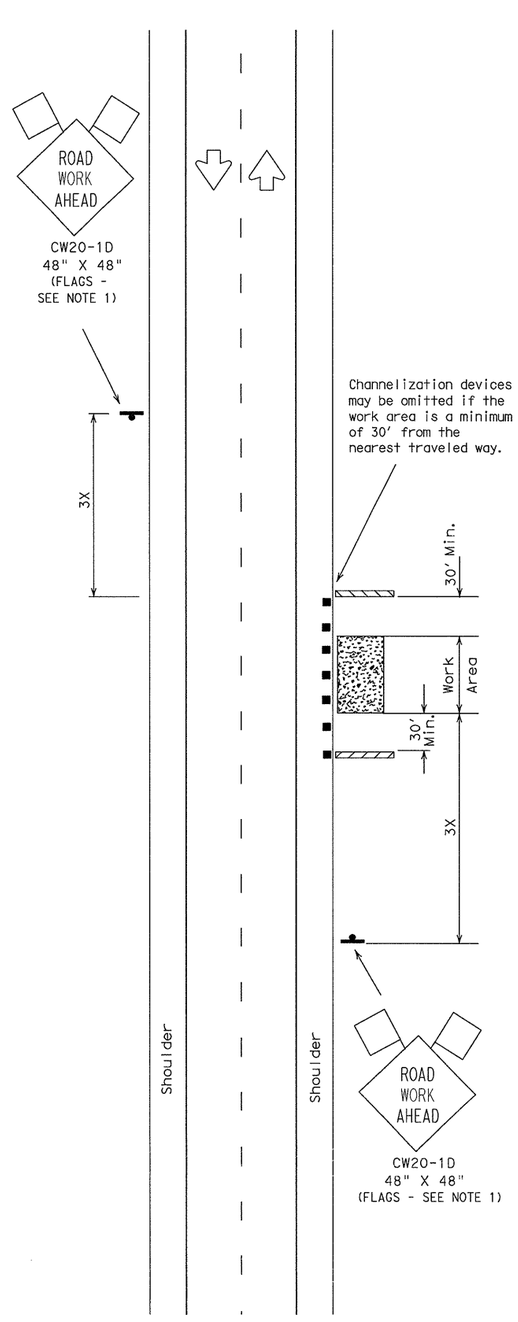

TCP (2-1a)

Work Area Near Shoulder

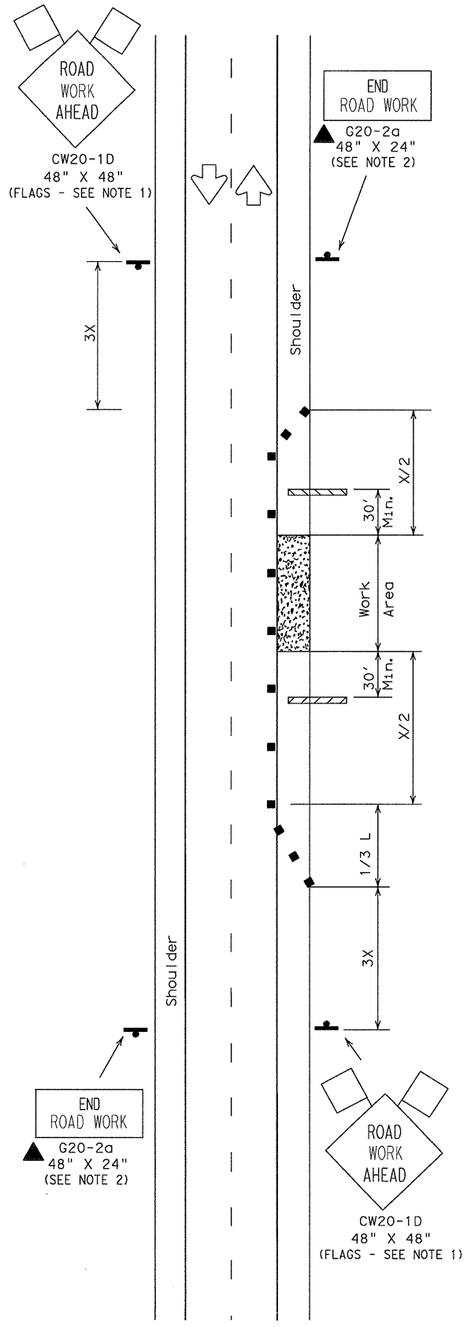

TCP (2-1b)

Work Area on Shoulder

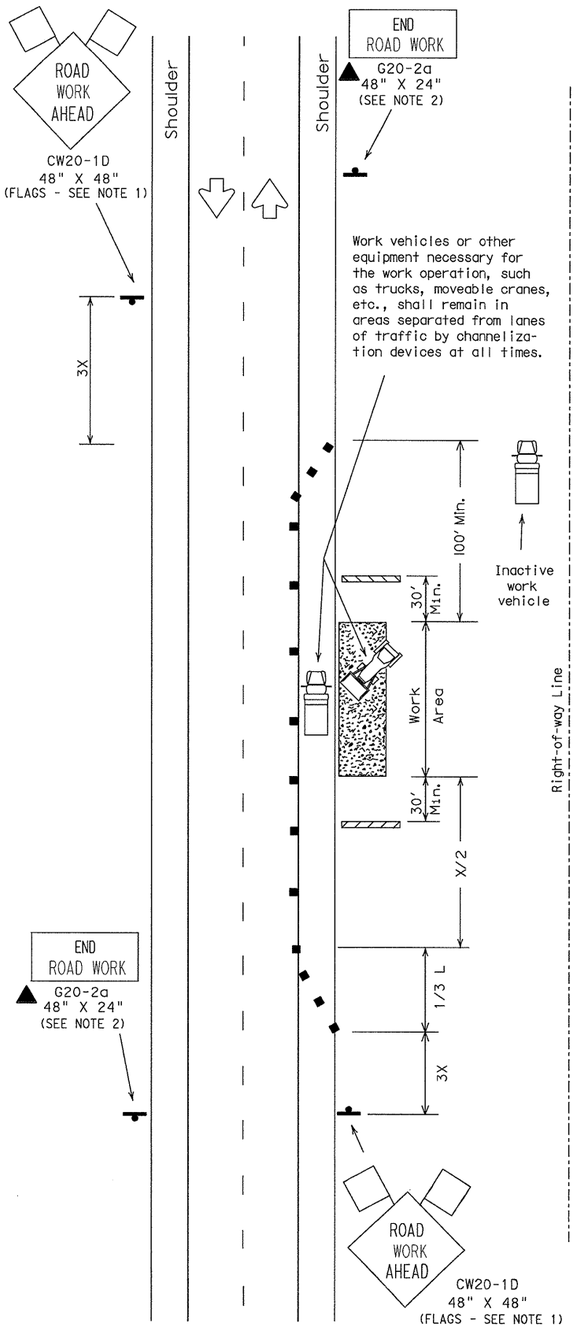

TCP (2-1c)

Work Vehicles on Shoulder

LEGEND

Type III Barricade | Channelizing Devices | Flag
Heavy Work Vehicle | Truck Mounted Attenuator
Trailer Mounted Flashing Arrow Panel | Portable Changeable Message Sign
Flagger | Sign Post

Posted Speed ✳	Formula	Minimum Desirable Taper Lengths ✳✳ 10' Offset	11' Offset	12' Offset	Suggested Maximum Spacing of Device On a Taper	On a Tangent	Minimum Sign Spacing X Distance
30	$L=\frac{WS^2}{60}$	150'	165'	180'	30'	60'-75'	120'
35		205'	225'	245'	35'	70'-90'	160'
40		265'	295'	320'	40'	80'-100'	240'
45	L=WS	450'	495'	540'	45'	90'-110'	320'
50		500'	550'	600'	50'	100'-125'	400'
55		550'	605'	660'	55'	110'-140'	500'
60		600'	660'	720'	60'	120'-150'	✳600'
65		650'	715'	780'	65'	130'-165'	✳700'
70		700'	770'	840'	70'	140'-175'	✳800'

✳ Conventional Roads Only

✳✳ Taper lengths have been rounded off.
L=Length of Taper (FT.) W=Width of Offset (FT.) S=Posted Speed (MPH)

TYPICAL USAGE:				
MOBILE	SHORT DURATION	SHORT TERM STATIONARY	INTERMEDIATE TERM STATIONARY	LONG TERM STATIONARY
	✓	✓	✓	✓

GENERAL NOTES:

1. Unless otherwise stated in the plans, flags attached to signs are REQUIRED.
2. All traffic control devices illustrated are REQUIRED, except those denoted with the triangle symbol may be omitted when stated elsewhere in the plans.
3. Type III barricades are required on both sides of work area at all times. (See BC Standards for barricade details.)
4. Stockpiled material should be placed a minimum 30' from nearest traveled way.
5. On high speed facilities advance warning signs should be installed approximately 3X from the work area or from the beginning of a lane or shoulder taper. On low speed facilities the advance warning sign should be placed on the "X" minimum distance.

Only pre-qualified products shall be used. A list of compliant products and their sources may be obtained by writing or faxing:

Standards Engineer
Traffic Operations Division - TE
Texas Department of Transportation
125 East 11th Street
Austin, Texas 78701-2483
Phone (512) 416-3335
Fax (512) 416-3161
E-mail TRF-STANDARD@mailgw.dot.state.tx.us

Texas Department of Transportation
Traffic Operations Division

TRAFFIC CONTROL PLAN

TCP(2-1)-98

©TxDOT December 1985

DN: TXDOT	CK: TXDOT	DW: TXDOT	CK: TXDOT

REVISIONS	CONT	SECT	JOB	HIGHWAY
2-94	2452	01	050	LP 1604
8-95	DIST	COUNTY		SHEET NO.
1-97	SAT	BEXAR		142
4-98				

DATE:
FILE:

DISCLAIMER:
The use of this standard is governed by the "Texas Engineering Practice Act". No warranty of any kind is made by TxDOT for any purpose whatsoever. TxDOT assumes no responsibility for the conversion of this standard to other formats or for incorrect results or damages resulting from its use.

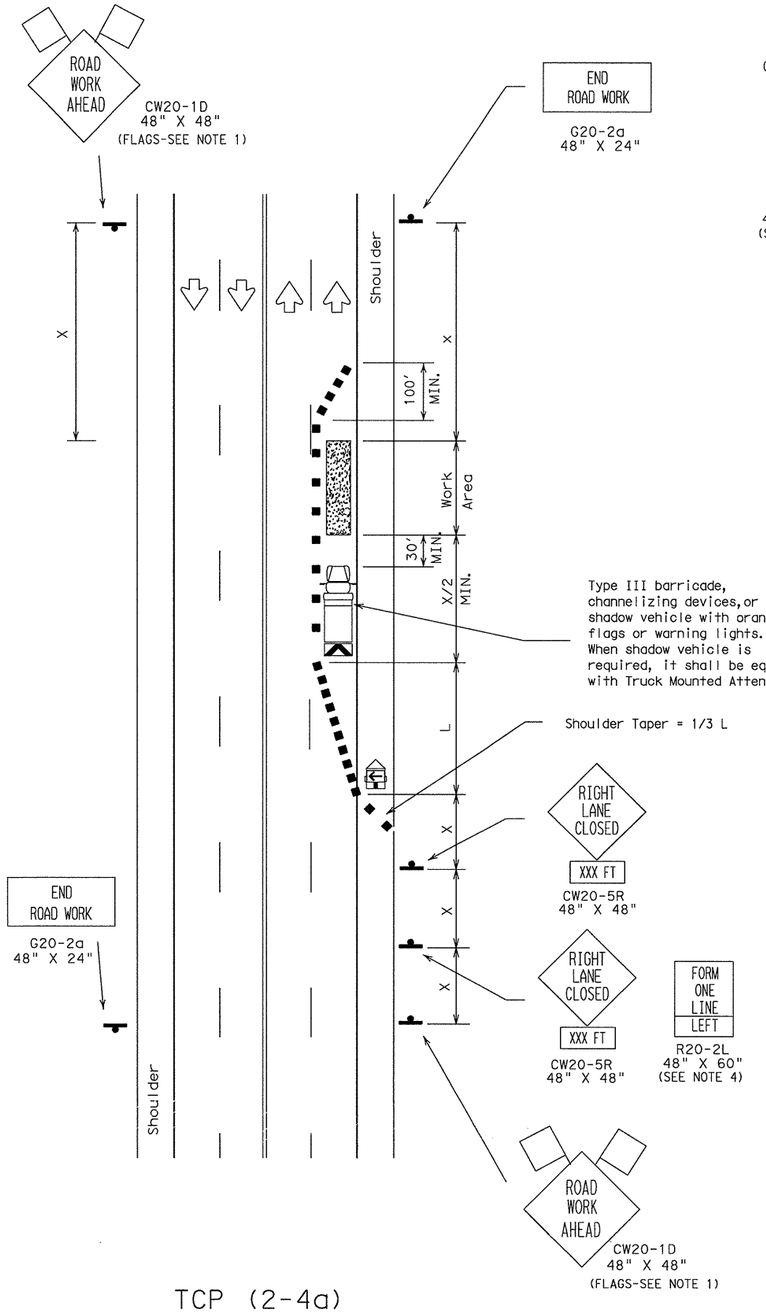

TCP (2-4a)

One Lane Closed
Less Than Two Weeks

The requirement for shadow vehicles will be listed in the project GENERAL NOTES, Item 502, Barricades, Signs and Traffic Handling.

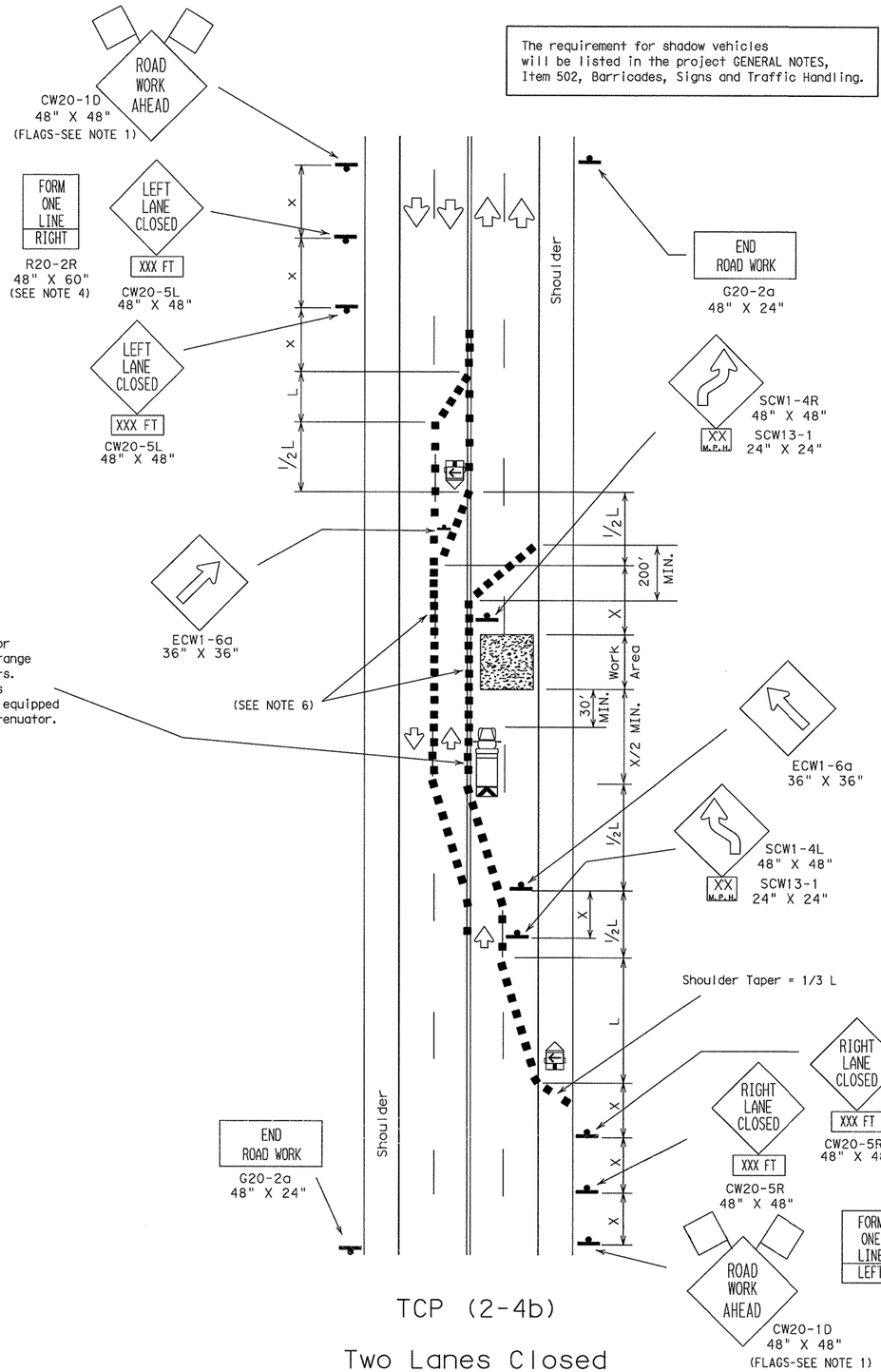

TCP (2-4b)

Two Lanes Closed
Less Than Two Weeks

LEGEND

Type III Barricade ▪▪ Channelizing Devices Flag
Heavy Work Vehicle Truck Mounted Attenuator
Trailer Mounted Flashing Arrow Panel (M) Portable Changeable Message Sign
Flagger Sign Post

Posted Speed ✳	Formula	Minimum Desirable Taper Lengths ✳✳ 10' Offset	11' Offset	12' Offset	Suggested Maximum Spacing of Device On a Taper	On a Tangent	Minimum Sign Spacing X Distance
30	$L=\frac{WS^2}{60}$	150'	165'	180'	30'	60'-75'	120'
35		205'	225'	245'	35'	70'-90'	160'
40		265'	295'	320'	40'	80'-100'	240'
45	L=WS	450'	495'	540'	45'	90'-110'	320'
50		500'	550'	600'	50'	100'-125'	400'
55		550'	605'	660'	55'	110'-140'	500'
60		600'	660'	720'	60'	120'-150'	✳600'
65		650'	715'	780'	65'	130'-165'	✳700'
70		700'	770'	840'	70'	140'-175'	✳800'

✳ Conventional Roads Only

✳✳ Taper lengths have been rounded off.
L=Length of Taper (FT.) W=Width of Offset (FT.) S=Posted Speed (MPH)

TYPICAL USAGE:				
MOBILE	SHORT DURATION	SHORT TERM STATIONARY	INTERMEDIATE TERM STATIONARY	LONG TERM STATIONARY
		✓	✓	

GENERAL NOTES:

1. Unless otherwise stated in the plans, flags attached to signs are REQUIRED.
2. TCP (2-4b) shall be used only on projects that will be at a location for less than two weeks.
3. Existing pavement markings may remain in place for projects less than two weeks in duration.
4. The FORM ONE LINE LEFT (or RIGHT) sign may be used following the RIGHT (or LEFT) LANE CLOSED XXX FT sign. Spacing distance between signs should be the minimum distance indicated.
5. Downstream taper is optional. When used, it should be 100' minimum length per lane.
6. For intermediate term situations, when it is not feasible to remove and restore pavement markings, the channelization must be made dominant by using a very close spacing. This is especially important in locations of conflicting information, such as where traffic is directed over a double yellow centerline. In such locations a maximum channelizing device spacing of 10 feet is recommended. The 10 foot channelizing device spacing recommendation is intended for the area of conflicting information and not the entire work zone.

Texas Department of Transportation
Traffic Operations Division

TRAFFIC CONTROL PLAN

TCP(2-4)-03

©TxDOT December 1985

DN: TXDOT	CK: TXDOT	DW: TXDOT	CK: TXDOT

REVISIONS	CONT	SECT	JOB	HIGHWAY
8-95	2452	01	050	LP 1604
1-97	DIST	COUNTY		SHEET NO.
4-98	SAT	BEXAR		143
3-03				

DATE:
FILE:

DISCLAIMER: The use of this standard is governed by the "Texas Engineering Practice Act". No warranty of any kind is made by TxDOT for any purpose whatsoever. TxDOT assumes no responsibility for the conversion of this standard to other formats or for incorrect results or damages resulting from its use.

DATE:
FILE:

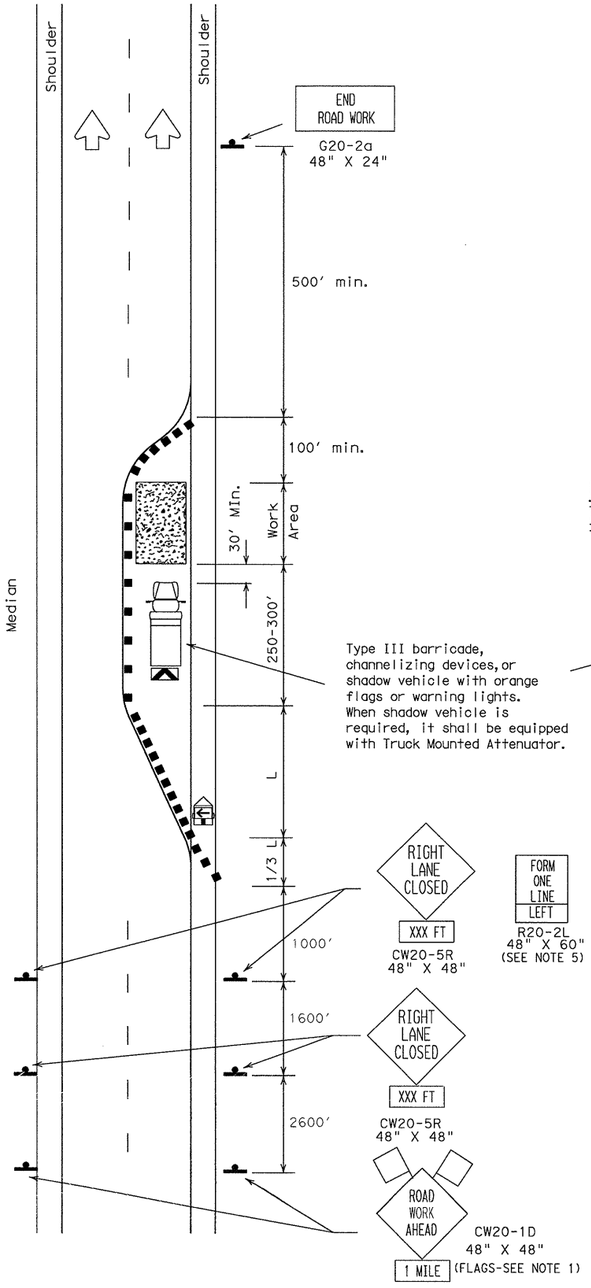

TCP (2-6a)
One Lane Closure

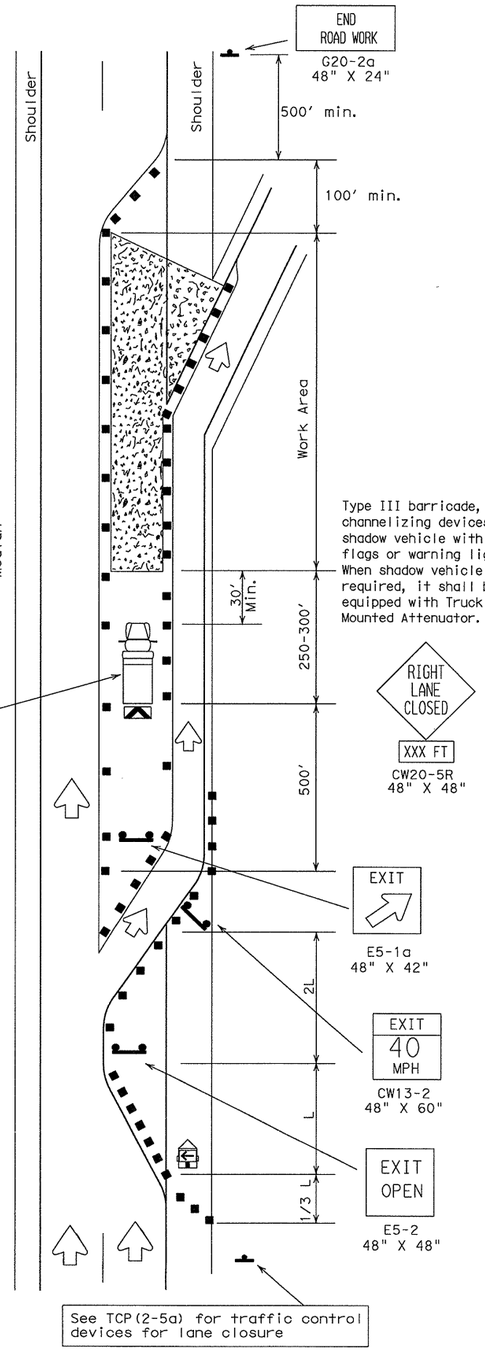

TCP (2-6b)
Lane Closure Near Exit Ramps

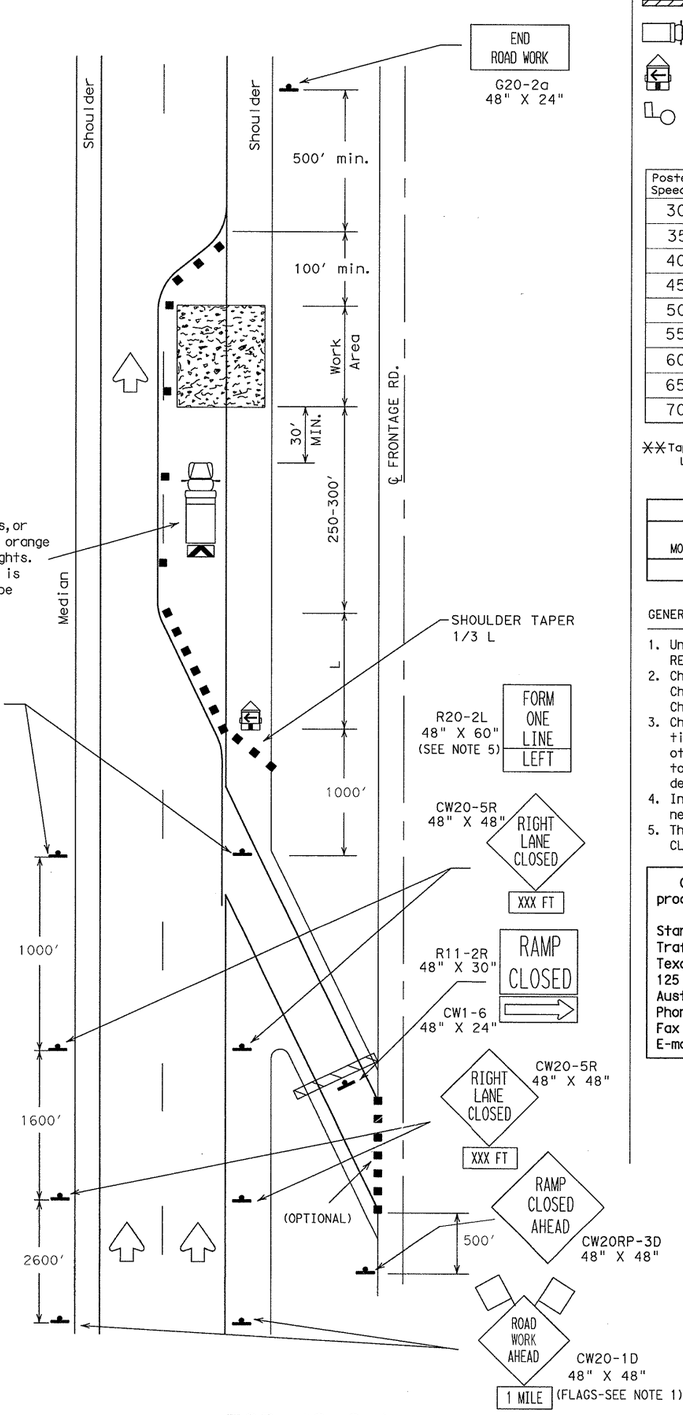

TCP (2-6c)
Lane Closure Near Entrance Ramps

LEGEND

Type III Barricade ▪▪ Channelizing Devices Flag
Heavy Work Vehicle Truck Mounted Attenuator
Trailer Mounted Flashing Arrow Panel
Portable Changeable Message Sign (M)
Flagger Sign Post

Posted Speed	Formula	Minimum Desirable Taper Lengths ✻✻ 10′ Offset	11′ Offset	12′ Offset	Suggested Maximum Spacing of Device On a Taper	On a Tangent
30	$L=\frac{WS^2}{60}$	150′	165′	180′	30′	60′-75′
35		205′	225′	245′	35′	70′-90′
40		265′	295′	320′	40′	80′-100′
45	L=WS	450′	495′	540′	45′	90′-110′
50		500′	550′	600′	50′	100′-125′
55		550′	605′	660′	55′	110′-140′
60		600′	660′	720′	60′	120′-150′
65		650′	715′	780′	65′	130′-165′
70		700′	770′	840′	70′	140′-175′

✻✻Taper lengths have been rounded off.
L=Length of Taper (FT.) W=Width of Offset (FT.) S=Posted Speed (MPH)

TYPICAL USAGE:				
MOBILE	SHORT DURATION	SHORT TERM STATIONARY	INTERMEDIATE TERM STATIONARY	LONG TERM STATIONARY
			✓	✓

GENERAL NOTES:

1. Unless otherwise stated in the plans, flags attached to signs are REQUIRED.
2. Channelizing devices used to close lanes may be supplemented with the Chevron Alignment Sign placed on every other channelizing device. Chevrons may be attached to plastic drums as per BC Standards.
3. Channelizing devices used along the work area or along tangent sections may be supplemented with vertical panels (VP) placed on every other channelizing device. If night time conditions make it difficult to see at least two VP's, the VP's may be placed on each channelizing device.
4. In areas with safety lighting or continuous illumination the channelizing devices can be supplemented with delineators.
5. The FORM ONE LINE LEFT sign may be used following the RIGHT LANE CLOSED sign.

Only pre-qualified products shall be used. A list of compliant products and their sources may be obtained by writing or faxing:

Standards Engineer
Traffic Operations Division - TE
Texas Department of Transportation
125 East 11th Street
Austin, Texas 78701-2483
Phone (512) 416-3335
Fax (512) 416-3161
E-mail TRF-STANDARD@mailgw.dot.state.tx.us

The requirement for shadow vehicles will be listed in the project GENERAL NOTES, Item 502, Barricades, Signs and Traffic Handling.

Texas Department of Transportation
Traffic Operations Division

TRAFFIC CONTROL PLAN

TCP(2-6)-98

©TxDOT December 1985

DN: TXDOT	CK: TXDOT	DW: TXDOT	CK: TXDOT

REVISIONS	CONT	SECT	JOB	HIGHWAY
2-94	2452	01	050	LP 1604
8-95	DIST	COUNTY		SHEET NO.
1-97	SAT	BEXAR		144
4-98				

DISCLAIMER: The use of this standard is governed by the "Texas Engineering Practice Act". No warranty of any kind is made by TxDOT for any purpose whatsoever. TxDOT assumes no responsibility for the conversion of this standard to other formats or for incorrect results or damages resulting from its use.

DATE:
FILE:

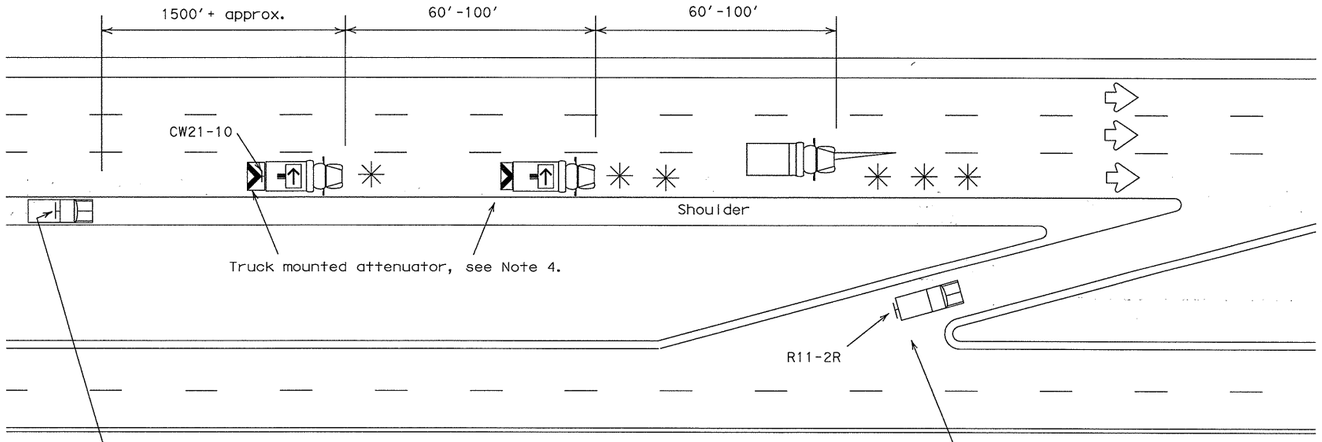

FCW20-6 Sign mounted on a truck or trailer

Ramp Control Vehicle shall be used when required by the Engineer

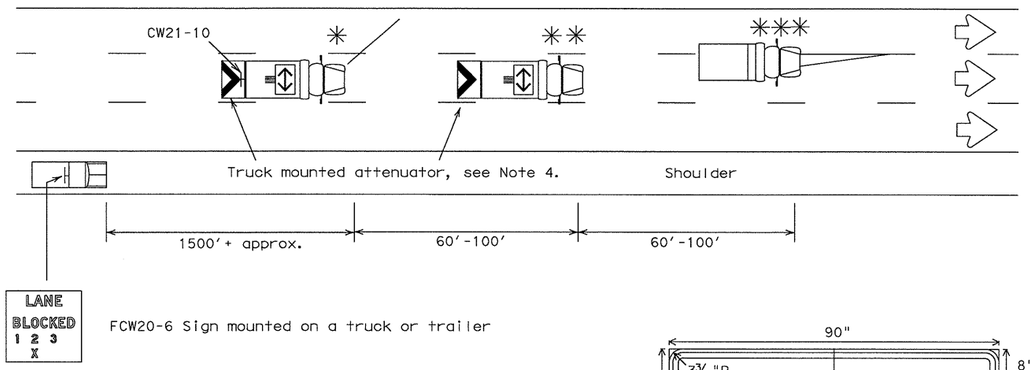

FCW20-6 Sign mounted on a truck or trailer

Shadow and trail vehicle shall be equipped with Truck Mounted Attenuator.

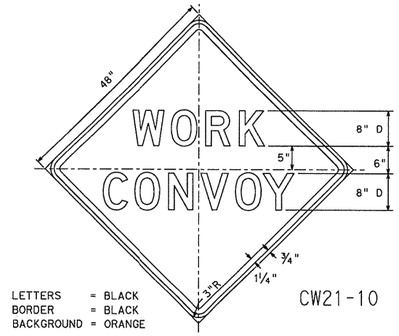

LETTERS = BLACK
BORDER = BLACK
BACKGROUND = ORANGE

CW21-10

Legend:

- ✳ TRAIL VEHICLE
- ✳✳ SHADOW VEHICLE
- ✳✳✳ WORK VEHICLE
- Truck mounted attenuator
- HEAVY WORK VEHICLE

Arrow Panel Displays

- RIGHT Directional
- LEFT Directional
- RIGHT or LEFT Directional
- CAUTION mode

GENERAL NOTES:

1. TRAIL, SHADOW, LEAD, and work vehicles shall be equipped with arrow panels as illustrated. The Engineer will determine if the LEAD VEHICLE and/or TRAIL VEHICLE are required based on prevailing roadway conditions, traffic volume, and sight distance restrictions.
2. All traffic control devices shall be in accordance with the "Texas Manual on Uniform Traffic Control Devices" (TMUTCD), latest edition.
3. The use of yellow rotating beacons or strobe lights on vehicles are required unless otherwise stated elsewhere in the plans.
4. The use of truck mounted attenuators (TMA) on the SHADOW VEHICLE and the TRAIL VEHICLE are required.
5. Optional striping on the back panel of all truck mounted attenuators shall be 8" red and white reflective sheeting placed in an inverted "V" design. Reflective sheeting shall meet or exceed the reflectivity and color requirements of DEPARTMENTAL MATERIAL SPECIFICATION D-9-8300, TYPE C.
6. Flashing Arrow Panels shall be Type B or Type C as per BC Standards. The panel operation shall be controlled from inside the vehicle.
7. Each vehicle shall have two-way radio communication capability.
8. When work convoys must change lanes, the TRAIL VEHICLE should change lanes first to shadow the other convoy vehicles.
9. Vehicle spacing between TRAIL VEHICLE and SHADOW VEHICLE will vary depending on sight distance restrictions. Motorists approaching the work convoy should be able to see the TRAIL VEHICLE in time to slow down and/or change lanes as they approach the TRAIL VEHICLE.
10. The LANE BLOCKED sign (FCW20-6) shall be used on divided highways and may be mounted on a truck or trailer. For divided highways with two lanes in each direction, the RIGHT or LEFT LANE CLOSED sign (CW20-5, 48" x 48") may be substituted for the LANE BLOCKED sign (FCW20-6).

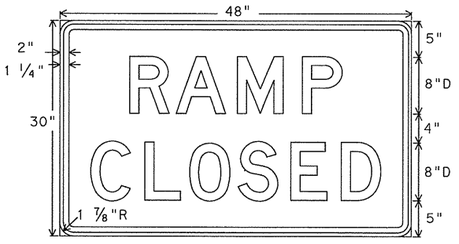

R11-2R

LETTERS = BLACK
BORDER = BLACK
BACKGROUND = WHITE

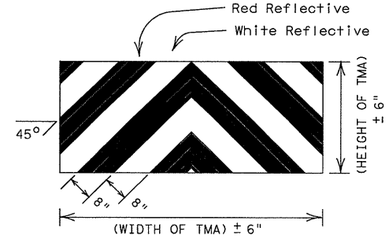

OPTIONAL STRIPING FOR TMA

STRIPING FOR TMA WILL BE REQUIRED ON ALL PROJECTS AWARDED AFTER JANUARY 1, 2000

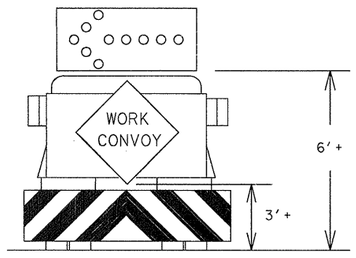

Typical Trail Vehicle
with LEFT Directional display
Flashing Arrow Panel

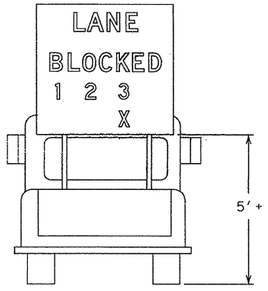

Typical Advance
Warning Vehicle

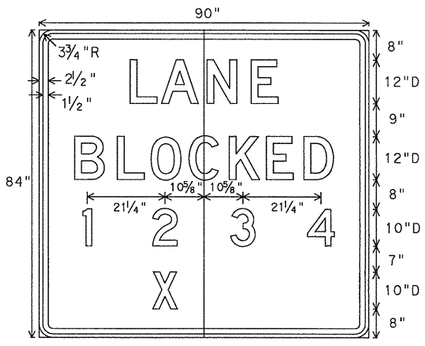

FCW20-6

LETTERS = BLACK
BORDER = BLACK
BACKGROUND = ORANGE

Only pre-qualified products shall be used. A list of compliant products and their sources may be obtained by writing or faxing:

Standards Engineer
Traffic Operations Division - TE
Texas Department of Transportation
125 East 11th Street
Austin, Texas 78701-2483
Phone (512) 416-3335
Fax (512) 416-3161
E-mail TRF-STANDARD@mailgw.dot.state.tx.us

Texas Department of Transportation
Traffic Operations Division

TRAFFIC CONTROL PLAN
MOBILE OPERATIONS
DIVIDED HIGHWAYS
TCP(3-2)-98

©TxDOT December 1985	DN: TXDOT		CK: TXDOT	DW: TXDOT	CK: TXDOT
REVISIONS	CONT	SECT	JOB	HIGHWAY	
2-94	2452	01	050	LP 1604	
8-95	DIST	COUNTY			SHEET NO.
1-97	SAT	BEXAR			145
4-98					

DISCLAIMER:
The use of this standard is governed by the "Texas Engineering Practice Act". No warranty of any kind is made by TxDOT for any purpose whatsoever. TxDOT assumes no responsibility for the conversion of this standard to other formats or for incorrect results or damages resulting from its use.

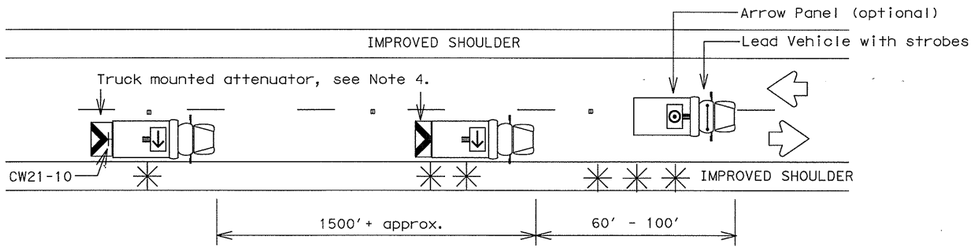

Two Lane Highway With Paved Shoulders (work on travel lane)

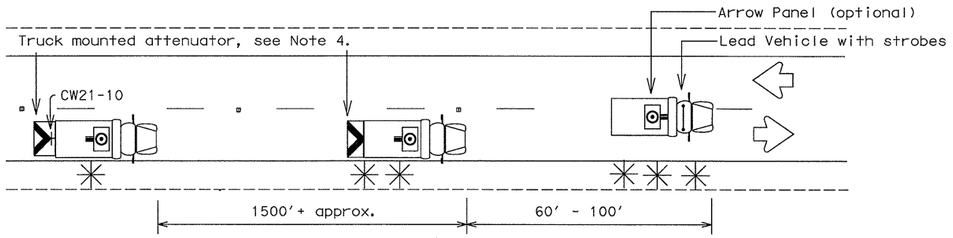

Two Lane Highway Without Paved Shoulders (work on travel lane)

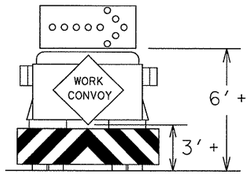

TYPICAL TRAIL VEHICLE
RIGHT Directional display
Flashing Arrow Panel

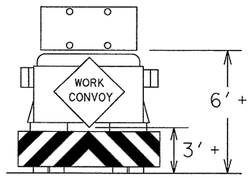

TYPICAL TRAIL VEHICLE
with (four corner flash)
CAUTION display
Flashing Arrow Panel

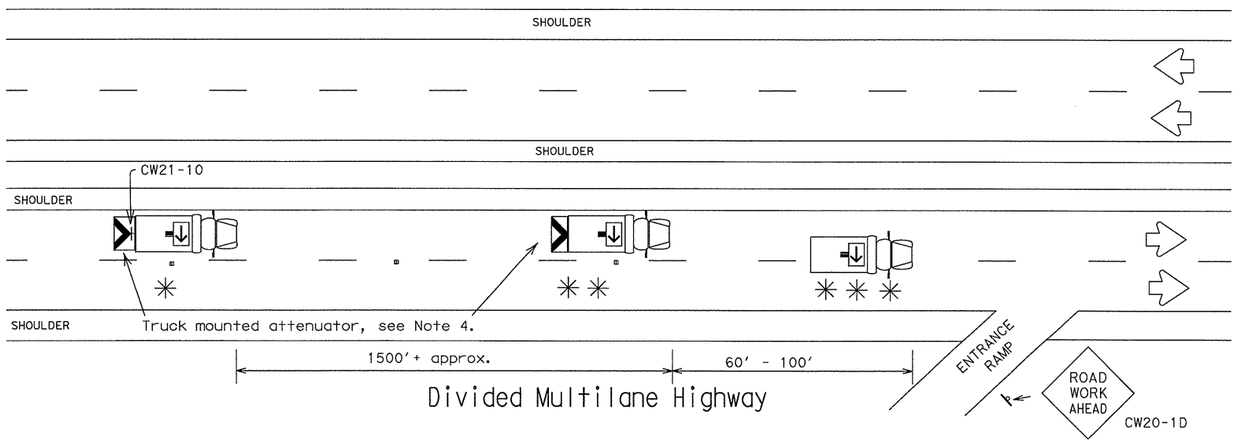

Divided Multilane Highway

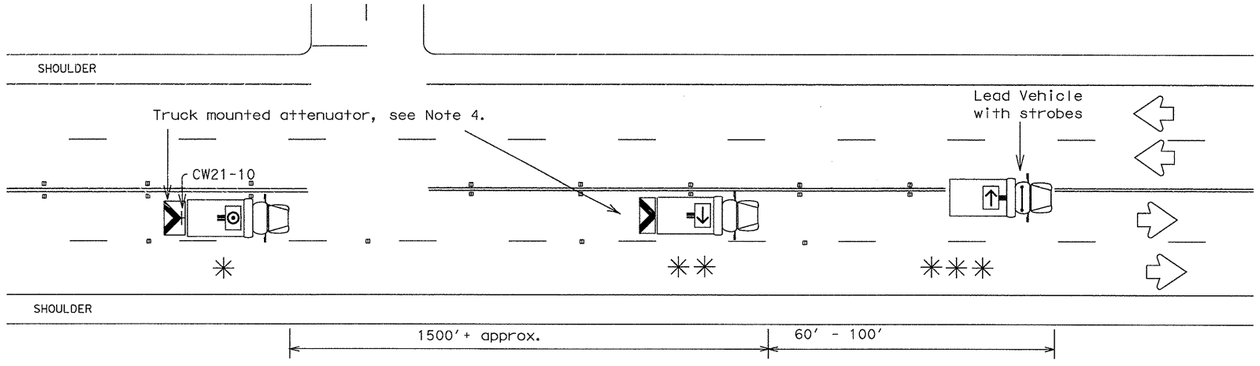

Undivided Multilane Highway

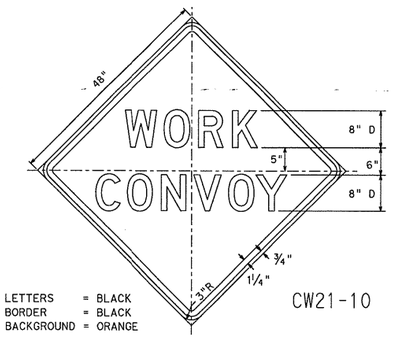

Legend:

- ✱ TRAIL VEHICLE
- ✱✱ SHADOW VEHICLE
- ✱✱✱ WORK VEHICLE
- Truck mounted attenuator
- HEAVY WORK VEHICLE

Arrow Panel Displays

- RIGHT Directional
- LEFT Directional
- RIGHT or LEFT Directional
- CAUTION mode

GENERAL NOTES:

1. TRAIL, SHADOW, LEAD, and work vehicles shall be equipped with arrow panels as illustrated. The Engineer will determine if the LEAD VEHICLE and/or TRAIL VEHICLE are required based on prevailing roadway conditions, traffic volume, and sight distance restrictions.
2. All traffic control devices shall be in accordance with the "Texas Manual on Uniform Traffic Control Devices" (TMUTCD), latest edition.
3. The use of yellow rotating beacons or strobe lights on vehicles are required unless otherwise stated elsewhere in the plans.
4. The use of truck mounted attenuators (TMA) on the SHADOW VEHICLE and the TRAIL VEHICLE are required.
5. Optional striping on the back panel of all truck mounted attenuators shall be 8" red and white reflective sheeting placed in an inverted "V" design. Reflective sheeting shall meet or exceed the reflectivity and color requirements of DEPARTMENTAL MATERIAL SPECIFICATION D-9-8300, TYPE C.
6. Flashing Arrow Panels shall be Type B or Type C as per BC Standards. The panel operation shall be controlled from inside the vehicle.
7. Each vehicle shall have two-way radio communication capability.
8. When work convoys must change lanes, the TRAIL VEHICLE should change lanes first to shadow the other convoy vehicles.
9. Vehicle spacing between TRAIL VEHICLE and SHADOW VEHICLE will vary depending on sight distance restrictions. Motorists approaching the work convoy should be able to see the TRAIL VEHICLE in time to slow down and/or change lanes as they approach the TRAIL VEHICLE.

Only pre-qualified products shall be used. A list of compliant products and their sources may be obtained by writing or faxing:

Standards Engineer
Traffic Operations Division - TE
Texas Department of Transportation
125 East 11th Street
Austin, Texas 78701-2483
Phone (512) 416-3335
Fax (512) 416-3161
E-mail TRF-STANDARD@mailgw.dot.state.tx.us

Shadow and trail vehicle shall be equipped with Truck Mounted Attenuator.

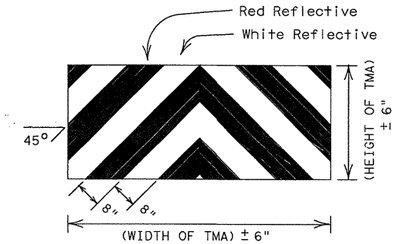

OPTIONAL STRIPING FOR TMA

STRIPING FOR TMA WILL BE REQUIRED ON ALL PROJECTS AWARDED AFTER JANUARY 1, 2000

Texas Department of Transportation
Traffic Operations Division

TRAFFIC CONTROL PLAN MOBILE OPERATIONS RAISED PAVEMENT MARKER INSTALLATION TCP(3-3)-98

©TxDOT September 1987

DN: TXDOT | CK: TXDOT | DW: TXDOT | CK: TXDOT

REVISIONS: 2-94, 8-95, 1-97, 4-98

CONT	SECT	JOB	HIGHWAY
2452	01	050	LP 1604
DIST	COUNTY		SHEET NO.
SAT	BEXAR		146

DATE:
FILE:

DISCLAIMER:
The use of this standard is governed by the "Texas Engineering Practice Act". No warranty of any kind is made by TxDOT for any purpose whatsoever. TxDOT assumes no responsibility for the conversion of this standard to other formats or for incorrect results or damages resulting from its use.

DATE:
FILE:

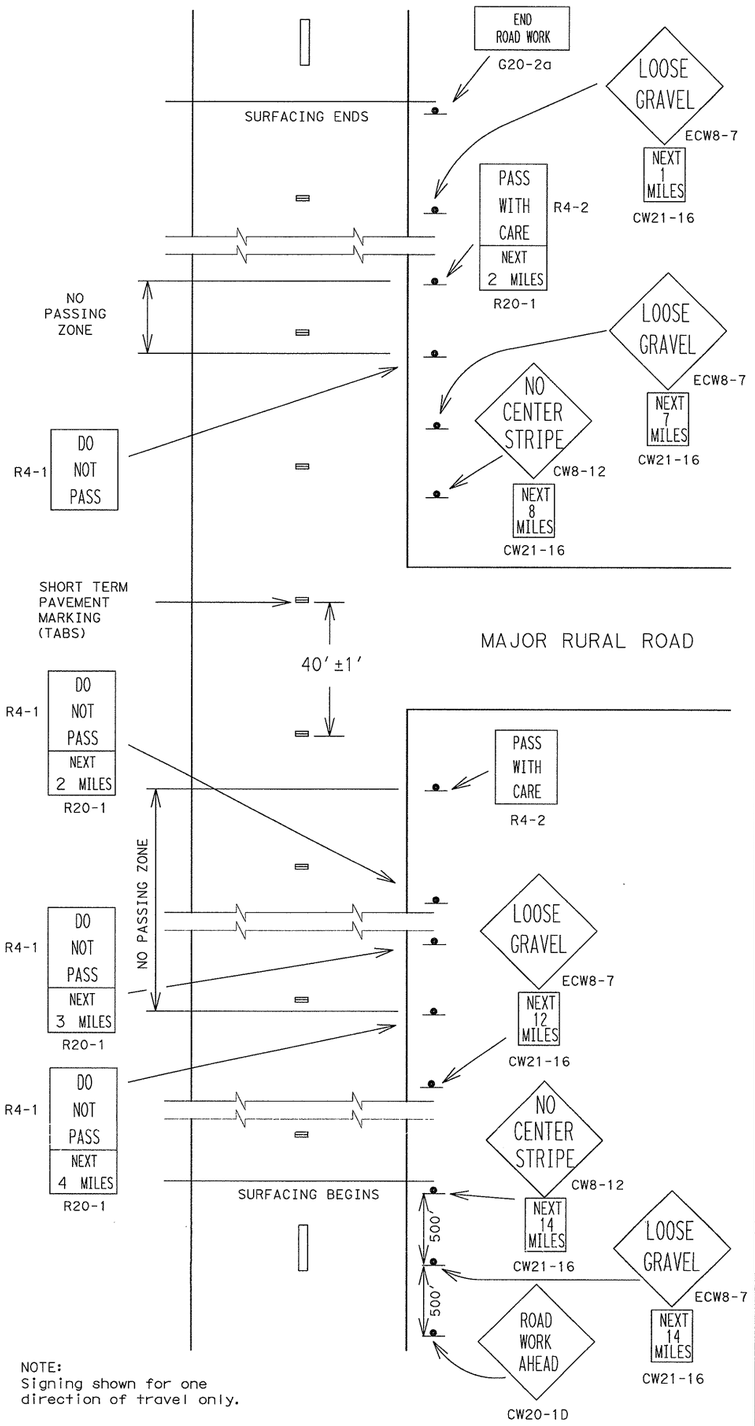

MAJOR RURAL ROAD

NOTE:
Signing shown for one direction of travel only.

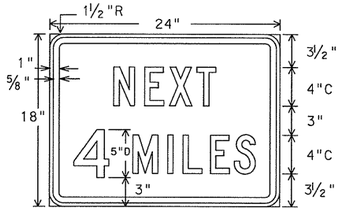

R20-1
24"x18"

Legend - Black
Border - Black
Background - White Refl.

FOR USE WITH REGULATORY SIGNS ONLY

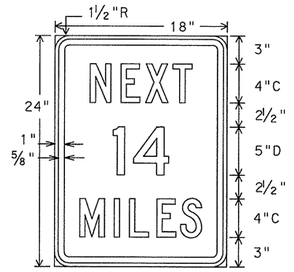

CW21-16
18"x24"

Legend - Black
Border - Black
Background - Orange Refl.

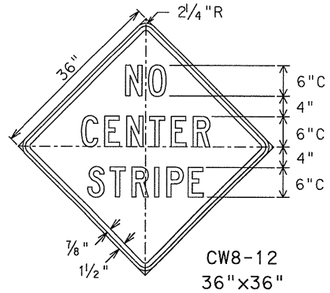

CW8-12
36"x36"

Legend - Black
Border - Black
Background - Orange Refl.

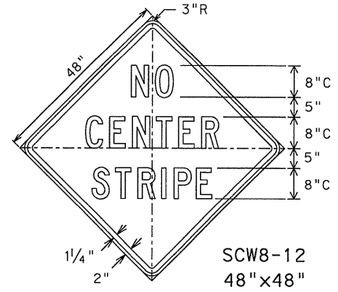

SCW8-12
48"x48"

Legend - Black
Border - Black
Background - Orange Refl.

FOR USE WITH CONSTRUCTION WARNING SIGNS ONLY

TEMPORARY FLEXIBLE-REFLECTIVE ROADWAY MARKER TABS

for surfacing projects only

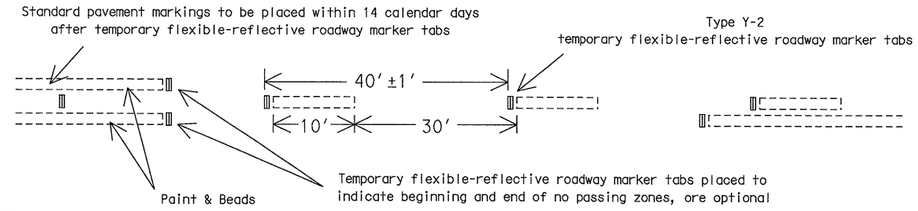

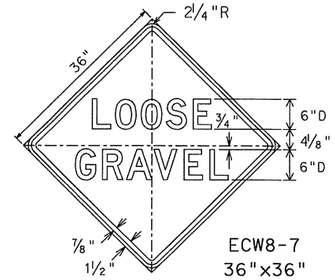

ECW8-7
36"x36"

Legend - Black
Border - Black
Background - Orange Refl.

GENERAL NOTES

The traffic control devices detailed on this sheet will be furnished and erected as directed by the Engineer on sections of roadway where the surfacing operation has covered or obliterated existing pavement markings. These traffic control devices are to be used to supplement those required by BC Standards.

"DO NOT PASS" SIGN (R4-1) and NO-PASSING ZONES

Prior to the beginning of construction, all currently striped no-passing zones should be signed with the DO NOT PASS sign (R4-1) and PASS WITH CARE sign (R4-2) placed at the beginning and end of each zone for each direction of travel except as otherwise provided herein. Signs marking these individual no-passing zones need not be covered prior to construction if the signs supplement the existing pavement markings.

At the discretion of the Engineer, in areas of numerous no-passing zones, several zones may be combined and signed as a single zone. If passing is to be prohibited over one or more lengthy sections, a DO NOT PASS sign and a NEXT XX MILES sign (R20-1) may be used at the beginning of such zones. The DO NOT PASS and NEXT XX MILES signs should be repeated every mile to the end of the no-passing zone. In areas where there is considerable distance between no-passing zones, the end of a no-passing zone may be signed with a PASS WITH CARE and NEXT XX MILES sign.

Depending on traffic volumes and length of sections, it may be desirable to prohibit passing throughout the project to prevent damage to windshields and lights. The DO NOT PASS and NEXT XX MILES sign should be used and repeated as often as necessary for this purpose. Where several existing zones are to be combined into one individual no-passing zone, the sign at the beginning of the zone should be covered until the surfacing operation has passed this location so as not to have the DO NOT PASS sign conflict with existing pavement markings. Also, unless one days operation completes the entire length of such combined zones, care must be taken to place DO NOT PASS and PASS WITH CARE signs in order to sign the beginning and end of the no-passing zones in the area where the surfacing operation has stopped for the day.

R4-1 and R4-2 signs should be mounted on fixed supports as detailed on BC Standards. These signs are to remain in place until standard pavement markings are placed.

"NO CENTER STRIPE" SIGN (CW21-15)

At the time construction activity obliterates the existing centerline (low volume roads may not have an existing centerline), a NO CENTER STRIPE sign (CW8-12) should be erected at each end of the work area and just beyond major rural intersections and other location deemed necessary by the Engineer. Where possible, the signs erected at each end of the work area should be located in such a manner that drivers can read the sign and immediately see the change to no centerline. The NO CENTER STRIPE sign should be supplemented with the NEXT XX MILES sign (CW21-16) mounted below it.

The NO CENTER STRIPE sign should be erected as detailed on BC Standards. These signs are to remain in place until standard pavement markings are placed.

"LOOSE GRAVEL" SIGN (ECW8-7)

When construction begins, a LOOSE GRAVEL sign (ECW8-7) should be erected at each end of the work area and repeated at intervals of approximately two (2) miles in rural areas and closer in urban areas. The LOOSE GRAVEL sign should be supplemented with the NEXT XX MILES sign (CW21-16) mounted below it.

The LOOSE GRAVEL sign should be erected as detailed on BC Standards. They should remain in place until the loose gravel condition no longer exists.

PAVEMENT MARKINGS

Short term pavement markings for surfacing projects shall use Temporary Flexible-reflective Roadway Marker Tabs. Tabs are to be installed to provide true alignment for striping crews or as directed by the Engineer. Tabs will be placed at the spacing indicated. Tabs should be applied to the pavement no more than two (2) days before the surfacing is applied. After the surfacing is rolled and swept the cover over the reflective strip shall be removed. Tabs shall NOT be used to simulate edge lines.

Only pre-qualified products shall be used. A list of compliant products and their sources may be obtained by writing or faxing:

Standards Engineer
Traffic Operations Division - TE
Texas Department of Transportation
125 East 11th Street
Austin, Texas 78701-2483
Phone (512) 416-3335
Fax (512) 416-3161
E-mail TRF-STANDARD@mailgw.dot.state.tx.us

TYPICAL USAGE:				
MOBILE	SHORT DURATION	SHORT TERM STATIONARY	INTERMEDIATE TERM STATIONARY	LONG TERM STATIONARY
	✓	✓	✓	✓

Texas Department of Transportation
Traffic Operations Division

TRAFFIC CONTROL DETAILS for SURFACING OPERATIONS

TCP(7-1)-98

©TxDOT March 1991

REVISIONS	DN: TXDOT	CK: TXDOT	DW: TXDOT	CK: TXDOT
4-92	CONT	SECT	JOB	HIGHWAY
1-97	2452	01	050	LP 1604
4-98	DIST	COUNTY		SHEET NO.
	SAT	BEXAR		147

DISCLAIMER:
The use of this standard is governed by the "Texas Engineering Practice Act". No warranty is made by TxDOT for any purpose whatsoever. TxDOT assumes no responsibility for errors or omissions in these standards or other formats or for incorrect results or damages resulting from its use.

LEVELS DISK

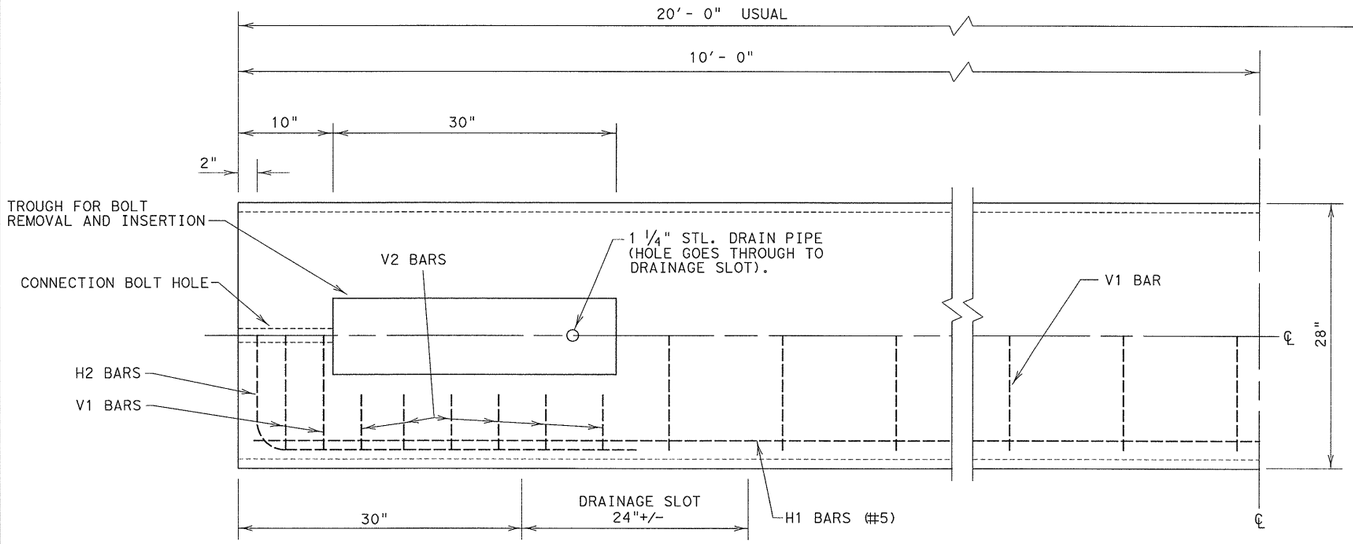

NOTE: CONCRETE ON BOTTOM HALF OF PLAN VIEW IS REMOVED IN ORDER TO SHOW DETAILS

PLAN VIEW - TYPE 1

(SYMMETRICAL ABOUT CENTER LINES)

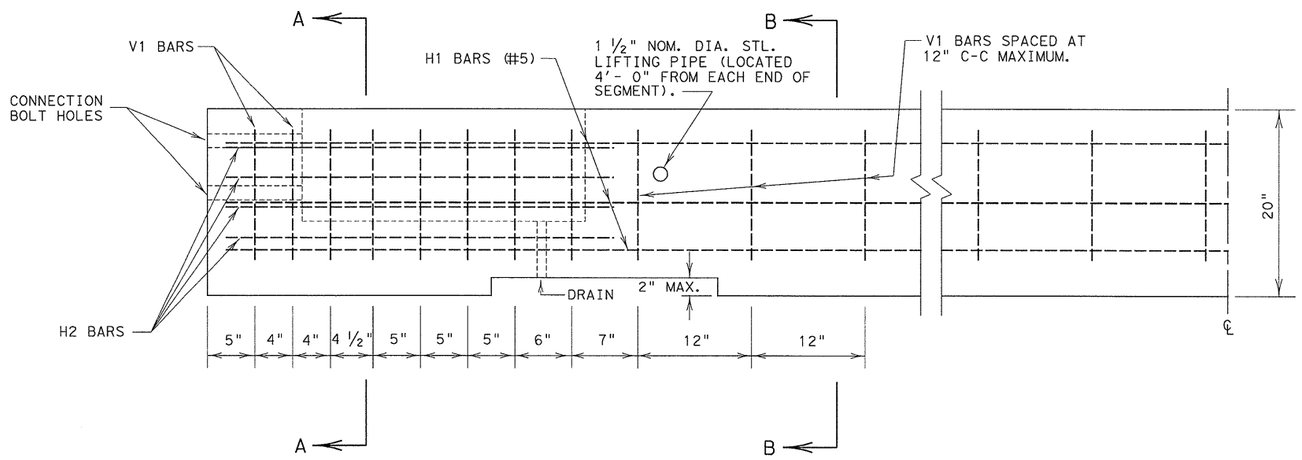

ELEVATION - TYPE 1

(SYMMETRICAL ABOUT CENTER LINES)

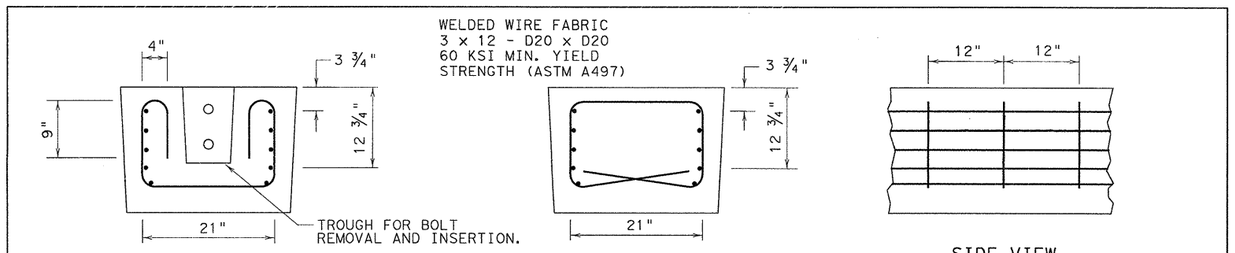

NOTE: THIS FABRIC OPTION CAN BE USED IN PLACE OF V1, V2 AND H1 BARS. THE H2 BARS SPECIFIED ARE STILL REQUIRED.

WELDED WIRE FABRIC OPTIONAL REINFORCING

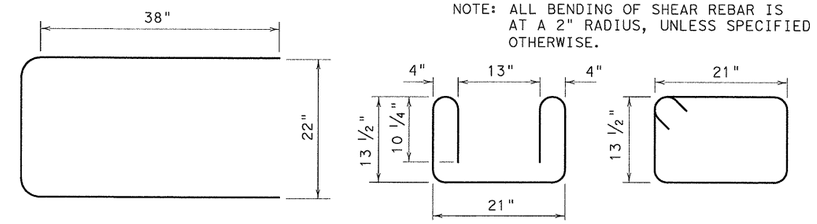

H2 BAR (#5)
(GRADE 60 MIN.)

V2 BAR (#4)

V1 BAR (#4)

NOTE: ALL BENDING OF SHEAR REBAR IS AT A 2" RADIUS, UNLESS SPECIFIED OTHERWISE.

NOTE: H2 REBAR IS TO BE BENT AT A 3" RADIUS.

REINFORCING STEEL DETAILS

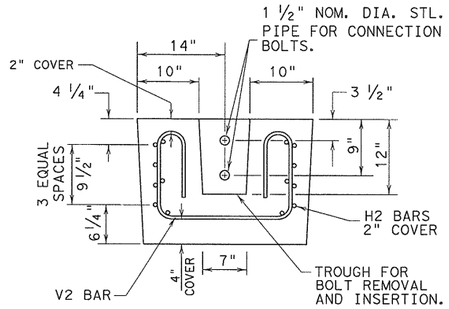

SECTION A-A

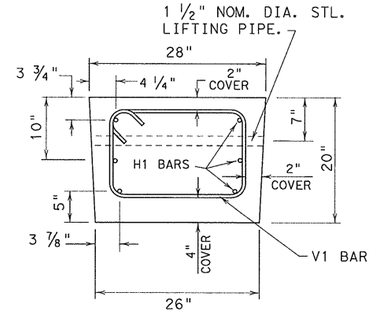

SECTION B-B

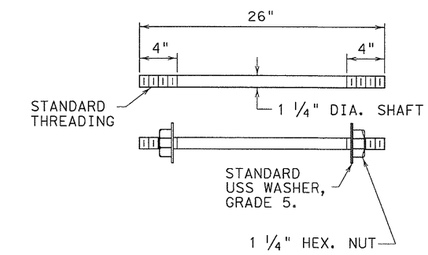

CONNECTION BOLT

GENERAL NOTES

1. BARRIER LENGTH SHALL BE 20 FEET (+/- 1 INCH) UNLESS OTHERWISE SPECIFIED IN THE PLANS.
2. ALL CONCRETE, REINFORCEMENT, ANCHOR BOLTS, BLOCKING, ETC., AS SHOWN ARE CONSIDERED AS PART OF THE BARRIER FOR PAYMENT.
3. ALL CONCRETE SHALL BE CLASS A, C, OR H, UNLESS OTHERWISE SPECIFIED.
4. ALL REINFORCING STEEL SHALL BE GRADE 40, UNLESS OTHERWISE SPECIFIED.
5. CHAMFER ALL EDGES ¾ INCH, AS DIRECTED BY THE ENGINEER.
6. STEEL PIPE SHALL BE HOT DIP GALVANIZED IN CONFORMANCE TO ASTM DESIGNATION A123. BOLTS, NUTS AND WASHERS SHALL BE HOT-DIP GALVANIZED TO ASTM DESIGNATION A153.
7. BOLTS SHALL CONFORM TO ASTM A36. NUTS SHALL CONFORM TO A307 REQUIREMENTS AND SHALL BE TAPPED OR CHASED AFTER GALVANIZING. BOLTS AND NUTS SHALL HAVE CLASS 2A AND 2B FIT TOLERANCES.
8. THE BARRIER SHOULD BE LIGHT IN COLOR AND SHOULD BE SUPPLEMENTED BY DELINEATION AS DETAILED ELSEWHERE IN THE PLANS.

FOR CONTRACTORS INFORMATION ONLY

(TYPE 1) APPROX. QUANTITIES 20 FT. SECTION		
CONCRETE	CY	2.6
REINFORCING STEEL	LBS	330
TOTAL BARRIER WT.	LBS	11000

Texas Department of Transportation
Design Division (Roadway)

LOW PROFILE CONCRETE BARRIER

(PORTABLE AND PRECAST)

LPCB(1)-92

FILE: lpcb192.dgn	DN:	CK:	DW:	CK:	
©TxDOT September 1992	DISTRICT	FEDERAL AID PROJECT			SHEET
REVISIONS	SAT				148
	COUNTY	CONTROL	SECT	JOB	HIGHWAY
	BEXAR	2452	01	050	LP1604

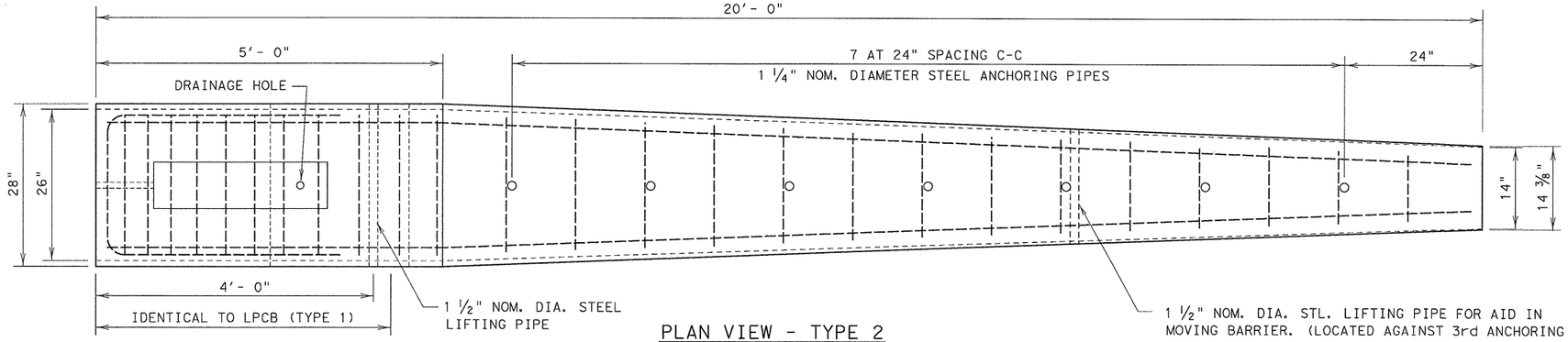

PLAN VIEW - TYPE 2

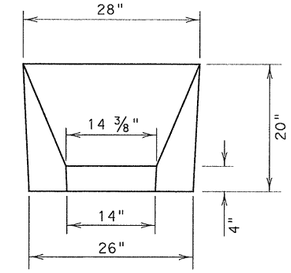

APPROACH VIEW

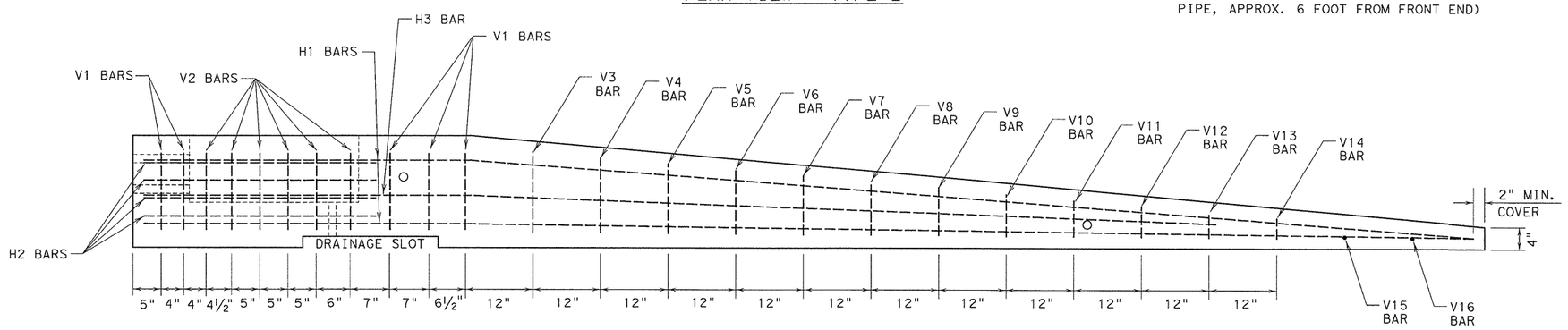

ELEVATION - TYPE 2

NOTE: ANCHORING PIPES NOT SHOWN IN ELEVATION.

GENERAL NOTES

1. TYPE 2 BARRIER SHALL BE USED AS AN END TREATMENT FOR TYPE 1 BARRIER WHEN APPROPRIATE.
2. THE ANCHORAGE PINS ARE ALL THE SAME LENGTH AND ARE INTENDED TO BE DRIVEN FLUSH WITH THE TOP OF THE BARRIER SURFACE.
3. THE BENDS IN THE H3 AND H1 BARS ARE SLIGHT, NO FORMAL BEND IS NECESSARY.
4. TYPE 2 BARRIER MUST BE LIFTED FROM REAR FIRST TO PREVENT CRACKING OF SLOPED SECTION.
5. SEE SHEET 1 OF 2 FOR ADDITIONAL INFORMATION.

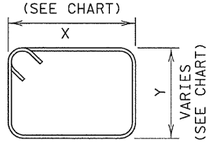

V 3-11 BARS (#4)

BAR (#4)	X (IN.)	Y (IN.)
V3 BAR	20 1/4	14 1/2
V4 BAR	19 1/2	13 1/2
V5 BAR	18 1/2	12 1/4
V6 BAR	17 1/2	11 1/4
V7 BAR	17	10 1/4
V8 BAR	16 1/4	9
V9 BAR	15 1/2	8
V10 BAR	14 1/2	7
V11 BAR	13 3/4	6

NOTE: ALL BENDING OF SHEAR REBAR IS AT A 2" RADIUS, UNLESS SPECIFIED OTHERWISE.

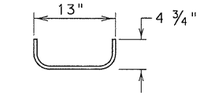

V12 BAR (#4)

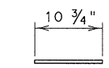

V15 BAR (#4)

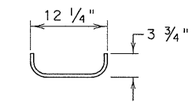

V13 BAR (#4)

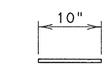

V16 BAR (#4)

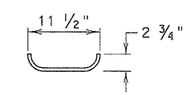

V14 BAR (#4)

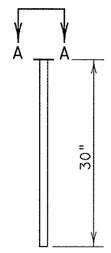

ANCHORING PIN
(1 1/4"DIA., A36 STL.)

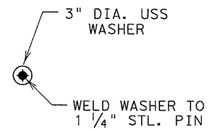

A-A
(HEAD OF ANCHORING PIN)

FOR CONTRACTORS INFORMATION ONLY

(TYPE 2) APPROX. QUANTITIES 20 FT. SECTION		
CONCRETE	CY	1.65
REINFORCING STEEL	LBS	240
TOTAL BARRIER WT.	LBS	7000

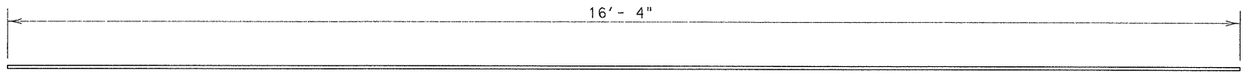

H3 BARS (#5)
(GRADE 60)

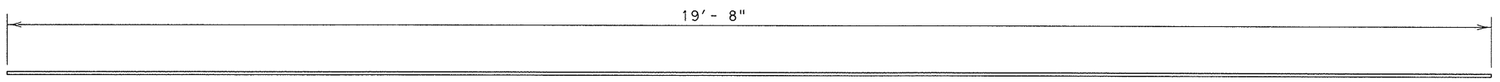

H1 BARS (#5)
(GRADE 60)

DISCLAIMER:
The use of this standard is governed by the "Texas Engineering Practice Act". No warranty of any kind is made by TxDOT for any purpose whatsoever. TxDOT assumes no responsibility for the conversion of this standard to other formats or for incorrect results or damages resulting from its use.

Texas Department of Transportation
Design Division (Roadway)

LOW PROFILE CONCRETE BARRIER
(PORTABLE AND PRECAST)

LPCB(2)-92

SHEET 2 OF 2

FILE: lpcb192.dgn	DN:	CK:	DW:	CK:
©TxDOT September 1992	DISTRICT	FEDERAL AID PROJECT		SHEET
REVISIONS	SAT			149
	COUNTY	CONTROL	SECT	JOB	HIGHWAY
	BEXAR	2452	01	050	LP1604

Plotted on: 6/25/2010

Design filename: p:\74\00\04\design\civil\general\740004EXISTDATA.dgn

VERTICAL DATA

EXISTING VERTICAL DATA BRAUN TO SHAENFIELD

PI	ELEV	L	e	G1	G2	K	SAG/CREST
385+00.58	930.61	328.08	-0.04	0.701%	1.040%	991	C
399+01.49	916.04	328.08	0.13	-1.040%	0.014%	308	S
414+73.01	916.27	295.27	-0.06	0.014%	0.491%	584	C
432+18.42	907.71	360.89	0.05	-0.491%	-0.163%	1099	S
454+03.45	904.13	131.23	0.03	-0.163%	0.420%	226	S
463+22.09	908.00	1181.10	-1.07	0.420%	-1.958%	495	C
473+48.99	887.89	623.36	0.89	-1.958%	1.788%	167	S
485+56.33	909.48	1476.37	-1.417	1.788%	-0.731%	587	C
501+96.75	897.49	524.93	-0.16	-0.731%	-1.530%	656	C
515+09.08	877.41	787.40	-0.984	-1.530%	1.750%	240	S
525+42.55	895.49	1148.29	-1.859	1.750%	-2.500%	269	C
537+21.68	866.02	1017.06	1.938	-2.500%	2.500%	203	S
562+33.48	928.81	656.17	-0.305	2.500%	1.280%	538	C
574+14.58	943.93	393.70	0.277	1.280%	3.124%	213	S
587+26.92	984.93	1312.33	-1.277	3.124%	0.571%	515	C

EXISTING VERTICAL DATA CULEBRA TO 151 (SOUTHBOUND FRTG RD)

PI	ELEV	L	e	G1	G2	K	SAG/CREST
32+80	870.35	164.04	0.069	0.550%	1.655%	148	S
37+40.15	877.95	98.42	0.02	1.655%	2.200%	180.45	S
41+01.04	885.82	196.85	0.135	2.200%	4.000%	108.27	S
7+50	927.32	600.00		4.700%	-2.260%	86.17	C
13+50	913.74	210.00		-2.260%	0.490%	76.03	S
20+49.88	916.61	350.00		0.500%	4.680%	83.67	S
27+50	949.39	350.00		4.680%	1.340%	104.88	C

HORIZONTAL DATA

EXISTING HORIZONTAL DATA BRAUN TO SHAENFIELD

	PC	PI	PT	DELTA	D	L	T	R	NB e	SB e
NBEX-2	1007+55.10	1014+19.68	1020+82.24	7° 43' 32"	0° 43' 32"	1327.15	664.58	9842.5	2.00%	
NBEX-3	1020+82.24	1026+20.67	1031+46.98	21° 01' 47"	1° 58' 30"	1064.73	538.42	2900.88	4.00%	
SBEN-2	2012+82.26	2014+98.68	2017+14.25	8° 45' 00"	2° 01' 32"	431.99	216.42	2828.71		4.00%
SBEN-3	2017+14.26	2022+82.35	2028+35.52	22° 42' 41"	2° 01' 32"	1121.26	568.09	2828.7		4.00%
CL-2	376+37.66	382+13.01	387+73.24	22° 42' 41"	2° 00' 00"	1135.58	575.34	2864.79	4.00%	4.00%
CL-3	400+14.89	406+49.04	412+71.73	18° 51' 10"	1° 30' 00"	1256.84	634.15	3819.71	4.30%	4.30%
CL G-5	461+43.95	462+67.32	463+90.69	0° 37' 01"	0° 15' 00"	246.75	123.37	22918.33	2.00%	2.00%
CL G-6	498+19.32	502+08.42	505+96.85	5° 49' 53"	0° 45' 00"	777.52	389.1	7639.45	2.50%	2.50%
CL G-7	508+06.33	512+53.63	516+99.92	6° 42' 07"	0° 45' 00"	893.59	447.31	7639.45	2.50%	2.50%
CL G-8	561+63.50	569+00.57	576+19.74	21° 50' 37"	1° 30' 00"	1456.25	737.07	3819.72	4.31%	4.31%

EXISTING HORIZONTAL DATA CULEBRA TO 151 (SOUTHBOUND FRTG RD)

	PC	PI	PT	DELTA	D	L	T	R	NB e	SB e
FR-B-1	28+39.14	30+51.80	32+64.02	6° 28' 51"	1° 29' 8"	424.9	212.66	3756.55		3.31%
FR-B-2	35+47.49	38+41.64	41+33.08	13° 27' 22"	2° 18' 52"	585.6	294.16	2493.43		4.36%
PI No. 17	5+33.34	6+46.66	7+59.25	11° 17' 45"	5° 00' 00"	225.92	113.33	1145.92		-2.00%
PI No. 18	9+74.40	12+20.86	14+59.93	24° 16' 34"	5° 00' 00"	485.52	246.46	1145.92		2.00%
PI No. 19	19+38.87	23+22.28	26+78.86	37° 00' 00"	5° 00' 00"	740	383.42	1145.92		2.00%
CRV 1604								45		-5.40%

NOTE:
INFORMATION TAKEN FROM PLANS:
CSJ: 245201035 (METRIC)
CSJ: 245201036 (METRIC)
PAPE-DAWSON/DEVELOPER PLANS DATED 1/16/06 AND 9/20/07

STATE OF TEXAS
SCOTT D. ARMSTRONG
69320
LICENSED PROFESSIONAL ENGINEER

SCOTT D. ARMSTRONG, P.E. 6/25/2010
DATE

REV. NO.	DATE	DESCRIPTION	BY

ALAMO RMA

PAPE-DAWSON ENGINEERS

555 EAST RAMSEY | SAN ANTONIO, TEXAS 78216 | PHONE: 210.375.9000 FAX: 210.375.9010

TEXAS BOARD OF PROFESSIONAL ENGINEERS, FIRM REGISTRATION # 470

Texas Department of Transportation ©2010

LOOP 1604

EXISTING HORIZONTAL AND VERTICAL CURVE DATA

DGN:	FED. RD. DIV. NO.	STATE	FEDERAL AID PROJECT NO.			HIGHWAY NO.
CHK DGN:	6	TEXAS	STP 2011(210)ES			LP 1604
DWG:	DIST.	COUNTY	CONT. NO.	SECT. NO.	JOB NO.	SHEET NO.
CHK DWG:	SAT	BEXAR	2452	01	050	150

LOOP 1604℄ ALIGNMENT

Plotted on: 6/25/2010

Design filename: p:\74\00\04\design\civil\general\740004HALN01.dgn

Beginning chain 1604 description

Point 4900 N 13,754,257.86 E 2,077,574.04 Sta 234+21.50

Course from 4900 to PC 1604C1 S 45° 07′ 03" W Dist 3,361.72

Curve Data					
Curve 1604C1					
P.I. Station	273+77.98	N	13,751,467.01	E	2,074,769.61
Delta =	5° 56′ 32"	(LT)			
Degree =	0° 30′ 00"				
Tangent =	594.76				
Length =	1,188.45				
Radius =	11,459.16				
External =	15.42				
Long Chord =	1,187.91				
Mid. Ord. =	15.40				
P.C. Station	267+83.22	N	13,751,885.64	E	2,075,192.08
P.T. Station	279+71.67	N	13,751,006.89	E	2,074,392.75
C.C.		N	13,743,745.94	E	2,083,257.91
Back = S	45° 15′ 40" W				
Ahead = S	39° 19′ 08" W				
Chord Bear = S	42° 17′ 24" W				

Course from PT 1604C1 to PC 1604C2 S 39° 19′ 08" W Dist 5,824.76

Curve Data					
Curve 1604C2					
P.I. Station	344+77.13	N	13,745,974.06	E	2,070,270.65
Delta =	20° 12′ 33"	(LT)			
Degree =	1° 30′ 00"				
Tangent =	680.71				
Length =	1,347.27				
Radius =	3,819.71				
External =	60.18				
Long Chord =	1,340.30				
Mid. Ord. =	59.25				
P.C. Station	337+96.43	N	13,746,500.68	E	2,070,701.97
P.T. Station	351+43.70	N	13,745,330.87	E	2,070,047.80
C.C.		N	13,744,080.36	E	2,073,657.01
Back = S	39° 19′ 09" W				
Ahead = S	19° 06′ 36" W				
Chord Bear = S	29° 12′ 52" W				

Course from PT 1604C2 to PC 1604C3 S 19° 06′ 36" W Dist 2,493.97

Curve Data					
Curve 1604C3					
P.I. Station	382+13.01	N	13,742,430.70	E	2,069,042.96
Delta =	22° 42′ 42"	(RT)			
Degree =	2° 00′ 00"				
Tangent =	575.34				
Length =	1,135.58				
Radius =	2,864.79				
External =	57.20				
Long Chord =	1,128.16				
Mid. Ord. =	56.08				
P.C. Station	376+37.66	N	13,742,974.34	E	2,069,231.31
P.T. Station	387+73.24	N	13,742,001.94	E	2,068,659.31
C.C.		N	13,743,912.22	E	2,066,524.40
Back = S	19° 06′ 36" W				
Ahead = S	41° 49′ 18" W				
Chord Bear = S	30° 27′ 57" W				

Course from PT 1604C3 to PC 1604C4 S 41° 49′ 17" W Dist 1,241.65

Curve Data					
Curve 1604C4					
P.I. Station	406+49.04	N	13,740,604.04	E	2,067,408.51
Delta =	18° 51′ 10"	(LT)			
Degree =	1° 30′ 00"				
Tangent =	634.15				
Length =	1,256.84				
Radius =	3,819.71				
External =	52.28				
Long Chord =	1,251.18				
Mid. Ord. =	51.58				
P.C. Station	400+14.89	N	13,741,076.63	E	2,067,831.37
P.T. Station	412+71.73	N	13,740,020.17	E	2,067,161.04
C.C.		N	13,738,529.61	E	2,070,677.92
Back = S	41° 49′ 17" W				
Ahead = S	22° 58′ 08" W				
Chord Bear = S	32° 23′ 42" W				

Course from PT 1604C4 to PC 1604C5 S 22° 58′ 07" W Dist 4,872.22

Curve Data					
Curve 1604C5					
P.I. Station	462+67.32	N	13,735,420.64	E	2,065,211.62
Delta =	0° 37′ 01"	(RT)			
Degree =	0° 15′ 00"				
Tangent =	123.37				
Length =	246.75				
Radius =	22,918.33				
External =	0.33				
Long Chord =	246.75				
Mid. Ord. =	0.33				
P.C. Station	461+43.95	N	13,735,534.23	E	2,065,259.76
P.T. Station	463+90.69	N	13,735,307.57	E	2,065,162.25
C.C.		N	13,744,477.60	E	2,044,158.44
Back = S	22° 58′ 07" W				
Ahead = S	23° 35′ 08" W				
Chord Bear = S	23° 16′ 38" W				

Course from PT 1604C5 to 4904 S 23° 48′ 19" W Dist 955.38

Point 4904 N 13,734,433.48 E 2,064,776.63 Sta 473+46.07

Course from 4904 to PC 1604C6 S 23° 35′ 08" W Dist 2,473.25

Curve Data					
Curve 1604C6					
P.I. Station	502+08.42	N	13,731,810.24	E	2,063,631.36
Delta =	5° 49′ 53"	(LT)			
Degree =	0° 45′ 00"				
Tangent =	389.10				
Length =	777.52				
Radius =	7,639.45				
External =	9.90				
Long Chord =	777.19				
Mid. Ord. =	9.89				
P.C. Station	498+19.32	N	13,732,166.83	E	2,063,787.04
P.T. Station	505+96.85	N	13,731,439.67	E	2,063,512.71
C.C.		N	13,729,110.15	E	2,070,788.32
Back = S	23° 35′ 08" W				
Ahead = S	17° 45′ 15" W				
Chord Bear = S	20° 40′ 12" W				

Course from PT 1604C6 to PC 1604C7 S 17° 45′ 15" W Dist 209.48

Curve Data					
Curve 1604C7					
P.I. Station	512+53.63	N	13,730,814.16	E	2,063,312.43
Delta =	6° 42′ 07"	(RT)			
Degree =	0° 45′ 00"				
Tangent =	447.31				
Length =	893.59				
Radius =	7,639.45				
External =	13.08				
Long Chord =	893.08				
Mid. Ord. =	13.06				
P.C. Station	508+06.33	N	13,731,240.17	E	2,063,448.83
P.T. Station	516+99.92	N	13,730,406.99	E	2,063,127.25
C.C.		N	13,733,569.69	E	2,056,173.21
Back = S	17° 45′ 15" W				
Ahead = S	24° 27′ 22" W				
Chord Bear = S	21° 06′ 18" W				

Course from PT 1604C7 to PC 1604C8 S 24° 27′ 22" W Dist 4,463.58

Curve Data					
Curve 1604C8					
P.I. Station	569+00.57	N	13,725,672.95	E	2,060,974.20
Delta =	21° 50′ 37"	(LT)			
Degree =	1° 30′ 00"				
Tangent =	737.07				
Length =	1,456.25				
Radius =	3,819.72				
External =	70.46				
Long Chord =	1,447.44				
Mid. Ord. =	69.19				
P.C. Station	561+63.50	N	13,726,343.89	E	2,061,279.35
P.T. Station	576+19.74	N	13,724,936.64	E	2,060,940.61
C.C.		N	13,724,762.55	E	2,064,756.35
Back = S	24° 27′ 22" W				
Ahead = S	2° 36′ 44" W				
Chord Bear = S	13° 32′ 03" W				

Course from PT 1604C8 to PC 1604C9 S 2° 36′ 44" W Dist 5,943.14

Curve Data					
Curve 1604C9					
P.I. Station	638+63.15	N	13,718,699.72	E	2,060,656.05
Delta =	3° 00′ 07"	(LT)			
Degree =	0° 30′ 00"				
Tangent =	300.26				
Length =	600.39				
Radius =	11,459.16				
External =	3.93				
Long Chord =	600.32				
Mid. Ord. =	3.93				
P.C. Station	635+62.89	N	13,718,999.68	E	2,060,669.73
P.T. Station	641+63.27	N	13,718,399.47	E	2,060,658.09
C.C.		N	13,718,477.38	E	2,072,116.98
Back = S	2° 36′ 45" W				
Ahead = S	0° 23′ 22" E				
Chord Bear = S	1° 06′ 41" W				

Course from PT 1604C9 to PC 1604C10 S 0° 22′ 04" E Dist 5,721.78

Curve Data					
Curve 1604C10					
P.I. Station	699+82.85	N	13,712,580.02	E	2,060,695.47
Delta =	0° 29′ 20"	(LT)			
Degree =	0° 15′ 00"				
Tangent =	97.79				
Length =	195.58				
Radius =	22,918.31				
External =	0.21				
Long Chord =	195.58				
Mid. Ord. =	0.21				
P.C. Station	698+85.06	N	13,712,677.80	E	2,060,694.80
P.T. Station	700+80.64	N	13,712,482.24	E	2,060,696.97
C.C.		N	13,712,833.62	E	2,083,612.59
Back = S	0° 23′ 22" E				
Ahead = S	0° 52′ 43" E				
Chord Bear = S	0° 38′ 02" E				

Ending chain 1604 description

STATE OF TEXAS
SCOTT D. ARMSTRONG
69320
LICENSED PROFESSIONAL ENGINEER

SCOTT D. ARMSTRONG, P.E. 6/25/2010 DATE

REV. NO.	DATE	DESCRIPTION	BY

ALAMO RMA

PAPE-DAWSON ENGINEERS

555 EAST RAMSEY | SAN ANTONIO, TEXAS 78216 | PHONE: 210.375.9000 FAX: 210.375.9010

TEXAS BOARD OF PROFESSIONAL ENGINEERS, FIRM REGISTRATION # 470

Texas Department of Transportation © 2010

LOOP 1604

HORIZONTAL ALIGNMENT DATA

SHEET 1 OF 4

DGN:	FED. RD. DIV. NO.	STATE	FEDERAL AID PROJECT NO.			HIGHWAY NO.
CHK DGN:	6	TEXAS	STP 2011(210)ES			LP 1604
DWG:	DIST.	COUNTY	CONT. NO.	SECT. NO.	JOB NO.	SHEET NO.
CHK DWG:	SAT	BEXAR	2452	01	050	151

Plotted on: 6/25/2010

Design Filename: p:\74\00\04\design\civil\general\74004HALN02.dgn

TURNAROUND @ NEW GUILBEAU
LINE "NGTA"

Beginning chain NGTA2 description

			Curve Data			
Curve NGTAC11						
P.I. Station		400+34.58	N	13,744,165.453686	E	2,069,489.139429
Delta	=	13° 14′ 15"	(RT)			
Degree	=	19° 13′ 36"				
Tangent	=	34.578338				
Length	=	68.848783				
Radius	=	298.000000				
External	=	1.999436				
Long Chord	=	68.695760				
Mid. Ord.	=	1.986110				
P.C. Station		400+00.00	N	13,744,172.104141	E	2,069,455.206658
P.T. Station		400+68.85	N	13,744,151.209797	E	2,069,520.647730
C.C.			N	13,743,879.667714	E	2,069,397.892294
Back	= S 78° 54′ 40" E					
Ahead	= S 65° 40′ 26" E					
Chord Bear	= S 72° 17′ 33" E					

Course from PT NGTAC11 to PC NGTAC12 S 65° 40′ 16" E Dist 0.000011

			Curve Data			
Curve NGTAC12						
P.I. Station		401+47.33	N	13,744,118.880899	E	2,069,592.161111
Delta	=	8° 59′ 34"	(RT)			
Degree	=	5° 44′ 28"				
Tangent	=	78.481332				
Length	=	156.640306				
Radius	=	998.000000				
External	=	3.081075				
Long Chord	=	156.479573				
Mid. Ord.	=	3.071593				
P.C. Station		400+68.85	N	13,744,151.209792	E	2,069,520.647741
P.T. Station		402+25.49	N	13,744,075.771097	E	2,069,657.742088
C.C.			N	13,743,241.817178	E	2,069,109.540609
Back	= S 65° 40′ 26" E					
Ahead	= S 56° 40′ 52" E					
Chord Bear	= S 61° 10′ 39" E					

Course from PT NGTAC12 to PC NGTAC13 S 56° 40′ 47" E Dist 0.000006

			Curve Data			
Curve NGTAC13						
P.I. Station		403+24.65	N	13,744,021.300627	E	2,069,740.605531
Delta	=	84° 04′ 06"	(RT)			
Degree	=	52° 05′ 13"				
Tangent	=	99.163406				
Length	=	161.399748				
Radius	=	110.000000				
External	=	38.099227				
Long Chord	=	147.306301				
Mid. Ord.	=	28.298021				
P.C. Station		402+25.49	N	13,744,075.771094	E	2,069,657.742093
P.T. Station		403+86.89	N	13,743,933.251806	E	2,069,694.989895
C.C.			N	13,743,983.852325	E	2,069,597.319084
Back	= S 56° 40′ 52" E					
Ahead	= S 27° 23′ 15" W					
Chord Bear	= S 14° 38′ 48" E					

Course from PT NGTAC13 to PC NGTAC14 S 27° 23′ 15" W Dist 0.000740

			Curve Data			
Curve NGTAC14						
P.I. Station		409+82.62	N	13,743,404.288544	E	2,069,420.948803
Delta	=	6° 55′ 20"	(LT)			
Degree	=	0° 34′ 54"				
Tangent	=	595.734648				
Length	=	1,190.019713				
Radius	=	9,850.000000				
External	=	17.998772				
Long Chord	=	1,189.296111				
Mid. Ord.	=	17.965943				
P.C. Station		403+86.89	N	13,743,933.251148	E	2,069,694.989555
P.T. Station		415+76.91	N	13,742,846.154106	E	2,069,212.656414
C.C.			N	13,739,402.204620	E	2,078,440.966765
Back	= S 27° 23′ 15" W					
Ahead	= S 20° 27′ 55" W					
Chord Bear	= S 23° 55′ 35" W					

Course from PT NGTAC14 to PC NGTAC15 S 20° 27′ 55" W Dist 0.016522

TURNAROUND @ NEW GUILBEAU
LINE "NGTA"

			Curve Data			
Curve NGTAC15						
P.I. Station		418+05.45	N	13,742,632.035020	E	2,069,132.748469
Delta	=	10° 26′ 45"	(RT)			
Degree	=	2° 17′ 31"				
Tangent	=	228.527265				
Length	=	455.787833				
Radius	=	2,500.000000				
External	=	10.423213				
Long Chord	=	455.156851				
Mid. Ord.	=	10.379937				
P.C. Station		415+76.93	N	13,742,846.138627	E	2,069,212.650637
P.T. Station		420+32.71	N	13,742,435.966651	E	2,069,015.352109
C.C.			N	13,743,720.237481	E	2,066,870.439888
Back	= S 20° 27′ 55" W					
Ahead	= S 30° 54′ 40" W					
Chord Bear	= S 25° 41′ 18" W					

Course from PT NGTAC15 to PC NGTAC16 S 30° 54′ 40" W Dist 0.084229

			Curve Data			
Curve NGTAC16						
P.I. Station		423+09.73	N	13,742,198.295184	E	2,068,873.045804
Delta	=	10° 54′ 35"	(RT)			
Degree	=	1° 58′ 33"				
Tangent	=	276.933478				
Length	=	552.192508				
Radius	=	2,900.000000				
External	=	13.192776				
Long Chord	=	551.358697				
Mid. Ord.	=	13.133031				
P.C. Station		420+32.80	N	13,742,435.894385	E	2,069,015.308839
P.T. Station		425+84.99	N	13,741,991.915319	E	2,068,688.385297
C.C.			N	13,743,925.648548	E	2,066,527.210663
Back	= S 30° 54′ 40" W					
Ahead	= S 41° 49′ 15" W					
Chord Bear	= S 36° 21′ 58" W					

Ending chain NGTA2 description

NEW GUILBEAU
LINE "NG"

Beginning chain NG description

Point 5220	N	13,742,636.98	E	2,069,089.70	Sta 500+00.00
Course from 5220 to 5221 S 51° 54′ 19" E Dist 600.00					
Point 5221	N	13,742,266.80	E	2,069,561.90	Sta 506+00.00

Ending chain NG description

STATE OF TEXAS
SCOTT D. ARMSTRONG
69320
LICENSED PROFESSIONAL ENGINEER

Scott D. Armstrong 6/25/2010
SCOTT D. ARMSTRONG, P.E. DATE

REV. NO.	DATE	DESCRIPTION	BY

ALAMO RMA

PAPE-DAWSON ENGINEERS

555 EAST RAMSEY | SAN ANTONIO, TEXAS 78216 | PHONE: 210.375.9000 FAX: 210.375.9010

TEXAS BOARD OF PROFESSIONAL ENGINEERS, FIRM REGISTRATION # 470

Texas Department of Transportation
© 2010

LOOP 1604

HORIZONTAL ALIGNMENT DATA

SHEET 2 OF 4

DGN:	FED. RD. DIV. NO.	STATE	FEDERAL AID PROJECT NO.			HIGHWAY NO.
CHK DGN:	6	TEXAS	STP 2011(210)ES			LP 1604
DWG:	DIST.	COUNTY	CONT. NO.	SECT. NO.	JOB NO.	SHEET NO.
CHK DWG:	SAT	BEXAR	2452	01	050	152

Plotted on: 6/25/2010

Design Filename: p:\74\00\04\design\civil\General\74004HALN03.dgn

SOUTHBOUND FRONTAGE ROAD
LINE "SBDET"

Beginning chain SBDET description

			Curve Data			
Curve SBDETC1						
P.I. Station		103+41.57	N	13,728,877.102824	E	2,062,363.342082
Delta	=	6° 30' 59"	(RT)			
Degree	=	0° 57' 18"				
Tangent	=	341.571983				
Length	=	682.407403				
Radius	=	6,000.000000				
External	=	9.714754				
Long Chord	=	682.039657				
Mid. Ord.	=	9.699050				
P.C. Station		100+00.00	N	13,729,188.028570	E	2,062,504.751417
P.T. Station		106+82.41	N	13,728,584.234388	E	2,062,187.559550
C.C.			N	13,731,672.002826	E	2,057,043.078423
Back	= S	24° 27' 22" W				
Ahead	= S	30° 58' 21" W				
Chord Bear	= S	27° 42' 52" W				

Course from PT SBDETC1 to PC SBDETC2 S 30° 58' 21" W Dist 0.143343

			Curve Data			
Curve SBDETC2						
P.I. Station		108+79.47	N	13,728,415.268780	E	2,062,086.144722
Delta	=	3° 45' 34"	(LT)			
Degree	=	0° 57' 18"				
Tangent	=	196.920971				
Length	=	393.700623				
Radius	=	6,000.000000				
External	=	3.230619				
Long Chord	=	393.629997				
Mid. Ord.	=	3.228881				
P.C. Station		106+82.55	N	13,728,584.111483	E	2,062,187.485782
P.T. Station		110+76.25	N	13,728,240.144525	E	2,061,996.092713
C.C.			N	13,725,496.343044	E	2,067,331.966909
Back	= S	30° 58' 21" W				
Ahead	= S	27° 12' 47" W				
Chord Bear	= S	29° 05' 34" W				

Course from PT SBDETC2 to PC SBDETC3 S 27° 12' 47" W Dist 98.963367

			Curve Data			
Curve SBDETC3						
P.I. Station		113+82.40	N	13,727,967.880650	E	2,061,856.089783
Delta	=	3° 57' 20"	(RT)			
Degree	=	0° 57' 18"				
Tangent	=	207.187639				
Length	=	414.210694				
Radius	=	6,000.000000				
External	=	3.576161				
Long Chord	=	414.128446				
Mid. Ord.	=	3.574031				
P.C. Station		111+75.21	N	13,728,152.135179	E	2,061,950.836741
P.T. Station		115+89.43	N	13,727,790.600684	E	2,061,748.858578
C.C.			N	13,730,895.936660	E	2,056,614.962545
Back	= S	27° 12' 47" W				
Ahead	= S	31° 10' 06" W				
Chord Bear	= S	29° 11' 27" W				

Course from PT SBDETC3 to PC SBDETC4 S 31° 10' 06" W Dist 654.691697

			Curve Data			
Curve SBDETC4						
P.I. Station		123+50.78	N	13,727,139.144769	E	2,061,354.812910
Delta	=	11° 16' 52"	(RT)			
Degree	=	5° 18' 19"				
Tangent	=	106.666823				
Length	=	212.644014				
Radius	=	1,080.000000				
External	=	5.254722				
Long Chord	=	212.300701				
Mid. Ord.	=	5.229279				
P.C. Station		122+44.12	N	13,727,230.414166	E	2,061,410.018964
P.T. Station		124+56.76	N	13,727,060.438341	E	2,061,282.819096
C.C.			N	13,727,789.374642	E	2,060,485.917678
Back	= S	31° 10' 06" W				
Ahead	= S	42° 26' 58" W				
Chord Bear	= S	36° 48' 32" W				

Course from PT SBDETC4 to PC SBDETC5 S 42° 26' 58" W Dist 241.070736

SOUTHBOUND FRONTAGE ROAD
LINE "SBDET"

			Curve Data			
Curve SBDETC5						
P.I. Station		129+39.79	N	13,726,704.025034	E	2,060,956.803115
Delta	=	24° 00' 24"	(LT)			
Degree	=	5° 02' 05"				
Tangent	=	241.958109				
Length	=	476.815864				
Radius	=	1,138.000000				
External	=	25.437891				
Long Chord	=	473.335672				
Mid. Ord.	=	24.881706				
P.C. Station		126+97.83	N	13,726,882.559071	E	2,061,120.110568
P.T. Station		131+74.65	N	13,726,474.494101	E	2,060,880.257199
C.C.			N	13,726,114.476191	E	2,061,959.808543
Back	= S	42° 26' 58" W				
Ahead	= S	18° 26' 35" W				
Chord Bear	= S	30° 26' 47" W				

Course from PT SBDETC5 to PC SBDETC6 S 18° 26' 35" W Dist 481.689192

			Curve Data			
Curve SBDETC6						
P.I. Station		140+41.03	N	13,725,652.611561	E	2,060,606.168860
Delta	=	36° 59' 30"	(LT)			
Degree	=	4° 58' 56"				
Tangent	=	384.691398				
Length	=	742.469925				
Radius	=	1,150.000000				
External	=	62.636579				
Long Chord	=	729.641700				
Mid. Ord.	=	59.401198				
P.C. Station		136+56.34	N	13,726,017.544879	E	2,060,727.869909
P.T. Station		143+98.81	N	13,725,287.903489	E	2,060,728.543261
C.C.			N	13,725,653.730646	E	2,061,818.804922
Back	= S	18° 26' 35" W				
Ahead	= S	18° 32' 55" E				
Chord Bear	= S	0° 03' 10" E				

Course from PT SBDETC6 to PC SBDETC7 S 18° 32' 55" E Dist 163.103258

			Curve Data			
Curve SBDETC7						
P.I. Station		148+30.31	N	13,724,878.815521	E	2,060,865.808922
Delta	=	20° 17' 22"	(RT)			
Degree	=	3° 49' 11"				
Tangent	=	268.399729				
Length	=	531.178139				
Radius	=	1,500.000000				
External	=	23.823617				
Long Chord	=	528.407079				
Mid. Ord.	=	23.451156				
P.C. Station		145+61.91	N	13,725,133.272855	E	2,060,780.428130
P.T. Station		150+93.09	N	13,724,610.539666	E	2,060,857.655417
C.C.			N	13,724,656.106993	E	2,059,358.347704
Back	= S	18° 32' 55" E				
Ahead	= S	1° 44' 27" W				
Chord Bear	= S	8° 24' 14" E				

Ending chain SBDET description

SOUTHBOUND ENTRANCE RAMP @ SH 151
LINE "SBENT2"

Beginning chain SBENT2 description

Point 5100 N 13,725,287.90 E 2,060,728.54 Sta 300+00.00

Course from 5100 to PC SBENT2C1 S 18° 32' 55" E Dist 182.18

			Curve Data			
Curve SBENT2C1						
P.I. Station		303+99.52	N	13,724,911.62	E	2,060,854.80
Delta	=	20° 17' 22"	(RT)			
Degree	=	4° 46' 29"				
Tangent	=	214.72				
Length	=	424.94				
Radius	=	1,200.00				
External	=	19.06				
Long Chord	=	422.73				
Mid. Ord.	=	18.76				
P.C. Station		301+84.80	N	13,725,115.19	E	2,060,786.50
P.T. Station		306+09.74	N	13,724,697.00	E	2,060,848.28
C.C.			N	13,724,733.46	E	2,059,648.83
Back	= S	18° 32' 55" E				
Ahead	= S	1° 44' 27" W				
Chord Bear	= S	8° 24' 14" E				

Course from PT SBENT2C1 to 5102 S 1° 44' 27" W Dist 300.47

Point 5102 N 13,724,396.67 E 2,060,839.15 Sta 309+10.21

Course from 5102 to 5103 S 0° 59' 48" W Dist 600.79

Point 5103 N 13,723,795.97 E 2,060,828.70 Sta 315+11.01

Ending chain SBENT2 description

STATE OF TEXAS
SCOTT D. ARMSTRONG
69320
LICENSED
PROFESSIONAL ENGINEER

SCOTT D. ARMSTRONG, P.E. — 6/25/2010 DATE

REV. NO.	DATE	DESCRIPTION	BY

ALAMO RMA

PAPE-DAWSON ENGINEERS

555 EAST RAMSEY | SAN ANTONIO, TEXAS 78216 | PHONE: 210.375.9000 FAX: 210.375.9010

TEXAS BOARD OF PROFESSIONAL ENGINEERS, FIRM REGISTRATION # 470

Texas Department of Transportation
© 2010

LOOP 1604

HORIZONTAL ALIGNMENT DATA

SHEET 3 OF 4

DGN:	FED. RD. DIV. NO.	STATE	FEDERAL AID PROJECT NO.			HIGHWAY NO.
CHK DGN:	6	TEXAS	STP 2011(210)ES			LP 1604
DWG:	DIST.	COUNTY	CONT. NO.	SECT. NO.	JOB NO.	SHEET NO.
CHK DWG:	SAT	BEXAR	2452	01	050	153

Plotted on: 6/25/2010

Design Filename: p:\74\00\04\design\civil\General\740004HALN04.dgn

SOUTHBOUND EXIT RAMP @ SH 151
LINE "SBEXT2"

Beginning chain SBEXT2 description

			Curve Data			
Curve SBEXT2C1						
P.I. Station		202+79.14	N	13,728,861.03	E	2,062,356.03
Delta	=	6° 08′ 43"	(RT)			
Degree	=	1° 06′ 07"				
Tangent	=	279.14				
Length	=	557.73				
Radius	=	5,200.00				
External	=	7.49				
Long Chord	=	557.47				
Mid. Ord.	=	7.48				
P.C. Station		200+00.00	N	13,729,115.12	E	2,062,471.59
P.T. Station		205+57.73	N	13,728,620.77	E	2,062,213.94
C.C.			N	13,731,267.90	E	2,057,738.14
Back	= S 24° 27′ 22" W					
Ahead	= S 30° 36′ 05" W					
Chord Bear	= S 27° 31′ 44" W					

Course from PT SBEXT2C1 to PC SBEXT2C2 S 30° 36′ 05" W Dist 15.01

			Curve Data			
Curve SBEXT2C2						
P.I. Station		208+08.10	N	13,728,405.27	E	2,062,086.48
Delta	=	4° 29′ 34"	(LT)			
Degree	=	0° 57′ 18"				
Tangent	=	235.36				
Length	=	470.47				
Radius	=	6,000.00				
External	=	4.61				
Long Chord	=	470.35				
Mid. Ord.	=	4.61				
P.C. Station		205+72.75	N	13,728,607.85	E	2,062,206.29
P.T. Station		210+43.21	N	13,728,193.93	E	2,061,982.91
C.C.			N	13,725,553.47	E	2,067,370.67
Back	= S 30° 36′ 05" W					
Ahead	= S 26° 06′ 32" W					
Chord Bear	= S 28° 21′ 18" W					

Course from PT SBEXT2C2 to PC SBEXT2C3 S 26° 06′ 35" W Dist 0.00

			Curve Data			
Curve SBEXT2C3						
P.I. Station		212+64.13	N	13,727,995.56	E	2,061,885.69
Delta	=	5° 03′ 35"	(RT)			
Degree	=	1° 08′ 45"				
Tangent	=	220.91				
Length	=	441.54				
Radius	=	5,000.00				
External	=	4.88				
Long Chord	=	441.40				
Mid. Ord.	=	4.87				
P.C. Station		210+43.21	N	13,728,193.93	E	2,061,982.91
P.T. Station		214+84.75	N	13,727,806.54	E	2,061,771.36
C.C.			N	13,730,394.32	E	2,057,493.11
Back	= S 26° 06′ 32" W					
Ahead	= S 31° 10′ 06" W					
Chord Bear	= S 28° 38′ 19" W					

Ending chain SBEXT2 description

ALAMO RANCH PARKWAY
LINE "ARP"

Beginning chain ARP description

Point 5520 N13,725,969.089090 E 2,061,013.555944 Sta 545+00.00

Course from 5520 to PC ALAMOC1 N 52° 46′ 37" W Dist 55.188660

			Curve Data			
Curve ALAMOC1						
P.I. Station		574+01.87	N	13,727,724.483188	E	2,058,702.831360
Delta	=	59° 18′ 32"	(LT)			
Degree	=	1° 08′ 45"				
Tangent	=	2,846.682554				
Length	=	5,175.676011				
Radius	=	5,000.000000				
External	=	753.572939				
Long Chord	=	4,947.677876				
Mid. Ord.	=	654.873890				
P.C. Station		545+55.19	N	13,726,002.473702	E	2,060,969.609888
P.T. Station		597+30.86	N	13,726,654.139514	E	2,056,065.035692
C.C.			N	13,722,021.034808	E	2,057,945.019943
Back	= N 52° 46′ 37" W					
Ahead	= S 67° 54′ 51" W					
Chord Bear	= N 82° 25′ 53" W					

Ending chain ARP description

SHAENFIELD RD
LINE "SHAEN"

Beginning chain SHAEN description

Point 5512 N13,737,940.789673 E 2,064,522.975127 Sta 85+00.00

Course from 5512 to PC SHAENC1 S 66° 16′ 25" E Dist 1,585.663455

			Curve Data			
Curve SHAENC1						
P.I. Station		102+53.73	N	13,737,235.140150	E	2,066,128.475062
Delta	=	33° 59′ 02"	(RT)			
Degree	=	10° 25′ 03"				
Tangent	=	168.067223				
Length	=	326.221733				
Radius	=	550.000000				
External	=	25.105722				
Long Chord	=	321.460801				
Mid. Ord.	=	24.009754				
P.C. Station		100+85.66	N	13,737,302.765446	E	2,065,974.613400
P.T. Station		104+11.89	N	13,737,093.063159	E	2,066,218.256576
C.C.			N	13,736,799.253148	E	2,065,753.309614
Back	= S 66° 16′ 25" E					
Ahead	= S 32° 17′ 23" E					
Chord Bear	= S 49° 16′ 54" E					

Course from PT SHAENC1 to 5510 S 32° 17′ 23" E Dist 52.042607

Point 5510 N13,737,049.068519 E 2,066,246.057738 Sta 104+63.93

Ending chain SHAEN description

STATE OF TEXAS
SCOTT D. ARMSTRONG
69320
LICENSED PROFESSIONAL ENGINEER

SCOTT D. ARMSTRONG, P.E. — 6/25/2010 DATE

REV. NO.	DATE	DESCRIPTION	BY

ALAMO RMA

PAPE-DAWSON ENGINEERS

555 EAST RAMSEY | SAN ANTONIO, TEXAS 78216 | PHONE: 210.375.9000 FAX: 210.375.9010

TEXAS BOARD OF PROFESSIONAL ENGINEERS, FIRM REGISTRATION # 470

Texas Department of Transportation © 2010

LOOP 1604

HORIZONTAL ALIGNMENT DATA

SHEET 4 OF 4

DGN:	FED. RD. DIV. NO.	STATE	FEDERAL AID PROJECT NO.			HIGHWAY NO.
CHK DGN:	6	TEXAS	STP 2011(210)ES			LP 1604
DWG:	DIST.	COUNTY	CONT. NO.	SECT. NO.	JOB NO.	SHEET NO.
CHK DWG:	SAT	BEXAR	2452	01	050	154

Plotted on: 7/7/2010

ITEM	DESCRIPTION	UNIT	QTY
0100-2002	PREPARING ROW	STA	2.5
0110-2001	EXCAVATION (ROADWAY)	CY	3088
0132-2003	EMBANKMENT (FINAL) (ORD COMP) (TY B)	CY	198
0161-2002	COMPOST MANUF TOPSOIL (BOS) (4")	SY	3398
0164-2039	DRILL SEEDING (PERM) (URBAN) (CLAY)	SY	3398
* 0168-2001	VEGETATIVE WATERING	SY	3398
0169-2001	SOIL RETENTION BLANKETS (CL 1) (TY A)	SY	3398
* 0341-2011	D-GR HMA (QCQA) TY-B PG64-22	SY	1892
* 0341-2034	D-GR HMA (QCQA) TY-C PG64-22	SY	1787

* AREA OF APPLICATION. SEE GENERAL NOTES FOR PAY QUANTITY.

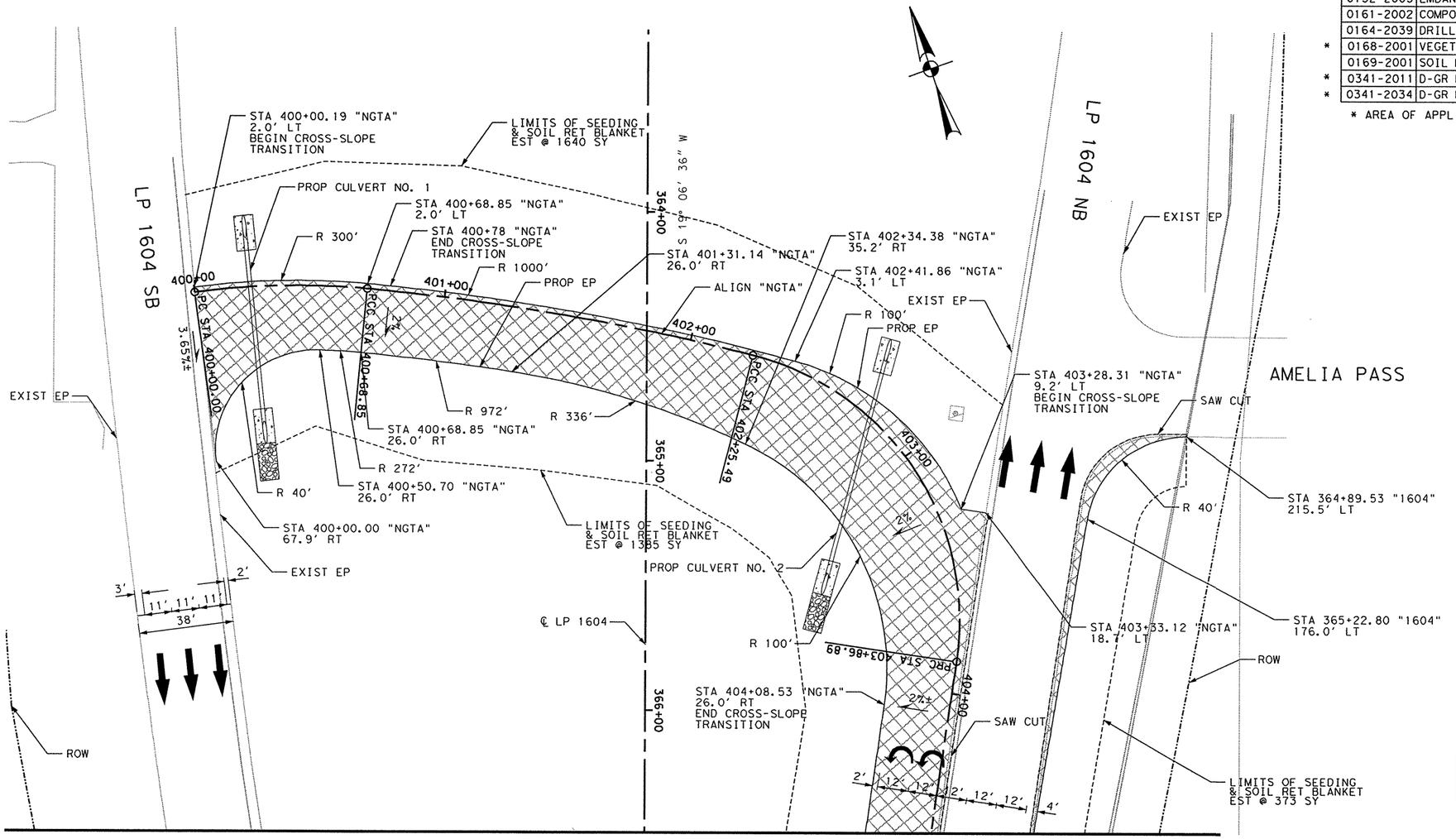

MATCHLINE STA. 366+50.00

LEGEND

- TRAFFIC FLOW ARROW
- ROW — RIGHT OF WAY LINE
- EP — EDGE OF PAVEMENT
- LIMITS OF SEEDING
- TREE PROTECTION FENCE
- PROP PAVEMENT WIDENING
- PAVEMENT REMOVAL
- CONC DIRECTIONAL ISLAND
- TYPE 2 PED RAMP
- TYPE 21 PED RAMP

STATE OF TEXAS
SCOTT D. ARMSTRONG
69320
LICENSED
PROFESSIONAL ENGINEER

SCOTT D. ARMSTRONG, P.E. — 7/7/2010 DATE

SCALE: PLAN - 1":50'

REV. NO.	DATE	DESCRIPTION	BY

NOTES:
1. FOR GEOMETRIC DATA SEE HORIZONTAL ALIGNMENT DATA SHEETS.
2. SEE PAVEMENT MARKING SHEETS FOR STRIPING DETAILS.
3. EXISTING FEATURES ARE SHOWN SCREENED BACK.
4. FOR OVERLAY LIMITS, SEE OVERLAY SHEETS.
5. SAW CUTTING WHERE CALLED FOR IN THE PLANS SHALL BE CONSIDERED SUBSIDIARY TO THE VARIOUS PERTINENT BID ITEMS.
6. CONC CURBS FOR DIRECTIONAL ISLANDS ARE SUBSIDIARY TO THE PAY ITEM FOR CONC DIRECTIONAL ISLAND (ITEM 536-2004). QUANTITIES SHOWN ARE FOR CONTRACTORS INFORMATION ONLY.

ALAMO RMA

PAPE-DAWSON ENGINEERS
555 EAST RAMSEY | SAN ANTONIO, TEXAS 78216 | PHONE: 210.375.9000 FAX: 210.375.9010
TEXAS BOARD OF PROFESSIONAL ENGINEERS, FIRM REGISTRATION # 470

Texas Department of Transportation ©2010

LOOP 1604

PLAN SHEET

BEGIN PROJECT TO STA. 366+50

SHEET 1 OF 26

DGN:	FED. RD. DIV. NO.	STATE	FEDERAL AID PROJECT NO.			HIGHWAY NO.
CHK DGN:	6	TEXAS	STP 2011(210)ES			LP 1604
DWG:	DIST.	COUNTY	CONT. NO.	SECT. NO.	JOB NO.	SHEET NO.
CHK DWG:	SAT	BEXAR	2452	01	050	155

Design Filename: p:\74\00\04\design\Civil\ROADWAY\740004PP1.dgn

Plotted on: 6/25/2010

Design Filename: p:\74\00\04\design\Civil\ROADWAY\740004PP2.dgn

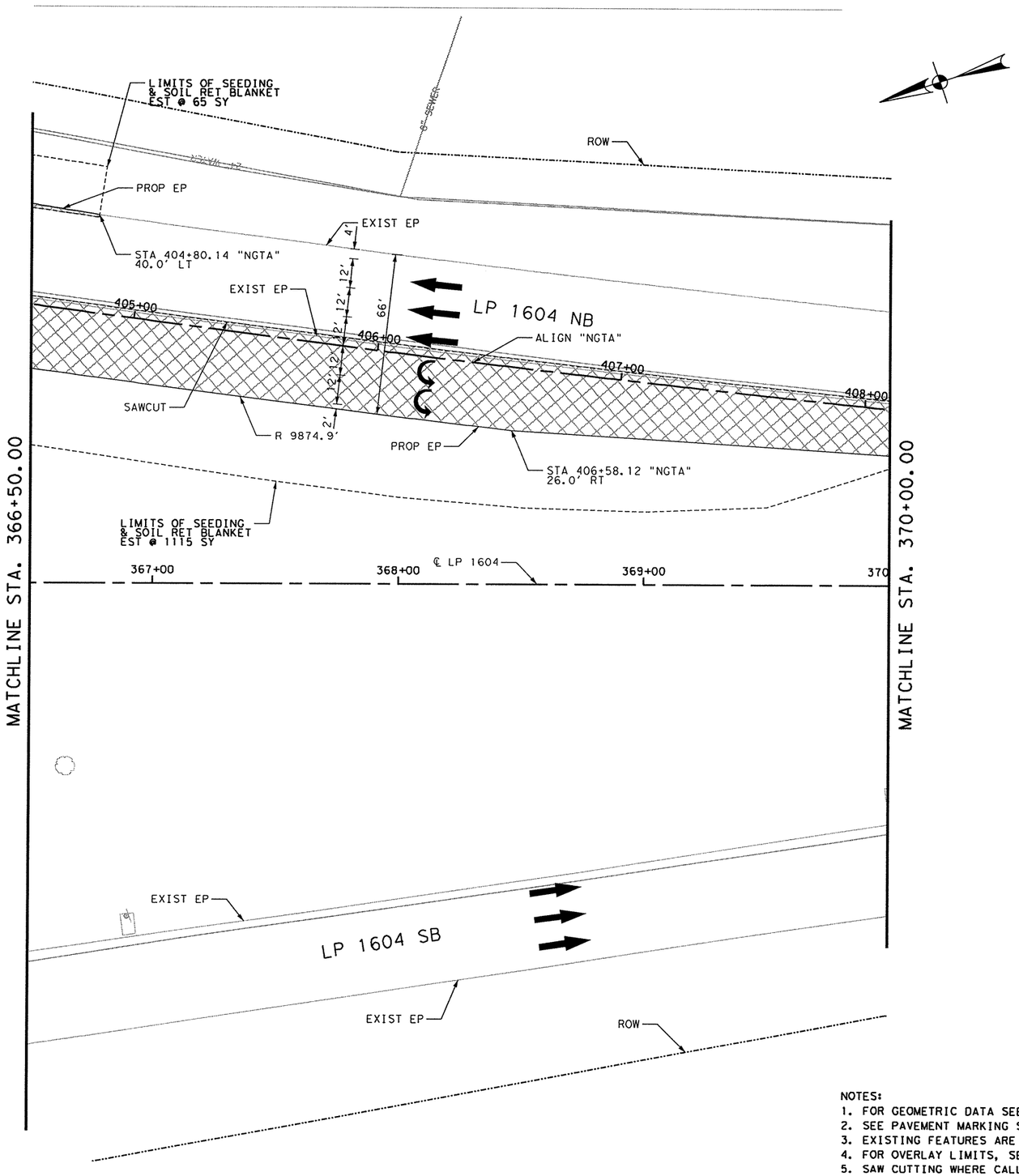

ITEM	DESCRIPTION	UNIT	QTY
0100-2002	PREPARING ROW	STA	3.5
0110-2001	EXCAVATION (ROADWAY)	CY	379
0132-2003	EMBANKMENT (FINAL) (ORD COMP) (TY B)	CY	191
0161-2002	COMPOST MANUF TOPSOIL (BOS) (4")	SY	1180
0164-2039	DRILL SEEDING (PERM) (URBAN) (CLAY)	SY	1180
* 0168-2001	VEGETATIVE WATERING	SY	1180
0169-2001	SOIL RETENTION BLANKETS (CL 1) (TY A)	SY	1180
* 0341-2011	D-GR HMA (QCQA) TY-B PG64-22	SY	1155
* 0341-2034	D-GR HMA (QCQA) TY-C PG64-22	SY	1116

* AREA OF APPLICATION. SEE GENERAL NOTES FOR PAY QUANTITY.

LEGEND

- TRAFFIC FLOW ARROW
- ROW — RIGHT OF WAY LINE
- EP — EDGE OF PAVEMENT
- LIMITS OF SEEDING
- TREE PROTECTION FENCE
- PROP PAVEMENT WIDENING
- PAVEMENT REMOVAL
- CONC DIRECTIONAL ISLAND
- TYPE 2 PED RAMP
- TYPE 21 PED RAMP

STATE OF TEXAS — SCOTT D. ARMSTRONG — 69320 — LICENSED PROFESSIONAL ENGINEER

SCOTT D. ARMSTRONG, P.E. — 6/25/2010 DATE

SCALE: PLAN - 1":50'

REV. NO.	DATE	DESCRIPTION	BY

ALAMO RMA

PAPE-DAWSON ENGINEERS

555 EAST RAMSEY | SAN ANTONIO, TEXAS 78216 | PHONE: 210.375.9000 FAX: 210.375.9010

TEXAS BOARD OF PROFESSIONAL ENGINEERS, FIRM REGISTRATION # 470

Texas Department of Transportation © 2010

NOTES:
1. FOR GEOMETRIC DATA SEE HORIZONTAL ALIGNMENT DATA SHEETS.
2. SEE PAVEMENT MARKING SHEETS FOR STRIPING DETAILS.
3. EXISTING FEATURES ARE SHOWN SCREENED BACK.
4. FOR OVERLAY LIMITS, SEE OVERLAY SHEETS.
5. SAW CUTTING WHERE CALLED FOR IN THE PLANS SHALL BE CONSIDERED SUBSIDIARY TO THE VARIOUS PERTINENT BID ITEMS.
6. CONC CURBS FOR DIRECTIONAL ISLANDS ARE SUBSIDIARY TO THE PAY ITEM FOR CONC DIRECTIONAL ISLAND (ITEM 536-2004). QUANTITIES SHOWN ARE FOR CONTRACTORS INFORMATION ONLY.

LOOP 1604

PLAN SHEET

STA. 366+50 TO STA. 370+00

SHEET 2 OF 26

DGN:	FED. RD. DIV. NO.	STATE	FEDERAL AID PROJECT NO.			HIGHWAY NO.
CHK DGN:	6	TEXAS	STP 2011(210)ES			LP 1604
DWG:	DIST.	COUNTY	CONT. NO.	SECT. NO.	JOB NO.	SHEET NO.
CHK DWG:	SAT	BEXAR	2452	01	050	156

Plotted on: 6/25/2010

Design Filename: p:\74\00\04\design\Civil\ROADWAY\740004PP3.dgn

ITEM	DESCRIPTION	UNIT	QTY
0100-2002	PREPARING ROW	STA	5
** 0104-2009	REMOVING CONC (RIPRAP)	SY	9
0110-2001	EXCAVATION (ROADWAY)	CY	148
0132-2003	EMBANKMENT (FINAL) (ORD COMP) (TY B)	CY	168
0161-2002	COMPOST MANUF TOPSOIL (BOS) (4")	SY	590
0164-2039	DRILL SEEDING (PERM) (URBAN) (CLAY)	SY	590
* 0168-2001	VEGETATIVE WATERING	SY	590
0169-2001	SOIL RETENTION BLANKETS (CL 1) (TY A)	SY	590
* 0341-2011	D-GR HMA (QCQA) TY-B PG64-22	SY	1111
* 0341-2034	D-GR HMA (QCQA) TY-C PG64-22	SY	1055
0432-2001	RIPRAP (CONC) (4 IN)	CY	4
0432-2039	RIPRAP (MOW STRIP) (4 IN)	CY	12
0540-2001	MTL W-BEAM GD FEN (TIM POST)	LF	225
0540-2005	TERMINAL ANCHOR SECTION	EA	1
0544-2001	GUARDRAIL END TREATMENT (INSTALL)	EA	1

* AREA OF APPLICATION. SEE GENERAL NOTES FOR PAY QUANTITY.

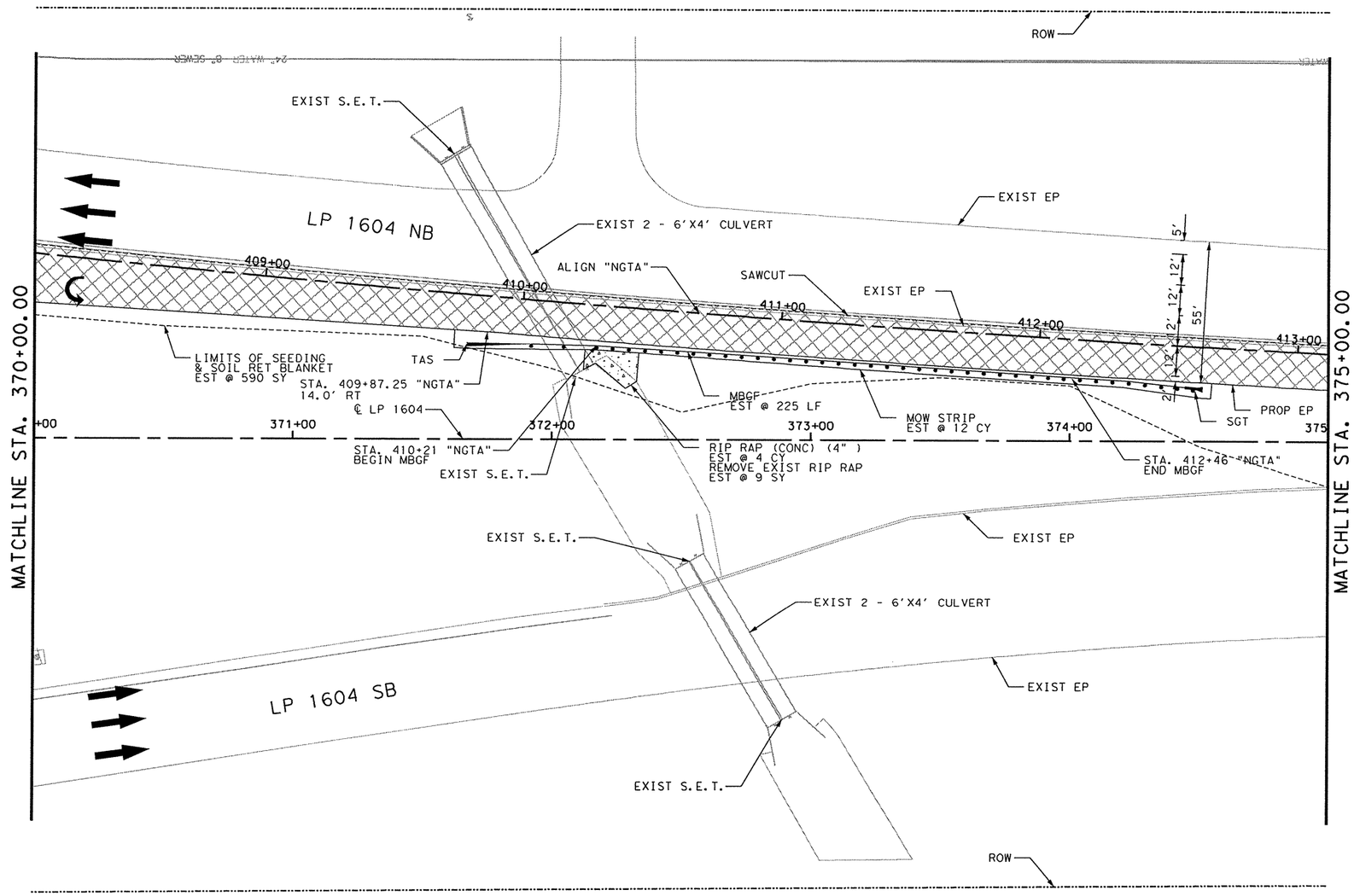

NOTES:
1. FOR GEOMETRIC DATA SEE HORIZONTAL ALIGNMENT DATA SHEETS.
2. SEE PAVEMENT MARKING SHEETS FOR STRIPING DETAILS.
3. EXISTING FEATURES ARE SHOWN SCREENED BACK.
4. FOR OVERLAY LIMITS, SEE OVERLAY SHEETS.
5. SAW CUTTING WHERE CALLED FOR IN THE PLANS SHALL BE CONSIDERED SUBSIDIARY TO THE VARIOUS PERTINENT BID ITEMS.
6. CONC CURBS FOR DIRECTIONAL ISLANDS ARE SUBSIDIARY TO THE PAY ITEM FOR CONC DIRECTIONAL ISLAND (ITEM 536-2004). QUANTITIES SHOWN ARE FOR CONTRACTORS INFORMATION ONLY.

LEGEND

- TRAFFIC FLOW ARROW
- ROW — RIGHT OF WAY LINE
- EP — EDGE OF PAVEMENT
- LIMITS OF SEEDING
- TREE PROTECTION FENCE
- PROP PAVEMENT WIDENING
- PAVEMENT REMOVAL
- CONC DIRECTIONAL ISLAND
- TYPE 2 PED RAMP
- TYPE 21 PED RAMP

STATE OF TEXAS — SCOTT D. ARMSTRONG — 69320 — LICENSED PROFESSIONAL ENGINEER

SCOTT D. ARMSTRONG, P.E. — 6/25/2010 DATE

SCALE: PLAN - 1":50'

REV. NO.	DATE	DESCRIPTION	BY

ALAMO RMA

PAPE-DAWSON ENGINEERS

555 EAST RAMSEY | SAN ANTONIO, TEXAS 78216 | PHONE: 210.375.9000 FAX: 210.375.9010

TEXAS BOARD OF PROFESSIONAL ENGINEERS, FIRM REGISTRATION # 470

Texas Department of Transportation ©2010

LOOP 1604

PLAN SHEET

STA. 370+00 TO STA. 375+00

SHEET 3 OF 26

DGN:	FED. RD. DIV. NO.	STATE	FEDERAL AID PROJECT NO.			HIGHWAY NO.
CHK DGN:	6	TEXAS	STP 2011(210)ES			LP 1604
DWG:	DIST.	COUNTY	CONT. NO.	SECT. NO.	JOB NO.	SHEET NO.
CHK DWG:	SAT	BEXAR	2452	01	050	157

Plotted on: 6/25/2010

Design Filename: p:\74\00\04\design\Civil\ROADWAY\740004PP4.dgn

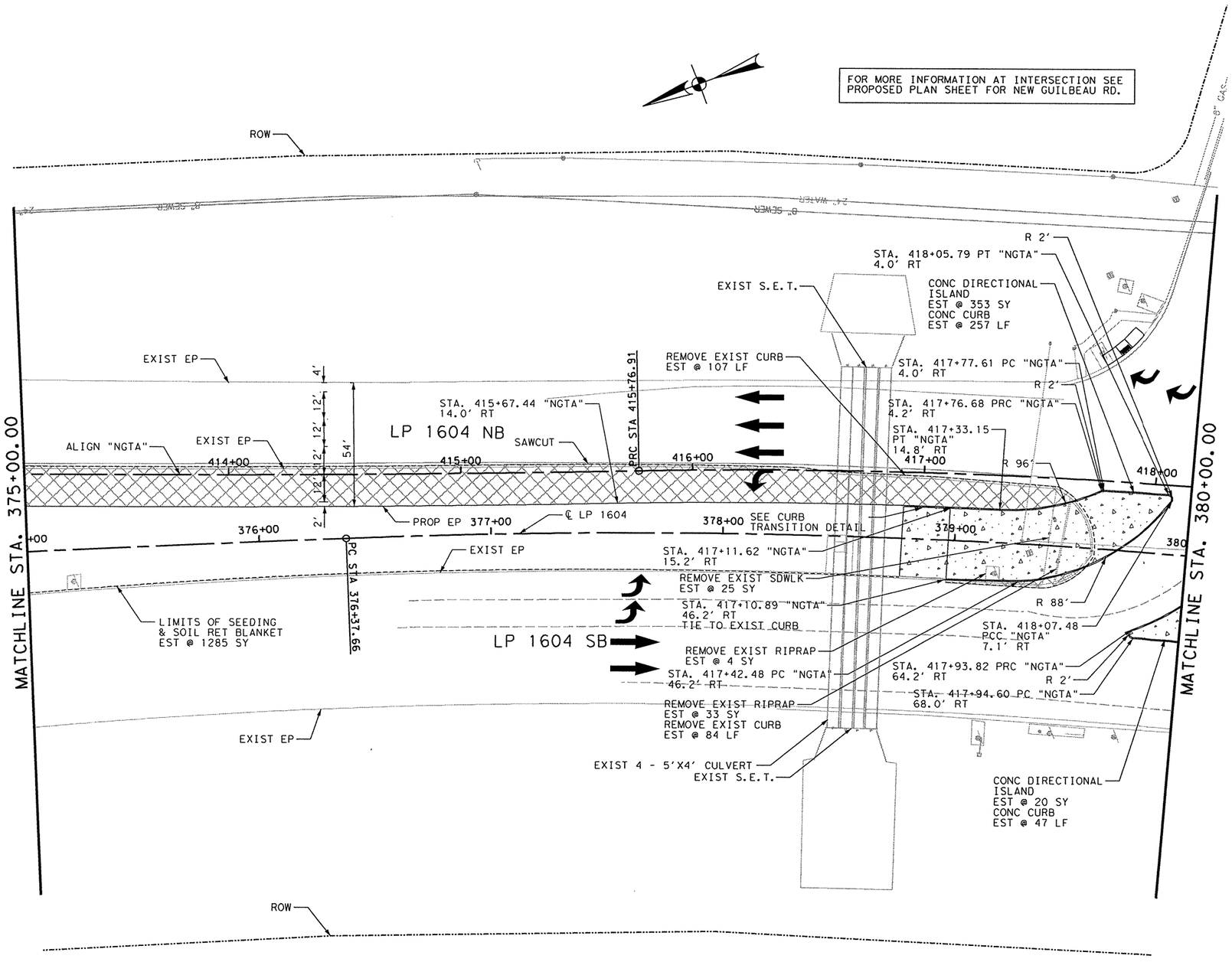

ITEM	DESCRIPTION	UNIT	QTY	
0100-2002	PREPARING ROW	STA	5	
0104-2009	REMOVING CONC (RIPRAP)	SY	37	**
0104-2015	REMOVING CONC (SIDEWALKS)	SY	25	**
0104-2021	REMOVING CONC (CURB)	LF	191	**
0110-2001	EXCAVATION (ROADWAY)	CY	100	
0132-2003	EMBANKMENT (FINAL) (ORD COMP) (TY B)	CY	212	
0161-2002	COMPOST MANUF TOPSOIL (BOS) (4")	SY	1285	
0164-2039	DRILL SEEDING (PERM) (URBAN) (CLAY)	SY	1285	
0168-2001	VEGETATIVE WATERING	SY	1285	*
0169-2001	SOIL RETENTION BLANKETS (CL 1) (TY A)	SY	1285	
0341-2011	D-GR HMA (QCQA) TY-B PG64-22	SY	900	*
0341-2034	D-GR HMA (QCQA) TY-C PG64-22	SY	842	*
0536-2004	CONC DIRECTIONAL ISLAND	SY	373	

* AREA OF APPLICATION. SEE GENERAL NOTES FOR PAY QUANTITY.

** FOR CONTRACTOR INFORMATION ONLY. ITEMS ARE SUBSIDIARY TO PREP ROW (ITEM 0100-2002).

LEGEND

- TRAFFIC FLOW ARROW
- ROW — RIGHT OF WAY LINE
- EP — EDGE OF PAVEMENT
- LIMITS OF SEEDING
- —x— TREE PROTECTION FENCE
- PROP PAVEMENT WIDENING
- PAVEMENT REMOVAL
- CONC DIRECTIONAL ISLAND
- TYPE 2 PED RAMP
- TYPE 21 PED RAMP

NOTES:
1. FOR GEOMETRIC DATA SEE HORIZONTAL ALIGNMENT DATA SHEETS.
2. SEE PAVEMENT MARKING SHEETS FOR STRIPING DETAILS.
3. EXISTING FEATURES ARE SHOWN SCREENED BACK.
4. FOR OVERLAY LIMITS, SEE OVERLAY SHEETS.
5. SAW CUTTING WHERE CALLED FOR IN THE PLANS SHALL BE CONSIDERED SUBSIDIARY TO THE VARIOUS PERTINENT BID ITEMS.
6. CONC CURBS FOR DIRECTIONAL ISLANDS ARE SUBSIDIARY TO THE PAY ITEM FOR CONC DIRECTIONAL ISLAND (ITEM 536-2004). QUANTITIES SHOWN ARE FOR CONTRACTORS INFORMATION ONLY.

STATE OF TEXAS
SCOTT D. ARMSTRONG
69320
LICENSED PROFESSIONAL ENGINEER

SCOTT D. ARMSTRONG, P.E. — 6/25/2010 DATE

SCALE: PLAN - 1":50'

REV. NO.	DATE	DESCRIPTION	BY

ALAMO RMA

PAPE-DAWSON ENGINEERS
555 EAST RAMSEY | SAN ANTONIO, TEXAS 78216 | PHONE: 210.375.9000 FAX: 210.375.9010
TEXAS BOARD OF PROFESSIONAL ENGINEERS, FIRM REGISTRATION # 470

Texas Department of Transportation ©2010

LOOP 1604

PLAN SHEET

STA. 375+00 TO STA. 380+00

SHEET 4 OF 26

DGN:	FED. RD. DIV. NO.	STATE	FEDERAL AID PROJECT NO.			HIGHWAY NO.
CHK DGN:	6	TEXAS	STP 2011(210)ES			LP 1604
DWG:	DIST.	COUNTY	CONT. NO.	SECT. NO.	JOB NO.	SHEET NO.
CHK DWG:	SAT	BEXAR	2452	01	050	158

Plotted on: 9/1/2010

Design Filename: p:\74\00\04\design\civil\ROADWAY\740004PP5.dgn

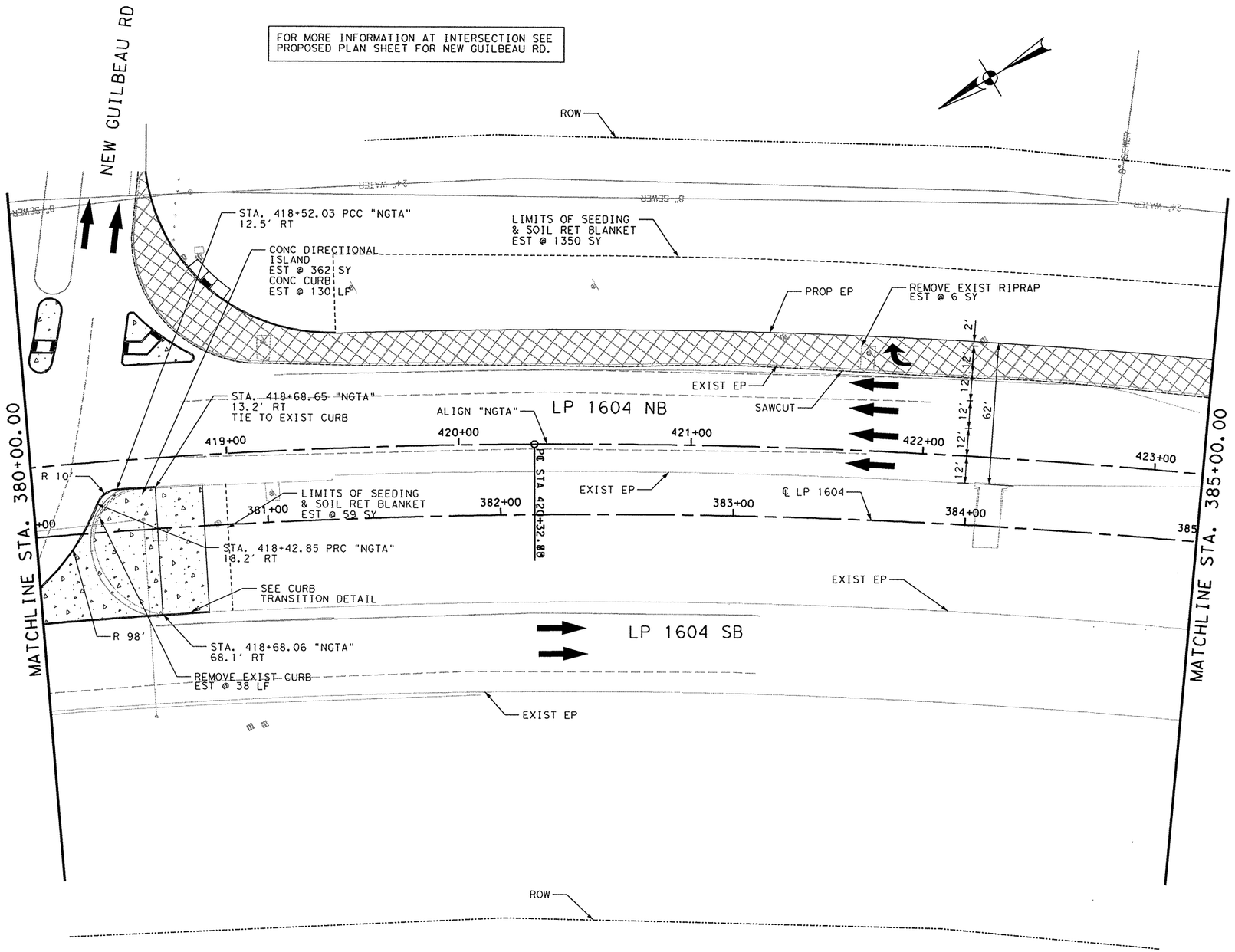

	ITEM	DESCRIPTION	UNIT	QTY
	0100-2002	PREPARING ROW	STA	5
**	0104-2009	REMOVING CONC (RIPRAP)	SY	6
**	0104-2021	REMOVING CONC (CURB)	LF	38
	0110-2001	EXCAVATION (ROADWAY)	CY	618
	0132-2003	EMBANKMENT (FINAL) (ORD COMP) (TY B)	CY	175
	0161-2002	COMPOST MANUF TOPSOIL (BOS) (4")	SY	1409
	0164-2039	DRILL SEEDING (PERM) (URBAN) (CLAY)	SY	1409
*	0168-2001	VEGETATIVE WATERING	SY	1409
	0169-2001	SOIL RETENTION BLANKETS (CL 1) (TY A)	SY	1409
*	0341-2011	D-GR HMA (QCQA) TY-B PG64-22	SY	722
*	0341-2034	D-GR HMA (QCQA) TY-C PG64-22	SY	680
	0531-2006	CURB RAMPS (TY 2)	EA	1
	0531-2017	CURB RAMPS (TY 21)	EA	1
	0536-2004	CONC DIRECTIONAL ISLAND	SY	362

* AREA OF APPLICATION. SEE GENERAL NOTES FOR PAY QUANTITY.

** FOR CONTRACTOR INFORMATION ONLY. ITEMS ARE SUBSIDIARY TO PREP ROW (ITEM 0100-2002).

LEGEND

- TRAFFIC FLOW ARROW
- ROW — RIGHT OF WAY LINE
- EP — EDGE OF PAVEMENT
- LIMITS OF SEEDING
- TREE PROTECTION FENCE
- PROP PAVEMENT WIDENING
- PAVEMENT REMOVAL
- CONC DIRECTIONAL ISLAND
- TYPE 2 PED RAMP
- TYPE 21 PED RAMP

STATE OF TEXAS — SCOTT D. ARMSTRONG — 69320 — LICENSED PROFESSIONAL ENGINEER

SCOTT D. ARMSTRONG, P.E. — 9/1/2010 DATE

SCALE: PLAN - 1":50'

REV. NO.	DATE	DESCRIPTION	BY

ALAMO RMA

PAPE-DAWSON ENGINEERS

555 EAST RAMSEY | SAN ANTONIO, TEXAS 78216 | PHONE: 210.375.9000 FAX: 210.375.9010

TEXAS BOARD OF PROFESSIONAL ENGINEERS, FIRM REGISTRATION # 470

Texas Department of Transportation © 2010

LOOP 1604

PLAN SHEET

STA. 375+00 TO STA. 380+00

SHEET 5 OF 26

DGN:	FED. RD. DIV. NO.	STATE	FEDERAL AID PROJECT NO.			HIGHWAY NO.
CHK DGN:	6	TEXAS	STP 2011(210)ES			LP 1604
DWG:	DIST.	COUNTY	CONT. NO.	SECT. NO.	JOB NO.	SHEET NO.
CHK DWG:	SAT	BEXAR	2452	01	050	159

NOTES:

1. FOR GEOMETRIC DATA SEE HORIZONTAL ALIGNMENT DATA SHEETS.
2. SEE PAVEMENT MARKING SHEETS FOR STRIPING DETAILS.
3. EXISTING FEATURES ARE SHOWN SCREENED BACK.
4. FOR OVERLAY LIMITS, SEE OVERLAY SHEETS.
5. SAW CUTTING WHERE CALLED FOR IN THE PLANS SHALL BE CONSIDERED SUBSIDIARY TO THE VARIOUS PERTINENT BID ITEMS.
6. CONC CURBS FOR DIRECTIONAL ISLANDS ARE SUBSIDIARY TO THE PAY ITEM FOR CONC DIRECTIONAL ISLAND (ITEM 536-2004). QUANTITIES SHOWN ARE FOR CONTRACTORS INFORMATION ONLY.

Plotted on: 9/1/2010

Design Filename: p:\74\00\04\design\civil\ROADWAY\740004PP6.dgn

	ITEM	DESCRIPTION	UNIT	QTY
	0100-2002	PREPARING ROW	STA	2
	0110-2001	EXCAVATION (ROADWAY)	CY	175
	0132-2003	EMBANKMENT (FINAL) (ORD COMP) (TY B)	CY	77
	0161-2002	COMPOST MANUF TOPSOIL (BOS) (4")	SY	794
	0164-2039	DRILL SEEDING (PERM) (URBAN) (CLAY)	SY	794
*	0168-2001	VEGETATIVE WATERING	SY	794
	0169-2001	SOIL RETENTION BLANKETS (CL 1) (TY A)	SY	794
*	0341-2011	D-GR HMA (QCQA) TY-B PG64-22	SY	315
*	0341-2034	D-GR HMA (QCQA) TY-C PG64-22	SY	290

* AREA OF APPLICATION. SEE GENERAL NOTES FOR PAY QUANTITY.

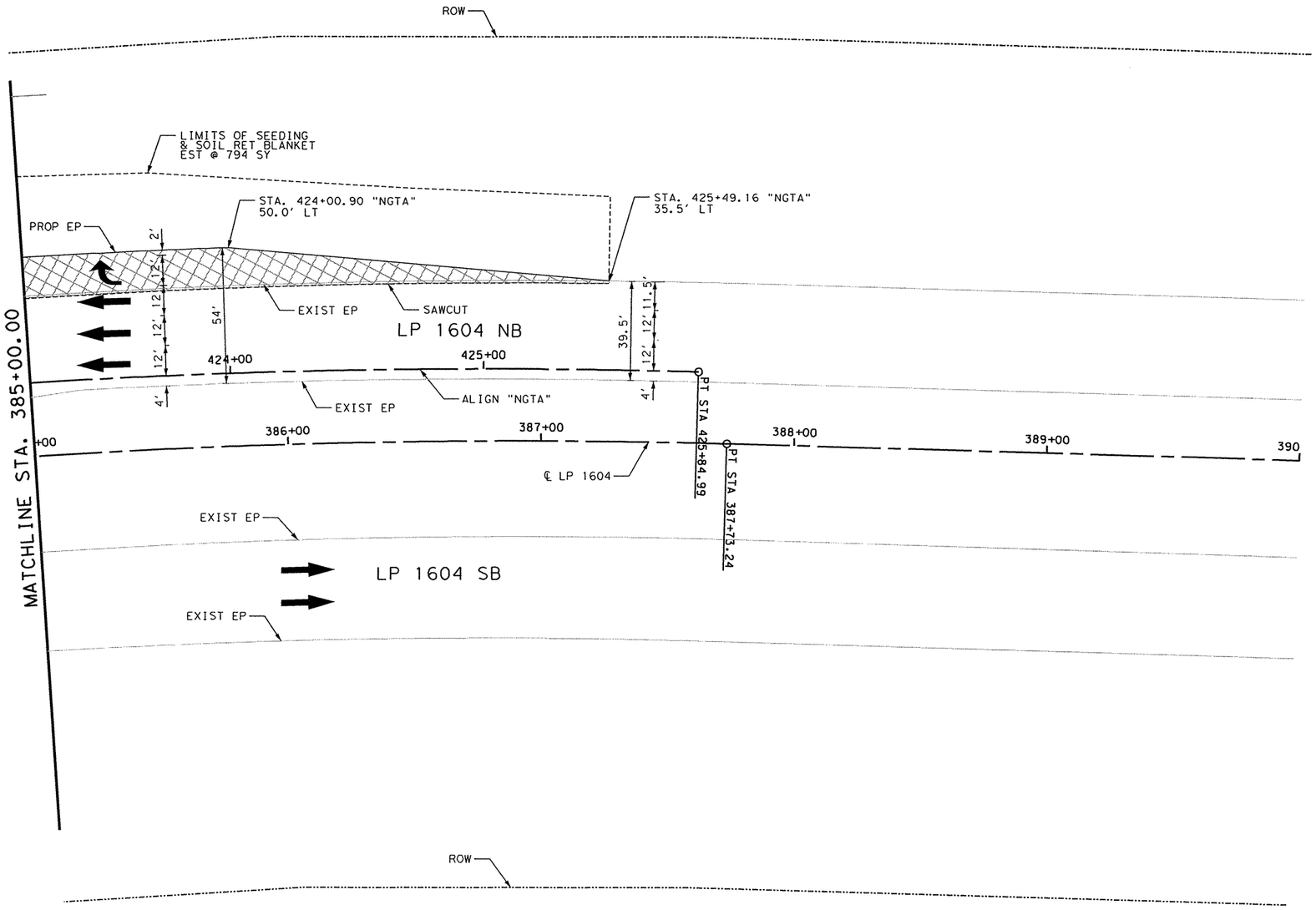

LEGEND

- TRAFFIC FLOW ARROW
- ROW — RIGHT OF WAY LINE
- EP — EDGE OF PAVEMENT
- LIMITS OF SEEDING
- TREE PROTECTION FENCE
- PROP PAVEMENT WIDENING
- PAVEMENT REMOVAL
- CONC DIRECTIONAL ISLAND
- TYPE 2 PED RAMP
- TYPE 21 PED RAMP

STATE OF TEXAS
SCOTT D. ARMSTRONG
69320
LICENSED
PROFESSIONAL ENGINEER

SCOTT D. ARMSTRONG, P.E. — 9/1/2010 DATE

SCALE: PLAN - 1":50'

REV. NO.	DATE	DESCRIPTION	BY

ALAMO RMA

PAPE-DAWSON ENGINEERS

555 EAST RAMSEY | SAN ANTONIO, TEXAS 78216 | PHONE: 210.375.9000 FAX: 210.375.9010

TEXAS BOARD OF PROFESSIONAL ENGINEERS, FIRM REGISTRATION # 470

Texas Department of Transportation
© 2010

NOTES:
1. FOR GEOMETRIC DATA SEE HORIZONTAL ALIGNMENT DATA SHEETS.
2. SEE PAVEMENT MARKING SHEETS FOR STRIPING DETAILS.
3. EXISTING FEATURES ARE SHOWN SCREENED BACK.
4. FOR OVERLAY LIMITS, SEE OVERLAY SHEETS.
5. SAW CUTTING WHERE CALLED FOR IN THE PLANS SHALL BE CONSIDERED SUBSIDIARY TO THE VARIOUS PERTINENT BID ITEMS.
6. CONC CURBS FOR DIRECTIONAL ISLANDS ARE SUBSIDIARY TO THE PAY ITEM FOR CONC DIRECTIONAL ISLAND (ITEM 536-2004). QUANTITIES SHOWN ARE FOR CONTRACTORS INFORMATION ONLY.

LOOP 1604

PLAN SHEET

STA. 380+00 TO STA. 385+00

SHEET 6 OF 26

DGN:	FED. RD. DIV. NO.	STATE	FEDERAL AID PROJECT NO.			HIGHWAY NO.
CHK DGN:	6	TEXAS	STP 2011 (210)ES			LP 1604
DWG:	DIST.	COUNTY	CONT. NO.	SECT. NO.	JOB NO.	SHEET NO.
CHK DWG:	SAT	BEXAR	2452	01	050	160

Plotted on: 6/25/2010

Design Filename: p:\74\00\04\design\Civil\ROADWAY\740004PP7.dgn

	ITEM	DESCRIPTION	UNIT	QTY
	0100-2002	PREPARING ROW	STA	4
	0110-2001	EXCAVATION (ROADWAY)	CY	59
	0132-2003	EMBANKMENT (FINAL) (ORD COMP) (TY B)	CY	1
	0161-2002	COMPOST MANUF TOPSOIL (BOS) (4")	SY	64
	0164-2039	DRILL SEEDING (PERM) (URBAN) (CLAY)	SY	64
*	0168-2001	VEGETATIVE WATERING	SY	64
	0169-2001	SOIL RETENTION BLANKETS (CL 1) (TY A)	SY	64
*	0341-2011	D-GR HMA (QCQA) TY-B PG64-22	SY	220
*	0341-2034	D-GR HMA (QCQA) TY-C PG64-22	SY	173

* AREA OF APPLICATION. SEE GENERAL NOTES FOR PAY QUANTITY.

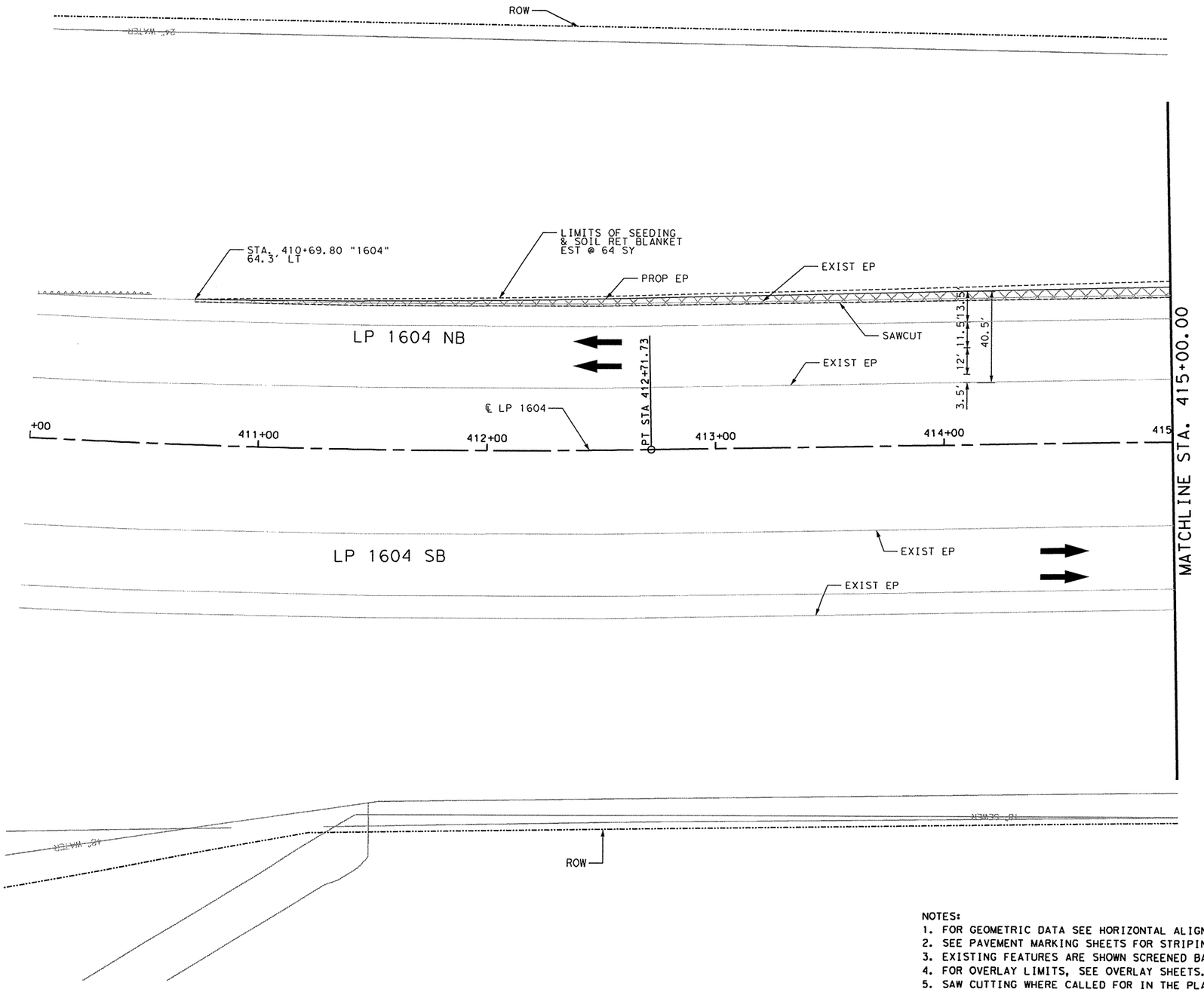

NOTES:
1. FOR GEOMETRIC DATA SEE HORIZONTAL ALIGNMENT DATA SHEETS.
2. SEE PAVEMENT MARKING SHEETS FOR STRIPING DETAILS.
3. EXISTING FEATURES ARE SHOWN SCREENED BACK.
4. FOR OVERLAY LIMITS, SEE OVERLAY SHEETS.
5. SAW CUTTING WHERE CALLED FOR IN THE PLANS SHALL BE CONSIDERED SUBSIDIARY TO THE VARIOUS PERTINENT BID ITEMS.
6. CONC CURBS FOR DIRECTIONAL ISLANDS ARE SUBSIDIARY TO THE PAY ITEM FOR CONC DIRECTIONAL ISLAND (ITEM 536-2004). QUANTITIES SHOWN ARE FOR CONTRACTORS INFORMATION ONLY.

LEGEND

- TRAFFIC FLOW ARROW
- ROW — RIGHT OF WAY LINE
- EP — EDGE OF PAVEMENT
- LIMITS OF SEEDING
- TREE PROTECTION FENCE
- PROP PAVEMENT WIDENING
- PAVEMENT REMOVAL
- CONC DIRECTIONAL ISLAND
- TYPE 2 PED RAMP
- TYPE 21 PED RAMP

STATE OF TEXAS — SCOTT D. ARMSTRONG — 69320 — LICENSED PROFESSIONAL ENGINEER

SCOTT D. ARMSTRONG, P.E. — 6/25/2010 DATE

SCALE: PLAN - 1":50'

REV. NO.	DATE	DESCRIPTION	BY

ALAMO RMA

PAPE-DAWSON ENGINEERS

555 EAST RAMSEY | SAN ANTONIO, TEXAS 78216 | PHONE: 210.375.9000 FAX: 210.375.9010

TEXAS BOARD OF PROFESSIONAL ENGINEERS, FIRM REGISTRATION # 470

Texas Department of Transportation ©2010

LOOP 1604

PLAN SHEET

STA. 410+00 TO STA. 415+00

SHEET 7 OF 26

DGN:	FED. RD. DIV. NO.	STATE	FEDERAL AID PROJECT NO.			HIGHWAY NO.
CHK DGN:	6	TEXAS	STP 2011(210)ES			LP 1604
DWG:	DIST.	COUNTY	CONT. NO.	SECT. NO.	JOB NO.	SHEET NO.
CHK DWG:	SAT	BEXAR	2452	01	050	161

Plotted on: 7/7/2010

Design Filename: p:\74\00\04\design\Civil\ROADWAY\740004PP8.dgn

	ITEM	DESCRIPTION	UNIT	QTY
	0100-2002	PREPARING ROW	STA	5
*	0104-2009	REMOVING CONC (RIPRAP)	SY	14
	0110-2001	EXCAVATION (ROADWAY)	CY	122
	0132-2003	EMBANKMENT (FINAL) (ORD COMP) (TY B)	CY	52
	0161-2002	COMPOST MANUF TOPSOIL (BOS) (4")	SY	617
	0164-2039	DRILL SEEDING (PERM) (URBAN) (CLAY)	SY	617
*	0168-2001	VEGETATIVE WATERING	SY	617
	0169-2001	SOIL RETENTION BLANKETS (CL 1) (TY A)	SY	617
*	0341-2011	D-GR HMA (QCQA) TY-B PG64-22	SY	768
*	0341-2034	D-GR HMA (QCQA) TY-C PG64-22	SY	669

* AREA OF APPLICATION. SEE GENERAL NOTES FOR PAY QUANTITY.

** FOR CONTRACTOR INFORMATION ONLY. ITEMS ARE SUBSIDIARY TO PREP ROW (ITEM 0100-2002).

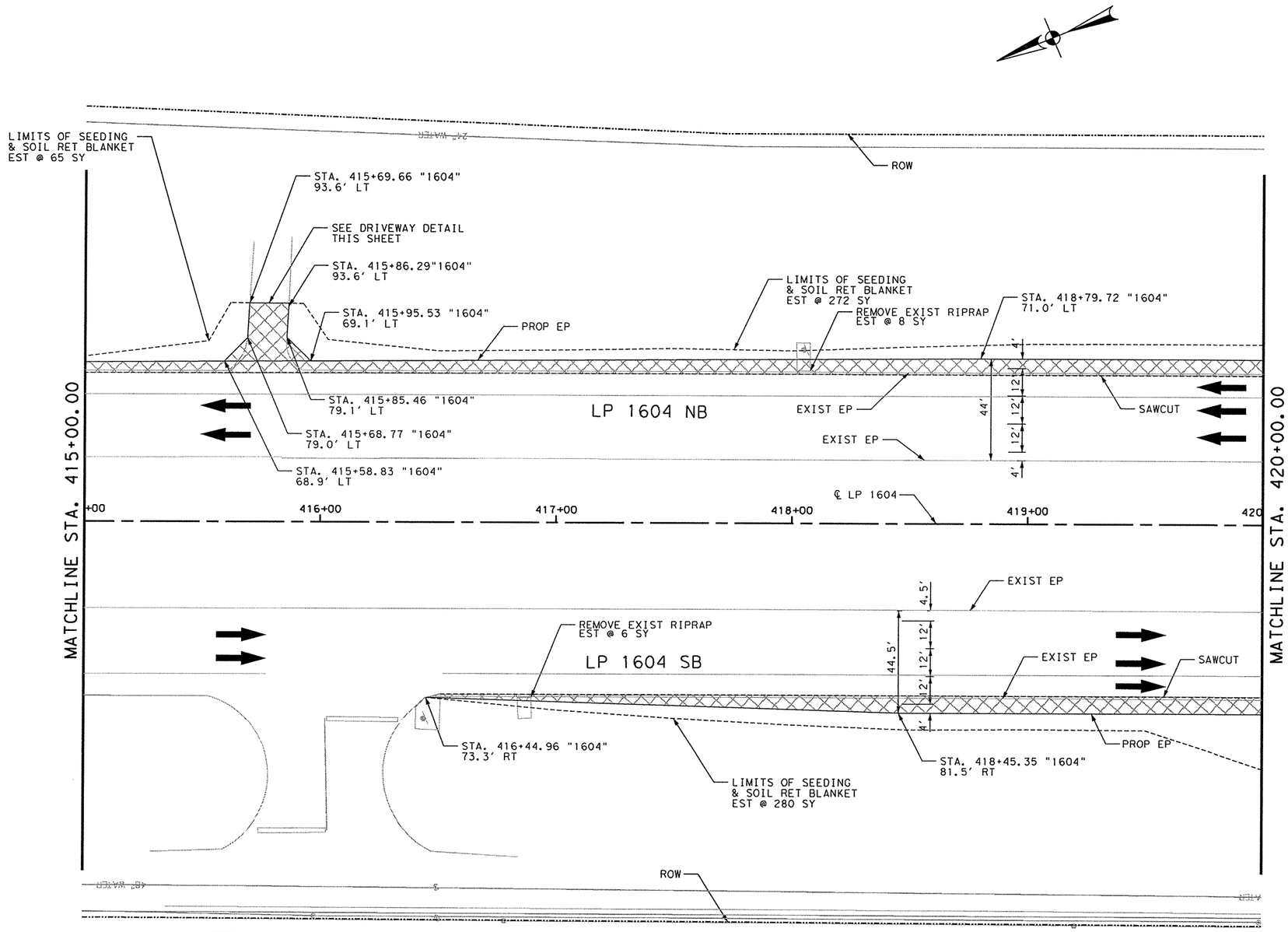

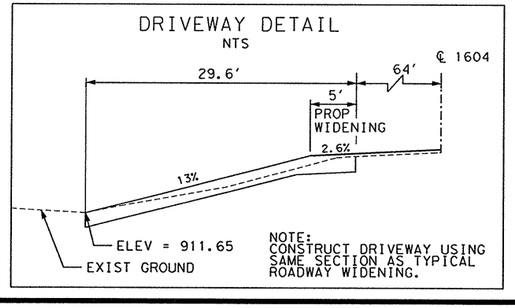

NOTES:
1. FOR GEOMETRIC DATA SEE HORIZONTAL ALIGNMENT DATA SHEETS.
2. SEE PAVEMENT MARKING SHEETS FOR STRIPING DETAILS.
3. EXISTING FEATURES ARE SHOWN SCREENED BACK.
4. FOR OVERLAY LIMITS, SEE OVERLAY SHEETS.
5. SAW CUTTING WHERE CALLED FOR IN THE PLANS SHALL BE CONSIDERED SUBSIDIARY TO THE VARIOUS PERTINENT BID ITEMS.
6. CONC CURBS FOR DIRECTIONAL ISLANDS ARE SUBSIDIARY TO THE PAY ITEM FOR CONC DIRECTIONAL ISLAND (ITEM 536-2004). QUANTITIES SHOWN ARE FOR CONTRACTORS INFORMATION ONLY.

LEGEND

- TRAFFIC FLOW ARROW
- ROW — RIGHT OF WAY LINE
- EP — EDGE OF PAVEMENT
- LIMITS OF SEEDING
- TREE PROTECTION FENCE
- PROP PAVEMENT WIDENING
- PAVEMENT REMOVAL
- CONC DIRECTIONAL ISLAND
- TYPE 2 PED RAMP
- TYPE 21 PED RAMP

STATE OF TEXAS — SCOTT D. ARMSTRONG — 69320 — LICENSED PROFESSIONAL ENGINEER

SCOTT D. ARMSTRONG, P.E. — 7/7/2010 DATE

SCALE: PLAN - 1":50'

REV. NO.	DATE	DESCRIPTION	BY

ALAMO RMA

PAPE-DAWSON ENGINEERS

555 EAST RAMSEY | SAN ANTONIO, TEXAS 78216 | PHONE: 210.375.9000 FAX: 210.375.9010

TEXAS BOARD OF PROFESSIONAL ENGINEERS, FIRM REGISTRATION # 470

Texas Department of Transportation © 2010

LOOP 1604

PLAN SHEET

STA. 415+00 TO STA. 420+00

SHEET 8 OF 26

DGN:	FED. RD. DIV. NO.	STATE	FEDERAL AID PROJECT NO.			HIGHWAY NO.
CHK DGN:	6	TEXAS	STP 2011(210)ES			LP 1604
DWG:	DIST.	COUNTY	CONT. NO.	SECT. NO.	JOB NO.	SHEET NO.
CHK DWG:	SAT	BEXAR	2452	01	050	162

Plotted on: 6/25/2010

Design Filename: p:\74\00\04\design\Civil\ROADWAY\740004PP9.dgn

	ITEM	DESCRIPTION	UNIT	QTY
	0100-2002	PREPARING ROW	STA	5
**	0104-2009	REMOVING CONC (RIPRAP)	SY	8
	0110-2001	EXCAVATION (ROADWAY)	CY	164
	0132-2003	EMBANKMENT (FINAL) (ORD COMP) (TY B)	CY	298
	0161-2002	COMPOST MANUF TOPSOIL (BOS) (4")	SY	1700
	0164-2039	DRILL SEEDING (PERM) (URBAN) (CLAY)	SY	1700
*	0168-2001	VEGETATIVE WATERING	SY	1700
	0169-2001	SOIL RETENTION BLANKETS (CL 1) (TY A)	SY	1700
*	0341-2011	D-GR HMA (QCQA) TY-B PG64-22	SY	961
*	0341-2034	D-GR HMA (QCQA) TY-C PG64-22	SY	850

* AREA OF APPLICATION. SEE GENERAL NOTES FOR PAY QUANTITY.

** FOR CONTRACTOR INFORMATION ONLY. ITEMS ARE SUBSIDIARY TO PREP ROW (ITEM 0100-2002).

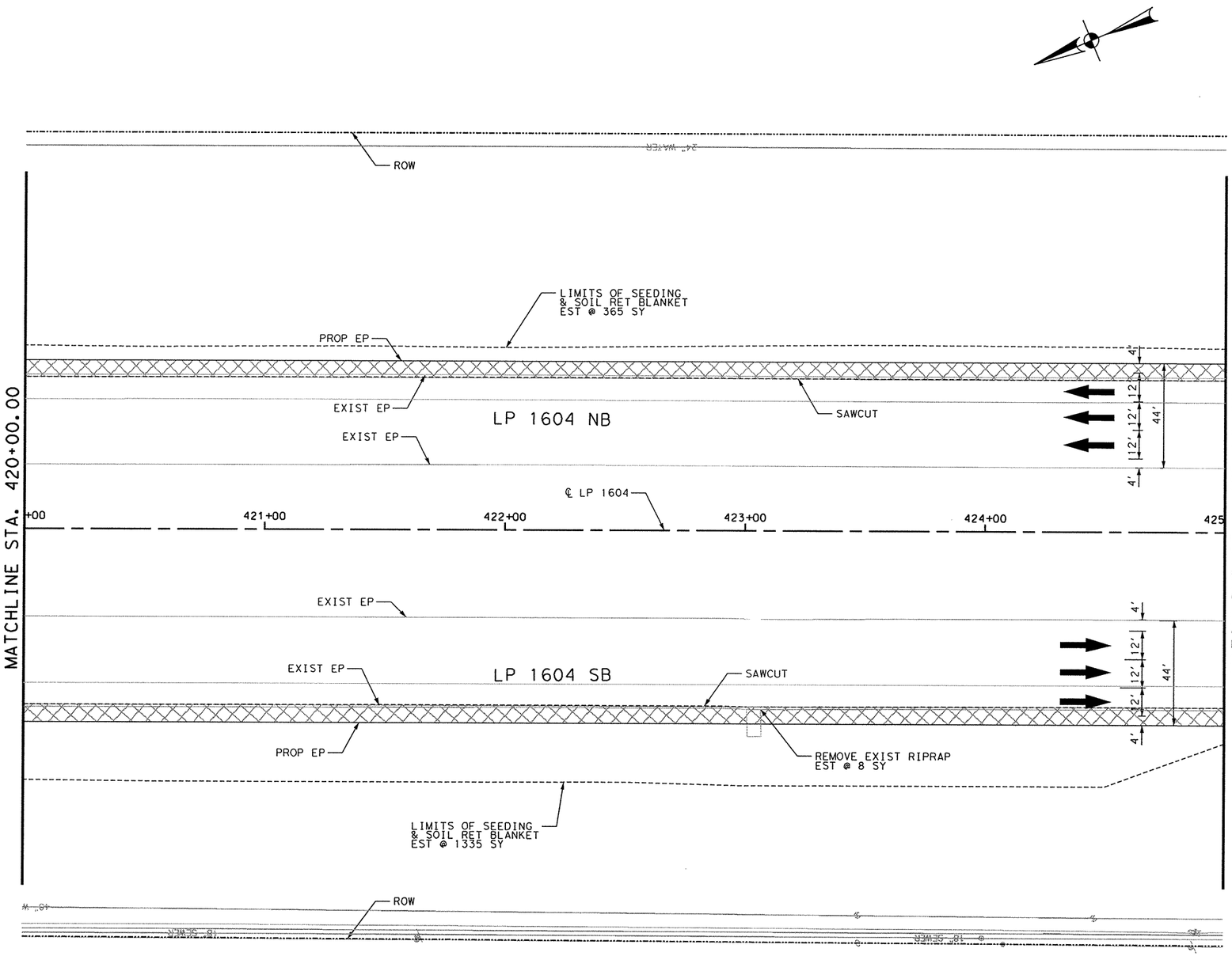

LEGEND

- TRAFFIC FLOW ARROW
- ROW — RIGHT OF WAY LINE
- EP — EDGE OF PAVEMENT
- LIMITS OF SEEDING
- TREE PROTECTION FENCE
- PROP PAVEMENT WIDENING
- PAVEMENT REMOVAL
- CONC DIRECTIONAL ISLAND
- TYPE 2 PED RAMP
- TYPE 21 PED RAMP

STATE OF TEXAS — SCOTT D. ARMSTRONG — 69320 — LICENSED PROFESSIONAL ENGINEER

SCOTT D. ARMSTRONG, P.E. — 6/25/2010 DATE

SCALE: PLAN - 1":50'

REV. NO.	DATE	DESCRIPTION	BY

ALAMO RMA

PAPE-DAWSON ENGINEERS

555 EAST RAMSEY | SAN ANTONIO, TEXAS 78216 | PHONE: 210.375.9000 FAX: 210.375.9010

TEXAS BOARD OF PROFESSIONAL ENGINEERS, FIRM REGISTRATION # 470

Texas Department of Transportation © 2010

NOTES:
1. FOR GEOMETRIC DATA SEE HORIZONTAL ALIGNMENT DATA SHEETS.
2. SEE PAVEMENT MARKING SHEETS FOR STRIPING DETAILS.
3. EXISTING FEATURES ARE SHOWN SCREENED BACK.
4. FOR OVERLAY LIMITS, SEE OVERLAY SHEETS.
5. SAW CUTTING WHERE CALLED FOR IN THE PLANS SHALL BE CONSIDERED SUBSIDIARY TO THE VARIOUS PERTINENT BID ITEMS.
6. CONC CURBS FOR DIRECTIONAL ISLANDS ARE SUBSIDIARY TO THE PAY ITEM FOR CONC DIRECTIONAL ISLAND (ITEM 536-2004). QUANTITIES SHOWN ARE FOR CONTRACTORS INFORMATION ONLY.

LOOP 1604

PLAN SHEET

STA. 420+00 TO STA. 425+00

SHEET 9 OF 26

DGN:	FED. RD. DIV. NO.	STATE	FEDERAL AID PROJECT NO.			HIGHWAY NO.
CHK DGN:	6	TEXAS	STP 2011(210)ES			LP 1604
DWG:	DIST.	COUNTY	CONT. NO.	SECT. NO.	JOB NO.	SHEET NO.
CHK DWG:	SAT	BEXAR	2452	01	050	163

	ITEM	DESCRIPTION	UNIT	QTY
**	0100-2002	PREPARING ROW	STA	5
**	0104-2009	REMOVING CONC (RIPRAP)	SY	7
	0110-2001	EXCAVATION (ROADWAY)	CY	340
	0132-2003	EMBANKMENT (FINAL) (ORD COMP) (TY B)	CY	381
	0161-2002	COMPOST MANUF TOPSOIL (BOS) (4")	SY	2438
	0164-2039	DRILL SEEDING (PERM) (URBAN) (CLAY)	SY	2438
*	0168-2001	VEGETATIVE WATERING	SY	2438
	0169-2001	SOIL RETENTION BLANKETS (CL 1) (TY A)	SY	2438
*	0341-2011	D-GR HMA (QCQA) TY-B PG64-22	SY	1926
*	0341-2034	D-GR HMA (QCQA) TY-C PG64-22	SY	1788
**	0772-2001	POST AND CABLE FENCE (REMOVAL)	LF	416
**	0772-2002	POST AND CABLE FENCE (REMV CONC ANCHOR)	EA	1

* AREA OF APPLICATION. SEE GENERAL NOTES FOR PAY QUANTITY.

** FOR CONTRACTOR INFORMATION ONLY. ITEMS ARE SUBSIDIARY TO PREP ROW (ITEM 0100-2002).

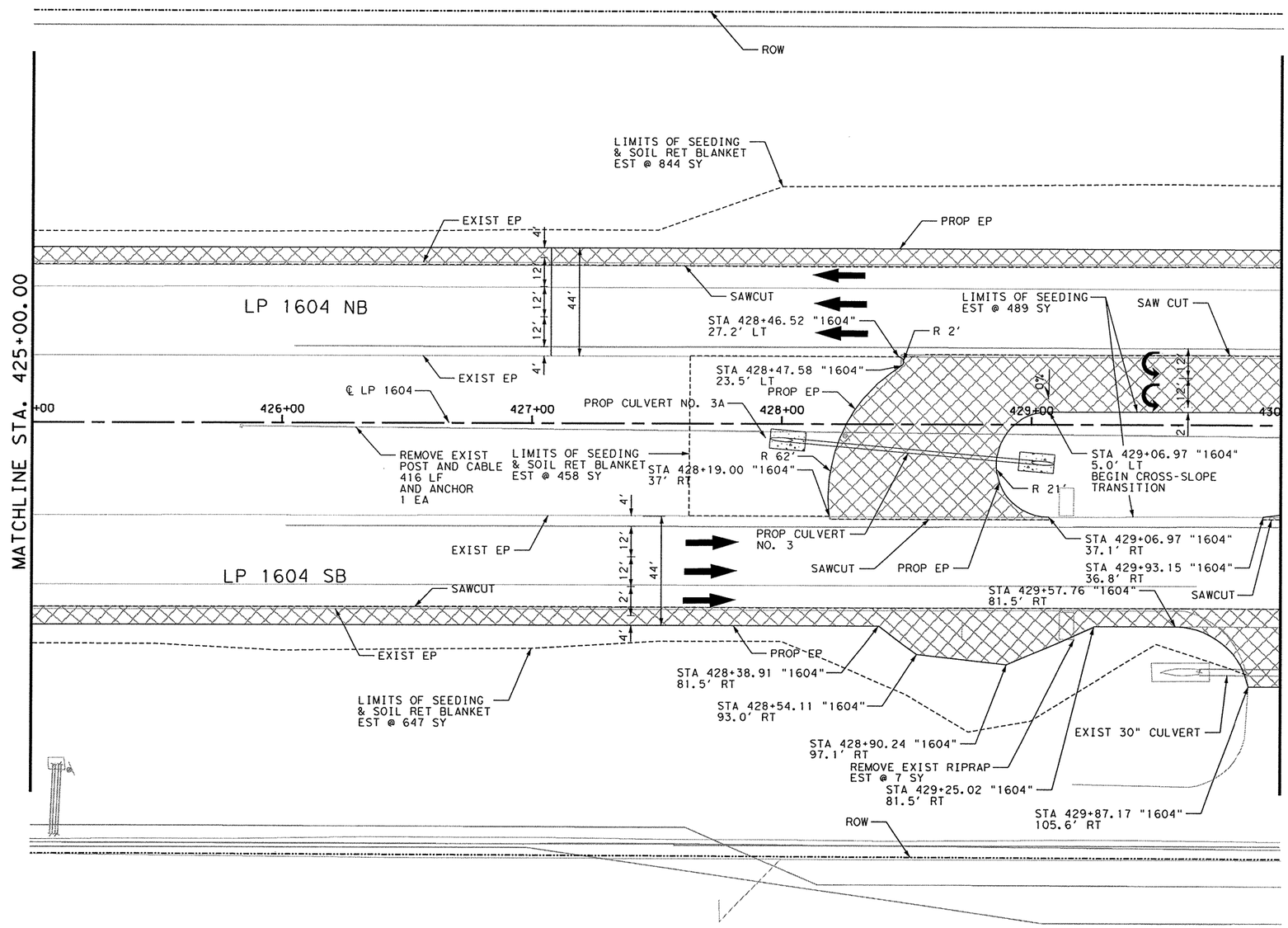

LEGEND

- TRAFFIC FLOW ARROW
- ROW — RIGHT OF WAY LINE
- EP — EDGE OF PAVEMENT
- LIMITS OF SEEDING
- TREE PROTECTION FENCE
- PROP PAVEMENT WIDENING
- PAVEMENT REMOVAL
- CONC DIRECTIONAL ISLAND
- TYPE 2 PED RAMP
- TYPE 21 PED RAMP

NOTES:
1. FOR GEOMETRIC DATA SEE HORIZONTAL ALIGNMENT DATA SHEETS.
2. SEE PAVEMENT MARKING SHEETS FOR STRIPING DETAILS.
3. EXISTING FEATURES ARE SHOWN SCREENED BACK.
4. FOR OVERLAY LIMITS, SEE OVERLAY SHEETS.
5. SAW CUTTING WHERE CALLED FOR IN THE PLANS SHALL BE CONSIDERED SUBSIDIARY TO THE VARIOUS PERTINENT BID ITEMS.
6. CONC CURBS FOR DIRECTIONAL ISLANDS ARE SUBSIDIARY TO THE PAY ITEM FOR CONC DIRECTIONAL ISLAND (ITEM 536-2004). QUANTITIES SHOWN ARE FOR CONTRACTORS INFORMATION ONLY.

STATE OF TEXAS — SCOTT D. ARMSTRONG — 69320 — LICENSED PROFESSIONAL ENGINEER

SCOTT D. ARMSTRONG, P.E. — 7/7/2010 DATE

SCALE: PLAN - 1":50'

REV. NO.	DATE	DESCRIPTION	BY

ALAMO RMA

PAPE-DAWSON ENGINEERS

555 EAST RAMSEY | SAN ANTONIO, TEXAS 78216 | PHONE: 210.375.9000 FAX: 210.375.9010

TEXAS BOARD OF PROFESSIONAL ENGINEERS, FIRM REGISTRATION # 470

Texas Department of Transportation © 2010

LOOP 1604

PLAN SHEET

STA. 425+00 TO STA. 430+00

SHEET 10 OF 26

DGN:	FED. RD. DIV. NO.	STATE	FEDERAL AID PROJECT NO.			HIGHWAY NO.
CHK DGN:	6	TEXAS	STP 2011(210)ES			LP 1604
DWG:	DIST.	COUNTY	CONT. NO.	SECT. NO.	JOB NO.	SHEET NO.
CHK DWG:	SAT	BEXAR	2452	01	050	164

Plotted on: 7/7/2010

Design Filename: p:\74\00\04\design\Civil\ROADWAY\740004PP10.dgn

Plotted on: 7/7/2010

ITEM	DESCRIPTION	UNIT	QTY
0100-2002	PREPARING ROW	STA	5
0104-2009	REMOVING CONC (RIPRAP)	SY	36
0110-2001	EXCAVATION (ROADWAY)	CY	565
0132-2003	EMBANKMENT (FINAL) (ORD COMP) (TY B)	CY	510
0161-2002	COMPOST MANUF TOPSOIL (BOS) (4")	SY	2376
0164-2039	DRILL SEEDING (PERM) (URBAN) (CLAY)	SY	2376
0168-2001	VEGETATIVE WATERING	SY	2376
0169-2001	SOIL RETENTION BLANKETS (CL 1) (TY A)	SY	2376
0341-2011	D-GR HMA (QCQA) TY-B PG64-22	SY	3630
0341-2034	D-GR HMA (QCQA) TY-C PG64-22	SY	3410
0772-2001	POST AND CABLE FENCE (REMOVAL)	LF	160
0772-2002	POST AND CABLE FENCE (REMV CONC ANCHOR)	EA	1

* AREA OF APPLICATION. SEE GENERAL NOTES FOR PAY QUANTITY.
** FOR CONTRACTOR INFORMATION ONLY. ITEMS ARE SUBSIDIARY TO PREP ROW (ITEM 0100-2002).

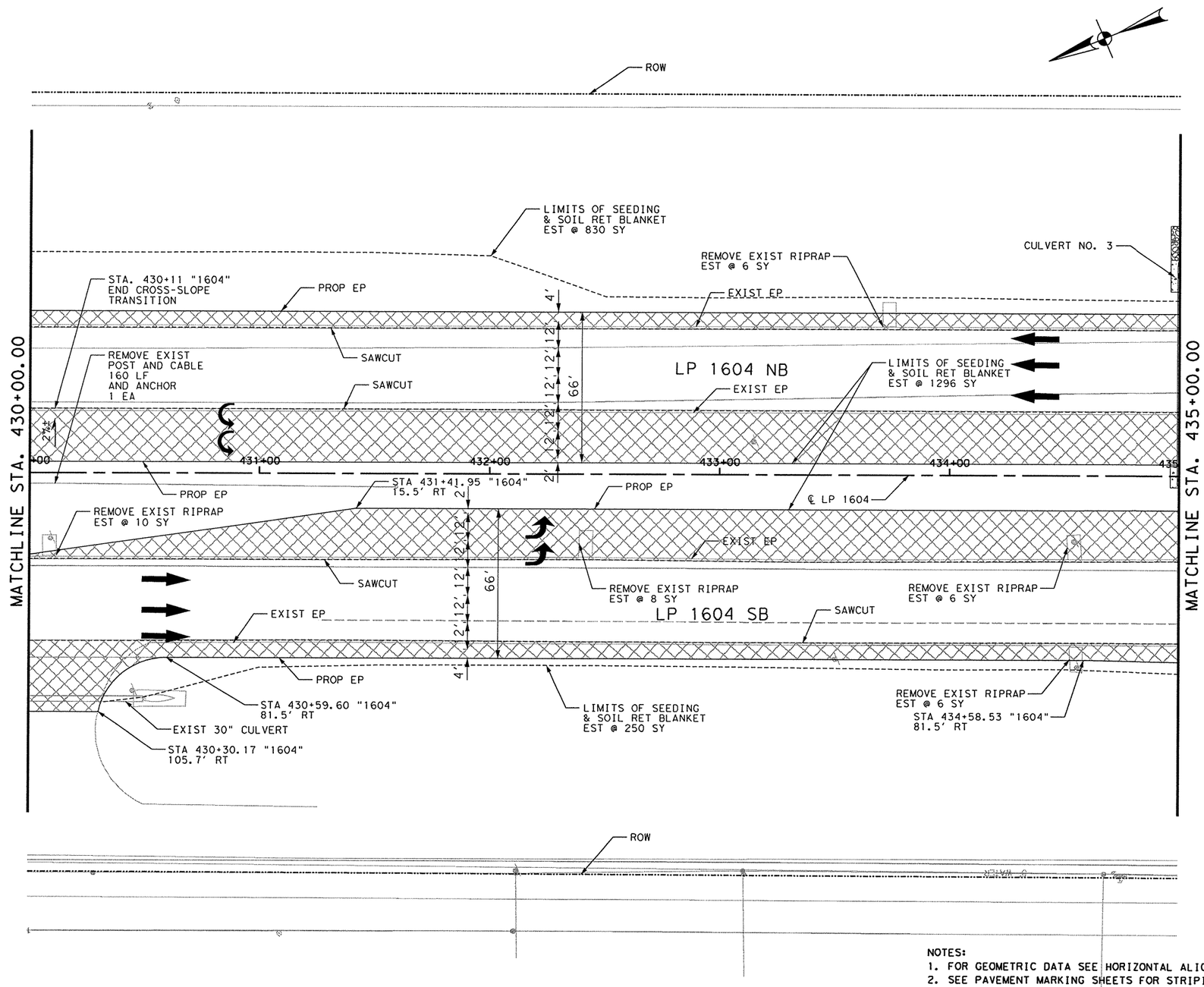

LEGEND

- TRAFFIC FLOW ARROW
- ROW — RIGHT OF WAY LINE
- EP — EDGE OF PAVEMENT
- LIMITS OF SEEDING
- TREE PROTECTION FENCE
- PROP PAVEMENT WIDENING
- PAVEMENT REMOVAL
- CONC DIRECTIONAL ISLAND
- TYPE 2 PED RAMP
- TYPE 21 PED RAMP

STATE OF TEXAS — SCOTT D. ARMSTRONG — 69320 — LICENSED PROFESSIONAL ENGINEER

SCOTT D. ARMSTRONG, P.E. — 7/7/2010 DATE

SCALE: PLAN - 1":50'

REV. NO.	DATE	DESCRIPTION	BY

ALAMO RMA

PAPE-DAWSON ENGINEERS
555 EAST RAMSEY | SAN ANTONIO, TEXAS 78216 | PHONE: 210.375.9000 FAX: 210.375.9010
TEXAS BOARD OF PROFESSIONAL ENGINEERS, FIRM REGISTRATION # 470

Texas Department of Transportation
© 2010

NOTES:
1. FOR GEOMETRIC DATA SEE HORIZONTAL ALIGNMENT DATA SHEETS.
2. SEE PAVEMENT MARKING SHEETS FOR STRIPING DETAILS.
3. EXISTING FEATURES ARE SHOWN SCREENED BACK.
4. FOR OVERLAY LIMITS, SEE OVERLAY SHEETS.
5. SAW CUTTING WHERE CALLED FOR IN THE PLANS SHALL BE CONSIDERED SUBSIDIARY TO THE VARIOUS PERTINENT BID ITEMS.
6. CONC CURBS FOR DIRECTIONAL ISLANDS ARE SUBSIDIARY TO THE PAY ITEM FOR CONC DIRECTIONAL ISLAND (ITEM 536-2004). QUANTITIES SHOWN ARE FOR CONTRACTORS INFORMATION ONLY.

LOOP 1604

PLAN SHEET

STA. 430+00 TO STA. 435+00

SHEET 11 OF 26

DGN:	FED. RD. DIV. NO.	STATE	FEDERAL AID PROJECT NO.			HIGHWAY NO.
CHK DGN:	6	TEXAS	STP 2011(210)ES			LP 1604
DWG:	DIST.	COUNTY	CONT. NO.	SECT. NO.	JOB NO.	SHEET NO.
CHK DWG:	SAT	BEXAR	2452	01	050	165

Design Filename: p:\741\00\04\design\Civil\ROADWAY\740004PP11.dgn

Plotted on: 6/25/2010

Design Filename: p:\74\00\04\design\Civil\ROADWAY\740004PP12.dgn

	ITEM	DESCRIPTION	UNIT	QTY
**	0104-2009	REMOVING CONC (RIPRAP)	SY	14
	0110-2001	EXCAVATION (ROADWAY)	CY	323
	0132-2003	EMBANKMENT (FINAL) (ORD COMP) (TY B)	CY	686
	0161-2002	COMPOST MANUF TOPSOIL (BOS) (4")	SY	1897
	0164-2039	DRILL SEEDING (PERM) (URBAN) (CLAY)	SY	1897
*	0168-2001	VEGETATIVE WATERING	SY	1897
	0169-2001	SOIL RETENTION BLANKETS (CL 1) (TY A)	SY	1897
*	0341-2011	D-GR HMA (QCQA) TY-B PG64-22	SY	3570
*	0341-2034	D-GR HMA (QCQA) TY-C PG64-22	SY	3347

* AREA OF APPLICATION. SEE GENERAL NOTES FOR PAY QUANTITY.

** FOR CONTRACTOR INFORMATION ONLY. ITEMS ARE SUBSIDIARY TO PREP ROW (ITEM 0100-2002).

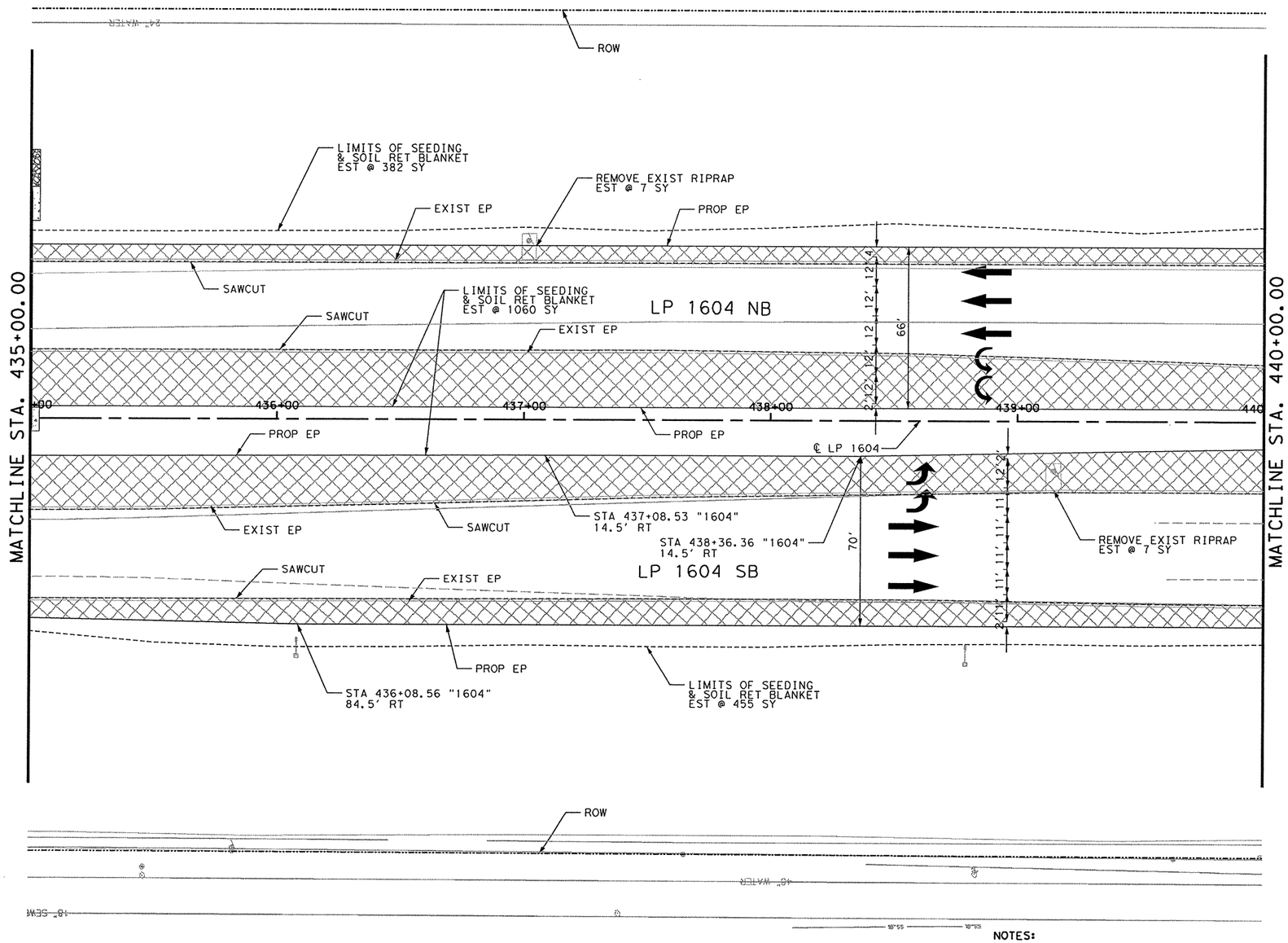

NOTES:

1. FOR GEOMETRIC DATA SEE HORIZONTAL ALIGNMENT DATA SHEETS.
2. SEE PAVEMENT MARKING SHEETS FOR STRIPING DETAILS.
3. EXISTING FEATURES ARE SHOWN SCREENED BACK.
4. FOR OVERLAY LIMITS, SEE OVERLAY SHEETS.
5. SAW CUTTING WHERE CALLED FOR IN THE PLANS SHALL BE CONSIDERED SUBSIDIARY TO THE VARIOUS PERTINENT BID ITEMS.
6. CONC CURBS FOR DIRECTIONAL ISLANDS ARE SUBSIDIARY TO THE PAY ITEM FOR CONC DIRECTIONAL ISLAND (ITEM 536-2004). QUANTITIES SHOWN ARE FOR CONTRACTORS INFORMATION ONLY.

LEGEND

- TRAFFIC FLOW ARROW
- ROW — RIGHT OF WAY LINE
- EP — EDGE OF PAVEMENT
- LIMITS OF SEEDING
- TREE PROTECTION FENCE
- PROP PAVEMENT WIDENING
- PAVEMENT REMOVAL
- CONC DIRECTIONAL ISLAND
- TYPE 2 PED RAMP
- TYPE 21 PED RAMP

STATE OF TEXAS — SCOTT D. ARMSTRONG — 69320 — LICENSED PROFESSIONAL ENGINEER

SCOTT D. ARMSTRONG, P.E. — 6/25/2010 DATE

SCALE: PLAN - 1":50'

REV. NO.	DATE	DESCRIPTION	BY

ALAMO RMA

PAPE-DAWSON ENGINEERS

555 EAST RAMSEY | SAN ANTONIO, TEXAS 78216 | PHONE: 210.375.9000 FAX: 210.375.9010

TEXAS BOARD OF PROFESSIONAL ENGINEERS, FIRM REGISTRATION # 470

Texas Department of Transportation © 2010

LOOP 1604

PLAN SHEET

STA. 435+00 TO STA. 440+00

SHEET 12 OF 26

DGN:	FED. RD. DIV. NO.	STATE	FEDERAL AID PROJECT NO.			HIGHWAY NO.
CHK DGN:	6	TEXAS	STP 2011(210)ES			LP 1604
DWG:	DIST.	COUNTY	CONT. NO.	SECT. NO.	JOB NO.	SHEET NO.
CHK DWG:	SAT	BEXAR	2452	01	050	166

SEE SHEET 13A OF 26 FOR CONSTRUCTION CONTROL DATA XX

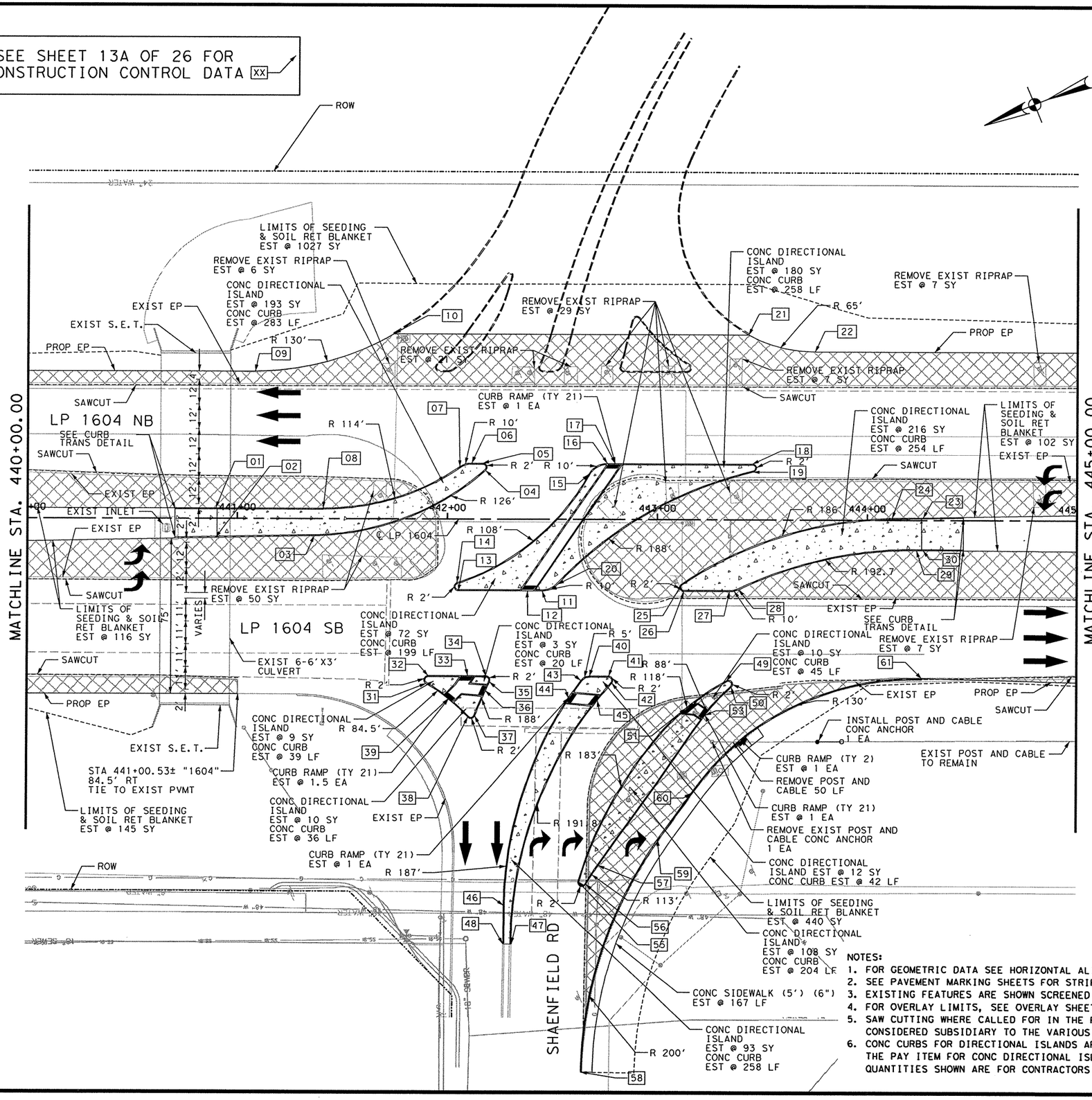

	ITEM	DESCRIPTION	UNIT	QTY
**	0100-2002	PREPARING ROW	STA	5
**	0104-2009	REMOVING CONC (RIPRAP)	SY	127
	0110-2001	EXCAVATION (ROADWAY)	CY	435
	0132-2003	EMBANKMENT (FINAL) (ORD COMP) (TY B)	CY	1230
	0161-2002	COMPOST MANUF TOPSOIL (BOS) (4")	SY	1830
	0164-2039	DRILL SEEDING (PERM) (URBAN) (CLAY)	SY	1830
*	0168-2001	VEGETATIVE WATERING	SY	1830
	0169-2001	SOIL RETENTION BLANKETS (CL 1) (TY A)	SY	1830
*	0341-2011	D-GR HMA (QCQA) TY-B PG64-22	SY	3818
*	0341-2034	D-GR HMA (QCQA) TY-C PG64-22	SY	3609
	0529-2014	CONC CURB (TY C)	LF	274
	0531-2003	CONC SIDEWALKS (5') (6")	LF	167
	0531-2006	CURB RAMPS (TY 2)	EA	1
	0531-2017	CURB RAMPS (TY 21)	EA	4.5
	0536-2004	CONC DIRECTIONAL ISLAND	SY	906
**	0772-2001	POST AND CABLE FENCE (REMOVAL)	LF	50
**	0772-2002	POST AND CABLE FENCE (REMV CONC ANCHOR)	EA	1
	0772-2004	POST AND CABLE FENCE (NEW CONC ANCHOR)	EA	1

* AREA OF APPLICATION. SEE GENERAL NOTES FOR PAY QUANTITY.

** FOR CONTRACTOR INFORMATION ONLY. ITEMS ARE SUBSIDIARY TO PREP ROW (ITEM 0100-2002).

LEGEND

- TRAFFIC FLOW ARROW
- ROW — RIGHT OF WAY LINE
- EP — EDGE OF PAVEMENT
- LIMITS OF SEEDING
- TREE PROTECTION FENCE
- PROP PAVEMENT WIDENING
- PAVEMENT REMOVAL
- CONC DIRECTIONAL ISLAND
- TYPE 2 PED RAMP
- TYPE 21 PED RAMP

NOTES:
1. FOR GEOMETRIC DATA SEE HORIZONTAL ALIGNMENT DATA SHEETS.
2. SEE PAVEMENT MARKING SHEETS FOR STRIPING DETAILS.
3. EXISTING FEATURES ARE SHOWN SCREENED BACK.
4. FOR OVERLAY LIMITS, SEE OVERLAY SHEETS.
5. SAW CUTTING WHERE CALLED FOR IN THE PLANS SHALL BE CONSIDERED SUBSIDIARY TO THE VARIOUS PERTINENT BID ITEMS.
6. CONC CURBS FOR DIRECTIONAL ISLANDS ARE SUBSIDIARY TO THE PAY ITEM FOR CONC DIRECTIONAL ISLAND (ITEM 536-2004). QUANTITIES SHOWN ARE FOR CONTRACTORS INFORMATION ONLY.

STATE OF TEXAS — SCOTT D. ARMSTRONG — 69320 — LICENSED PROFESSIONAL ENGINEER

SCOTT D. ARMSTRONG, P.E. — 6/25/2010 DATE

SCALE: PLAN - 1":50'

REV. NO.	DATE	DESCRIPTION	BY

ALAMO RMA

PAPE-DAWSON ENGINEERS

555 EAST RAMSEY | SAN ANTONIO, TEXAS 78216 | PHONE: 210.375.9000 FAX: 210.375.9010

TEXAS BOARD OF PROFESSIONAL ENGINEERS, FIRM REGISTRATION # 470

Texas Department of Transportation © 2010

LOOP 1604

PLAN SHEET

STA. 440+00 TO STA. 445+00

SHEET 13 OF 26

DGN:	FED. RD. DIV. NO.	STATE	FEDERAL AID PROJECT NO.			HIGHWAY NO.
CHK DGN:	6	TEXAS	STP 2011(210)ES			LP 1604
DWG:	DIST.	COUNTY	CONT. NO.	SECT. NO.	JOB NO.	SHEET NO.
CHK DWG:	SAT	BEXAR	2452	01	050	167

Plotted on: 6/25/2010

Design Filename: p:\74\00\04\design\Civil\ROADWAY\740004PP13.dgn

Plotted on: 7/7/2010

Design Filename: p:\74V00\04\design\civil\roadway\740004PP13A.dgn

SHAENFIELD ROAD
INTERSECTION CONTROL DATA

POINT #	STA. ("1604")	DISTANCE	RT/LT
1	Sta. 440+89.52	5.00	LT
2	Sta. 440+89.52	9.44	RT
3	Sta. 441+36.70	8.49	RT
4	Sta. 442+18.11	23.51	LT
5	Sta. 442+16.78	27.00	LT
6	Sta. 442+11.41	27.00	LT
7	Sta. 442+05.73	25.23	LT
8	Sta. 441+40.90	5.00	LT
9	Sta. 441+08.24	71.00	LT
10	Sta. 441+74.11	88.92	LT
11	Sta. 442+45.27	34.50	RT
12	Sta. 442+38.24	34.50	RT
13	Sta. 442+05.31	34.50	RT
14	Sta. 442+04.69	30.60	RT
15	Sta. 442+67.08	21.68	LT
16	Sta. 442+75.92	27.00	LT
17	Sta. 442+79.67	27.00	LT
18	Sta. 443+45.12	27.00	LT
19	Sta. 443+45.59	23.06	LT
20	Sta. 442+52.58	31.32	RT
21	Sta. 443+43.20	88.93	LT
22	Sta. 443+74.73	81.00	LT
23	Sta. 444+26.70	1.14	LT
24	Sta. 444+11.94	0.85	LT
25	Sta. 443+11.76	30.84	RT
26	Sta. 443+12.88	34.50	RT
27	Sta. 443+34.50	34.50	RT
28	Sta. 443+38.82	33.52	RT
29	Sta. 444+23.48	14.59	RT
30	Sta. 444+26.72	14.61	RT
31	Sta. 441+90.01	79.22	RT
32	Sta. 441+91.03	75.50	RT
33	Sta. 442+10.11	75.50	RT
34	Sta. 442+18.66	75.50	RT
35	Sta. 442+20.47	78.36	RT
36	Sta. 442+18.51	82.58	RT
37	Sta. 442+13.44	95.03	RT
38	Sta. 442+10.07	95.68	RT
39	Sta. 442+00.79	86.77	RT
40	Sta. 442+67.90	75.50	RT
41	Sta. 442+77.05	75.50	RT
42	Sta. 442+78.56	78.81	RT
43	Sta. 442+63.87	77.54	RT
44	Sta. 442+57.97	86.07	RT
45	Sta. 442+71.60	87.28	RT
46	Sta. 442+27.61	186.03	RT
47	Sta. 442+31.39	204.61	RT
48	Sta. 442+27.39	204.56	RT
49	Sta. 443+33.28	77.41	RT
50	Sta. 443+35.58	80.65	RT
51	Sta. 443+13.87	91.02	RT
52	Sta. 443+23.10	94.38	RT
53	Sta. 443+22.01	95.90	RT
54	Sta. 443+03.53	101.12	RT
55	Sta. 442+63.03	174.29	RT
56	Sta. 442+66.69	175.82	RT
57	Sta. 442+72.48	166.64	RT
58	Sta. 442+64.58	266.27	RT
59	Sta. 443+00.73	154.20	RT
60	Sta. 443+16.60	131.53	RT
61	Sta. 444+26.21	76.13	RT

STATE OF TEXAS
SCOTT D. ARMSTRONG
69320
LICENSED PROFESSIONAL ENGINEER

SCOTT D. ARMSTRONG, P.E. — 7/7/2010 DATE

REV. NO.	DATE	DESCRIPTION	BY

ALAMO RMA

PAPE-DAWSON ENGINEERS

555 EAST RAMSEY | SAN ANTONIO, TEXAS 78216 | PHONE: 210.375.9000 FAX: 210.375.9010

TEXAS BOARD OF PROFESSIONAL ENGINEERS, FIRM REGISTRATION # 470

Texas Department of Transportation
© 2010

LOOP 1604

PLAN SHEET

SHANEFIELD ROAD
INTERSECTION CONTROL DATA

SHEET 13A OF 26

DGN:	FED. RD. DIV. NO.	STATE	FEDERAL AID PROJECT NO.			HIGHWAY NO.
CHK DGN:	6	TEXAS	STP 2011(210)ES			LP 1604
DWG:	DIST.	COUNTY	CONT. NO.	SECT. NO.	JOB NO.	SHEET NO.
CHK DWG:	SAT	BEXAR	2452	01	050	168

Plotted on: 6/25/2010

Design Filename: p:\74\00\04\design\Civil\ROADWAY\740004PP14.dgn

	ITEM	DESCRIPTION	UNIT	QTY
	0100-2002	PREPARING ROW	STA	5
*	0104-2009	REMOVING CONC (RIPRAP)	SY	7
	0110-2001	EXCAVATION (ROADWAY)	CY	393
	0132-2003	EMBANKMENT (FINAL)(ORD COMP)(TY B)	CY	1082
	0161-2002	COMPOST MANUF TOPSOIL (BOS) (4")	SY	2291
	0164-2039	DRILL SEEDING (PERM) (URBAN) (CLAY)	SY	2291
*	0168-2001	VEGETATIVE WATERING	SY	2291
	0169-2001	SOIL RETENTION BLANKETS (CL 1) (TY A)	SY	2291
*	0341-2011	D-GR HMA (QCQA) TY-B PG64-22	SY	4343
*	0341-2034	D-GR HMA (QCQA) TY-C PG64-22	SY	4120
*	0772-2001	POST AND CABLE FENCE (REMOVAL)	LF	113
*	0772-2002	POST AND CABLE FENCE (REMV CONC ANCHOR)	EA	1

* AREA OF APPLICATION. SEE GENERAL NOTES FOR PAY QUANTITY.

** FOR CONTRACTOR INFORMATION ONLY. ITEMS ARE SUBSIDIARY TO PREP ROW (ITEM 0100-2002).

LEGEND

- TRAFFIC FLOW ARROW
- ROW — RIGHT OF WAY LINE
- EP — EDGE OF PAVEMENT
- LIMITS OF SEEDING
- TREE PROTECTION FENCE
- PROP PAVEMENT WIDENING
- PAVEMENT REMOVAL
- CONC DIRECTIONAL ISLAND
- TYPE 2 PED RAMP
- TYPE 21 PED RAMP

STATE OF TEXAS — SCOTT D. ARMSTRONG — 69320 — LICENSED PROFESSIONAL ENGINEER

SCOTT D. ARMSTRONG, P.E. — 6/25/2010 DATE

SCALE: PLAN - 1":50'

REV. NO.	DATE	DESCRIPTION	BY

ALAMO RMA

PAPE-DAWSON ENGINEERS

555 EAST RAMSEY | SAN ANTONIO, TEXAS 78216 | PHONE: 210.375.9000 FAX: 210.375.9010

TEXAS BOARD OF PROFESSIONAL ENGINEERS, FIRM REGISTRATION # 470

Texas Department of Transportation

© 2010

NOTES:

1. FOR GEOMETRIC DATA SEE HORIZONTAL ALIGNMENT DATA SHEETS.
2. SEE PAVEMENT MARKING SHEETS FOR STRIPING DETAILS.
3. EXISTING FEATURES ARE SHOWN SCREENED BACK.
4. FOR OVERLAY LIMITS, SEE OVERLAY SHEETS.
5. SAW CUTTING WHERE CALLED FOR IN THE PLANS SHALL BE CONSIDERED SUBSIDIARY TO THE VARIOUS PERTINENT BID ITEMS.
6. CONC CURBS FOR DIRECTIONAL ISLANDS ARE SUBSIDIARY TO THE PAY ITEM FOR CONC DIRECTIONAL ISLAND (ITEM 536-2004). QUANTITIES SHOWN ARE FOR CONTRACTORS INFORMATION ONLY.

LOOP 1604

PLAN SHEET

STA. 445+00 TO STA. 450+00

SHEET 14 OF 26

DGN:	FED. RD. DIV. NO.	STATE	FEDERAL AID PROJECT NO.			HIGHWAY NO.
CHK DGN:	6	TEXAS	STP 2011(210)ES			LP 1604
DWG:	DIST.	COUNTY	CONT. NO.	SECT. NO.	JOB NO.	SHEET NO.
CHK DWG:	SAT	BEXAR	2452	01	050	169

Plotted on: 7/7/2010

Design Filename: p:\74\00\04\design\Civil\ROADWAY\740004PP15.dgn

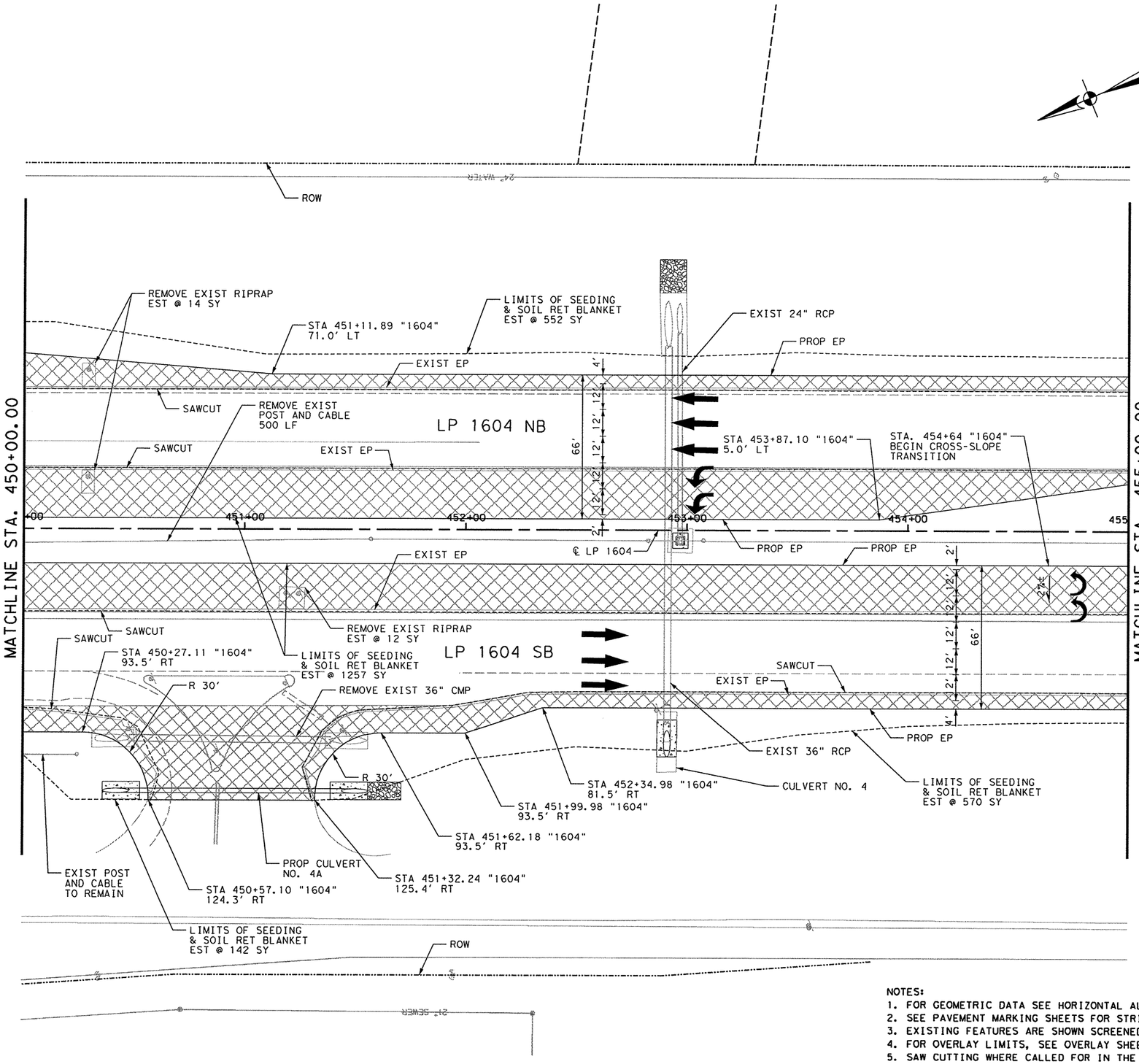

	ITEM	DESCRIPTION	UNIT	QTY
	0100-2002	PREPARING ROW	STA	5
**	0104-2009	REMOVING CONC (RIPRAP)	SY	26
	0110-2001	EXCAVATION (ROADWAY)	CY	351
	0132-2003	EMBANKMENT (FINAL) (ORD COMP) (TY B)	CY	997
	0161-2002	COMPOST MANUF TOPSOIL (BOS) (4")	SY	2521
	0164-2039	DRILL SEEDING (PERM) (URBAN) (CLAY)	SY	2521
*	0168-2001	VEGETATIVE WATERING	SY	2521
	0169-2001	SOIL RETENTION BLANKETS (CL 1) (TY A)	SY	2521
*	0341-2011	D-GR HMA (QCQA) TY-B PG64-22	SY	4044
*	0341-2034	D-GR HMA (QCQA) TY-C PG64-22	SY	3826
**	0496-2051	REMOV STR (DRIVEWAY CULVERT)	EA	1
**	0772-2001	POST AND CABLE FENCE (REMOVAL)	LF	500

* AREA OF APPLICATION. SEE GENERAL NOTES FOR PAY QUANTITY.

** FOR CONTRACTOR INFORMATION ONLY. ITEMS ARE SUBSIDIARY TO PREP ROW (ITEM 0100-2002).

LEGEND

- TRAFFIC FLOW ARROW
- ROW — RIGHT OF WAY LINE
- EP — EDGE OF PAVEMENT
- ------- LIMITS OF SEEDING
- —x— TREE PROTECTION FENCE
- PROP PAVEMENT WIDENING
- PAVEMENT REMOVAL
- CONC DIRECTIONAL ISLAND
- TYPE 2 PED RAMP
- TYPE 21 PED RAMP

NOTES:
1. FOR GEOMETRIC DATA SEE HORIZONTAL ALIGNMENT DATA SHEETS.
2. SEE PAVEMENT MARKING SHEETS FOR STRIPING DETAILS.
3. EXISTING FEATURES ARE SHOWN SCREENED BACK.
4. FOR OVERLAY LIMITS, SEE OVERLAY SHEETS.
5. SAW CUTTING WHERE CALLED FOR IN THE PLANS SHALL BE CONSIDERED SUBSIDIARY TO THE VARIOUS PERTINENT BID ITEMS.
6. CONC CURBS FOR DIRECTIONAL ISLANDS ARE SUBSIDIARY TO THE PAY ITEM FOR CONC DIRECTIONAL ISLAND (ITEM 536-2004). QUANTITIES SHOWN ARE FOR CONTRACTORS INFORMATION ONLY.

STATE OF TEXAS
SCOTT D. ARMSTRONG
69320
LICENSED PROFESSIONAL ENGINEER

SCOTT D. ARMSTRONG, P.E. — 7/7/2010 DATE

SCALE: PLAN - 1":50'

REV. NO.	DATE	DESCRIPTION	BY

ALAMO RMA

PAPE-DAWSON ENGINEERS
555 EAST RAMSEY | SAN ANTONIO, TEXAS 78216 | PHONE: 210.375.9000 FAX: 210.375.9010
TEXAS BOARD OF PROFESSIONAL ENGINEERS, FIRM REGISTRATION # 470

Texas Department of Transportation © 2010

LOOP 1604

PLAN SHEET

STA. 450+00 TO STA. 455+00

SHEET 15 OF 26

DGN:	FED. RD. DIV. NO.	STATE	FEDERAL AID PROJECT NO.			HIGHWAY NO.
CHK DGN:	6	TEXAS	STP 2011(210)ES			LP 1604
DWG:	DIST.	COUNTY	CONT. NO.	SECT. NO.	JOB NO.	SHEET NO.
CHK DWG:	SAT	BEXAR	2452	01	050	170

Plotted on: 7/7/2010

Design Filename: p:\74\00\04\design\Civil\ROADWAY\740004PP16.dgn

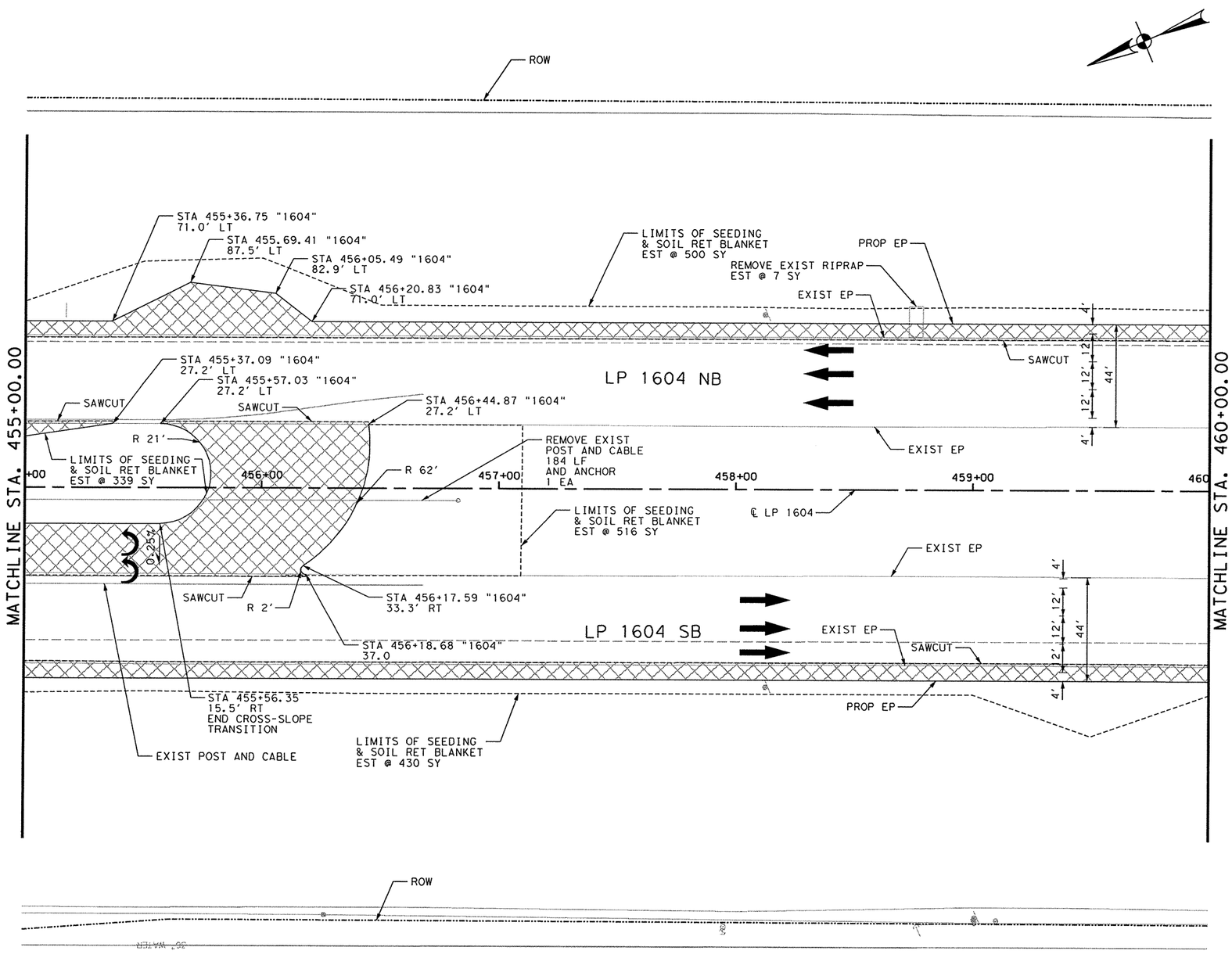

	ITEM	DESCRIPTION	UNIT	QTY
	0100-2002	PREPARING ROW	STA	5
**	0104-2009	REMOVING CONC (RIPRAP)	SY	7
	0110-2001	EXCAVATION (ROADWAY)	CY	202
	0132-2003	EMBANKMENT (FINAL) (ORD COMP) (TY B)	CY	364
	0161-2002	COMPOST MANUF TOPSOIL (BOS) (4")	SY	1785
	0164-2039	DRILL SEEDING (PERM) (URBAN) (CLAY)	SY	1785
*	0168-2001	VEGETATIVE WATERING	SY	1785
	0169-2001	SOIL RETENTION BLANKETS (CL 1) (TY A)	SY	1785
*	0341-2011	D-GR HMA (QCQA) TY-B PG64-22	SY	1768
*	0341-2034	D-GR HMA (QCQA) TY-C PG64-22	SY	1630
**	0772-2001	POST AND CABLE FENCE (REMOVAL)	LF	184
**	0772-2002	POST AND CABLE FENCE (REMV CONC ANCHOR)	EA	1

* AREA OF APPLICATION. SEE GENERAL NOTES FOR PAY QUANTITY.

** FOR CONTRACTOR INFORMATION ONLY. ITEMS ARE SUBSIDIARY TO PREP ROW (ITEM 0100-2002).

LEGEND

- TRAFFIC FLOW ARROW
- ROW — RIGHT OF WAY LINE
- EP — EDGE OF PAVEMENT
- LIMITS OF SEEDING
- TREE PROTECTION FENCE
- PROP PAVEMENT WIDENING
- PAVEMENT REMOVAL
- CONC DIRECTIONAL ISLAND
- TYPE 2 PED RAMP
- TYPE 21 PED RAMP

STATE OF TEXAS
SCOTT D. ARMSTRONG
69320
LICENSED PROFESSIONAL ENGINEER

SCOTT D. ARMSTRONG, P.E. — 7/7/2010 DATE

SCALE: PLAN - 1":50'

REV. NO.	DATE	DESCRIPTION	BY

ALAMO RMA

PAPE-DAWSON ENGINEERS
555 EAST RAMSEY | SAN ANTONIO, TEXAS 78216 | PHONE: 210.375.9000 FAX: 210.375.9010
TEXAS BOARD OF PROFESSIONAL ENGINEERS, FIRM REGISTRATION # 470

Texas Department of Transportation
© 2010

NOTES:
1. FOR GEOMETRIC DATA SEE HORIZONTAL ALIGNMENT DATA SHEETS.
2. SEE PAVEMENT MARKING SHEETS FOR STRIPING DETAILS.
3. EXISTING FEATURES ARE SHOWN SCREENED BACK.
4. FOR OVERLAY LIMITS, SEE OVERLAY SHEETS.
5. SAW CUTTING WHERE CALLED FOR IN THE PLANS SHALL BE CONSIDERED SUBSIDIARY TO THE VARIOUS PERTINENT BID ITEMS.
6. CONC CURBS FOR DIRECTIONAL ISLANDS ARE SUBSIDIARY TO THE PAY ITEM FOR CONC DIRECTIONAL ISLAND (ITEM 536-2004). QUANTITIES SHOWN ARE FOR CONTRACTORS INFORMATION ONLY.

LOOP 1604

PLAN SHEET

STA. 455+00 TO STA. 460+00

SHEET 16 OF 26

DGN:	FED. RD. DIV. NO.	STATE	FEDERAL AID PROJECT NO.			HIGHWAY NO.
CHK DGN:	6	TEXAS	STP 2011(210)ES			LP 1604
DWG:	DIST.	COUNTY	CONT. NO.	SECT. NO.	JOB NO.	SHEET NO.
CHK DWG:	SAT	BEXAR	2452	01	050	171

Plotted on: 6/25/2010

Design Filename: p:\74\00\04\design\Civil\ROADWAY\740004PP17.dgn

	ITEM	DESCRIPTION	UNIT	QTY
**	0100-2002	PREPARING ROW	STA	5
	0104-2009	REMOVING CONC (RIPRAP)	SY	14
	0110-2001	EXCAVATION (ROADWAY)	CY	166
	0132-2003	EMBANKMENT (FINAL) (ORD COMP) (TY B)	CY	182
	0161-2002	COMPOST MANUF TOPSOIL (BOS) (4")	SY	1207
	0164-2039	DRILL SEEDING (PERM) (URBAN) (CLAY)	SY	1207
*	0168-2001	VEGETATIVE WATERING	SY	1207
	0169-2001	SOIL RETENTION BLANKETS (CL 1) (TY A)	SY	1207
*	0341-2011	D-GR HMA (QCQA) TY-B PG64-22	SY	962
*	0341-2034	D-GR HMA (QCQA) TY-C PG64-22	SY	851

* AREA OF APPLICATION. SEE GENERAL NOTES FOR PAY QUANTITY.

** FOR CONTRACTOR INFORMATION ONLY. ITEMS ARE SUBSIDIARY TO PREP ROW (ITEM 0100-2002).

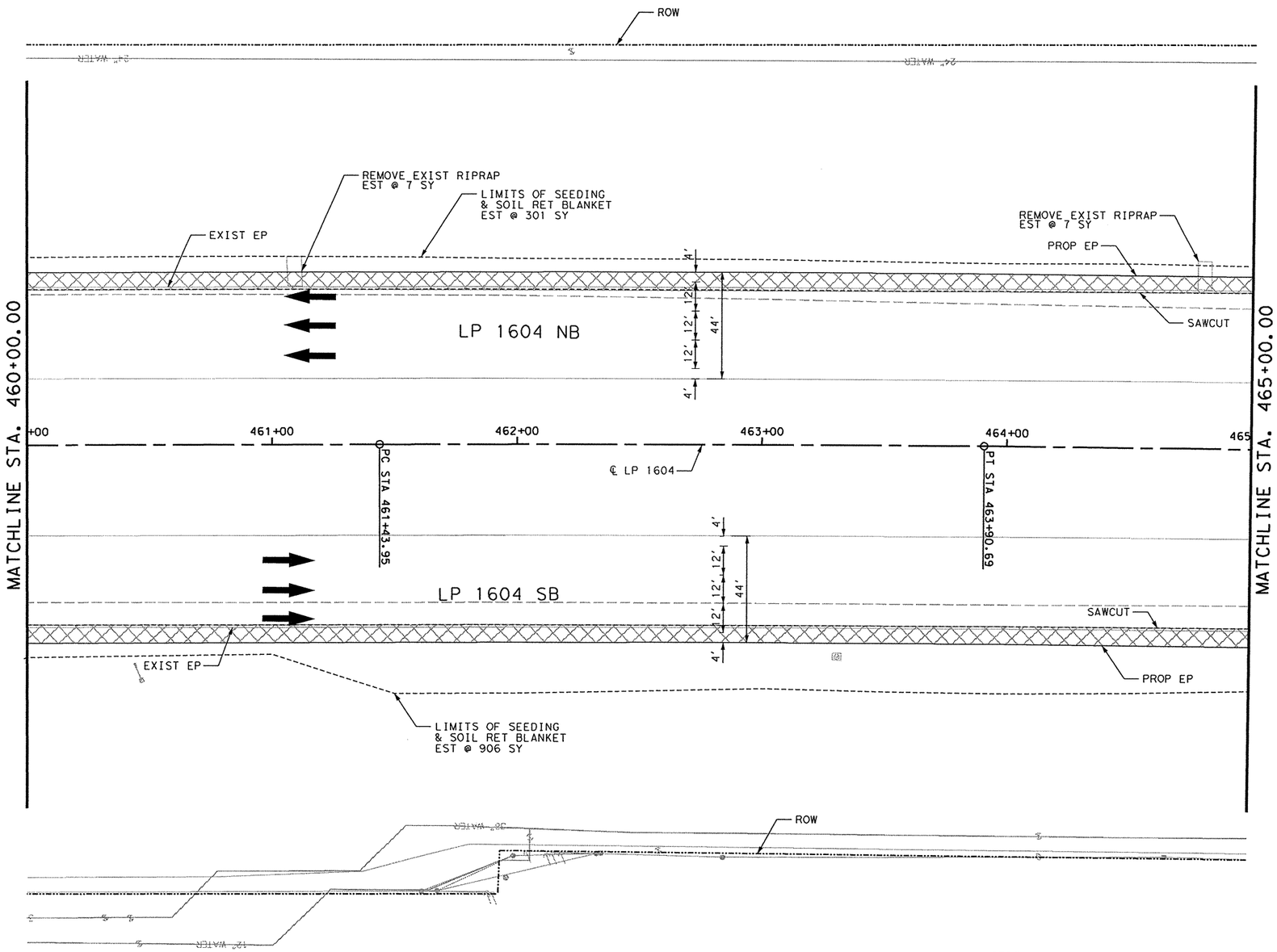

NOTES:
1. FOR GEOMETRIC DATA SEE HORIZONTAL ALIGNMENT DATA SHEETS.
2. SEE PAVEMENT MARKING SHEETS FOR STRIPING DETAILS.
3. EXISTING FEATURES ARE SHOWN SCREENED BACK.
4. FOR OVERLAY LIMITS, SEE OVERLAY SHEETS.
5. SAW CUTTING WHERE CALLED FOR IN THE PLANS SHALL BE CONSIDERED SUBSIDIARY TO THE VARIOUS PERTINENT BID ITEMS.
6. CONC CURBS FOR DIRECTIONAL ISLANDS ARE SUBSIDIARY TO THE PAY ITEM FOR CONC DIRECTIONAL ISLAND (ITEM 536-2004). QUANTITIES SHOWN ARE FOR CONTRACTORS INFORMATION ONLY.

LEGEND

- TRAFFIC FLOW ARROW
- ROW — RIGHT OF WAY LINE
- EP — EDGE OF PAVEMENT
- LIMITS OF SEEDING
- TREE PROTECTION FENCE
- PROP PAVEMENT WIDENING
- PAVEMENT REMOVAL
- CONC DIRECTIONAL ISLAND
- TYPE 2 PED RAMP
- TYPE 21 PED RAMP

STATE OF TEXAS — SCOTT D. ARMSTRONG — 69320 — LICENSED PROFESSIONAL ENGINEER

SCOTT D. ARMSTRONG, P.E. — 6/25/2010 DATE

SCALE: PLAN - 1":50'

REV. NO.	DATE	DESCRIPTION	BY

ALAMO RMA

PAPE-DAWSON ENGINEERS

555 EAST RAMSEY | SAN ANTONIO, TEXAS 78216 | PHONE: 210.375.9000 FAX: 210.375.9010

TEXAS BOARD OF PROFESSIONAL ENGINEERS, FIRM REGISTRATION # 470

Texas Department of Transportation © 2010

LOOP 1604

PLAN SHEET

STA. 460+00 TO STA. 465+00

SHEET 17 OF 26

DGN:	FED. RD. DIV. NO.	STATE	FEDERAL AID PROJECT NO.			HIGHWAY NO.
CHK DGN:	6	TEXAS	STP 2011(210)ES			LP 1604
DWG:	DIST.	COUNTY	CONT. NO.	SECT. NO.	JOB NO.	SHEET NO.
CHK DWG:	SAT	BEXAR	2452	01	050	172

Plotted on: 7/7/2010

Design Filename: p:\74\00\04\design\Civil\ROADWAY\740004PP18.dgn

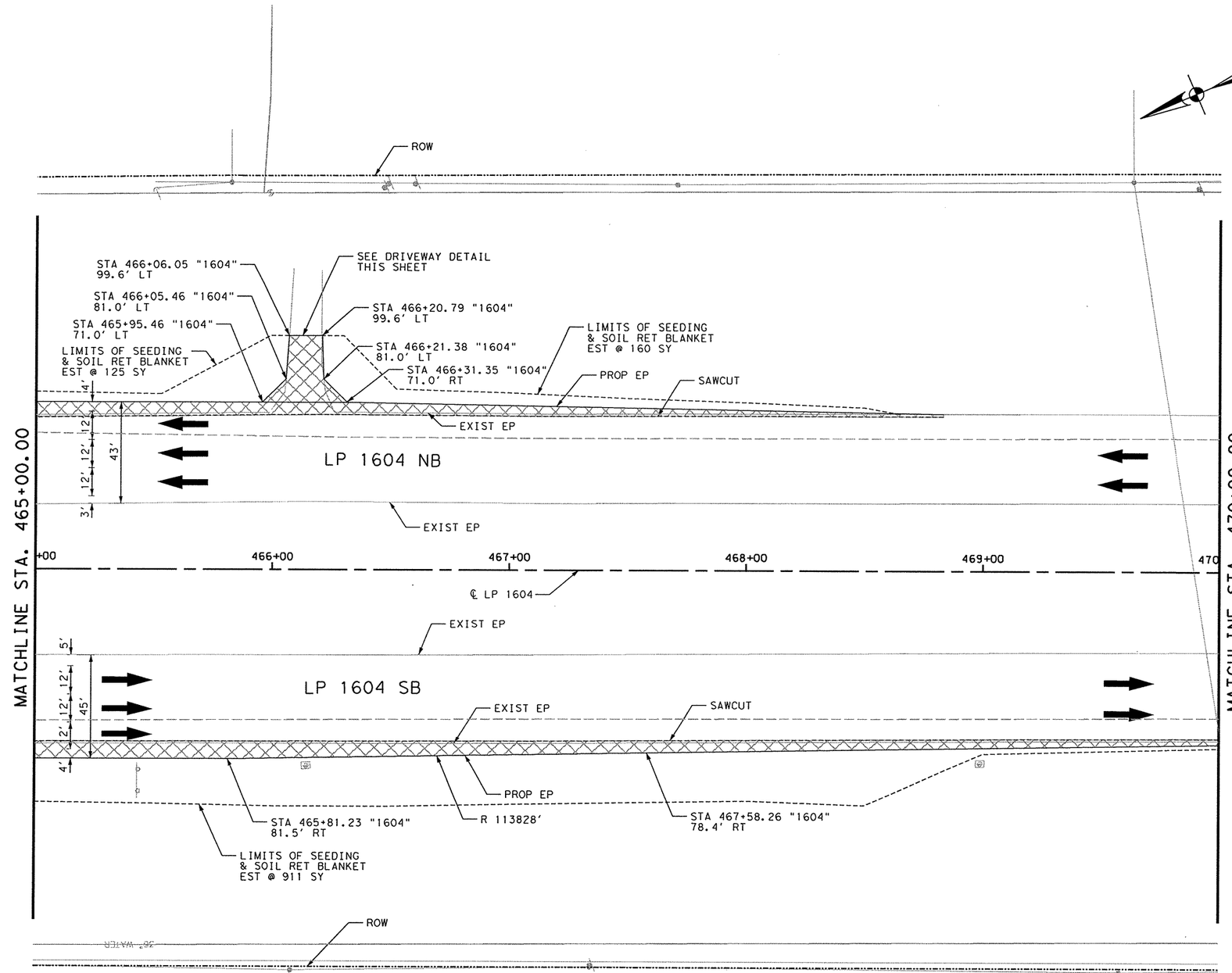

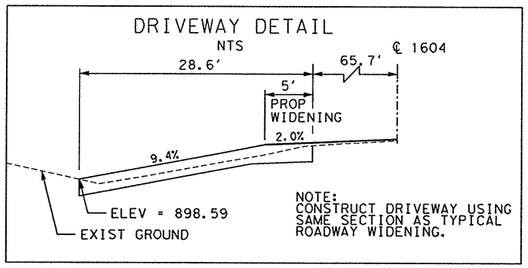

	ITEM	DESCRIPTION	UNIT	QTY
	0100-2002	PREPARING ROW	STA	5
	0110-2001	EXCAVATION (ROADWAY)	CY	129
	0132-2003	EMBANKMENT (FINAL) (ORD COMP) (TY B)	CY	120
	0161-2002	COMPOST MANUF TOPSOIL (BOS) (4")	SY	1196
	0164-2039	DRILL SEEDING (PERM) (URBAN) (CLAY)	SY	1196
*	0168-2001	VEGETATIVE WATERING	SY	1196
	0169-2001	SOIL RETENTION BLANKETS (CL 1) (TY A)	SY	1196
*	0341-2011	D-GR HMA (QCQA) TY-B PG64-22	SY	699
*	0341-2034	D-GR HMA (QCQA) TY-C PG64-22	SY	598

* AREA OF APPLICATION. SEE GENERAL NOTES FOR PAY QUANTITY.

LEGEND

- TRAFFIC FLOW ARROW
- ROW — RIGHT OF WAY LINE
- EP — EDGE OF PAVEMENT
- LIMITS OF SEEDING
- TREE PROTECTION FENCE
- PROP PAVEMENT WIDENING
- PAVEMENT REMOVAL
- CONC DIRECTIONAL ISLAND
- TYPE 2 PED RAMP
- TYPE 21 PED RAMP

STATE OF TEXAS
SCOTT D. ARMSTRONG
69320
LICENSED PROFESSIONAL ENGINEER

SCOTT D. ARMSTRONG, P.E. — 7/7/2010 DATE

SCALE: PLAN - 1":50'

REV. NO.	DATE	DESCRIPTION	BY

ALAMO RMA

PAPE-DAWSON ENGINEERS
555 EAST RAMSEY | SAN ANTONIO, TEXAS 78216 | PHONE: 210.375.9000 FAX: 210.375.9010
TEXAS BOARD OF PROFESSIONAL ENGINEERS, FIRM REGISTRATION # 470

Texas Department of Transportation
© 2010

NOTES:
1. FOR GEOMETRIC DATA SEE HORIZONTAL ALIGNMENT DATA SHEETS.
2. SEE PAVEMENT MARKING SHEETS FOR STRIPING DETAILS.
3. EXISTING FEATURES ARE SHOWN SCREENED BACK.
4. FOR OVERLAY LIMITS, SEE OVERLAY SHEETS.
5. SAW CUTTING WHERE CALLED FOR IN THE PLANS SHALL BE CONSIDERED SUBSIDIARY TO THE VARIOUS PERTINENT BID ITEMS.
6. CONC CURBS FOR DIRECTIONAL ISLANDS ARE SUBSIDIARY TO THE PAY ITEM FOR CONC DIRECTIONAL ISLAND (ITEM 536-2004). QUANTITIES SHOWN ARE FOR CONTRACTORS INFORMATION ONLY.

LOOP 1604

PLAN SHEET

STA. 465+00 TO STA. 470+00

SHEET 18 OF 26

DGN:	FED. RD. DIV. NO.	STATE	FEDERAL AID PROJECT NO.			HIGHWAY NO.
DIR. DGN:	6	TEXAS	STP 2011(210)ES			LP 1604
DWG:	DIST.	COUNTY	CONT. NO.	SECT. NO.	JOB NO.	SHEET NO.
CHK. DWG:	SAT	BEXAR	2452	01	050	173

Plotted on: 6/25/2010

Design Filename: p:\74\00\04\design\Civil\ROADWAY\740004PP19.dgn

	ITEM	DESCRIPTION	UNIT	QTY
	0100-2002	PREPARING ROW	STA	1.5
	0110-2001	EXCAVATION (ROADWAY)	CY	1
	0132-2003	EMBANKMENT (FINAL) (ORD COMP) (TY B)	CY	1
	0161-2002	COMPOST MANUF TOPSOIL (BOS) (4")	SY	50
	0164-2039	DRILL SEEDING (PERM) (URBAN) (CLAY)	SY	50
*	0168-2001	VEGETATIVE WATERING	SY	50
	0169-2001	SOIL RETENTION BLANKETS (CL 1) (TY A)	SY	50
*	0341-2011	D-GR HMA (QCQA) TY-B PG64-22	SY	55
*	0341-2034	D-GR HMA (QCQA) TY-C PG64-22	SY	39

* AREA OF APPLICATION. SEE GENERAL NOTES FOR PAY QUANTITY.

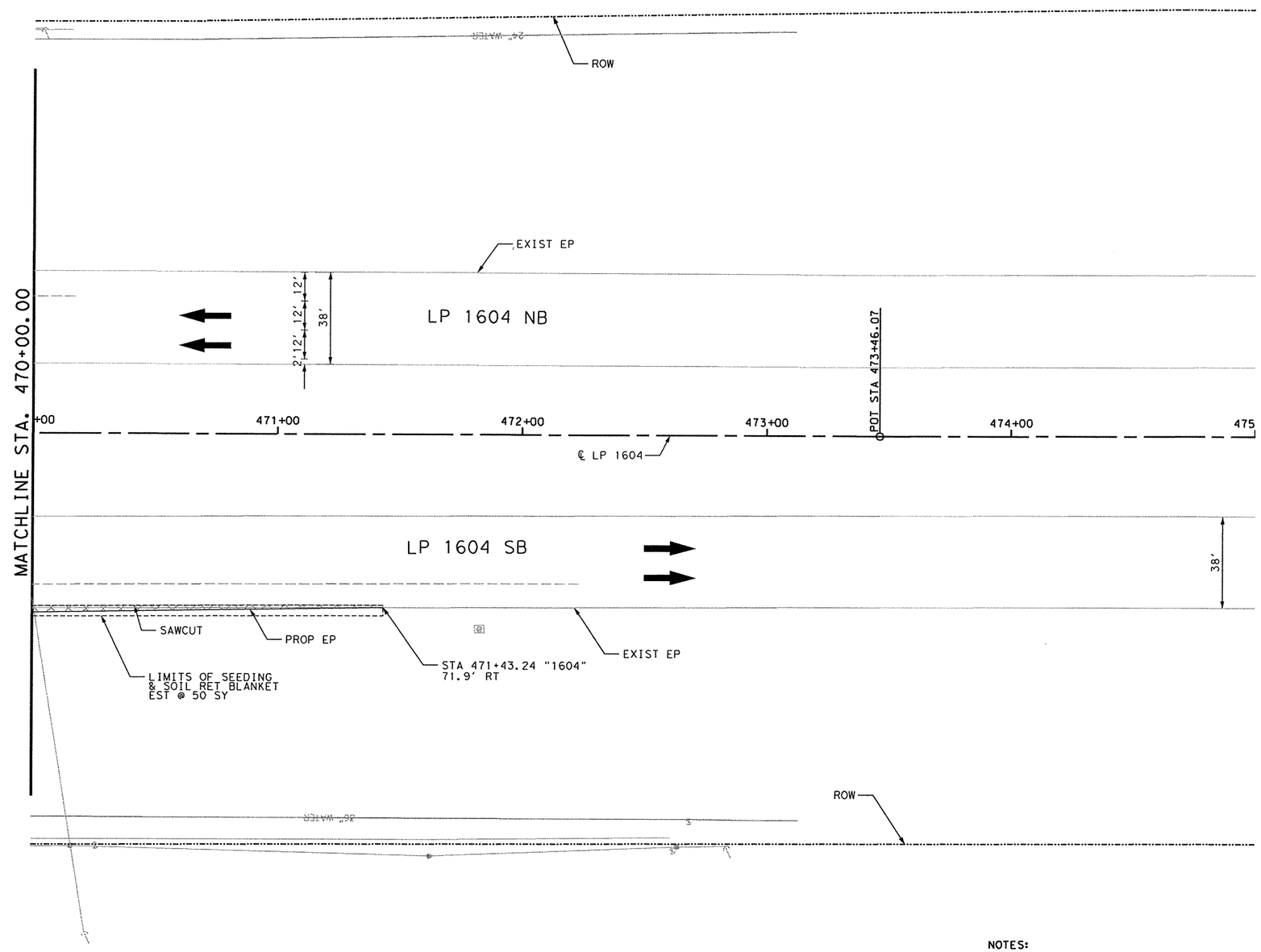

LEGEND

- TRAFFIC FLOW ARROW
- ROW — RIGHT OF WAY LINE
- EP — EDGE OF PAVEMENT
- LIMITS OF SEEDING
- TREE PROTECTION FENCE
- PROP PAVEMENT WIDENING
- PAVEMENT REMOVAL
- CONC DIRECTIONAL ISLAND
- TYPE 2 PED RAMP
- TYPE 21 PED RAMP

STATE OF TEXAS — SCOTT D. ARMSTRONG — 69320 — LICENSED PROFESSIONAL ENGINEER

SCOTT D. ARMSTRONG, P.E. — 6/25/2010 DATE

SCALE: PLAN - 1":50'

REV. NO.	DATE	DESCRIPTION	BY

ALAMO RMA

PAPE-DAWSON ENGINEERS

555 EAST RAMSEY | SAN ANTONIO, TEXAS 78216 | PHONE: 210.375.9000 FAX: 210.375.9010

TEXAS BOARD OF PROFESSIONAL ENGINEERS, FIRM REGISTRATION # 470

Texas Department of Transportation ©2010

LOOP 1604

PLAN SHEET

STA. 470+00 TO STA. 475+00

SHEET 19 OF 26

NOTES:
1. FOR GEOMETRIC DATA SEE HORIZONTAL ALIGNMENT DATA SHEETS.
2. SEE PAVEMENT MARKING SHEETS FOR STRIPING DETAILS.
3. EXISTING FEATURES ARE SHOWN SCREENED BACK.
4. FOR OVERLAY LIMITS, SEE OVERLAY SHEETS.
5. SAW CUTTING WHERE CALLED FOR IN THE PLANS SHALL BE CONSIDERED SUBSIDIARY TO THE VARIOUS PERTINENT BID ITEMS.
6. CONC CURBS FOR DIRECTIONAL ISLANDS ARE SUBSIDIARY TO THE PAY ITEM FOR CONC DIRECTIONAL ISLAND (ITEM 536-2004). QUANTITIES SHOWN ARE FOR CONTRACTORS INFORMATION ONLY.

DGN:	FED. RD. DIV. NO.	STATE	FEDERAL AID PROJECT NO.			HIGHWAY NO.
CHK DGN:	6	TEXAS	STP 2011(210)ES			LP 1604
DWG:	DIST.	COUNTY	CONT. NO.	SECT. NO.	JOB NO.	SHEET NO.
CHK DWG:	SAT	BEXAR	2452	01	050	174

	ITEM	DESCRIPTION	UNIT	QTY
	0100-2002	PREPARING ROW	STA	8
	0110-2001	EXCAVATION (ROADWAY)	CY	257
	0132-2003	EMBANKMENT (FINAL) (ORD COMP) (TY B)	CY	121
	0161-2002	COMPOST MANUF TOPSOIL (BOS) (4")	SY	400
	0164-2039	DRILL SEEDING (PERM) (URBAN) (CLAY)	SY	400
*	0168-2001	VEGETATIVE WATERING	SY	400
	0169-2001	SOIL RETENTION BLANKETS (CL 1) (TY A)	SY	400
*	0341-2011	D-GR HMA (QCQA) TY-B PG64-22	SY	1388
*	0341-2034	D-GR HMA (QCQA) TY-C PG64-22	SY	1320

* AREA OF APPLICATION. SEE GENERAL NOTES FOR PAY QUANTITY.

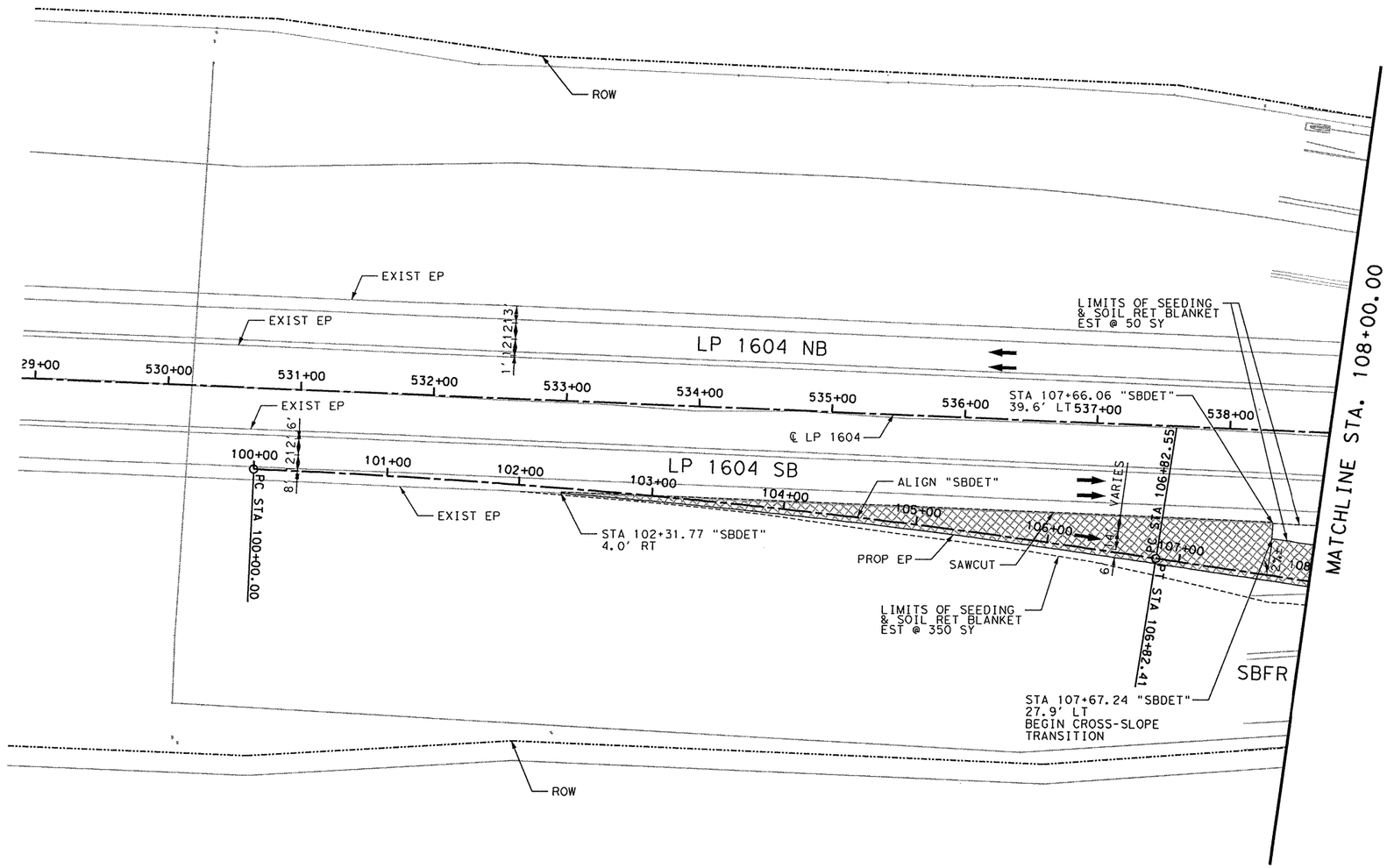

LEGEND

- TRAFFIC FLOW ARROW
- ROW — RIGHT OF WAY LINE
- EP — EDGE OF PAVEMENT
- ------- LIMITS OF SEEDING
- —x— TREE PROTECTION FENCE
- PROP PAVEMENT WIDENING
- PAVEMENT REMOVAL
- CONC DIRECTIONAL ISLAND
- TYPE 2 PED RAMP
- TYPE 21 PED RAMP

STATE OF TEXAS
SCOTT D. ARMSTRONG
69320
LICENSED PROFESSIONAL ENGINEER

SCOTT D. ARMSTRONG, P.E. — 7/7/2010 DATE

SCALE: PLAN - 1":100'

REV. NO.	DATE	DESCRIPTION	BY

ALAMO RMA

PAPE-DAWSON ENGINEERS
555 EAST RAMSEY | SAN ANTONIO, TEXAS 78216 | PHONE: 210.375.9000 FAX: 210.375.9010
TEXAS BOARD OF PROFESSIONAL ENGINEERS, FIRM REGISTRATION # 470

Texas Department of Transportation © 2010

LOOP 1604

PLAN SHEET

SBFR

STA. 100+00 TO STA. 108+00

SHEET 20 OF 26

DGN:	FED. RD. DIV. NO.	STATE	FEDERAL AID PROJECT NO.			HIGHWAY NO.
CHK DGN:	6	TEXAS	STP 2011(210)ES			LP 1604
DW:	DIST.	COUNTY	CONT. NO.	SECT. NO.	JOB NO.	SHEET NO.
CHK DW:	SAT	BEXAR	2452	01	050	175

NOTES:
1. FOR GEOMETRIC DATA SEE HORIZONTAL ALIGNMENT DATA SHEETS.
2. SEE PAVEMENT MARKING SHEETS FOR STRIPING DETAILS.
3. EXISTING FEATURES ARE SHOWN SCREENED BACK.
4. FOR OVERLAY LIMITS, SEE OVERLAY SHEETS.
5. SAW CUTTING WHERE CALLED FOR IN THE PLANS SHALL BE CONSIDERED SUBSIDIARY TO THE VARIOUS PERTINENT BID ITEMS.
6. CONC CURBS FOR DIRECTIONAL ISLANDS ARE SUBSIDIARY TO THE PAY ITEM FOR CONC DIRECTIONAL ISLAND (ITEM 536-2004). QUANTITIES SHOWN ARE FOR CONTRACTORS INFORMATION ONLY.

Plotted on: 7/7/2010

Design Filename: p:\74\00\04\design\Civil\ROADWAY\740004PP20.dgn

Plotted on: 7/7/2010

Design Filename: p:\74\00\04\design\civil\ROADWAY\740004PP21.dgn

ITEM	DESCRIPTION	UNIT	QTY
0100-2002	PREPARING ROW	STA	10
0106-2002	OBLITERATING ABANDONED ROAD	SY	1800
0110-2001	EXCAVATION (ROADWAY)	CY	900
0132-2003	EMBANKMENT (FINAL) (ORD COMP) (TY B)	CY	1983
0161-2002	COMPOST MANUF TOPSOIL (BOS) (4")	SY	3518
0164-2039	DRILL SEEDING (PERM) (URBAN) (CLAY)	SY	3518
* 0168-2001	VEGETATIVE WATERING	SY	3518
0169-2001	SOIL RETENTION BLANKETS (CL 1) (TY A)	SY	3518
* 0341-2011	D-GR HMA (QCQA) TY-B PG64-22	SY	1764
* 0341-2034	D-GR HMA (QCQA) TY-C PG64-22	SY	1653

* AREA OF APPLICATION. SEE GENERAL NOTES FOR PAY QUANTITY.

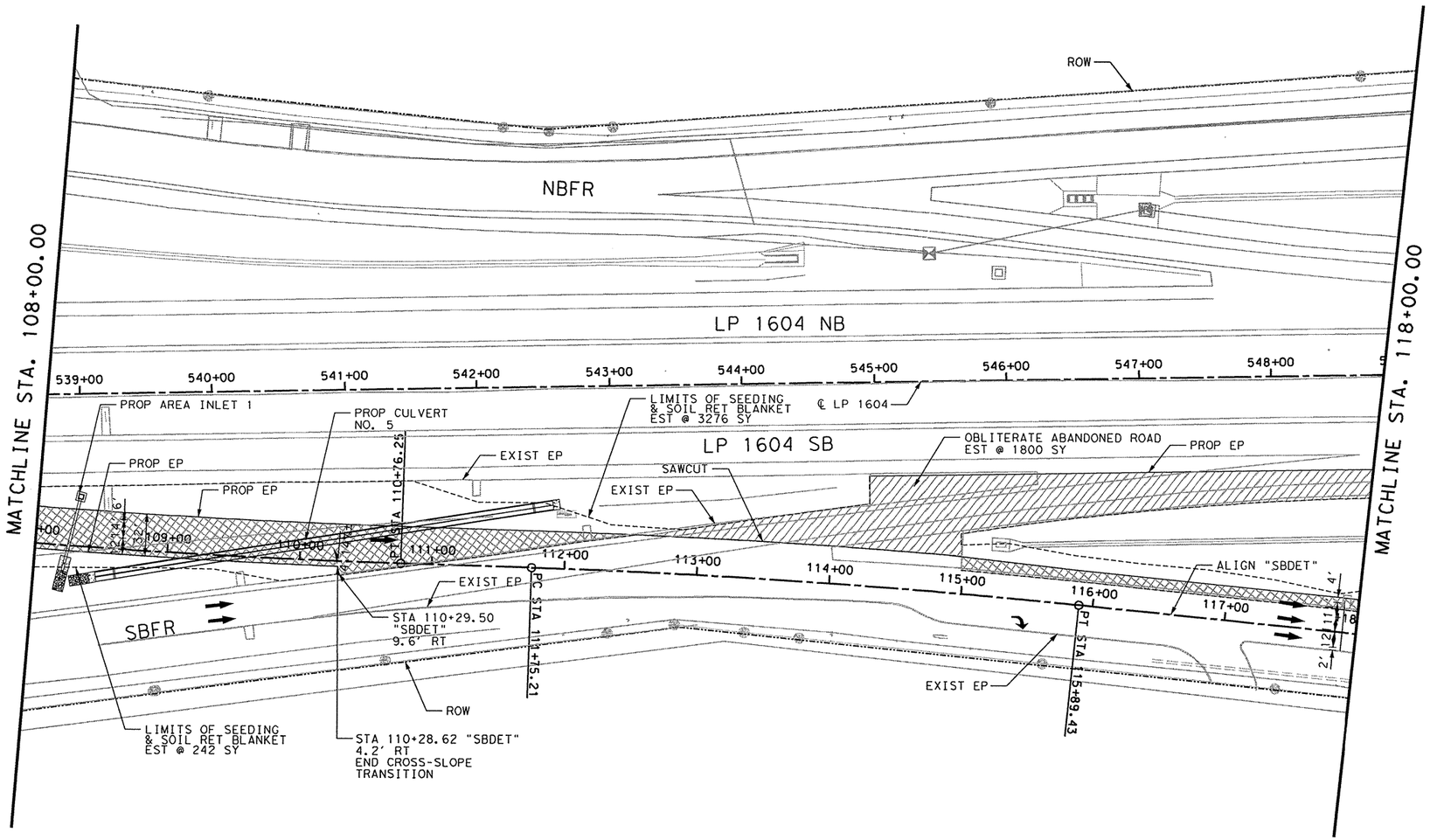

LEGEND

- TRAFFIC FLOW ARROW
- ROW — RIGHT OF WAY LINE
- EP — EDGE OF PAVEMENT
- LIMITS OF SEEDING
- TREE PROTECTION FENCE
- PROP PAVEMENT WIDENING
- PAVEMENT REMOVAL
- CONC DIRECTIONAL ISLAND
- TYPE 2 PED RAMP
- TYPE 21 PED RAMP

STATE OF TEXAS — SCOTT D. ARMSTRONG — 69320 — LICENSED PROFESSIONAL ENGINEER

SCOTT D. ARMSTRONG, P.E. — 7/7/2010 DATE

SCALE: PLAN - 1":100'

REV. NO.	DATE	DESCRIPTION	BY

ALAMO RMA

PAPE-DAWSON ENGINEERS

555 EAST RAMSEY | SAN ANTONIO, TEXAS 78216 | PHONE: 210.375.9000 FAX: 210.375.9010

TEXAS BOARD OF PROFESSIONAL ENGINEERS, FIRM REGISTRATION # 470

Texas Department of Transportation ©2010

NOTES:
1. FOR GEOMETRIC DATA SEE HORIZONTAL ALIGNMENT DATA SHEETS.
2. SEE PAVEMENT MARKING SHEETS FOR STRIPING DETAILS.
3. EXISTING FEATURES ARE SHOWN SCREENED BACK.
4. FOR OVERLAY LIMITS, SEE OVERLAY SHEETS.
5. SAW CUTTING WHERE CALLED FOR IN THE PLANS SHALL BE CONSIDERED SUBSIDIARY TO THE VARIOUS PERTINENT BID ITEMS.
6. CONC CURBS FOR DIRECTIONAL ISLANDS ARE SUBSIDIARY TO THE PAY ITEM FOR CONC DIRECTIONAL ISLAND (ITEM 536-2004). QUANTITIES SHOWN ARE FOR CONTRACTORS INFORMATION ONLY.

LOOP 1604

PLAN SHEET

SBFR

STA. 108+00 TO STA. 118+00

DGN:	FED. RD. DIV. NO.	STATE	FEDERAL AID PROJECT NO.			HIGHWAY NO.
CHK DGN:	6	TEXAS	STP 2011(210)ES			LP 1604
DWG:	DIST.	COUNTY	CONT. NO.	SECT. NO.	JOB NO.	SHEET NO.
CHK DWG:	SAT	BEXAR	2452	01	050	176

Plotted on: 8/31/2010

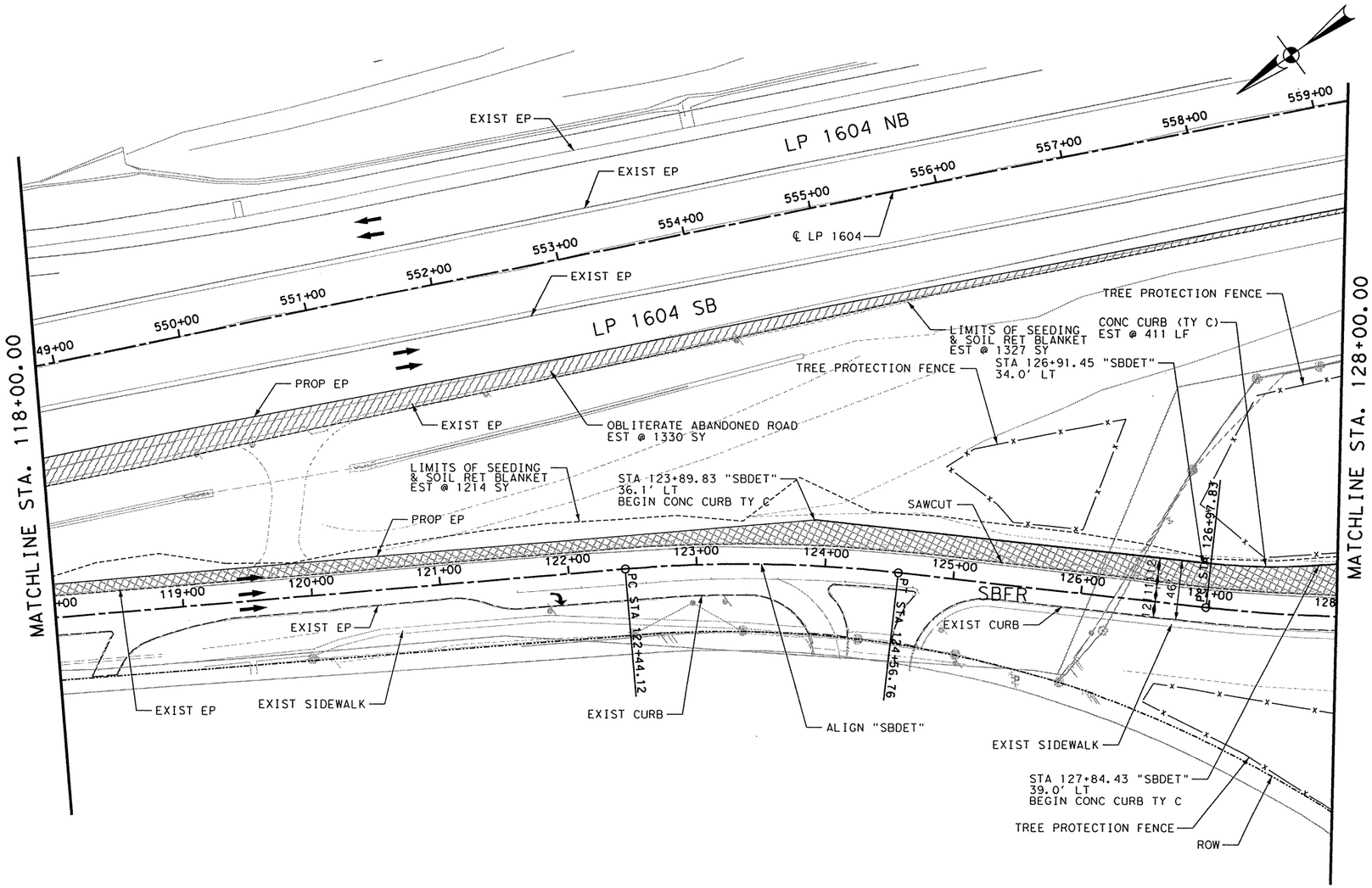

	ITEM	DESCRIPTION	UNIT	QTY
	0100-2002	PREPARING ROW	STA	10
	0106-2002	OBLITERATING ABANDONED ROAD	SY	1330
	0110-2001	EXCAVATION (ROADWAY)	CY	764
	0132-2003	EMBANKMENT (FINAL) (ORD COMP) (TY B)	CY	107
	0161-2002	COMPOST MANUF TOPSOIL (BOS) (4")	SY	2535
	0164-2039	DRILL SEEDING (PERM) (URBAN) (CLAY)	SY	2535
*	0168-2001	VEGETATIVE WATERING	SY	2535
	0169-2001	SOIL RETENTION BLANKETS (CL 1) (TY A)	SY	2535
*	0341-2011	D-GR HMA (QCQA) TY-B PG64-22	SY	1766
*	0341-2034	D-GR HMA (QCQA) TY-C PG64-22	SY	1654
	0529-2014	CONC CURB (TY C)	LF	411
	1018-2002	TREE PROTECTION	AC	0.57

* AREA OF APPLICATION. SEE GENERAL NOTES FOR PAY QUANTITY.

LEGEND

- TRAFFIC FLOW ARROW
- ROW — RIGHT OF WAY LINE
- EP — EDGE OF PAVEMENT
- LIMITS OF SEEDING
- TREE PROTECTION FENCE
- PROP PAVEMENT WIDENING
- PAVEMENT REMOVAL
- CONC DIRECTIONAL ISLAND
- TYPE 2 PED RAMP
- TYPE 21 PED RAMP

STATE OF TEXAS
SCOTT D. ARMSTRONG
69320
LICENSED
PROFESSIONAL ENGINEER

SCOTT D. ARMSTRONG, P.E. — 8/31/2010 DATE

SCALE: PLAN - 1":100'

CLEARING NOTE:
ALL AREAS BEING CLEARED BETWEEN EXISTING EDGE OF PAVEMENT TO TREE PROTECTION FENCING SHALL BE CONSIDERED POTENTIAL HABITAT OF GOLDEN-CHEEKED WARBLER AND CANNOT BE CLEARED DURING THE NESTING SEASON. (SEPT 2nd TO FEB 28tth)

NOTES:
1. FOR GEOMETRIC DATA SEE HORIZONTAL ALIGNMENT DATA SHEETS.
2. SEE PAVEMENT MARKING SHEETS FOR STRIPING DETAILS.
3. EXISTING FEATURES ARE SHOWN SCREENED BACK.
4. FOR OVERLAY LIMITS, SEE OVERLAY SHEETS.
5. SAW CUTTING WHERE CALLED FOR IN THE PLANS SHALL BE CONSIDERED SUBSIDIARY TO THE VARIOUS PERTINENT BID ITEMS.
6. CONC CURBS FOR DIRECTIONAL ISLANDS ARE SUBSIDIARY TO THE PAY ITEM FOR CONC DIRECTIONAL ISLAND (ITEM 536-2004). QUANTITIES SHOWN ARE FOR CONTRACTORS INFORMATION ONLY.

REV. NO.	DATE	DESCRIPTION	BY

ALAMO RMA

PAPE-DAWSON ENGINEERS
555 EAST RAMSEY | SAN ANTONIO, TEXAS 78216 | PHONE: 210.375.9000 FAX: 210.375.9010
TEXAS BOARD OF PROFESSIONAL ENGINEERS, FIRM REGISTRATION # 470

Texas Department of Transportation
© 2010

LOOP 1604

PLAN SHEET

SBFR

STA. 118+00 TO STA. 128+00

SHEET 22 OF 26

DGN:	FED. RD. DIV. NO.	STATE	FEDERAL AID PROJECT NO.			HIGHWAY NO.
CHK DGN:	6	TEXAS	STP 2011(210)ES			LP 1604
DWG:	DIST.	COUNTY	CONT. NO.	SECT. NO.	JOB NO.	SHEET NO.
CHK DWG:	SAT	BEXAR	2452	01	050	177

Design Filename: p:\74\00\04\design\civil\ROADWAY\740004PP22.dgn

Plotted on: 8/31/2010

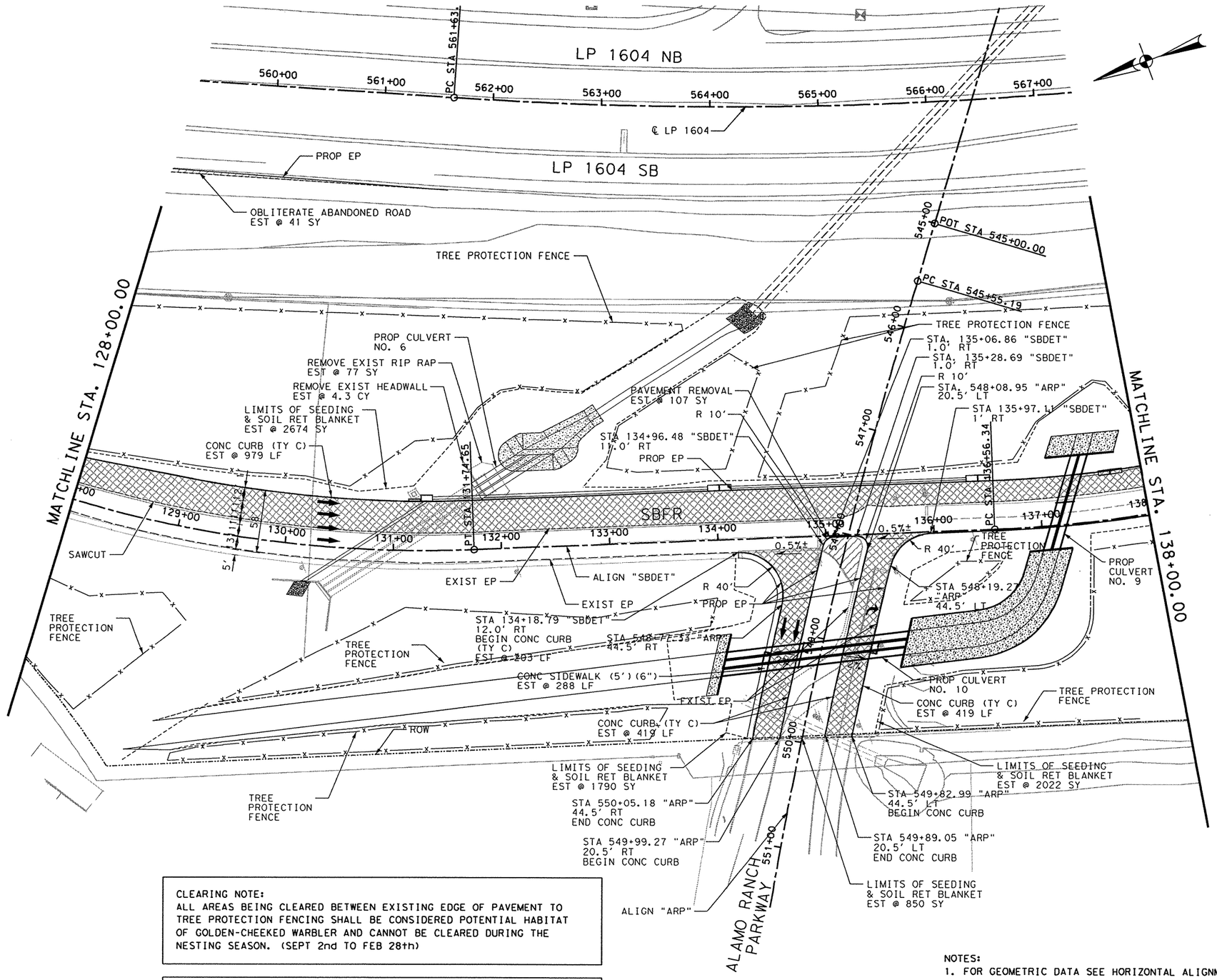

	ITEM	DESCRIPTION	UNIT	QTY
**	0100-2002	PREPARING ROW	STA	8
**	0104-2009	REMOVING CONC (RIPRAP)	SY	77
**	0104-2021	REMOVING CONC (CURB)	LF	125
**	0104-2024	REMOVING CONC (RETAINING WALLS)	CY	4.3
	0106-2002	OBLITERATING ABANDONED ROAD	SY	41
	0110-2001	EXCAVATION (ROADWAY)	CY	1251
	0132-2003	EMBANKMENT (FINAL)(ORD COMP)(TY B)	CY	453
	0161-2002	COMPOST MANUF TOPSOIL (BOS) (4")	SY	7336
	0164-2039	DRILL SEEDING (PERM) (URBAN) (CLAY)	SY	7336
*	0168-2001	VEGETATIVE WATERING	SY	7336
	0169-2001	SOIL RETENTION BLANKETS (CL 1) (TY A)	SY	7336
*	0341-2011	D-GR HMA(QCQA) TY-B PG64-22	SY	4712
*	0341-2034	D-GR HMA(QCQA) TY-C PG64-22	SY	4489
	0529-2014	CONC CURB (TY C)	LF	2020
	0531-2003	CONC SIDEWALKS (5') (6")	LF	288
	1018-2002	TREE PROTECTION	AC	3.47

* AREA OF APPLICATION. SEE GENERAL NOTES FOR PAY QUANTITY.

** FOR CONTRACTOR INFORMATION ONLY. ITEMS ARE SUBSIDIARY TO PREP ROW (ITEM 0100-2002).

LEGEND

- TRAFFIC FLOW ARROW
- ROW — RIGHT OF WAY LINE
- EP — EDGE OF PAVEMENT
- LIMITS OF SEEDING
- TREE PROTECTION FENCE
- PROP PAVEMENT WIDENING
- PAVEMENT REMOVAL
- CONC DIRECTIONAL ISLAND
- TYPE 2 PED RAMP
- TYPE 21 PED RAMP

CLEARING NOTE:
ALL AREAS BEING CLEARED BETWEEN EXISTING EDGE OF PAVEMENT TO TREE PROTECTION FENCING SHALL BE CONSIDERED POTENTIAL HABITAT OF GOLDEN-CHEEKED WARBLER AND CANNOT BE CLEARED DURING THE NESTING SEASON. (SEPT 2nd TO FEB 28th)

CROSS-SLOPE TRANSITION NOTE:
ALAMO RANCH PARKWAY - EASTBOUND LANES -
STA. 135+97.11 "SBDET" BEGIN TRANSITION (0.50%±)
STA. 549+10 "ARP" END TRANSITION (2%)
ALAMO RANCH PARKWAY - WESTBOUND LANES -
STA. 134+18.79 "SBDET" BEGIN TRANSITION (0.50%±)
STA. 549+20 "ARP" END TRANSITION (2%)

NOTES:
1. FOR GEOMETRIC DATA SEE HORIZONTAL ALIGNMENT DATA SHEETS.
2. SEE PAVEMENT MARKING SHEETS FOR STRIPING DETAILS.
3. EXISTING FEATURES ARE SHOWN SCREENED BACK.
4. FOR OVERLAY LIMITS, SEE OVERLAY SHEETS.
5. SAW CUTTING WHERE CALLED FOR IN THE PLANS SHALL BE CONSIDERED SUBSIDIARY TO THE VARIOUS PERTINENT BID ITEMS.
6. CONC CURBS FOR DIRECTIONAL ISLANDS ARE SUBSIDIARY TO THE PAY ITEM FOR CONC DIRECTIONAL ISLAND (ITEM 536-2004). QUANTITIES SHOWN ARE FOR CONTRACTORS INFORMATION ONLY.

STATE OF TEXAS
SCOTT D. ARMSTRONG
69320
LICENSED PROFESSIONAL ENGINEER

SCOTT D. ARMSTRONG, P.E. — 8/31/2010 DATE

SCALE: PLAN - 1":100'

REV. NO.	DATE	DESCRIPTION	BY

ALAMO RMA

PAPE-DAWSON ENGINEERS
555 EAST RAMSEY | SAN ANTONIO, TEXAS 78216 | PHONE: 210.375.9000 FAX: 210.375.9010
TEXAS BOARD OF PROFESSIONAL ENGINEERS, FIRM REGISTRATION # 470

Texas Department of Transportation
© 2010

LOOP 1604

PLAN SHEET

SBFR

STA. 128+00 TO STA. 138+00

SHEET 23 OF 26

DGN:	FED. RD. DIV. NO.	STATE	FEDERAL AID PROJECT NO.			HIGHWAY NO.
CHK DGN:	6	TEXAS	STP 2011(210)ES			LP 1604
DWG:	DIST.	COUNTY	CONT. NO.	SECT. NO.	JOB NO.	SHEET NO.
CHK DWG:	SAT	BEXAR	2452	01	050	178

Design Filename: p:\74\00\04\design\civil\ROADWAY\740004PP23.dgn

Plotted on: 8/31/2010

Design Filename: p:\74\00\04\design\civil\ROADWAY\740004PP24.dgn

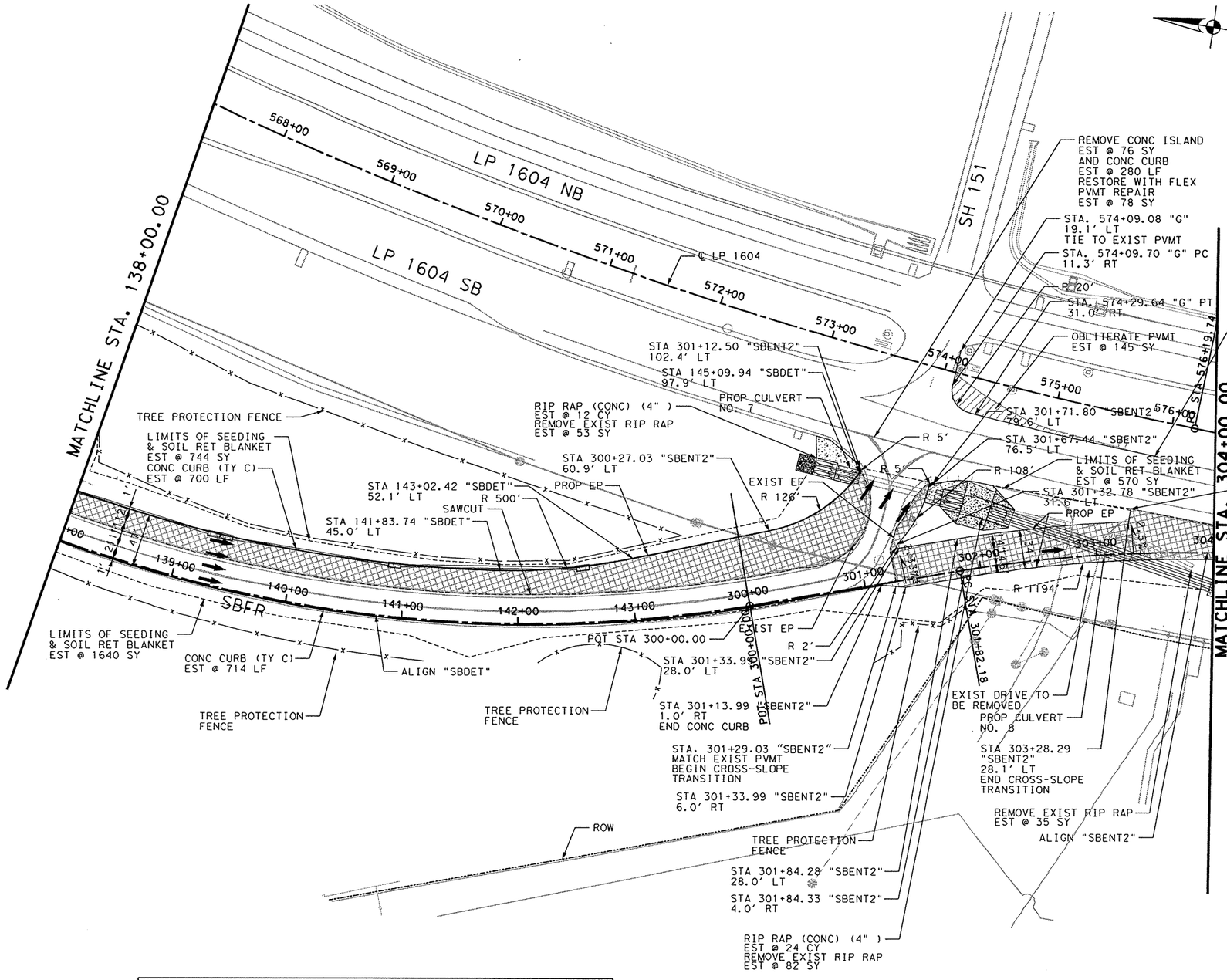

	ITEM	DESCRIPTION	UNIT	QTY
**	0104-2009	REMOVING CONC (RIPRAP)	SY	248
**	0104-2021	REMOVING CONC (CURB)	LF	442
	0106-2002	OBLITERATING ABANDONED ROAD	SY	145
	0110-2001	EXCAVATION (ROADWAY)	CY	1154
	0132-2003	EMBANKMENT (FINAL) (ORD COMP) (TY B)	CY	1363
	0161-2002	COMPOST MANUF TOPSOIL (BOS) (4")	SY	2954
	0164-2039	DRILL SEEDING (PERM) (URBAN) (CLAY)	SY	2954
*	0168-2001	VEGETATIVE WATERING	SY	2954
	0169-2001	SOIL RETENTION BLANKETS (CL 1) (TY A)	SY	2954
*	0341-2011	D-GR HMA (QCQA) TY-B PG64-22	SY	3704
*	0341-2034	D-GR HMA (QCQA) TY-C PG64-22	SY	3543
	0351-2006	FLEXIBLE PAVEMENT STRUCTURE REPAIR (10")	SY	78
	0432-2001	RIPRAP (CONC) (4 IN)	CY	36
	0529-2014	CONC CURB (TY C)	LF	1414
	1018-2002	TREE PROTECTION	AC	1.56

* AREA OF APPLICATION. SEE GENERAL NOTES FOR PAY QUANTITY.
** FOR CONTRACTOR INFORMATION ONLY. ITEMS ARE SUBSIDIARY TO

LEGEND

- TRAFFIC FLOW ARROW
- ROW RIGHT OF WAY LINE
- EP EDGE OF PAVEMENT
- LIMITS OF SEEDING
- TREE PROTECTION FENCE
- PROP PAVEMENT WIDENING
- PAVEMENT REMOVAL
- CONC DIRECTIONAL ISLAND
- TYPE 2 PED RAMP
- TYPE 21 PED RAMP

CLEARING NOTE:
ALL AREAS BEING CLEARED BETWEEN EXISTING EDGE OF PAVEMENT TO TREE PROTECTION FENCING SHALL BE CONSIDERED POTENTIAL HABITAT OF GOLDEN-CHEEKED WARBLER AND CANNOT BE CLEARED DURING THE NESTING SEASON. (SEPT 2nd TO FEB 28th)

NOTES:
1. FOR GEOMETRIC DATA SEE HORIZONTAL ALIGNMENT DATA SHEETS.
2. SEE PAVEMENT MARKING SHEETS FOR STRIPING DETAILS.
3. EXISTING FEATURES ARE SHOWN SCREENED BACK.
4. FOR OVERLAY LIMITS, SEE OVERLAY SHEETS.
5. SAW CUTTING WHERE CALLED FOR IN THE PLANS SHALL BE CONSIDERED SUBSIDIARY TO THE VARIOUS PERTINENT BID ITEMS.
6. CONC CURBS FOR DIRECTIONAL ISLANDS ARE SUBSIDIARY TO THE PAY ITEM FOR CONC DIRECTIONAL ISLAND (ITEM 536-2004). QUANTITIES SHOWN ARE FOR CONTRACTORS INFORMATION ONLY.

STATE OF TEXAS
SCOTT D. ARMSTRONG
69320
LICENSED PROFESSIONAL ENGINEER

SCOTT D. ARMSTRONG, P.E. — 8/31/2010 DATE

SCALE: PLAN - 1":100'

REV. NO.	DATE	DESCRIPTION	BY

ALAMO RMA

PAPE-DAWSON ENGINEERS
555 EAST RAMSEY | SAN ANTONIO, TEXAS 78216 | PHONE: 210.375.9000 FAX: 210.375.9010
TEXAS BOARD OF PROFESSIONAL ENGINEERS, FIRM REGISTRATION # 470

Texas Department of Transportation
© 2010

LOOP 1604

PLAN SHEET

SBFR

STA. 138+00 "SBDET" TO STA. 304+00 "SBENT2"

SHEET 24 OF 26

DGN:	FED. RD. DIV. NO.	STATE	FEDERAL AID PROJECT NO.			HIGHWAY NO.
CHK DGN:	6	TEXAS	STP 2011(210)ES			LP 1604
DWG:	DIST.	COUNTY	CONT. NO.	SECT. NO.	JOB NO.	SHEET NO.
CHK DWG:	SAT	BEXAR	2452	01	050	179

Plotted on: 8/31/2010

Design Filename: p:\74\00\04\design\civil\ROADWAY\740004PP25.dgn

ITEM	DESCRIPTION	UNIT	QTY
0100-2002	PREPARING ROW	STA	9
0104-2009	REMOVING CONC (RIPRAP)	SY	16
0110-2001	EXCAVATION (ROADWAY)	CY	504
0132-2003	EMBANKMENT (FINAL) (ORD COMP) (TY B)	CY	733
0161-2002	COMPOST MANUF TOPSOIL (BOS) (4")	SY	1536
0164-2039	DRILL SEEDING (PERM) (URBAN) (CLAY)	SY	1536
* 0168-2001	VEGETATIVE WATERING	SY	1536
0169-2001	SOIL RETENTION BLANKETS (CL 1) (TY A)	SY	1536
* 0341-2011	D-GR HMA (QCQA) TY-B PG64-22	SY	1316
* 0341-2034	D-GR HMA (QCQA) TY-C PG64-22	SY	1220
0464-2007	RC PIPE (CL III) (30 IN)	LF	26
0467-2290	SET (TY II) (30 IN) (RCP) (6:1) (P)	EA	1
1018-2002	TREE PROTECTION	AC	0.22

* AREA OF APPLICATION. SEE GENERAL NOTES FOR PAY QUANTITY.

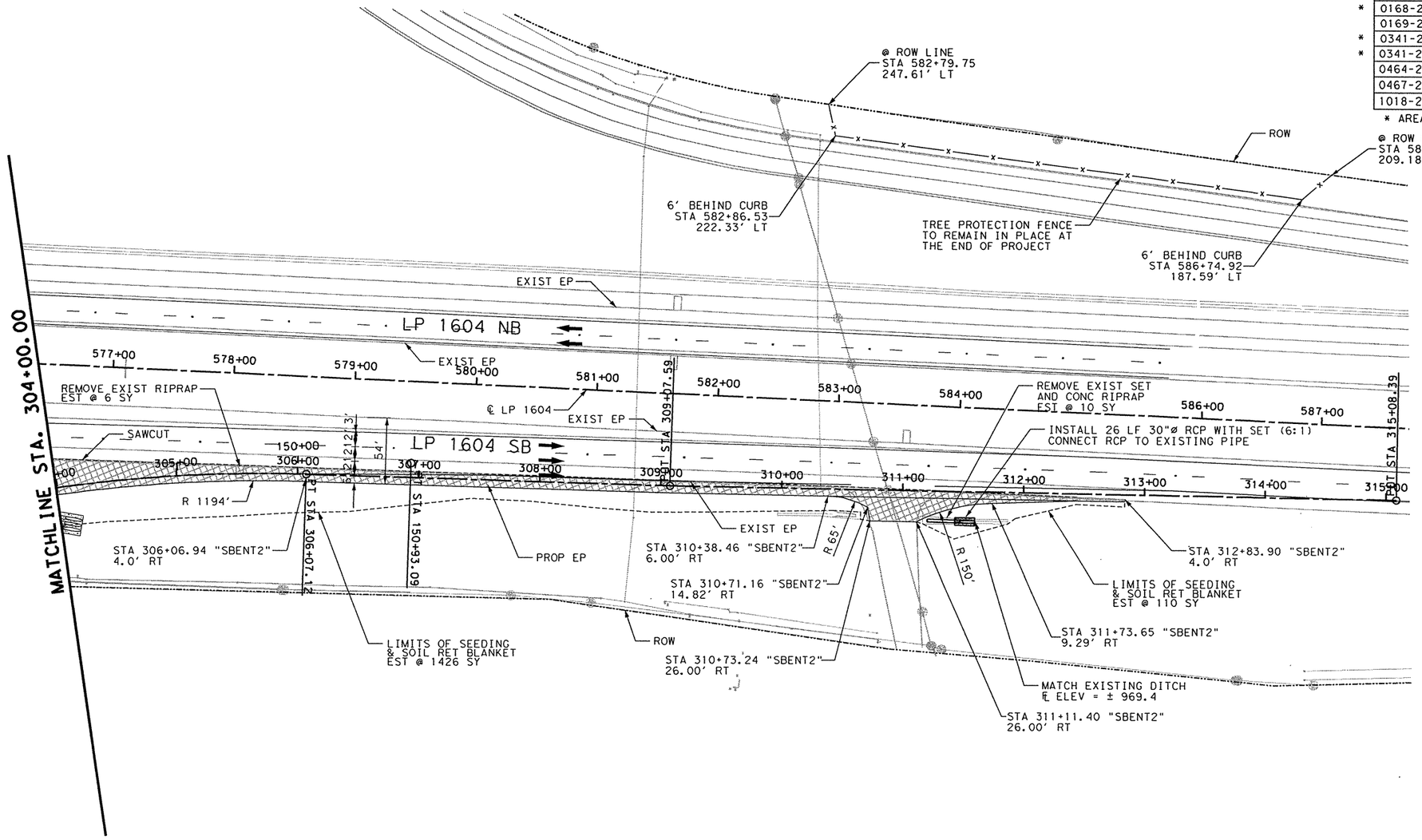

LEGEND

- TRAFFIC FLOW ARROW
- ROW — RIGHT OF WAY LINE
- EP — EDGE OF PAVEMENT
- LIMITS OF SEEDING
- TREE PROTECTION FENCE
- PROP PAVEMENT WIDENING
- PAVEMENT REMOVAL
- CONC DIRECTIONAL ISLAND
- TYPE 2 PED RAMP
- TYPE 21 PED RAMP

DRIVEWAY DETAIL

NTS

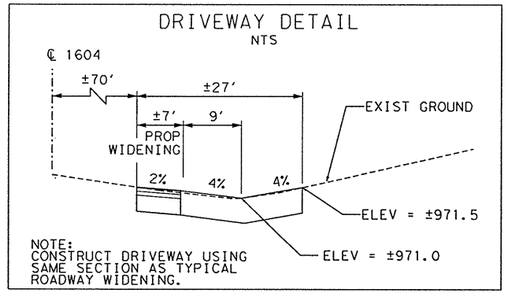

NOTE:
CONSTRUCT DRIVEWAY USING SAME SECTION AS TYPICAL ROADWAY WIDENING.

NOTES:
1. FOR GEOMETRIC DATA SEE HORIZONTAL ALIGNMENT DATA SHEETS.
2. SEE PAVEMENT MARKING SHEETS FOR STRIPING DETAILS.
3. EXISTING FEATURES ARE SHOWN SCREENED BACK.
4. FOR OVERLAY LIMITS, SEE OVERLAY SHEETS.
5. SAW CUTTING WHERE CALLED FOR IN THE PLANS SHALL BE CONSIDERED SUBSIDIARY TO THE VARIOUS PERTINENT BID ITEMS.
6. CONC CURBS FOR DIRECTIONAL ISLANDS ARE SUBSIDIARY TO THE PAY ITEM FOR CONC DIRECTIONAL ISLAND (ITEM 536-2004). QUANTITIES SHOWN ARE FOR CONTRACTORS INFORMATION ONLY.

STATE OF TEXAS
SCOTT D. ARMSTRONG
69320
LICENSED PROFESSIONAL ENGINEER

SCOTT D. ARMSTRONG, P.E. — 8/31/2010 DATE

SCALE: PLAN - 1":100'

REV. NO.	DATE	DESCRIPTION	BY

ALAMO RMA

PAPE-DAWSON ENGINEERS
555 EAST RAMSEY | SAN ANTONIO, TEXAS 78216 | PHONE: 210.375.9000 FAX: 210.375.9010
TEXAS BOARD OF PROFESSIONAL ENGINEERS, FIRM REGISTRATION # 470

Texas Department of Transportation
© 2010

LOOP 1604

PLAN SHEET

SBFR

STA. 304+00 "SBENT2" TO END OF PROJECT

SHEET 25 OF 26

DGN:	FED. RD. DIV. NO.	STATE	FEDERAL AID PROJECT NO.			HIGHWAY NO.
CHK DGN:	6	TEXAS	STP 2011(210)ES			LP 1604
DWG:	DIST.	COUNTY	CONT. NO.	SECT. NO.	JOB NO.	SHEET NO.
CHK DWG:	SAT	BEXAR	2452	01	050	180

Plotted on: 6/25/2010

Design Filename: p:\74\00\04\design\civil\ROADWAY\740004PP26.dgn

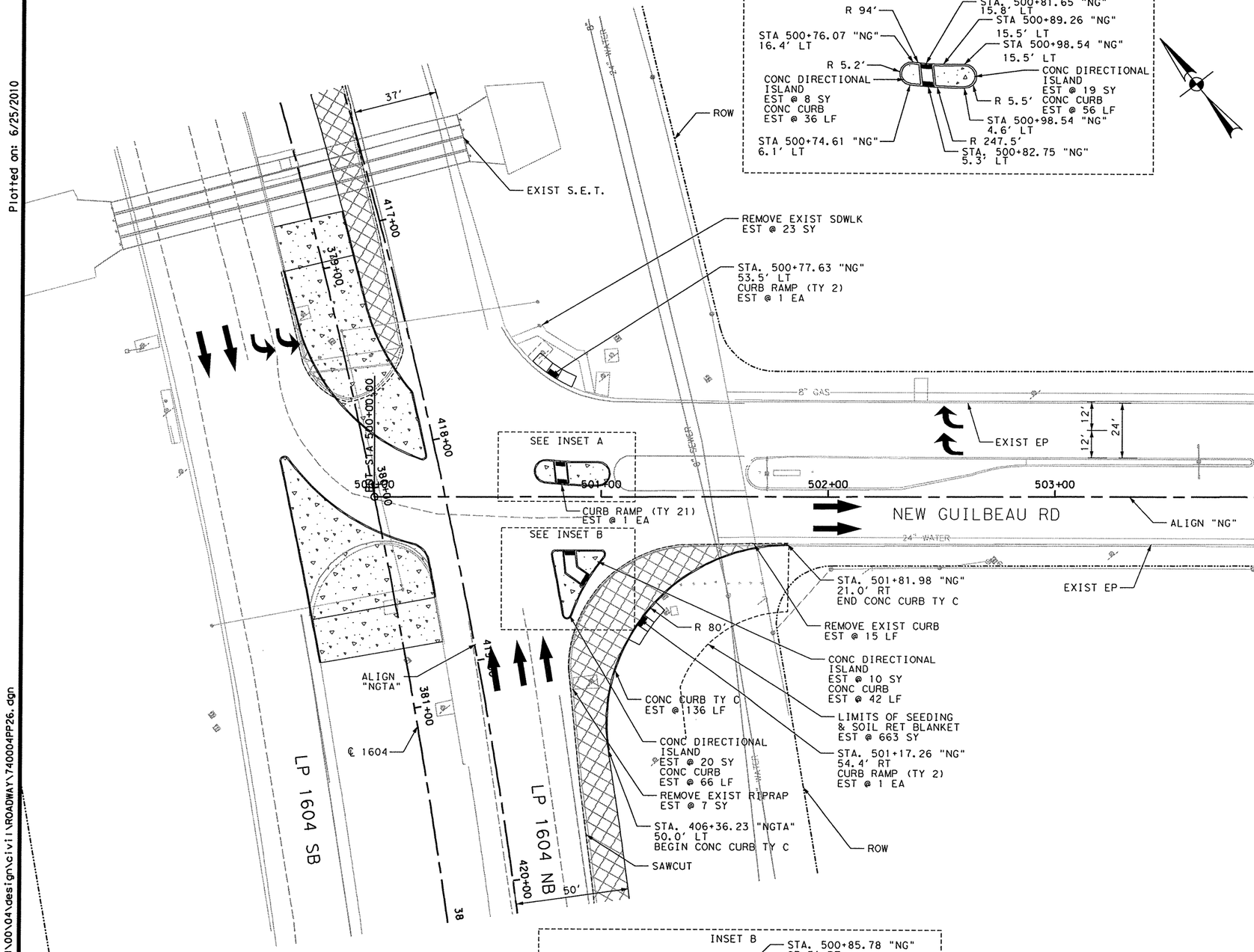

	ITEM	DESCRIPTION	UNIT	QTY
**	0104-2009	REMOVING CONC (RIPRAP)	SY	7
**	0104-2015	REMOVING CONC (SIDEWALKS)	SY	23
**	0104-2021	REMOVING CONC (CURB)	LF	15
	0110-2001	EXCAVATION (ROADWAY)	CY	42
	0132-2003	EMBANKMENT (FINAL) (ORD COMP) (TY B)	CY	9
	0161-2002	COMPOST MANUF TOPSOIL (BOS) (4")	SY	663
	0164-2039	DRILL SEEDING (PERM) (URBAN) (CLAY)	SY	663
*	0168-2001	VEGETATIVE WATERING	SY	663
	0169-2001	SOIL RETENTION BLANKETS (CL 1) (TY A)	SY	663
*	0341-2011	D-GR HMA (QCQA) TY-B PG64-22	SY	297
*	0341-2034	D-GR HMA (QCQA) TY-C PG64-22	SY	283
	0529-2014	CONC CURB (TY C)	LF	136
	0531-2006	CURB RAMPS (TY 2)	EA	2
	0531-2017	CURB RAMPS (TY 21)	EA	1
	0536-2004	CONC DIRECTIONAL ISLAND	SY	56

* AREA OF APPLICATION. SEE GENERAL NOTES FOR PAY QUANTITY.

** FOR CONTRACTOR INFORMATION ONLY. ITEMS ARE SUBSIDIARY TO PREP ROW (ITEM 0100-2002).

LEGEND

- TRAFFIC FLOW ARROW
- ROW — RIGHT OF WAY LINE
- EP — EDGE OF PAVEMENT
- LIMITS OF SEEDING
- TREE PROTECTION FENCE
- PROP PAVEMENT WIDENING
- PAVEMENT REMOVAL
- CONC DIRECTIONAL ISLAND
- TYPE 2 PED RAMP
- TYPE 21 PED RAMP

NOTES:
1. FOR GEOMETRIC DATA SEE HORIZONTAL ALIGNMENT DATA SHEETS.
2. SEE PAVEMENT MARKING SHEETS FOR STRIPING DETAILS.
3. EXISTING FEATURES ARE SHOWN SCREENED BACK.
4. FOR OVERLAY LIMITS, SEE OVERLAY SHEETS.
5. SAW CUTTING WHERE CALLED FOR IN THE PLANS SHALL BE CONSIDERED SUBSIDIARY TO THE VARIOUS PERTINENT BID ITEMS.
6. CONC CURBS FOR DIRECTIONAL ISLANDS ARE SUBSIDIARY TO THE PAY ITEM FOR CONC DIRECTIONAL ISLAND (ITEM 536-2004). QUANTITIES SHOWN ARE FOR CONTRACTORS INFORMATION ONLY.

STATE OF TEXAS
SCOTT D. ARMSTRONG
69320
LICENSED PROFESSIONAL ENGINEER

SCOTT D. ARMSTRONG, P.E. — 6/25/2010 DATE

SCALE: PLAN - 1":50'

REV. NO.	DATE	DESCRIPTION	BY

ALAMO RMA

PAPE-DAWSON ENGINEERS
555 EAST RAMSEY | SAN ANTONIO, TEXAS 78216 | PHONE: 210.375.9000 FAX: 210.375.9010
TEXAS BOARD OF PROFESSIONAL ENGINEERS, FIRM REGISTRATION # 470

Texas Department of Transportation
© 2010

LOOP 1604

PLAN SHEET

NEW GUILBEAU RD

SHEET 26 OF 26

DGN:	FED. RD. DIV. NO.	STATE	FEDERAL AID PROJECT NO.			HIGHWAY NO.
CHK DGN:	6	TEXAS	STP 2011(210)ES			LP 1604
DWG:	DIST.	COUNTY	CONT. NO.	SECT. NO.	JOB NO.	SHEET NO.
CHK DWG:	SAT	BEXAR	2452	01	050	181

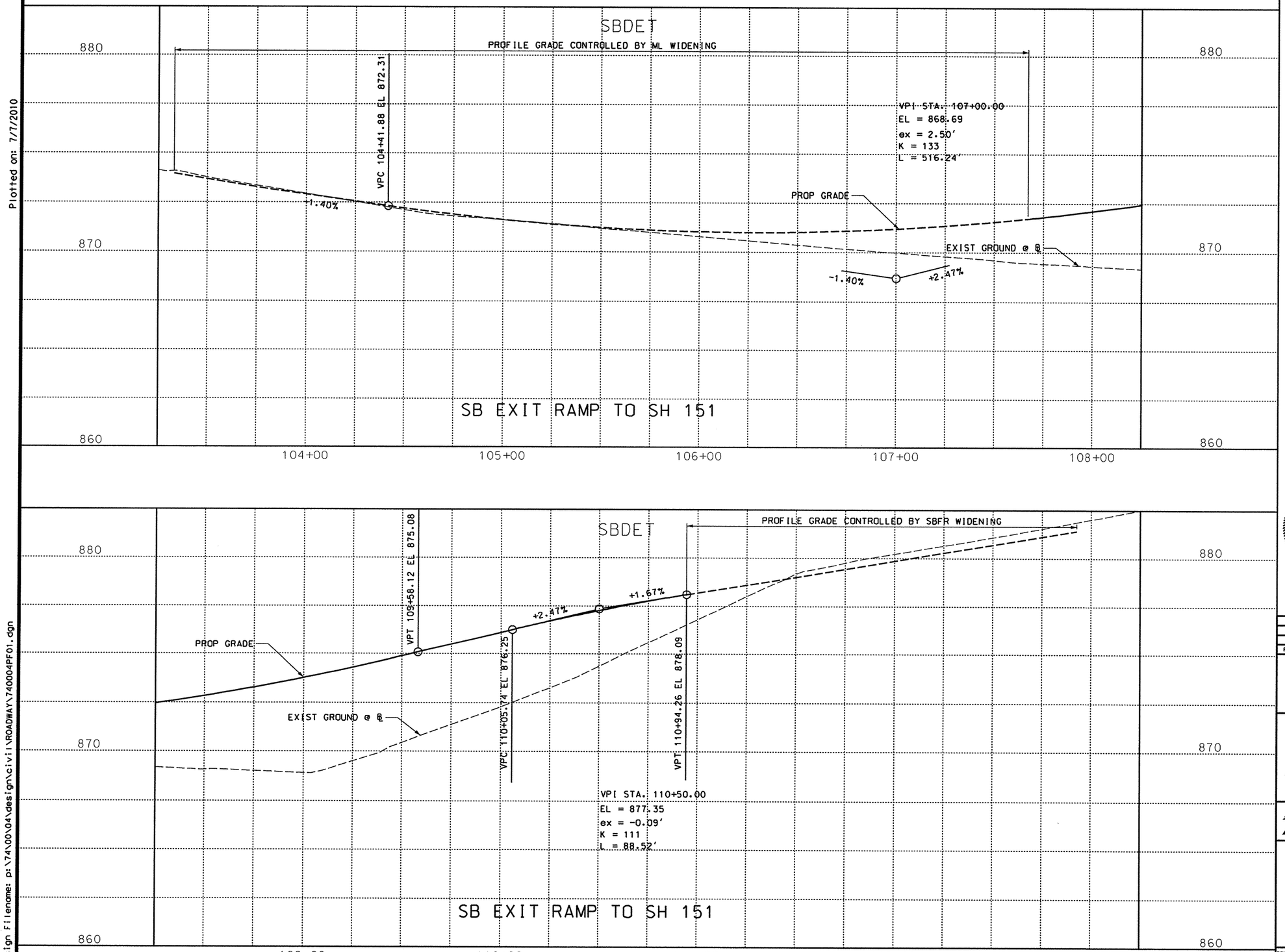

Plotted on: 7/7/2010

Design Filename: p:\74\00\04\design\civil\ROADWAY\740004PF01.dgn

SCOTT D. ARMSTRONG
69320
LICENSED
PROFESSIONAL ENGINEER
STATE OF TEXAS

SCOTT D. ARMSTRONG, P.E. — 7/7/2010 DATE

SCALE: PLAN - 1":50'
PROFILE - 1":5'

REV. NO.	DATE	DESCRIPTION	BY

ALAMO RMA

PAPE-DAWSON ENGINEERS

555 EAST RAMSEY | SAN ANTONIO, TEXAS 78216 | PHONE: 210.375.9000 FAX: 210.375.9010

TEXAS BOARD OF PROFESSIONAL ENGINEERS, FIRM REGISTRATION # 470

Texas Department of Transportation
© 2010

LOOP 1604

ROADWAY PROFILE SHEETS

SB EXIT RAMP TO SH 151

SHEET 1 OF 3

DGN:	FED. RD. DIV. NO.	STATE	FEDERAL AID PROJECT NO.			HIGHWAY NO.
CHK DGN:	6	TEXAS	STP 2011(210)ES			LP 1604
DWG:	DIST.	COUNTY	CONT. NO.	SECT. NO.	JOB NO.	SHEET NO.
CHK DWG:	SAT	BEXAR	2452	01	050	182

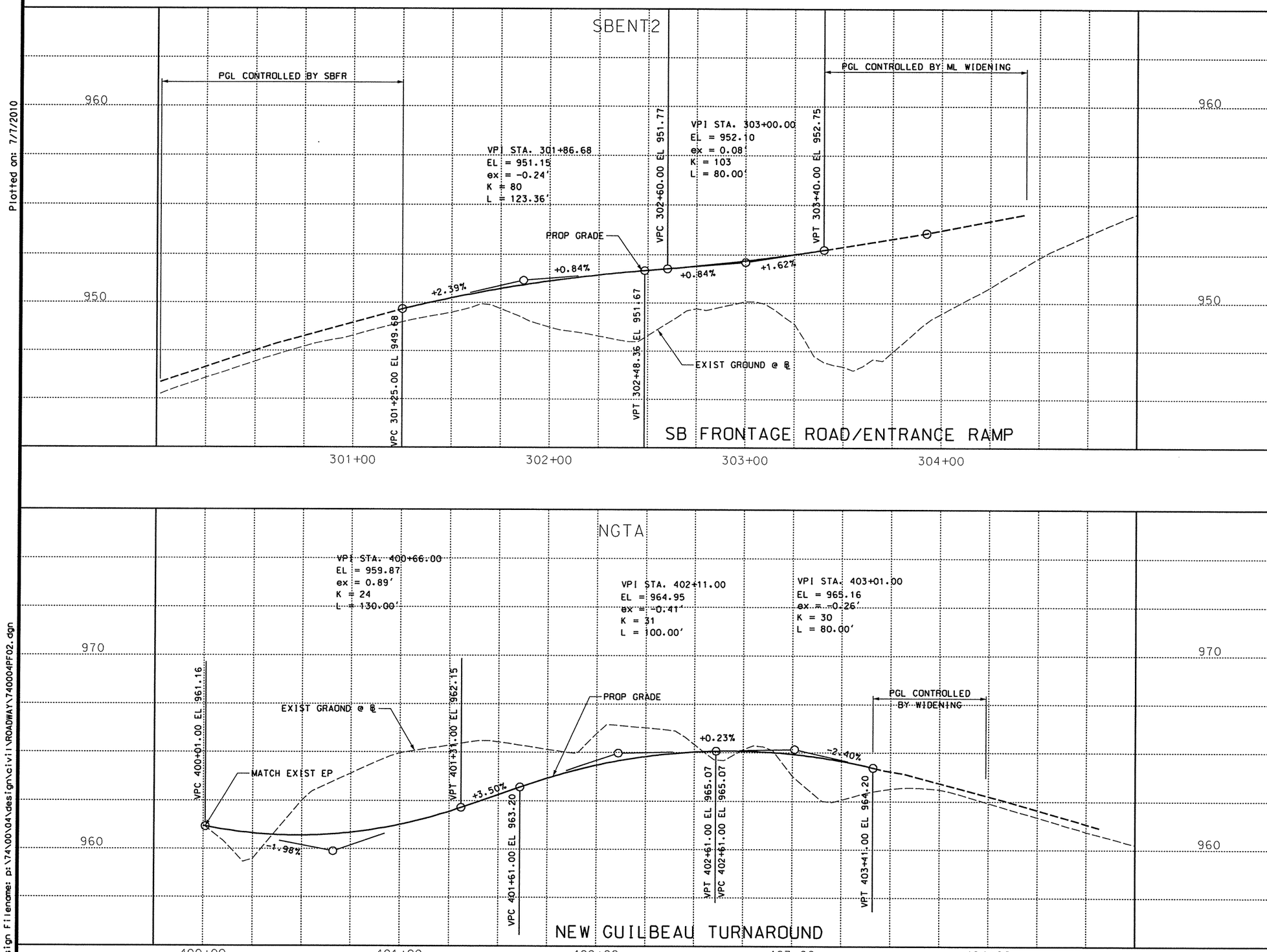

Plotted on: 7/7/2010

Design Filename: p:\74\00\04\design\civil\ROADWAY\740004PF02.dgn

STATE OF TEXAS
SCOTT D. ARMSTRONG
69320
LICENSED
PROFESSIONAL ENGINEER

SCOTT D. ARMSTRONG, P.E. — 7/7/2010 DATE

SCALE: PLAN - 1":50'
PROFILE - 1":5'

REV. NO.	DATE	DESCRIPTION	BY

ALAMO RMA

PAPE-DAWSON ENGINEERS

555 EAST RAMSEY | SAN ANTONIO, TEXAS 78216 | PHONE: 210.375.9000 FAX: 210.375.9010

TEXAS BOARD OF PROFESSIONAL ENGINEERS, FIRM REGISTRATION # 470

Texas Department of Transportation © 2010

LOOP 1604

ROADWAY PROFILE SHEETS

SB FRONTAGE ROAD/ENTRANCE RAMP
NEW GUILBEAU TURNAROUND

SHEET 2 OF 3

DGN:	FED. RD. DIV. NO.	STATE	FEDERAL AID PROJECT NO.			HIGHWAY NO.
CHK DGN:	6	TEXAS	STP 2011(210)ES			LP 1604
DWG:	DIST.	COUNTY	CONT. NO.	SECT. NO.	JOB NO.	SHEET NO.
CHK DWG:	SAT	BEXAR	2452	01	050	183

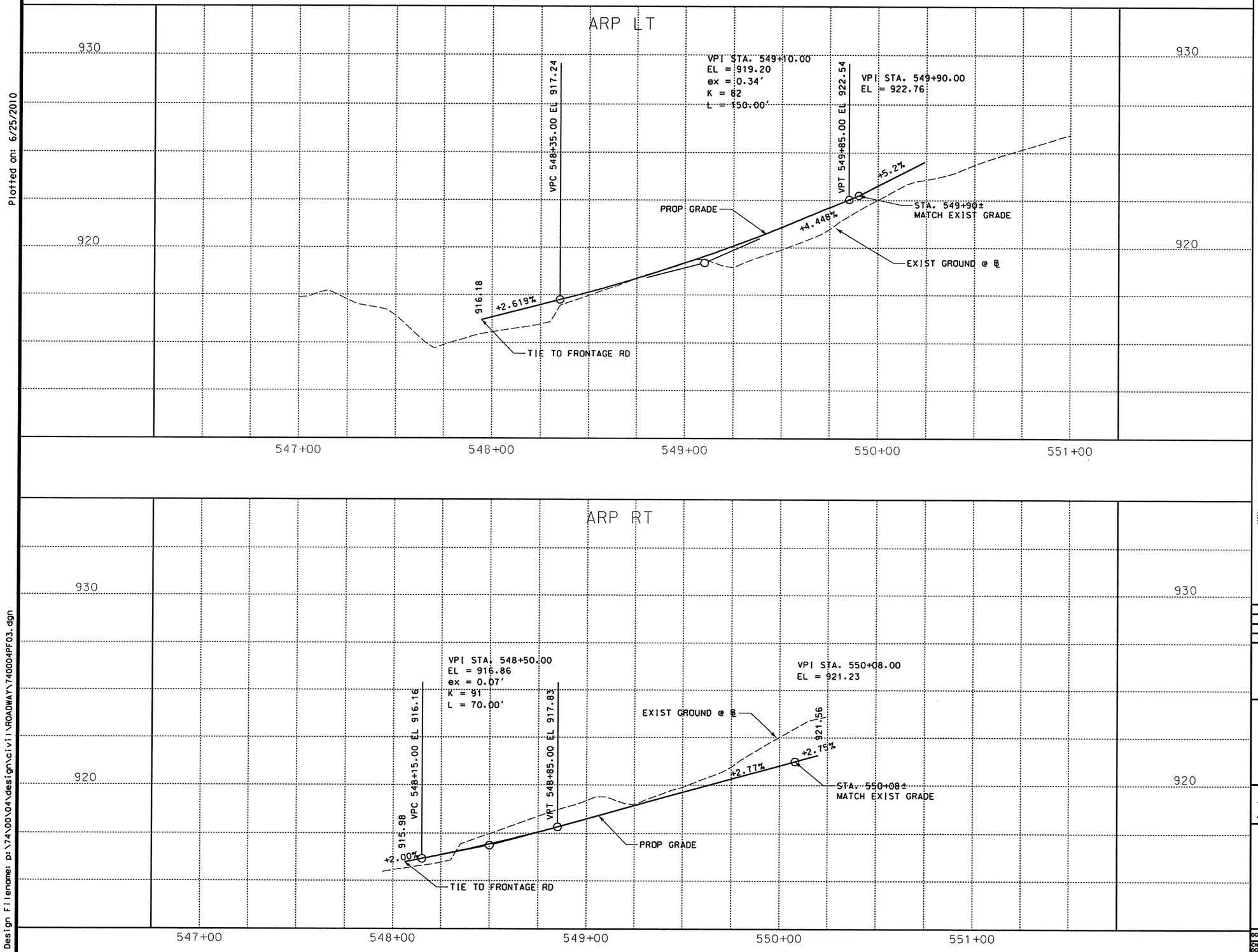

Plotted on: 6/25/2010

Design Filename: p:\74\00\04\design\civil\ROADWAY\740004PF03.dgn

SCOTT D. ARMSTRONG
69320
LICENSED PROFESSIONAL ENGINEER
STATE OF TEXAS

SCOTT D. ARMSTRONG, P.E. — 6/25/2010 DATE

SCALE: PLAN - 1":50'
PROFILE - 1":5'

REV. NO.	DATE	DESCRIPTION	BY

ALAMO RMA

PAPE-DAWSON ENGINEERS

555 EAST RAMSEY | SAN ANTONIO, TEXAS 78216 | PHONE: 210.375.9000 FAX: 210.375.9010
TEXAS BOARD OF PROFESSIONAL ENGINEERS, FIRM REGISTRATION # 470

Texas Department of Transportation
© 2010

LOOP 1604

ROADWAY PROFILE SHEETS

ALAMO RANCH PARKWAY

SHEET 3 OF 3

DGN:	FED. RD. DIV. NO.	STATE	FEDERAL AID PROJECT NO.			HIGHWAY NO.
CHK DGN:	6	TEXAS	STP 2011(210)ES			LP 1604
DWG:	DIST.	COUNTY	CONT. NO.	SECT. NO.	JOB NO.	SHEET NO.
CHK DWG:	SAT	BEXAR	2452	01	050	184

	ITEM	DESCRIPTION	UNIT	QTY
*	0316-2366	ASPH (AC-15P OR CRS-2P)	SY	18213
*	0316-2645	AGGR (TY-PE GR-4)	SY	18213
*	0341-2064	D-GR HMA (QCQA) TY-C SAC-B PG76-22	SY	18213
	0354-2021	PLANE ASPH CONC PAV (0" TO 2")	SY	1331

* AREA OF APPLICATION. SEE GENERAL NOTES FOR PAY QUANTITY.

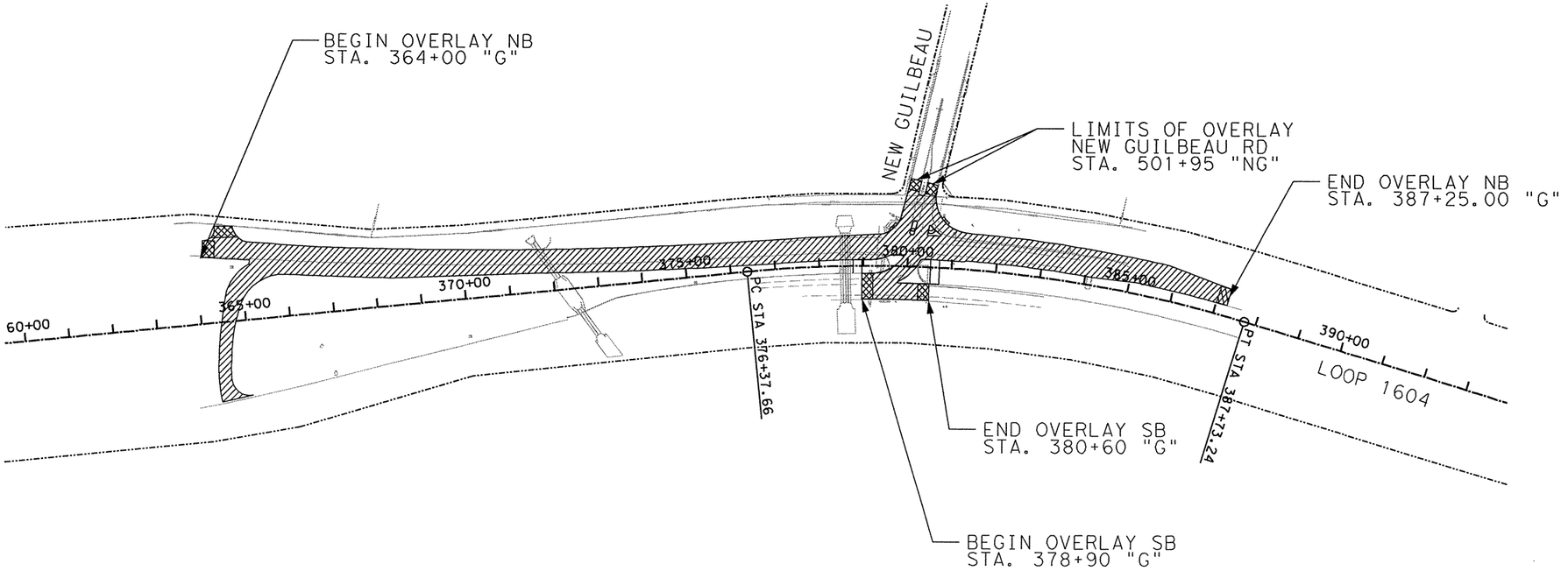

LEGEND

2" OVERLAY HMAC TY-C SURF WITH 1 COURSE SURFACE TREATMENT

0 - 2" PLANE ASPHALT PAVEMENT

NOTES

1. ALL EXISTING FEATURES ARE SHOWN SCREENED BACK i.e. FADED.
2. FOR PLANE DETAILS AT OVERLAY LIMITS SEE MISC DETAIL SHEET.
3. SURFACE TREATMENT SHALL occur PRIOR TO OVERLAY.

STATE OF TEXAS
SCOTT D. ARMSTRONG
69320
LICENSED PROFESSIONAL ENGINEER

SCOTT D. ARMSTRONG, P.E. 6/25/2010 DATE

SCALE: PLAN - 1":300'

REV. NO.	DATE	DESCRIPTION	BY

ALAMO RMA

PAPE-DAWSON ENGINEERS

555 EAST RAMSEY | SAN ANTONIO, TEXAS 78216 | PHONE: 210.375.9000 FAX: 210.375.9010

TEXAS BOARD OF PROFESSIONAL ENGINEERS, FIRM REGISTRATION # 470

Texas Department of Transportation
© 2010

LOOP 1604

HMAC OVERLAY SHEET

SHEET 1 OF 3

DGN:	FED. RD. DIV. NO.	STATE	FEDERAL AID PROJECT NO.			HIGHWAY NO.
CHK DGN:	6	TEXAS	STP 2011(210)ES			LP 1604
DWG:	DIST.	COUNTY	CONT. NO.	SECT. NO.	JOB NO.	SHEET NO.
CHK DWG:	SAT	BEXAR	2452	01	050	185

Plotted on: 6/25/2010

Design Filename: p:\74\00\04\design\civil\ROADWAY\7400040VR01.dgn

Plotted on: 6/25/2010

Design filename: p:\74\00\04\design\civil\ROADWAY\7400040VR02.dgn

ITEM	DESCRIPTION	UNIT	QTY
* 0316-2366	ASPH (AC-15P OR CRS-2P)	SY	75953
* 0316-2645	AGGR (TY-PE GR-4)	SY	75953
* 0341-2064	D-GR HMA (QCQA) TY-C SAC-B PG76-22	SY	75953
0354-2021	PLANE ASPH CONC PAV (0" TO 2")	SY	402

* AREA OF APPLICATION. SEE GENERAL NOTES FOR PAY QUANTITY.

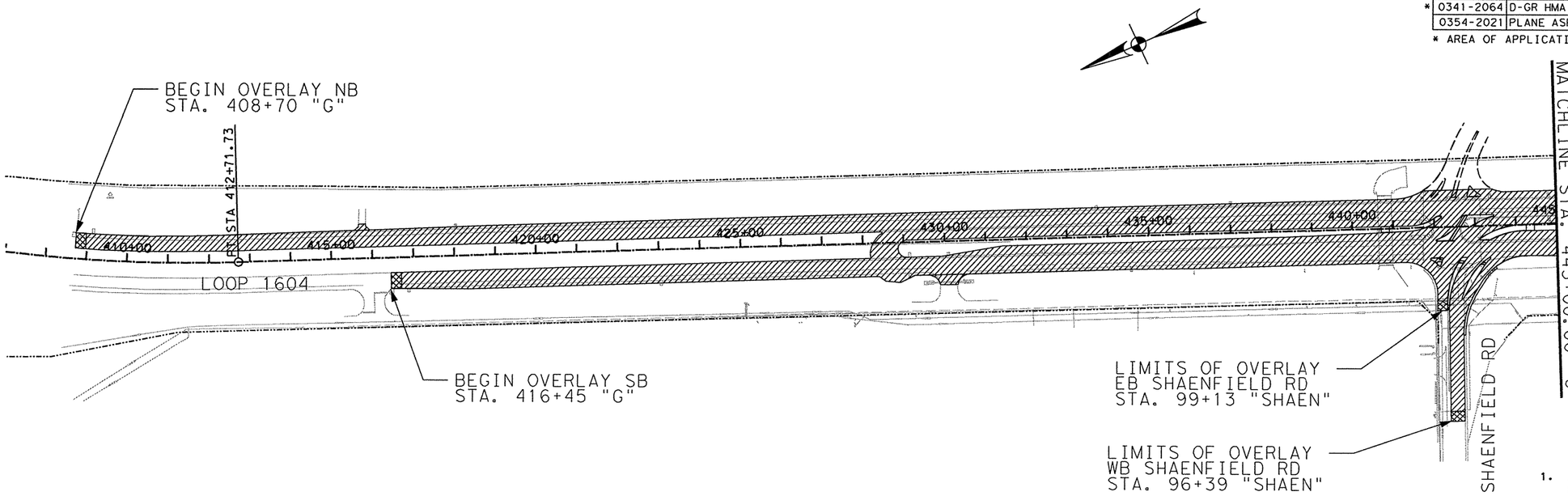

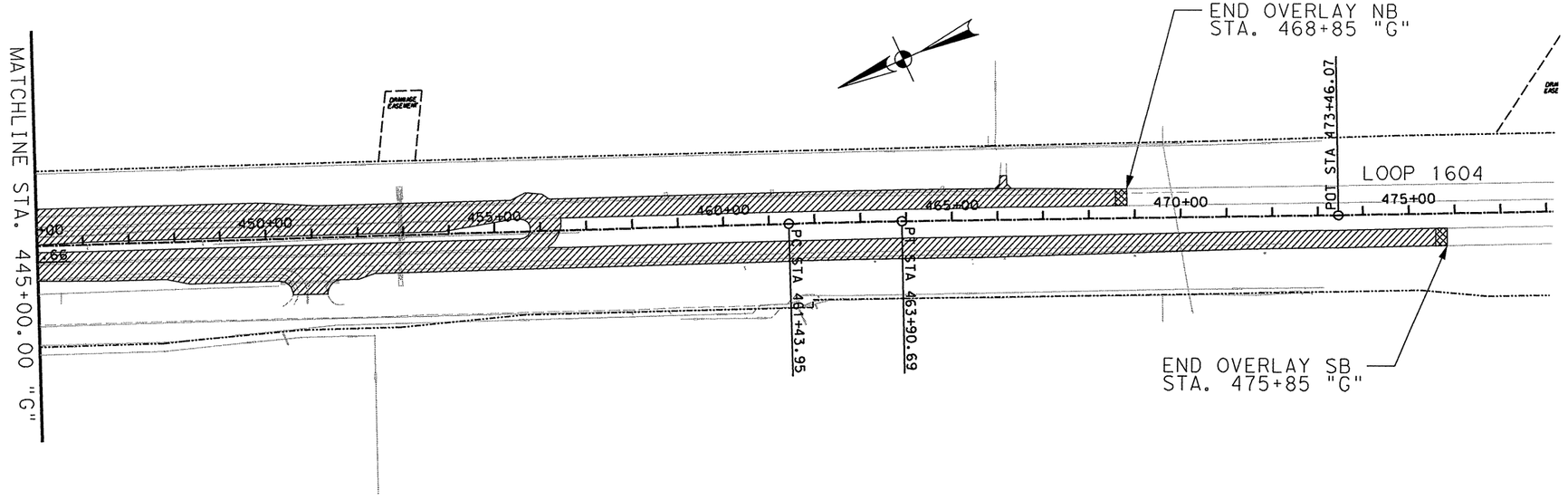

LEGEND

2" OVERLAY HMAC TY-C SURF WITH 1 COURSE SURFACE TREATMENT

0 - 2" PLANE ASPHALT PAVEMENT

NOTES

1. ALL EXISTING FEATURES ARE SHOWN SCREENED BACK i.e. FADED.
2. FOR PLANE DETAILS AT OVERLAY LIMITS SEE MISC DETAIL SHEET.
3. SURFACE TREATMENT SHALL OCCUR PRIOR TO OVERLAY.

STATE OF TEXAS
SCOTT D. ARMSTRONG
69320
LICENSED PROFESSIONAL ENGINEER

SCOTT D. ARMSTRONG, P.E. — 6/25/2010 DATE

SCALE: PLAN - 1":300'

REV. NO.	DATE	DESCRIPTION	BY

ALAMO RMA

PAPE-DAWSON ENGINEERS
555 EAST RAMSEY | SAN ANTONIO, TEXAS 78216 | PHONE: 210.375.9000 FAX: 210.375.9010
TEXAS BOARD OF PROFESSIONAL ENGINEERS, FIRM REGISTRATION # 470

Texas Department of Transportation
© 2010

LOOP 1604
HMAC OVERLAY SHEET

SHEET 2 OF 3

DGN:	FED. RD. DIV. NO.	STATE	FEDERAL AID PROJECT NO.			HIGHWAY NO.
CHK DGN:	6	TEXAS	STP 2011(210)ES			LP 1604
DWG:	DIST.	COUNTY	CONT. NO.	SECT. NO.	JOB NO.	SHEET NO.
CHK DWG:	SAT	BEXAR	2452	01	050	186

	ITEM	DESCRIPTION	UNIT	QTY
*	0316-2366	ASPH (AC-15P OR CRS-2P)	SY	25817
*	0316-2645	AGGR (TY-PE GR-4)	SY	25817
*	0341-2064	D-GR HMA (QCQA) TY-C SAC-B PG76-22	SY	25817
	0354-2021	PLANE ASPH CONC PAV (0" TO 2")	SY	6142

* AREA OF APPLICATION. SEE GENERAL NOTES FOR PAY QUANTITY.

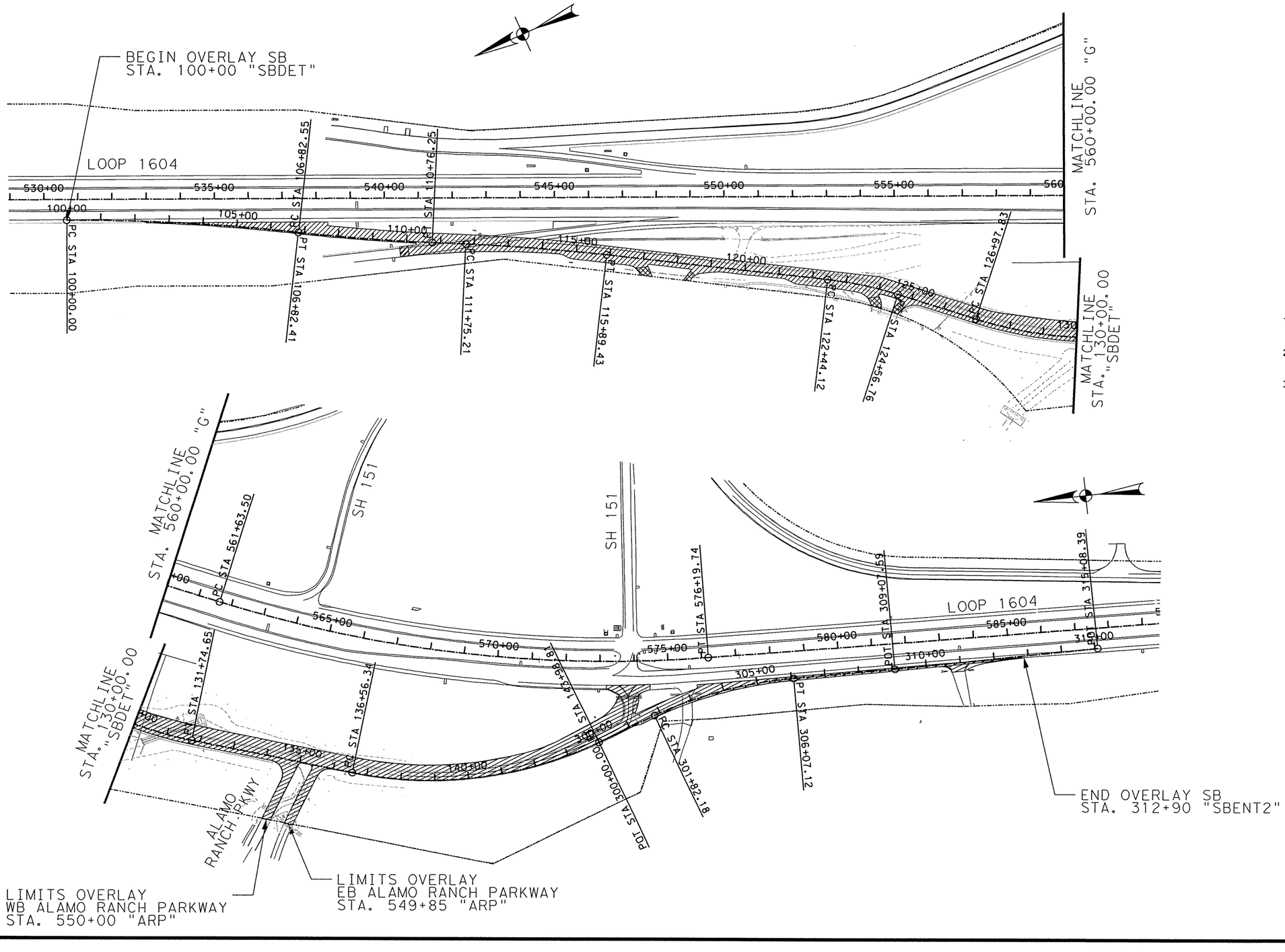

LEGEND

2" OVERLAY HMAC TY-C SURF WITH 1 COURSE SURFACE TREATMENT

0 - 2" PLANE ASPHALT PAVEMENT

NOTES

1. ALL EXISTING FEATURES ARE SHOWN SCREENED BACK i.e. FADED.
2. FOR PLANE DETAILS AT OVERLAY LIMITS SEE MISC DETAIL SHEET.
3. SURFACE TREATMENT SHALL OCCUR PRIOR TO OVERLAY.

STATE OF TEXAS
SCOTT D. ARMSTRONG
69320
LICENSED
PROFESSIONAL ENGINEER

SCOTT D. ARMSTRONG, P.E. — 8/18/2010 DATE

SCALE: PLAN - 1":300'

REV. NO.	DATE	DESCRIPTION	BY

ALAMO RMA

PAPE-DAWSON ENGINEERS

555 EAST RAMSEY | SAN ANTONIO, TEXAS 78216 | PHONE: 210.375.9000 FAX: 210.375.9010

TEXAS BOARD OF PROFESSIONAL ENGINEERS, FIRM REGISTRATION # 470

Texas Department of Transportation
© 2010

LOOP 1604

HMAC OVERLAY SHEET

SHEET 3 OF 3

DGN:	FED. RD. DIV. NO.	STATE	FEDERAL AID PROJECT NO.			HIGHWAY NO.
CHK DGN:	6	TEXAS	STP 2011(210)ES			LP 1604
DWG:	DIST.	COUNTY	CONT. NO.	SECT. NO.	JOB NO.	SHEET NO.
CHK DWG:	SAT	BEXAR	2452	01	050	187

Plotted on: 8/18/2010

Design Filename: p:\74\00\04\design\civil\ROADWAY\7400040VR03.dgn

Plotted on: 7/7/2010

Design Filename: p:\74\00\04\design\civil\roadway\740004misc01.dgn

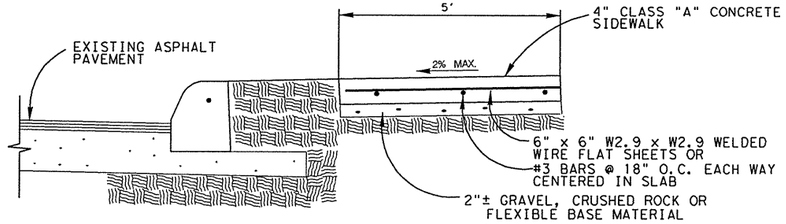

SIDEWALK DETAIL
N.T.S.

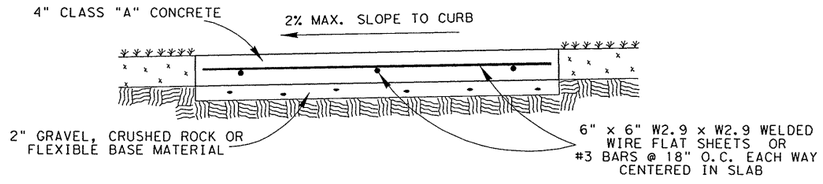

SIDEWALK DETAIL
N.T.S.

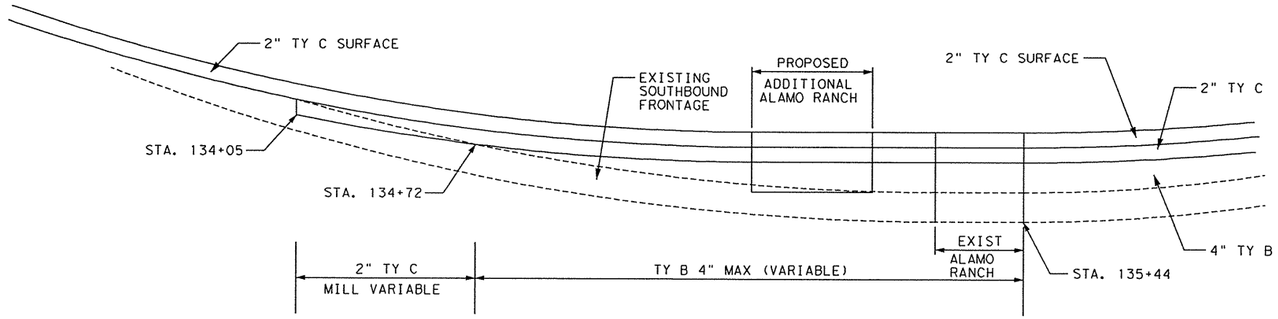

SOUTHBOUND FRONTAGE ROAD
@ ALAMO RANCH PAVEMENT DETAIL
N.T.S.

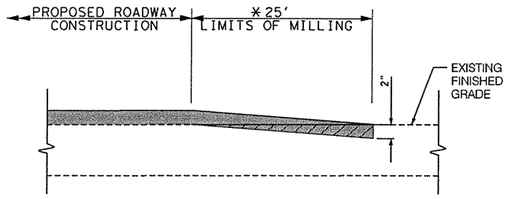

ACP TERMINAL DETAIL
N.T.S.

LIMITS OF 0-2" MILLING

2" D-GR-HMA TY-C

* MILLING SHALL BE SUBIDARY TO THE VARIOUS BID ITEMS.

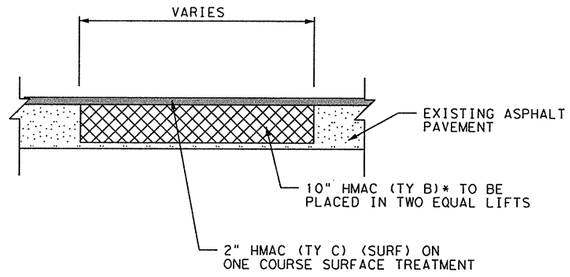

FLEXIBLE PAVEMENT STRUCTURE REPAIR
N.T.S.
LOCATIONS TO BE DETERMINED BY THE ENGINEER.

*PAYMENT SHALL BE INCLUDED IN THE BID ITEM FOR FLEXIBLE PAVEMENT STRUCTURE REPAIR (ITEM 0351-2006)

STATE OF TEXAS
SCOTT D. ARMSTRONG
69320
LICENSED PROFESSIONAL ENGINEER

SCOTT D. ARMSTRONG, P.E. — 7/7/2010 DATE

NOT TO SCALE

REV. NO.	DATE	DESCRIPTION	BY

ALAMO RMA

PAPE-DAWSON ENGINEERS

555 EAST RAMSEY | SAN ANTONIO, TEXAS 78216 | PHONE: 210.375.9000 FAX: 210.375.9010

TEXAS BOARD OF PROFESSIONAL ENGINEERS, FIRM REGISTRATION # 470

Texas Department of Transportation © 2010

LOOP 1604

MISCELLANEOUS ROADWAY DETAILS

SHEET 1 OF 3

	FED. RD. DIV. NO.	STATE	FEDERAL AID PROJECT NO.			HIGHWAY NO.
CHK:	6	TEXAS	STP 2011(210)ES			LP 1604
DWG:	DIST.	COUNTY	CONT. NO.	SECT. NO.	JOB NO.	SHEET NO.
CHK:	SAT	BEXAR	2452	01	050	188

Plotted on: 7/7/2010

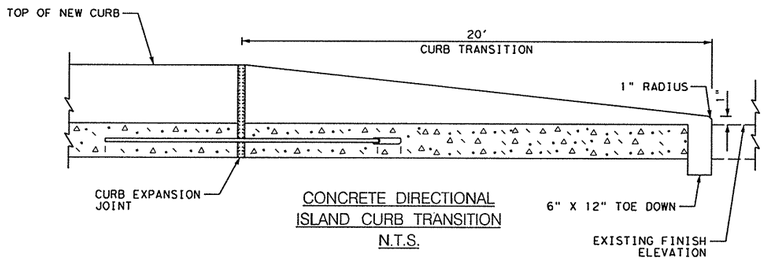

CONCRETE DIRECTIONAL ISLAND CURB TRANSITION
N.T.S.

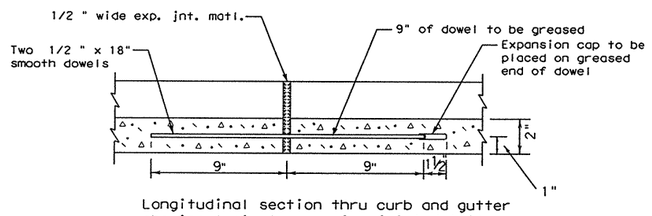

Longitudinal section thru curb and gutter showing typical expansion joint details.

Reinforcing steel (when used) shall not cross expansion joints. Steel shall be terminated 3" ± 1" from face of the joint.

CURB EXPANSION JOINT DETAIL
N.T.S.

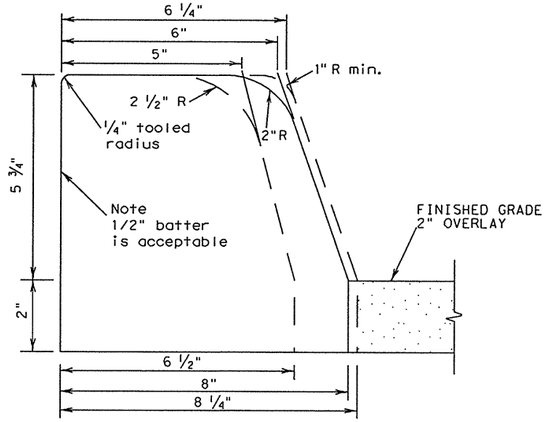

TYPE "C" CURB DETAIL
N.T.S.

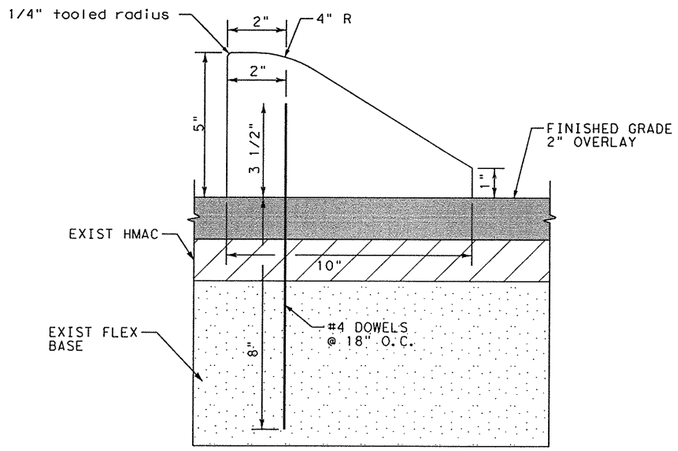

INSET A
N.T.S.

CONC CURB
SEE INSET A

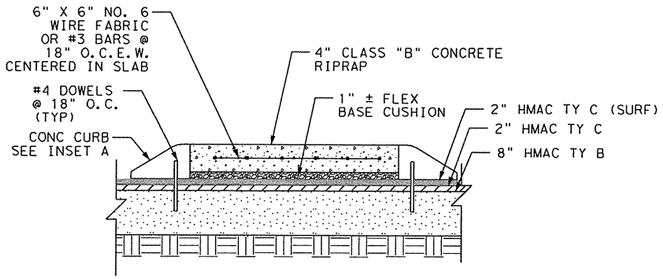

DIRECTIONAL ISLAND DETAIL ON EXISTING PAVEMENT WITH 2" OVERLAY
N.T.S.

GENERAL NOTES (CURB DETAILS)

1. Contractor may use existing forms if the cross section lies within the band shown by dotted lines. If new forms are to be purchased leased or constructed they shall conform to the solid line.
2. When reinforcing steel is required or placed at contractor's option one of the following schemes of reinforcement shall be required. The manner of placement and location shall be to the satisfaction of the Engineer.
   a. Type A, Type B, or Type C curb shall have longitudinal reinforcing bars as follows: Three #3, two #4, two #5, or one #6.
   b. All types of curb (reinf.) shall have one #3 or #4 bar for for longitudinal reinforcement.
3. Reinforcing bars shall be lapped a minimum of 15".
4. When curb or curb and gutter is placed by a separate pour adjacent to or atop concrete pavement curb or curb and gutter shall be tied to pavement in a manner satisfactory to the engineer with 8-inch long #3 or #4 bars spaced at 5 feet and expansion and/or contraction joints of curb or curb and gutter shall match those of pavement.
5. One-half inch expansion joint material shall be provided where curb or curb gutter is adjacent to sidewalk or riprap.
6. Unless otherwise shown, transitions between curbs or curbs and gutters of differing cross section shall be accomplished over a 20 foot length or as approved by the Engineer.
7. See the PED-05 standard sheet for information on curb ramps and sidewalks crossing driveways.

NOT TO SCALE

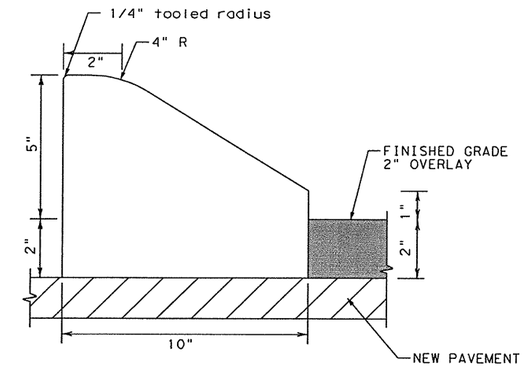

INSET B
N.T.S.

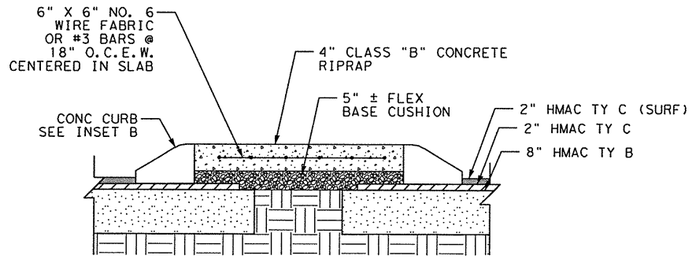

DIRECTIONAL ISLAND DETAIL ON NEW PAVEMENT
N.T.S.

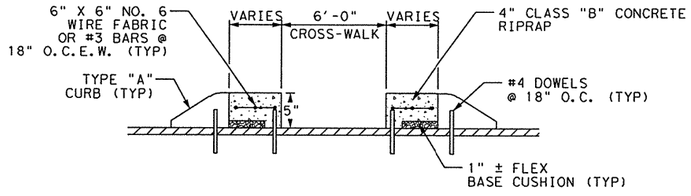

DIRECTIONAL ISLAND DETAIL AT PEDESTRIAN CROSSWALK
N.T.S.

REV. NO.	DATE	DESCRIPTION	BY

ALAMO RMA

STATE OF TEXAS
SCOTT D. ARMSTRONG
69320
LICENSED PROFESSIONAL ENGINEER

SCOTT D. ARMSTRONG, P.E. — 7/7/2010 DATE

PAPE-DAWSON ENGINEERS
555 EAST RAMSEY | SAN ANTONIO, TEXAS 78216 | PHONE: 210.375.9000 FAX: 210.375.9010
TEXAS BOARD OF PROFESSIONAL ENGINEERS, FIRM REGISTRATION # 470

Texas Department of Transportation
© 2010

LOOP 1604

MISCELLANEOUS ROADWAY DETAILS

SHEET 2 OF 3

DGN:	FED. RD. DIV. NO.	STATE	FEDERAL AID PROJECT NO.			HIGHWAY NO.
CHK DGN:	6	TEXAS	STP 2011(210)ES			LP 1604
DWG:	DIST.	COUNTY	CONT. NO.	SECT. NO.	JOB NO.	SHEET NO.
CHK DWG:	SAT	BEXAR	2452	01	050	189

Design Filename: p:\74\00\04\design\civil\roadway\740004miscdet02.dgn

Plotted on: 6/25/2010

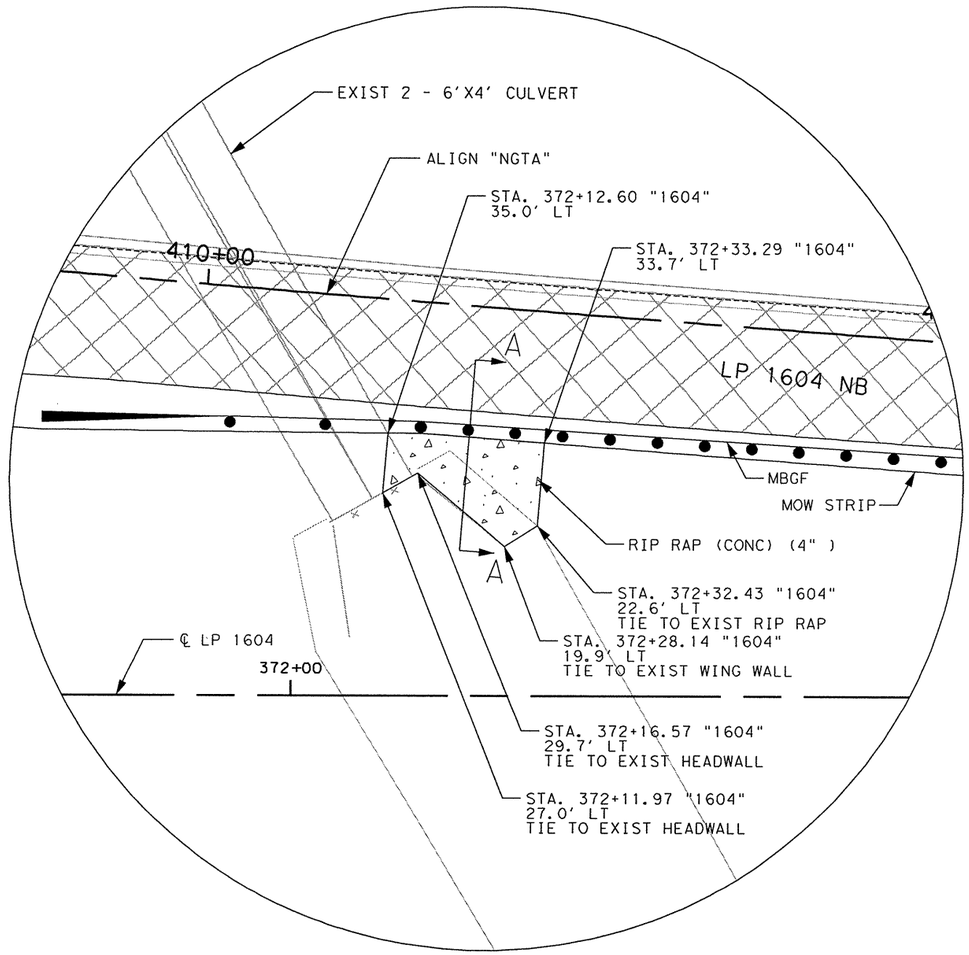

RIP RAP SLOPE DETAIL
N.T.S.

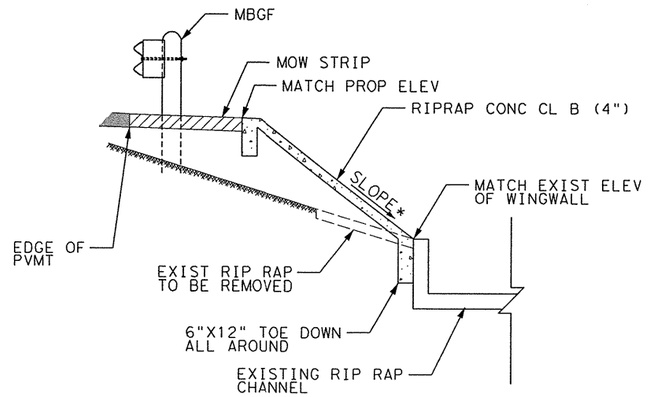

* SLOPE VARIES, MAX SLOPE 1.5:1

SECTION A-A
N.T.S.

SCOTT D. ARMSTRONG
69320
LICENSED PROFESSIONAL ENGINEER
STATE OF TEXAS

SCOTT D. ARMSTRONG, P.E. — 6/25/2010 DATE

SCALE: PLAN - 1":50'

REV. NO.	DATE	DESCRIPTION	BY

ALAMO RMA

PAPE-DAWSON ENGINEERS

555 EAST RAMSEY | SAN ANTONIO, TEXAS 78216 | PHONE: 210.375.9000 FAX: 210.375.9010
TEXAS BOARD OF PROFESSIONAL ENGINEERS, FIRM REGISTRATION # 470

Texas Department of Transportation
© 2010

LOOP 1604

MISCELLANEOUS ROADWAY DETAILS

SHEET 3 OF 3

DGN:	FED. RD. DIV. NO.	STATE	FEDERAL AID PROJECT NO.			HIGHWAY NO.
CHK DGN:	6	TEXAS	STP 2011(210)ES			LP 1604
DWG:	DIST.	COUNTY	CONT. NO.	SECT. NO.	JOB NO.	SHEET NO.
CHK DWG:	SAT	BEXAR	2452	01	050	190

Design Filename: p:\74\00\04\design\civil\ROADWAY\740004miscde+03.dgn

DISCLAIMER:
The use of this standard is governed by the "Texas Engineering Practice Act". No warranty of any kind is made by TxDOT for any purpose whatsoever. TxDOT assumes no responsibility for the conversion of this standard to other formats or for incorrect results or damages resulting from its use.

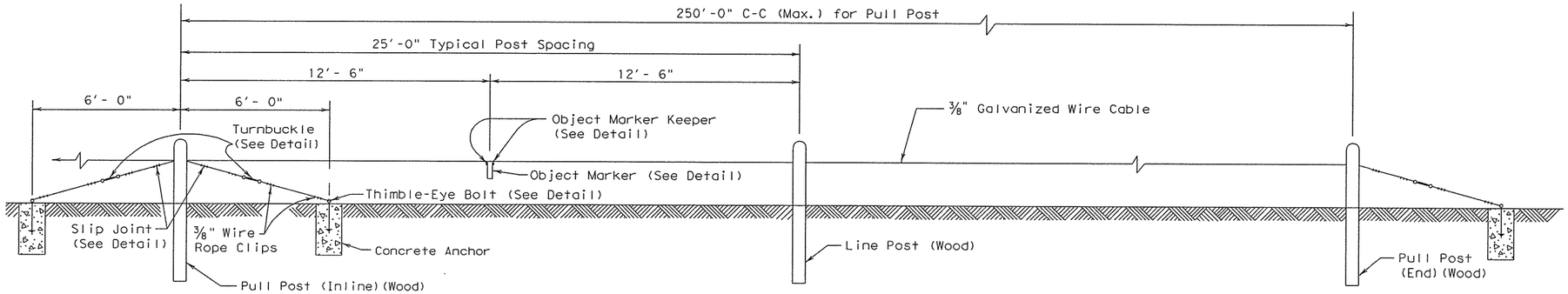

WOOD POST & CABLE UNIT

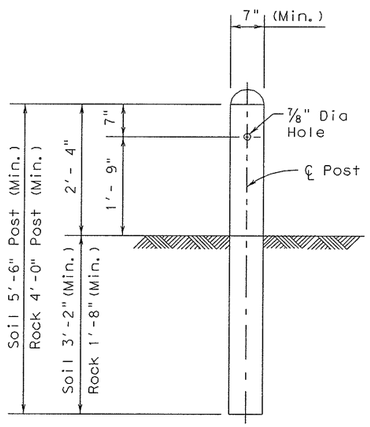

WOOD POST DETAIL

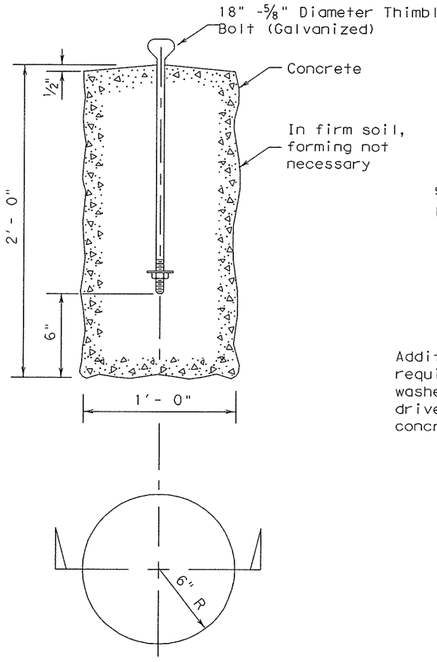

CONCRETE ANCHOR DETAILS

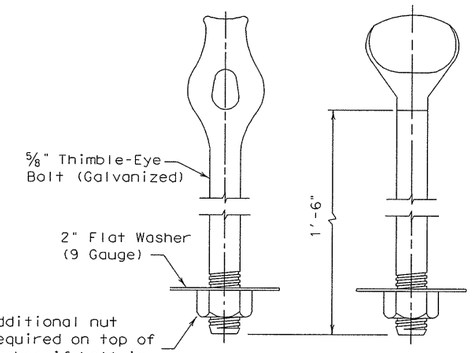

THIMBLE-EYE BOLT DETAILS

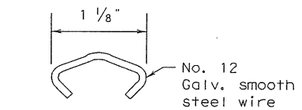

Clamp keepers on both sides of Reflector as shown above.

OBJECT MARKER KEEPER DETAIL

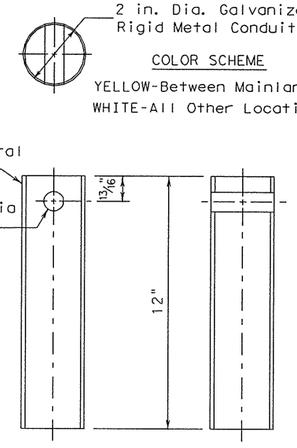

OBJECT MARKER (Reflector Detail)

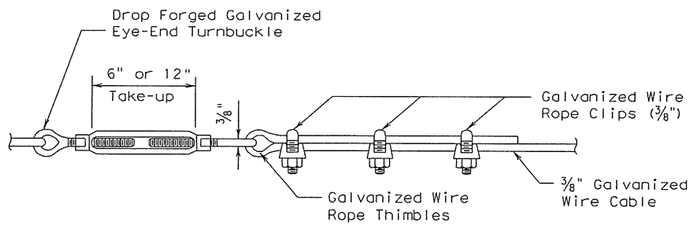

WIRE CABLE CONNECTION (at turnbuckles & eyebolts) DETAIL

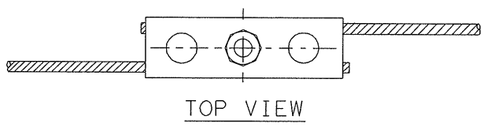

TOP VIEW

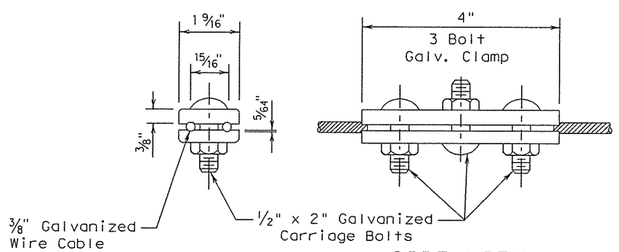

SIDE VIEW

SLIP JOINT DETAIL

GENERAL NOTES

1. Furnish Class "B" or better concrete in accordance with Item 421, "Hydraulic Cement Concrete". Cure concrete anchors at least five (5) days before attaching the cable.
2. Furnish galvanized cable fittings in accordance with the Item 445, Galvanizing.
3. Furnish posts meeting the requirements of DMS 7200, "Timber Posts and Blocks for Metal Beam Guard Fence." Do not use painted timber posts.
4. Cover the entire surface of object marker (reflector) with a reflectorized sheeting material conforming to Departmental Material Specification DMS 8300, "Sign Face Materials", Type C.
5. Furnish cable conforming to ASTM designation A475.

LEVELS

1	3	4	5	6	7	8										
7	8	19	20	21	22	23	24	25	26	27	28	29	30	31	32	
33	34	35	36	37	38	39	40	41	42	43	44	45	46	47	48	
49	50	51	52	53	54	55	56	57	58	59	60	61	62	63		

Texas Department of Transportation
Maintenance Division

POST & CABLE FENCE

PCF-05

FILE: pcf05.dgn	DN:	CK:	DW: LJB	CK: JG	NEG:	
©TxDOT FEB. 2005	DIST	FED REG	FEDERAL AID PROJECT #			SHEET
REVISIONS 2/02 Rev.Design Div. PCF-99		6	2451-01-057			191
		COUNTY		CONTROL	SECT	JOB	HIGHWAY
		DEXAR					

DISCLAIMER:
The use of this standard is governed by the "Texas Engineering Practice Act". No warranty of any kind is made by TxDOT for any purpose whatsoever. TxDOT assumes no responsibility for the conversion of this standard to other formats or for incorrect results or damages resulting from its use.

TYPE 1

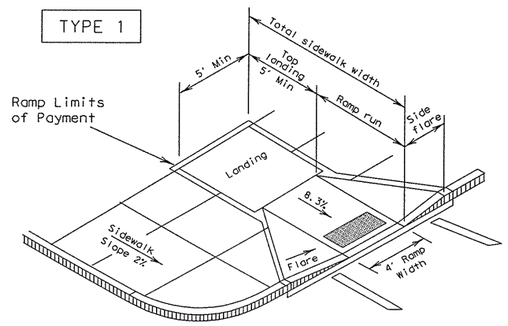

PERPENDICULAR CURB RAMP

TYPE 2

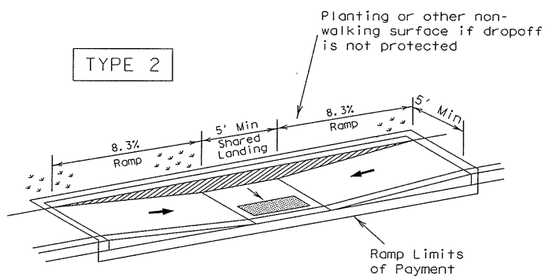

PARALLEL CURB RAMP
(Use only where water will not pond in the landing.)

TYPE 4

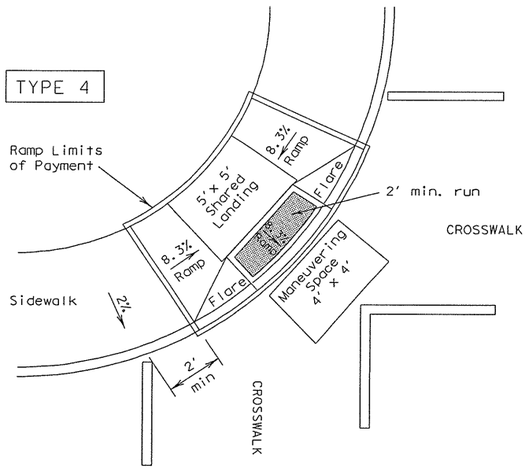

DIAGONAL COMBINATION CURB RAMP
Perpendicular to the Tangent of the Curb Radius and Contained in Crosswalk

TYPE 7

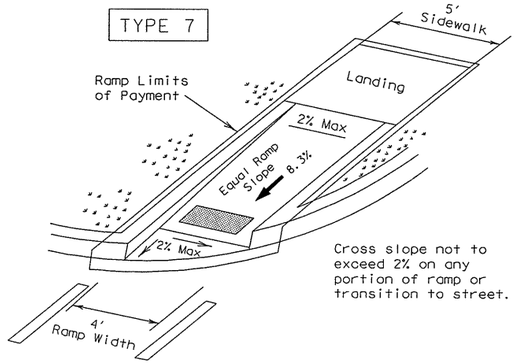

Cross slope not to exceed 2% on any portion of ramp or transition to street.

DIRECTIONAL RAMP WITHIN RADIUS
(Sidewalk set back from curb)

TYPE 8

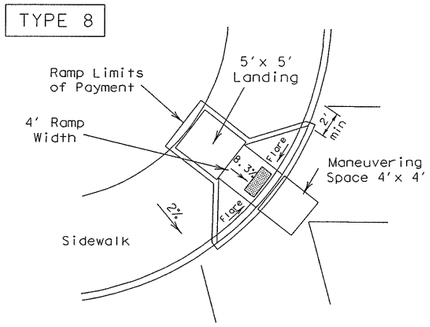

DIAGONAL CURB RAMP (FLARED SIDES)

TYPE 5

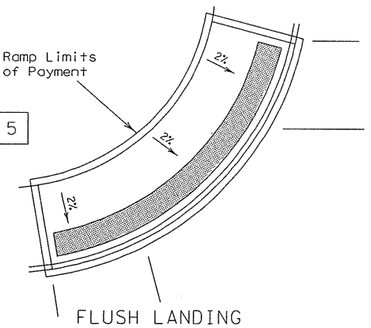

FLUSH LANDING

TYPE 9

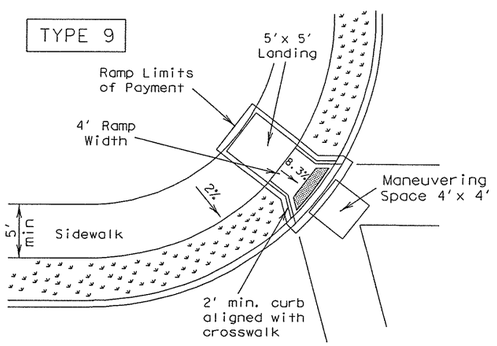

DIAGONAL CURB RAMP (RETURNED CURB)

TYPE 20

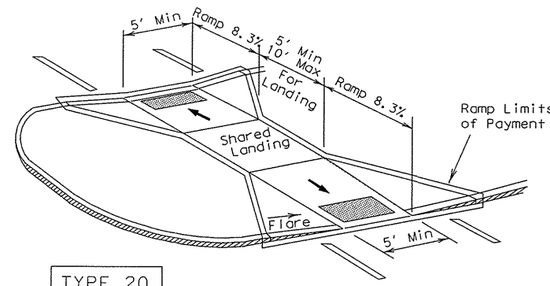

TYPE 21

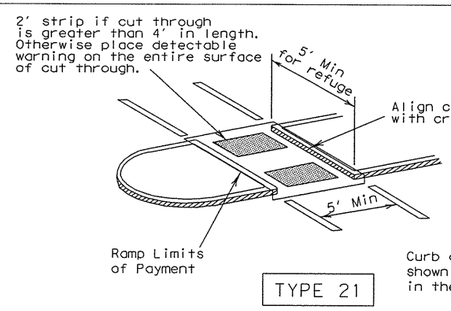

Curb details are shown elsewhere in the plans.

CURB RAMPS AT MEDIAN ISLANDS

Planting or other non-walking surface if dropoff is not protected

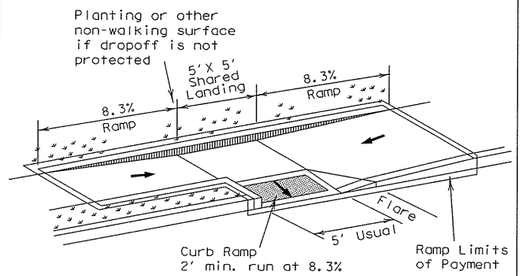

TYPE 3

TYPE 10

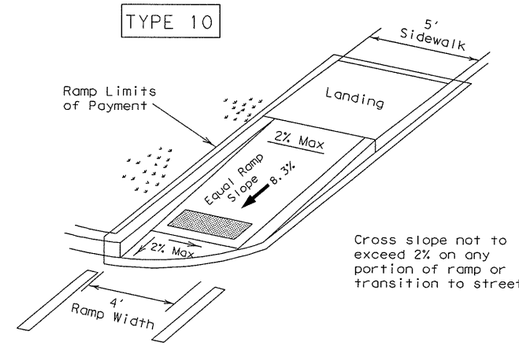

Cross slope not to exceed 2% on any portion of ramp or transition to street.

DIRECTIONAL RAMP WITHIN RADIUS
(Sidewalk adjacent to curb)

Planting or other non-walking surface if dropoff is not protected

TYPE 6

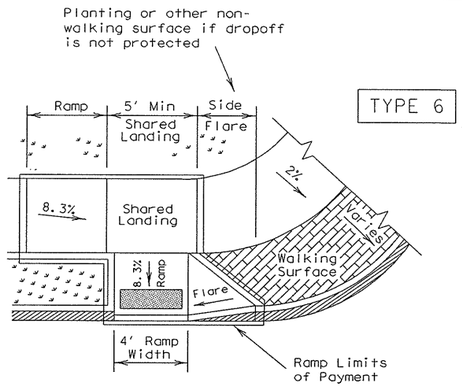

COMBINATION CURB RAMPS

TYPE 22

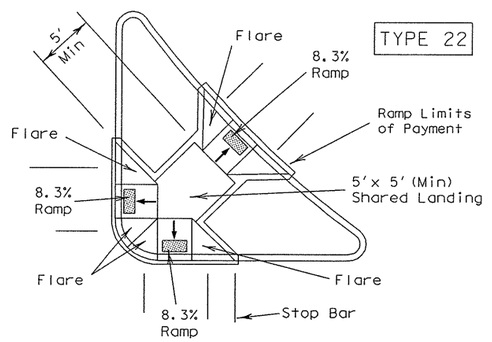

COMBINATION ISLAND RAMPS

Min. 2' taper to existing or proposed sidewalk

TYPE 11

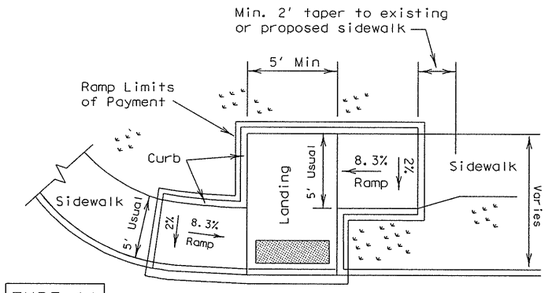

OFFSET PARALLEL CURB RAMP

NOTES:
See General Notes on sheet 2 of 4 for more information.

" " Denotes planting or non-walking surface.

Texas Department of Transportation
Design Division (Roadway)

PEDESTRIAN FACILITIES
CURB RAMPS

PED-05 SHEET 1 OF 4

FILE: ped05.dgn	DN: EH	CK:	DW: BGD	CK:
© TxDOT March 2002	DIST	FEDERAL AID PROJECT		SHEET
REVISIONS		2452-0-050		192
	COUNTY	CONTROL	SECT	JOB	HIGHWAY
	BEXAR				

LEVELS 1

DETECTABLE WARNINGS

General Notes for Detectable Warnings

1. Curb ramps must contain a detectable warning surface that consists of raised truncated domes complying with Section 4.29 of the Texas Accessibility Standards (TAS). The surface must contrast visually with adjoining surfaces, including side flares. Furnish dark brown or dark red detectable warning surface adjacent to uncolored concrete, unless specified elsewhere in the plans.
2. Detectable warning surfaces must be slip resistant and not allow water to accumulate.
3. Align truncated domes in the direction of pedestrian travel when entering the street.
4. Shaded areas on Sheet 1 of 4 indicate the approximate location for the detectable warning surface for each curb ramp type.
5. Detectable warning surfaces shall be a minimum of 24" in depth in the direction of pedestrian travel, and extend the full width of the curb ramp or landing where the pedestrian access route enters the street.
6. Detectable warning surfaces shall be located so that the edge nearest the curb line is a minimum of 6" and a maximum of 10" from the extension of the face of curb. Detectable warning surfaces may be curved along the corner radius.
7. TxDOT maintains a list of Qualified Detectable Warning Materials. Details are provided herein for the placement of landscape pavers. For other materials, refer to the manufacturer's product manual for proper installation.

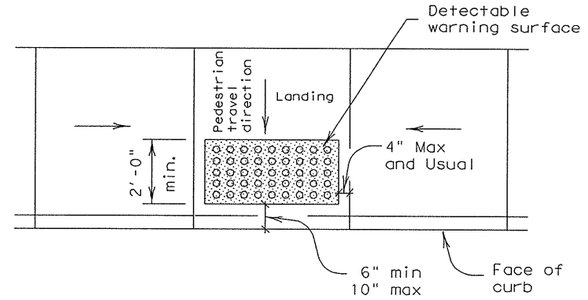

Typical placement of detectable warning surface on landing at street edge.

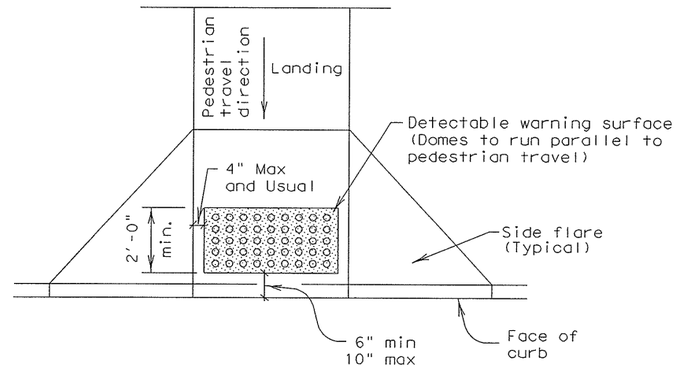

Typical placement of detectable warning surface on sloping ramp run.

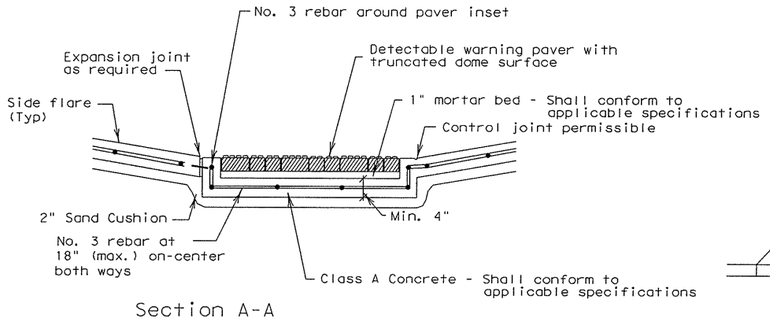

Section A-A

General Notes (Pavers)

Furnish detectable warning paver units meeting all requirements of ASTM C-936, C-33. Lay in a two by two unit basket weave pattern or as directed.

Lay full-size units first followed by closure units consisting of at least 25 percent of a full unit. Cut detectable warning paver units using a power saw.

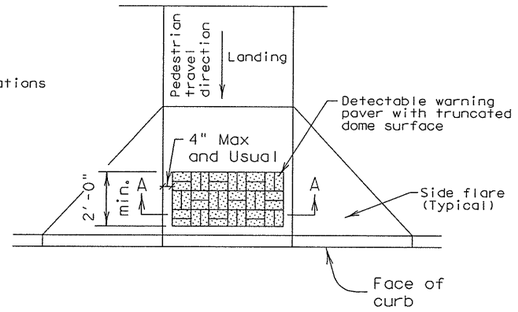

Truncated Dome Pattern Curb Ramp

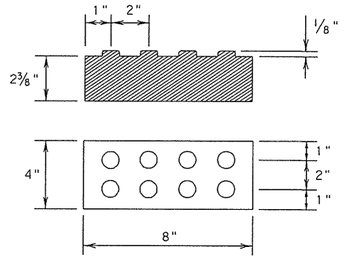

Detectable Warning Paver

DETECTABLE WARNING PAVER (OPTION)

Pedestrian Facilities General Notes

1. All slopes are maximum allowable. The least possible slope that will still drain properly should be used. Adjust curb ramp length or grade of approach sidewalks as directed.
2. The minimum sidewalk width is 5'. Where the sidewalk is adjacent to the back of curb, a 6' sidewalk width is encouraged. Where a 5' sidewalk can not be provided due to site constraints, a minimum 3' sidewalk with 5'x 5' passing areas at intervals not to exceed 200' is required.
3. Landings shall be 5'x 5' minimum with a maximum 2% slope in any direction.
4. Maneuvering space at the bottom of curb ramps shall be a minimum of 4'x 4' wholly contained within the crosswalk and wholly outside the parallel vehicular travel path.
5. Maximum allowable cross slope on sidewalk and curb ramp surfaces is 2%.
6. Curb ramps with returned curbs may be used only where pedestrians would not normally walk across the ramp, either because the adjacent surface is planting or other non-walking surface or because the side approach is substantially obstructed. Otherwise, provide flared sides.
7. Additional information on curb ramp location, design, light reflective value and texture may be found in the current edition of the Texas Accessibility Standards (TAS) and 16 TAC §68.102.
8. To serve as a pedestrian refuge area, the median should be a minimum of 5' wide. Medians should be designed to provide accessible passage over or through them.
9. Small channelization islands, which do not provide a minimum 5'x 5' landing at the top of curb ramps, shall be cut through level with the surface of the street.
10. Crosswalk dimensions, crosswalk markings and stop bar locations shall be as shown elsewhere in the plans. At intersections where crosswalk markings are not required, curb ramps shall be aligned with theoretical crosswalks, or as directed by the Engineer.
11. Existing features that comply with TAS may remain in place unless otherwise shown on the plans.
12. Handrails are not required on curb ramps. Provide curb ramps wherever on accessible route crosses (penetrates) a curb.
13. Curb ramps and landings shall be constructed and paid for in accordance with Item 531 "Sidewalks".
14. Separate curb ramp and landings from adjacent sidewalk and any other elements with premold or board joint of ¾" unless otherwise directed by the Engineer.
15. Provide a smooth transition where the curb ramps connect to the street.
16. Curbs shown on sheet 1 within the limits of payment are considered part of the curb ramp for payment, whether it is concrete curb, gutter, or combined curb and gutter.
17. Flare slope shall not exceed 10% measured along curb line.

DISCLAIMER:
The use of this standard is governed by the "Texas Engineering Practice Act". No warranty of any kind is made by TxDOT for any purpose whatsoever. TxDOT assumes no responsibility for the conversion of this standard to other formats or for incorrect results or damages resulting from its use.

LEVELS C

Texas Department of Transportation
Design Division (Roadway)

PEDESTRIAN FACILITIES
GENERAL NOTES AND DETECTABLE WARNINGS

PED-05

FILE: ped05.dgn	DN: EH	CK:	DW: BGD	CK:
©TxDOT March 2002	DIST	FEDERAL AID PROJECT		SHEET
REVISIONS		2452-01-050		193
	COUNTY	CONTROL	SECT	JOB	HIGHWAY
	DEXTER				

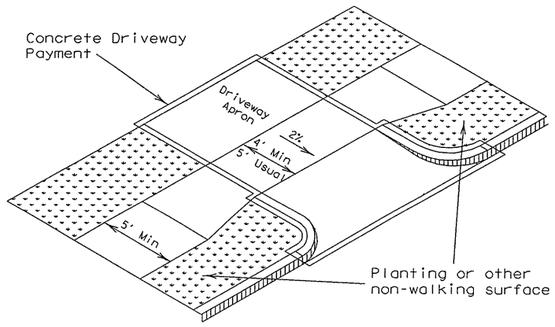

Setback sidewalk

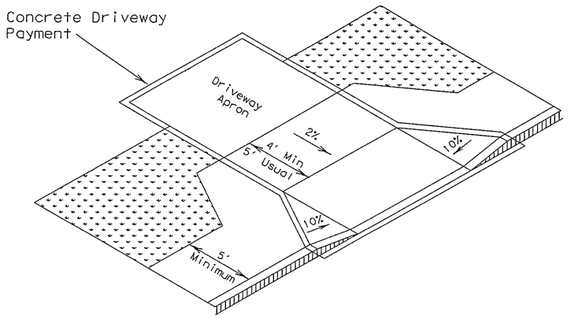

Apron offset sidewalk

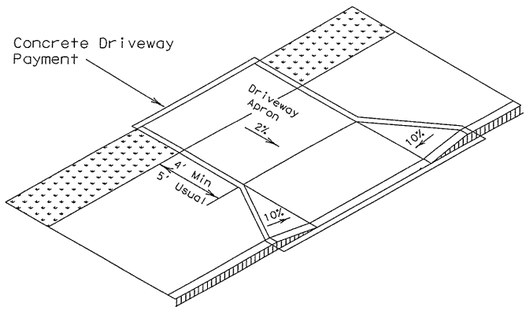

Wide sidewalk

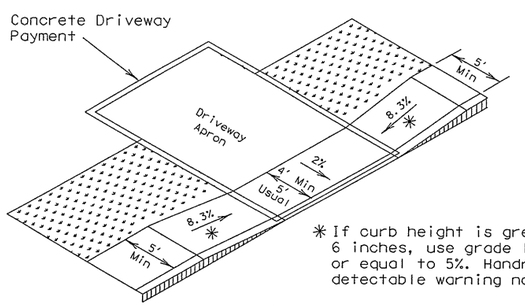

Ramp sidewalk

SIDEWALK TREATMENT AT DRIVEWAYS

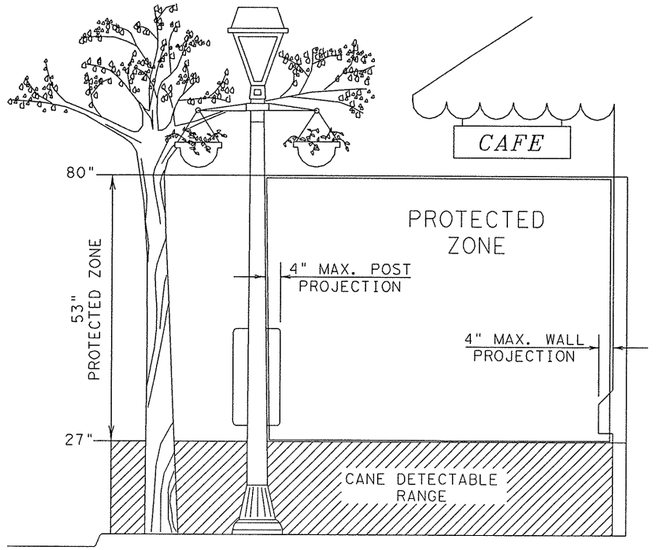

PROTECTED ZONE

In pedestrian circulation area, maximum 4" projection for post or wall mounted objects between 27"and 80" above the surface.

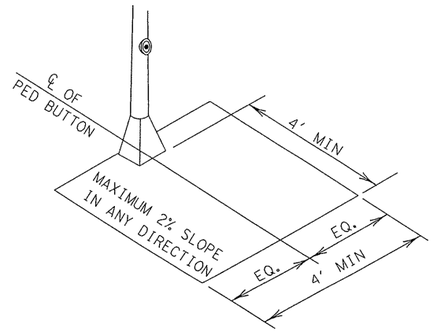

CLEAR GROUND SPACE CENTERED AT PEDESTRIAN PUSH BUTTON

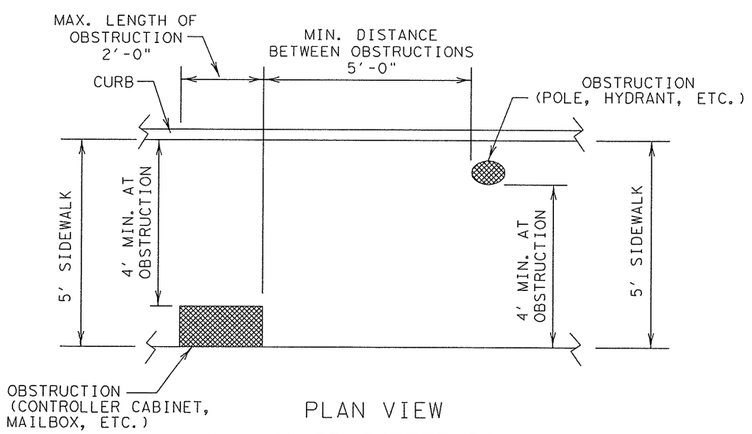

PLAN VIEW

PLACEMENT OF STREET FIXTURES

(ITEMS NOT INTENDED FOR PUBLIC USE. MINIMUM 4' x 4' CLEAR GROUND SPACE REQUIRED AT PUBLIC USE FIXTURES.)

General Notes

1. All slopes are maximum allowable. The least possible slope that will still drain properly should be used.
2. Place traffic signal or illumination poles, ground boxes, controller boxes, signs, drainage facilities and other items so as not to obstruct the accessible route or clear ground space.
3. Usual sidewalk cross slope equals 1.5%. The maximum allowable sidewalk cross slope equals 2%.
4. Street grades and cross slopes shall be as shown elsewhere in the plans.
5. Existing features that comply with TAS may remain in place unless otherwise shown on the plans.
6. Changes in level greater than ¼inch are not permitted.
7. The least possible grade should be used to maximize accessibility. The running slope of sidewalks and crosswalks, within the public right of way, may follow the grade of the parallel roadway. Where a continuous grade greater than 5% must be provided, handrails may be desirable on one or both sides of the sidewalk to improve accessibility. Handrails may also be needed to protect pedestrians from potentially hazardous conditions. If provided, handrails must comply with TAS 4.8.5.
8. Handrail extensions shall not protrude into the usable landing area or into intersecting pedestrian routes.
9. Driveways and turnouts shall be constructed and paid for in accordance with Item, "Driveways and Turnouts". Sidewalks shall be constructed and paid for in accordance with Item, "Sidewalks".
10. Sidewalk details are shown elsewhere in the plans.

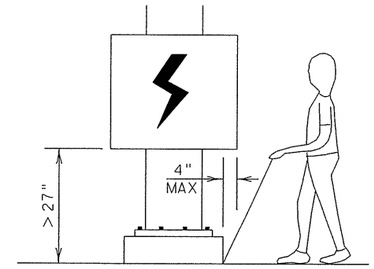

When an obstruction of a height greater than 27" from the surface would create a protrusion of more than 4" into the pedestrian circulation area, construct additional curb or foundation at the bottom to provide a maximum 4" overhang.

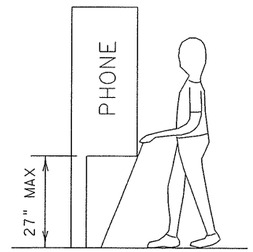

Protruding objects of a height ≤ 27" are detectable by cane and do not require additional treatment.

DETECTION BARRIER FOR VERTICAL CLEARANCE < 80"

DISCLAIMER:
The use of this standard is governed by the "Texas Engineering Practice Act". No warranty of any kind is made by TxDOT for any purpose whatsoever. TxDOT assumes no responsibility for the conversion of this standard to other formats or for incorrect results or damages resulting from its use.

LEVELS

Texas Department of Transportation
Design Division (Roadway)

PEDESTRIAN FACILITIES
SIDEWALKS

PED-05

FILE: ped05.dgn	DN: EH	CK:	DW: BGD	CK:	
©TxDOT March 2002	DIST	FEDERAL AID PROJECT			SHEET
REVISIONS		2420(069)			194
	COUNTY		CONTROL	SECT	JOB	HIGHWAY
	BEXAR					

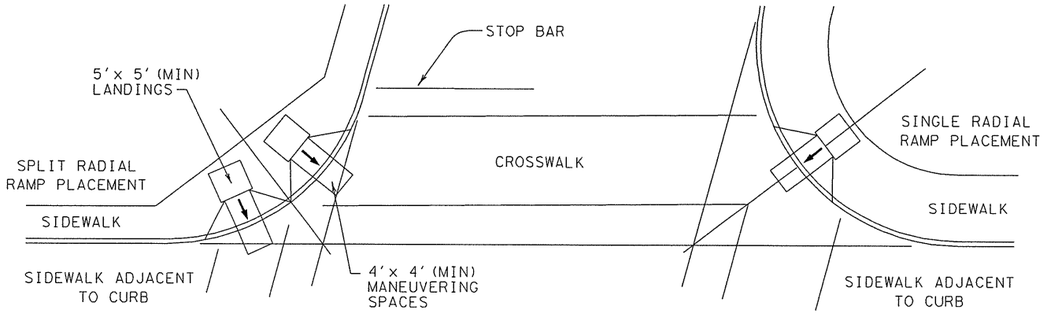

SKEWED INTERSECTION WITH "LARGE" RADIUS

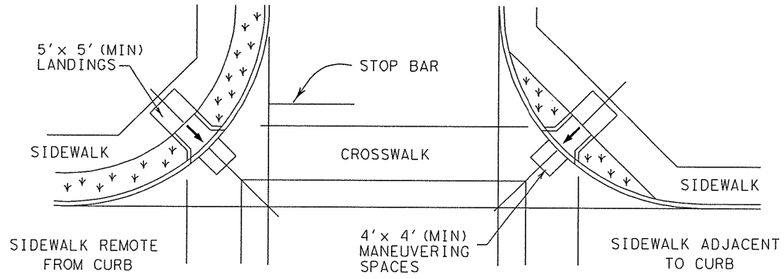

NORMAL INTERSECTION WITH "LARGE" RADIUS

General Notes

1. Street grades and cross slopes shall be as shown elsewhere in the plans.
2. Ramps are shown here without detectable warnings for simplicity. Detectable warnings are required at the locations shown on the PED Standard (Sheets 1 and 2 of 4) and in accordance with the details shown below.
3. Small channelization islands, which can not provide a minimum 5' x 5' landing at the top of ramps, shall be cut through level with the surface of the street.

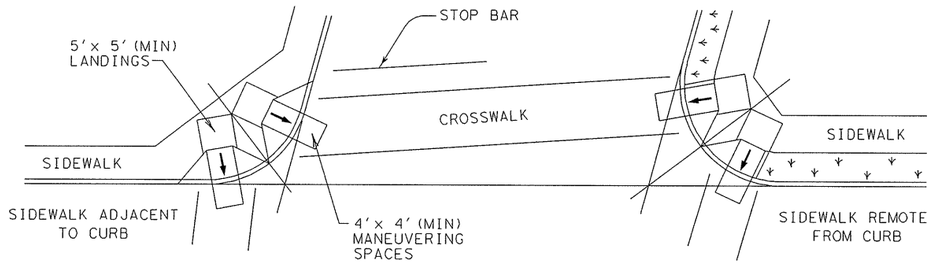

SKEWED INTERSECTION WITH "SMALL" RADIUS

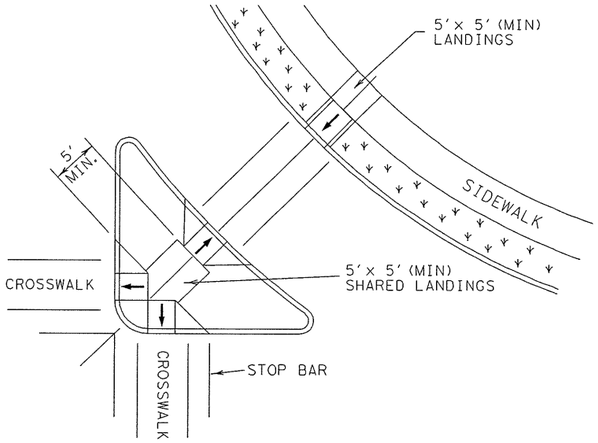

AT INTERSECTION
W/FREE RIGHT TURN & ISLAND

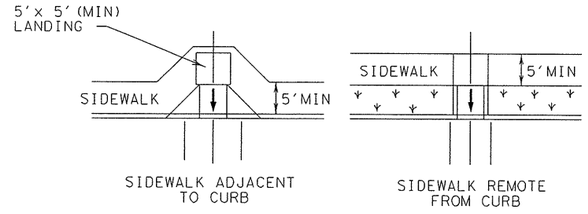

MID-BLOCK PLACEMENT
PERPENDICULAR RAMPS

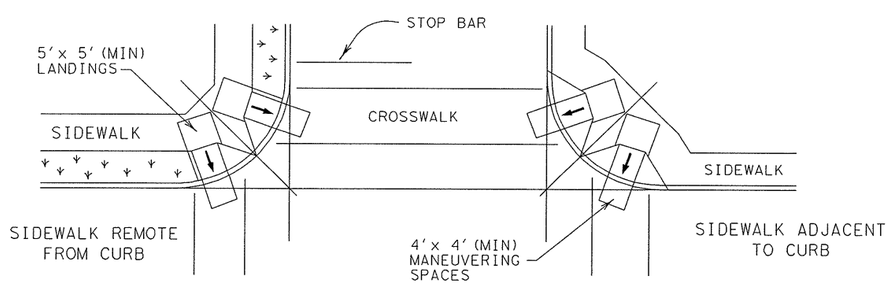

NORMAL INTERSECTION WITH "SMALL" RADIUS

TYPICAL CROSSING LAYOUTS

SEE SHEET 1 OF 4 FOR DETAILS AND DIMENSIONS

DISCLAIMER:
The use of this standard is governed by the "Texas Engineering Practice Act". No warranty of any kind is made by TxDOT for any purpose whatsoever. TxDOT assumes no responsibility for the conversion of this standard to other formats or for incorrect results or damages resulting from its use.

LEVELS

Texas Department of Transportation
Design Division (Roadway)

PEDESTRIAN FACILITIES

INTERSECTION LAYOUTS

PED-05

SHEET 4 OF 4

FILE: ped05.dgn	DN: EH	CK:	DW: BGD	CK:
©TxDOT March 2002	DIST	FEDERAL AID PROJECT		SHEET
REVISIONS		2450-01-050		195
	COUNTY	CONTROL	SECT	JOB	HIGHWAY
	BOR				

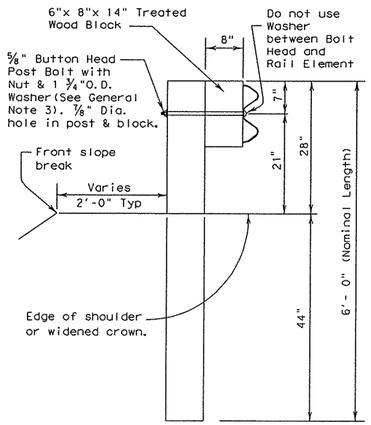

TYPICAL POST

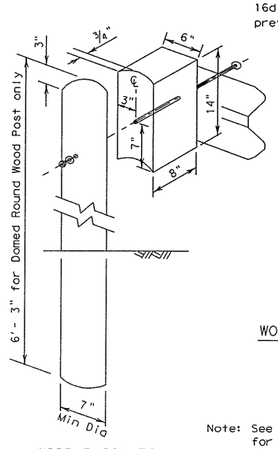

WOOD BLOCK TO ROUND WOOD POST

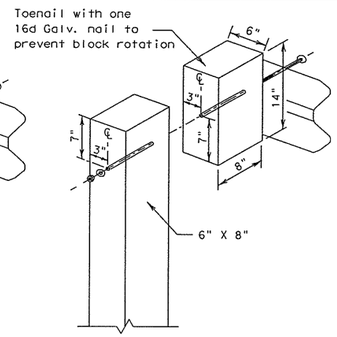

WOOD BLOCK TO RECTANGULAR WOOD POST

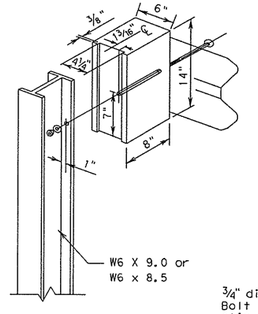

WOOD BLOCK TO STEEL POST

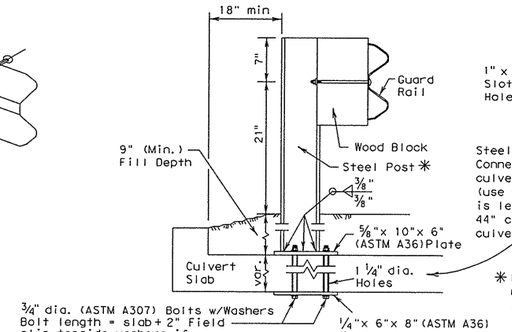

* LOW FILL CULVERT POST

FOR USE ON NON-BRIDGE CLASS CULVERTS ONLY

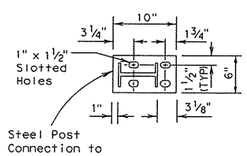

* Post(s) may require field modifications to ensure proper guardrail height.

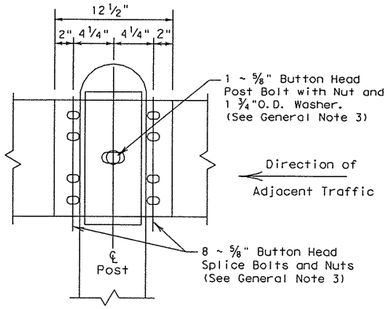

RAIL SPLICE DETAIL

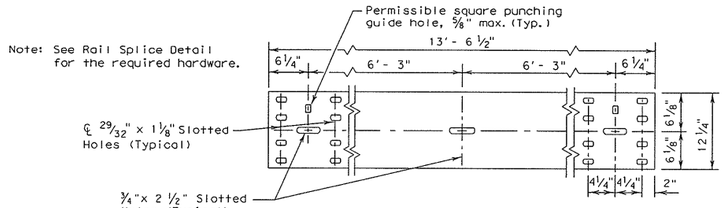

ELEVATION 12 1/2' (NOM.) W-BEAM SECTION

25 foot sections may also be supplied (See General Note 2)

GENERAL NOTES

1. The type of post (round wood post, rectangular wood post, or steel post) will be shown elsewhere in the plans. The exact position of MBGF shall be shown elsewhere in the plans or as directed by the Engineer. Steel posts to be galvanized in accordance with Item 445, "Galvanizing."
2. Rail element shall meet the requirements of Item 540, "Metal Beam Guard Fence" except as modified on the plans. The Contractor may furnish rail elements of 12 1/2 or 25 foot nominal lengths.
3. Button head "post" bolts (ASTM A307) shall be of sufficient length to extend through the full thickness of the nut (ASTM A563) and Type A (1 3/4" O.D.)washer and not more than 1" beyond it. Button head "splice" bolts (ASTM A307) are 5/8" x 1 1/4" (or 2" long at triple rail splices) with a 5/8" double recessed nut (ASTM A563).
4. Fittings (bolts, nuts, and washers) shall be galvanized in accordance with Item 445, "Galvanizing." Fittings shall be subsidiary to the bid item.
5. Crown shall be widened to accommodate the Metal Beam Guard Fence.
6. The lateral approach to the guard fence, shall have a slope rate of not more than 1V:10H.
7. Unless otherwise shown in the plans, guard fence placed in the vicinity of curbs shall be positioned so that the face of curb is located directly below or behind the face of the block. Rail placed over curbs shall be installed so that the post bolt is located approximately 21 inches above the gutter pan or roadway surface.
8. If solid rock is encountered within 0 to 18" of the finished grade, drill a 22" dia. hole, 24" into the rock, or drill two 12" dia. front to back overlapping holes, 24" into the rock. If solid rock is encountered below 18", drill a 12" dia. hole, 12" into the rock or to the standard embedment depth, whichever is less. Any excess post length, after meeting these depths, may be field cut to ensure proper guardrail mounting height. Backfill with a cohesionless material.
9. Posts shall not be set in concrete, of any depth.
10. Special fabrication will be required at installations having a curvature of less than 150 ft. radius.
11. The terminal anchor section (TAS) post shall be set in Class A concrete (unless otherwise shown in the plans) in accordance with Item 421, "Hydraulic Cement Concrete." Concrete shall be subsidiary to the bid item requiring construction of the terminal anchor section (TAS). Terminal anchor post to be galvanized in accordance with Item 445, "Galvanizing."
12. Unless otherwise shown in the plans, a composite material post and/or block that meets the requirements of DMS-7210, "Composite Material Posts and Blocks for Metal Beam Guard Fence" may be substituted for posts and/or blocks of similar dimensions. The Construction Division, TxDOT maintains a Material Producer List (MPL) for producers of materials conforming to DMS-7210. Only producers on the MPL can furnish composite material posts and/or blocks.

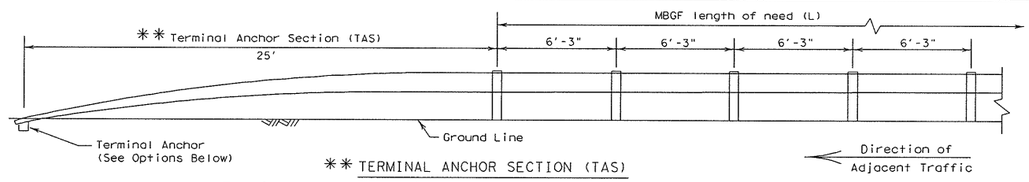

** TERMINAL ANCHOR SECTION (TAS)

Terminal anchor sections are only for downstream use, when located outside the horizontal clearance area of opposing traffic.

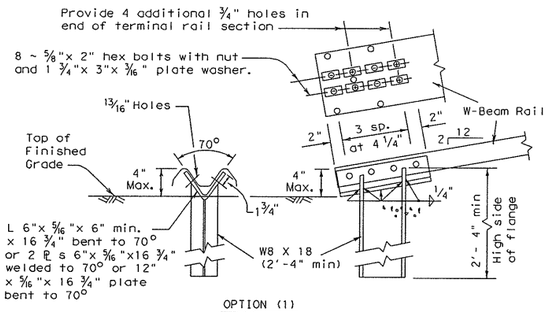

OPTION (1)

Note: This anchor post requires four additional 3/4" holes (shop or field) in the rail member with eight 5/8" hex bolts with nut and plate washer.

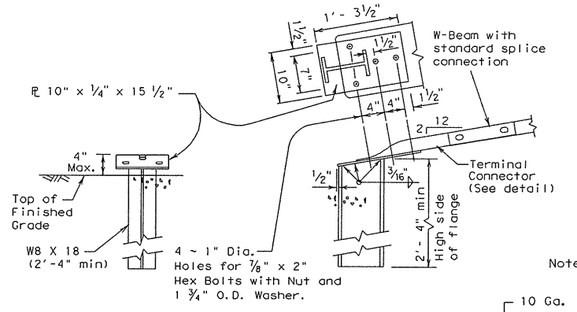

OPTION (2)

Note: This anchor post requires the use of the 10 ga. terminal connector with four 7/8" hex bolts with nut and washer.

TERMINAL ANCHOR POST OPTIONS

(See General Note 11)

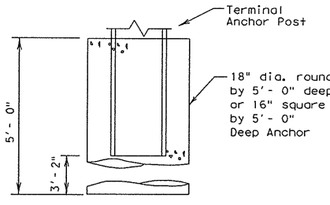

Notes:

Either concrete anchor may be used with either post option above.

No construction joint is allowed in the concrete anchor.

Terminal rail may be bolted to post and in twist position prior to placing concrete anchor.

If concrete anchor is precast, the area should be compacted as directed by the Engineer, when placed in the field.

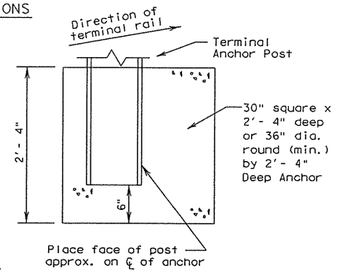

TERMINAL CONCRETE ANCHOR OPTIONS

(See General Note 11)

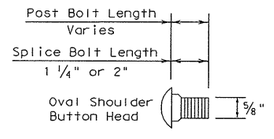

BUTTON HEAD BOLT

Post and Splice Bolts (See General Note 3)

Note: Terminal Connector to be used with terminal anchor post options 2.

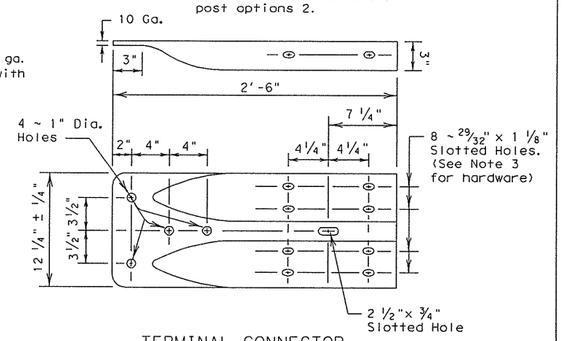

TERMINAL CONNECTOR

For connection hardware to concrete rails, see the MBGF transition standards.

DISCLAIMER:
The use of this standard is governed by the "Texas Engineering Practice Act". No warranty of any kind is made by TxDOT for any purpose whatsoever. TxDOT assumes no responsibility for the conversion of this standard to other formats or for incorrect results or damages resulting from its use.

LEVELS

Texas Department of Transportation
Design Division (Roadway)

METAL BEAM GUARD FENCE

MBGF-09

FILE: mbgf09.dgn	DN: AM	CK: AM	DW: BD	CK:	
©TxDOT JULY 1994	DIST	FEDERAL AID PROJECT			SHEET
REVISIONS		2452-01-050			196
	COUNTY		CONTROL	SECT	JOB	HIGHWAY
	BEXAR					

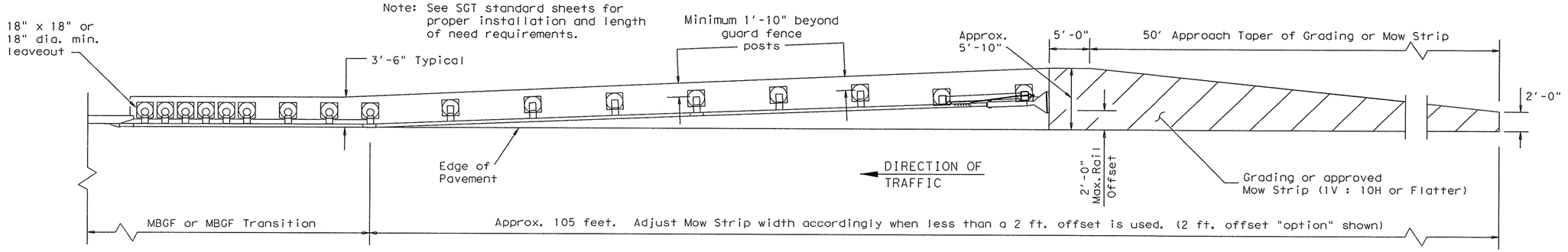

GRADING AND MOW STRIP AT GUARDRAIL END TREATMENTS

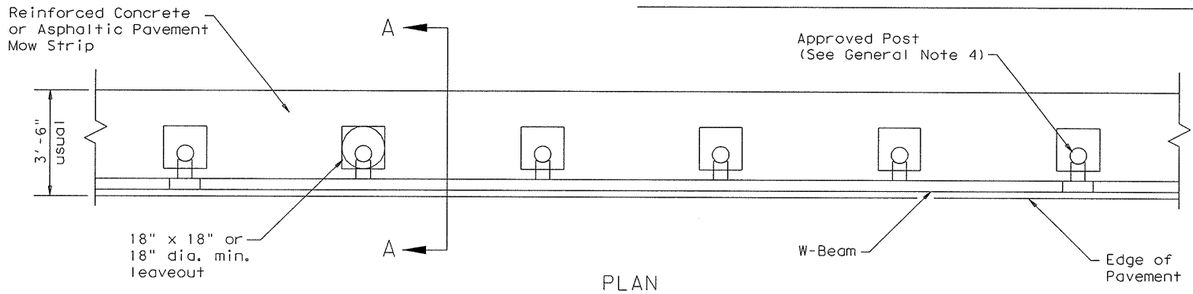

PLAN

Regular MBGF shown with Mow Strip

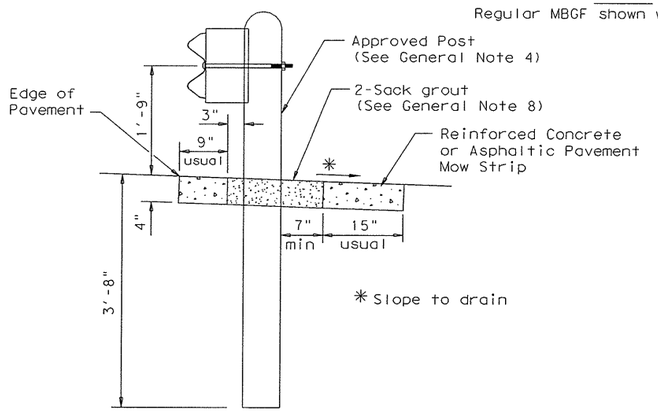

SECTION A-A

Typical

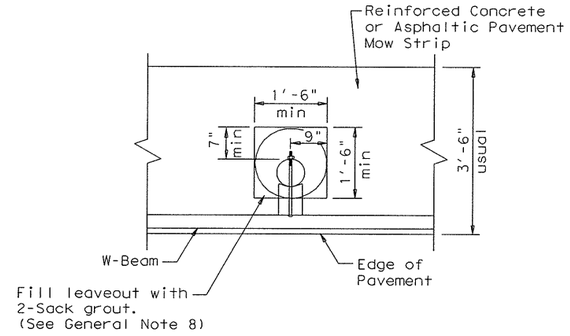

MOW STRIP DETAIL

Reinforced Concrete or Asphaltic Pavement Mow Strip with 18" x 18" or 18" dia. minimum leaveout.

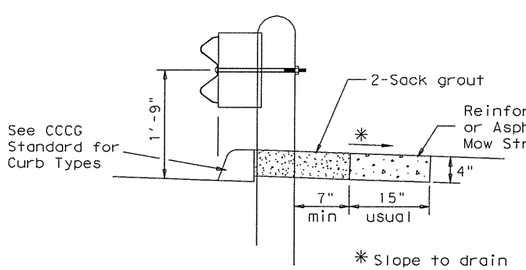

CURB OPTION (1)

This option will increase the post embedment through out the system.

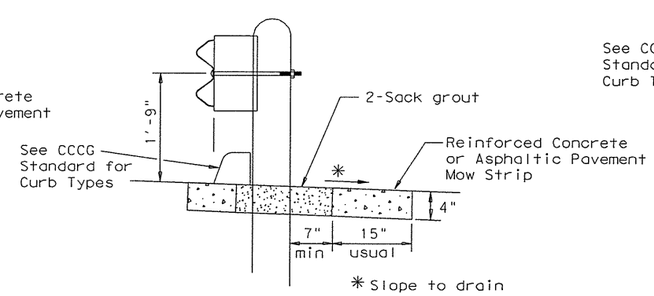

CURB OPTION (2)

Curb shown on top of mow strip

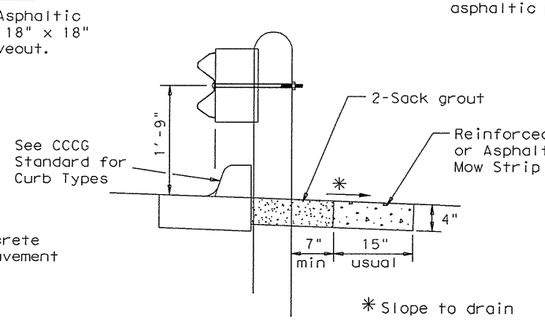

CURB OPTION (3)

Note: Site Condition(s)

Site conditions may exist where grading is required for the proper installation of metal guard fence and end treatments.

Approach grading or mow strip may be decreased or eliminated. As directed by the Engineer.

GENERAL NOTES

1. This mow strip design is for use with metal beam guard fence, guard fence transitions, and guard fence end treatments (See SGT standards for proper SGT installation).
2. Mow strips shall be asphaltic pavement or reinforced concrete (wire mesh or synthetic fiber), as shown on the plans and will be paid for under the pertinent bid item of work. Asphaltic pavement shall meet the requirements of the item, and be placed in accordance with the pertinent bid item as shown on the plans. Reinforced concrete shall be placed in accordance with Item 432, "Riprap." The use of the synthetic fiber in lieu of steel reinforcing is acceptable, provided the fiber producer is on the Department Material Producer List (MPL), maintained by TxDOT, Construction Division.
3. The leaveout behind the post shall be a minimum of 7".
4. The type of approved post will be shown elsewhere in the plans. See the applicable standard sheets for additional details and information.
5. Other curb placement options may be used. Curbs are not considered part of the mow strip and will be paid for under other pertinent bid item.
6. Depth of mow strip will be 4".
7. The limits of payment for asphaltic pavement or reinforced concrete will include leaveouts for post.
8. The leaveouts shall be filled with no more than a 2-sack grout mixture and placed in accordance with Section 421.2.F, "Mortar and Grout." Payment for furnishing and placing the grout mixture will be considered subsidiary to the pay item of asphaltic pavement or reinforced concrete.

DISCLAIMER:
The use of this standard is governed by the "Texas Engineering Practice Act". No warranty of any kind is made by TxDOT for any purpose whatsoever. TxDOT assumes no responsibility for the conversion of this standard to other formats or for incorrect results or damages resulting from its use.

Texas Department of Transportation
Design Division (Roadway)

METAL BEAM GUARD FENCE

(MOW STRIP)

MBGF(MS)-10

FILE: mbgfms10.dgn	DN: TxDOT	CK: AM	DW: BD	CK:	
©TxDOT April 2003	DIST	FEDERAL AID PROJECT			SHEET
REVISIONS		2452-01-046			197
	COUNTY		CONTROL	SECT	JOB	HIGHWAY
	BLCO					

DISCLAIMER:
The use of this standard is governed by the "Texas Engineering Practice Act". No warranty of any kind is made by TxDOT for any purpose whatsoever. TxDOT assumes no responsibility for the conversion of this standard to other formats or for incorrect results or damages resulting from its use.

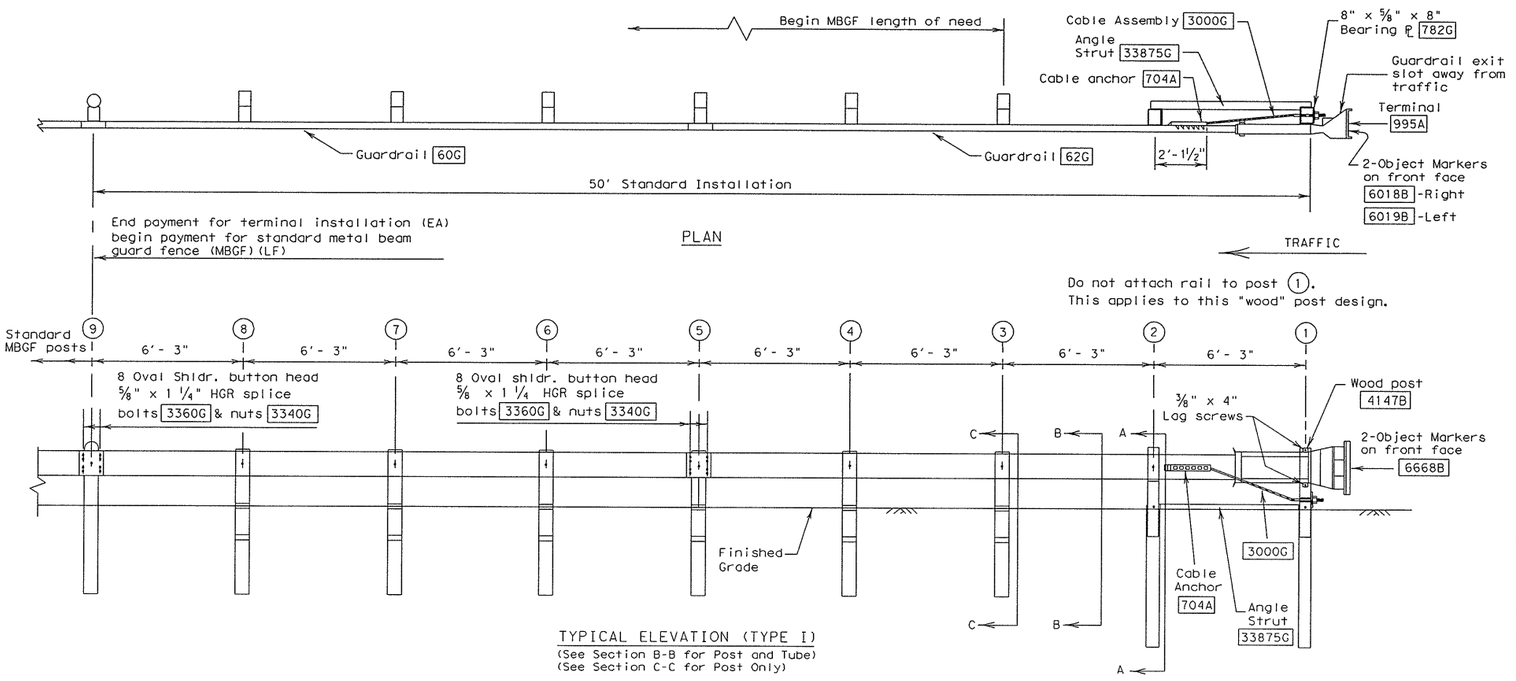

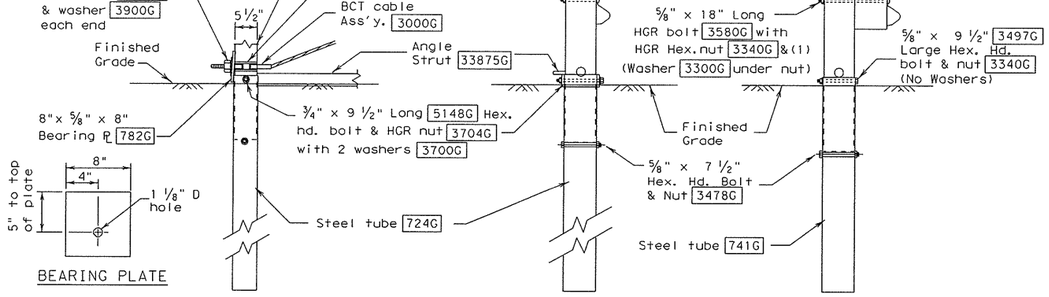

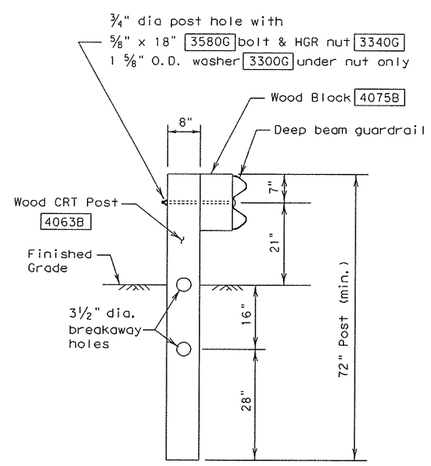

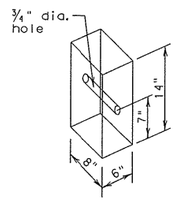

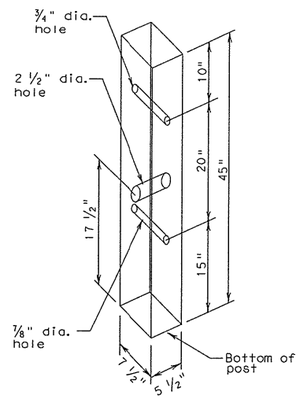

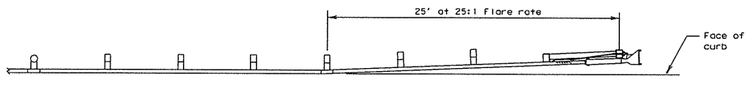

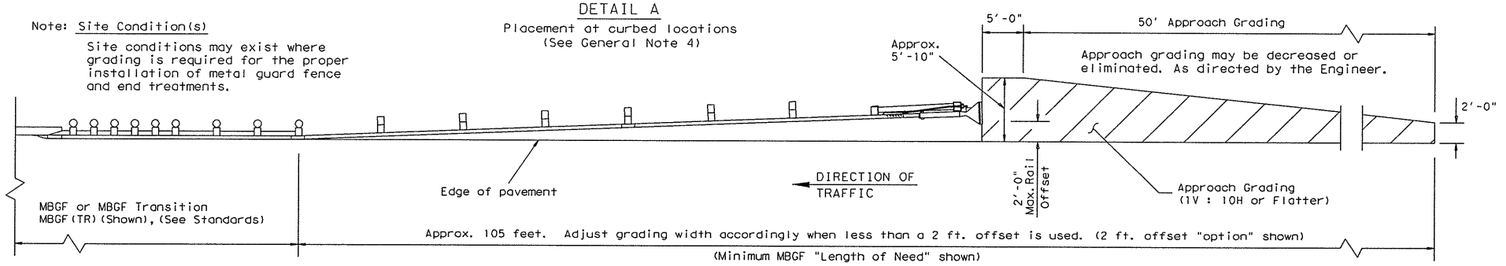

GENERAL NOTES

1. The Type of SGT unit will be specified elsewhere in the plans. Numbers in circles indicate post position. The Type of SGT unit chosen is a maintenance consideration and does not affect the systems performance.

Post & Tube Options		Post Only	
Type I	Posts (1) thru (2)	Posts (3) thru (8)	
Type II	Posts (1) thru (4)	Posts (5) thru (8)	
Type III	Posts (1) thru (8)	None	

2. SGT's placed within the "minimum" 150 ft. radius, shall be installed straight. Standard rail elements may be installed within the radius, without special fabrication.
3. All bolts, nuts, cable assemblies, cable anchors, steel tubes & bearing plates shall be galvanized.
4. At non-curbed locations, a flare rate of 25:1 may be used over the first 50 ft. of the system to prevent the terminal head from encroaching on the shoulder. The flare may be decreased or eliminated for specific installations, if directed by the Engineer.
   At curbed locations, a flare rate of 25:1 shall be used beginning at post number 5 and ending at post number 1.
5. The steel tubes shall not protrude more than 4 inches above ground. Site grading may be necessary to meet this requirement.
6. The steel tubes may be driven with an approved driving head. They shall not be driven with the wood post in the tube. If the steel tubes are placed in drilled holes, the backfill material must be satisfactorily compacted to prevent tube settlement.
7. If solid rock is encountered. See the manufacturer's installation manual for the proper installation guidance.
8. The breakaway cable assembly must be taut. A locking device, (vice grips or channel lock pliers) should be used to prevent the cable from twisting when tightening the nuts.
9. The wood blocks shall be "toe nailed" to the rectangular wood posts to prevent them from turning when the wood shrinks.
10. For curb installations, the soil tubes and posts shall be installed at the proper ground elevation behind the curb. The posts will then require field drilling new holes to accommodate the rail to post connection bolt to maintain the proper height of the rail above the gutter pan. The excess post length above the rail will be removed if directed by the Engineer.
11. An object marker shall be installed on the front of the impact head as detailed on D&OM(VIA).
12. A special site evaluation should be considered, prior to using this end treatment where there is less than 25 feet between the extrusion side of the end treatment and any adjacent driving lane.

BILL OF MATERIAL

Code #	POST & TUBE OPTIONS Type I Qty.	Type II Qty.	Type III Qty.	DESCRIPTION
62G	1	1	1	#1 Deep Beam Guardrail (12 Ga) at 25'
60G	1	1	1	#2 Deep Beam Guardrail (12 Ga) at 25'
724G	2	2	2	Steel Tube - 6"x 8"x 72"x 1/8" min
741G	0	2	6	Steel Tube - 6" x 8" x 54" x 1/8" min
4147B	2	4	8	Wood Posts - 5 1/2" x 7 1/2" x 45"
4063B	6	4	0	Wood CRT Posts - 6"x 8"x 72"
4075B	6	6	6	Wood Block - 6"x 8"x 14"
705G	1	1	1	Pipe Sleeve - 2" std. pipe x 5 1/2"
782G	1	1	1	Bearing Plate - 8"x 8"x 5/8"
704A	1	1	1	Cable Anchor
3000G	1	1	1	Cable Assembly (¾" x 78")
33875G	1	1	1	Angle Strut
995A	1	1	1	ET-2000 Plus Guardrail Terminal
				HARDWARE
5148G	2	2	2	¾" x 9 1/2" Hex Hd (Top of tubes 1&2)A325
3300G	7	7	7	5/8" Washers
3478G	2	4	8	5/8" x 7 1/2" Hex Bolt
3500G	1	1	1	5/8" x 10" Post Bolt (Post 2 of LET)
3580G	6	6	6	5/8" x 18" HGR Post Bolt (posts (3) thru (8))
3360G	16	16	16	5/8" x 1 1/4" HGR Splice Bolt
3340G	25	27	31	5/8" HGR Nut (16-spl, 7-posts)
4228G	2	2	2	3/8" x 4" Lag Screw
3910G	2	2	2	1" Hex Nut (Anchor Cable)
3900G	2	2	2	1" Washer (Anchor Cable)
6018B	2	2	2	Right - Object Marker (12" x 12")
6019B	2	2	2	Left - Object Marker (12" x 12")
3700G	4	4	4	¾" Washer
3704G	2	2	2	¾" Heavy Hex Nut
3497G	0	2	6	5/8" x 9 1/2" Hex Hd (Top of Tubes 3-8)A307

POST & TUBE OPTIONS	
Type I	Posts (1) thru (2)
Type II	Posts (1) thru (4)
Type III	Posts (1) thru (8)

Texas Department of Transportation
Design Division (Roadway)

SINGLE GUARDRAIL TERMINAL (ET-2000 PLUS) (WOOD POST)

SGT(7)-09

FILE: sgt709.dgn	DN: MAM	CK: MAM	DW: BGD	CK:		
©TxDOT APRIL 1997	DIST	FEDERAL AID PROJECT				SHEET
REVISIONS						198
	COUNTY		CONTROL	SECT	JOB	HIGHWAY

LEVELS 1

DISCLAIMER:
The use of this standard is governed by the "Texas Engineering Practice Act". No warranty of any kind is made by TxDOT for any purpose whatsoever. TxDOT assumes no responsibility for the conversion of this standard to other formats or for incorrect results or damages resulting from its use.

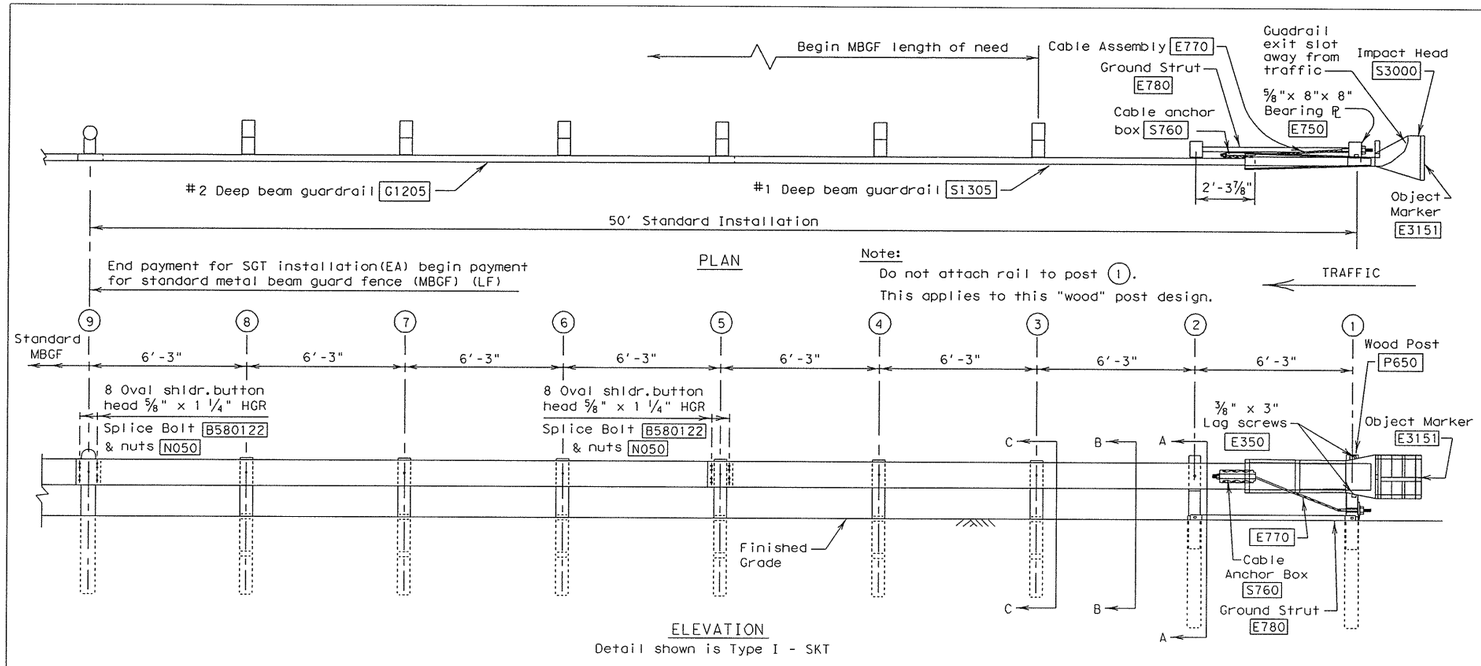

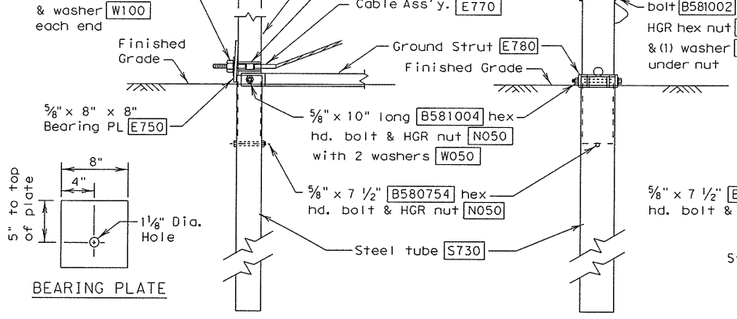

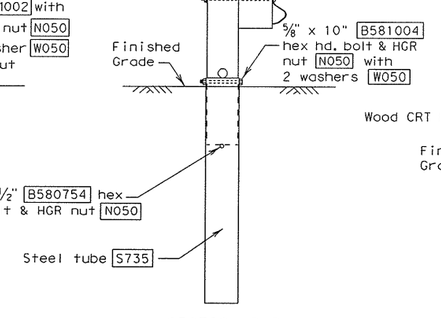

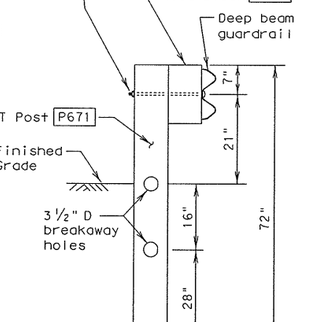

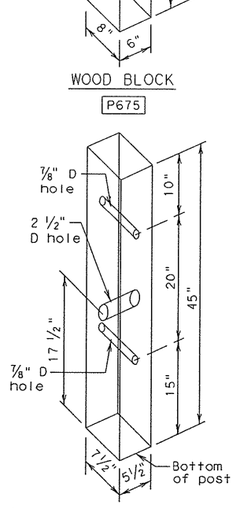

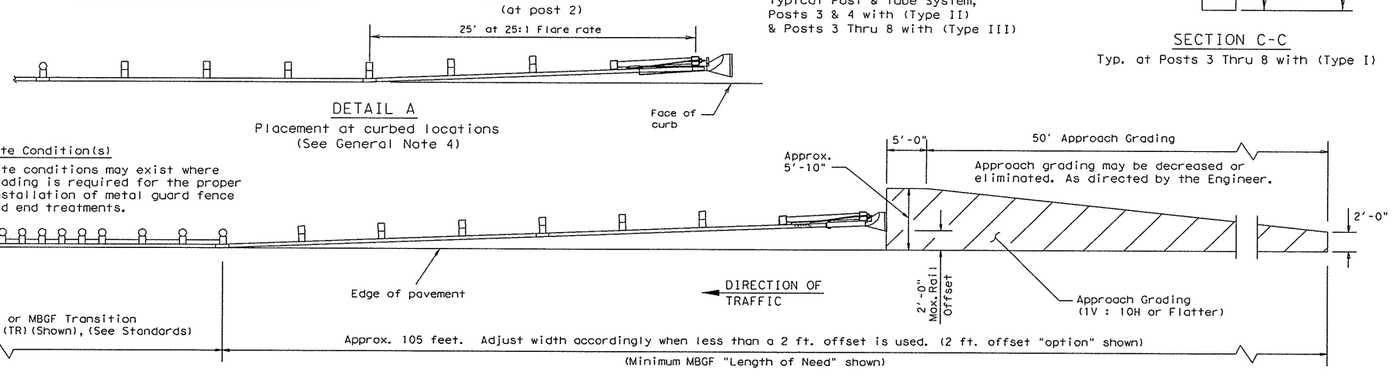

GENERAL NOTES

1. The Type of SGT unit will be specified elsewhere in the plans. Numbers in circles indicate post position. The Type of SGT unit chosen is a maintenance consideration and does not affect the systems performance.

	Post & Tube Options	Post Only
Type I	Posts (1) thru (2)	Posts (3) thru (8)
Type II	Posts (1) thru (4)	Posts (5) thru (8)
Type III	Posts (1) thru (8)	None

2. SGT's placed within the "minimum" 150 ft. radius, shall be installed straight. Standard rail elements may be installed within the radius, without special fabrication.
3. All bolts, nuts cable assemblies, cable anchors, steel tubes & bearing plates shall be galvanized.
4. At non-curbed locations, a flare rate of 25:1 may be used over the first 50 ft. of the system to prevent the terminal head from encroaching on the shoulder. The flare may be decreased or eliminated for specific installations, if directed by the Engineer.
   At curbed locations, a flare rate of 25:1 shall be used beginning at post number 5 and ending at post number 1.
5. The steel tubes shall not protrude more than 4 inches above ground. Site grading may be necessary to meet this requirement.
6. The steel tubes may be driven with an approved driving head. They shall not be driven with the wood post in the tube. If the steel tubes are placed in drilled holes, the backfill material must be satisfactorily compacted to prevent tube settlement.
7. If solid rock is encountered. See the Manufacturer's installation manual for the proper installation guidance.
8. The breakaway cable assembly must be taut. A locking device, (vice grips or channel lock pliers) should be used to prevent the cable from twisting when tightening the nuts.
9. The wood blocks shall be "toe nailed" to the rectangular wood posts to prevent them from turning when the wood shrinks.
10. For curb installations, the soil tubes and posts shall be installed at the proper ground elevation behind the curb. The posts will then require field drilling new holes to accommodate the rail to post connection bolt to maintain the proper height of the rail above the gutter pan. The excess post length above the rail will be removed if directed by the Engineer.
11. An object marker shall be installed on the front of the impact head as detailed on D&OM(VIA).
12. A special site evaluation should be considered, prior to using this end treatment where there is less than 25 feet between the outlet side of the end treatment and any adjacent driving lane.

Code #	POST & TUBE OPTIONS Type I Qty.	Type II Qty.	Type III Qty.	BILL OF MATERIAL DESCRIPTION
S1305	1	1	1	#1 Deep Beam Guardrail (12 Ga.)
G1205	1	1	1	#2 Deep Beam Guardrail (12 Ga.)
S730	2	2	2	Steel Tube - 6" x 8" x 72" x 3/16" or 1/8" min
S735	0	2	6	Steel Tube - 6" x 8" x 54" x 3/16" or 1/8" min
P650	2	4	8	Wood Posts - 5 1/2" x 7 1/2" x 45"
P671	6	4	0	Wood CRT Posts - 6" x 8" x 72"
P675	6	6	6	Wood Block - 6" x 8" x 14"
E740	1	1	1	Pipe Sleeve - 2" Std. Pipe x 5 1/2"
E750	1	1	1	Bearing Plate - 5/8" x 8" x 8"
S760	1	1	1	Cable Anchor Box
E770	1	1	1	Cable Assembly
E780	1	1	1	Ground Strut
S3000	1	1	1	Impact Head
				HARDWARE
B580754	2	4	8	5/8" x 7 1/2" Hex Hd. Bolt
B581004	2	4	8	5/8" x 10" Hex Hd. Bolt (Top of Tubes)
W050	11	15	23	5/8" Washers
B581002	1	1	1	5/8" x 10" HGR Post Bolt (Post 2)
B580122	16	16	16	5/8" x 1 1/4" HGR Splice Bolt
B581802	6	6	6	5/8" x 18" HGR Post Bolt (Posts (3) thru (8))
N050	27	31	39	5/8" HGR Nut (16-Spl, 8-Posts, 2-Strut)
E350	2	2	2	3/8" x 3" Lag Screw
N100	2	2	2	1" Hex Nut (Anchor Cable)
W100	2	2	2	1" Washer (Anchor Cable)
SB58A	8	8	8	Cable Anchor Box Shoulder Bolts
N055A	8	8	8	1/2" A325 Structural Nut
W050A	16	16	16	1/2" A325 Structural Washer
E3151	1	1	1	Object Marker - (18" x 18")

POST & TUBE OPTIONS	
Type I	post (1) thru (2)
Type II	post (1) thru (4)
Type III	post (1) thru (8)

Texas Department of Transportation
Design Division (Roadway)

SINGLE GUARDRAIL TERMINAL
(SKT 350) (WOOD POST)
SGT(8)-09

FILE: sgt809.dgn	DN: MAM	CK: MAM	DW: BGD	CK: MAM	
©TxDOT July 2001	DIST	FEDERAL AID PROJECT			SHEET
REVISIONS					199
	COUNTY		CONTROL	SECT	JOB	HIGHWAY

Plotted on: 6/29/2010

Design Filename: N:\2294-001\dgn\DRAINAGE\LP1604DAMAP01.DGN

TxDOT RATIONAL METHOD LOCAL DRAINAGE AREA CALCULATIONS

DRAINAGE AREA ID	OUTAFALL STRUCTURE ID	Station Location (Loop 1604)	Stucture Type	Drainage Area		Tc_t(min)	TOTAL C VALUE	C*A	INTENSITY (I) in/hr						PEAK DISCHARGE (Q) cfs					
				ft^2	ac				I_2	I_5	I_{10}	I_{25}	I_{50}	I_{100}	Q_2	Q_5	Q_{10}	Q_{25}	Q_{50}	Q_{100}
DA1	Culvert 1	364+30	Culvert	130079	3.0	10	0.40	1.20	5.41	7.05	8.07	9.26	10.27	11.49	6.49	8.46	9.68 *	12.22	14.79	17.24
DA2	Culvert 2	364+82	Culvert	115267	2.6	10	0.52	1.35	5.41	7.05	8.07	9.26	10.27	11.49	7.31	9.53	10.91 *	13.77	16.66	19.42

NOTES:
1. ADJUSTED RUNOFF FACTOR OF 1.1, 1.2 AND 1.25 USED FOR RUNOFF CALCULATIONS IN THE 25 YEAR, 50 YEAR, AND 100 YEAR EVENTS, RESPECTIVELY.
2. THE EXISTING STRUCTURES IMMEDIATELY DOWNSTREAM OF PROPOSED IMPROVEMENTS WERE ANALYZED AND PROPOSED IMPROVEMENTS HAVE NO IMPACT TO EXISTING STRUCTURES' HYDRAULIC CAPACITY.
3. * DENOTES DESIGN STORM

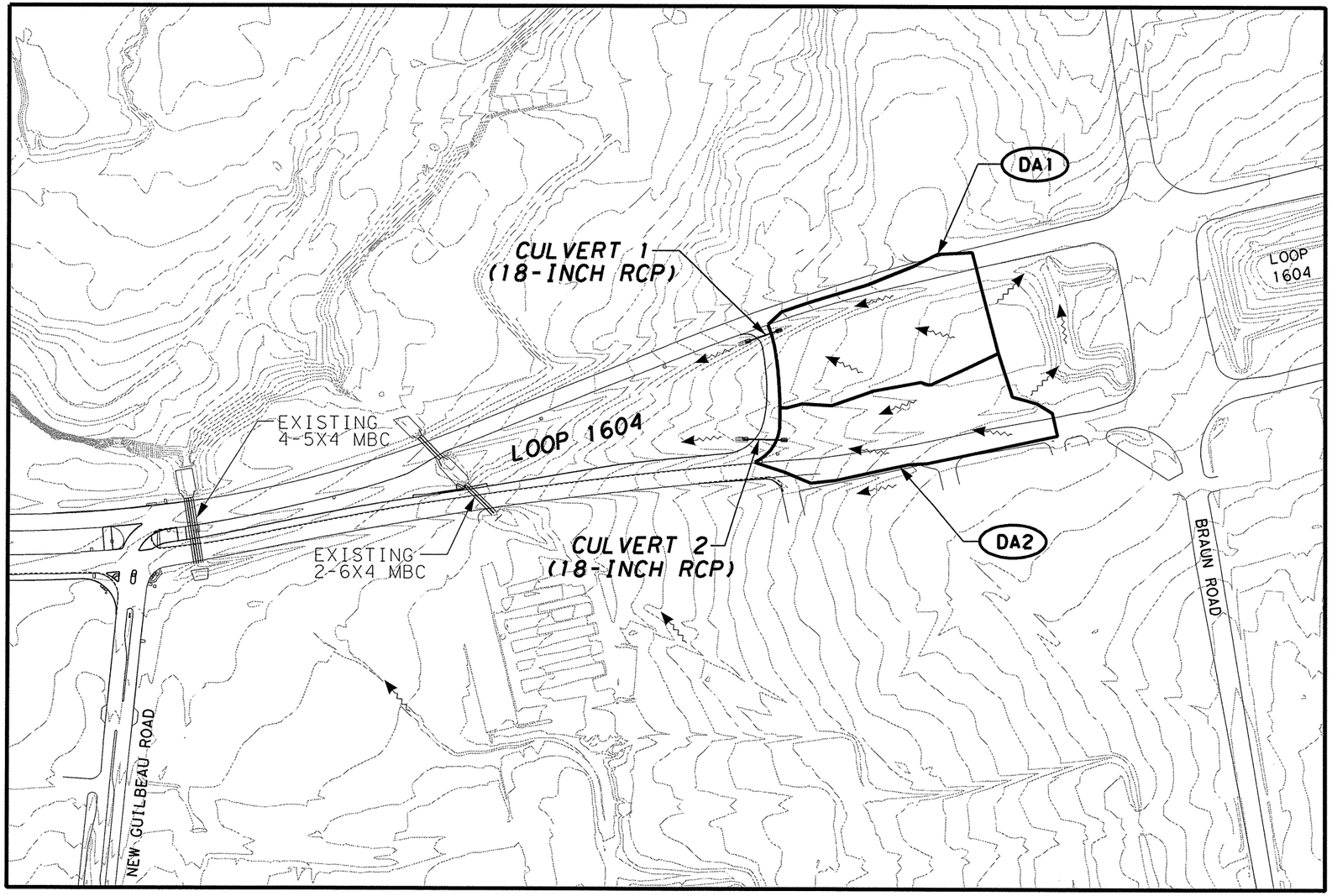

SCALE: 1" = 300'

150 75 0 150 300
HORIZ. SCALE FEET

LEGEND

DRAINAGE AREA FLOW ARROWS

DA1 DRAINAGE AREA

DRAINAGE AREA BOUNDARY

STATE OF TEXAS
KENNETH E. ROGERS
89448
LICENSED
PROFESSIONAL ENGINEER
6/30/10

REV. NO.	DATE	DESCRIPTION	BY

ALAMO RMA

VICKREY & ASSOCIATES, INC.
CONSULTING ENGINEERS
CIVIL /ENVIRONMENTAL /SURVEY
12940 Country Parkway San Antonio, Texas 78216
Voice:(210) 349-3271 Fax:(210) 349-2561 www.vickreynet.com
Texas Board of Professional Engineers Registration No: F-159 ©2010

Texas Department of Transportation © 2010

LOOP 1604 SUPER STREET

DRAINAGE AREA MAP

SHEET 1 OF 5

DGN:	FED. RD. DIV. NO.	STATE	FEDERAL AID PROJECT NO.			HIGHWAY NO.
CHK DGN:	6	TEXAS	STP 2011(210)ES			LP 1604
DWG:	DIST.	COUNTY	CONT. NO.	SECT. NO.	JOB NO.	SHEET NO.
CHK DWG:	SAT	BEXAR	2452	01	050	200

Plotted on: 6/29/2010

Design Filename: N:\2294-001\dgn\DRAINAGE\LP1604DAMAP02.dgn

TxDOT RATIONAL METHOD LOCAL DRAINAGE AREA CALCULATIONS

DRAINAGE AREA ID	OUTAFALL STRUCTURE ID	Station Location (Loop 1604)	Stucture Type	Drainage Area		Tc,(min)	TOTAL C VALUE	C*A	INTENSITY (I) in/hr						PEAK DISCHARGE (Q) cfs					
				ft^2	ac				I_2	I_5	I_{10}	I_{25}	I_{50}	I_{100}	Q_2	Q_5	Q_{10}	Q_{25}	Q_{50}	Q_{100}
DA3A	Culvert 3A	428+52	Culvert	95633	2.2	26	0.35	0.77	3.30	4.34	4.99	5.75	6.44	7.17	2.54	3.34	3.84 *	4.87	5.95	6.90
DA3+3A	Culvert 3	435+00	Culvert	126595	2.9	34	0.35	1.02	2.80	3.69	4.24	4.91	5.50	6.12	2.84	3.75	4.30	5.48 *	6.70	7.76

NOTES:
1. ADJUSTED RUNOFF FACTOR OF 1.1, 1.2 AND 1.25 USED FOR RUNOFF CALCULATIONS IN THE 25 YEAR, 50 YEAR, AND 100 YEAR EVENTS, RESPECTIVELY.
2. THE EXISTING STRUCTURES IMMEDIATELY DOWNSTREAM OF PROPOSED IMPROVEMENTS WERE ANALYZED AND PROPOSED IMPROVEMENTS HAVE NO IMPACT TO EXISTING STRUCTURES' HYDRAULIC CAPACITY.
3. * DENOTES DESIGN STORM

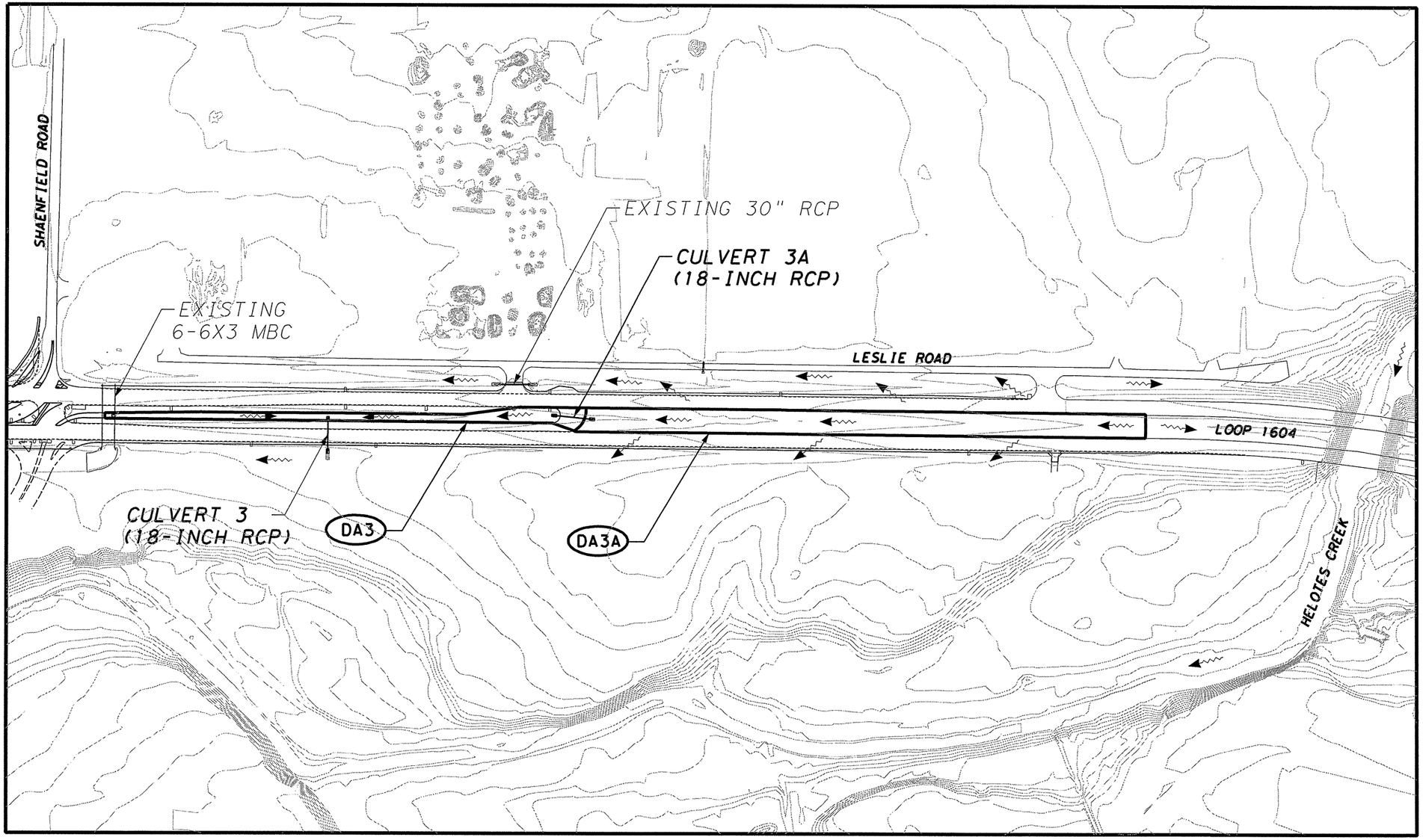

SCALE: 1" = 300'

150 75 0 150 300

HORIZ. SCALE FEET

LEGEND

DRAINAGE AREA FLOW ARROWS

DA1 DRAINAGE AREA

DRAINAGE AREA BOUNDARY

STATE OF TEXAS
KENNETH E. ROGERS
89448
LICENSED
PROFESSIONAL ENGINEER
12/30/10

REV. NO.	DATE	DESCRIPTION	BY

ALAMO RMA

VICKREY & ASSOCIATES, INC.
CONSULTING ENGINEERS
CIVIL /ENVIRONMENTAL /SURVEY
12940 Country Parkway San Antonio, Texas 78216
Voice:(210) 349-3271 Fax:(210) 349-2561 www.vickreynet.com
Texas Board of Professional Engineers Registration No: F-159 ©2010

Texas Department of Transportation
© 2010

LOOP 1604 SUPER STREET

DRAINAGE AREA MAP

SHEET 2 OF 5

DGN:	FED. RD. DIV. NO.	STATE	FEDERAL AID PROJECT NO.			HIGHWAY NO.
CHK DGN:	6	TEXAS	STP 2011(210)ES			LP 1604
DWG:	DIST.	COUNTY	CONT. NO.	SECT. NO.	JOB NO.	SHEET NO.
CHK DWG:	SAT	BEXAR	2452	01	050	201

Plotted on: 6/29/2010

Design Filename: N:\2294-001\dgn\DRAINAGE\LP1604DAMAP02A.dgn

TxDOT RATIONAL METHOD LOCAL DRAINAGE AREA CALCULATIONS

DRAINAGE AREA ID	OUTAFALL STRUCTURE ID	Station Location (Loop 1604)	Stucture Type	Drainage Area		Tc,(min)	TOTAL C VALUE	C*A	INTENSITY (I) in/hr						PEAK DISCHARGE (Q) cfs					
				ft^2	ac				I_2	I_5	I_{10}	I_{25}	I_{50}	I_{100}	Q_2	Q_5	Q_{10}	Q_{25}	Q_{50}	Q_{100}
DA4A	Culvert 4A	450+95	Culvert	144547	3.3	10	0.68	2.24	5.41	7.05	8.07	9.26	10.27	11.49	12.14	15.82	18.11 *	22.86	27.66	32.23
DA4+4A	Culvert 4	452+91	Culvert	261304	6.0	10	0.68	4.08	5.41	7.05	8.07	9.26	10.27	11.49	22.07	28.76	32.93	41.56 *	50.28	58.60
DA14	Area Inlet 2	452+97	Area Inlet	31888	0.7	16	0.47	0.33	4.33	5.67	6.50	7.47	8.32	9.29	1.42	1.87	2.14	2.70 *	3.28	3.82

NOTES:
1. ADJUSTED RUNOFF FACTOR OF 1.1, 1.2 AND 1.25 USED FOR RUNOFF CALCULATIONS IN THE 25 YEAR, 50 YEAR, AND 100 YEAR EVENTS, RESPECTIVELY.
2. THE EXISTING STRUCTURES IMMEDIATELY DOWNSTREAM OF PROPOSED IMPROVEMENTS WERE ANALYZED AND PROPOSED IMPROVEMENTS HAVE NO IMPACT TO EXISTING STRUCTURES' HYDRAULIC CAPACITY.
3. * DENOTES DESIGN STORM

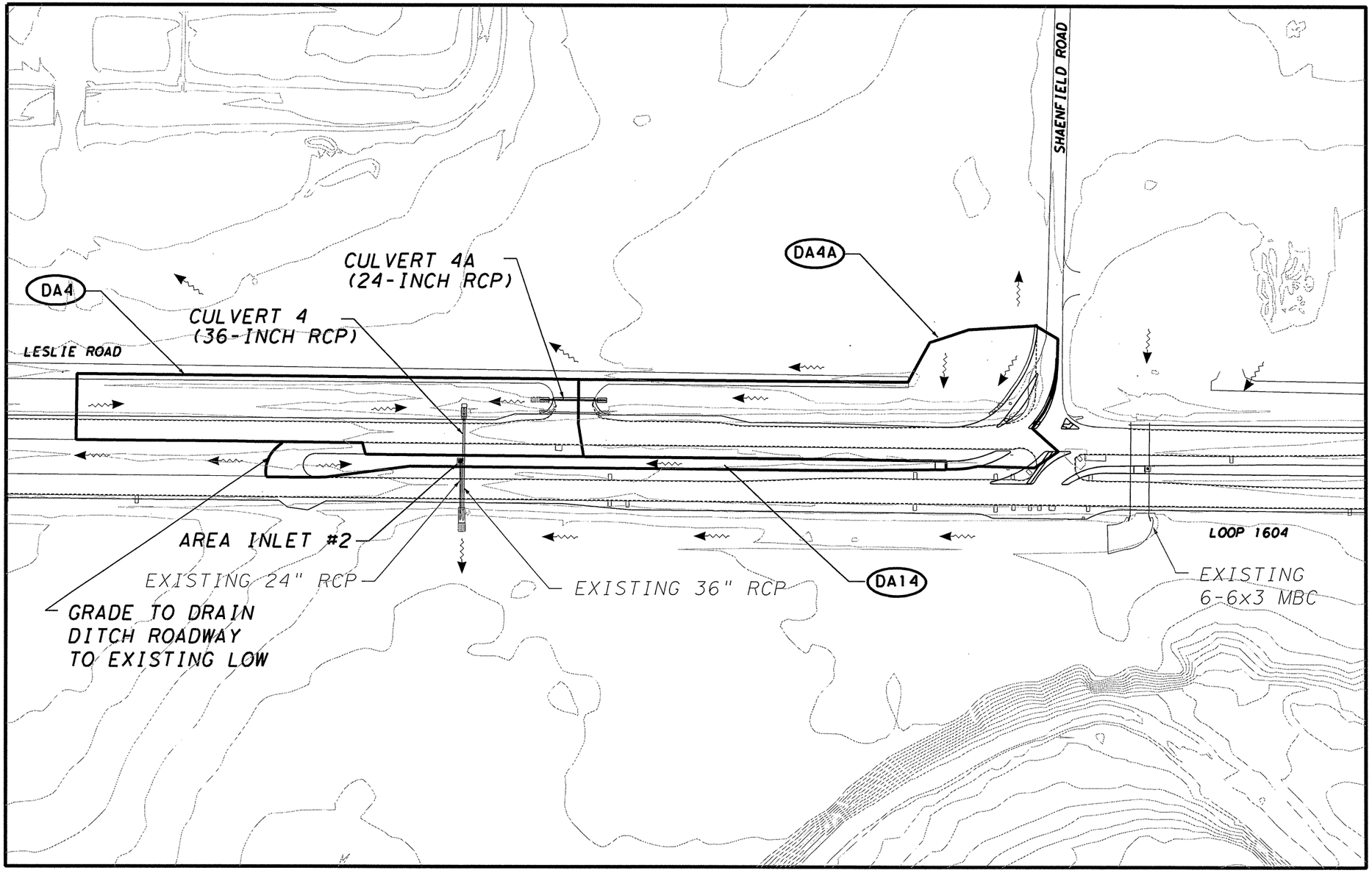

SCALE: 1" = 200'

100 50 0 100 200
HORIZ. SCALE FEET

LEGEND

- DRAINAGE AREA FLOW ARROWS
- DA1 DRAINAGE AREA
- DRAINAGE AREA BOUNDARY

STATE OF TEXAS
KENNETH E. ROGERS
89448
LICENSED PROFESSIONAL ENGINEER
6/30/10

REV. NO.	DATE	DESCRIPTION	BY

ALAMO RMA

VICKREY & ASSOCIATES, INC.
CONSULTING ENGINEERS
CIVIL /ENVIRONMENTAL /SURVEY
12940 Country Parkway San Antonio, Texas 78216
Voice:(210) 349-3271 Fax:(210) 349-2561 www.vickreynet.com
Texas Board of Professional Engineers Registration No: F-159 ©2010

Texas Department of Transportation
©2010

LOOP 1604 SUPER STREET

DRAINAGE AREA MAP

SHEET 3 OF 5

DGN:	FED. RD. DIV. NO.	STATE	FEDERAL AID PROJECT NO.			HIGHWAY NO.
CHK DGN:	6	TEXAS	STP 2011(210)ES			LP 1604
DWG:	DIST.	COUNTY	CONT. NO.	SECT. NO.	JOB NO.	SHEET NO.
CHK DWG:	SAT	BEXAR	2452	01	050	202

Plotted on: 6/29/2010

Design Filename: N:\2294-001\dgn\DRAINAGE\LP1604DAMAP03.DGN

TxDOT RATIONAL METHOD LOCAL DRAINAGE AREA CALCULATIONS

DRAINAGE AREA ID	OUTAFALL STRUCTURE ID	Station Location (Loop 1604)	Stucture Type	Drainage Area		Tc,(min)	TOTAL C VALUE	C*A	INTENSITY (I) in/hr						PEAK DISCHARGE (Q) cfs					
				ft^2	ac				I_2	I_5	I_{10}	I_{25}	I_{50}	I_{100}	Q_2	Q_5	Q_{10}	Q_{25}	Q_{50}	Q_{100}
DA5	Culvert 5	540+10	Culvert	325368	7.5	12	0.60	4.50	4.99	6.51	7.46	8.56	9.51	10.63	22.46	29.30	33.57	42.37 *	51.35	59.79
DA6+6A+6B	Bridge Class Culvert 6	561+29	Culvert	1552434	35.6	23	0.45	16.02	3.55	4.66	5.35	6.17	6.89	7.68	56.87	74.65	85.71	108.73 *	132.45	153.79
DA7+8	Culvert 7	573+82	Culvert	1318037	30.3	12	0.50	15.15	4.99	6.51	7.46	8.56	9.51	10.63	75.60	98.63	113.02	142.65 *	172.89	201.31
DA8	Culvert 8	575+79	Culvert	1303750	29.9	12	0.50	14.95	4.99	6.51	7.46	8.56	9.51	10.63	74.60	97.32	111.53	140.77 *	170.61	198.65
DA13	Area Inlet 1	539+00	Area Inlet	22315	0.5	10	0.69	0.35	5.41	7.05	8.07	9.26	10.27	11.49	1.87	2.43	2.78	3.51 *	4.25	4.96

NOTES:
1. ADJUSTED RUNOFF FACTOR OF 1.1, 1.2 AND 1.25 USED FOR RUNOFF CALCULATIONS IN THE 25 YEAR, 50 YEAR, AND 100 YEAR EVENTS, RESPECTIVELY.
2. THE EXISTING STRUCTURES IMMEDIATELY DOWNSTREAM OF PROPOSED IMPROVEMENTS WERE ANALYZED AND PROPOSED IMPROVEMENTS HAVE NO IMPACT TO EXISTING STRUCTURES' HYDRAULIC CAPACITY.
3. * DENOTES DESIGN STORM

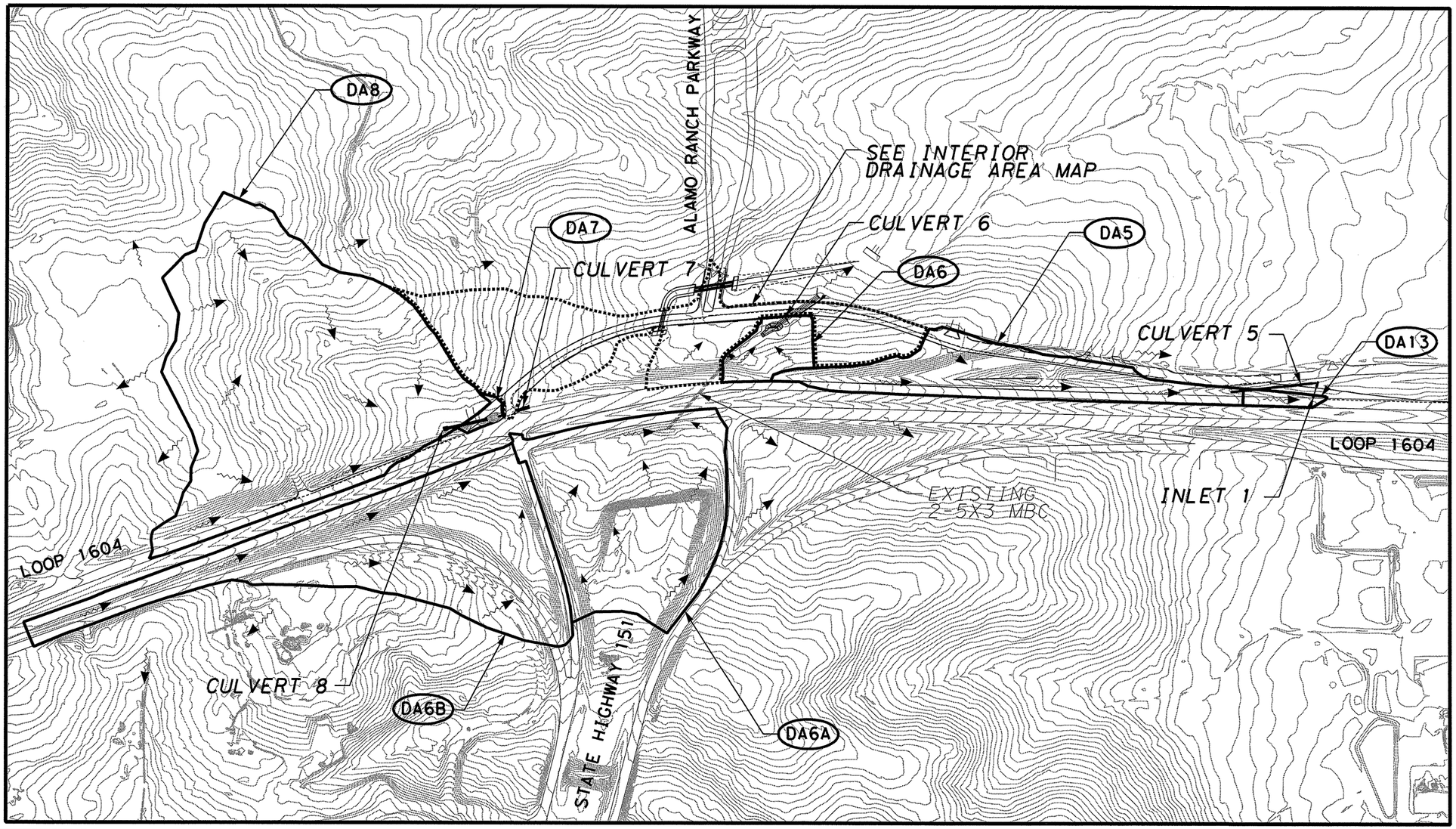

SCALE: 1" = 500'

250 125 0 250 500

HORIZ. SCALE FEET

LEGEND

- DRAINAGE AREA FLOW ARROWS
- DA1 — DRAINAGE AREA
- DRAINAGE AREA BOUNDARY
- INTERIOR DRAINAGE AREA BOUNDARY

STATE OF TEXAS
KENNETH E. ROGERS
89448
LICENSED
PROFESSIONAL ENGINEER
6/30/10

REV. NO.	DATE	DESCRIPTION	BY

ALAMO RMA

VICKREY & ASSOCIATES, INC.
CONSULTING ENGINEERS
CIVIL / ENVIRONMENTAL / SURVEY
12940 Country Parkway San Antonio, Texas 78216
Voice:(210) 349-3271 Fax:(210) 349-2561 www.vickreynet.com
Texas Board of Professional Engineers Registration No: F-159 ©2010

Texas Department of Transportation
© 2010

LOOP 1604 SUPER STREET
OVERALL DRAINAGE AREA MAP AT SH 151

SHEET 4 OF 5

DGN:	FED. RD. DIV. NO.	STATE	FEDERAL AID PROJECT NO.			HIGHWAY NO.
CHK DGN:	6	TEXAS	STP 2011(210)ES			LP 1604
DWG:	DIST.	COUNTY	CONT. NO.	SECT. NO.	JOB NO.	SHEET NO.
CHK DWG:	SAT	BEXAR	2452	01	050	203

Plotted on: 6/25/2010

Design Filename: p:\74\00\04\design\civil\Drainage\740004da01.dgn

RUNOFF COMPUTATIONS - RATIONAL METHOD						
AREA - ID	AREA (ac)	C	CA	Tc (MIN)	I50 (IN/HR)	Q50 (CFS)
DA7	0.33	0.75	0.25	10	10.27	3.0
DA8	29.93	0.50	14.97	12	9.51	170.8
DA10	31.71	0.50	15.86	15	8.59	163.4
DA11	1.04	0.95	0.99	10	10.27	12.2
DA12	0.74	0.95	0.70	10	10.27	8.6
DA6B	18.68	0.45	8.41	15	8.59	86.6
DA9A	5.42	0.64	3.47	10	10.27	42.7
DA9B	2.41	0.55	1.33	10	10.27	16.4
I-B1	1.02	0.46	0.47	10	10.27	5.8
I-B2	4.46	0.45	2.00	10	10.27	24.7
I-B3	0.63	0.54	0.34	10	10.27	4.2
I-B4	1.33	0.58	0.77	10	10.27	9.5
DA6A1	6.59	0.45	2.97	15	8.59	30.6

NOTE: AREAS DA6A1, DA6B, AND DA9A WILL CONTRIBUTE TO CULVERT 9 AFTER FUTURE SH 151 INTERCHANGE PROJECT.

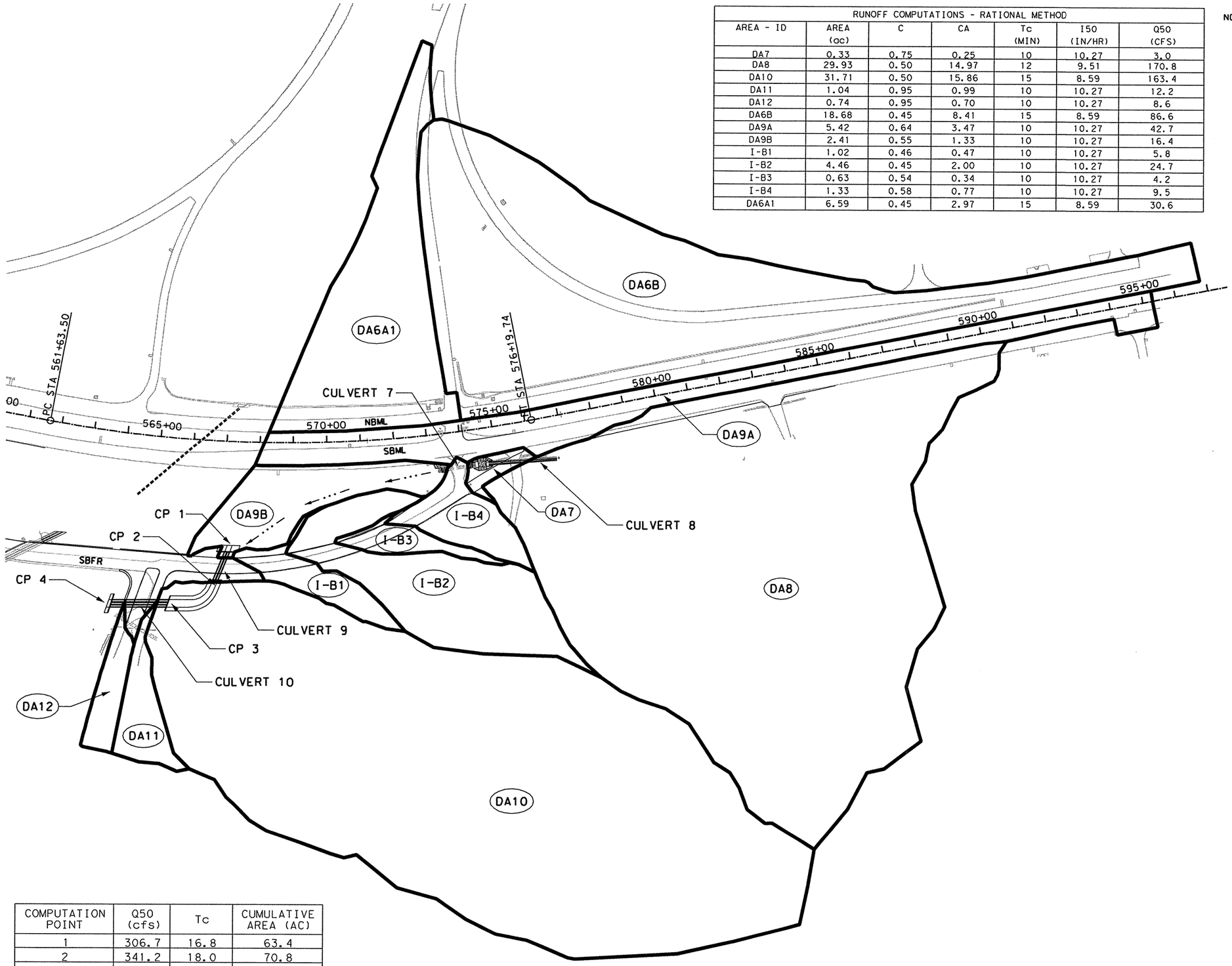

COMPUTATION POINT	Q50 (cfs)	Tc	CUMULATIVE AREA (AC)
1	306.7	16.8	63.4
2	341.2	18.0	70.8
3	478.8	18.1	102.5
4	490.2	21.9	104.3

LEGEND

- R.O.W.
- DRAINAGE AREA BOUNDARY
- 850 EXISTING CONTOUR
- FLOW ARROW
- (X-X) DRAINAGE AREA

STATE OF TEXAS
SCOTT D. ARMSTRONG
69320
LICENSED PROFESSIONAL ENGINEER

SCOTT D. ARMSTRONG, P.E. 6/25/2010 DATE

SCALE: PLAN - 1":300'

REV. NO.	DATE	DESCRIPTION	BY

ALAMO RMA

PAPE-DAWSON ENGINEERS

555 EAST RAMSEY | SAN ANTONIO, TEXAS 78216 | PHONE: 210.375.9000 FAX: 210.375.9010

TEXAS BOARD OF PROFESSIONAL ENGINEERS, FIRM REGISTRATION # 470

Texas Department of Transportation © 2010

LOOP 1604

DRAINAGE AREA MAP CULVERT 9 & 10

DGN:	FED. RD. DIV. NO.	STATE	FEDERAL AID PROJECT NO.			HIGHWAY NO.
CHK DGN:	6	TEXAS	STP 2011(210)ES			LP 1604
DWG:	DIST.	COUNTY	CONT. NO.	SECT. NO.	JOB NO.	SHEET NO.
CHK DWG:	SAT	BEXAR	2452	01	050	204

Plotted on: 6/29/2010

Design Filename: N:\2294-001\dgn\DRAINAGE\LP1604DAMAP04.dgn

TxDOT RATIONAL METHOD LOCAL DRAINAGE AREA CALCULATIONS

DRAINAGE AREA ID	OUTAFALL STRUCTURE ID	Station Location (Loop 1604)	Stucture Type	Drainage Area		Tc,(min)	TOTAL C VALUE	C*A	INTENSITY (I) in/hr						PEAK DISCHARGE (Q) cfs					
				ft^2	ac				I_2	I_5	I_{10}	I_{25}	I_{50}	I_{100}	Q_2	Q_5	Q_{10}	Q_{25}	Q_{50}	Q_{100}
I-A1	Curb Inlet A-1	561+63	Curb Inlet	139932	3.2	10	0.57	1.82	5.41	7.05	8.07	9.26	10.27	11.49	9.87	12.86	14.72	18.58 *	22.48	26.20
I-A2	Curb Inlet A-2	564+10	Curb Inlet	122688	2.8	10	0.45	1.26	5.41	7.05	8.07	9.26	10.27	11.49	6.82	8.88	10.17	12.83 *	15.53	18.10
I-A3	Curb Inlet A-3	566+28	Curb Inlet	13189	0.3	10	0.67	0.20	5.41	7.05	8.07	9.26	10.27	11.49	1.09	1.42	1.62	2.05 *	2.48	2.89
I-B1	Curb Inlet B-1	567+40	Curb Inlet	44195	1.0	10	0.46	0.46	5.41	7.05	8.07	9.26	10.27	11.49	2.49	3.24	3.71	4.69 *	5.67	6.61
I-B2	Curb Inlet B-2	568+83	Curb Inlet	194052	4.5	10	0.45	2.03	5.41	7.05	8.07	9.26	10.27	11.49	10.96	14.28	16.34	20.63 *	24.96	29.08
I-B3	Curb Inlet B-3	570+20	Curb Inlet	27423	0.6	10	0.54	0.32	5.41	7.05	8.07	9.26	10.27	11.49	1.75	2.28	2.61	3.30 *	3.99	4.65
I-B4	Curb Inlet B-4	571+62	Curb Inlet	57803	1.3	10	0.58	0.75	5.41	7.05	8.07	9.26	10.27	11.49	4.08	5.32	6.08	7.68 *	9.29	10.83

NOTES:
1. ADJUSTED RUNOFF FACTOR OF 1.1, 1.2 AND 1.25 USED FOR RUNOFF CALCULATIONS IN THE 25 YEAR, 50 YEAR, AND 100 YEAR EVENTS, RESPECTIVELY.
2. THE EXISTING STRUCTURES IMMEDIATELY DOWNSTREAM OF PROPOSED IMPROVEMENTS WERE ANALYZED AND PROPOSED IMPROVEMENTS HAVE NO IMPACT TO EXISTING STRUCTURES' HYDRAULIC CAPACITY.
3. * DENOTES DESIGN STORM

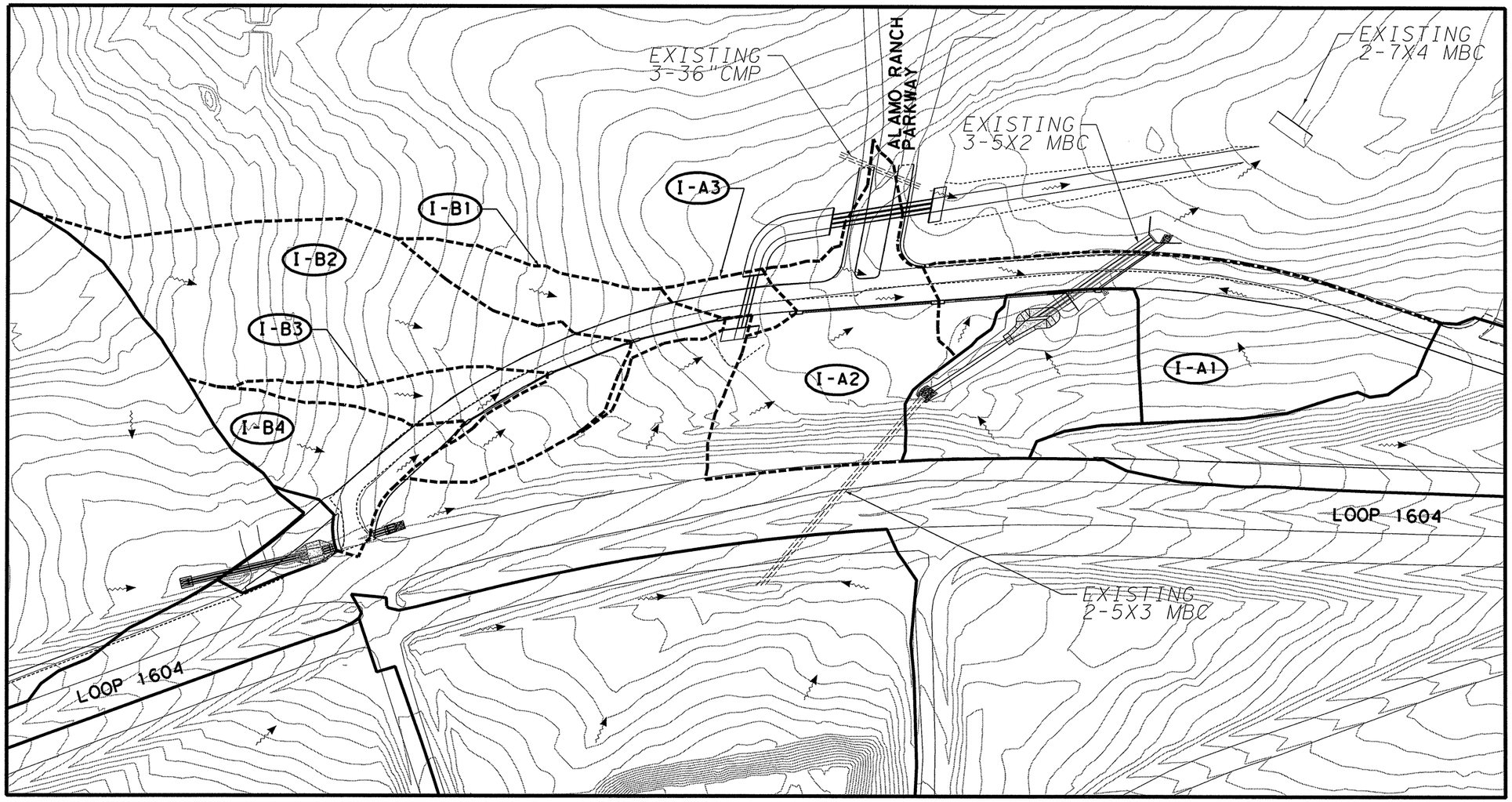

SCALE: 1" = 200'

100 50 0 100 200
HORIZ. SCALE FEET

LEGEND

- DRAINAGE AREA FLOW ARROWS
- DA1 DRAINAGE AREA
- DRAINAGE AREA BOUNDARY
- INTERIOR DRAINAGE AREA BOUNDARY

STATE OF TEXAS
KENNETH E. ROGERS
89448
LICENSED PROFESSIONAL ENGINEER
6/30/10

REV. NO.	DATE	DESCRIPTION	BY

ALAMO RMA

VICKREY & ASSOCIATES, INC.
CONSULTING ENGINEERS
CIVIL /ENVIRONMENTAL /SURVEY
12940 Country Parkway San Antonio, Texas 78216
Voice:(210) 349-3271 Fax:(210) 349-2561 www.vickreynet.com
Texas Board of Professional Engineers Registration No: F-159 ©2010

Texas Department of Transportation
© 2010

LOOP 1604 SUPER STREET
INTERIOR DRAINAGE AREA MAP AT SH 151

SHEET 5 OF 5

DGN:	FED. RD. DIV. NO.	STATE	FEDERAL AID PROJECT NO.			HIGHWAY NO.
CHK DGN:	6	TEXAS	STP 2011(210)ES			LP 1604
DWG:	DIST.	COUNTY	CONT. NO.	SECT. NO.	JOB NO.	SHEET NO.
CHK DWG:	SAT	BEXAR	2452	01	050	205

Plotted on: 6/29/2010

Design Filename: N:\2294-001\dgn\DRAINAGE\LP1604HYDO1.DGN

HY-8 Analysis Results

Table 1 - Summary of Culvert Flows at Crossing: Crossing 1

Storm Event	Headwater Elevation (ft)	Total Discharge (cfs)	Culvert 1 Discharge (cfs)	Roadway Discharge (cfs)	Iterations
2 YR	959.08	6.49	6.49	0	1
10 YR	959.73	9.68	9.68	0	1
100 YR	960.86	17.24	13.55	3.58	3

Table 2 - Culvert Summary Table: Culvert 1

Storm Event	Total Discharge (cfs)	Culvert Discharge (cfs)	Headwater Elevation (ft)	Inlet Control Depth(ft)	Outlet Control Depth(ft)	Flow Type	Normal Depth (ft)	Critical Depth (ft)	Outlet Depth (ft)	Tailwater Depth (ft)	Outlet Velocity (ft/s)	Tailwater Velocity (ft/s)
2 YR	6.49	6.49	959.08	1.541	0.0*	5-S2n	0.807	0.982	0.811	0.469	6.66	2.95
10 YR	9.68	9.68	959.73	2.185	0.0*	5-S2n	1.057	1.201	1.057	0.545	7.274	3.26
100 YR	17.24	13.55	960.86	3.323	3.103	7-M2c	1.5	1.377	1.372	0.677	7.98	3.766

* theoretical depth is impractical. Depth reported is corrected.

****

Inlet Elevation (invert): 957.54 ft, Outlet Elevation (invert): 956.76 ft

Culvert Length: 77.00 ft, Culvert Slope: 0.0101

****

Site Data - Culvert 1

Site Data Option: Culvert Invert Data
Inlet Station: 0.00 ft
Inlet Elevation: 957.54 ft
Outlet Station: 77.00 ft
Outlet Elevation: 956.76 ft
Number of Barrels: 1

Culvert Data Summary - Culvert 1

Barrel Shape: Circular
Barrel Diameter: 1.50 ft
Barrel Material: Concrete
Embedment: 0.00 in
Barrel Manning's n: 0.0120
Inlet Type: Conventional
Inlet Edge Condition: Square Edge with Headwall
Inlet Depression: None

Table 3 - Downstream Channel Rating Curve (Crossing: Crossing 1)

Storm Event	Flow (cfs)	Water Surface Elev (ft)	Depth (ft)	Velocity (ft/s)	Shear (psf)	Froude Number
2 YR	6.49	957.16	0.47	2.95	0.98	1.07
10 YR	9.68	957.23	0.54	3.26	1.14	1.10
100 YR	17.24	957.37	0.68	3.77	1.42	1.14

Tailwater Channel Data - Crossing 1

Tailwater Channel Option: Triangular Channel
Side Slope (H:V): 10.00 (_:1)
Channel Slope: 0.0336
Channel Manning's n: 0.0350
Channel Invert Elevation: 956.69 ft

Roadway Data for Crossing: Crossing 1

Roadway Profile Shape: Constant Roadway Elevation
Crest Length: 100.00 ft
Crest Elevation: 960.81 ft
Roadway Surface: Paved
Roadway Top Width: 50.00 ft

STATE OF TEXAS
KENNETH E. ROGERS
89448
LICENSED
PROFESSIONAL ENGINEER
6/30/10

REV. NO.	DATE	DESCRIPTION	BY

ALAMO RMA

VICKREY & ASSOCIATES, INC.
CONSULTING ENGINEERS
CIVIL /ENVIRONMENTAL /SURVEY

12940 Country Parkway San Antonio, Texas 78216
Voice:(210) 349-3271 Fax:(210) 349-2561 www.vickreynet.com
Texas Board of Professional Engineers Registration No: F-159 ©2010

Texas Department of Transportation
© 2010

LOOP 1604 SUPER STREET
HYDRAULIC DATA SHEET
CULVERT CALCULATIONS
CULVERT No. 1

SHEET 1 OF 10

DGN:	FED. RD. DIV. NO.	STATE	FEDERAL AID PROJECT NO.			HIGHWAY NO.
CHK DGN:	6	TEXAS	STP 2011(210)ES			LP 1604
DWG:	DIST.	COUNTY	CONT. NO.	SECT. NO.	JOB NO.	SHEET NO.
CHK DWG:	SAT	BEXAR	2452	01	050	206

Plotted on: 6/29/2010

Design Filename: N:\2294-001\dgn\DRAINAGE\LP1604HYD02.DGN

HY-8 Analysis Results

Table 1 - Summary of Culvert Flows at Crossing: Crossing 2

Storm Event	Headwater Elevation (ft)	Total Discharge (cfs)	Culvert 1 Discharge (cfs)	Roadway Discharge (cfs)	Iterations
2 YR	963.14	7.31	7.31	0	1
10 YR	964.06	10.91	10.91	0	1
100 YR	965.13	19.42	13.78	5.56	3

Table 2 - Culvert Summary Table: Culvert 2

Storm Event	Total Discharge (cfs)	Culvert Discharge (cfs)	Headwater Elevation (ft)	Inlet Control Depth(ft)	Outlet Control Depth(ft)	Flow Type	Normal Depth (ft)	Critical Depth (ft)	Outlet Depth (ft)	Tailwater Depth (ft)	Outlet Velocity (ft/s)	Tailwater Velocity (ft/s)
2 YR	7.31	7.31	963.14	1.691	1.742	2-M2c	1.13	1.047	1.047	0.576	5.55	2.756
10 YR	10.91	10.91	964.06	2.504	2.664	7-M2c	1.5	1.257	1.266	0.669	6.859	3.046
100 YR	19.42	13.78	965.13	3.406	3.731	7-M2c	1.5	1.387	1.379	0.831	8.105	3.519

****

Inlet Elevation (invert): 961.40 ft, Outlet Elevation (invert): 960.95 ft

Culvert Length: 91.00 ft, Culvert Slope: 0.0049

****

Site Data - Culvert 2

Site Data Option: Culvert Invert Data
Inlet Station: 0.00 ft
Inlet Elevation: 961.40 ft
Outlet Station: 91.00 ft
Outlet Elevation: 960.95 ft
Number of Barrels: 1

Culvert Data Summary - Culvert 2

Barrel Shape: Circular
Barrel Diameter: 1.50 ft
Barrel Material: Concrete
Embedment: 0.00 in
Barrel Manning's n: 0.0120
Inlet Type: Conventional
Inlet Edge Condition: Square Edge with Headwall
Inlet Depression: None

Table 3 - Downstream Channel Rating Curve (Crossing: Crossing 2)

Storm Event	Flow (cfs)	Water Surface Elev (ft)	Depth (ft)	Velocity (ft/s)	Shear (psf)	Froude Number
2 YR	7.31	961.49	0.58	2.76	0.80	0.91
10 YR	10.91	961.58	0.67	3.05	0.94	0.93
100 YR	19.42	961.74	0.83	3.52	1.16	0.96

Tailwater Channel Data - Crossing 2

Tailwater Channel Option: Triangular Channel
Side Slope (H:V): 8.00 (_:1)
Channel Slope: 0.0224
Channel Manning's n: 0.0350
Channel Invert Elevation: 960.91 ft

Roadway Data for Crossing: Crossing 2

Roadway Profile Shape: Constant Roadway Elevation
Crest Length: 100.00 ft
Crest Elevation: 965.06 ft
Roadway Surface: Paved
Roadway Top Width: 50.00 ft

STATE OF TEXAS
KENNETH E. ROGERS
89448
LICENSED
PROFESSIONAL ENGINEER
6/30/10

REV. NO.	DATE	DESCRIPTION	BY

ALAMO RMA

VICKREY & ASSOCIATES, INC.
CONSULTING ENGINEERS
CIVIL / ENVIRONMENTAL / SURVEY
12940 Country Parkway San Antonio, Texas 78216
Voice:(210) 349-3271 Fax:(210) 349-2561 www.vickreynet.com
Texas Board of Professional Engineers Registration No: F-159 ©2010

Texas Department of Transportation
© 2010

LOOP 1604 SUPER STREET
HYDRAULIC DATA SHEET
CULVERT CALCULATIONS
CULVERT No. 2

SHEET 2 OF 10

DGN:	FED. RD. DIV. NO.	STATE	FEDERAL AID PROJECT NO.			HIGHWAY NO.
CHK DGN:	6	TEXAS	STP 2011(210)ES			LP 1604
DWG:	DIST.	COUNTY	CONT. NO.	SECT. NO.	JOB NO.	SHEET NO.
CHK DWG:	SAT	BEXAR	2452	01	050	207

Plotted on: 6/29/2010

Design Filename: N:\2294-001\dgn\DRAINAGE\LP1604HYD03.dgn

HY-8 Analysis Results

Table 1 - Summary of Culvert Flows at Crossing: Crossing 3

Storm Event	Headwater Elevation (ft)	Total Discharge (cfs)	Culvert 1 Discharge (cfs)	Roadway Discharge (cfs)	Iterations
10 YR	905.46	4.3	4.3	0	1
25 YR	905.66	5.48	5.48	0	1
100 YR	906.06	7.76	7.76	0	1

Table 2 - Culvert Summary Table: Culvert 3

Storm Event	Total Discharge (cfs)	Culvert Discharge (cfs)	Headwater Elevation (ft)	Inlet Control Depth(ft)	Outlet Control Depth(ft)	Flow Type	Normal Depth (ft)	Critical Depth (ft)	Outlet Depth (ft)	Tailwater Depth (ft)	Outlet Velocity (ft/s)	Tailwater Velocity (ft/s)
10 YR	4.3	4.3	905.46	1.173	0.0*	1-S2n	0.565	0.792	0.567	0.599	7.011	1.198
25 YR	5.48	5.48	905.66	1.368	0.0*	1-S2n	0.646	0.902	0.647	0.656	7.533	1.273
100 YR	7.76	7.76	906.06	1.768	0.0*	5-S2n	0.792	1.077	0.792	0.748	8.197	1.389

* theoretical depth is impractical. Depth reported is corrected.

****

Inlet Elevation (invert): 904.29 ft, Outlet Elevation (invert): 902.92 ft

Culvert Length: 89.01 ft, Culvert Slope: 0.0154

****

Site Data - Culvert 3

Site Data Option: Culvert Invert Data
Inlet Station: 0.00 ft
Inlet Elevation: 904.29 ft
Outlet Station: 89.00 ft
Outlet Elevation: 902.92 ft
Number of Barrels: 1

Culvert Data Summary - Culvert 3

Barrel Shape: Circular
Barrel Diameter: 1.50 ft
Barrel Material: Concrete
Embedment: 0.00 in
Barrel Manning's n: 0.0120
Inlet Type: Conventional
Inlet Edge Condition: Square Edge with Headwall
Inlet Depression: None

Table 3 - Downstream Channel Rating Curve (Crossing: Crossing 3)

Storm Event	Flow (cfs)	Water Surface Elev (ft)	Depth (ft)	Velocity (ft/s)	Shear (psf)	Froude Number
10 YR	4.30	903.40	0.60	1.20	0.15	0.39
25 YR	5.48	903.46	0.66	1.27	0.16	0.39
100 YR	7.76	903.55	0.75	1.39	0.19	0.40

Tailwater Channel Data - Crossing 3

Tailwater Channel Option: Triangular Channel
Side Slope (H:V): 10.00 (_:1)
Channel Slope: 0.0040
Channel Manning's n: 0.0350
Channel Invert Elevation: 902.80 ft

Roadway Data for Crossing: Crossing 3

Roadway Profile Shape: Constant Roadway Elevation
Crest Length: 100.00 ft
Crest Elevation: 907.67 ft
Roadway Surface: Paved
Roadway Top Width: 50.00 ft

STATE OF TEXAS
KENNETH E. ROGERS
89448
LICENSED
PROFESSIONAL ENGINEER
6/30/10

REV. NO.	DATE	DESCRIPTION	BY

ALAMO RMA

VICKREY & ASSOCIATES, INC.
CONSULTING ENGINEERS
CIVIL /ENVIRONMENTAL /SURVEY
12940 Country Parkway San Antonio, Texas 78216
Voice:(210) 349-3271 Fax:(210) 349-2561 www.vickreynet.com
Texas Board of Professional Engineers Registration No: F-159 ©2010

Texas Department of Transportation
© 2010

LOOP 1604 SUPER STREET
HYDRAULIC DATA SHEET
CULVERT CALCULATIONS
CULVERT No. 3

SHEET 3 OF 10

DGN:	FED. RD. DIV. NO.	STATE	FEDERAL AID PROJECT NO.			HIGHWAY NO.
CHK DGN:	6	TEXAS	STP 2011(210)ES			LP 1604
DWG:	DIST.	COUNTY	CONT. NO.	SECT. NO.	JOB NO.	SHEET NO.
CHK DWG:	SAT	BEXAR	2452	01	050	208

Plotted on: 6/29/2010

Design Filename: N:\2294-001\dgn\DRAINAGE\LP1604HYD03A.DGN

HY-8 Analysis Results

Table 1 - Summary of Culvert Flows at Crossing: Crossing 3A

Storm Event	Headwater Elevation (ft)	Total Discharge (cfs)	Culvert 1 Discharge (cfs)	Roadway Discharge (cfs)	Iterations
2 YR	907.51	2.54	2.54	0	1
10 YR	907.76	3.84	3.84	0	1
100 YR	908.34	6.9	6.9	0	1

Table 2 - Culvert Summary Table: Culvert 3A

Storm Event	Total Discharge (cfs)	Culvert Discharge (cfs)	Headwater Elevation (ft)	Inlet Control Depth(ft)	Outlet Control Depth(ft)	Flow Type	Normal Depth (ft)	Critical Depth (ft)	Outlet Depth (ft)	Tailwater Depth (ft)	Outlet Velocity (ft/s)	Tailwater Velocity (ft/s)
2 YR	2.54	2.54	907.51	0.853	0.0*	1-S2n	0.577	0.603	0.578	0.325	4.037	0.982
10 YR	3.84	3.84	907.76	1.102	0.0*	1-S2n	0.728	0.749	0.729	0.409	4.506	1.111
100 YR	6.9	6.9	908.34	1.617	1.679	2-M2c	1.07	1.014	1.017	0.559	5.412	1.319

* theoretical depth is impractical. Depth reported is corrected.

****

Inlet Elevation (invert): 906.66 ft, Outlet Elevation (invert): 906.17 ft

Culvert Length: 98.00 ft, Culvert Slope: 0.0050

****

Site Data - Culvert 3A

Site Data Option: Culvert Invert Data
Inlet Station: 0.00 ft
Inlet Elevation: 906.66 ft
Outlet Station: 98.00 ft
Outlet Elevation: 906.17 ft
Number of Barrels: 1

Culvert Data Summary - Culvert 3A

Barrel Shape: Circular
Barrel Diameter: 1.50 ft
Barrel Material: Concrete
Embedment: 0.00 in
Barrel Manning's n: 0.0120
Inlet Type: Conventional
Inlet Edge Condition: Square Edge with Headwall
Inlet Depression: None

Table 3 - Downstream Channel Rating Curve (Crossing: Crossing 3A)

Storm Event	Flow (cfs)	Water Surface Elev (ft)	Depth (ft)	Velocity (ft/s)	Shear (psf)	Froude Number
2 YR	2.54	906.46	0.33	0.98	0.06	0.34
10 YR	3.84	906.54	0.41	1.11	0.08	0.35
100 YR	6.90	906.69	0.56	1.32	0.11	0.36

Tailwater Channel Data - Crossing 3A

Tailwater Channel Option: Trapezoidal Channel
Bottom Width: 6.00 ft
Side Slope (H:V): 6.00 (_:1)
Channel Slope: 0.0032
Channel Manning's n: 0.0350
Channel Invert Elevation: 906.13 ft

Roadway Data for Crossing: Crossing 3A

Roadway Profile Shape: Constant Roadway Elevation
Crest Length: 100.00 ft
Crest Elevation: 909.38 ft
Roadway Surface: Paved
Roadway Top Width: 50.00 ft

STATE OF TEXAS
KENNETH E. ROGERS
89448
LICENSED PROFESSIONAL ENGINEER
6/30/10

REV. NO.	DATE	DESCRIPTION	BY

ALAMO RMA

VICKREY & ASSOCIATES, INC.
CONSULTING ENGINEERS
CIVIL /ENVIRONMENTAL /SURVEY
12940 Country Parkway San Antonio, Texas 78216
Voice:(210) 349-3271 Fax:(210) 349-2561 www.vickreynet.com
Texas Board of Professional Engineers Registration No: F-159 ©2010

Texas Department of Transportation
© 2010

LOOP 1604 SUPER STREET
HYDRAULIC DATA SHEET
CULVERT CALCULATIONS

CULVERT No. 3A

SHEET 4 OF 10

DGN:	FED. RD. DIV. NO.	STATE	FEDERAL AID PROJECT NO.			HIGHWAY NO.
CHK DGN:	6	TEXAS	STP 2011(210)ES			LP 1604
DWG:	DIST.	COUNTY	CONT. NO.	SECT. NO.	JOB NO.	SHEET NO.
CHK DWG:	SAT	BEXAR	2452	01	050	209

Plotted on: 6/29/2010

Design Filename: N:\2294-001\dgn\DRAINAGE\LP1604HYD04.dgn

HY-8 Analysis Results

Table 1 - Summary of Culvert Flows at Crossing: Crossing 4

Storm Event	Headwater Elevation (ft)	Total Discharge (cfs)	Culvert 1 Discharge (cfs)	Roadway Discharge (cfs)	Iterations
10 YR	900.66	32.93	32.93	0	1
25 YR	901.34	41.56	41.56	0	1
100 YR	902.52	58.6	58.6	0	1

Table 2 - Culvert Summary Table: Culvert 4

Storm Event	Total Discharge (cfs)	Culvert Discharge (cfs)	Headwater Elevation (ft)	Inlet Control Depth(ft)	Outlet Control Depth(ft)	Flow Type	Normal Depth (ft)	Critical Depth (ft)	Outlet Depth (ft)	Tailwater Depth (ft)	Outlet Velocity (ft/s)	Tailwater Velocity (ft/s)
10 YR	32.93	32.93	900.66	2.865	0.142	1-S2n	1.789	1.858	1.792	1.082	7.478	2.81
25 YR	41.56	41.56	901.34	3.396	3.535	2-M2c	2.106	2.099	2.099	1.181	7.866	2.979
100 YR	58.6	58.6	902.52	4.716	4.493	2-M2c	3	2.463	2.476	1.344	9.414	3.246

****

Inlet Elevation (invert): 897.80 ft, Outlet Elevation (invert): 897.73 ft

Culvert Length: 15.00 ft, Culvert Slope: 0.0047

****

Site Data - Culvert 4

Site Data Option: Culvert Invert Data

Inlet Station: 0.00 ft

Inlet Elevation: 897.80 ft

Outlet Station: 15.00 ft

Outlet Elevation: 897.73 ft

Number of Barrels: 1

Culvert Data Summary - Culvert 4

Barrel Shape: Circular

Barrel Diameter: 3.00 ft

Barrel Material: Concrete

Embedment: 0.00 in

Barrel Manning's n: 0.0120

Inlet Type: Conventional

Inlet Edge Condition: Square Edge with Headwall

Inlet Depression: None

Table 3 - Downstream Channel Rating Curve (Crossing: Crossing 4)

Storm Event	Flow (cfs)	Water Surface Elev (ft)	Depth (ft)	Velocity (ft/s)	Shear (psf)	Froude Number
10 YR	32.93	897.94	1.08	2.81	0.68	0.67
25 YR	41.56	898.04	1.18	2.98	0.74	0.68
100 YR	58.60	898.20	1.34	3.25	0.84	0.70

Tailwater Channel Data - Crossing 4

Tailwater Channel Option: Triangular Channel

Side Slope (H:V): 10.00 (_:1)

Channel Slope: 0.0100

Channel Manning's n: 0.0350

Channel Invert Elevation: 896.86 ft

Roadway Data for Crossing: Crossing 4

Roadway Profile Shape: Constant Roadway Elevation

Crest Length: 100.00 ft

Crest Elevation: 903.44 ft

Roadway Surface: Paved

Roadway Top Width: 50.00 ft

STATE OF TEXAS
KENNETH E. ROGERS
89448
PROFESSIONAL LICENSED ENGINEER
6/30/10

REV. NO.	DATE	DESCRIPTION	BY

ALAMO RMA

VICKREY & ASSOCIATES, INC.
CONSULTING ENGINEERS
CIVIL / ENVIRONMENTAL / SURVEY
12940 Country Parkway San Antonio, Texas 78216
Voice:(210) 349-3271 Fax:(210) 349-2561 www.vickreynet.com
Texas Board of Professional Engineers Registration No: F-159 ©2010

Texas Department of Transportation
© 2010

LOOP 1604 SUPER STREET
HYDRAULIC DATA SHEET
CULVERT CALCULATIONS

CULVERT No. 4

SHEET 5 OF 10

DGN:	FED. RD. DIV. NO.	STATE	FEDERAL AID PROJECT NO.			HIGHWAY NO.
CHK DGN:	6	TEXAS	STP 2011(210)ES			LP 1604
DWG:	DIST.	COUNTY	CONT. NO.	SECT. NO.	JOB NO.	SHEET NO.
CHK DWG:	SAT	BEXAR	2452	01	050	210

Plotted on: 6/29/2010

Design Filename: N:\2294-001\dgn\DRAINAGE\LP1604HYD04A.dgn

HY-8 Analysis Results

Table 1 - Summary of Culvert Flows at Crossing: Crossing 4A

Storm Event	Headwater Elevation (ft)	Total Discharge (cfs)	Culvert 1 Discharge (cfs)	Roadway Discharge (cfs)	Iterations
2 YR	901.38	12.14	12.14	0	1
10 YR	902.11	18.11	18.11	0	1
100 YR	903.16	32.23	24.09	8	3

Table 2 - Culvert Summary Table: Culvert 4A

Storm Event	Total Discharge (cfs)	Culvert Discharge (cfs)	Headwater Elevation (ft)	Inlet Control Depth(ft)	Outlet Control Depth(ft)	Flow Type	Normal Depth (ft)	Critical Depth (ft)	Outlet Depth (ft)	Tailwater Depth (ft)	Outlet Velocity (ft/s)	Tailwater Velocity (ft/s)
2 YR	12.14	12.14	901.38	1.93	0.295	1-S2n	1.229	1.249	1.229	0.845	5.994	2.833
10 YR	18.11	18.11	902.11	2.658	2.649	2-M2c	1.736	1.527	1.533	0.982	7.024	3.131
100 YR	32.23	24.09	903.16	3.654	3.711	7-M2c	2	1.725	1.738	1.219	8.31	3.616

****

Inlet Elevation (invert): 899.45 ft, Outlet Elevation (invert): 898.95 ft

Culvert Length: 99.00 ft, Culvert Slope: 0.0051

****

Site Data - Culvert 4A

Site Data Option: Culvert Invert Data

Inlet Station: 0.00 ft

Inlet Elevation: 899.45 ft

Outlet Station: 99.00 ft

Outlet Elevation: 898.95 ft

Number of Barrels: 1

Culvert Data Summary - Culvert 4A

Barrel Shape: Circular

Barrel Diameter: 2.00 ft

Barrel Material: Concrete

Embedment: 0.00 in

Barrel Manning's n: 0.0120

Inlet Type: Conventional

Inlet Edge Condition: Square Edge with Headwall

Inlet Depression: None

Table 3 - Downstream Channel Rating Curve (Crossing: Crossing 4A)

Storm Event	Flow (cfs)	Water Surface Elev (ft)	Depth (ft)	Velocity (ft/s)	Shear (psf)	Froude Number
2 YR	12.14	899.75	0.85	2.83	0.75	0.77
10 YR	18.11	899.88	0.98	3.13	0.88	0.79
100 YR	32.23	900.12	1.22	3.62	1.09	0.82

Tailwater Channel Data - Crossing 4A

Tailwater Channel Option: Triangular Channel

Side Slope (H:V): 6.00 (_:1)

Channel Slope: 0.0143

Channel Manning's n: 0.0350

Channel Invert Elevation: 898.90 ft

Roadway Data for Crossing: Crossing 4A

Roadway Profile Shape: Constant Roadway Elevation

Crest Length: 100.00 ft

Crest Elevation: 903.07 ft

Roadway Surface: Paved

Roadway Top Width: 50.00 ft

STATE OF TEXAS
KENNETH E. ROGERS
89448
LICENSED
PROFESSIONAL ENGINEER
6/30/10

REV. NO.	DATE	DESCRIPTION	BY

ALAMO RMA

VICKREY & ASSOCIATES, INC.
CONSULTING ENGINEERS
CIVIL / ENVIRONMENTAL / SURVEY

12940 Country Parkway San Antonio, Texas 78216
Voice:(210) 349-3271 Fax:(210) 349-2561 www.vickreynet.com
Texas Board of Professional Engineers Registration No: F-159 ©2010

Texas Department of Transportation
© 2010

LOOP 1604 SUPER STREET
HYDRAULIC DATA SHEET
CULVERT CALCULATIONS

CULVERT No. 4A

SHEET 6 OF 10

DGN:	FED. RD. DIV. NO.	STATE	FEDERAL AID PROJECT NO.			HIGHWAY NO.
CHK DGN:	6	TEXAS	STP 2011(210)ES			LP 1604
DWG:	DIST.	COUNTY	CONT. NO.	SECT. NO.	JOB NO.	SHEET NO.
CHK DWG:	SAT	BEXAR	2452	01	050	211

Plotted on: 6/29/2010

Design Filename: N:\2294-001\dgn\DRAINAGE\LP1604HYD05.DGN

HY-8 Analysis Results

Table 1 - Summary of Culvert Flows at Crossing: Crossing 5

Storm Event	Headwater Elevation (ft)	Total Discharge (cfs)	Culvert 1 Discharge (cfs)	Roadway Discharge (cfs)	Iterations
10 YR	875.79	33.57	33.57	0	1
25 YR	876.1	42.37	42.37	0	1
100 YR	876.39	59.79	50.49	9.22	4

Table 2 - Culvert Summary Table: Culvert 5

Storm Event	Total Discharge (cfs)	Culvert Discharge (cfs)	Headwater Elevation (ft)	Inlet Control Depth(ft)	Outlet Control Depth(ft)	Flow Type	Normal Depth (ft)	Critical Depth (ft)	Outlet Depth (ft)	Tailwater Depth (ft)	Outlet Velocity (ft/s)	Tailwater Velocity (ft/s)
10 YR	33.57	33.57	875.79	1.643	0.0*	1-S2n	0.579	0.993	0.583	1.409	9.601	2.115
25 YR	42.37	42.37	876.1	1.947	0.0*	1-S2n	0.678	1.159	0.678	1.537	10.409	2.241
100 YR	59.79	50.49	876.39	2.239	0.0*	5-S2n	0.767	1.303	0.769	1.749	10.948	2.443

* theoretical depth is impractical. Depth reported is corrected.

****

Inlet Elevation (invert): 874.15 ft, Outlet Elevation (invert): 867.99 ft

Culvert Length: 320.06 ft, Culvert Slope: 0.0192

****

Site Data - Culvert 5

Site Data Option: Culvert Invert Data
Inlet Station: 0.00 ft
Inlet Elevation: 874.15 ft
Outlet Station: 320.00 ft
Outlet Elevation: 867.99 ft
Number of Barrels: 2

Culvert Data Summary - Culvert 5

Barrel Shape: Concrete Box
Barrel Span: 3.00 ft
Barrel Rise: 2.00 ft
Barrel Material: Concrete
Embedment: 0.00 in
Barrel Manning's n: 0.0120
Inlet Type: Conventional
Inlet Edge Condition: Square Edge (0° flare) Wingwall
Inlet Depression: None

Table 3 - Downstream Channel Rating Curve (Crossing: Crossing 5)

Storm Event	Flow (cfs)	Water Surface Elev (ft)	Depth (ft)	Velocity (ft/s)	Shear (psf)	Froude Number
10 YR	33.57	869.07	1.41	2.11	0.35	0.44
25 YR	42.37	869.20	1.54	2.24	0.38	0.45
100 YR	59.79	869.41	1.75	2.44	0.44	0.46

Tailwater Channel Data - Crossing 5

Tailwater Channel Option: Triangular Channel
Side Slope (H:V): 8.00 (_:1)
Channel Slope: 0.0040
Channel Manning's n: 0.0350
Channel Invert Elevation: 867.66 ft

Roadway Data for Crossing: Crossing 5

Roadway Profile Shape: Constant Roadway Elevation
Crest Length: 100.00 ft
Crest Elevation: 876.29 ft
Roadway Surface: Paved
Roadway Top Width: 50.00 ft

STATE OF TEXAS
KENNETH E. ROGERS
89448
LICENSED
PROFESSIONAL ENGINEER
6/30/10

REV. NO.	DATE	DESCRIPTION	BY

ALAMO RMA

VICKREY & ASSOCIATES, INC.
CONSULTING ENGINEERS
CIVIL /ENVIRONMENTAL /SURVEY
12940 Country Parkway San Antonio, Texas 78216
Voice:(210) 349-3271 Fax:(210) 349-2561 www.vickreynet.com
Texas Board of Professional Engineers Registration No: F-159 ©2010

Texas Department of Transportation
©2010

LOOP 1604 SUPER STREET
HYDRAULIC DATA SHEET
CULVERT CALCULATIONS
CULVERT No. 5

SHEET 7 OF 10

DGN:	FED. RD. DIV. NO.	STATE	FEDERAL AID PROJECT NO.			HIGHWAY NO.
CHK DGN:	6	TEXAS	STP 2011(210)ES			LP 1604
DWG:	DIST.	COUNTY	CONT. NO.	SECT. NO.	JOB NO.	SHEET NO.
CHK DWG:	SAT	BEXAR	2452	01	050	212

Plotted on: 6/29/2010

Design Filename: N:\2294-001\dgn\DRAINAGE\LP1604HYD06.dgn

HY-8 Analysis Results

Table 1 - Summary of Culvert Flows at Crossing: Crossing 6

Storm Event	Headwater Elevation (ft)	Total Discharge (cfs)	Culvert 1 Discharge (cfs)	Roadway Discharge (cfs)	Iterations
10 YR	906.69	87.71	87.71	0	1
25 YR	906.97	108.73	108.73	0	1
100 YR	907.93	153.79	153.79	0	1

Table 2 - Culvert Summary Table: Culvert 6

Storm Event	Total Discharge (cfs)	Culvert Discharge (cfs)	Headwater Elevation (ft)	Inlet Control Depth(ft)	Outlet Control Depth(ft)	Flow Type	Normal Depth (ft)	Critical Depth (ft)	Outlet Depth (ft)	Tailwater Depth (ft)	Outlet Velocity (ft/s)	Tailwater Velocity (ft/s)
10 YR	87.71	87.71	906.69	1.723	1.76	3-M1t	1.116	1.022	1.706	1.706	3.427	2.294
25 YR	108.73	108.73	906.97	1.996	2.039	7-M1t	1.294	1.18	1.932	1.932	3.752	2.462
100 YR	153.79	153.79	907.93	2.604	3.003	4-FFf	1.653	1.487	2	2.355	5.126	2.755

****

Inlet Elevation (invert): 904.93 ft, Outlet Elevation (invert): 904.35 ft

Culvert Length: 230.97 ft, Culvert Slope: 0.0025

****

Site Data - Culvert 6

Site Data Option: Culvert Invert Data

Inlet Station: 0.00 ft

Inlet Elevation: 904.93 ft

Outlet Station: 230.97 ft

Outlet Elevation: 904.35 ft

Number of Barrels: 3

Culvert Data Summary - Culvert 6

Barrel Shape: Concrete Box

Barrel Span: 5.00 ft

Barrel Rise: 2.00 ft

Barrel Material: Concrete

Embedment: 0.00 in

Barrel Manning's n: 0.0120

Inlet Type: Conventional

Inlet Edge Condition: Square Edge (90°) Headwall

Inlet Depression: None

Table 3 - Downstream Channel Rating Curve (Crossing: Crossing 6)

Storm Event	Flow (cfs)	Water Surface Elev (ft)	Depth (ft)	Velocity (ft/s)	Shear (psf)	Froude Number
10 YR	87.71	906.06	1.71	2.29	0.19	0.33
25 YR	108.73	906.28	1.93	2.46	0.22	0.34
100 YR	153.79	906.70	2.35	2.75	0.26	0.35

Tailwater Channel Data - Crossing 6

Tailwater Channel Option: Trapezoidal Channel

Bottom Width: 19.00 ft

Side Slope (H:V): 2.00 (_:1)

Channel Slope: 0.0018

Channel Manning's n: 0.0350

Channel Invert Elevation: 904.35 ft

Roadway Data for Crossing: Crossing 6

Roadway Profile Shape: Constant Roadway Elevation

Crest Length: 100.00 ft

Crest Elevation: 913.50 ft

Roadway Surface: Paved

Roadway Top Width: 50.00 ft

STATE OF TEXAS
KENNETH E. ROGERS
89448
LICENSED
PROFESSIONAL ENGINEER
6/30/10

REV. NO.	DATE	DESCRIPTION	BY

ALAMO RMA

VICKREY & ASSOCIATES, INC.
CONSULTING ENGINEERS
CIVIL / ENVIRONMENTAL / SURVEY
12940 Country Parkway San Antonio, Texas 78216
Voice:(210) 349-3271 Fax:(210) 349-2561 www.vickreynet.com
Texas Board of Professional Engineers Registration No: F-159 ©2010

Texas Department of Transportation
© 2010

LOOP 1604 SUPER STREET
HYDRAULIC DATA SHEET
CULVERT CALCULATIONS

CULVERT No. 6

SHEET 8 OF 10

DGN:	FED. RD. DIV. NO.	STATE	FEDERAL AID PROJECT NO.			HIGHWAY NO.
CHK DGN:	6	TEXAS	STP 2011(210)ES			LP 1604
DWG:	DIST.	COUNTY	CONT. NO.	SECT. NO.	JOB NO.	SHEET NO.
CHK DWG:	SAT	BEXAR	2452	01	050	213

Plotted on: 6/29/2010

Design Filename: N:\2294-001\dgn\DRAINAGE\LP1604HYD07.DGN

HY-8 Analysis Results

Table 1 - Summary of Culvert Flows at Crossing: Crossing 7

Storm Event	Headwater Elevation (ft)	Total Discharge (cfs)	Culvert 1 Discharge (cfs)	Roadway Discharge (cfs)	Iterations
10 YR	946.79	113.02	113.02	0	1
25 YR	948.01	142.65	141.99	0.44	21
100 YR	948.31	201.31	148.4	52.8	4

Table 2 - Culvert Summary Table: Culvert 7

Storm Event	Total Discharge (cfs)	Culvert Discharge (cfs)	Headwater Elevation (ft)	Inlet Control Depth(ft)	Outlet Control Depth(ft)	Flow Type	Normal Depth (ft)	Critical Depth (ft)	Outlet Depth (ft)	Tailwater Depth (ft)	Outlet Velocity (ft/s)	Tailwater Velocity (ft/s)
10 YR	113.02	113.02	946.79	3.253	3.728	2-M2c	3	1.991	1.997	1.449	7.54	3.159
25 YR	142.65	141.99	948.01	4.087	4.953	7-M2c	3	2.232	2.241	1.636	8.359	3.378
100 YR	201.31	148.4	948.31	4.299	5.254	7-M2c	3	2.281	2.29	1.951	8.546	3.723

```
********************************************************************************
Inlet Elevation (invert): 943.06 ft,    Outlet Elevation (invert): 942.57 ft
Culvert Length: 97.00 ft,    Culvert Slope: 0.0051
********************************************************************************
```

Site Data - Culvert 7

Site Data Option: Culvert Invert Data
Inlet Station: 0.00 ft
Inlet Elevation: 943.06 ft
Outlet Station: 97.00 ft
Outlet Elevation: 942.57 ft
Number of Barrels: 3

Culvert Data Summary - Culvert 7

Barrel Shape: Circular
Barrel Diameter: 3.00 ft
Barrel Material: Corrugated Steel
Embedment: 0.00 in
Barrel Manning's n: 0.0240
Inlet Type: Conventional
Inlet Edge Condition: Mitered to Conform to Slope
Inlet Depression: None

Table 3 - Downstream Channel Rating Curve (Crossing: Crossing 7)

Storm Event	Flow (cfs)	Water Surface Elev (ft)	Depth (ft)	Velocity (ft/s)	Shear (psf)	Froude Number
10 YR	113.02	943.92	1.45	3.16	0.46	0.54
25 YR	142.65	944.11	1.64	3.38	0.52	0.55
100 YR	201.31	944.42	1.95	3.72	0.62	0.56

Tailwater Channel Data - Crossing 7

Tailwater Channel Option: Trapezoidal Channel
Bottom Width: 16.00 ft
Side Slope (H:V): 6.00 (_:1)
Channel Slope: 0.0051
Channel Manning's n: 0.0350
Channel Invert Elevation: 942.47 ft

Roadway Data for Crossing: Crossing 7

Roadway Profile Shape: Constant Roadway Elevation
Crest Length: 100.00 ft
Crest Elevation: 948.00 ft
Roadway Surface: Paved
Roadway Top Width: 50.00 ft

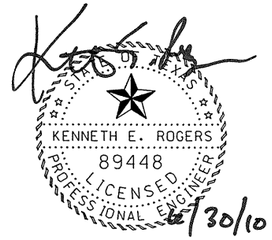

REV. NO.	DATE	DESCRIPTION	BY

ALAMO RMA

VICKREY & ASSOCIATES, INC.
CONSULTING ENGINEERS
CIVIL / ENVIRONMENTAL / SURVEY
12940 Country Parkway San Antonio, Texas 78216
Voice:(210) 349-3271 Fax:(210) 349-2561 www.vickreynet.com
Texas Board of Professional Engineers Registration No: F-159 ©2010

Texas Department of Transportation
© 2010

LOOP 1604 SUPER STREET
HYDRAULIC DATA SHEET
CULVERT CALCULATIONS

CULVERT No. 7

SHEET 9 OF 10

DGN:	FED. RD. DIV. NO.	STATE	FEDERAL AID PROJECT NO.			HIGHWAY NO.
CHK DGN:	6	TEXAS	STP 2011(210)ES			LP 1604
DWG:	DIST.	COUNTY	CONT. NO.	SECT. NO.	JOB NO.	SHEET NO.
CHK DWG:	SAT	BEXAR	2452	01	050	214

Plotted on: 6/29/2010

Design Filename: N:\2294-001\dgn\DRAINAGE\LP1604HYD08.DGN

HY-8 Analysis Results

Table 1 - Summary of Culvert Flows at Crossing: Crossing 8

Storm Event	Headwater Elevation (ft)	Total Discharge (cfs)	Culvert 1 Discharge (cfs)	Roadway Discharge (cfs)	Iterations
10 YR	950.49	111.53	111.53	0	1
25 YR	951.83	140.77	140.77	0	1
100 YR	952.3	198.65	149.46	49.07	4

Table 2 - Culvert Summary Table: Culvert 8

Storm Event	Total Discharge (cfs)	Culvert Discharge (cfs)	Headwater Elevation (ft)	Inlet Control Depth(ft)	Outlet Control Depth(ft)	Flow Type	Normal Depth (ft)	Critical Depth (ft)	Outlet Depth (ft)	Tailwater Depth (ft)	Outlet Velocity (ft/s)	Tailwater Velocity (ft/s)
10 YR	111.53	111.53	950.49	3.928	0.0*	5-S2n	1.83	2.053	1.832	0.422	9.663	16.842
25 YR	140.77	140.77	951.83	5.273	4.897	7-M2c	2.5	2.259	2.254	0.483	10.068	18.286
100 YR	198.65	149.46	952.3	5.74	5.519	7-M2c	2.5	2.32	2.301	0.59	10.588	20.578

* theoretical depth is impractical. Depth reported is corrected.

****

Inlet Elevation (invert): 946.56 ft, Outlet Elevation (invert): 944.83 ft

Culvert Length: 193.01 ft, Culvert Slope: 0.0090

****

Site Data - Culvert 8

Site Data Option: Culvert Invert Data
Inlet Station: 0.00 ft
Inlet Elevation: 946.56 ft
Outlet Station: 193.00 ft
Outlet Elevation: 944.83 ft
Number of Barrels: 3

Culvert Data Summary - Culvert 8

Barrel Shape: Circular
Barrel Diameter: 2.50 ft
Barrel Material: Concrete
Embedment: 0.00 in
Barrel Manning's n: 0.0120
Inlet Type: Conventional
Inlet Edge Condition: Square Edge with Headwall
Inlet Depression: None

Table 3 - Downstream Channel Rating Curve (Crossing: Crossing 8)

Storm Event	Flow (cfs)	Water Surface Elev (ft)	Depth (ft)	Velocity (ft/s)	Shear (psf)	Froude Number
10 YR	111.53	945.12	0.42	16.84	1.78	4.81
25 YR	140.77	945.18	0.48	18.29	2.03	4.91
100 YR	198.65	945.29	0.59	20.58	2.48	5.05

Tailwater Channel Data - Crossing 8

Tailwater Channel Option: Trapezoidal Channel
Bottom Width: 14.00 ft
Side Slope (H:V): 4.00 (_:1)
Channel Slope: 0.0674
Channel Manning's n: 0.0120
Channel Invert Elevation: 944.70 ft

Roadway Data for Crossing: Crossing 8

Roadway Profile Shape: Constant Roadway Elevation
Crest Length: 100.00 ft
Crest Elevation: 952.00 ft
Roadway Surface: Paved
Roadway Top Width: 50.00 ft

STATE OF TEXAS
KENNETH E. ROGERS
89448
LICENSED
PROFESSIONAL ENGINEER
6/30/10

REV. NO.	DATE	DESCRIPTION	BY

ALAMO RMA

VICKREY & ASSOCIATES, INC.
CONSULTING ENGINEERS
CIVIL / ENVIRONMENTAL / SURVEY
12940 Country Parkway San Antonio, Texas 78216
Voice:(210) 349-3271 Fax:(210) 349-2561 www.vickreynet.com
Texas Board of Professional Engineers Registration No: F-159 ©2010

Texas Department of Transportation
© 2010

LOOP 1604 SUPER STREET
HYDRAULIC DATA SHEET
CULVERT CALCULATIONS

CULVERT No. 8

SHEET 10 OF 10

DGN:	FED. RD. DIV. NO.	STATE	FEDERAL AID PROJECT NO.			HIGHWAY NO.
CHK DGN:	6	TEXAS	STP 2011(210)ES			LP 1604
DWG:	DIST.	COUNTY	CONT. NO.	SECT. NO.	JOB NO.	SHEET NO.
CHK DWG:	SAT	BEXAR	2452	01	050	215

Plotted on: 6/25/2010

HY-8 Analysis Results

Culvert Summary Table - Culvert 9
Culvert Crossing: Culvert A-1 New

Storm Event	Total Discharge (cfs)	Culvert Discharge (cfs)	Headwater Elevation (ft)	Inlet Control Depth (ft)	Outlet Control Depth (ft)	Flow Type	Normal Depth (ft)	Critical Depth (ft)	Outlet Depth (ft)	Tailwater Depth (ft)	Outlet Velocity (ft/s)	Tailwater Velocity (ft/s)
50 YR	342.00	342.00	915.63	5.12	5.12	5-S2n	1.99	2.94	2.23	2.18	12.79	11.20

Culvert Summary Table - Culvert 10
Culvert Crossing: Culvert A-2 New

Storm Event	Total Discharge (cfs)	Culvert Discharge (cfs)	Headwater Elevation (ft)	Inlet Control Depth (ft)	Outlet Control Depth (ft)	Flow Type	Normal Depth (ft)	Critical Depth (ft)	Outlet Depth (ft)	Tailwater Depth (ft)	Outlet Velocity (ft/s)	Tailwater Velocity (ft/s)
50 Yr	490.00	490.00	912.71	4.92	4.92	5-S2n	1.96	2.85	2.07	1.95	13.17	11.19

STATE OF TEXAS
SCOTT D. ARMSTRONG
69320
LICENSED PROFESSIONAL ENGINEER
SCOTT D. ARMSTRONG, P.E.

6/25/2010
DATE

REV. NO.	DATE	DESCRIPTION	BY

ALAMO RMA

PAPE-DAWSON ENGINEERS
555 EAST RAMSEY | SAN ANTONIO, TEXAS 78216 | PHONE: 210.375.9000 FAX: 210.375.9010
TEXAS BOARD OF PROFESSIONAL ENGINEERS, FIRM REGISTRATION # 470

Texas Department of Transportation
© 2010

LOOP 1604

HYDRAULIC CALCULATIONS CULVERT 9 & 10

DGN:	FED. RD. DIV. NO.	STATE	FEDERAL AID PROJECT NO.			HIGHWAY NO.
CHK DGN:	6	TEXAS	STP 2011(210)ES			LP 1604
DWG:	DIST.	COUNTY	CONT. NO.	SECT. NO.	JOB NO.	SHEET NO.
CHK DWG:	SAT	BEXAR	2452	01	050	216

Design Filename: p:\74\00\04\design\civil\Drainage\740004clvt**CALCS.dgn

Plotted on: 6/29/2010

Design Filename: N:\2294-001\dgn\DRAINAGE\LP1604HYD10.dgn

WinStorm (STORM DRAIN DESIGN) Version 3.05, Jan. 25, 2002
Run @ 5/27/2010 10:41:01 AM

PROJECT NAME : LP1604
JOB NUMBER : 2294-001
PROJECT DESCRIPTION : Loop 1604 Super Street
ANALYSYS FREQUENCY : 25 Years
MEASUREMENT UNITS: ENGLISH

OUTPUT FOR ANALYSYS FREQUENCY of: 25 Years

Runoff Computation for Design Frequency.

ID	C Value	Area (acre)	Tc (min)	Tc Used (min)	Intensity (in/hr)	Supply Q (cfs)	Total Q (cfs)
A1	0.56	0.70	10.00	10.00	0.00	18.580	18.580
A2	0.45	2.80	10.00	10.00	0.00	16.883	16.883**
A3	0.67	0.30	10.00	10.00	0.00	11.655	11.655***

On Grade Inlet Configuration Data

Inlet ID	Inlet Type	Inlet Length (ft)	Slopes Long (%)	Slopes Trans (%)	Gutter n	Gutter Depr. (ft)	Grate Width (ft)	Grate Type	Pond Width Allowed (ft)	Critic Elev. (ft)
A3	Curb	20.00	1.40	2.20	0.013	0.21	n/a	n/a	30.00	915.94
A2	Curb	20.00	0.20	2.40	0.013	0.21	n/a	n/a	30.00	914.50

On Grade Inlets Conmputation Data.

Inlet ID	Inlet Type	Total Q (cfs)	Intercept Capacity (cfs)	Q Bypass Allow (cfs)	Q Bypass Actual (cfs)	To Inlet ID	Required Length (ft)	Actual Length (ft)	Ponded Width (ft)
A3	Curb	11.655	9.778	2.000	1.877	A2	31.38	20.00	14.82
A2	Curb	18.760	17.042	2.000	1.718	A1	27.21	20.00	24.17

Sag Inlets Configuration Data.

Inlet ID	Inlet Type	Length/ Perim. (ft)	Grate Area (sf)	Left-Slope Long (%)	Left-Slope Trans (%)	Right-Slope Long (%)	Right-Slope Trans (%)	Gutter n	Gutter DeprW (ft)	Depth Allowed (ft)	Critic Elev. (ft)
A1	Curb	20.00	n/a	3.00	2.20	0.70	2.20	0.013	2.00	0.60	913.24

Sag Inlets Computation Data.

Inlet ID	Inlet Type	Length (ft)	Grate Perim (ft)	Grate Area (sf)	Total Q (cfs)	Inlet Capacity (cfs)	Total Head (ft)	Ponded Width Left (ft)	Ponded Width Right (ft)
A1	Curb	20.00	n/a	n/a	20.298	25.227	0.519	8.64	19.09

Cumulative Junction Discharge Computations

Node I.D.	Node Type	Weighted C-Value	Cumulat. Dr.Area (acres)	Cumulat. Tc (min)	Intens. (in/hr)	User Supply Q cfs)	Additional Q in Node (cfs)	Total Disch. (cfs)
A3	Curb	0.000	0.00	0.00	0.00	11.655	0.00	11.655
A2	Curb	0.000	0.00	10.00	9.26	28.538	0.00	28.538
A1	Curb	0.000	0.00	10.00	9.26	47.118	0.00	47.118
O1	Outlt	0.000	0.00	10.00	9.26	47.118	0.00	47.118

Conveyance Configuration Data

Run#	Node I.D. US	Node I.D. DS	Flowline Elev. US (ft)	Flowline Elev. DS (ft)	Shape #	Span (ft)	Rise (ft)	Length (ft)	Slope (%)	n_value
1	A1	O1	908.74	906.50	Circ 1	0.00	2.50	136.85	1.64	0.013
2	A2	A1	910.00	908.74	Circ 1	0.00	2.50	255.00	0.49	0.013
3	A3	A2	911.44	910.50	Circ 1	0.00	2.00	218.00	0.43	0.013

Conveyance Hydraulic Computations. Tailwater = 905.924 (ft)

Run#	Hydraulic Gradeline US Elev (ft)	Hydraulic Gradeline DS Elev (ft)	Fr.Slope (%)	Depth Unif. (ft)	Depth Actual (ft)	Velocity Unif. (f/s)	Velocity Actual (f/s)	Q (cfs)	Cap (cfs)	Junc Loss (ft)
1*	912.65	908.35	1.319	1.85	1.85	12.09	12.09	47.12	52.49	2.062
2	913.99	912.65	0.484	2.03	2.50	6.68	5.81	28.54	28.84	0.105
3	914.57	913.99	0.265	1.34	2.00	5.19	3.71	11.66	14.86	0.000

END

* Super critical flow.
** Includes bypass from curb inlet C-1 and D-1 (see sheet 3 of 3)
*** Includes bypass from curb inlet B-1 (see sheet 2 of 3)

NORMAL TERMINATION OF WINSTORM.

Warning Messages for current project:

Runoff Frequency of: 25 Years
Capacity of grade inlet exceeded at inlet Id= A3
Capacity of grade inlet exceeded at inlet Id= A2
Tailwater set to uniform depth elevation = 908.35(ft)

STATE OF TEXAS
KENNETH E. ROGERS
89448
LICENSED PROFESSIONAL ENGINEER
5/30/10

REV. NO.	DATE	DESCRIPTION	BY

ALAMO RMA

VICKREY & ASSOCIATES, INC.
CONSULTING ENGINEERS
CIVIL /ENVIRONMENTAL /SURVEY
12940 Country Parkway San Antonio, Texas 78216
Voice:(210) 349-3271 Fax:(210) 349-2561 www.vickreynet.com
Texas Board of Professional Engineers Registration No: F-159 ©2010

Texas Department of Transportation
©2010

LOOP 1604 SUPER STREET
HYDRAULIC DATA SHEET
STORM DRAIN
LINE "A"

SHEET 1 OF 3

DGN:	FED. RD. DIV. NO.	STATE	FEDERAL AID PROJECT NO.			HIGHWAY NO.
CHK DGN:	6	TEXAS	STP 2011(210)ES			LP 1604
DWG:	DIST.	COUNTY	CONT. NO.	SECT. NO.	JOB NO.	SHEET NO.
CHK DWG:	SAT	BEXAR	2452	01	050	217

Plotted on: 8/4/2010

Design Filename: N:\2294-001\dgn\DRAINAGE\LP1604HYD11.dgn

WinStorm (STORM DRAIN DESIGN) Version 3.05, Jan. 25, 2002
Run @ 5/27/2010 6:56:26 AM

PROJECT NAME : LP1604
JOB NUMBER : 2294-001
PROJECT DESCRIPTION : Loop 1604 Super Street
ANALYSYS FREQUENCY : 25 Years
MEASUREMENT UNITS: ENGLISH

==========

OUTPUT FOR ANALYSYS FREQUENCY of: 25 Years

Runoff Computation for Design Frequency.

ID	C Value	Area (acre)	Tc (min)	Tc Used (min)	Intensity (in/hr)	Supply Q (cfs)	Total Q (cfs)
B1	0.57	1.00	10.00	10.00	0.00	4.690	4.690
B2	0.56	4.50	10.00	10.00	0.00	20.630	20.630
B3	0.54	0.60	10.00	10.00	0.00	3.300	3.300
B4	0.58	1.30	10.00	10.00	0.00	7.680	7.680

On Grade Inlet Configuration Data

Inlet ID	Inlet Type	Inlet Length (ft)	Slopes Long (%)	Slopes Trans (%)	Gutter n	Gutter Depr. (ft)	Grate Width (ft)	Grate Type	Pond Width Allowed (ft)	Critic Elev. (ft)
B3	Curb	10.00	4.70	1.30	0.013	0.21	n/a	n/a	30.00	931.51
B2	Curb	20.00	4.60	1.20	0.013	0.21	n/a	n/a	30.00	924.37
B1	Curb	20.00	3.00	1.60	0.013	0.21	n/a	n/a	30.00	918.59
B4	Curb	10.00	5.00	0.50	0.013	0.21	n/a	n/a	30.00	939.82

On Grade Inlets Conmputation Data.

Inlet ID	Inlet Type	Total Q (cfs)	Intercept Capacity (cfs)	Q Bypass Allow (cfs)	Q Bypass Actual (cfs)	To Inlet ID	Required Length (ft)	Actual Length (ft)	Ponded Width (ft)
B3	Curb	8.554	3.090	10.000	5.465	B2	45.38	10.00	14.62
B2	Curb	26.095	10.000	20.000	16.095	B1	84.94	20.00	23.42
B1	Curb	20.785	11.179	10.000	9.605**	A3	57.35	20.00	19.44
B4	Curb	7.680	2.426	10.000	5.254	B3	52.60	10.00	25.20

Cumulative Junction Discharge Computations

Node I.D.	Node Type	Weighted C-Value	Cumulat. Dr.Area (acres)	Cumulat. Tc (min)	Intens. (in/hr)	User Supply Q cfs)	Additional Q in Node (cfs)	Total Disch. (cfs)
B3	Curb	0.000	0.00	10.00	9.26	10.980	0.00	10.980
B2	Curb	0.000	0.00	10.00	9.26	31.610	0.00	31.610
B1	Curb	0.000	0.00	10.00	9.26	36.300	0.00	36.300
B4	Curb	0.000	0.00	0.00	0.00	7.680	0.00	7.680
O1	Outlt	0.000	0.00	10.00	9.26	36.300	0.00	36.300

Conveyance Configuration Data

Run#	Node I.D. US	Node I.D. DS	Flowline Elev. US (ft)	Flowline Elev. DS (ft)	Shape #	Span (ft)	Rise (ft)	Length (ft)	Slope (%)	n_value
1	B1	O1	908.59	907.59	Circ 1	0.00	2.00	19.24	5.20	0.013
2	B2	B1	919.37	908.59	Circ 1	0.00	2.00	135.61	7.97	0.013
3	B3	B2	926.51	919.37	Circ 1	0.00	2.00	135.66	5.27	0.013
4	B4	B3	934.82	926.51	Circ 1	0.00	2.00	151.01	5.51	0.013

Conveyance Hydraulic Computations. Tailwater = 912.028 (ft)

Run#	Hydraulic Gradeline US Elev (ft)	Hydraulic Gradeline DS Elev (ft)	Fr.Slope (%)	Depth Unif. (ft)	Depth Actual (ft)	Velocity Unif. (f/s)	Velocity Actual (f/s)	Q (cfs)	Cap (cfs)	Junc Loss (ft)
1*	913.26	912.03	2.574	1.24	2.00	17.80	11.55	36.30	51.62	0.733
2*	921.84	913.26	1.952	0.99	2.00	20.27	10.06	31.61	63.89	0.588
3*	927.77	921.84	0.236	0.62	2.00	13.12	3.50	10.98	51.94	0.074
4*	935.33	927.77	0.115	0.51	1.26	12.04	3.67	7.68	53.12	0.000

==========END==========

* Super critical flow.
** Bypass goes to curb inlet A-3 (see sheet 1 of 3)

NORMAL TERMINATION OF WINSTORM.

Warning Messages for current project:

Runoff Frequency of: 25 Years
Capacity of grade inlet exceeded at inlet Id= B3
Capacity of grade inlet exceeded at inlet Id= B2
Capacity of grade inlet exceeded at inlet Id= B1
Capacity of grade inlet exceeded at inlet Id= B4

STATE OF TEXAS
KENNETH E. ROGERS
89448
LICENSED
PROFESSIONAL ENGINEER
8/4/10

REV. NO.	DATE	DESCRIPTION	BY

ALAMO RMA

VICKREY & ASSOCIATES, INC.
CONSULTING ENGINEERS
CIVIL /ENVIRONMENTAL /SURVEY
12940 Country Parkway San Antonio, Texas 78216
Voice:(210) 349-3271 Fax:(210) 349-2561 www.vickreynet.com
Texas Board of Professional Engineers Registration No: F-159 ©2010

Texas Department of Transportation
© 2010

LOOP 1604 SUPER STREET
HYDRAULIC DATA SHEET
STORM DRAIN
LINE "B"

SHEET 2 OF 3

DGN:	FED. RD. DIV. NO.	STATE	FEDERAL AID PROJECT NO.			HIGHWAY NO.
CHK DGN:	6	TEXAS	STP 2011(210)ES			LP 1604
DWG:	DIST.	COUNTY	CONT. NO.	SECT. NO.	JOB NO.	SHEET NO.
CHK DWG:	SAT	BEXAR	2452	01	050	218

Plotted on: 8/4/2010

Design Filename: N:\2294-001\dgn\DRAINAGE\LP1604HYD12.dgn

WinStorm (STORM DRAIN DESIGN) Version 3.05, Jan. 25, 2002
Run @ 5/27/2010 9:54:19 AM

PROJECT NAME : LP1604
JOB NUMBER : 2294-001
PROJECT DESCRIPTION : Loop 1604 Super Street
ANALYSYS FREQUENCY : 25 Years
MEASUREMENT UNITS: ENGLISH

==========

OUTPUT FOR ANALYSYS FREQUENCY of: 25 Years

Runoff Computation for Design Frequency.

ID	C Value	Area (acre)	Tc (min)	Tc Used (min)	Intensity (in/hr)	Supply Q (cfs)	Total Q (cfs)
C1	0.56	0.70	10.00	10.00	0.00	3.990	3.990
D1	0.62	1.00	10.00	10.00	0.00	6.320	6.320
DA13	0.69	0.50	10.00	10.00	0.00	3.510	3.510
DA14	0.47	0.70	16.00	10.00	0.00	2.700	2.700

On Grade Inlet Configuration Data

Inlet ID	Inlet Type	Inlet Length (ft)	Slopes Long (%)	Slopes Trans (%)	Gutter n	Gutter Depr. (ft)	Grate Width (ft)	Grate Type	Pond Width Allowed (ft)	Critic Elev. (ft)
C1	Curb	10.00	3.00	2.00	0.013	0.21	n/a	n/a	30.00	918.60
D1	Curb	10.00	3.00	2.00	0.013	0.21	n/a	n/a	30.00	918.60

On Grade Inlets Conmputation Data.

Inlet ID	Inlet Type	Total Q (cfs)	Intercept Capacity (cfs)	Q Bypass Allow (cfs)	Q Bypass Actual (cfs)	To Inlet ID	Required Length (ft)	Actual Length (ft)	Ponded Width (ft)
C1	Curb	3.990	2.721	3.000	1.269*	A2	21.24	10.00	9.10
D1	Curb	6.320	3.536	3.000	2.784*	A2	27.33	10.00	10.85

Sag Inlets Configuration Data.

Inlet ID	Inlet Type	Length/ Perim. (ft)	Grate Area (sf)	Left-Slope Long (%)	Left-Slope Trans (%)	Right-Slope Long (%)	Right-Slope Trans (%)	Gutter n	Gutter DeprW (ft)	Depth Allowed (ft)	Critic Elev. (ft)
DA13	Grate	11.33	8.13	0.5025.00		0.50	25.00	0.013	n/a	0.78	871.21
DA14	Grate	11.33	8.13	0.5025.00		0.50	25.00	0.013	n/a	1.35	902.00

Sag Inlets Computation Data.

Inlet ID	Inlet Type	Length (ft)	Grate Perim (ft)	Grate Area (sf)	Total Q (cfs)	Inlet Capacity (cfs)	Total Head (ft)	Ponded Width Left (ft)	Ponded Width Right (ft)
DA13	Grate	n/a	11.33	8.13	3.510	12.050	0.216	1.94	1.94
DA14	Grate	n/a	11.33	8.13	2.700	25.369	0.181	1.75	1.75

==========END==========

* Bypass goes to curb inlet A-2 (see sheet 1 of 3)

NORMAL TERMINATION OF WINSTORM.

Warning Messages for current project:
Capacity of grade inlet exceeded at inlet Id= C1
Capacity of grade inlet exceeded at inlet Id= D1
Grate inlet in sag Id=DA13 has a % reduction safety factor = 50
Grate inlet in sag Id=DA14 has a % reduction safety factor = 50

STATE OF TEXAS
KENNETH E. ROGERS
89448
LICENSED
PROFESSIONAL ENGINEER
8/4/10

REV. NO.	DATE	DESCRIPTION	BY

ALAMO RMA

VICKREY & ASSOCIATES, INC.
CONSULTING ENGINEERS
CIVIL /ENVIRONMENTAL /SURVEY
12940 Country Parkway San Antonio, Texas 78216
Voice:(210) 349-3271 Fax:(210) 349-2561 www.vickreynet.com
Texas Board of Professional Engineers Registration No: F-159 ©2010

Texas Department of Transportation
© 2010

LOOP 1604 SUPER STREET
HYDRAULIC DATA SHEET
STORM DRAIN
VARIOUS INLETS

SHEET 3 OF 3

DGN:	FED. RD. DIV. NO.	STATE	FEDERAL AID PROJECT NO.			HIGHWAY NO.
CHK DGN:	6	TEXAS	STP 2011(210)ES			LP 1604
DWG:	DIST.	COUNTY	CONT. NO.	SECT. NO.	JOB NO.	SHEET NO.
CHK DWG:	SAT	BEXAR	2452	01	050	219

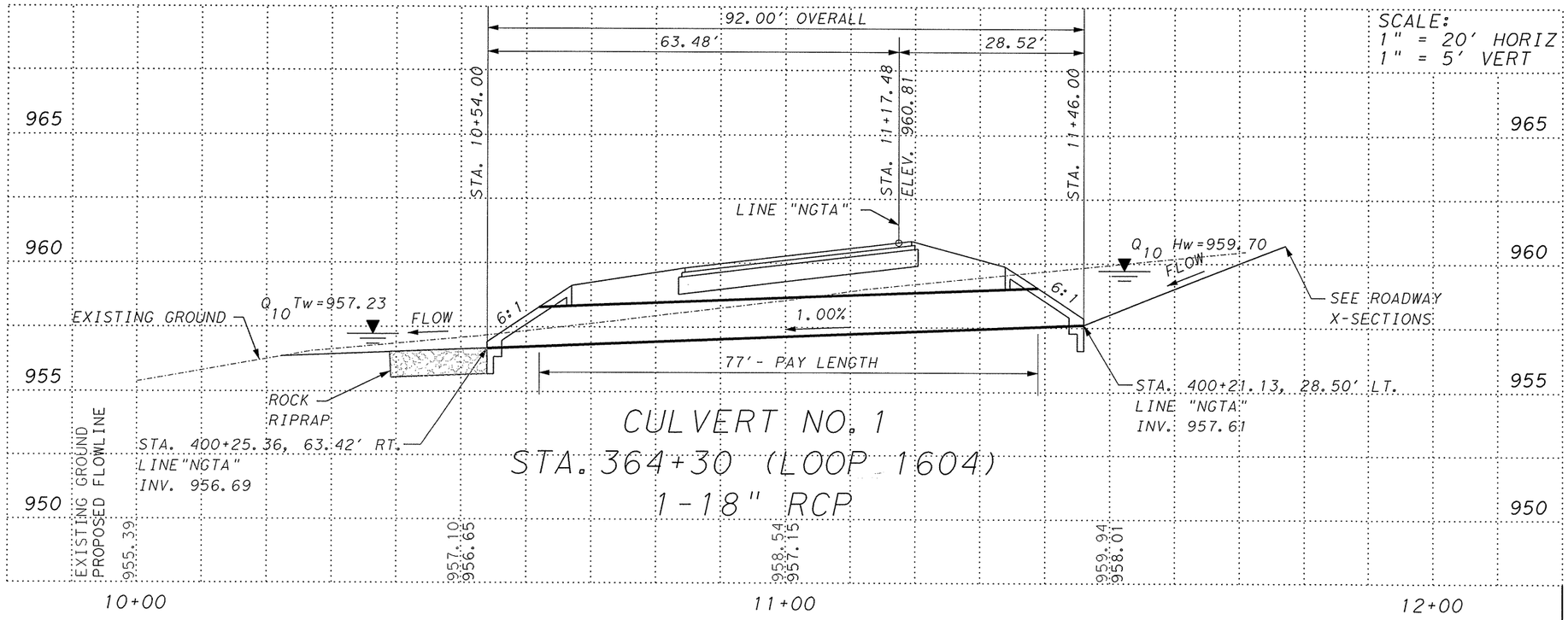

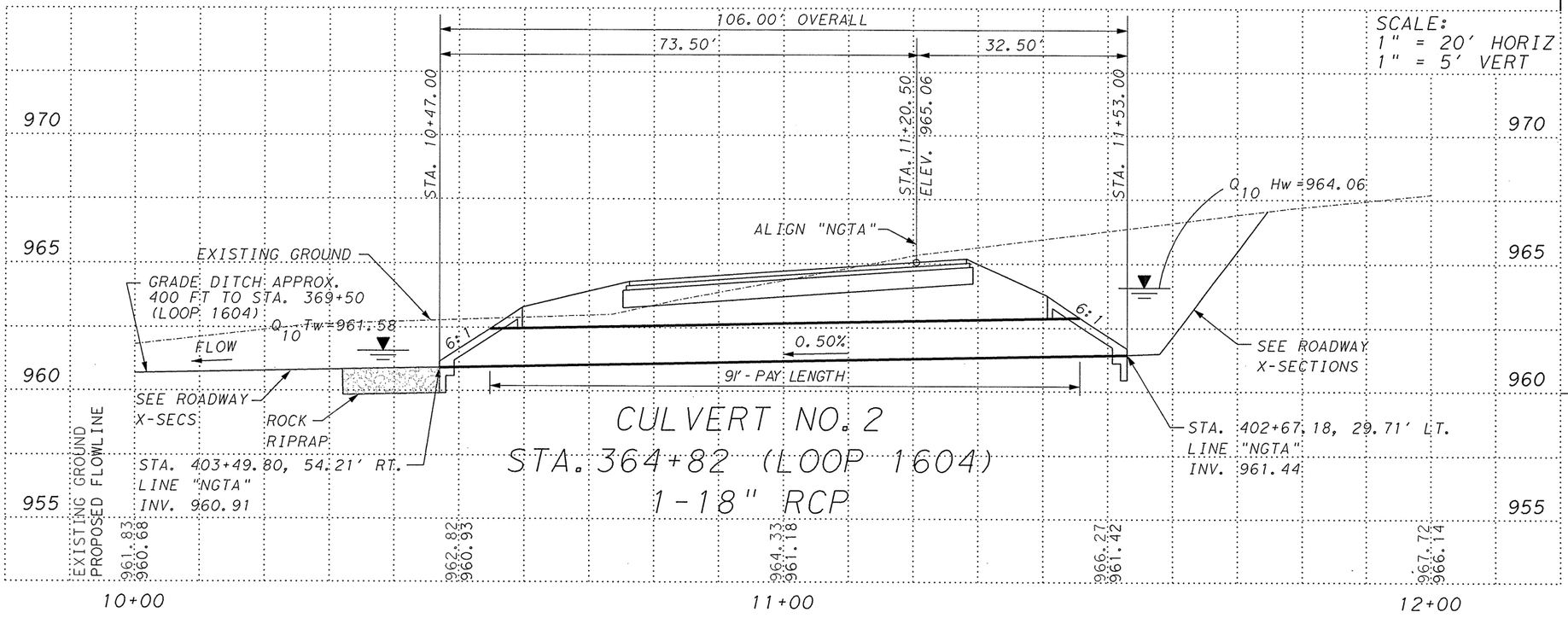

ESTIMATED QUANTITIES

CULVERT 1

ITEM	DESCRIPTION	UNIT	QTY
0432-2001	Riprap (Conc)(4 in)	CY	3
0432-2019	Stone Riprap (Stone Protection)(12 in)	CY	5
0464-2035	RC Pipe (CL V)(18 in)	LF	77
0467-2286	SET (Ty II)(18 in)(RCP)(6:1)(P)	EA	2

CULVERT 2

ITEM	DESCRIPTION	UNIT	QTY
0432-2001	Riprap (Conc)(4 in)	CY	3
0432-2019	Stone Riprap (Stone Protection)(12 in)	CY	5
0464-2035	RC Pipe (CL V)(18 in)	LF	91
0467-2286	SET (Ty II)(18 in)(RCP)(6:1)(P)	EA	2

NOTES:
1. ALL GRADING TO BE KEPT IN TxDOT ROW.
2. CONTRACTOR TO CONSTRUCT SET IN ACCORDANCE WITH TXDOT STANDARD (SETP-PD), UNLESS NOTED OTHERWISE. CONTRACTOR TO CONSTRUCT RIPRAP 1.5' BEYOND PAY LIMITS OF SET WITH A 12" DEEP BY 9" WIDE TOE DOWN ON ALL SIDES. WORK PAID UNDER ITEM 432.
3. WHEN EXTENDING EXISTING CULVERTS, CONTRACTOR TO CUTBACK PIPE AS NEEDED IN ORDER TO ENSURE PROPER CONNECTION.
4. ROCKRIP TO BE PLACED THE WIDTH OF THE CONCRETE RIPRAP TO 15' DOWNSTREAM OF THE END OF PIPE
5. QUANTITES FOR EMBANKMENT AND EXCAVATION ARE ACCOUNTED FOR ON THE ROADWAY QUANTITY SUMMARY.

STATE OF TEXAS
KENNETH E. ROGERS
89448
LICENSED
PROFESSIONAL ENGINEER
12/30/10

REV. NO.	DATE	DESCRIPTION	BY

ALAMO RMA

VICKREY & ASSOCIATES, INC.
CONSULTING ENGINEERS
CIVIL / ENVIRONMENTAL / SURVEY
12940 Country Parkway San Antonio, Texas 78216
Voice:(210) 349-3271 Fax:(210) 349-2561 www.vickreynet.com
Texas Board of Professional Engineers Registration No: F-159 ©2010

Texas Department of Transportation
© 2010

LOOP 1604 SUPER STREET

CULVERT NO. 1 & 2

SHEET 1 OF 8

DGN:	FED. RD. DIV. NO.	STATE	FEDERAL AID PROJECT NO.			HIGHWAY NO.
CHK DGN:	6	TEXAS	STP 2011(210)ES			LP 1604
DWG:	DIST.	COUNTY	CONT. NO.	SECT. NO.	JOB NO.	SHEET NO.
CHK DWG:	SAT	BEXAR	2452	01	050	220

Plotted on: 6/30/2010

Design Filename: N:\2294-001\dgn\DRAINAGE\LP1604STR1&2.DGN

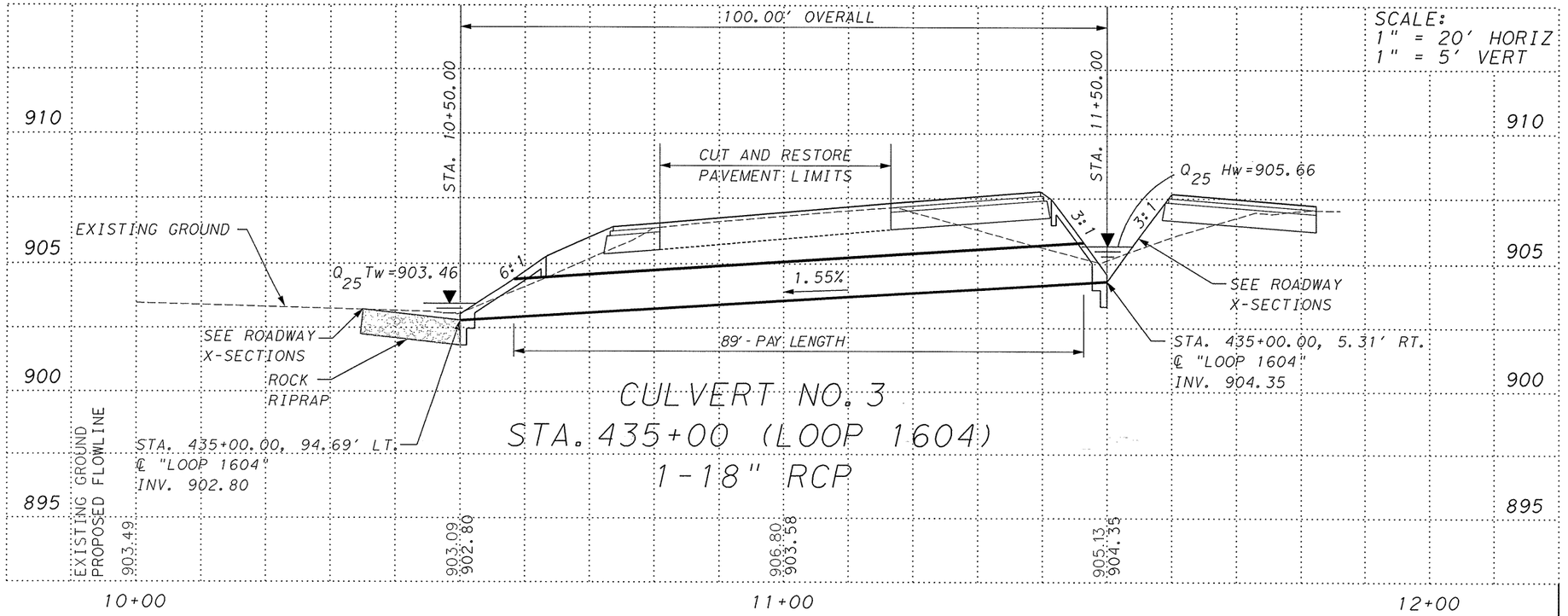

CULVERT NO. 3
STA. 435+00 (LOOP 1604)
1-18" RCP

SCALE:
1" = 20' HORIZ
1" = 5' VERT

ESTIMATED QUANTITIES

CULVERT 3

ITEM	DESCRIPTION	UNIT	QTY
0400-2006	Cut & Restoring Pav	SY	15
0432-2001	Riprap (Conc)(4 in)	CY	3
0432-2019	Stone Riprap (Stone Protection)(12 in)	CY	5
0464-2035	RC Pipe (CL V)(18 in)	LF	89
0467-2209	SET (Ty II)(18 in)(RCP)(3:1)(C)	EA	1
0467-2234	SET (Ty II)(18 in)(RCP)(6:1)(C)	EA	1

NOTES:
1. ALL GRADING TO BE KEPT IN TxDOT ROW.
2. CONTRACTOR TO CONSTRUCT SET IN ACCORDANCE WITH TXDOT STANDARD (SETP-PD), UNLESS NOTED OTHERWISE. CONTRACTOR TO CONSTRUCT RIPRAP 1.5' BEYOND PAY LIMITS OF SET WITH A 12" DEEP BY 9" WIDE TOE DOWN ON ALL SIDES. WORK PAID UNDER ITEM 432.
3. WHEN EXTENDING EXISTING CULVERTS, CONTRACTOR TO CUTBACK PIPE AS NEEDED IN ORDER TO ENSURE PROPER CONNECTION.
4. ROCKRIP TO BE PLACED THE WIDTH OF THE CONCRETE RIPRAP TO 15' DOWNSTREAM OF THE END OF PIPE
5. QUANTITES FOR EMBANKMENT AND EXCAVATION ARE ACCOUNTED FOR ON THE ROADWAY QUANTITY SUMMARY.

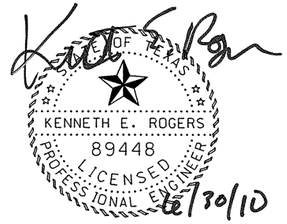

REV. NO.	DATE	DESCRIPTION	BY

ALAMO RMA

VICKREY & ASSOCIATES, INC.
CONSULTING ENGINEERS
CIVIL / ENVIRONMENTAL / SURVEY
12940 Country Parkway San Antonio, Texas 78216
Voice:(210) 349-3271 Fax:(210) 349-2561 www.vickreynet.com
Texas Board of Professional Engineers Registration No: F-159 ©2010

Texas Department of Transportation
© 2010

LOOP 1604 SUPER STREET

CULVERT NO. 3

SHEET 2 OF 8

DGN:	FED. RD. DIV. NO.	STATE	FEDERAL AID PROJECT NO.			HIGHWAY NO.
CHK DGN:	6	TEXAS	STP 2011(210)ES			LP 1604
DWG:	DIST.	COUNTY	CONT. NO.	SECT. NO.	JOB NO.	SHEET NO.
CHK DWG:	SAT	BEXAR	2452	01	050	221

Plotted on: 6/30/2010

Design Filename: N:\2294-001\dgn\DRAINAGE\LP1604STR3.dgn

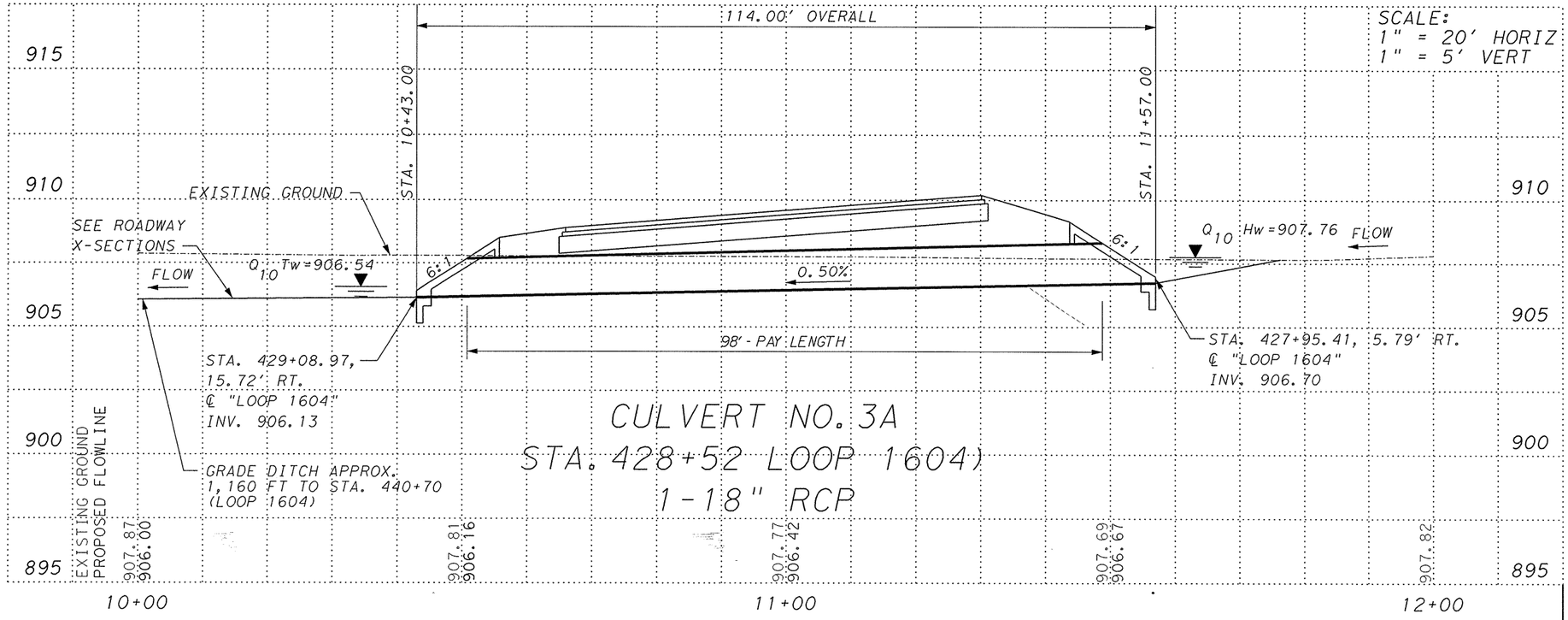

CULVERT NO. 3A
STA. 428+52 LOOP 1604)
1-18" RCP

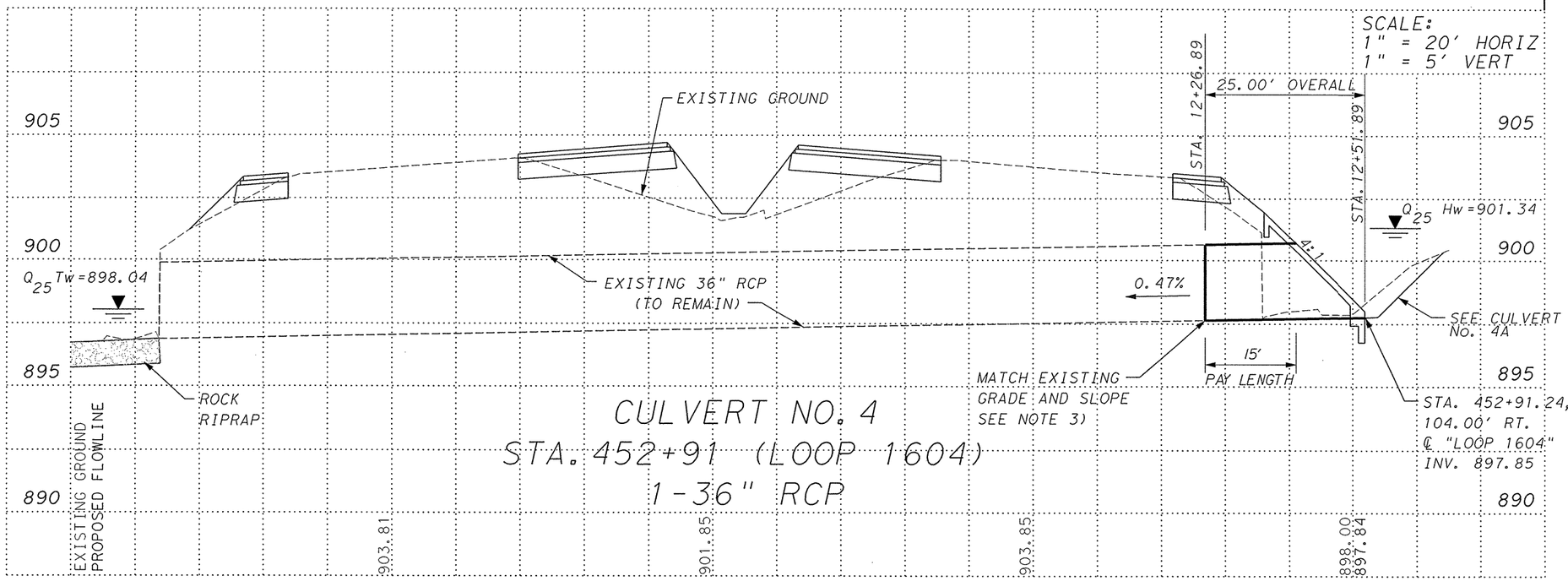

CULVERT NO. 4
STA. 452+91 (LOOP 1604)
1-36" RCP

ESTIMATED QUANTITIES

CULVERT 3A

ITEM	DESCRIPTION	UNIT	QTY
0432-2001	Riprap (Conc)(4 in)	CY	3
0464-2035	RC Pipe (CL V)(18 in)	LF	98
0467-2286	SET (Ty II)(18 in)(RCP)(6:1)(P)	EA	2

CULVERT 4

ITEM	DESCRIPTION	UNIT	QTY
0432-2001	Riprap (Conc)(4 in)	CY	2
0432-2019	Stone Riprap (Stone Protection)(12 in)	CY	7
0464-2009	RC Pipe (CL III)(36 in)	LF	15
0467-2227	SET (Ty II)(36 in)(RCP)(4:1)(C)	EA	1

NOTES:
1. ALL GRADING TO BE KEPT IN TxDOT ROW.
2. CONTRACTOR TO CONSTRUCT SET IN ACCORDANCE WITH TXDOT STANDARD (SETP-PD), UNLESS NOTED OTHERWISE. CONTRACTOR TO CONSTRUCT RIPRAP 1.5' BEYOND PAY LIMITS OF SET WITH A 12" DEEP BY 9" WIDE TOE DOWN ON ALL SIDES. WORK PAID UNDER ITEM 432.
3. WHEN EXTENDING EXISTING CULVERTS, CONTRACTOR TO CUTBACK PIPE AS NEEDED IN ORDER TO ENSURE PROPER CONNECTION.
4. ROCKRIP TO BE PLACED THE WIDTH OF THE CONCRETE RIPRAP TO 15' DOWNSTREAM OF THE END OF PIPE
5. QUANTITES FOR EMBANKMENT AND EXCAVATION ARE ACCOUNTED FOR ON THE ROADWAY QUANTITY SUMMARY.

STATE OF TEXAS
KENNETH E. ROGERS
89448
LICENSED
PROFESSIONAL ENGINEER
6/30/10

REV. NO.	DATE	DESCRIPTION	BY

ALAMO RMA

VICKREY & ASSOCIATES, INC.
CONSULTING ENGINEERS
CIVIL / ENVIRONMENTAL / SURVEY
12940 Country Parkway San Antonio, Texas 78216
Voice:(210) 349-3271 Fax:(210) 349-2561 www.vickreynet.com
Texas Board of Professional Engineers Registration No: F-159 ©2010

Texas Department of Transportation
© 2010

LOOP 1604 SUPER STREET

CULVERT NO. 3A & 4

SHEET 3 OF 8

DGN:	FED. RD. DIV. NO.	STATE	FEDERAL AID PROJECT NO.			HIGHWAY NO.
CHK DGN:	6	TEXAS	STP 2011(210)ES			LP 1604
DWG:	DIST.	COUNTY	CONT. NO.	SECT. NO.	JOB NO.	SHEET NO.
CHK DWG:	SAT	BEXAR	2452	01	050	222

Plotted on: 6/30/2010

Design Filename: N:\2294-001\dgn\DRAINAGE\LP1604STR3&4.DGN

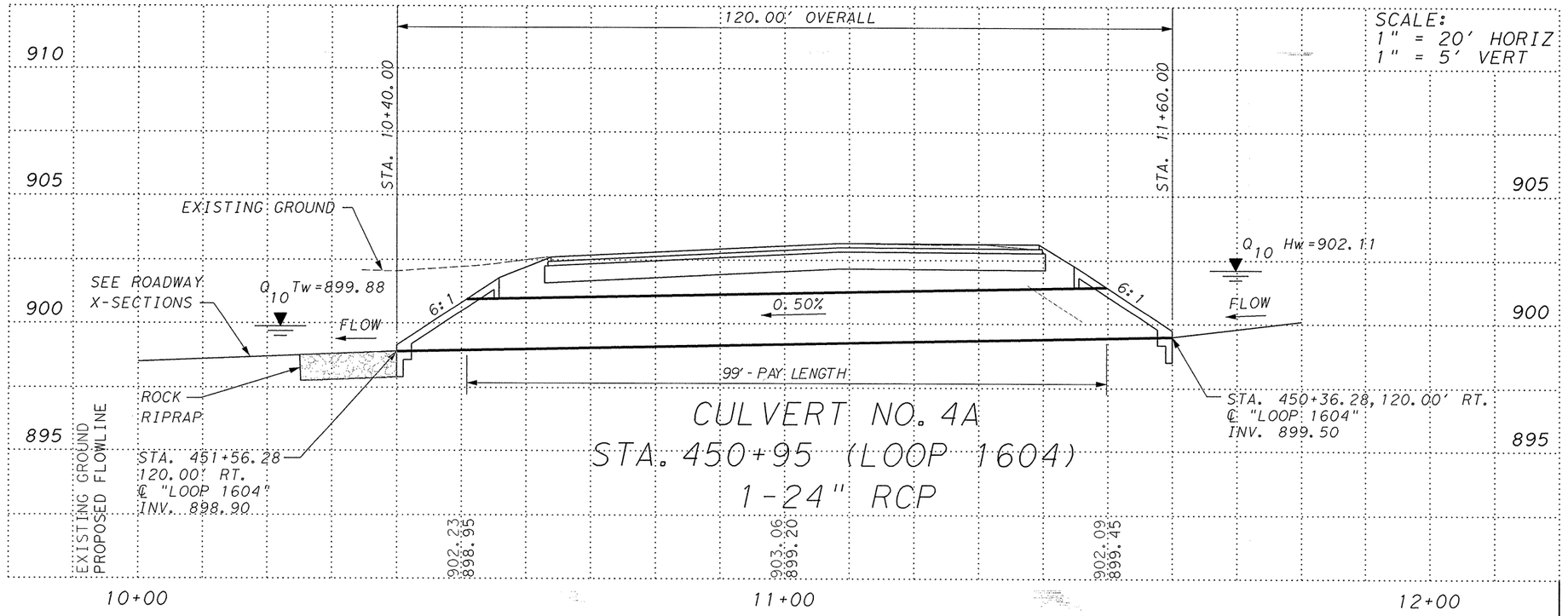

CULVERT NO. 4A
STA. 450+95 (LOOP 1604)
1-24" RCP

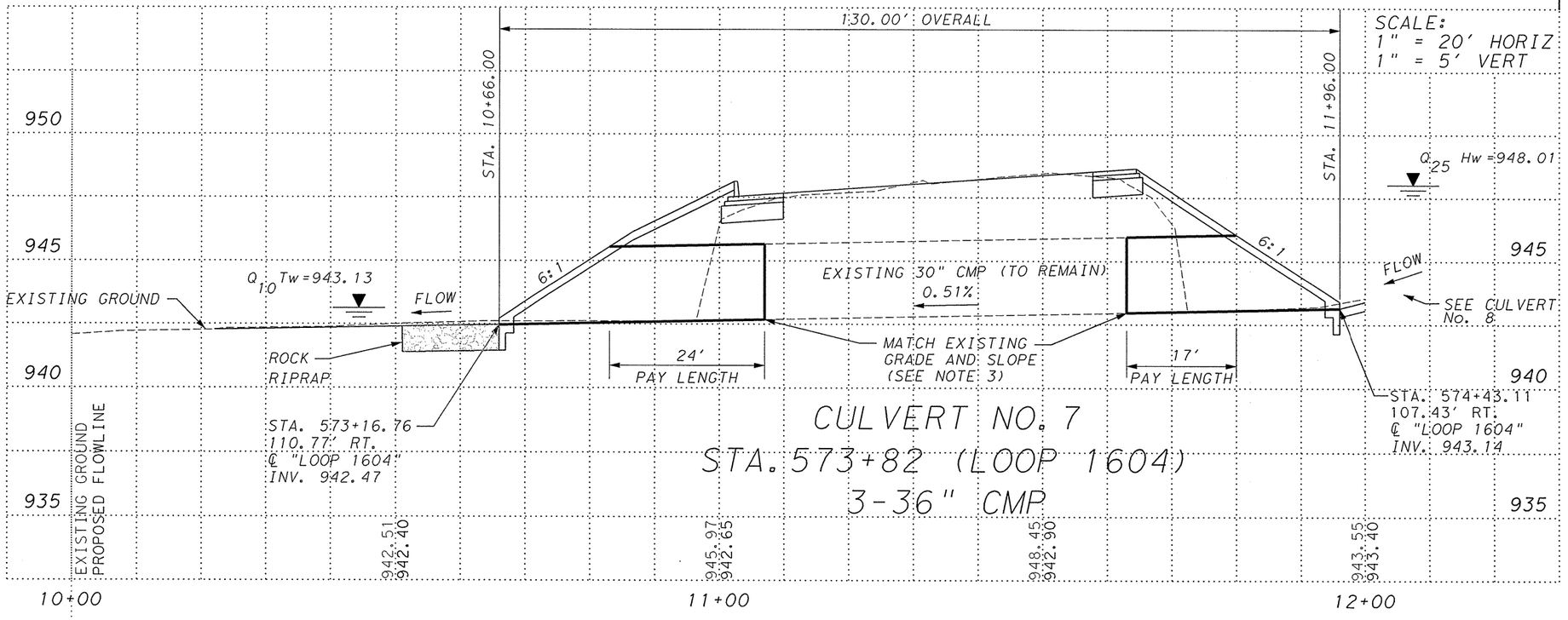

CULVERT NO. 7
STA. 573+82 (LOOP 1604)
3-36" CMP

ESTIMATED QUANTITIES

CULVERT 4A

ITEM	DESCRIPTION	UNIT	QTY
0432-2001	Riprap (Conc)(4 in)	CY	3
0432-2019	Stone Riprap (Stone Protection)(12 in)	CY	5
0464-2005	RC Pipe (CL III)(24 in)	LF	99
0467-2288	SET (Ty II)(24 in)(RCP)(6:1)(P)	EA	2

CULVERT 7

ITEM	DESCRIPTION	UNIT	QTY
0432-2019	Stone Riprap (Stone Protection)(12 in)	CY	9
0460-2007	CMP (GalSt)(36 in)	LF	123
0467-2307	SET (Ty II)(36 in)(CMP)(6:1)(P)	EA	6

NOTES:
1. ALL GRADING TO BE KEPT IN TxDOT ROW.
2. CONTRACTOR TO CONSTRUCT SET IN ACCORDANCE WITH TXDOT STANDARD (SETP-PD), UNLESS NOTED OTHERWISE. CONTRACTOR TO CONSTRUCT RIPRAP 1.5' BEYOND PAY LIMITS OF SET WITH A 12" DEEP BY 9" WIDE TOE DOWN ON ALL SIDES. WORK PAID UNDER ITEM 432.
3. WHEN EXTENDING EXISTING CULVERTS, CONTRACTOR TO CUTBACK PIPE AS NEEDED IN ORDER TO ENSURE PROPER CONNECTION.
4. ROCKRIP TO BE PLACED THE WIDTH OF THE CONCRETE RIPRAP TO 15' DOWNSTREAM OF THE END OF PIPE
5. QUANTITES FOR EMBANKMENT AND EXCAVATION ARE ACCOUNTED FOR ON THE ROADWAY QUANTITY SUMMARY.

STATE OF TEXAS
KENNETH E. ROGERS
89448
LICENSED PROFESSIONAL ENGINEER
6/30/10

REV. NO.	DATE	DESCRIPTION	BY

ALAMO RMA

VICKREY & ASSOCIATES, INC.
CONSULTING ENGINEERS
CIVIL /ENVIRONMENTAL /SURVEY
12940 Country Parkway San Antonio, Texas 78216
Voice:(210) 349-3271 Fax:(210) 349-2561 www.vickreynet.com
Texas Board of Professional Engineers Registration No: F-159 ©2010

Texas Department of Transportation
© 2010

LOOP 1604 SUPER STREET

CULVERT NO. 4A & 7

SHEET 4 OF 8

DGN:	FED. RD. DIV. NO.	STATE	FEDERAL AID PROJECT NO.			HIGHWAY NO.
CHK DGN:	6	TEXAS	STP 2011(210)ES			LP 1604
DWG:	DIST.	COUNTY	CONT. NO.	SECT. NO.	JOB NO.	SHEET NO.
CHK DWG:	SAT	BEXAR	2452	01	050	223

Plotted on: 6/30/2010

Design Filename: N:\2294-001\dgn\DRAINAGE\LP1604STR4A&7.dgn

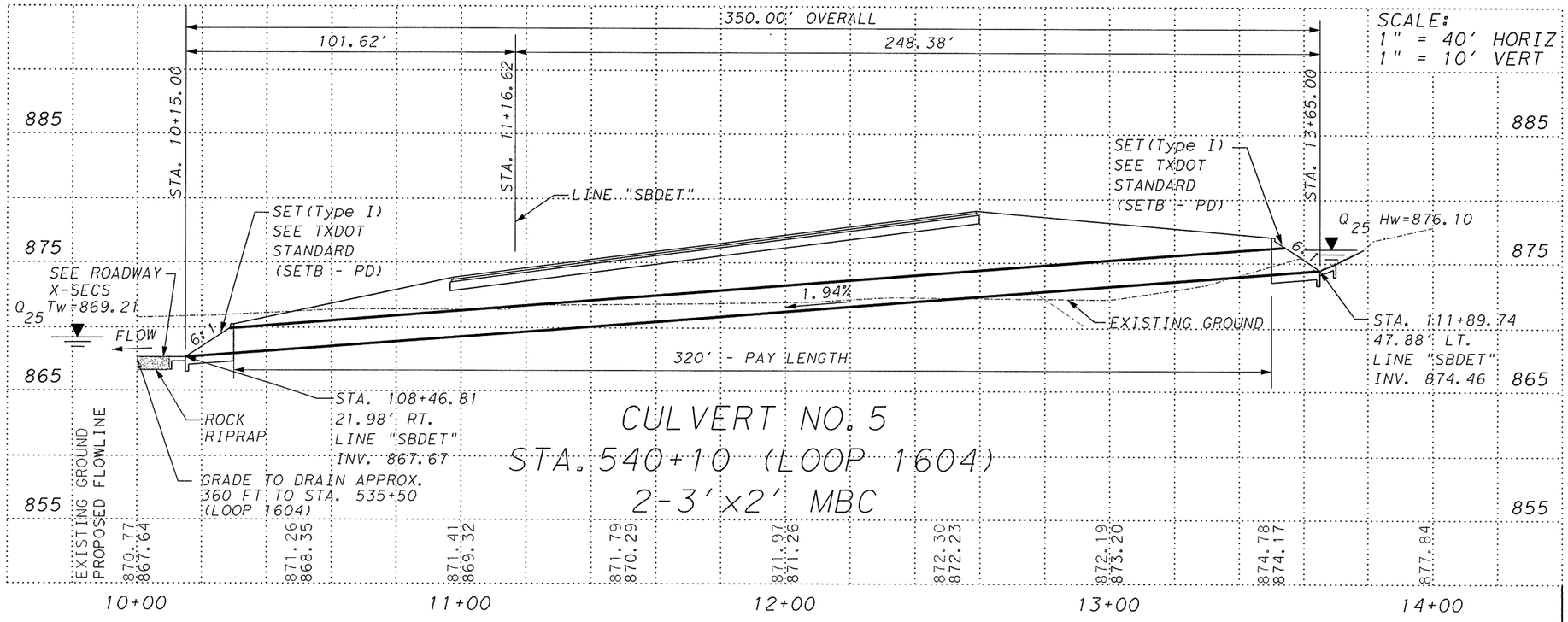

CULVERT NO. 5
STA. 540+10 (LOOP 1604)
2-3'x2' MBC

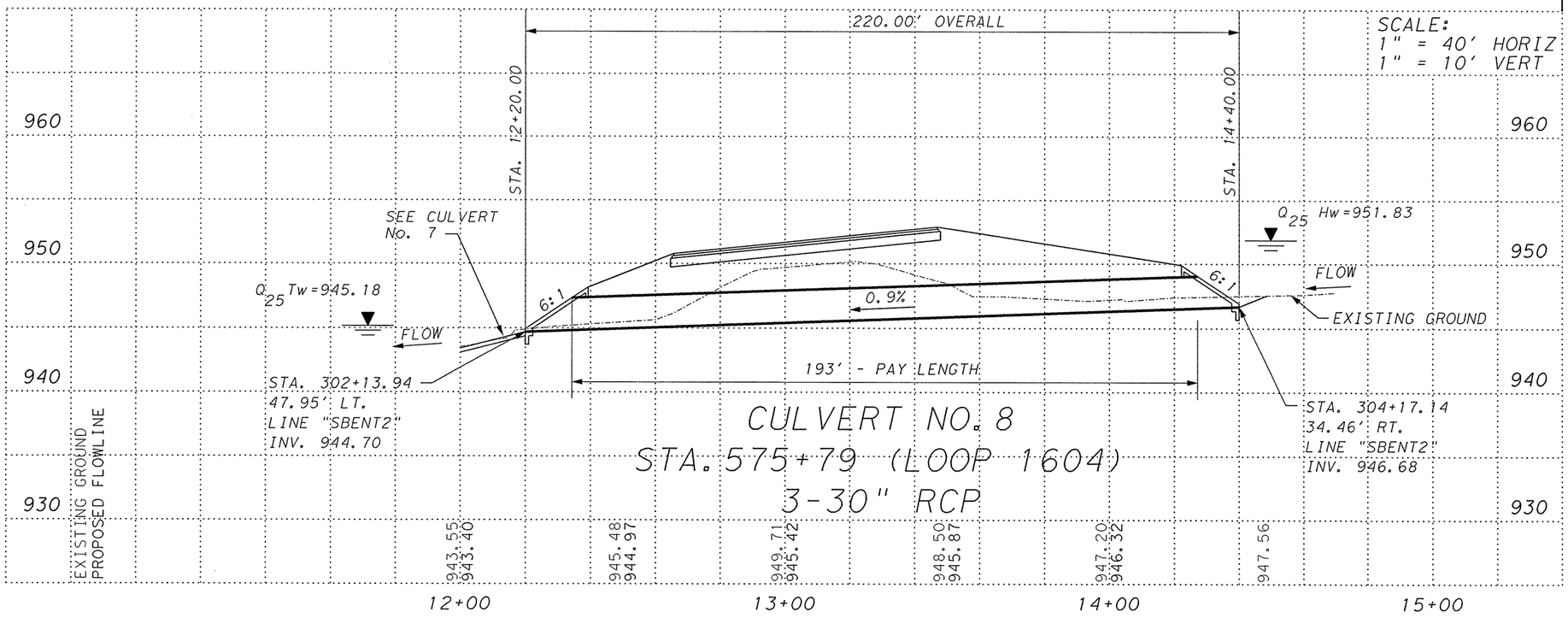

CULVERT NO. 8
STA. 575+79 (LOOP 1604)
3-30" RCP

ESTIMATED QUANTITIES

CULVERT 5

ITEM	DESCRIPTION	UNIT	QTY
0432-2001	Riprap (Conc)(4 in)	CY	2
0432-2019	Stone Riprap (Stone Protection)(12 in)	CY	5
0462-2001	Conc Box Culv (3 ft x 2 ft)	LF	640
0467-2172	SET (Ty I)(S= 3 ft)(HW= 3 ft)(6:1)(P)	EA	4

CULVERT 8

ITEM	DESCRIPTION	UNIT	QTY
0432-2001	Riprap (Conc)(4 in)	CY	5
0464-2007	RC Pipe (CL III)(30 in)	LF	579
0467-2290	SET (Ty II)(30 in)(RCP)(6:1)(P)	EA	6

NOTES:
1. ALL GRADING TO BE KEPT IN TxDOT ROW.
2. CONTRACTOR TO CONSTRUCT SET IN ACCORDANCE WITH TXDOT STANDARD (SETP-PD), UNLESS NOTED OTHERWISE. CONTRACTOR TO CONSTRUCT RIPRAP 1.5' BEYOND PAY LIMITS OF SET WITH A 12" DEEP BY 9" WIDE TOE DOWN ON ALL SIDES. WORK PAID UNDER ITEM 432.
3. WHEN EXTENDING EXISTING CULVERTS, CONTRACTOR TO CUTBACK PIPE AS NEEDED IN ORDER TO ENSURE PROPER CONNECTION.
4. ROCKRIP TO BE PLACED THE WIDTH OF THE CONCRETE RIPRAP TO 15' DOWNSTREAM OF THE END OF PIPE
5. QUANTITES FOR EMBANKMENT AND EXCAVATION ARE ACCOUNTED FOR ON THE ROADWAY QUANTITY SUMMARY.

STATE OF TEXAS
KENNETH E. ROGERS
89448
LICENSED
PROFESSIONAL ENGINEER
12/30/10

REV. NO.	DATE	DESCRIPTION	BY

ALAMO RMA

VICKREY & ASSOCIATES, INC.
CONSULTING ENGINEERS
CIVIL / ENVIRONMENTAL / SURVEY
12940 Country Parkway San Antonio, Texas 78216
Voice:(210) 349-3271 Fax:(210) 349-2561 www.vickreynet.com
Texas Board of Professional Engineers Registration No: F-159 ©2010

Texas Department of Transportation
© 2010

LOOP 1604 SUPER STREET

CULVERT NO. 5 & 8

SHEET 5 OF 8

DGN:	FED. RD. DIV. NO.	STATE	FEDERAL AID PROJECT NO.			HIGHWAY NO.
CHK DGN:	6	TEXAS	STP 2011(210)ES			LP 1604
DWG:	DIST.	COUNTY	CONT. NO.	SECT. NO.	JOB NO.	SHEET NO.
CHK DWG:	SAT	BEXAR	2452	01	050	224

Plotted on: 6/30/2010

Design Filename: N:\2294-001\dgn\DRAINAGE\LP1604STR5&8.dgn

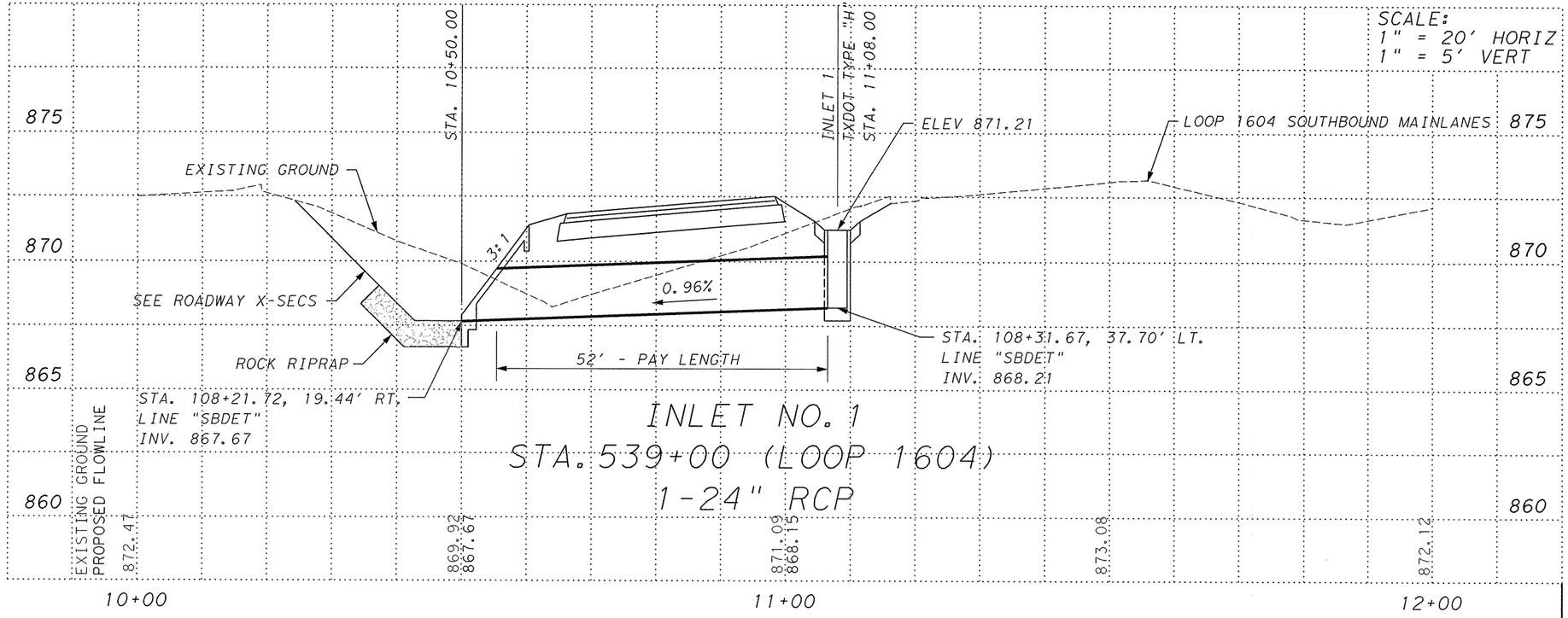

INLET NO. 1
STA. 539+00 (LOOP 1604)
1-24" RCP

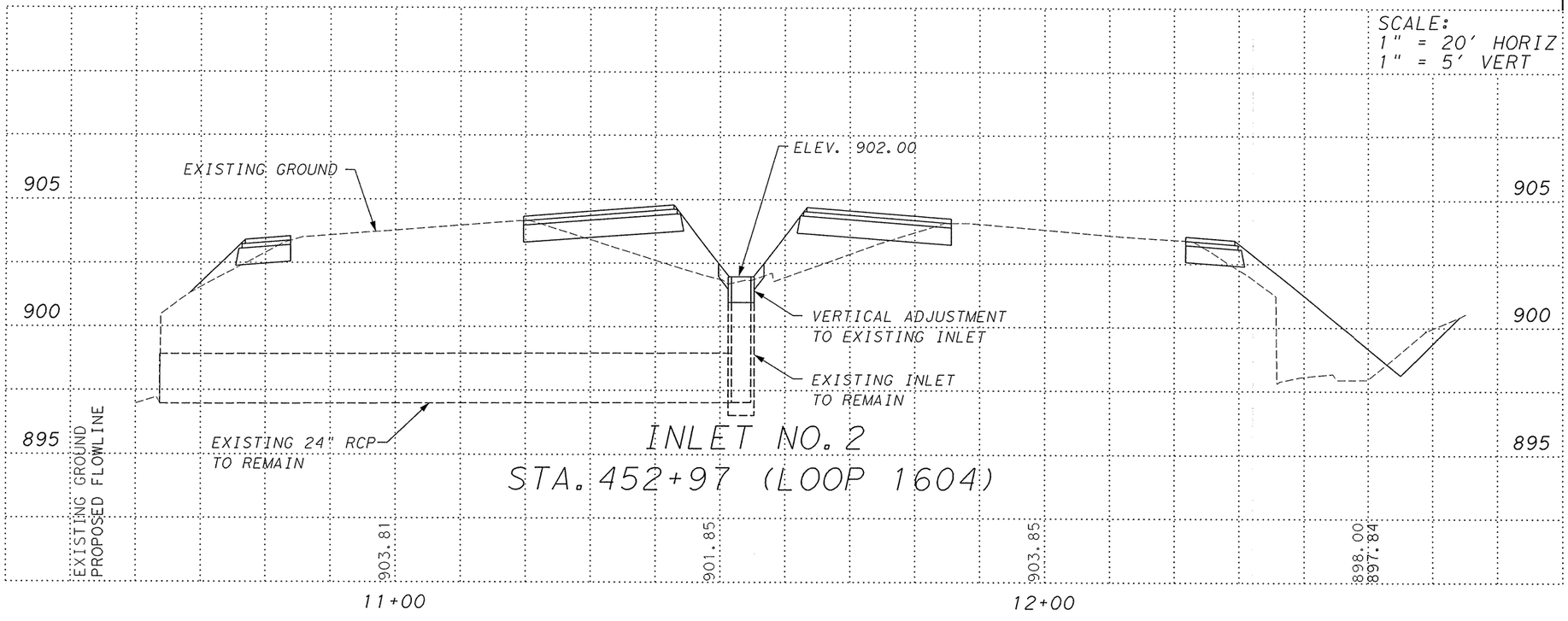

INLET NO. 2
STA. 452+97 (LOOP 1604)

ESTIMATED QUANTITIES

INLET 1

ITEM	DESCRIPTION	UNIT	QTY
0432-2001	Riprap (Conc)(4 in)	CY	1
0432-2019	Stone Riprap (Stone Protection)(12 in)	CY	5
0464-2005	RC Pipe (CL III)(24 in)	LF	52
0465-2003	Inlet (Compl)(Ty H)	EA	1
0467-2211	SET (Ty II)(24 in)(RCP)(3:1)(C)	EA	1

INLET 2

ITEM	DESCRIPTION	UNIT	QTY
0479-2002	Adj Inlets	EA	1

NOTES:
1. ALL GRADING TO BE KEPT IN TxDOT ROW.
2. CONTRACTOR TO CONSTRUCT SET IN ACCORDANCE WITH TXDOT STANDARD (SETP-PD), UNLESS NOTED OTHERWISE. CONTRACTOR TO CONSTRUCT RIPRAP 1.5' BEYOND PAY LIMITS OF SET WITH A 12" DEEP BY 9" WIDE TOE DOWN ON ALL SIDES. WORK PAID UNDER ITEM 432.
3. WHEN EXTENDING EXISTING CULVERTS, CONTRACTOR TO CUTBACK PIPE AS NEEDED IN ORDER TO ENSURE PROPER CONNECTION.
4. ROCKRIP TO BE PLACED THE WIDTH OF THE CONCRETE RIPRAP TO 15' DOWNSTREAM OF THE END OF PIPE
5. QUANTITES FOR EMBANKMENT AND EXCAVATION ARE ACCOUNTED FOR ON THE ROADWAY QUANTITY SUMMARY.

STATE OF TEXAS
KENNETH E. ROGERS
89448
LICENSED
PROFESSIONAL ENGINEER
10/20/10

REV. NO.	DATE	DESCRIPTION	BY

ALAMO RMA

VICKREY & ASSOCIATES, INC.
CONSULTING ENGINEERS
CIVIL / ENVIRONMENTAL / SURVEY
12940 Country Parkway San Antonio, Texas 78216
Voice:(210) 349-3271 Fax:(210) 349-2561 www.vickreynet.com
Texas Board of Professional Engineers Registration No: F-159 ©2010

Texas Department of Transportation
© 2010

LOOP 1604 SUPER STREET

INLET NO. 1 & 2

SHEET 6 OF 8

DGN:	FED. RD. DIV. NO.	STATE	FEDERAL AID PROJECT NO.			HIGHWAY NO.
CHK DGN:	6	TEXAS	STP 2011(210)ES			LP 1604
DWG:	DIST.	COUNTY	CONT. NO.	SECT. NO.	JOB NO.	SHEET NO.
CHK DWG:	SAT	BEXAR	2452	01	050	225

Plotted on: 6/30/2010

Design Filename: N:\2294-001\dgn\DRAINAGE\LP1604SD01.dgn

Plotted on: 6/30/2010

Design Filename: N:\2294-001\dgn\DRAINAGE\LP1604STR6.dgn

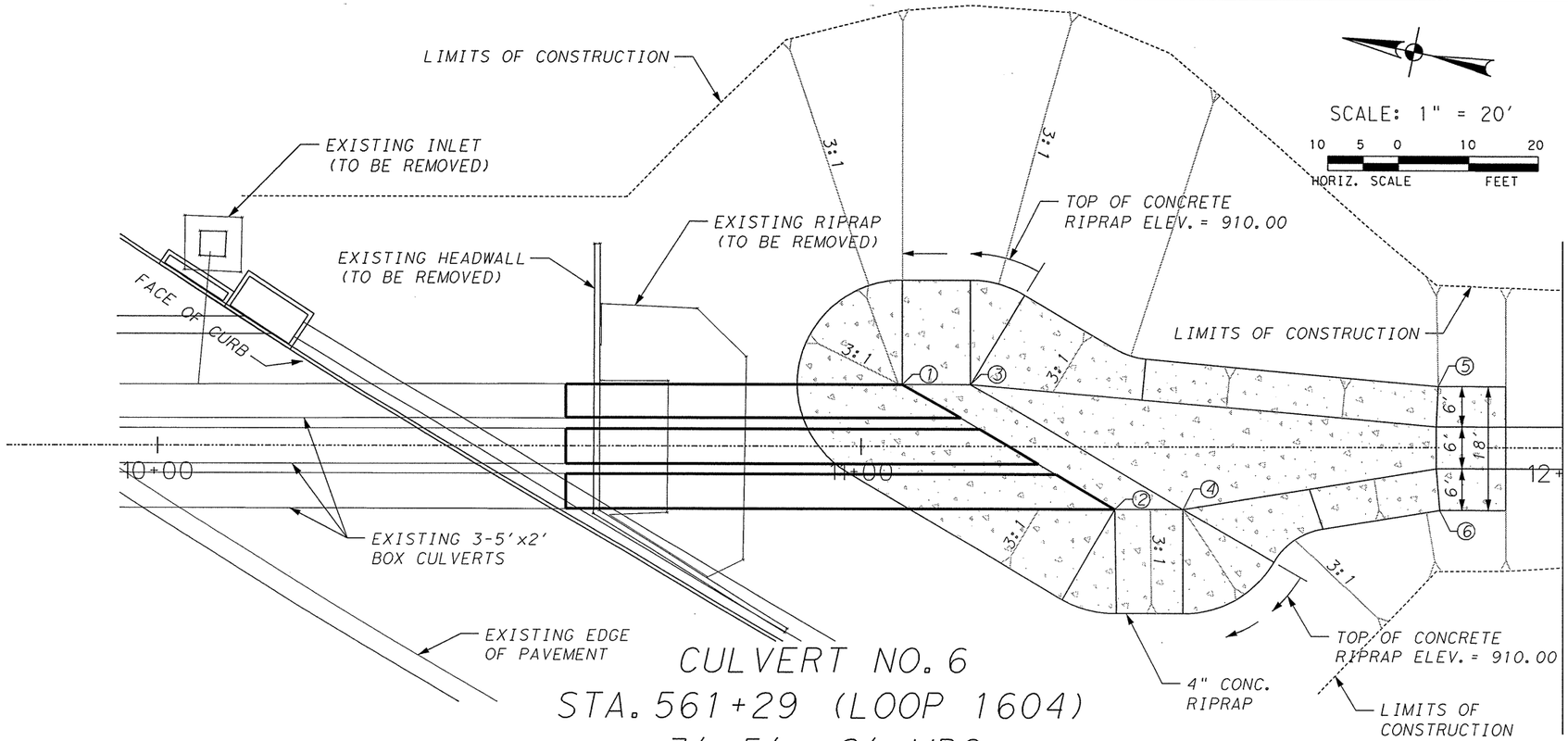

SCALE: 1" = 20'

10 5 0 10 20

HORIZ. SCALE FEET

CULVERT NO. 6
STA. 561+29 (LOOP 1604)
3'-5'x 2' MBC

ESTIMATED QUANTITIES			
CULVERT 6			
ITEM	DESCRIPTION	UNIT	QTY
0110-2002	Excavation (Channel)	CY	1469
0132-2007	Embankment (Final)(Ord Comp) (Ty D)	CY	104
0432-2001	Riprap (Conc)(4 in)	CY	51
0462-2006	Conc Box Culv (5 ft x 2 ft)	LF	189

NOTES:
1. ALL GRADING TO BE KEPT IN TxDOT ROW.
2. CONTRACTOR TO CONSTRUCT SET IN ACCORDANCE WITH TXDOT STANDARD (SETP-PD), UNLESS NOTED OTHERWISE. CONTRACTOR TO CONSTRUCT RIPRAP 1.5' BEYOND PAY LIMITS OF SET WITH A 12" DEEP BY 9" WIDE TOE DOWN ON ALL SIDES. WORK PAID UNDER ITEM 432.
3. WHEN EXTENDING EXISTING CULVERTS, CONTRACTOR TO CUTBACK PIPE AS NEEDED IN ORDER TO ENSURE PROPER CONNECTION.
4. ROCKRIP TO BE PLACED THE WIDTH OF THE CONCRETE RIPRAP TO 15' DOWNSTREAM OF THE END OF PIPE

POINT	ELEV.	STA.	OFFSET		ALIGNMENT
1	904.93	562+35.20	328.13	RT	LOOP 1604
2	904.93	562+67.55	325.25	RT	LOOP 1604
3	905.00	562+42.48	322.44	RT	LOOP 1604
4	905.00	562+74.88	319.62	RT	LOOP 1604
5	917.00	562+92.88	284.05	RT	LOOP 1604
6	917.00	563+02.53	298.69	RT	LOOP 1604

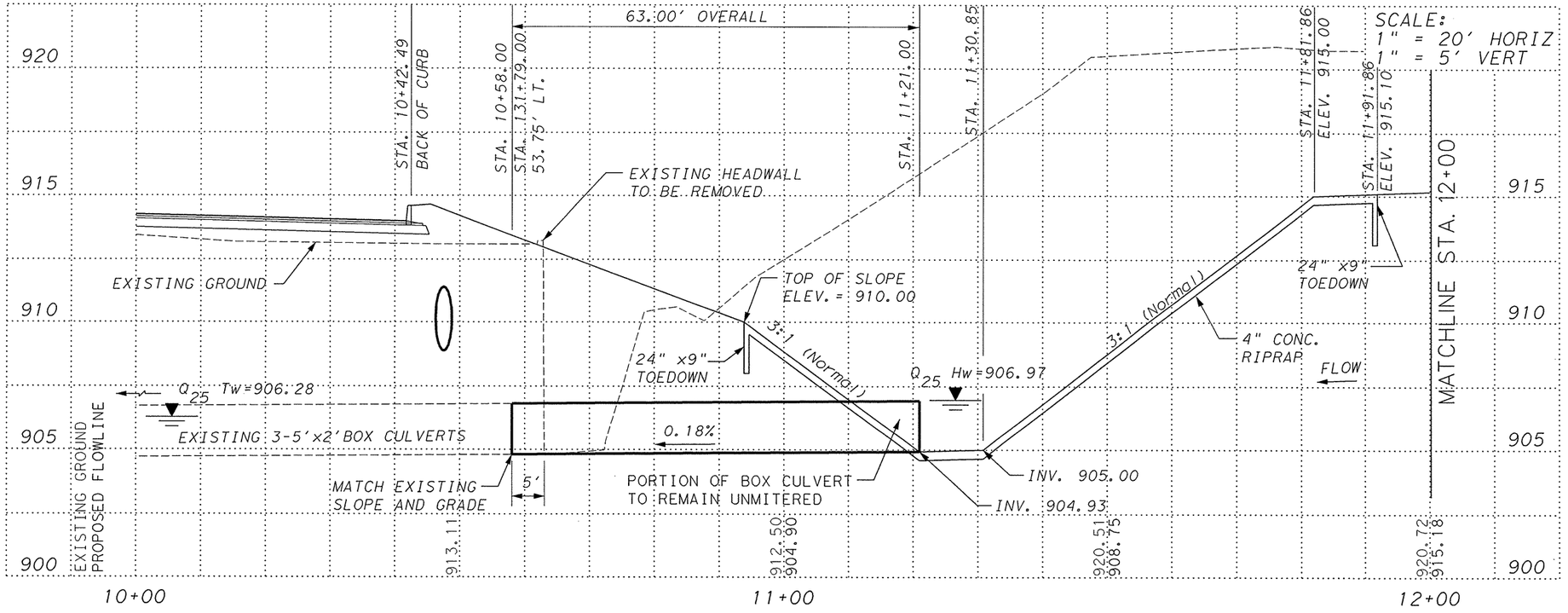

KENNETH E. ROGERS
89448
LICENSED
PROFESSIONAL ENGINEER
STATE OF TEXAS
6/30/10

REV. NO.	DATE	DESCRIPTION	BY

ALAMO RMA

VICKREY & ASSOCIATES, INC.
CONSULTING ENGINEERS
CIVIL /ENVIRONMENTAL /SURVEY
12940 Country Parkway San Antonio, Texas 78216
Voice:(210) 349-3271 Fax:(210) 349-2561 www.vickreynet.com
Texas Board of Professional Engineers Registration No: F-159

Texas Department of Transportation
© 2010

LOOP 1604 SUPER STREET
(WEST FRONTAGE ROAD)
CULVERT NO. 6

SHEET 7 OF 8

DGN:	FED. RD. DIV. NO.	STATE	FEDERAL AID PROJECT NO.			HIGHWAY NO.
CHK DGN:	6	TEXAS	STP 2011(210)ES			LP 1604
DWG:	DIST.	COUNTY	CONT. NO.	SECT. NO.	JOB NO.	SHEET NO.
CHK DWG:	SAT	BEXAR	2452	01	050	226

Plotted on: 6/30/2010

Design Filename: N:\2294-001\dgn\DRAINAGE\LP1604STR6A.dgn

ESTIMATED QUANTITIES			
CULVERT 6			
ITEM	DESCRIPTION	UNIT	QTY
0110-2002	Excavation (Channel)	CY	570
0132-2007	Embankment (Final)(Ord Comp) (Ty D)	CY	23
0432-2019	Stone Riprap (Stone Protection)(12 in)	CY	19

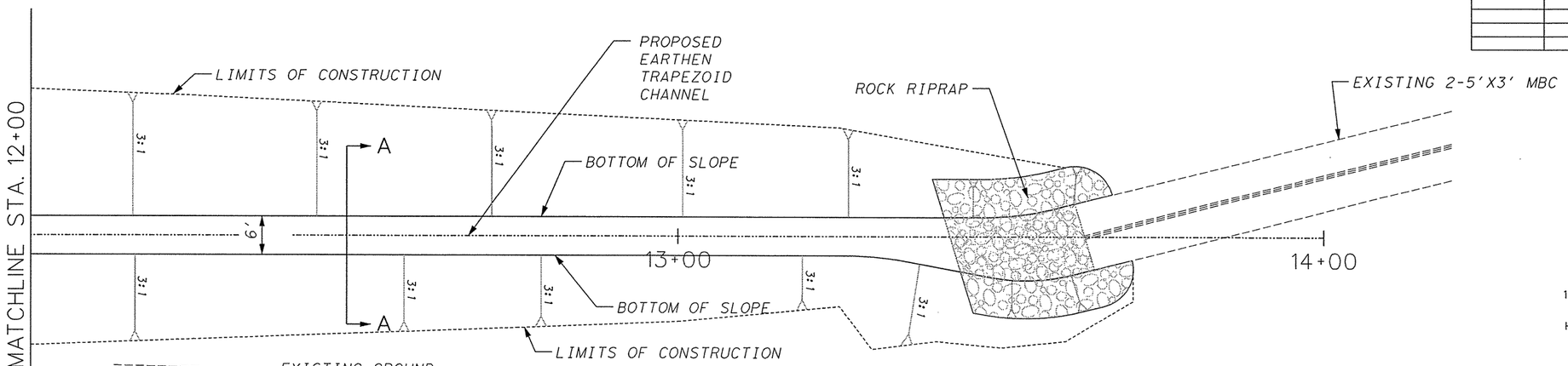

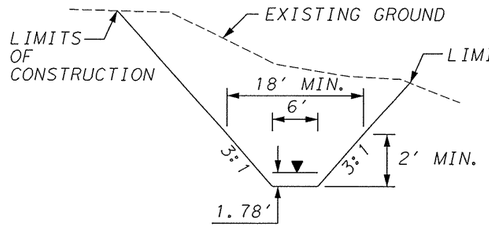

SECTION A-A

SCALE: 1" = 20'

10 5 0 10 20
HORIZ. SCALE FEET

CHANNEL CALCULATIONS

DISCHARGE = 108.73 CFS
NORMAL DEPTH = 1.78 FT
FLOW AREA = 20.26 SQ FT
WETTED PERIMETER = 17.29 FT
TOP WIDTH = 16.71 FT
CRITICAL DEPTH = 1.65 FT
VELOCITY = 5.376 FT/S
FROUDE NUMBER = 0.86
FLOW TYPE = SUBCRITICAL

KENNETH E. ROGERS
89448
LICENSED
PROFESSIONAL ENGINEER
6/30/10

CHANNEL #1

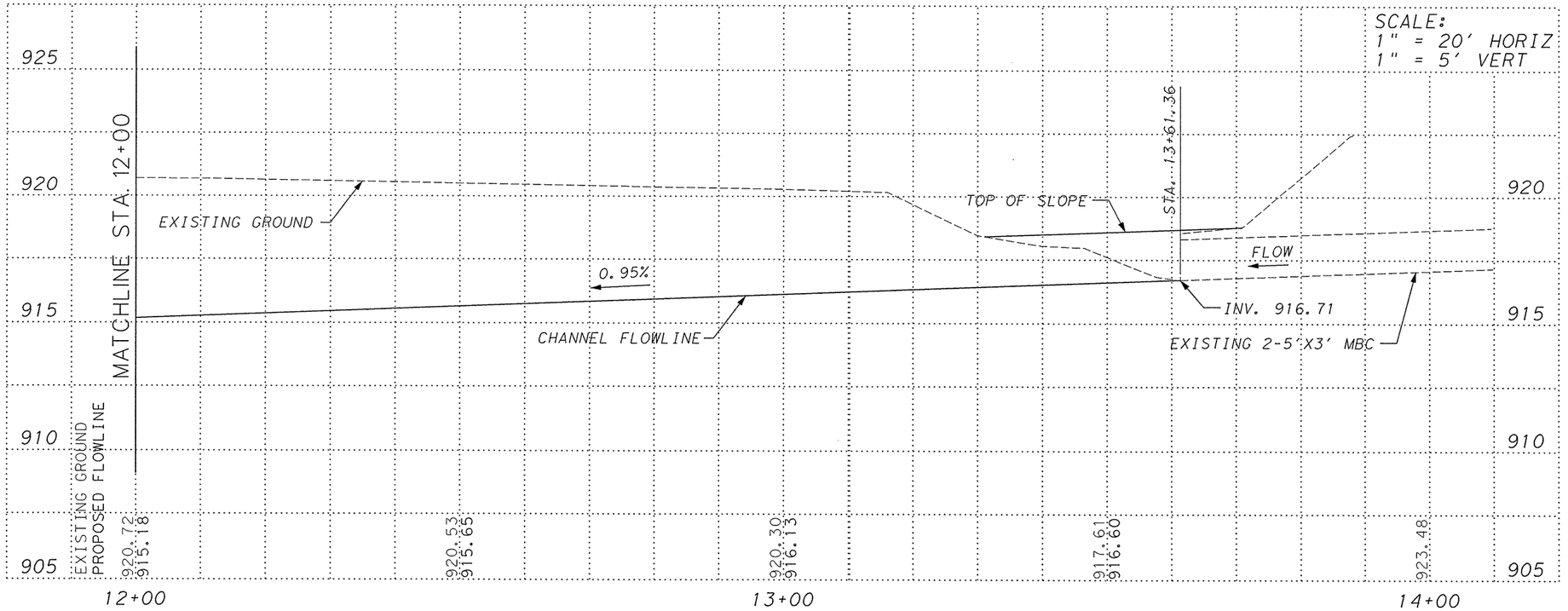

REV. NO.	DATE	DESCRIPTION	BY

ALAMO RMA

VICKREY & ASSOCIATES, INC.
CONSULTING ENGINEERS
CIVIL / ENVIRONMENTAL / SURVEY
12940 Country Parkway San Antonio, Texas 78216
Voice:(210) 349-3271 Fax:(210) 349-2561 www.vickreynet.com
Texas Board of Professional Engineers Registration No: F-159

©2010

Texas Department of Transportation
© 2010

LOOP 1604 SUPER STREET
(WEST FRONTAGE ROAD)
CULVERT NO. 6

SHEET 8 OF 8

DGN:	FED. RD. DIV. NO.	STATE	FEDERAL AID PROJECT NO.			HIGHWAY NO.
CHK DGN:	6	TEXAS	STP 2011(210)ES			LP 1604
DWG:	DIST.	COUNTY	CONT. NO.	SECT. NO.	JOB NO.	SHEET NO.
CHK DWG:	SAT	BEXAR	2452	01	050	227

Plotted on: 6/25/2010

	ITEM	DESCRIPTION	UNIT	QTY
✳	0400-2001	STRUCT EXCAV	CY	501
△	0400-2006	CUT & RESTORING PAV	SY	96
	0402-2001	TRENCH EXCAVATION PROTECTION	LF	93.13
	0403-2001	TEMPORARY SPL SHORING	SF	188
	0462-2011	CONC BOX CULV (6 FT X 4 FT)	LF	186.26
	0466-2050	WINGWALL (PW) (HW=6 FT)	EA	2

✳ FOR CONTRACTOR'S INFO ONLY

△ CONSISTS OF 4" D-GR HMAC TY B

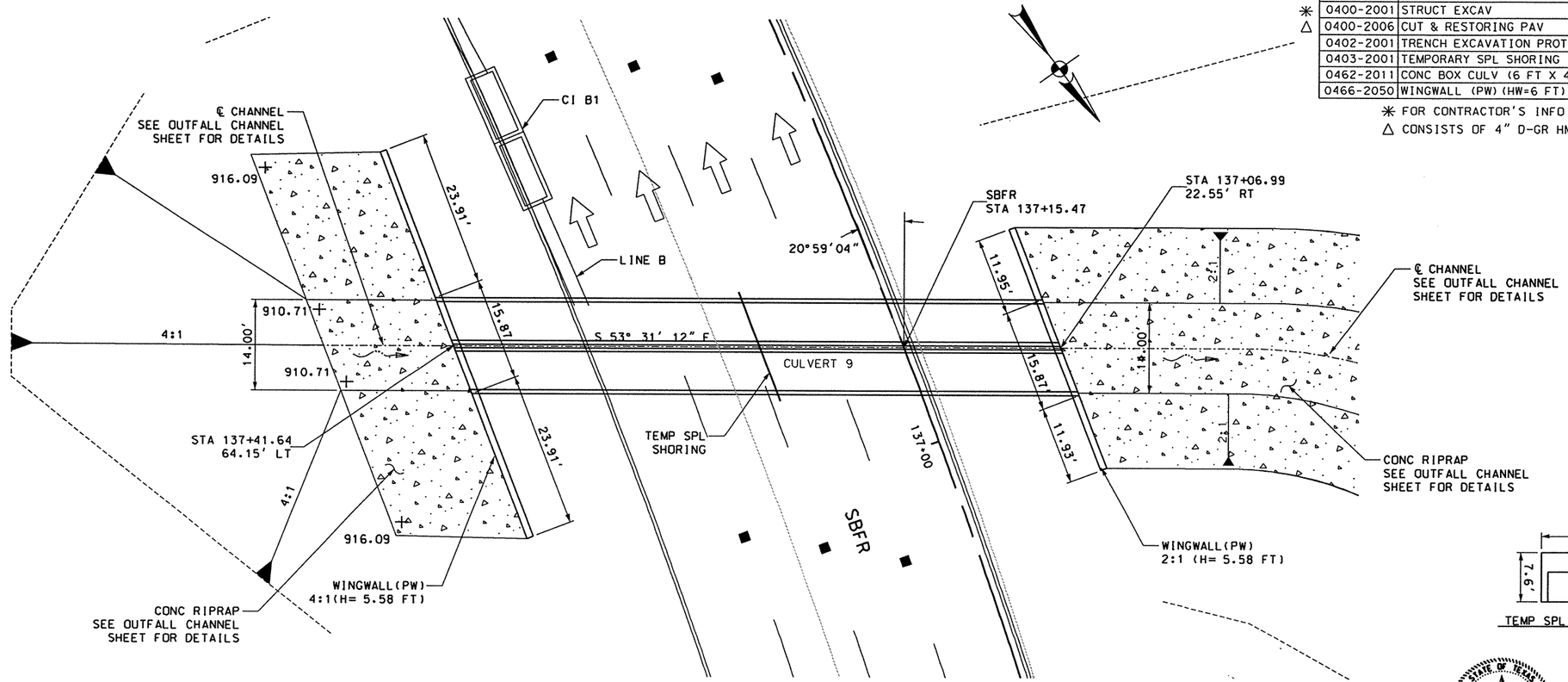

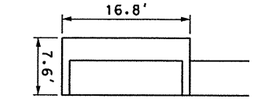

TEMP SPL SHORING DEATIL
NTS

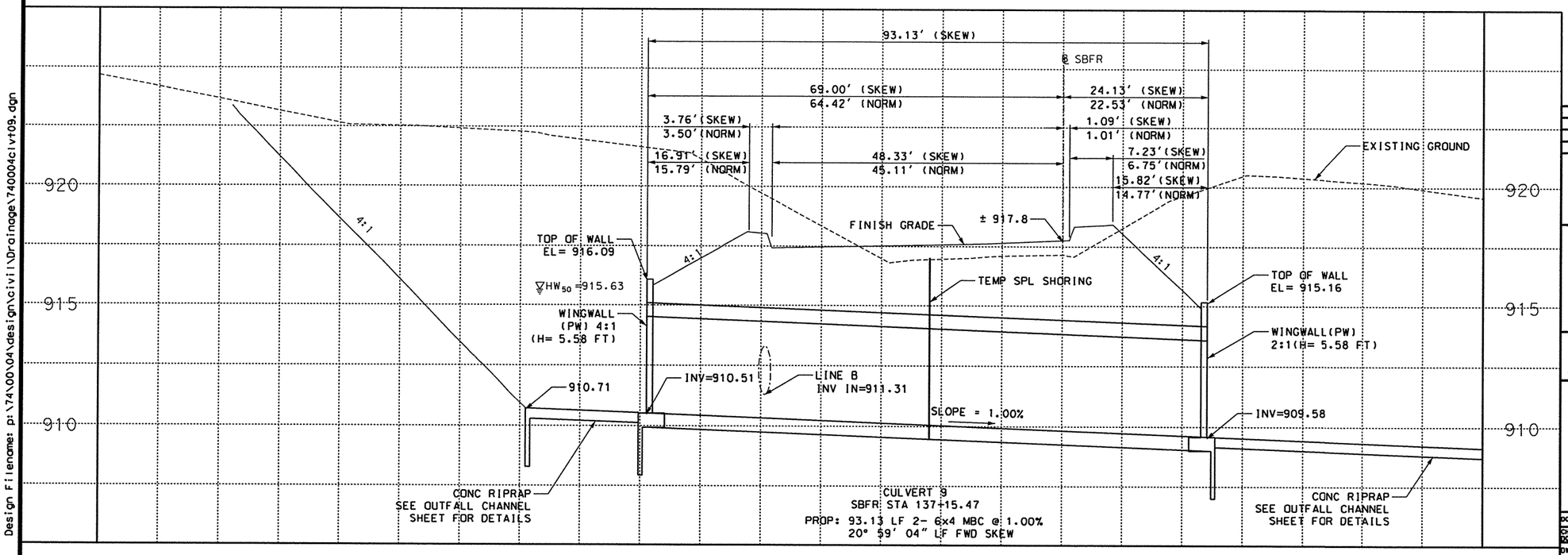

Design Filename: p:\74\00\04\design\civil\Drainage\740004clvt09.dgn

STATE OF TEXAS
SCOTT D. ARMSTRONG
69320
LICENSED PROFESSIONAL ENGINEER

SCOTT D. ARMSTRONG, P.E. 6/25/2010 DATE

SCALE: 1"= 20' HORIZ
1"= 5' VERT

REV. NO.	DATE	DESCRIPTION	BY

ALAMO RMA

PAPE-DAWSON ENGINEERS
555 EAST RAMSEY | SAN ANTONIO, TEXAS 78216 | PHONE: 210.375.9000 FAX: 210.375.9010
TEXAS BOARD OF PROFESSIONAL ENGINEERS, FIRM REGISTRATION # 470

Texas Department of Transportation
© 2010

LOOP 1604

CULVERT 9

DGN:	FED. RD. DIV. NO.	STATE	FEDERAL AID PROJECT NO.			HIGHWAY NO.
CHK DGN:	6	TEXAS	XXX XXXX			LP 1604
DWG:	DIST.	COUNTY	CONT. NO.	SECT. NO.	JOB NO.	SHEET NO.
CHK DWG:	SAT	BEXAR	2452	01	050	228

Plotted on: 8/6/2010

Design Filename: P:\74\00\04\design\Civil\Drainage\740004clvt10.dgn

	ITEM	DESCRIPTION	UNIT	QTY
*	0400-2001	STRUCT EXCAV	CY	1678
	0402-2001	TRENCH EXCAVATION PROTECTION	LF	170.79
	0403-2001	TEMPORARY SPL SHORING	SF	588
	0460-2004	CMP (GAL STL 24 IN)	LF	9
	0462-2011	CONC BOX CULV (6 FT X 4 FT)	LF	512.37
	0465-2020	INLET (COMPL)(CURB)(TY II)	EA	2
	0466-2050	WINGWALL (PW)(HW=6 FT)	EA	2

* FOR CONTRACTOR'S INFO ONLY

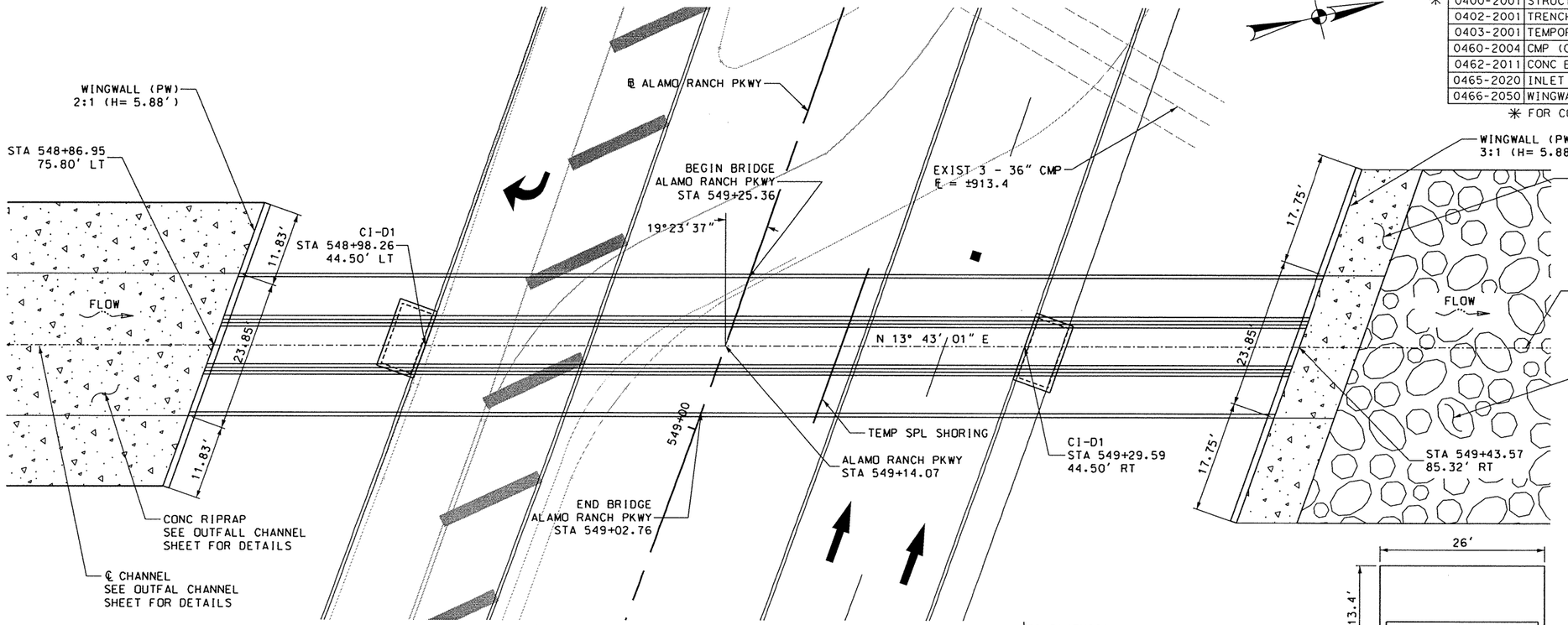

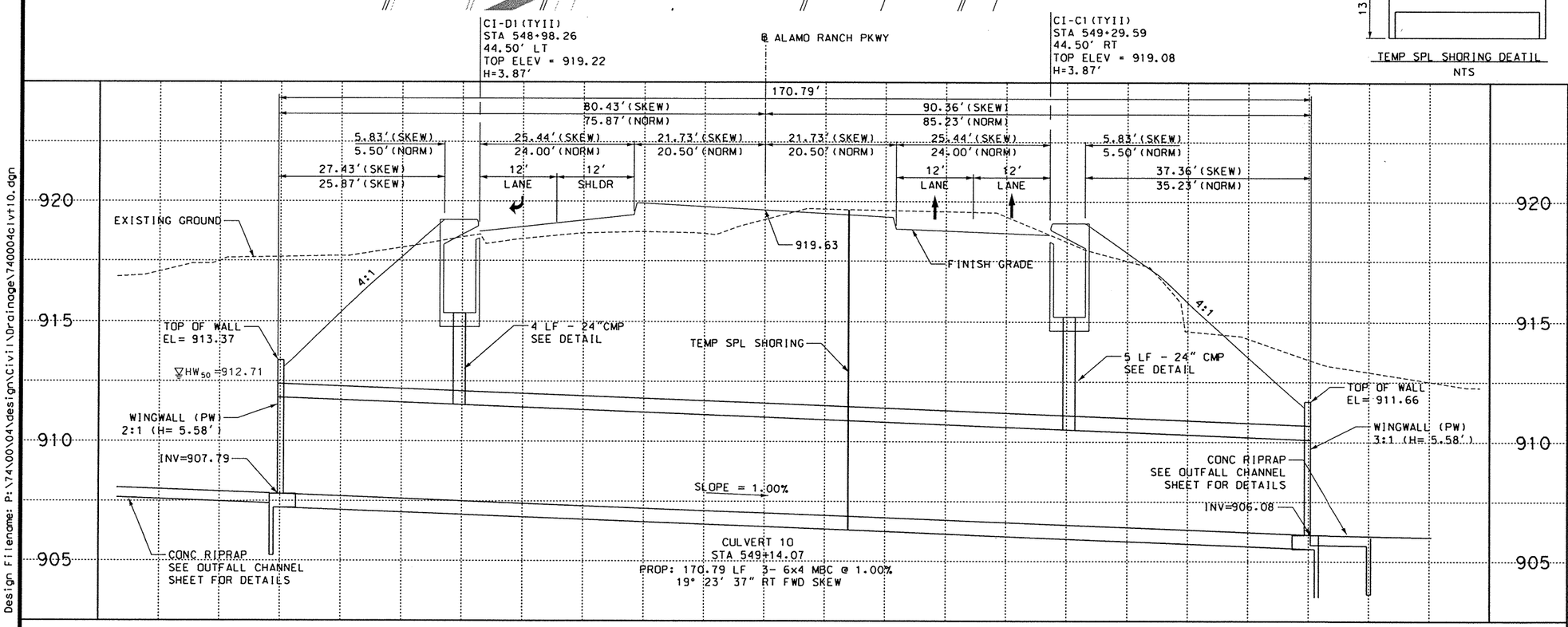

STATE OF TEXAS
SCOTT D. ARMSTRONG
69320
LICENSED
PROFESSIONAL ENGINEER

SCOTT D. ARMSTRONG, P.E. — 8/6/2010 DATE

NBI# 15-015-0-2452-01-255

SCALE: 1"= 20' HORIZ
1"= 5' VERT

REV. NO.	DATE	DESCRIPTION	BY

ALAMO RMA

PAPE-DAWSON ENGINEERS

555 EAST RAMSEY | SAN ANTONIO, TEXAS 78216 | PHONE: 210.375.9000 FAX: 210.375.9010

TEXAS BOARD OF PROFESSIONAL ENGINEERS, FIRM REGISTRATION # 470

Texas Department of Transportation
© 2010

LOOP 1604

BRIDGE CLASS CULVERT LAYOUT CULVERT 10

DGN:	FED. RD. DIV. NO.	STATE	FEDERAL AID PROJECT NO.			HIGHWAY NO.
CHK: DGN:	6	TEXAS	STP 2011(210)ES			LP 1604
DWG:	DIST.	COUNTY	CONT. NO.	SECT. NO.	JOB NO.	SHEET NO.
CHK: DWG:	SAT	BEXAR	2452	01	050	229

Plotted on: 6/25/2010

ITEM	DESCRIPTION	UNIT	QTY
0110-2002	EXCAVATION (CHANNEL)	CY	7177
0432-2019	RIPRAP (STONE PROTECTION) (12 IN)	CY	85
0432-2050	RIPRAP (CONC) (CL B) (5 IN)	CY	179.2

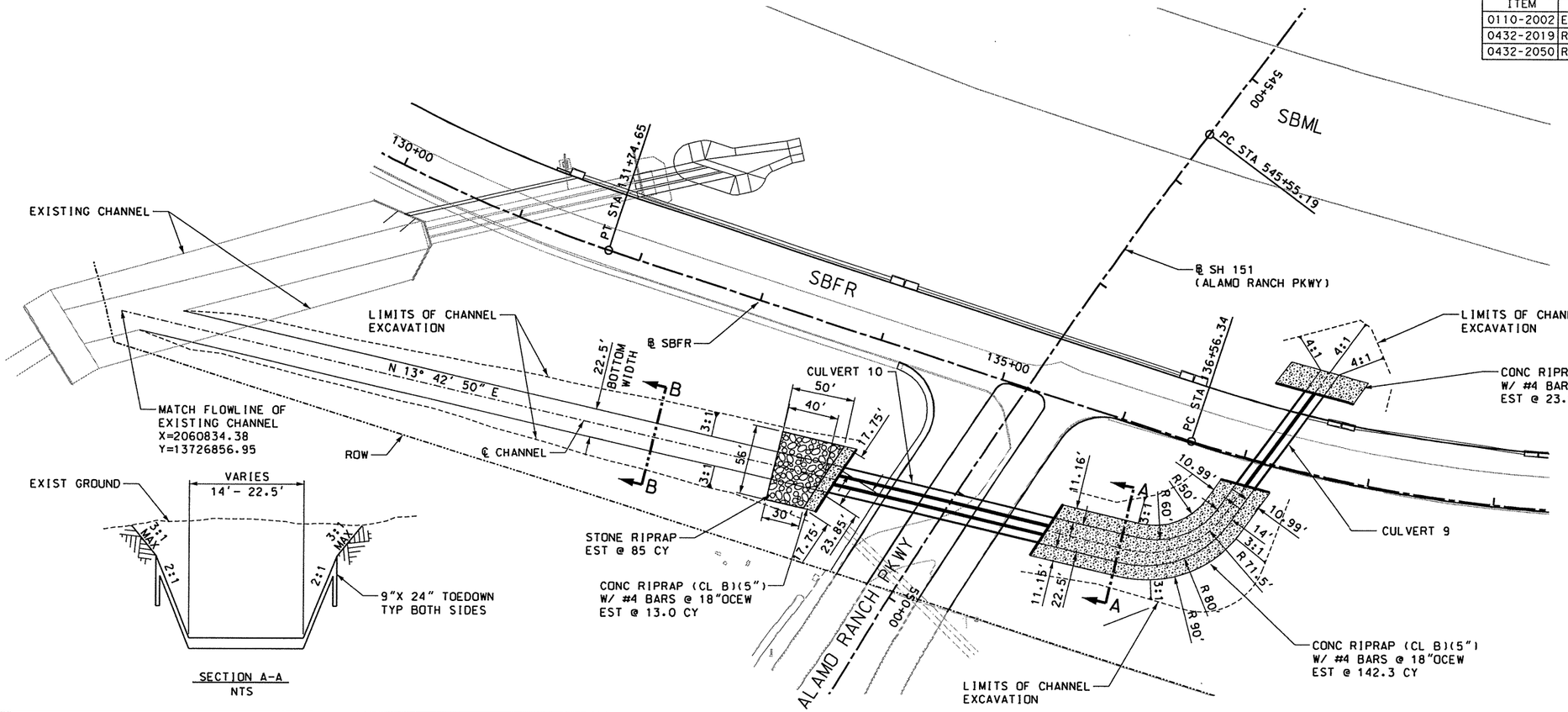

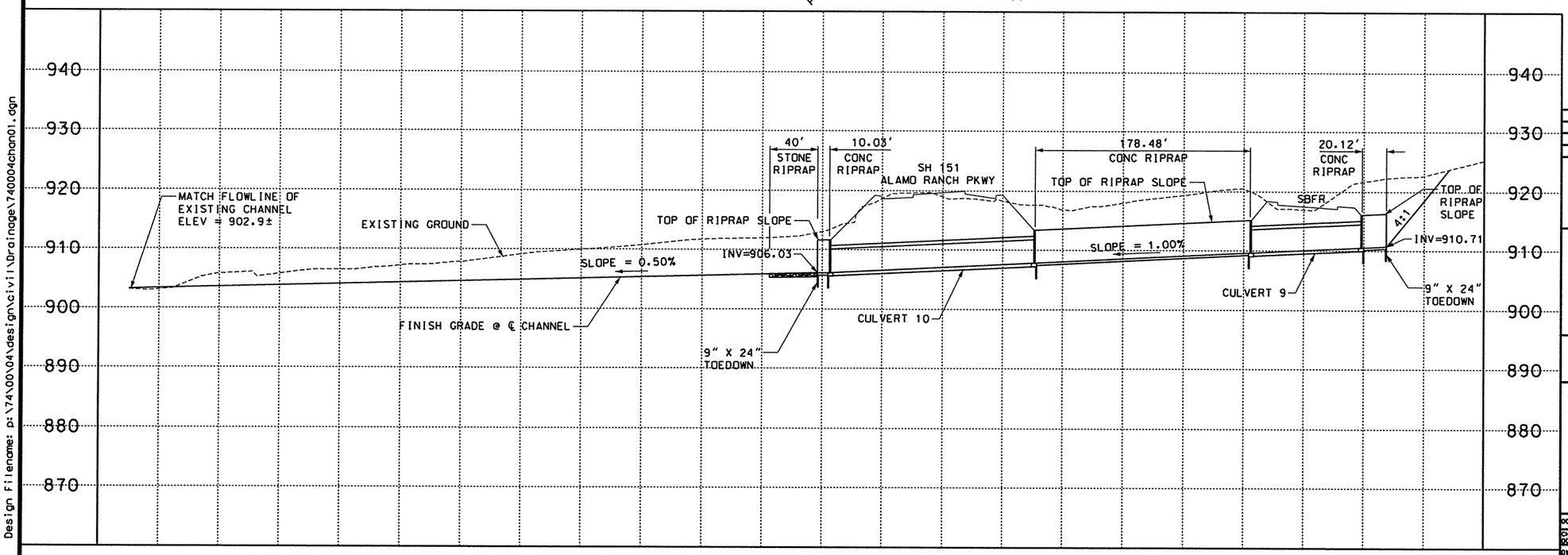

SCOTT D. ARMSTRONG 69320 LICENSED PROFESSIONAL ENGINEER

SCOTT D. ARMSTRONG, P.E. 6/25/2010 DATE

SCALE: 1"= 100' HORIZ
1"= 20' VERT

REV. NO.	DATE	DESCRIPTION	BY

ALAMO RMA

PAPE-DAWSON ENGINEERS

555 EAST RAMSEY | SAN ANTONIO, TEXAS 78216 | PHONE: 210.375.9000 FAX: 210.375.9010

TEXAS BOARD OF PROFESSIONAL ENGINEERS, FIRM REGISTRATION # 470

Texas Department of Transportation © 2010

LOOP 1604

CULVERT 9 & 10 OUTFALL CHANNEL

DGN:	FED. RD. DIV. NO.	STATE	FEDERAL AID PROJECT NO.			HIGHWAY NO.
CHK DGN:	6	TEXAS	XXX XXXX			LP 1604
DWG:	DIST.	COUNTY	CONT. NO.	SECT. NO.	JOB NO.	SHEET NO.
CHK DWG:	SAT	BEXAR	2452	01	050	230

Design filename: p:\74\00\04\design\civil\Drainage\740004chan01.dgn

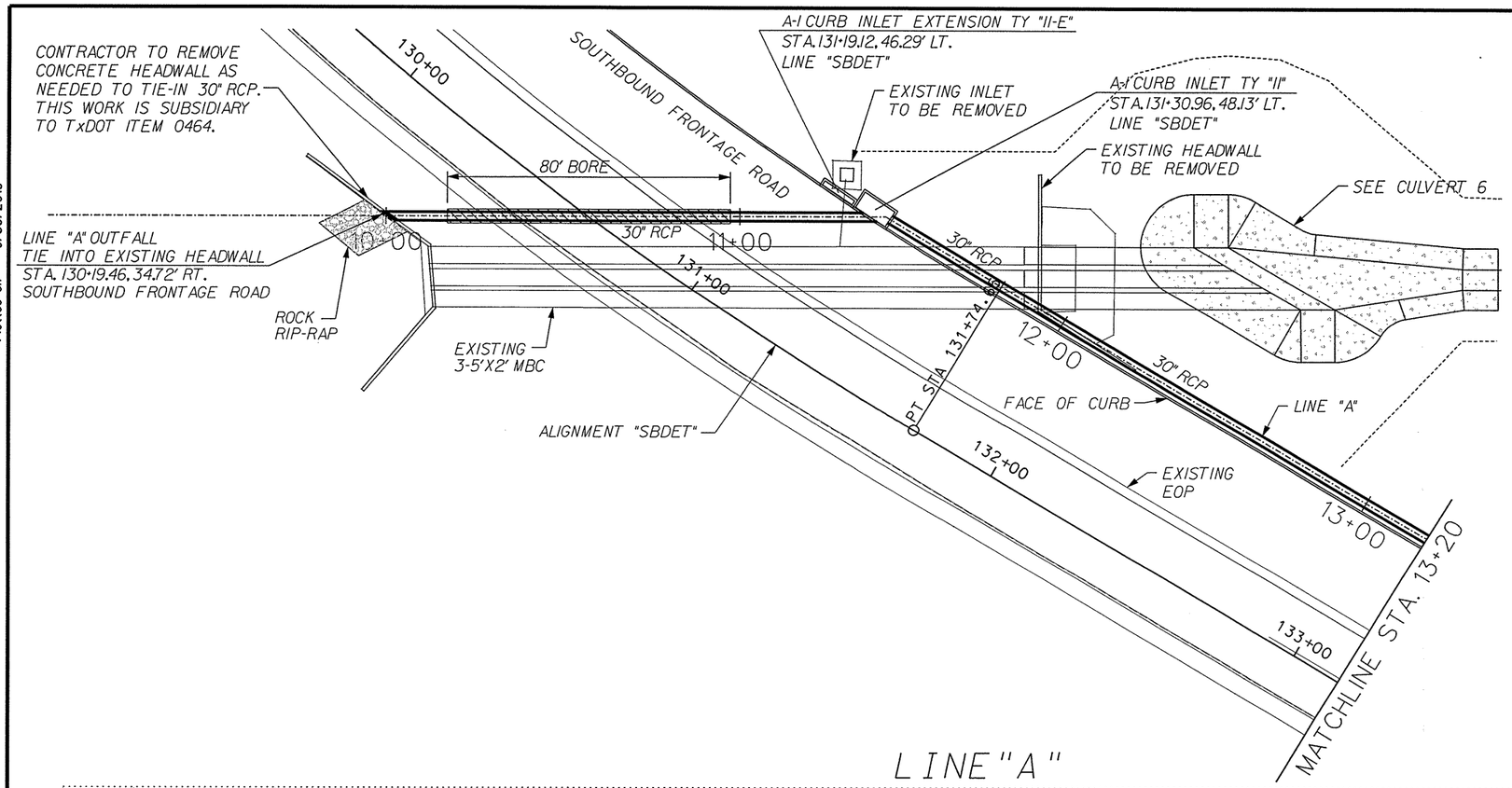

LINE "A"

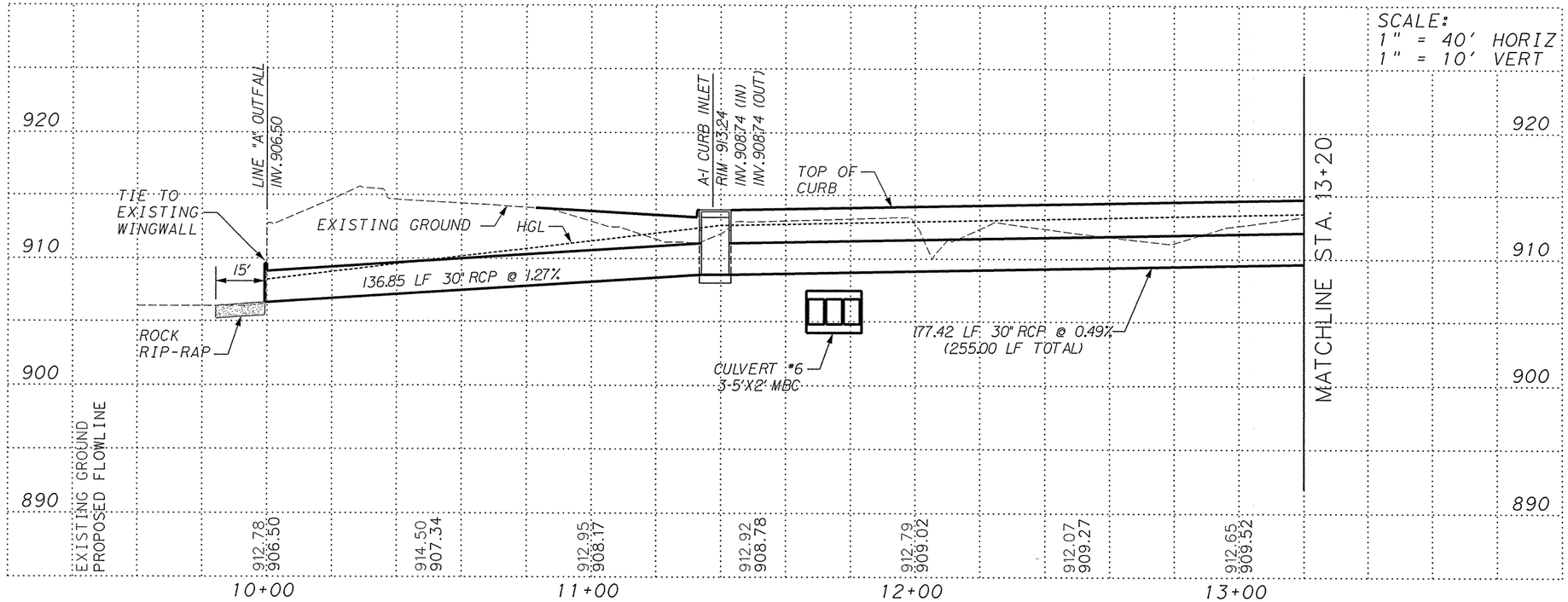

ESTIMATED QUANTITIES

ITEM	DESCRIPTION	UNIT	QTY
0402-2001	Trench Excavation Protection	LF	18
0432-2019	Stone Riprap (Stone Protection)(12 in)	CY	8
0464-2005	RC Pipe (CL III)(24 in)	LF	0
0464-2007	RC Pipe (CL III)(30 in)	LF	315
0465-2001	Inlet (Compl)(Ty C)	EA	0
0465-2020	Inlet (Compl)(Curb)(Ty II)	EA	1
0465-2106	Inlet Ext (Ty II)	EA	1
0476-2003	Jack Bore Or Tun Pipe (30 in)(RC)(CL III)	LF	80

SCALE: 1" = 40'

20 10 0 20 40
HORIZ. SCALE FEET

STATE OF TEXAS
KENNETH E. ROGERS
89448
LICENSED PROFESSIONAL ENGINEER
6/30/10

REV. NO.	DATE	DESCRIPTION	BY

ALAMO RMA

VICKREY & ASSOCIATES, INC.
CONSULTING ENGINEERS
CIVIL /ENVIRONMENTAL /SURVEY
12940 Country Parkway San Antonio, Texas 78216
Voice:(210) 349-3271 Fax:(210) 349-2561 www.vickreynet.com
Texas Board of Professional Engineers Registration No: F-159
©2010

Texas Department of Transportation
© 2010

LOOP 1604 SUPER STREET (WEST FRONTAGE ROAD) LINE "A"

SHEET 1 OF 2

DGN:	FED. RD. DIV. NO.	STATE	FEDERAL AID PROJECT NO.			HIGHWAY NO.
CHK DGN:	6	TEXAS	STP 2011(210)ES			LP 1604
DWG:	DIST.	COUNTY	CONT. NO.	SECT. NO.	JOB NO.	SHEET NO.
CHK DWG:	SAT	BEXAR	2452	01	050	231

Plotted on: 6/30/2010
Design Filename: N:\2294-001\dgn\DRAINAGE\LP1604SD02.dgn

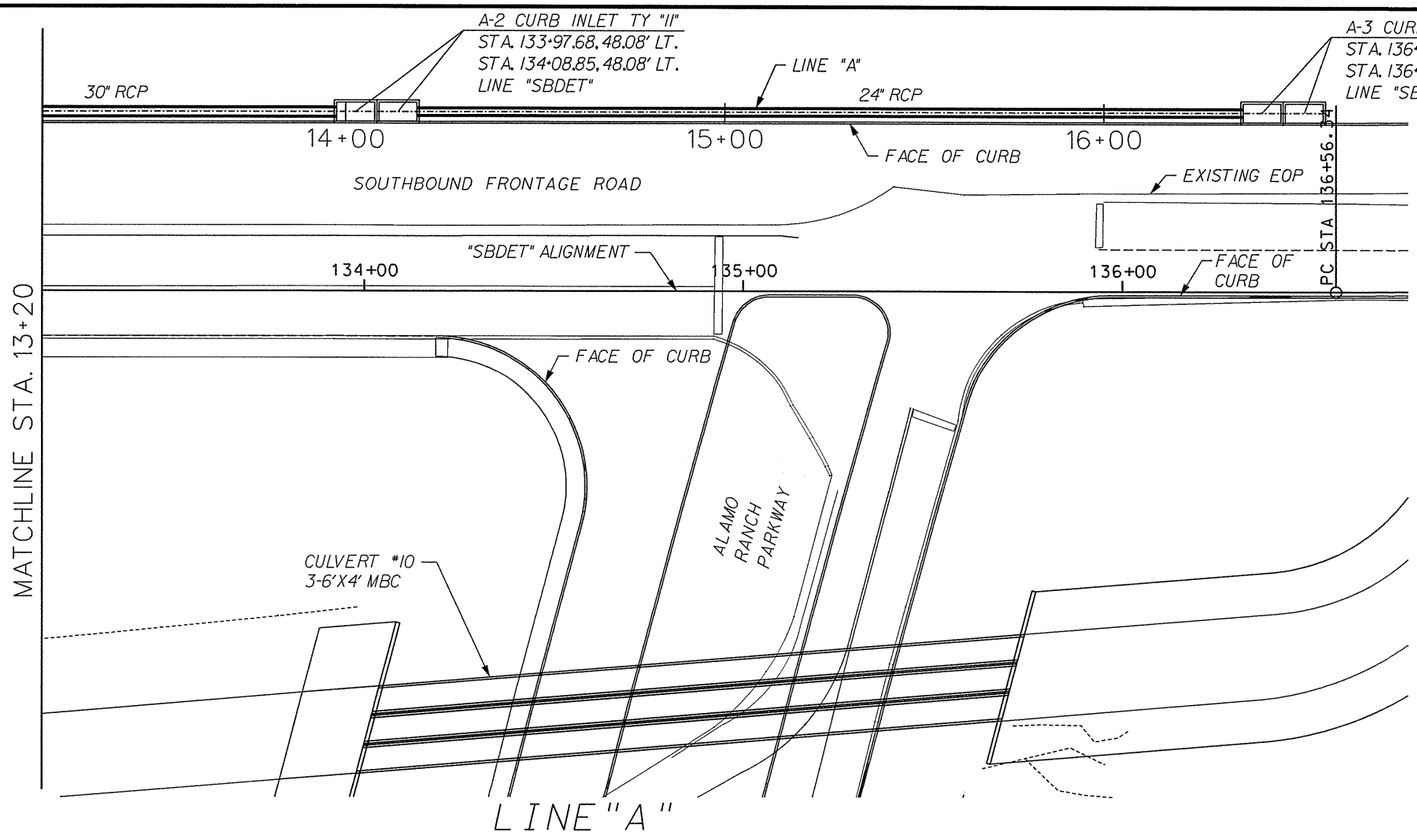

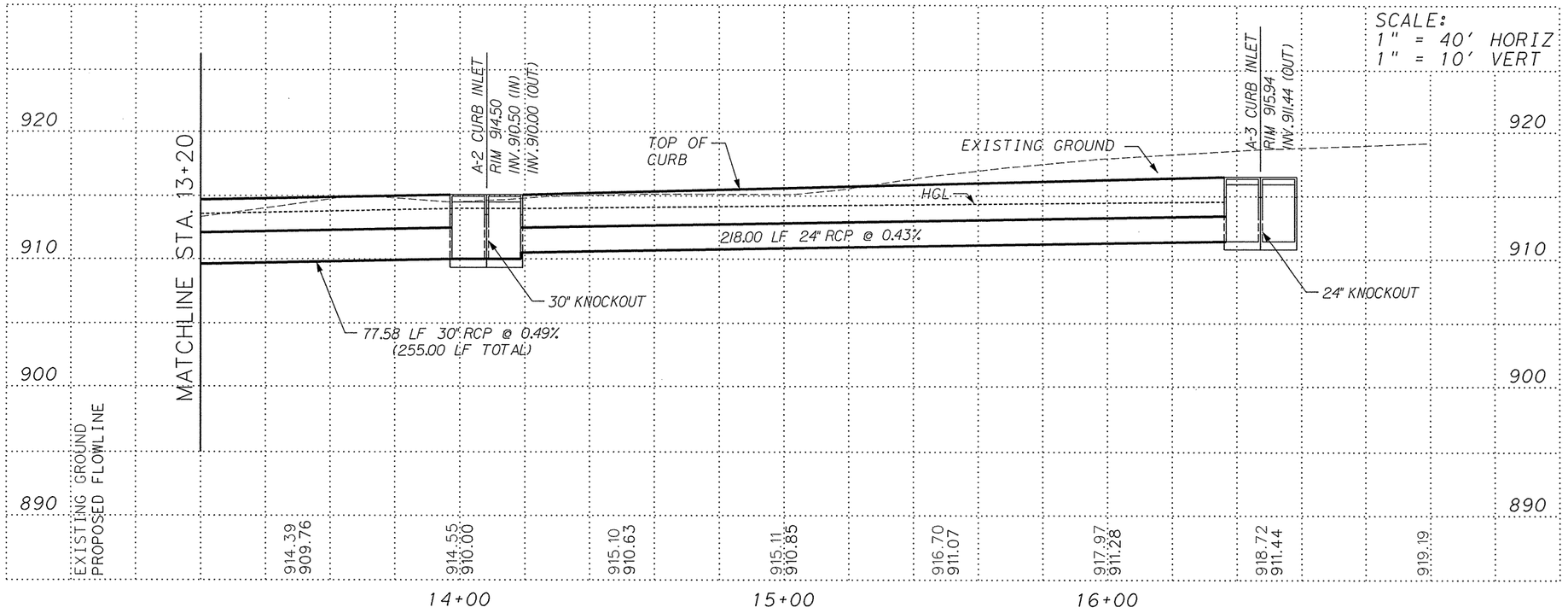

ESTIMATED QUANTITIES			
ITEM	DESCRIPTION	UNIT	QTY
0402-2001	Trench Excavation Protection	LF	122
0432-2019	Stone Riprap (Stone Protection)(12 in)	CY	0
0464-2005	RC Pipe (CL III)(24 in)	LF	218
0464-2007	RC Pipe (CL III)(30 in)	LF	78
0465-2001	Inlet (Compl)(Ty C)	EA	0
0465-2020	Inlet (Compl)(Curb)(Ty II)	EA	4
0465-2106	Inlet Ext (Ty II)	EA	0
0476-2003	Jack Bore Or Tun Pipe (30 in)(RC)(CL III)	LF	0

SCALE: 1" = 40'

20 10 0 20 40
HORIZ. SCALE FEET

KENNETH E. ROGERS
89448
LICENSED
PROFESSIONAL ENGINEER
6/30/10

REV. NO.	DATE	DESCRIPTION	BY

ALAMO RMA

VICKREY & ASSOCIATES, INC.
CONSULTING ENGINEERS
CIVIL / ENVIRONMENTAL / SURVEY
12940 Country Parkway San Antonio, Texas 78216
Voice:(210) 349-3271 Fax:(210) 349-2561 www.vickreynet.com
Texas Board of Professional Engineers Registration No: F-159 ©2010

Texas Department of Transportation
©2010

LOOP 1604 SUPER STREET
(WEST FRONTAGE ROAD)
LINE "A"

SHEET 2 OF 2

DGN:	FED. RD. DIV. NO.	STATE	FEDERAL AID PROJECT NO.			HIGHWAY NO.
CHK DGN:	6	TEXAS	STP 2011(210)ES			LP 1604
DWG:	DIST.	COUNTY	CONT. NO.	SECT. NO.	JOB NO.	SHEET NO.
CHK DWG:	SAT	BEXAR	2452	01	050	232

Plotted on: 6/30/2010

Design Filename: N:\2294-001\dgn\DRAINAGE\LP1604SD03.dgn

Plotted on: 6/30/2010

Design Filename: N:\2294-001\dgn\DRAINAGE\LP1604SD04.dgn

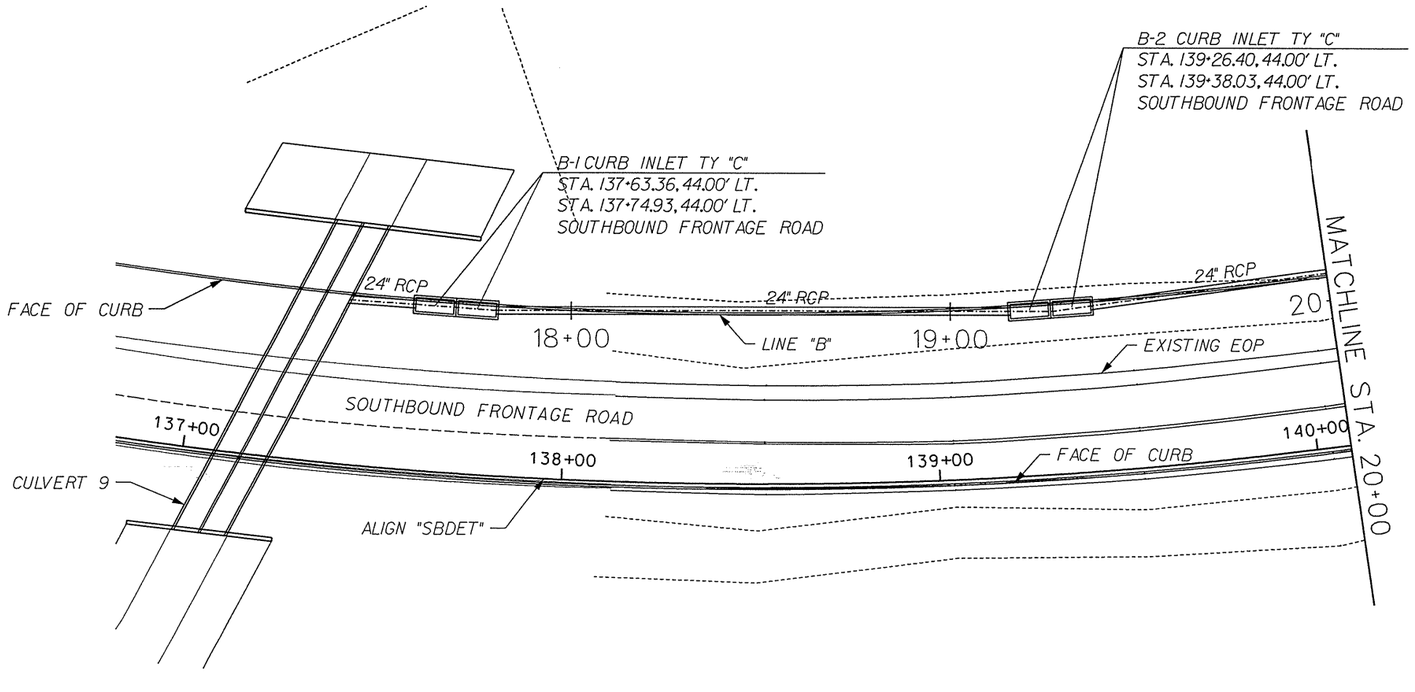

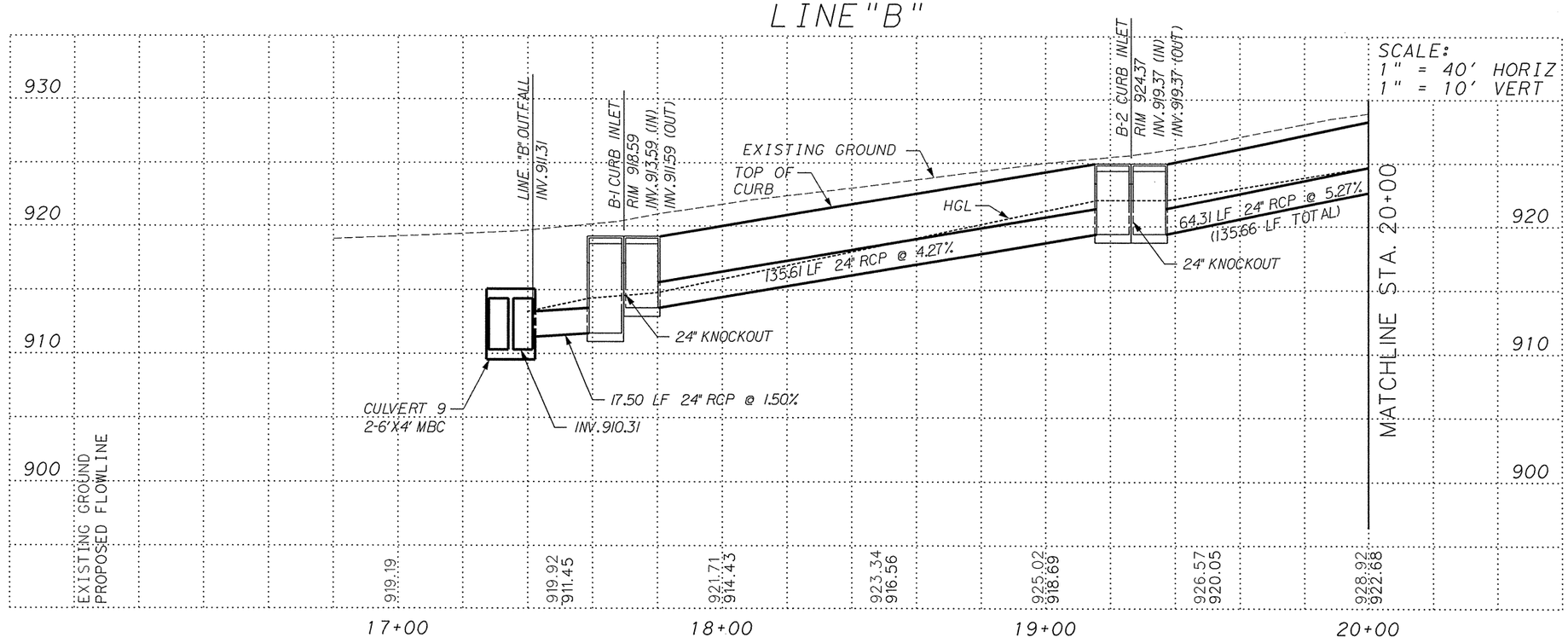

ESTIMATED QUANTITIES			
ITEM	DESCRIPTION	UNIT	QTY
0402-2001	Trench Excavation Protection	LF	218
0432-2019	Stone Riprap (Stone Protection)(12 in)	CY	0
0464-2005	RC Pipe (CL III)(24 in)	LF	218
0464-2007	RC Pipe (CL III)(30 in)	LF	0
0465-2001	Inlet (Compl)(Ty C)	EA	4
0465-2020	Inlet (Compl)(Curb)(Ty II)	EA	0
0465-2106	Inlet Ext (Ty II)	EA	0
0476-2003	Jack Bore Or Tun Pipe (30 in)(RC)(CL III)	LF	0

SCALE: 1" = 40'

20 10 0 20 40
HORIZ. SCALE FEET

STATE OF TEXAS
KENNETH E. ROGERS
89448
LICENSED
PROFESSIONAL ENGINEER
6/30/10

REV. NO.	DATE	DESCRIPTION	BY

ALAMO RMA

VICKREY & ASSOCIATES, INC.
CONSULTING ENGINEERS
CIVIL / ENVIRONMENTAL / SURVEY
12940 Country Parkway San Antonio, Texas 78216
Voice:(210) 349-3271 Fax:(210) 349-2561 www.vickreynet.com
Texas Board of Professional Engineers Registration No: F-159

©2010

Texas Department of Transportation
© 2010

LOOP 1604 SUPER STREET (WEST FRONTAGE ROAD) LINE "B"

SHEET 1 OF 2

DGN:	FED. RD. DIV. NO.	STATE	FEDERAL AID PROJECT NO.			HIGHWAY NO.
CHK DGN:	6	TEXAS	STP 2011(210)ES			LP 1604
DWG:	DIST.	COUNTY	CONT. NO.	SECT. NO.	JOB NO.	SHEET NO.
CHK DWG:	SAT	BEXAR	2452	01	050	233

Plotted on: 6/30/2010

Design Filename: N:\2294-001\dgn\DRAINAGE\LP1604SD05.dgn

ESTIMATED QUANTITIES			
ITEM	DESCRIPTION	UNIT	QTY
0402-2001	Trench Excavation Protection	LF	128
0432-2019	Stone Riprap (Stone Protection)(12 in)	CY	0
0464-2005	RC Pipe (CL III)(24 in)	LF	223
0464-2007	RC Pipe (CL III)(30 in)	LF	0
0465-2001	Inlet (Compl)(Ty C)	EA	2
0465-2020	Inlet (Compl)(Curb)(Ty II)	EA	0
0465-2106	Inlet Ext (Ty II)	EA	0
0476-2003	Jack Bore Or Tun Pipe (30 in)(RC)(CL III)	LF	0

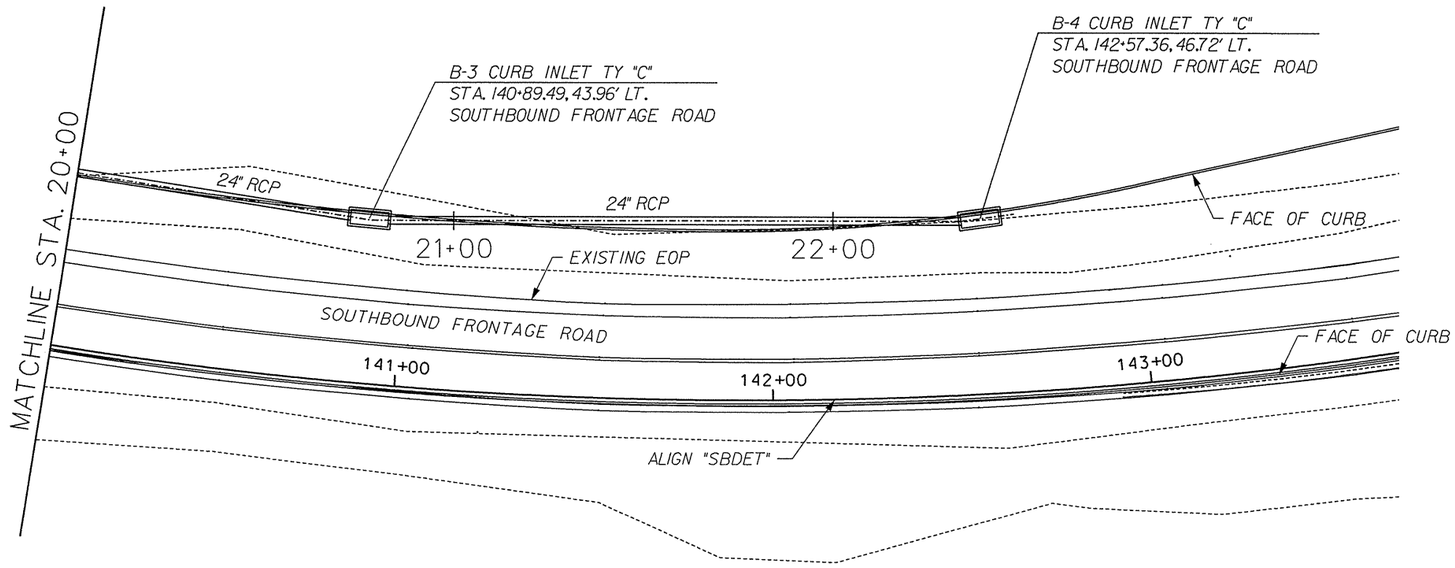

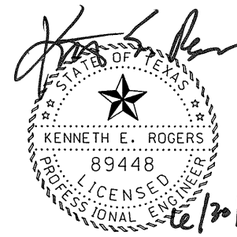

LINE "B"

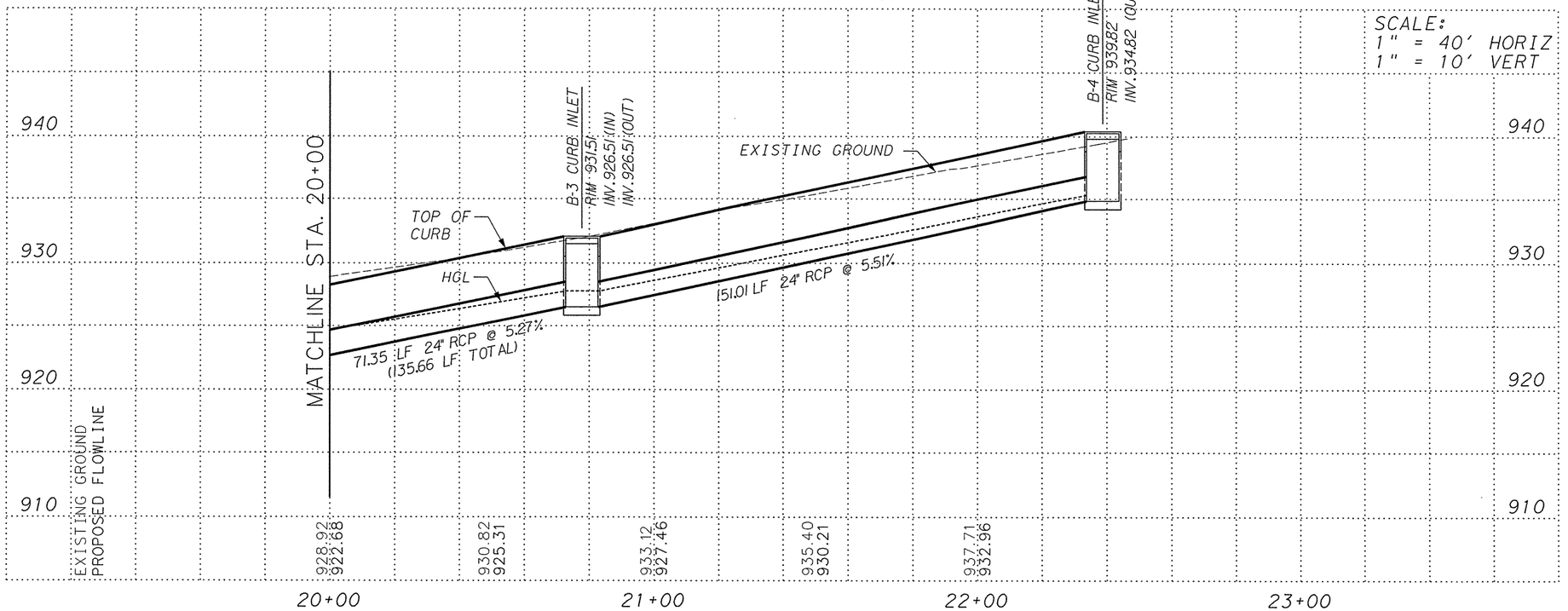

REV. NO.	DATE	DESCRIPTION	BY

ALAMO RMA

VICKREY & ASSOCIATES, INC.
CONSULTING ENGINEERS
CIVIL / ENVIRONMENTAL / SURVEY

12940 Country Parkway San Antonio, Texas 78216
Voice:(210) 349-3271 Fax:(210) 349-2561 www.vickreynet.com
Texas Board of Professional Engineers Registration No: F-159 ©2010

Texas Department of Transportation
© 2010

LOOP 1604 SUPER STREET (WEST FRONTAGE ROAD) LINE "B"

SHEET 2 OF 2

DGN:	FED. RD. DIV. NO.	STATE	FEDERAL AID PROJECT NO.			HIGHWAY NO.
CHK DGN:	6	TEXAS	STP 2011(210)ES			LP 1604
DWG:	DIST.	COUNTY	CONT. NO.	SECT. NO.	JOB NO.	SHEET NO.
CHK DWG:	SAT	BEXAR	2452	01	050	234

Plotted on: 7/7/2010

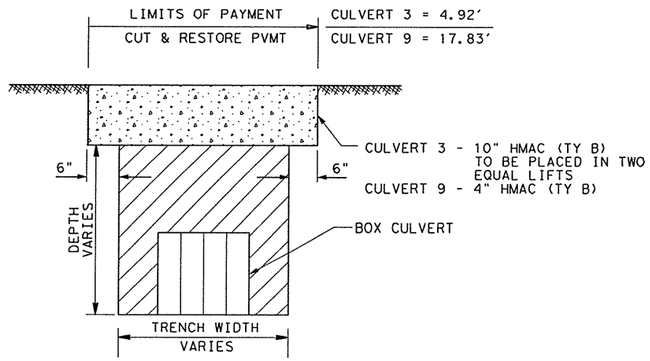

CUT AND RESTORE PAVEMENT
CULVERT DETAIL
N.T.S.

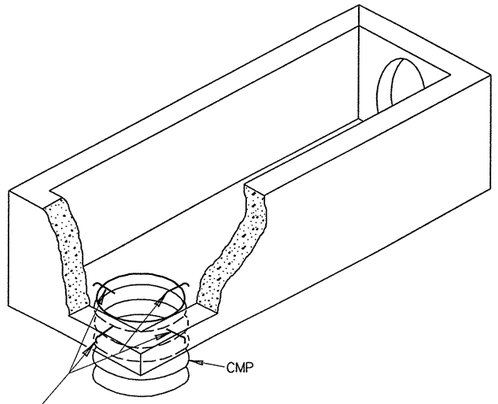

CMP ANCHOR DETAILS
N.T.S.

NOTE:
INFLOW AND OUTFLOW BLOCKOUT LOCATION VARIES. REFER TO DRAINAGE DETAILS FOR LOCATIONS. MANHOLE RING AND COVER SHALL NOT BE PLACED OVER ANY VERTICAL CMP DRAIN AND SHALL BE PLACED AT OPPOSITE END OF INLET.

STATE OF TEXAS
SCOTT D. ARMSTRONG
69320
LICENSED PROFESSIONAL ENGINEER

SCOTT D. ARMSTRONG, P.E. — 7/7/2010 DATE

REV. NO.	DATE	DESCRIPTION	BY

ALAMO RMA

PAPE-DAWSON ENGINEERS

555 EAST RAMSEY | SAN ANTONIO, TEXAS 78216 | PHONE: 210.375.9000 FAX: 210.375.9010
TEXAS BOARD OF PROFESSIONAL ENGINEERS, FIRM REGISTRATION # 470

Texas Department of Transportation
© 2010

LOOP 1604

MISCELLANEOUS DRAINAGE DETAILS

SHEET 1 OF 1

DGN:	FED. RD. DIV. NO.	STATE	FEDERAL AID PROJECT NO.			HIGHWAY NO.
CHK DGN:	6	TEXAS	STP 2011(210)ES			LP 1604
DWG:	DIST.	COUNTY	CONT. NO.	SECT. NO.	JOB NO.	SHEET NO.
CHK DWG:	SAT	BEXAR	2452	01	050	235

Design Filename: p:\74\00\04\design\civil\Drainage\740004msdt101.dgn

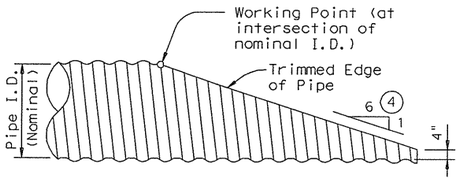

NOTE: All Cross Pipes, calculations, and dimensions are based on the pipe culverts mitered as shown in this detail. Alternate styles of mitered ends will require that appropriate adjustments be made to the values presented on this standard.

SIDE ELEVATION OF TYPICAL PIPE CULVERT MITER

(Showing Corrugated Metal Pipe Culvert.)
(Details at Concrete Pipe Culvert are similar.)

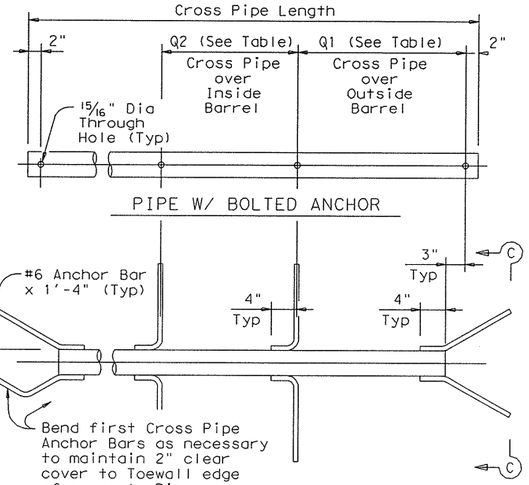

PIPE W/ ANCHOR BARS

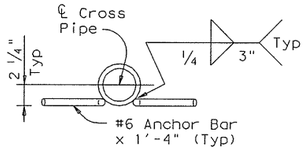

SECTION C-C

CROSS PIPE DETAILS

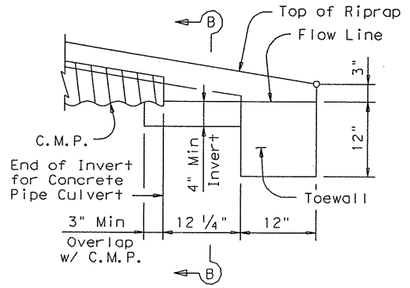

DETAIL "A"

(Showing Invert with Corrugated Metal Pipe Culvert. Concrete Pipe Culvert details are similar. Cross Pipes not shown for clarity.)

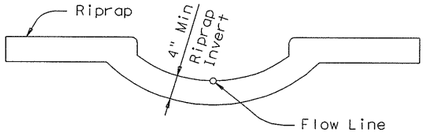

SECTION B-B

(Cross Pipes not shown for clarity.)

CROSS PIPE LENGTHS, REQUIRED PIPE SIZES, & RIPRAP QUANTITIES (2)

Nominal Culvert I.D.	Conc Riprap (CY) (6)	Pipe Culvert Spa ~ G	Single Barrel ~ Q1	Multi-Barrel ~ Q1	Q2	Conditions for use of Cross Pipes	Cross Pipe Size
12"	0.6	9"	N/A	2'- 1"	1'- 9"	3 or more Pipe Culverts	3" Std (3.500" O.D.)
15"	0.7	11"	N/A	2'- 5"	2'- 2"		
18"	0.8	1'- 2"	N/A	2'-10"	2'- 8"		
21"	0.9	1'- 4"	N/A	3'- 2"	3'- 1"		
24"	0.9	1'- 7"	N/A	3'- 6"	3'- 7"		
27"	1.0	1'- 8"	N/A	3'-10"	3'-11"	3 or more Pipe Culverts	3 1/2" Std (4.000" O.D.)
30"	1.1	1'-10"	N/A	4'- 2"	4'- 4"	2 or more Pipe Culverts	
33"	1.2	1'-11"	4'- 2"	4'- 5"	4'- 8"	All Pipe Culverts	
36"	1.3	2'- 1"	4'- 5"	4'- 9"	5'- 1"	All Pipe Culverts	4" Std (4.500" O.D.)
42"	1.5	2'- 4"	4'-11"	5'- 5"	5'-10"		
48"	1.7	2'- 7"	5'- 5"	6'- 0"	6'- 7"	All Pipe Culverts	5" Std (5.563" O.D.)
54"	2.0	3'- 0"	5'-11"	6'- 9"	7'- 6"		
60"	2.2	3'- 3"	6'- 5"	7'- 4"	8'- 3"		
66"	2.4	3'- 3"	6'-11"	7'-10"	8'- 9"		
72"	2.7	3'- 4"	7'- 5"	8'- 5"	9'- 4"		

(1) The proper installation of the first Cross Pipe is critical for vehicle safety. The top of the first Cross Pipe must be placed at no more than 6" above the flow line.

(2) Size of Cross Pipes, except the first bottom pipe, shall be as shown in the PIPE SIZE table. The first bottom pipe shall be 3 1/2" Standard Pipe (4" O.D.).

(3) The third Cross Pipe from the bottom of the Culvert shall always be installed using a bolted connection. Care shall be taken to ensure that Riprap concrete does not flow into the Cross Pipe so as to permit disassembly of the bolted connection to allow cleanout access. At the Contractor's option, all other Cross Pipes may also be installed using the bolted connection details.

(4) Match Cross Slope as shown elsewhere in the plans. Cross Slope of 6:1 or flatter is required for vehicle safety.

(5) Riprap placed beyond the limits shown will be paid as Concrete Riprap in accordance with Item 432, "Riprap".

(6) Quantities shown are for one end of one reinforced Concrete Pipe Culvert. For multiple pipe culverts or for Corrugated Metal Pipe Culverts, quantities will need to be adjusted. Riprap quantities are for Contractor's information only.

GENERAL NOTES:

Cross Pipes are designed for a traversing load of 10,000 pounds at yield as recommended by Research Report 280-2F, "Safety Treatment of of Roadside Parallel-Drainage Structures", Texas Transportation Institute, March 1981.

Safety End Treatments shown herein are intended for use in those installations where out of control vehicles are likely to traverse the openings approximately perpendicular to the Cross Pipes.

Riprap and all necessary inverts shall be Concrete Riprap conforming to the requirements of Item 432, "Riprap".

Payment for riprap and toewall is included in the Price Bid for each Safety End Treatment.

Cross Pipes shall conform to the requirements of ASTM A53 (Type E or S, Grade B), ASTM A500 (Grade B), or API 5LX52.

Bolts and nuts shall conform to ASTM A307.

All steel components, except concrete reinforcing, shall be galvanized after fabrication. Galvanizing damaged during transport or construction shall be repaired in accordance with the specifications.

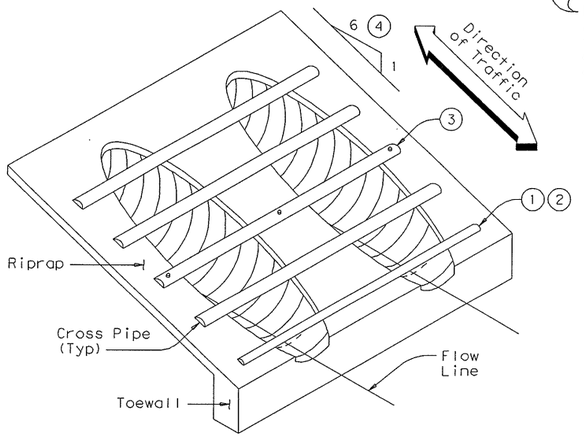

ISOMETRIC VIEW OF TYPICAL INSTALLATION

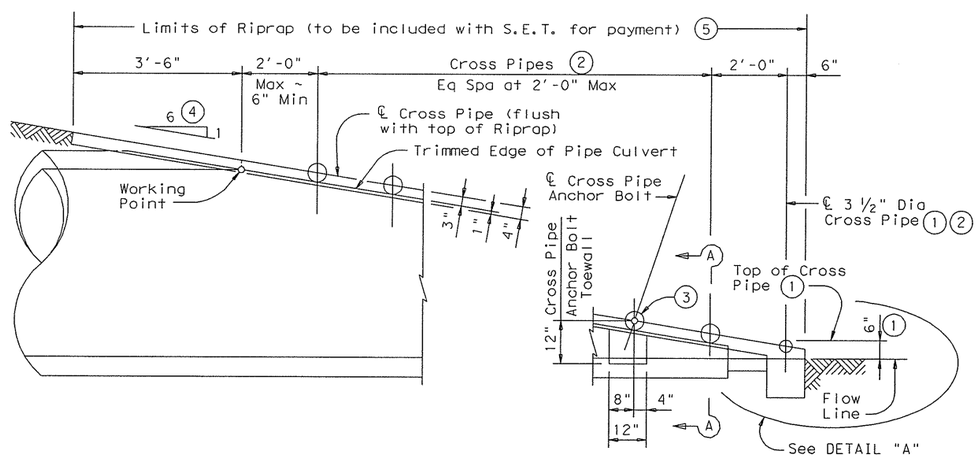

SIDE ELEVATION OF CAST-IN-PLACE CONCRETE

(Showing Concrete Pipe Culvert.)
(Details at Corrugated Metal Pipe Culvert are similar.)

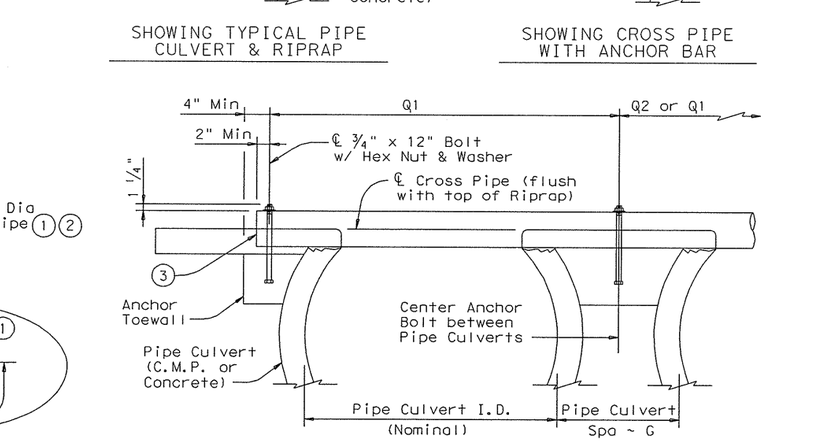

SECTION A-A

Texas Department of Transportation
Bridge Division

SAFETY END TREATMENT
FOR 12" DIA TO 72" DIA PIPE CULVERTS TYPE II ~ PARALLEL DRAINAGE

SETP-PD

FILE: setppdse.dgn	DN: GAF	CK: CAT	DW: JRP	CK: GAF
©TxDOT February 2010	DISTRICT	FEDERAL AID PROJECT		SHEET
REVISIONS		2452-01-050		236
	COUNTY	CONTROL	SECT	JOB	HIGHWAY
	Bexar				

DISCLAIMER:
The use of this standard is governed by the "Texas Engineering Practice Act". No warranty of any kind is made by TxDOT for any purpose whatsoever. TxDOT assumes no responsibility for the conversion of this standard to other formats or for incorrect results or damages resulting from its use.

ACC:
DED
LEVELS D.
1

DISCLAIMER:
The use of this standard is governed by the "Texas Engineering Practice Act". No warranty of any kind is made by TxDOT for any purpose whatsoever. TxDOT assumes no responsibility for the conversion of this standard to other formats or for incorrect results or damages resulting from its use.

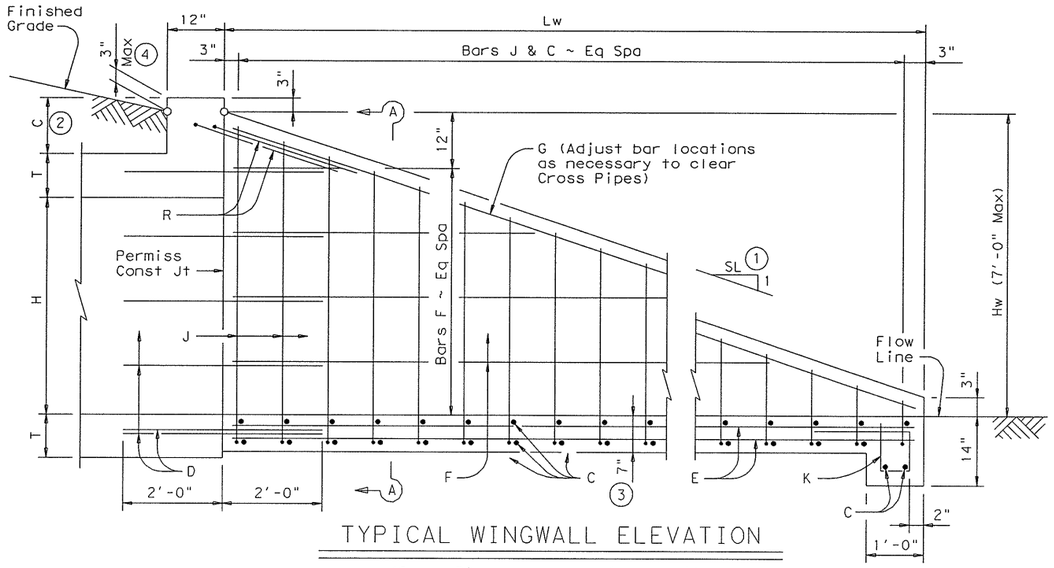

TYPICAL WINGWALL ELEVATION

(Cross Pipes not shown for clarity)

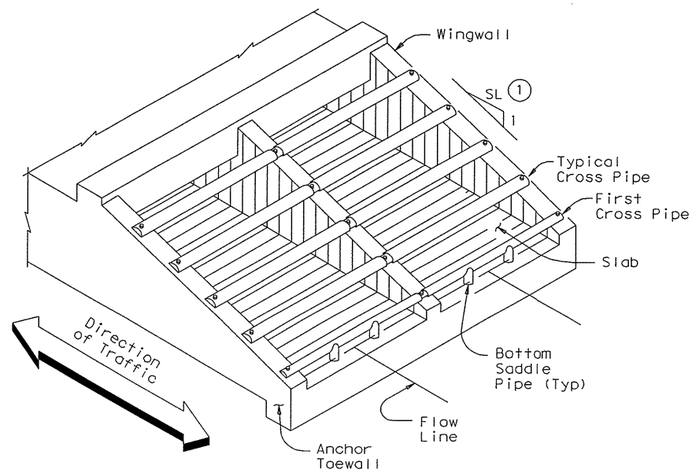

ISOMETRIC VIEW OF TYPICAL INSTALLATION

(Showing Bolted Anchor Option)

Formulas: (All values are in Feet)

$Hw = H + T + C - 0.250'$

$Lw = (Hw - 0.250') (SL)$

For Cast-in-place culverts:

$Atw = (N) (S) + (N+1) (U)$

For Precast culverts:

$Atw = (N) (2U+S) + (N-1) (0.500')$

Total Wingwall Area (S.F.)
$= (0.5) (Hw + 0.250') (Lw) (N+1)$

Total Concrete Volume (C.Y.)
$= [(\text{Wingwall Area}) (0.583') + (Lw) (Atw) (0.583') + (Atw) (1.000') (1.167' - 0.583')] \div (27)$

Total Reinforcing (Lbs)
$= (1.55) (Lw) (Atw) + (4.43) (Atw) + (K) (Hw) (N+1) (\sqrt{Lw})$

C = Height of Curb above top of Top Slab
Hw = Height of Wingwall
K = Constant Value for use in formulas

Slope SL:1	K
6:1	~ 10.41

Atw = Anchor Toewall Length
Lw = Length of Wingwall
N = Number of Culvert Barrels
S = Clear Span of each Barrel
SL:1 = Side Slope Ratio (Horizontal : 1 Vertical)

See applicable box culvert standard for H, S, T, and U values.

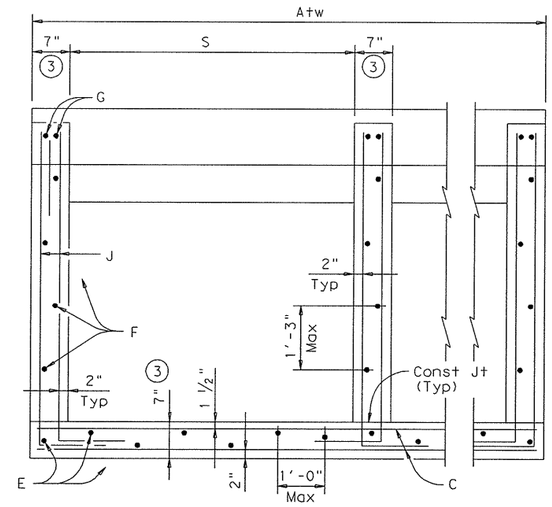

SECTION A-A

(Showing typical Wingwall and Wing Slab reinforcing)
(Pipe Runners not shown for clarity)

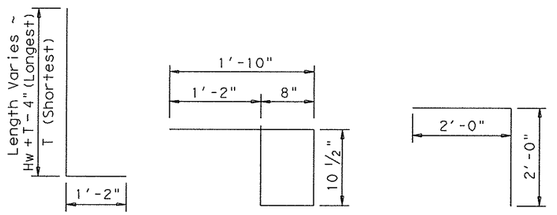

TABLE OF REINFORCING BAR SIZES & SPACING		
Bar	Size	Spacing
C	#4	10" Max
D	#4	match F & E
E	#4	1'- 0" Max
F	#4	1'- 3" Max
G	#6	Shown
J	#4	10" Max
K	#4	1'- 0" Max
R	#4	Shown

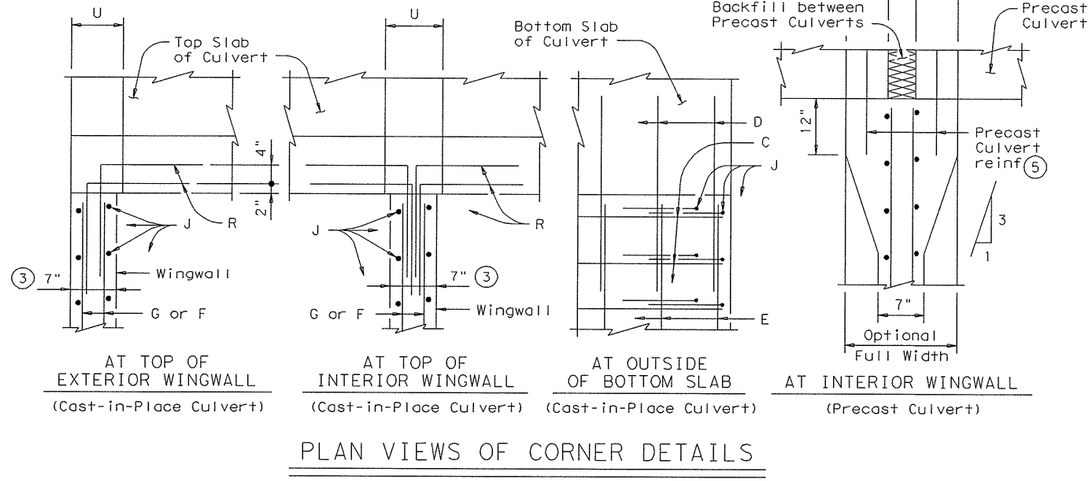

PLAN VIEWS OF CORNER DETAILS

(1) Slope will be 6:1 or flatter.

(2) 0" min to 5'-0" max. Estimated curb heights are shown elsewhere in the plans. For structures without railing and curbs taller than 1'-0", refer to ECD standard.

(3) Wingwall and slab thicknesses may be the same as the adjacent culvert wall and slab thicknesses (7" Minimum). If thicknesses greater than the minimum (7") are used, no changes will be made in quantities and no additional compensation will be allowed.

(4) For vehicle safety, curbs shall project no more than 3" above finished grade. Curb heights shall be reduced, if necessary, to meet these requirements. No changes will be made in quantities and no additional compensation will be allowed for this work.

(5) For Culverts with C = 0", the precast culvert reinforcing may extend 1'-0" minimum into Wingwall. Wingwall Bars D and R may be omitted. Otherwise, refer to the "Wingwall Connection Detail" on the SCP-MD standard.

GENERAL NOTES:

Designed according to AASHTO LRFD Specifications.

The Safety End Treatments shown herein are intended for use in those installations where out of control vehicles are likely to traverse the openings approximately perpendicular to the Cross Pipes.

Cross Pipes are designed for a traversing load of 10,000 pounds at yield as recommended by Research Report 280-2F, "Safety Treatment of Roadside Parallel-Drainage Structures", Texas Transportation Institute, March 1981.

All concrete shall be Class "C" and shall have a minimum compressive strength of 3600 psi.

All reinforcing steel shall be Grade 60. All reinforcing shall be adjusted as necessary to provide a minimum clear cover of 1 1/4".

The quantities for concrete, reinforcing steel, and Cross Pipes resulting from the formulas given herein are for Contractor's information only.

Cross Pipes, Sleeve Pipes, and Saddle Pipes shall conform to the requirements of ASTM A53 (Type E or S, Grade B), ASTM A500 (Grade B), or API 5LX52.

Bolts and nuts shall conform to ASTM A307.

All steel components, except the concrete reinforcing, shall be galvanized after fabrication. Galvanizing damaged during transport or construction shall be repaired in accordance with the specifications.

See BCS standard sheet for additional dimensions and information.

Alternate design drawings bearing the seal of a professional engineer will be acceptable for precast construction of the Safety End Treatments.

Texas Department of Transportation
Bridge Division

SAFETY END TREATMENT

FOR BOX CULVERTS
(MAXIMUM Hw = 7'-0")
TYPE I ~ PARALLEL DRAINAGE

SETB-PD

FILE: setbpdse.dgn	DN: GAF	CK: CAT	DW: JRP	CK: GAF
©TxDOT February 2010	DISTRICT	FEDERAL AID PROJECT		SHEET
REVISIONS				237
	COUNTY	CONTROL	SECT	JOB	HIGHWAY
	Reis				

ACC:
LEVELS DI... ED
1

DISCLAIMER:
The use of this standard is governed by the "Texas Engineering Practice Act". No warranty of any kind is made by TxDOT for any purpose whatsoever. TxDOT assumes no responsibility for the conversion of this standard to other formats or for incorrect results or damages resulting from its use.

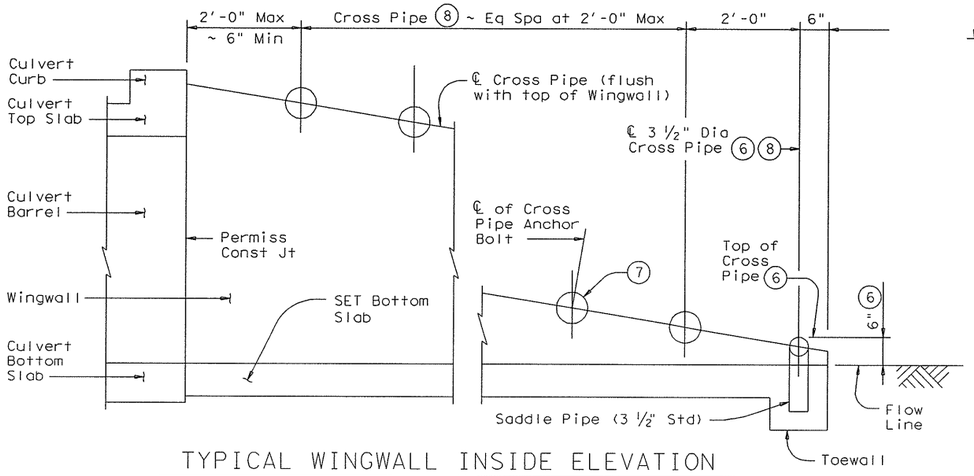

TYPICAL WINGWALL INSIDE ELEVATION

(Showing installation of Cross Pipes)

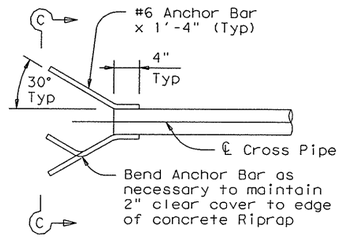

PART PLAN

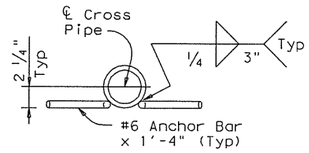

SECTION C-C

OPTIONAL ANCHOR BAR DETAILS

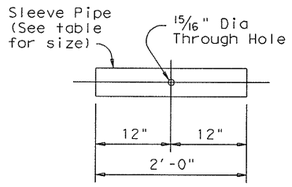

SLEEVE PIPE DETAILS (9)

REQUIRED PIPE SIZES (8)		
Culvert Span Sizes	Cross Pipe Size	Sleeve Pipe Size (9)
First Pipe	3 ½" STD	2 ½" STD
30" to 42"	4" STD	3" STD
48" to 72"	5" STD	4" STD
78" to 120"	6" STD	5" STD

STANDARD PIPE SIZES		
Pipe Size	Pipe O.D.	Pipe I.D.
2 ½" STD	2.875"	2.469"
3" STD	3.500"	3.068"
3 ½" STD	4.000"	3.548"
4" STD	4.500"	4.026"
5" STD	5.563"	5.047"
6" STD	6.625"	6.065"

(6) The proper installation of the first Cross Pipe is critical for vehicle safety. The top of the first Cross Pipe must be placed at no more than 6" above the flow line.

(7) The third Cross Pipe from the bottom of the Culvert shall always be installed using a bolted connection. Care shall be taken to ensure that concrete does not flow into this Cross Pipe so as to permit disassembly of the bolted connection to allow cleanout access.

(8) Cross Pipes and Sleeve Pipes (if required) shall be as shown in the REQUIRED PIPE SIZES table. Saddle Pipes for the 3 ½" first Cross Pipe shall also be 3 ½".

(9) At Contractor's option, the Cross Pipe may be continuous across the Inside Wingwalls. If such option is selected, the Sleeve Pipe shall be omitted and a 15/16" diameter through hole made in the Cross Pipe to accept the anchor bolt at the centerline of each Interior Wingwall.

(10) Riprap will be required when using the optional Anchor Bar details and shall be included in the Price Bid for Safety End Treatment. Such Riprap shall be concrete Riprap in accordance with Item 432, "Riprap".

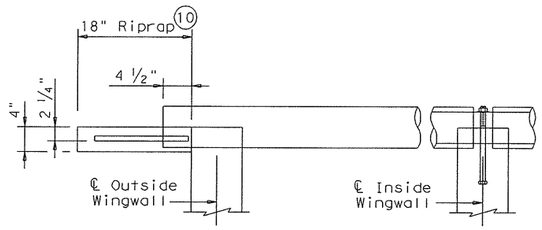

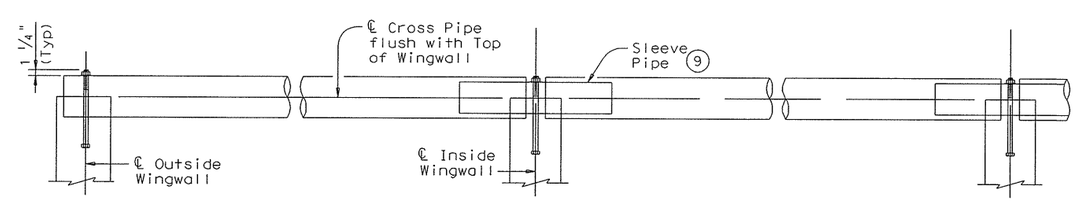

SECTION THROUGH INSTALLATION OF TYPICAL FULL CROSS PIPE

(Anchor details and dimensions are similar to those shown below in SECTION THROUGH INSTALLATION OF 3 ½" FIRST CROSS PIPE detail.)

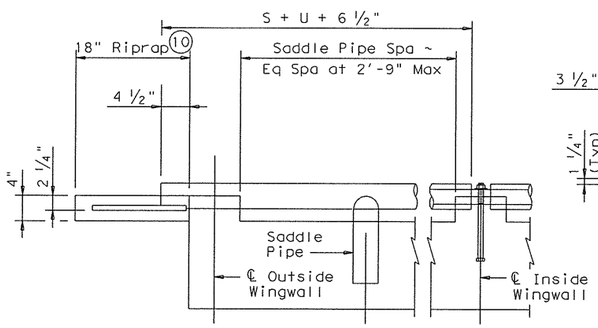

OUTSIDE CULVERT BARREL WITH OPTIONAL ANCHOR BARS & RIPRAP

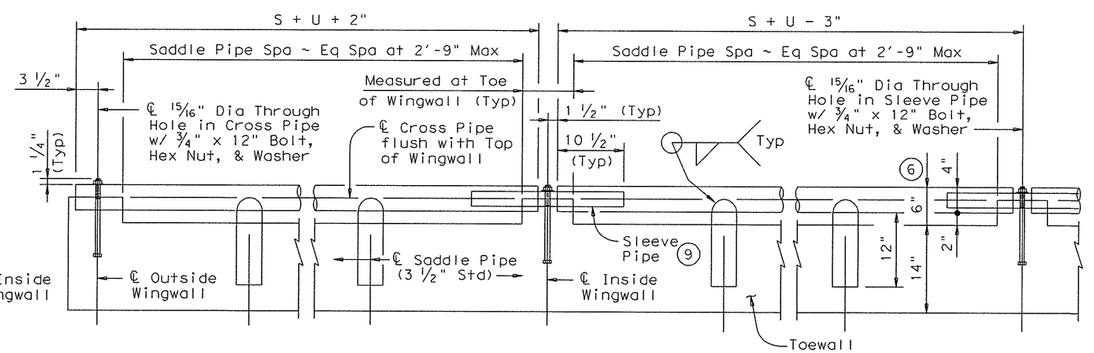

OUTSIDE CULVERT BARREL WITH BOLTED ANCHOR

INSIDE CULVERT BARREL

SECTION THROUGH INSTALLATION OF 3 ½" FIRST CROSS PIPE

CROSS PIPE INSTALLATION DETAILS

SHEET 2 OF 2

Texas Department of Transportation
Bridge Division

SAFETY END TREATMENT
FOR BOX CULVERTS
(MAXIMUM Hw = 7'-0")
TYPE I ~ PARALLEL DRAINAGE

SETB-PD

FILE: setbpdse.dgn	DN: GAF	CK: CAT	DW: JRP	CK: GAF
©TxDOT February 2010	DISTRICT	FEDERAL AID PROJECT		SHEET
REVISIONS		2452-01-056		238
	COUNTY	CONTROL	SECT	JOB	HIGHWAY
	Cass				

ACC:
LEVELS DI... ED
1

DISCLAIMER:
The use of this standard is governed by the "Texas Engineering Practice Act". No warranty of any kind is made by TxDOT for any purpose whatsoever. TxDOT assumes no responsibility for the conversion of this standard to other formats or for incorrect results or damages resulting from its use.

ACC:
LEVELS DI.
ED
1

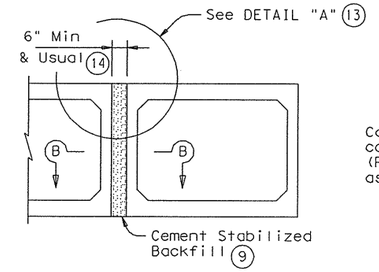

MULTIPLE UNIT PLACEMENT

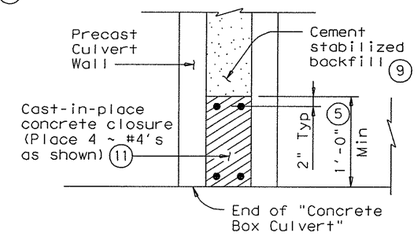

SECTION B-B

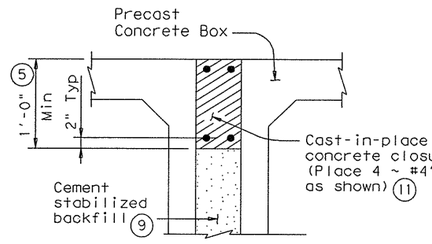

DETAIL "A" (13)

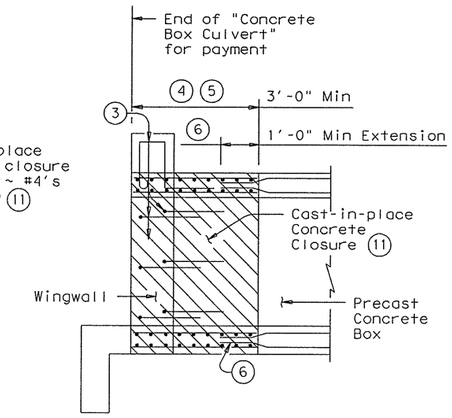

WINGWALL CONNECTION

(Also applies to Safety End Treatment)

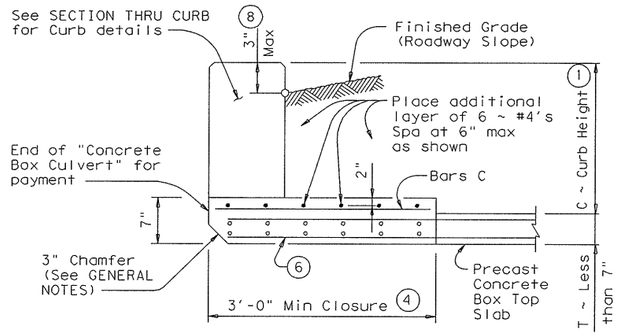

SECTION THRU TOP SLABS LESS THAN 7"

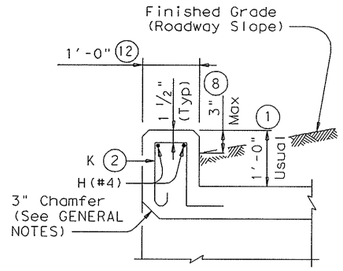

SECTION THRU CURB

(10) QUANTITIES PER FOOT OF CURB	
Reinforcing Steel	4.18 Lb
Concrete	0.037 CY

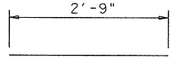

BARS C ~ #4
(Spa = 1'-0" Max)

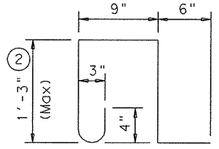

BARS K ~ #4
(Spa = 1'-0" Max)
(Length = 4'-3")

(1) 0" min to 5'-0" max. Estimated curb heights are shown elsewhere in the plans. For structures with pedestrian rail, bicycle rail or curbs taller than 1'-0", refer to ECD standard. For structures with T6 traffic rail, refer to T6-CM standard. For structures with traffic rail, other than T6, refer to RAC standard.

(2) For curbs less than 1'-0" high, tilt Bars K or reduce bar height as necessary to maintain cover. For curbs less than 3" high, Bars K may be omitted.

(3) Curb, Wingwall or Safety End Treatment reinforcing shall extend into concrete closure. Any reinforcing that does not fit into the closure shall be bent or trimmed as necessary.

(4) Cast-in-place concrete closure shall be 3'-0" min. Boxes shall be cast short or broken back in the field. All reinforcing in the closure shall be the same size and spacing as in the precast box section. Except where shown otherwise, the cast-in-place closure shall be flush with the inside and outside faces of the precast box section.

(5) For multiple unit placements the length of the closure for the interior walls may be adjusted as necessary. The length of the top slab, bottom slab, and exterior wall closure shall not be less than 3'-0". See Section B-B detail when interior walls are cast full length.

(6) Precast box reinforcing shall extend a minimum of 1'-0" into concrete closure (Typ).

(7) Bands of reinforcing matching the inside and outside face reinforcing shall be placed in the gaps of the top and bottom slabs. A band matching the outside face reinforcing of the wall shall be placed in the gaps of the walls (placed in the outside face only). The bands shall be tack welded to the exposed reinforcing at each point of contact.

(8) For vehicle safety, the following requirements must be met:
- For structures without bridge rail, curbs shall project no more than 3" above finished grade.
- For structures with bridge rail, curbs shall be flush with finished grade.

Curb heights shall be reduced, if necessary, to meet the above requirements. No changes will be made in quantities and no additional compensation will be allowed for this work.

(9) Cement Stabilized Backfill between boxes is considered part of the Box Culvert for payment.

(10) All curb concrete and reinforcing is considered part of the Box Culvert for payment.

(11) Any additional concrete and reinforcing required for the closures shall be considered as subsidiary to the Concrete Box Culvert.

(12) 1'-0" typical. 2'-0" when RAC standard is referred to elsewhere in the plans.

(13) For multiple unit placement with overlay, with 1 to 2 course surface treatment, or with the top slab as the final riding surface, provide wall closure as shown in DETAIL "A".

(14) This dimension may be increased with approval of the Engineer to allow the precast boxes to be tunneled or jacked in accordance with Item 476, "Jacking, Boring, or Tunneling Pipe or Box". No payment will be made for any additional material in the gap between adjacent boxes.

GENERAL NOTES:
Designed according to AASHTO LRFD Specifications.
All closure concrete shall be Class "C" with a minimum compressive strength of 3600 psi and shall be placed according to the Item, "Concrete Structures".
Any additional concrete required for the closures shall be considered as subsidiary to the Concrete Box Culvert.
Refer to the Single Box Culverts Precast standard for details not shown.
The bottom edge of the top slab closure shall be chamfered 3 inches at the entrance.

HL93 LOADING

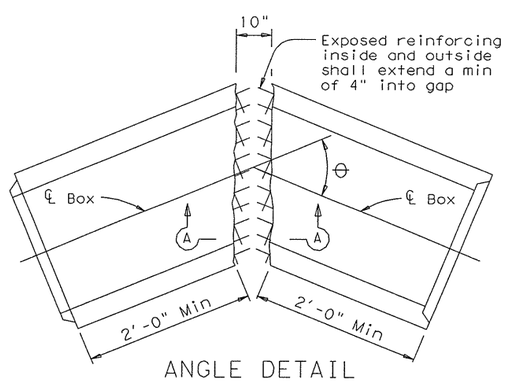

ANGLE DETAIL

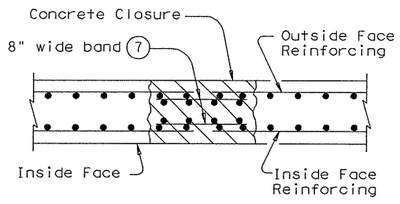

SECTION A-A

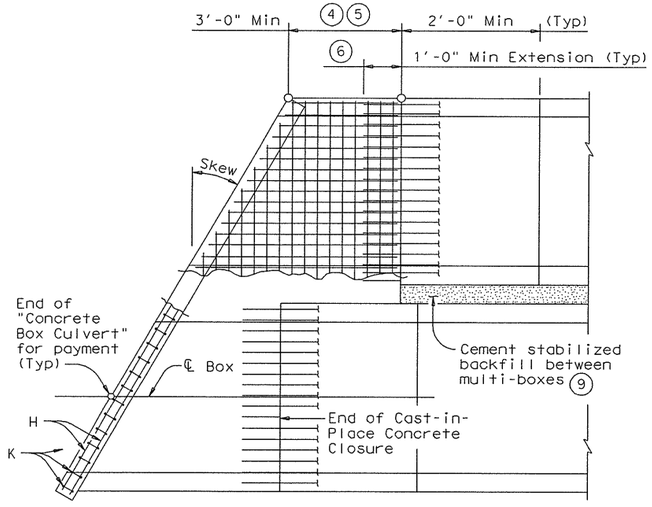

PLAN OF SKEWED ENDS

(Showing multi-box placement)

Texas Department of Transportation
Bridge Division

BOX CULVERTS PRECAST MISCELLANEOUS DETAILS

SCP-MD

FILE: scpmdste.dgn	DN: GAF	CK: LMW	DW: BWH/TxDOT	CK: GAF
©TxDOT February 2010	DISTRICT	FEDERAL AID PROJECT		SHEET
REVISIONS		2452-01-030		239
	COUNTY	CONTROL	SECT	JOB	HIGHWAY

DISCLAIMER:
The use of this standard is governed by the "Texas Engineering Practice Act". No warranty of any kind is made by TxDOT for any purpose whatsoever. TxDOT assumes no responsibility for the conversion of this standard to other formats or for incorrect results or damages resulting from its use.

ACC:

LEVELS DI_ ED

1

BOX DATA

SECTION DIMENSIONS					Fill Height	M (Min)	REINFORCING (in²/ft) ②								① Lift Weight (Tons)
S (ft)	H (ft)	T_T (in)	T_B (in)	T_S (in)	(ft)	(in)	A_{S1}	A_{S2}	A_{S3}	A_{S4}	A_{S5}	A_{S6}	A_{S7}	A_{S8}	
3	2	7	6	4	<2	-	0.17	0.25	0.16	0.10	0.17	0.17	0.17	0.14	3.3
3	2	4	4	4	2<3	31	0.13	0.19	0.18	0.10	-	-	-	-	2.4
3	2	4	4	4	3-5	31	0.10	0.11	0.12	0.10	-	-	-	-	2.4
3	2	4	4	4	10	31	0.10	0.10	0.10	0.10	-	-	-	-	2.4
3	2	4	4	4	15	31	0.10	0.13	0.13	0.10	-	-	-	-	2.4
3	2	4	4	4	20	31	0.11	0.17	0.17	0.10	-	-	-	-	2.4
3	2	4	4	4	25	31	0.14	0.21	0.21	0.10	-	-	-	-	2.4
3	2	4	4	4	30	31	0.17	0.25	0.25	0.10	-	-	-	-	2.4
3	2	4	4	4	35	31	0.20	0.29	0.30	0.10	-	-	-	-	2.4
3	3	7	6	4	<2	-	0.17	0.27	0.17	0.10	0.17	0.17	0.17	0.14	3.7
3	3	4	4	4	2<3	31	0.10	0.22	0.21	0.10	-	-	-	-	2.8
3	3	4	4	4	3-5	31	0.10	0.14	0.14	0.10	-	-	-	-	2.8
3	3	4	4	4	10	31	0.10	0.11	0.11	0.10	-	-	-	-	2.8
3	3	4	4	4	15	31	0.10	0.14	0.15	0.10	-	-	-	-	2.8
3	3	4	4	4	20	31	0.10	0.18	0.19	0.10	-	-	-	-	2.8
3	3	4	4	4	25	31	0.10	0.23	0.23	0.10	-	-	-	-	2.8
3	3	4	4	4	30	31	0.12	0.27	0.28	0.10	-	-	-	-	2.8
3	3	4	4	4	35	31	0.14	0.32	0.32	0.10	-	-	-	-	2.8

① For Box Length = 8'-0"

② A_{S1} thru A_{S4}, A_{S7} and A_{S8} are minimum required areas of reinforcement per linear foot of box length. A_{S6} and A_{S5} are minimum required areas of reinforcement per linear foot of box width.

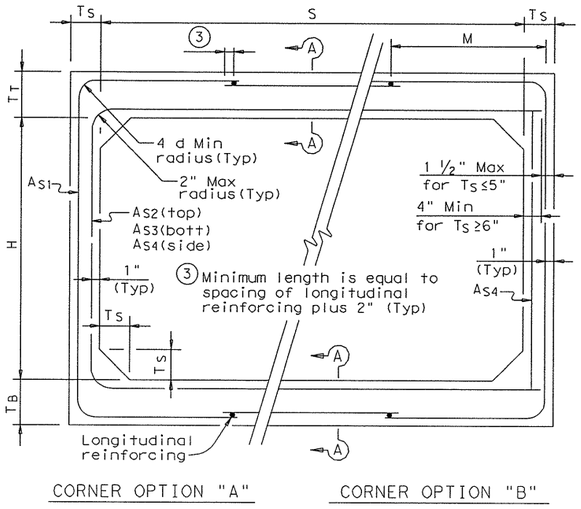

FILL HEIGHT 2 FT AND GREATER

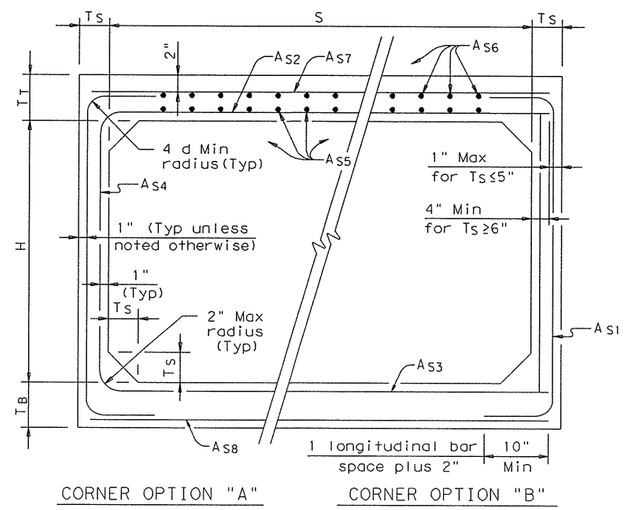

FILL HEIGHT LESS THAN 2 FT

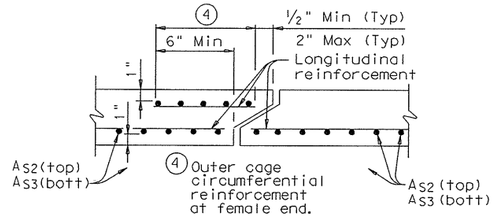

SECTION A-A

(TOP AND BOTTOM SLAB JOINT REINFORCEMENT)

GENERAL NOTES:

Designs shown conform to ASTM C1577. Refer to ASTM C1577 for information or details not shown.

All concrete shall be Class "H" Concrete with a minimum compressive strength of 5,000 psi.

See SCP-MD standard sheet for miscellaneous details and notes not shown.

In lieu of furnishing the designs shown on this sheet, the contractor may furnish an alternate design that is equal to or exceeds the box design for the design fill height in the table. Shop plans for alternate designs shall be submitted in accordance with Item "Precast Concrete Structures".

HL93 LOADING

Texas Department of Transportation
Bridge Division

SINGLE BOX CULVERTS PRECAST
3'-0" SPAN

SCP-3

FILE: scp03ste.dgn	DN: GAF	CK: LMW	DW: BWH/TxDOT	CK: GAF
©TxDOT February 2010	DISTRICT	FEDERAL AID PROJECT		SHEET
REVISIONS				240
	COUNTY	CONTROL	SECT	JOB	HIGHWAY

DISCLAIMER:
The use of this standard is governed by the "Texas Engineering Practice Act". No warranty of any kind is made by TxDOT for any purpose whatsoever. TxDOT assumes no responsibility for the conversion of this standard to other formats or for incorrect results or damages resulting from its use.

ACC:

LEVELS DI- ED

1

BOX DATA

SECTION DIMENSIONS					Fill Height	M (Min)	REINFORCING (in²/ft) ②								① Lift Weight (Tons)
S (ft)	H (ft)	T_T (in)	T_B (in)	T_S (in)	(ft)	(in)	A_{S1}	A_{S2}	A_{S3}	A_{S4}	A_{S5}	A_{S6}	A_{S7}	A_{S8}	
5	3	8	7	6	<2	-	0.19	0.31	0.21	0.14	0.19	0.19	0.19	0.17	6.6
5	3	6	6	6	2<3	45	0.18	0.24	0.19	0.14	-	-	-	-	5.7
5	3	6	6	6	3-5	36	0.14	0.17	0.16	0.14	-	-	-	-	5.7
5	3	6	6	6	10	36	0.14	0.16	0.17	0.14	-	-	-	-	5.7
5	3	6	6	6	15	35	0.16	0.21	0.22	0.14	-	-	-	-	5.7
5	3	6	6	6	20	35	0.21	0.27	0.28	0.14	-	-	-	-	5.7
5	3	6	6	6	25	35	0.26	0.34	0.34	0.14	-	-	-	-	5.7
5	3	6	6	6	30	35	0.31	0.41	0.41	0.14	-	-	-	-	5.7
5	4	8	7	6	<2	-	0.19	0.33	0.24	0.14	0.19	0.19	0.19	0.17	7.2
5	4	6	6	6	2<3	45	0.16	0.27	0.22	0.14	-	-	-	-	6.3
5	4	6	6	6	3-5	45	0.14	0.19	0.18	0.14	-	-	-	-	6.3
5	4	6	6	6	10	36	0.14	0.18	0.18	0.14	-	-	-	-	6.3
5	4	6	6	6	15	35	0.14	0.23	0.24	0.14	-	-	-	-	6.3
5	4	6	6	6	20	35	0.17	0.30	0.31	0.14	-	-	-	-	6.3
5	4	6	6	6	25	35	0.21	0.37	0.38	0.14	-	-	-	-	6.3
5	4	6	6	6	30	35	0.25	0.44	0.45	0.14	-	-	-	-	6.3
5	5	8	7	6	<2	-	0.19	0.35	0.26	0.14	0.19	0.19	0.19	0.17	7.8
5	5	6	6	6	2<3	45	0.14	0.29	0.24	0.14	-	-	-	-	6.9
5	5	6	6	6	3-5	45	0.14	0.21	0.20	0.14	-	-	-	-	6.9
5	5	6	6	6	10	45	0.14	0.19	0.20	0.14	-	-	-	-	6.9
5	5	6	6	6	15	36	0.14	0.24	0.25	0.14	-	-	-	-	6.9
5	5	6	6	6	20	35	0.15	0.31	0.32	0.14	-	-	-	-	6.9
5	5	6	6	6	25	35	0.18	0.38	0.39	0.14	-	-	-	-	6.9
5	5	6	6	6	30	35	0.21	0.46	0.47	0.14	-	-	-	-	6.9
5	2	8	7	6	<2	-	0.20	0.31	0.20	0.14	0.22	0.19	0.19	0.17	6.0
5	2	6	6	6	30	44	0.39	0.33	0.34	0.14	-	-	-	-	5.1

⑤

① For Box Length = 8'-0"

② A_{S1} thru A_{S4}, A_{S7} and A_{S8} are minimum required areas of reinforcement per linear foot of box length. A_{S6} and A_{S5} are minimum required areas of reinforcement per linear foot of box width.

⑤ These designs were created by TxDOT and are not shown in the ASTM Specifications.

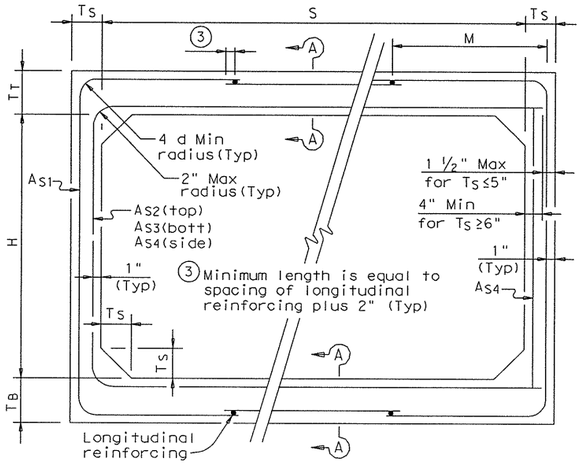

CORNER OPTION "A" CORNER OPTION "B"

FILL HEIGHT 2 FT AND GREATER

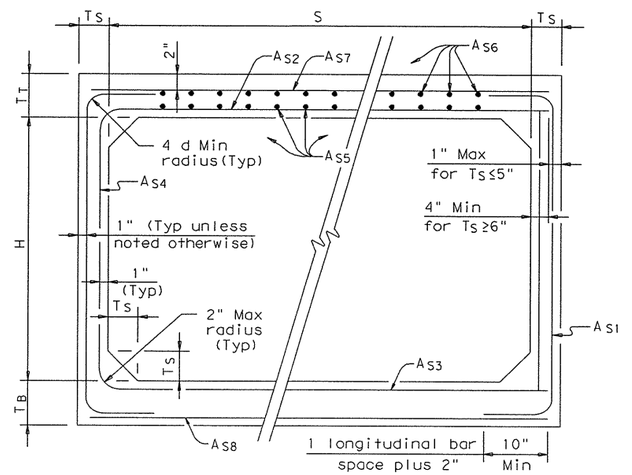

CORNER OPTION "A" CORNER OPTION "B"

FILL HEIGHT LESS THAN 2 FT

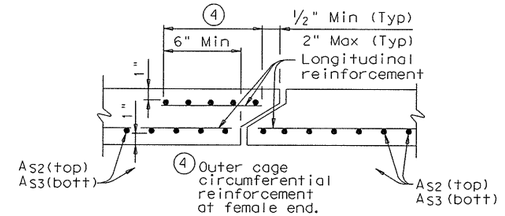

SECTION A-A

(TOP AND BOTTOM SLAB JOINT REINFORCEMENT)

GENERAL NOTES:

Designs shown conform to ASTM C1577. Refer to ASTM C1577 for information or details not shown.

All concrete shall be Class "H" Concrete with a minimum compressive strength of 5,000 psi.

See SCP-MD standard sheet for miscellaneous details and notes not shown.

In lieu of furnishing the designs shown on this sheet, the contractor may furnish an alternate design that is equal to or exceeds the box design for the design fill height in the table. Shop plans for alternate designs shall be submitted in accordance with Item "Precast Concrete Structures".

HL93 LOADING

Texas Department of Transportation
Bridge Division

SINGLE BOX CULVERTS PRECAST 5'-0" SPAN

SCP-5

FILE: scp05ste.dgn	DN: GAF	CK: LMW	DW: BWH/TxDOT	CK: GAF
©TxDOT February 2010	DISTRICT	FEDERAL AID PROJECT		SHEET
REVISIONS		2452-01-056		241
	COUNTY	CONTROL	SECT	JOB	HIGHWAY

DISCLAIMER:
The use of this standard is governed by the "Texas Engineering Practice Act". No warranty of any kind is made by TxDOT for any purpose whatsoever. TxDOT assumes no responsibility for the conversion of this standard to other formats or for incorrect results or damages resulting from its use.

ACC:

LEVELS DI...ED

1

BOX DATA

SECTION DIMENSIONS					Fill Height	M (Min)	REINFORCING (in²/ft) ②								① Lift Weight (Tons)
S (ft)	H (ft)	T_T (in)	T_B (in)	T_S (in)	(ft)	(in)	A_{S1}	A_{S2}	A_{S3}	A_{S4}	A_{S5}	A_{S6}	A_{S7}	A_{S8}	
6	3	8	7	7	<2	-	0.20	0.31	0.22	0.17	0.19	0.19	0.19	0.17	7.9
6	3	7	7	7	2<3	43	0.21	0.24	0.19	0.17	-	-	-	-	7.5
6	3	7	7	7	3-5	39	0.17	0.18	0.17	0.17	-	-	-	-	7.5
6	3	7	7	7	10	39	0.17	0.18	0.19	0.17	-	-	-	-	7.5
6	3	7	7	7	15	38	0.22	0.24	0.24	0.17	-	-	-	-	7.5
6	3	7	7	7	20	38	0.28	0.31	0.31	0.17	-	-	-	-	7.5
6	3	7	7	7	25	38	0.35	0.38	0.39	0.17	-	-	-	-	7.5
6	3	7	7	7	30	38	0.42	0.46	0.46	0.17	-	-	-	-	7.5
6	4	8	7	7	<2	-	0.19	0.34	0.25	0.17	0.19	0.19	0.19	0.17	8.6
6	4	7	7	7	2<3	43	0.19	0.27	0.21	0.17	-	-	-	-	8.2
6	4	7	7	7	3-5	39	0.17	0.21	0.19	0.17	-	-	-	-	8.2
6	4	7	7	7	10	39	0.17	0.20	0.21	0.17	-	-	-	-	8.2
6	4	7	7	7	15	38	0.18	0.27	0.27	0.17	-	-	-	-	8.2
6	4	7	7	7	20	38	0.24	0.34	0.35	0.17	-	-	-	-	8.2
6	4	7	7	7	25	38	0.29	0.43	0.42	0.17	-	-	-	-	8.2
6	4	7	7	7	30	38	0.35	0.51	0.52	0.17	-	-	-	-	8.2
6	5	8	7	7	<2	-	0.19	0.37	0.28	0.17	0.19	0.19	0.19	0.17	9.3
6	5	7	7	7	2<3	43	0.17	0.30	0.24	0.17	-	-	-	-	8.9
6	5	7	7	7	3-5	43	0.17	0.23	0.21	0.17	-	-	-	-	8.9
6	5	7	7	7	10	39	0.17	0.22	0.23	0.17	-	-	-	-	8.9
6	5	7	7	7	15	38	0.17	0.28	0.29	0.17	-	-	-	-	8.9
6	5	7	7	7	20	38	0.20	0.37	0.38	0.17	-	-	-	-	8.9
6	5	7	7	7	25	38	0.25	0.45	0.46	0.17	-	-	-	-	8.9
6	5	7	7	7	30	38	0.30	0.54	0.55	0.17	-	-	-	-	8.9
6	6	8	7	7	<2	-	0.19	0.38	0.30	0.17	0.19	0.19	0.19	0.17	10.0
6	6	7	7	7	2<3	52	0.17	0.32	0.26	0.17	-	-	-	-	9.6
6	6	7	7	7	3-5	52	0.17	0.24	0.22	0.17	-	-	-	-	9.6
6	6	7	7	7	10	43	0.17	0.23	0.24	0.17	-	-	-	-	9.6
6	6	7	7	7	15	39	0.17	0.29	0.31	0.17	-	-	-	-	9.6
6	6	7	7	7	20	39	0.18	0.38	0.39	0.17	-	-	-	-	9.6
6	6	7	7	7	25	38	0.23	0.46	0.48	0.17	-	-	-	-	9.6
6	6	7	7	7	30	38	0.27	0.55	0.57	0.17	-	-	-	-	9.6

① For Box Length = 8'-0"

② A_{S1} thru A_{S4}, A_{S7} and A_{S8} are minimum required areas of reinforcement per linear foot of box length. A_{S6} and A_{S5} are minimum required areas of reinforcement per linear foot of box width.

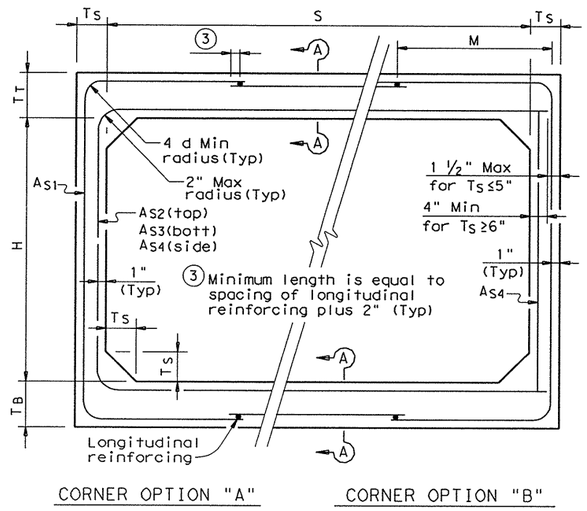

FILL HEIGHT 2 FT AND GREATER

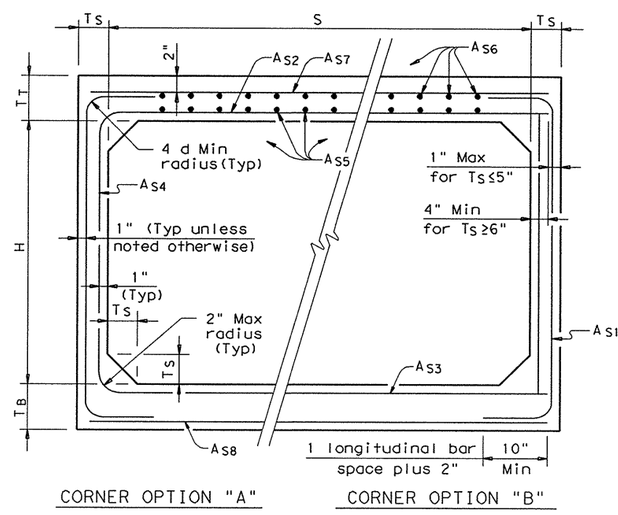

FILL HEIGHT LESS THAN 2 FT

SECTION A-A

(TOP AND BOTTOM SLAB JOINT REINFORCEMENT)

GENERAL NOTES:

Designs shown conform to ASTM C1577. Refer to ASTM C1577 for information or details not shown.

All concrete shall be Class "H" Concrete with a minimum compressive strength of 5,000 psi.

See SCP-MD standard sheet for miscellaneous details and notes not shown.

In lieu of furnishing the designs shown on this sheet, the contractor may furnish an alternate design that is equal to or exceeds the box design for the design fill height in the table. Shop plans for alternate designs shall be submitted in accordance with Item "Precast Concrete Structures".

HL93 LOADING

Texas Department of Transportation
Bridge Division

SINGLE BOX CULVERTS PRECAST
6'-0" SPAN

SCP-6

FILE: scp06ste.dgn	DN: GAF	CK: LMW	DW: BWH/TxDOT	CK: GAF
©TxDOT February 2010	DISTRICT	FEDERAL AID PROJECT		SHEET
REVISIONS		2452-01-000		242
	COUNTY		CONTROL SECT JOB	HIGHWAY

DISCLAIMER:
The use of this standard is governed by the "Texas Engineering Practice Act". No warranty of any kind is made by TxDOT for any purpose whatsoever. TxDOT assumes no responsibility for the conversion of this standard to other formats or for incorrect results or damages resulting from its use.

ACC:
ED
LEVELS

TABLE OF DIMENSIONS & REINFORCING STEEL
(Wings for One Structure End)

Dimensions					Variable Reinforcing				Estimated ④ Quantities per ft of wing (2~Wings)		Estimated Quantities per ft of Toewall (1~Toewall)	
					Bars J1		Bars J2					
Maximum Wingwall Height Hw	W	X	Y	Z	Size	Spa	Size	Spa	Reinf (Lb/Ft)	Conc (CY/Ft)	Reinf (Lb/Ft)	Conc (CY/Ft)
2'-6"	2'-10"	10"	1'- 0"	7"	#4	1'-0"	#4	1'-0"	43.13	0.406	6.85	0.071
2'-9"	2'-10"	10"	1'- 0"	7"	#4	1'-0"	#4	1'-0"	43.80	0.424	6.85	0.071
3'-0"	2'-10"	10"	1'- 0"	7"	#4	1'-0"	#4	1'-0"	44.47	0.444	6.85	0.071
3'-3"	2'-10"	10"	1'- 0"	7"	#4	1'-0"	#4	1'-0"	47.81	0.462	6.85	0.071
3'-6"	2'-10"	10"	1'- 0"	7"	#4	1'-0"	#4	1'-0"	48.48	0.480	6.85	0.071
4'-0"	3'- 2"	1'- 2"	1'- 0"	7"	#4	1'-0"	#4	1'-0"	50.26	0.532	6.85	0.071
4'-6"	3'- 2"	1'- 2"	1'- 0"	7"	#4	1'-0"	#4	1'-0"	54.27	0.568	6.85	0.071
5'-0"	3'- 9"	1'- 7"	1'- 2"	7"	#4	1'-0"	#4	1'-0"	57.94	0.632	6.96	0.075
5'-6"	3'- 9"	1'- 7"	1'- 2"	7"	#4	1'-0"	#4	1'-0"	61.95	0.668	6.96	0.075
6'-0"	4'- 4"	2'- 0"	1'- 4"	7"	#5	1'-0"	#5	1'-0"	75.16	0.730	7.07	0.078
6'-6"	4'- 4"	2'- 0"	1'- 4"	7"	#5	1'-0"	#5	1'-0"	79.54	0.768	7.07	0.078
7'-0"	5'- 0"	2'- 3"	1'- 9"	8"	#5	1'-0"	#5	1'-0"	86.65	0.864	8.07	0.093
7'-6"	5'- 0"	2'- 3"	1'- 9"	8"	#5	1'-0"	#5	1'-0"	91.03	0.902	8.07	0.093
8'-0"	5'- 6"	2'- 8"	1'-10"	8"	#5	6"	#5	6"	133.54	0.962	8.13	0.095
8'-6"	5'- 6"	2'- 8"	1'-10"	8"	#5	6"	#5	6"	138.96	1.000	8.13	0.095
9'-6"	6'- 0"	2'-10"	2'- 2"	9"	#5	6"	#5	6"	151.43	1.136	8.41	0.110
10'-6"	6'- 5"	3'- 0"	2'- 5"	9"	#6	6"	#5	6"	190.76	1.234	8.57	0.117
11'-6"	7'- 2"	3'- 6"	2'- 8"	11"	#6	6"	#6	6"	224.62	1.438	9.52	0.140
12'-6"	7'- 8"	3'- 9"	2'-11"	1'- 0"	#7	6"	#6	6"	277.90	1.592	9.74	0.157
13'-6"	8'- 2"	4'- 0"	3'- 2"	1'- 2"	#8	6"	#6	6"	343.21	1.804	10.02	0.186
14'-6"	8'-10"	4'- 5"	3'- 5"	1'- 4"	#9	6"	#6	6"	427.43	2.046	10.30	0.218
15'-6"	9'- 6"	4'-10"	3'- 8"	1'- 6"	#9	6"	#7	6"	484.01	2.302	11.24	0.253
16'-0"	9'-11"	5'- 0"	3'-11"	1'- 7"	#9	6"	#7	6"	500.21	2.448	11.47	0.279

TABLE OF WINGWALL REINFORCING (2~Wings)

Bar	Size	No.	Spa
D1	#6	~	1'-0"
D2	#6	~	1'-0"
E1	#4	~	1'-0"
F	#4	~	1'-0"
G	#6	~	8"
M1	#4	4	~
P	#4	~	1'-0"
V	#4	~	1'-0"

TABLE OF TOEWALL REINFORCING

Bar	Size	No	Spa
J3	#4	~	1'-0"
M2	#4	2	~
E2	#4	~	1'-0"

WING DIMENSION CALCULATIONS:

Formulas: (All values are in Feet)

Hw = H + T + C

Lw = (Hw) (SL) ÷ Cosine (Φ)

For Cast-in-place culverts:

Ltw = [(N) (S) + (N + 1) (U)] ÷ (Cosine Φ)

For Precast culverts:

Ltw = [(N) (2 U + S) + (N − 1) (0.5′)] ÷ (Cosine Φ)

Total Wingwall Area (Two Wings ~ S.F.) = (2) (Hw) (Lw)

Hw = Height of Wingwall
Lw = Length of Wingwall
Ltw = Culvert Toewall Length
N = Number of Culvert Spans
SL:1 = Channel Slope ratio. (Horizontal: 1 Vertical, Usual value is 2:1)
Φ = Culvert Skew

See applicable box culvert standard for S, H, T and U values.

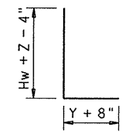

BARS J1

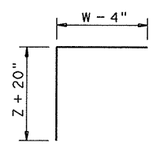

BARS J2

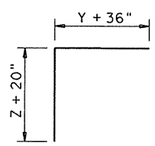

BARS J3

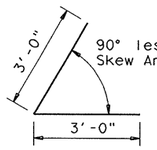

BARS D1

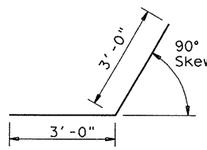

BARS D2

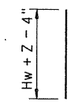

BARS V

GENERAL NOTES:

Designed according to AASHTO LRFD Specifications.
All reinforcing steel shall be Grade 60.
All concrete shall be Class "C" and shall have a minimum compressive strength of 3600 psi.
All reinforcing bars shall be adjusted to provide a minimum of 1 ¼" clear cover.
When structure is founded on solid rock, depth of toewalls for culverts and wingwalls may be reduced or eliminated as directed by the Engineer.
See BCS sheet for additional dimensions and information.
The quantities for concrete and reinforcing steel resulting from the formulas given on this sheet are for Contractor's information only.

① Skew Angle = 0°
② At discharge end, chamfer may be ¾".
③ For 15° Skew ~ 1"
For 30° Skew ~ 2"
For 45° Skew ~ 3"
④ Quantities shown are for two wings. To determine total quantities for two wings, multiply the tabulated values by Lw.
⑤ Provide weepholes for Hw = 5′-0" and greater. Fill around weepholes with coarse gravel.
⑥ Extend Bars E1 1′-6" minimum into the bottom slab of the culvert.
⑦ Lap Bars M1 1′-6" minimum with Bars M2.
⑧ Bars G shall be equally spaced at 8" maximum, placed as shown. There shall be at least two pair Bars G per wing.
⑨ 0" min to 5′-0" max. Estimated curb heights are shown elsewhere in the plans. For structures with pedestrian rail, bicycle rail or curbs taller than 1′-0", refer to ECD standard. For structures with T6 bridge rail, refer to T6-CM standard. For structures with traffic rail, other than T6, refer to RAC standard.
⑩ For vehicle safety, the following requirements must be met:
- For structures without bridge rail, curbs shall project no more than 3" above finished grade.
- For structures with bridge rail, curbs shall be flush with finished grade.
Curb heights shall be reduced, if necessary, to meet the above requirements. No changes will be made in quantities and no additional compensation will be allowed for this work.
⑪ 1′-0" typical. 2′-0" typical when RAC standard is referenced elsewhere in the plans.

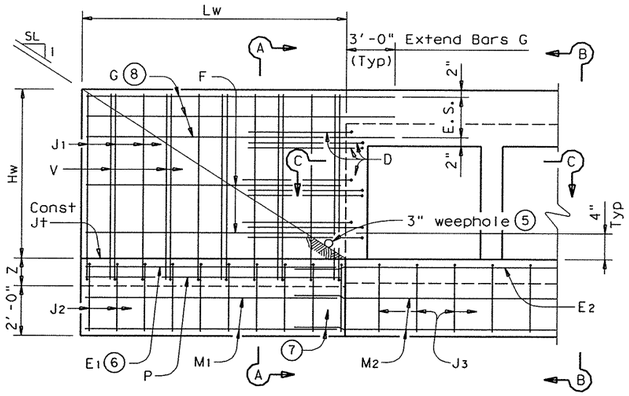

PARTIAL ELEVATION

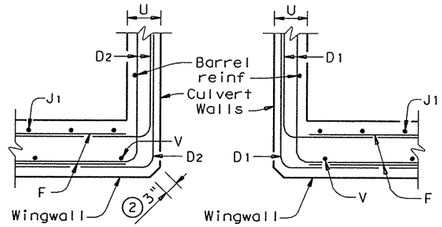

SECTION C-C

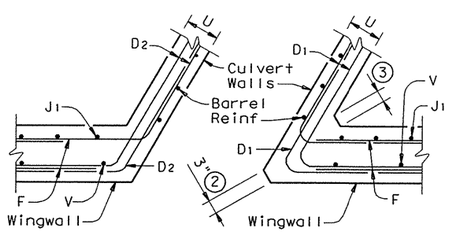

SECTION C-C

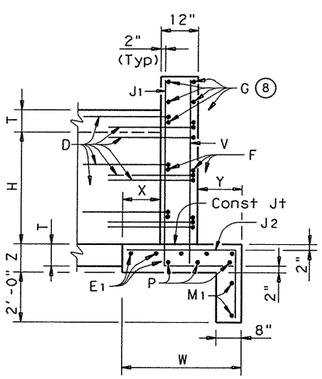

SECTION A-A
(Showing Wing Reinf)

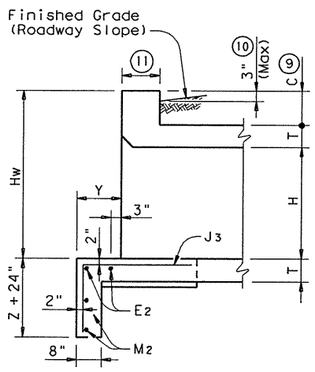

SECTION B-B
(Showing Toewall Reinf)

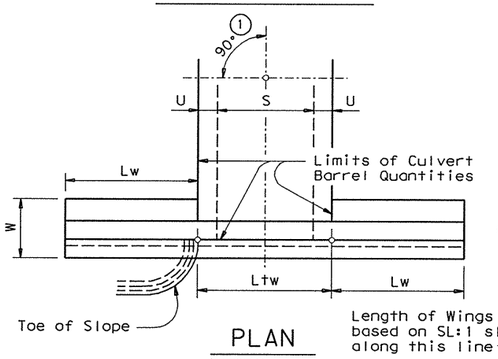

PLAN

DETAILS FOR NON-SKEWED BOX CULVERTS

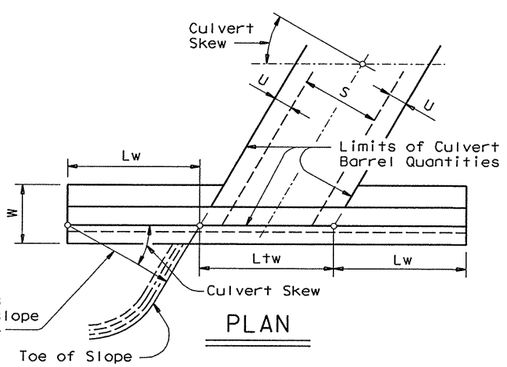

PLAN

DETAILS FOR SKEWED BOX CULVERTS
(Showing 30° Skew)

Texas Department of Transportation
Bridge Division

CONCRETE WINGWALLS
WITH PARALLEL WINGS FOR SKEWED AND NON-SKEWED BOX CULVERTS

PW

FILE: pwstde01.dgn	DN: GAF	CK: CAT	DW: TxDOT	CK: GAF
©TxDOT February 2010	DISTRICT	FEDERAL AID PROJECT		SHEET
REVISIONS		2452-01-050		243
	COUNTY	CONTROL	SECT	JOB	HIGHWAY

Culvert Station and/or Creek name followed by applicable end (Lt, Rt or Both)	Description of Box Culvert No. Spans ~ Span X Height	Max Fill Height (Ft)	Applicable Box Culvert Standard (4)	Applicable Wingwall or End Treatment Standard	Skew Angle (0°, 15°, 30° or 45°)	Side Slope or Channel Slope Ratio (SL:1)	T Culvert Top Slab Thickness (In)	U Culvert Wall Thickness (In)	C Estimated Curb Height (Ft)	Hw (1) Height of Wingwall (Ft)	A Curb to End of Wingwall (Ft)	B Offset of End of Wingwall (Ft)	Lw Length of Longest Wingwall (Ft)	Ltw Culvert Toewall Length (Ft)	Atw Anchor Toewall Length (Ft)	Riprap Apron (C.Y.)	Class "C" (2) Conc (Curb) (C.Y.)	Class "C" (3) Conc (Wingwall) (C.Y.)	Total Wingwall Area (S.F.)
CULVERT 9 LT	2 ~ 6' X 4'	4'	SCP-6	PW	21°	4:1	7"	7"	1'	5.58'	N/A	N/A	23.91'	15.87'	N/A	23.9	0.6	17.9	267
CULVERT 9 RT	2 ~ 6' x 4'	4'	SCP-6	PW	21°	2:1	7"	7"	1'	5.58'	N/A	N/A	11.95'	15.87'	N/A	N/A	0.6	9.6	133
CULVERT 10 LT	3 ~ 6' X 4'	8'	SCP-6	PW	21°	2:1	7"	7"	1'	5.58'	N/A	N/A	11.83'	23.85'	N/A	N/A	0.9	10.2	132
CULVERT 10 RT	3 ~ 6' X 4'	8'	SCP-6	PW	21°	3:1	7"	7"	1'	5.58'	N/A	N/A	17.75'	23.85'	N/A	13.0	0.9	14.3	198

DISCLAIMER:
The use of this standard is governed by the "Texas Engineering Practice Act". No warranty of any kind is made by TxDOT for any purpose whatsoever. TxDOT assumes no responsibility for the conversion of this standard to other formats or for incorrect results or damages resulting from its use.

LEVELS DIS:
1 2 3 4 5 6 7 8 9 10 11 12 13 14 15 16
17 18 19 20 22 22 24 25 26 27 28 29 30 31 32
33 34 35 36 37 38 39 40 41 42 43 44 45 46 47 48
49 50 51 52 53 54 55 56 57 58 59 60 61 62 63

COMMENTS:

NOTES:
Skew Angle = 0° for SW-0, FW-0, SETB-CD, SETB-SW-0, and SETB-FW-0 standards.
30° Maximum for Safety End Treatment

SL:1 = Horizontal:1 Vertical
Side Slope at culvert for Flared or Straight Wingwalls. Channel Slope for Parallel Wingwalls.
Slope shall be 3:1 or flatter for Safety End Treatments.

T = Box Culvert Top Slab Thickness. Dimension can be found on the applicable Box Culvert Standard.

U = Box Culvert Wall Thickness. Dimension can be found on the applicable Box Culvert Standard.

C = Curb Height.

See applicable wing or end treatment standards for calculations of Hw, A, B, Lw, Ltw, Atw, and Total Wingwall Area.
Hw = Height of Wingwall.
A = Distance from Face of Curb to End of Wingwall (Not applicable to Parallel or Straight Wingwalls).
B = Offset of End of Wingwall (Not applicable to Parallel or Straight Wingwalls).
Lw = Length of Longest Wingwall.
Ltw = Length of Culvert Toewall (Not applicable when using Riprap Apron).
Atw = Length of Anchor Toewall (Applicable to Safety End Treatment only).
Total Wingwall Area = Wingwall area in S.F. for two wingwalls (one structure end) if Lt or Rt.
Area for four wingwalls (two structure ends) if Both.

(1) The wall heights shown will be rounded to the nearest Foot for bidding purposes.

(2) Concrete volume shown is for box culvert curb only. For curbs using the RAC standard, quantities shown must be increased by a factor of 2. If Class "S" concrete is required for the top slab of the culvert, the curb concrete shall also be Class "S". Curb concrete is considered part of the Box Culvert for payment.

(3) Concrete volume shown is total of wing, footing, culvert toewall (if any), anchor toewall (if any) and wingwall toewall. Riprap apron, culvert and curb quantities are not included.

(4) Regardless of the type of culvert shown on this sheet, the Contractor shall have the option of furnishing cast-in-place or precast culverts unless otherwise shown elsewhere on the plans. If the Contractor elects to provide culverts of a different type than those shown on this sheet, it shall be the Contractor's responsibility to make the necessary adjustments to the dimensions and quantities shown.

SPECIAL NOTE:

This sheet is a supplement to the Box Culvert standards. It is to be filled out by the culvert specifier and provides dimensions for the construction of the Box Culvert Wingwalls and Safety End Treatments.

An Excel 97 spreadsheet to assist in completing this table can be downloaded from the Bridge Standards (English) web page on the TxDOT web site. The completed sheet shall be signed, sealed, and dated by a licensed Professional Engineer.

STATE OF TEXAS
SCOTT D. ARMSTRONG
69320
LICENSED PROFESSIONAL ENGINEER

SCOTT D. ARMSTRONG, P.E. 6/28/2010
DATE

Texas Department of Transportation
Bridge Division

BOX CULVERT SUPPLEMENT
WINGS AND END TREATMENTS

BCS

FILE: bcsstde1.dgn	DN: TxDOT	CK: TxDOT	DW: TxDOT	CK: GAF
©TxDOT February 2010	DISTRICT	FEDERAL AID PROJECT		SHEET
REVISIONS		2452-01-050		244
	COUNTY	CONTROL	SECT	JOB	HIGHWAY

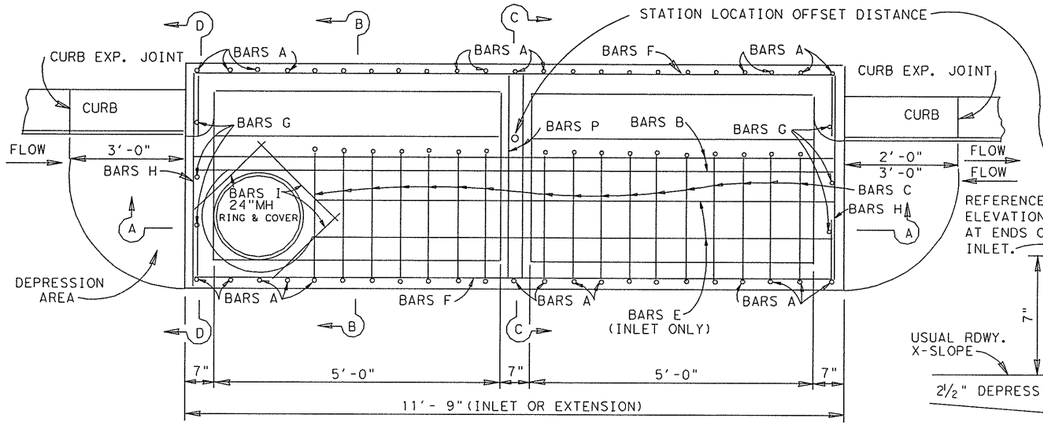

PLAN
(INLET OR EXTENSION)

NOTE: RING & COVER SHOWN ABOVE IS TO BE PLACED IN INLET ONLY.
FOR EXTENSION, CONTINUE REINF. STEEL THRU THIS AREA.

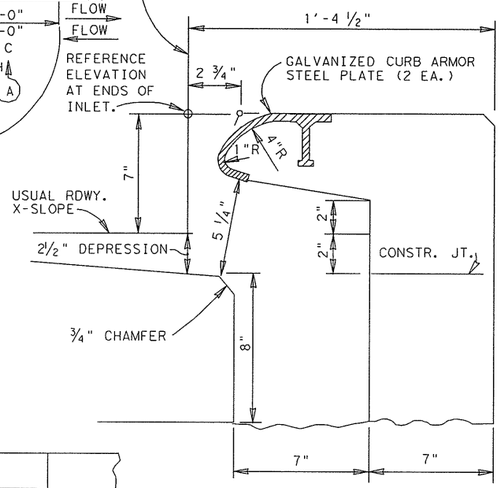

THROAT DETAIL

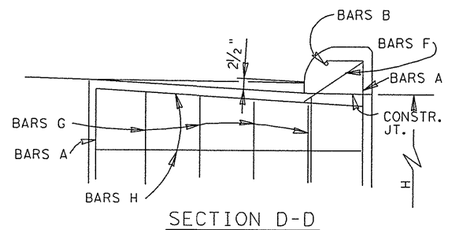

SECTION D-D
(WITHOUT BLOCKOUT)

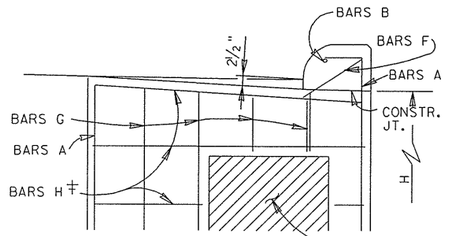

‡CUT OR BEND STEEL FOR BLOCKOUT AREA.

SECTION D-D
(WITH BLOCKOUT)

REINFORCING STEEL

ESTIMATED QUANTITIES - FOR "H" = 4'-10"					
BAR	NO.	SIZE	SPAC	LENGTH	WEIGHT
A	29	#4	5"	16'-8"	323
B	5	#5	3"	11'-5"	60
C	17	#5	6"	5'-7"	99
D	2	#5	—	7'-8"	16
E	2	#4	8"	9'-5"	13
F	17	#4	11"	14'-1"	160
G	6	#4	11"	4'-11"	20
H	10	#4	11"	4'-4"	29
I	3	#4	-	2'-4"	5
P	6	#5	-	4'-4"	27
TOTAL - REINF. STEEL - LBS.					752 ✳
TOTAL - CLASS "C" CONC. - CY.					5.60 ✳

✳ FOR CONTRACTOR'S INFORMATION ONLY.
NO DEDUCTION MADE FOR PIPES.
QUANTITIES SHOWN ARE FOR "H" = 4'-10".
"H" MAY VARY

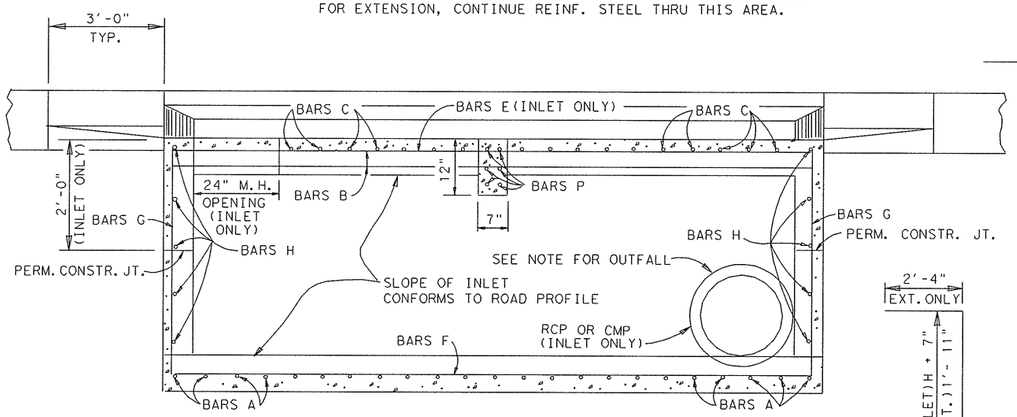

SECTION A-A

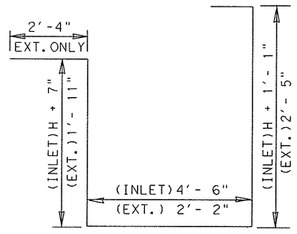

BAR A

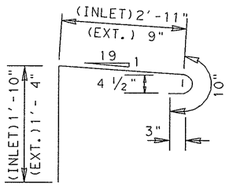

BAR C

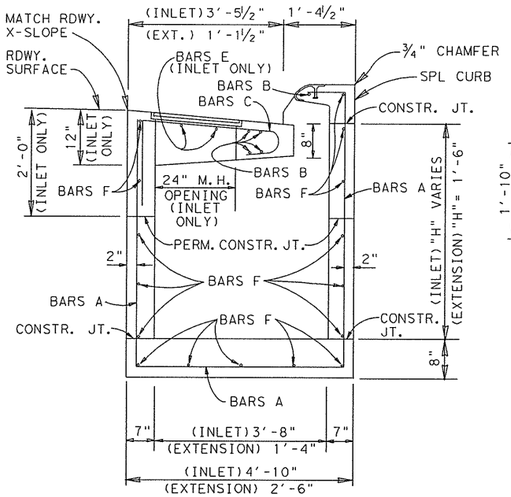

SECTION B-B

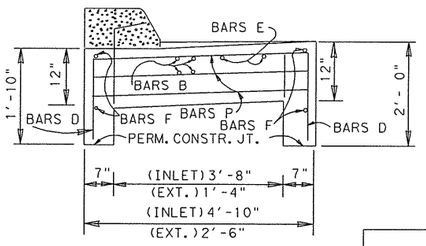

SECTION C-C
BEAM DETAIL

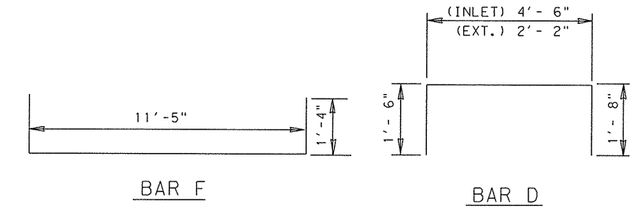

BAR F

BAR D

BAR DETAILS

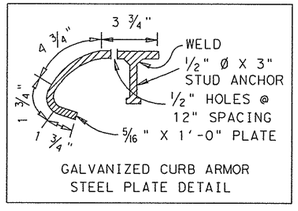

GALVANIZED CURB ARMOR
STEEL PLATE DETAIL

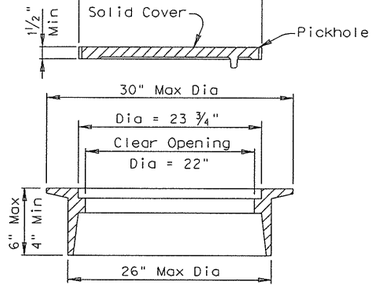

RING AND COVER DETAILS
Approximate Weight = 255 lb

GENERAL NOTES :

CURB MUST BE CAST-IN-PLACE FROM BEGIN GUTTER TRANSITION TO END GUTTER TRANSITION INCLUDING OVER INLET.

OUTFALL PIPES WHICH LAY TRANSVERSE TO ROADWAY, AT INLETS ON GRADE, WILL BE PLACED AT LOW END OF INLET. OTHER PIPES MAY BE PLACED ON ANY SIDE OF INLET.

ALL EXPOSED CORNERS SHALL HAVE A ¾" CHAMFER.

FOR REINFORCING STEEL AND CONCRETE QUANTITIES FOR THE EXTENSION, SEE SHEET 2 OF 2.

IF THE ROADWAY CURB HEIGHT DOES NOT MATCH THE TOP OF THE INLET, TRANSITION THE ROADWAY CURB AT 40:1

PAYMENT FOR CONC., REINF. STEEL, M H RING & COVER, CURB ARMOR AND STEPS SHALL BE INCLUDED IN UNIT COST OF ITEM 465 "MANHOLE & INLETS".

SAN ANTONIO DISTRICT STANDARD

CURB INLET TYPE C WITH INLET EXTENSION TYPE C-E

© 1999 Texas Department of Transportation

SHEET 1 OF 2

FED.RD. DIV.NO.	PROJECT NO.			SHEET NO.
6	2952-01-059			245
STATE	STATE DISTRICT	COUNTY		
TEXAS	SAT			
CONT.	SECT.	JOB	HIGHWAY NO.	

3/01

STRUCTURE DESIGN
/BRIDGE/STDS/CURB1NCE.DGN

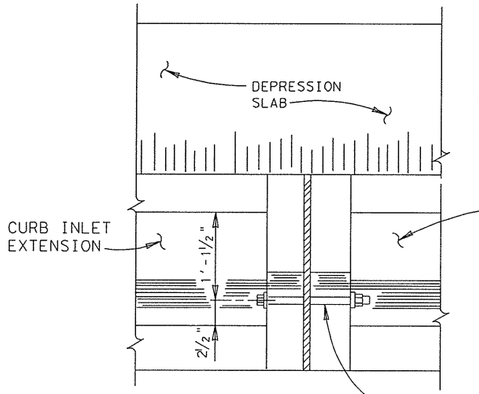

PLAN VIEW

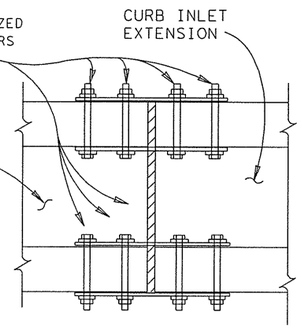

SECTION A-A

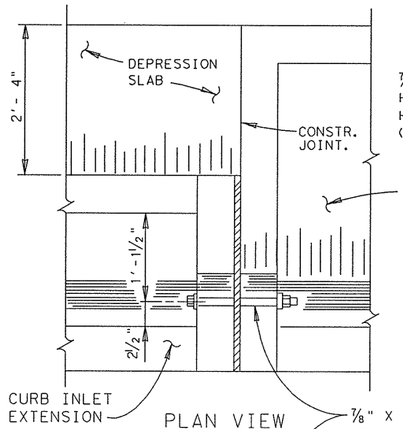

PLAN VIEW

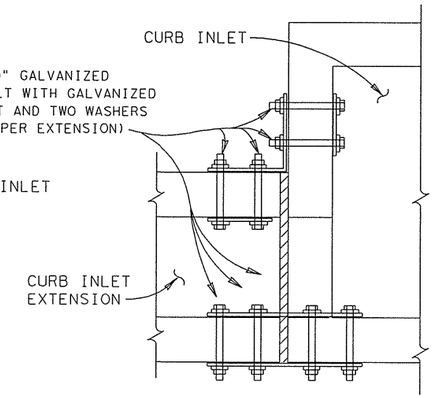

SECTION A-A

⅞" X 1'-3½" GALVANIZED HEX BOLT WITH GALVANIZED HEX NUT AND TWO WASHERS (1 EA. PER EXTENSION)

⅞" X 1'-3½" GALVANIZED HEX BOLT WITH GALVANIZED HEX NUT AND TWO WASHERS (1 EA. PER EXTENSION)

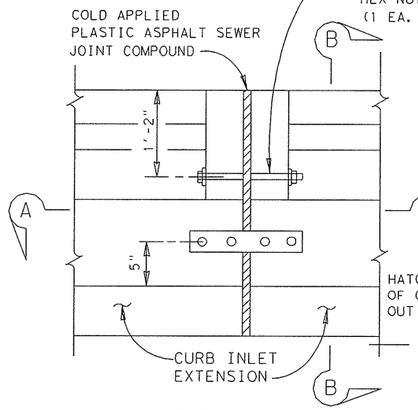

ELEVATION

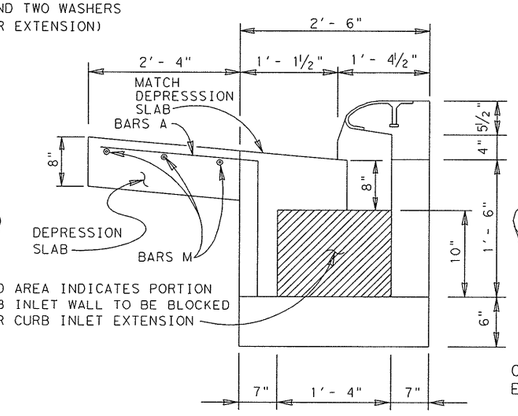

SECTION B-B

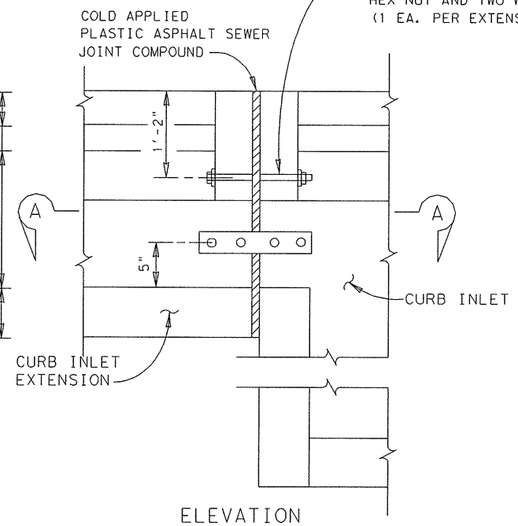

ELEVATION

INLET BOLTING DETAILS

(SHOWING EXTENSION TO EXTENSION)

INLET BOLTING DETAILS

(SHOWING CURB INLET TO EXTENSION)

REINFORCING STEEL

ESTIMATED QUANTITIES - (EXTENSION)

BAR	NO.	SIZE	SPAC	LENGTH	WEIGHT
A	29	#4	5"	9'-8"	187
B	5	#5	3"	11'-5"	60
C	20	#5	6"	2'-11"	61
F	12	#4	11"	14'-1"	113
G	4	#4	11"	1'-11"	5
H	6	#4	11"	2'-2"	9
P	4	#5	-	2'-2"	9
M	3	#4	10"	11'-5"	23
D	2	#5	-	5'-0"	11
TOTAL - REINF. STEEL - LBS.					478 ✳
TOTAL - CLASS "C" CONC. - CY.					3.55 ✳
TOTAL - CLASS "C" CONC. - CY. DEPRESSION SLAB					0.80 ✳

✳ FOR CONTRACTOR'S INFORMATION ONLY.
NO DEDUCTION MADE FOR PIPES.
QUANTITIES SHOWN ARE FOR "H" = 4'-10".
"H" MAY VARY

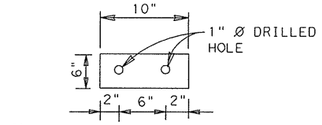

⅜" X 6" X 10" GALVANIZED STEEL BOLTING EXTENSION TO CURB INLET
2 EACH REQUIRED

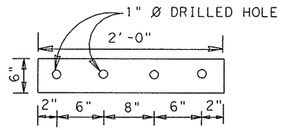

⅜" X 6" X 24" GALVANIZED STEEL BOLTING EXTENSION TO CURB INLET
2 EACH REQUIRED
BOLTING EXTENSION TO EXTENSION
4 EACH REQUIRED

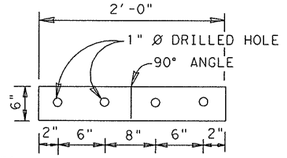

⅜" X 6" X 24" GALVANIZED STEEL BOLTING EXTENSION TO CURB INLET
1 EACH REQUIRED

PLATES

NOTES:
WHEN INLET EXTENSIONS ARE REQUIRED FOR ON GRADE INLETS THE EXTENSION(S) SHALL BE PLACED ON THE UPSTREAM END OF THE INLET.
FOR CURB INLET EXTENSION REINFORCING STEEL, NOTES & VARIOUS OTHER APPLICABLE DETAILS NOT FOUND ON THIS SHEET, REFER TO SHEET 1.

SAN ANTONIO DISTRICT STANDARD

CURB INLET EXTENSION

TYPE C-E

©1999 Texas Department of Transportation

SHEET 2 OF 2

FED.RD. DIV.NO.	PROJECT NO.			SHEET NO.
6	2452-01-050			246
STATE	STATE DISTRICT	COUNTY		
TEXAS	SAT	ORIG		
CONT.	SECT.	JOB	HIGHWAY NO.	

8/01

T:/ENGDATA/STANDARDS/CURBINCE.DGN

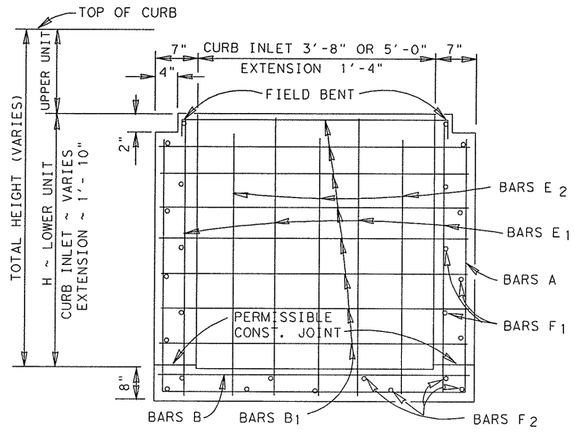

SECTION A-A

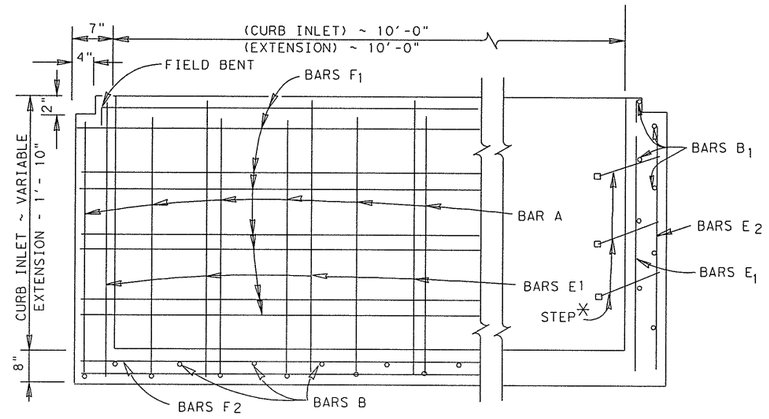

SECTION B-B

⚹ LOCATION OF STEPS IN CURB INLET (LOWER UNIT) ONLY, WILL BE DETERMINED BY THE LOCATION OF RING COVER PLACEMENT. STEPS @ 15" O.C.

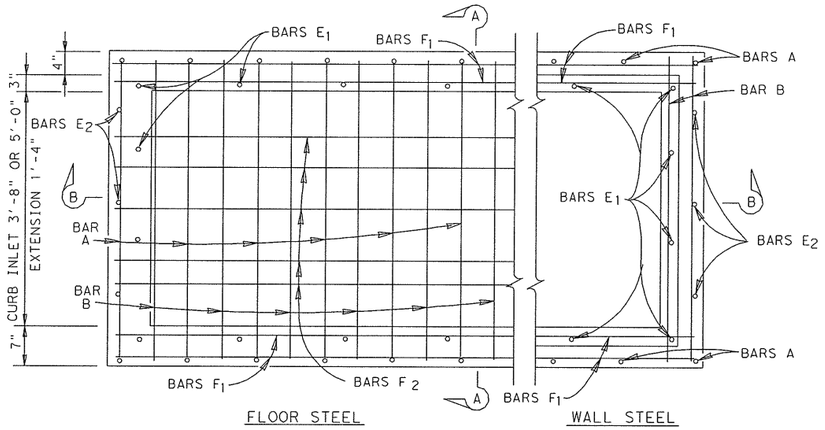

FLOOR STEEL

WALL STEEL

PLAN

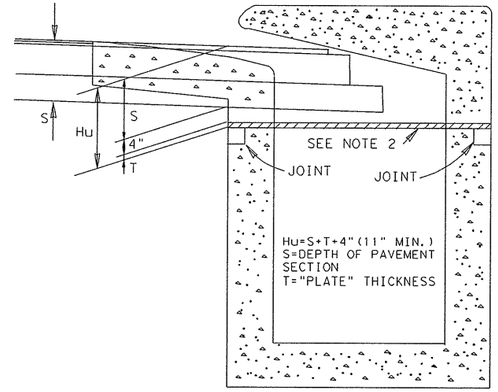

PHASE CONSTRUCTION

NOTES FOR PHASE CONSTRUCTION: (WHEN DIRECTED BY THE ENGINEER)

1. THE CURB INLET AND EXTENSION SHALL BE CONSTRUCTED TO A DEPTH "Hu" BELOW THE INLET AND EXTENSION GUTTER LINE ELEVATION.
2. CAP THE CURB INLET AND EXTENSION WITH A STEEL PLATE APPROVED BY THE ENGINEER AND CONSTRUCT THE ROADWAY OVER THE PLATE.
3. AFTER THE ROADWAY IS COMPLETED BUT PRIOR TO THE FINAL ACP, SAW CUT THE PAVEMENT, REMOVE THE PLATE AND COMPLETE THE UPPER PORTION OF THE CURB INLET AND/OR EXTENSION.

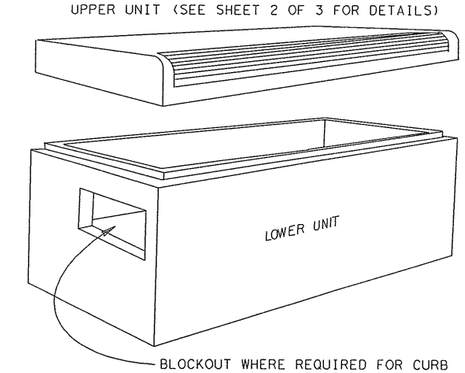

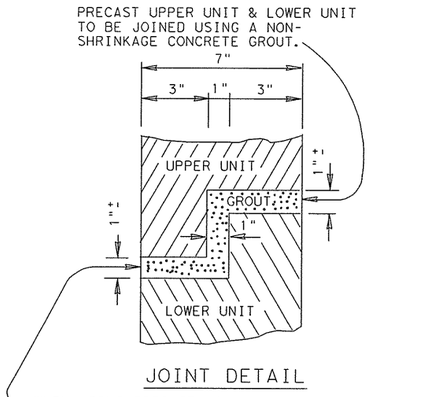

JOINT DETAIL

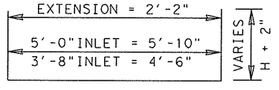

BARS A
(LOWER UNIT)

REINFORCING STEEL

LOWER UNIT 10' X 3'-8" (TY. I)				
BAR	NO.	SIZE	SPAC.	LENGTH
A	12	#4	12"	VARIES
B	11	#4	12"	4'-6"
B_1	VARIES	#4	12"	4'-6"
E_1	20	#4	18"±	VARIES
E_2	6	#4	18"±	VARIES
F_1	VARIES	#4	12"±	10'-10"
F_2	9	#4	—	10'-10"

LOWER UNIT 10' X 5'-0" (TY. II)				
BAR	NO.	SIZE	SPAC.	LENGTH
A	12	#4	12"	VARIES
B	11	#4	12"	5'-10"
B_1	VARIES	#4	12"	5'-10"
E_1	22	#4	18"±	VARIES
E_2	8	#4	18"±	VARIES
F_1	VARIES	#4	12"±	10'-10"
F_2	11	#4	—	10'-10"

GENERAL NOTES:

QUANTITIES SHOWN ARE FOR CONTRACTORS INFORMATION ONLY.
ALL DIMENSIONS RELATING TO REINFORCING STEEL ARE TO CENTER OF BARS.
ALL REINFORCING STEEL SHALL HAVE A MINIMUM COVER OF 1½".
ALL EXPOSED CORNERS SHALL BE CHAMFERED ¾".
DEPRESSION SLAB SHALL RECEIVE A WOOD FLOAT FINISH.
FACE OF INLET TO CONFORM TO FACE OF CURB LINE.
ALL BARS INTERCEPTING MANHOLE RING & COVER SHALL BE CUT OR BENT.
PAYMENT FOR CONC., REINF. STEEL, M H RING & COVER, CURB ARMOR AND STEPS SHALL BE INCLUDED IN UNIT COST OF ITEM 465 "MANHOLE & INLETS".
RING & COVER LOCATION WILL BE AS DIRECTED/APPROVED BY THE ENGINEER.
GALVANIZED BOLTS, NUTS, WASHERS, PLATES AND GASKETS ARE SUBSIDIARY TO INLETS.
THE CONTRACTOR SHALL PROVIDE AN ADEQUATE MEANS TO LIFT AND PLACE THE INLETS, WHEN USING PRECAST UNITS.
ALL BARS AT PIPE BLOCKOUT LOCATIONS SHALL BE CUT OR BEND.
ALL LOWER UNITS SHALL RECEIVE INVERT MORTAR SHAPING.
PIPE BLOCKOUTS IN INLET WALLS SHOULD NOT EXCEED 3" BEYOND THE OUTER SHELL OF THE PIPE, TAKING INTO ACCOUNT THE SKEW OF THE PIPE AS NECESSARY.
CONSTRUCTION JOINT MAY BE RAISED A MAXIMUM OF 6"

SAN ANTONIO DISTRICT STANDARD

CURB INLET
TYPE I & II WITH
INLET EXTENSION I/II-E

© 1999 Texas Department of Transportation

SHEET 1 OF 3

FED. RD. DIV. NO.	PROJECT NO.		SHEET NO.
6	2452-01-050		247
STATE	STATE DISTRICT	COUNTY	
TEXAS	SAT		
CONT.	SECT.	JOB	HIGHWAY NO.

3/01

STRUCTURE DESIGN
/BRIDGE/STDS/CURBINEXT.DGN

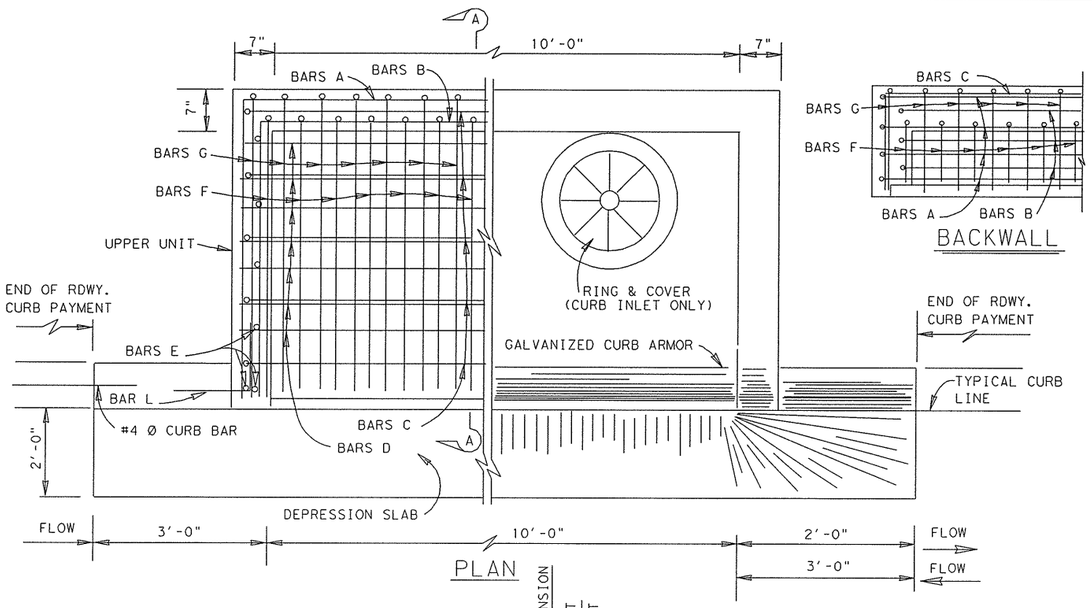

PLAN

BACKWALL

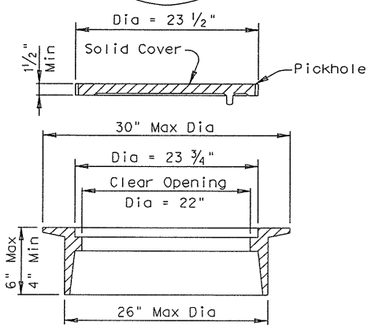

RING AND COVER DETAILS

Approximate Weight = 255 lb

REINFORCING STEEL (FOR Hu = 11")

UPPER UNIT 10' X 3'-8' (TY. I)					
BAR	NO.	SIZE	SPAC.	LENGTH	WEIGHT
A	4	#4	—	19'-10"	53
B	3	#4	—	18'-10"	38
C	5	#4	11"	13'-2"	44
D	7	#4	6"	10'-10"	51
E	12	#4	11"	1'-2"	9
F	21	#6	6"	4'-8"	147
G	22	#6	6"	5'-8"	187
H	4	#4	—	10'-10"	29
J	12	#4	12"	3'-6"	28
L	4	#4	—	2'-0"	5
M	3	#4	—	14'-8"	29
TOTAL WEIGHT				LBS.	620

UPPER UNIT 10' X 5' (TY. II)					
BAR	NO.	SIZE	SPAC.	LENGTH	WEIGHT
A	4	#4	—	22'-6"	60
B	3	#4	—	21'-6"	43
C	7	#4	11"	13'-2"	62
D	11	#4	6"	10'-10"	80
E	16	#4	11"	1'-2"	13
F	21	#6	6"	5'-8"	179
G	22	#6	6"	7'-0"	231
H	4	#4	—	10'-10"	29
J	12	#4	12"	3'-6"	28
L	4	#4	—	2'-0"	5
M	3	#4	—	14'-8"	29
TOTAL WEIGHT				LBS.	759

CL "A" CONCRETE QUANTITIES (FOR Hu = 11")

DEPRESSION SLAB	C.Y.
10' INLET	0.7
10' EXTENSION	0.7

UPPER UNIT (ONLY)	C.Y.
10' X 3'-8" CURB INLET	1.9
10' X 5'-0" CURB INLET	2.7
10' EXTENSION	1.0

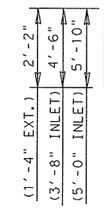

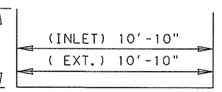

BAR A

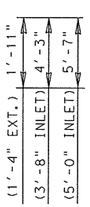

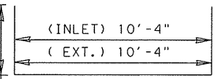

BAR B

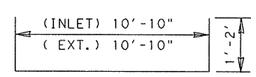

BAR C

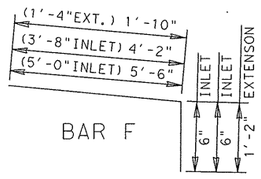

BAR F

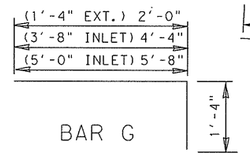

BAR G

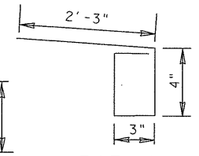

BAR J

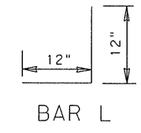

BAR L

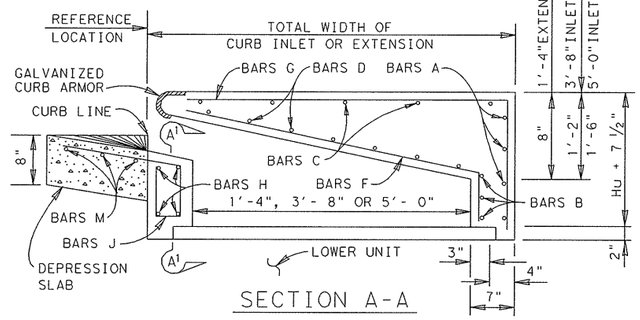

SECTION A-A

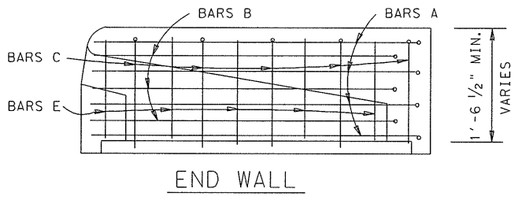

END WALL

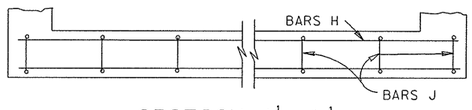

SECTION A1-A1

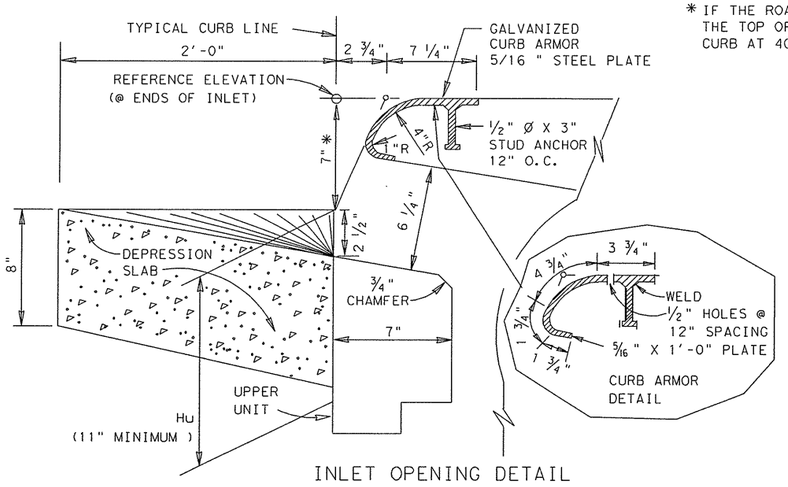

INLET OPENING DETAIL

* IF THE ROADWAY CURB HEIGHT DOES NOT MATCH THE TOP OF THE INLET, TRANSITION THE ROADWAY CURB AT 40:1.

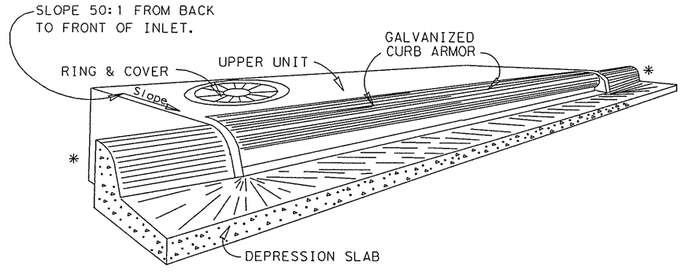

SEE SHEET 1 OF 3 FOR GENERAL NOTES.

SAN ANTONIO DISTRICT STANDARD

CURB INLET

TYPE I & II WITH INLET EXTENSION I/II-E

3/01

© 1999 Texas Department of Transportation

SHEET 2 OF 3

FED.RD. DIV.NO.	PROJECT NO.		SHEET NO.
6	2452-01-050		248
STATE	STATE DISTRICT	COUNTY	
TEXAS	SAT		
CONT.	SECT.	JOB	HIGHWAY NO.

STRUCTURE DESIGN
/BRISGE/STDS/CURBINEXT.DGN

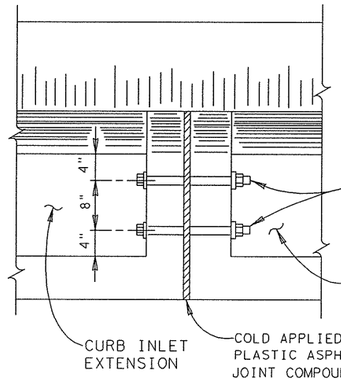

PLAN VIEW

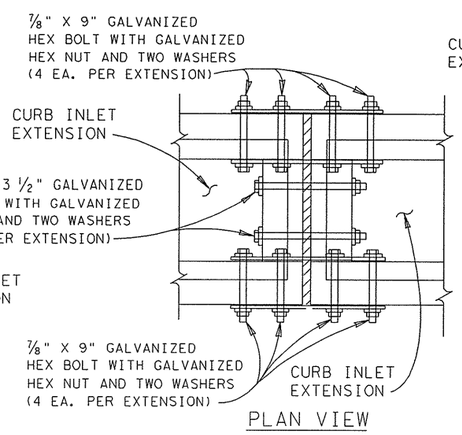

PLAN VIEW

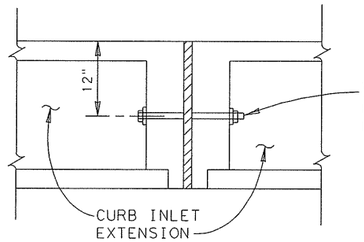

ELEVATION
UPPER UNIT

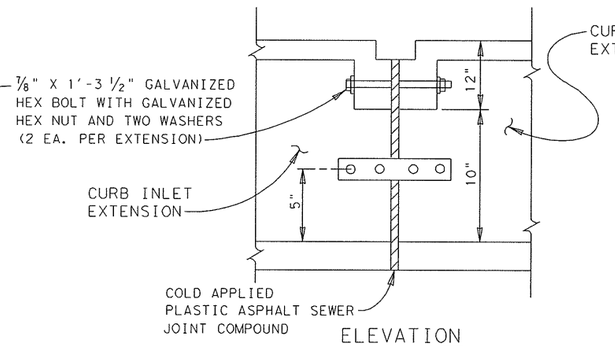

ELEVATION
LOWER UNIT

INLET BOLTING DETAILS

(SHOWING EXTENSION TO EXTENSION)

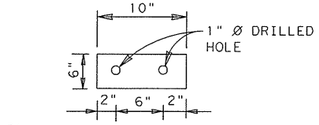

3/8" X 6" X 10" GALVANIZED STEEL BOLTING EXTENSION TO CURB INLET
2 EACH REQUIRED

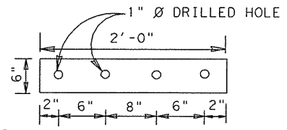

3/8" X 6" X 24" GALVANIZED STEEL BOLTING EXTENSION TO CURB INLET
2 EACH REQUIRED
BOLTING EXTENSION TO EXTENSION
4 EACH REQUIRED

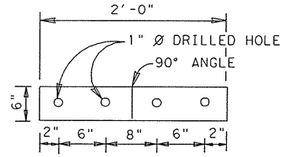

3/8" X 6" X 24" GALVANIZED STEEL BOLTING EXTENSION TO CURB INLET
1 EACH REQUIRED

PLATES

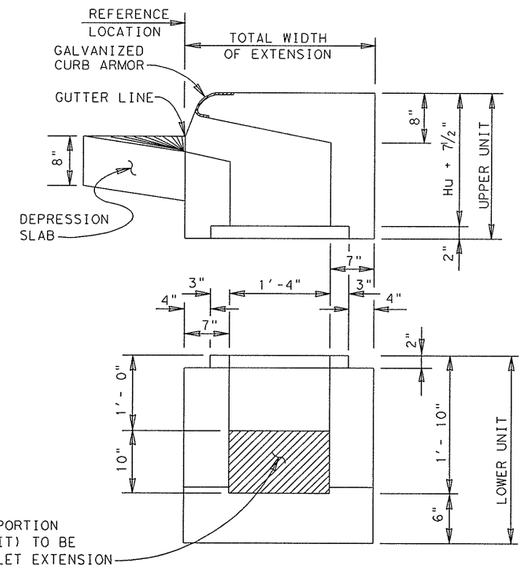

HATCHED AREA INDICATES PORTION OF CURB INLET (LOWER UNIT) TO BE BLOCKED OUT FOR CURB INLET EXTENSION

SECTION A-A CURB INLET EXTENSION TYPE E

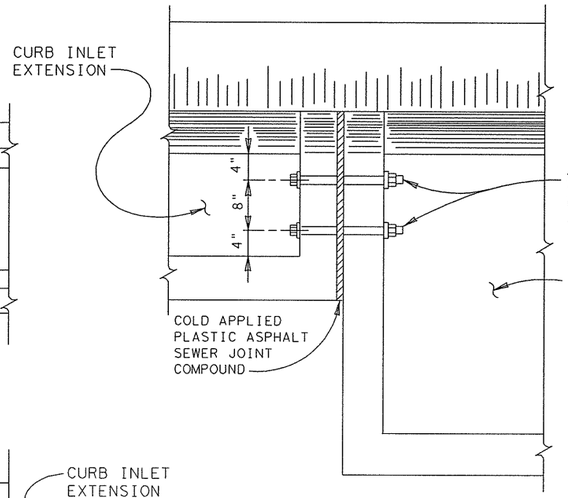

PLAN VIEW

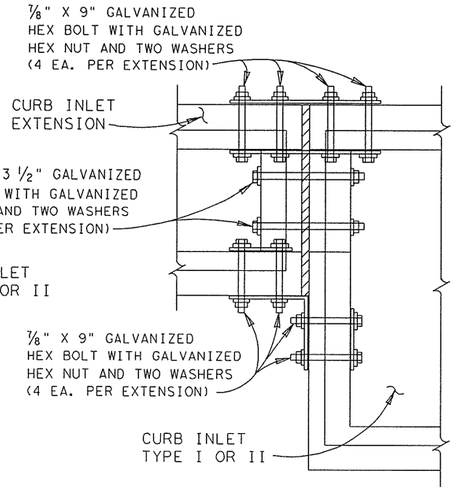

PLAN VIEW

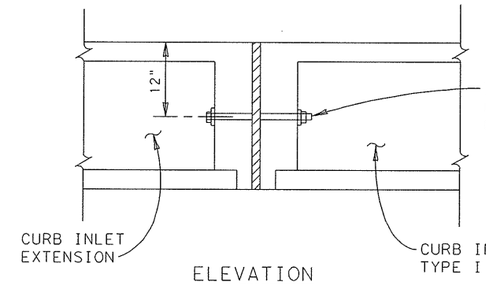

ELEVATION
UPPER UNIT

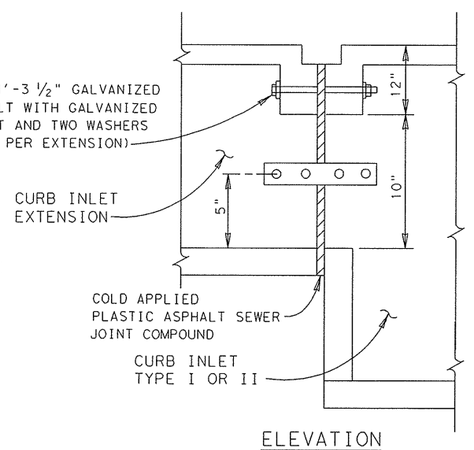

ELEVATION
LOWER UNIT

INLET BOLTING DETAILS

(SHOWING CURB INLET TO EXTENSION)

UPPER UNIT EXTENSION (FOR Hu = 11")					
BAR	NO.	SIZE	SPAC.	LENGTH	WEIGHT
A	4	#4	—	15'-2"	41
B	3	#4	—	14'-2"	28
C	3	#4	11"	13'-2"	26
D	3	#4	6"	10'-10"	22
E	8	#4	11"	1'-2"	6
F	21	#6	6"	2'-0"	63
G	22	#6	6"	3'-4"	110
H	4	#4	—	10'-10"	29
J	12	#4	12"	3'-6"	28
L	4	#4	—	2'-0"	5
M	3	#4	—	14'-8"	29
REINFORCING STEEL				LBS.	387
CL. "A" CONC.				C.Y.	1.0

LOWER UNIT EXTENSION					
BAR	NO.	SIZE	SPAC.	LENGTH	WEIGHT
A	12	#4	12"	6'-2"	49
B	11	#4	12"	2'-2"	16
B_1	3	#4	12"	2'-2"	4
E_1	18	#4	18"±	2'-3"	27
E_2	4	#4	18"±	2'-1"	6
F_1	16	#4	12"±	10'-10"	116
F_2	5	#4	—	10'-10"	36
REINFORCING STEEL				LBS.	254
CL. "A" CONC.				C.Y.	1.4

NOTES:
WHEN INLET EXTENSIONS ARE REQUIRED FOR ON GRADE INLETS THE EXTENSION(S) SHALL BE PLACED ON THE UPSTREAM END OF THE INLET.
FOR CURB INLET EXTENSION REINFORCING STEEL, NOTES & VARIOUS OTHER APPLICABLE DETAILS NOT FOUND ON THIS SHEET, REFER TO SHEETS 1 & 2.

SAN ANTONIO DISTRICT STANDARD

CURB INLET EXTENSION

TYPE I/II-E

© 1999 Texas Department of Transportation

FED. RD. DIV. NO.	PROJECT NO.		SHEET NO.
6	2452-01-050		249
STATE	STATE DISTRICT	COUNTY	
TEXAS	SAT		
CONT.	SECT.	JOB	HIGHWAY NO.

3/01

T:/ENGDATA/STANDARDS/CURBINEXT.DGN

DISCLAIMER:
The use of this standard is governed by the "Texas Engineering Practice Act". No warranty of any kind is made by TxDOT for any purpose whatsoever. TxDOT assumes no responsibility for the conversion of this standard to other formats or for incorrect results or damages resulting from its use.

PATH:

LEVELS DIS.

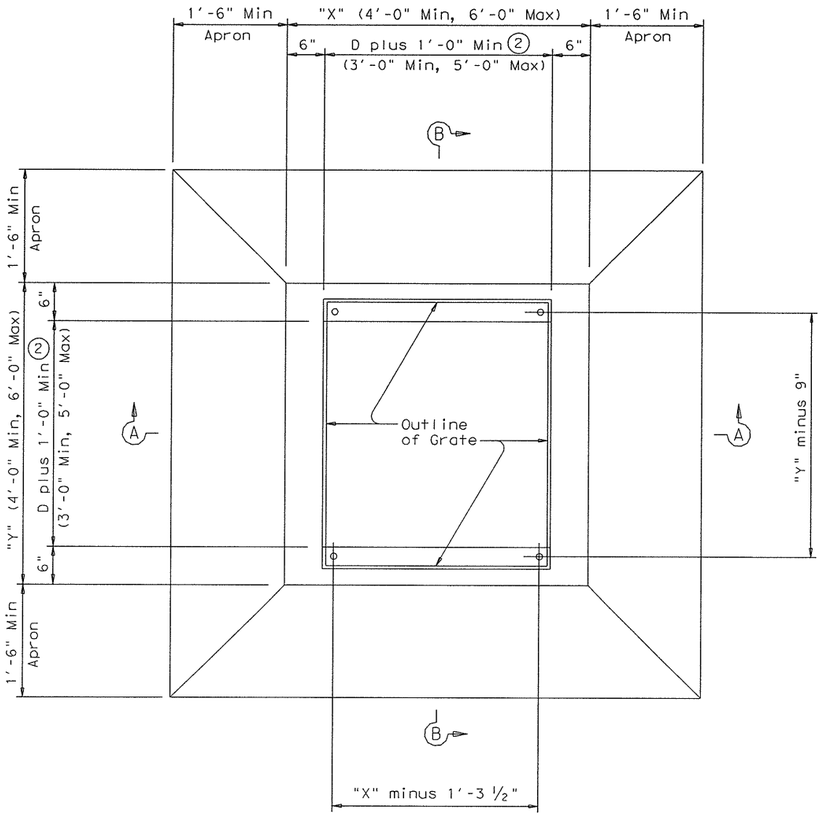

PLAN

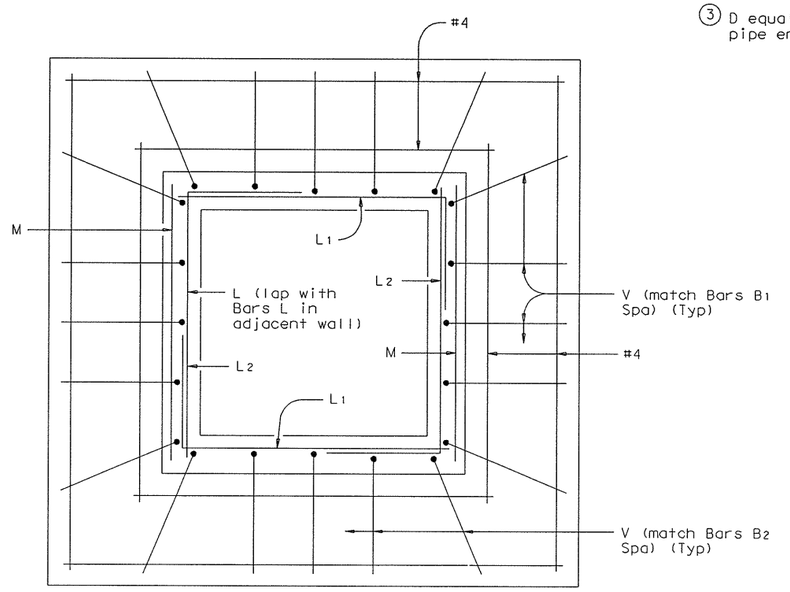

TYPICAL APRON PLAN
(Showing reinforcing in walls and in apron)

1. May be changed as directed by the Engineer.
2. D equals the maximum inside diameter of any pipe entering the wall shown or the opposite wall.
3. D equals the maximum inside diameter of any pipe entering the inlet.

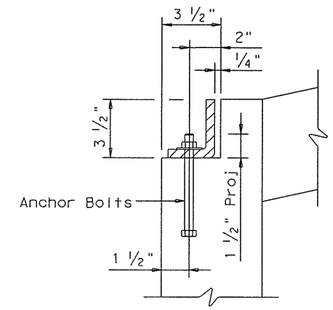

GRATE MOUNTING DETAIL

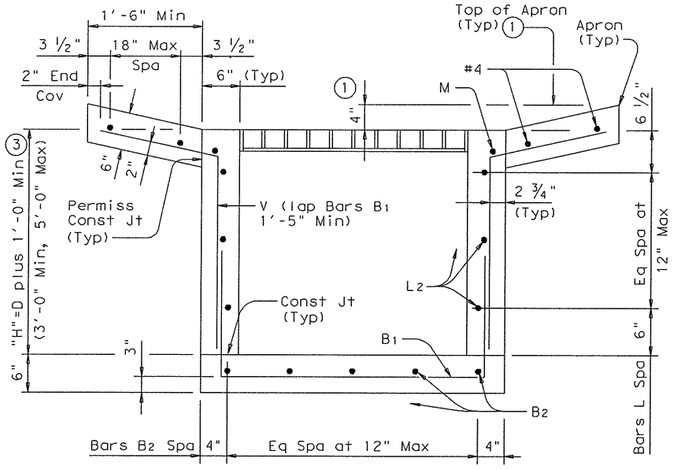

SECTION A-A

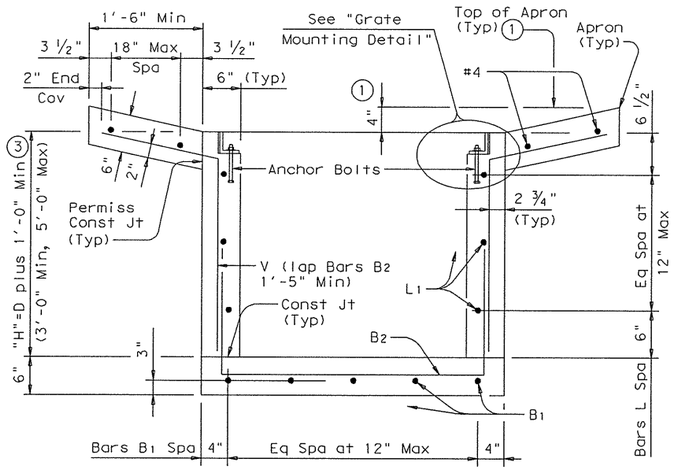

SECTION B-B

℄ ½" Dia x 6" Hex Head Anchor Bolt (ASTM-A307) or Threaded Rod (ASTM-A36) with one Plain Steel Washer placed under Hex Nut. One additional Hex Nut shall be furnished for each Threaded Rod.

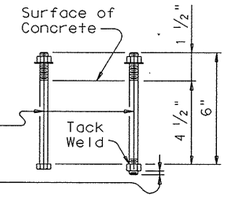

ANCHOR BOLT OPTIONS

SHEET 1 OF 2

Texas Department of Transportation
Bridge Division

HORIZONTAL INLET TYPE H WITH GRATE (MAX 48" DIA PIPES)

IL-H-G

FILE: ilhste01.dgn	DN: TxDOT	CK: TxDOT	DW: TxDOT	CK: TxDOT
©TxDOT February 2010	DISTRICT	FEDERAL AID PROJECT		SHEET
REVISIONS		2457-01-030		250
	COUNTY	CONTROL	SECT	JOB	HIGHWAY

DISCLAIMER:
The use of this standard is governed by the "Texas Engineering Practice Act". No warranty of any kind is made by TxDOT for any purpose whatsoever. TxDOT assumes no responsibility for the conversion of this standard to other formats or for incorrect results or damages resulting from its use.

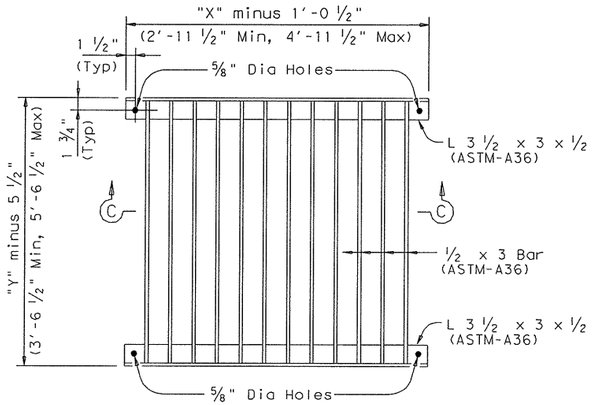

TYPICAL GRATE PLAN

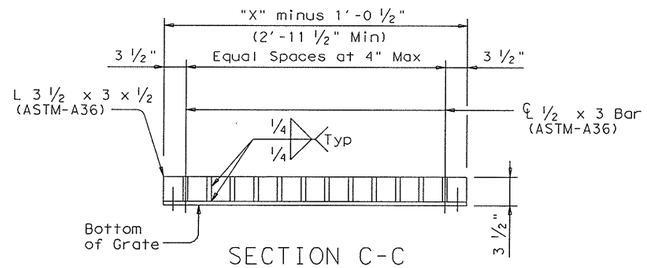

SECTION C-C

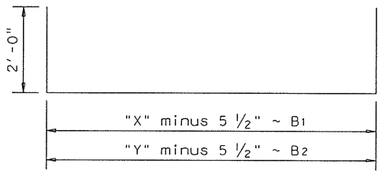

BARS B (#4)

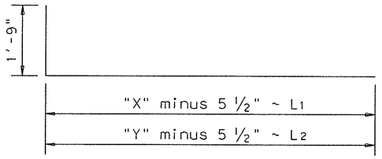

BARS L (#4)

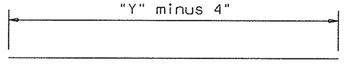

BARS M (#4)

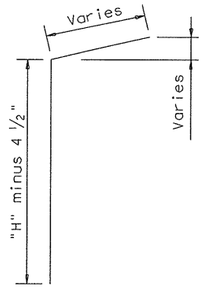

BARS V (#4)

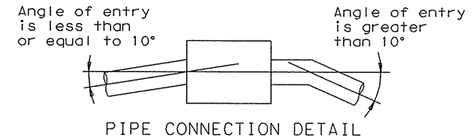

PIPE CONNECTION DETAIL

Connecting pipes should enter within 10° of normal to inlet wall. If necessary, pipe elbow or curved approach alignment should be used to stay within this limit.

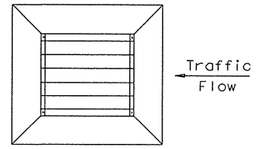

GRATE ORIENTATION DETAIL

If possible, horizontal grate inlet should be oriented such that both traffic and ditch water approach parallel to bars on grate. If this is not possible, orientation must favor traffic flow. Grate is not to be used under direct traffic, rather it is to be used in ditches and medians away from the roadway.

GENERAL NOTES:

When approved, precast inlets with equivalent structural capacity may be furnished. Sealed engineering calculations and drawings shall be submitted for approval prior to construction.

Shop drawings will not be required.

Apron shall be cast-in-place.

In areas of conflict between reinforcing steel, blockouts, pipes, anchor bolts or other reinforcing steel, the reinforcement shall be bent or adjusted to clear as directed by the Engineer.

Anchor Bolts are ½" Dia ASTM A307 Grade A bolts (or A36 threaded rods with one tack welded hex head nut each) with one hex head nut and one plain steel washer.

Structural Steel for grates shall conform to the requirements of ASTM Designation A-36 or AISI Designation M1010-M1020.

All reinforcing steel shall be Grade 60 unless otherwise noted.

All steel components except reinforcing, shall be galvanized after fabrication. Galvanizing damaged during transport or construction shall be repaired in accordance with the specifications.

All concrete shall be Class "A" (f'c = 3,000 psi).

Texas Department of Transportation
Bridge Division

HORIZONTAL INLET TYPE H WITH GRATE (MAX 48" DIA PIPES)

IL-H-G

FILE: ilhste01.dgn	DN: TxDOT	CK: TxDOT	DW: TxDOT	CK: TxDOT
©TxDOT February 2010	DISTRICT	FEDERAL AID PROJECT		SHEET
REVISIONS		2A52-01-030		251
	COUNTY		CONTROL SECT JOB	HIGHWAY

PATH:
LEVELS DIS-
1

Plotted on: 8/4/2010

Design Filename: p:\74\00\04\design\civil\traffic\740004SIG01-P1.dgn

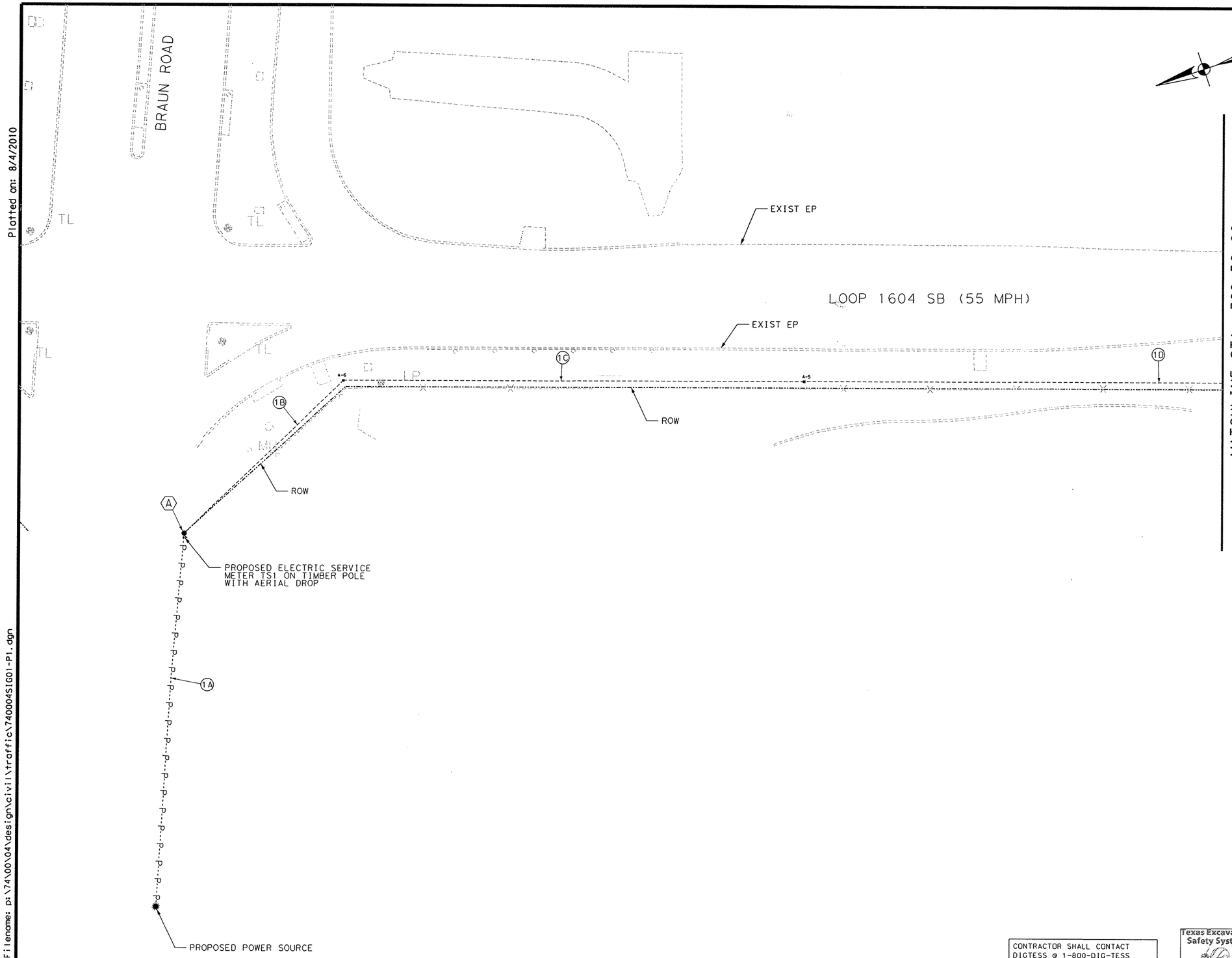

SIGNAL PLAN LEGEND

- NO 3½ GROUND BOX (PROPOSED) (TY A)
- NO 7 GROUND BOX (EXISTING) (TY D)
- NO 7 GROUND BOX (PROPOSED) (TY D)
- POLE (EXISTING OR RELOCATED)
- POLE (PROPOSED)
- POWER SOURCE (EXISTING OR RELOCATED)
- POWER SOURCE (PROPOSED)
- PROP. MODEL 332 CONTROLLER CABINET & FDN WITH BBS BATTERY BOX
- PROP. MODEL 332 CONTROLLER CABINET & FDN
- ELECTRIC SERVICE METER (EXISTING)
- ELECTRIC SERVICE METER (PROPOSED)
- CONDUIT (EXISTING)
- 3" CONDUIT SCHEDULE 80 (PROPOSED)
- SIGNAL HEAD (EXISTING)
- SIGNAL HEAD (TEMPORARY)
- SIGNAL HEAD (PROPOSED)
- SIGN
- MAST ARM POLE & FOUNDATION (PROPOSED)
- PED SIGNAL AND PUSHBUTTON (EXISTING)
- PED SIGNAL AND PUSHBUTTON (PROPOSED)
- V.I.V.D.S CAMERA & MOUNT (EXISTING)
- V.I.V.D.S CAMERA & MOUNT (PROPOSED)
- 2" CONDUIT STUBOUT & CAP
- RPDD RADAR PRESENCE DETECTOR
- RADD RADAR ADVANCE DETECTOR
- AP WIRELESS ACCESS POINT
- CCTV TRAFFIC SURVEILLANCE SYSTEM 4PTZ
- OPTICOM DETECTOR (PROPOSED)
- XX CONDUIT IDENTIFIER
- X POLE & EQUIPMENT IDENTIFIER
- PROPOSED ILLUMINATION POLE AND LUMINAIRE
- X ILLUMINATION IDENTIFIER

STATE OF TEXAS
GILMER D. GASTON
80472
LICENSED
PROFESSIONAL ENGINEER

GILMER D. GASTON P.E. — 8/4/2010 DATE

25 0 25 50
SCALE: PLAN - 1":50'

REV. NO.	DATE	DESCRIPTION	BY

ALAMO RMA

PAPE-DAWSON ENGINEERS

555 EAST RAMSEY | SAN ANTONIO, TEXAS 78216 | PHONE: 210.375.9000 FAX: 210.375.9010
TEXAS BOARD OF PROFESSIONAL ENGINEERS, FIRM REGISTRATION # 470

Texas Department of Transportation
© 2010

LOOP 1604

PROPOSED TRAFFIC SIGNAL LAYOUT

TURNAROUND #1 (NORTH OF NEW GUILBEAU ROAD)

SHEET 1 OF 5

DGN:	FED. RD. DIV. NO.	STATE	FEDERAL AID PROJECT NO.			HIGHWAY NO.
CHK DGN:	6	TEXAS	STP 2011(210)ES			LP 1604
DWG:	DIST.	COUNTY	CONT. NO.	SECT. NO.	JOB NO.	SHEET NO.
CHK DWG:	SAT	BEXAR	2452	01	050	252

CONTRACTOR SHALL CONTACT DIGTESS @ 1-800-DIG-TESS FOR LOCATION OF ALL UTILITIES AT LEAST 72 HOURS PRIOR TO BEGINNING CONSTRUCTION.

Texas Excavation Safety System

Plotted on: 6/29/2010

Design Filename: p:\74\00\04\design\civil\traffic\740004SIG01-P2.dgn

PROPOSED TRAFFIC SIGNS		
SIGN	DESCRIPTION	DESIGNATION
	R3-1, (36" x 36")	S1
	R10-5 (SPL), (30" x 36")	S2
	R6-1L, (48" x 16")	S3
	R3-2, (36" x 36")	S4

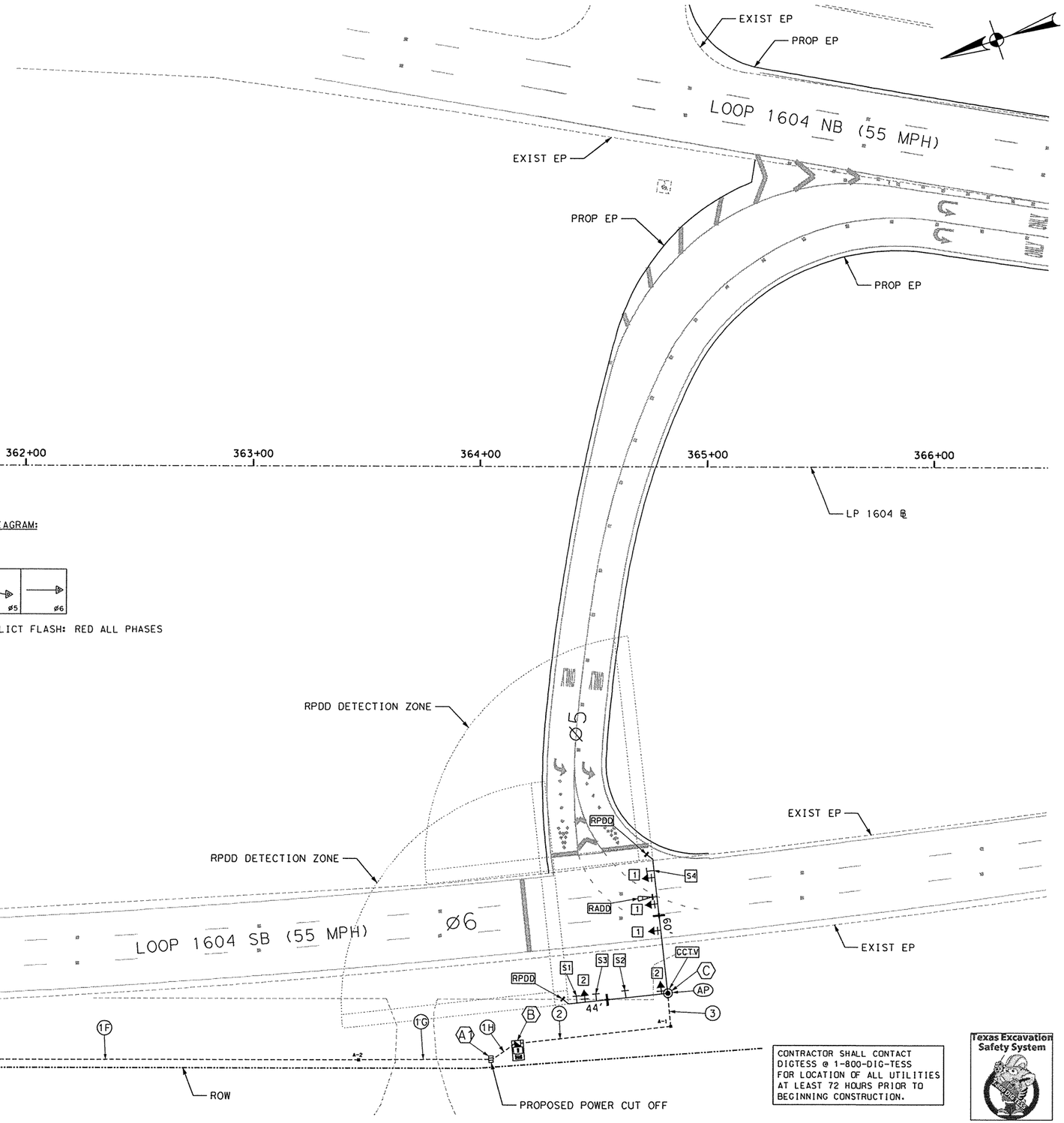

SIGNAL PHASING DIAGRAM:

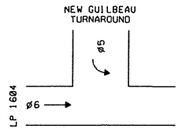

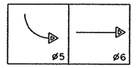

CONFLICT FLASH: RED ALL PHASES

TRAFFIC SIGNAL HEADS

SIGNAL FACES

12" LED SIGNAL SECTIONS

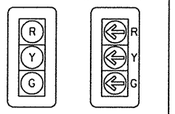

1 QTY:3 2 QTY:2

SIGNAL PLAN LEGEND

- NO 3½ GROUND BOX (PROPOSED) (TY A)
- NO 7 GROUND BOX (EXISTING) (TY D)
- NO 7 GROUND BOX (PROPOSED) (TY D)
- POLE (EXISTING OR RELOCATED)
- POLE (PROPOSED)
- POWER SOURCE (EXISTING OR RELOCATED)
- POWER SOURCE (PROPOSED)
- PROP. MODEL 332 CONTROLLER CABINET & FDN WITH BBS BATTERY BOX
- PROP. MODEL 332 CONTROLLER CABINET & FDN
- ELECTRIC SERVICE METER (EXISTING)
- ELECTRIC SERVICE METER (PROPOSED)
- CONDUIT (EXISTING)
- 3" CONDUIT SCHEDULE 80 (PROPOSED)
- SIGNAL HEAD (EXISTING)
- SIGNAL HEAD (TEMPORARY)
- SIGNAL HEAD (PROPOSED)
- SIGN
- MAST ARM POLE & FOUNDATION (PROPOSED)
- PED SIGNAL AND PUSHBUTTON (EXISTING)
- PED SIGNAL AND PUSHBUTTON (PROPOSED)
- V.I.V.D.S CAMERA & MOUNT (EXISTING)
- V.I.V.D.S CAMERA & MOUNT (PROPOSED)
- 2" CONDUIT STUBOUT & CAP
- RPDD RADAR PRESENCE DETECTOR
- RADD RADAR ADVANCE DETECTOR
- AP WIRELESS ACCESS POINT
- CCTV TRAFFIC SURVEILLANCE SYSTEM 4PTZ
- OPTICOM DETECTOR (PROPOSED)
- XX CONDUIT IDENTIFIER
- X POLE & EQUIPMENT IDENTIFIER
- PROPOSED ILLUMINATION POLE AND LUMINAIRE
- X ILLUMINATION IDENTIFIER

CONTRACTOR SHALL CONTACT DIGTESS @ 1-800-DIG-TESS FOR LOCATION OF ALL UTILITIES AT LEAST 72 HOURS PRIOR TO BEGINNING CONSTRUCTION.

Texas Excavation Safety System

GILMER D. GASTON P.E. — 6/29/2010 DATE

25 0 25 50

SCALE: PLAN - 1":50'

REV. NO.	DATE	DESCRIPTION	BY

ALAMO RMA

PAPE-DAWSON ENGINEERS

555 EAST RAMSEY | SAN ANTONIO, TEXAS 78216 | PHONE: 210.375.9000 FAX: 210.375.9010

TEXAS BOARD OF PROFESSIONAL ENGINEERS, FIRM REGISTRATION # 470

Texas Department of Transportation © 2010

LOOP 1604

PROPOSED TRAFFIC SIGNAL LAYOUT

TURNAROUND #1 (NORTH OF NEW GUILBEAU ROAD)

SHEET 2 OF 5

DGN:	FED. RD. DIV. NO.	STATE	FEDERAL AID PROJECT NO.			HIGHWAY NO.
CHK DGN:	6	TEXAS	STP 2011(210)ES			LP 1604
DWG:	DIST.	COUNTY	CONT. NO.	SECT. NO.	JOB NO.	SHEET NO.
CHK DWG:	SAT	BEXAR	2452	01	050	253

Plotted on: 8/4/2010

Design Filename: p:\74\00\04\design\civil\traffic\74000451G01-CBL1.dgn

CONDUIT AND CONDUCTOR SCHEDULE

	RUN NUMBER			1A	1B	1C	1D	1E	1F	1G	1H	2	3
	CONDUIT SIZE IN INCHES			–	3	2	2	2	2	2	3	3	3
	NUMBER OF CONDUITS			–	1	1	1	1	1	1	1	1	1
	LENGTH OF RUN (FT)			–	115	235	220	75	225	60	15	70	15
	TRENCH (T)/BORE (B)/EXISTING (E)			A	T	T	T	B	T	B	T	T	T
CABLE	CIRCUIT												
#3/0 XHHW	120 POWER HOT			CABLES PULLED BY CPS ENERGY	1	1	1	1	1	1	1		
	120 POWER COMMON				1	1	1	1	1	1	1		
#3/0 BARE	BARE BOND GROUND				1	1	1	1	1	1	1		
#8 BARE	BARE BOND GROUND											1	1
9 COND. #14 SOLID TYPE "A"	VEH SIGNALS	Ø	5									1	1
		Ø	6									1	1
M138 OPTICOM CABLE	EMERG PREEMPT	POLE	C									2	2
POWER & DATA CABLE	RADAR PRESENCE DETECTION DEVICE (RPDD)	Ø	5									1	1
		Ø	6									1	1
POWER CABLE	COMMUNICATION CABLE	POLE	C									1	1
ETHERNET CABLE		POLE	C									1	1
POWER & DATA CABLE	RADAR ADVANCE DETECTION DEVICE (RADD)	POLE	C									1	1
POWER & DATA CABLE	CLOSED CIRCUIT TELEVISION (CCTV)	POLE	C									1	1

AN EXTRA 2 INCH CONDUIT SHALL BE STUBBED OUT AND CAPPED 2 FEET FROM EACH CONCRETE FOUNDATION, INCLUDING CONTROLLER AND EACH DRILLED SHAFT.

RUN #1B SHALL HAVE 36" OF COVER.

POLE SCHEDULE

	POLE			Ⓒ
	POLE TYPE			LMA(D)
	POLE HEIGHT (FEET)			30
	MAST ARM LENGTH (FEET)			60 & 44
	LUMINAIRE EXTENSION			YES
	LUMINAIRE			NO
	FOUNDATION TYPE			48-A
	FOUNDATION DEPTH (FEET)			21.9
CABLE	CIRCUIT			NUMBER OF CONDUCTORS
# 8 BARE				1
9 COND. #14 SOLID TYPE "A"	VEH SIGNALS	Ø	5	2
		Ø	6	3
M138 OPTICOM CABLE	EMERG PREEMPT	POLE	C	2
POWER & DATA CABLE	RADAR PRESENCE DETECTION DEVICE (RPDD)	Ø	5	1
		Ø	6	1
POWER CABLE	COMMUNICATION CABLE	POLE	C	1
ETHERNET CABLE		POLE	C	1
POWER & DATA CABLE	RADAR ADVANCE DETECTION DEVICE (RADD)	POLE	C	1
POWER & DATA CABLE	CLOSED CIRCUIT TELEVISION (CCTV)	POLE	C	1

POLE & EQUIPMENT INFORMATION

ID NO.	DESCRIPTION/ATTACHMENTS	STATION	OFFSET	FND. ELEV
Ⓐ	PROPOSED ELECTRIC SERVICE METER TS1 ON TIMBER POLE WITH AERIAL DROP.	N/A	N/A	N/A
Ⓐ1	PROPOSED ELECTRIC SERVICE CUT-OFF.	N/A	N/A	N/A
Ⓑ	INSTALL SAN ANTONIO STANDARD MODEL 332 TRAFFIC SIGNAL CONTROLLER CABINET ASSEMBLY, MODEL 2070 CONTROLLER, AND COSA BASE-MOUNT FOUNDATION (5' X 9') WITH BATTERY BOX IN FOUNDATION.	N/A	N/A	N/A
Ⓒ	INSTALL LMA (D) SIGNAL POLE PER POLE SCHEDULE, WITH ONE CCTV CAMERA ASSEMBLY, TWO OPTICOM DETECTORS, THREE RADAR SENSORS, WIRELESS COMMUNUCATION EQUIPMENT, SIGNS, AND FIVE VEHICLE SIGNALS AS INDICATED ON LAYOUT.	364+83.38 "1604"	234.03 RT	960.41

Elec. Service No.	Electrical Service Description (see ED (4) - 03)	Service Conduit Size	Service Conductors No./Size	Safety Switch Amps	Main Ckt. Bkr. Pole/Amp	Two-Pole Contactor Amps	Panelbd/ Loadcenter Amp Rating	Circuit No.	Branch Ckt. Bkr. Pole/Amps	Branch Circuit Amps	KVA Load
TS1	ELEC SERV TY D(120/240)070(NS)GS(N)TP(O)	3"	3/#6	N/A	2P/70	N/A	100	A (SIGNAL)	1P/50	40	4.8

STATE OF TEXAS
GILMER A. GASTON
80472
LICENSED
PROFESSIONAL ENGINEER

GILMER G. GASTON P.E. — 8/4/2010 DATE

NOT TO SCALE

REV. NO.	DATE	DESCRIPTION	BY

ALAMO RMA

PAPE-DAWSON ENGINEERS

555 EAST RAMSEY | SAN ANTONIO, TEXAS 78216 | PHONE: 210.375.9000 FAX: 210.375.9010

TEXAS BOARD OF PROFESSIONAL ENGINEERS, FIRM REGISTRATION # 470

Texas Department of Transportation ©2010

LOOP 1604

TRAFFIC SIGNAL DETAILS

TURNAROUND #1 (NORTH OF NEW GUILBEAU ROAD)

DGN:	FED. RD. DIV. NO.	STATE	FEDERAL AID PROJECT NO.			HIGHWAY NO.
CHK DGN:	6	TEXAS	STP 2011(210)ES			LP 1604
DWG:	DIST.	COUNTY	CONT. NO.	SECT. NO.	JOB NO.	SHEET NO.
CHK DWG:	SAT	BEXAR	2452	01	050	254

ITEM	DESC	DESCRIPTION	UNIT	QTY
0416		DRILL SHAFT (TRF SIG POLE) (48 IN) (ROCK)	LF	21.9
0618	2086	CONDT (PVC) (SCHD 80) (2") (TRENCH) (ROCK)	LF	680
0618	2087	CONDT (PVC) (SCHD 80) (2") (BORE) (ROCK)	LF	135
0618	2088	CONDT (PVC) (SCHD 80) (3") (TRENCH) (ROCK)	LF	215
0620	2011	ELEC CONDR (NO. 8) BARE	LF	130
0620	2023	ELEC CONDR (NO. 3/0) BARE	LF	1040
0620	2024	ELEC CONDR (NO. 3/0) INSULATED	LF	2080
0624	2008	GROUND BOX TY A (122311) W/APRON	EA	6
0628	2089	ELC SRV TY D 120/240 070 (NS) GS (N) TP (O)	EA	1
0680	2003	INSTALL HWY TRF SIG (SYSTEM)	EA	1
0682	2001	BACK PLATE (12 IN) (3 SEC)	EA	5
0682	2022	VEH SIG SEC (12 IN) LED (GRN ARW)	EA	2
0682	2023	VEH SIG SEC (12 IN) LED (GRN)	EA	3
0682	2024	VEH SIG SEC (12 IN) LED (YEL ARW)	EA	2
0682	2025	VEH SIG SEC (12 IN) LED (YEL)	EA	3
0682	2026	VEH SIG SEC (12 IN) LED (RED ARW)	EA	2
0682	2027	VEH SIG SEC (12 IN) LED (RED)	EA	3
0684	2035	TRF SIG CBL (TY A) (14 AWG) (9 CONDR)	LF	595
0686	2249	INS TRF SIG PL AM(S) 2 ARM(60-44') LUM	EA	1
		INSTALL CCTV FIELD EQUIPMENT $	EA	1
		BATTERY BACK-UP SYSTEM	EA	1
		RADAR ADVANCE DETECTION DEVICE $	EA	1
		RADAR PRESENCE DETECTION DEVICE $	EA	2
*		802.11a, b/g Outdoor Mesh AP, FCC Cfg (Part#: AIR-LAP1522AG-AK9)	EA	1
*		2400-2483.5 MHz, 8.0 dBi Omni Ant, with N Connect (Part #: AIR-ANT2480V-N)	EA	3
*		Aironet 1520 Series AC Power Cord, 40 ft, N. Amer Plug (Part #: AIR-CORD-R3P-40NA)	EA	1
*		4900-5850 MHz, 8.0Dbi OMNI with N Connect (Part #: AIR-ANT5180V-N)	EA	1
*		1520 Series Pole Mount Kit (AIR-ACCPMK1520)	EA	1
*		802.11a, b/g Outdoor Mesh AP, FCC Cfg (Part #: SMARTNET 8X5XNBD)	EA	1
*		27331A 01010000 BELDEN (Power Cable) (Part #: VNTC 16-3-R10K-BED)	LF	180
*		IND ETH 5E4P24 HLD (Ethernet Cable) (Part #: 7919A 01001000)	LF	180
*		2955 12 TX W/SM UPLINKS (Part #: WS-C2955S-12)	EA	1
*		19 IN RACK MOUNT KIT (Part #: CISCO STK-RACKMNT-2955)	EA	1
*		CISCO, AC TO 24 V DC DIN RAIL PW (Part #: PWR-2955-AC)	EA	1
*		SMARTNET 8X5XNBD 2955 12 TX w/Single Mode Uplinks (Part #: CON-SNTWSC2955S)	EA	1
*		TRAFFIC SIGNAL CONTROLLER ASSEMBLY (TYPE 332 CABINET)	EA	1
*		MODEL 2070 CONTROLLER WITH NEXTPHASE SOFTWARE	EA	1
*		TYPE 332 CONTROLLER FOUNDATION WITH BBS BOX	EA	1
*		R3-1 (36"X36") NO RIGHT-TURN	EA	1
*		R3-2 (36"X36") NO LEFT-TURN	EA	1
*		R6-1L (48"X16") ONE-WAY	EA	1
*		R10-5 (SPL) (30"X36") TURN ON GREEN ARROW ONLY	EA	1
*		3M MODEL 138 OPTICOM CABLE $	LF	345
*		3M MODEL 752 PHASE SELECTORS $	EA	1
*		3M OPTICOM MODEL 722 DETECTOR $	EA	2
*		PELCO ASTRO-BRAC MAST ARM WIND DAMPER ASSY(AB-0178) $	EA	2
**		ASTRO-BRAC SIGNAL MOUNT ASSEMBLIES	EA	5

* SUBSIDIARY TO ITEM 680
** SUBSIDIARY TO ITEM 682
*** SUBSIDIARY TO ITEM 687
$ TO BE INSTALLED PER MANUFACTURERS SPECIFICATION

1. MODEL 332 CONTROLLER FOUNDATION SHALL BE PROVIDED BY CONTRACTOR PER DETAIL IN THIS PLAN SET.

2. COMMUNICATION EQUIPMENT TO BE DELIVERED TO CoSA SIGNAL SHOP FOUR (4) WEEKS IN ADVANCE FOR TESTING AND PROGRAMMING. CONTRACTOR TO INSTALL COMMUNICATION EQUIPMENT IN THE FIELD AS DIRECTED BY CoSA ITSD. SUBSIDIARY TO ITEM 680.

3. CONTRACTOR TO FURNISH AND DELIVER CONTROLLER AND CABINET ASSEMBLY TO COSA SHOP FOR PROGRAMMING AND TESTING FOUR (4) WEEKS IN ADVANCE PRIOR TO CONTRACTOR INSTALLING EQUIPMENT IN THE FIELD. SUBSIDIARY TO ITEM 680.

4. THE CONTRACTOR SHALL SUPPLY A CONFLICT MONITOR THAT CONFORMS TO THE TEES SPECIFICATION FOR MODEL 2070L CONTROLLER. THE CONFLICT MONITOR SHALL BE EDI. MODEL 2018 KCLIP, OR APPROVED EQUAL.

STATE OF TEXAS
GILMER D. GASTON
80472
LICENSED
PROFESSIONAL ENGINEER

GILMER D. GASTON P.E. 7/6/2010
DATE

NOT TO SCALE

REV. NO.	DATE	DESCRIPTION	BY

ALAMO RMA

PAPE-DAWSON ENGINEERS
555 EAST RAMSEY | SAN ANTONIO, TEXAS 78216 | PHONE: 210.375.9000 FAX: 210.375.9010
TEXAS BOARD OF PROFESSIONAL ENGINEERS, FIRM REGISTRATION # 470

Texas Department of Transportation
© 2010

LOOP 1604

TRAFFIC SIGNAL DETAILS

TURNAROUND #1 (NORTH OF NEW GUILBEAU ROAD)

SHEET 4 OF 5

DGN:	FED. RD. DIV. NO.	STATE	FEDERAL AID PROJECT NO.			HIGHWAY NO.
CHK DGN:	6	TEXAS	STP 2011(210)ES			LP 1604
DWG:	DIST.	COUNTY	CONT. NO.	SECT. NO.	JOB NO.	SHEET NO.
CHK DWG:	SAT	BEXAR	2452	01	050	255

Plotted on: 7/6/2010

Design Filename: p:\74\00\04\design\civil\TRAFFIC\740004SIG01-CBL2.dgn

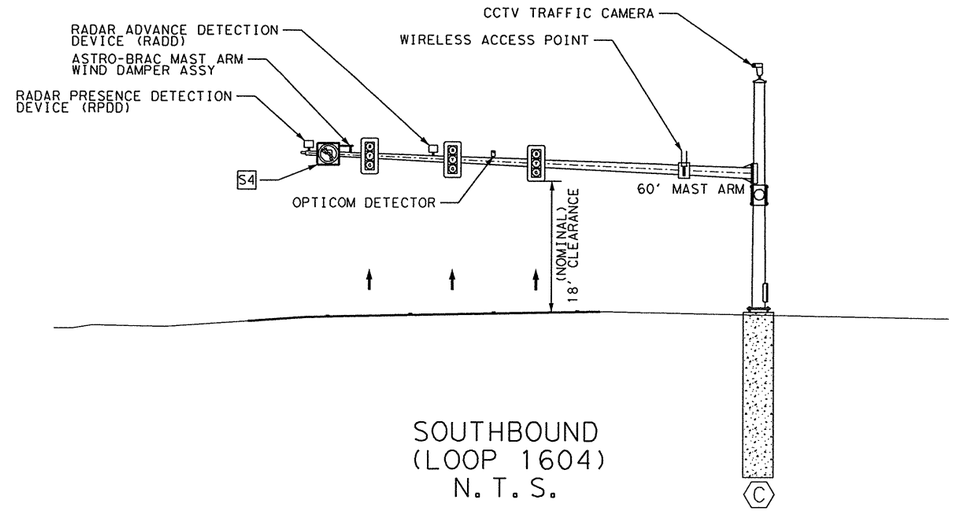

SOUTHBOUND
(LOOP 1604)
N.T.S.

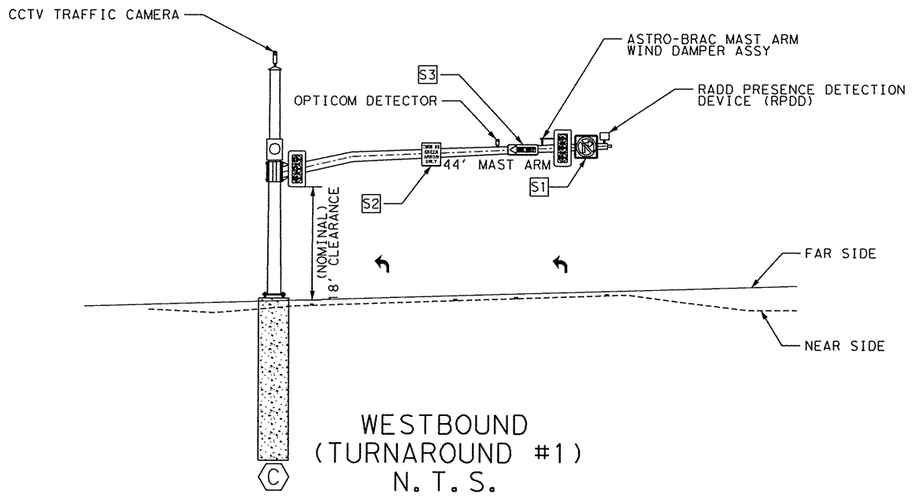

WESTBOUND
(TURNAROUND #1)
N.T.S.

STATE OF TEXAS
GILMER D. GASTON
80472
LICENSED
PROFESSIONAL ENGINEER

GILMER D. GASTON P.E. — 6/26/2010 DATE

NOT TO SCALE

REV. NO.	DATE	DESCRIPTION	BY

ALAMO RMA

PAPE-DAWSON ENGINEERS

555 EAST RAMSEY | SAN ANTONIO, TEXAS 78216 | PHONE: 210.375.9000 FAX: 210.375.9010

TEXAS BOARD OF PROFESSIONAL ENGINEERS, FIRM REGISTRATION # 470

Texas Department of Transportation © 2010

LOOP 1604
ELEVATION

TURNAROUND #1 (NORTH OF NEW GUILBEAU ROAD)

SHEET 5 OF 5

DGN:	FED. RD. DIV. NO.	STATE	FEDERAL AID PROJECT NO.			HIGHWAY NO.
CHK DGN:	6	TEXAS	STP 2011(210)ES			LP 1604
DWG:	DIST.	COUNTY	CONT. NO.	SECT. NO.	JOB NO.	SHEET NO.
CHK DWG:	SAT	BEXAR	2452	01	050	256

Plotted on: 6/26/2010

Design Filename: p:\74\00\04\design\civil\traffic\740004SIG01-EL1.dgn

Plotted on: 6/30/2010

Design Filename: p:\74\00\04\Design\Civil\TRAFFIC\7400045IG02-E.dgn

EXISTING TRAFFIC SIGNS		
SIGN	DESCRIPTION	DESIGNATION
	R9-3A, (24" x 24")	S1 S7 S8 S12
	R3-5R, (30" x 36")	S2 S5
	SPECIAL	S3 S11
	R10-10L, (24" x 30")	S4 S9 S10
	SPECIAL	S6

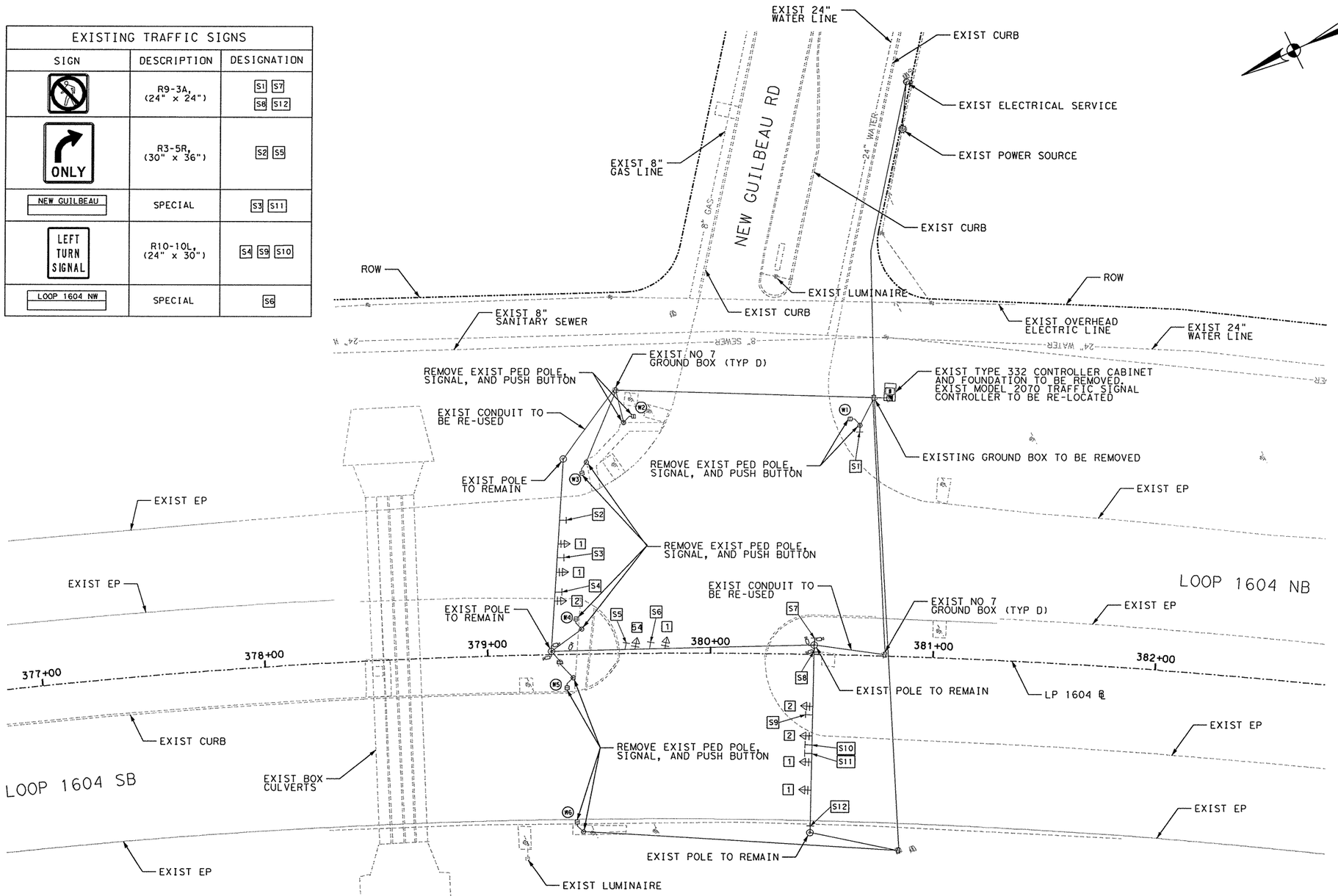

SIGNAL PLAN LEGEND

- NO 3½ GROUND BOX (PROPOSED) (TY A)
- NO 7 GROUND BOX (EXISTING) (TY D)
- NO 7 GROUND BOX (PROPOSED) (TY D)
- POLE (EXISTING OR RELOCATED)
- POLE (PROPOSED)
- POWER SOURCE (EXISTING OR RELOCATED)
- POWER SOURCE (PROPOSED)
- PROP. MODEL 332 CONTROLLER CABINET & FDN WITH BBS BATTERY BOX
- PROP. MODEL 332 CONTROLLER CABINET & FDN
- ELECTRIC SERVICE METER (EXISTING)
- ELECTRIC SERVICE METER (PROPOSED)
- CONDUIT (EXISTING)
- 3" CONDUIT SCHEDULE 80 (PROPOSED)
- SIGNAL HEAD (EXISTING)
- SIGNAL HEAD (TEMPORARY)
- SIGNAL HEAD (PROPOSED)
- SIGN
- MAST ARM POLE & FOUNDATION (PROPOSED)
- PED SIGNAL AND PUSHBUTTON (EXISTING)
- PED SIGNAL AND PUSHBUTTON (PROPOSED)
- V.I.V.D.S CAMERA & MOUNT (EXISTING)
- V.I.V.D.S CAMERA & MOUNT (PROPOSED)
- 2" CONDUIT STUBOUT & CAP
- RPDD RADAR PRESENCE DETECTOR
- RADD RADAR ADVANCE DETECTOR
- AP WIRELESS ACCESS POINT
- CCTV TRAFFIC SURVEILLANCE SYSTEM 4PTZ
- OPTICOM DETECTOR (PROPOSED)
- XX CONDUIT IDENTIFIER
- X POLE & EQUIPMENT IDENTIFIER
- PROPOSED ILLUMINATION POLE AND LUMINAIRE
- X ILLUMINATION IDENTIFIER

SIGNAL PHASING DIAGRAM:

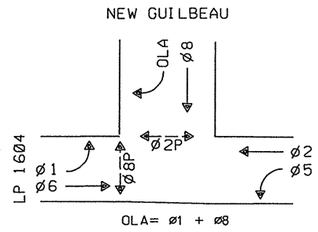

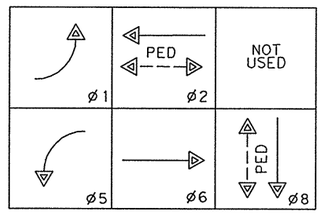

TRAFFIC SIGNAL HEADS

SIGNAL FACES

12" LED SIGNAL SECTIONS

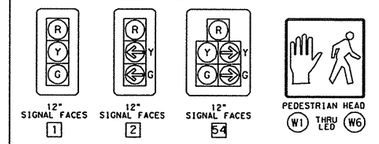

STATE OF TEXAS
GILMER D. GASTON
80472
LICENSED PROFESSIONAL ENGINEER

GILMER D. GASTON P.E. — 6/30/2010 DATE

25 0 25 50

SCALE: PLAN - 1":50'

REV. NO.	DATE	DESCRIPTION	BY

ALAMO RMA

PAPE-DAWSON ENGINEERS

555 EAST RAMSEY | SAN ANTONIO, TEXAS 78216 | PHONE: 210.375.9000 FAX: 210.375.9010

TEXAS BOARD OF PROFESSIONAL ENGINEERS, FIRM REGISTRATION # 470

Texas Department of Transportation © 2010

LOOP 1604

EXISTING TRAFFIC SIGNAL LAYOUT

LP 1604 & NEW GUILBEAU ROAD

SHEET 1 OF 7

DGN:	FED. RD. DIV. NO.	STATE	FEDERAL AID PROJECT NO.			HIGHWAY NO.
CHK DGN:	6	TEXAS	STP 2011(210)ES			LP 1604
DWG:	DIST.	COUNTY	CONT. NO.	SECT. NO.	JOB NO.	SHEET NO.
CHK DWG:	SAT	BEXAR	2452	01	050	257

Plotted on: 8/4/2010

Design Filename: p:\74\00\04\design\civil\traffic\740004SIG02-TEMP.dgn

CONDUIT AND CONDUCTOR SCHEDULE														
	RUN NUMBER			1A	1B	1C	2	3	4	6	8	13	14	15
	CONDUIT SIZE IN INCHES			-	3	3	3	3	3	3	3	-	-	-
	NUMBER OF CONDUITS			-	1	1	2	2	2	1	1	1	1	1
	LENGTH OF RUN (FT)			25	80	65	25	125	120	40	35	90	120	85
	TRENCH (T)/BORE (B)/EXISTING (E)			E	T	T	T	B	B	E	E	A	A	A
CABLE	CIRCUIT													
#6 XHHW	120 POWER HOT			CABLES PULLED BY CPS ENERGY	1	1								
	120 POWER COMMON				1	1								
#6 BARE	BARE BOND GROUND				1	1								
#8 BARE	BARE BOND GROUND						2	2	2	1	1	1	1	1
9 COND. #14 SOLID TYPE "A"	VEH SIGNALS	Ø	1+6				2		2		2			2
		Ø	2+5				2	2		2		2		
		Ø	8				1		1		1		1	
		Ø	OLA				1		1		1		1	
4 COND. #14 SOLID TYPE "A"	VIVDS	POLE	1+6				2	1	1	1	1	1		
		POLE	2+5				2	1	1	1	1	1		
		POLE	8				2	1	1	1	1	1		

CONTRACTOR SHALL REMOVE ALL SIGNAL CABLES PRIOR TO OPERATION OF PERMANENT SIGNAL.
RUN #1B SHALL HAVE 36" OF COVER.

TEMPORARY SIGNAL SHALL INCLUDE EXISTING DETECTION WITH VIVDS.

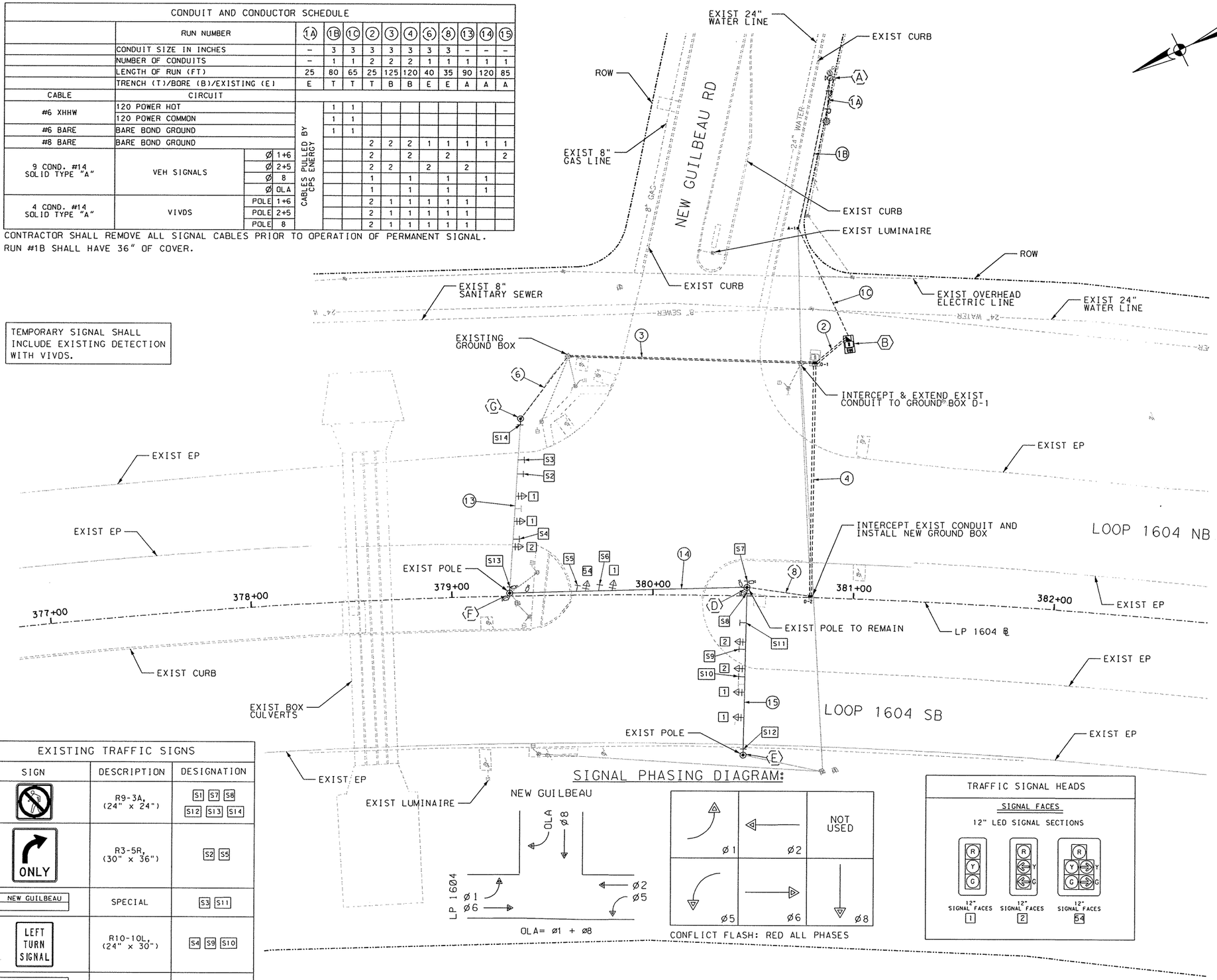

SIGNAL PLAN LEGEND

- NO 3½ GROUND BOX (PROPOSED) (TY A)
- NO 7 GROUND BOX (EXISTING) (TY D)
- NO 7 GROUND BOX (PROPOSED) (TY D)
- POLE (EXISTING OR RELOCATED)
- POLE (PROPOSED)
- POWER SOURCE (EXISTING OR RELOCATED)
- POWER SOURCE (PROPOSED)
- PROP. MODEL 332 CONTROLLER CABINET & FDN WITH BBS BATTERY BOX
- PROP. MODEL 332 CONTROLLER CABINET & FDN
- ELECTRIC SERVICE METER (EXISTING)
- ELECTRIC SERVICE METER (PROPOSED)
- CONDUIT (EXISTING)
- 3" CONDUIT SCHEDULE 80 (PROPOSED)
- SIGNAL HEAD (EXISTING)
- SIGNAL HEAD (TEMPORARY)
- SIGNAL HEAD (PROPOSED)
- SIGN
- MAST ARM POLE & FOUNDATION (PROPOSED)
- PED SIGNAL AND PUSHBUTTON (EXISTING)
- PED SIGNAL AND PUSHBUTTON (PROPOSED)
- V.I.V.D.S CAMERA & MOUNT (EXISTING)
- V.I.V.D.S CAMERA & MOUNT (PROPOSED)
- 2" CONDUIT STUBOUT & CAP
- RADAR PRESENCE DETECTOR
- RADAR ADVANCE DETECTOR
- WIRELESS ACCESS POINT
- TRAFFIC SURVEILLANCE SYSTEM 4PTZ
- OPTICOM DETECTOR (PROPOSED)
- CONDUIT IDENTIFIER
- POLE & EQUIPMENT IDENTIFIER
- PROPOSED ILLUMINATION POLE AND LUMINAIRE
- ILLUMINATION IDENTIFIER

EXISTING TRAFFIC SIGNS		
SIGN	DESCRIPTION	DESIGNATION
	R9-3A, (24" x 24")	S1 S7 S8 S12 S13 S14
ONLY	R3-5R, (30" x 36")	S2 S5
NEW GUILBEAU	SPECIAL	S3 S11
LEFT TURN SIGNAL	R10-10L, (24" x 30")	S4 S9 S10
LOOP 1604 NW	SPECIAL	S6

SIGNAL PHASING DIAGRAM:

OLA= Ø1 + Ø8

CONFLICT FLASH: RED ALL PHASES

TRAFFIC SIGNAL HEADS

SIGNAL FACES

12" LED SIGNAL SECTIONS

STATE OF TEXAS
GILMER D. GASTON
80472
LICENSED PROFESSIONAL ENGINEER

GILMER D. GASTON P.E. — 8/4/2010 DATE

25 0 25 50
SCALE: PLAN - 1":50'

REV. NO.	DATE	DESCRIPTION	BY

ALAMO RMA

PAPE-DAWSON ENGINEERS
555 EAST RAMSEY | SAN ANTONIO, TEXAS 78216 | PHONE: 210.375.9000 FAX: 210.375.9010
TEXAS BOARD OF PROFESSIONAL ENGINEERS, FIRM REGISTRATION # 470

Texas Department of Transportation © 2010

LOOP 1604

TEMPORARY TRAFFIC SIGNAL LAYOUT

LP 1604 & NEW GUILBEAU ROAD

SHEET 2 OF 7

DGN:	FED. RD. DIV. NO.	STATE	FEDERAL AID PROJECT NO.			HIGHWAY NO.
CHK DGN:	6	TEXAS	STP 2011(210)ES			LP 1604
DWG:	DIST.	COUNTY	CONT. NO.	SECT. NO.	JOB NO.	SHEET NO.
CHK DWG:	SAT	BEXAR	2452	01	050	258

Plotted on: 8/31/2010

Design Filename: P:\74\00\04\design\Civil\TRAFFIC\7400045\G02-P.dgn

PROPOSED TRAFFIC SIGNS		
SIGN	DESCRIPTION	DESIGNATION
NEW GUILBEAU <XXXX YYYY>	SPECIAL	S1
	R3-2, (36" x 36")	S2
ONLY	R3-5R, (30" x 36")	S4 S6
LOOP 1604 <XXXX YYYY>	SPECIAL	S5
NO RIGHT TURN ON RED	R10-11T, (24" x 30")	S3
TURN ON GREEN ARROW ONLY	R10-5(SPL), (30" x 36")	S8 S9
NEW GUILBEAU <YYYY XXXX>	SPECIAL	S7
PUSH BUTTON FOR	R10-4BL, (5" x 9")	PB2
PUSH BUTTON FOR	R10-4BR, (5" x 9")	PB1

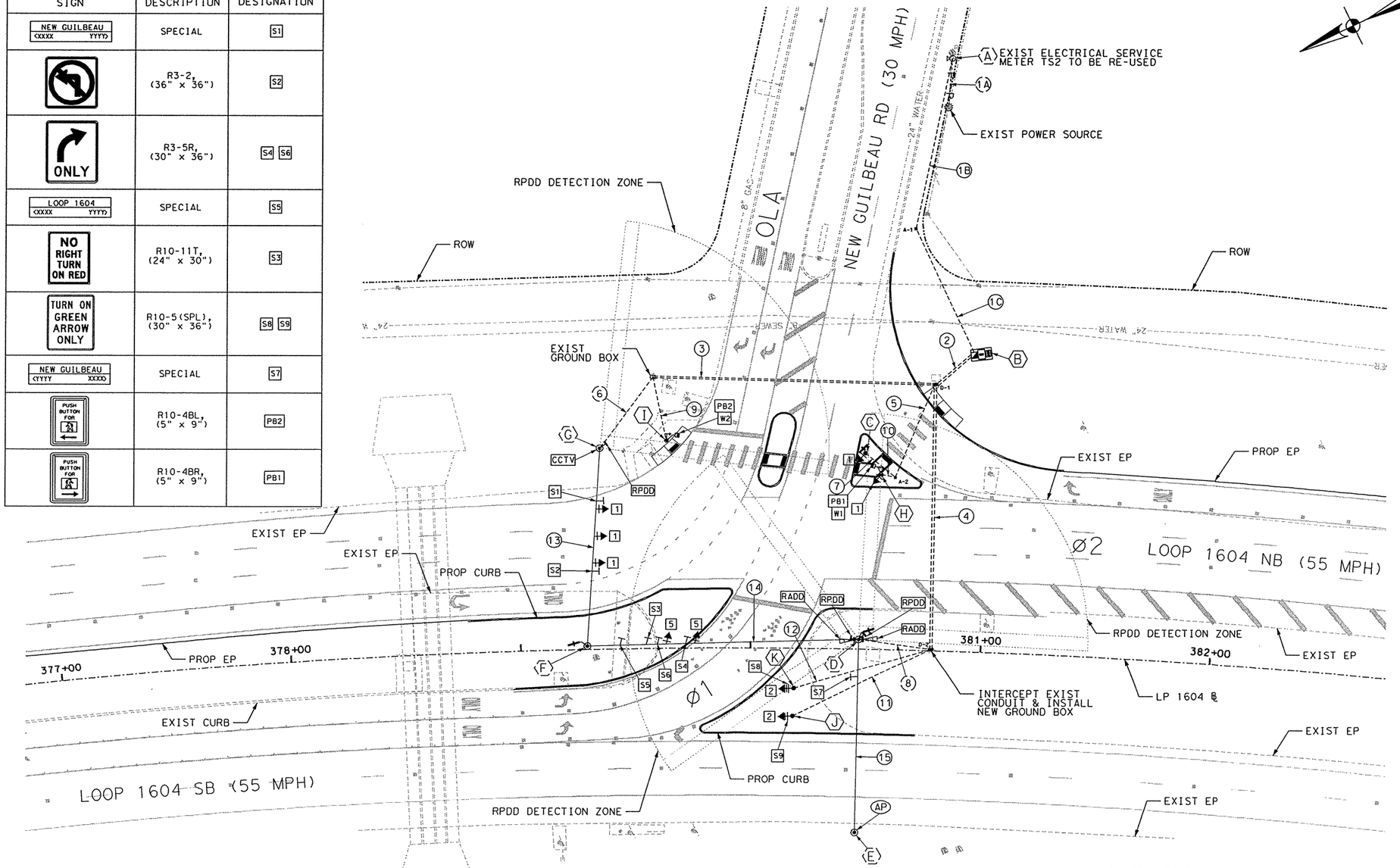

SIGNAL PLAN LEGEND

- NO 3½ GROUND BOX (PROPOSED) (TY A)
- NO 7 GROUND BOX (EXISTING) (TY D)
- NO 7 GROUND BOX (PROPOSED) (TY D)
- POLE (EXISTING OR RELOCATED)
- POLE (PROPOSED)
- POWER SOURCE (EXISTING OR RELOCATED)
- POWER SOURCE (PROPOSED)
- PROP. MODEL 332 CONTROLLER CABINET & FDN WITH BBS BATTERY BOX
- PROP. MODEL 332 CONTROLLER CABINET & FDN
- ELECTRIC SERVICE METER (EXISTING)
- ELECTRIC SERVICE METER (PROPOSED)
- CONDUIT (EXISTING)
- 3" CONDUIT SCHEDULE 80 (PROPOSED)
- SIGNAL HEAD (EXISTING)
- SIGNAL HEAD (TEMPORARY)
- SIGNAL HEAD (PROPOSED)
- SIGN
- MAST ARM POLE & FOUNDATION (PROPOSED)
- PED SIGNAL AND PUSHBUTTON (EXISTING)
- PED SIGNAL AND PUSHBUTTON (PROPOSED)
- V.I.V.D.S CAMERA & MOUNT (EXISTING)
- V.I.V.D.S CAMERA & MOUNT (PROPOSED)
- 2" CONDUIT STUBOUT & CAP
- RPDD RADAR PRESENCE DETECTOR
- RADD RADAR ADVANCE DETECTOR
- AP WIRELESS ACCESS POINT
- CCTV TRAFFIC SURVEILLANCE SYSTEM 4PTZ
- OPTICOM DETECTOR (PROPOSED)
- (XX) CONDUIT IDENTIFIER
- (X) POLE & EQUIPMENT IDENTIFIER
- PROPOSED ILLUMINATION POLE AND LUMINAIRE
- (X) ILLUMINATION IDENTIFIER

TRAFFIC SIGNAL HEADS

SIGNAL FACES

12" LED SIGNAL SECTIONS

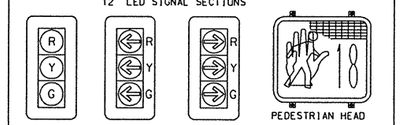

1 QTY:5 | 2 QTY:2 | 5 QTY:2 | W1 THRU LED W2 QTY:2

SIGNAL PHASING DIAGRAM:

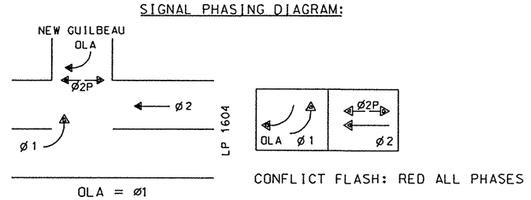

CONFLICT FLASH: RED ALL PHASES

CONTRACTOR SHALL CONTACT DIGTESS @ 1-800-DIG-TESS FOR LOCATION OF ALL UTILITIES AT LEAST 72 HOURS PRIOR TO BEGINNING CONSTRUCTION.

Texas Excavation Safety System

GILMER D. GASTON 80472 LICENSED PROFESSIONAL ENGINEER

GILMER D. GASTON P.E. — 8/31/2010 DATE

25 0 25 50

SCALE: PLAN - 1":50'

REV. NO.	DATE	DESCRIPTION	BY

ALAMO RMA

PAPE-DAWSON ENGINEERS

555 EAST RAMSEY | SAN ANTONIO, TEXAS 78216 | PHONE: 210.375.9000 FAX: 210.375.9010

TEXAS BOARD OF PROFESSIONAL ENGINEERS, FIRM REGISTRATION # 470

Texas Department of Transportation © 2010

LOOP 1604

PROPOSED TRAFFIC SIGNAL LAYOUT

LP 1604 & NEW GUILBEAU ROAD

SHEET 3 OF 7

DGN:	FED. RD. DIV. NO.	STATE	FEDERAL AID PROJECT NO.			HIGHWAY NO.
CHK DGN:	6	TEXAS	STP 2011(210)ES			LP 1604
DWG:	DIST.	COUNTY	CONT. NO.	SECT. NO.	JOB NO.	SHEET NO.
CHK DWG:	SAT	BEXAR	2452	01	050	259

Plotted on: 8/31/2010

Design Filename: p:\7400\04\design\civil\traffic\740004SIG02-CBL1.dgn

LOOP 1604 SUPERSTREET - LOOP 1604 & NEW GUILBEAU ROAD

CONDUIT AND CONDUCTOR SCHEDULE

	RUN NUMBER			1A	1B	1C	2	3	4	5	6	7	8	9	10	11	12	13	14	15
	CONDUIT SIZE IN INCHES			-	3	3	3	3	3	3	3	3	3	3	3	3	3	-	-	-
	NUMBER OF CONDUITS			-	1	1	2	2	2	1	1	1	1	1	1	1	1	1	1	1
	LENGTH OF RUN (FT)			25	80	65	25	125	120	45	40	20	35	30	10	70	65	90	120	90
	TRENCH (T)/BORE (B)/EXISTING (E)			E	T	T	T	B	B	T	E	T	E	T	T	T	T	A	A	A
CABLE	CIRCUIT																			
#6 XHHW	120 POWER HOT				1	1														
	120 POWER COMMON				1	1														
#6 BARE	BARE BOND GROUND				1	1														
#8 BARE	BARE BOND GROUND						2	2	2	1	1	1	1	1	1	1	1	1	1	1
9 COND. #14 SOLID TYPE "A"	VEH SIGNALS	Ø	1				4		2	2		1				1	1	1		
		Ø	2				1	1			1								1	
		Ø	OLA				1		1				1			1				1
9 COND. #14 SOLID TYPE "A" & APS WIRING*	PED SIGNALS & APS	POLE	H				1			1						1				
		POLE	I				1	1						1						
M138 OPTICOM CABLE	EMERG PREEMPT	POLE	C				1					1								
		POLE	D				1		1				1							
		POLE	F				1	1			1							1		
POWER & DATA CABLE	RADAR PRESENCE DETECTION DEVICE (RPDD)	Ø	1				1		1				1							
		Ø	2				1		1				1							
		Ø	OLA				1	1			1									
POWER CABLE	COMMUNICATION CABLE	POLE	E				1		1				1							1
ETHERNET CABLE		POLE	E				1		1				1							1
POWER & DATA CABLE	RADAR ADVANCE DETECTION DEVICE (RADD)	POLE	D				2		2				2							
POWER & DATA CABLE	CLOSED CIRCUIT TELEVISION (CCTV)	POLE	G				1	1			1									

CABLES PULLED BY CPS ENERGY

AN EXTRA 2 INCH CONDUIT SHALL BE STUBBED OUT AND CAPPED 2 FEET FROM EACH CONCRETE FOUNDATION, INCLUDING CONTROLLER AND EACH DRILLED SHAFT.

RUN #1B TO #1C SHALL HAVE 36" OF COVER.

POLE & EQUIPMENT INFORMATION

ID NO.	DESCRIPTION/ATTACHMENTS	STATION	OFFSET	FND. ELEV
(A)	EXIST ELECTRIC SERVICE METER TS2 ON TIMBER POLE WITH AERIAL DROP TO BE RE-USED.	N/A	N/A	N/A
(B)	INSTALL SAN ANTONIO STANDARD MODEL 332 TRAFFIC SIGNAL CONTROLLER CABINET ASSEMBLY, AND COSA BASE-MOUNT FOUNDATION (5' X 9'). RELOCATE EXIST CONTROLLER TO NEW CONTROLLER CABINET.	N/A	N/A	N/A
(C)	INSTALL 20 FT BRUSHED ALUMINUM PEDESTRAIN POLE ON FRANGIBLE BASE WITH ONE VEHICLE SIGNAL AS INDICATED ON LAYOUT.	418+64.40 "NGTA"	55.54 LT	FLUSH WITH FINISHED ISLAND
(D)	RETAIN EXIST STRAIN POLE TYPE D (SPL 34 D-80) ON DRILLED SHAFT (36-B) FND. INSTALL FOUR RADAR SENSORS, AND ONE OPTICOM DETECTOR AS INDICATED ON LAYOUT.	N/A	N/A	N/A
(E)	RETAIN EXIST STRAIN POLE TYPE D (SPL 34 D-80) ON DRILLED SHAFT (36-B) FND. INSTALL WIRELESS COMMUNUCATION EQUIPMENT AS INDICATED ON LAYOUT.	N/A	N/A	N/A
(F)	RETAIN EXIST STRAIN POLE TYPE D (SPL 34 D-80) ON DRILLED SHAFT (36-B) FND. INSTALL ONE OPTICOM DETECTOR AS INDICATED ON LAYOUT.	N/A	N/A	N/A
(G)	RETAIN EXIST STRAIN POLE TYPE D (SPL 34 D-80) ON DRILLED SHAFT (36-B) FND. INSTALL ONE RADAR SENSOR, AND ONE CCTV CAMERA ASSEMBLY AS INDICATED ON LAYOUT.	N/A	N/A	N/A
(H)	INSTALL 20 FT BRUSHED ALUMINUM PEDESTRAIN POLE ON FRANGIBLE BASE, WITH ONE PEDESTRIAN SIGNAL, ONE AUDIBLE PEDESTRIAN DEVICE ASSEMBLY, AND ONE VEHICLE SIGNAL AS INDICATED ON LAYOUT.	418+71.39 "NGTA"	46.26 LT	FLUSH WITH FINISHED ISLAND
(I)	INSTALL 10 FT BRUSHED ALUMINUM PEDESTRAIN POLE ON FRANGIBLE BASE WITH ONE PEDESTRIAN SIGNAL AND AUDIBLE PEDESTRIAN DEVICE ASSEMBLY AS INDICATED ON LAYOUT.	417+79.85 "NGTA"	61.36 LT	FLUSH WITH FINISHED LANDING ZONE
(J)	INSTALL 20 FT BRUSHED ALUMINUM PEDESTRAIN POLE ON FRANGIBLE BASE WITH ONE VEHICLE SIGNAL AS INDICATED ON LAYOUT.	418+33.78 "NGTA"	60.66 RT	FLUSH WITH FINISHED ISLAND
(K)	INSTALL 20 FT BRUSHED ALUMINUM PEDESTRAIN POLE ON FRANGIBLE BASE WITH ONE VEHICLE SIGNAL AS INDICATED ON LAYOUT.	418+34.34 "NGTA"	48.61 RT	FLUSH WITH FINISHED ISLAND

SIGNS SHALL BE ATTACHED TO POLES, SPANS, AND MAST ARMS AS INDICATED ON LAYOUT.

POLE SCHEDULE

	POLE			(C)	(D)	(E)	(F)	(G)	(H)	(I)	(J)	(K)
	POLE TYPE			PED	SP D-80	SP D-80	SP D-80	SP D-80	PED	PED	PED	PED
	POLE HEIGHT (FEET)			20	34	34	34	34	20	10	20	20
	MAST ARM LENGTH (FEET)			N/A	N/A	N/A	N/A	N/A	N/A	N/A	N/A	N/A
	LUMINAIRE EXTENSION			N/A	NO	NO	NO	NO	N/A	N/A	N/A	N/A
	LUMINAIRE			N/A	NO	NO	NO	NO	N/A	N/A	N/A	N/A
	FOUNDATION TYPE			24-A	36-B	36-B	36-B	36-B	24-A	24-A	24-A	24-A
	FOUNDATION DEPTH (FEET)			5.7	EXIST	EXIST	EXIST	EXIST	5.7	5.7	5.7	5.7
CABLE	CIRCUIT			NUMBER OF CONDUCTORS								
# 8 BARE				1	1	1	1	1	1	1		
9 COND. #14 SOLID TYPE "A"	VEH SIGNALS	Ø	1	1					1		1	1
		Ø	2					3				
		Ø	OLA		2							
9 COND. #14 SOLID TYPE "A" & APS WIRING*	PED SIGNALS & APS	POLE	H						1			
		POLE	I							1		
M138 OPTICOM CABLE	EMERG PREEMPT	POLE	C	1								
		POLE	D		1							
		POLE	F				1					
POWER & DATA CABLE	RADAR PRESENCE DETECTION DEVICE (RPDD)	Ø	1		1							
		Ø	2		1							
		Ø	OLA					1				
NOT USED	LUMINAIRE	POLE										
		POLE										
		POLE										
		POLE										
POWER CABLE	COMMUNICATION CABLE	POLE	E		1							
ETHERNET CABLE		POLE	E		1							
POWER & DATA CABLE	RADAR ADVANCE DETECTION DEVICE (RADD)	POLE	D		2							
POWER & DATA CABLE	CLOSED CIRCUIT TELEVISION (CCTV)	POLE	G					1				

*CONTRACTOR TO WIRE AUDIBLE PEDESTRIAN SIGNAL UNIT (APS) PER MANUFACTURER'S REQUIREMENTS.

STATE OF TEXAS
GILMER D. GASTON
80472
LICENSED
PROFESSIONAL ENGINEER

GILMER D. GASTON P.E. — 8/31/2010 DATE

NOT TO SCALE

REV. NO.	DATE	DESCRIPTION	BY

ALAMO RMA

PAPE-DAWSON ENGINEERS

555 EAST RAMSEY | SAN ANTONIO, TEXAS 78216 | PHONE: 210.375.9000 FAX: 210.375.9010

TEXAS BOARD OF PROFESSIONAL ENGINEERS, FIRM REGISTRATION # 470

Texas Department of Transportation
© 2010

LOOP 1604

TRAFFIC SIGNAL DETAILS

LP 1604 & NEW GUILBEAU ROAD

SHEET 4 OF 7

DGN:	FED. RD. DIV. NO.	STATE	FEDERAL AID PROJECT NO.			HIGHWAY NO.
CHK DGN:	6	TEXAS	STP 2011(210)ES			LP 1604
DWG:	DIST.	COUNTY	CONT. NO.	SECT. NO.	JOB NO.	SHEET NO.
CHK DWG:	SAT	BEXAR	2452	01	050	260

Plotted on: 8/31/2010

ITEM	DESC	DESCRIPTION	UNIT	QTY
0618	2088	CONDT (PVC) (SCHD 80) (3") (TRENCH) (ROCK)	LF	435
0618	2089	CONDT (PVC) (SCHD 80) (3") (BORE) (ROCK)	LF	490
0620	2009	ELEC CONDR (NO. 6) BARE	LF	160
0620	2010	ELEC CONDR (NO. 6) INSULATED	LF	320
0620	2011	ELEC CONDR (NO. 8) BARE	LF	1475
0624	2008	GROUND BOX TY A (122311) W/APRON	EA	2
0624	2014	GROUND BOX TY D (162922) W/APRON	EA	3
0680	2003	INSTALL HWY TRF SIG (SYSTEM)	EA	1
0681	2001	TEMP TRAF SIGNALS	EA	1
0682	2001	BACK PLATE (12 IN) (3 SEC)	EA	9
0682	2022	VEH SIG SEC (12 IN) LED (GRN ARW)	EA	4
0682	2023	VEH SIG SEC (12 IN) LED (GRN)	EA	5
0682	2024	VEH SIG SEC (12 IN) LED (YEL ARW)	EA	4
0682	2025	VEH SIG SEC (12 IN) LED (YEL)	EA	5
0682	2026	VEH SIG SEC (12 IN) LED (RED ARW)	EA	4
0682	2027	VEH SIG SEC (12 IN) LED (RED)	EA	5
0682	2043	PED SIG SEC (12") (2 IND) (HOUSING ONLY)	EA	2
0684	2035	TRF SIG CBL (TY A) (14 AWG) (9 CONDR)	LF	2450
0687	2001	PED POLE ASSEMBLY	EA	5
8642	XXXX	AUDIBLE PEDESTRIAN SIGNAL UNIT	EA	2
6007	2001	REMOVING TRAFFIC SIGNALS	EA	1
		INSTALL CCTV FIELD EQUIPMENT $	EA	1
		BATTERY BACK-UP SYSTEM	EA	1
		LED COUNTDOWN PEDESTRIAN SIGNAL MODULE	EA	2
		RADAR ADVANCE DETECTION DEVICE $	EA	2
		RADAR PRESENCE DETECTION DEVICE $	EA	3
*		802.11a, b/g Outdoor Mesh AP, FCC Cfg (Part#: AIR-LAP1522AG-AK9)	EA	1
*		2400-2483.5 MHz, 8.0 dBi Omni Ant, with N Connect (Part #: AIR-ANT2480V-N)	EA	3
*		Aironet 1520 Series AC Power Cord, 40 ft, N. Amer Plug (Part #: AIR-CORD-R3P-40NA)	EA	1
*		4900-5850 MHz, 8.0Dbi OMNI with N Connect (Part #: AIR-ANT5180V-N)	EA	1
*		1520 Series Pole Mount Kit (AIR-ACCPMK1520)	EA	1
*		802.11a, b/g Outdoor Mesh AP, FCC Cfg (Part #: SMARTNET 8X5XNBD)	EA	1
*		27331A 01010000 BELDEN (Power Cable) (Part #: VNTC 16-3-R10K-BED)	LF	365
*		IND ETH 5E4P24 HLD (Ethernet Cable) (Part #: 7919A 01001000)	LF	365
*		2955 12 TX W/SM UPLINKS (Part #: WS-C2955S-12)	EA	1
*		19 IN RACK MOUNT KIT (Part #: CISCO STK-RACKMNT-2955)	EA	1
*		CISCO, AC TO 24 V DC DIN RAIL PW (Part #: PWR-2955-AC)	EA	1
*		SMARTNET 8X5XNBD 2955 12 TX w/Single Mode Uplinks (Part #: CON-SNTWSC2955S)	EA	1
*		TRAFFIC SIGNAL CONTROLLER ASSEMBLY (TYPE 332 CABINET)	EA	1
*		TYPE 332 CONTROLLER FOUNDATION WITH BBS BOX	EA	1
*		R3-2 (36"X36") NO LEFT-TURN	EA	1
*		R3-5R (30"X36") RIGHT-TURN ONLY	EA	2
*		R10-5 (SPL) (30"X36") TURN ON GREEN ARROW ONLY	EA	2
*		R10-11T (24"X30") NO RIGHT TURN ON RED	EA	1
*		METRO STREET NAME SIGN	EA	3
*		3M MODEL 138 OPTICOM CABLE $	LF	710
*		3M MODEL 752 PHASE SELECTORS $	EA	1
*		3M OPTICOM MODEL 722 DETECTOR $	EA	3
*		PELCO ASTRO-BRAC MAST ARM WIND DAMPER ASSY(AB-0178) $	EA	1
*		ZINC-COAST STL WIRE STRAND (5/16 IN)	LF	765
*		ZINC-COAST STL WIRE STRAND (3/16 IN)	LF	325
*		R10-4BL (5"X9") PEDESTRIAN SIGN	EA	1
*		R10-4BR (5"X9") PEDESTRIAN SIGN	EA	1
**		ASTRO-BRAC SIGNAL MOUNT ASSEMBLIES	EA	10
**		BRACKET ASSY (SYMBOLIC PEDESTRIAN HEAD)	EA	2
***		DRILL SHAFT (TRF SIG POLE) (24 IN) (ROCK)	LF	28.5

* SUBSIDIARY TO ITEM 680
** SUBSIDIARY TO ITEM 682
*** SUBSIDIARY TO ITEM 687
$ TO BE INSTALLED PER MANUFACTURERS SPECIFICATION

1. MODEL 332 CONTROLLER FOUNDATION SHALL BE PROVIDED BY CONTRACTOR PER DETAIL IN THIS PLAN SET.
2. COMMUNICATION EQUIPMENT TO BE DELIVERED TO CoSA SIGNAL SHOP FOUR (4) WEEKS IN ADVANCE FOR TESTING AND PROGRAMMING. CONTRACTOR TO INSTALL COMMUNICATION EQUIPMENT IN THE FIELD AS DIRECTED BY CoSA ITSD. SUBSIDIARY TO ITEM 680.
3. CONTRACTOR TO FURNISH AND DELIVER CONTROLLER AND CABINET ASSEMBLY TO COSA SHOP FOR PROGRAMMING AND TESTING FOUR (4) WEEKS IN ADVANCE PRIOR TO CONTRACTOR INSTALLING EQUIPMENT IN THE FIELD. SUBSIDIARY TO ITEM 680.
4. THE CONTRACTOR SHALL SUPPLY A CONFLICT MONITOR THAT CONFORMS TO THE TEES SPECIFICATION FOR MODEL 2070L CONTROLLER. THE CONFLICT MONITOR SHALL BE EDI. MODEL 2018 KCLIP, OR APPROVED EQUAL.
5. SALVAGEABLE MATERIAL SHALL BE DETERMINED BY THE CITY INSPECTOR AND DELIVERED TO THE CITY OF SAN ANTONIO TRAFFIC OPERATIONS FACILITY LOCATED AT 223 S CHERRY, SAN ANTONIO, TEXAS 78205. THE CONTRACTOR SHALL CONTACT THE CITY SERVICES & SUPPLY SUPERINTENDENT, AT (210)-207-7771 SEVEN (7) DAYS PRIOR TO DELIVERY OF THE SALVAGED MATERIAL. THE CONTRACTOR SHALL BECOME THE OWNER AND DISPOSE OF UNSALVAGED MATERIAL IN ACCORDANCE WITH FEDERAL, STATE, AND LOCAL REGULATIONS.

Design Filename: p:\74\00\04\design\civil\traffic\74000451602-CBL2.dgn

STATE OF TEXAS
GILMER D. GASTON
80472
LICENSED PROFESSIONAL ENGINEER

GILMER D. GASTON P.E. — 8/31/2010 DATE

NOT TO SCALE

REV. NO.	DATE	DESCRIPTION	BY

ALAMO RMA

PAPE-DAWSON ENGINEERS

555 EAST RAMSEY | SAN ANTONIO, TEXAS 78216 | PHONE: 210.375.9000 FAX: 210.375.9010

TEXAS BOARD OF PROFESSIONAL ENGINEERS, FIRM REGISTRATION # 470

Texas Department of Transportation
© 2010

LOOP 1604

TRAFFIC SIGNAL DETAILS

LP 1604 & NEW GUILBEAU ROAD

SHEET 5 OF 7

DGN:	FED. RD. DIV. NO.	STATE	FEDERAL AID PROJECT NO.			HIGHWAY NO.
CHK DGN:	6	TEXAS	STP 2011(210)ES			LP 1604
DWG:	DIST.	COUNTY	CONT. NO.	SECT. NO.	JOB NO.	SHEET NO.
CHK DWG:	SAT	BEXAR	2452	01	050	261

Plotted on: 8/31/2010

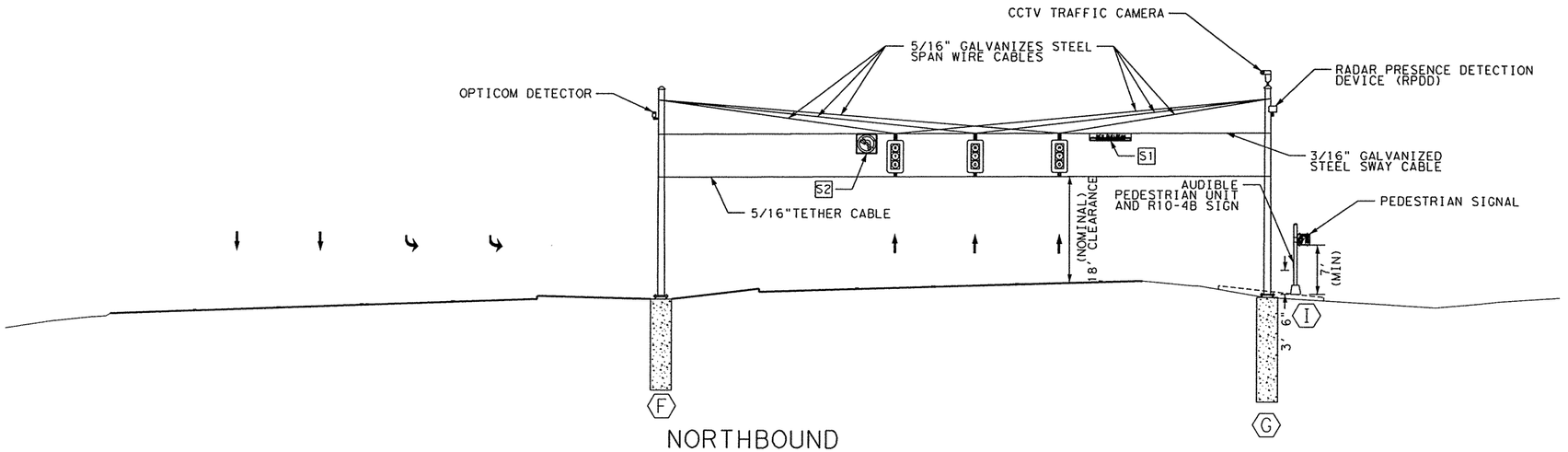

NORTHBOUND
(LOOP 1604)
N. T. S.

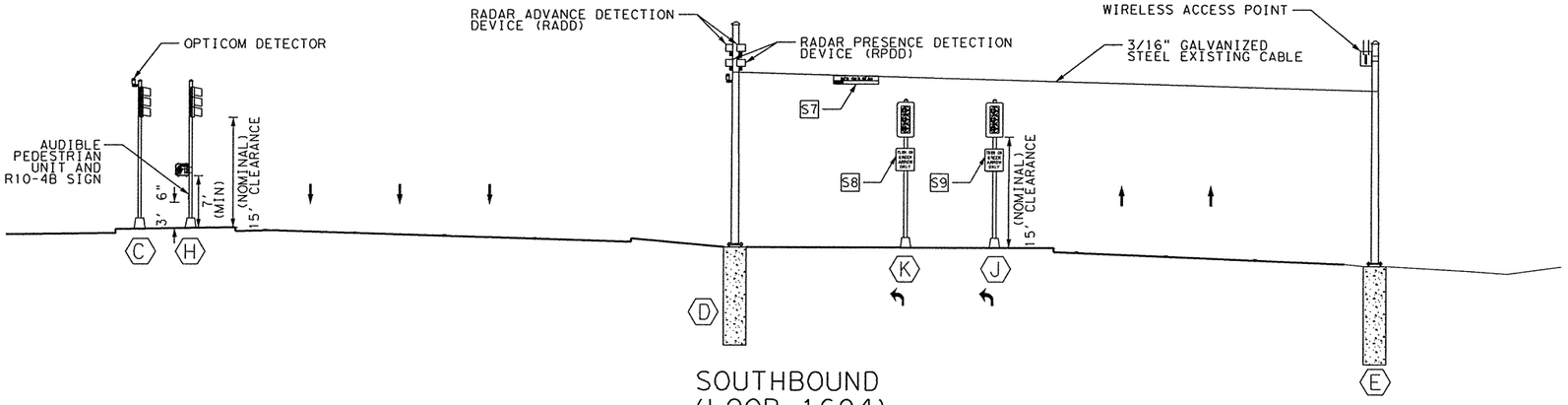

SOUTHBOUND
(LOOP 1604)
N. T. S.

8/31/2010
GILMER D. GASTON P.E. — DATE

NOT TO SCALE

REV. NO.	DATE	DESCRIPTION	BY

ALAMO RMA

PAPE-DAWSON ENGINEERS
555 EAST RAMSEY | SAN ANTONIO, TEXAS 78216 | PHONE: 210.375.9000 FAX: 210.375.9010
TEXAS BOARD OF PROFESSIONAL ENGINEERS, FIRM REGISTRATION # 470

Texas Department of Transportation
© 2010

LOOP 1604

ELEVATION

LOOP 1604 & NEW GUILBEAU ROAD

SHEET 6 OF 7

DGN:	FED. RD. DIV. NO.	STATE	FEDERAL AID PROJECT NO.			HIGHWAY NO.
CHK DGN:	6	TEXAS	STP 2011(210)ES			LP 1604
DWG:	DIST.	COUNTY	CONT. NO.	SECT. NO.	JOB NO.	SHEET NO.
CHK DWG:	SAT	BEXAR	2452	01	050	262

Design Filename: p:\74\00\04\design\civil\traffic\740004SIG02-EL1.dgn

Plotted on: 8/31/2010

Design Filename: p:\74\00\04\design\civil\traffic\740004SIG02-EL2.dgn

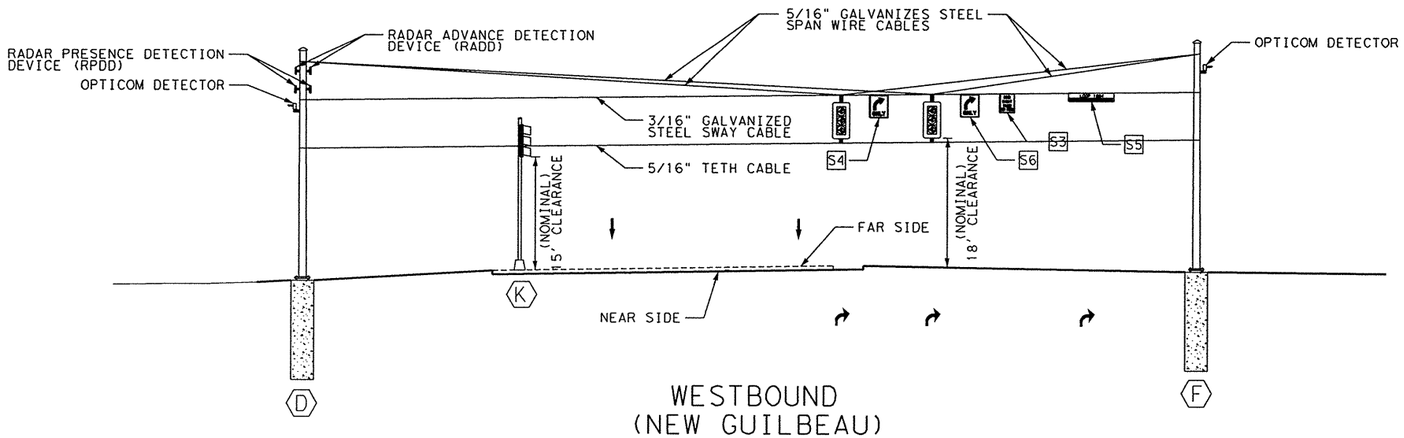

WESTBOUND
(NEW GUILBEAU)
N. T. S.

STATE OF TEXAS
GILMER D. CASTON
80472
LICENSED
PROFESSIONAL ENGINEER

GILMER D. GASTON P.E. — 8/31/2010 DATE

NOT TO SCALE

REV. NO.	DATE	DESCRIPTION	BY

ALAMO RMA

PAPE-DAWSON ENGINEERS

555 EAST RAMSEY | SAN ANTONIO, TEXAS 78216 | PHONE: 210.375.9000 FAX: 210.375.9010

TEXAS BOARD OF PROFESSIONAL ENGINEERS, FIRM REGISTRATION # 470

Texas Department of Transportation
© 2010

LOOP 1604

ELEVATION

LOOP 1604 & NEW GUILBEAU ROAD

SHEET 7 OF 7

DGN:	FED. RD. DIV. NO.	STATE	FEDERAL AID PROJECT NO.			HIGHWAY NO.
CHK DGN:	6	TEXAS	STP 2011(210)ES			LP 1604
DWG:	DIST.	COUNTY	CONT. NO.	SECT. NO.	JOB NO.	SHEET NO.
CHK DWG:	SAT	BEXAR	2452	01	050	263

Plotted on: 8/4/2010

Design Filename: p:\74\00\04\Design\Civil\TRAFFIC\740004SIG03-P.dgn

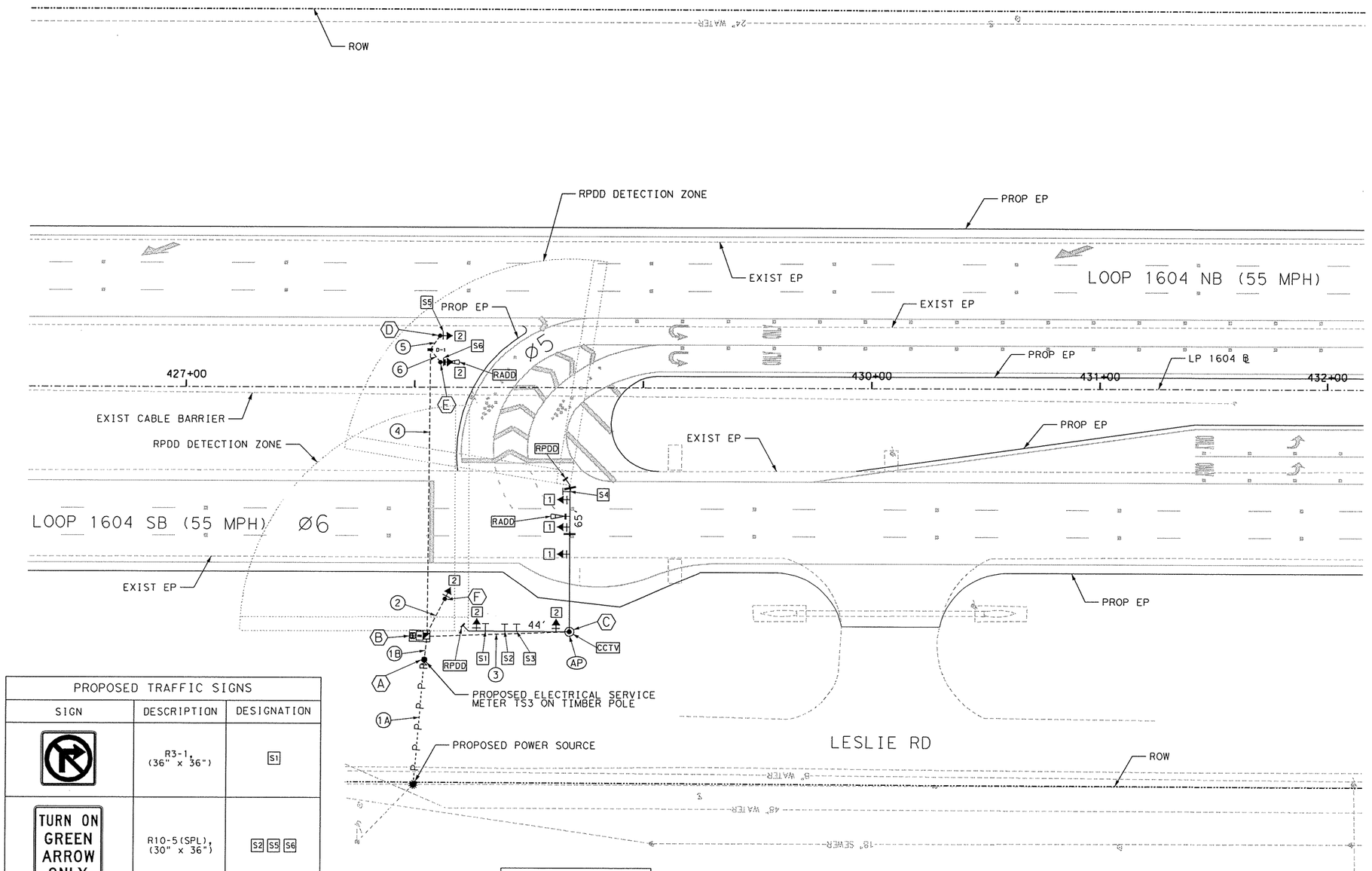

SIGNAL PLAN LEGEND

- NO 3½ GROUND BOX (PROPOSED) (TY A)
- NO 7 GROUND BOX (EXISTING) (TY D)
- NO 7 GROUND BOX (PROPOSED) (TY D)
- POLE (EXISTING OR RELOCATED)
- POLE (PROPOSED)
- POWER SOURCE (EXISTING OR RELOCATED)
- POWER SOURCE (PROPOSED)
- PROP. MODEL 332 CONTROLLER CABINET & FDN WITH BBS BATTERY BOX
- PROP. MODEL 332 CONTROLLER CABINET & FDN
- ELECTRIC SERVICE METER (EXISTING)
- ELECTRIC SERVICE METER (PROPOSED)
- CONDUIT (EXISTING)
- 3" CONDUIT SCHEDULE 80 (PROPOSED)
- SIGNAL HEAD (EXISTING)
- SIGNAL HEAD (TEMPORARY)
- SIGNAL HEAD (PROPOSED)
- SIGN
- MAST ARM POLE & FOUNDATION (PROPOSED)
- PED SIGNAL AND PUSHBUTTON (EXISTING)
- PED SIGNAL AND PUSHBUTTON (PROPOSED)
- V.I.V.D.S CAMERA & MOUNT (EXISTING)
- V.I.V.D.S CAMERA & MOUNT (PROPOSED)
- 2" CONDUIT STUBOUT & CAP
- RPDD RADAR PRESENCE DETECTOR
- RADD RADAR ADVANCE DETECTOR
- AP WIRELESS ACCESS POINT
- CCTV TRAFFIC SURVEILLANCE SYSTEM 4PTZ
- OPTICOM DETECTOR (PROPOSED)
- XX CONDUIT IDENTIFIER
- X POLE & EQUIPMENT IDENTIFIER
- PROPOSED ILLUMINATION POLE AND LUMINAIRE
- A ILLUMINATION IDENTIFIER

PROPOSED TRAFFIC SIGNS

SIGN	DESCRIPTION	DESIGNATION
	R3-1, (36" x 36")	S1
TURN ON GREEN ARROW ONLY	R10-5(SPL), (30" x 36")	S2 S5 S6
ONE WAY	R6-1L, (48" x 16")	S3
	R3-2, (36" x 36")	S4

TRAFFIC SIGNAL HEADS

SIGNAL FACES

12" LED SIGNAL SECTIONS

1 QTY:3 — R Y G

2 QTY:5 — R Y G

SIGNAL PHASING DIAGRAM:

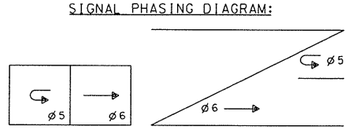

CONFLICT FLASH: RED ALL PHASES

CONTRACTOR SHALL CONTACT DIGTESS @ 1-800-DIG-TESS FOR LOCATION OF ALL UTILITIES AT LEAST 72 HOURS PRIOR TO BEGINNING CONSTRUCTION.

Texas Excavation Safety System

GILMER D. CASTON 80472 LICENSED PROFESSIONAL ENGINEER — STATE OF TEXAS

GILMER D. CASTON P.E. — 8/4/2010 DATE

25 0 25 50

SCALE: PLAN - 1":50'

REV. NO.	DATE	DESCRIPTION	BY

ALAMO RMA

PAPE-DAWSON ENGINEERS

555 EAST RAMSEY | SAN ANTONIO, TEXAS 78216 | PHONE: 210.375.9000 FAX: 210.375.9010

TEXAS BOARD OF PROFESSIONAL ENGINEERS, FIRM REGISTRATION # 470

Texas Department of Transportation © 2010

LOOP 1604

PROPOSED TRAFFIC SIGNAL LAYOUT

TURNAROUND #2 (NORTH OF SHAENFIELD ROAD)

SHEET 1 OF 5

DGN:	FED. RD. DIV. NO.	STATE	FEDERAL AID PROJECT NO.			HIGHWAY NO.
CHK DGN:	6	TEXAS	STP 2011(210)ES			LP 1604
DWG:	DIST.	COUNTY	CONT. NO.	SECT. NO.	JOB NO.	SHEET NO.
CHK DWG:	SAT	BEXAR	2452	01	050	264

Plotted on: 8/4/2010

Design Filename: p:\74\00\04\design\civil\traffic\740004SIG03-CBL1.dgn

CONDUIT AND CONDUCTOR SCHEDULE

	RUN NUMBER			1A	1B	2	3	4	5	6
	CONDUIT SIZE IN INCHES			-	3	3	3	3	3	3
	NUMBER OF CONDUITS			-	1	1	1	1	1	1
	LENGTH OF RUN/SPAN (FT)			60	15	20	65	130	10	10
	TRENCH (T)/BORE (B)/EXISTING (E)			A	T	T	T	B	T	T
CABLE	CIRCUIT									
#6 XHHW	120 POWER HOT				1					
	120 POWER COMMON				1					
#6 BARE	BARE BOND GROUND				1					
#8 BARE	BARE BOND GROUND					1	1	1	1	1
9 COND. #14 SOLID TYPE "A"	VEH SIGNALS	Ø	5			1	1	2	1	1
		Ø	6				1			
M138 OPTICOM CABLE	EMERG PREEMPT	POLE	C				2			
POWER & DATA CABLE	RADAR PRESENCE DETECTION DEVICE (RPDD)	Ø	5				1			
		Ø	6				1			
POWER CABLE	COMMUNICATION CABLE	POLE	C				2			
ETHERNET CABLE		POLE	C				2			
POWER & DATA CABLE	RADAR ADVANCE DETECTION DEVICE (RADD)	POLE	C				1			
		POLE	E					1		1
POWER & DATA CABLE	CLOSED CIRCUIT TELEVISION (CCTV)	POLE	C				1			

CABLES PULLED BY CPS ENERGY

AN EXTRA 2 INCH CONDUIT SHALL BE STUBBED OUT AND CAPPED 2 FEET FROM EACH CONCRETE FOUNDATION, INCLUDING CONTROLLER AND EACH DRILLED SHAFT.

RUN #1B SHALL HAVE 36" OF COVER.

POLE SCHEDULE

	POLE			Ⓒ	Ⓓ	Ⓔ	Ⓕ
	POLE TYPE			LMA(D)	PED	PED	PED
	POLE HEIGHT (FEET)			30	20	20	20
	MAST ARM LENGTH (FEET)			65 & 44	N/A	N/A	N/A
	LUMINAIRE EXTENSION			YES	N/A	N/A	N/A
	LUMINAIRE			NO	N/A	N/A	N/A
	FOUNDATION TYPE			48-A	24-A	24-A	24-A
	FOUNDATION DEPTH (FEET)			24.9	5.7	5.7	5.7
CABLE	CIRCUIT			NUMBER OF CONDUCTORS			
# 8 BARE				1	1	1	1
9 COND. #14 SOLID TYPE "A"	VEH SIGNALS	Ø	5	2	1	1	1
		Ø	6	3			
M138 OPTICOM CABLE	EMERG PREEMPT	POLE	C	2			
POWER & DATA CABLE	RADAR PRESENCE DETECTION DEVICE (RPDD)	Ø	5	1			
		Ø	6	1			
POWER CABLE	COMMUNICATION CABLE	POLE	C	2			
ETHERNET CABLE		POLE	C	2			
POWER & DATA CABLE	RADAR ADVANCE DETECTION DEVICE (RADD)	POLE	C	1			
		POLE	E			1	
POWER & DATA CABLE	CLOSED CIRCUIT TELEVISION (CCTV)	POLE	C	1			

POLE & EQUIPMENT INFORMATION

ID NO.	DESCRIPTION/ATTACHMENTS	STATION	OFFSET	FND. ELEV
Ⓐ	PROPOSED ELECTRIC SERVICE METER TS3 ON TIMBER POLE WITH AERIAL DROP.	N/A	N/A	N/A
Ⓑ	INSTALL SAN ANTONIO STANDARD MODEL 332 TRAFFIC SIGNAL CONTROLLER CABINET ASSEMBLY, MODEL 2070 CONTROLLER, AND COSA BASE-MOUNT FOUNDATION (5' X 9') WITH BATTERY BOX IN FOUNDATION.	N/A	N/A	N/A
Ⓒ	INSTALL LMA (D) SIGNAL POLE PER POLE SCHEDULE, WITH ONE CCTV CAMERA ASSEMBLY, TWO OPTICOM DETECTORS, THREE RADAR SENSORS, WIRELESS COMMUNUCATION EQUIPMENT, SIGNS, AND FIVE VEHICLE SIGNALS AS INDICATED ON LAYOUT.	428+67.99 "1604"	108.23 RT	909.48
Ⓓ	INSTALL 20 FT BRUSHED ALUMINUM PEDESTRAIN POLE ON FRANGIBLE BASE WITH SIGN AND ONE VEHICLE SIGNAL AS INDICATED ON LAYOUT.	428+10.99 "1604"	22.74 LT	FLUSH WITH FINISHED GRADE
Ⓔ	INSTALL 20 FT BRUSHED ALUMINUM PEDESTRAIN POLE ON FRANGIBLE BASE, WITH ONE RADAR SENSOR, SIGN, AND ONE VEHICLE SIGNAL AS INDICATED ON LAYOUT.	428+11.18 "1604"	10.74 LT	FLUSH WITH FINISHED GRADE
Ⓕ	INSTALL 20 FT BRUSHED ALUMINUM PEDESTRAIN POLE ON FRANGIBLE BASE WITH ONE VEHICLE SIGNAL AS INDICATED ON LAYOUT.	428+13.71 "1604"	93.63 RT	MATCH EDGE OF PAVEMENT

SIGNS SHALL BE ATTACHED TO POLES AND MAST ARMS AS INDICATED ON LAYOUT.

Elec. Service No.	Electrical Service Description (see ED (4) - 03)	Service Conduit Size	Service Conductors No./Size	Safety Switch Amps	Main Ckt. Bkr. Pole/Amp	Two-Pole Contactor Amps	Panelbd/ Loadcenter Amp Rating	Circuit No.	Branch Ckt. Bkr. Pole/Amps	Branch Circuit Amps	KVA Load
TS3	ELEC SERV TY D(120/240)070(NS)GS(N)TP(O)	3"	3/#6	N/A	2P/70	N/A	100	A (SIGNAL)	1P/50	40	4.8

GILMER D. GASTON P.E. — 8/4/2010 DATE

NOT TO SCALE

REV. NO.	DATE	DESCRIPTION	BY

ALAMO RMA

PAPE-DAWSON ENGINEERS
555 EAST RAMSEY | SAN ANTONIO, TEXAS 78216 | PHONE: 210.375.9000 FAX: 210.375.9010
TEXAS BOARD OF PROFESSIONAL ENGINEERS, FIRM REGISTRATION # 470

Texas Department of Transportation
© 2010

LOOP 1604

TRAFFIC SIGNAL DETAILS

TURNAROUND #2 (NORTH OF SHAENFIELD ROAD)

DGN:	FED. RD. DIV. NO.	STATE	FEDERAL AID PROJECT NO.			HIGHWAY NO.
CHK DGN:	6	TEXAS	STP 2011(210)ES			LP 1604
DWG:	DIST.	COUNTY	CONT. NO.	SECT. NO.	JOB NO.	SHEET NO.
CHK DWG:	SAT	BEXAR	2452	01	050	265

ITEM	DESC	DESCRIPTION	UNIT	QTY
0416		DRILL SHAFT (TRF SIG POLE) (48 IN) (ROCK)	LF	24.9
0618	2088	CONDT (PVC) (SCHD 80) (3") (TRENCH) (ROCK)	LF	120
0618	2089	CONDT (PVC) (SCHD 80) (3") (BORE) (ROCK)	LF	130
0620	2009	ELEC CONDR (NO. 6) BARE	LF	20
0620	2010	ELEC CONDR (NO. 6) INSULATED	LF	40
0620	2011	ELEC CONDR (NO. 8) BARE	LF	360
0624	2014	GROUND BOX TY D (162922) W/APRON	EA	1
0628	2089	ELC SRV TY D 120/240 070 (NS)GS(N)TP(O)	EA	1
0680	2003	INSTALL HWY TRF SIG (SYSTEM)	EA	1
0682	2001	BACK PLATE (12 IN) (3 SEC)	EA	8
0682	2022	VEH SIG SEC (12 IN) LED (GRN ARW)	EA	5
0682	2023	VEH SIG SEC (12 IN) LED (GRN)	EA	3
0682	2024	VEH SIG SEC (12 IN) LED (YEL ARW)	EA	5
0682	2025	VEH SIG SEC (12 IN) LED (YEL)	EA	3
0682	2026	VEH SIG SEC (12 IN) LED (RED ARW)	EA	5
0682	2027	VEH SIG SEC (12 IN) LED (RED)	EA	3
0684	2035	TRF SIG CBL (TY A) (14 AWG) (9 CONDR)	LF	960
0686	2277	INS TRF SIG PL AM(S) 2 ARM(65-44')LUM	EA	1
0687	2001	PED POLE ASSEMBLY	EA	3
		INSTALL CCTV FIELD EQUIPMENT $	EA	1
		BATTERY BACK-UP SYSTEM	EA	1
		RADAR ADVANCE DETECTION DEVICE $	EA	2
		RADAR PRESENCE DETECTION DEVICE $	EA	2
*		802.11a, b/g Outdoor Mesh AP, FCC Cfg (Part#: AIR-LAP1522AG-AK9)	EA	1
*		2400-2483.5 MHz, 8.0 dBi Omni Ant, with N Connect (Part #: AIR-ANT2480V-N)	EA	3
*		Aironet 1520 Series AC Power Cord, 40 ft, N. Amer Plug (Part #: AIR-CORD-R3P-40NA)	EA	1
*		4900-5850 MHz, 8.0Dbi OMNI with N Connect (Part #: AIR-ANT5180V-N)	EA	1
*		1520 Series Pole Mount Kit (AIR-ACCPMK1520)	EA	1
*		802.11a, b/g Outdoor Mesh AP, FCC Cfg (Part #: SMARTNET 8X5XNBD)	EA	1
*		27331A 01010000 BELDEN (Power Cable) (Part #: VNTC 16-3-R10K-BED)	LF	330
*		IND ETH 5E4P24 HLD (Ethernet Cable) (Part #: 7919A 01001000)	LF	165
*		2955 12 TX W/SM UPLINKS (Part #: WS-C2955S-12)	EA	1
*		19 IN RACK MOUNT KIT (Part #: CISCO STK-RACKMNT-2955)	EA	1
*		CISCO, AC TO 24 V DC DIN RAIL PW (Part #: PWR-2955-AC)	EA	1
*		SMARTNET 8X5XNBD 2955 12 TX w/Single Mode Uplinks (Part #: CON-SNTWSC2955S)	EA	1
*		Su-a-5.3-6-bd-v1 (Part #: ALV-853197)	EA	1
*		Astro Bracket (Part #: AB-3004-29)	EA	1
*		Aluminum Tube (Part #: AB-2003-23)	EA	1
*		IND ETH 5E4P24 HLD (Ethernet Cable) (Part #: 7919A 01001000)	LF	165
*		TRAFFIC SIGNAL CONTROLLER ASSEMBLY (TYPE 332 CABINET)	EA	1
*		MODEL 2070 CONTROLLER WITH NEXTPHASE SOFTWARE	EA	1
*		TYPE 332 CONTROLLER FOUNDATION WITH BBS BOX	EA	1
*		R3-1 (36"X36") NO RIGHT-TURN	EA	1
*		R3-2 (36"X36") NO LEFT-TURN	EA	1
*		R6-1L (48"X16") ONE-WAY	EA	1
*		R10-5 (SPL) (30"X36") TURN ON GREEN ARROW ONLY	EA	3
*		3M MODEL 138 OPTICOM CABLE $	LF	310
*		3M MODEL 752 PHASE SELECTORS $	EA	1
*		3M OPTICOM MODEL 722 DETECTOR $	EA	2
*		PELCO ASTRO-BRAC MAST ARM WIND DAMPER ASSY(AB-0178) $	EA	2
**		ASTRO-BRAC SIGNAL MOUNT ASSEMBLIES	EA	8
***		DRILL SHAFT (TRF SIG POLE) (24 IN) (ROCK)	LF	17.1

* SUBSIDIARY TO ITEM 680
** SUBSIDIARY TO ITEM 682
*** SUBSIDIARY TO ITEM 687
$ TO BE INSTALLED PER MANUFACTURERS SPECIFICATION

1. MODEL 332 CONTROLLER FOUNDATION SHALL BE PROVIDED BY CONTRACTOR PER DETAIL IN THIS PLAN SET.
2. COMMUNICATION EQUIPMENT TO BE DELIVERED TO CoSA SIGNAL SHOP FOUR (4) WEEKS IN ADVANCE FOR TESTING AND PROGRAMMING. CONTRACTOR TO INSTALL COMMUNICATION EQUIPMENT IN THE FIELD AS DIRECTED BY CoSA ITSD. SUBSIDIARY TO ITEM 680.
3. CONTRACTOR TO FURNISH AND DELIVER CONTROLLER AND CABINET ASSEMBLY TO COSA SHOP FOR PROGRAMMING AND TESTING FOUR (4) WEEKS IN ADVANCE PRIOR TO CONTRACTOR INSTALLING EQUIPMENT IN THE FIELD. SUBSIDIARY TO ITEM 680.
4. THE CONTRACTOR SHALL SUPPLY A CONFLICT MONITOR THAT CONFORMS TO THE TEES SPECIFICATION FOR MODEL 2070L CONTROLLER. THE CONFLICT MONITOR SHALL BE EDI. MODEL 2018 KCLIP, OR APPROVED EQUAL.

STATE OF TEXAS
GILMER D. GASTON
80472
LICENSED
PROFESSIONAL ENGINEER

GILMER D. GASTON P.E. 7/6/2010
DATE

NOT TO SCALE

REV. NO.	DATE	DESCRIPTION	BY

ALAMO RMA

PAPE-DAWSON ENGINEERS

555 EAST RAMSEY | SAN ANTONIO, TEXAS 78216 | PHONE: 210.375.9000 FAX: 210.375.9010

TEXAS BOARD OF PROFESSIONAL ENGINEERS, FIRM REGISTRATION # 470

Texas Department of Transportation
© 2010

LOOP 1604

TRAFFIC SIGNAL DETAILS

TURNAROUND #2 (NORTH OF SHAENFIELD ROAD)

SHEET 3 OF 5

DGN:	FED. RD. DIV. NO.	STATE	FEDERAL AID PROJECT NO.			HIGHWAY NO.
CHK DGN:	6	TEXAS	STP 2011(210)ES			LP 1604
DWG:	DIST.	COUNTY	CONT. NO.	SECT. NO.	JOB NO.	SHEET NO.
CHK DWG:	SAT	BEXAR	2452	01	050	266

Plotted on: 7/6/2010

Design Filename: p:\74\00\04\design\civil\traffic\740004SIG03-CBL2.dgn

Plotted on: 6/26/2010

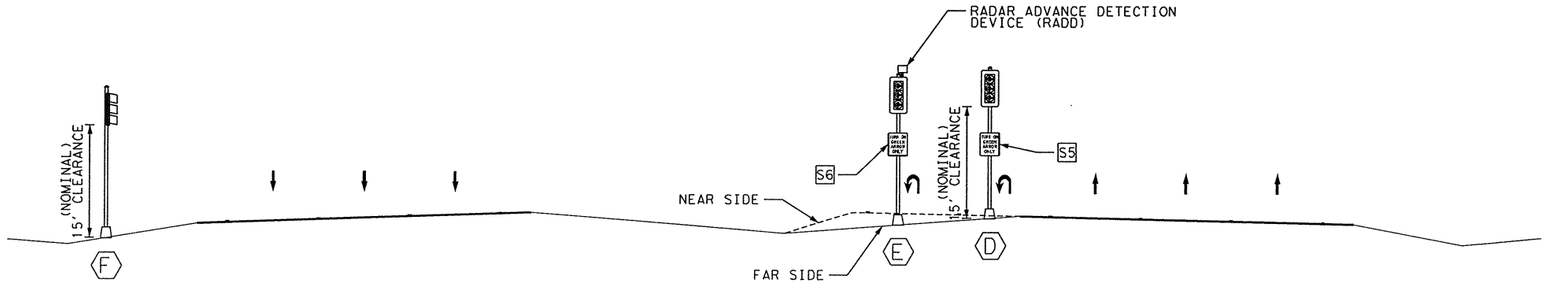

NORTHBOUND
(LOOP 1604)
N.T.S.

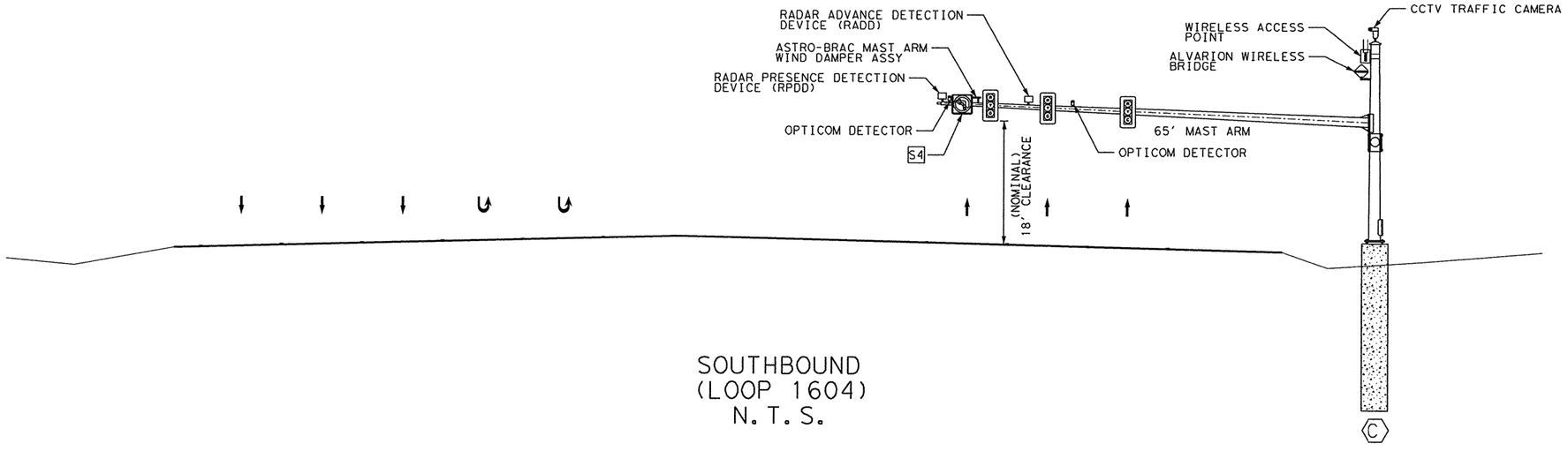

SOUTHBOUND
(LOOP 1604)
N.T.S.

GILMER D. GASTON
80472
LICENSED PROFESSIONAL ENGINEER
STATE OF TEXAS
GILMER D. GASTON P.E.
6/26/2010
DATE

NOT TO SCALE

REV. NO.	DATE	DESCRIPTION	BY

ALAMO RMA

PAPE-DAWSON ENGINEERS
555 EAST RAMSEY | SAN ANTONIO, TEXAS 78216 | PHONE: 210.375.9000 FAX: 210.375.9010
TEXAS BOARD OF PROFESSIONAL ENGINEERS, FIRM REGISTRATION # 470

Texas Department of Transportation
© 2010

LOOP 1604

ELEVATION

TURNAROUND #2 (NORTH OF SHAENFIELD ROAD)

SHEET 4 OF 5

DGN:	FED. RD. DIV. NO.	STATE	FEDERAL AID PROJECT NO.			HIGHWAY NO.
CHK DGN:	6	TEXAS	STP 2011(210)ES			LP 1604
DWG:	DIST.	COUNTY	CONT. NO.	SECT. NO.	JOB NO.	SHEET NO.
CHK DWG:	SAT	BEXAR	2452	01	050	267

Design Filename: p:\74\00\04\design\civil\traffic\740004SIG03-EL1.dgn

Plotted on: 6/26/2010

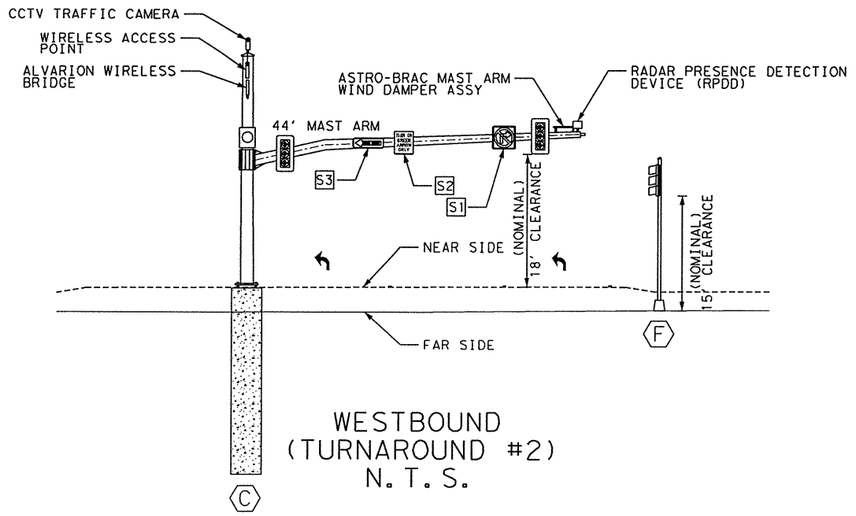

WESTBOUND
(TURNAROUND #2)
N.T.S.

GILMER D. GASTON
60472
LICENSED
PROFESSIONAL ENGINEER
STATE OF TEXAS

GILMER D. GASTON P.E. 6/26/2010
DATE

NOT TO SCALE

REV. NO.	DATE	DESCRIPTION	BY

ALAMO RMA

PAPE-DAWSON ENGINEERS

555 EAST RAMSEY | SAN ANTONIO, TEXAS 78216 | PHONE: 210.375.9000 FAX: 210.375.9010

TEXAS BOARD OF PROFESSIONAL ENGINEERS, FIRM REGISTRATION # 470

Texas Department of Transportation
© 2010

LOOP 1604
ELEVATION

TURNAROUND #2 (NORTH OF SHAENFIELD ROAD)

SHEET 5 OF 5

DGN:	FED. RD. DIV. NO.	STATE	FEDERAL AID PROJECT NO.			HIGHWAY NO.
CHK DGN:	6	TEXAS	STP 2011(210)ES			LP 1604
DWG:	DIST.	COUNTY	CONT. NO.	SECT. NO.	JOB NO.	SHEET NO.
CHK DWG:	SAT	BEXAR	2452	01	050	268

Design Filename: p:\74\00\04\design\civil\traffic\740004SIG03-EL2.dgn

Plotted on: 7/7/2010

Design Filename: p:\74\00\04\Design\Civil\TRAFFIC\740004SIG04-E.dgn

SIGNAL PHASING DIAGRAM:

SIGNAL PLAN LEGEND

- NO 3½ GROUND BOX (PROPOSED) (TY A)
- NO 7 GROUND BOX (EXISTING) (TY D)
- NO 7 GROUND BOX (PROPOSED) (TY D)
- POLE (EXISTING OR RELOCATED)
- POLE (PROPOSED)
- POWER SOURCE (EXISTING OR RELOCATED)
- POWER SOURCE (PROPOSED)
- PROP. MODEL 332 CONTROLLER CABINET & FDN WITH BBS BATTERY BOX
- PROP. MODEL 332 CONTROLLER CABINET & FDN
- ELECTRIC SERVICE METER (EXISTING)
- ELECTRIC SERVICE METER (PROPOSED)
- CONDUIT (EXISTING)
- 3" CONDUIT SCHEDULE 80 (PROPOSED)
- SIGNAL HEAD (EXISTING)
- SIGNAL HEAD (TEMPORARY)
- SIGNAL HEAD (PROPOSED)
- SIGN
- MAST ARM POLE & FOUNDATION (PROPOSED)
- PED SIGNAL AND PUSHBUTTON (EXISTING)
- PED SIGNAL AND PUSHBUTTON (PROPOSED)
- V.I.V.D.S CAMERA & MOUNT (EXISTING)
- V.I.V.D.S CAMERA & MOUNT (PROPOSED)
- 2" CONDUIT STUBOUT & CAP
- RPDD RADAR PRESENCE DETECTOR
- RADD RADAR ADVANCE DETECTOR
- AP WIRELESS ACCESS POINT
- CCTV TRAFFIC SURVEILLANCE SYSTEM 4PTZ
- OPTICOM DETECTOR (PROPOSED)
- XX CONDUIT IDENTIFIER
- X POLE & EQUIPMENT IDENTIFIER
- PROPOSED ILLUMINATION POLE AND LUMINAIRE
- X ILLUMINATION IDENTIFIER

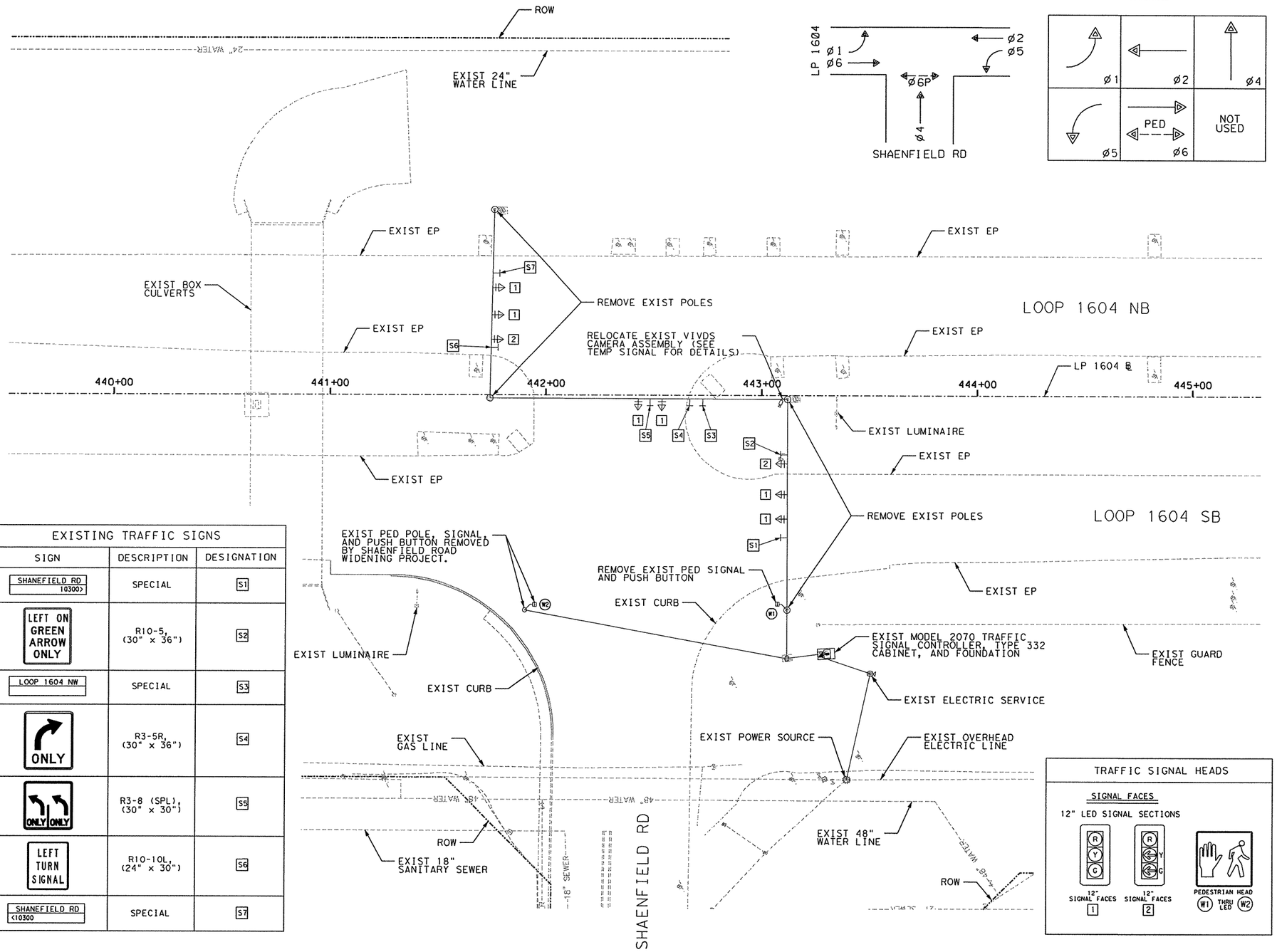

EXISTING TRAFFIC SIGNS

SIGN	DESCRIPTION	DESIGNATION
SHANEFIELD RD 10300	SPECIAL	S1
LEFT ON GREEN ARROW ONLY	R10-5, (30" x 36")	S2
LOOP 1604 NW	SPECIAL	S3
ONLY	R3-5R, (30" x 36")	S4
ONLY ONLY	R3-8 (SPL), (30" x 30")	S5
LEFT TURN SIGNAL	R10-10L, (24" x 30")	S6
SHANEFIELD RD 10300	SPECIAL	S7

TRAFFIC SIGNAL HEADS

SIGNAL FACES

12" LED SIGNAL SECTIONS

GILMER D. GASTON 80472 LICENSED PROFESSIONAL ENGINEER — STATE OF TEXAS

GILMER D. GASTON P.E. — 7/7/2010 DATE

25 0 25 50

SCALE: PLAN - 1":50'

REV. NO.	DATE	DESCRIPTION	BY

ALAMO RMA

PAPE-DAWSON ENGINEERS

555 EAST RAMSEY | SAN ANTONIO, TEXAS 78216 | PHONE: 210.375.9000 FAX: 210.375.9010

TEXAS BOARD OF PROFESSIONAL ENGINEERS, FIRM REGISTRATION # 470

Texas Department of Transportation © 2010

LOOP 1604

EXISTING TRAFFIC SIGNAL LAYOUT

LP 1604 & SHAENFIELD ROAD

SHEET 1 OF 9

DGN:	FED. RD. DIV. NO.	STATE	FEDERAL AID PROJECT NO.			HIGHWAY NO.
CHK DGN:	6	TEXAS	STP 2011(210)ES			LP 1604
DWG:	DIST.	COUNTY	CONT. NO.	SECT. NO.	JOB NO.	SHEET NO.
CHK DWG:	SAT	BEXAR	2452	01	050	269

Plotted on: 8/4/2010

Design Filename: p:\74\00\04\design\civil\traffic\740004SIG04-TMP.dgn

CONDUIT AND CONDUCTOR SCHEDULE

	RUN NUMBER			1A	1B	1C	2	3	9	10	13	14	16	18	29
	CONDUIT SIZE IN INCHES			-	3	3	3	3	3	3	3	3	3	3	-
	NUMBER OF CONDUITS			-	1	2	4	2	2	2	1	1	1	1	1
	LENGTH OF RUN (FT)			-	20	10	15	100	115	210	55	25	30	10	95
	TRENCH (T)/BORE (B)/EXISTING (E)			E	T	T	T	B	B	B	T	T	T	T	A
CABLE	CIRCUIT			CABLES PULLED BY CPS ENERGY											
#6 XHHW	120 POWER HOT				1	1									
	120 POWER COMMON				1	1									
#6 BARE	BARE BOND GROUND				1	1									
#8 BARE	BARE BOND GROUND						4	2	2	2	1	1	1	1	1
9 COND. #14 SOLID TYPE "A"	VEH SIGNALS	Ø	1+6				2	2				2			
		Ø	2+5				2		2	2			2		
		Ø	4				1		1	1			1		1
POWER & DATA CABLE	RADAR PRESENCE DETECTION DEVICE (RPDD)	Ø	1+6				1		1	1			1		
		Ø	4				1				1			1	
VIVDS COAX & 3/C #18 AWG PWR CABLE	VIVDS	Ø	2+5				1		1	1			1		
POWER & DATA CABLE	RADAR ADVANCE DETECTION DEVICE (RADD)	POLE	D				1	1				1			
		POLE	F				1		1	1			1		
		POLE	T				1		1	1			1		1

RUN #1B TO #1C SHALL HAVE 36" OF COVER.

SIGNAL PHASING DIAGRAM:

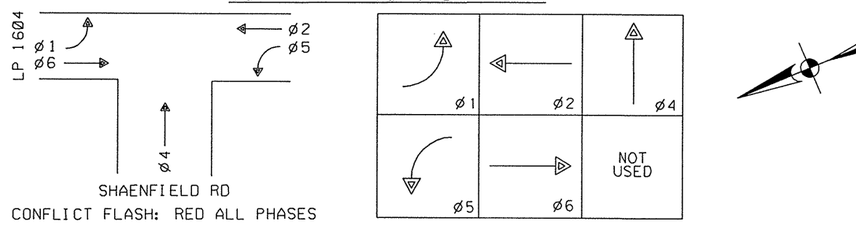

TEMP SIGNALS SHALL INCLUDE PERMANENT DETECTION WITH RADD AND RPDD. ø5 AND ø2 PRESENCE DETECTION BY VIVDS.

SIGNAL PLAN LEGEND

- NO 3½ GROUND BOX (PROPOSED) (TY A)
- NO 7 GROUND BOX (EXISTING) (TY D)
- NO 7 GROUND BOX (PROPOSED) (TY D)
- POLE (EXISTING OR RELOCATED)
- POLE (PROPOSED)
- POWER SOURCE (EXISTING OR RELOCATED)
- POWER SOURCE (PROPOSED)
- PROP. MODEL 332 CONTROLLER CABINET & FDN WITH BBS BATTERY BOX
- PROP. MODEL 332 CONTROLLER CABINET & FDN
- ELECTRIC SERVICE METER (EXISTING)
- ELECTRIC SERVICE METER (PROPOSED)
- CONDUIT (EXISTING)
- 3" CONDUIT SCHEDULE 80 (PROPOSED)
- SIGNAL HEAD (EXISTING)
- SIGNAL HEAD (TEMPORARY)
- SIGNAL HEAD (PROPOSED)
- SIGN
- MAST ARM POLE & FOUNDATION (PROPOSED)
- PED SIGNAL AND PUSHBUTTON (EXISTING)
- PED SIGNAL AND PUSHBUTTON (PROPOSED)
- V.I.V.D.S CAMERA & MOUNT (EXISTING)
- V.I.V.D.S CAMERA & MOUNT (PROPOSED)
- 2" CONDUIT STUBOUT & CAP
- RPDD RADAR PRESENCE DETECTOR
- RADD RADAR ADVANCE DETECTOR
- AP WIRELESS ACCESS POINT
- CCTV TRAFFIC SURVEILLANCE SYSTEM 4PTZ
- OPTICOM DETECTOR (PROPOSED)
- XX CONDUIT IDENTIFIER
- X POLE & EQUIPMENT IDENTIFIER
- PROPOSED ILLUMINATION POLE AND LUMINAIRE
- A ILLUMINATION IDENTIFIER

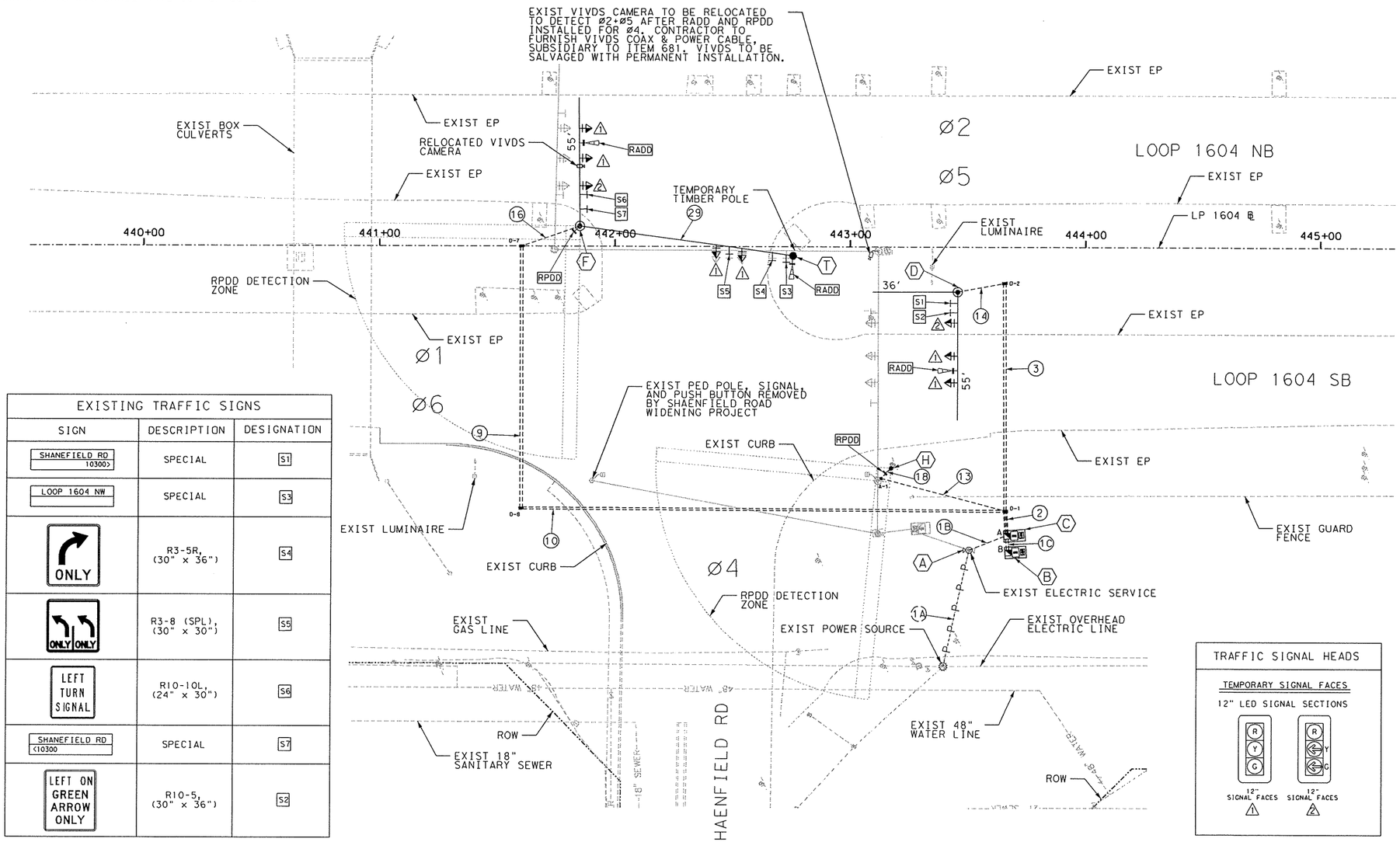

EXISTING TRAFFIC SIGNS

SIGN	DESCRIPTION	DESIGNATION
SHANEFIELD RD 10300>	SPECIAL	S1
LOOP 1604 NW	SPECIAL	S3
ONLY	R3-5R, (30" x 36")	S4
ONLY ONLY	R3-8 (SPL), (30" x 30")	S5
LEFT TURN SIGNAL	R10-10L, (24" x 30")	S6
SHANEFIELD RD <10300	SPECIAL	S7
LEFT ON GREEN ARROW ONLY	R10-5, (30" x 36")	S2

TRAFFIC SIGNAL HEADS

TEMPORARY SIGNAL FACES

12" LED SIGNAL SECTIONS

STATE OF TEXAS
GILMER D. CASTON
80472
LICENSED PROFESSIONAL ENGINEER

GILMER D. CASTON P.E. — 8/4/2010 DATE

SCALE: PLAN - 1":50'

REV. NO.	DATE	DESCRIPTION	BY

ALAMO RMA

PAPE-DAWSON ENGINEERS

555 EAST RAMSEY | SAN ANTONIO, TEXAS 78216 | PHONE: 210.375.9000 FAX: 210.375.9010

TEXAS BOARD OF PROFESSIONAL ENGINEERS, FIRM REGISTRATION # 470

Texas Department of Transportation © 2010

LOOP 1604

TEMPORARY TRAFFIC SIGNAL LAYOUT

LP 1604 & SHAENFIELD ROAD

SHEET 2 OF 9

DGN:	FED. RD. DIV. NO.	STATE	FEDERAL AID PROJECT NO.			HIGHWAY NO.
CHK DGN:	6	TEXAS	STP 2011(210)ES			LP 1604
DWG:	DIST.	COUNTY	CONT. NO.	SECT. NO.	JOB NO.	SHEET NO.
CHK DWG:	SAT	BEXAR	2452	01	050	270

Plotted on: 8/31/2010

Design Filename: p:\74\00\04\Design\Civil\TRAFFIC\740004SIG04-P.dgn

TRAFFIC SIGNAL HEADS

SIGNAL FACES

12" LED SIGNAL SECTIONS

LOUVER

PEDESTRIAN HEAD

1	2	5	1L	W1 THRU LED W12
QTY:6 FUTURE:0 TOTAL:6	QTY:2 FUTURE:2 TOTAL:4	QTY:4 FUTURE:5 TOTAL:9	QTY:2 FUTURE:2 TOTAL:4	QTY:8 FUTURE:4 TOTAL:12

PROPOSED TRAFFIC SIGNS

SIGN	DESCRIPTION	DESIGNATION
PUSH BUTTON FOR	R10-4BL, (5" x 9")	PB2 PB5 PB9 PB10 *PB7 *PB11 *PB12
PUSH BUTTON FOR	R10-4BR, (5" x 9")	PB1 PB3 PB4 PB6 *PB8

* INDICATES EQUIPMENT FOR FUTURE SHAENFIELD ROAD EXTENSION AND IS NOT INCLUDED IN THIS PROJECT.

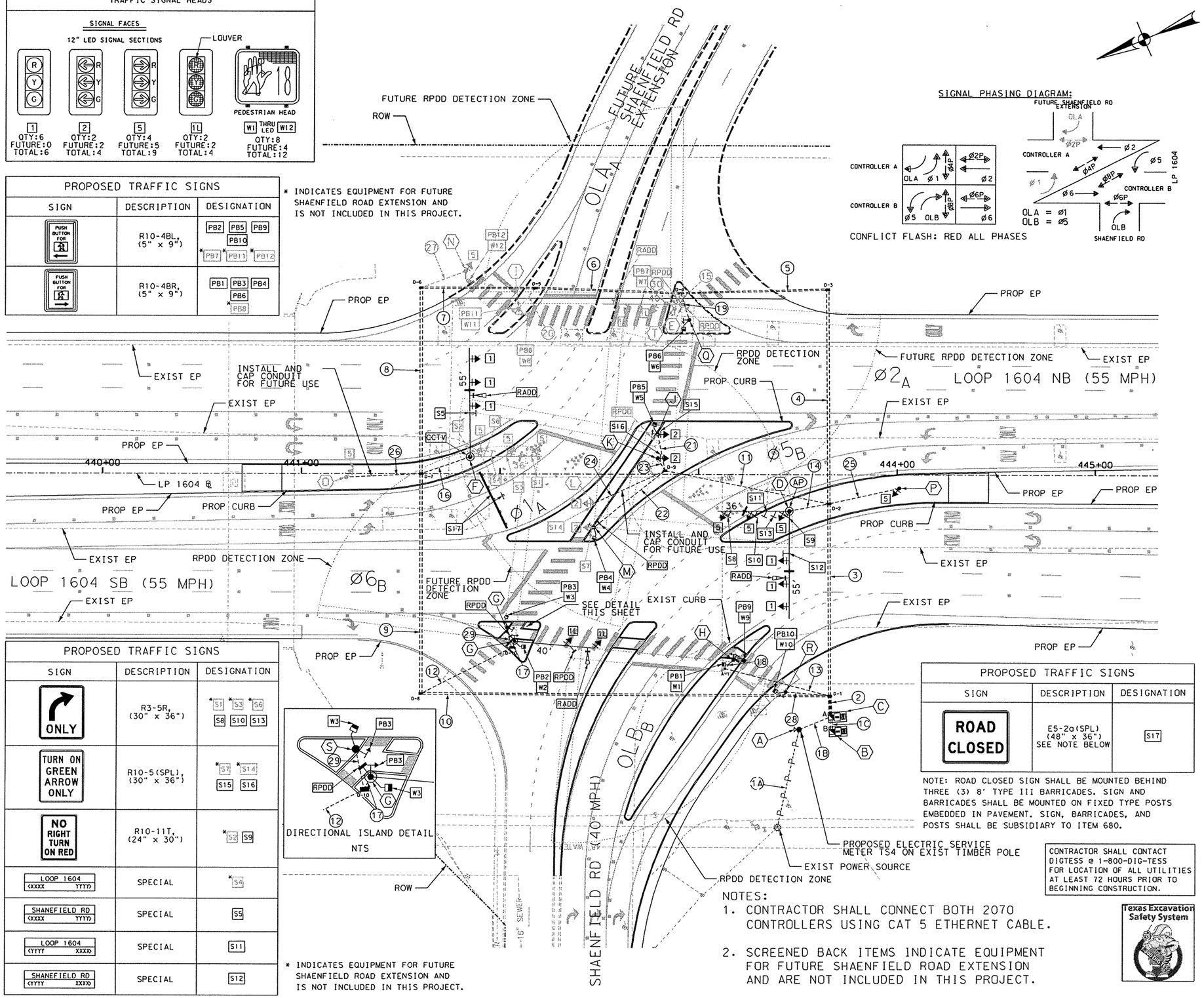

SIGNAL PHASING DIAGRAM:

CONFLICT FLASH: RED ALL PHASES

SIGNAL PLAN LEGEND

- NO 3½ GROUND BOX (PROPOSED) (TY A)
- NO 7 GROUND BOX (EXISTING) (TY D)
- NO 7 GROUND BOX (PROPOSED) (TY D)
- POLE (EXISTING OR RELOCATED)
- POLE (PROPOSED)
- POWER SOURCE (EXISTING OR RELOCATED)
- POWER SOURCE (PROPOSED)
- PROP. MODEL 332 CONTROLLER CABINET & FDN WITH BBS BATTERY BOX
- PROP. MODEL 332 CONTROLLER CABINET & FDN
- ELECTRIC SERVICE METER (EXISTING)
- ELECTRIC SERVICE METER (PROPOSED)
- CONDUIT (EXISTING)
- 3" CONDUIT SCHEDULE 80 (PROPOSED)
- SIGNAL HEAD (EXISTING)
- SIGNAL HEAD (TEMPORARY)
- SIGNAL HEAD (PROPOSED)
- SIGN
- MAST ARM POLE & FOUNDATION (PROPOSED)
- PED SIGNAL AND PUSHBUTTON (EXISTING)
- PED SIGNAL AND PUSHBUTTON (PROPOSED)
- V.I.V.D.S CAMERA & MOUNT (EXISTING)
- V.I.V.D.S CAMERA & MOUNT (PROPOSED)
- 2" CONDUIT STUBOUT & CAP
- RPDD RADAR PRESENCE DETECTOR
- RADD RADAR ADVANCE DETECTOR
- AP WIRELESS ACCESS POINT
- CCTV TRAFFIC SURVEILLANCE SYSTEM 4PTZ
- OPTICOM DETECTOR (PROPOSED)
- (XX) CONDUIT IDENTIFIER
- (X) POLE & EQUIPMENT IDENTIFIER
- PROPOSED ILLUMINATION POLE AND LUMINAIRE
- (XX) ILLUMINATION IDENTIFIER

PROPOSED TRAFFIC SIGNS

SIGN	DESCRIPTION	DESIGNATION
ONLY	R3-5R, (30" x 36")	*S1 *S3 *S6 S8 S10 S13
TURN ON GREEN ARROW ONLY	R10-5(SPL), (30" x 36")	*S7 *S14 S15 S16
NO RIGHT TURN ON RED	R10-11T, (24" x 30")	*S2 S9
LOOP 1604 XXXX YYYY	SPECIAL	*S4
SHANEFIELD RD XXXX YYYY	SPECIAL	S5
LOOP 1604 YYYY XXXX	SPECIAL	S11
SHANEFIELD RD YYYY XXXX	SPECIAL	S12

* INDICATES EQUIPMENT FOR FUTURE SHAENFIELD ROAD EXTENSION AND IS NOT INCLUDED IN THIS PROJECT.

PROPOSED TRAFFIC SIGNS

SIGN	DESCRIPTION	DESIGNATION
ROAD CLOSED	E5-2a(SPL) (48" x 36") SEE NOTE BELOW	S17

NOTE: ROAD CLOSED SIGN SHALL BE MOUNTED BEHIND THREE (3) 8' TYPE III BARRICADES. SIGN AND BARRICADES SHALL BE MOUNTED ON FIXED TYPE POSTS EMBEDDED IN PAVEMENT. SIGN, BARRICADES, AND POSTS SHALL BE SUBSIDIARY TO ITEM 680.

CONTRACTOR SHALL CONTACT DIGTESS @ 1-800-DIG-TESS FOR LOCATION OF ALL UTILITIES AT LEAST 72 HOURS PRIOR TO BEGINNING CONSTRUCTION.

NOTES:

1. CONTRACTOR SHALL CONNECT BOTH 2070 CONTROLLERS USING CAT 5 ETHERNET CABLE.
2. SCREENED BACK ITEMS INDICATE EQUIPMENT FOR FUTURE SHAENFIELD ROAD EXTENSION AND ARE NOT INCLUDED IN THIS PROJECT.

Texas Excavation Safety System

STATE OF TEXAS — GILMER D. CASTON — 80472 — LICENSED PROFESSIONAL ENGINEER

GILMER D. CASTON P.E. — 8/31/2010 DATE

SCALE: PLAN - 1":50'

REV. NO.	DATE	DESCRIPTION	BY

ALAMO RMA

PAPE-DAWSON ENGINEERS

555 EAST RAMSEY | SAN ANTONIO, TEXAS 78216 | PHONE: 210.375.9000 FAX: 210.375.9010

TEXAS BOARD OF PROFESSIONAL ENGINEERS, FIRM REGISTRATION # 470

Texas Department of Transportation © 2010

LOOP 1604

PROPOSED TRAFFIC SIGNAL LAYOUT

LP 1604 & SHAENFIELD ROAD

SHEET 3 OF 9

DGN:	FED. RD. DIV. NO.	STATE	FEDERAL AID PROJECT NO.			HIGHWAY NO.
CHK DGN:	6	TEXAS	STP 2011(210)ES			LP 1604
DWG:	DIST.	COUNTY	CONT. NO.	SECT. NO.	JOB NO.	SHEET NO.
CHK DWG:	SAT	BEXAR	2452	01	050	271

Plotted on: 8/31/2010

Design Filename: p:\74\00\04\design\civil\traffic\740004SIG04-CBL1.dgn

CONDUIT AND CONDUCTOR SCHEDULE

	RUN NUMBER			1A	1B	1C	2	3	4	5	6	7	8	9	10	11	12	13	14	15	16	17	18	19	20	21	22	23	24	25	26	27	28	29	30
	CONDUIT SIZE IN INCHES			-	3	3	3	3	3	3	3	3	3	3	3	3	3	3	3	3*	3	3	3	3	3*	3	3	3	3	3	3	3*	3	3	3
	NUMBER OF CONDUITS			-	1	2	4	2	2	2	2	2	2	2	2	1	1	1	1	1*	1	1	1	1	1*	1	1	1	1	1	1	1*	1	1	1
	LENGTH OF RUN (FT)			-	20	10	15	100	110	75	75	60	95	115	210	85	55	55	25	10*	30	5	10	15	15*	20	50	10	40	40	40	25*	25	15	15
	TRENCH (T)/BORE (B)/EXISTING (E)			E	T	T	T	B	B	T	T	T	B	B	B	T	T	T	T	T*	T	T	T	T	T*	T	T	T	T	T	T	T*	T	T	T
CABLE	CIRCUIT																																		
#6 XHHW	120 POWER HOT				2	1																													
	120 POWER COMMON				2	1																													
#6 BARE	BARE BOND GROUND				1	2																													
#8 BARE	BARE BOND GROUND						4	2	2	2	2	2	2	2	2	1	1	1	1	1*	1	1	1	1	1*	1	1	1	1	1	1	1*	1	1	1*
9 COND. #14 SOLID TYPE "A"	VEH SIGNALS	Ø	1				3*	3*	1*	1*						2*				1*							1*		1*						
		Ø	2				1							1	1						1														
		Ø	OLA				3*						1*	3*	3*						1*										1*	1*			
		Ø	5		3	3	2								1	2	1					1				1		1							
		Ø	6		1	1	1													1															
		Ø	OLB		2	2	2													1										1					
9 COND. #14 SOLID TYPE "A" & APS WIRING +	PED SIGNALS & APS	POLE	G		1	1									1		1					1													
		POLE	H		1	1												1					1												
		POLE	I			1*	1*	1*	1*	1*															1*										
		POLE	J			1	1									1										1									
		POLE	M		1	1	1									1											1								
		POLE	N			1*							1*	1*	1*																1*				
		POLE	O			1	1	1	1															1											
		POLE	R		1	1																											1		
		POLE	S		1	1									1		1																	1	
		POLE	T			1*	1*	1*	1*																										1*
M138 OPTICOM CABLE	EMERG PREEMPT	POLE	D		2	2	2												2																
		POLE	F			1								1	1						1														
		POLE	F			1*								1*	1*						1*														
POWER & DATA CABLE	RADAR PRESENCE DETECTION DEVICE (RPDD)	Ø	1			1*	1*									1*										1*								
		Ø	2			1*	1*	1*	1*											1*															
		Ø	OLA			1*	1*	1*	1*											1*																
		Ø	5		1	1	1									1										1									
		Ø	6		1	1									1		1					1													
		Ø	OLB		1	1									1		1					1													
POWER CABLE	COMMUNICATION CABLE	POLE	D		1	1	1												1																
ETHERNET CABLE		POLE	D		1	1	1												1																
CAT 5 ETHERNET CABLE					1																														
POWER & DATA CABLE	RADAR ADVANCE DETECTION DEVICE (RADD)	POLE	D		1	1	1												1																
		POLE	E			1*	1*	1*	1*												1*															
		POLE	F		1	1								1	1							1														
		POLE	G		1	1									1		1					1													
POWER & DATA CABLE	CLOSED CIRCUIT TELEVISION (CCTV)	POLE	F			1							1	1							1														

CABLES PULLED BY CPS ENERGY

AN EXTRA 2 INCH CONDUIT SHALL BE STUBBED OUT AND CAPPED 2 FEET FROM EACH CONCRETE FOUNDATION. INCLUDING CONTROLLER AND EACH DRILLED SHAFT.

RUN #1B TO #1C SHALL HAVE 36" OF COVER.

ITEM WITH * IS FOR FUTURE SHAENFIELD ROAD EXTENSION ONLY

+ CONTRACTOR TO WIRE AUDIBLE PEDESTRIAN SIGNAL UNIT (APS) PER MANUFACTURER'S REQUIREMENTS

Elec. Service No.	Electrical Service Description (see ED (4) - 03)	Service Conduit Size	Service Conductors No./Size	Safety Switch Amps	Main Ckt. Bkr. Pole/Amp	Two-Pole Contactor Amps	Panelbd/ Loadcenter Amp Rating	Circuit No.	Branch Ckt. Bkr. Pole/Amps	Branch Circuit Amps	KVA Load
TS4	ELEC SERV TY D(120/240)125(NS)GS(N)EX(O)	3"	3/#6 3/#6	N/A	2P/125	N/A	125	A (SIGNAL) B (SIGNAL)	1P/50 1P/50	40 40	9.6

STATE OF TEXAS
GILMER D. GASTON
80472
LICENSED
PROFESSIONAL ENGINEER

GILMER D. GASTON P.E. — 8/31/2010 DATE

NOT TO SCALE

REV. NO.	DATE	DESCRIPTION	BY

ALAMO RMA

PAPE-DAWSON ENGINEERS

555 EAST RAMSEY | SAN ANTONIO, TEXAS 78216 | PHONE: 210.375.9000 FAX: 210.375.9010

TEXAS BOARD OF PROFESSIONAL ENGINEERS, FIRM REGISTRATION # 470

Texas Department of Transportation
© 2010

LOOP 1604

TRAFFIC SIGNAL DETAILS

LP 1604 & SHAENFIELD ROAD

SHEET 4 OF 9

DGN:	FED. RD. DIV. NO.	STATE	FEDERAL AID PROJECT NO.			HIGHWAY NO.
CHK DGN:	6	TEXAS	STP 2011(210)ES			LP 1604
DWG:	DIST.	COUNTY	CONT. NO.	SECT. NO.	JOB NO.	SHEET NO.
CHK DWG:	SAT	BEXAR	2452	01	050	272

Plotted on: 8/31/2010

Design Filename: p:\74\00\04\design\civil\traffic\74000451G04-CBL2.dgn

POLE & EQUIPMENT INFORMATION

ID NO.	DESCRIPTION/ATTACHMENTS	STATION	OFFSET	FND. ELEV
Ⓐ	PROPOSED ELECTRIC SERVICE METER TS4 ON EXIST TIMBER POLE WITH AERIAL DROP.	N/A	N/A	N/A
Ⓑ	INSTALL SAN ANTONIO STANDARD MODEL 332 TRAFFIC SIGNAL CONTROLLER CABINET ASSEMBLY. AND COSA BASE-MOUNT FOUNDATION (5' X 9') WITH BATTERY BOX IN FOUNDATION. RELOCATE EXIST 2070 CONTROLLER TO NEW CABINET.	N/A	N/A	N/A
Ⓒ	INSTALL SAN ANTONIO STANDARD MODEL 332 TRAFFIC SIGNAL CONTROLLER CABINET ASSEMBLY. MODEL 2070 CONTROLLER. AND COSA BASE-MOUNT FOUNDATION (5' x 9') WITH BATTERY BOX IN FOUNDATION.	N/A	N/A	N/A
Ⓓ	INSTALL LMA (D) SIGNAL POLE PER POLE SCHEDULE. WITH TWO OPTICOM DETECTORS. ONE RADAR SENSOR. WIRELESS COMMUNICATION EQUIPMENT. SIGNS. AND SIX VEHICLE SIGNALS AS INDICATED ON LAYOUT.	443+45.66 "1604"	18.88 RT	906.82
Ⓔ *	FUTURE INSTALLATION OF SMA-80 SIGNAL POLE PER POLE SCHEDULE. WITH THREE RADAR SENSORS. SIGNS. AND TWO VEHICLE SIGNALS AS INDICATED ON LAYOUT. NOT INCLUDED IN THIS PROJECT.	442+91.49 "1604"	85.96 LT	905.35
Ⓕ	INSTALL LMA (D) SIGNAL POLE PER POLE SCHEDULE. WITH 55' MAST ARM. ONE CCTV CAMERA ASSEMBLY. ONE OPTICOM DETECTOR. ONE RADAR SENSOR. SIGNS. AND THREE VEHICLE SIGNALS AS INDICATED ON LAYOUT. FUTURE INSTALLATION OF 36' MAST ARM WITH ONE OPTICOM DETECTOR. SIGNS. AND THREE VEHICLE SIGNALS SHALL NOT BE INCLUDED IN THIS PROJECT.	441+84.84 "1604"	8.70 LT	907.18
Ⓖ	INSTALL SMA-80 SIGNAL POLE PER POLE SCHEDULE. WITH THREE RADAR SENSORS. ONE PEDESTRIAN SIGNAL AND AUDIBLE PEDESTRIAN DEVICE ASSEMBLY. SIGNS. AND TWO VEHICLE SIGNALS AS INDICATED ON LAYOUT.	442+07.53 "1604"	85.66 RT	905.94
Ⓗ	INSTALL 10 FT BRUSHED ALUMINUM PEDESTRIAN POLE ON FRANGIBLE BASE WITH TWO PEDESTRIAN SIGNALS AND AUDIBLE PEDESTRIAN DEVICE ASSEMBLIES AS INDICATED ON LAYOUT.	443+17.71 "1604"	94.88 RT	FLUSH WITH FINISHED ISLAND
Ⓘ *	FUTURE INSTALLATION OF 10 FT BRUSHED ALUMINUM PEDESTRIAN POLE ON FRANGIBLE BASE WITH TWO PEDESTRIAN SIGNALS AND AUDIBLE PEDESTRIAN DEVICE ASSEMBLIES AS INDICATED ON LAYOUT. NOT INCLUDED IN THIS PROJECT.	442+09.13 "1604"	83.50 LT	FLUSH WITH FINISHED ISLAND
Ⓙ	INSTALL 20 FT BRUSHED ALUMINUM PEDESTRIAN POLE ON FRANGIBLE BASE. WITH ONE PEDESTRIAN SIGNAL AND AUDIBLE PEDESTRIAN DEVICE ASSEMBLY. SIGN. AND ONE VEHICLE SIGNAL AS INDICATED ON LAYOUT. FUTURE RADAR SENSOR WILL NOT BE INCLUDED IN THIS PROJECT.	442+79.34 "1604"	20.18 LT	FLUSH WITH FINISHED ISLAND
Ⓚ	INSTALL 20 FT BRUSHED ALUMINUM PEDESTRIAN POLE ON FRANGIBLE BASE WITH SIGN AND ONE VEHICLE SIGNAL AS INDICATED ON LAYOUT.	442+79.27 "1604"	8.21 LT	FLUSH WITH FINISHED ISLAND
Ⓛ *	FUTURE INSTALLATION OF 20 FT BRUSHED ALUMINUM PEDESTRIAN POLE ON FRANGIBLE BASE WITH SIGN AND ONE VEHICLE SIGNAL AS INDICATED ON LAYOUT. NOT INCLUDED IN THIS PROJECT.	442+46.90 "1604"	15.34 RT	FLUSH WITH FINISHED ISLAND
Ⓜ	INSTALL 20 FT BRUSHED ALUMINUM PEDESTRIAN POLE ON FRANGIBLE BASE. WITH ONE PEDESTRIAN SIGNAL AND AUDIBLE PEDESTRIAN DEVICE ASSEMBLY AND ONE RADAR SENSOR AS INDICATED ON LAYOUT. FUTURE SIGN AND VEHICLE SIGNAL WILL NOT BE INCLUDED IN THIS PROJECT.	442+47.29 "1604"	27.38 RT	FLUSH WITH FINISHED ISLAND
Ⓝ *	FUTURE INSTALLATION OF 20 FT BRUSHED ALUMINUM PEDESTRIAN POLE ON FRANGIBLE BASE. WITH ONE VEHICLE SIGNAL. AND ONE PEDESTRIAN SIGNAL AND AUDIBLE PEDESTRIAN DEVICE ASSEMBLY AS INDICATED ON LAYOUT. NOT INCLUDED IN THIS PROJECT.	441+82.38 "1604"	102.77 LT	FLUSH WITH FINISHED GRADE
Ⓞ *	FUTURE INSTALLATION OF 20 FT BRUSHED ALUMINUM PEDESTRIAN POLE ON FRANGIBLE BASE WITH ONE VEHICLE SIGNAL AS INDICATED ON LAYOUT. NOT INCLUDED IN THIS PROJECT.	441+22.58 "1604"	1.77 RT	FLUSH WITH FINISHED ISLAND
Ⓟ	INSTALL 20 FT BRUSHED ALUMINUM PEDESTRIAN POLE ON FRANGIBLE BASE WITH ONE VEHICLE SIGNAL AS INDICATED ON LAYOUT.	444+01.03 "1604"	6.92 RT	FLUSH WITH FINISHED ISLAND
Ⓠ	INSTALL 10 FT BRUSHED ALUMINUM PEDESTRIAN POLE ON FRANGIBLE BASE WITH ONE PEDESTRIAN SIGNAL AND AUDIBLE PEDESTRIAN DEVICE ASSEMBLY AS INDICATED ON LAYOUT.	442+94.96 "1604"	78.02 LT	FLUSH WITH FINISHED ISLAND
Ⓡ	INSTALL 10 FT BRUSHED ALUMINUM PEDESTRIAN POLE ON FRANGIBLE BASE WITH ONE PEDESTRIAN SIGNAL AND AUDIBLE PEDESTRIAN DEVICE ASSEMBLY AS INDICATED ON LAYOUT.	443+44.11 "1604"	111.19 RT	FLUSH WITH FINISHED GRADE
Ⓢ	INSTALL 10 FT BRUSHED ALUMINUM PEDESTRIAN POLE ON FRANGIBLE BASE WITH ONE PEDESTRIAN SIGNAL AND AUDIBLE PEDESTRIAN DEVICE ASSEMBLY AS INDICATED ON LAYOUT.	442+03.73 "1604"	78.57 RT	FLUSH WITH FINISHED ISLAND
Ⓣ *	FUTURE INSTALLATION OF 10 FT BRUSHED ALUMINUM PEDESTRIAN POLE ON FRANGIBLE BASE WITH ONE PEDESTRIAN SIGNAL AND AUDIBLE PEDESTRIAN DEVICE ASSEMBLY AS INDICATED ON LAYOUT. NOT INCLUDED IN THIS PROJECT.	442+87.58 "1604"	83.50 LT	FLUSH WITH FINISHED ISLAND

SIGNS SHALL BE ATTACHED TO POLES AND MAST ARMS AS INDICATED ON LAYOUT.

* FUTURE ITEM. NOT INCLUDED IN THIS PROJECT.

ITEM	DESC	DESCRIPTION	UNIT	QTY
0416	2056	DRILL SHAFT (TRF SIG POLE) (36 IN) (ROCK)	LF	13.2
0416		DRILL SHAFT (TRF SIG POLE) (48 IN) (ROCK)	LF	43.8
0618	2088	CONDT (PVC) (SCHD 80) (3") (TRENCH) (ROCK)	LF	960
0618	2089	CONDT (PVC) (SCHD 80) (3") (BORE) (ROCK)	LF	1260
0620	2009	ELEC CONDR (NO. 6) BARE	LF	45
0620	2010	ELEC CONDR (NO. 6) INSULATED	LF	110
0620	2011	ELEC CONDR (NO. 8) BARE	LF	2710
0624	2008	GROUND BOX TY A (122311) W/APRON	EA	1
0624	2014	GROUND BOX TY D (162922) W/APRON	EA	10
0628	2129	ELC SRV TY D 120/240 125 (NS)GS(N)EX(O)	EA	1
0680	2003	INSTALL HWY TRF SIG (SYSTEM)	EA	1
0681	2001	TEMP TRAF SIGNALS	EA	1
0682	2001	BACK PLATE (12 IN) (3 SEC)	EA	14
0682	2012	LOUVER (12 IN) (ADJUSTABLE)	EA	6
0682	2022	VEH SIG SEC (12 IN) LED (GRN ARW)	EA	6
0682	2023	VEH SIG SEC (12 IN) LED (GRN)	EA	8
0682	2024	VEH SIG SEC (12 IN) LED (YEL ARW)	EA	6
0682	2025	VEH SIG SEC (12 IN) LED (YEL)	EA	8
0682	2026	VEH SIG SEC (12 IN) LED (RED ARW)	EA	6
0682	2027	VEH SIG SEC (12 IN) LED (RED)	EA	8
0682	2043	PED SIG SEC (12") (2 IND) (HOUSING ONLY)	EA	8
0684	2035	TRF SIG CBL (TY A) (14 AWG) (9 CONDR)	LF	4375
0686	2041	INS TRF SIG PL AM(S) 1 ARM (40') LUM	EA	1
0686	2213	INS TRF SIG PL AM(S) 2 ARM (55-36')LUM	EA	2
0687	2001	PED POLE ASSEMBLY	EA	8
8642	XXXX	AUDIBLE PEDESTRIAN SIGNAL UNIT	EA	8
6007	2001	REMOVING TRAFFIC SIGNALS	EA	1
		INSTALL CCTV FIELD EQUIPMENT $	EA	1
		BATTERY BACK-UP SYSTEM	EA	2
		LED COUNTDOWN PEDESTRIAN SIGNAL MODULE	EA	8
		RADAR ADVANCE DETECTION DEVICE $	EA	3
		RADAR PRESENCE DETECTION DEVICE $	EA	3
*		802.11a, b/g Outdoor Mesh AP, FCC Cfg (Part#: AIR-LAP1522AG-AK9)	EA	1
*		2400-2483.5 MHz, 8.0 dBi Omni Ant, with N Connect (Part #: AIR-ANT2480V-N)	EA	3
*		Aironet 1520 Series AC Power Cord, 40 ft, N. Amer Plug (Part #: AIR-CORD-R3P-40NA)	EA	1
*		4900-5850 MHz, 8.0Dbi OMNI with N Connect (Part #: AIR-ANT5180V-N)	EA	1
*		1520 Series Pole Mount Kit (AIR-ACCPMK1520)	EA	1
*		802.11a, b/g Outdoor Mesh AP, FCC Cfg (Part #: SMARTNET 8X5XNBD)	EA	1
*		27331A 01010000 BELDEN (Power Cable) (Part #: VNTC 16-3-R10K-BED)	LF	250
*		IND ETH 5E4P24 HLD (Ethernet Cable) (Part #: 7919A 01001000)	LF	250
*		2955 12 TX W/SW UPLINKS (Part #: WS-C2955S-12)	EA	1
*		19 IN RACK MOUNT KIT (Part #: CISCO STK-RACKMNT-2955)	EA	1
*		CISCO, AC TO 24 V DC DIN RAIL PW (Part #: PWR-2955-AC)	EA	1
*		SMARTNET 8X5XNBD 2955 12 TX w/Single Mode Uplinks (Part #: CON-SNTWSC2955S)	EA	1
*		TRAFFIC SIGNAL CONTROLLER ASSEMBLY (TYPE 332 CABINET)	EA	2
*		MODEL 2070 CONTROLLER WITH NEXTPHASE SOFTWARE	EA	1
*		TYPE 332 CONTROLLER FOUNDATION WITH BBS BOX	EA	2
*		R3-5R (30"X36") RIGHT-TURN ONLY	EA	3
*		R10-5 (SPL) (30"X36") TURN ON GREEN ARROW ONLY	EA	2
*		R10-11T (24"X30") NO RIGHT TURN ON RED	EA	1
*		METRO STREET NAME SIGN	EA	3
*		3M MODEL 138 OPTICOM CABLE $	LF	935
*		3M MODEL 752 PHASE SELECTORS $	EA	2
*		3M OPTICOM MODEL 722 DETECTOR $	EA	3
*		PELCO ASTRO-BRAC MAST ARM WIND DAMPER ASSY(AB-0178) $	EA	4
*		CAT 5 ETHERNET CABLE	LF	40
*		R10-4BL (5"X9") PEDESTRIAN SIGN	EA	4
*		R10-4BR (5"X9") PEDESTRIAN SIGN	EA	4
**		ASTRO-BRAC SIGNAL MOUNT ASSEMBLIES	EA	14
**		BRACKET ASSY (SYMBOLIC PEDESTRIAN HEAD)	EA	8
***		DRILL SHAFT (TRF SIG POLE) (24 IN) (ROCK)	LF	45.6

* SUBSIDIARY TO ITEM 680

** SUBSIDIARY TO ITEM 682

*** SUBSIDIARY TO ITEM 687

$ TO BE INSTALLED PER MANUFACTURERS SPECIFICATION

1. MODEL 332 CONTROLLER FOUNDATION SHALL BE PROVIDED BY CONTRACTOR PER DETAIL IN THIS PLAN SET.
2. COMMUNICATION EQUIPMENT TO BE DELIVERED TO CoSA SIGNAL SHOP FOUR (4) WEEKS IN ADVANCE FOR TESTING AND PROGRAMMING. CONTRACTOR TO INSTALL COMMUNICATION EQUIPMENT IN THE FIELD AS DIRECTED BY CoSA ITSD. SUBSIDIARY TO ITEM 680.
3. CONTRACTOR TO FURNISH AND DELIVER CONTROLLER AND CABINET ASSEMBLY TO COSA SHOP FOR PROGRAMMING AND TESTING FOUR (4) WEEKS IN ADVANCE PRIOR TO CONTRACTOR INSTALLING EQUIPMENT IN THE FIELD. SUBSIDIARY TO ITEM 680.
4. THE CONTRACTOR SHALL SUPPLY A CONFLICT MONITOR THAT CONFORMS TO THE TEES SPECIFICATION FOR MODEL 2070L CONTROLLER. THE CONFLICT MONITOR SHALL BE EDI. MODEL 2018 KCLIP, OR APPROVED EQUAL.
5. SALVAGEABLE MATERIAL SHALL BE DETERMINED BY THE CITY INSPECTOR AND DELIVERED TO THE CITY OF SAN ANTONIO TRAFFIC OPERATIONS FACILITY LOCATED AT 223 S CHERRY, SAN ANTONIO, TEXAS 78205. THE CONTRACTOR SHALL CONTACT THE CITY SERVICES & SUPPLY SUPERINTENDENT, AT (210)-207-7771 SEVEN (7) DAYS PRIOR TO DELIVERY OF THE SALVAGED MATERIAL. THE CONTRACTOR SHALL BECOME THE OWNER AND DISPOSE OF UNSALVAGED MATERIAL IN ACCORDANCE WITH FEDERAL, STATE, AND LOCAL REGULATIONS.

STATE OF TEXAS — GILMER D. GASTON — 80472 — LICENSED PROFESSIONAL ENGINEER

GILMER D. GASTON P.E. — 8/31/2010 DATE

NOT TO SCALE

REV. NO.	DATE	DESCRIPTION	BY

ALAMO RMA

PAPE-DAWSON ENGINEERS

555 EAST RAMSEY | SAN ANTONIO, TEXAS 78216 | PHONE: 210.375.9000 FAX: 210.375.9010

TEXAS BOARD OF PROFESSIONAL ENGINEERS, FIRM REGISTRATION # 470

Texas Department of Transportation ©2010

LOOP 1604

TRAFFIC SIGNAL DETAILS

LP 1604 & SHAENFIELD ROAD

SHEET 5 OF 9

DGN:	FED. RD. DIV. NO.	STATE	FEDERAL AID PROJECT NO.			HIGHWAY NO.
CHK DGN:	6	TEXAS	STP 2011(210)ES			LP 1604
DWG:	DIST.	COUNTY	CONT. NO.	SECT. NO.	JOB NO.	SHEET NO.
CHK DWG:	SAT	BEXAR	2452	01	050	273

Plotted on: 8/31/2010

POLE SCHEDULE

	POLE			Ⓓ	Ⓔ*	Ⓕ	Ⓖ	Ⓗ	Ⓘ*	Ⓙ	Ⓚ	Ⓛ*	Ⓜ	Ⓝ*	Ⓞ*	Ⓟ	Ⓠ	Ⓡ	Ⓢ	Ⓣ*
	POLE TYPE			LMA(D)	SMA-80	LMA(D)	SMA-80	PED	PED	PED	PED	PED	PED	PED	PED	PED	PED	PED	PED	PED
	POLE HEIGHT (FEET)			30	24	30	24	10	10	20	20	20	20	20	20	20	10	10	10	10
	MAST ARM LENGTH (FEET)			55 & 36	40	55 & 36	40	N/A	N/A	N/A	N/A	N/A	N/A	N/A	N/A	N/A	N/A	N/A	N/A	N/A
	LUMINAIRE EXTENSION			YES	YES	YES	YES	N/A	N/A	N/A	N/A	N/A	N/A	N/A	N/A	N/A	N/A	N/A	N/A	N/A
	LUMINAIRE			NO	NO	NO	NO	N/A	N/A	N/A	N/A	N/A	N/A	N/A	N/A	N/A	N/A	N/A	N/A	N/A
	FOUNDATION TYPE			48-A	36-A	48-A	36-A	24-A	24-A	24-A	24-A	24-A	24-A	24-A	24-A	24-A	24-A	24-A	24-A	24-A
	FOUNDATION DEPTH (FEET)			21.9	13.2	21.9	13.2	5.7	5.7	5.7	5.7	5.7	5.7	5.7	5.7	5.7	5.7	5.7	5.7	5.7
CABLE	CIRCUIT			NUMBER OF CONDUCTORS																
# 8 BARE				1	1*	1	1	1	1*	1	1	1*	1	1*	1*	1	1	1	1	1
9 COND. #14 SOLID TYPE "A"	VEH SIGNALS	Ø	1		2*							1*	1*							
		Ø	2			3														
		Ø	OLA			3*								1*	1*					
		Ø	5				2			1	1									
		Ø	6	3																
		Ø	OLB	3												1				
9 COND. #14 SOLID TYPE "A" & APS WIRING+	PED SIGNALS & APS	POLE	G				2													
		POLE	H					2												
		POLE	I						2*											
		POLE	J							1										
		POLE	M										1							
		POLE	N											1*						
		POLE	Q														1*			
		POLE	Q														1			
		POLE	R															1		
		POLE	S																1	
		POLE	T																	1*
M138 OPTICOM CABLE	EMERG PREEMPT	POLE	D	2																
		POLE	F			1*														
		POLE	F			1														
POWER & DATA CABLE	RADAR PRESENCE DETECTION DEVICE (RPDD)	Ø	1							1*										
		Ø	2		1*															
		Ø	OLA		1*															
		Ø	5										1							
		Ø	6				1													
		Ø	OLB				1													
POWER CABLE	COMMUNICATION CABLE	POLE	D	1																
ETHERNET CABLE		POLE	D	1																
POWER & DATA CABLE	RADAR ADVANCE DETECTION DEVICE (RADD)	POLE	D	1																
		POLE	E		1*															
		POLE	F			1														
		POLE	G				1													
POWER & DATA CABLE	CLOSED CIRCUIT TELEVISION (CCTV)	POLE	F			1														

ITEM WITH * IS FOR FUTURE SHAENFIELD ROAD EXTENSION ONLY

+ CONTRACTOR TO WIRE AUDIBLE PEDESTRIAN SIGNAL UNIT (APS) PER MANUFACTURER'S REQUIREMENTS

STATE OF TEXAS
GILMER D. GASTON
80412
LICENSED
PROFESSIONAL ENGINEER

8/31/2010
GILMER D. GASTON P.E. — DATE

NOT TO SCALE

REV. NO.	DATE	DESCRIPTION	BY

ALAMO RMA

PAPE-DAWSON ENGINEERS

555 EAST RAMSEY | SAN ANTONIO, TEXAS 78216 | PHONE: 210.375.9000 FAX: 210.375.9010

TEXAS BOARD OF PROFESSIONAL ENGINEERS, FIRM REGISTRATION # 470

Texas Department of Transportation
© 2010

LOOP 1604

TRAFFIC SIGNAL DETAILS

LP 1604 & SHAENFIELD ROAD

SHEET 6 OF 9

DGN:	FED. RD. DIV. NO.	STATE	FEDERAL AID PROJECT NO.			HIGHWAY NO.
CHK DGN:	6	TEXAS	STP 2011(210)ES			LP 1604
DWG:	DIST.	COUNTY	CONT. NO.	SECT. NO.	JOB NO.	SHEET NO.
CHK DWG:	SAT	BEXAR	2452	01	050	274

Design Filename: p:\74\00\04\design\civil\traffic\740004S1G04-CBL3.dgn

Plotted on: 8/31/2010

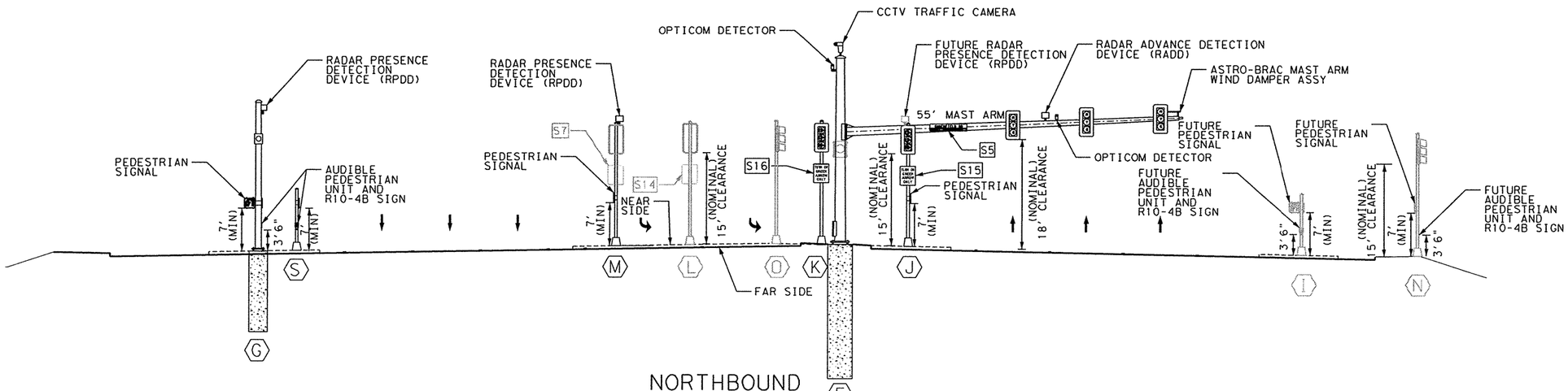

NORTHBOUND
(LOOP 1604)
N. T. S.

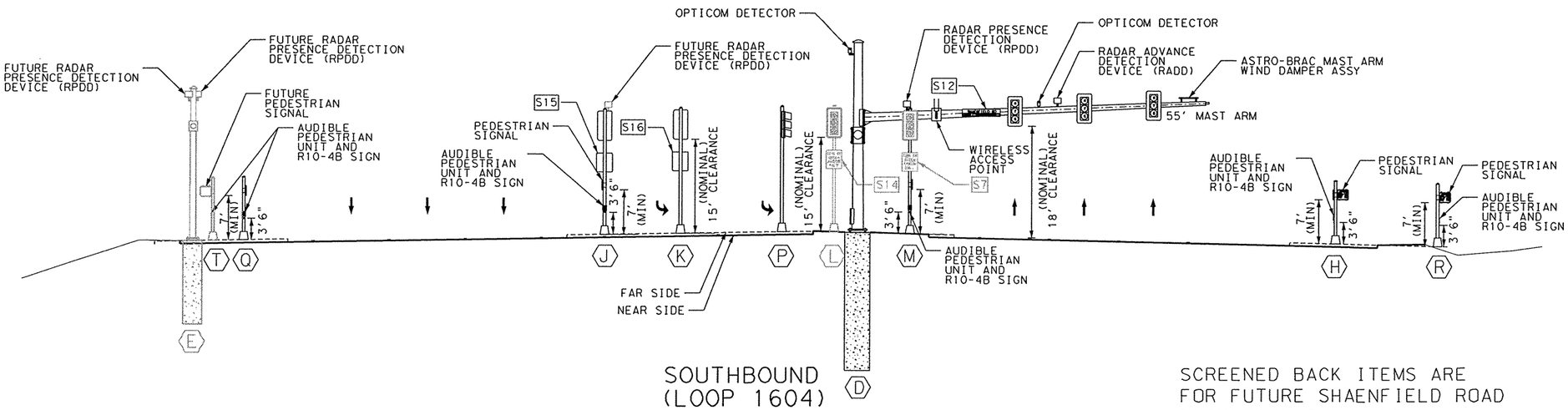

SOUTHBOUND
(LOOP 1604)
N. T. S.

SCREENED BACK ITEMS ARE FOR FUTURE SHAENFIELD ROAD EXTENSION ONLY AND NOT INCLUDED IN THIS PROJECT.

STATE OF TEXAS
GILNER D. GASTON
80472
LICENSED
PROFESSIONAL ENGINEER

GILNER D. GASTON P.E. — 8/31/2010 DATE

NOT TO SCALE

REV. NO.	DATE	DESCRIPTION	BY

ALAMO RMA

PAPE-DAWSON ENGINEERS
555 EAST RAMSEY | SAN ANTONIO, TEXAS 78216 | PHONE: 210.375.9000 FAX: 210.375.9010
TEXAS BOARD OF PROFESSIONAL ENGINEERS, FIRM REGISTRATION # 470

Texas Department of Transportation
© 2010

LOOP 1604
ELEVATION

LOOP 1604 & SHAENFIELD ROAD

SHEET 7 OF 9

DGN:	FED. RD. DIV. NO.	STATE	FEDERAL AID PROJECT NO.			HIGHWAY NO.
CHK DGN:	6	TEXAS	STP 2011(210)ES			LP 1604
DWG:	DIST.	COUNTY	CONT. NO.	SECT. NO.	JOB NO.	SHEET NO.
CHK DWG:	SAT	BEXAR	2452	01	050	275

Design Filename: p:\74\00\04\design\civil\traffic\740004S1G04-EL1.dgn

Plotted on: 8/31/2010

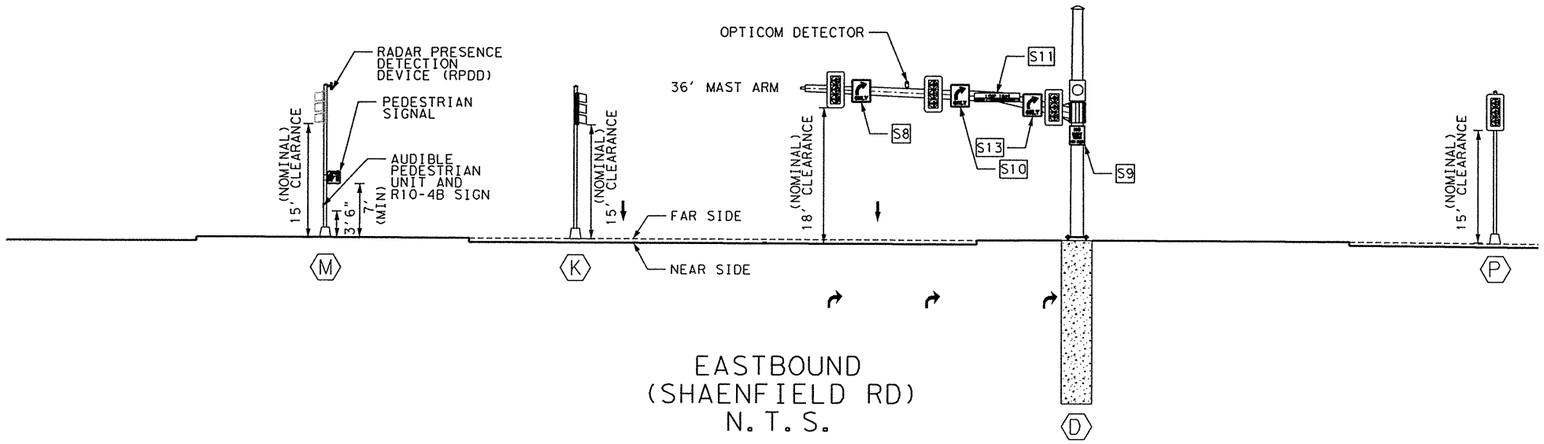

EASTBOUND
(SHAENFIELD RD)
N.T.S.

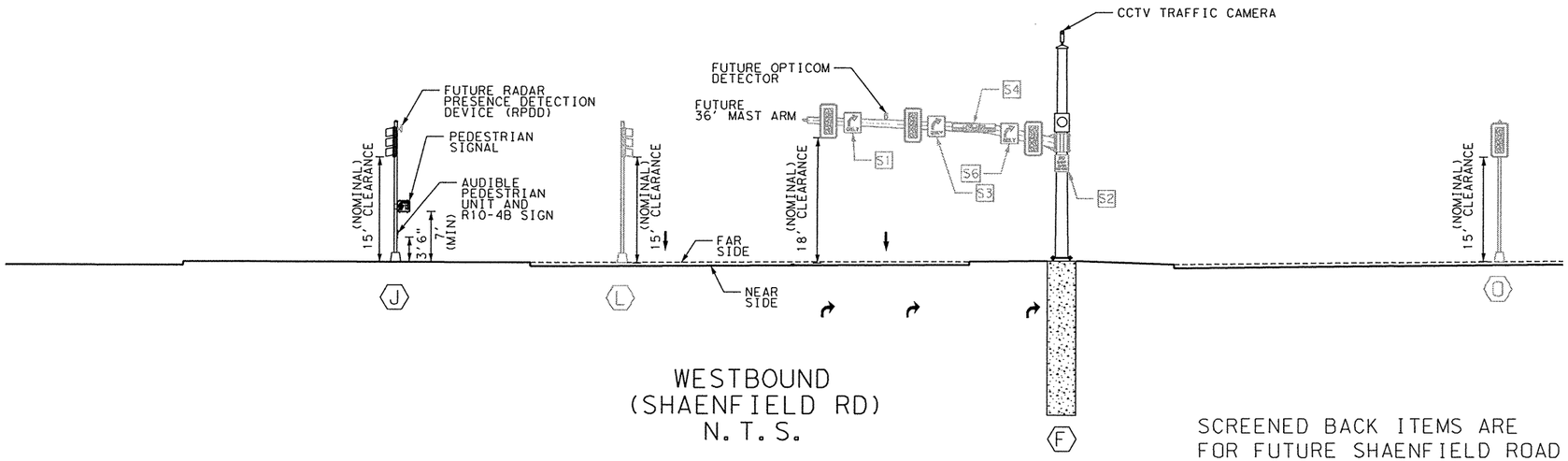

WESTBOUND
(SHAENFIELD RD)
N.T.S.

SCREENED BACK ITEMS ARE FOR FUTURE SHAENFIELD ROAD EXTENSION ONLY AND NOT INCLUDED IN THIS PROJECT.

STATE OF TEXAS
GILMER D. OXSTON
80472
LICENSED PROFESSIONAL ENGINEER

GILMER D. OXSTON P.E. — 8/31/2010 DATE

NOT TO SCALE

REV. NO.	DATE	DESCRIPTION	BY

ALAMO RMA

PAPE-DAWSON ENGINEERS
555 EAST RAMSEY | SAN ANTONIO, TEXAS 78216 | PHONE: 210.375.9000 FAX: 210.375.9010
TEXAS BOARD OF PROFESSIONAL ENGINEERS, FIRM REGISTRATION # 470

Texas Department of Transportation ©2010

LOOP 1604

ELEVATION

LOOP 1604 & SHAENFIELD ROAD

SHEET 8 OF 9

DGN:	FED. RD. DIV. NO.	STATE	FEDERAL AID PROJECT NO.			HIGHWAY NO.
CHK DGN:	6	TEXAS	STP 2011(210)ES			LP 1604
DWG:	DIST.	COUNTY	CONT. NO.	SECT. NO.	JOB NO.	SHEET NO.
CHK DWG:	SAT	BEXAR	2452	01	050	276

Design Filename: p:\74\00\04\design\civil\traffic\740004SIG04-EL2.dgn

Plotted on: 8/31/2010

Design Filename: p:\74A001\04\design\civil\traffic\74A004S1G04-EL3.dgn

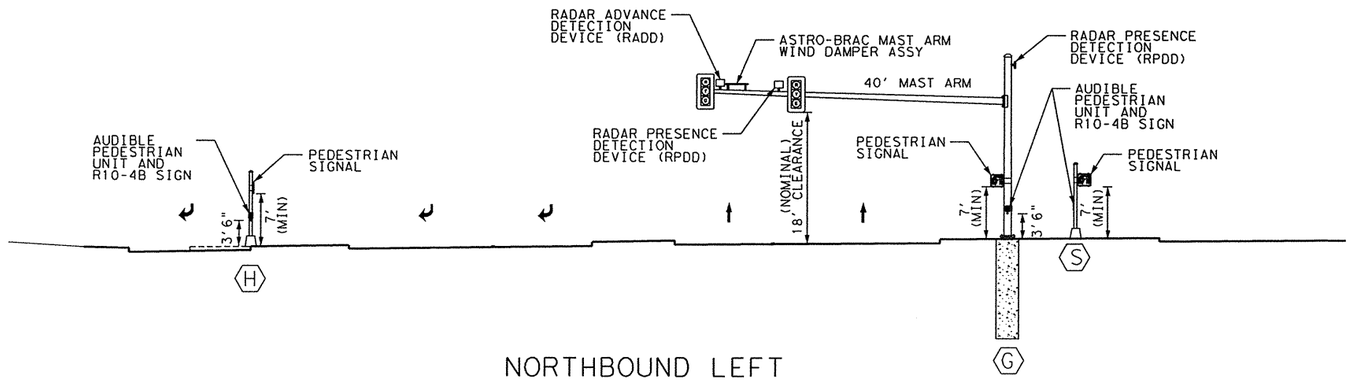

NORTHBOUND LEFT
(LOOP 1604)
N.T.S.

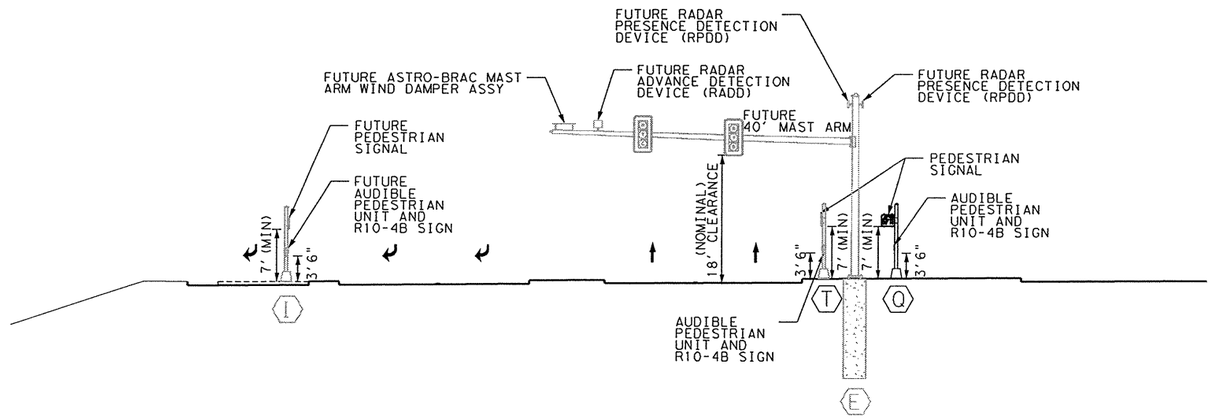

SOUTHBOUND LEFT
(LOOP 1604)
N.T.S.

SCREENED BACK ITEMS ARE FOR FUTURE SHAENFIELD ROAD EXTENSION ONLY AND NOT INCLUDED IN THIS PROJECT.

GILMER D. GASTON P.E. — 8/31/2010 DATE

NOT TO SCALE

REV. NO.	DATE	DESCRIPTION	BY

ALAMO RMA

PAPE-DAWSON ENGINEERS
555 EAST RAMSEY | SAN ANTONIO, TEXAS 78216 | PHONE: 210.375.9000 FAX: 210.375.9010
TEXAS BOARD OF PROFESSIONAL ENGINEERS, FIRM REGISTRATION # 470

Texas Department of Transportation
© 2010

LOOP 1604

ELEVATION

LOOP 1604 & SHAENFIELD ROAD

SHEET 9 OF 9

DGN:	FED. RD. DIV. NO.	STATE	FEDERAL AID PROJECT NO.			HIGHWAY NO.
CHK DGN:	6	TEXAS	STP 2011(210)ES			LP 1604
DWG:	DIST.	COUNTY	CONT. NO.	SECT. NO.	JOB NO.	SHEET NO.
CHK DWG:	SAT	BEXAR	2452	01	050	277

Plotted on: 8/4/2010

Design Filename: p:\74\00\04\Design\Civil\TRAFFIC\740004SIG05-P.dgn

PROPOSED TRAFFIC SIGNS		
SIGN	DESCRIPTION	DESIGNATION
	R3-2, (36" x 36")	S1
	R6-1L, (48" x 16")	S2
	R10-5(SPL), (30" x 36")	S3 S5 S6
	R3-1, (36" x 36")	S4

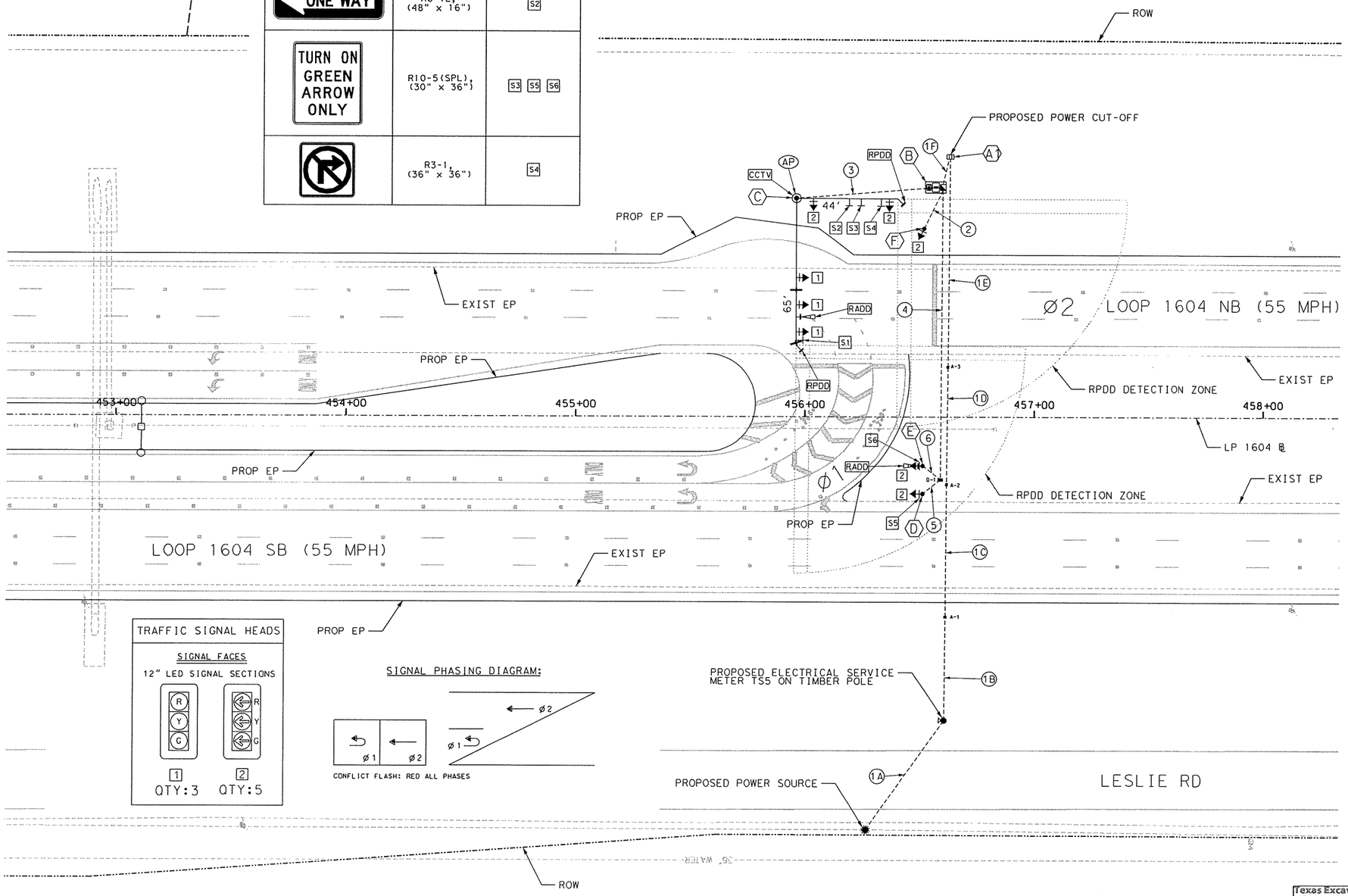

TRAFFIC SIGNAL HEADS

SIGNAL FACES

12" LED SIGNAL SECTIONS

SIGNAL PHASING DIAGRAM:

CONFLICT FLASH: RED ALL PHASES

SIGNAL PLAN LEGEND

- NO 3½ GROUND BOX (PROPOSED) (TY A)
- NO 7 GROUND BOX (EXISTING) (TY D)
- NO 7 GROUND BOX (PROPOSED) (TY D)
- POLE (EXISTING OR RELOCATED)
- POLE (PROPOSED)
- POWER SOURCE (EXISTING OR RELOCATED)
- POWER SOURCE (PROPOSED)
- PROP. MODEL 332 CONTROLLER CABINET & FDN WITH BBS BATTERY BOX
- PROP. MODEL 332 CONTROLLER CABINET & FDN
- ELECTRIC SERVICE METER (EXISTING)
- ELECTRIC SERVICE METER (PROPOSED)
- CONDUIT (EXISTING)
- 3" CONDUIT SCHEDULE 80 (PROPOSED)
- SIGNAL HEAD (EXISTING)
- SIGNAL HEAD (TEMPORARY)
- SIGNAL HEAD (PROPOSED)
- SIGN
- MAST ARM POLE & FOUNDATION (PROPOSED)
- PED SIGNAL AND PUSHBUTTON (EXISTING)
- PED SIGNAL AND PUSHBUTTON (PROPOSED)
- V.I.V.D.S CAMERA & MOUNT (EXISTING)
- V.I.V.D.S CAMERA & MOUNT (PROPOSED)
- 2" CONDUIT STUBOUT & CAP
- RPDD RADAR PRESENCE DETECTOR
- RADD RADAR ADVANCE DETECTOR
- AP WIRELESS ACCESS POINT
- CCTV TRAFFIC SURVEILLANCE SYSTEM 4PTZ
- OPTICOM DETECTOR (PROPOSED)
- XX CONDUIT IDENTIFIER
- X POLE & EQUIPMENT IDENTIFIER
- PROPOSED ILLUMINATION POLE AND LUMINAIRE
- A ILLUMINATION IDENTIFIER

CONTRACTOR SHALL CONTACT DIGTESS @ 1-800-DIG-TESS FOR LOCATION OF ALL UTILITIES AT LEAST 72 HOURS PRIOR TO BEGINNING CONSTRUCTION.

Texas Excavation Safety System

STATE OF TEXAS — GILMER D. GASTON — 80472 — LICENSED PROFESSIONAL ENGINEER

GILMER D. GASTON P.E. — 8/4/2010 DATE

25 0 25 50

SCALE: PLAN - 1":50'

REV. NO.	DATE	DESCRIPTION	BY

ALAMO RMA

PAPE-DAWSON ENGINEERS

555 EAST RAMSEY | SAN ANTONIO, TEXAS 78216 | PHONE: 210.375.9000 FAX: 210.375.9010

TEXAS BOARD OF PROFESSIONAL ENGINEERS, FIRM REGISTRATION # 470

Texas Department of Transportation © 2010

LOOP 1604

PROPOSED TRAFFIC SIGNAL LAYOUT

TURNAROUND #3 (SOUTH OF SHAENFIELD ROAD)

SHEET 1 OF 5

DGN:	FED. RD. DIV. NO.	STATE	FEDERAL AID PROJECT NO.			HIGHWAY NO.
CHK DGN:	6	TEXAS	STP 2011(210)ES			LP 1604
DWG:	DIST.	COUNTY	CONT. NO.	SECT. NO.	JOB NO.	SHEET NO.
CHK DWG:	SAT	BEXAR	2452	01	050	278

Plotted on: 8/4/2010

Design Filename: p:\74\00\04\design\civil\traffic\740004SIG05-CBL1.dgn

CONDUIT AND CONDUCTOR SCHEDULE

	RUN NUMBER			1A	1B	1C	1D	1E	1F	2	3	4	5	6
	CONDUIT SIZE IN INCHES			-	3	3	3	3	3	3	3	3	3	3
	NUMBER OF CONDUITS			-	1	1	1	1	1	1	1	1	1	1
	LENGTH OF RUN (FT)			60	50	60	55	95	15	20	65	130	10	10
	TRENCH (T)/BORE (B)/EXISTING (E)			A	T	B	T	B	T	T	T	B	T	T
CABLE	CIRCUIT			CABLES PULLED BY CPS ENERGY										
#6 XHHW	120 POWER HOT				1	1	1	1	1					
	120 POWER COMMON				1	1	1	1	1					
#6 BARE	BARE BOND GROUND				1	1	1	1	1					
#8 BARE	BARE BOND GROUND									1	1	1	1	1
9 COND. #14 SOLID TYPE "A"	VEH SIGNALS	Ø	1							1	1	2	1	1
		Ø	2								1			
M138 OPTICOM CABLE	EMERG PREEMPT	POLE	C								2			
POWER & DATA CABLE	RADAR PRESENCE DETECTION DEVICE (RPDD)	Ø	1								1			
		Ø	2								1			
POWER CABLE	COMMUNICATION CABLE	POLE	C								1			
ETHERNET CABLE		POLE	C								1			
POWER & DATA CABLE	RADAR ADVANCE DETECTION DEVICE (RADD)	POLE	C								1			
		POLE	E									1		1
POWER & DATA CABLE	CLOSED CIRCUIT TELEVISION (CCTV)	POLE	C								1			

AN EXTRA 2 INCH CONDUIT SHALL BE STUBBED OUT AND CAPPED 2 FEET FROM EACH CONCRETE FOUNDATION, INCLUDING CONTROLLER AND EACH DRILLED SHAFT.

RUN #1B TO #1G SHALL HAVE 36" OF COVER.

POLE SCHEDULE

	POLE			(C)	(D)	(E)	(F)
	POLE TYPE			LMA(D)	PED	PED	PED
	POLE HEIGHT (FEET)			30	20	20	20
	MAST ARM LENGTH (FEET)			65 & 44	N/A	N/A	N/A
	LUMINAIRE EXTENSION			YES	N/A	N/A	N/A
	LUMINAIRE			NO	N/A	N/A	N/A
	FOUNDATION TYPE			48-A	24-A	24-A	24-A
	FOUNDATION DEPTH (FEET)			26.4	5.7	5.7	5.7
CABLE	CIRCUIT			NUMBER OF CONDUCTORS			
# 8 BARE				1	1	1	1
9 COND. #14 SOLID TYPE "A"	VEH SIGNALS	Ø	1	2	1	1	1
		Ø	2	3			
M138 OPTICOM CABLE	EMERG PREEMPT	POLE	C	2			
POWER & DATA CABLE	RADAR PRESENCE DETECTION DEVICE (RPDD)	Ø	1	1			
		Ø	2	1			
POWER CABLE	COMMUNICATION CABLE	POLE	C	1			
ETHERNET CABLE		POLE	C	1			
POWER & DATA CABLE	RADAR ADVANCE DETECTION DEVICE (RADD)	POLE	C	1			
		POLE	E			1	
POWER & DATA CABLE	CLOSED CIRCUIT TELEVISION (CCTV)	POLE	C	1			

POLE & EQUIPMENT INFORMATION

ID NO.	DESCRIPTION/ATTACHMENTS	STATION	OFFSET	END. ELEV
(A)	PROPOSED ELECTRIC SERVICE METER TS5 ON TIMBER POLE.	N/A	N/A	N/A
(A1)	PROPOSED ELECTRIC SERVICE CUT-OFF.	N/A	N/A	N/A
(B)	INSTALL SAN ANTONIO STANDARD MODEL 332 TRAFFIC SIGNAL CONTROLLER CABINET ASSEMBLY, MODEL 2070 CONTROLLER, AND COSA BASE-MOUNT FOUNDATION (5' X 9') WITH BATTERY BOX IN FOUNDATION.	N/A	N/A	N/A
(C)	INSTALL LMA (D) SIGNAL POLE PER POLE SCHEDULE, WITH ONE CCTV CAMERA ASSEMBLY, TWO OPTICOM DETECTORS, THREE RADAR SENSORS, WIRELESS COMMUNUCATION EQUIPMENT, SIGNS, AND FIVE VEHICLE SIGNALS AS INDICATED ON LAYOUT.	455+95.97 "1604"	96.14 LT	905.03
(D)	INSTALL 20 FT BRUSHED ALUMINUM PEDESTRAIN POLE ON FRANGIBLE BASE, WITH SIGN, AND ONE VEHICLE SIGNAL AS INDICATED ON LAYOUT.	456+51.23 "1604"	33.68 RT	FLUSH WITH FINISHED GRADE
(E)	INSTALL 20 FT BRUSHED ALUMINUM PEDESTRAIN POLE ON FRANGIBLE BASE, WITH ONE RADAR SENSOR, SIGN, AND ONE VEHICLE SIGNAL AS INDICATED ON LAYOUT.	456+51.23 "1604"	21.68 RT	FLUSH WITH FINISHED GRADE
(F)	INSTALL 20 FT BRUSHED ALUMINUM PEDESTRAIN POLE ON FRANGIBLE BASE WITH ONE VEHICLE SIGNAL AS INDICATED ON LAYOUT.	456+51.51 "1604"	82.73 LT	FLUSH WITH FINISHED GRADE

Elec. Service No.	Electrical Service Description (see ED (4) - 03)	Service Conduit Size	Service Conductors No./Size	Safety Switch Amps	Main Ckt. Bkr. Pole/Amp	Two-Pole Contactor Amps	Panelbd/ Loadcenter Amp Rating	Circuit No.	Branch Ckt. Bkr. Pole/Amps	Branch Circuit Amps	KVA Load
TS5	ELEC SERV TY D(120/240)070(NS)GS(N)TP(O)	3"	3/#6	N/A	2P/70	N/A	100	A (SIGNAL)	1P/50	40	4.8

STATE OF TEXAS
GILMER D. GASTON
80472
LICENSED
PROFESSIONAL ENGINEER

GILMER D. GASTON P.E. — 8/4/2010 DATE

NOT TO SCALE

REV. NO.	DATE	DESCRIPTION	BY

ALAMO RMA

PAPE-DAWSON ENGINEERS

555 EAST RAMSEY | SAN ANTONIO, TEXAS 78216 | PHONE: 210.375.9000 FAX: 210.375.9010

TEXAS BOARD OF PROFESSIONAL ENGINEERS, FIRM REGISTRATION # 470

Texas Department of Transportation © 2010

LOOP 1604

TRAFFIC SIGNAL DETAILS

TURNAROUND #3 (SOUTH OF SHAENFIELD ROAD)

DGN:	FED. RD. DIV. NO.	STATE	FEDERAL AID PROJECT NO.			HIGHWAY NO.
CHK DGN:	6	TEXAS	STP 2011(210)ES			LP 1604
DWG:	DIST.	COUNTY	CONT. NO.	SECT. NO.	JOB NO.	SHEET NO.
CHK DWG:	SAT	BEXAR	2452	01	050	279

ITEM	DESC	DESCRIPTION	UNIT	QTY
0416		DRILL SHAFT (TRF SIG POLE) (48 IN) (ROCK)	LF	26.4
0618	2088	CONDT (PVC) (SCHD 80) (3") (TRENCH) (ROCK)	LF	225
0618	2089	CONDT (PVC) (SCHD 80) (3") (BORE) (ROCK)	LF	285
0620	2009	ELEC CONDR (NO. 6) BARE	LF	370
0620	2010	ELEC CONDR (NO. 6) INSULATED	LF	740
0620	2011	ELEC CONDR (NO. 8) BARE	LF	360
0624	2008	GROUND BOX TY A (122311) W/APRON	EA	4
0624	2014	GROUND BOX TY D (162922) W/APRON	EA	2
0628	2089	ELC SRV TY D 120/240 070 (NS)GS(N)TP(O)	EA	1
0680	2003	INSTALL HWY TRF SIG (SYSTEM)	EA	1
0682	2001	BACK PLATE (12 IN) (3 SEC)	EA	8
0682	2022	VEH SIG SEC (12 IN) LED (GRN ARW)	EA	5
0682	2023	VEH SIG SEC (12 IN) LED (GRN)	EA	3
0682	2024	VEH SIG SEC (12 IN) LED (YEL ARW)	EA	5
0682	2025	VEH SIG SEC (12 IN) LED (YEL)	EA	3
0682	2026	VEH SIG SEC (12 IN) LED (RED ARW)	EA	5
0682	2027	VEH SIG SEC (12 IN) LED (RED)	EA	3
0684	2035	TRF SIG CBL (TY A) (14 AWG) (9 CONDR)	LF	960
0686	2277	INS TRF SIG PL AM(S) 2 ARM(65-44')LUM	EA	1
0687	2001	PED POLE ASSEMBLY	EA	3
		INSTALL CCTV FIELD EQUIPMENT $	EA	1
		BATTERY BACK-UP SYSTEM	EA	1
		RADAR ADVANCE DETECTION DEVICE $	EA	2
		RADAR PRESENCE DETECTION DEVICE $	EA	2
*		802.11a, b/g Outdoor Mesh AP, FCC Cfg (Part#: AIR-LAP1522AG-AK9)	EA	1
*		2400-2483.5 MHz, 8.0 dBi Omni Ant, with N Connect (Part #: AIR-ANT2480V-N)	EA	3
*		Aironet 1520 Series AC Power Cord, 40 ft, N. Amer Plug (Part #: AIR-CORD-R3P-40NA)	EA	1
*		4900-5850 MHz, 8.0Dbi OMNI with N Connect (Part #: AIR-ANT5180V-N)	EA	1
*		1520 Series Pole Mount Kit (AIR-ACCPMK1520)	EA	1
*		802.11a, b/g Outdoor Mesh AP, FCC Cfg (Part #: SMARTNET 8X5XNBD)	EA	1
*		27331A 01010000 BELDEN (Power Cable) (Part #: VNTC 16-3-R10K-BED)	LF	165
*		IND ETH 5E4P24 HLD (Ethernet Cable) (Part #: 7919A 01001000)	LF	165
*		2955 12 TX W/SM UPLINKS (Part #: WS-C2955S-12)	EA	1
*		19 IN RACK MOUNT KIT (Part #: CISCO STK-RACKMNT-2955)	EA	1
*		CISCO, AC TO 24 V DC DIN RAIL PW (Part #: PWR-2955-AC)	EA	1
*		SMARTNET 8X5XNBD 2955 12 TX w/Single Mode Uplinks (Part #: CON-SNTWSC2955S)	EA	1
*		TRAFFIC SIGNAL CONTROLLER ASSEMBLY (TYPE 332 CABINET)	EA	1
*		MODEL 2070 CONTROLLER WITH NEXTPHASE SOFTWARE	EA	1
*		TYPE 332 CONTROLLER FOUNDATION WITH BBS BOX	EA	1
*		R3-1 (36"X36") NO RIGHT-TURN	EA	1
*		R3-2 (36"X36") NO LEFT-TURN	EA	1
*		R6-1L (48"X16") ONE-WAY	EA	1
*		R10-5 (SPL) (30"X36") TURN ON GREEN ARROW ONLY	EA	3
*		3M MODEL 138 OPTICOM CABLE $	LF	310
*		3M MODEL 752 PHASE SELECTORS $	EA	1
*		3M OPTICOM MODEL 722 DETECTOR $	EA	2
*		PELCO ASTRO-BRAC MAST ARM WIND DAMPER ASSY(AB-0178) $	EA	2
**		ASTRO-BRAC SIGNAL MOUNT ASSEMBLIES	EA	8
***		DRILL SHAFT (TRF SIG POLE) (24 IN) (ROCK)	LF	17.1

* SUBSIDIARY TO ITEM 680
** SUBSIDIARY TO ITEM 682
*** SUBSIDIARY TO ITEM 687
$ TO BE INSTALLED PER MANUFACTURERS SPECIFICATION

1. MODEL 332 CONTROLLER FOUNDATION SHALL BE PROVIDED BY CONTRACTOR PER DETAIL IN THIS PLAN SET.
2. COMMUNICATION EQUIPMENT TO BE DELIVERED TO CoSA SIGNAL SHOP FOUR (4) WEEKS IN ADVANCE FOR TESTING AND PROGRAMMING. CONTRACTOR TO INSTALL COMMUNICATION EQUIPMENT IN THE FIELD AS DIRECTED BY CoSA ITSD. SUBSIDIARY TO ITEM 680.
3. CONTRACTOR TO FURNISH AND DELIVER CONTROLLER AND CABINET ASSEMBLY TO COSA SHOP FOR PROGRAMMING AND TESTING FOUR (4) WEEKS IN ADVANCE PRIOR TO CONTRACTOR INSTALLING EQUIPMENT IN THE FIELD. SUBSIDIARY TO ITEM 680.
4. THE CONTRACTOR SHALL SUPPLY A CONFLICT MONITOR THAT CONFORMS TO THE TEES SPECIFICATION FOR MODEL 2070L CONTROLLER. THE CONFLICT MONITOR SHALL BE EDI. MODEL 2018 KCLIP, OR APPROVED EQUAL.

Plotted on: 7/6/2010

Design Filename: p:\74\00\04\design\civil\traffic\7400045IG05-CBL2.dgn

STATE OF TEXAS
GILMER D. GASTON
60472
LICENSED PROFESSIONAL ENGINEER

GILMER D. GASTON P.E. — 7/6/2010 DATE

NOT TO SCALE

REV. NO.	DATE	DESCRIPTION	BY

ALAMO RMA

PAPE-DAWSON ENGINEERS

555 EAST RAMSEY | SAN ANTONIO, TEXAS 78216 | PHONE: 210.375.9000 FAX: 210.375.9010

TEXAS BOARD OF PROFESSIONAL ENGINEERS, FIRM REGISTRATION # 470

Texas Department of Transportation
© 2010

LOOP 1604

TRAFFIC SIGNAL DETAILS

TURNAROUND #3 (SOUTH OF SHAENFIELD ROAD)

SHEET 3 OF 5

DGN:	FED. RD. DIV. NO.	STATE	FEDERAL AID PROJECT NO.			HIGHWAY NO.
CHK DGN:	6	TEXAS	STP 2011(210)ES			LP 1604
DWG:	DIST.	COUNTY	CONT. NO.	SECT. NO.	JOB NO.	SHEET NO.
CHK DWG:	SAT	BEXAR	2452	01	050	280

Plotted on: 6/26/2010

Design Filename: p:\74\00\04\design\civil\traffic\740004SIG05-EL1.dgn

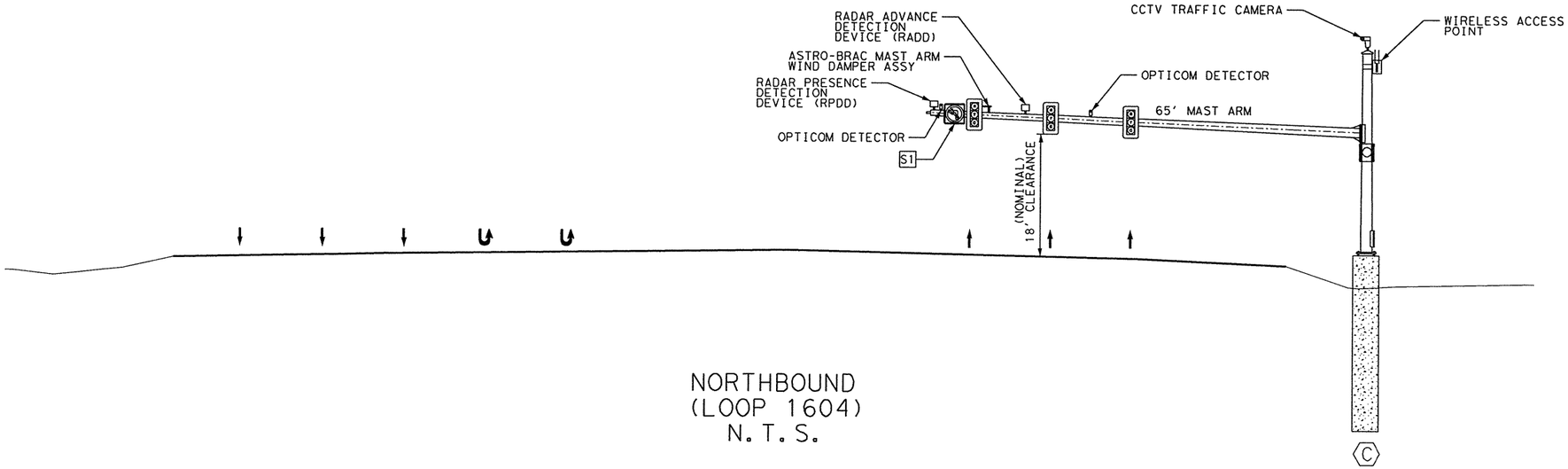

NORTHBOUND
(LOOP 1604)
N.T.S.

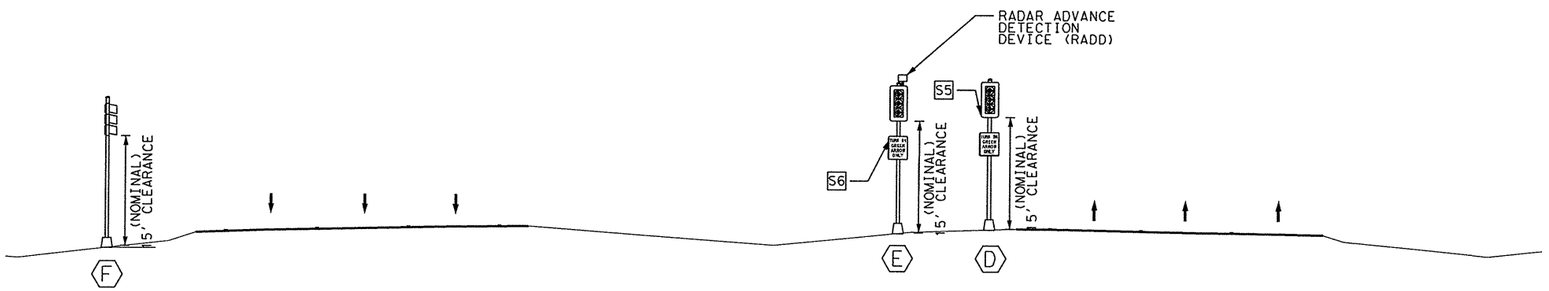

SOUTHBOUND
(LOOP 1604)
N.T.S.

GILNER D. GASTON
80472
LICENSED
PROFESSIONAL ENGINEER
STATE OF TEXAS

GILNER D. GASTON P.E. — 6/26/2010 DATE

NOT TO SCALE

REV. NO.	DATE	DESCRIPTION	BY

ALAMO RMA

PAPE-DAWSON ENGINEERS
555 EAST RAMSEY | SAN ANTONIO, TEXAS 78216 | PHONE: 210.375.9000 FAX: 210.375.9010
TEXAS BOARD OF PROFESSIONAL ENGINEERS, FIRM REGISTRATION # 470

Texas Department of Transportation ©2010

LOOP 1604
ELEVATION

TURNAROUND #3 (SOUTH OF SHAENFIELD ROAD)

SHEET 4 OF 5

DGN:	FED. RD. DIV. NO.	STATE	FEDERAL AID PROJECT NO.			HIGHWAY NO.
CHK DGN:	6	TEXAS	STP 2011(210)ES			LP 1604
DWG:	DIST.	COUNTY	CONT. NO.	SECT. NO.	JOB NO.	SHEET NO.
CHK DWG:	SAT	BEXAR	2452	01	050	281

Plotted on: 6/26/2010

Design Filename: p:\74\00\04\design\civil\traffic\740004SIG05-EL2.dgn

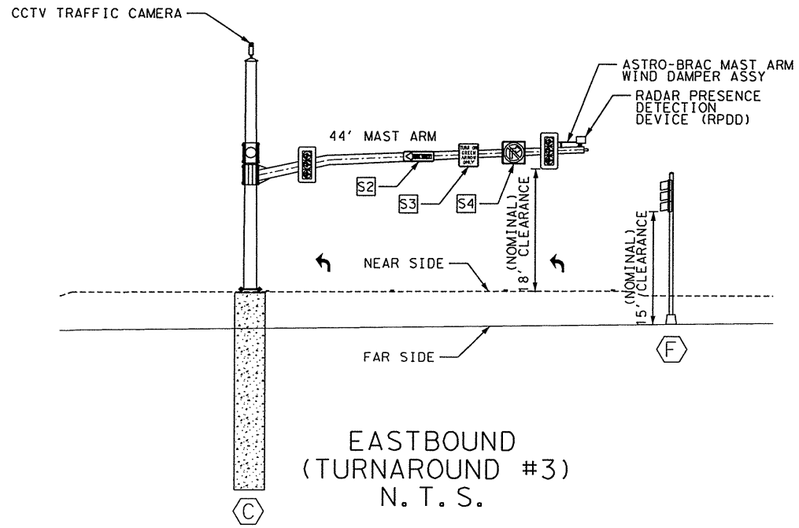

EASTBOUND
(TURNAROUND #3)
N. T. S.

GILMER D. GASTON
80472
LICENSED
PROFESSIONAL ENGINEER
STATE OF TEXAS

GILMER D. GASTON P.E. — 6/26/2010 DATE

NOT TO SCALE

REV. NO.	DATE	DESCRIPTION	BY

ALAMO RMA

PAPE-DAWSON ENGINEERS

555 EAST RAMSEY | SAN ANTONIO, TEXAS 78216 | PHONE: 210.375.9000 FAX: 210.375.9010

TEXAS BOARD OF PROFESSIONAL ENGINEERS, FIRM REGISTRATION # 470

Texas Department of Transportation
© 2010

LOOP 1604

ELEVATION

TURNAROUND #3 (SOUTH OF SHAENFIELD ROAD)

SHEET 5 OF 5

DGN:	FED. RD. DIV. NO.	STATE	FEDERAL AID PROJECT NO.			HIGHWAY NO.
CHK DGN:	6	TEXAS	STP 2011(210)ES			LP 1604
DWG:	DIST.	COUNTY	CONT. NO.	SECT. NO.	JOB NO.	SHEET NO.
CHK DWG:	SAT	BEXAR	2452	01	050	282

Plotted on: 6/26/2010

Design Filename: p:\74X00\04\Design\Civil\TRAFFIC\740004SIG06-E.dgn

SIGNAL PHASING DIAGRAM:

EXISTING TRAFFIC SIGNS		
SIGN	DESCRIPTION	DESIGNATION
	R4-7, (24" x 30")	S1

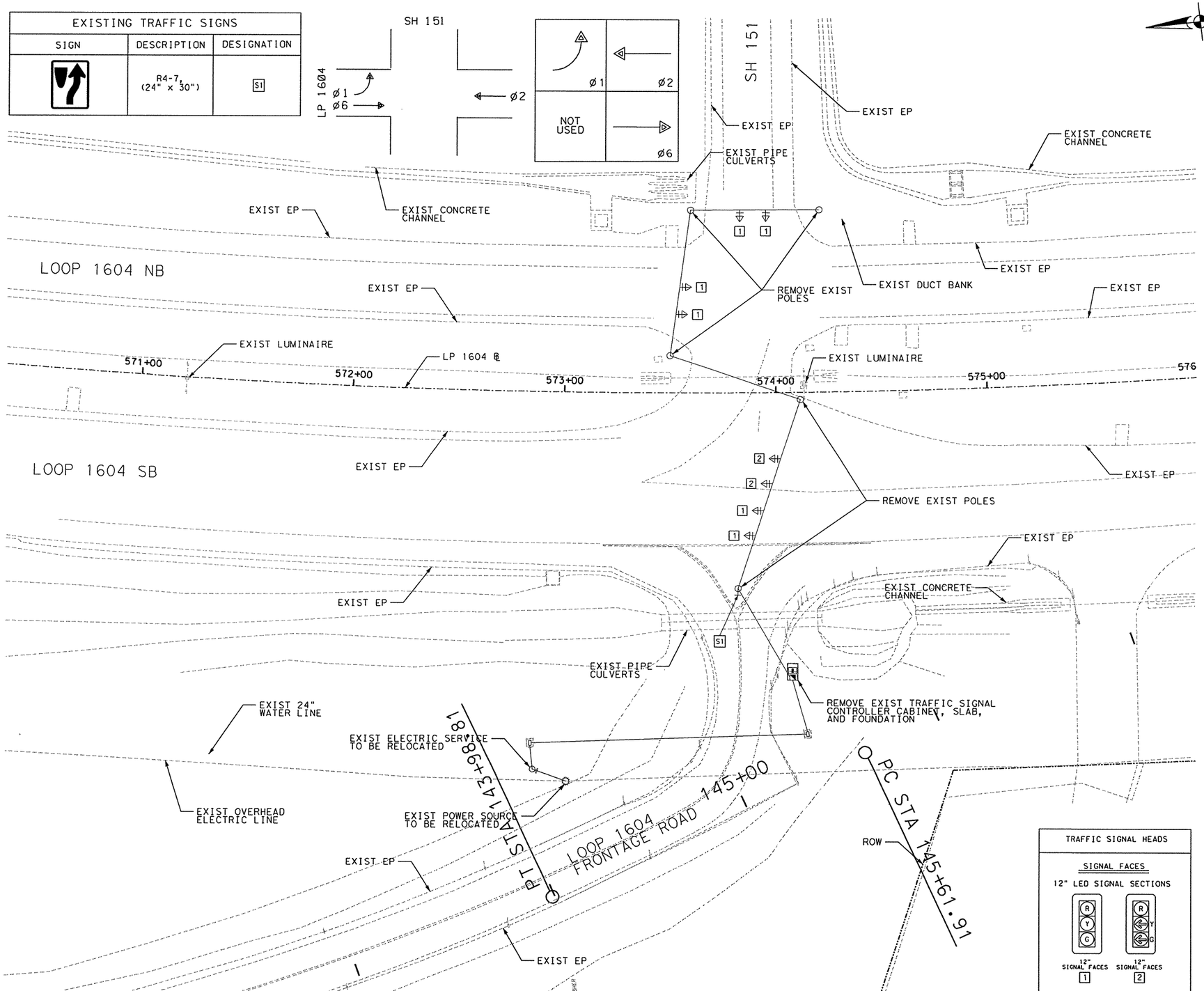

TRAFFIC SIGNAL HEADS	
SIGNAL FACES	
12" LED SIGNAL SECTIONS	
12" SIGNAL FACES 1	12" SIGNAL FACES 2

SIGNAL PLAN LEGEND

- NO 3½ GROUND BOX (PROPOSED) (TY A)
- NO 7 GROUND BOX (EXISTING) (TY D)
- NO 7 GROUND BOX (PROPOSED) (TY D)
- POLE (EXISTING OR RELOCATED)
- POLE (PROPOSED)
- POWER SOURCE (EXISTING OR RELOCATED)
- POWER SOURCE (PROPOSED)
- PROP. MODEL 332 CONTROLLER CABINET & FDN WITH BBS BATTERY BOX
- PROP. MODEL 332 CONTROLLER CABINET & FDN
- ELECTRIC SERVICE METER (EXISTING)
- ELECTRIC SERVICE METER (PROPOSED)
- CONDUIT (EXISTING)
- 3" CONDUIT SCHEDULE 80 (PROPOSED)
- SIGNAL HEAD (EXISTING)
- SIGNAL HEAD (TEMPORARY)
- SIGNAL HEAD (PROPOSED)
- SIGN
- MAST ARM POLE & FOUNDATION (PROPOSED)
- PED SIGNAL AND PUSHBUTTON (EXISTING)
- PED SIGNAL AND PUSHBUTTON (PROPOSED)
- V.I.V.D.S CAMERA & MOUNT (EXISTING)
- V.I.V.D.S CAMERA & MOUNT (PROPOSED)
- 2" CONDUIT STUBOUT & CAP
- RPDD RADAR PRESENCE DETECTOR
- RADD RADAR ADVANCE DETECTOR
- AP WIRELESS ACCESS POINT
- CCTV TRAFFIC SURVEILLANCE SYSTEM 4PTZ
- OPTICOM DETECTOR (PROPOSED)
- XX CONDUIT IDENTIFIER
- X POLE & EQUIPMENT IDENTIFIER
- PROPOSED ILLUMINATION POLE AND LUMINAIRE
- X ILLUMINATION IDENTIFIER

GILMER D. GASTON P.E. — 6/26/2010 DATE

25 0 25 50

SCALE: PLAN - 1":50'

REV. NO.	DATE	DESCRIPTION	BY

ALAMO RMA

PAPE-DAWSON ENGINEERS

555 EAST RAMSEY | SAN ANTONIO, TEXAS 78216 | PHONE: 210.375.9000 FAX: 210.375.9010

TEXAS BOARD OF PROFESSIONAL ENGINEERS, FIRM REGISTRATION # 470

Texas Department of Transportation © 2010

LOOP 1604

EXISTING TRAFFIC SIGNAL LAYOUT

LP 1604 & SH 151

SHEET 1 OF 8

DGN:	FED. RD. DIV. NO.	STATE	FEDERAL AID PROJECT NO.			HIGHWAY NO.
CHK DGN:	6	TEXAS	STP 2011(210)ES			LP 1604
DWG:	DIST.	COUNTY	CONT. NO.	SECT. NO.	JOB NO.	SHEET NO.
CHK DWG:	SAT	BEXAR	2452	01	050	283

Plotted on: 8/4/2010

Design Filename: p:\74\00\04\design\civil\traffic\740004SIG06-TEMP.dgn

CONDUIT AND CONDUCTOR SCHEDULE														
	RUN NUMBER				1A	1B	2	3	4	5	6	8	9	10	11
	CONDUIT SIZE IN INCHES				-	3	3	3	3	3	3	3	3	3	3
	NUMBER OF CONDUITS				-	1	2	2	1	1	1	1	1	1	1
	LENGTH OF RUN (FT)				65	15	15	140	85	95	95	10	20	10	10
	TRENCH (T)/BORE (B)/EXISTING (E)				A	T	T	B	B	B	B	T	T	T	T
CABLE	CIRCUIT														
#6 XHHW	120 POWER HOT			CABLES PULLED BY CPS ENERGY		1									
	120 POWER COMMON					1									
#6 BARE	BARE BOND GROUND					1									
#8 BARE	BARE BOND GROUND						2	2	1	1	1	1	1	1	1
9 COND. #14 SOLID TYPE "A"	VEH SIGNALS		Ø	1			2	2	1	1	1		1		1
			Ø	2			1	1	1			1			
			Ø	6			1	1			1				1
POWER & DATA CABLE	RADAR PRESENCE DETECTION DEVICE (RPDD)		Ø	1			2	2	1		1	1		1	
			Ø	2			1	1			1			1	
POWER & DATA CABLE	RADAR ADVANCE DETECTION DEVICE (RADD)		POLE	C			1	1	1			1			
			POLE	F			1	1			1				1

CONTRACTOR SHALL REMOVE ALL SIGNAL CABLES PRIOR TO OPERATION OF PERMANENT SIGNAL.

RUN #1B SHALL HAVE 36" OF COVER.

TEMP SIGNALS SHALL INCLUDE PERMANENT DETECTION WITH RADD AND RPDD.

SIGNAL PHASING DIAGRAM:

CONFLICT FLASH: RED ALL PHASES

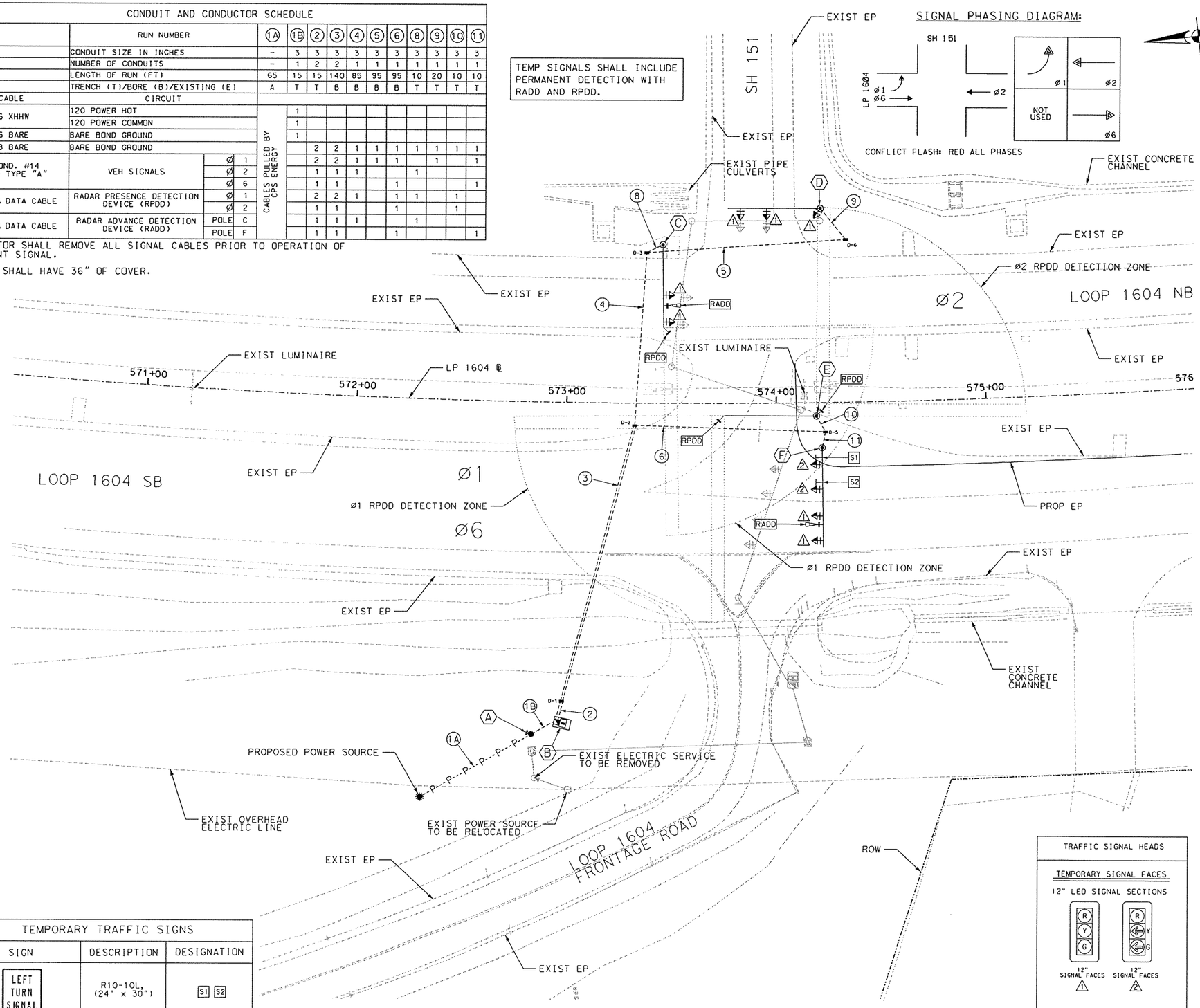

TEMPORARY TRAFFIC SIGNS		
SIGN	DESCRIPTION	DESIGNATION
LEFT TURN SIGNAL	R10-10L, (24" x 30")	S1 S2

TRAFFIC SIGNAL HEADS

TEMPORARY SIGNAL FACES

12" LED SIGNAL SECTIONS

SIGNAL PLAN LEGEND

- NO 3½ GROUND BOX (PROPOSED) (TY A)
- NO 7 GROUND BOX (EXISTING) (TY D)
- NO 7 GROUND BOX (PROPOSED) (TY D)
- POLE (EXISTING OR RELOCATED)
- POLE (PROPOSED)
- POWER SOURCE (EXISTING OR RELOCATED)
- POWER SOURCE (PROPOSED)
- PROP. MODEL 332 CONTROLLER CABINET & FDN WITH BBS BATTERY BOX
- PROP. MODEL 332 CONTROLLER CABINET & FDN
- ELECTRIC SERVICE METER (EXISTING)
- ELECTRIC SERVICE METER (PROPOSED)
- CONDUIT (EXISTING)
- 3" CONDUIT SCHEDULE 80 (PROPOSED)
- SIGNAL HEAD (EXISTING)
- SIGNAL HEAD (TEMPORARY)
- SIGNAL HEAD (PROPOSED)
- SIGN
- MAST ARM POLE & FOUNDATION (PROPOSED)
- PED SIGNAL AND PUSHBUTTON (EXISTING)
- PED SIGNAL AND PUSHBUTTON (PROPOSED)
- V.I.V.D.S CAMERA & MOUNT (EXISTING)
- V.I.V.D.S CAMERA & MOUNT (PROPOSED)
- 2" CONDUIT STUBOUT & CAP
- RPDD RADAR PRESENCE DETECTOR
- RADD RADAR ADVANCE DETECTOR
- AP WIRELESS ACCESS POINT
- CCTV TRAFFIC SURVEILLANCE SYSTEM 4PTZ
- OPTICOM DETECTOR (PROPOSED)
- XX CONDUIT IDENTIFIER
- X POLE & EQUIPMENT IDENTIFIER
- PROPOSED ILLUMINATION POLE AND LUMINAIRE
- X ILLUMINATION IDENTIFIER

STATE OF TEXAS
GILMER D. CASTON
80472
LICENSED PROFESSIONAL ENGINEER

GILMER D. CASTON P.E. — 8/4/2010 DATE

25 0 25 50

SCALE: PLAN - 1":50'

REV. NO.	DATE	DESCRIPTION	BY

ALAMO RMA

PAPE-DAWSON ENGINEERS

555 EAST RAMSEY | SAN ANTONIO, TEXAS 78216 | PHONE: 210.375.9000 FAX: 210.375.9010

TEXAS BOARD OF PROFESSIONAL ENGINEERS, FIRM REGISTRATION # 470

Texas Department of Transportation © 2010

LOOP 1604

TEMPORARY TRAFFIC SIGNAL LAYOUT

LP 1604 & SH 151

SHEET 2 OF 8

DGN:	FED. RD. DIV. NO.	STATE	FEDERAL AID PROJECT NO.			HIGHWAY NO.
CHK DGN:	6	TEXAS	STP 2011(210)ES			LP 1604
DWG:	DIST.	COUNTY	CONT. NO.	SECT. NO.	JOB NO.	SHEET NO.
CHK DWG:	SAT	BEXAR	2452	01	050	284

Plotted on: 8/4/2010

Design Filename: p:\74\00\04\Design\Civil\TRAFFIC\7400045IG06-P.dgn

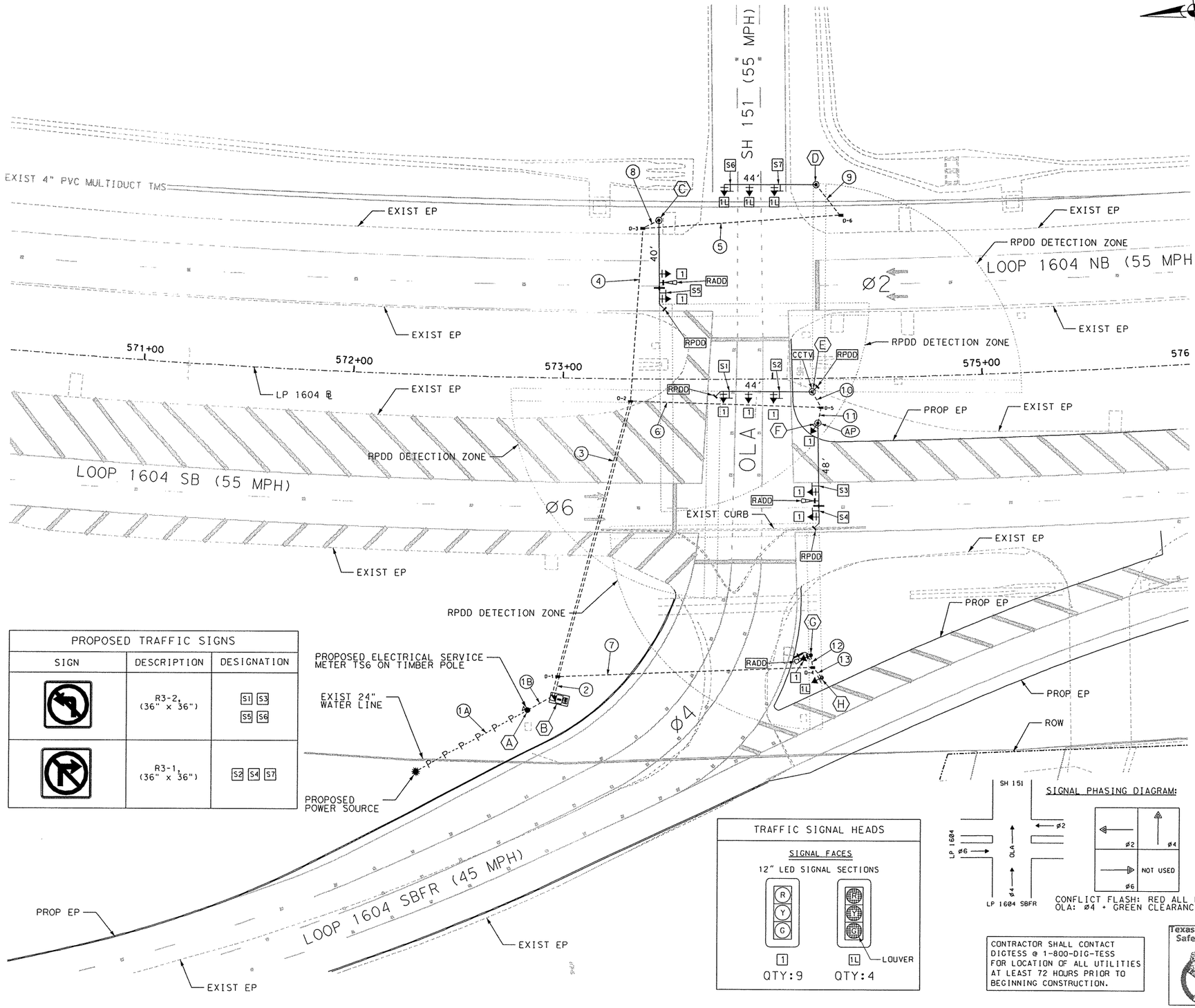

SIGNAL PLAN LEGEND

- NO 3½ GROUND BOX (PROPOSED) (TY A)
- NO 7 GROUND BOX (EXISTING) (TY D)
- NO 7 GROUND BOX (PROPOSED) (TY D)
- POLE (EXISTING OR RELOCATED)
- POLE (PROPOSED)
- POWER SOURCE (EXISTING OR RELOCATED)
- POWER SOURCE (PROPOSED)
- PROP. MODEL 332 CONTROLLER CABINET & FDN WITH BBS BATTERY BOX
- PROP. MODEL 332 CONTROLLER CABINET & FDN
- ELECTRIC SERVICE METER (EXISTING)
- ELECTRIC SERVICE METER (PROPOSED)
- CONDUIT (EXISTING)
- 3" CONDUIT SCHEDULE 80 (PROPOSED)
- SIGNAL HEAD (EXISTING)
- SIGNAL HEAD (TEMPORARY)
- SIGNAL HEAD (PROPOSED)
- SIGN
- MAST ARM POLE & FOUNDATION (PROPOSED)
- PED SIGNAL AND PUSHBUTTON (EXISTING)
- PED SIGNAL AND PUSHBUTTON (PROPOSED)
- V.I.V.D.S CAMERA & MOUNT (EXISTING)
- V.I.V.D.S CAMERA & MOUNT (PROPOSED)
- 2" CONDUIT STUBOUT & CAP
- RPDD RADAR PRESENCE DETECTOR
- RADD RADAR ADVANCE DETECTOR
- AP WIRELESS ACCESS POINT
- CCTV TRAFFIC SURVEILLANCE SYSTEM 4PTZ
- OPTICOM DETECTOR (PROPOSED)
- XX CONDUIT IDENTIFIER
- X POLE & EQUIPMENT IDENTIFIER
- X ILLUMINATION IDENTIFIER

PROPOSED TRAFFIC SIGNS		
SIGN	DESCRIPTION	DESIGNATION
	R3-2, (36" x 36")	S1 S3 S5 S6
	R3-1, (36" x 36")	S2 S4 S7

TRAFFIC SIGNAL HEADS

SIGNAL FACES

12" LED SIGNAL SECTIONS

1 QTY: 9

1L QTY: 4

SIGNAL PHASING DIAGRAM:

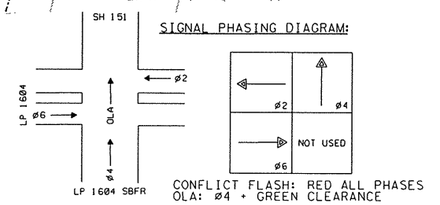

CONFLICT FLASH: RED ALL PHASES
OLA: Ø4 + GREEN CLEARANCE

CONTRACTOR SHALL CONTACT DIGTESS @ 1-800-DIG-TESS FOR LOCATION OF ALL UTILITIES AT LEAST 72 HOURS PRIOR TO BEGINNING CONSTRUCTION.

Texas Excavation Safety System

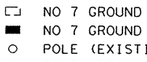

GILMER D. GASTON P.E. — 8/4/2010 DATE

25 0 25 50

SCALE: PLAN - 1":50'

REV. NO.	DATE	DESCRIPTION	BY

ALAMO RMA

PAPE-DAWSON ENGINEERS

555 EAST RAMSEY | SAN ANTONIO, TEXAS 78216 | PHONE: 210.375.9000 FAX: 210.375.9010

TEXAS BOARD OF PROFESSIONAL ENGINEERS, FIRM REGISTRATION # 470

Texas Department of Transportation © 2010

LOOP 1604

PROPOSED TRAFFIC SIGNAL LAYOUT

LP 1604 & SH 151

SHEET 3 OF 8

DGN:	FED. RD. DIV. NO.	STATE	FEDERAL AID PROJECT NO.			HIGHWAY NO.
CHK DGN:	6	TEXAS	STP 2011(210)ES			LP 1604
DWG:	DIST.	COUNTY	CONT. NO.	SECT. NO.	JOB NO.	SHEET NO.
CHK DWG:	SAT	BEXAR	2452	01	050	285

Plotted on: 8/4/2010

Design Filename: p:\74\00\04\design\civil\traffic\7400045IG06-CBL1.dgn

CONDUIT AND CONDUCTOR SCHEDULE

	RUN NUMBER			1A	1B	2	3	4	5	6	7	8	9	10	11	12	13
	CONDUIT SIZE IN INCHES			-	3	3	3	3	3	3	3	3	3	3	3	3	3
	NUMBER OF CONDUITS			-	1	2	2	1	1	1	1	1	1	1	1	1	1
	LENGTH OF RUN (FT)			65	15	15	140	85	95	95	125	10	20	10	10	10	10
	TRENCH (T)/BORE (B)/EXISTING (E)			A	T	T	B	B	B	B	B	T	T	T	T	T	T
CABLE	CIRCUIT																
#6 XHHW	120 POWER HOT				1												
	120 POWER COMMON				1												
#6 BARE	BARE BOND GROUND				1												
#8 BARE	BARE BOND GROUND					2	2	1	1	1	1	1	1	1	1	1	1
9 COND. #14 SOLID TYPE "A"	VEH SIGNALS	Ø	2			1	1	1				1					
		Ø	4			4	2			2	2			1	1	1	1
			OLA			1	1	1	1				1				
		Ø	6			1	1			1					1		
M138 OPTICOM CABLE	EMERG PREEMPT	POLE	C			1	1	1				1					
		POLE	F			1	1			1							
		POLE	G			1					1					1	
POWER & DATA CABLE	RADAR PRESENCE DETECTION DEVICE (RPDD)	Ø	2			1	1			1				1			
		Ø	4			2	2	1		1		1			1		
		Ø	6			1	1			1				1			
POWER CABLE	COMMUNICATION CABLE	POLE	F			2	2			2					2		
ETHERNET CABLE		POLE	F			2	2			2					2		
POWER & DATA CABLE	RADAR ADVANCE DETECTION DEVICE (RADD)	POLE	C			1	1	1				1					
		POLE	F			1	1			1					1		
		POLE	G			1					1					1	
POWER & DATA CABLE	CLOSED CIRCUIT TELEVISION (CCTV)	POLE	E			1	1			1				1			

CABLES PULLED BY CPS ENERGY

AN EXTRA 2 INCH CONDUIT SHALL BE STUBBED OUT AND CAPPED 2 FEET FROM EACH CONCRETE FOUNDATION, INCLUDING CONTROLLER AND EACH DRILLED SHAFT.

RUN #1B SHALL HAVE 36" OF COVER.

POLE & EQUIPMENT INFORMATION

ID NO.	DESCRIPTION/ATTACHMENTS	STATION	OFFSET	FND. ELEV
(A)	PROPOSED ELECTRIC SERVICE METER TS6 ON TIMBER POLE WITH AERIAL DROP PER TXDOT STD.	N/A	N/A	N/A
(B)	INSTALL TXDOT STANDARD TRAFFIC SIGNAL CONTROLLER CABINET AND BASE-MOUNT FOUNDATION (7.5'x 4.5'). RELOCATE EXIST NEMA TS-2 CONTROLLER TO NEW CABINET AND INSTALL MODEL TR-3 GPS CLOCK.	N/A	N/A	N/A
(C)	INSTALL SMA-80 SIGNAL POLE PER POLE SCHEDULE, WITH ONE OPTICOM DETECTOR, ONE RADAR SENSOR, SIGNS, AND TWO VEHICLE SIGNALS AS INDICATED ON LAYOUT.	573+45.37 "1604"	76.21 LT	942.37
(D)	INSTALLSMA-80 SIGNAL POLE PER POLE SCHEDULE, WITH SIGNS, AND THREE VEHICLE SIGNALS AS INDICATED ON LAYOUT.	574+22.13 "1604"	93.03 LT	941.69
(E)	INSTALL SMA-80 SIGNAL POLE PER POLE SCHEDULE, WITH TWO RADAR SENSORS, ONE CCTV CAMERA ASSEMBLY, SIGNS, AND THREE VEHICLE SIGNALS AS INDICATED ON LAYOUT.	574+18.92 "1604"	6.39 RT	945.42
(F)	INSTALL SMA-80 SIGNAL POLE PER POLE SCHEDULE, WITH ONE OPTICOM DETECTOR, TWO RADAR SENSORS, ONE CCTV CAMERA ASSEMBLY, WIRELESS COMMUNICATION EQUIPMENT, SIGNS, AND THREE VEHICLE SIGNALS AS INDICATED ON LAYOUT.	574+21.39 "1604"	21.59 RT	948.38
(G)	INSTALL 20 FT BRUSHED ALUMINUM PEDESTRAIN POLE ON FRANGIBLE BASE, WITH ONE OPTICOM DETECTOR, ONE RADAR SENSOR, AND ONE VEHICLE SIGNAL AS INDICATED ON LAYOUT.	574+16.67 "1604"	133.86 RT	FLUSH WITH FINISHED GRADE
(H)	INSTALL 20 FT BRUSHED ALUMINUM PEDESTRAIN POLE ON FRANGIBLE BASE, WITH ONE VEHICLE SIGNAL AS INDICATED ON LAYOUT.	574+21.57 "1604"	144.73 RT	FLUSH WITH FINISHED GRADE

SIGNS SHALL BE ATTACHED TO POLES AND MAST ARMS AS INDICATED ON LAYOUT.

Elec. Service No.	Electrical Service Description (see ED (4) - 03)	Service Conduit Size	Service Conductors No./Size	Safety Switch Amps	Main Ckt. Bkr. Pole/Amp	Two-Pole Contactor Amps	Panelbd/ Loadcenter Amp Rating	Circuit No.	Branch Ckt. Bkr. Pole/Amps	Branch Circuit Amps	KVA Load
TS6	ELEC SERV TY D(120/240)070(NS)GS(N)TP(O)	3"	3/#6	N/A	2P/70	N/A	100	A (SIGNAL)	1P/50	40	4.8

POLE SCHEDULE

	POLE			(C)	(D)	(E)	(F)	(G)	(H)
	POLE TYPE			SMA-80	SMA-80	SMA-80	SMA-80	PED	PED
	POLE HEIGHT (FEET)			19	19	30	30	20	20
	MAST ARM LENGTH (FEET)			40	44	44	48	N/A	N/A
	LUMINAIRE EXTENSION			NO	NO	YES	YES	N/A	N/A
	LUMINAIRE			NO	NO	NO	NO	N/A	N/A
	FOUNDATION TYPE			36-A	36-A	36-A	36-A	24-A	24-A
	FOUNDATION DEPTH (FEET)			15.2	13.2	13.2	15.2	5.7	5.7
CABLE	CIRCUIT			NUMBER OF CONDUCTORS					
# 8 BARE				1	1	1	1	1	1
9 COND. #14 SOLID TYPE "A"	VEH SIGNALS	Ø	2	2					
		Ø	4			3	1	1	1
			OLA		3				
		Ø	6				2		
M138 OPTICOM CABLE	EMERG PREEMPT	POLE	C	1					
		POLE	F				1		
		POLE	G					1	
POWER & DATA CABLE	RADAR PRESENCE DETECTION DEVICE (RPDD)	Ø	2			1			
		Ø	4	1			1		
		Ø	6			1			
POWER CABLE	COMMUNICATION CABLE	POLE	F				2		
ETHERNET CABLE		POLE	F				2		
POWER & DATA CABLE	RADAR ADVANCE DETECTION DEVICE (RADD)	POLE	C	1					
		POLE	F				1		
		POLE	G					1	
POWER & DATA CABLE	CLOSED CIRCUIT TELEVISION (CCTV)	POLE	E			1			

STATE OF TEXAS
GILMER A. GASTON
80472
LICENSED
PROFESSIONAL ENGINEER

GILMER D. GASTON P.E. — 8/4/2010 DATE

NOT TO SCALE

REV. NO.	DATE	DESCRIPTION	BY

ALAMO RMA

PAPE-DAWSON ENGINEERS

555 EAST RAMSEY | SAN ANTONIO, TEXAS 78216 | PHONE: 210.375.9000 FAX: 210.375.9010

TEXAS BOARD OF PROFESSIONAL ENGINEERS, FIRM REGISTRATION # 470

Texas Department of Transportation ©2010

LOOP 1604

TRAFFIC SIGNAL DETAILS

LP 1604 & SH 151

SHEET 4 OF 8

DGN:	FED. RD. DIV. NO.	STATE	FEDERAL AID PROJECT NO.			HIGHWAY NO.
CHK DGN:	6	TEXAS	STP 2011(210)ES			LP 1604
DWG:	DIST.	COUNTY	CONT. NO.	SECT. NO.	JOB NO.	SHEET NO.
CHK DWG:	SAT	BEXAR	2452	01	050	286

Plotted on: 7/6/2010

ITEM	DESC	DESCRIPTION	UNIT	QTY
0416	2056	DRILL SHAFT (TRF SIG POLE)(36 IN)(ROCK)	LF	56.8
0618	2088	CONDT (PVC)(SCHD 80)(3")(TRENCH)(ROCK)	LF	115
0618	2089	CONDT (PVC)(SCHD 80)(3")(BORE) (ROCK)	LF	680
0620	2009	ELEC CONDR (NO. 6) BARE	LF	20
0620	2010	ELEC CONDR (NO. 6) INSULATED	LF	40
0620	2011	ELEC CONDR (NO. 8) BARE	LF	1010
0624	2014	GROUND BOX TY D (162922) W/APRON	EA	6
0628	2089	ELC SRV TY D 120/240 070 (NS)GS(N)TP(O)	EA	1
0680	2003	INSTALL HWY TRF SIG (SYSTEM)	EA	1
0681	2001	TEMP TRAF SIGNALS	EA	1
0682	2001	BACK PLATE (12 IN) (3 SEC)	EA	13
0682	2012	LOUVER (12 IN) (ADJUSTABLE)	EA	12
0682	2023	VEH SIG SEC (12 IN) LED (GRN)	EA	13
0682	2025	VEH SIG SEC (12 IN) LED (YEL)	EA	13
0682	2027	VEH SIG SEC (12 IN) LED (RED)	EA	13
0684	2035	TRF SIG CBL (TY A) (14 AWG) (9 CONDR)	LF	2675
0686	2039	INS TRF SIG PL AM(S) 1 ARM (40')	EA	1
0686	2043	INS TRF SIG PL AM(S) 1 ARM (44')	EA	1
0686	2045	INS TRF SIG PL AM(S) 1 ARM (44') LUM	EA	1
0686	2049	INS TRF SIG PL AM(S) 1 ARM (48') LUM	EA	1
0687	2001	PED POLE ASSEMBLY	EA	2
6007	2001	REMOVING TRAFFIC SIGNALS	EA	1
		INSTALL CCTV FIELD EQUIPMENT $	EA	1
		BATTERY BACK-UP SYSTEM	EA	1
		RADAR ADVANCE DETECTION DEVICE $	EA	3
		RADAR PRESENCE DETECTION DEVICE $	EA	4
*		802.11a, b/g Outdoor Mesh AP, FCC Cfg (Part#: AIR-LAP1522AG-AK9)	EA	1
*		2400-2483.5 MHz, 8.0 dBi Omni Ant, with N Connect (Part #: AIR-ANT2480V-N)	EA	3
*		Aironet 1520 Series AC Power Cord, 40 ft, N. Amer Plug (Part #: AIR-CORD-R3P-40NA)	EA	1
*		4900-5850 MHz, 8.0Dbi OMNI with N Connect (Part #: AIR-ANT5180V-N)	EA	1
*		1520 Series Pole Mount Kit (AIR-ACCPMK1520)	EA	1
*		802.11a, b/g Outdoor Mesh AP, FCC Cfg (Part #: SMARTNET 8X5XNBD)	EA	1
*		27331A 01010000 BELDEN (Power Cable) (Part #: VNTC 16-3-R10K-BED)	LF	720
*		IND ETH 5E4P24 HLD (Ethernet Cable) (Part #: 7919A 01001000)	LF	360
*		2955 12 TX W/SM UPLINKS (Part #: WS-C2955S-12)	EA	1
*		19 IN RACK MOUNT KIT (Part #: CISCO STK-RACKMNT-2955)	EA	1
*		CISCO, AC TO 24 V DC DIN RAIL PW (Part #: PWR-2955-AC)	EA	1
*		SMARTNET 8X5XNBD 2955 12 TX w/Single Mode Uplinks (Part #: CON-SNTWSC2955S)	EA	1
*		Su-a-5.3-6-bd-vl (Part #: ALV-853197)	EA	1
*		Astro Bracket (Part #: AB-3004-29)	EA	1
*		Aluminum Tube (Part #: AB-2003-23)	EA	1
*		IND ETH 5E4P24 HLD (Ethernet Cable) (Part #: 7919A 01001000)	LF	360
*		TRAFFIC SIGNAL CONTROLLER ASSEMBLY (TYPE 332 CABINET)	EA	1
*		MODEL 2070 CONTROLLER WITH NEXTPHASE SOFTWARE	EA	1
*		TYPE 332 CONTROLLER FOUNDATION WITH BBS BOX	EA	1
*		R3-1 (36"X36") NO RIGHT-TURN	EA	3
*		R3-2 (36"X36") NO LEFT-TURN	EA	4
*		3M MODEL 138 OPTICOM CABLE $	LF	890
*		3M MODEL 752 PHASE SELECTORS $	EA	1
*		3M OPTICOM MODEL 722 DETECTOR $	EA	3
*		PELCO ASTRO-BRAC MAST ARM WIND DAMPER ASSY(AB-0178) $	EA	4
**		ASTRO-BRAC SIGNAL MOUNT ASSEMBLIES	EA	13
***		DRILL SHAFT (TRF SIG POLE) (24 IN) (ROCK)	LF	11.4

* SUBSIDIARY TO ITEM 680
** SUBSIDIARY TO ITEM 682
*** SUBSIDIARY TO ITEM 687
$ TO BE INSTALLED PER MANUFACTURERS SPECIFICATION

1. MODEL 332 CONTROLLER FOUNDATION SHALL BE PROVIDED BY CONTRACTOR PER DETAIL IN THIS PLAN SET.

2. COMMUNICATION EQUIPMENT TO BE DELIVERED TO CoSA SIGNAL SHOP FOUR (4) WEEKS IN ADVANCE FOR TESTING AND PROGRAMMING. CONTRACTOR TO INSTALL COMMUNICATION EQUIPMENT IN THE FIELD AS DIRECTED BY CoSA ITSD. SUBSIDIARY TO ITEM 680.

3. CONTRACTOR TO FURNISH AND DELIVER CONTROLLER AND CABINET ASSEMBLY TO COSA SHOP FOR PROGRAMMING AND TESTING FOUR (4) WEEKS IN ADVANCE PRIOR TO CONTRACTOR INSTALLING EQUIPMENT IN THE FIELD. SUBSIDIARY TO ITEM 680.

4. THE CONTRACTOR SHALL SUPPLY A CONFLICT MONITOR THAT CONFORMS TO THE TEES SPECIFICATION FOR MODEL 2070L CONTROLLER. THE CONFLICT MONITOR SHALL BE EDI. MODEL 2018 KCLIP, OR APPROVED EQUAL.

5. SALVAGEABLE MATERIAL SHALL BE DETERMINED BY THE CITY INSPECTOR AND DELIVERED TO THE CITY OF SAN ANTONIO TRAFFIC OPERATIONS FACILITY LOCATED AT 223 S CHERRY, SAN ANTONIO, TEXAS 78205. THE CONTRACTOR SHALL CONTACT THE CITY SERVICES & SUPPLY SUPERINTENDENT, AT (210)-207-7771 SEVEN (7) DAYS PRIOR TO DELIVERY OF THE SALVAGED MATERIAL. THE CONTRACTOR SHALL BECOME THE OWNER AND DISPOSE OF UNSALVAGED MATERIAL IN ACCORDANCE WITH FEDERAL, STATE, AND LOCAL REGULATIONS.

Design Filename: p:\74\00\04\design\civil\traffic\7400045IG06-CBL2.dgn

STATE OF TEXAS
GILMER D. GASTON
80472
LICENSED
PROFESSIONAL ENGINEER

GILMER D. GASTON P.E. — 7/6/2010 DATE

NOT TO SCALE

REV. NO.	DATE	DESCRIPTION	BY

ALAMO RMA

PAPE-DAWSON ENGINEERS

555 EAST RAMSEY | SAN ANTONIO, TEXAS 78216 | PHONE: 210.375.9000 FAX: 210.375.9010

TEXAS BOARD OF PROFESSIONAL ENGINEERS, FIRM REGISTRATION # 470

Texas Department of Transportation
© 2010

LOOP 1604

TRAFFIC SIGNAL DETAILS

LP 1604 & SH 151

SHEET 5 OF 8

DGN:	FED. RD. DIV. NO.	STATE	FEDERAL AID PROJECT NO.			HIGHWAY NO.
CHK DGN:	6	TEXAS	STP 2011(210)ES			LP 1604
DWG:	DIST.	COUNTY	CONT. NO.	SECT. NO.	JOB NO.	SHEET NO.
CHK DWG:	SAT	BEXAR	2452	01	050	287

Plotted on: 6/30/2010

Design Filename: p:\74\00\04\design\civil\traffic\740004SIG06-EL1.dgn

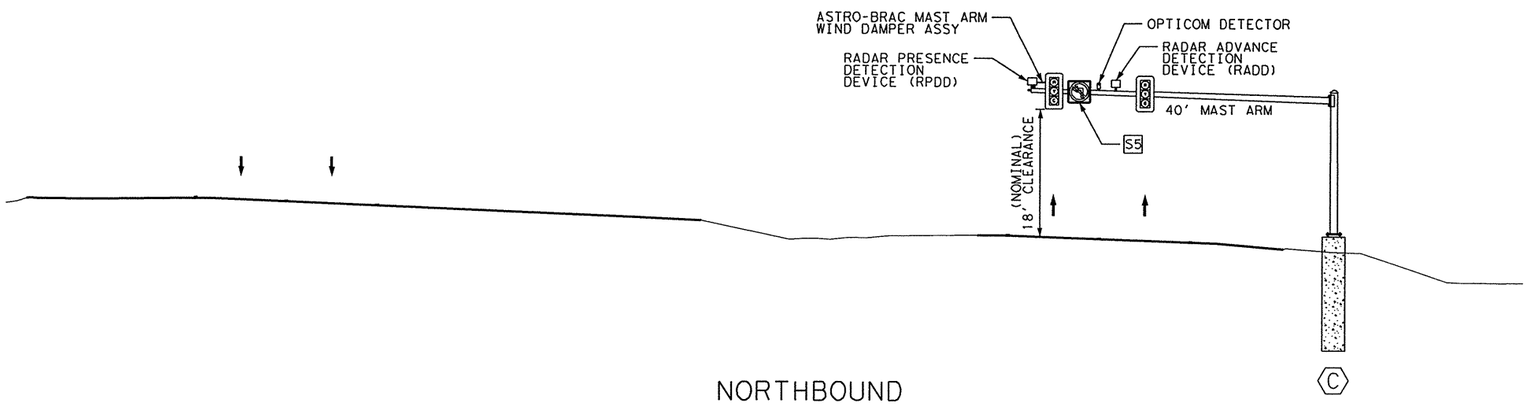

NORTHBOUND
(LOOP 1604)
N.T.S.

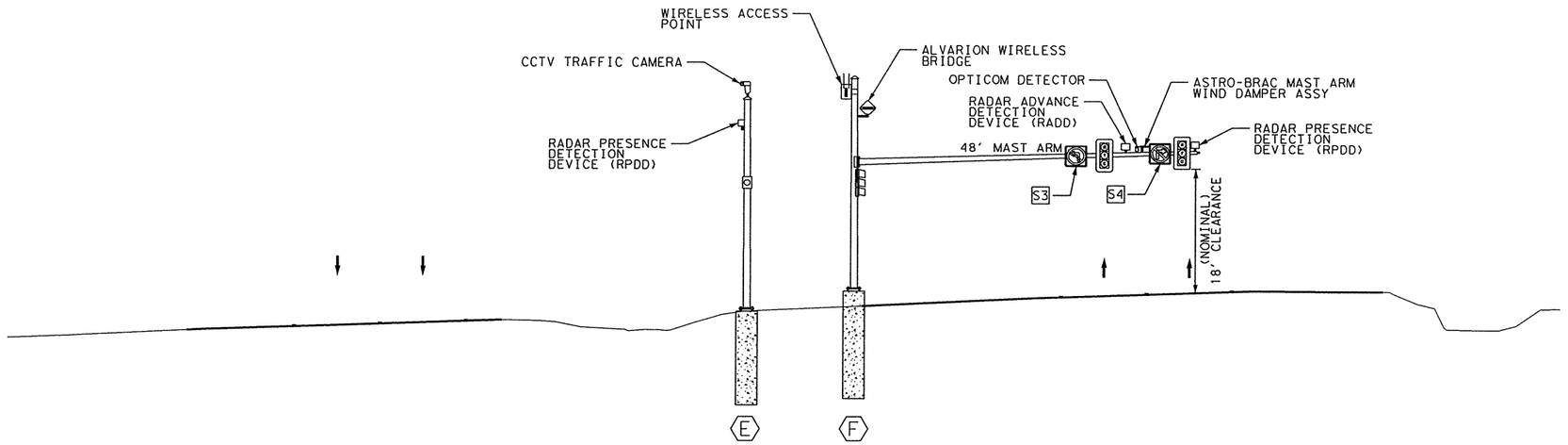

SOUTHBOUND
(LOOP 1604)
N.T.S.

GILMER D. GASTON P.E. — 6/30/2010 DATE

NOT TO SCALE

REV. NO.	DATE	DESCRIPTION	BY

ALAMO RMA

PAPE-DAWSON ENGINEERS
555 EAST RAMSEY | SAN ANTONIO, TEXAS 78216 | PHONE: 210.375.9000 FAX: 210.375.9010
TEXAS BOARD OF PROFESSIONAL ENGINEERS, FIRM REGISTRATION # 470

Texas Department of Transportation
© 2010

LOOP 1604
ELEVATION

LOOP 1604 & SH 151

SHEET 6 OF 8

DGN:	FED. RD. DIV. NO.	STATE	FEDERAL AID PROJECT NO.			HIGHWAY NO.
CHK DGN:	6	TEXAS	STP 2011(210)ES			LP 1604
DWG:	DIST.	COUNTY	CONT. NO.	SECT. NO.	JOB NO.	SHEET NO.
CHK DWG:	SAT	BEXAR	2452	01	050	288

Plotted on: 6/26/2010

Design Filename: p:\74\00\04\design\civil\traffic\740004SIG06-EL2.dgn

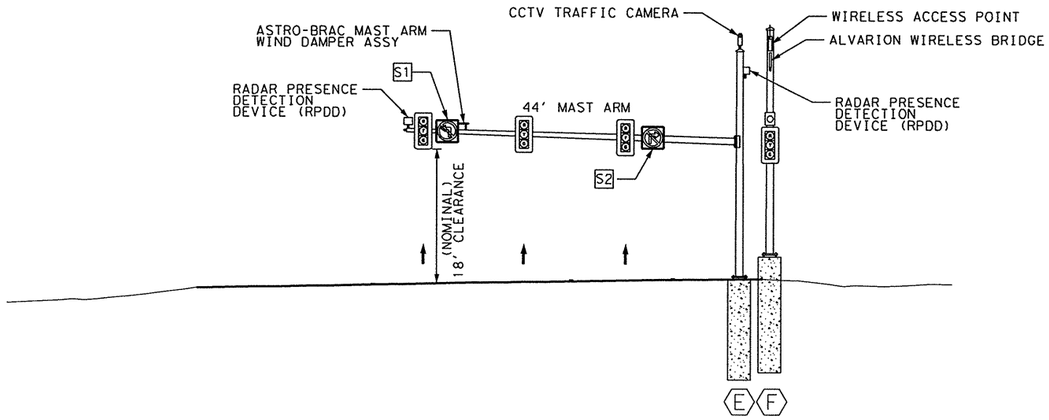

EASTBOUND
(SH 151 AT LOOP 1604 SB)
N.T.S.

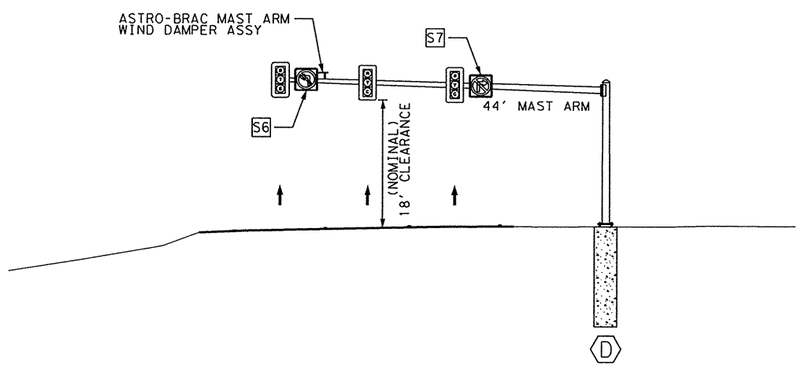

EASTBOUND
(SH 151 AT LOOP 1604 NB)
N.T.S.

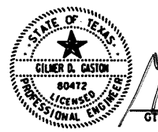

GILMER D. GASTON P.E. — 6/26/2010 DATE

NOT TO SCALE

REV. NO.	DATE	DESCRIPTION	BY

ALAMO RMA

PAPE-DAWSON ENGINEERS
555 EAST RAMSEY | SAN ANTONIO, TEXAS 78216 | PHONE: 210.375.9000 FAX: 210.375.9010
TEXAS BOARD OF PROFESSIONAL ENGINEERS, FIRM REGISTRATION # 470

Texas Department of Transportation
© 2010

LOOP 1604

ELEVATION

LOOP 1604 & SH 151

SHEET 7 OF 8

DGN:	FED. RD. DIV. NO.	STATE	FEDERAL AID PROJECT NO.			HIGHWAY NO.
CHK DGN:	6	TEXAS	STP 2011(210)ES			LP 1604
DWG:	DIST.	COUNTY	CONT. NO.	SECT. NO.	JOB NO.	SHEET NO.
CHK DWG:	SAT	BEXAR	2452	01	050	289

Plotted on: 6/26/2010

Design filename: p:\74\00\04\design\civil\traffic\740004SIG06-EL3.dgn

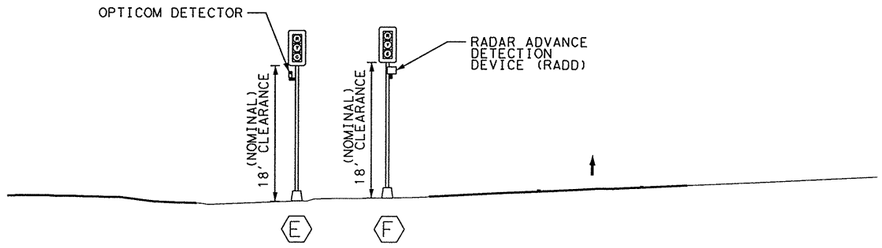

SOUTHBOUND
(LOOP 1604 SBFR)
N. T. S.

STATE OF TEXAS
GILMER D. GASTON
80472
LICENSED
PROFESSIONAL ENGINEER

GILMER D. GASTON P.E. — 6/26/2010 DATE

NOT TO SCALE

REV. NO.	DATE	DESCRIPTION	BY

ALAMO RMA

PAPE-DAWSON ENGINEERS
555 EAST RAMSEY | SAN ANTONIO, TEXAS 78216 | PHONE: 210.375.9000 FAX: 210.375.9010
TEXAS BOARD OF PROFESSIONAL ENGINEERS, FIRM REGISTRATION # 470

Texas Department of Transportation
© 2010

LOOP 1604

ELEVATION

LOOP 1604 & SH 151

SHEET 8 OF 8

DGN:	FED. RD. DIV. NO.	STATE	FEDERAL AID PROJECT NO.			HIGHWAY NO.
CHK DGN:	6	TEXAS	STP 2011(210)ES			LP 1604
DWG:	DIST.	COUNTY	CONT. NO.	SECT. NO.	JOB NO.	SHEET NO.
CHK DWG:	SAT	BEXAR	2452	01	050	290

Plotted on: 6/26/2010

Design Filename: p:\74\00\04\design\civil\TRAFFIC\740004SIG07-P1.dgn

ITEM	DESC	DESCRIPTION	UNIT	QTY
0618	2088	CONDT (PVC)(SCHD 80)(3")(TRENCH)(ROCK)	LF	130
0618	2089	CONDT (PVC)(SCHD 80)(3")(BORE) (ROCK)	LF	215
0624	2014	GROUND BOX TY D (162922) W/APRON	EA	5

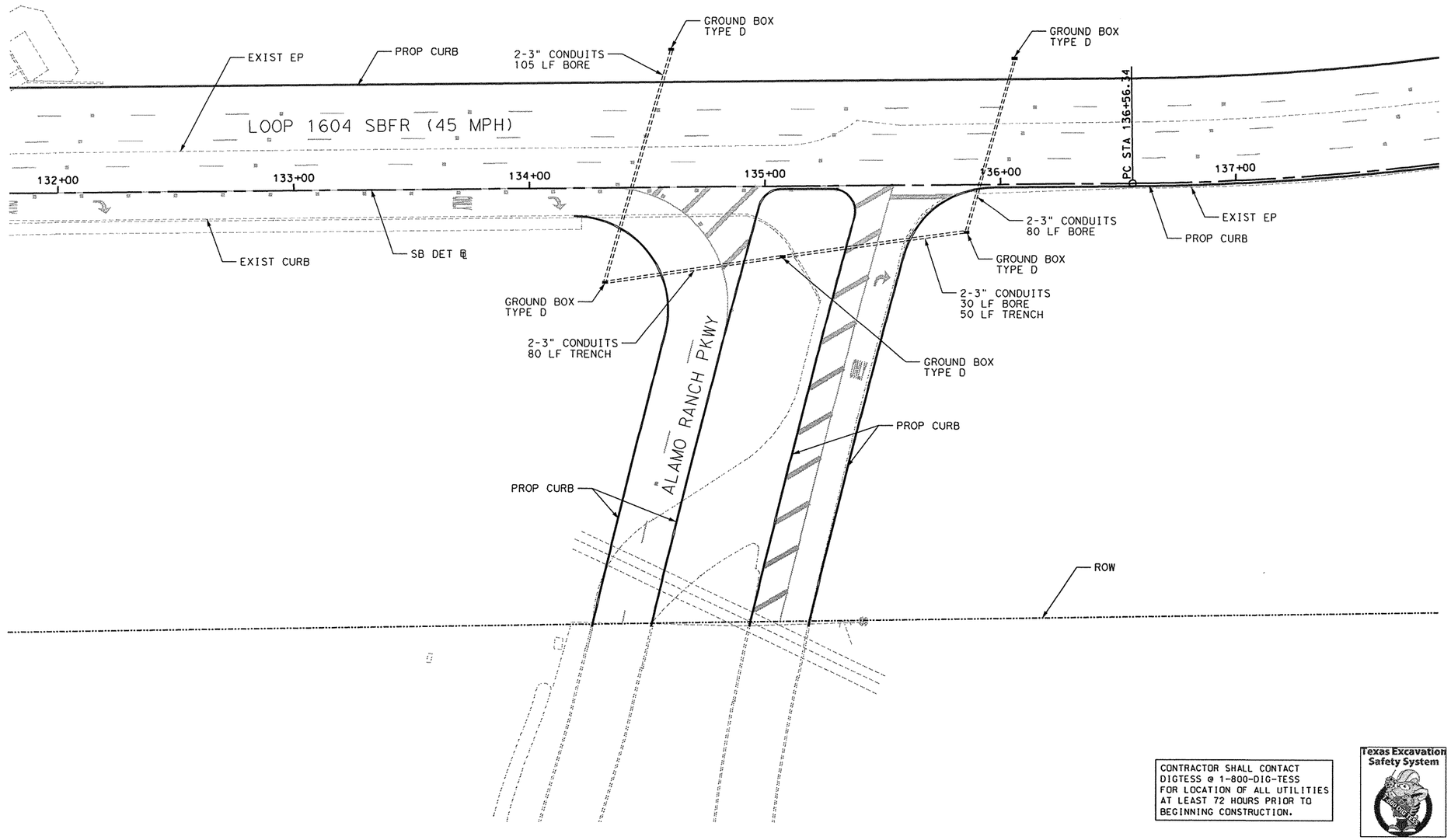

SIGNAL PLAN LEGEND

- NO 3½ GROUND BOX (PROPOSED)(TY A)
- NO 7 GROUND BOX (EXISTING)(TY D)
- NO 7 GROUND BOX (PROPOSED)(TY D)
- POLE (EXISTING OR RELOCATED)
- POLE (PROPOSED)
- POWER SOURCE (EXISTING OR RELOCATED)
- POWER SOURCE (PROPOSED)
- PROP. MODEL 332 CONTROLLER CABINET & FDN WITH BBS BATTERY BOX
- PROP. MODEL 332 CONTROLLER CABINET & FDN
- ELECTRIC SERVICE METER (EXISTING)
- ELECTRIC SERVICE METER (PROPOSED)
- CONDUIT (EXISTING)
- 3" CONDUIT SCHEDULE 80 (PROPOSED)
- SIGNAL HEAD (EXISTING)
- SIGNAL HEAD (TEMPORARY)
- SIGNAL HEAD (PROPOSED)
- SIGN
- MAST ARM POLE & FOUNDATION (PROPOSED)
- PED SIGNAL AND PUSHBUTTON (EXISTING)
- PED SIGNAL AND PUSHBUTTON (PROPOSED)
- V.I.V.D.S CAMERA & MOUNT (EXISTING)
- V.I.V.D.S CAMERA & MOUNT (PROPOSED)
- 2" CONDUIT STUBOUT & CAP
- RPDD RADAR PRESENCE DETECTOR
- RADD RADAR ADVANCE DETECTOR
- AP WIRELESS ACCESS POINT
- CCTV TRAFFIC SURVEILLANCE SYSTEM 4PTZ
- OPTICOM DETECTOR (PROPOSED)
- XX CONDUIT IDENTIFIER
- X POLE & EQUIPMENT IDENTIFIER
- PROPOSED ILLUMINATION POLE AND LUMINAIRE
- X ILLUMINATION IDENTIFIER

STATE OF TEXAS
GILMER D. GASTON
80472
LICENSED
PROFESSIONAL ENGINEER

GILMER D. GASTON P.E. — 6/26/2010 DATE

25 0 25 50
SCALE: PLAN - 1":50'

REV. NO.	DATE	DESCRIPTION	BY

ALAMO RMA

PAPE-DAWSON ENGINEERS
555 EAST RAMSEY | SAN ANTONIO, TEXAS 78216 | PHONE: 210.375.9000 FAX: 210.375.9010
TEXAS BOARD OF PROFESSIONAL ENGINEERS, FIRM REGISTRATION # 470

Texas Department of Transportation
© 2010

LOOP 1604

PROPOSED CONDUIT LAYOUT

LP 1604 SBFR & ALAMO RANCH PKWY

SHEET 1 OF 1

DGN:	FED. RD. DIV. NO.	STATE	FEDERAL AID PROJECT NO.			HIGHWAY NO.
CHK DGN:	6	TEXAS	STP 2011(210)ES			LP 1604
DWG:	DIST.	COUNTY	CONT. NO.	SECT. NO.	JOB NO.	SHEET NO.
CHK DWG:	SAT	BEXAR	2452	01	050	291

CONTRACTOR SHALL CONTACT DIGTESS @ 1-800-DIG-TESS FOR LOCATION OF ALL UTILITIES AT LEAST 72 HOURS PRIOR TO BEGINNING CONSTRUCTION.

Texas Excavation Safety System

Plotted on: 7/2/2010

Design Filename: p:\74\00\04\design\civil\traffic\illum\740004illum01.dgn

ITEM	DESCRIPTION	UNIT	QTY

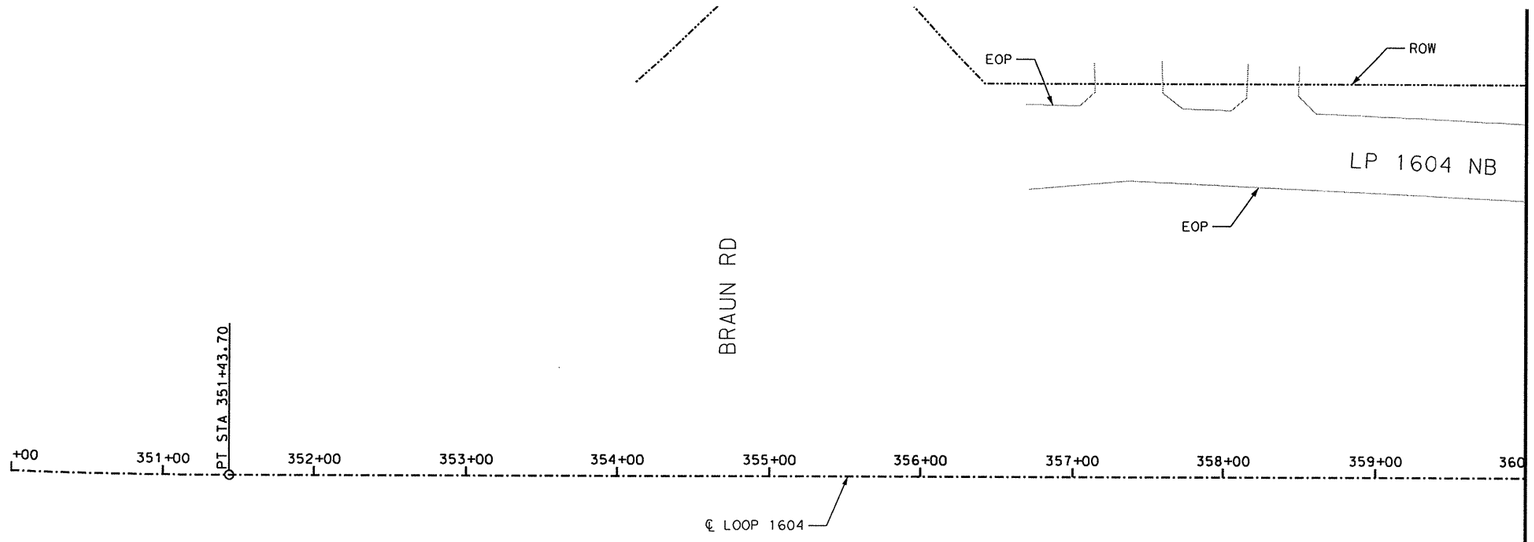

MATCHLINE STA. 360+00.00

NO WORK THIS SHEET

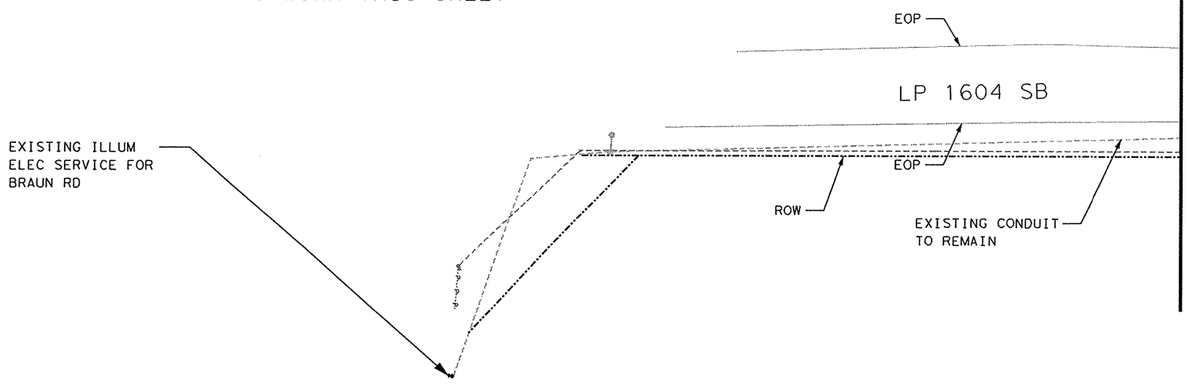

LEGEND

- PROP ILLUM ASSEM TY (SA 40 T-8)(0.25 KW)S
- PROP ILLUM ASSEM TY (SA 40 T-8-8)(0.25 KW)S
- EXIST ILLUM ASSEM TY (SA 40 T-8)(0.25 KW)S
- EXIST ILLUM ASSEM TY (SA 40 T-8-8)(0.25 KW)S
- EXIST ILLUM ASSEM TY (SA 50 T-8)(0.4 KW)S
- EXIST ILLUM ASSEM TY (SA 50 T-8)(0.4 KW)S
- PROP CONDUIT
- CONDUIT BORE
- EXIST CONDUIT
- ELECTRICAL SERVICE
- GROUND BOX TY A
- XX-XXX ILLUMINATION IDENTIFIER AND CIRCUIT NUMBER
- (XX) CONDUIT IDENTIFIER
- (X) ELECTRICAL SERVICE IDENTIFIER

NOTES:

1. SEE SHEET 307 FOR LUMINAIRE SUMMARY.
2. SEE SHEET 309 - 310 FOR CONDUIT AND CONDUCTOR SUMMARY.
3. SEE SHEET 308 FOR ELECTRICAL SERVICE SUMMARY.
4. SCHEDULE 80 CONDUIT TO BE USED IN LIMITS OF BORE.

Texas Excavation Safety System

CONTRACTOR SHALL CONTACT DIGTESS @ 1-800-DIG-TESS FOR LOCATION OF ALL UTILITIES AT LEAST 72 HOURS PRIOR TO BEGINNING CONSTRUCTION.

STATE OF TEXAS
GILMER D. GASTON
80472
LICENSED
PROFESSIONAL ENGINEER

GILMER D. GASTON P.E. — 7/2/2010 DATE

50 0 50 100
SCALE: PLAN - 1":100'

REV. NO.	DATE	DESCRIPTION	BY

ALAMO RMA

PAPE-DAWSON ENGINEERS

555 EAST RAMSEY | SAN ANTONIO, TEXAS 78216 | PHONE: 210.375.9000 FAX: 210.375.9010

TEXAS BOARD OF PROFESSIONAL ENGINEERS, FIRM REGISTRATION # 470

Texas Department of Transportation
© 2010

LOOP 1604

PROPOSED ILLUMINATION SHEET

STA. 360+00 TO STA. 370+00

SHEET 1 OF 15

DGN:	FED. RD. DIV. NO.	STATE	FEDERAL AID PROJECT NO.			HIGHWAY NO.
CHK DGN:	6	TEXAS	STP 2011(210)ES			LP 1604
DWG:	DIST.	COUNTY	CONT. NO.	SECT. NO.	JOB NO.	SHEET NO.
CHK DWG:	SAT	BEXAR	2452	01	050	292

Plotted on: 7/2/2010

Design Filename: p:\74\00\04\design\civil\traffic\illum\740004illum02.dgn

ITEM	DESCRIPTION	UNIT	QTY
0416-2029	DRILL SHAFT (RDWY ILL POLE) (30 IN)	LF	40
0432-2001	RIPRAP (CONC)(4 IN)	CY	1.75
0610-2025	INS RD IL AM (TY SA) 40T-8 (.25 KW)S	EA	5
0618-2018	CONDT (PVC) (SCHD 40) (2")	LF	775
0620-2011	ELEC CONDR (NO. 8) BARE	LF	775
0620-2012	ELEC CONDR (NO. 8) INSULATED	LF	1550

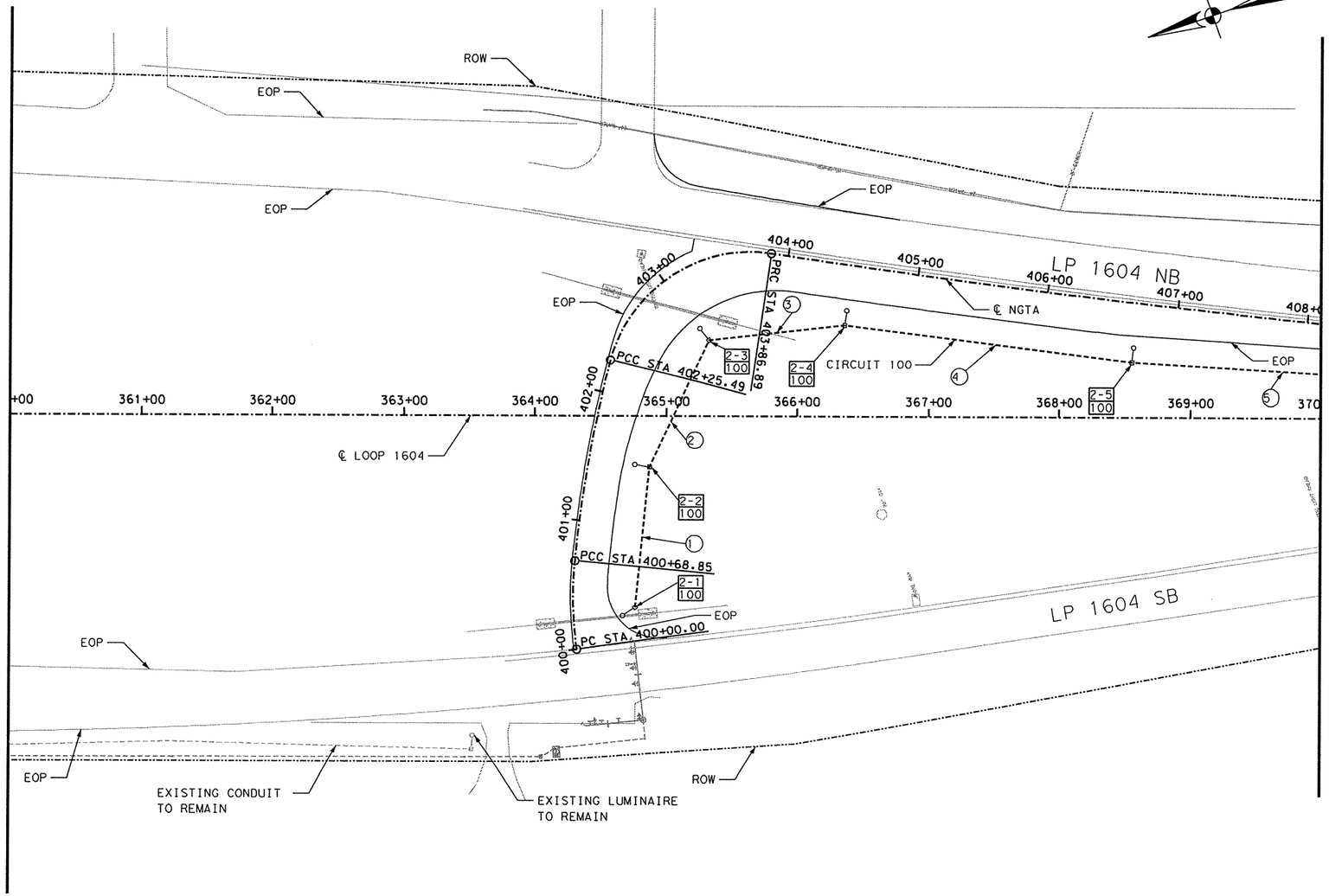

LEGEND

- PROP ILLUM ASSEM TY (SA 40 T-8)(0.25 KW)S
- PROP ILLUM ASSEM TY (SA 40 T-8-8)(0.25 KW)S
- EXIST ILLUM ASSEM TY (SA 40 T-8)(0.25 KW)S
- EXIST ILLUM ASSEM TY (SA 40 T-8-8)(0.25 KW)S
- EXIST ILLUM ASSEM TY (SA 50 T-8)(0.4 KW)S
- EXIST ILLUM ASSEM TY (SA 50 T-8)(0.4 KW)S
- PROP CONDUIT
- CONDUIT BORE
- EXIST CONDUIT
- ELECTRICAL SERVICE
- GROUND BOX TY A
- XX-XX / XXX ILLUMINATION IDENTIFIER AND CIRCUIT NUMBER
- (XX) CONDUIT IDENTIFIER
- (X) ELECTRICAL SERVICE IDENTIFIER

NOTES:

1. SEE SHEET 307 FOR LUMINAIRE SUMMARY.
2. SEE SHEET 309 - 310 FOR CONDUIT AND CONDUCTOR SUMMARY.
3. SEE SHEET 308 FOR ELECTRICAL SERVICE SUMMARY.
4. SCHEDULE 80 CONDUIT TO BE USED IN LIMITS OF BORE.

Texas Excavation Safety System

CONTRACTOR SHALL CONTACT DIGTESS @ 1-800-DIG-TESS FOR LOCATION OF ALL UTILITIES AT LEAST 72 HOURS PRIOR TO BEGINNING CONSTRUCTION.

STATE OF TEXAS
GILMER D. GASTON
80472
LICENSED
PROFESSIONAL ENGINEER

GILMER D. GASTON P.E. — 7/2/2010 DATE

50 0 50 100
SCALE: PLAN - 1":100'

REV. NO.	DATE	DESCRIPTION	BY

ALAMO RMA

PAPE-DAWSON ENGINEERS
555 EAST RAMSEY | SAN ANTONIO, TEXAS 78216 | PHONE: 210.375.9000 FAX: 210.375.9010
TEXAS BOARD OF PROFESSIONAL ENGINEERS, FIRM REGISTRATION # 470

Texas Department of Transportation
© 2010

LOOP 1604

PROPOSED ILLUMINATION SHEET

STA. 360+00 TO STA. 370+00

SHEET 2 OF 15

DGN:	FED. RD. DIV. NO.	STATE	FEDERAL AID PROJECT NO.			HIGHWAY NO.
CHK DGN:	6	TEXAS	STP 2011(210)ES			LP 1604
DWG:	DIST.	COUNTY	CONT. NO.	SECT. NO.	JOB NO.	SHEET NO.
CHK DWG:	SAT	BEXAR	2452	01	050	293

Plotted on: 7/2/2010

Design Filename: p:\74\00\04\design\civil\traffic\illum\740004illum03.dgn

ITEM	DESCRIPTION	UNIT	QTY
0416-2029	DRILL SHAFT (RDWY ILL POLE) (30 IN)	LF	40
0432-2001	RIPRAP (CONC)(4 IN)	CY	1.4
0610-2025	INS RD IL AM (TY SA) 40T-8 (.25 KW)S	EA	1
0610-2026	INS RD IL AM (TY SA) 40T-8-8 (.25 KW)S	EA	4
0618-2018	CONDT (PVC) (SCHD 40) (2")	LF	899
0618-2035	CONDT (PVC) (SCHD 80) (2") (BORE)	LF	136
0620-2011	ELEC CONDR (NO. 8) BARE	LF	1035
0620-2012	ELEC CONDR (NO. 8) INSULATED	LF	2070

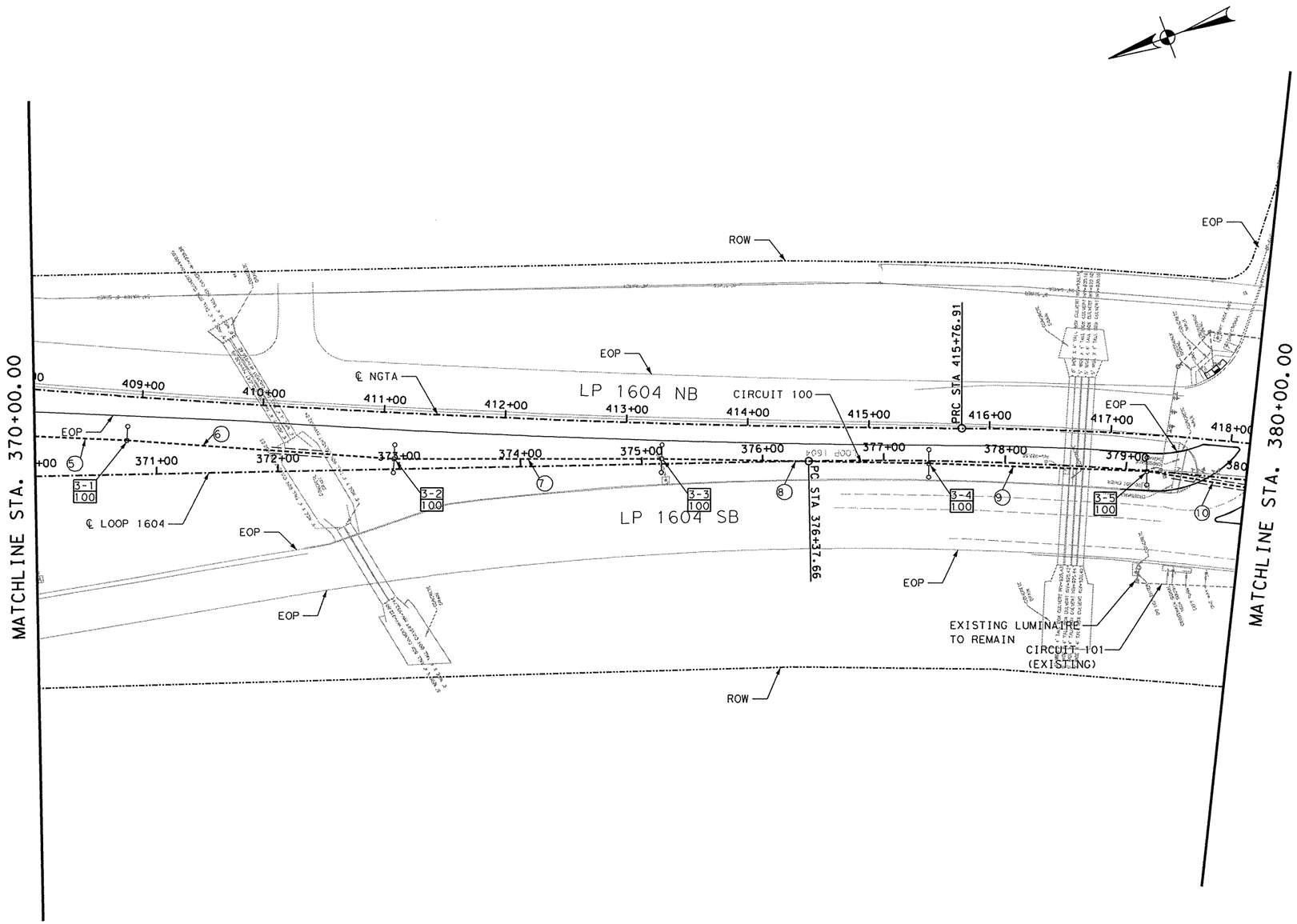

LEGEND

- PROP ILLUM ASSEM TY (SA 40 T-8)(0.25 KW)S
- PROP ILLUM ASSEM TY (SA 40 T-8-8)(0.25 KW)S
- EXIST ILLUM ASSEM TY (SA 40 T-8)(0.25 KW)S
- EXIST ILLUM ASSEM TY (SA 40 T-8-8)(0.25 KW)S
- EXIST ILLUM ASSEM TY (SA 50 T-8)(0.4 KW)S
- EXIST ILLUM ASSEM TY (SA 50 T-8)(0.4 KW)S
- PROP CONDUIT
- CONDUIT BORE
- EXIST CONDUIT
- ELECTRICAL SERVICE
- GROUND BOX TY A
- XX-XX / XXX ILLUMINATION IDENTIFIER AND CIRCUIT NUMBER
- (XX) CONDUIT IDENTIFIER
- (X) ELECTRICAL SERVICE IDENTIFIER

NOTES:

1. SEE SHEET 307 FOR LUMINAIRE SUMMARY.
2. SEE SHEET 309 - 310 FOR CONDUIT AND CONDUCTOR SUMMARY.
3. SEE SHEET 308 FOR ELECTRICAL SERVICE SUMMARY.
4. SCHEDULE 80 CONDUIT TO BE USED IN LIMITS OF BORE.

Texas Excavation Safety System

CONTRACTOR SHALL CONTACT DIGTESS @ 1-800-DIG-TESS FOR LOCATION OF ALL UTILITIES AT LEAST 72 HOURS PRIOR TO BEGINNING CONSTRUCTION.

STATE OF TEXAS
GILMER D. GASTON
80472
LICENSED PROFESSIONAL ENGINEER

GILMER D. GASTON P.E. — 7/2/2010 DATE

50 0 50 100
SCALE: PLAN - 1":100'

REV. NO.	DATE	DESCRIPTION	BY

ALAMO RMA

PAPE-DAWSON ENGINEERS
555 EAST RAMSEY | SAN ANTONIO, TEXAS 78216 | PHONE: 210.375.9000 FAX: 210.375.9010
TEXAS BOARD OF PROFESSIONAL ENGINEERS, FIRM REGISTRATION # 470

Texas Department of Transportation © 2010

LOOP 1604

PROPOSED ILLUMINATION SHEET

STA. 370+00 TO STA. 380+00

SHEET 3 OF 15

DGN:	FED. RD. DIV. NO.	STATE	FEDERAL AID PROJECT NO.			HIGHWAY NO.
CHK DGN:	6	TEXAS	STP 2011(210)ES			LP 1604
DWG:	DIST.	COUNTY	CONT. NO.	SECT. NO.	JOB NO.	SHEET NO.
CHK DWG:	SAT	BEXAR	2452	01	050	294

Plotted on: 8/4/2010

Design Filename: p:\74\00\04\design\civil\traffic\illum\740004illum04.dgn

ITEM	DESCRIPTION	UNIT	QTY
0416-2029	DRILL SHAFT (RDWY ILL POLE) (30 IN)	LF	16
0432-2001	RIPRAP (CONC)(4 IN)	CY	0.7
0610-2026	INS RD IL AM (TY SA) 40T-8-8 (.25 KW)S	EA	2
0618-2018	CONDT (PVC) (SCHD 40) (2")	LF	865
0618-2035	CONDT (PVC) (SCHD 80) (2") (BORE)	LF	80
0620-2009	ELEC CONDR (NO. 6) BARE	LF	1500
0620-2010	ELEC CONDR (NO. 6) INSULATED	LF	3000
0620-2011	ELEC CONDR (NO. 8) BARE	LF	545
0620-2012	ELEC CONDR (NO. 8) INSULATED	LF	1090
0624-2008	GROUND BOX TY A (122311) W/APRON	EA	5
0628-2158	REMOVE ELECTRICAL SERVICES	EA	1
0628-2174	ELC SRV TY A 240/480 060(NS)AL(E)TP(O)	EA	1

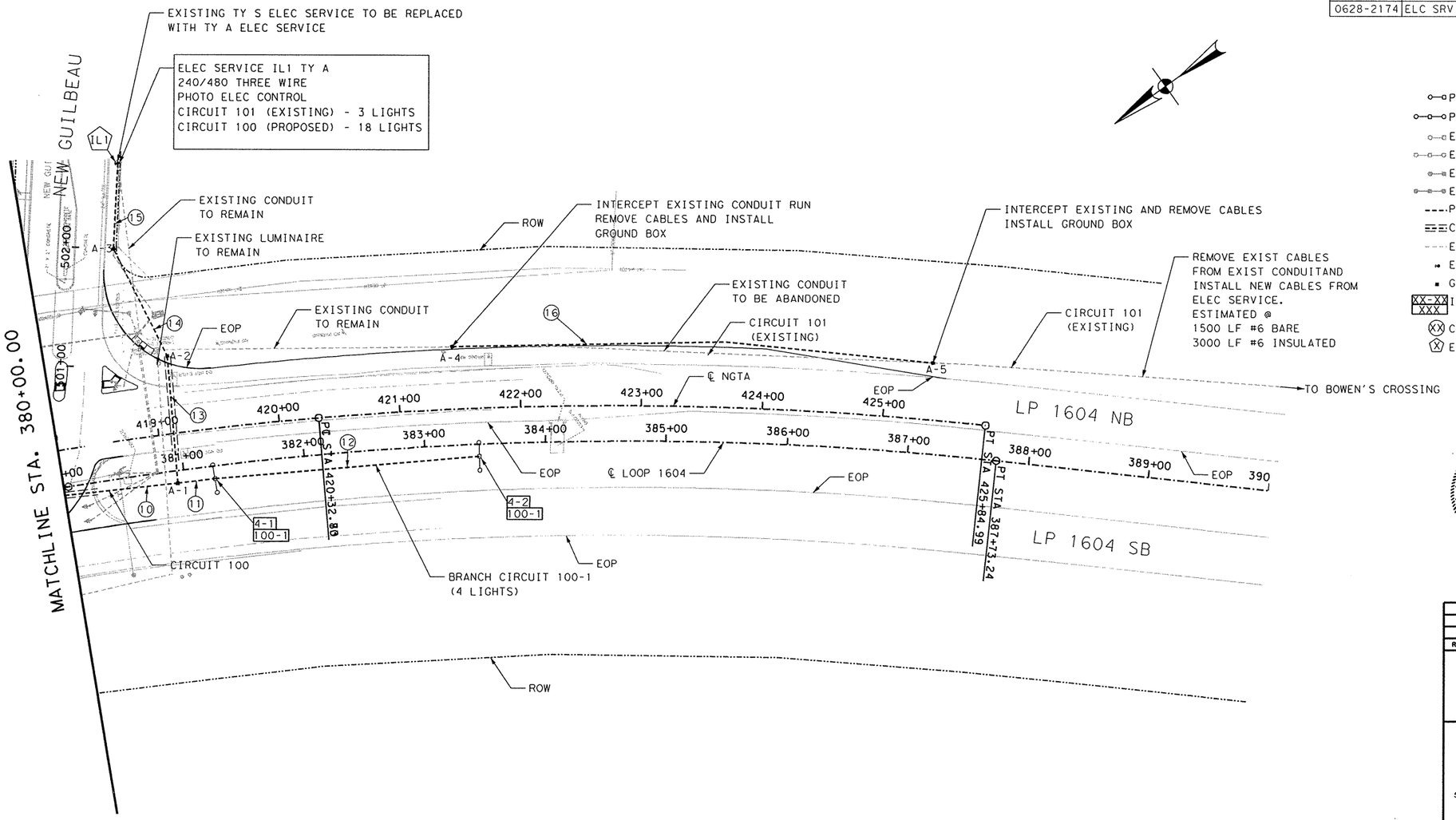

LEGEND

- PROP ILLUM ASSEM TY (SA 40 T-8)(0.25 KW)S
- PROP ILLUM ASSEM TY (SA 40 T-8-8)(0.25 KW)S
- EXIST ILLUM ASSEM TY (SA 40 T-8)(0.25 KW)S
- EXIST ILLUM ASSEM TY (SA 40 T-8-8)(0.25 KW)S
- EXIST ILLUM ASSEM TY (SA 50 T-8)(0.4 KW)S
- EXIST ILLUM ASSEM TY (SA 50 T-8)(0.4 KW)S
- PROP CONDUIT
- CONDUIT BORE
- EXIST CONDUIT
- ELECTRICAL SERVICE
- GROUND BOX TY A
- XX-XX / XXX ILLUMINATION IDENTIFIER AND CIRCUIT NUMBER
- (XX) CONDUIT IDENTIFIER
- (X) ELECTRICAL SERVICE IDENTIFIER

NOTES:

1. SEE SHEET 307 FOR LUMINAIRE SUMMARY.
2. SEE SHEET 309 - 310 FOR CONDUIT AND CONDUCTOR SUMMARY.
3. SEE SHEET 308 FOR ELECTRICAL SERVICE SUMMARY.
4. SCHEDULE 80 CONDUIT TO BE USED IN LIMITS OF BORE.

Texas Excavation Safety System

CONTRACTOR SHALL CONTACT DIGTESS @ 1-800-DIG-TESS FOR LOCATION OF ALL UTILITIES AT LEAST 72 HOURS PRIOR TO BEGINNING CONSTRUCTION.

STATE OF TEXAS
GILMER D. GASTON
80472
LICENSED PROFESSIONAL ENGINEER

GILMER D. GASTON P.E. — 8/4/2010 DATE

50 0 50 100

SCALE: PLAN - 1":100'

REV. NO.	DATE	DESCRIPTION	BY

ALAMO RMA

PAPE-DAWSON ENGINEERS

555 EAST RAMSEY | SAN ANTONIO, TEXAS 78216 | PHONE: 210.375.9000 FAX: 210.375.9010

TEXAS BOARD OF PROFESSIONAL ENGINEERS, FIRM REGISTRATION # 470

Texas Department of Transportation © 2010

LOOP 1604

PROPOSED ILLUMINATION SHEET

STA. 380+00 TO STA. 390+00

SHEET 4 OF 15

DGN:	FED. RD. DIV. NO.	STATE	FEDERAL AID PROJECT NO.			HIGHWAY NO.
CHK DGN:	6	TEXAS	STP 2011(210)ES			LP 1604
DWG:	DIST.	COUNTY	CONT. NO.	SECT. NO.	JOB NO.	SHEET NO.
CHK DWG:	SAT	BEXAR	2452	01	050	295

Plotted on: 7/2/2010

Design Filename: p:\74\00\04\design\civil\traffic\illum\740004illum05.dgn

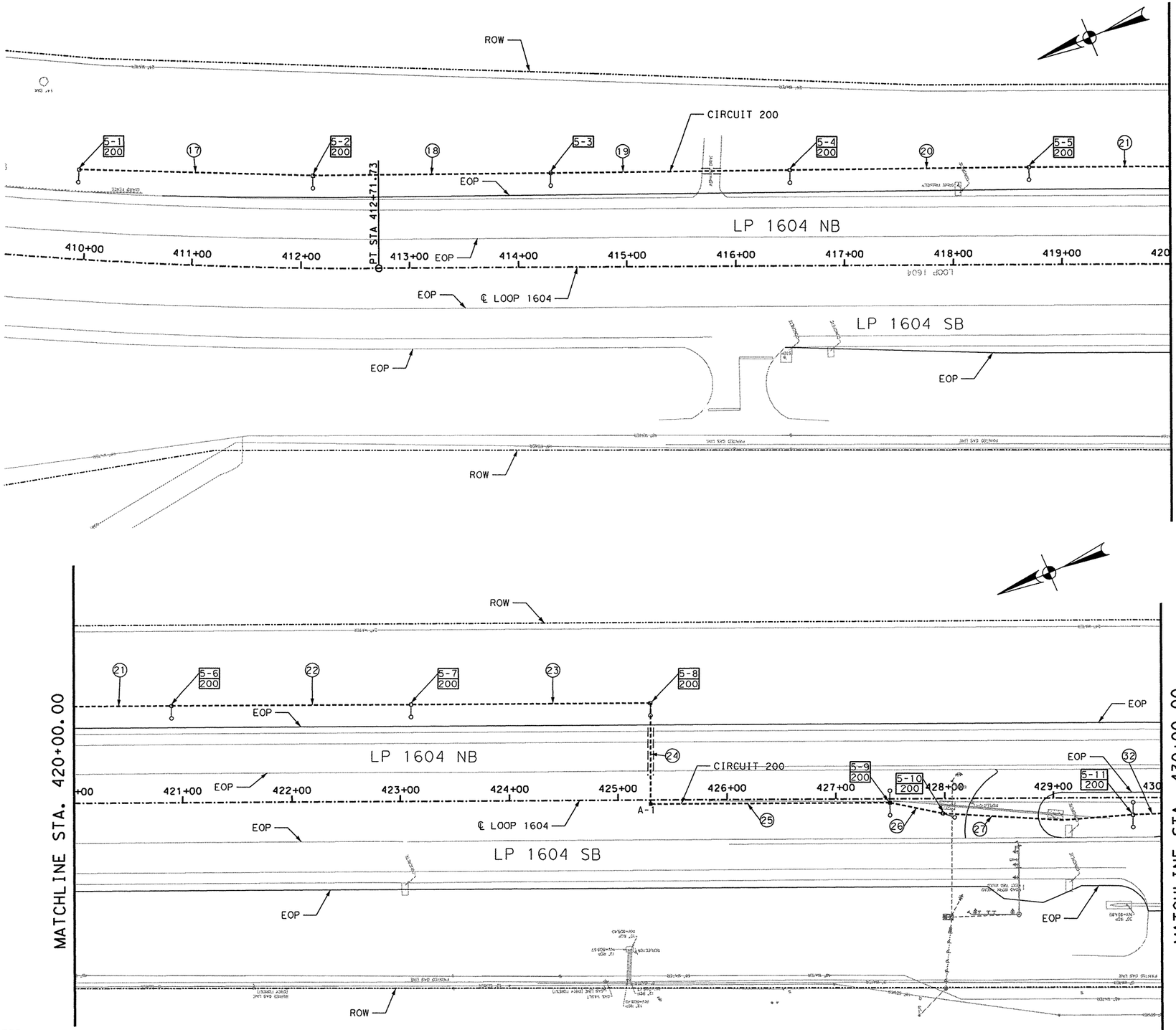

ITEM	DESCRIPTION	UNIT	QTY
0416-2029	DRILL SHAFT (RDWY ILL POLE) (30 IN)	LF	88
0432-2001	RIPRAP (CONC)(4 IN)	CY	3.85
0610-2025	INS RD IL AM (TY SA) 40T-8 (.25 KW)S	EA	9
0610-2026	INS RD IL AM (TY SA) 40T-8-8 (.25 KW)S	EA	2
0618-2018	CONDT (PVC) (SCHD 40) (2")	LF	2250
0618-2035	CONDT (PVC) (SCHD 80) (2") (BORE)	LF	65
0620-2009	ELEC CONDR (NO. 6) BARE	LF	2315
0620-2010	ELEC CONDR (NO. 6) INSULATED	LF	4630
0624-2008	GROUND BOX TY A (122311) W/APRON	EA	1

LEGEND

- PROP ILLUM ASSEM TY (SA 40 T-8)(0.25 KW)S
- PROP ILLUM ASSEM TY (SA 40 T-8-8)(0.25 KW)S
- EXIST ILLUM ASSEM TY (SA 40 T-8)(0.25 KW)S
- EXIST ILLUM ASSEM TY (SA 40 T-8-8)(0.25 KW)S
- EXIST ILLUM ASSEM TY (SA 50 T-8)(0.4 KW)S
- EXIST ILLUM ASSEM TY (SA 50 T-8)(0.4 KW)S
- PROP CONDUIT
- CONDUIT BORE
- EXIST CONDUIT
- ELECTRICAL SERVICE
- GROUND BOX TY A
- XXX / XXX ILLUMINATION IDENTIFIER AND CIRCUIT NUMBER
- (XX) CONDUIT IDENTIFIER
- (X) ELECTRICAL SERVICE IDENTIFIER

NOTES:

1. SEE SHEET 307 FOR LUMINAIRE SUMMARY.
2. SEE SHEET 309 - 310 FOR CONDUIT AND CONDUCTOR SUMMARY.
3. SEE SHEET 308 FOR ELECTRICAL SERVICE SUMMARY.
4. SCHEDULE 80 CONDUIT TO BE USED IN LIMITS OF BORE.

STATE OF TEXAS
GILMER D. GASTON
80472
LICENSED
PROFESSIONAL ENGINEER

GILMER D. GASTON P.E. — 7/2/2010 DATE

50 0 50 100
SCALE: PLAN - 1":100'

REV. NO.	DATE	DESCRIPTION	BY

ALAMO RMA

PAPE-DAWSON ENGINEERS

555 EAST RAMSEY | SAN ANTONIO, TEXAS 78216 | PHONE: 210.375.9000 FAX: 210.375.9010

TEXAS BOARD OF PROFESSIONAL ENGINEERS, FIRM REGISTRATION # 470

Texas Department of Transportation
© 2010

Texas Excavation Safety System

CONTRACTOR SHALL CONTACT DIGTESS @ 1-800-DIG-TESS FOR LOCATION OF ALL UTILITIES AT LEAST 72 HOURS PRIOR TO BEGINNING CONSTRUCTION.

LOOP 1604

PROPOSED ILLUMINATION SHEET

STA. 410+00 TO STA. 430+00

SHEET 5 OF 15

DGN:	FED. RD. DIV. NO.	STATE	FEDERAL AID PROJECT NO.			HIGHWAY NO.
CHK DGN:	6	TEXAS	STP 2011(210)ES			LP 1604
DWG:	DIST.	COUNTY	CONT. NO.	SECT. NO.	JOB NO.	SHEET NO.
CHK DWG:	SAT	BEXAR	2452	01	050	296

Plotted on: 8/4/2010

Design Filename: p:\74\00\04\design\civil\traffic\illum\740004illum06.dgn

ITEM	DESCRIPTION	UNIT	QTY
0416-2029	DRILL SHAFT (RDWY ILL POLE) (30 IN)	LF	80
0432-2001	RIPRAP (CONC)(4 IN)	CY	3.15
0610-2025	INS RD IL AM (TY SA) 40T-8 (.25 KW)S	EA	4
0610-2026	INS RD IL AM (TY SA) 40T-8-8 (.25 KW)S	EA	6
0610-2068	REMOVE RD IL ASM (TRANS-BASE)	EA	3
0618-2018	CONDT (PVC) (SCHD 40) (2")	LF	1960
0618-2035	CONDT (PVC) (SCHD 80) (2") (BORE)	LF	435
0620-2009	ELEC CONDR (NO. 6) BARE	LF	1465
0620-2010	ELEC CONDR (NO. 6) INSULATED	LF	3360
0620-2011	ELEC CONDR (NO. 8) BARE	LF	930
0620-2012	ELEC CONDR (NO. 8) INSULATED	LF	1910
0624-2008	GROUND BOX TY A (122311) W/APRON	EA	7
0628-2036	ELC SRV TY A 240/480 100 (NS)SS(E)TP(O)	EA	1
0628-2158	REMOVE ELECTRICAL SERVICES	EA	1

LEGEND

- PROP ILLUM ASSEM TY (SA 40 T-8)(0.25 KW)S
- PROP ILLUM ASSEM TY (SA 40 T-8-8)(0.25 KW)S
- EXIST ILLUM ASSEM TY (SA 40 T-8)(0.25 KW)S
- EXIST ILLUM ASSEM TY (SA 40 T-8-8)(0.25 KW)S
- EXIST ILLUM ASSEM TY (SA 50 T-8)(0.4 KW)S
- EXIST ILLUM ASSEM TY (SA 50 T-8)(0.4 KW)S
- PROP CONDUIT
- CONDUIT BORE
- EXIST CONDUIT
- ELECTRICAL SERVICE
- GROUND BOX TY A
- XX-XX / XXX ILLUMINATION IDENTIFIER AND CIRCUIT NUMBER
- (XX) CONDUIT IDENTIFIER
- (X) ELECTRICAL SERVICE IDENTIFIER

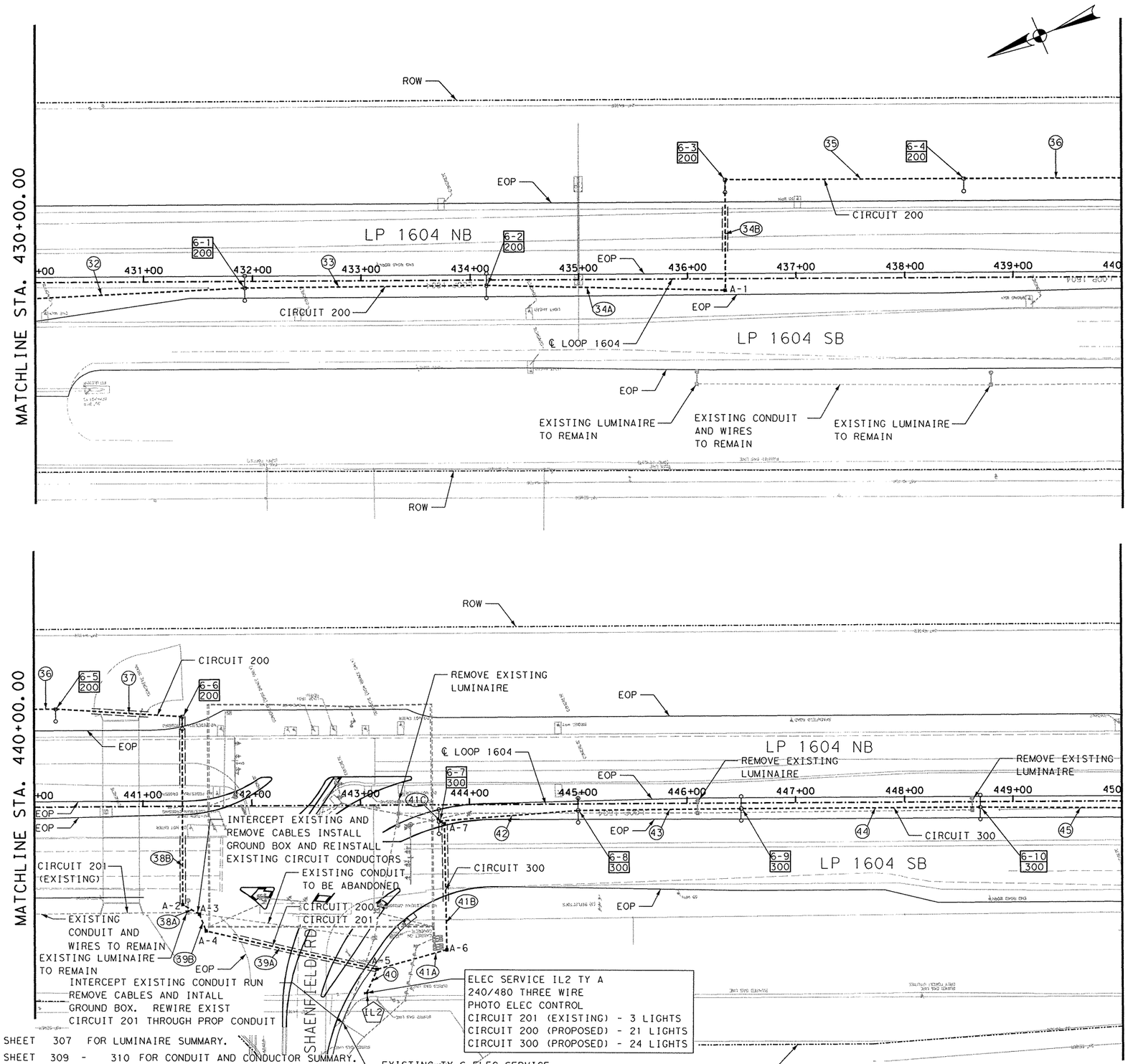

NOTES:

1. SEE SHEET 307 FOR LUMINAIRE SUMMARY.
2. SEE SHEET 309 - 310 FOR CONDUIT AND CONDUCTOR SUMMARY.
3. SEE SHEET 308 FOR ELECTRICAL SERVICE SUMMARY.
4. SCHEDULE 80 CONDUIT TO BE USED IN LIMITS OF BORE.

STATE OF TEXAS
GILMER D. GASTON
80472
LICENSED PROFESSIONAL ENGINEER

GILMER D. GASTON P.E. — 8/4/2010 DATE

50 0 50 100
SCALE: PLAN - 1":100'

REV. NO.	DATE	DESCRIPTION	BY

ALAMO RMA

PAPE-DAWSON ENGINEERS
555 EAST RAMSEY | SAN ANTONIO, TEXAS 78216 | PHONE: 210.375.9000 FAX: 210.375.9010
TEXAS BOARD OF PROFESSIONAL ENGINEERS, FIRM REGISTRATION # 470

Texas Department of Transportation
© 2010

Texas Excavation Safety System

CONTRACTOR SHALL CONTACT DIGTESS @ 1-800-DIG-TESS FOR LOCATION OF ALL UTILITIES AT LEAST 72 HOURS PRIOR TO BEGINNING CONSTRUCTION.

LOOP 1604

PROPOSED ILLUMINATION SHEET

STA. 430+00 TO STA. 450+00

SHEET 6 OF 15

DGN:	FED. RD. DIV. NO.	STATE	FEDERAL AID PROJECT NO.			HIGHWAY NO.
CHK DGN:	6	TEXAS	STP 2011(210)ES			LP 1604
DWG:	DIST.	COUNTY	CONT. NO.	SECT. NO.	JOB NO.	SHEET NO.
CHK DWG:	SAT	BEXAR	2452	01	050	297

Plotted on: 7/2/2010

Design Filename: p:\74\00\04\design\civil\traffic\illum\740004illum07.dgn

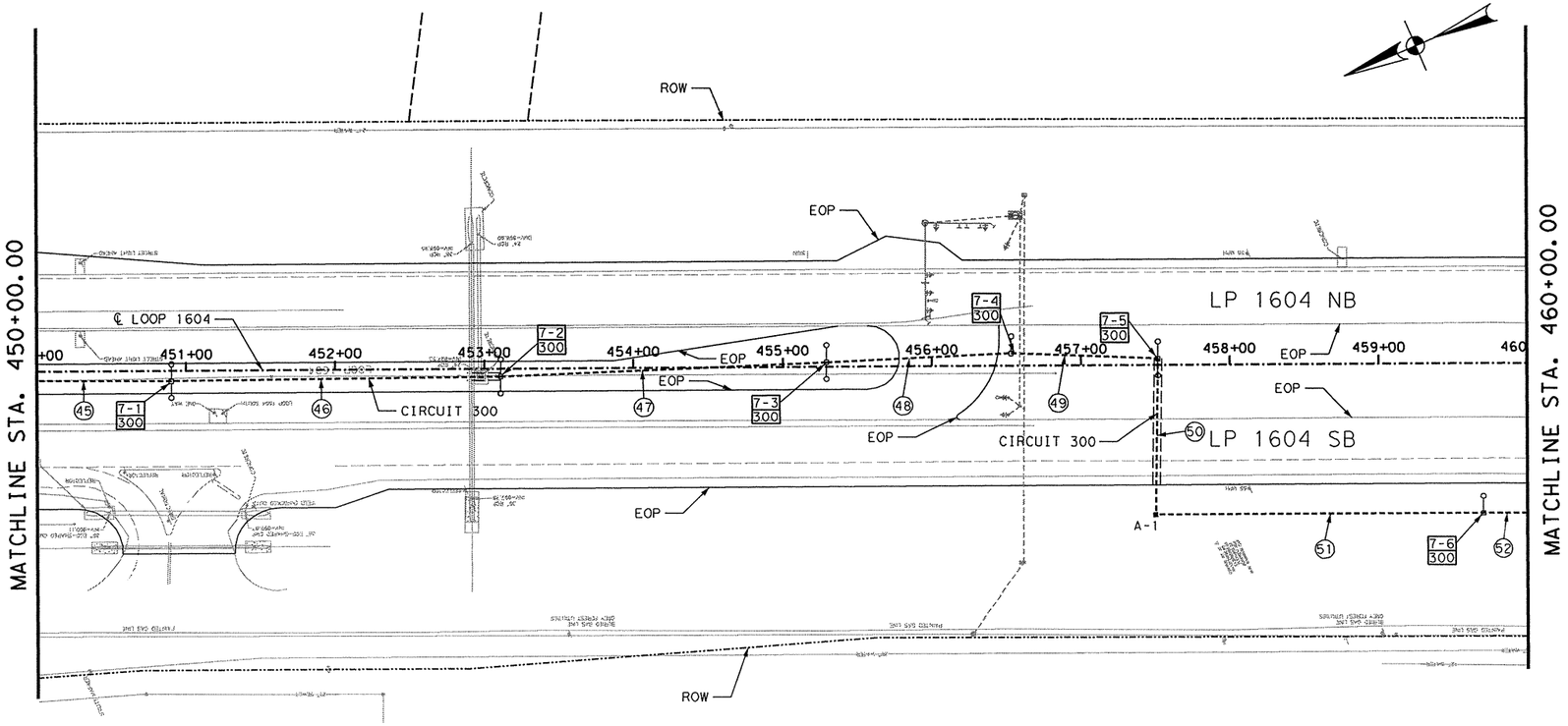

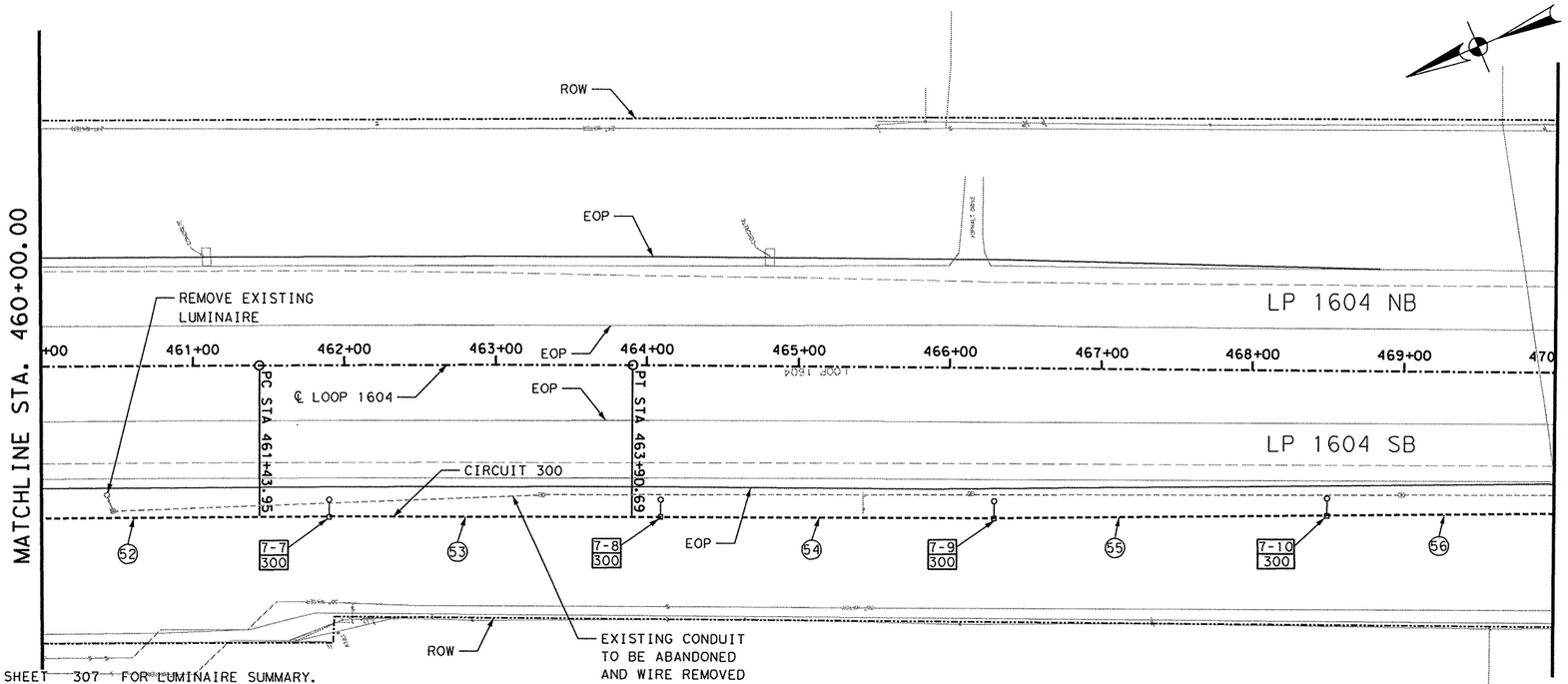

ITEM	DESCRIPTION	UNIT	QTY
0416-2029	DRILL SHAFT (RDWY ILL POLE) (30 IN)	LF	80
0432-2001	RIPRAP (CONC)(4 IN)	CY	3.5
0610-2025	INS RD IL AM (TY SA) 40T-8 (.25 KW)S	EA	6
0610-2026	INS RD IL AM (TY SA) 40T-8-8 (.25 KW)S	EA	4
0610-2068	REMOVE RD IL ASM (TRANS-BASE)	EA	1
0618-2018	CONDT (PVC) (SCHD 40) (2")	LF	2005
0618-2035	CONDT (PVC) (SCHD 80) (2") (BORE)	LF	110
0620-2011	ELEC CONDR (NO. 8) BARE	LF	2115
0620-2012	ELEC CONDR (NO. 8) INSULATED	LF	4230
0624-2008	GROUND BOX TY A (122311) W/APRON	EA	1

LEGEND

- PROP ILLUM ASSEM TY (SA 40 T-8)(0.25 KW)S
- PROP ILLUM ASSEM TY (SA 40 T-8-8)(0.25 KW)S
- EXIST ILLUM ASSEM TY (SA 40 T-8)(0.25 KW)S
- EXIST ILLUM ASSEM TY (SA 40 T-8-8)(0.25 KW)S
- EXIST ILLUM ASSEM TY (SA 50 T-8)(0.4 KW)S
- EXIST ILLUM ASSEM TY (SA 50 T-8)(0.4 KW)S
- PROP CONDUIT
- CONDUIT BORE
- EXIST CONDUIT
- ELECTRICAL SERVICE
- GROUND BOX TY A
- XX-XX / XXX ILLUMINATION IDENTIFIER AND CIRCUIT NUMBER
- (XX) CONDUIT IDENTIFIER
- (X) ELECTRICAL SERVICE IDENTIFIER

NOTES:

1. SEE SHEET 307 FOR LUMINAIRE SUMMARY.
2. SEE SHEET 309 - 310 FOR CONDUIT AND CONDUCTOR SUMMARY.
3. SEE SHEET 308 FOR ELECTRICAL SERVICE SUMMARY.
4. SCHEDULE 80 CONDUIT TO BE USED IN LIMITS OF BORE.

Texas Excavation Safety System

CONTRACTOR SHALL CONTACT DIGTESS @ 1-800-DIG-TESS FOR LOCATION OF ALL UTILITIES AT LEAST 72 HOURS PRIOR TO BEGINNING CONSTRUCTION.

STATE OF TEXAS
GILMER D. GASTON
80472
LICENSED PROFESSIONAL ENGINEER

GILMER D. GASTON P.E. — 7/2/2010 DATE

50 0 50 100
SCALE: PLAN - 1":100'

REV. NO.	DATE	DESCRIPTION	BY

ALAMO RMA

PAPE-DAWSON ENGINEERS
555 EAST RAMSEY | SAN ANTONIO, TEXAS 78216 | PHONE: 210.375.9000 FAX: 210.375.9010
TEXAS BOARD OF PROFESSIONAL ENGINEERS, FIRM REGISTRATION # 470

Texas Department of Transportation © 2010

LOOP 1604

PROPOSED ILLUMINATION SHEET

STA. 450+00 TO STA. 470+00

SHEET 7 OF 15

DGN:	FED. RD. DIV. NO.	STATE	FEDERAL AID PROJECT NO.			HIGHWAY NO.
CHK DGN:	6	TEXAS	STP 2011(210)ES			LP 1604
DWG:	DIST.	COUNTY	CONT. NO.	SECT. NO.	JOB NO.	SHEET NO.
CHK DWG:	SAT	BEXAR	2452	01	050	298

Plotted on: 7/2/2010

ITEM	DESCRIPTION	UNIT	QTY
0416-2029	DRILL SHAFT (RDWY ILL POLE) (30 IN)	LF	16
0432-2001	RIPRAP (CONC) (4 IN)	CY	0.7
0610-2025	INS RD IL AM (TY SA) 40T-8 (.25 KW)S	EA	2
0618-2018	CONDT (PVC) (SCHD 40) (2")	LF	225
0620-2011	ELEC CONDR (NO. 8) BARE	LF	225
0620-2012	ELEC CONDR (NO. 8) INSULATED	LF	450

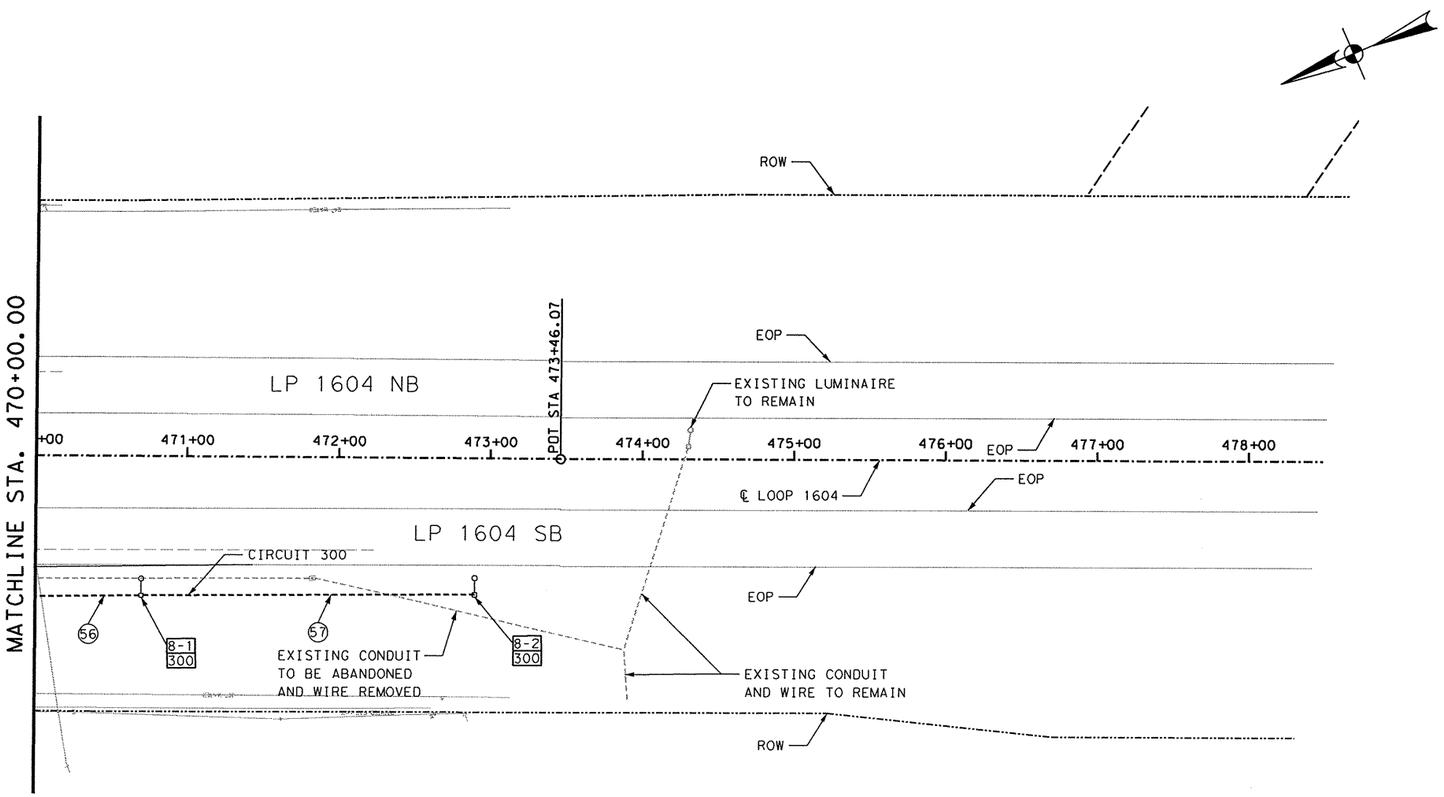

LEGEND

- PROP ILLUM ASSEM TY (SA 40 T-8)(0.25 KW)S
- PROP ILLUM ASSEM TY (SA 40 T-8-8)(0.25 KW)S
- EXIST ILLUM ASSEM TY (SA 40 T-8)(0.25 KW)S
- EXIST ILLUM ASSEM TY (SA 40 T-8-8)(0.25 KW)S
- EXIST ILLUM ASSEM TY (SA 50 T-8)(0.4 KW)S
- EXIST ILLUM ASSEM TY (SA 50 T-8)(0.4 KW)S
- PROP CONDUIT
- CONDUIT BORE
- EXIST CONDUIT
- ELECTRICAL SERVICE
- GROUND BOX TY A
- XX-XX / XXX ILLUMINATION IDENTIFIER AND CIRCUIT NUMBER
- (XX) CONDUIT IDENTIFIER
- (X) ELECTRICAL SERVICE IDENTIFIER

NOTES:
1. SEE SHEET 307 FOR LUMINAIRE SUMMARY.
2. SEE SHEET 309 - 310 FOR CONDUIT AND CONDUCTOR SUMMARY.
3. SEE SHEET 308 FOR ELECTRICAL SERVICE SUMMARY.
4. SCHEDULE 80 CONDUIT TO BE USED IN LIMITS OF BORE.

STATE OF TEXAS · GILMER D. GASTON · 80472 · LICENSED PROFESSIONAL ENGINEER

GILMER D. GASTON P.E. — 7/2/2010 DATE

50 0 50 100
SCALE: PLAN - 1":100'

REV. NO.	DATE	DESCRIPTION	BY

ALAMO RMA

PAPE-DAWSON ENGINEERS
555 EAST RAMSEY | SAN ANTONIO, TEXAS 78216 | PHONE: 210.375.9000 FAX: 210.375.9010
TEXAS BOARD OF PROFESSIONAL ENGINEERS, FIRM REGISTRATION # 470

Texas Department of Transportation © 2010

Texas Excavation Safety System

CONTRACTOR SHALL CONTACT DIGTESS @ 1-800-DIG-TESS FOR LOCATION OF ALL UTILITIES AT LEAST 72 HOURS PRIOR TO BEGINNING CONSTRUCTION.

LOOP 1604

PROPOSED ILLUMINATION SHEET

STA. 470+00 TO STA. 478+00

SHEET 8 OF 15

DGN:	FED. RD. DIV. NO.	STATE	FEDERAL AID PROJECT NO.			HIGHWAY NO.
CHK DGN:	6	TEXAS	STP 2011(210)ES			LP 1604
DWG:	DIST.	COUNTY	CONT. NO.	SECT. NO.	JOB NO.	SHEET NO.
CHK DWG:	SAT	BEXAR	2452	01	050	299

Design Filename: p:\74\00\04\design\civil\traffic\illum\740004illum08.dgn

Plotted on: 8/4/2010

Design Filename: p:\74\00\04\design\civil\traffic\illum\740004illum09.dgn

ITEM	DESCRIPTION	UNIT	QTY
0416-2029	DRILL SHAFT (RDWY ILL POLE) (30 IN)	LF	32
0432-2001	RIPRAP (CONC)(4 IN)	CY	1.4
0610-2025	INS RD IL AM (TY SA) 40T-8 (.25 KW)S	EA	4
0618-2018	CONDT (PVC) (SCHD 40) (2")	LF	792
0618-2035	CONDT (PVC) (SCHD 80) (2") (BORE)	LF	71
0620-2011	ELEC CONDR (NO. 8) BARE	LF	863
0620-2012	ELEC CONDR (NO. 8) INSULATED	LF	1726
0624-2008	GROUND BOX TY A (122311) W/APRON	EA	1
0628-2174	ELC SRV TY A 240/480 060(NS)AL(E)TP(O)	EA	1

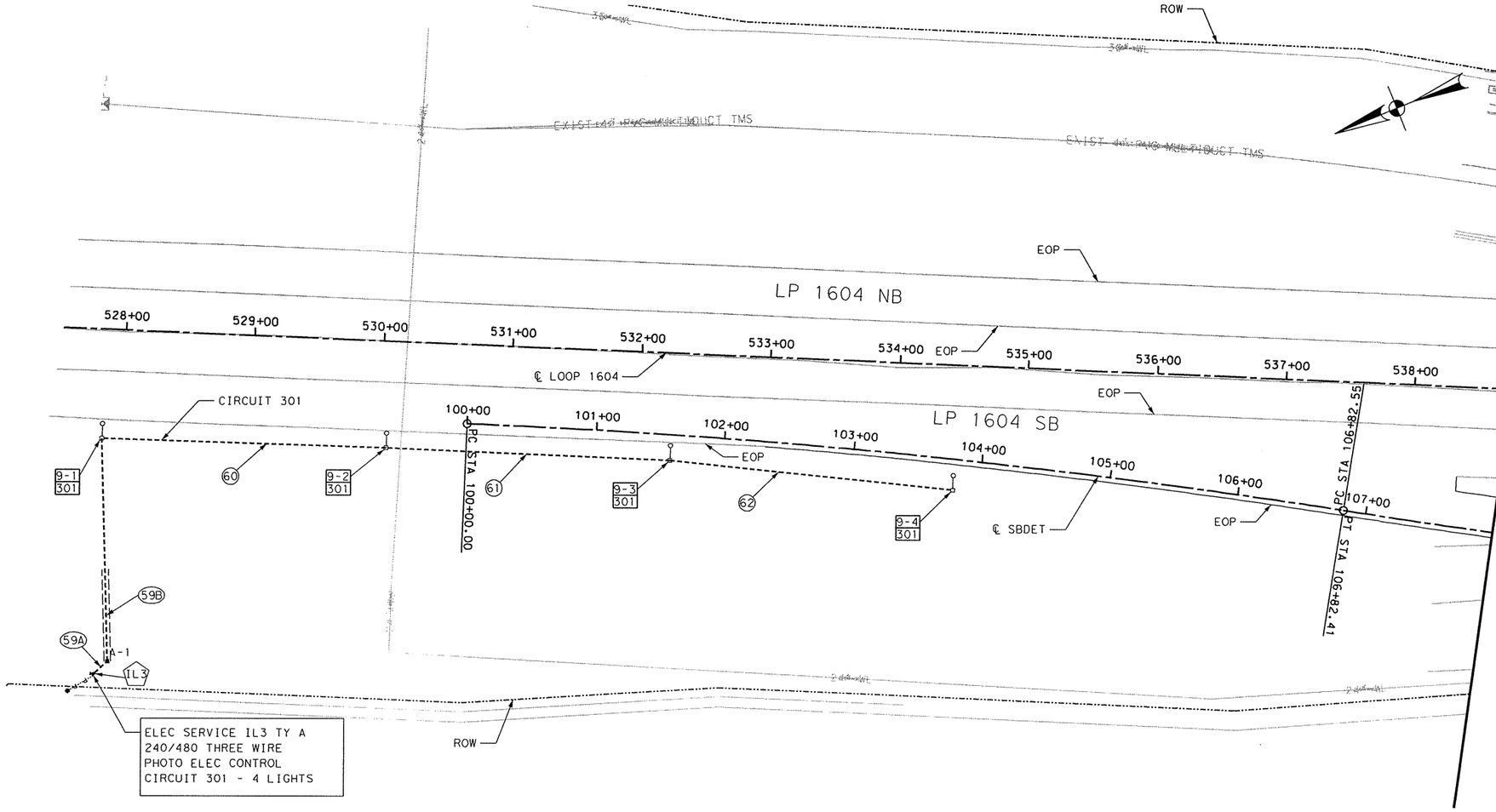

LEGEND

- PROP ILLUM ASSEM TY (SA 40 T-8)(0.25 KW)S
- PROP ILLUM ASSEM TY (SA 40 T-8-8)(0.25 KW)S
- EXIST ILLUM ASSEM TY (SA 40 T-8)(0.25 KW)S
- EXIST ILLUM ASSEM TY (SA 40 T-8-8)(0.25 KW)S
- EXIST ILLUM ASSEM TY (SA 50 T-8)(0.4 KW)S
- EXIST ILLUM ASSEM TY (SA 50 T-8)(0.4 KW)S
- PROP CONDUIT
- CONDUIT BORE
- EXIST CONDUIT
- ELECTRICAL SERVICE
- GROUND BOX TY A
- XX-XXX / XXX ILLUMINATION IDENTIFIER AND CIRCUIT NUMBER
- (XX) CONDUIT IDENTIFIER
- (X) ELECTRICAL SERVICE IDENTIFIER

NOTES:

1. SEE SHEET 307 FOR LUMINAIRE SUMMARY.
2. SEE SHEET 309 - 310 FOR CONDUIT AND CONDUCTOR SUMMARY.
3. SEE SHEET 308 FOR ELECTRICAL SERVICE SUMMARY.
4. SCHEDULE 80 CONDUIT TO BE USED IN LIMITS OF BORE.

Texas Excavation Safety System

CONTRACTOR SHALL CONTACT DIGTESS @ 1-800-DIG-TESS FOR LOCATION OF ALL UTILITIES AT LEAST 72 HOURS PRIOR TO BEGINNING CONSTRUCTION.

STATE OF TEXAS
GILMER D. GASTON
80472
LICENSED PROFESSIONAL ENGINEER

GILMER D. GASTON P.E. — 8/4/2010 DATE

50 0 50 100
SCALE: PLAN - 1":100'

REV. NO.	DATE	DESCRIPTION	BY

ALAMO RMA

PAPE-DAWSON ENGINEERS
555 EAST RAMSEY | SAN ANTONIO, TEXAS 78216 | PHONE: 210.375.9000 FAX: 210.375.9010
TEXAS BOARD OF PROFESSIONAL ENGINEERS, FIRM REGISTRATION # 470

Texas Department of Transportation
© 2010

LOOP 1604

ILLUMINATION LAYOUT

SBFR

BEGIN SBFR TO STA. 108+00

DGN:	FED. RD. DIV. NO.	STATE	FEDERAL AID PROJECT NO.			HIGHWAY NO.
CHK DGN:	6	TEXAS	STP 2011(210)ES			LP 1604
DWG:	DIST.	COUNTY	CONT. NO.	SECT. NO.	JOB NO.	SHEET NO.
CHK DWG:	SAT	BEXAR	2452	01	050	300

Plotted on: 7/2/2010

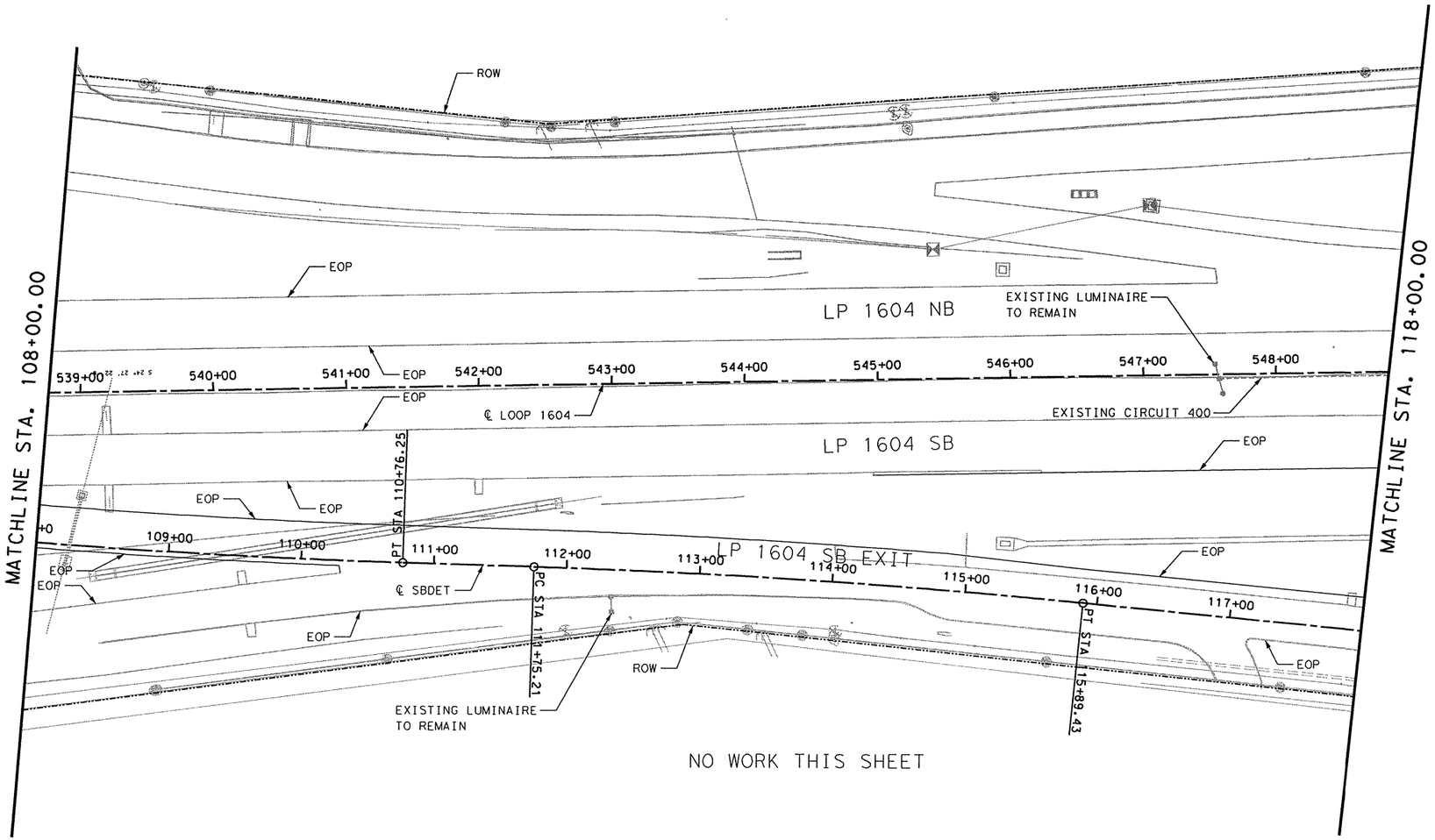

NO WORK THIS SHEET

NOTES:
1. SEE SHEET 307 FOR LUMINAIRE SUMMARY.
2. SEE SHEET 309 - 310 FOR CONDUIT AND CONDUCTOR SUMMARY.
3. SEE SHEET 308 FOR ELECTRICAL SERVICE SUMMARY.
4. SCHEDULE 80 CONDUIT TO BE USED IN LIMITS OF BORE.

LEGEND

- PROP ILLUM ASSEM TY (SA 40 T-8)(0.25 KW)S
- PROP ILLUM ASSEM TY (SA 40 T-8-8)(0.25 KW)S
- EXIST ILLUM ASSEM TY (SA 40 T-8)(0.25 KW)S
- EXIST ILLUM ASSEM TY (SA 40 T-8-8)(0.25 KW)S
- EXIST ILLUM ASSEM TY (SA 50 T-8)(0.4 KW)S
- EXIST ILLUM ASSEM TY (SA 50 T-8)(0.4 KW)S
- PROP CONDUIT
- CONDUIT BORE
- EXIST CONDUIT
- ELECTRICAL SERVICE
- GROUND BOX TY A
- XX-XX / XXX ILLUMINATION IDENTIFIER AND CIRCUIT NUMBER
- (XX) CONDUIT IDENTIFIER
- (X) ELECTRICAL SERVICE IDENTIFIER

STATE OF TEXAS · GILMER D. GASTON · 80472 · LICENSED PROFESSIONAL ENGINEER

GILMER D. GASTON P.E. 7/2/2010 DATE

50 0 50 100
SCALE: PLAN - 1":100'

REV. NO.	DATE	DESCRIPTION	BY

ALAMO RMA

PAPE-DAWSON ENGINEERS
555 EAST RAMSEY | SAN ANTONIO, TEXAS 78216 | PHONE: 210.375.9000 FAX: 210.375.9010
TEXAS BOARD OF PROFESSIONAL ENGINEERS, FIRM REGISTRATION # 470

Texas Department of Transportation © 2010

Texas Excavation Safety System

CONTRACTOR SHALL CONTACT DIGTESS @ 1-800-DIG-TESS FOR LOCATION OF ALL UTILITIES AT LEAST 72 HOURS PRIOR TO BEGINNING CONSTRUCTION.

LOOP 1604

ILLUMINATION LAYOUT

SBFR

STA. 108+00 TO STA. 118+00

SHEET 10 OF 15

DGN:	FED. RD. DIV. NO.	STATE	FEDERAL AID PROJECT NO.			HIGHWAY NO.
CHK DGN:	6	TEXAS	STP 2011(210)ES			LP 1604
DWG:	DIST.	COUNTY	CONT. NO.	SECT. NO.	JOB NO.	SHEET NO.
CHK DWG:	SAT	BEXAR	2452	01	050	301

Design Filename: p:\74\00\04\design\civil\traffic\illum\740004illum10.dgn

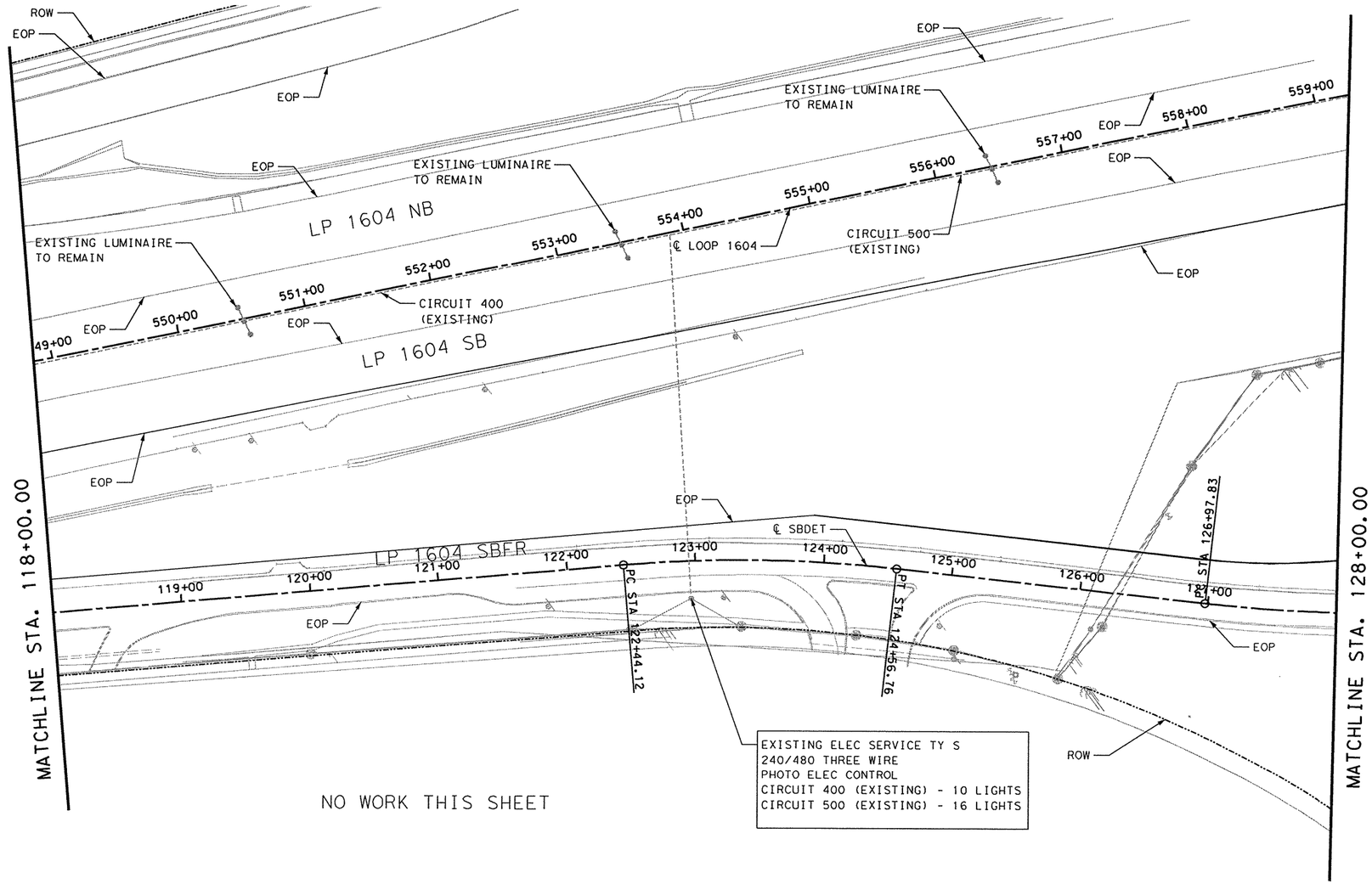

NO WORK THIS SHEET

LEGEND

- PROP ILLUM ASSEM TY (SA 40 T-8)(0.25 KW)S
- PROP ILLUM ASSEM TY (SA 40 T-8-8)(0.25 KW)S
- EXIST ILLUM ASSEM TY (SA 40 T-8)(0.25 KW)S
- EXIST ILLUM ASSEM TY (SA 40 T-8-8)(0.25 KW)S
- EXIST ILLUM ASSEM TY (SA 50 T-8)(0.4 KW)S
- EXIST ILLUM ASSEM TY (SA 50 T-8)(0.4 KW)S
- PROP CONDUIT
- CONDUIT BORE
- EXIST CONDUIT
- ELECTRICAL SERVICE
- GROUND BOX TY A
- XXX ILLUMINATION IDENTIFIER AND CIRCUIT NUMBER
- (XX) CONDUIT IDENTIFIER
- (X) ELECTRICAL SERVICE IDENTIFIER

NOTES:

1. SEE SHEET 307 FOR LUMINAIRE SUMMARY.
2. SEE SHEET 309 - 310 FOR CONDUIT AND CONDUCTOR SUMMARY.
3. SEE SHEET 308 FOR ELECTRICAL SERVICE SUMMARY.
4. SCHEDULE 80 CONDUIT TO BE USED IN LIMITS OF BORE.

Texas Excavation Safety System

CONTRACTOR SHALL CONTACT DIGTESS @ 1-800-DIG-TESS FOR LOCATION OF ALL UTILITIES AT LEAST 72 HOURS PRIOR TO BEGINNING CONSTRUCTION.

STATE OF TEXAS — GILMER D. GASTON — 80472 — LICENSED PROFESSIONAL ENGINEER

7/2/2010
GILMER D. GASTON P.E. — DATE

50 0 50 100
SCALE: PLAN - 1":100'

REV. NO.	DATE	DESCRIPTION	BY

ALAMO RMA

PAPE-DAWSON ENGINEERS
555 EAST RAMSEY | SAN ANTONIO, TEXAS 78216 | PHONE: 210.375.9000 FAX: 210.375.9010
TEXAS BOARD OF PROFESSIONAL ENGINEERS, FIRM REGISTRATION # 470

Texas Department of Transportation © 2010

LOOP 1604

ILLUMINATION LAYOUT

SBFR

STA. 118+00 TO STA. 128+00

SHEET 11 OF 15

DGN:	FED. RD. DIV. NO.	STATE	FEDERAL AID PROJECT NO.			HIGHWAY NO.
CHK DGN:	6	TEXAS	STP 2011(210)ES			LP 1604
DWG:	DIST.	COUNTY	CONT. NO.	SECT. NO.	JOB NO.	SHEET NO.
CHK DWG:	SAT	BEXAR	2452	01	050	302

Plotted on: 7/2/2010

Design Filename: p:\74\00\04\design\civil\traffic\illum\740004illum11.dgn

Plotted on: 7/2/2010

Design Filename: p:\74\00\04\design\civil\traffic\illum\7400041illum12.dgn

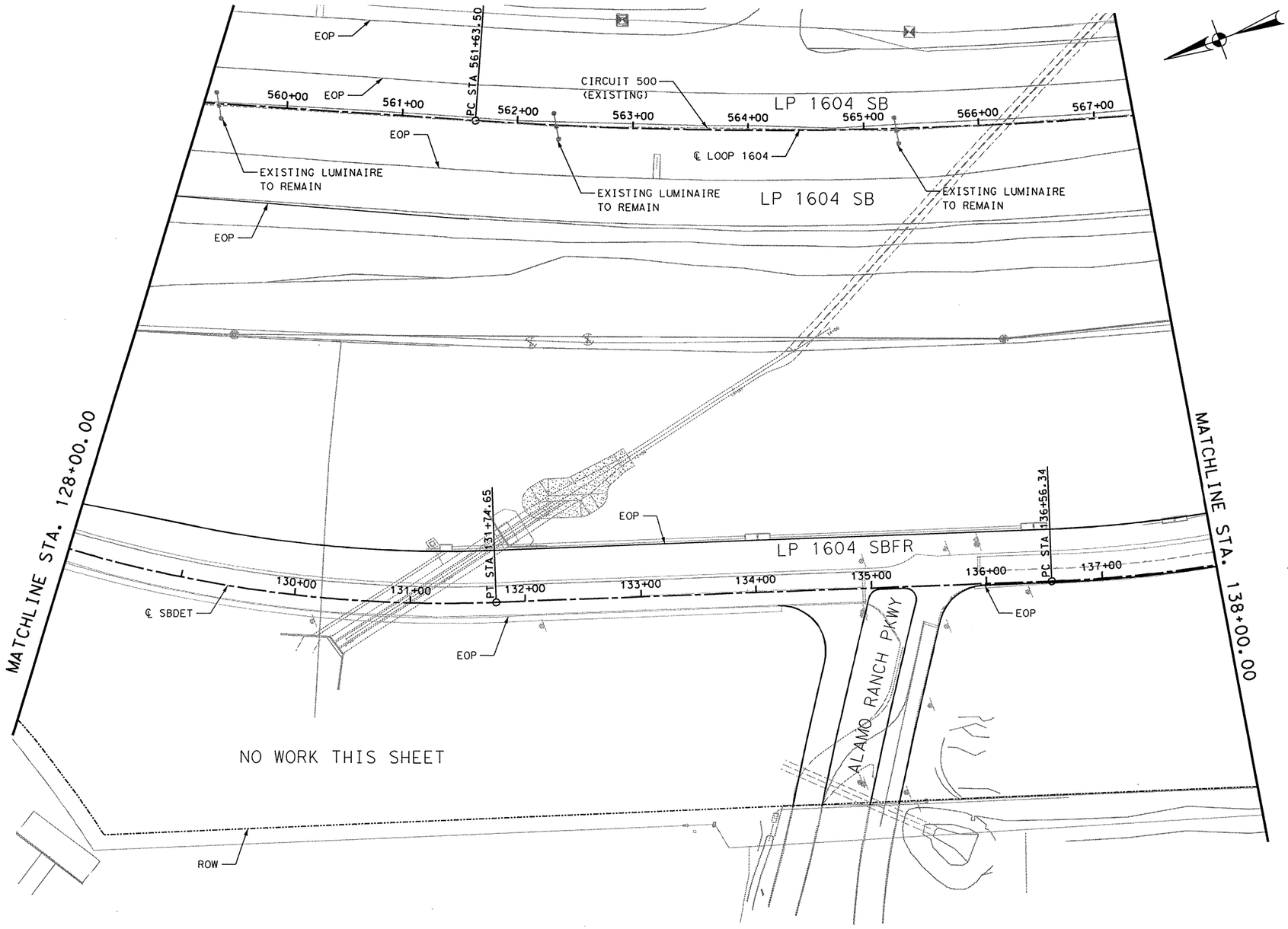

LEGEND

- PROP ILLUM ASSEM TY (SA 40 T-8)(0.25 KW)S
- PROP ILLUM ASSEM TY (SA 40 T-8-8)(0.25 KW)S
- EXIST ILLUM ASSEM TY (SA 40 T-8)(0.25 KW)S
- EXIST ILLUM ASSEM TY (SA 40 T-8-8)(0.25 KW)S
- EXIST ILLUM ASSEM TY (SA 50 T-8)(0.4 KW)S
- EXIST ILLUM ASSEM TY (SA 50 T-8)(0.4 KW)S
- PROP CONDUIT
- CONDUIT BORE
- EXIST CONDUIT
- ELECTRICAL SERVICE
- GROUND BOX TY A
- XX-XXX / XXX ILLUMINATION IDENTIFIER AND CIRCUIT NUMBER
- (XX) CONDUIT IDENTIFIER
- (X) ELECTRICAL SERVICE IDENTIFIER

NOTES:

1. SEE SHEET 307 FOR LUMINAIRE SUMMARY.
2. SEE SHEET 309 - 310 FOR CONDUIT AND CONDUCTOR SUMMARY.
3. SEE SHEET 308 FOR ELECTRICAL SERVICE SUMMARY.
4. SCHEDULE 80 CONDUIT TO BE USED IN LIMITS OF BORE.

STATE OF TEXAS
GILMER D. GASTON
80472
LICENSED
PROFESSIONAL ENGINEER

GILMER D. GASTON P.E. — 7/2/2010 DATE

50 0 50 100
SCALE: PLAN - 1":100'

REV. NO.	DATE	DESCRIPTION	BY

ALAMO RMA

PAPE-DAWSON ENGINEERS
555 EAST RAMSEY | SAN ANTONIO, TEXAS 78216 | PHONE: 210.375.9000 FAX: 210.375.9010
TEXAS BOARD OF PROFESSIONAL ENGINEERS, FIRM REGISTRATION # 470

Texas Department of Transportation
© 2010

Texas Excavation Safety System

CONTRACTOR SHALL CONTACT DIGTESS @ 1-800-DIG-TESS FOR LOCATION OF ALL UTILITIES AT LEAST 72 HOURS PRIOR TO BEGINNING CONSTRUCTION.

LOOP 1604

ILLUMINATION LAYOUT

SBFR

STA. 128+00 TO STA. 138+00

SHEET 12 OF 15

DGN:	FED. RD. DIV. NO.	STATE	FEDERAL AID PROJECT NO.			HIGHWAY NO.
CHK DGN:	6	TEXAS	STP 2011(210)ES			LP 1604
DWG:	DIST.	COUNTY	CONT. NO.	SECT. NO.	JOB NO.	SHEET NO.
CHK DWG:	SAT	BEXAR	2452	01	050	303

Plotted on: 8/4/2010

Design Filename: p:\74\00\04\design\civil\traffic\illum\740004illum13.dgn

ITEM	DESCRIPTION	UNIT	QTY
0416-2029	DRILL SHAFT (RDWY ILL POLE) (30 IN)	LF	32
0432-2001	RIPRAP (CONC) (4 IN)	CY	1.4
0610-2025	INS RD IL AM (TY SA) 40T-8 (.25 KW)S	EA	4
0618-2018	CONDT (PVC) (SCHD 40) (2")	LF	937
0618-2035	CONDT (PVC) (SCHD 80) (2") (BORE)	LF	281
0620-2011	ELEC CONDR (NO. 8) BARE	LF	1218
0620-2012	ELEC CONDR (NO. 8) INSULATED	LF	2496
0624-2008	GROUND BOX TY A (122311) W/APRON	EA	6
0628-2174	ELC SRV TY A 240/480 060(NS)AL(E)TP(O)	EA	1

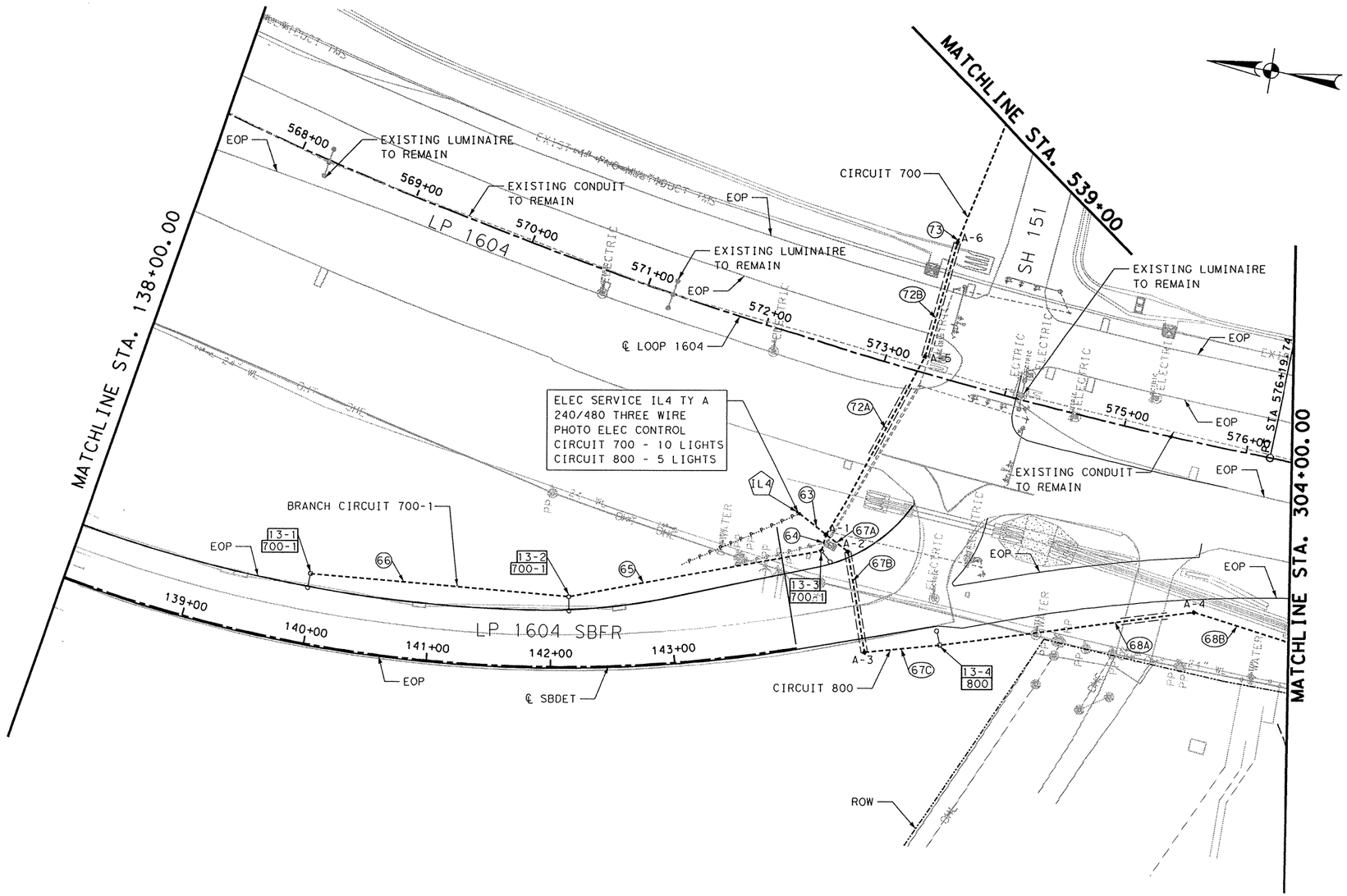

LEGEND

- PROP ILLUM ASSEM TY (SA 40 T-8)(0.25 KW)S
- PROP ILLUM ASSEM TY (SA 40 T-8-8)(0.25 KW)S
- EXIST ILLUM ASSEM TY (SA 40 T-8)(0.25 KW)S
- EXIST ILLUM ASSEM TY (SA 40 T-8-8)(0.25 KW)S
- EXIST ILLUM ASSEM TY (SA 50 T-8)(0.4 KW)S
- EXIST ILLUM ASSEM TY (SA 50 T-8)(0.4 KW)S
- PROP CONDUIT
- CONDUIT BORE
- EXIST CONDUIT
- ELECTRICAL SERVICE
- GROUND BOX TY A
- XXX / XXX ILLUMINATION IDENTIFIER AND CIRCUIT NUMBER
- (XX) CONDUIT IDENTIFIER
- (X) ELECTRICAL SERVICE IDENTIFIER

NOTES:

1. SEE SHEET 307 FOR LUMINAIRE SUMMARY.
2. SEE SHEET 309 - 310 FOR CONDUIT AND CONDUCTOR SUMMARY.
3. SEE SHEET 308 FOR ELECTRICAL SERVICE SUMMARY.
4. SCHEDULE 80 CONDUIT TO BE USED IN LIMITS OF BORE.

STATE OF TEXAS
GILMER D. GASTON
80472
LICENSED
PROFESSIONAL ENGINEER

GILMER D. GASTON P.E. — 8/4/2010 DATE

50 0 50 100
SCALE: PLAN - 1":100'

REV. NO.	DATE	DESCRIPTION	BY

ALAMO RMA

PAPE-DAWSON ENGINEERS

555 EAST RAMSEY | SAN ANTONIO, TEXAS 78216 | PHONE: 210.375.9000 FAX: 210.375.9010

TEXAS BOARD OF PROFESSIONAL ENGINEERS, FIRM REGISTRATION # 470

Texas Department of Transportation
© 2010

Texas Excavation Safety System

CONTRACTOR SHALL CONTACT DIGTESS @ 1-800-DIG-TESS FOR LOCATION OF ALL UTILITIES AT LEAST 72 HOURS PRIOR TO BEGINNING CONSTRUCTION.

LOOP 1604

ILLUMINATION LAYOUT

SBFR

STA. 138+00 "SBDET"
TO STA. 304+00 "SBET2"

SHEET 13 OF 15

DGN:	FED. RD. DIV. NO.	STATE	FEDERAL AID PROJECT NO.			HIGHWAY NO.
CHK DGN:	6	TEXAS	STP 2011(210)ES			LP 1604
DWG:	DIST.	COUNTY	CONT. NO.	SECT. NO.	JOB NO.	SHEET NO.
CHK DWG:	SAT	BEXAR	2452	01	050	304

Plotted on: 8/19/2010

Design Filename: P:\74\00\04\design\Civil\TRAFFIC\Illum\740004Illum14.dgn

ITEM	DESCRIPTION	UNIT	QTY
0416-2029	DRILL SHAFT (RDWY ILL POLE) (30 IN)	LF	32
0432-2001	RIPRAP (CONC)(4 IN)	CY	1.4
0610-2025	INS RD IL AM (TY SA) 40T-8 (.25 KW)S	EA	4
0618-2018	CONDT (PVC) (SCHD 40) (2")	LF	931
0618-2035	CONDT (PVC) (SCHD 80) (2") (BORE)	LF	48
0620-2011	ELEC CONDR (NO. 8) BARE	LF	979
0620-2012	ELEC CONDR (NO. 8) INSULATED	LF	1958
0624-2008	GROUND BOX TY A (122311) W/APRON	EA	1

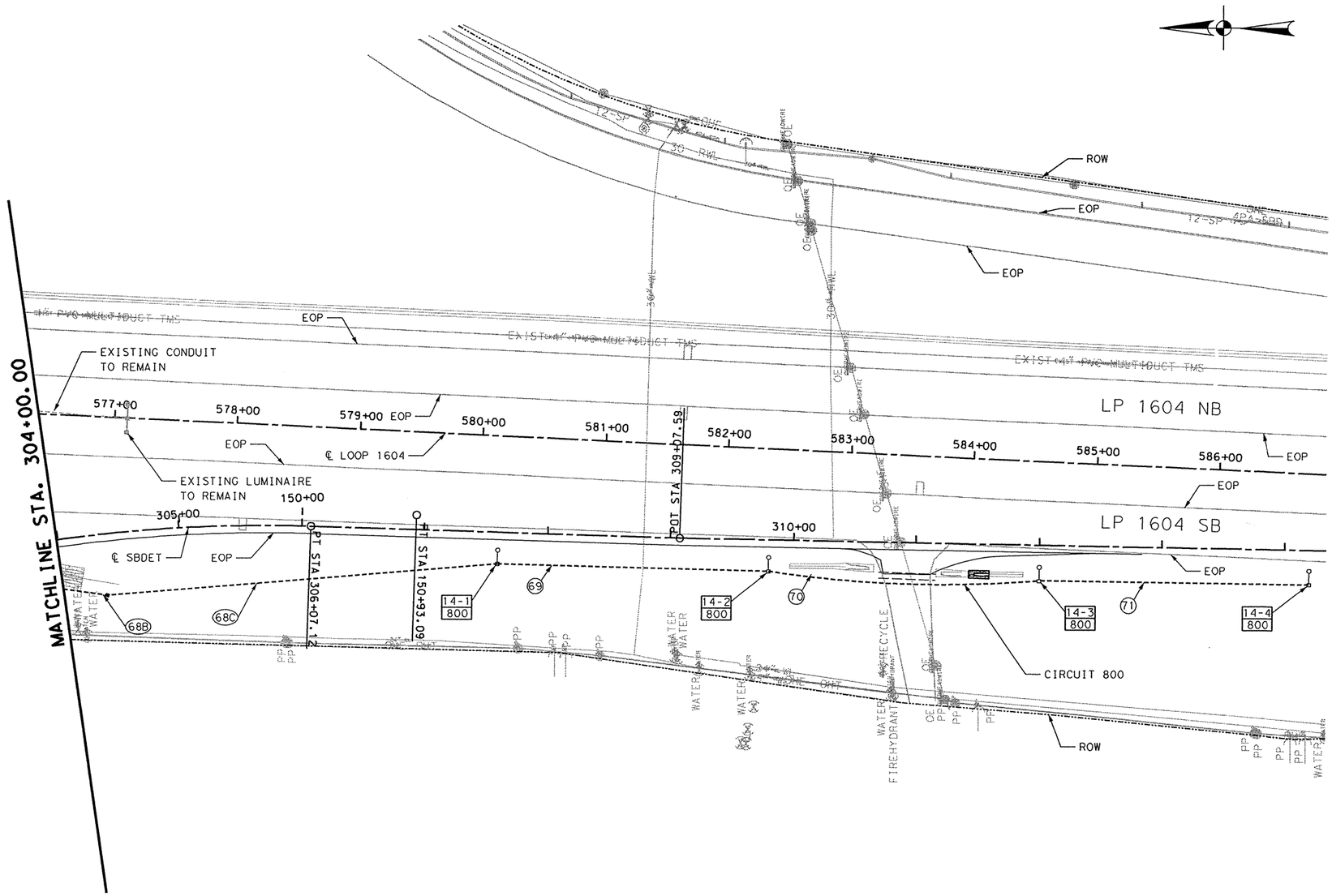

NOTES:

1. SEE SHEET 307 FOR LUMINAIRE SUMMARY.
2. SEE SHEET 309 - 310 FOR CONDUIT AND CONDUCTOR SUMMARY.
3. SEE SHEET 308 FOR ELECTRICAL SERVICE SUMMARY.
4. SCHEDULE 80 CONDUIT TO BE USED IN LIMITS OF BORE.

LEGEND

- PROP ILLUM ASSEM TY (SA 40 T-8)(0.25 KW)S
- PROP ILLUM ASSEM TY (SA 40 T-8-8)(0.25 KW)S
- EXIST ILLUM ASSEM TY (SA 40 T-8)(0.25 KW)S
- EXIST ILLUM ASSEM TY (SA 40 T-8-8)(0.25 KW)S
- EXIST ILLUM ASSEM TY (SA 50 T-8)(0.4 KW)S
- EXIST ILLUM ASSEM TY (SA 50 T-8)(0.4 KW)S
- PROP CONDUIT
- CONDUIT BORE
- EXIST CONDUIT
- ELECTRICAL SERVICE
- GROUND BOX TY A
- XXX / XXX ILLUMINATION IDENTIFIER AND CIRCUIT NUMBER
- (XX) CONDUIT IDENTIFIER
- (X) ELECTRICAL SERVICE IDENTIFIER

STATE OF TEXAS · GILMER D. GASTON · 80472 · LICENSED PROFESSIONAL ENGINEER

GILMER D. GASTON P.E. — 8/19/2010 DATE

50 0 50 100

SCALE: PLAN - 1":100'

REV. NO.	DATE	DESCRIPTION	BY

ALAMO RMA

PAPE-DAWSON ENGINEERS

555 EAST RAMSEY | SAN ANTONIO, TEXAS 78216 | PHONE: 210.375.9000 FAX: 210.375.9010

TEXAS BOARD OF PROFESSIONAL ENGINEERS, FIRM REGISTRATION # 470

Texas Department of Transportation © 2010

Texas Excavation Safety System

CONTRACTOR SHALL CONTACT DIGTESS @ 1-800-DIG-TESS FOR LOCATION OF ALL UTILITIES AT LEAST 72 HOURS PRIOR TO BEGINNING CONSTRUCTION.

LOOP 1604

ILLUMINATION LAYOUT

SBFR

STA. 304+00 "SBENT2" TO END OF PROJECT

SHEET 14 OF 15

DGN:	FED. RD. DIV. NO.	STATE	FEDERAL AID PROJECT NO.			HIGHWAY NO.
CHK DGN:	6	TEXAS	STP 2011(210)ES			LP 1604
DWG:	DIST.	COUNTY	CONT. NO.	SECT. NO.	JOB NO.	SHEET NO.
CHK DWG:	SAT	BEXAR	2452	01	050	305

Plotted on: 8/2/2010

Design Filename: p:\74\00\04\design\civil\traffic\illum\74000411um15.dgn

ITEM	DESCRIPTION	UNIT	QTY
0416-2029	DRILL SHAFT (RDWY ILL POLE) (30 IN)	LF	56
0432-2001	RIPRAP (CONC)(4 IN)	CY	2.45
0610-2025	INS RD IL AM (TY SA) 40T-8 (.25 KW)S	EA	7
0618-2018	CONDT (PVC) (SCHD 40) (2")	LF	1486
0620-2011	ELEC CONDR (NO. 8) BARE	LF	1486
0620-2012	ELEC CONDR (NO. 8) INSULATED	LF	2972

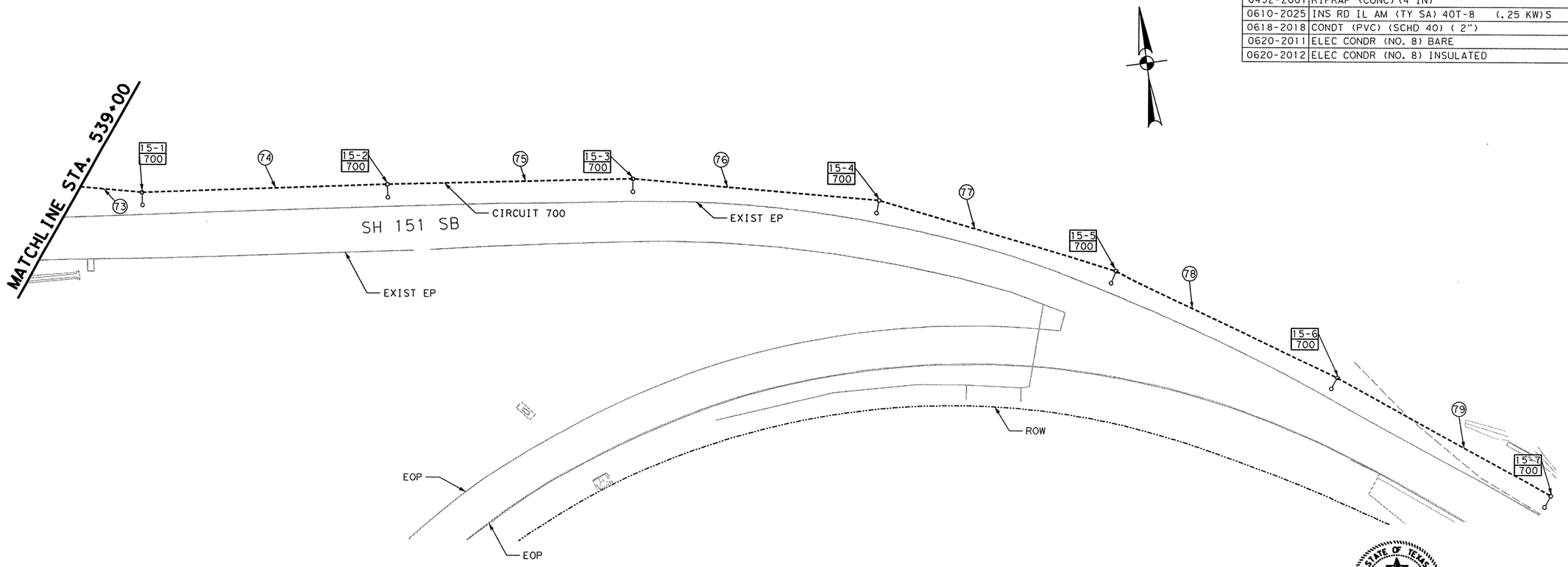

LEGEND

- PROP ILLUM ASSEM TY (SA 40 T-8)(0.25 KW)S
- PROP ILLUM ASSEM TY (SA 40 T-8-8)(0.25 KW)S
- EXIST ILLUM ASSEM TY (SA 40 T-8)(0.25 KW)S
- EXIST ILLUM ASSEM TY (SA 40 T-8-8)(0.25 KW)S
- EXIST ILLUM ASSEM TY (SA 50 T-8)(0.4 KW)S
- EXIST ILLUM ASSEM TY (SA 50 T-8)(0.4 KW)S
- PROP CONDUIT
- CONDUIT BORE
- EXIST CONDUIT
- ELECTRICAL SERVICE
- GROUND BOX TY A
- XX-XX / XXX ILLUMINATION IDENTIFIER AND CIRCUIT NUMBER
- (XX) CONDUIT IDENTIFIER
- (X) ELECTRICAL SERVICE IDENTIFIER

NOTES:

1. SEE SHEET 307 FOR LUMINAIRE SUMMARY.
2. SEE SHEET 309 - 310 FOR CONDUIT AND CONDUCTOR SUMMARY.
3. SEE SHEET 308 FOR ELECTRICAL SERVICE SUMMARY.

Texas Excavation Safety System

CONTRACTOR SHALL CONTACT DIGTESS @ 1-800-DIG-TESS FOR LOCATION OF ALL UTILITIES AT LEAST 72 HOURS PRIOR TO BEGINNING CONSTRUCTION.

STATE OF TEXAS
GILMER D. GASTON
80472
LICENSED
PROFESSIONAL ENGINEER

GILMER D. GASTON P.E. — 8/2/2010 DATE

50 0 50 100
SCALE: PLAN - 1":100'

REV. NO.	DATE	DESCRIPTION	BY

ALAMO RMA

PAPE-DAWSON ENGINEERS
555 EAST RAMSEY | SAN ANTONIO, TEXAS 78216 | PHONE: 210.375.9000 FAX: 210.375.9010
TEXAS BOARD OF PROFESSIONAL ENGINEERS, FIRM REGISTRATION # 470

Texas Department of Transportation ©2010

LOOP 1604

ILLUMINATION LAYOUT

SH 151

SHEET 15 OF 15

DGN:	FED. RD. DIV. NO.	STATE	FEDERAL AID PROJECT NO.			HIGHWAY NO.
CHK DGN:	6	TEXAS	STP 2011(210)ES			LP 1604
DWG:	DIST.	COUNTY	CONT. NO.	SECT. NO.	JOB NO.	SHEET NO.
CHK DWG:	SAT	BEXAR	2452	01	050	306

Plotted on: 7/6/2010

Design Filename: p:\74\00\04\design\civil\traffic\illum\740041LLUMPOLE.dgn

ILLUMINATION INFORMATION

POLE NO.	STATION	OFFSET	LUMINAIRE TYPE	30" DRILL SHAFT DEPTH (FT)	RIP RAP (CY)
2-1	364+76.6 "1604"	147.65' RT	(TYPE SA 40 T-8)(0.25kW)S	8	0.35
2-2	364+87.2 "1604"	39.42' RT	(TYPE SA 40 T-8)(0.25kW)S	8	0.35
2-3	365+32 "1604"	57.76' LT	(TYPE SA 40 T-8)(0.25kW)S	8	0.35
2-4	366+35.9 "1604"	69.74' LT	(TYPE SA 40 T-8)(0.25kW)S	8	0.35
2-5	368+55.2 "1604"	41.77' LT	(TYPE SA 40 T-8)(0.25kW)S	8	0.35
3-1	370+75.7 "1604"	28.27' LT	(TYPE SA 40 T-8)(0.25kW)S	8	0.35
3-2	372+95.9 "1604"	8.67' LT	(TYPE SA 40 T-8-8)(0.25kW)S	8	0.35
3-3	375+16.7 "1604"	4.3' LT	(TYPE SA 40 T-8-8)(0.25kW)S	8	0.35
3-4	377+37.3 "1604"	2.25' RT	(TYPE SA 40 T-8-8)(0.25kW)S	8	0.35
3-5	379+17.4 "1604"	0.44' RT	(TYPE SA 40 T-8-8)(0.25kW)S	8	0
4-1	381+25 "1604"	10.54' RT	(TYPE SA 40 T-8-8)(0.25kW)S	8	0.35
4-2	383+45 "1604"	9.92' RT	(TYPE SA 40 T-8-8)(0.25kW)S	8	0.35
5-1	409+90 "1604"	83.51' LT	(TYPE SA 40 T-8)(0.25kW)S	8	0.35
5-2	412+10 "1604"	86.46' LT	(TYPE SA 40 T-8)(0.25kW)S	8	0.35
5-3	414+30 "1604"	88.06' LT	(TYPE SA 40 T-8)(0.25kW)S	8	0.35
5-4	416+50 "1604"	89.5' LT	(TYPE SA 40 T-8)(0.25kW)S	8	0.35
5-5	418+70 "1604"	90.94' LT	(TYPE SA 40 T-8)(0.25kW)S	8	0.35
5-6	420+90 "1604"	91' LT	(TYPE SA 40 T-8)(0.25kW)S	8	0.35
5-7	423+10 "1604"	91' LT	(TYPE SA 40 T-8)(0.25kW)S	8	0.35
5-8	425+30 "1604"	91' LT	(TYPE SA 40 T-8)(0.25kW)S	8	0.35
5-9	427+49.8 "1604"	3.8' RT	(TYPE SA 40 T-8-8)(0.25kW)S	8	0.35
5-10	427+98.2 "1604"	13.86' RT	(TYPE SA 40 T-8)(0.25kW)S	8	0.35
5-11	429+73.6 "1604"	15.99' RT	(TYPE SA 40 T-8-8)(0.25kW)S	8	0.35
6-1	431+92.7 "1604"	6.26' RT	(TYPE SA 40 T-8-8)(0.25kW)S	8	0.35
6-2	434+15 "1604"	5.25' RT	(TYPE SA 40 T-8-8)(0.25kW)S	8	0.35
6-3	436+35 "1604"	91' LT	(TYPE SA 40 T-8)(0.25kW)S	8	0.35
6-4	438+55 "1604"	91' LT	(TYPE SA 40 T-8)(0.25kW)S	8	0.35
6-5	440+20 "1604"	91' LT	(TYPE SA 40 T-8)(0.25kW)S	8	0.35
6-6	441+36.3 "1604"	83.31' LT	(TYPE SA 40 T-8)(0.25kW)S	8	0.35
6-7	443+71.8 "1604"	15.85' RT	(TYPE SA 40 T-8-8)(0.25kW)S	8	0
6-8	445+0 "1604"	6.15' RT	(TYPE SA 40 T-8-8)(0.25kW)S	8	0.35
6-9	446+50 "1604"	5.25' RT	(TYPE SA 40 T-8-8)(0.25kW)S	8	0.35
6-10	448+70 "1604"	5.25' RT	(TYPE SA 40 T-8-8)(0.25kW)S	8	0.35

ILLUMINATION INFORMATION

POLE NO.	STATION	OFFSET	LUMINAIRE TYPE	30" DRILL SHAFT DEPTH (FT)	RIP RAP (CY)
7-1	450+90 "1604"	7.06' RT	(TYPE SA 40 T-8-8)(0.25kW)S	8	0.35
7-2	453+10.9 "1604"	5.31' RT	(TYPE SA 40 T-8-8)(0.25kW)S	8	0.35
7-3	455+29.4 "1604"	2.97' LT	(TYPE SA 40 T-8-8)(0.25kW)S	8	0.35
7-4	456+53.2 "1604"	8.18' LT	(TYPE SA 40 T-8)(0.25kW)S	8	0.35
7-5	457+51.9 "1604"	4.19' LT	(TYPE SA 40 T-8-8)(0.25kW)S	8	0.35
7-6	459+70 "1604"	101.5' RT	(TYPE SA 40 T-8)(0.25kW)S	8	0.35
7-7	461+90 "1604"	101.5' RT	(TYPE SA 40 T-8)(0.25kW)S	8	0.35
7-8	464+10 "1604"	101.5' RT	(TYPE SA 40 T-8)(0.25kW)S	8	0.35
7-9	466+30 "1604"	100.62' RT	(TYPE SA 40 T-8)(0.25kW)S	8	0.35
7-10	468+50 "1604"	96.86' RT	(TYPE SA 40 T-8)(0.25kW)S	8	0.35
8-1	470+70 "1604"	93.17' RT	(TYPE SA 40 T-8)(0.25kW)S	8	0.35
8-2	472+90 "1604"	91.28' RT	(TYPE SA 40 T-8)(0.25kW)S	8	0.35
9-1	527+84.5 "1604"	85.33' RT	(TYPE SA 40 T-8)(0.25kW)S	8	0.35
9-2	530+4.7 "1604"	83.67' RT	(TYPE SA 40 T-8)(0.25kW)S	8	0.35
9-3	532+25 "1604"	84.07' RT	(TYPE SA 40 T-8)(0.25kW)S	8	0.35
9-4	534+45 "1604"	97.91' RT	(TYPE SA 40 T-8)(0.25kW)S	8	0.35
13-1	569+35.8 "1604"	315.57' RT	(TYPE SA 40 T-8)(0.25kW)S	8	0.35
13-2	571+23.1 "1604"	259.67' RT	(TYPE SA 40 T-8)(0.25kW)S	8	0.35
13-3	572+95.4 "1604"	161.56' RT	(TYPE SA 40 T-8)(0.25kW)S	8	0.35
13-4	574+2.5 "1604"	208.6' RT	(TYPE SA 40 T-8)(0.25kW)S	8	0.35
14-1	580+16.6 "1604"	104.98' RT	(TYPE SA 40 T-8)(0.25kW)S	8	0.35
14-2	582+36.9 "1604"	100.69' RT	(TYPE SA 40 T-8)(0.25kW)S	8	0.35
14-3	584+56.9 "1604"	97.92' RT	(TYPE SA 40 T-8)(0.25kW)S	8	0.35
14-4	586+76.8 "1604"	90.92' RT	(TYPE SA 40 T-8)(0.25kW)S	8	0.35
15-1	538+50 "151"	500.47' LT	(TYPE SA 40 T-8)(0.25kW)S	8	0.35
15-2	536+62.4 "151"	385.53' LT	(TYPE SA 40 T-8)(0.25kW)S	8	0.35
15-3	534+73.5 "151"	272.4' LT	(TYPE SA 40 T-8)(0.25kW)S	8	0.35
15-4	532+71.9 "151"	179.91' LT	(TYPE SA 40 T-8)(0.25kW)S	8	0.35
15-5	530+55.7 "151"	129.71' LT	(TYPE SA 40 T-8)(0.25kW)S	8	0.35
15-6	528+34.9 "151"	114.69' LT	(TYPE SA 40 T-8)(0.25kW)S	8	0.35
15-7	526+14.9 "151"	113.41' LT	(TYPE SA 40 T-8)(0.25kW)S	8	0.35

STATE OF TEXAS
GILMER D. GASTON
80472
LICENSED
PROFESSIONAL ENGINEER

GILMER D. GASTON P.E. — 7/6/2010 DATE

REV. NO.	DATE	DESCRIPTION	BY

ALAMO RMA

PAPE-DAWSON ENGINEERS

555 EAST RAMSEY | SAN ANTONIO, TEXAS 78216 | PHONE: 210.375.9000 FAX: 210.375.9010
TEXAS BOARD OF PROFESSIONAL ENGINEERS, FIRM REGISTRATION # 470

Texas Department of Transportation ©2010

LOOP 1604

ILLUMINATION POLE SCHEDULE

SHEET 1 OF 1

DGN:	FED. RD. DIV. NO.	STATE	FEDERAL AID PROJECT NO.			HIGHWAY NO.
CHK DGN:	6	TEXAS	STP 2011(210)ES			LP 1604
DWG:	DIST.	COUNTY	CONT. NO.	SECT. NO.	JOB NO.	SHEET NO.
CHK DWG:	SAT	BEXAR	2452	01	050	307

Elec. Service No.	Electrical Service Description (see ED (4) - 03)	Service Conduit Size	Service Conductors No./Size	Safety Switch Amps	Main Ckt. Bkr. Pole/Amp	Two-Pole Contactor Amps	Panelbd/ Loadcenter Amp Rating	Circuit No.	Branch Ckt. Bkr. Pole/Amps	Branch Circuit Amps	KVA Load	NOTES
IL1	ELEC SERV TY A(240/480)060(NS)AL(E)TP(O)	1 1/4"	3/#6	N/A	2P/60	60	N/A	101	2P/20	3	9.6	EXISTING CIRCUIT
								100	2P/20	14		PROPOSED CIRCUIT
IL2	ELEC SERV TY A(240/480)100(NS)AL(E)TP(O)	1 1/4"	3/#2	N/A	2P/100	100	N/A	201	2P/20	4	18.2	EXISTING CIRCUIT
								200	2P/20	16		PROPOSED CIRCUIT
								300	2P/30	18		PROPOSED CIRCUIT
IL3	ELEC SERV TY A(240/480)060(NS)AL(E)TP(O)	1 1/4"	3/#6	N/A	2P/60	60	N/A	301	2P/20	3	1.4	PROPOSED CIRCUIT
IL4	ELEC SERV TY A(240/480)060(NS)AL(E)TP(O)	1 1/4"	3/#6	N/A	2P/60	60	N/A	--	2P/20	--	5.8	SPARE BREAKER
								700	2P/20	8		PROPOSED CIRCUIT
								800	2P/20	4		PROPOSED CIRCUIT

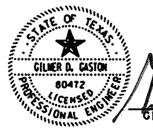

GILMER D. GASTON P.E. — 8/4/2010 DATE

REV. NO.	DATE	DESCRIPTION	BY

ALAMO RMA

PAPE-DAWSON ENGINEERS

555 EAST RAMSEY | SAN ANTONIO, TEXAS 78216 | PHONE: 210.375.9000 FAX: 210.375.9010

TEXAS BOARD OF PROFESSIONAL ENGINEERS, FIRM REGISTRATION # 470

Texas Department of Transportation
© 2010

LOOP 1604

ILUMINATION ELECTRICAL SERVICE SUMMARY

SHEET 1 OF 1

DGN:	FED. RD. DIV. NO.	STATE	FEDERAL AID PROJECT NO.			HIGHWAY NO.
CHK DGN:	6	TEXAS	STP 2011(210)ES			LP 1604
DWG:	DIST.	COUNTY	CONT. NO.	SECT. NO.	JOB NO.	SHEET NO.
CHK DWG:	SAT	BEXAR	2452	01	050	308

Plotted on: 8/4/2010

Design Filename: P:\74\00\04\design\Civil\TRAFFIC\Illum\740004ILUMSERV.dgn

	RUN NUMBER	(1)	(2)	(3)	(4)	(5)	(6)	(7)	(8)	(9)	(10)	(11)	(12)	(13)	(14)	(15)	(16)	(17)	(18)	(19)	(20)	(21)	(22)	(23)	(24)	(25)	(26)	(27)	(32)	(33)	(34A)	(34B)	(35)	(36)
	CONDUIT SIZE IN INCHES	2	2	2	2	2	2	2	2	2	2	2	2	2	2	2	2	2	2	2	2	2	2	2	2	2	2	2	2	2	2	2	2	2
	NUMBER OF CONDUITS	1	1	1	1	1	1	1	1	1	1	1	1	1	1	1	1	1	1	1	1	1	1	1	1	1	1	1	1	1	1	1	1	1
	LENGTH OF RUN (FT)	110	110	105	225	225	225	225	225	180	180	35	220	110	105	75	400	220	220	225	225	220	220	220	95	220	50	180	220	225	220	105	220	165
	TRENCH (T)/BORE (B)	T	T	T	T	T	T	T	T	T	B	T	T	T	T	T	T	T	T	T	T	T	T	T	B	T	T	T	T	T	T	B	T	T
CABLE	CIRCUIT	100	100	100	100	100	100	100	100	100	100	100-1	100-1	100	100	100	101	200	200	200	200	200	200	200	200	200	200	200	200	200	200	200	200	200
#6 BARE																	E	1	1	1	1	1	1	1	1	1	1	1	1	1	1	1	1	1
#8 BARE		1	1	1	1	1	1	1	1	1	1	1	1	1	1	1																		
#6AWG INSULATED																	E	2	2	2	2	2	2	2	2	2	2	2	2	2	2	2	2	2
#8 AWG INSULATED		2	2	2	2	2	2	2	2	2	2	2	2	2	2	2																		

	RUN NUMBER	(37)	(38A)	(38B)	(39A)	(39B)	(40)	(41A)	(41B)	(41C)	(42)	(43)	(44)	(45)	(46)	(47)	(48)	(49)	(50)	(51)	(52)	(53)	(54)	(55)
	CONDUIT SIZE IN INCHES	2	2	2	2	2	2	2	2	2	2	2	2	2	2	2	2	2	2	2	2	2	2	2
	NUMBER OF CONDUITS	1	1	1	1	1	1	1	1	1	1	1	1	1	1	1	1	1	1	1	1	1	1	1
	LENGTH OF RUN (FT)	120	20	175	170	20	25	70	120	10	130	155	220	225	225	220	125	100	110	220	220	220	225	225
	TRENCH (T)/BORE (B)	B	T	B	B	T	T	T	B	T	T	T	T	T	T	T	T	T	B	T	T	T	T	T
CABLE	CIRCUIT	200	200	200	200, 201	200, 201	200, 201, 300	300	300	300	300	300	300	300	300	300	300	300	300	300	300	300	300	300
#6 BARE		1	1	1	1	1	1																	
#8 BARE								1	1	1	1	1	1	1	1	1	1	1	1	1	1	1	1	1
#6AWG INSULATED		2	2	2	4	4	4																	
#8 AWG INSULATED							2	2	2	2	2	2	2	2	2	2	2	2	2	2	2	2	2	2

	RUN NUMBER	(56)	(57)	(59A)	(59B)	(60)	(61)	(62)	(63)	(64)	(65)	(66)	(67A)	(67B)	(67C)	(68A)	(68B)	(68C)	(69)	(70)	(71)	(72A)	(72B)	(73)	(74)
	CONDUIT SIZE IN INCHES	2	2	2	2	2	2	2	2	2	2	2	2	2	2	2	2	2	2	2	2	2	2	2	2
	NUMBER OF CONDUITS	1	1	1	1	1	1	1	1	1	1	1	1	1	1	1	1	1	1	1	1	1	1	1	1
	LENGTH OF RUN (FT)	225	225	15	173	225	225	225	30	15	207	209	25	83	61	207	117	318	221	220	220	168	96	160	220
	TRENCH (T)/BORE (B)	T	T	T	B	T	T	T	T	T	T	T	T	B	T	T	T	T	T	T	T	T	B	T	T
CABLE	CIRCUIT	300	300	301	301	301	301	301	700, 800	700-1	700-1	700-1	800	800	800	800	800	800	800	800	700	700	700	700	700
#6 BARE																									
#8 BARE		1	1	1	1	1	1	1	1	1	1	1	1	1	1	1	1	1	1	1	1	1	1	1	1
#6AWG INSULATED																									
#8 AWG INSULATED		2	2	2	2	2	2	2	4	2	2	2	2	2	2	2	2	2	2	2	2	2	2	2	2

E = EXISTING

B = BORE (SCHED 80 CONDUIT) BORE PAID UNDER PAVED SURFACE, WHERE INDICATED, ONLY. ALL OTHER CONDUIT PAID AS TRENCH.

T = TRENCH (SCHED 40 CONDUIT)

STATE OF TEXAS
GILMER D. GASTON
80472
LICENSED PROFESSIONAL ENGINEER

GILMER D. GASTON P.E. — 8/2/2010 DATE

REV. NO.	DATE	DESCRIPTION	BY

ALAMO RMA

PAPE-DAWSON ENGINEERS

555 EAST RAMSEY | SAN ANTONIO, TEXAS 78216 | PHONE: 210.375.9000 FAX: 210.375.9010

TEXAS BOARD OF PROFESSIONAL ENGINEERS, FIRM REGISTRATION # 470

Texas Department of Transportation
© 2010

LOOP 1604

ILLUMINATION SHEDULE TABLE

SHEET 1 OF 2

DGN:	FED. RD. DIV. NO.	STATE	FEDERAL AID PROJECT NO.			HIGHWAY NO.
CHK DGN:	6	TEXAS	STP 2011(210)ES			LP 1604
DWG:	DIST.	COUNTY	CONT. NO.	SECT. NO.	JOB NO.	SHEET NO.
CHK DWG:	SAT	BEXAR	2452	01	050	309

Plotted on: 8/2/2010

Design Filename: P:\74\00\04\design\Civil\TRAFFIC\Illum\740004ILUMTABLE01.dgn

	RUN NUMBER	(75)	(76)	(77)	(78)	(79)
	CONDUIT SIZE IN INCHES	2	2	2	2	2
	NUMBER OF CONDUITS	1	1	1	1	1
	LENGTH OF RUN (FT)	220	222	222	222	220
	TRENCH (T)/BORE (B)	T	T	T	T	T
CABLE	CIRCUIT	700	700	700	700	700
#6 BARE						
#8 BARE		1	1	1	1	1
#6AWG INSULATED						
#8 AWG INSULATED		2	2	2	2	2

B = BORE (SCHED 80 CONDUIT)
BORE PAID UNDER PAVED SURFACE, WHERE INDICATED, ONLY. ALL OTHER CONDUIT PAID AS TRENCH.

T = TRENCH (SCHED 40 CONDUIT)

STATE OF TEXAS
GILMER D. GASTON
80472
LICENSED
PROFESSIONAL ENGINEER

GILMER D. GASTON P.E. — 8/2/2010 DATE

REV. NO.	DATE	DESCRIPTION	BY

ALAMO RMA

PAPE-DAWSON ENGINEERS

555 EAST RAMSEY | SAN ANTONIO, TEXAS 78216 | PHONE: 210.375.9000 FAX: 210.375.9010

TEXAS BOARD OF PROFESSIONAL ENGINEERS, FIRM REGISTRATION # 470

Texas Department of Transportation
© 2010

LOOP 1604

ILLUMINATION SHEDULE TABLE

SHEET 2 OF 2

DGN:	FED. RD. DIV. NO.	STATE	FEDERAL AID PROJECT NO.			HIGHWAY NO.
CHK DGN:	6	TEXAS	STP 2011(210)ES			LP 1604
DWG:	DIST.	COUNTY	CONT. NO.	SECT. NO.	JOB NO.	SHEET NO.
CHK DWG:	SAT	BEXAR	2452	01	050	310

Plotted on: 8/2/2010

Design Filename: p:\74\00\04\design\civil\traffic\illum\740004ILLUMTABLE02.dgn

DISCLAIMER
The use of this standard is governed by the "Texas Engineering Practice Act". No warranty of any kind is made by TxDOT for any purpose whatsoever. TxDOT assumes no responsibility for the conversion of this standard to other formats or for incorrect results or damages resulting from its use.

Plotted on: 6/26/2010

Design Filename: p:\74\00\04\design\civil\standards\signals\ED5-03.dgn

LEVELS D... 1 2 3 4 5 6 7 8 12 13 14 15 16 17 18 19 20 21 22 23 24 ... 28 29 30 31 32 33 34 35 36 37 38 39 40 41 42 43 44 45 46 47 48 49 50 51 52 53 54 55 56 57 58 59 60 61 62 63
DATE: ACC: FILE:
DN: CK: DW: CK:

I. GENERAL REQUIREMENTS FOR ALL ELECTRICAL WORK

The location of all conductors, conduits, junction boxes, ground boxes, and electrical services is diagrammatic only and may be shifted by the Engineer to accommodate local conditions.

Materials shall be new and unused. Materials and installation shall comply with the applicable provisions of the National Electrical Code (NEC), National Electrical Manufacturers Association (NEMA) standards, and shall be Underwriters Laboratories (UL) Listed unless otherwise shown on the plans or specifications or approved by the Engineer in writing. Faulty fabrication or poor workmanship in any material, equipment, or installation shall be justification for rejection. When reference is made to UL, it can be considered to mean a Nationally Recognized Independent Testing Lab (NRTL). Comparable standards of Canadian Standard Association, Electrical Testing Laboratories or Factory Mutual can be equal to the referenced UL standard. Where reference is made to NEMA listed devices, IEC listed devices shall not be considered to be an acceptable equal to a NEMA listed device. Acceptable devices may have both a NEMA and IEC listing.

With the exception of high strength bolts, miscellaneous nuts, bolts and hardware may be stainless steel when plans specify galvanized, provided that bolts are 1/2 inch or less in diameter. The Contractor shall provide the following electrical test instruments as required by the Engineer to confirm compliance with the contract and the NEC. Those test instruments are voltmeter, amp probe, megger (1000 volt DC) and torque wrenches. All meters shall have been properly calibrated within one year. Calibration certification shall be provided to the Engineer upon request. Calibration certification tag shall also be applied to the meter. The Contractor shall operate meters during inspection as requested by the Engineer. Grounding shall be as shown on the plans and in accordance with the NEC. Metallic conduit, light poles, luminaires on bridge structures, and all metal enclosures shall be bonded to the system-grounding conductor. The ground rod in each ground box or junction box at the bridge ends, and in each ground box installed for underpass lighting will also be bonded to the system grounding conductor. The grounding conductor shall be bare or, if insulated, shall be green. Ground rods, connectors, and bonding jumpers will not be paid for separately, but will be subsidiary to the various bid items.

SUBMITTALS:

The contractor shall submit for approval six (6) copies of catalog cut sheets for each of the following three (3) categories.
Category 1. Electrical services including photocell.
Catagory 2. Breakaway disconnects, heat shrink tubing, heat shrink filler tape, GelCaps and ground boxes which will include loading capacity certification.
Category 3. Highmast assembly kits, when applicable. See Item 614 "Highmast Illumination Assemblies". Submittals shall be legible and shall be marked to indicate which product on a cut sheet is to be supplied. Where manufacturers provide warranties and guarantees as a customary trade practice, the Contractor shall furnish to the State such warranties and guarantees.
Any deviation from plans or specifications, including deviations due to plan error shauld be prominently displayed on the submittal.
Any changes not prominently noted in submittal and incorporated into the work without proper authorization will constitute grounds for rejection of that portion of the work.

II. CONDUIT

A. MATERIALS
1. Conduit and fittings shall be UL Listed for the intended use shown on plan sheets.
2. Conduit shall be the type shown by descriptive code or shown elsewhere on the plans. Substitution of the various types of conduits will not be permitted. All flexible conduit in rigid metallic conduit (RMC) systems shall be Liquidtight Flexible Metal (LFMC) conduit. All flexible conduit in PVC systems shall be Liquidtight Flexible Non-metallic conduit (LFNC).
3. All exposed conduits shall be RMC, unless otherwise specifically shown on the plans. All metal conduit shall be properly grounded.
4. Couplings, connectors, conduit bodies, grounding bushings, and offset nipples for RMC shall be electro-zinc plated steel or hot dipped galvanized malleable iron, threaded or threadless compression type, rain-tight and shall be UL listed for the intended use.
5. Expansion joints for metal conduit shall be provided with an internal or external bonding jumper and shall be UL listed.
6. Unless otherwise shown on the plans, junction box minimum sizes shall be in accordance with the following table which applies to the greatest number of conductors entering the box through one conduit with no more than four conduits per box. When a mixture of conductor sizes are present, the conductors shall be counted as if all are of the larger size. Situations not applicable to the table shall be sized in accordance with NEC 370-28.

AWG	3 CONDUCTORS	5 CONDUCTORS	7 CONDUCTORS
#1	10" x 10" x 4"	12" x 12" x 4"	16" x 16" x 4"
#2	8" x 8" x 4"	10" x 10" x 4"	12" x 12" x 4"
#4	8" x 8" x 4"	10" x 10" x 4"	10" x 10" x 4"
#6	8" x 8" x 4"	8" x 8" x 4"	10" x 10" x 4"
#8	8" x 8" x 4"	8" x 8" x 4"	8" x 8" x 4"

7. RMC system junction boxes equal to or smaller, in any dimension, than 12 x 12 x 6 (HxWxD), surface mounted and containing conductors #8 or larger, shall be hot dipped galvanized cast iron with minimum wall thickness of 3/16 inch, shall have external mounting lugs, and shall be UL listed Crouse-Hinds Type WAB, OZ/Gedney Type YS or approved equal. Unless otherwise shown elsewhere on the plans, RMC system junction boxes larger than the aforementioned boxes but equal to or smaller, in any dimension, than 18 x 18 x 6 (HxWxD) shall be 14-ga. stainless steel; RMC system junction boxes larger than 18 x 18 x 6 (HxWxD) shall be 12-ga. stainless steel. All metal junction boxes shall be equipped with a threaded hole or lug for grounding. Stainless steel boxes 12 x 12 x 6 and larger need not be UL Listed but shall meet the other requirements of the NEC and shall have ribs, stiffeners, or thicker metal and shall have external mounting feet. Junction boxes with an internal volume of more than 100 cu. in. may be supported by connection of two or more rigid metal conduits, where specifically shown on the plans or where approved by the Engineer.
8. Junction boxes containing only #10 or #12 AWG conductors shall be Crouse Hinds Type GRFX, Appleton Type JBOX, two-gang FD, or similar approved cast iron box. Boxes shall be sized according to NEC Table 370-16(a).
9. IMC and EMT conduit shall not be used unless specifically required by the plan layout sheets. Junction boxes in EMT conduit systems shall be made from galvanized sheeting and shall be UL listed and approved for outdoor use, unless otherwise noted on the plans. Sheet metal junction boxes shall be sized in accordance with the NEC. Junction boxes for IMC conduit systems shall meet the requirements of boxes used with RMC systems.
10. Junction boxes in PVC conduit systems shall be PVC, intended for outdoor use, unless otherwise noted on the plans.
11. Elbows in PVC conduit systems one inch and larger shall be rigid metal, with the exception of traffic signal systems which may have PVC elbows instead of rigid. If any part of the rigid metal elbow is buried less than 18 inches underground the elbow and rigid metal extension shall be grounded. Grounding shall be accomplished by means of a grounding bushing installed on the extension. Unless specifically shown on the plans, rigid metal elbows containing, or entering ground boxes containing only communications conductors, loop detectors, or other low voltage power limited circuits need not be grounded unless a ground wire is present in the conduit or ground box. The rigid metal elbows located in concrete foundations may be extended with PVC conduit and need not be grounded provided that the end of the elbow nearest the end of the conduit run exiting the foundation is at least 2 inches below the concrete. RMC elbows will not be eliminated. RMC elbows will not be paid for directly, but will be subsidiary to various bid items.
12. High-Density Polyethylene (HDPE) conduit shall meet the requirements of Item 622, Duct Cable, except that the HDPE conduit, when bid under Item 618, Conduit, shall not contain factory installed conductors. Fittings for HDPE conduit shall be UL listed as an electrical conduit connector or shall be thermally fused using an electrically heated wound wire resistance welding method. HDPE conduit may be substituted for bored schedule 40 or schedule 80 PVC conduit. When such substitution is made, bored HDPE shall be schedule 40 of the size PVC being replaced. The HDPE conduit shall transition to PVC (or RMC elbow when required) at the bore pit. Size and schedule shall be as shown on the plans. Substituted conduit may not be extended to ground boxes or foundations; RMC elbows shall be installed at ground boxes and foundations. RMC elbows will not be eliminated.
13. All conduit support hardware including straps, nuts, bolts, screws, retaining anchors and washers shall be hot dipped galvanized or stainless steel. Strut type conduit straps shall be stainless steel or hot dipped galvanized. Strut type straps need not be made of malleable type material. Stamped-cadmium plated straps will not be allowed. Straps having only one mounting hole shall not be allowed for use on conduits 2 inches and larger with the exception of electrical service poles where stainless steel standoff straps will be allowed. Two piece conduit straps designed to be used with a mounting shoe shall be installed only with the correctly sized shoe.

B. CONSTRUCTION METHODS

1. Conduit in structures shall have expansion fittings at structure expansion joints. All straight runs of RMC conduit exposed on structures such as bridges shall have expansion joints installed at maximum intervals of 150 feet. Expansion joints shall be installed so they allow for movement of the conduit. Installation of the joint in such a manner that will not allow for movement shall be repaired at no expense to the state. The method of determining the final setting length of the expansion joint shall be provided to the Engineer upon request.
2. Conduit supports shall be spaced at maximum intervals of 5 feet. Conduit spacers shall be used with metal conduit placed on surfaces of concrete structures (See conduit mounting options).
3. Conduit supports shall not be attached directly to prestressed concrete beams except as shown specifically in the plans and approved by the Engineer.
4. Unless otherwise shown on the plans, conduit placed beneath existing roadways, driveways, or sidewalks, or after the base or surfacing operation has begun, shall be accomplished by jacking or boring. The Contractor shall back fill and compact the bore pits to the bottom of the conduit prior to installing connecting conduit or duct cable to prevent bending of the connection.
5. Conduit trenched in the subgrade of new roadways shall be backfilled with excavated material, unless otherwise noted on the plans. Conduit trenched in the sub-base of new roadways shall be backfilled with cement-stabilized base.
6. Open ends of all conduit and raceways shall be fitted with temporary caps or plugs to prevent entry of dirt, debris and rodents during construction. The temporary cap may be constructed of duct tape, but in all cases shall be tightly fixed to the conduit and shall be durable. The contractor shall clean out the conduit and prove it clear in accordance with Standard Specifications Item 618.3 prior to installing any conductors.
7. Conduit entry into the top of enclosures such as safety switches, meter cans, service enclosures, auxiliary enclosures and junction boxes shall be made weatherproof using conduit sealing hubs, or threaded bosses.
8. A bonding jumper shall be installed from each grounding bushing to the nearest grounding rod, grounding lug, and/or equipment grounding conductor. All jumpers shall be the same size as equipment grounding conductor. Conduit used as casing under roadways for duct cable need not be grounded if duct extends full length through the casing. At electrical services, grounding electrode conductor shall be a solid Copper #6 AWG.
9. Metal junction boxes shall be bonded to the grounding conductor in accordance with the NEC.
10. Conduits entering ground boxes shall be placed so that the conduit ends shall be not less than 3 inches nor more than 6 inches from bottom of box (See ground box detail on sheet ED(3).
11. Conduit ends shall be sealed with heat shrink boots with waterproof sealant, urethane foam, or by other methods approved by the Engineer. Sealing shall be done after completion of any required pull tests. Duct tape shall not be used as a permanent conduit sealant. Silicone caulking shall not be used as a sealant.
12. All strut mounting material and hardware shall be hot-dip galvanized or shall be stainless steel. The cut ends of strut and non-galvanized rigid metal conduit threads shall be coated with a zinc rich paint (90% or more zinc content). Zinc rich paint may only be used to touch up galvanized material as allowed under item 445.6 galvanizing. The painting of non-galvanized material with a zinc rich paint shall not be considered as an approved alternative for galvanized materials.
13. All PVC conduit terminations shall be fitted with bushings or bell ends. All metal conduit terminations shall be fitted with a grounding type bushing.

CONDUIT MOUNTING OPTIONS

(Attachment to concrete surfaces)
(See para. II.B.2)

TYPICAL CONDUIT ENTRY TO BRIDGE STRUCTURE DETAIL

NOTES

1.) Ground rod clamp to be UL listed for direct burial. (Revision 1)
2.) For conduit placed in structure, use flush-mounted box.
3.) Bond junction box and metal conduits to equipment grounding conductor and grounding electrode conductor using listed connector.
4.) Seal all conduits entering the junction box from underground.
5.) Install bell end or bushing on 1/2 " PVC conduit both ends.
6.) Ground rod to be driven within 8 inches of 1/2 inch PVC conduit end.

CONDUIT HANGER DETAIL

(Attachment to horizontal surfaces)
Hangers need not be UL listed for electrical use
ie: plumber pipe hangers are acceptable

5/03 Revision

Revision 1: Revised notes.

STANDARD PLANS
TEXAS DEPARTMENT OF TRANSPORTATION
Traffic Operations Division

ELECTRICAL DETAILS-
CONDUIT

ED(1)-03

©TxDOT January 1992

DN: KB	CK: JW	DW: DN	CK: GC	REG NO.:

REVISIONS	STATE DISTRICT	FEDERAL REGION	FEDERAL AID PROJECT			SHEET
4-98	SAT	6	XXX XXXX			311
12-00	COUNTY		CONTROL	SECTION	JOB	HIGHWAY
3-03						
5-03	BEXAR		2452	01	050	LP 1604

71A

DISCLAIMER
The use of this standard is governed by the "Texas Engineering Practice Act". No warranty of any kind is made by TxDOT for any purpose whatsoever. TxDOT assumes no responsibility for the conversion of this standard to other formats or for incorrect results or damages resulting from its use.

Plotted on: 6/26/2010

Design Filename: p:\74\00\04\design\civil\standards\signals\ED5-03.dgn

I. ELECTRICAL CONDUCTORS

A. MATERIALS

1. Insulated conductors shall be NEC Type XHHW. Insulated conductors shall be color coded in accordance with the NEC, articles 200, 250, and 310; i.e. Insulation of grounded conductors (neutrals) shall be white. Grounding conductors (ground wires) shall be bare or insulation shall be green. Insulation of ungrounded conductors (hots) shall be any color except green, white, or gray. Identification of conductors #6 American Wire Guage (AWG) and smaller shall be by continuous jacket color. Color coding of electrical conductors #4 AWG and larger shall be either by continuous color jacket or by colored tape. Colored tape marker shall consist of a half-lap of tape covering a 6-inch length of conductor.
2. Where two or more circuits are present in one conduit or enclosure, the conductors of each circuit shall be identified by a permanent non-metallic tag at each accessible location. The tag shall be fastened to the conductors by two plastic straps. Each tag shall indicate circuit number, letter, or other identification shown in the plans.
3. Grounding electrode conductor #6 AWG for bonding to ground rod at electrical service, shall be solid. Connection of conductor to ground rod shall be made using UL Listed connectors designed for such purposes.
4. Heat Shrink Tape filler shall be used to seal the ends of heat shrink tubing around two or more conductors that are insulated with heat shrink tubing. Tape material shall have a minimum dielectric strength of 225 volts per mil and shall be cross-linked butyl rubber. Tape shall be supplied in rolls and shall have a backing (release paper) to prevent the tape from sticking to itself.
5. Heat shrink tubing shall be heavy wall, UL listed for 600 volts or greater and shall have factory applied internal sealant.
6. GelCaps shall be UL listed for 600-volt applications. GelCap shall have see-through elastomer molded cover. Cover shall be filled with high dielectric insulating gel silicone sealant to provide waterseal. Cover shall be held in place by snap-lock, molded clamp made of UV stable polypropylene.
7. Splicing materials, insulating materials, breakaway disconnects, GelCaps and fuse holders will not be paid for directly but shall be subsidiary to various bid items.

B. CONSTRUCTION METHODS

1. After conductors have been installed in conduit, a pull test shall be made on conductors. When any length of conductor cannot be freely pulled, the Contractor shall make any needed alterations or repairs at no expense to the State.
2. The Contractor shall perform insulation resistance tests in accordance with Item 620, "Electrical Conductors." The Contractor shall coordinate with the Engineer to witness the tests.
3. A sufficient length of conductor for making up connections shall be left in ground boxes (2 feet minimum, 3 feet maximum, to point of splice, 3 feet minimum, 4 feet maximum, when conductor is pulled through with no splice), enclosures, weatherheads and pole bases (1 foot minimum, 1.5 feet maximum).
4. Splices shall be made only in junction boxes, ground boxes, pole bases, or electrical enclosures and shall be made with listed compression or screw type pressure connectors, terminal blocks, bolted lugs, or split bolt connectors. Splices shall be insulated with heavy wall heat shrink tubing or GelCaps and shall be made so as to provide a watertight splice. Heat shrink sleeve shall overlap conductor insulation a minimum of 2 inches on both sides of the splice. Where heat shrink tubing may not shrink sufficiently to provide a watertight seal around the individual conductors, prior to heating the tubing, the Contractor shall increase the diameter of the conductors insulation using heat shrink filler tape to provide a watertight seal between the individual conductors and the heat shrink tubing. Tape shall be visible after completion of all splices. Where filler tape is used but not visible, the Engineer shall approve each individual splice by conducting a physical inspection of each splice. When it appears the tubing has been burned, or overheated the tubing shall be considered to be defective and shall be replaced.
5. GelCaps when used in place of heat shrink method of splicing, shall be sized and installed according to manufacturer's specifications. (Raychem GelCap and GelCap SL or equal.)
6. Wire nuts may be used for #8 AWG or smaller conductors in above-ground junction boxes, but not in pole bases or ground boxes. Wire nuts shall be positioned upright to prevent the accumulation of water. Wire nuts used at these locations shall have factory applied waterproof sealant.
7. Conductors in illumination poles shall be supported by a J-hook in the top of the pole.
8. All conductors bid under Item 620 "Electrical Conductors" shall have breakaway electrical disconnects installed anytime conductors pass through a break-away support device.
9. For terminating the conductors, insulation-jacketing material shall be removed in such a manner as to not nick any of the individual strands of the conductor. When individual conductor strands are removed, the conductor shall be considered to be damaged.
10. When a conductor or cable has been damaged, or fails to pass an insulation resistance test, the conductor shall be replaced.
11. Duct tape, black electrical tape, or wire nuts shall not be used in the repair of a damaged conductor.
12. For terminations, no more than one wire may be installed under a single pressure connector, unless the device is listed for more than one wire.
13. Conductors connected to break-away in line fuse holders must be installed in accordance with the specific manufacturer's installation instructions. Where threaded connections are made, they shall be properly torqued. Where crimp type connections are made, crimps shall be made using properly sized crimping pliers. Proper conductor terminations are critical to the safe operation of break-away devices.
14. Waterproofing boots shall be properly trimmed to fit snugly around the conductor so as to provide a water proof connection. No more than one wire may enter a single opening in any one boot. Water proofing boots must provide the correct number of openings. Where only one wire is to be connected to a boot, the boot may not be a two wire type.

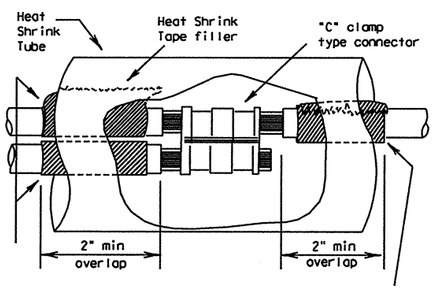

SPLICE OPTION 1

C-CLAMP

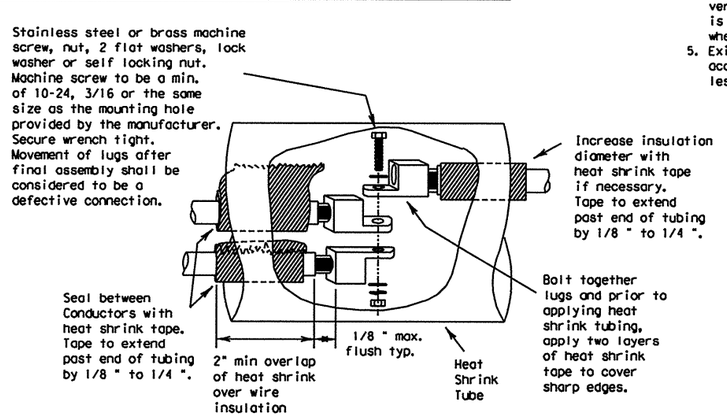

SPLICE OPTION 2

BOLTED WIRE LUGS

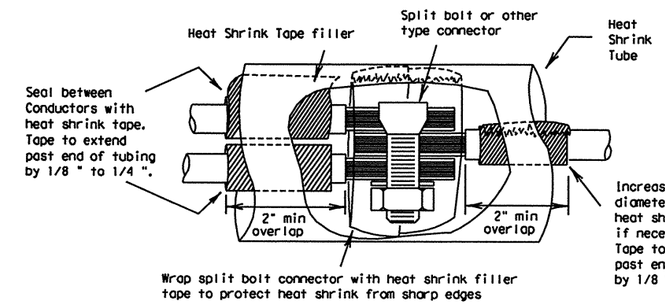

SPLICE OPTION 3

SPLIT BOLT

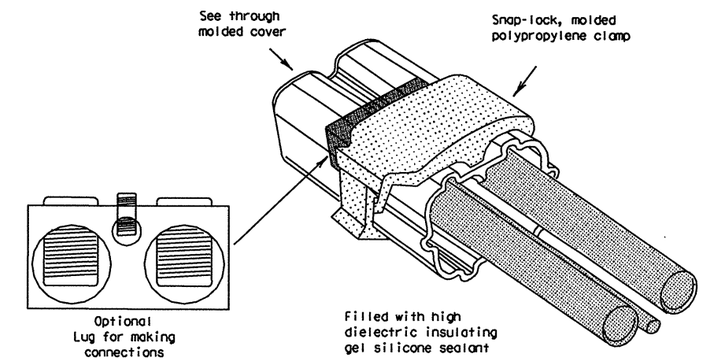

SPLICE OPTION 4

GELCAP

GelCap shall be sized and installed according to manufacturers specifications

15. All conduits that contain circuit wiring of 50 volts or more shall contain an equipment grounding conductor (EGC). Conduit for traffic signals shall have an EGC, with a minimum size of #8 AWG stranded. Unless otherwise shown on the plans, the EGC for all other conduits shall be the same AWG size as the largest current carrying conductor contained in that conduit. The EGC shall be paid for item 620-Electrical Conductors.

C. TEMPORARY WIRING

1. Temporary conductors and electrical equipment to provide power for utilization equipment, shall be installed in accordance with the NEC article 305. All temporary wiring materials and methods shall comply with the standard sheets. All power outlets for portable electrical equipment, power tools, ice machines, ice storage bins and refrigerators located outdoors at grade, supplied from a utility power source, shall be provided with a ground fault circuit interrupter.
2. Residual current protective devices (GFCI) may be any one of the following: molded cord and plug set, receptacle, or circuit breaker type.
3. Where wire nuts are approved for temporary wiring, they shall be of the self-sealing type.
4. All conductor splices must be contained within a listed enclosure, ground box or the splices will be more than ten feet above grade vertically and more than five feet horizontally from any metal structure. Where temporary conductors are installed in any area that is likely to be subjected to vehicle traffic, or mobile construction equipment, the vertical clearance to ground shall be at least 18 feet when measured at the lowest point. Where power conductors are to be supported by a span wire, the span wire shall be properly grounded.
5. Existing conduit containing service conductors uncovered during the construction process shall be repaired in a timely manner in accordance with the NEC. Existing non-metallic conduit exposed during construction shall not be left exposed above grade, or with less than eighteen inches of cover, without protective methods approved by the Engineer.

STANDARD PLANS
TEXAS DEPARTMENT OF TRANSPORTATION
Traffic Operations Division

ELECTRICAL DETAILS-CONDUCTORS

ED(2)-03

©TxDOT January 1992	DW-KB	CK-JW	DW-DN	CK-GC	REG NO.:	
REVISIONS	STATE DISTRICT	FEDERAL REGION	FEDERAL AID PROJECT			SHEET
10-93	SAT	6	XXX XXXX			312
4-98	COUNTY		CONTROL	SECTION	JOB	HIGHWAY
12-00	BEXAR		2452	01	050	LP 1604
3-03						

71B

LEVELS	DN:
1 2 3 4 5 6 7 8	CK:
9 10 11 12 13 14 15 16	DW:
17 18 19 20 21 22 23 24	CK:
25 26 27 28 29 30 31 32	
33 34 35 36 37 38 39 40 41 42 43 44 45 46 47 48	DATE:
49 50 51 52 53 54 55 56 57 58 59 60 61 62 63	ACC:
	FILE:

DISCLAIMER
The use of this standard is governed by the "Texas Engineering Practice Act". No warranty of any kind is made by TxDOT for any purpose whatsoever. TxDOT assumes no responsibility for the conversion of this standard to other formats or for incorrect results or damages resulting from its use.

Plotted on: 6/26/2010

Design Filename: p:\74\00\04\design\civil\standards\signals\ED5-03.dgn

II. GROUND RODS

A. MATERIALS

1. All ground rods installed at electrical services, including supplemental lightning protection ground rods specified by the plans in other locations such as pole bases, shall be copper clad and UL listed. Rods shall be a minimum diameter of 5/8 inch. The length shall be a minimum of 8 feet. Larger diameter or longer length rods may be called for in some specific locations, see the individual plans sheets.
2. Ground rod clamps shall be listed to be in direct contact with the soil. Where concrete encasement is required, the clamp shall be listed for concrete encasement.

B. CONSTRUCTION METHODS

1. Ground rods installed in locations such as pole bases, to provide supplemental lightning protection need not be totally in contact with the soil. Where called for in the plans, rods may be encased in soil or concrete or any combination of soil and concrete. When concrete encased, the connection of the conductor to the rod shall be readily accessible for inspection or repairs. When driven into the soil the upper end shall be between 2 to 4 inches below finished grade. Ground rods shall not be placed in the same drilled hole as a timber pole.
2. Ground rods shall be installed such that the end imprinted with the rod's part number is installed as being the upper end.
3. Non-conductive coatings such as concrete splatter shall be removed from the rod at the clamp location.
4. Routing of lightning protection ground rod wires shall be run as short and straight as possible. Where bends are required they shall have a minimum radius of four inches.
5. Unless specifically called for by the plans, conduits used for ground rod wires shall be non-metallic. Where metal conduits are specified, a grounding bushing and properly sized bonding jumper shall be provided and properly installed on each end.
6. Where rocky soil or a solid rock bottom is encountered when driving a ground rod and the horizontal trench placement method is the only viable solution, written authorization from the Engineer must be obtained.

III. GROUND BOX

A. MATERIALS

1. Ground boxes 16x30x24 inches (WxLxD) or smaller shall be polymer concrete of the type required by the descriptive code shown elsewhere. Larger ground boxes shall be as shown elsewhere in the plans.
2. All ground boxes and covers shall be permanently marked either by impress or by permanent ink, with manufacturer's model number and manufacturer's name or logo.
3. Covers shall be bolted down, and bolt holes in the box shall be arranged to drain dirt.
4. Ground box Types A, B, C, D & E shall meet the following requirements:
   a. Ground boxes and covers be manufactured from polymer concrete reinforced with continuous strands of woven or stitched borosilicate fiberglass cloth. The polymer concrete shall be made from catalyzed polyester resin, sand and aggregate, and shall have a minimum compressive strength of 11,000 psi. Polymer concrete containing chopped fiberglass or fiberglass reinforced plastic is not acceptable.
   b. Minimum inside dimensions shall be as follows (width x length x depth):
      Type A shall be 11.5 inches x 21 inches x 10 inches, (122311)
      Type B shall be 11.5 inches x 21 inches x 20 inches, (122322)
      Type C shall be 15.25 inches x 28.25 inches x 10 inches, (162911)
      Type D shall be 15.25 inches x 28.25 inches x 20 inches, (162922)
      Type E shall be 11.5 inches x 21 inches x 16 inches, (122317)
   c. Bottom edge of box or extension shall be footed with a minimum 1 1/4 inch flange.
   d. Ground boxes shall withstand 600 lbs. per sq. ft. applied over the entire sidewall with less than 1/4 inch deflection per foot length of box. Ground boxes and covers shall withstand a test loading of 20,000 lbs. over a 10 inch by 10 inch area centered on the cover with less than 1/2 inch deflection. Ground boxes and covers shall meet Western Underground Standards 3.6. Manufacturer shall supply certification by an independent laboratory or sealed by a Texas-Licensed Professional Engineer.
   e. Covers shall be 2 inch (nominal) thick polymer concrete. All hardware shall be stainless steel. Cover shall be secured with two 1/2 inch stainless steel bolts. Bolts shall be self-retaining and shall withstand a minimum of 70 ft-lbs. torque and shall have a minimum 750 lbs. straight pull out strength. Nuts shall be floating and shall provide a minimum of 1/2 inch movement from the center of the nut. Covers shall be skid resistant, minimum 0.5 coefficient of friction. Covers shall be interchangeable between manufacturers and shall conform to the dimensions shown herein. Unless otherwise approved by the Engineer, cover shall be legibly imprinted with the following words in minimum 1 inch letters:
      Ground Boxes containing wiring for traffic signals shall be labeled, Danger High Voltage Traffic Signal.
      Ground boxes containing wiring for illumination systems shall be labeled, Danger High Voltage Illumination.
      Ground boxes containing wiring for traffic management systems shall be labeled, Danger High Voltage Traffic Management.
      Ground boxes containing wiring for sign illumination systems shall be labeled, Danger High Voltage Sign Illumination.
      Ground boxes containing wiring for traffic signals that also contain illumination, powered by the signal electrical service, shall be labeled, Danger High Voltage Traffic Signal.

B. CONSTRUCTION METHODS

⚠

1. Ground boxes shall be set on a 9 inch (minimum) bed of aggregate from 3/4 " up to 2" in size. Aggregate shall be in place prior to setting box and conduits shall be capped. Any gravel or dirt in conduit shall be removed.
2. When required by Item descriptive code, construction of an apron encasing a ground box including concrete and reinforcing steel shall not be paid for directly but shall be subsidiary to the ground box. Reinforcing steel may be field bent. Concrete for aprons shall be considered miscellaneous concrete for testing purposes. Aprons shall be cast in place.
3. Conduit holes may be cut in the walls of type B & D boxes at least 18 inches beneath the cover.
4. If, within the limits of this project, the Contractor must utilize an existing ground box equipped with a metal cover, the Contractor shall bond the cover to the grounding conductor with a 3 foot long flexible stranded jumper the same size as the grounding conductor. Connection of bonding jumper to metal ground cover shall not be paid for directly but shall be subsidiary to various bid items. The box(es) must be clearly shown on the plans with plan notes fully describing the work required.
5. If there are other ground boxes with metal Covers within the project limits but not involved in the contract, the Engineer may direct the Contractor to ground the covers, designating and identifying the specific boxes in writing. This work will be paid for separately.
6. Termination to metal ground box covers shall be made using a tank ground type lug.

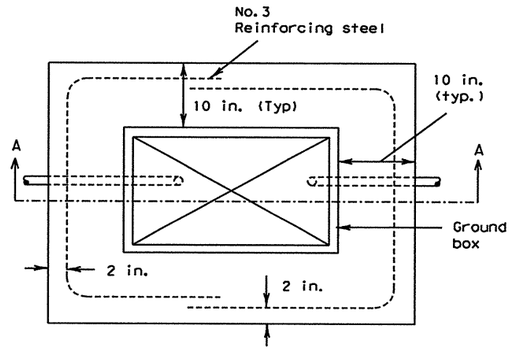

PLAN VIEW

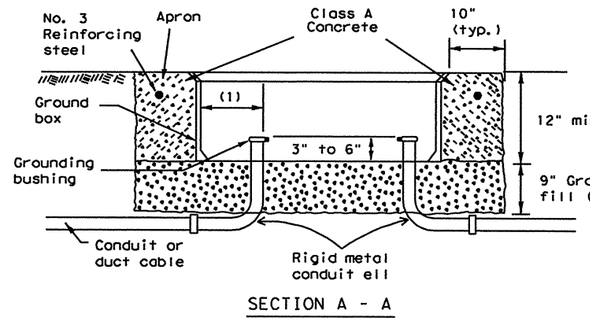

SECTION A - A

APRON FOR GROUND BOXES

(Where required)

(1) Final position of end of conduit shall not exceed one-half the distance to the side of box opposite the conduit entry.
(2) Place gravel "under" the box, not "in" the box. Gravel should not encroach on the interior volume of the box.
(3) Install bushing on the upper end of all ells.
(4) Where a ground rod is present in the ground box, connect it to any and all equipment grounding conductors using a listed connector.
(5) Maintain sufficient space between all conduits so as to allow for proper installation of bushings.
(6) All conduits shall be installed in a neat and workmanlike manner.
(7) All conduits installed in the ground box shall be sealed after completion of conductor installation and any required pull tests. Silicone shall not be used as sealant.

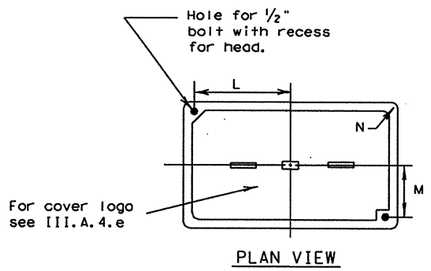

PLAN VIEW

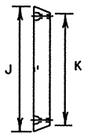

END

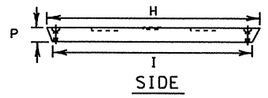

SIDE

GROUND BOX COVER

GROUND BOX COVER DIMENSIONS								
BOX SIZE	DIMENSIONS (INCHES)							
	H	I	J	K	L	M	N	P
A, B & E	23 1/4	23	13 3/4	13 1/2	9 7/8	5 1/8	1 3/8	2
C & D	30 1/2	30 1/4	17 1/2	17 1/4	13 1/4	6 3/4	1 3/8	2

5/03 Revision

⚠ Revised notes.

STANDARD PLANS
TEXAS DEPARTMENT OF TRANSPORTATION
Traffic Operations Division

ELECTRICAL DETAILS-GROUND BOXES

ED(3)-03

© TxDOT January 1992	DN: KB	CK: JW	DW: DN	CK: GC	REG NO.:
REVISIONS 4-98, 12-00, 3-03, 5-03	STATE DISTRICT: SAT	FEDERAL REGION: 6	FEDERAL AID PROJECT: XXX XXXX		SHEET: 313
	COUNTY: BEXAR	CONTROL: 2452	SECTION: 01	JOB: 050	HIGHWAY: LP 1604

71C

DN:
CK:
DW:
CK:

LEVELS	D	DATE:
1 2 3 4 5 6 7 8	1 2 3 4 5 6	
17 18 19 20 21 22 23 24	27 28 29 30 31 32	ACC:
33 34 35 36 37 38 39 40 41 42 43 44 45 46 47 48		
49 50 51 52 53 54 55 56 57 58 59 60 61 62 63		FILE:

DISCLAIMER
The use of this standard is governed by the "Texas Engineering Practice Act". No warranty of any kind is made by TxDOT for any purpose whatsoever. TxDOT assumes no responsibility for the conversion of this standard to other formats or for incorrect results or damages resulting from its use.

Plotted on: 6/26/2010

Design Filename: p:\74\00\04\design\civil\standards\signals\ED5-03.dgn

DN: CK: DW: CK:

DATE: ACC: FILE:

LEVELS
1 2 3 4 5 6 7 8
9 10 11 12 13 14 15 16
17 18 19 20 21 22 23 24
25 26 27 28 29 30 31 32
33 34 35 36 37 38 39 40
41 42 43 44 45 46 47 48
49 50 51 52 53 54 55 56
57 58 59 60 61 62 63

ELECTRICAL SERVICES NOTES

All work, materials, services, and incidentals, whether or not specifically shown on the plans, which may be necessary for a complete and proper electrical service installation as specified in the plans to obtain electrical power shall be paid for, performed, furnished and installed by the Contractor. The Contractor shall contact the Utility for metering and shall comply with all Utility requirements.

Primary line extensions, connection charges, meter charges, and other charges by the Utility company to provide power to the location shown, when required, shall be paid for under force account work. The costs associated with these charges shall be approved by the Engineer prior to engaging the Utility company to do the work. The Contractor shall consult with the appropriate Utility to determine costs and requirements, and shall coordinate the Utility's work as approved by the Engineer. The Contractor shall be reimbursed only the amount billed by the Utility. No additional amount for supervision of the Utility's work will be paid.

Materials shall be new and unused, materials and installation shall comply with the applicable provisions of the National Electrical Code (NEC) and National Electrical Manufacturers Association (NEMA) standards and shall be Underwriters Laboratories (UL) Listed. Electrical Service conduits, conductors, disconnects, contactors, circuit breaker panel sizes, and branch circuit breakers, shall be as shown in the Electrical Service Data elsewhere in the plans. Faulty fabrication or poor workmanship in any material, equipment, or installation shall be justification for rejection.

The Contractor shall submit for approval no less than six (6) copies of catalog cut sheets on electrical service materials. Submittals shall be legible and shall be marked to indicate which product on a cut-sheet is to be supplied. Where manufacturers provide warranties and guarantees as a customary trade practice, Contractor shall furnish to the State such warranties or guarantees.

The Contractor shall provide locks keyed with Master #2195 for all lockable electrical enclosures. Keys and locks become property of the State. Unless otherwise approved by the Engineer, enclosures shall not be energized until locks are provided and all bolts are installed.

Circuit directories, where provided, shall be filled out. All breakers and components in shop built panels and enclosures shall be labeled with duo-colored plastic labels. Letters shall be a minimum 3/8 " in height.

Enclosures with external disconnects that de-energize all equipment inside the enclosure, need not have dead front trim, except that incoming line terminations shall be protected from incidental contact.

When galvanized is specified for nuts, screws, bolts or miscellaneous hardware, stainless steel may be used. All wiring and components shall be rated for 75 degrees C. Minimum size for service entrance conductors shall be #6 XHHW.

I. Safety Switch. A safety switch, placed ahead of the meter, shall only be used when specified by the Utility and when shown on the Electrical Service Data. The switch shall be UL Listed, heavy duty type, 600 volt, unfused, with a UL type 3R enclosure and equipped with a solid neutral (s/n) assembly. The switch shall be padlockable in the "on" position.

II. Service Type. Electrical service types A, C, D, and T shall be as schematically detailed on ED(4) or ED(5). Other service types shall be as detailed elsewhere on the plans.

III. Branch Circuit Breakers. Circuit breakers shall be thermal magnetic and have a minimum interrupting capacity of 10,000 amps and a voltage rating compatible with their use. Circuit breakers shall be sized as shown in the electrical service data. Circuit breakers in panelboards and load centers shall be full size and designed exclusively for the panelboard or load center in use. Tandem and half-width breakers shall not be used. All circuit breakers shall be permanently and clearly marked identifying the circuit or device supplied. Circuit breakers shall be UL Listed to UL489.

IV. Circuit Breaker Panelboard. Panelboards shall be UL Listed. Panelboards shall have copper busses, a minimum of 6 one-pole spaces or as required in the electrical service data, and when required will be rated for service equipment. Enclosure shall meet or exceed UL type 3R classification. Panelboards shall have a threaded hub conduit entry for conduit entering the top of the enclosure. Circuit breakers shall be bolt-in type only.

V. Circuit Breaker Load Center. Load centers shall be UL Listed.
Load centers for type T services may have copper or aluminum busses, all other load centers will be copper bus only. Load center will have a minimum of 4 one-pole spaces, and shall be rated for service equipment. Enclosure shall meet UL type 3R classification. Load centers shall have a threaded hub conduit entry for conduit entering the top of the enclosure. Circuit breakers shall be plug-in type only. Load centers for type T services shall accomodate a maximum of 6 one-pole breakers.

VI. Separate or Auxiliary Enclosure. Separate enclosures for HOA, photocell and lighting contactors for types D & T Services shall be a UL Listed assembly with outer door. Interior shall have dead front trim. HOA switch operator shall extend through the dead front trim. Photocell shall be mounted inside the enclosure as described in paragraph XIII when required by descriptive code. Separate enclosures shall meet the construction requirements of paragraph VIII. E, except that separate enclosure shall not have external operating handle, need not have a data pocket and door may latch at only one point. All equipment may be located in one enclosure instead of two, when approved by the Engineer.

VII. Where a Type D or T service is provided, laminated "as built" drawings are required as shown on ED(5) VIII E; shall be delivered before completion of the work, to the Engineer in lieu of placement within these smaller enclosures. Conduit may not enter the back wall of a service enclosure penetrating the equipment mounting panel. Provide grounding bushings on all metal conduits, terminate bonding jumper to grounding bus. Grounding bushing is not required when the end of the metal conduit is fitted with a conduit sealing hub or threaded boss such as a meter base.

EXPLANATION OF ELECTRICAL SERVICE DESCRIPTIVE CODE

ELEC SERV TY X (XXX/XXX) XXX (XX) XX (X) XX (X)

Example: ELEC SERV TY A(240/480)100(NS)SS(E)GC(O)

Schematic Type

Service Voltage (V / V)

Disconnect Amp Rating
(000 indicates main lug only)

SS= Safety switch ahead of meter
NS= No switch ahead of meter and/or no meter required

Enclosure Type
GS= Galvanized steel (see ED(5)VIII,D)
SS= Stainless steel
AL= Aluminum

Photocell Mounting Location
T= Top of pole
E= Inside service/separate enclosure
L= Luminaire mounted
N= None

Service Support Type
GC= Granite concrete
OC= Other concrete
TP= Timber pole
SP= Steel pole
SF= Steel frame
OT= Pole by others or paid for separately
EX= Existing pole
TS= Switch gear to be placed on traffic signal pole
RT= Rectangular structural tubing
PS= Pedestal Service (see ED(5)VIII,G)

O= Overhead service
U= Underground service

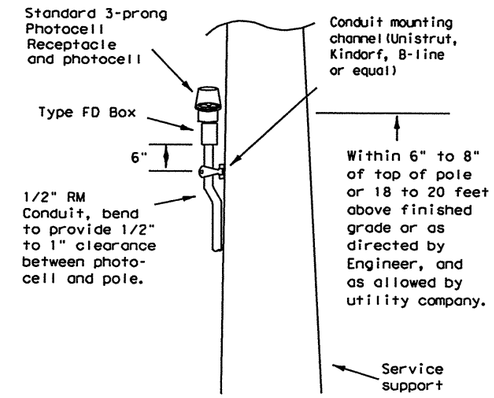

TOP MOUNTED PHOTOCELL

Conduit support spacing 3 feet from enclosure; 5 feet max.

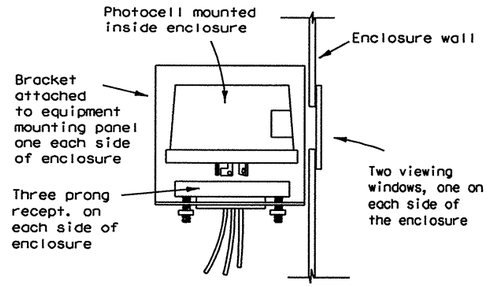

ENCLOSURE MOUNTED PHOTOCELL

For photocell specifications see ED(5),XIII.

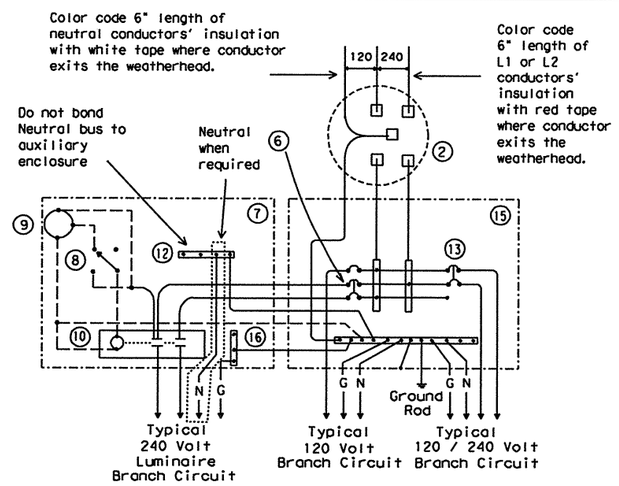

SCHEMATIC TYPE T
120/240 VOLTS - THREE WIRE

Install photocell and lighting contactor when shown on Electrical Service Data.

SCHEMATIC LEGEND

1 - omitted
2 - Meter (when required)
3 - Service Assembly Enclosure
4 - Main Disconnect Breaker (Not Used)
5 - Omit
6 - Circuit Breaker, 15 Amp typical for control circuit wiring
7 - Auxiliary Enclosure
8 - Control Station ("H-O-A" Switch)
9 - Photo Electric Control (enclosure-mounted shown)
10 - Lighting Contactor
11 - Power Distribution Terminal Blocks (Not Used)
12 - Neutral Bus required when 120 v. lights are controlled by lighting contactor
13 - Branch Circuit Breaker (See Electrical Service Data)
14 - Circuit Breaker Panelboard (Not Used)
15 - Load Center
16 - Ground Bus

——— Power Wiring
- - - - - - - Control Wiring
——N—— Neutral Conductor (when required-to serve 120 v. loads only)
——G—— Equipment grounding conductor-always required

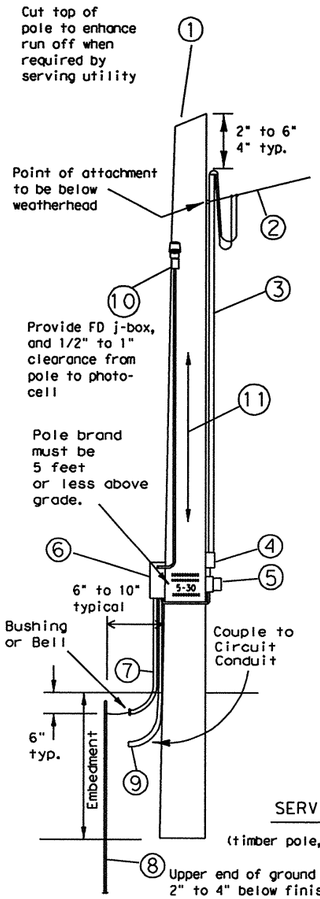

1 - Class 5 pole, height as required
2 - Service drop from utility company (attached below weatherhead)
3 - Service conduit and service entrance conductors (RMC) (See Electrical Service Data)
4 - Safety switch (when required)
5 - Meter (when required)
6 - Service enclosure
7 - No. 6 bare grounding electrode conductor in 1/2 " PVC to ground rod - extend 1/2 " PVC 6" underground.
8 - 5/8 " x 8' Copper clad ground rod - drive ground rod completely underground unless otherwise approved by the Engineer.
9 - RM conduit - same size as branch circuit conduit.
10 - Photocell and conduit - if top mounted. (See Electrical Service Data)
11 - When required by the serving utility provide bare #6 awg copper conductor. Run wire from pole top to butt wrap or copper butt plate. Protect conductor to a height of 8 ft above finish grade.

LIQUIDTIGHT FLEXIBLE METAL CONDUIT (LFMC)

(If applicable)

- Liquidtight flexible metal conduit, may be used when meter and service enclosure are mounted 90 to 180 degrees to each other. Size shall be same as service entrance conduit.
- LFMC shall not exceed 3 ft. and shall be securely supported within one ft. of each end. No strap required for LFMC shorter then 12"
- Each end of LFMC must have a grounding bushing or be terminated with a grounding fitting.
- A neutral conductor must be installed within the LFMC.
- Bend in liquidtight flexible metal conduit shall not exceed 180 degrees.
- A pull test is required on all installed conductors, at least six inches of free conductor movement shall be demonstrated to the satisfaction of the Engineer.

SERVICE SUPPORT TYPE TP (O)

(timber pole, overhead service, typical arrangement)

8 Upper end of ground rod to be 2" to 4" below finished grade

TIMBER POLE NOTES

1. Conduit and electrical conductors attached to the electrical service pole and underground within 12 inches of service pole shall not be paid for directly but shall be subsidiary to the service pole.
2. Pole top mounted photocell, install on north side of pole or in service enclosure as required. See Electrical Service Data.
3. Attach meter and service equipment with stainless steel or galvanized channel (Unistrut, Kindorf, or equal). Gain pole as required to provide flat surfaces for each strut. Paint ends of galvanized channel with zinc rich paint. Gain depth 5/8" max. Gain height 1 7/8" max. Strut to be 1" max. deep, and 1 5/8" wide max. Secure each strut section to timber pole with two galvanized or SS lag bolts, 1/4" diameter min. by 1 1/2" length min. Place flat cut galvanized or SS washer on each lag bolt. Gain pole in a neat and workmanlike manner.
4. Embedment depth shall be as required in Item 627 Treated Timber Poles.
5. Poles trimmed for excess length shall be trimmed from the top end only.

STANDARD PLANS
TEXAS DEPARTMENT OF TRANSPORTATION
Traffic Operations Division

ELECTRICAL DETAILS- SERVICE SCHEMATICS AND SUPPORT-TYPE TP (OVERHEAD)

ED(4)-03

©TxDOT April 1998	DN-KB	CK-JW	DW-DN	CK-GC	REG NO.:
REVISIONS 12-00 3-03	STATE DISTRICT: SAT	FEDERAL REGION: 6	FEDERAL AID PROJECT: XXX XXXX		SHEET: 314
	COUNTY: BEXAR	CONTROL: 2452	SECTION: 01	JOB: 050	HIGHWAY: LP 1604

71D

SERVICE ENCLOSURE NOTES

VIII. Service Assembly Enclosures. All service assemblies and enclosures shall be UL Listed for the intended purpose.

A. Shop built or shop assembled service assemblies (all types except Type T and Type D without lighting contactor or enclosure mounted photo cell) and all auxilliary equipment enclosures mounted with service equipment and paid for as part of Item 628, "Electrical Services", shall be built or assembled by a UL Listed Industrial Control Panel shop and shall have a unique serial numbered UL Label with the words "LISTED ENCLOSED INDUSTRIAL CONTROL PANEL". The same or an additional label shall have the name, location, and phone number of the shop, the UL file number of the shop, the shop order or drawing number, date of manufacture or assembly, and the line voltage. The service assembly enclosure shall also be labeled "SUITABLE ONLY FOR USE AS SERVICE EQUIPMENT".

B. Conduit entries into the top of enclosures shall have threaded hub. Conduit entries through the equipment mounting back plate will not be allowed.

C. All service enclosure front doors shall be permanently labeled "DANGER HIGH VOLTAGE". Label shall be a self sticking type, intended for outdoor installation. Lettering style, layout and colors of red, black and white shall be as required by OSHA. Label letters shall be 1 to 1 1/2 inches high or as high as the enclosure door width will permit for smaller services. Separate or auxiliary lighting enclosures need not be OSHA labeled when mounted in the same viewing plane as the service enclosure front door. Where only one type of load is served by the service, the service door shall be marked using duo-colored plastic labels or self adhesive vinyl weather resistant labels, minimum of 1 inch high; applied in a neat and workmanlike manner. On the label will be the service number shown on the plans as well as identifying the load served specifically (i.e. lighting, landscaping, signals, traffic management or other wording as directed by the Engineer). Safety switches need not be OSHA labeled unless specifically required by the serving utility.

D. Type GS enclosures will only be allowed for service Types D and T without an enclosure mounted photocell and/or lighting contactor and the Type C panelboard. This spec will allow an "off the shelf" product meeting these specifications to be used. Type GS enclosures shall be made from pre-galvanized steel sheeting, hot dipped galvanized steel, or powder coat painted steel unless shown differently on the plans. Steel enclosures shall be painted inside and outside; galvanized enclosures may be painted. Unless otherwise approved by the Engineer, painted enclosures shall be gray, beige, white or light green. Panelboard/loadcenter enclosures shall meet UL type 3R requirements, shall have a dead front trim, and an outer padlockable door preventing unauthorized persons from operating contained equipment. Galvanized steel is no longer allowed for Types A,C,or custom-built D or T enclosures. If GS is shown in the descriptive code for any of these, an AL shall be provided.

E. Type AL enclosures for service Types A and C shall meet UL type 3R requirements and shall also meet additional requirements of this paragraph. The enclosure shall have both a main disconnect remote operator handle and a door latch handle. Die-cast handles are not acceptable. The main disconnect remote operator shall be flange-mounted, shall interlock the door when in the "on" position, and shall be padlockable in both the "on" or "off" positions. Door latch shall latch at two or more points, operate by a handle separate from disconnect switch and be capable of being locked. Door closure clamps will not be allowed. Lock must be keyed to Master #2195. All the enclosures shall have either a continuous stainless steel piano hinge with stainless steel pin or enclosures less than 30 inches may have two heavy duty hinges, those over 30 inches must have three. Heavy duty two and three point hinges shall have a 0.185 inch minimum diameter electro-zinc plated steel pin or a stainless steel pin. Two point hinged doors shall be rated for 56 lbs of loading. Three point hinged doors shall be rated for 70 lbs of loading. The door shall have an attached data pocket constructed of either thermoplastic or metal. Pocket shall be 12" x 12", unless that size will not fit in enclosure. The pocket shall then be as large as possible, as approved by the Engineer, and mechanically attached with stainless steel nuts and bolts, or stainless steel or aluminum rivets. Enclosure shall include an equipment mounting panel installed inside the enclosure on collar studs or tapped bosses, and constructed of a minimum 12 guage galvanized steel. Equipment mounting panels shall not be painted. Enclosure shall have factory installed external mounting feet. Enclosure door shall be capable of opening at least 130 degrees, with arm or other approved means to hold the door open. Only the enclosure exterior will be primed and painted. Paint color shall be beige or gray and shall be powder coat paint as shown below. Condensation drainage shall be provided in the bottom of the enclosure before leaving the factory. The Contractor shall prepare and submit a schematic drawing unique to an individual service. The approved drawing shall be laminated and placed in the document pocket of the service at the time of shipment to the job site. All applicable wiring diagrams and plan sheet layouts for all equipment and branch breaker circuits supplied by that service shall also be laminated and placed in the document pocket prior to shipping. Type AL enclosures for Type D and T services with enclosure mounted photocell and/or lighting contactor shall have the loadcenter interior mounted in an enclosure with properly adapted dead front trim. Types D and T shall not have a loadcenter exterior "can" mounted inside another enclosure meeting these specifications. (Do not put one enclosure inside another enclosure). Types D and T with enclosure mounted photocell and/or lighting contactor shall meet the additional requirements of this paragraph except that remote-operating handle will not be provided.

F. Type SS enclosures for Type A and C shall meet all the requirements above for their respective type AL. Type SS enclosures for D and T shall meet all the requirements above for their respective type AL. Stainless Steel shall not be painted.

G. PS enclosure shall be as detailed and specified on ED(8). Galvanized steel will not be allowed for any pedestal service. If GS is shown in the descriptive code an AL will be provided.

IX. Powder Coat Paint. Powder coating shall be either a polyester thermosetting resin, a zinc rich primer with a TGIC (triglycidyl isocyanurate) powder overcoating, or a zinc-rich epoxy powder, applied by either electrostatic spray or fluidized bed immersion, high temperature oven cured, high density, low gloss, 4 mil thick (minimum), coating. Adhesion shall meet the 5A or 5B classifications of ASTM D3359. Finish shall be uniform in appearance and free of scratches.

X. Main Disconnect. Main disconnect device shall be a circuit breaker, as specified in the Electrical Service Data, shall be two or three pole, and rated for the voltage and amperage specified. Circuit breaker shall be an UL Listed thermal-magnetic circuit breaker controlled by flange-mounted remote operator in the service assembly enclosure when required. Circuit breakers shall have a minimum interrupting rating of 10,000 Amps. When the utility company provides a transformer larger than 50 KVA, Contractor shall verify that the available fault current is less than the circuit breaker amps interrupting capacity (AIC) rating and shall provide documentation from the Utility to the Engineer. Documentation shall be submitted at the same time as other electrical submittals. Circuit breaker shall be UL Listed to UL489. No backfed breakers will be allowed for use as a main disconnect.

XI. Control Circuit. Control circuit protection shall be 15 amp circuit breaker.

XII. Control Station ("H-O-A" Switch). Control station shall be a maintained-contact, three position selector switch in an UL type enclosure. Switch shall be rated 600 volts and shall be fitted with "Hand-Off-Auto" legend.

XIII. Photo Electric Control. Photo electric control shall consist of a photocell, internal lightning arrester, and relay or bimetallic switch mounted inside a weatherproof enclosure with standard 3-prong twist lock photocell plug and receptacle. The enclosure shall be made of poly-acrylic with clear acrylic window. Enclosure chassis shall be molded thermosetting plastic. The photocell shall have a polyethylene gasket, and shall have a hermetically sealed cadmium sulfide cell. The arrester shall have an enclosed type expulsion arrester rated 2.0 kV sparkover with 5,000 amps follow-through. Relay or switch shall be time delay type with normally closed contacts. Photo electric control shall be rated a minimum of 1800 VA, voltage as required. Enclosure mounted photocells shall be the same as above except that the photocell shall be mounted inside the enclosure. The enclosure shall have two acrylic paned windows, or other material approved by the Engineer, one on each side of the enclosure. Each window shall be rectangular approximately one inch by two inches, round 2 inch diameter, or as otherwise approved by the Engineer. Bracket and photocell's receptacle will be mounted inside enclosure next to each window. Except for window side, 2" of clearance is required on all sides of photocell for ease of replacement. The photocell's receptacle is held in place by two mounting screws on bracket and located next to each window of the enclosure. The 3-prong twist lock photocell shall be mounted in a position to receive light from the window closest to the photocell. The photocell shall be mounted in a position to receive light from one window. Top of pole mounted photocells shall be mounted as shown on ED(4). The Contractor shall be responsible for proper operation of the photo-electric control. The Contractor shall move and/or adjust or shield the photocell from stray or ambient nighttime light or shall make any other adjustments required for proper operation. The photocell shall face North when practicable. Unless otherwise shown on the plans, the photocell shall turn on the illumination system at 1.0 +(-) 0.5 footcandle and turn off the illumination system at two footcandles higher than turn on.

XIV. Lighting Contactor. Lighting contactor shall be a UL Listed NEMA rated lighting contactor, two-pole or multipole as required, electrically held type designed to control high pressure sodium lighting loads, with silver alloy double break contacts rated at 240 volts, 480 volts or 600 volts as required. Lighting contactor shall not be the DIN rail mounted type.

XV. Power Distribution Terminal Blocks. Power distribution terminal blocks shall be rated for 600 volts and shall be used for line side connections to branch circuit breakers where more than one circuit breaker is required. Lugs on blocks shall be properly sized for conductors being used. Only one conductor shall be placed under each lug.

XVI. Neutral/Ground Bus. Neutral/ground bus shall be a factory made bus permanently bonded to the enclosure with properly sized lugs for grounding and neutral conductors.

SCHEMATIC LEGEND

1 - Safety Switch (when required)
2 - Meter (when required)
3 - Service Assembly Enclosure
4 - Main Disconnect Breaker (See Electrical Service Data)
5 - Omit
6 - Circuit Breaker, 15Amp
7 - Auxiliary Enclosure
8 - Control Station ("H-O-A" Switch)
9 - Photo Electric Control (enclosure-mounted shown)
10 - Lighting Contactor
11 - Power Distribution Terminal Blocks
12 - Neutral/Ground Bus
13 - Branch Circuit Breaker (See Electrical Service Data)
14 - Circuit Breaker Panelboard (See Electrical Service Data)
(If Type C is shown as AL or SS on descriptive code, this is the service assembly enclosure only. Panelboard enclosure is GS unless otherwise noted.
15 - Load Center

———— Power Wiring
-------- Control Wiring
——N—— Neutral Conductor (when required) serve 120 v. loads only)
——G—— Equipment grounding conductor-always required

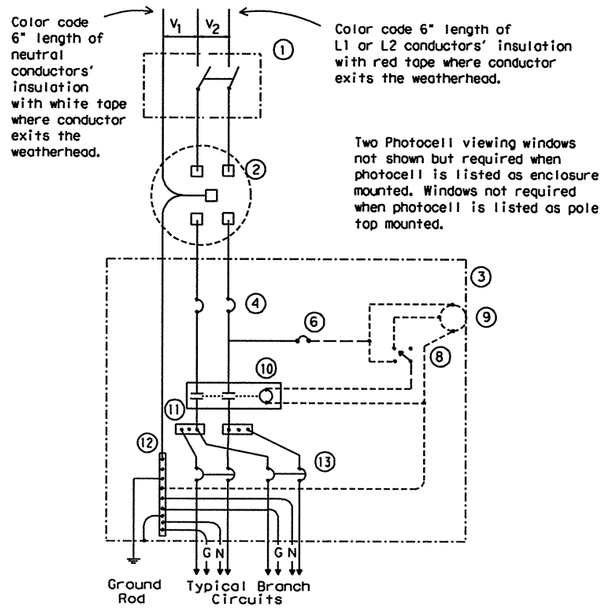

SCHEMATIC TYPE A

THREE WIRE

[Maximum feeder circuit size (High Mast Poles): 100 amps for two pole 480V, 125 amps for one or two pole 120V or 240V. Maximum branch circuit size: 50 amps.]

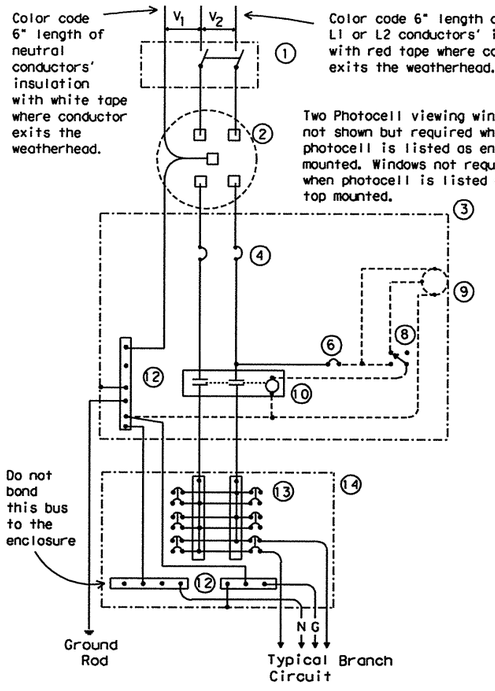

SCHEMATIC TYPE C

THREE WIRE

[Maximum feeder circuit size (High Mast Poles): 100 amps for two pole 480V, 125 amps for one or two pole 120V or 240V. Maximum branch circuit size: 50 amps.]

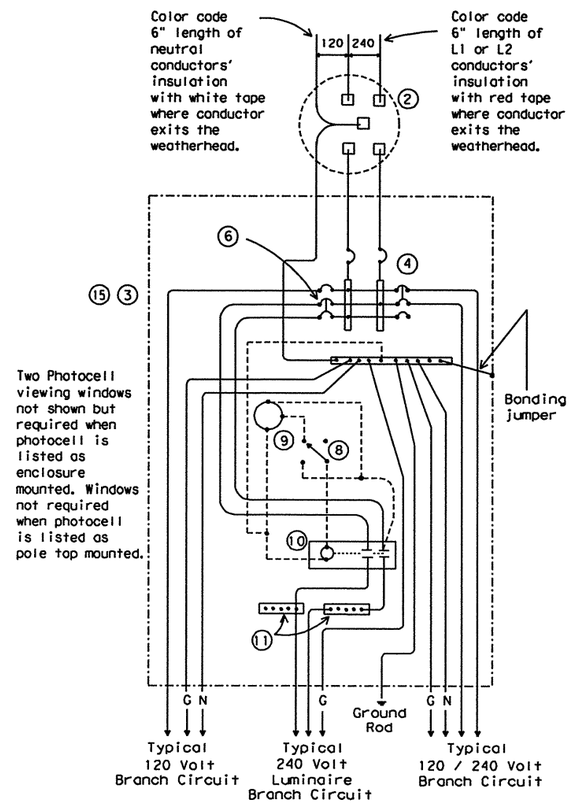

SCHEMATIC TYPE D

120/240 VOLTS - THREE WIRE

[Install photocell and lighting contactor when shown on Electrical Service Data. See Type D service notes.]

TYPE D SERVICE NOTES

Photocell and lighting contactor shall be located either in the same UL type 3R enclosure with load center or, if approved by Engineer, in separate enclosure. There shall be a window on each side of enclosure to allow operation of photocell. Both photocell contactor and breaker area shall have dead front trim. Enclosure, except for RT and PS supports, shall not exceed 36 inches in height or 16 inches in width unless approved by the Engineer. Ty D load center with lighting controls or TY D separate lighting control enclosure shall have power distribution blocks for a minimum of 4, #8 conductors per phase.

STANDARD PLANS
TEXAS DEPARTMENT OF TRANSPORTATION
Traffic Operations Division

ELECTRICAL DETAILS- SERVICE ENCLOSURE & NOTES

ED(5)-03

© TxDOT April 1998	DN: KB	CK: JW	DW: DN	CK: GC	REQ NO.:
REVISIONS 12-00 3-03	STATE DISTRICT	FEDERAL REGION	FEDERAL AID PROJECT		SHEET
	SAT	6	XXX XXXX		315
	COUNTY		CONTROL	SECTION	JOB	HIGHWAY
	BEXAR		2452	01	050	LP 1604

71E

Plotted on: 6/26/2010

DISCLAIMER
The use of this standard is governed by the "Texas Engineering Practice Act". No warranty of any kind is made by TxDOT for any purpose whatsoever. TxDOT assumes no responsibility for the conversion of this standard to other formats or for incorrect results or damages resulting from its use.

Design Filename: p:\74\00\04\design\civil\standards\signals\ED5-03.dgn

DN: CK: DW: CK:

DATE: ACC: FILE:

LEVELS D
1 2 3 4 5 6 7 8
9 10 11 12 13 14 15 16
17 18 19 20 21 22 23 24
25 26 27 28 29 30 31 32
33 34 35 36 37 38 39 40 41 42 43 44 45 46 47 48
49 50 51 52 53 54 55 56 57 58 59 60 61 62 63

DISCLAIMER
The use of this standard is governed by the "Texas Engineering Practice Act". No warranty of any kind is made by TxDOT for any purpose whatsoever. TxDOT assumes no responsibility for the conversion of this standard to other formats or for incorrect results or damages resulting from its use.

Plotted on: 6/26/2010

Design Filename: p:\74\00\04\design\civil\standards\signals\ED5-03.dgn

LEVELS D
1 2 3 4 5 6 7 8
9 10 11 12 22 32 42
33 34 35 36 37 38 39 40 41 42 43 44 45 46 47 48
49 50 51 52 53 54 55 56 57 58 59 60 61 62 63

DATE:
ACC: d58nplc/usr/d580504
FILE:

DN: LR
CK: CW
DW: DN
CK: MT

NOTES:

1. Luminaire conductors shall not be looped through controller cabinet.
2. Electrical system to include an equipment grounding conductor noted here as "G". All exposed metal parts are to be bonded to grounding conductor.
3. Photocell, when required, shall be mounted at top of pole or in enclosure as shown on ED(4) and ED(5) and as required by descriptive code.
4. Roadway lighting fixtures, when required, shall be in accordance with the material and construction methods of the Item, "Roadway Illumination Assemblies" except for the test period for proper operation of the luminaires. Installed roadway lighting luminaires and internally lighted street name signs shall be tested for proper operation as a part of the associated traffic signal system.
5. Internally lighted street name signs (ILSN), when required, shall be in accordance with the Item "Internally Lighted Street Name Signs". Because of the electrical isolation of ILSN hinges, a #12 green grounding conductor shall be run to the ILSN fixture.
6. Install ground rod at alternate location when directed by the Engineer. Maintain a minimum of 8 ft in contact with the earth.
7. Liquidtight flexible metal conduit (LFMC), may be used when meter and service enclosure are mounted 90 to 180 degrees to each other. LFMC shall be same size as service entrance conduit. LFMC shall not exceed 3 ft. and shall be securely supported within one foot of each end. No strap required for a LFMC shorter than 12". Each end of LFMC must have a grounding bushing or be terminated with a grounding fitting. A neutral conductor must be installed within the LFMC. Bend in liquidtight flexible metal conduit shall not exceed 180 degrees.
8. Minimum embedment depth as per Item 627 Treated Timber Poles.
9. Pole to be set plumb.
10. Back fill thoroughly tamped in 6 in. lifts. Place 6 inches additional backfill above grade around pole base to allow for settling, as per Item 627.
11. Excess pole length shall be trimmed from the top at a slope to aid water run off.
12. Gain pole two places for each meter, service, separate or auxiliary enclosure. See ED(4) for details.
13. All illumination and power conductors to be pull tested and megged. Do not meg traffic signal cable.
14. Enclosures are to be locked, and ground box covers are to be bolted before power is applied to the circuit.
15. Conduits entering top of enclosures to be fitted with conduit sealing hub or threaded boss, such as meter hub. Off-set nipple, when required, shall not be zinc-die-pressure cast. All metal conduits not connected to conduit sealing hub, or threaded boss must have a grounding bushing. Terminate bonding jumper to ground bus. All conduits entering enclosures shall be sealed. Silicone shall not be allowed.

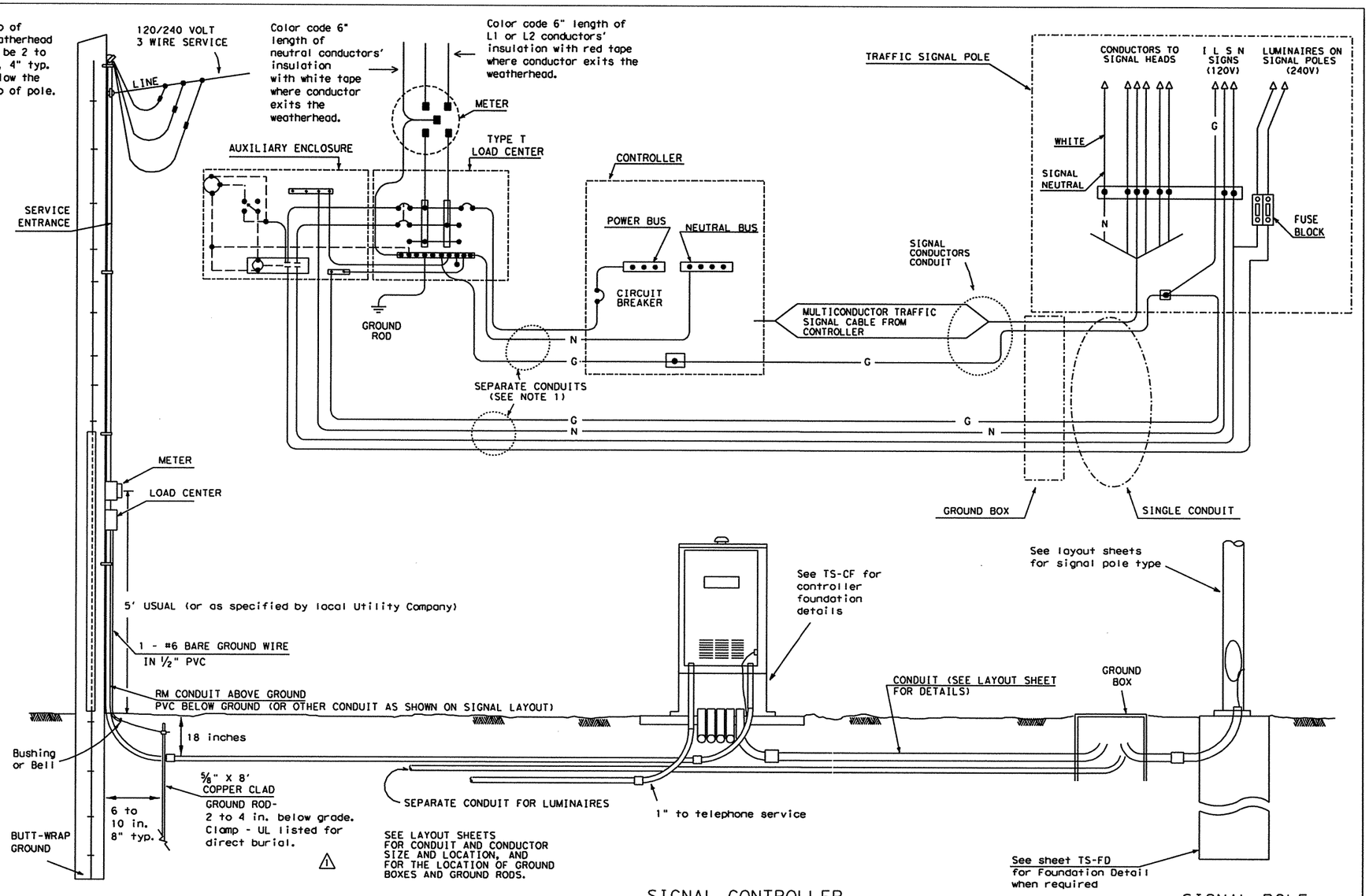

ELECTRICAL SERVICE

(TYPE T TIMBER POLE SHOWN AS EXAMPLE, SEE ELECTRICAL DETAILS, LAYOUT SHEETS, AND ELECTRICAL SERVICE DATA SHEET FOR SERVICE REQUIRED AND FOR DETAILS.)

SIGNAL CONTROLLER

SIGNAL POLE

Unless shown elsewhere in the plans, electrical service data for Types D and T shall be as follows.

ELECTRICAL SERVICE DATA

ELECTRICAL SERVICE DESCRIPTION (SEE ED(4))	SERVICE CONDUIT SIZE (RMC)	SERVICE CONDUCTORS NO./SIZE	SAFETY SWITCH AMPS	MAIN DISCONNECT CKT. BRK. POLE/AMP	TWO-POLE CONTACTOR AMPS ***	PANELBD./ LOADCENTER AMP RATING (MIN)	CIRCUIT NO.	BRANCH CKT. BRK. POLE/AMPS	KVA LOAD
TY D (120/240)070(NS)AL(E)**(*)	1 1/4 ⚠1	3/#4	N/A	2P/70	30	100	T.S. Lighting	1P/50 2P/15	<7.1
TY T (120/240)000(NS)GS(E)**(*)	1 1/4 ⚠1	3/#4	N/A	None	30	70	T.S. Lighting	1P/50 2P/15	<7.1

*** Eliminate photocell, contactor and seperate enclosure if lighting, or internally lighted signs are not required by plans
** See descriptive code in estimate for service support type.
* See descriptive code in estimate for overhead or underground service.

5/03 Revision
⚠1 Revised notes.

STANDARD PLANS
TEXAS DEPARTMENT OF TRANSPORTATION
Traffic Operations Division

ELECTRICAL DETAILS- TYPICAL TRAFFIC SIGNAL SYSTEM DETAILS

ED(7)-03

©TxDOT January 1992	DN-KB	CK- JW	DW-DN	CK- GC	REG NO.:
REVISIONS 4-98 12-00 3-03 5-03	STATE DISTRICT: SAT	FEDERAL REGION: 6	FEDERAL AID PROJECT: XXX XXXX		SHEET: 316
	COUNTY: BEXAR		CONTROL: 2452	SECTION: 01	JOB: 050	HIGHWAY: LP 1604

71G

DISCLAIMER
The use of this standard is governed by the "Texas Engineering Practice Act". No warranty of any kind is made by TxDOT for any purpose whatsoever. TxDOT assumes no responsibility for the conversion of this standard to other formats or for incorrect results or damages resulting from its use.

Plotted on: 6/26/2010

Design Filename: p:\74\00\04\design\civil\standards\signals\ED5-03.dgn

Note: Ells in foundation are rigid metal, size called for on the plans. Extension conduits from these ells may be PVC, provided ends of rigid metal conduits are more than 2 in. below top of concrete foundation. Where extension conduits are metal, grounding bushing must be installed and a bonding jumper properly terminated.

FRONT VIEW

Ty C shown, Ty A similar except that Ty A shall have individual circuit breakers mounted on a equipment mounting panel. CB Handles shall protrude through hinged deadfront trim.

SIDE VIEW

SECTION A-A

ANCHOR BOLT DETAIL

GENERAL NOTES

1. The pedestal service shall be UL type 3R, and shall be constructed of a minimum of 12 guage stainless steel or aluminum as required by descriptive code. Stainless steel shall not be painted. For aluminum, the finish shall be an electrostatic applied polyurethane baked on powder, light green in color, or color as shown elsewhere and as approved by the Engineer. The front of the interior dead front trim shall be permanently labeled, "Danger High Voltage" with OSHA style label. The exterior of the pedestal service door shall be permanently labeled with a placard as to its use (i.e. Roadway Lighting, Traffic Signals, etc.). Placard shall be neat and professional in appearance. Lettering shall be 1" minimum height.
2. Utility Access Door shall have stainless steel piano hinge and provisions for padlocking.
3. Pedestal door shall have stainless steel piano hinge and stainless steel latch with provisions for padlocking.
4. Meter Access shall be hinged and capable of padlocking.
5. All mounting hardware and installation details of services shall be in accordance with utility company specifications. The Contractor is responsible for contacting the local utility company and obtaining their approval of pedestal details prior to making submittal to the Department and prior to constructing the electrical pedestal service. Any changes required by the utility company shall be noted on the submittals.
6. Meter Socket shall be a minimum of 100 amp rating and shall comply with the local utility requirements.
7. Photoelectric Control shall meet the requirements as shown on ED(5). Shield to control stray light is allowable. The Contractor shall be responsible for proper operation of the photo-electric control. The Contractor shall move and/or adjust or shield the photocell from stray or ambient nighttime light or shall make any other adjustments required for proper operation. The photocell shall face North when practicable. Unless otherwise shown on the plans, the photocell shall turn on the illumination system at 1.0 +(-) 0.5 foot-candle and turn off the illumination system at two footcandles higher than turn on.
8. The Control Station (H-O-A Switch) shall be as shown on ED(5) except that H-O-A Switch operating handle shall protrude through hinged deadfront trim and NEMA 1 enclosure will not be required.
9. Concrete for pedestal service foundation shall be class A or C and shall be in accordance with Item 420, "CONCRETE STRUCTURES", except that concrete will not be paid for directly but shall be considered subsidiary to Item 628, "ELECTRICAL SERVICES".
10. Reinforcing steel shall be #4 rebar in accordance with Item 440, "REINFORCING STEEL".
11. Anchor bolts shall be A36M55 in accordance with Item 449, "ANCHOR BOLTS". Anchor bolts shall be 1/2 inch x 12 inches x 4 inches (dia. x length x hook length).
12. All conduit and conductors attached to the pedestal service and within 12 inches of the pedestal service will not be paid for directly, but shall be subsidiary to the pedestal service. All service conduit and conductors from the utility company transformer to a point 12 inches from the pedestal service shall be paid for separately. Service conduit shall be the size and type as shown in the Electrical Service Data.
13. Dimensions may vary to accomodate required equipment, utility company requirements, or manufacturer's standard equipment dimensions. The Contractor shall submit to the Engineer for approval, six (6) copies of brochures and/or drawings of the pedestal service to be supplied, including actual dimensions, and a paint color sample.
14. A separate enclosure as shown on ED(4) or ED(5) for photocell shall not be used for pedestal services. Photocell shall be installed as shown here.
15. The pedestal door shall have a mechanically attached data pocket on the inside. Pocket shall be either metal or thermoplastic and shall measure at least 12 inches by 12 inches. The Contractor shall prepare and submit a schematic drawing unique to an individual service. The approved drawing shall be laminated and placed in the document pocket of the service at the time of shipment to the job site. All applicable wiring diagrams and plan sheet layouts for all equipment and branch breaker circuits supplied by that service shall also be laminated and placed in the document pocket prior to shipping.
16. ⚠1 Ground rod clamp to be UL listed for direct burial. All non-conductive coating to be removed from ground rod at clamp location. Ground rod wire to be #6 AWG solid copper. Metal conduit ells to have grounding bushing and bonding jumpers correctly installed.
17. All conduits entering enclosures from underground must be sealed. Silicone shall not be allowed.
18. All conductors shall be megged and pull tested. Traffic signal cable not to be megged after connection, as electronics will be damaged.
19. Top of concrete foundation to be finished in a neat and workman like manner. If leveling washers are used, no more than 1/8 in. height shall be used at any one corner. Maximum dip or rise in foundation is not to exceed 1/8 in per foot. When properly installed, top of service enclosure shall read level front to back and side to side within 1/4 in. Rocking or movement of the service enclosure shall be repaired by the contractor at no cost to the state.
20. Liquidtight flexible metal conduit shall not be allowed on PS type services.

LEGEND

1. METER SOCKET, (when required)
2. METER SOCKET WINDOW, (when required)
3. EQUIPMENT MOUNTING PANEL
4. PHOTO ELECTRIC CONTROL WINDOW, (when required)
5. HINGED DEADFRONT TRIM
6. LOAD SIDE CONDUIT AREA
7. LINE SIDE CONDUIT AREA
8. UTILITY ACCESS DOOR, with handle
9. PEDESTAL DOOR
10. HINGED METER ACCESS
11. CONTROL STATION (H-O-A Switch)
12. MAIN DISCONNECT
13. BRANCH CIRCUIT BREAKERS

5/03 Revision
⚠1 Revised notes.

STANDARD PLANS
TEXAS DEPARTMENT OF TRANSPORTATION
Traffic Operations Division

ELECTRICAL DETAILS
ELECTRICAL SERVICE SUPPORT
PEDESTAL SERVICE TYPE PS

ED(8)-03

©TxDOT April 1998	DN: KB	CK: JW	DW: DN	CK: GC	HEG NO.:
REVISIONS 12-00 3-03 5-03	STATE DISTRICT	FEDERAL REGION 6	FEDERAL AID PROJECT 2452-01-058		SHEET 317
	COUNTY	CONTROL	SECTION	JOB	HIGHWAY

71H

LEVELS / DN: CK: DW: CK: / DATE: ACC: FILE:

DISCLAIMER
The use of this standard is governed by the "Texas Engineering Practice Act". No warranty of any kind is made by TxDOT for any purpose whatsoever. TxDOT assumes no responsibility for the conversion of this standard to other formats or for incorrect results or damages resulting from its use.

Plotted on: 6/26/2010

Design Filename: p:\74\00\04\design\civil\standards\signals\ED5-03.dgn

LEVELS 'D'
1 2 3 4 5 6 7 8
17 18 19 20 21 22 23 24
33 34 35 36 37 38 39 40 41 42 43 44 45 46 47 48
49 50 51 52 53 54 55 56 57 58 59 60 61 62 63

DATE:
ACC:
FILE:
DN:
CK:
DW:
CK:

1. DUCT CABLE

A. Duct cable shall be placed by the open trench method at a minimum depth of 18 inches. Bends in duct cable shall be made in the manner recommended by the manufacturer; minimum bending radius shall be 20 inches for 1 1/2 inch duct and 26 inches for 2 inch duct. Unless otherwise approved by the Engineer in writing, duct cable shall be 2 inch diameter. Handling of duct cable reels and installation of duct shall be as recommended by the manufacturer. Duct for duct cable is designed as a conduit system and shall be considered as such in NEC interpretations. Conductors shall not be spliced within a duct. Duct entering a ground box or foundation shall be coupled to a RMC elbow.

B. Duct cable shall have factory installed conductors. AWG size of electrical conductors shall be as called for in the plans or as required by the National Electrical Code. Conduit bid as High Density Polyethylene (HDPE) conduit shall meet the requirements of duct cable except that the conduit shall be supplied without factory installed conductors. HDPE conduit may be substituted for duct cable. After HDPE conduit is installed, conductors shall be installed. AWG size of electrical conductors shall be as called for in the plans.

C. Duct cable shall be extended through conduit casings in one continuous length without connection to the casing.

D. After duct cable has been installed, a pull test will be made on conductors. If conductors cannot be freely pulled, Contractor shall replace or otherwise adjust installation to free up the conductors. Duct cable ends shall be sealed with foam electrical conduit sealant or with heat-shrinking material after pull test is completed.

E. Sufficient clearance shall be left between each conduit ell so the bonding bushings may be correctly installed. Conduit cover is shown as 18 inches minimum, where run under a road, the minimum cover requirement is 24 inches.

F. All duct splices shall be by means of UL listed fittings, threaded duct with PVC threaded connector or UL listed tiewrap fitting or central Fusamatic electrically heated fusing conduit coupling installed in accordance with the manufacturer's instructions and approved by the Engineer. Glue on connectors, water pipefittings and heat shrink tubing splices will not be allowed.

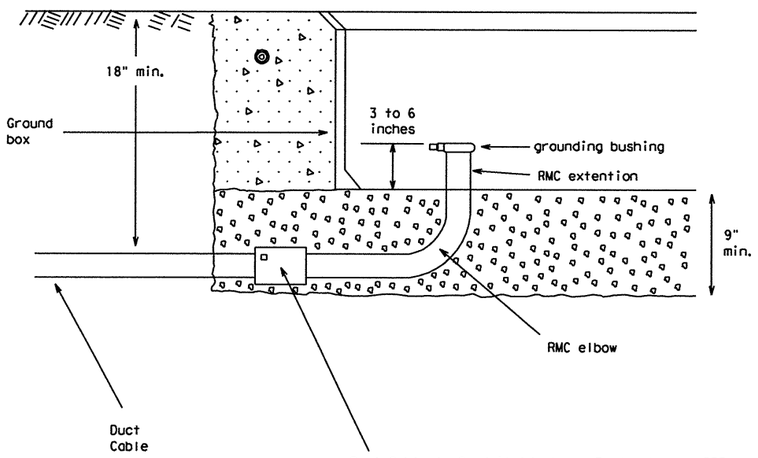

When the upper end of an RMC Ell does not enter the ground box, it may be extended with a Sch-40 PVC conduit nipple and bell end, provided there is 18" of cover over all parts of the elbow. If not, a rigid extension and ground bushing is required.

Gravel bed is to be a min, of 9 inches deep, placed under and not in the ground box. Gravel shall not encroach into the interior of the box.

DUCT CABLE AT GROUND BOX

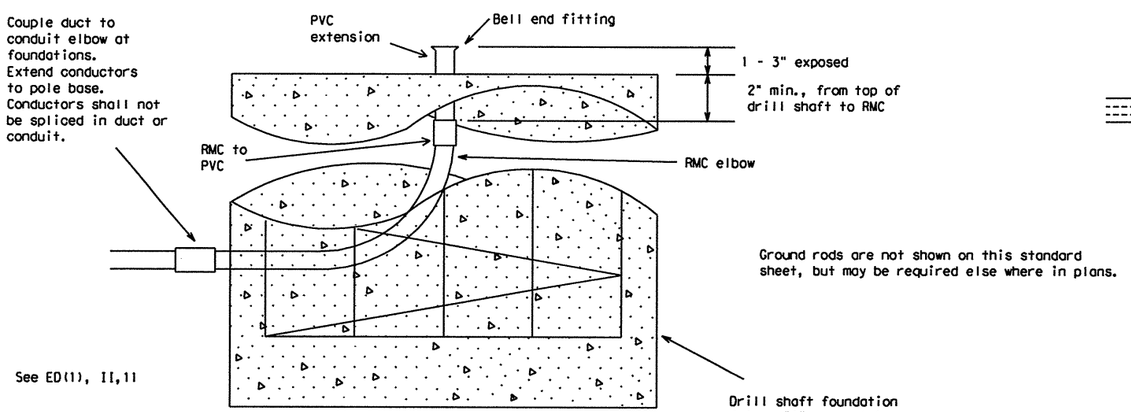

Ground rods are not shown on this standard sheet, but may be required else where in plans.

DUCT CABLE AT FOUNDATION

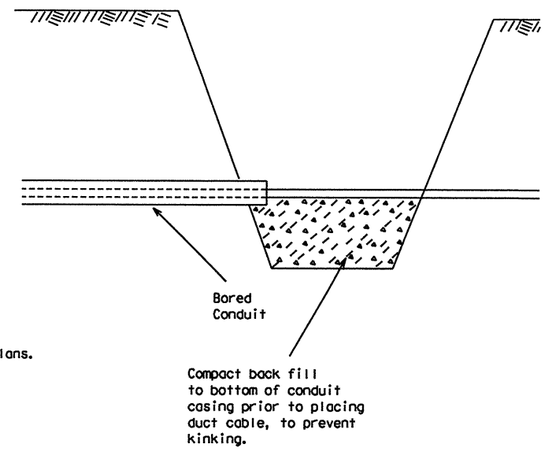

BORE PIT DETAIL

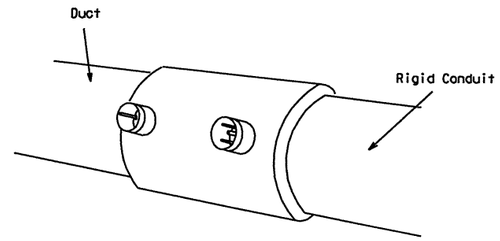

Central Fuseamatic

Electrically Heated Fusing Conduit Coupling

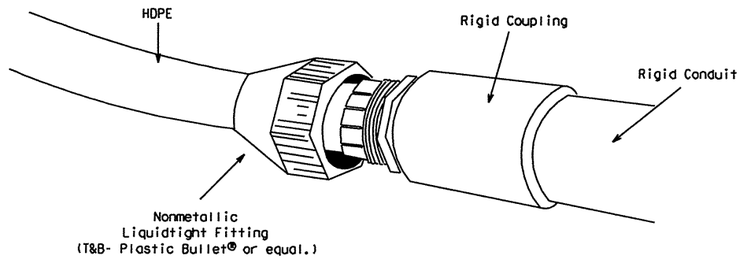

EXAMPLES OF PROPER CONNECTIONS

STANDARD PLANS
TEXAS DEPARTMENT OF TRANSPORTATION
Traffic Operations Division

ELECTRICAL DETAILS- DUCT CABLE

ED(10)-03

©TxDOT April 1998

DN-KB	CK-JW	DW-DN	CK-GC	MEG NO.1

REVISIONS	STATE DISTRICT	FEDERAL REGION	FEDERAL AID PROJECT	SHEET
12-00	SAT	6	XXX XXXX	318
3-03	COUNTY		CONTROL / SECTION / JOB	HIGHWAY
	BEXAR		2452 / 01 / 050	LP 1604

71K

DISCLAIMER
The use of this standard is governed by the "Texas Engineering Practice Act". No warranty of any kind is made by TxDOT for any purpose whatsoever. TxDOT assumes no responsibility for the conversion of this standard to other formats or for incorrect results or damages resulting from its use.

Plotted on: 6/26/2010

Design Filename: p:\74\00\04\design\civil\standards\signals\ED5-03.dgn

DISPLAYED
1 2 3 4 5 | 9 10 11 12 13 14 15 16
17 18 19 20 21 22 23 24 25 26 27 28 29 30 31 32
33 34 35 36 37 38 39 40 41 42 43 44 45 46 47 48
49 50 51 52 53 54 55 56 57 58 59 60 61 62 63

ACC:

GROUND BOX - Type - Battery Box

A. MATERIALS

1. Battery box ground boxes shall be constructed such that it will be possible to install and accomodate up to 4 batteries measuring 8" x 13.5" x 10" (W x L x D).
2. All battery box ground boxes and covers shall be permanently marked either by impress or by permanent ink, with manufacturer's model number and manufacturer's name or logo.
3. Covers shall be bolted down, and bolt holes in the box shall be arranged to drain dirt.
4. Battery box ground boxes shall meet the following requirements:
   a. Battery box cover and cover ring will be manufactured from polymer concrete reinforced with continuous strands of woven or stitched borosilicate fiberglass cloth. The polymer concrete shall be made from catalyzed polyester resin, sand and aggregate, and shall have a minimum compressive strength of 11,000 psi. Polymer concrete containing chopped fiberglass or fiberglass reinforced plastic is not acceptable.
   b. Battery box ground box walls will be manufactured from fiberglass reinforced plastic reinforced with continuos strands of woven or stitched borosilicate fiberglass cloth. The fiberglass reinforced plastic shall be made from catalyzed polyester resin, lightweight filler and reinforced with woven roving and shall have a minimum compressive strength of 7,500 psi.
   c. Minimum inside dimensions shall be at least as follows (width x length x depth): Battery box shall be at least 15 1/4 inches x 28 1/4 inches x 14 1/2 inches.
   d. Bottom edge of box or extension shall be footed with a minimum 1 1/2 inch flange.
   e. Battery ground boxes shall withstand 600 lbs. per sq. ft. applied over the entire sidewall with less than 1/4 inch deflection per foot length of box. Ground boxes and covers shall withstand a test loading of 20,000 lbs. over a 10 inch by 20 inch area centered on the cover with less than 1/2 inch deflection. Battery ground boxes and covers shall meet Western Underground Standards 3.6. Manufacturer shall supply certification by an independent laboratory or sealed by a Texas-Licensed Professional Engineer.
   f. Covers shall be 2 inch thick polymer concrete. All hardware shall be stainless steel. Cover shall be secured with two 1/2 inch stainless steel bolts. Bolts shall be self-retaining and shall withstand a minimum of 70 ft-lbs. torque and shall have a minimum 750 lbs. straight pull out strength. Nuts shall be floating and shall provide a minimum of 1/2 inch movement from the center of the nut. Covers shall be skid resistant, minimum 0.5 coefficient of friction. Covers shall be interchangeable between manufacturers and shall conform to the dimensions shown herein. Unless otherwise approved by the Engineer, cover shall be legibly labeled, "Traffic Signals Danger High Voltage" in minimum 1 inch letters.
   g. The battery box shall be supplied with predrilled holes to accept 3/8 inch stainless steel rods. The holes shall be installed 1 1/2 inches (+/- 1/4 inches) above the bottom edge of the box along the length of the box at 3 1/2 inch centers beginning 4 1/2 inches from the edge of the box.
   h. A minimum of seven 3/8 inch stainless steel rods threaded on both ends shall come equipped to be inserted in the predrilled holes to serve as a rack sufficient to accommodate up to four batteries. The rods shall be secured in place utilizing 3/8" stainless steel (s.s.) nuts and 3/8" X 1" s.s. flat washers.
   i. Ground boxes of the type specified above shall meet the requirements shown above. The Contractor will be permitted to furnish like materials of any manufacturer provided they are of equal quality and comply with the specifications.
   j. Two 3/8" plastic sheets measuring a nominal 6" x 24" shall be supplied which are to be placed on the secured rods upon which the batteries (supplied by others) are to be set.
   k. A minimum of four battery "bell jars" and respective tie down straps are to be supplied. These bell jars are inverted over the batteries and strapped to the batteries.

B. CONSTRUCTION METHODS

1. Battery box ground boxes shall be set on a 9 inch (minimum) bed of coarse No. 1 aggregate as defined by Item 421. Gravel shall be in place prior to setting box and conduits shall be capped. Any gravel or dirt in conduit shall be removed.
2. Construction of an apron encasing the battery box ground box including concrete and reinforcing steel is required and shall not be paid for directly but shall be subsidiary to the ground box. Reinforcing steel may be field bent. Concrete for aprons shall be considered miscellaneous concrete for testing purposes. Aprons shall be cast in place.
3. Any holes cut into the sidewall of battery box ground boxes shall be accomplished using a round hole saw or other method approved by the Engineer.

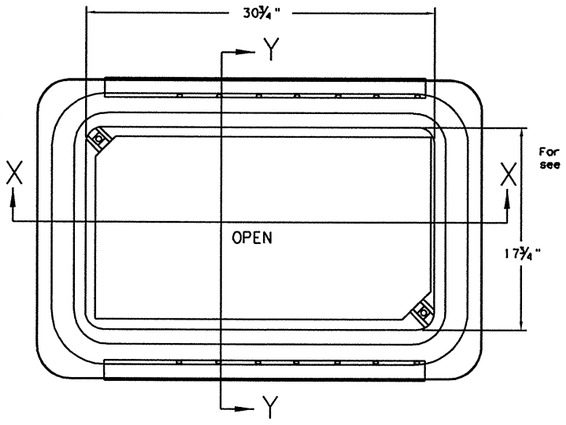

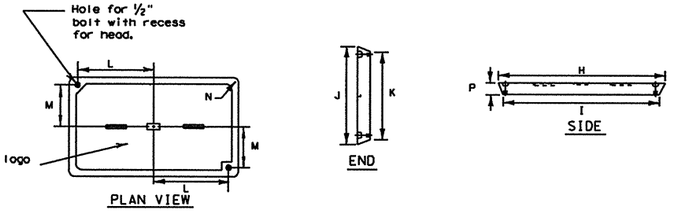

GROUND BOX COVER

GROUND BOX COVER DIMENSIONS								
BOX SIZE	DIMENSIONS (INCHES)							
	H	I	J	K	L	M	N	P
Battery box	30 ½	30 ¼	17 ½	17 ¼	13 ¼	6 ¾	1 ⅜	2

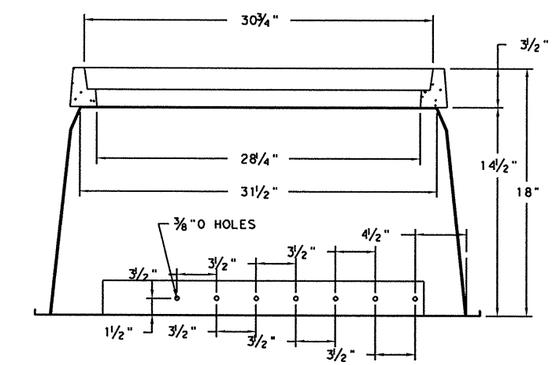

SECTION X-X

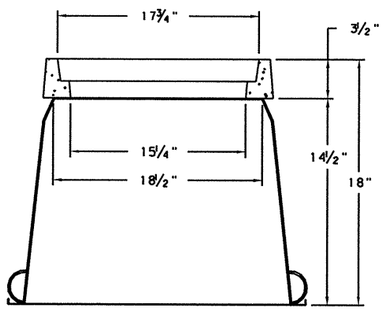

SECTION Y-Y

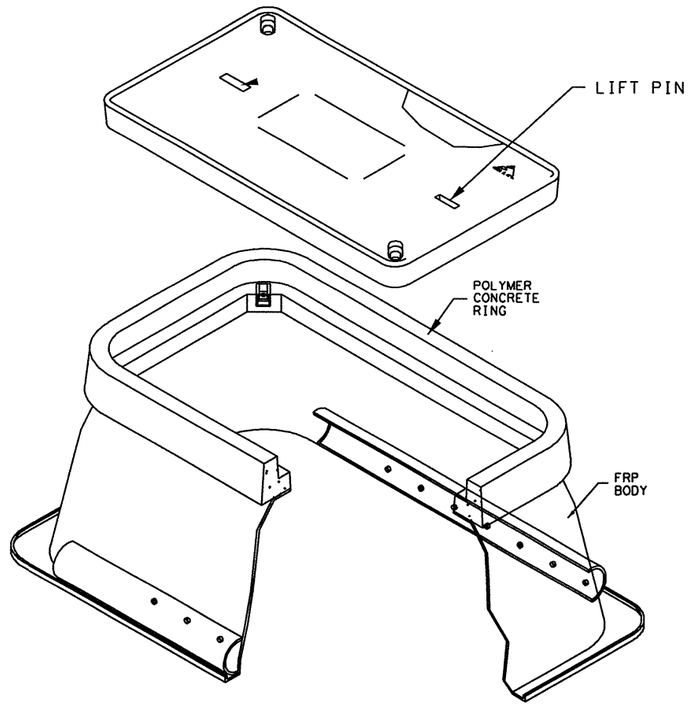

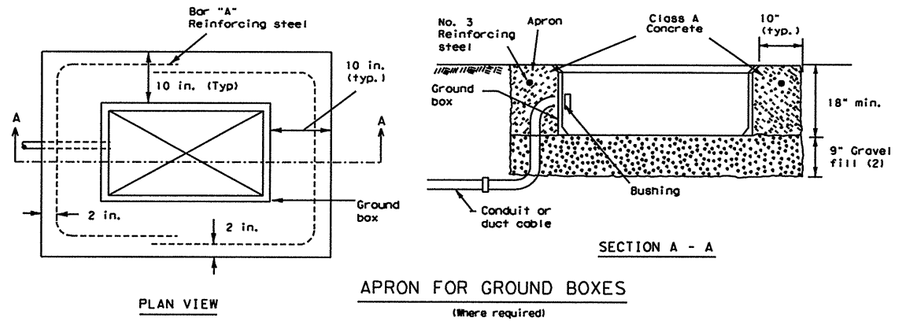

APRON FOR GROUND BOXES
(Where required)

(1) Place gravel "under" the box, not "in" the box. Gravel should not encroach on the interior volume of the box.
(2) Install bushing on the upper end of all ells.
(3) All conduits shall be installed in a neat and workmanlike manner.

STANDARD PLANS
Texas Department of Transportation
Traffic Operations Division

ELECTRICAL DETAILS GROUND BOXES/ BATTERY BOX

ED(13)-03

©TxDOT May 2003		DN: HW	CK: BV	DW: HW	CK: CAL
REVISIONS	STATE DISTRICT	FEDERAL REGION	FEDERAL AID PROJECT		SHEET
	SAT	6	XXX XXXX		319
	COUNTY		CONTROL	SECTION	JOB	HIGHWAY
	BEXAR		2452	01	050	LP 1604

71N

DISCLAIMER:
The use of this standard is governed by the "Texas Engineering Practice Act". No warranty of any kind is made by TxDOT for any purpose whatsoever. TxDOT assumes no responsibility for the conversion of this standard to other formats or for incorrect results or damages resulting from its use.

Plotted on: 6/26/2010

STRAIN POLE DESCRIPTION	Pole Type	Foundation Type	Maximum Permissible Span Wire Load (lbs.)
26' Pole	A	36-A	5200
30' Pole	B	36-A	4600
30' Pole with Lum.	B	36-A	4400
30' Pole with 20' Mast Arm	C	36-B	5600
30' Pole with 24' Mast Arm	C	36-B	5500
30' Pole with 28' Mast Arm	C	36-B	5300
30' Pole with 32' Mast Arm	C	36-B	5100
30' Pole with 36' Mast Arm	C	36-B	4900
30' Pole with 20' Mast Arm & Lum.	C	36-B	5300
30' Pole with 24' Mast Arm & Lum.	C	36-B	5200
30' Pole with 28' Mast Arm & Lum.	C	36-B	5000
30' Pole with 32' Mast Arm & Lum.	C	36-B	4800
30' Pole with 36' Mast Arm & Lum.	C	36-B	4500
34' Pole	D	36-B	5600
34' Pole with Lum.	D	36-B	5400

② Numbers on charts indicate the number of signal heads on the span. The total span wire design load is based on one 5-section head and one or more additional 3-section head(s). Design wind pressures on cables are assumed as 1.0 lb/ft. Weight of span wire cables (one per signal head) is assumed as 0.65 lb/ft which includes an allowance for conductor cables and miscellaneous hardware. The effect of the sway cable on load distribution is ignored as it is assumed to break at design wind conditions. When a pole supports 2 spans, the span wire design loads for both spans should be added vectorially to determine the design load for that pole.

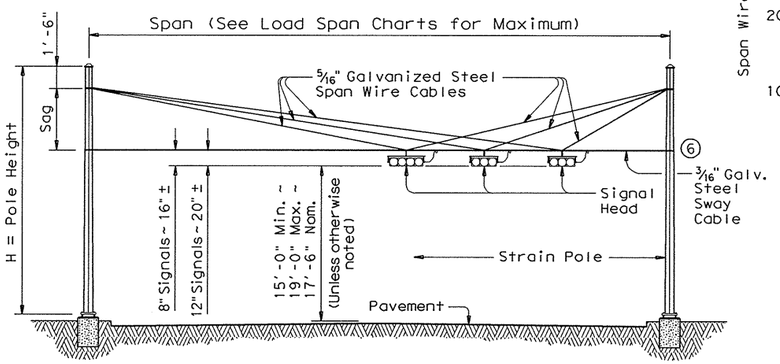

STRAIN POLE ELEVATIONS HORIZONTAL SIGNALS

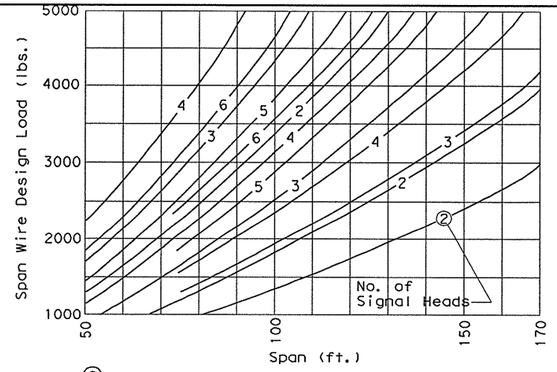

② SIGNALS WITH 12-INCH LENS

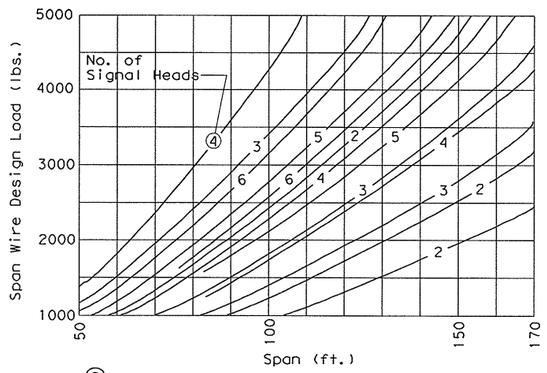

② SIGNALS WITH 8-INCH LENS

Signal Head Type	Wt. Per Head	Wind Area ◆
5-Section, 12" Lens	125 lbs	9.6 sq. ft.
5-Section, 8" Lens	70 lbs	4.8 sq. ft.
3-Section, 12" Lens	75 lbs	5.64 sq. ft.
3-Section, 8" Lens	45 lbs	3.0 sq. ft.

◆ Effective projected design wind area (actual area times drag coefficient)

——— Sag = 4'-6" (26' or 30' Pole)
——— Sag = 8'-0" (30' or 34' Pole)
——— Sag = 11'-6" (34' Pole)

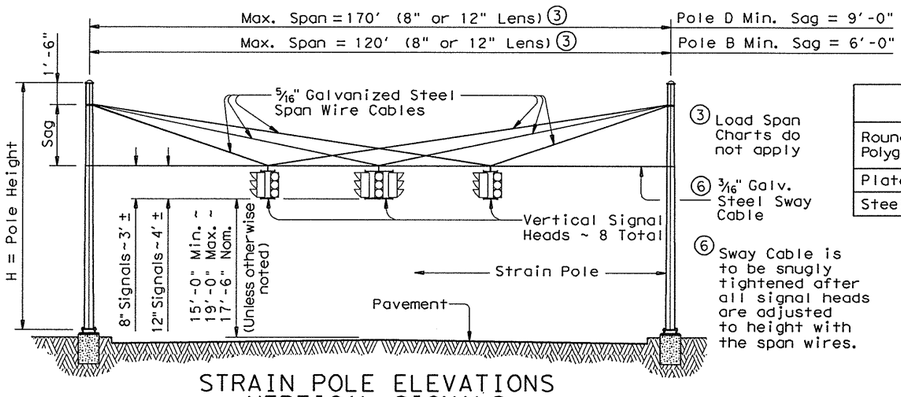

STRAIN POLE ELEVATIONS VERTICAL SIGNALS

(Mast arms are not used with vertical signals)

MATERIALS	
Round Shafts or Polygonal Shafts	ASTM A595 GR A, ASTM A570 GR50, ASTM A607 GR50, ASTM A572 GR50 or A36M50
Plates ⑦	ASTM A36 OR A572 GR50 OR A595 GR A OR A36M50
Steel Cable	ASTM A475, 7 Wire, Utilities Grade

⑦ Any of the materials listed for plates may be used where the drawings do not specify a particular ASTM designation.

Pole Type	ROUND POLES				POLYGONAL POLES			
	D_B	D_T	⑤thk	H	D_B	D_T	⑤thk	H
	in.	in.	in.	ft.	in.	in.	in.	ft.
A	12.5	8.9	.239	26	13.0	9.0	.239	26
B	13.5	9.3	.239	30	14.0	9.0	.239	30
C	15.5	11.3	.239	30	16.0	11.0	.239	30
D	15.5	10.7	.239	34	16.0	11.0	.239	34

⑤ Thickness shown are minimum, thicker materials may be used.

D_B = Pole Base O.D. D_T = Pole Top O.D. H = Pole Height

SHIPPING PARTS LIST

Poles (Without Traffic Signal Arm)

Pole Type	Strain poles with Luminaire: Ship each pole with the following hardware attached: handhole at base, pole cap, 2 clamp-on simplex and 1 pipe plug.			Strain poles without Luminaire: Ship each pole with the following hardware attached: handhole at base, pole cap and 1 pipe plug.		
	Description	Designation	Quantity	Description	Designation	Quantity
A				26' Strain Pole	SP 26 A-80	
B	30' Strain Pole	SPL 30 B-80		30' Strain Pole	SP 30 B-80	
D	34' Strain Pole	SPL 34 D-80		34' Strain Pole	SP 34 D-80	

Poles (With Traffic Signal Arm)

Pole Type	Strain poles with Luminaire: Ship each pole with the following hardware attached: handhole at base, pole cap, clamp-on simplex and 3 pipe plugs.			Strain poles without Luminaire: Ship each pole with the following hardware attached: handhole at base, pole cap and 3 pipe plugs.		
	Description	Designation	Quantity	Description	Designation	Quantity
C	30' SPw/TS Arm	SPL 30 C-80		30' SPw/TS Arm	SP 30 C-80	

Traffic Signal Arms (For Type C poles)

Nominal Arm Length	Type I Arm (1 Signal): Ship each Type I Arm with the following hardware attached: 2 CGB Connectors, 1 clamp with bolts and washers		Type II Arm (2 Signals): Ship each Type II Arm with the following hardware attached: ① 1 Bracket Assembly, 3 CGB Connectors and 1 clamp with bolts and washers		Type III Arm (3 Signals): Ship each Type III Arm with the following hardware attached: ① 2 Bracket Assemblies, 4 CGB Connectors and 1 clamp with bolts and washers	
ft.	Designation	Quantity	Designation	Quantity	Designation	Quantity
20	20I-80					
24	24I-80		24 II-80			
28	28I-80		28 II-80			
32			32 II-80		32 III-80	
36			36 II-80		36 III-80	

Anchor Bolt Assemblies (1 per pole)

Anchor Bolt Diameter	Anchor Bolt Length	Templates may be removed for shipment. Quantity
1 3/4"	3'-10"	
2"	4'-3"	

Each Anchor Bolt Assembly consists of the following: Top and Bottom templates, 4 anchor bolts, 8 nuts, 8 flat washers, 4 lock washers and 4 nut anchor devices (Type 2) per Standard Drawing "TS-FD".

Luminaire Arms

Nominal Arm Length	Quantity
8' Arm	

① Supply Option "A" unless otherwise noted. See Sheet "DMA-80"

Texas Department of Transportation
Traffic Operations Division

TRAFFIC SIGNAL SUPPORT STRUCTURES STRAIN POLE ASSEMBLIES

(80 MPH WIND ZONE)

SP-80(1)-96

© TxDOT March 1996

DN: TXDOT	CK: TXDOT	DW: TXDOT	CK: TXDOT

REVISIONS	CONT	SECT	JOB	HIGHWAY
6-96	2452	01	050	LP 1604
	DIST	COUNTY		SHEET NO.
	SAT	BEXAR		320

Design Filename: p:\74\00\04\design\civil\standards\signals\SP80.DGN
DATE:
FILE:

DISCLAIMER: The use of this standard is governed by the "Texas Engineering Practice Act". No warranty of any kind is made by TxDOT for any purpose whatsoever. TxDOT assumes no responsibility for the conversion of this standard to other formats or for incorrect results or damages resulting from its use.

Plotted on: 6/26/2010

Design Filename: p:\74\00\04\design\civil\standards\signals\SP80.DGN

DATE:
FILE:

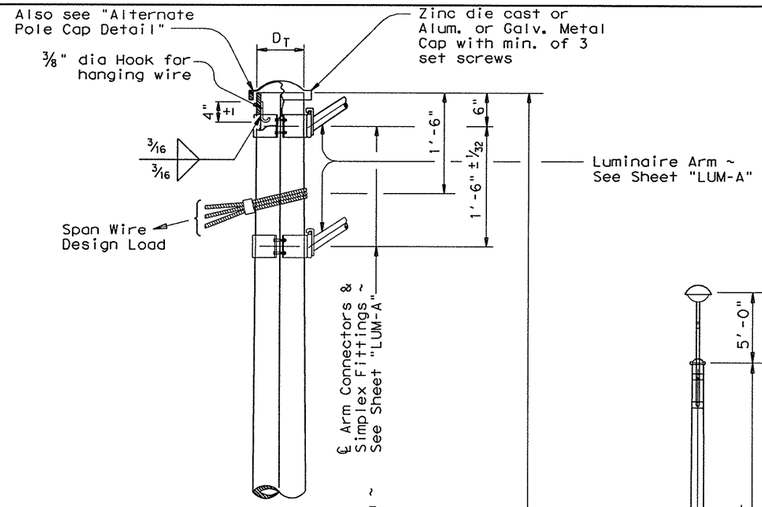

DETAIL A

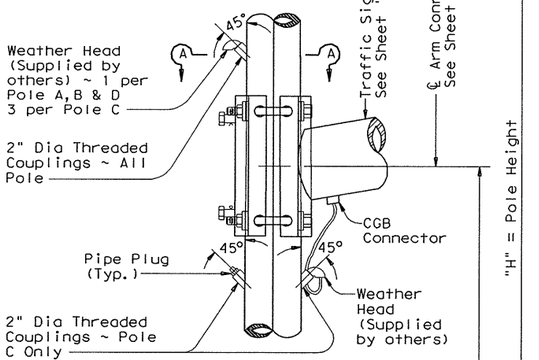

DETAIL B

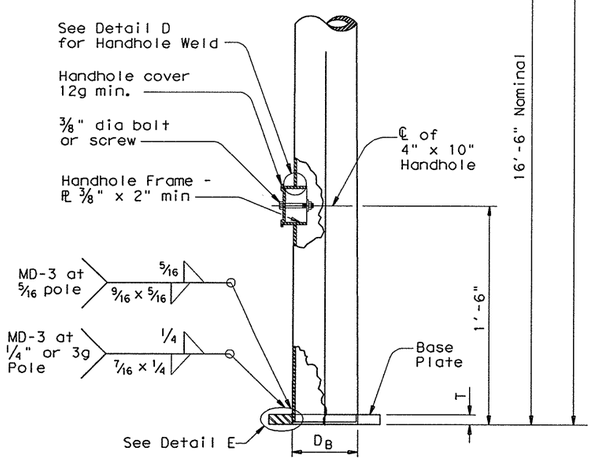

POLE ELEVATION

DETAIL C

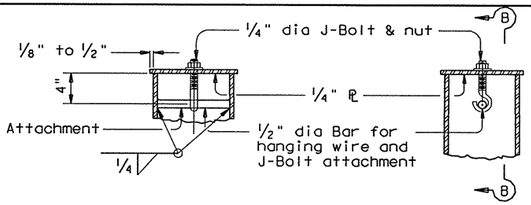

SECTION B-B

ALTERNATE POLE CAP DETAIL

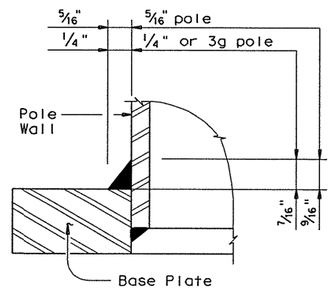

DETAIL E

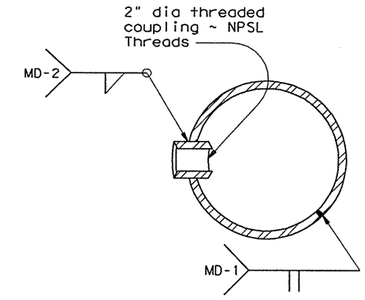

SECTION A-A

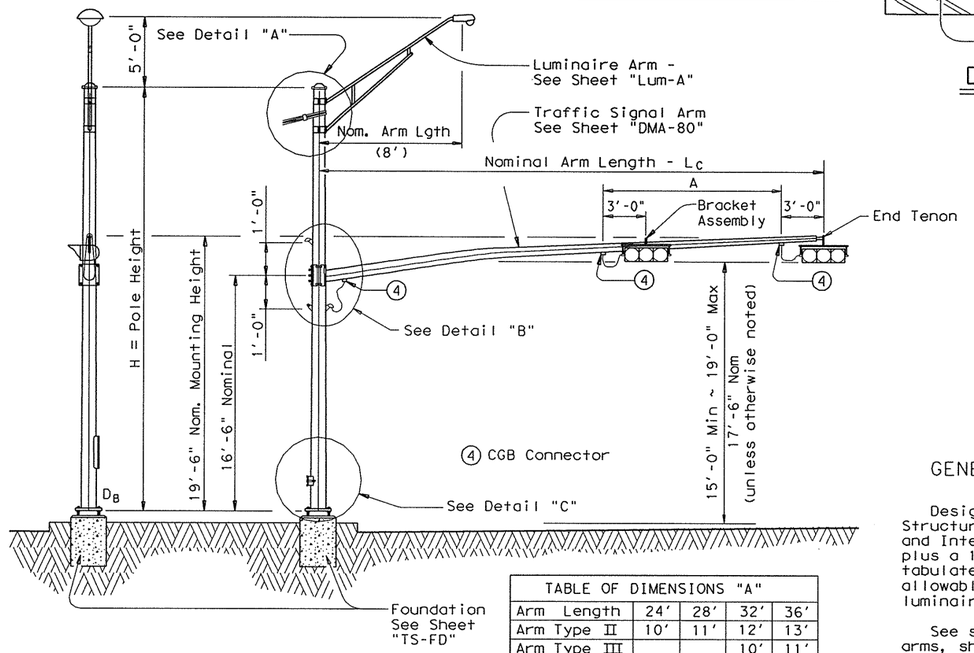

STRUCTURE ASSEMBLY

TABLE OF DIMENSIONS "A"				
Arm Length	24'	28'	32'	36'
Arm Type II	10'	11'	12'	13'
Arm Type III			10'	11'

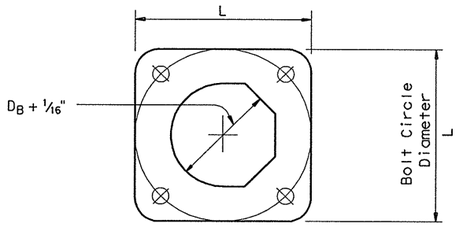

BASE PLATE PLAN

Foundation Type	Anchor Bolt Diameter	Bolt Hole Diameter	Bolt Circle Diameter	Base ℄ Dim. L x T
36-A	1 3/4"	2"	19"	19" x 1 3/4"
36-B	2"	2 1/4"	21"	21" x 2"

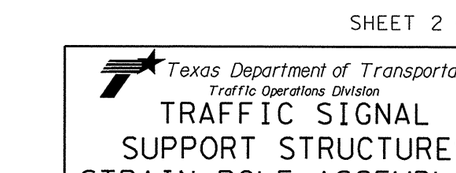

DETAIL D

GENERAL NOTES:

Design conforms to 1994 AASHTO Standard Specifications for Structural Supports for Highway Signs, Luminaires, and Traffic Signals and Interim Specifications thereto. Design Wind Speed equals 80 mph plus a 1.3 gust factor. The maximum permissible span wire design loads tabulated are calculated at a stress load of 1.4 times the basic allowable stress. A simultaneous wind on the pole, mast arm, and luminaire is also included.

See standard sheet "DMA-80" for details of clamp-on traffic signal arms, sheet "MA-C" for traffic signal arm connection details, sheet "LUM-A" for luminaire arm and connection details, and sheet "TS-FD" for anchor bolt and foundation details.

Fabrication shall be in accordance with the Specifications and with the details, dimensions, and weld procedures shown herein. Weld references call for preapproved weld procedures which the Fabricator must obtain prior to fabrication. Materials, fabrication tolerances, and shipping practices shall meet the requirements of this sheet and the Specifications.

Unless otherwise noted, all parts shall be galvanized in accordance with the Specifications.

Special design require submission of shop drawings in accordance with the item "Steel Structures".

Texas Department of Transportation
Traffic Operations Division

TRAFFIC SIGNAL SUPPORT STRUCTURES STRAIN POLE ASSEMBLIES

(80 MPH WIND ZONE)

SP-80(2)-96

©TxDOT March 1996

DN: TXDOT	CK: TXDOT	DW: TXDOT	CK: TXDOT

REVISIONS	CONT	SECT	JOB	HIGHWAY
6-96	2452	01	050	LP 1604
	DIST	COUNTY		SHEET NO.
	SAT	BEXAR		321

1208

DISCLAIMER: The use of this standard is governed by the "Texas Engineering Practice Act". No warranty of any kind is made by TxDOT for any purpose whatsoever. TxDOT assumes no responsibility for the conversion of this standard to other formats or for incorrect results or damages resulting from its use.

Plotted on: 7/7/2010

Design Filename: P:\74\00\04\design\Civil\Standards\Signals\SMA-80.dgn

DATE:
FILE:

Arm Length	ROUND POLES					POLYGONAL POLES					Foundation Type
	D_B	D_{19}	D_{24}	D_{30}	① thk	D_B	D_{19}	D_{24}	D_{30}	① thk	
ft.	in.	in.	in.	in.	in.	in.	in.	in.	in.	in.	
20	10.5	7.8	7.1	6.3	.179	11.5	8.5	7.7	6.8	.179	30-A
24	11.0	8.3	7.6	6.8	.179	12.0	9.0	8.2	7.3	.179	30-A
28	11.5	8.8	8.1	7.3	.179	12.5	9.5	8.7	7.8	.179	30-A
32	12.5	9.8	9.1	8.3	.179	12.0	9.0	8.2	7.3	.239	30-A
36	12.0	9.3	8.6	7.8	.239	12.5	9.5	8.7	7.8	.239	36-A
40	12.0	9.3	8.6	7.8	.239	13.5	10.5	9.7	8.8	.239	36-A
44	12.5	9.8	9.1	8.3	.239	14.0	11.0	10.2	9.3	.239	36-A
48	13.0	10.3	9.6	8.8	.239	15.0	12.0	11.2	10.3	.239	36-A

Arm Length	ROUND ARMS					POLYGONAL ARMS				
	L_1	D_1	D_2	① thk	Rise	L_1	D_1	② D_2	① thk	Rise
ft.	ft.	in.	in.	in.		ft.	in.	in.	in.	
20	19.1	6.5	3.8	.179	1'-9"	19.1	7.0	3.5	.179	1'-8"
24	23.1	7.5	4.3	.179	1'-10"	23.1	7.5	3.5	.179	1'-9"
28	27.1	8.0	4.2	.179	1'-11"	27.1	8.0	3.5	.179	1'-10"
32	31.0	9.0	4.7	.179	2'-1"	31.0	9.0	3.5	.179	2'-0"
36	35.0	9.5	4.6	.179	2'-4"	35.0	10.0	3.5	.179	2'-1"
40	39.0	9.5	4.1	.239	2'-8"	39.0	9.5	3.5	.239	2'-3"
44	43.0	10.0	4.1	.239	2'-11"	43.0	10.0	3.5	.239	2'-6"
48	47.0	10.5	4.1	.239	3'-4"	47.0	11.0	3.5	.239	2'-9"

D_B = Pole Base O.D.
D_{19} = Pole Top O.D. with no Luminaire and no ILSN
D_{24} = Pole Top O.D. with ILSN w/out Luminaire
D_{30} = Pole Top O.D. with Luminaire
D_1 = Arm Base O.D.
D_2 = Arm End O.D.
L_1 = Shaft Length
L = Nominal Arm Length

① Thickness shown are minimums, thicker materials may be used.

② D_2 may be increased by up to 1" for polygonal arms.

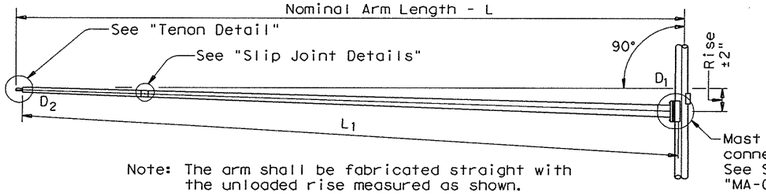

Note: The arm shall be fabricated straight with the unloaded rise measured as shown.

TRAFFIC SIGNAL ARM

(Fixed Mount)

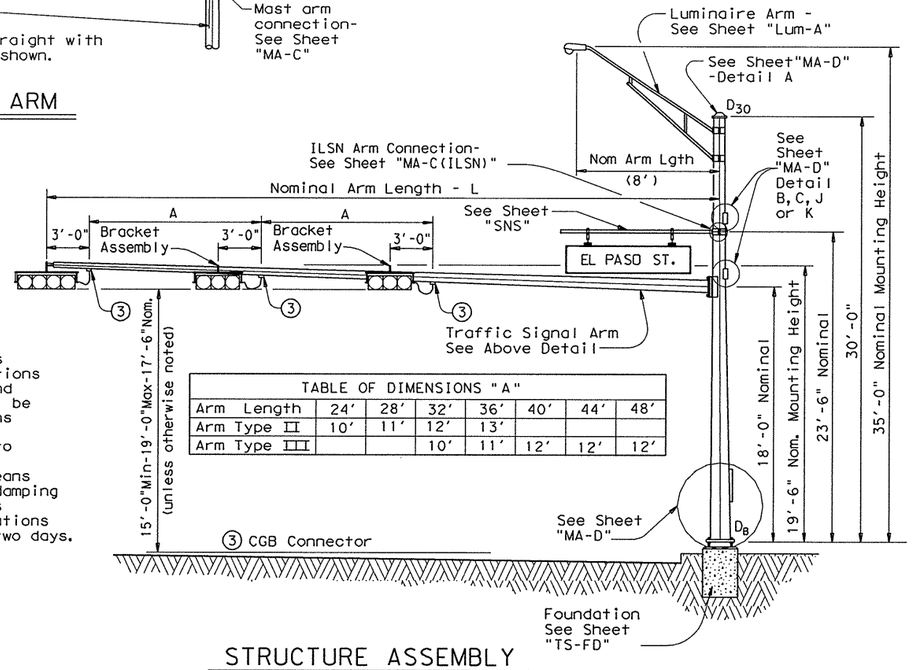

TABLE OF DIMENSIONS "A"							
Arm Length	24'	28'	32'	36'	40'	44'	48'
Arm Type II	10'	11'	12'	13'			
Arm Type III			10'	11'	12'	12'	12'

STRUCTURE ASSEMBLY

VIBRATION WARNING

Mast Arms of approximately 40' or longer are subject to possible harmonic vertical vibrations in light wind conditions due to unusual combinations of signal numbers, weights or positions, arm-wind orientation, and arm-pole stiffness. Arms shall be visually inspected in 5 to 20 mph wind conditions after signal head installation and, if vertical movements with a total excursion (max positive to max negative) of more than approximately 8" are observed at arm tip, damping devices or other means shall be fitted to the arm(s). The necessary damping device(s) or other remedial measures shall be as recommended by the fabricator. Excessive vibrations shall not be allowed to continue for more than two days.

SHIPPING PARTS LIST

Ship each pole with the following attached: enlarged hand hole, pole cap, fixed-arm connection bolts and washers and any additional hardware listed in the table.

Nominal Arm Length	30' Poles With Luminaire		24' Poles With ILSN		19' Poles With No Luminaire and No ILSN	
	Above hardware plus: One (or two if ILSN attached) small hand hole, clamp-on simplex		Above hardware plus one small hand hole		See note above	
ft	Designation	Quantity	Designation	Quantity	Designation	Quantity
20	20L-80		20S-80		20-80	
24	24L-80		24S-80		24-80	
28	28L-80		28S-80		28-80	
32	32L-80		32S-80		32-80	
36	36L-80		36S-80		36-80	
40	40L-80	1	40S-80		40-80	2
44	44L-80	1	44S-80		44-80	1
48	48L-80	1	48S-80		48-80	

Traffic Signal Arms (1 per Pole) Ship each arm with the listed equipment attached

Nominal Arm Length	Type I Arm (1 Signal)		Type II Arm (2 Signals)		Type III Arm (3 Signals)	
	1 CGB connector		1 Bracket Assembly ④ and 2 CGB Connectors		2 Bracket Assemblies and 3 CGB Connectors ④	
ft	Designation	Quantity	Designation	Quantity	Designation	Quantity
20	20I-80					
24	24I-80		24II-80			
28	28I-80		28II-80			
32			32II-80		32III-80	
36			36II-80		36III-80	
40					40III-80	3
44					44III-80	2
48					48III-80	1

Luminaire Arms (1 per 30' pole)

Nominal Arm Length	Quantity
8' Arm	

④ Supply Option "A" unless otherwise noted

ILSN Arm (Max. 2 per pole) Ship with clamps, bolts and washers

Nominal Arm Length	Quantity
7' Arm	
9' Arm	

Anchor Bolt Assemblies (1 per pole)

Anchor Bolt Diameter	Anchor Bolt Length	Quantity
1 ½"	3'-4"	
1 ¾"	3'-10"	6

Each anchor bolt assembly consists of the following: Top and Bottom templates, 4 anchor bolts, 8 nuts, 8 flat washers, 4 lock washers and 4 nut anchor devices (Type 2) per Standard Drawing "TS-FD".

Templates may be removed for shipment.

SHEET 1 OF 2

11/99 Revision

① Changed to Facilitate new terminal strip enclosure

Texas Department of Transportation
Traffic Operations Division

TRAFFIC SIGNAL SUPPORT STRUCTURES

SINGLE MAST ARM ASSEMBLY

(80 MPH WIND ZONE)

SMA-80(1)-99

© TxDOT August 1996

DN: TXDOT	CK: TXDOT	DW: TXDOT	CK: TXDOT

REVISIONS	CONT	SECT	JOB	HIGHWAY
5-96	2452	01	050	LP 1604
11-99	DIST	COUNTY		SHEET NO.
	SAT	BEXAR		322

1224

DISCLAIMER: The use of this standard is governed by the "Texas Engineering Practice Act". No warranty of any kind is made by TxDOT for any purpose whatsoever. TxDOT assumes no responsibility for the conversion of this standard to other formats or for incorrect results or damages resulting from its use.

Plotted on: 6/26/2010

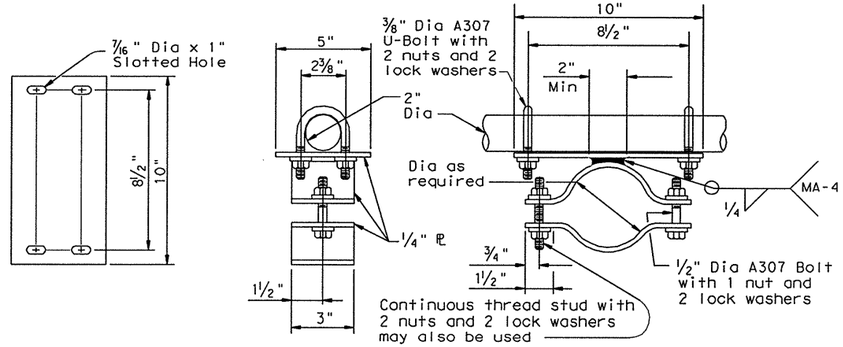

BRACKET ASSEMBLY DETAILS OPTION A

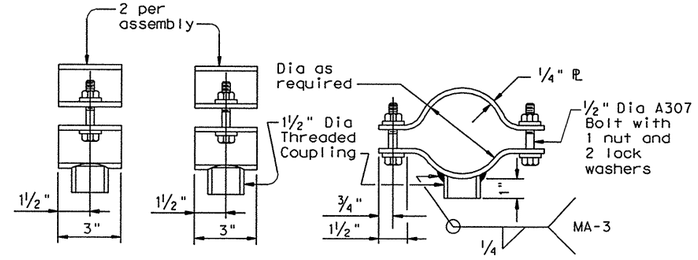

BRACKET ASSEMBLY DETAILS OPTION B

Stainless steel bands and cast bracket as in "Astro-Brac" with 1½" Dia Threaded Coupling.

BRACKET ASSEMBLY OPTION C

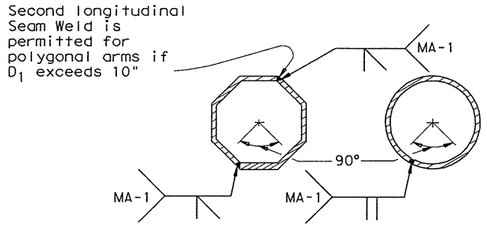

ARM WELD DETAIL

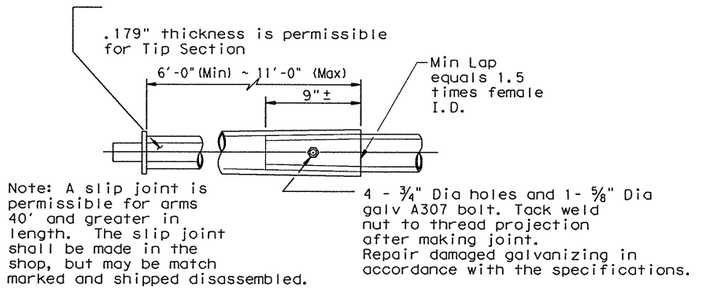

SLIP JOINT DETAIL

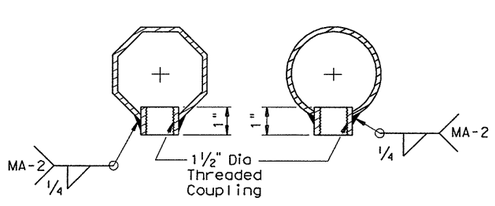

COUPLING DETAILS

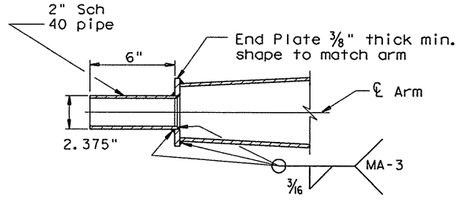

TENON DETAIL

GENERAL NOTES:

Design conforms to 1994 AASHTO Standard Specifications for Structural Supports for Highway Signs, Luminaires, and Traffic Signals and Interim Specifications thereto. Design Wind Speed equals 80 mph plus a 1.3 gust factor.

Poles are designed to support one 8'-0" luminaire arm, one 9'-0" internally lighted street name sign and one traffic signal arm with a length as tabulated. The specified luminaire load applied at the end of the luminaire arm equals 75 lbs vertical dead load plus the horizontal wind load on an effective projected area of 1.5 sq ft. The specified internally lighted street name sign load applied 4.5 ft from the centerline of the pole equals 85 lbs vertical dead load plus horizontal wind load on an effective projected area of 11.5 sq ft. The specified signal load applied at the end of the traffic signal arm equals 180 lbs vertical dead load plus the horizontal wind load on an effective projected area of 32.4 sq ft (actual area times drag coefficient).

See Standard Sheet "MA-D" for pole details, "MA-C" for traffic signal arm connection details, "MA-C (ILSN)" for internally lighted street name sign arm connection details, "LUM-A" for luminaire arm and connection details, "SNS" for internally lighted street name sign details, and "TS-FD" for anchor bolt and foundation details. See "MA-C" for material specifications.

Fabrication shall be in accordance with the Specifications and with the details, dimensions, and weld procedures shown herein. Weld references call for preapproved weld procedures which the Fabricator must obtain prior to fabrication. Miscellaneous welds which do not call for preapproved weld procedures are nevertheless subject to rejection for poor workmanship. Materials, fabrication tolerances, and shipping practices shall meet the requirements of this sheet and the Specifications.

Unless otherwise noted, all parts shall be galvanized in accordance with the Specifications.

Special design require submission of shop drawings in accordance with the item "Steel Structures".

Texas Department of Transportation
Traffic Operations Division

TRAFFIC SIGNAL SUPPORT STRUCTURES

SINGLE MAST ARM ASSEMBLY

(80 MPH WIND ZONE)

SMA-80(2)-96

©TxDOT August 1995

REVISIONS	DN: TXDOT	CK: TXDOT	DW: TXDOT	CK: TXDOT
5-96	CONT	SECT	JOB	HIGHWAY
	2452	01	050	LP 1604
	DIST	COUNTY		SHEET NO.
	SAT	BEXAR		323

DATE:
FILE:

Design Filename: p:\74\00\04\design\civil\standards\signals\SMA-80.dgn

122R1

DISCLAIMER: The use of this standard is governed by the "Texas Engineering Practice Act". No warranty of any kind is made by TxDOT for any purpose whatsoever. TxDOT assumes no responsibility for the conversion of this standard to other formats or for incorrect results or damages resulting from its use.

Plotted on: 6/26/2010

Design Filename: p:\74\00\04\design\civil\standards\signals\LMA.DGN

DATE:
FILE:

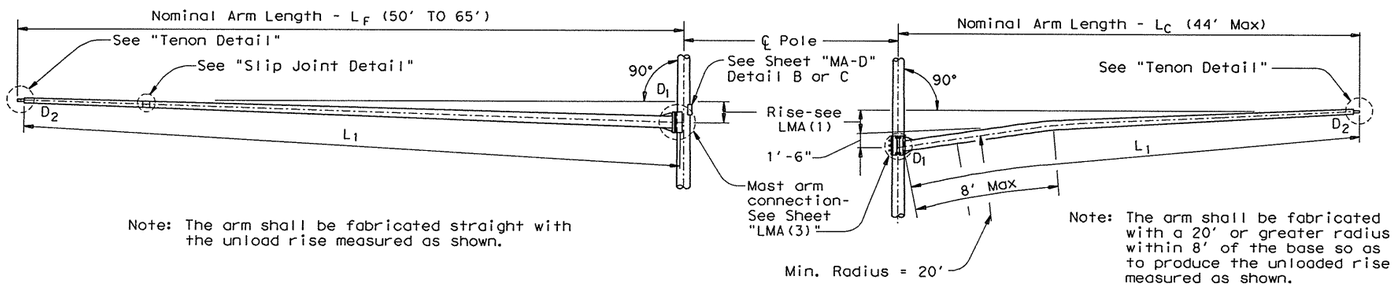

FIXED MOUNT TRAFFIC SIGNAL ARM

CLAMP-ON TRAFFIC SIGNAL ARM

(If required, See DMA-80 or DMA-100 Standard Sheets for Clamp-on Arm Details)

Design also conforms to NCHRP Report 412 for fatigue resistance except that there are no stiffeners at the base plate. TxDOT is conducting tests to determine if stiffeners at the base plate will or will not result in optimal performance; depending upon the results of the tests, poles may need a retrofit to ensure optimal fatigue performance.

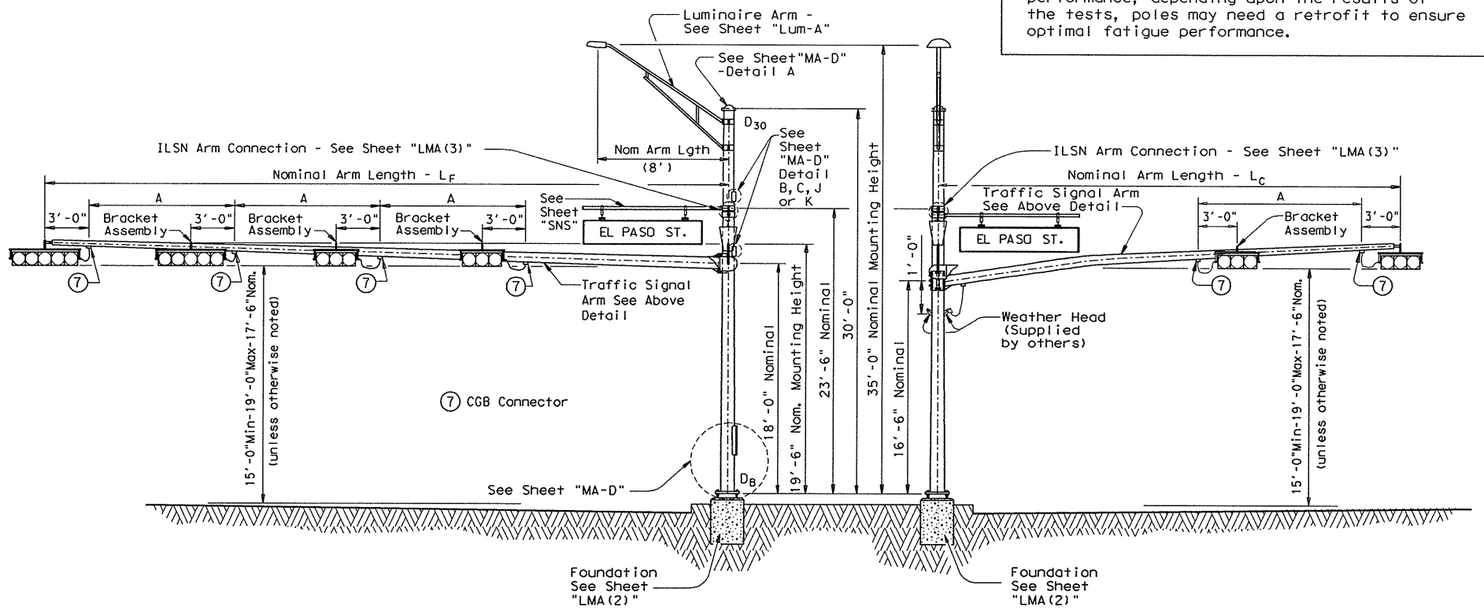

ELEVATION
(Showing fixed mount arm)

STRUCTURE ASSEMBLY

ELEVATION
(Showing clamp mount arm)

TABLE OF DIMENSIONS "A"										
Arm Length	24'	28'	32'	36'	40'	44'	50'	55'	60'	65'
Arm Type II	10'	11'	12'	13'						
Arm Type III			10'	11'	12'	12'				
Arm Type IV							12'	12'	12'	12'

VIBRATION WARNING

Mast Arms of approximately 40'-0" or longer are subject to possible harmonic vertical vibrations in light wind conditions due to unusual combinations of signal numbers, weights or positions, arm-wind orientation, and arm-pole stiffness.

Arms shall be visually inspected in 5 to 20 mph wind conditions after signal head installation and, if vertical movements with a total excursion (max positive to max negative) of more than approximately 8" are observed at arm tip, damping devices or other means shall be fitted to the arm(s).

The necessary damping device(s) or other remedial measures shall be as recommended by the fabricator. Excessive vibrations shall not be allowed to continue for more than two days.

If damping plate is used, the size shall be 16" x 66". The plate must be installed directly above traffic light located nearest the free end.

GENERAL NOTES:

Design conforms to 1994 AASHTO Standard Specifications for Structural Supports for Highway Signs, Luminaires, and Traffic Signals and Interim Specifications thereto. Design Wind Speed can be either 100 mph or 80 mph plus a 1.3 gust factor. If clamp-on traffic signal is required, designs are based on an arm included angle of 90 degrees or more. Angles of less than approximately 75 degrees will require a special design.

Poles are designed to support one 8'-0" luminaire arm, two 9'-0" internally lighted street name signs and two traffic signal arms with limited length combinations. The specified luminaire load applied at the end of luminaire arm equals 75 lbs vertical dead load plus the horizontal wind load on an effective projected area of 1.5 sq ft. The specified internally lighted street name sign applied 4'-6" from the centerline of the pole equals 85 lbs vertical dead load plus the horizontal wind load on an effective projected area of 11.5 sq ft. For 50 ft. to 65 ft. fixed-mount mast arm the specified signal load applied at the end of the traffic signal arm equals 310 lbs vertical dead load plus the horizontal wind load on an effective projected area of 52.0 sq ft. (actual area times drag coefficient). For clamp-on mast arm, the specified signal load applied at the end of the traffic signal arms equals 180 lbs vertical dead load plus the horizontal wind load on an effective projected area of 32.4 sq ft. (actual area times drag cofficient).

Except as noted in sheets 1 thru 3 of 3, also refer to Standard Sheet "MA-D" for pole details, "LUM-A for luminaire arm and connection details, "SNS" for internally lighted street name sign details, and "TS-FD" for anchor bolt and foundation details.

Fabrication shall be in accordance with the Specifications and with the details, dimensions, and weld procedures shown herein. Weld references call for preapproved weld procedures which the Fabricator must obtain prior to fabrication. Miscellaneous welds which do not call for preapproved weld procedures are nevertheless subject to rejection for poor workmanship. Material, fabrication tolerances, and shipping practices shall meet the requirements of this sheet and the Specifications.

Unless otherwise noted, all parts shall be galvanized in accordance with the Specifications.

Special designs require submission of shop drawings in accordance with the item "Steel Structures".

Texas Department of Transportation
Traffic Operations Division

TRAFFIC SIGNAL SUPPORT STRUCTURES
LONG MAST ARM ASSEMBLY (50 TO 65 FT) (80 AND 100 MPH WIND ZONE)

Sheet 1 of 4

LMA(1)-01

©TxDOT July 2000

4-20-01 REVISIONS

DN: TXDOT	CK: TXDOT	DW: TXDOT	CK: TXDOT
CONT	SECT	JOB	HIGHWAY
2452	01	050	LP 1604
DIST	COUNTY		SHEET NO.
SAT	BEXAR		324

1314

DISCLAIMER: The use of this standard is governed by the "Texas Engineering Practice Act". No warranty of any kind is made by TxDOT for any purpose whatsoever. TxDOT assumes no responsibility for the conversion of this standard to other formats or for incorrect results or damages resulting from its use.

Plotted on: 6/26/2010

Design Filename: p:\74\00\04\design\civil\standards\signals\LMA.DGN

DATE:
FILE:

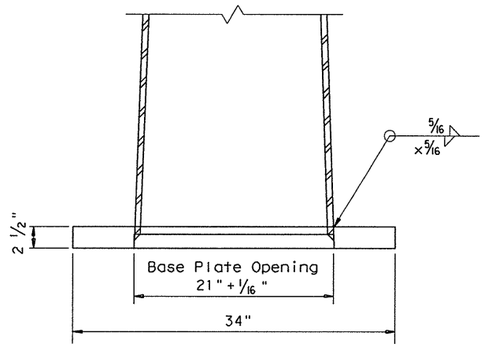

POLE CONNECTION TO BASE PLATE

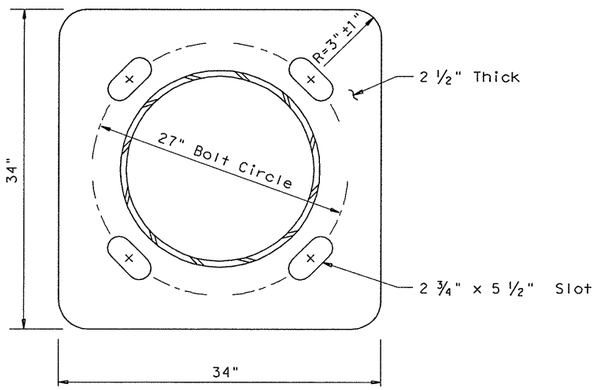

BASE PLATE

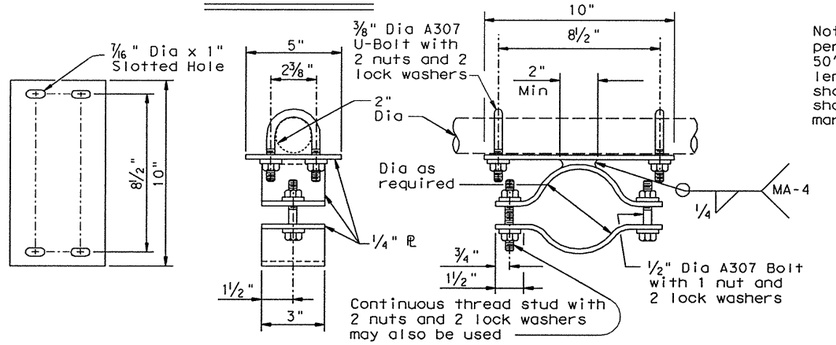

BRACKET ASSEMBLY DETAILS OPTION A

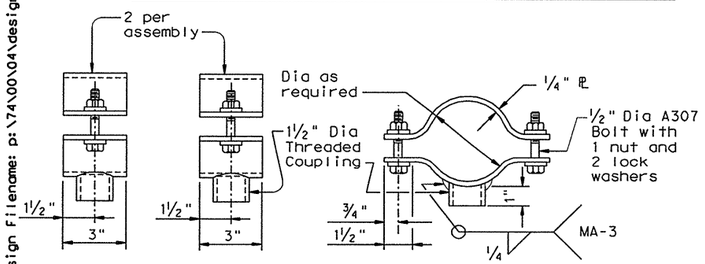

BRACKET ASSEMBLY DETAILS OPTION B

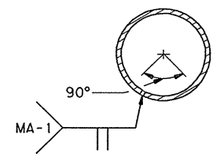

Longitudinal Seam Weld must be oriented within the lower 90° of the signal arm.

ARM WELD DETAIL

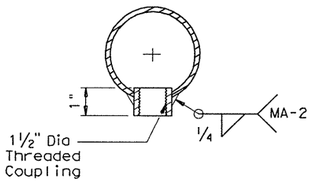

COUPLING DETAIL

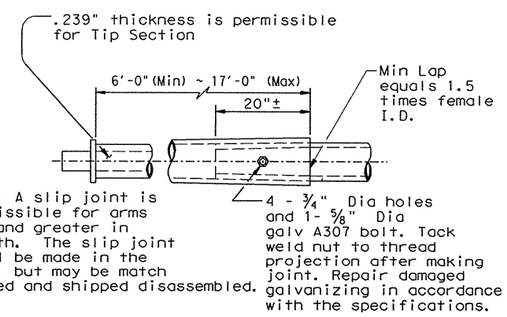

Note: A slip joint is permissible for arms 50' and greater in length. The slip joint shall be made in the shop, but may be match marked and shipped disassembled.

SLIP JOINT DETAIL

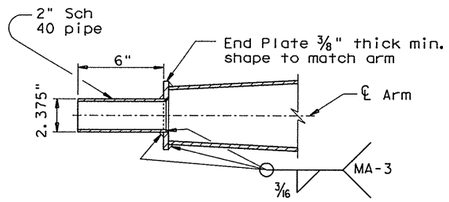

TENON DETAIL

Stainless steel bands and cast bracket as in "Astro-Brac" with 1½" Dia Threaded Coupling.

BRACKET ASSEMBLY OPTION C

Arm Length	ROUND POLES					Foundation Type
	D_B	D_{19}	D_{24}	D_{30}	① thk	
ft.	in.	in.	in.	in.	in.	
50', 55' 60', 65'	21.0	18.3	17.6	16.8	.3125	48-A

Arm Length	ROUND ARMS				
	L_1	D_1	D_2	① thk	Rise (±2")
ft.	ft.	in.	in.	in.	
50	49	18.5	11.7	.3125	3'- 3"
55	54	18.5	11.0	.3125	3'- 7"
60	59	18.5	10.3	.3125	3'-11"
65	64	18.5	9.6	.3125	4'- 4"

D_B = Pole Base O.D.
D_{19} = Pole Top O.D. with no Luminaire and no ILSN
D_{24} = Pole Top O.D. with ILSN w/out Luminaire
D_{30} = Pole Top O.D. with Luminaire
D_1 = Arm Base O.D.
D_2 = Arm End O.D.
L_1 = Shaft Length
L = Nominal Arm Length

① Thickness shown is minimum, thicker materials may be used.

ANCHOR BOLT & TEMPLATE SIZE						
Bolt Dia in	Length ‡	Top Thread	Bottom Thread	Bolt Circle	R_2	R_1
2 ½"	5'-3"	10"	3"	27"	16"	11"

‡ Min dimension given, longer bolts are acceptable.

① Anchor bolt design develops the foundation capacity given under Foundation Design Loads.

② Foundation Design Loads are the allowable moments and shears at the base of the structure.

③ Field Penetrometer readings at a depth of approximately 3 to 5 feet may be used to adjust shaft lengths.

④ If rock is encountered, the Drilled Shaft shall extend a minimum of two diameters into solid rock.

⑤ Decimal lengths in Design Table are to allow interpolation for other penetrometer values. Round to nearest foot for entry into Summary Table.

FOUNDATION DESIGN TABLE

FDN TYPE	DRILLED SHAFT DIA	REINFORCING STEEL		DRILLED SHAFT LENGTH-ft ③, ④, ⑤			ANCHOR BOLT DESIGN ①				FOUNDATION DESIGN LOAD ②		TYPICAL APPLICATION
		VERT BARS	SPIRAL & PITCH	TEXAS CONE PENETROMETER N blows/ft			ANCHOR BOLT DIA	Fy (ksi)	BOLT CIR DIA	ANCHOR TYPE	MOMENT K-ft	SHEAR Kips	
				10	15	40							
48-A	48"	20 #9	#4 at 6"	21.9	19.5	14.7	2 ½"	55	27"	2	490	10	Mast arm assembly.

SEE SHEET "TS-FD" FOR ADDITIONAL DETAILS.

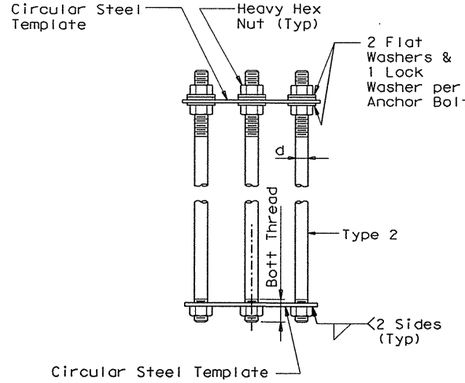

NUT ANCHOR
(TYPE 2)

ANCHOR BOLT ASSEMBLY

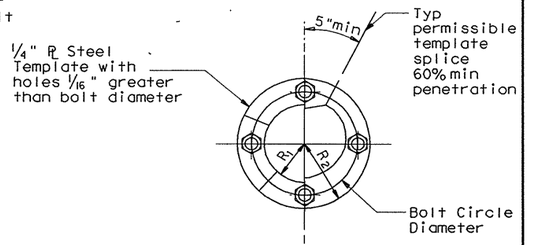

R_1 may equal R_2 if plate is welded of 3 or more segments.

TEMPLATE DETAIL

Texas Department of Transportation
Traffic Operations Division

TRAFFIC SIGNAL SUPPORT STRUCTURES
LONG MAST ARM ASSEMBLY (50 TO 65 FT) (80 AND 100 MPH WIND ZONE)

LMA(2)-01

Sheet 2 of 4

©TxDOT July 2000

DN: TXDOT	CK: TXDOT	DW: TXDOT	CK: TXDOT

REVISIONS
4-20-01

CONT	SECT	JOB	HIGHWAY
2452	01	050	LP 1604
DIST	COUNTY		SHEET NO.
SAT	BEXAR		325

1318

DISCLAIMER: The use of this standard is governed by the "Texas Engineering Practice Act". No warranty of any kind is made by TxDOT for any purpose whatsoever. TxDOT assumes no responsibility for the conversion of this standard to other formats or for incorrect results or damages resulting from its use.

Plotted on: 6/26/2010

Design Filename: p:\74\00\04\design\civil\standards\signals\LMA.DGN

DATE:
FILE:

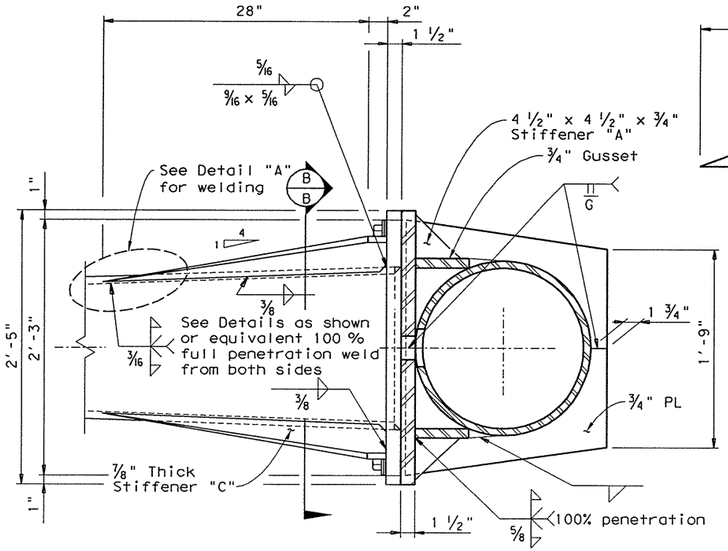

SECTION A-A

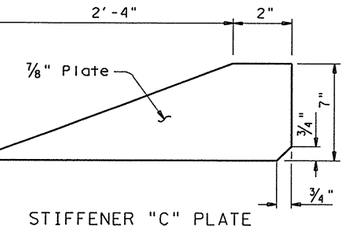

STIFFENER "C" PLATE

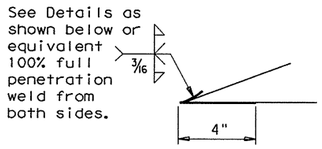

Only 4" length at tip of Stiffener "C" requires full penetration weld. Smooth weld radius to connect Stiffener . Others only require fillet weld.

DETAIL "A"

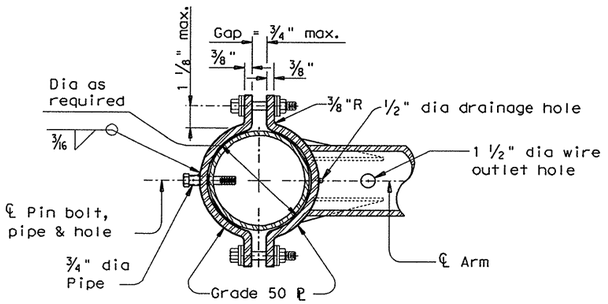

SECTION C-C

MATERIALS	
Round Shafts or Polygonal Shafts	ASTM A595 GR A, ASTM A570 GR 50, ASTM A607 GR 50, ASTM A572 GR 50 or A36M50
Plates (1)	ASTM A36 OR A572 GR 50 or A595(2) or A36M50
Connection Bolts	ASTM A325 except where noted
Pin Bolts	ASTM A325
Pipe	ASTM A53 GR A or B, or A501
Misc. Hardware	Galvanized steel or stainless steel or as noted

(1) Any of the materials listed for plates may be used where the drawings do not specify a particular Grade designation.

(2) If A595 material is used, it need not be cold worked to A595 requirments, but material must have 40 ksi minimum yield prior to fabrication.

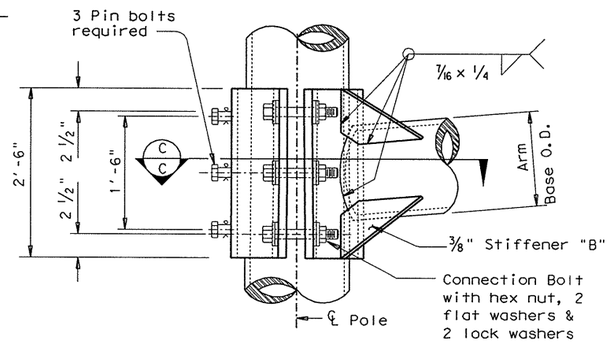

ELEVATION

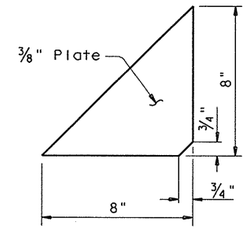

STIFFENER "B" PLATE

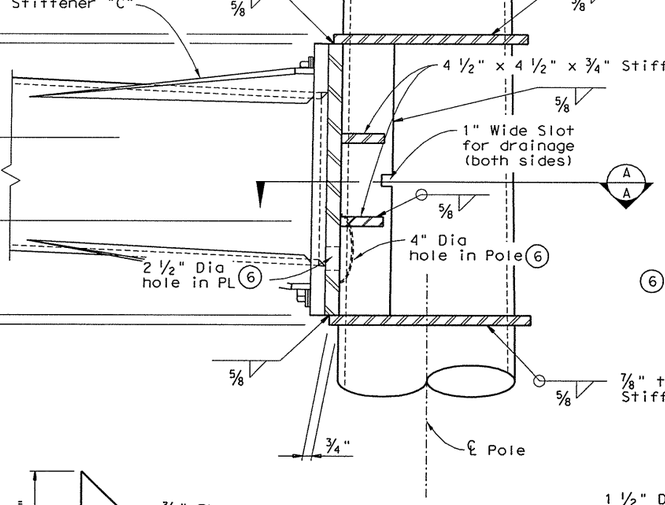

ELEVATION

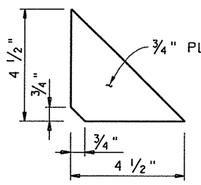

STIFFENER "A" PLATE

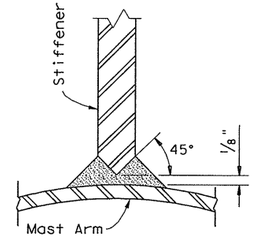

(6) Deburr holes and offset as shown for drainage

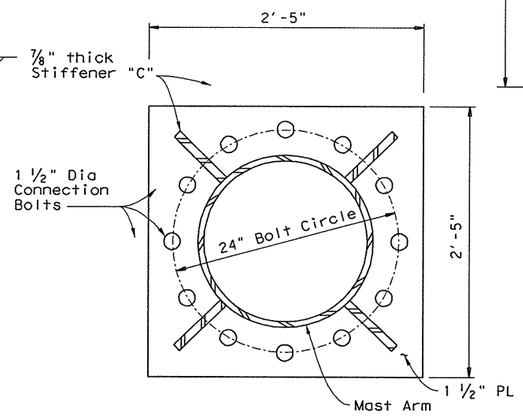

SECTION B-B

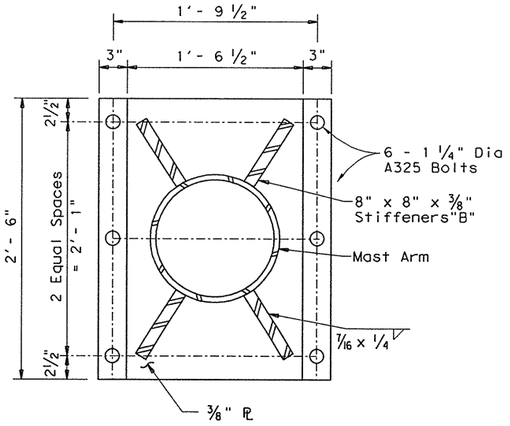

MAST ARM AND ILSN ARM TO POLE
CLAMP-ON DETAIL

GENERAL NOTES:

Clamp-on details are used for the second arm on dual mast arm assemblies. A Maximum 1 ½" wide vertical slotted hole may be cut in the front clamp plate to facilitate drainage during galvanizing. THe slot shall be centered behind the arm and shall be no longer than the arm diameter minus 1".

Fixed mount details are used for single mast arm assemblies and for the first arm on dual mast assemblies.

Where duplicate parts occur on a detail, welds shown for one part shall apply to all similar parts on the detail.

Pin bolts are required to prevent rotation of clamp-on arms under design wind forces.

Texas Department of Transportation
Traffic Operations Division

TRAFFIC SIGNAL SUPPORT STRUCTURES
LONG MAST ARM ASSEMBLY (50 TO 65 FT) (80 AND 100 MPH WIND ZONE)

LMA(3)-01

Sheet 3 of 4

©TxDOT July 2000

DN: TXDOT	CK: TXDOT	DW: TXDOT	CK: TXDOT

REVISIONS
4-20-01

CONT	SECT	JOB	HIGHWAY
2452	01	050	LP 1604
DIST	COUNTY		SHEET NO.
SAT	BEXAR		326

131C

DISCLAIMER: The use of this standard is governed by the "Texas Engineering Practice Act". No warranty of any kind is made by TxDOT for any purpose whatsoever. TxDOT assumes no responsibility for the conversion of this standard to other formats or for incorrect results or damages resulting from its use.

Plotted on: 7/1/2010

Design Filename: P:\74\00\04\design\Civil\Standards\Signals\LMA.DGN

DATE:
FILE:

Shipping Parts List

Ship each pole with the following attached: enlarged hand hole, pole cap, fixed arm connection bolts and washers, and any additional hardware listed in the table.

Nominal Arm Length	30' Poles with Luminaire: See note above plus: one (or two if ILSN attached) small hand hole, clamp-on simplex	24' Poles with ILSN: See note above plus one small hand hole	19' Poles with no Luminaire and no ILSN: See note above

Single Mast Arm

Lf ft.	Designation	Quantity	Designation	Quantity	Designation	Quantity
50	50L		50S		50	
55	55L		55S		55	
60	60L		60S		60	
65	65L		65S		65	

Dual Mast Arm

Lf ft.	Lc ft.	Designation	Quantity	Designation	Quantity	Designation	Quantity
50	20	5020L		5020S		5020	
	24	5024L		5024S		5024	
	28	5028L		5028S		5028	
	32	5032L		5032S		5032	
	36	5036L		5036S		5036	
	40	5040L		5040S		5040	
	44	5044L		5044S		5044	
55	20	5520L		5520S		5520	
	24	5524L		5524S		5524	
	28	5528L		5528S		5528	
	32	5532L		5532S		5532	
	36	5536L	2	5536S		5536	
	40	5540L		5540S		5540	
	44	5544L		5544S		5544	
60	20	6020L		6020S		6020	
	24	6024L		6024S		6024	
	28	6028L		6028S		6028	
	32	6032L		6032S		6032	
	36	6036L		6036S		6036	
	40	6040L		6040S		6040	
	44	6044L	1	6044S		6044	
65	20	6520L		6520S		6520	
	24	6524L		6524S		6524	
	28	6528L		6528S		6528	
	32	6532L		6532S		6532	
	36	6536L		6536S		6536	
	40	6540L		6540S		6540	
	44	6544L	2	6544S		6544	

Foundation Summary Table **

Location Ident.	Avg. N Blow/ft.	No. Each	Drill Shaft *** Length (feet) 48-A
TURNAROUND #1		1	21.9
TURNAROUND #2		1	24.9
SHAENFIELD		2	43.8
TURNAROUND #3		1	26.4
Total Drill Shaft Length			117.0

Shipping Parts List

Traffic Signal Arms (Fixed Mount) (1 per pole)
Ship each arm with listed equipment attached

Nominal Arm Length	Type IV Arm (4 Signals) * 3 Bracket Assembly * and 4 CGB Connectors	
ft.	Designation	Quantity
50	50IV	
55	55IV	2
60	60IV	1
65	65IV	2

Luminaire Arms (1 per 30' pole)

Nominal Arm Length	Quantity
8' Arm	

ILSN Arm (Max. 2 per pole) Ship with clamps, bolts and washers

Nominal Arm Length	Quantity
7' Arm	
9' Arm	

Traffic Signal Arms (80 MPH Clamp-On Mount) (1 per pole) Ship each arm with listed equipment attached

Nominal Arm Length	Type I Arm (1 Signal) 2 CGB connector and 1 clamp w/bolts and washers		Type II Arm (2 Signals) * 1 Bracket Assembly * and 3 CGB connectors, and 1 clamp w/bolts and washers		Type III Arm (3 Signals) * 2 Bracket Assembly * and 4 CGB connectors, and 1 clamp w/bolts and washers	
ft.	Designation	Quantity	Designation	Quantity	Designation	Quantity
20	20I-80					
24	24I-80		24II-80			
28	28I-80		28II-80			
32			32II-80		32III-80	
36			36II-80		36III-80	2
40					40III-80	
44					44III-80	3

Traffic Signal Arms (100 MPH Clamp-On Mount) (1 per pole) Ship each arm with listed equipment attached

Nominal Arm Length	Type I Arm (1 Signal) 2 CGB connector and 1 clamp w/bolts and washers		Type II Arm (2 Signals) * 1 Bracket Assembly * and 3 CGB connectors, and 1 clamp w/bolts and washers		Type III Arm (3 Signals) * 2 Bracket Assembly * and 4 CGB connectors, and 1 clamp w/bolts and washers	
ft.	Designation	Quantity	Designation	Quantity	Designation	Quantity
20	20I-100					
24	24I-100		24II-100			
28	28I-100		28II-100			
32			32II-100		32III-100	
36			36II-100		36III-100	
40					40III-100	
44					44III-100	

Anchor Bolt Assemblies (1 per pole)

Anchor Bolt Diameter	Anchor Bolt Length	Quantity
2 1/2 "	5' - 3"	5

Each anchor bolt assembly consists of the following: Top and bottom templates, 4 anchor bolts, 8 nuts, 8 flat washers, 4 lock washers and 4 nut anchor devices (type 2) per Standard Drawing "TS-FD".
Templates may be removed for shipment.

Notes
- * Supply Option "A" unless otherwise noted
- ** Foundations may be listed separately or grouped according to similarity of location and type. Quantities are for the Contractor's information only.
- *** Decimal lengths in Design Table are to allow interpolation for other penetrometer values. Round to nearest foot for entry into Summary Table.

Abbreviations
- Lf= Fixed Arm Length
- Lc= Clamp-on Arm Length (44' Max.)

Texas Department of Transportation
Traffic Operations Division

LONG MAST ARM ASSEMBLY PARTS LIST

Sheet 4 of 4

LMA(4)-01

©TxDOT November 2000

DN: TXDOT	CK: TXDOT	DW: TXDOT	CK: TXDOT

REVISIONS
4-20-01

CONT	SECT	JOB	HIGHWAY
2452	01	050	LP 1604
DIST	COUNTY		SHEET NO.
SAT	BEXAR		327

1310

DISCLAIMER:
The use of this standard is governed by the "Texas Engineering Practice Act". No warranty of any kind is made by TxDOT for any purpose whatsoever. TxDOT assumes no responsibility for the conversion of this standard to other formats or for incorrect results or damages resulting from its use.

Plotted on: 6/26/2010

ARM SIZE D_1	ARM SIZE ǂ	A	B	C	D	E	CONN BOLT DIA
in.	in.	in.	in.	in.	in.	in.	in.
6.5	.179	12	9	9	6	1 3/4	1
7.5	.179	13	9	10	6	1 3/4	1
8.0	.179	14	10	11	7	2	1 1/4
9.0	.179	16	11	13	8	2	1 1/4
9.5	.179	17	12	14	9	2	1 1/4
9.5	.239	18	12	15	9	2	1 1/4
10.0	.239	18	12	15	9	2	1 1/4
10.5	.239	18	13	15	10	3	1 1/2
11.0	.239	18	13	15	10	3	1 1/2

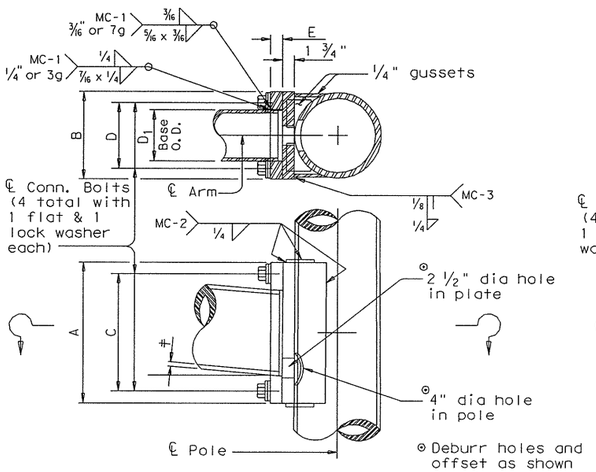

FIXED MOUNT DETAIL 1

ARM SIZE D_1	ARM SIZE ǂ	A	F	CONN. BOLTS No.	CONN. BOLTS Dia	PIN BOLTS No.	PIN BOLTS Dia
in.	in.	in.	in.	ea.	in.	ea.	in.
6.5	.179	12	8	4	* 7/8	2	5/8
7.5	.179	14	8	4	1	2	5/8
8.0	.179	14	8	4	1	2	5/8
9.0	.179	16	10	4	1	2	5/8
9.5	.179	18	12	4	1 1/4	3	5/8
9.5	.239	18	12	4	1 1/4	3	5/8
10.0	.239	18	12	4	1 1/4	3	5/8

*1" Dia connection bolts are permissible

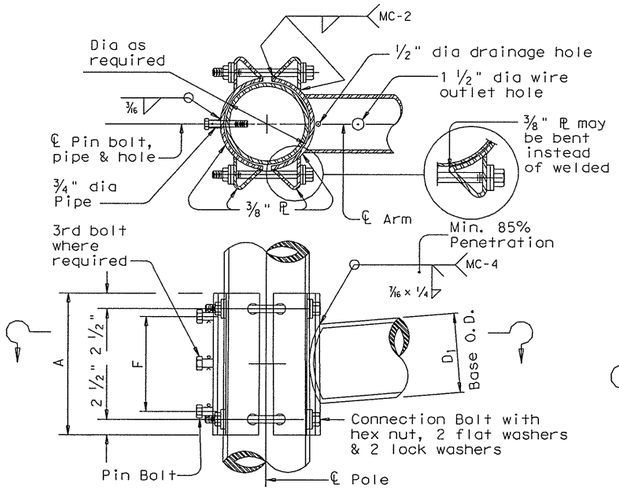

CLAMP-ON DETAIL 1

ARM SIZE D_1	ARM SIZE ǂ	A	F	T	CONN. BOLTS No.	CONN. BOLTS Dia	PIN BOLTS No.	PIN BOLTS Dia
in.	in.	in.	in.	in.	ea.	in.	ea.	in.
7.0	.179	12	8	3/4	4	3/4	2	5/8
7.5	.179	14	8	3/4	4	3/4	2	5/8
8.0	.179	14	8	3/4	4	3/4	2	5/8
9.0	.179	16	10	7/8	4	1	2	5/8
10.0	.179	18	10	7/8	4	1	2	5/8
9.5	.239	18	10	1	6	1	3	5/8
10.0	.239	18	10	1	6	1	3	5/8

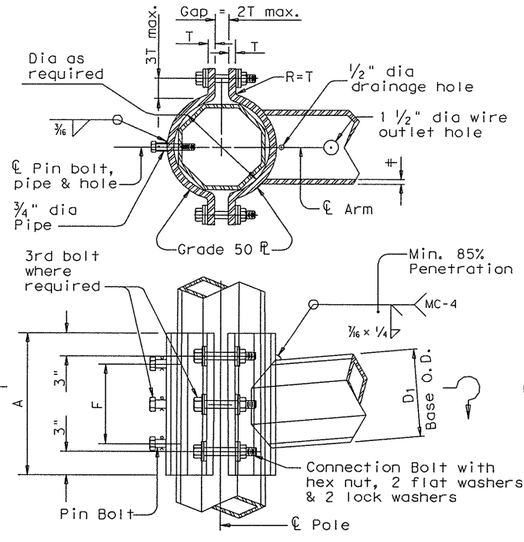

CLAMP-ON DETAIL 2

ARM SIZE D_1	ARM SIZE ǂ	A	F	CONN. BOLTS No.	CONN. BOLTS Dia	PIN BOLTS No.	PIN BOLTS Dia
in.	in.	in.	in.	ea.	in.	ea.	in.
6.5	.179	12	8	4	1	2	5/8
7.5	.179	14	8	4	1	2	5/8
8.0	.179	14	8	4	1	2	5/8
9.0	.179	16	10	4	1	2	5/8
9.5	.179	18	12	6	1	3	5/8
9.5	.239	18	12	6	1	3	5/8
10.0	.239	18	12	6	1	3	5/8

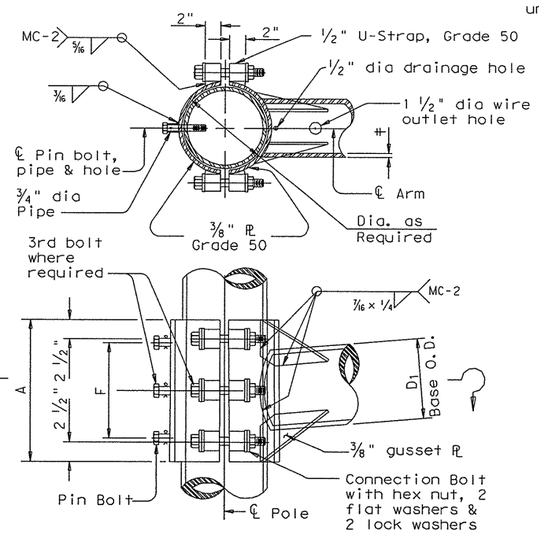

CLAMP-ON DETAIL 3

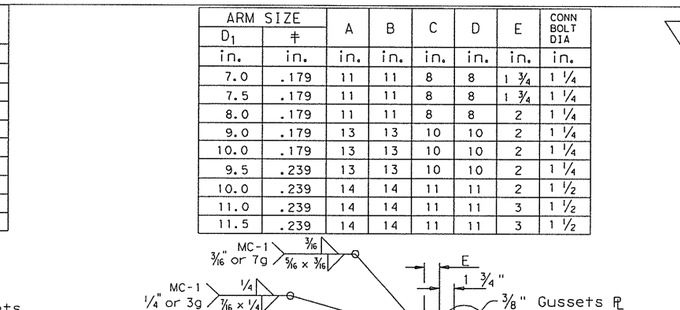

DETAIL A

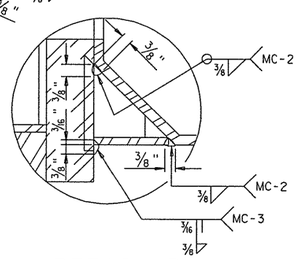

DETAIL B

MATERIALS	
Round Shafts or Polygonal Shafts	ASTM A595 GR A, ASTM A570 GR 50, ASTM A607 GR 50, ASTM A572 GR 50 or A36M50
Plates (1)	ASTM A36 OR A572 GR 50 or A595(2) or A36M50
Connection Bolts	ASTM A325 except where noted
Pin Bolts	ASTM A325
Pipe	ASTM A53 GR A or B, or A501
Misc. Hardware	Galvanized steel or stainless steel or as noted

(1) Any of the materials listed for plates may be used where the drawings do not specify a particular Grade designation.

(2) If A595 material is used, it need not be cold worked to A595 requirments, but material must have 40 ksi minimum yield prior to fabrication.

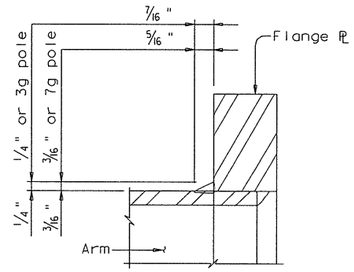

FIXED MOUNT ARM

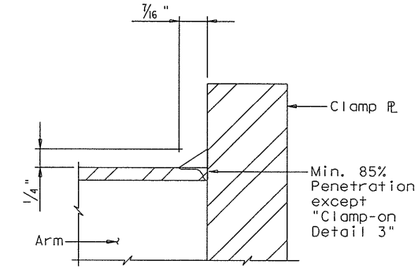

CLAMP-ON ARM

ARM BASE WELD DETAILS

GENERAL NOTES:

Clamp-on details are used for the second arm on dual mast arm assemblies. A Maximum 1 1/2" wide vertical slotted hole may be cut in the front clamp plate to facilitate drainage during galvanizing. The slot shall be centered behind the arm and shall be no longer than the arm diameter minus 1"

Fixed mount details are used for single mast arm assemblies and for the first arm on dual mast arm assemblies.

Where duplicate parts occur on a detail, welds shown for one part shall apply to all similar parts on the detail.

Pin bolts are required to prevent rotation of clamp-on arms under design wind forces.

NOTE:

Pin bolts shall be A325 with threads excluded from the shear plane. Pin bolt and 3/4" dia pipe shall have 3/16" dia holes for a 1/8" dia galvanized cotter pin. Back clamp plate shall be furnished with a 3/4" dia hole for each pin bolt. An 11/16" dia hole for each pin bolt shall be field drilled through the pole after arm orientations have been approved by the Engineer.

Texas Department of Transportation
Traffic Operations Division

STANDARD ASSEMBLY FOR TRAFFIC SIGNAL SUPPORT STRUCTURES

MAST ARM CONNECTIONS

MA-C-09

©TxDOT August 1995

REVISIONS	DN: TXDOT	CK: TXDOT	DW: TXDOT	CK: TXDOT
5-96	CONT	SECT	JOB	HIGHWAY
5-09 Connection ! Thk E	2452	01	050	LP 1604
	DIST	COUNTY		SHEET NO.
	SAT	BEXAR		328

1264

DATE:
FILE:
Design Filename: p:\74\00\04\design\civil\standards\signals\MAC.DGN

DISCLAIMER: The use of this standard is governed by the "Texas Engineering Practice Act". No warranty of any kind is made by TxDOT for any purpose whatsoever. TxDOT assumes no responsibility for the conversion of this standard to other formats or for incorrect results or damages resulting from its use.

Plotted on: 6/26/2010

Design Filename: p:\74\00\04\design\civil\standards\signals\MAD.dgn

DATE:
FILE:

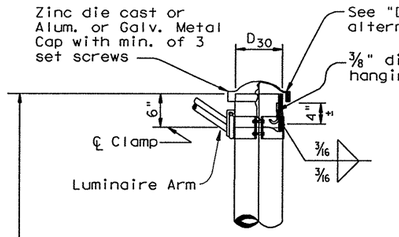

DETAIL A

(for pole with luminaire)

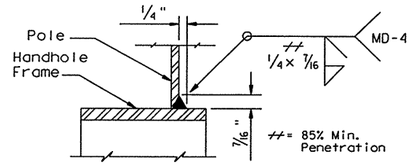

DETAIL E

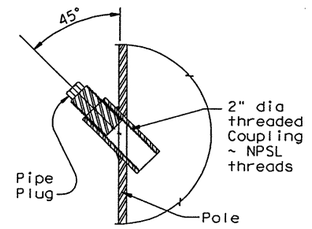

COUPLING DETAIL

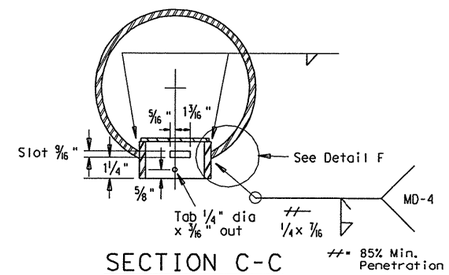

SECTION C-C

Opening for access compartment shall be no more than 1/16 inch wider than the access compartment itself.

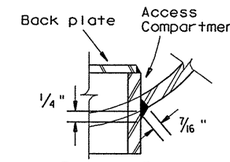

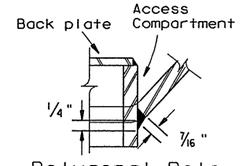

DETAIL F

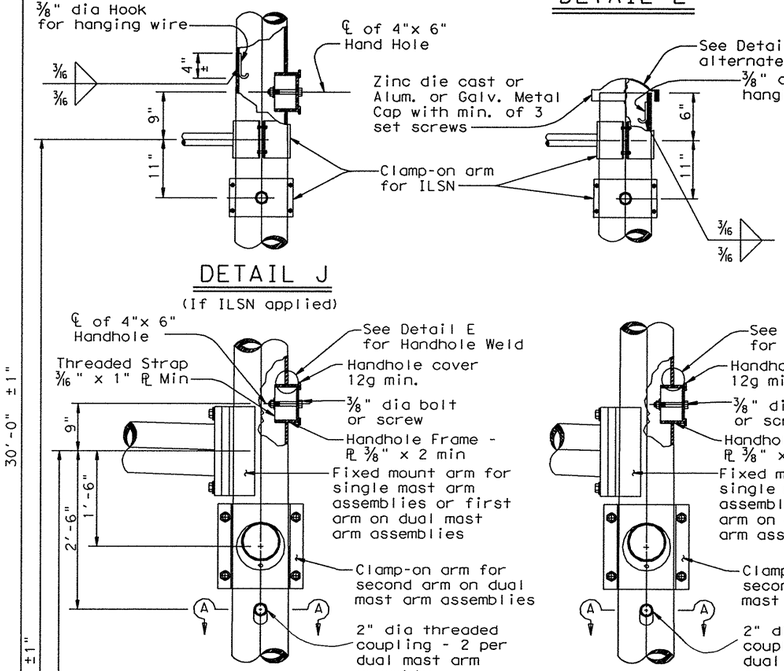

DETAIL J

(If ILSN applied)

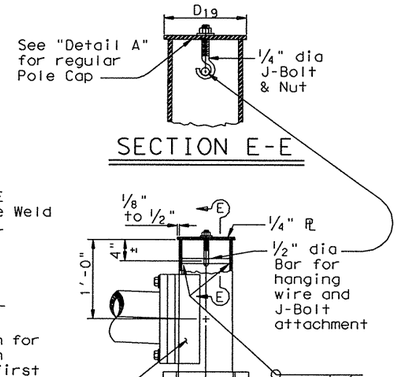

SECTION E-E

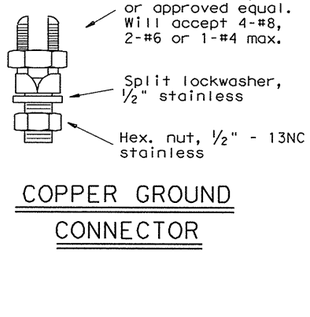

COPPER GROUND CONNECTOR

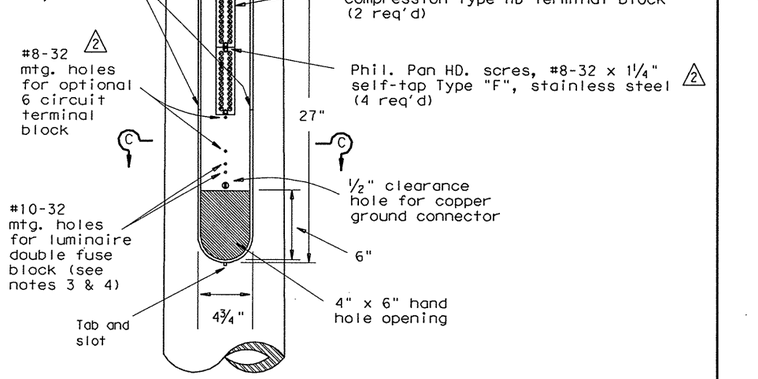

ACCESS COMPARTMENT

DETAIL B

(for 30' pole with luminaire and ILSN sign)

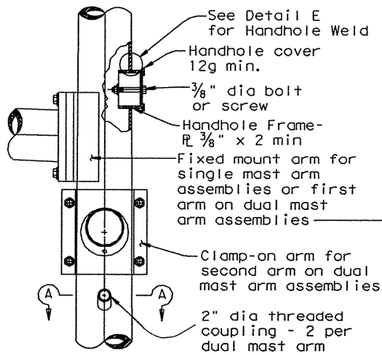

DETAIL K

(for 24' pole with ILSN sign and no luminaire)

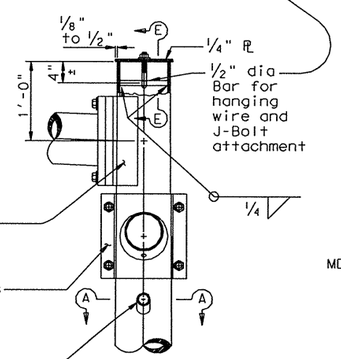

DETAIL C

(for 19' pole with no ILSN sign and no luminaire)

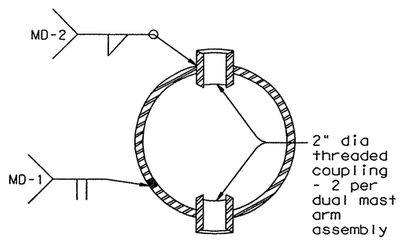

SECTION A-A

1. The cover shall be one piece formed from ABS plastic, shall be a pearl gray color, and shall be suitable for exposure to harsh sunlight and extreme weather. Cover shall latch with two screw latches and shall fit tightly to the enclosure ring to create a rainproof seal. Latch screws shall be 1/4-20 stainless flat socket head screws with tamper proof feature.
2. The pole manufacturer shall provide with each pole a separate kit consisting of: one cover with two latching assemblies, two terminal strips (Marathon #985GP12CU or approved equal), four #8-32 x 1¼" self tapping type "F" stainless steel pan head screws, and one ground connector (Blackburn TTC, Burndy KC22J12T13, or Ilsco SSS-5). The traffic signal contractor shall install the kit items in the field.
3. The screw hole spacing on the enclosure back plate shall be for two Marathon #985GP12 terminal strips, one Marathon #985GP06CU terminal strip, and one Bussmann #BM6032B fuse block.
4. Install one Bussmann #BM6032B, Littelfuse #L60030M-2C, or Ferraz-Shawmut #30352 fuse block for poles where luminaires are to be installed.

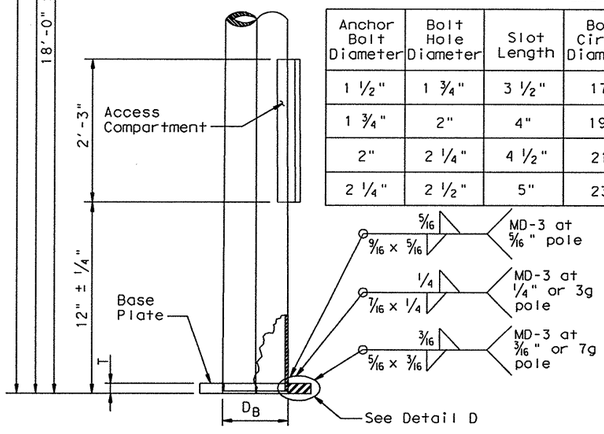

POLE ELEVATION

Anchor Bolt Diameter	Bolt Hole Diameter	Slot Length	Bolt Circle Diameter	Base ℞ Dim. L x T	Adjust. Range
1 1/2"	1 3/4"	3 1/2"	17"	18" x 1 1/2"	13.4°
1 3/4"	2"	4"	19"	20" x 1 3/4"	13.5°
2"	2 1/4"	4 1/2"	21"	22" x 2"	13.6°
2 1/4"	2 1/2"	5"	23"	24" x 2 1/4"	13.7°

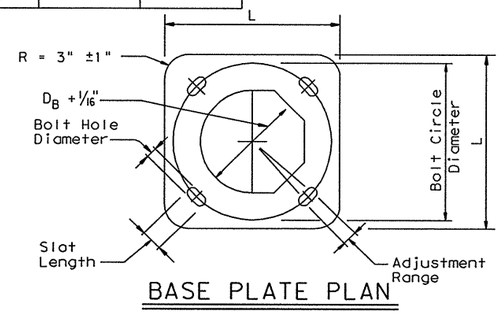

BASE PLATE PLAN

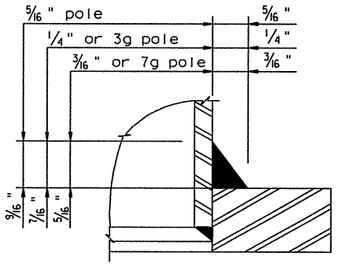

DETAIL D

1 10/03 Revision
Revised notes, and remove detail.

2 2/07 Revision
Revised dimension of terminal-block screw.

Texas Department of Transportation
Traffic Operations Division

TRAFFIC SIGNAL SUPPORT STRUCTURES MAST ARM POLE DETAILS

MA-D-07

© TxDOT August 1995

REVISIONS	DN: TXDOT	CK: TXDOT	DW: TXDOT	CK: TXDOT
8-99	CONT	SECT	JOB	HIGHWAY
10-00	2452	01	050	LP 1604
10-03	DIST	COUNTY		SHEET NO.
2-07	SAT	BEXAR		329

DISCLAIMER:
The use of this standard is governed by the "Texas Engineering Practice Act". No warranty of any kind is made by TxDOT for any purpose whatsoever. TxDOT assumes no responsibility for the conversion of this standard to other formats or for incorrect results or damages resulting from its use.

Plotted on: 6/26/2010

Design Filename: P:\74\00\04\design\Civil\Standards\Signals\TS-FD.DGN

DATE:
FILE:

FOUNDATION DESIGN TABLE

FDN TYPE	DRILLED SHAFT DIA	REINFORCING STEEL		DRILLED SHAFT LENGTH-ft ④, ⑤, ⑥			ANCHOR BOLT DESIGN ①				FOUNDATION DESIGN LOAD ②		TYPICAL APPLICATION
		VERT BARS	SPIRAL & PITCH	TEXAS CONE PENETROMETER N blows/ft 10	15	40	ANCHOR BOLT DIA	Fy (ksi)	BOLT CIR DIA	ANCHOR TYPE	MOMENT K-ft	SHEAR Kips	
24-A	24"	4- #5	#2 at 12"	5.7	5.3	4.5	¾"	36	12 ¾"	1	10	1	Pedestal pole, pedestal mounted controller.
30-A	30"	8- #9	#3 at 6"	11.3	10.3	8.0	1 ½"	55	17"	2	87	3	Mast arm assembly. (see Selection Table)
36-A	36"	10- #9	#3 at 6"	13.2	12.0	9.4	1 ¾"	55	19"	2	131	5	Mast arm assembly. (see Selection Table) 30' strain pole with or without luminaire.
36-B	36"	12- #9	#3 at 6"	15.2	13.6	10.4	2"	55	21"	2	190	7	Mast arm assembly. (see Selection Table) Strain pole taller than 30' & strain pole with mast arm
42-A	42"	14- #9	#3 at 6"	17.4	15.6	11.9	2 ¼"	55	23"	2	271	9	Mast arm assembly. (see Selection Table)

FOUNDATION SELECTION TABLE FOR STANDARD MAST ARM PLUS ILSN SUPPORT ASSEMBLIES (ft)

		FDN 30-A	FDN 36-A	FDN 36-B	FDN 42-A
80 MPH DESIGN WIND SPEED	MAX SINGLE ARM LENGTH	32' ⚠1	48'		
	MAXIMUM DOUBLE ARM LENGTH COMBINATIONS	24' X 24'			
		28' X 28'			
		32' X 28'	32' X 32'		
			36' X 36'		
			40' X 36'		
			44' X 28'	44' X 36'	
100 MPH DESIGN WIND SPEED	MAX SINGLE ARM LENGTH	⚠1	36'	44'	
	MAXIMUM DOUBLE ARM LENGTH COMBINATIONS		24' X 24'		
			28' X 28'		
			32' X 24'	32' X 32'	
				36' X 36'	
				40' x24'	40' X 36'
					44' x 36'

EXAMPLE:
1. For 80mph design wind speed, foundation 30-A can support up to a 32' arm with another arm up to 28'
2. For 100mph design wind speed, foundation 36-A can support a single 36' mast arm.

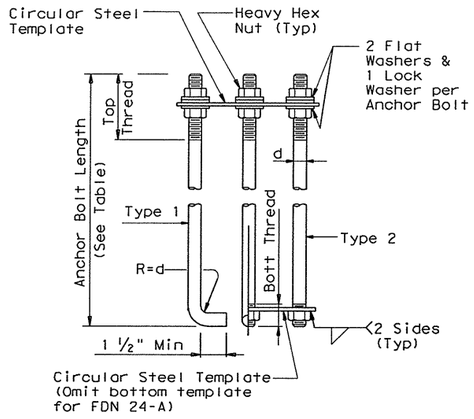

HOOKED ANCHOR (TYPE 1) NUT ANCHOR (TYPE 2)

ANCHOR BOLT ASSEMBLY

INSTALLATION PROCEDURE:
Threads of anchor bolts shall be coated with pipe joint compound prior to installation of upper nuts when erecting pole. After pole is plumbed and in permanent alignment, the exposed threads of painted bolts shall be cleaned and an additional coating of zinc-rich paint applied to seal the bolt thread-nut joint.

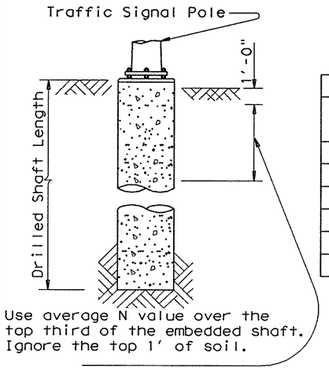

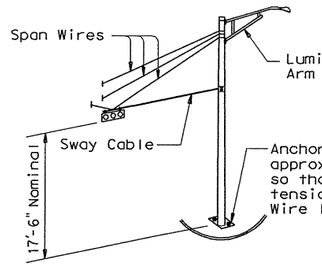

TYPICAL STRAIN POLE ASSEMBLY

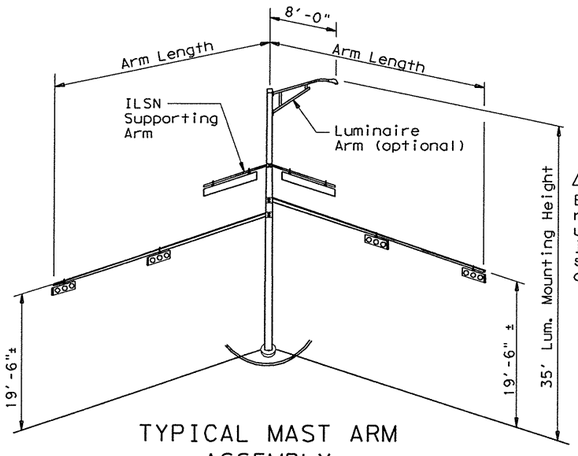

TYPICAL MAST ARM ASSEMBLY

NOTES:
① Anchor bolt design develops the foundation capacity given under Foundation Design Loads.
② Foundation Design Loads are the allowable moments and shears at the base of the structure.
③ Foundations may be listed seperately or grouped according to similarity of location and type. Quantities are for the Contractor's information only.
④ Field Penetrometer readings at a depth of approximately 3 to 5 feet may be used to adjust shaft lengths.
⑤ If rock is encountered, the Drilled Shaft shall extend a minimum of two diameters into solid rock.
⑥ Decimal lengths in Design Table are to allow interpolation for other penetrometer values. Round to nearest foot for entry into Summary Table.

ANCHOR BOLT & TEMPLATE SIZES

BOLT DIA IN.	⑦ BOLT LENGTH	TOP THREAD	BOTT THREAD	BOLT CIRCLE	R2	R1
¾"	1'-6"	3"	—	12 ¾"	7 ⅛"	5 ⅝"
1 ½"	3'-4"	6"	2"	17"	10"	7"
1 ¾"	3'-10"	7"	2 ¼"	19"	11 ¼"	7 ¾"
2"	4'-3"	8"	2 ½"	21"	12 ½"	8 ½"
2 ¼"	4'-9"	9"	3"	23"	13 ¾"	9 ¼"

⑦ Min dimensions given, longer bolts are acceptable.

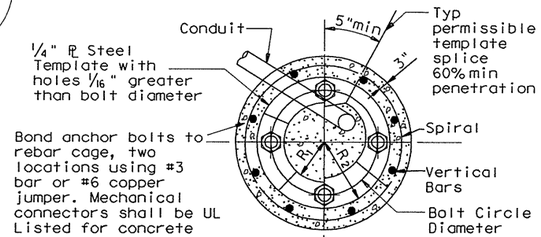

TOP VIEW

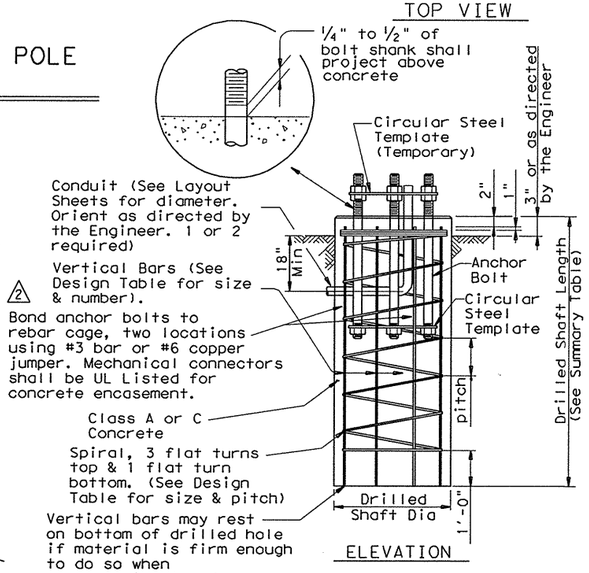

ELEVATION

FOUNDATION DETAILS

FOUNDATION SUMMARY TABLE ③

LOCATION IDENTIFICATION	AVG. N BLOW /ft.	FDN TYPE	NO. EA	DRILLED SHAFT LENGTH ⑥ (FEET) 24-A	30-A	36-A	36-B	42-A
TOTAL DRILLED SHAFT LENGTHS								

GENERAL NOTES:
Design conforms to 1994 AASHTO Standard Specifications for Structural Supports for Highway Signs, Luminaires and Traffic Signals and interim revisions thereto.
Reinforcing steel shall conform to Item 440.
Concrete shall be Class A or C.
Threads for anchor bolts and nuts shall be rolled or cut threads of unified national coarse thread series except for A193B7 bolts which shall have 8 pitch thread series. Bolts and nuts shall have Class 2A and 2B fit tolerances. Galvanized nuts shall be tapped after galvanizing.
Anchor bolts that are 1" in diameter or less shall conform to ASTM A36. Anchor bolts larger than 1" in diameter shall conform to A36M55 in accordance with the Item, "Anchor Bolts" or ASTM A193B7 or A687. Galvanize or coat with zinc-rich paint a minimum of the upper 14 inches of all anchor bolts unless otherwise noted. Exposed nuts shall be galvanized or coated with zinc-rich paint. Washers shall be galvanized. Templates and embeded nuts need not be galvanized.

11/99 Revision

⚠1 Changed to Facilitate new terminal strip enclosure

⚠2 Changed from ground rod to UFER ground

Texas Department of Transportation
Traffic Operations Division

TRAFFIC SIGNAL POLE FOUNDATION

TS-FD-99

©TxDOT August 1995

DN: TXDOT	CK: TXDOT	DW: TXDOT	CK: TXDOT

REVISIONS	CONT	SECT	JOB	HIGHWAY
5-96	2452	01	050	LP 1604
11-99	DIST	COUNTY		SHEET NO.
	SAT	BEXAR		330

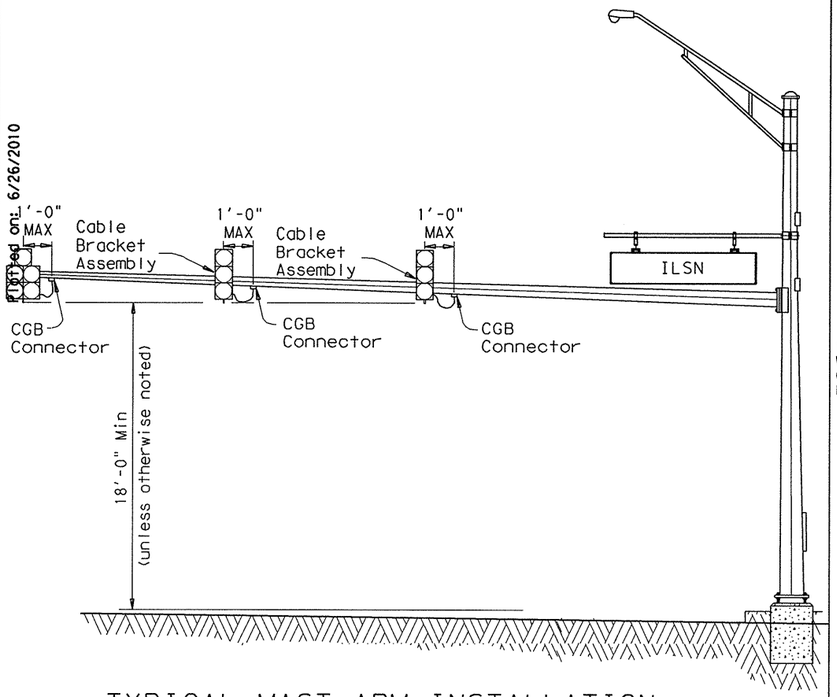

TYPICAL MAST ARM INSTALLATION

BACKPLATES ARE NOT SHOWN FOR CLARITY

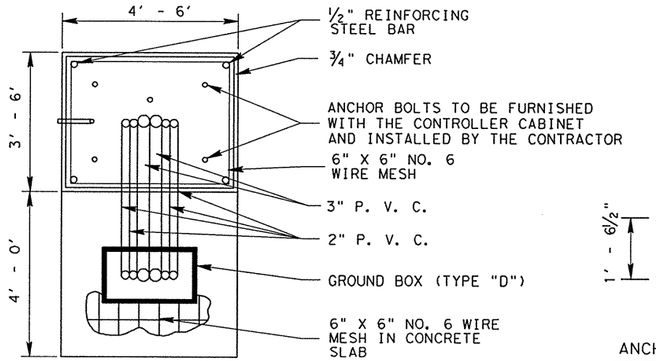

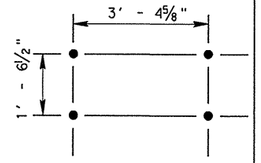

ANCHOR BOLT PATTERN

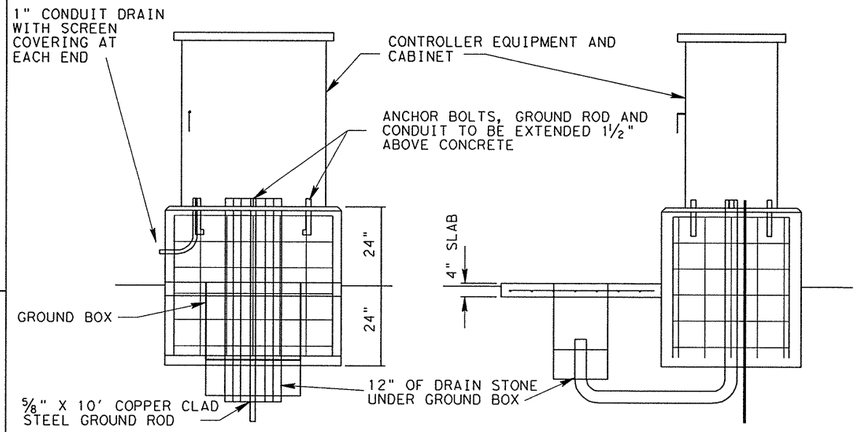

CONTROLLER MOUNT NOTES :

ALL WIRING TERMINATING IN THE CONTROLLER SHALL BE LABELED IN A MANNER THAT CAN BE IDENTIFIED WHEN THE CONTROLLER IS INSTALLED THE CONTRACTOR SHALL CONNECT THE FIELD WIRING TO THE CONTROLLER

ONE 2" PVC SHALL REMAIN EMPTY FOR FUTURE USE

CONCRETE SHALL BE TESTED AS MISCELLANEOUS CONCRETE

ALL MATERIALS SHOWN AND LABOR TO INSTALL THE CONTROLLER FOUNDATION SHALL BE CONSIDERED SUBSIDIARY TO PERTINENT ITEMS

CONTROLLER FOUNDATION SHALL BE AS SHOWN ON THE PLANS, UNLESS OTHERWISE DIRECTED BY THE ENGINEER.

TYPICAL CONTROLLER MOUNT DETAILS

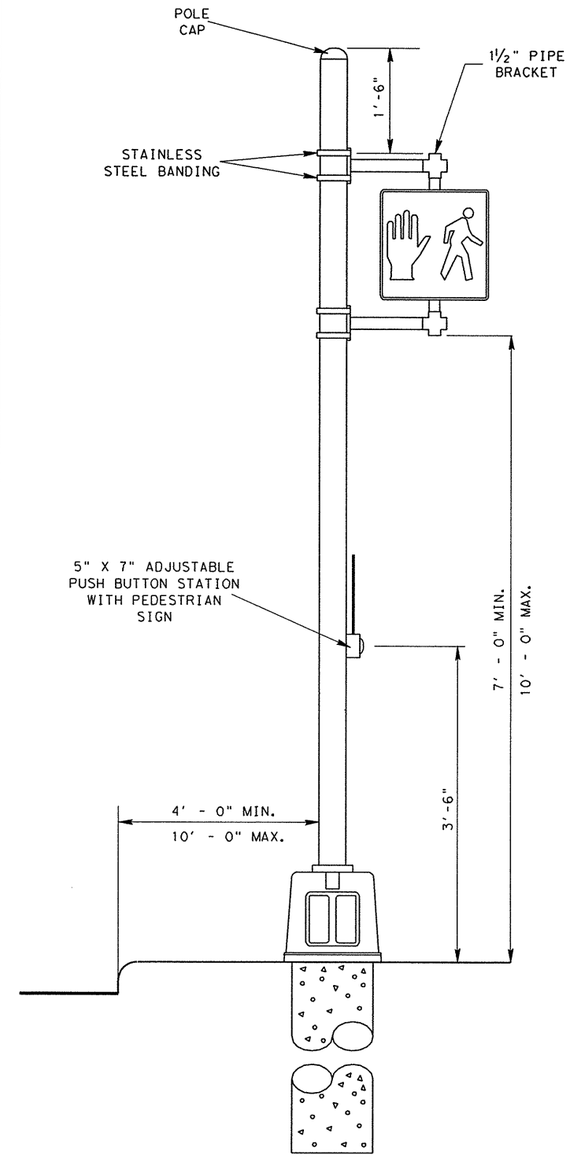

TYPICAL PEDESTAL POLE ASSEMBLY

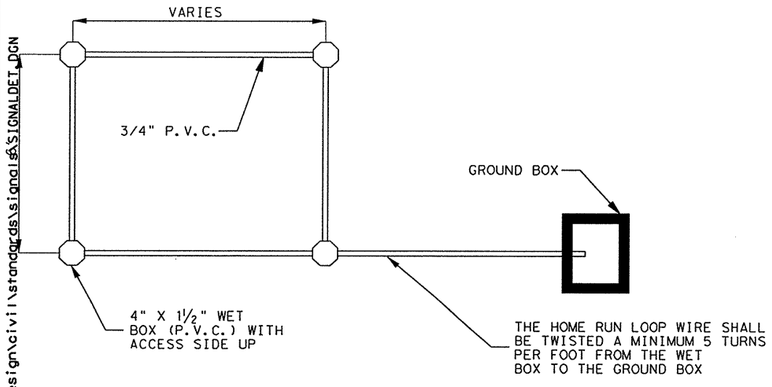

NOTES:

SHALL INSTALL CONDUIT ENCASED LOOPS AT THE LOCATIONS SHOWN ON THE PLANS USING 3/4 " DIAMETER PVC SCHEDULE 40 OR AT NO ADDITIONAL COST 1" DIAMETER PVC SCHEDULE 80.

LOOP LOCATIONS MAY BE STAGGERED SLIGHTLY (6") TO ACCOMMODATE HOME RUN PLACEMENT.

INDIVIDUAL HOME RUN CONDUITS SHALL BE EXTENDED TO THE GROUND BOX SHOWN ON THE PLANS FOR EACH LOOP INSTALLED.

THE NUMBER OF LOOP WIRE TURNS SHALL BE AS SHOWN ON THE TYPICAL LOOP DETECTOR DETAILS.

CONDUIT ENCASED LOOPS

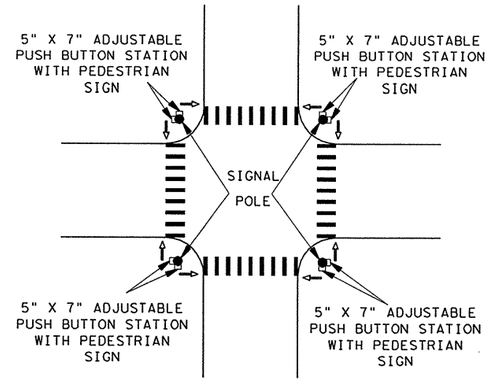

TYPICAL PED PUSH BUTTON LOCATION

THE ENGINEER SHALL VERIFY ALL PEDESTRIAN SIGNAL AND PEDESTRIAN PUSH BUTTON LOCATIONS PRIOR TO INSTALLATION.

San Antonio District Standard

MISCELLANEOUS TRAFFIC SIGNAL DETAILS

MTS

© 2006 Texas Department of Transportation

REVISIONS	FED. RD. DIV. NO.	FEDERAL AID PROJECT NO.		SHEET NO.
FEB. 2006	6			331
OCT. 2007	STATE	DIST.	COUNTY	
	TEXAS	SAT	BEXAR	
	CONT.	SECT.	JOB	HIGHWAY NO.
	2452	01	050	LP 1604

Design Filename: p:\74\00\04\design\civil\standards\signals\SIGNALDET.DGN
Plotted on: 6/26/2010 10:50:34 AM
p:\74\00\04\design\civil\standards\signals\SIGNALDET.DGN
ACC: DISPLAYED

LOOP DETECTOR PLACEMENT DETAILS

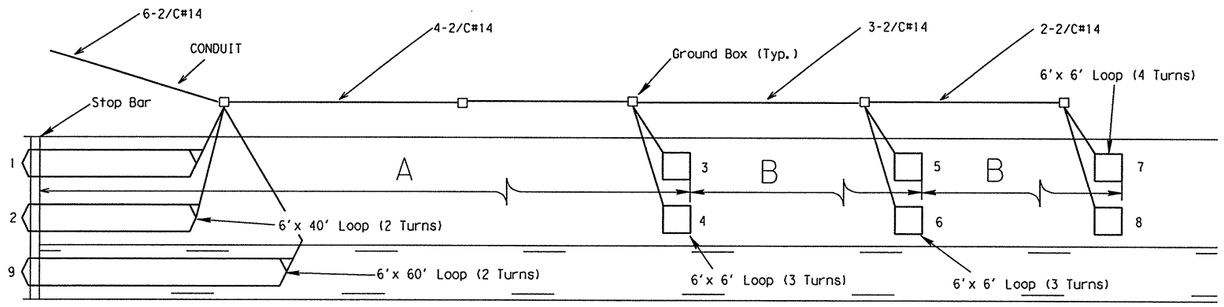

55 MPH (A=231', B=95') 60 MPH (A=281', B=100')
65 MPH (A=326', B=110') 70 MPH (A=356', B=125')

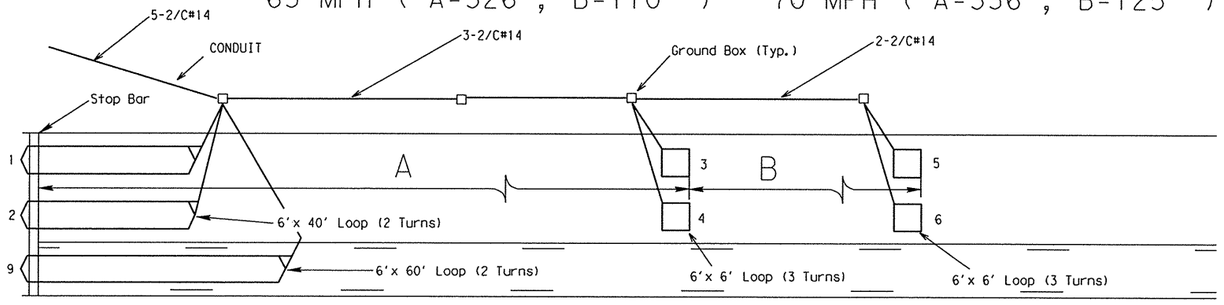

35 MPH (A=96', B=100') 40 MPH (A=116', B=130')
45 MPH (A=181', B=115') 50 MPH (A=226', B=130')

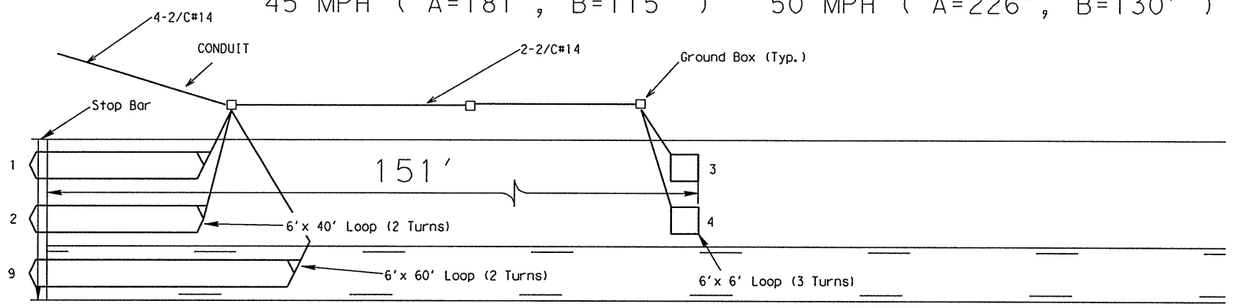

30 MPH

LOOP DETECTOR GENERAL NOTES (55 MPH TO 70 MPH):

Loops 1 and 2 shall be connected to the controller cabinet by means of the same loop lead-in (2/C #14 AWG).

Loops 3 and 4 shall be connected to the controller cabinet by means of the same loop lead-in (2/C #14 AWG).

Loops 5 and 6 shall be connected to the controller cabinet by means of the same loop lead-in (2/C #14 AWG).

Loops 7 and 8 shall be connected to the controller cabinet by means of individual loop lead-in (2/C#14 AWG)

Loop 9 shall be connected to the controller cabinet by means of a loop lead-in (2/C #14 AWG). Loop 9 shall be placed only when a left turn lane exists.

LOOP DETECTOR GENERAL NOTES (35 MPH TO 50 MPH):

Loops 1 and 2 shall be connected to the controller cabinet by means of the same loop lead-in (2/C #14 AWG).

Loops 3 and 4 shall be connected to the controller cabinet by means of the same loop lead-in (2/C #14 AWG).

Loops 5 and 6 shall be connected to the controller cabinet by means of individual loop lead-in (2/C #14 AWG).

Loop 9 shall be connected to the controller cabinet by means of a loop lead-in (2/C #14 AWG). Loop 9 shall be placed only when a left turn lane exists.

LOOP DETECTOR GENERAL NOTES (30 MPH):

Loops 1 and 2 shall be connected to the controller cabinet by means of the same loop lead-in (2/C #14 AWG).

Loops 3 and 4 shall be connected to the controller cabinet by means of individual loop lead-in (2/C #14 AWG).

Loop 9 shall be connected to the controller cabinet by means of a loop lead-in (2/C #14 AWG). Loop 9 shall be placed only when a left turn lane exists.

VIDEO DETECTION PLACEMENT DETAILS

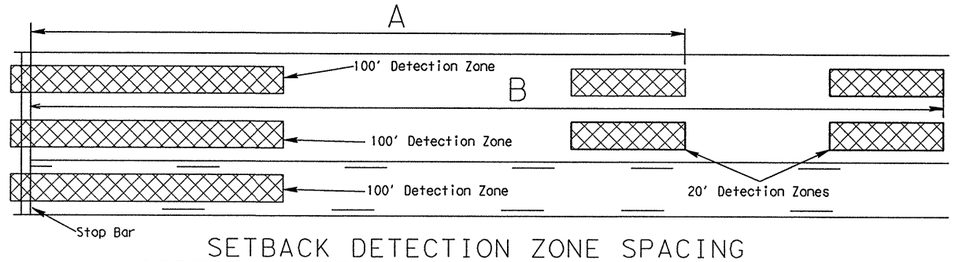

SETBACK DETECTION ZONE SPACING
(SPEEDS GREATER THAN OR EQUAL TO 45 MPH)

45 MPH (A=210', B=350') 50 MPH (A=235', B=390')
55 MPH (A=255', B=430') 60 MPH (A=280', B=470')
65 MPH (A=305', B=510') 70 MPH (A=330', B=550')

NOTE: SPEEDS EQUAL OR GREATER THAN 45 MPH WILL REQUIRE THE USE OF TWO VIVDS CAMERAS.

UTILIZATION OF CAMERA ONE FOR STOP BAR DETECTION AND CAMERA TWO FOR SET BACK DETECTION ZONES.

STOP BAR DETETCION ZONES SHALL BE PROVIDED FOR EACH LANE OF EACH APPROACH.

STOP BAR DETECTION AND SET BACK DETECTION SHOULD DRIVE A SEPARATE DETECTOR INPUT INTO THE CONTROLLER. IN ADDITION, DETECTORS IN EXCLUSIVE TURN LANES SHOULD DRIVE A SEPARATE DETECTOR INPUT INTO THE CONTROLLER. SEE TYPICAL LAYOUT BELOW.

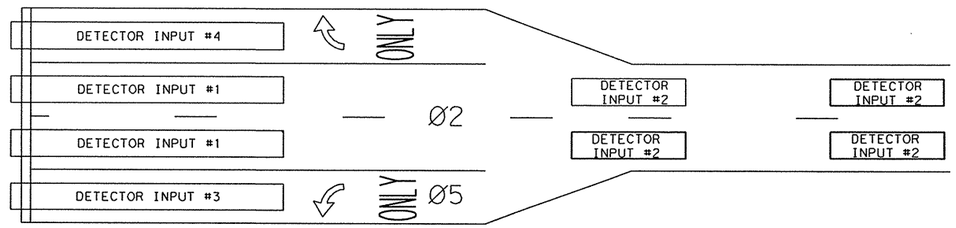

DETECTOR INPUT #	PHASE
1	Ø2 STOP BAR
2	Ø2 SET BACK
3	Ø5 STOP BAR
4	Ø2 RT LANE

NOTE:
ALL DETECTOR PLACEMENTS ARE BASED ON THE POSTED SPEED LIMIT

San Antonio District Standard

VEHICLE DETECTOR PLACEMENT DETAILS

VD(2)-06

© 2006 Texas Department of Transportation

REVISIONS	FED.RD. DIV.NO.	FEDERAL AID PROJECT NO.		SHEET NO.
FEB. 2006	6	2451-01-050		332
	STATE	DIST.	COUNTY	
	TEXAS	SAT		
	CONT.	SECT.	JOB	HIGHWAY NO.

Plotted on: 6/26/2010
10:50:33 AM
6/26/2010
p:\74\00\04\design\civil\standards\signals\SIGNALDET.DGN
Design Filename: p:\74\00\04\design\civil\standards\signals\SIGNALDET.DGN
DISPLAYED
ACC:

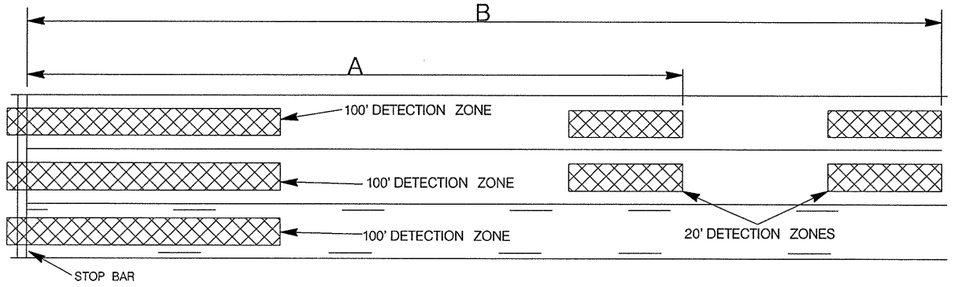

SETBACK DETECTION ZONE SPACING

POSTED SPEED	A	B
35 MPH	165''	270''
40 MPH	190''	310''
45 MPH	210'	350'
50 MPH	235''	390''
55 MPH	255''	430'

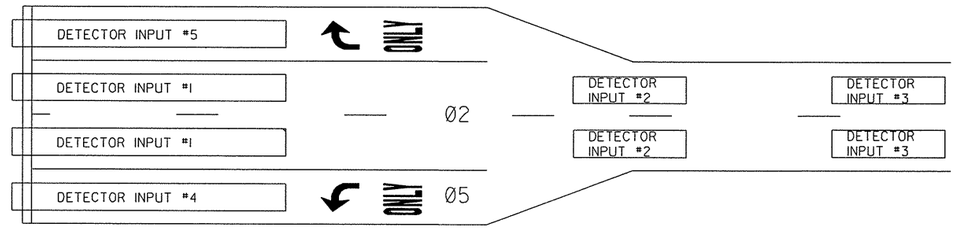

DETECTOR INPUT #	PHASE
1	Ø2 STOP BAR
2	Ø2 SETBACK - MID
3	Ø2 SETBACK - REAR
4	Ø5 STOP BAR
5 **	Ø2 RT LANE

** SEE NOTE 5

DETECTION PLACEMENT NOTES

1. ALL DETECTOR PLACEMENTS ARE BASED ON THE POSTED SPEED LIMIT
2. SPEEDS EQUAL OR GREATER THAN 35 MPH WILL REQUIRE THE USE OF TWO VIVDS CAMERAS. UTILIZATION OF CAMERA ONE FOR STOP BAR DETECTION AND CAMERA TWO FOR SET BACK DETECTION ZONES.
3. STOP BAR DETETCION ZONES SHALL BE PROVIDED FOR EACH LANE OF EACH APPROACH.
4. STOP BAR DETECTION AND SET BACK DETECTION SHOULD DRIVE A SEPARATE DETECTOR INPUT INTO THE CONTROLLER. IN ADDITION, DETECTORS IN EXCLUSIVE TURN LANES SHOULD DRIVE A SEPARATE DETECTOR INPUT INTO THE CONTROLLER. SEE TYPICAL LAYOUT.
5. WHEN AN EXCLUSIVE RIGHT TURN LANE IS PRESENT, AN EXTENSION MODULE MUST BE USED TO PROVIDE INPUT #5. IN LIEU OF AN EXTENSION MODULE, A SECOND PROCESSOR CARD CAN BE USED FOR THE STOP BAR CAMERA

VIDEO DETECTION PLACEMENT DETAILS

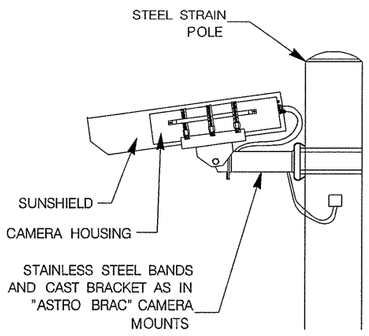

POLE MOUNT

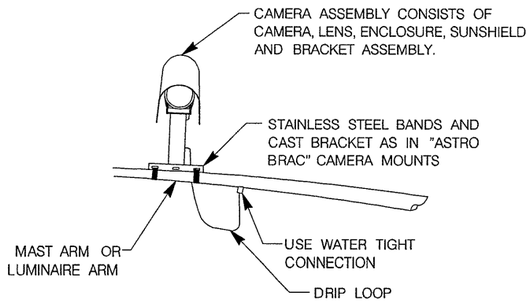

FRONT VIEW

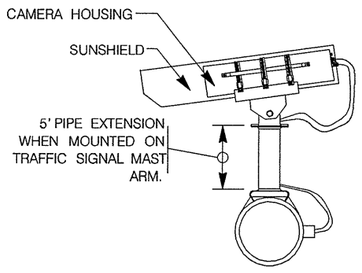

SIDE VIEW

MAST ARM OR LUMINAIRE ARM

VIDEO DETECTION NOTES

1. VIDEO DETECTION PROCESSOR UNIT SHALL BE INSTALLED INSIDE CONTROLLER CABINET.
2. VIDEO DETECTION CAMERA & BRACKET SHALL BE INSTALLED AS DETAILED OR AS DIRECTED BY THE ENGINEER.
3. CAMERAS SHALL BE MOUNTED AS FAR OVER THE ROADWAY AS POSSIBLE.
4. STAINLESS STEEL BANDS AND CAST BRACKETS AS IN "ASTRO-BRAC" SHALL BE USED TO INSTALL THE CAMERAS.
5. WHEN AIMING CAMERA, HORIZON SHALL NOT BE VISIBLE IN THE FIELD OF VIEW.
6. CAMERA ENCLOSURE ASSEMBLY SHALL BE ROTATABLE AFTER INSTALLATION TO PROVIDE PROPER ALIGNMENT.
7. ALL CABLE ENTRY AND EXIT POINTS IN THE MAST ARM AND /OR POLES SHALL BE WATER TIGHT.

TYPICAL VIVDS DETAILS

CITY OF SAN ANTONIO
TRAFFIC MANAGEMENT DIVISION
DEPARTMENT OF PUBLIC WORKS

TRAFFIC SIGNAL STANDARDS

VEHICLE DETECTOR INSTALLATION DETAILS

2452-01-050

TM-VIVDS-08

DRWN: M. BARRERA, P.E., PTOE	DATE: 05/27/08	SHT. NO. 333
APRV:	DATE:	
APRV: CITY OF SAN ANTONIO	DATE:	NOT TO SCALE

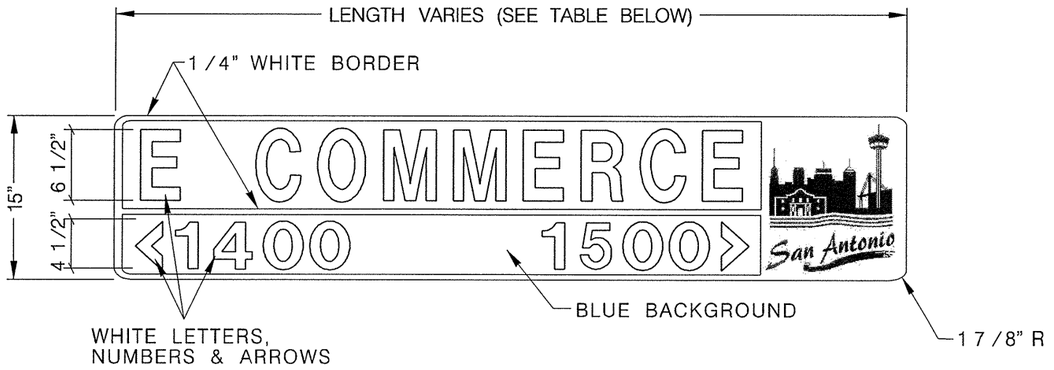

15" METRO – STREET NAME SIGNS

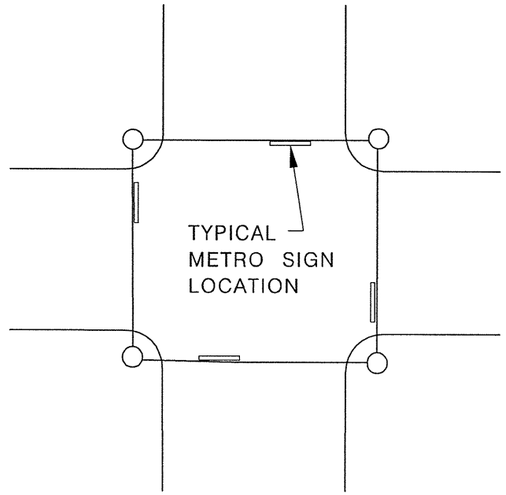

SPAN WIRE INSTALLATION

TYPICAL METRO SIGN PLACEMENT

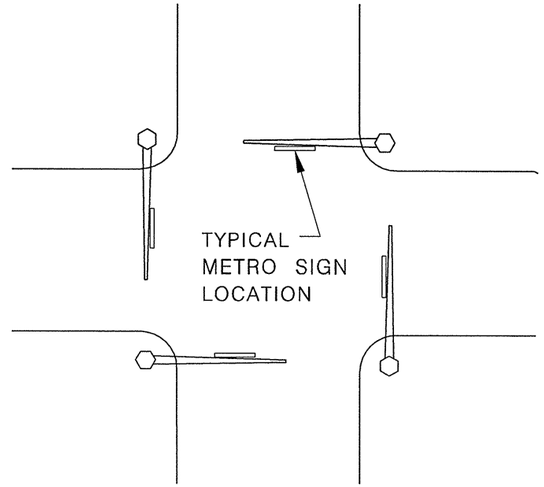

MAST ARM INSTALLATION

15" METRO w/CITY SKY LINE

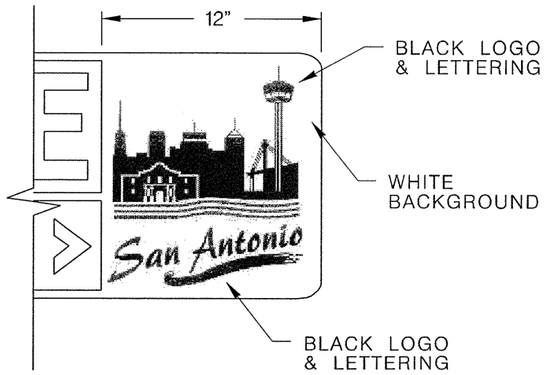

HEIGHT	15" (381 MM)
LENGTH	48" (1200 MM) MIN. 72" (1800 MM) MAX.** 1' (300 MM) INCREMENTS OF LENGTH
THICKNESS	0.125" (3 MM)
SUBSTRATE	ALUMINUM ALLOY, 5052–H38 (ASTM B–209) GOLD CHROMATE FINISH
SIGN FACE MATERIALS	BLUE FILM OVER DIAMOND GRADE FP–85, SECTION 718 AND L–S–300C
LEGENDS AND SYMBOLS	SERIES D (USUAL) SERIES C OR B FOR MAXIMUM LENGTH SIGN BLANK, IF NECESSARY
COLOR	WHITE LEGEND ON BLUE BACKGROUND
LETTER TRACKING	17% (USUAL) 10% (MIN.)

** SIGN PLATE LONGER THAN 72" MUST BE APPROVED BY THE CITY TRAFFIC ENGINEER

* DIAMOND GRADE SHEETING 5052–H38 ALUMINUM SUBSTRATE

PEDESTRIAN PUSHBUTTON SIGNS

LEFT TURN SIGNS

THE ORIGINAL OF THIS DRAWING WAS SIGNED AND SEALED BY EDWARD N. MERY, P.E., #58698 ON 02.06.06 AND IS ON FILE WITH THE TRAFFIC ENGINEERING DIVISION OF THE PUBLIC WORKS DEPARTMENT, CITY OF SAN ANTONIO.

FEBRUARY 2006

CITY OF SAN ANTONIO
DEPARTMENT OF PUBLIC WORKS

TRAFFIC SIGN STANDARDS

METRO STREET NAME SIGN AND SIGN PLACEMENT

SHEET 4 OF 4

% SUBMITTAL	PROJECT NO.: 2452-01-050		DATE:
DRWN. BY: A.F.G.	DSGN. BY: E.N.M.	CHKD. BY: J.D.F./E.N.M.	SHEET NO.: 334

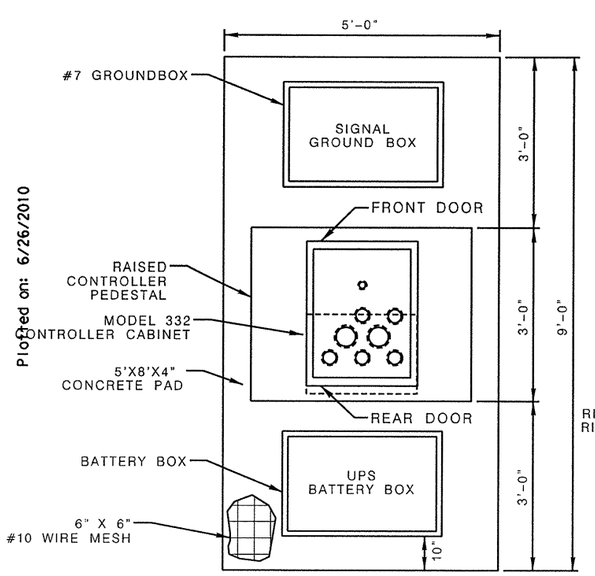

TOP VIEW

(REQUIRED FOR NEW FOUNDATION)

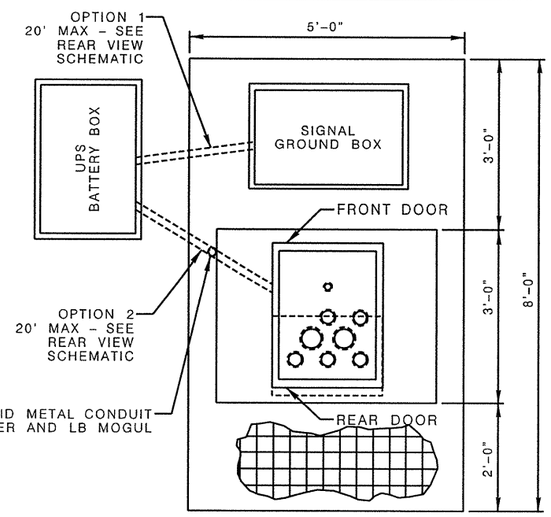

TOP VIEW

(RETROFITTED FOUNDATION)

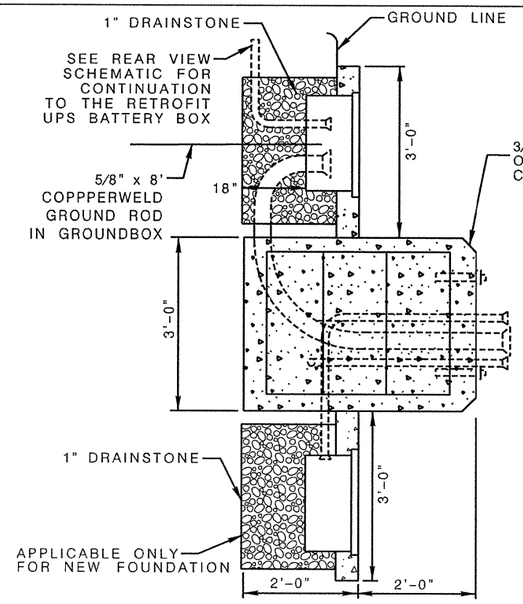

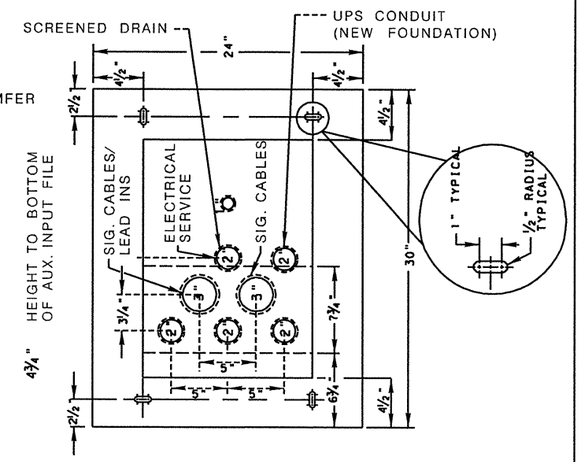

332 BASE PLATE TEMPLATE

SIDE VIEW

OPTION 1:
USE AVAILABLE CONDUIT SPACE TO CONNECT WIRING FROM GROUNDBOX TO CABINET.

OPTION 2:
UPS CONDUIT AND CABLES TO BE ROUTED THROUGH EXISTING CONDUITS, WHEN AVAILABLE. A 2" RMC WITH LB MOGUL MAY BE INSTALLED ON THE RIGHTSIDE (REARVIEW) OF THE CABINET FOR THE UPS CABLING IF NO SPARE CONDUITS ARE AVIAILABLE IN THE EXISTING FOUNDATION.

NOTES:

1) CONTRACTOR TO INSTALL GROUNDBOX, CONDUIT, CONTROLLER FOUNDATION, CONCRETE SLAB AND CONDUIT FROM GROUNDBOX TO CABINET. SEE UPS SPECIAL SPECIFICATION FOR ADDITIONAL WIRING DETAILS.

2) FOR NEW FOUNDATIONS A DEDICATED UPS CONDUIT FROM THE FOUNDATION TO THE BATTERY BOX SHALL BE PROVIDED BY THE CONTRACTOR.

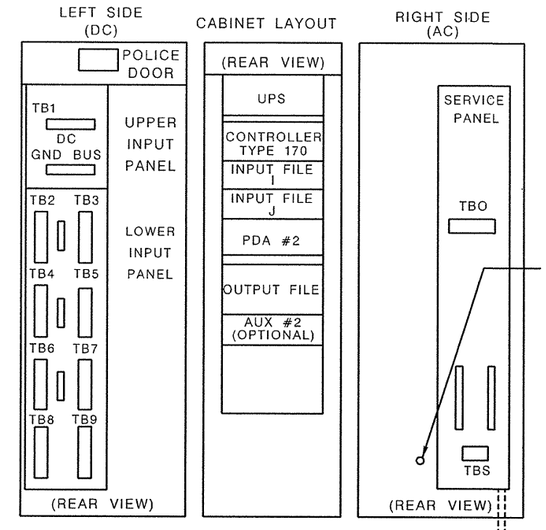

REAR VIEW SCHEMATIC

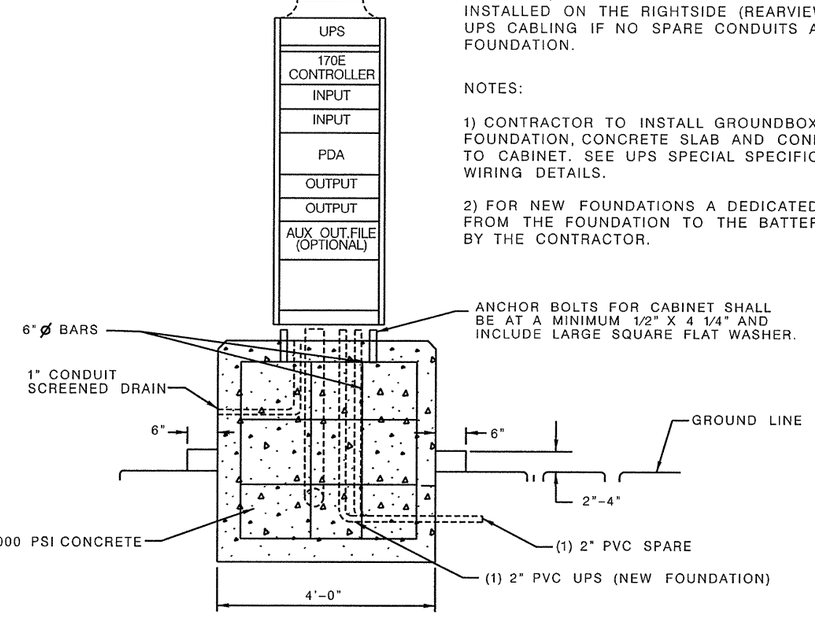

REAR VIEW

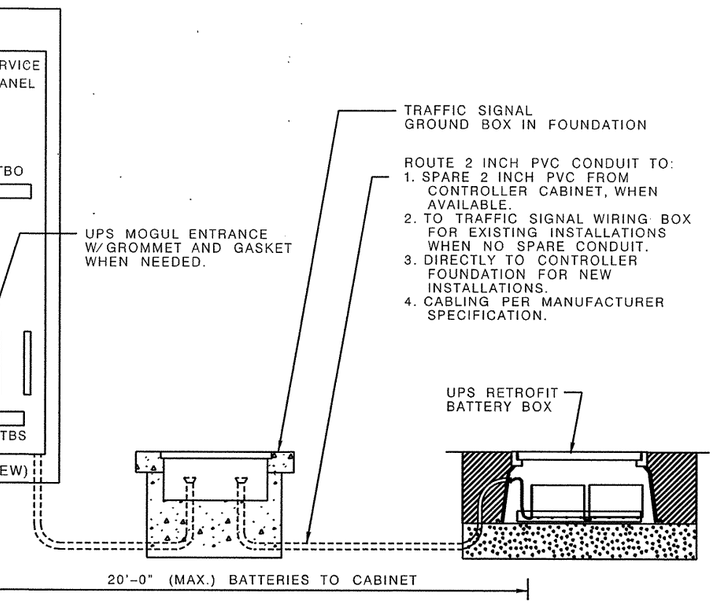

A SIGNED AND SEALED COPY OF THIS STANDARD IS ON FILE WITH THE CITY OF SAN ANTONIO

TRAFFIC SIGNAL DETAILS
UPS LAYOUT, CONDUIT & FOUNDATION

2452-01-050

SURVY. BY:	APPR. BY: TRAFFIC SIGNAL DESIGN ENGINEER	SCALE:
DRWN. BY:		REF. NO.:
DSGN. BY:	APPR. BY: ENGINEERING & TRAFFIC ENGINEER	PROJ NO.:
CHKD. BY:		SHEET NO.: 335

SHEET NO.:1600

Plotted on: 6/26/2010

Design Filename: p:\74\00\04\design\civil\standards\signals\UPSSIGNALSTDDETAIL_UTIL.dgn

p:\74\00\04\design\civil\standards\signals\UPSSIGNALSTDDETAIL_UTIL.dgn 6/26/2010

DISCLAIMER:
The use of this standard is governed by the "Texas Engineering Practice Act". No warranty of any kind is made by TxDOT for any purpose whatsoever. TxDOT assumes no responsibility for the conversion of this standard to other formats or for incorrect results or damages resulting from its use.

DATE:
FILE:

SHIPPING PARTS LIST ~ POLES AND LUMINAIRE ARMS

Nominal Mounting Ht. (ft)	Shoe Base Designation Pole	A1	A2	Luminaire	Quantity	T-Base Designation Pole	A1	A2	Luminaire	Quantity	CSB/SSCB Mounted Designation Pole	A1	A2	Luminaire	Quantity
20	(Type SA 20 S - 4)			(.15kW) S		(Type SA 20 T - 4)			(.15kW) S						
	(Type SA 20 S - 4 - 4)			(.15kW) S		(Type SA 20 T - 4 - 4)			(.15kW) S						
30	(Type SA 30 S - 4)			(.25kW) S		(Type SA 30 T - 4)			(.25kW) S		(Type SP 28 S - 4)			(.25kW) S	
	(Type SA 30 S - 4 - 4)			(.25kW) S		(Type SA 30 T - 4 - 4)			(.25kW) S		(Type SP 28 S - 4 - 4)			(.25kW) S	
	(Type SA 30 S - 8)			(.25kW) S		(Type SA 30 T - 8)			(.25kW) S		(Type SP 28 S - 8)			(.25kW) S	
	(Type SA 30 S - 8 - 8)			(.25kW) S		(Type SA 30 T - 8 - 8)			(.25kW) S		(Type SP 28 S - 8 - 8)			(.25kW) S	
40	(Type SA 40 S - 4)			(.25kW) S		(Type SA 40 T - 4)			(.25kW) S		(Type SP 38 S - 4)			(.25kW) S	
	(Type SA 40 S - 4 - 4)			(.25kW) S		(Type SA 40 T - 4 - 4)			(.25kW) S		(Type SP 38 S - 4 - 4)			(.25kW) S	
	(Type SA 40 S - 8)			(.25kW) S		(Type SA 40 T - 8)			(.25kW) S		(Type SP 38 S - 8)			(.25kW) S	
	(Type SA 40 S - 8 - 8)			(.25kW) S		(Type SA 40 T - 8 - 8)			(.25kW) S		(Type SP 38 S - 8 - 8)			(.25kW) S	
	(Type SA 40 S - 10)			(.25kW) S		(Type SA 40 T - 10)			(.25kW) S		(Type SP 38 S - 10)			(.25kW) S	
	(Type SA 40 S - 10 - 10)			(.25kW) S		(Type SA 40 T - 10 - 10)			(.25kW) S		(Type SP 38 S - 10 - 10)			(.25kW) S	
	(Type SA 40 S - 12)			(.25kW) S		(Type SA 40 T - 12)			(.25kW) S		(Type SP 38 S - 12)			(.25kW) S	
	(Type SA 40 S - 12 - 12)			(.25kW) S		(Type SA 40 T - 12 - 12)			(.25kW) S		(Type SP 38 S - 12 - 12)			(.25kW) S	
50	(Type SA 50 S - 4)			(.4kW) S		(Type SA 50 T - 4)			(.4kW) S		(Type SP 48 S - 4)			(.4kW) S	
	(Type SA 50 S - 4 - 4)			(.4kW) S		(Type SA 50 T - 4 - 4)			(.4kW) S		(Type SP 48 S - 4 - 4)			(.4kW) S	
	(Type SA 50 S - 8)			(.4kW) S		(Type SA 50 T - 8)			(.4kW) S		(Type SP 48 S - 8)			(.4kW) S	
	(Type SA 50 S - 8 - 8)			(.4kW) S		(Type SA 50 T - 8 - 8)			(.4kW) S		(Type SP 48 S - 8 - 8)			(.4kW) S	
	(Type SA 50 S - 10)			(.4kW) S		(Type SA 50 T - 10)			(.4kW) S		(Type SP 48 S - 10)			(.4kW) S	
	(Type SA 50 S - 10 - 10)			(.4kW) S		(Type SA 50 T - 10 - 10)			(.4kW) S		(Type SP 48 S - 10 - 10)			(.4kW) S	
	(Type SA 50 S - 12)			(.4kW) S		(Type SA 50 T - 12)			(.4kW) S		(Type SP 48 S - 12)			(.4kW) S	
	(Type SA 50 S - 12 - 12)			(.4kW) S		(Type SA 50 T - 12 - 12)			(.4kW) S		(Type SP 48 S - 12 - 12)			(.4kW) S	

OTHER Designation Pole	A1	A2	Luminaire	Quantity

GENERAL NOTES:

All work, materials and services not shown on the plans which may be necessary for complete and proper construction shall be performed, furnished and installed by the Contractor. Faulty fabrication or poor workmanship in any material, equipment or installation will be considered justification for rejection. Where manufacturers provide warranties or guarantees as a customary trade practice, Contractor shall furnish to the Department such warranties or guarantees.

The location of poles and fixtures are diagrammatic only and may be shifted by the Engineer to accommodate local conditions. Erection and/or removal of poles and luminaires located near overhead electrical lines shall be accomplished using established industry and utility safety practices and in accordance with laws governing such work. The Contractor shall consult with the appropriate utility company prior to beginning such work.

A. Standard Steel Pole Designs. Steel poles fabricated in accordance with the details and dimensions shown herein, shall be considered standard designs. Submission of shop drawings and design calculations for standard designs is not required.

B. Optional Steel Pole Designs. Multi-sided steel poles may be allowed as optional designs, if steel poles are permitted or required, pending approval by the Department as outlined below.
1. Shop Drawings. Optional designs require submission of shop drawings and design calculations bearing the seal of an engineer registered in the State of Texas, in accordance with Item 441, "Steel Structures." The Department may elect to pre-approve some shop drawings for optionally designed poles. Submission of shop drawings and design calculations is not required for structures fabricated in accordance with the details of shop drawings on the pre-approved list maintained by the TxDOT Traffic Operations Division. Any deviation from the pre-approved shop drawings will require submission of shop drawings of the complete assembly and design calculations as described above.
2. Structural Support Design for Luminaires. Lighting support structures shall be designed for a 25 year design life in accordance with the 2001 Edition of the AASHTO "Standard Specifications for Structural Supports for Highway Signs, Luminaires and Traffic Signals." All poles shall be designed for 110 mph 3-second gust wind speeds. An additional 1.14 gust factor shall be applied to the wind loads. For transformer base poles, fabricator shall include transformer base and connecting hardware in design calculations and shop drawing submittals. All transformer bases shall have been structurally tested to resist the theoretical plastic moment capacity of the pole. Certification of the plastic moment load test and FHWA breakaway requirement test of the model of base being furnished shall be submitted with the shop drawings. Shop drawings shall show breakaway base model number, and manufacturer's name and logo. Manufacturer's shop drawings shall include the ASTM designations for all materials to be used.
3. Mast Arm Attachments. All poles and attachments shall be structurally designed to support two 12-foot mast arms and luminaires. Poles shall be supplied with mast arm combinations as shown in the plans. All mast arms shall be designed for a 60-pound luminaire having an effective projected area of 1.6 square feet.
4. Anchor Bolt Assembly. Anchor bolt assemblies for optionally designed poles shall be the same as those shown herein.

C. Aluminum Pole Designs. Aluminum pole designs may be allowed, if aluminum poles are permitted or required, pending approval by the Department as outlined below.
1. Meet all of the requirements stated above for optional steel pole designs and the following:
a. Aluminum poles shall be fabricated in accordance with "Structural Welding Code-Aluminum" AWS D1.2.
b. Aluminum pole designs shall use the same anchor bolt assembly and be subject to the same geometric restraints and other requirements for steel poles specified herein.
C. Aluminum poles shall be equipped with vibration mitigation devices, as approved by the engineer.
d. Pole components shall be constructed using the following material:
Shaft: ASTM B221 or B241 Alloy 6063-T6, ASTM B209 Alloy 5086-H34, ASTM B221 Alloy 6005-T5.
Base Flange: ASTM B26 Alloy 356.0-T6 or ASTM B108 Alloy 356.0-T6 (Yield strength test required).
Mast Arm Fitting: ASTM B209 Alloy 6061-T6 or ASTM B221 Alloy 6005-T5.
Mast Arms: ASTM B241 Alloy 6061-T6 or Alloy 6063-T6.
Pole Cap: ASTM B209 Alloy 5086-H32 or ASTM B108 or B26 Alloy 356.0-T6.
Bolts: Stainless Steel AISI 300 series. Bolts threading into aluminum threads shall be treated with anti-seize compound, Never-Seez Compound, Permatex 133K or equal.

D. Special Designs. Poles with architectural treatments shall meet the requirements shown elsewhere in the plans.

EXPLANATION OF ROADWAY ILLUMINAION ASSEMBLY DESIGNATIONS

(TYPE SA 50 T - X - X) (.4KW) S

SA: Pole and mast arm may be steel or aluminum.
ST: Pole and mast arm must be steel.
AL: Pole and mast arm must be aluminum.
SP: Squashed (ovalized) steel or aluminum pole for installing on CSB or SSCB. See standard sheet CSB (5), or SSCB (4).

Two numerical digits denote mounting height in feet.

Next letter denotes type of base, (S-Shoe Base, T-Transformer Base, or B-Shoe Base Bridge Mount)

First number denotes length of mast arm in feet.

Use of second mast arm is indicated by second dashed number which denotes length in feet.

Next three figures indicate luminaire rating (1 kW= 1000 watts, .4 kW= 400 watts, etc.) Fixtures for U/P (SPL-CO) (.15KW)S(TYPE 1) and (TYPE 2) as shown on RID(UP) shall be "cobra head" style fixtures that meet the specifications shown on RID(LUM) sheets 1 and 2. Fixtures bid under the descriptive code RDWY ILL ASSEM U/P TYPE IF shall meet the specifications shown on RID(IF). All other fixtures bid under Item 610 shall meet specifications shown elsewhere in the plans.

Last letter indicates the type of lamp (M- Metal Halide, S- High Pressure Sodium, L- Low Pressure Sodium).

Texas Department of Transportation
Traffic Operations Division

ROADWAY ILLUMINATION POLES

RIP(1)-07

©TxDOT January 2007

DN: TXDOT	CK: TXDOT	DW: TXDOT	CK: TXDOT
REVISIONS			

CONT	SECT	JOB	HIGHWAY
2452	01	050	LP 1604
DIST	COUNTY		SHEET NO.
SAT	BEXAR		336

DISCLAIMER:
The use of this standard is governed by the "Texas Engineering Practice Act". No warranty of any kind is made by TxDOT for any purpose whatsoever. TxDOT assumes no responsibility for the conversion of this standard to other formats or for incorrect results or damages resulting from its use.

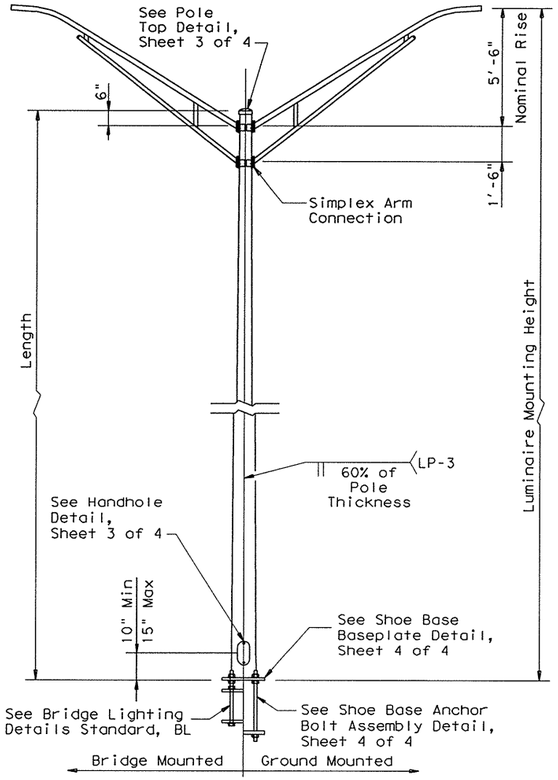

SHOE BASE POLE

SHOE BASE POLE					
Luminaire Mounting Height (ft)	Base Diameter (in)	Top Diameter (in)	Length (ft)	Pole Thickness (in)	Design Moment (K-ft)
20.00	7.00	4.90	15.00	0.1196	7.1
30.00	7.50	4.00	25.00	0.1196	13.2
40.00	8.50	3.60	35.00	0.1196	20.7
50.00	10.50	4.20	45.00	0.1196	30.3

Designs conform to 2001 AASHTO Standard Specifications for Structural Supports for Highway Signs, Luminaires, and Traffic Signals and Interim Specifications. Design 3-Second Gust Wind Speed equal 110 mph with a 1.14 gust factor. A wind importance factor of 0.80 is applied to adjust the wind speed to a 25 year recurrence interval. Design moments listed in tables assume base of pole is less than 25' above natural ground level.

Design structures to support two 12' luminaire mast arms and luminaires. Design mast arms for a 60-pound luminaire having an effective projected area of 1.6 square feet.

Fabrication shall be in accordance with the Specifications and with the details, dimensions, and weld procedures shown herein. Do not submit shop drawings for roadway illumination pole assemblies fabricated in accordance with the details, dimensions, and weld procedures shown herein. Weld references call for preapproved weld procedures which the Fabricator must obtain prior to fabrication. Materials, fabrication tolerances, and shipping practices shall meet the requirements of these sheets and the Specifications. In the absence of specified fabrication tolerances, dimensions shall be within the tolerances generally obtainable in normal fabrication practice.

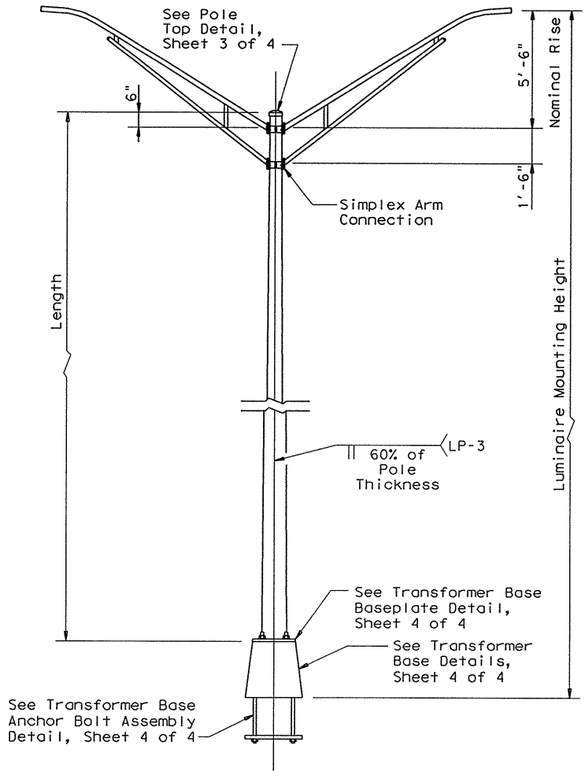

TRANSFORMER BASE POLE

TRANSFORMER BASE POLE					
Luminaire Mounting Height (ft)	Base Diameter (in)	Top Diameter (in)	Length (ft)	Pole Thickness (in)	Design Moment (K-ft)
20.00	7.00	5.11	13.50	0.1196	7.1
30.00	7.50	4.21	23.50	0.1196	13.2
40.00	8.50	3.81	33.50	0.1196	20.7
50.00	10.00	3.41	43.50	0.1196	30.3

For mounting heights between values shown in the tables, use base diameter and thickness values for the larger pole.

Unless otherwise noted, all steel parts shall be galvanized in accordance with Item 445, "Galvanizing."

Steel poles shall be fabricated in accordance with Item 441, "Steel Structures." Longitudinal seam welds for pole sections shall have 60% minimum penetration. All welding shall be in accordance with the ANSI/AWS Structural Welding Code D1.1.

Two-section poles joined by circumferential welds will not be permitted, unless otherwise shown on the plans. Poles may be fabricated in two sections and field-assembled by the lap-joint method. The two sections shall telescope together with a lap length of not less than 1-1/2 times the shaft diameter at the lap joint.

Alternate material equal to or better than material specified may be substituted with the approval of the Engineer.

Lubricate and tighten anchor bolts, when erecting shoe base poles and concrete traffic barrier base poles, in accordance with Item 449, "Anchor Bolts."

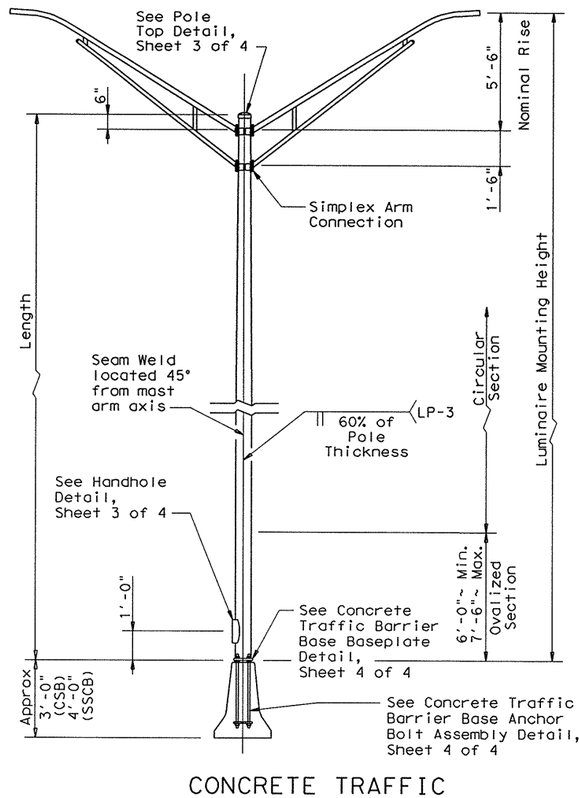

CONCRETE TRAFFIC BARRIER BASE POLE

CONCRETE TRAFFIC BARRIER BASE POLE (CSB/SSCB)						
Luminaire Mounting Height (ft)	Base② Diameter (in)	Top Diameter (in)	Length (ft)	Pole Thickness (in)	Design Moment (K-ft)	
					About ℄ of Rail	Perp. to Rail
28.00	9.00	5.78	23.00	0.1196	10.3	13.2
38.00	9.00	4.38	33.00	0.1196	16.6	20.8
48.00	10.50	4.48	43.00	0.1345	25.1	30.5

All poles, except Transformer Base Poles, shall have hand holes with reinforcing frames and covers. Except for poles mounted on a concrete traffic barrier, hand holes shall be placed 90 degrees to mast arm unless otherwise noted on the plans. For poles mounted on a concrete traffic barrier with one luminaire arm, hand holes shall be located 180 degrees from luminaire arm. For poles mounted on a concrete traffic barrier with two luminaire arms, all hand holes shall be on the same side of the barrier.

The finished pole shall have a smooth, uniform finish free of pits, blisters, or other defects. Scratched, chipped, and other damaged galvanized areas on poles and mast arms shall be repaired in accordance with Item 445, "Galvanizing."

MATERIAL DATA		
COMPONENT	ASTM DESIGNATION	MIN. YIELD (ksi)
Pole Shaft (0.14"/ft. Taper)	A572 Gr 50, A595 Gr A, A1011 HSLAS Gr 50 Cl 2 ③, or A1008 HSLAS Gr 50 Cl 2	50
Base Plate and Handhole Frame	A572 Gr.50, or A36	36
T-Base Connecting Bolts	A325 ①	92
Anchor Bolts(T-Base, Shoe)	F1554 Gr 55	55
Anchor Bolts (CSB/SSCB)	A325, A193-B7, or A321	105
Anchor Bolt Templates	A36	36
Heavy Hex (H.H.) Nuts	A194 Gr 2H, or A563 Gr DH	
Flat Washers	F436	

① Lubricate in the field if necessary in lieu of the requirements in ASTM A325.

② Before ovalized as shown on Concrete Traffic Barrier Base Baseplate details, Sheet 4 of 4.

③ A1011 SS Gr 50 may be used in lieu of HSLAS, provided the material meets the elongation requirements for HSLAS

POLE ASSEMBLY FABRICATION TOLERANCES TABLE	
DIMENSION	TOLERANCE
Shaft length	+1"
I.D. of outside piece of slip fitting pieces	+1/8", -1/16"
O.D. of inside piece of slip fitting pieces	+1/32", -1/8"
Shaft diameter: other	+3/16"
Out of "round"	1/4"
Straightness of shaft	±1/4" in 10 ft
Twist in shaft	4° in 50 ft
Perpendicular to baseplate	1/8" in 24"
Pole centered on baseplate	±1/4"
Location of Attachments	±1/4"
Bolt hole spacing	±1/16"

Texas Department of Transportation
Traffic Operations Division

ROADWAY ILLUMINATION POLES

RIP(2)-07

©TxDOT January 2007
REVISIONS

DN: TXDOT	CK: TXDOT	DW: TXDOT	CK: TXDOT
CONT	SECT	JOB	HIGHWAY
2452	01	050	LP 1604
DIST	COUNTY		SHEET NO.
SAT	BEXAR		337

DATE:
FILE:

DISCLAIMER:
The use of this standard is governed by the "Texas Engineering Practice Act". No warranty of any kind is made by TxDOT for any purpose whatsoever. TxDOT assumes no responsibility for the conversion of this standard to other formats or for incorrect results or damages resulting from its use.

DATE:
FILE:

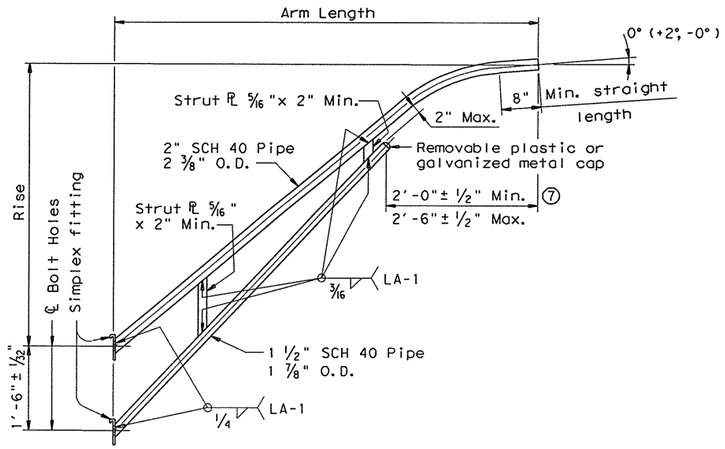

LUMINAIRE ARM

LUMINAIRE ARM DIMENSIONS		
Nominal Arm Length	Arm Length	Rise
4'-0"	3'-6"	2'-6" ⑩
6'-0"	5'-6"	5'-6"
8'-0"	7'-6"	5'-6"
10'-0"	9'-6"	5'-6"
12'-0"	11'-6"	5'-6"

MATERIALS	
Pole or Arm Simplex	ASTM A27 Gr 65-35, A148 Gr 80-50, A576 Gr 1021 ⑤, or A36 (Arm only)
Arm Pipes	ASTM A53 Gr A or B, A500 Gr B, A501, A 1008 HSLAS-F Gr 50 ⑥, or A1011 HSLAS-F Gr 50 ⑥
Arm Struts and Gusset Plates ④	ASTM A36, A572 Gr 50 ⑥, or A588
Misc.	ASTM designations as noted

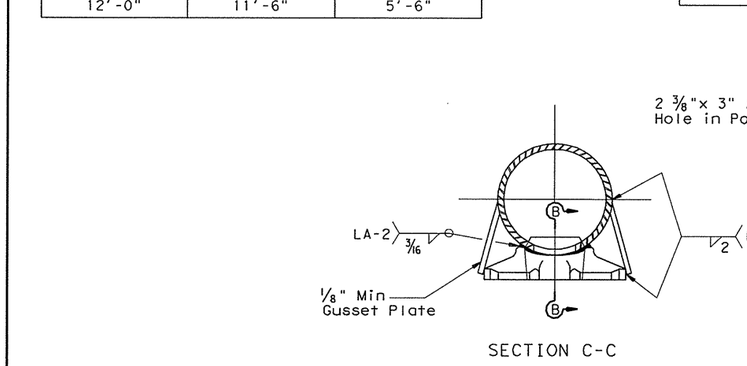

SECTION C-C

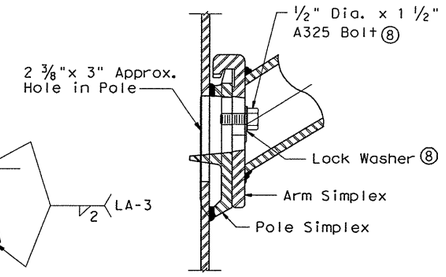

UPPER SIMPLEX FITTING
(Gusset not shown for clarity)

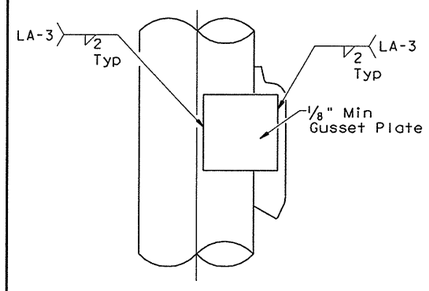

SIDE

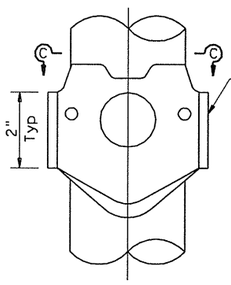

ELEVATION

SIMPLEX ATTACHMENT DETAIL

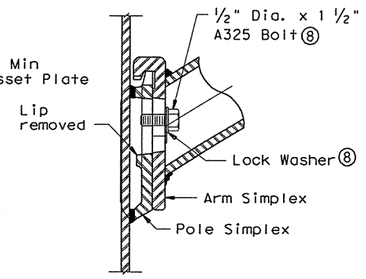

LOWER SIMPLEX FITTING
(Gusset not shown for clarity)

SECTION B-B

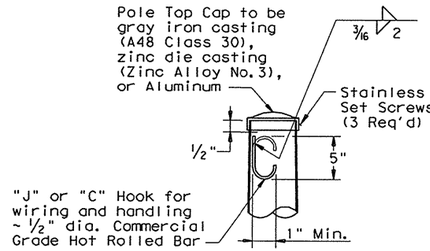

POLE TOP

ARM ASSEMBLY FABRICATION TOLERANCES TABLE	
DIMENSION	TOLERANCE
Arm Length	±3"
Arm Rise	+1 3/4" in 10 ft
Arm Diameter	+3/16"
Overall length or width	+1/4"
Thickness	+1/4", -1/16"
Deviation from flat	1/8" in 12"
Spacing between holes	+3/32"
Bolt hole size	±1/16"
Strut location in truss arms	±1 1/2"

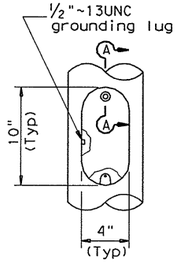

ELEVATION

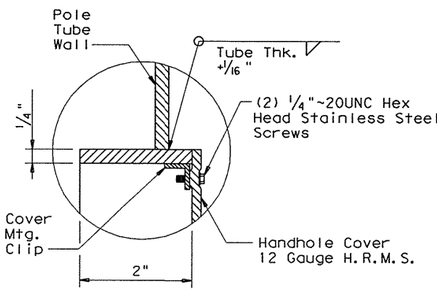

SECTION A-A

HANDHOLE

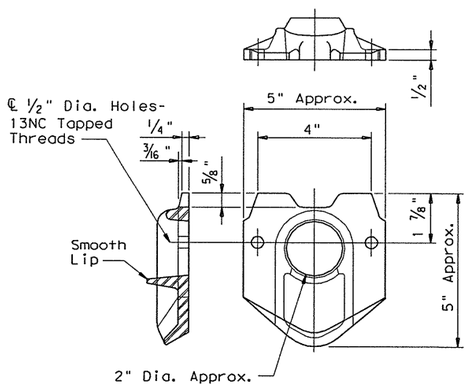

POLE SIMPLEX DETAIL⑨

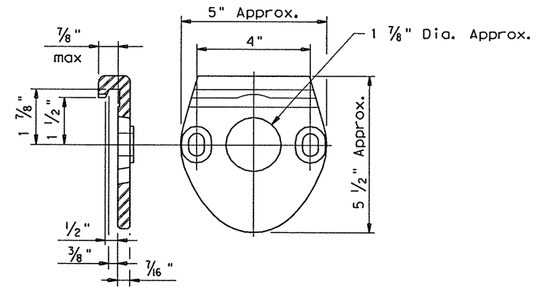

ARM SIMPLEX DETAIL⑨

④ Any of the materials listed for plates may be used where the drawings do not specify a particular ASTM designation.

⑤ A576 must be suitable for forging and also meet minimum tensile strength of 65 ksi, minimum yield of 35 ksi, and elongation in 2 inches of 22 percent.

⑥ A572, A1008 HSLAS-F, and A1011 HSLAS-F materials may have higher yield strengths but shall not have less elongation than the grade indicated.

⑦ Dimensional limits are given to show acceptable variation in design. All of a Fabricator's production of a particular arm length shall have the same dimensions within specified tolerances.

⑧ Each pole simplex fitting shall be supplied with 2 bolts and 2 lock washers of the size specified. The bolts and lock washers shall be secured to the pole with the other hardware items called for in the plans.

⑨ Proposed deviations in arm simplex dimensions or materials must be submitted to the Department for approval.

⑩ Luminaire mounting heights are based on assumed 5'-6" luminaire arm rise.

Texas Department of Transportation
Traffic Operations Division

ROADWAY ILLUMINATION POLES

RIP(3)-07

©TxDOT January 2007

DN: TXDOT	CK: TXDOT	DW: TXDOT	CK: TXDOT
REVISIONS			

CONT	SECT	JOB	HIGHWAY
2452	01	050	LP 1604
DIST	COUNTY		SHEET NO.
SAT	BEXAR		338

DISCLAIMER: The use of this standard is governed by the "Texas Engineering Practice Act". No warranty of any kind is made by TxDOT for any purpose whatsoever. TxDOT assumes no responsibility for the conversion of this standard to other formats or for incorrect results or damages resulting from its use.

DATE:
FILE:

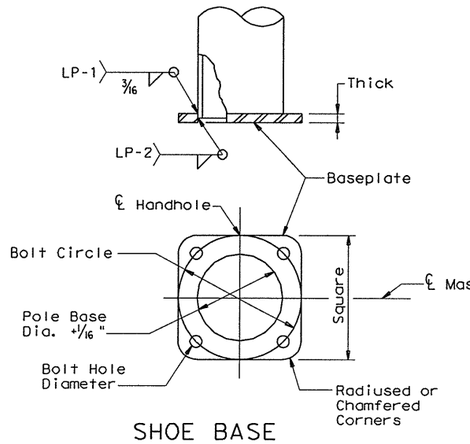

SHOE BASE BASEPLATE

SHOE BASE BASEPLATE TABLE				
MOUNTING HEIGHTS	BOLT CIRCLE	SQUARE	THICK	BOLT HOLE DIAMETER
20'- 30'	13"	13"	1 1/4"	1 1/4"
40'	15"	15"	1 1/4"	1 1/2"
50'	15"	15"	1 1/2"	1 1/2"

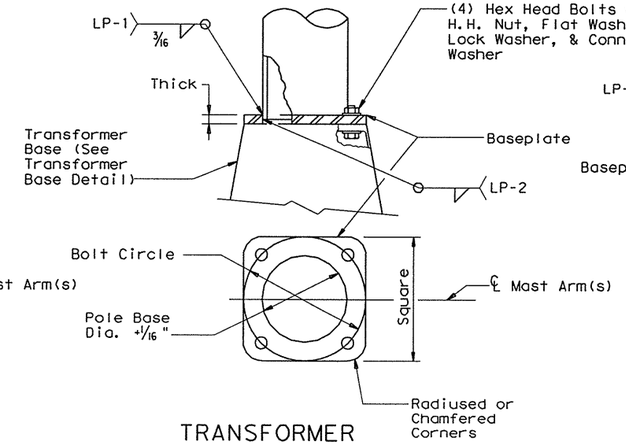

TRANSFORMER BASE BASEPLATE

TRANSFORMER BASE BASEPLATE TABLE						
MOUNTING HEIGHTS	BOLT CIRCLE	SQUARE	THICK	CONNECTING BOLT DIA.	BOLT HOLE DIAMETER	TRANSFOMER BASE TYPE
20'- 30'	13"	13"	1 1/4"	1"	1 1/4"	A
40'	15"	15"	1 1/4"	1 1/4"	1 1/2"	B
50'	15"	15"	1 1/2"	1 1/4"	1 1/2"	B

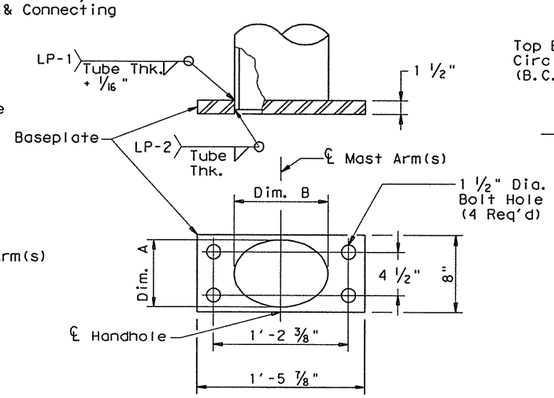

CONCRETE TRAFFIC BARRIER BASE BASEPLATE

CONCRETE TRAFFIC BARRIER BASE BASEPLATE TABLE			
MOUNTING HEIGHTS	POLE DIA.②	DIM. A	DIM. B
28'- 38'	9"	7"± 1/4"	10"± 1/4"
48'	10 1/2"	7"± 1/4"	13"± 1/4"

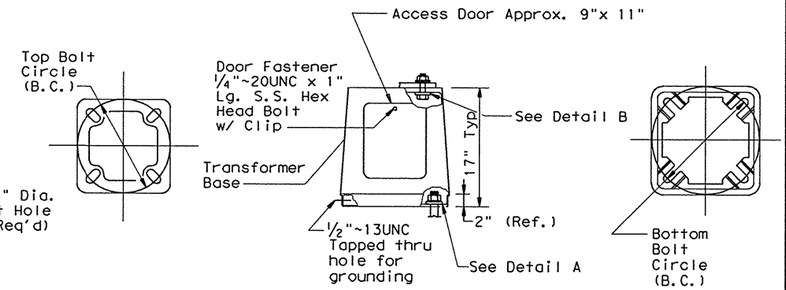

TRANSFORMER BASE TABLE		
TYPE	TOP B.C.	BTM. B.C.
A	13"	14"
B	15"	17 1/4"

TRANSFORMER BASE DETAILS

For mounting heights between those shown in the table, use the values in the table for the larger mounting height.

All breakaway bases shall meet the breakaway requirements of the Latest Edition of the AASHTO "Standard Specifications for Structural Supports for Highway Signs, Luminaires and Traffic Signals," and shall have been tested by FHWA-approved methods. All bases shall have been structurally tested to resist 150% of the design moment.

Transformer bases shall be cast from aluminum, ASTM B108 or B26 Alloy 356.0-T6, or other material approved by the Engineer. Four hex head bolts with four H.H. nuts, four lock washers, four flat washers, and connecting and hold-down washers as recommended by the manufacturer, galvanized to ASTM A153 Class C or D, or B695 Class 50, shall be provided with each transformer base for connecting the pole. Bolts shall be ASTM A325 or approved equal. Nuts shall be ASTM A563 grade DH galvanized.

Bases shall be stamped, incised or by other approved permanent means, marked to show fabricator's name or logo, and model number. Such information shall be placed in a readily seen location, inside or outside the base, but shall not be placed on the door.

Doors for transformer bases shall be made of plastic, fiberglass or other non-metallic material approved by the Engineer and shall be attached with stainless steel screws or bolts. Transformer bases shall be cleaned by grit blast cleaning after heat treatment. Certification by the manufacturer of heat treatment shall be furnished with transformer bases. The certification shall show the metal alloy and temper and that the base meets those requirements, chemical and physical. The certification shall also show the material ASTM specification. Transformer bases shall be cast with a removable tab bar for material testing. Some bars may have been removed by the manufacturer for testing.

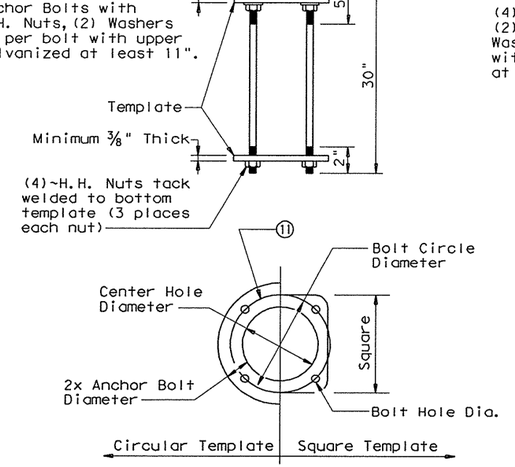

SHOE BASE ANCHOR BOLT ASSEMBLY

SHOE BASE ANCHOR BOLT ASSEMBLY TABLE					
MOUNTING HEIGHTS	A.B. Dia.	BOLT CIRCLE DIAMETER	SQUARE	CTR. HOLE DIAMETER	BOLT HOLE DIAMETER
20'- 30'	1"	13"	13"	11"	1 1/16"
40'- 50'	1 1/4"	15"	14 1/2"	12 1/2"	1 5/16"

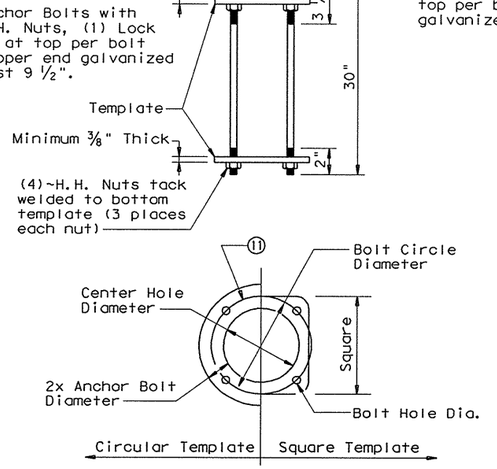

TRANSFORMER BASE ANCHOR BOLT ASSEMBLY

TRANSFORMER BASE ANCHOR BOLT ASSEMBLY TABLE					
MOUNTING HEIGHTS	A.B. Dia.	BOLT CIRCLE DIAMETER	SQUARE	CTR. HOLE DIAMETER	BOLT HOLE DIAMETER
20'- 30'	1"	14"	14"	12"	1 1/16"
40'- 50'	1 1/4"	17 1/4"	16 3/4"	14 3/4"	1 5/16"

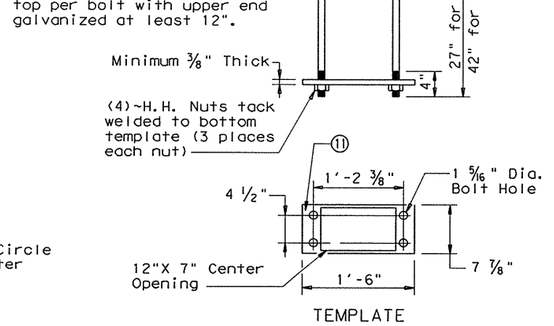

CONCRETE TRAFFIC BARRIER BASE ANCHOR BOLT ASSEMBLY

⑪ Anchor Bolt Templates need not be galvanized.

ANCHOR BOLT FABRICATION TOLERANCES TABLE	
DIMENSION	TOLERANCE
Length	± 1/2"
Threaded length	± 1/2"
Galvanized length (if required)	- 1/4"

SHEET 4 of 4

Texas Department of Transportation
Traffic Operations Division

ROADWAY ILLUMINATION POLES

RIP(4)-07

© TxDOT January 2007
REVISIONS

DN: TXDOT	CK: TXDOT	DW: TXDOT	CK: TXDOT
CONT	SECT	JOB	HIGHWAY
2452	01	050	LP 1604
DIST	COUNTY		SHEET NO.
SAT	BEXAR		339

73D

DISCLAIMER:
The use of this standard is governed by the "Texas Engineering Practice Act". No warranty of any kind is made by TxDOT for any purpose whatsoever. TxDOT assumes no responsibility for the conversion of this standard to other formats or for incorrect results or damages resulting from its use.

DATE:
FILE:

ROADWAY ILLUMINATION LIGHT FIXTURES

Fixture Housing:

A. Provide *UL listed fixture suitable for use in wet locations. Ensure optical compartment meets IEC Standard 60529-IP 65. Place a permanent label inside fixture indicating fixture meets *UL, IP 65 optical, and shows date of manufacture. Meet ANSI 136.15 wattage label requirements.
B. Construct fixture housing, lens frame, and door from 96% copper-free, die cast aluminum. Provide fixture mounting to a 2-in. pipe arm. Equip fixture with a 4-bolt clamp capable of adjustments plus or minus 5 degrees from level. Meet ANSI 136.31 3.0 G vibration requirements.
C. Attach a level bubble to the fixture housing. Ensure the level bubble is sensitive to 1 degree changes in position at any point within 5 degrees of the level position. Ensure the level bubble is clearly visible from the ground up to a 50 ft. mounting height. Ensure level bubble corresponds to level position of fixture.
D. Do not exceed 1.6 sq. ft. effective projected area. Do not exceed 60 lb. maximum weight.
E. Equip fixture with a 3-prong photocell receptacle with shorting cap installed.
F. Paint inside and outside of fixture light gray, when installing on galvanized poles. For all other fixtures, paint to match the color of the pole as directed by the Department.
G. Use a thermoset powder coat system. Ensure paint exceeds 1000-hr. salt-spray test in accordance with ASTM B117. Ensure a nominal thickness of 2.5 mil and no pigment loss upon 50 double-rubs using Methyl Ethyl Ketone (MEK) solvent in accordance with ASTM D5402, "Standard Practice for Assessing the Solvent Resistance of Organic Coatings Using Solvent Rubs."
H. Fabricate brackets, nuts, bolts, washers, ballast tray, and parts from stainless-steel, or aluminum of adequate thickness as approved by the Department except that:
   1. The 4 bolts/studs, 4 flat washers, 4 lock washers, and clamp that attach the luminaire to the arm may be galvanized in accordance with ASTM A123, A153 or B633. Provide means to ensure clamp is in the open position when installing.
   2. Glass lens retainer spring clips may be fabricated from galvanized steel in accordance with ASTM A153.
   3. Provide nylon throat or other approved locking means for all stainless steel nuts.
I. Provide optical assemblies which meet the following:
   1. Polished aluminum reflectors with Alzak or equal coating.
   2. Do not paint reflectors, except that, when approved by the Engineer, some surfaces may be painted with 92% reflective white paint.
   3. Reflectors may be one piece or segmented as follows.
      a. One piece reflectors:
         1. Seal photometric compartment by the use of a seamless or vulcanized seam, closed-cell silicone gasket, or other method approved by the Department.
         2. Provide a non-adjustable lamp socket mounting method so the lamp center is consistent with the reflector
      b. Segmented reflectors:
         1. Attach segments at both ends (or opposite sides if segments are square) of the segment to a rigid aluminum base plate and side wall support assembly. Seal glass lens to lens frame with a one piece seamless silicone gasket.
   4. Equip the optical assembly with a lamp support in addition to the lamp socket to ensure the outer envelope is positioned as intended.
J. Provide 5/32 in. thick (min.) clear heat tempered or borosilicate glass.

Electrical Components:

K. Meet the following ballast requirements and pass tests in accordance with Test Method Tex-1130-T, "Ballasts of Lighting Assemblies."
   1. Mount electrical components on a removable stainless steel or aluminum tray of adequate thickness.
   2. Provide a fixture wiring diagram on or near the ballast.
   3. Use a copper wound magnetic regulating three isolated coil ballast.
   4. Provide ballast factor between 0.95 and 1.0.
   5. When the circuit voltage indicated on the plans is applied, the ballast input wattage during fluctuations of the test voltage of plus 10 percent and minus 10 percent, do not exceed the following:
      a. 220 Watts for 150 watt nominal lamp rating
      b. 440 Watts for 250 watt nominal lamp rating
      c. 552 Watts for 400 watt nominal lamp rating
   6. During fluctuation of the test voltage of plus 10 percent and minus 10 percent, ensure the lamp wattage fluctuation does not exceed a total of 20 percent and ballast maintains lamp wattage within the following limits.
      a. 110 Watts minimum and 180 Watts maximum for 150 Watt nominal lamp rating
      b. 175 Watts minimum and 370 Watts maximum for 250 Watt nominal lamp rating
      c. 280 Watts minimum and 475 Watts maximum for 400 Watt nominal lamp rating
   7. Ensure the ballast power factor, when tested at circuit voltage indicated on the plans, is not less than 90%.
   8. Permanently and clearly mark ballast or fixture to indicate following:
      a. Lamp type
      b. Catalog number
      c. Voltage rating
      d. Connection diagram
      e. Manufacturer
      f. *UL listing
L. Meet the following electronic starting aid requirements and pass tests in accordance with Test Method Tex-1140-T, "Electronic Starting Aids of High Pressure Sodium Vapor Lighting Assemblies."
   1. Provide a starting pulse with an amplitude of 2500 volts minimum, 4000 volts maximum.
   2. Ensure the pulse width is a minimum of 0.8 microseconds at 2250 volts.
   3. Ensure the pulse occurs when the open circuit voltage is equal to or greater than 90 percent of peak open circuit voltage.
   4. Ensure pulse repetition rate is a minimum of one per cycle.
   5. Provide a pulse current of 0.18 amperes (min.).
   6. Discontinue to pulse when, either,
      a. the lamp starts, or
      b. after a minimum of 3 minutes and a maximum of 10 minutes if the lamp fails to start.
M. Do not place fuses inside pole mounted luminaires. For wall mount or underpass mounted luminaires, provide internal 10 amp time-delay fuses.
N. Provide a two position terminal block for connecting supply wires which meet the following requirements:
   1. Insulate using nylon, porcelain, or phenolic material. Ensure phenolic terminal block is of adequate construction as approved by the Department.
   2. Fabricate terminals from nickel, tin plated brass, or aluminum.
O. Equip fixture with MOV surge protection in accordance with IEEE recommendations.
   1. Connect MOV from line to neutral or from line to line.
   2. Install MOV on the terminal block.

Lamp & Socket:

P. Provide *UL listed mogul base lamp sockets rated for 600 V, 1500 W that can withstand a 5000 V pulse. Meet *UL 496 requirements. Use porcelain-insulated lamp sockets with nickel plated copper alloy screw shells. Equip socket shell with a spring tensioned contact. Use nickel-plated copper alloy or stainless steel for the spring and contact.
Q. Supply and secure lamps inside the fixture that meet the following:
   1. Use pre-qualified high pressure sodium (HPS) lamps from TxDOT's material producers list of the wattages shown on the plans. No alternatives allowed.
   2. Average rated lamp life 30,000 hours.
   3. Fully extinguish at end of usable lamp life and remain extinguished without cycling.
   4. Do not provide lamps that burn at reduced output at end of life.
   5. Meet the Federal Toxic Characteristic Leachate Procedure (TCLP) limits.

Performance:

R. Meet the following photometric requirements using published photometric data and photometric data obtained by testing sampled fixtures.
   1. 150 Watt mast arm (underpass) mounted luminaire. Meet IESNA Cutoff requirements. Provide a minimum intensity of 0.20 foot-candle in a rectangular area measuring 110.0 ft. by 30.0 ft., when mounted in a level position as indicated on the properly mounted fixture level bubble 20.0 ft. above the midpoint of either long side of the surface area. Do not exceed 50:1 maximum to minimum horizontal illuminance uniformity ratio within the rectangular area.
   2. 250-watt mast arm mounted luminaire. Meet IESNA Cutoff requirements. Provide a minimum intensity of 0.20 foot-candle in a rectangular area measuring 190.0 ft. by 45.0 ft., when mounted properly in a level position as indicated on the level bubble 40.0 ft. above the midpoint either long side of the surface area. Ensure light intensities along a line parallel to and 20.0 ft. in from the long side of this rectangular area do not decrease by more than 0.50 foot-candles in any 5.0 ft. interval along the line from 10.0 ft. to 90.0 ft. on both sides of the luminaire and provide a minimum intensity of 0.30 foot-candles at any point along the line. Do not exceed 20:1 maximum-to-minimum horizontal illuminance uniformity ratio within the rectangular area.
   3. 400-watt mast arm mounted luminaire. Meet IESNA Cutoff requirements. Provide a minimum intensity of 0.20 foot-candle in a rectanglular area measuring 220.0 ft. by 60.0 ft. when mounted properly in a level position as indicated on the level bubble 50.0 ft. above the midpoint of either long side of the surface area. Ensure light intensities along a line parallel to and 30.0 ft. in from the long side of this rectangular area do not decrease by more than 0.75 foot-candle in any 10.0 ft. interval along the line from 10.0 ft. to 90.0 ft. on both sides of the luminaire and provide a minimum intensity of 0.30 foot-candle at any point along the line. Do not exceed 20:1 maximum-to-minimum horizontal illuminance uniformity ratio within the rectangular area.
S. Ensure photometric data is consistent from fixture to fixture. Match published photometric data (or approved photometric reports submitted during the prequalification process as the typical photometric output instead of published data) as follows:
   1. Point of maximum candela within 5 degrees horizontally and vertically.
   2. Maximum candela within 20% of published maximum candela.
   3. Fixture efficiency within 10% of published efficiency.

* When reference is made to UL, it can be considered to mean a Nationally Recognized Independent Testing Lab (NRTL). Comperable standards of Canadian Standard Association, Electrical Testing Laboratories or Factory Mutual can be equal to the referenced UL standard.

Texas Department of Transportation
Traffic Operations Division

ROADWAY ILLUMINATION DETAILS
(RDWY ILLUM LIGHT FIXTURES)

RID(LUM1)-07

©TxDOT January 2007

REVISIONS	DN: TXDOT	CK: TXDOT	DW: TXDOT	CK: TXDOT
	CONT	SECT	JOB	HIGHWAY
	2452	01	050	LP 1604
	DIST	COUNTY		SHEET NO.
	SAT	BEXAR		340

724

DISCLAIMER: The use of this standard is governed by the "Texas Engineering Practice Act". No warranty of any kind is made by TxDOT for any purpose whatsoever. TxDOT assumes no responsibility for the conversion of this standard to other formats or for incorrect results or damages resulting from its use.

Prequalification:

T. Use only pre-qualified fixtures. No alternates will be considered.
   1. Only materials with approved product codes or designations from prequalified producers are accepted on bids. The Construction Division (CST) of the Texas Department of Transportation (TxDOT) maintains the material producers list of approved producer product codes or designations. Use the following website to view this list:
      http://www.dot.state.tx.us/business/producer_list.htm
      Use of prequalified material does not relieve the contractor of the responsibility to provide materials that meet the specifications. All materials, including those shown on the prequalified material list, may be inspected and tested at any time and may be rejected if not in compliance with the specifications.
   2. Notify the Department in writing as to which fixture from the prequalified list of approved fixtures will be supplied on each project.
   3. To have a fixture listed as pre-qualified:
      a. Submit a sample of each type of luminaire and all pertinent data, including published photometric data and recently tested photometric data (IES format, both "averaged" and both sides of "un-averaged" data) to:
         TXDOT- TRF 118 East Riverside Dr. Austin, TX 78704
      b. Demonstrate a commitment to quality.
      c. Submit the following documentation:
         1. QA/QC program documentation with the following minimum requirements;
            a. Written statement of the companies QA/QC policy.
            b. QA/QC person employed that has special QA/QC training and has QA/QC as their primary job responsibility.
            c. A written procedure specifically for handling orders for fixtures built to TxDOT specifications.
            d. A written procedure for keeping track of fixtures built, certified, and tested for TxDOT orders.
            e. A check list of features for TxDOT fixtures with QA/QC person signature.
         2. Fixture UL certification
         3. IP 65 certification
         4. 3G certification
         5. Aluminum casting and paint analysis
         6. Socket, MOV, and shutoff ignitor data
         7. Stainless steel and aluminum bracket data
         8. Ballast electrical data
         9. Photometric data
         10. Lamp data
      d. Prequalification samples, if approved, will not be returned to the manufacturer but will be retained by the the Department for comparison testing. Once a fixture has been approved, do not change any material or manufacturing method without prior approval of the Department. Unapproved changes will result in rejection of the fixture.
      e. In addition, luminaires will be tested for compliance with this specification. Luminaires that inconsistently pass testing or that are inconsistent with published photometric information will be removed from the pre-qualified list at the discretion of the Department.

Sampling:

U. Sample in accordance with Test Method Tex-1110-T, "Sampling Lighting Assemblies."

Manufacturer Warranty:

V. Replace failed fixtures, when non-operable due to defects in materials or workmanship within five years of installation with a fixture that passes all testing, delivered to the project location. Lamps and photocells are subject to the warranties of their respective manufacturers.

Testing:

W. Conduct electrical testing required in the Ballast section. Provide photometric testing of fixtures. Test fixtures at the following rates.
   1. Manufactuer Testing. Before fixtures are shipped from the manufacturer, test fixtures as follows. From each lot or manufacturing run, select one completed fixture of each 25, with a minimum of 2 and a maximum of 5. Test photometrics at an independent test lab inspected and approved by TxDOT. Electrical testing may be performed at manufacturer's facility.
      a. Provide IES photometric report in two formats:
         1. Standard averaged format for asymmetric fixtures.
         2. Un-averaged format showing both sides. Un-averaged data may be supplied in two files or as approved by the Department.
      b. Provide electrical and photometric test data directly to TRF-TE electronically for evaluation prior to shipping fixtures to the project. Do not ship fixtures until test data for each lot is approved by TRF-TE.
      c. Provide the following information on test reports:
         1. TxDOT's Control-Section-Job number, maintenance contract number, or purchase order number the fixtures are assigned to,
         2. a unique fixture test number per fixture,
         3. date of manufacture, and
         4. quantities supplied and lot number per fixture type.
      d. Write the unique lab report number on the top of the fixture housing with permanent marker. Ensure the test lab retains the results for 5 years. Provide the Department access to documentation.
      e. Retain records of manufacturing lots, test reports, lot quantities, and other pertinent details. Submit records to the Department upon request.
      f. Submit to TRF-TE a daily shipment report for shipments to each job.
      g. Make available to TxDOT inspectors upon request, all manufacturing facilities involved in the production of fixtures for use on Department projects, inventories of fixtures produced to Department specifications, and records of fixture testing and tracking.
   2. Departmental Test Reporting. Departmental test reports will be issued in accordance with Tex 1110-T.

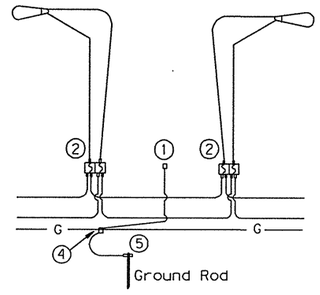

FOR THREE-WIRE CIRCUIT-CENTER GROUNDED
LUMINAIRES SERVED AT 480V ON 240/480 VOLT SERVICE OR LUMINAIRES SERVED AT 240V FOR FOR 120/240 VOLT SERVICE.

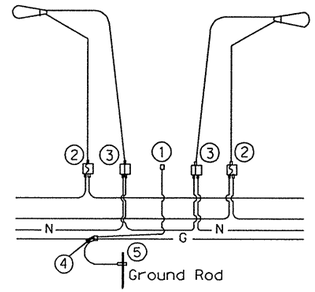

FOUR-WIRE CIRCUIT-CENTER GROUNDED
LUMINAIRES SERVED AT 240V
(240/480 VOLT SERVICE)

NOTES:

① Use 1/2 in.-13 UNC threaded, copper or tin-plated copper, pole bonding connector, sized appropriately for conductors.
②③ Use pre-qualified Breakaway Connectors for both T-Base and Shoe-Base installations.
④ Split Bolt or other connector.
⑤ Use Ground Rod Clamp listed for its intended purpose (i.e. concrete, direct burial...)

Texas Department of Transportation
Traffic Operations Division

ROADWAY ILLUMINATION DETAILS

(RDWY ILLUM LIGHT FIXTURES)

RID(LUM2)-07

©TxDOT January 2007

DN: TXDOT	CK: TXDOT	DW: TXDOT	CK: TXDOT

REVISIONS

CONT	SECT	JOB	HIGHWAY
2452	01	050	LP 1604

DIST	COUNTY	SHEET NO.
SAT	BEXAR	341

DATE:
FILE:

DISCLAIMER: ...ne use of this standard is governed by the "Texas Engineering Practice Act". No warranty of any kind is made by TxDOT for any purpose whatsoever. TxDOT assumes no responsibility for the conversion of this standard to other formats or for incorrect results or damages resulting from its use.

DATE:
FILE:

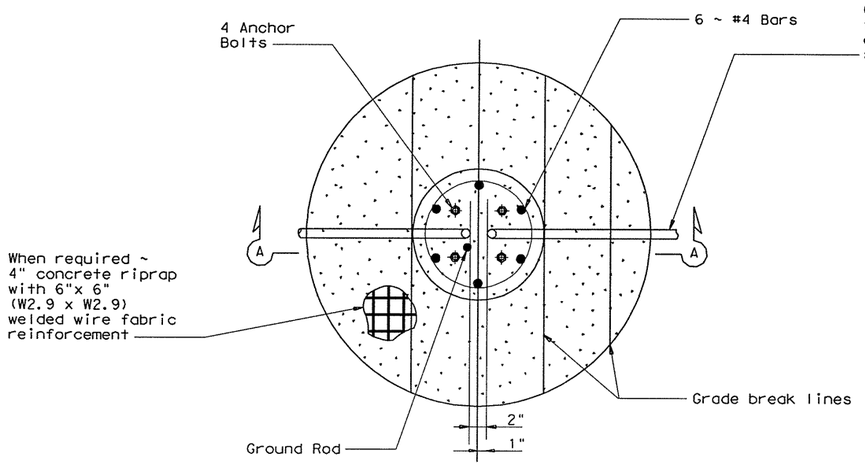

FOUNDATION DETAIL

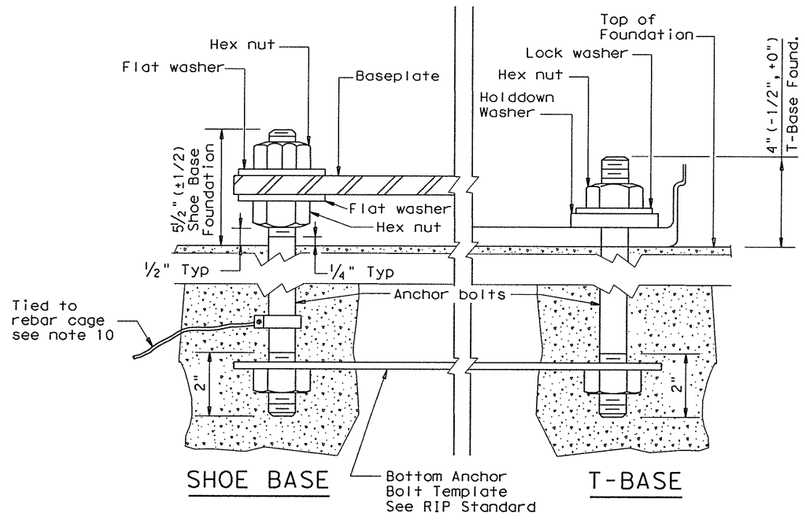

ANCHOR BOLT DETAIL

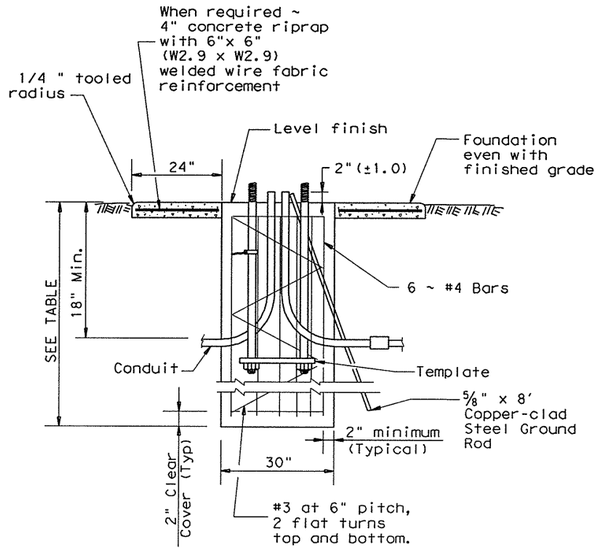

SECTION A-A

SHOWING CONSTANT GRADE

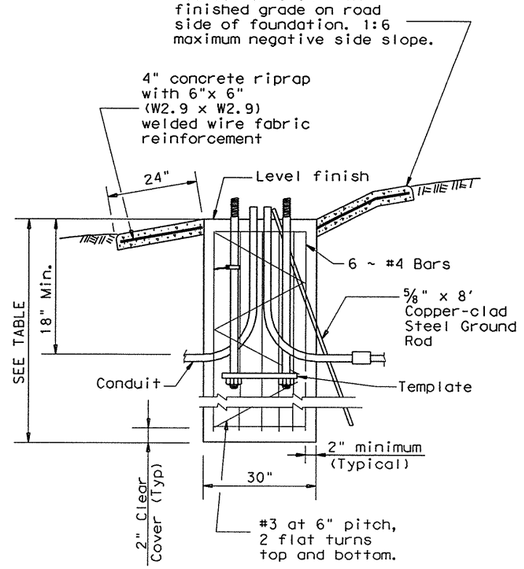

SECTION A-A

SHOWING SLOPED GRADE

PAY QUANTITY OF RIPRAP PER FOUNDATION (Install only when shown on the plans)		
Foundation Diameter	RIPRAP DIAMETER	RIPRAP (CONC) (CL B)
30 in.	78 in.	0.35 CY

RECOMMENDED FOUNDATION LENGTHS (See note 1)			
MOUNTING HEIGHT	TEXAS CONE PENETROMETER N Blows/ft		
	10	15	40
≤20 ft.	6'	6'	6'
>20 ft. to 30 ft.	8'	6'	6'
>30 ft. to 40 ft.	8'	8'	6'
>40 ft. to 50 ft.	10'	8'	6'

ANCHOR BOLTS			
POLE MOUNTING HEIGHT	BOLT CIRCLE		ANCHOR BOLT SIZE
	Shoe Base	T-Base	
<40 ft.	13 in.	14 in.	1 in. x 30in.
40-50 ft.	15 in.	17 ¼ in.	1 ¼ in. x 30in.

BREAKAWAY POLE PLACEMENT (See note 6)	
Roadway Functional Classification	** Pole offset (distance to transformer base, tolerance + 6in.-0in.)
Freeway Mainlanes (roadway with full control of access)	15 ft. (minimum and typical) from lane edge
All curbed, 45 mph or less design speed	2.5 ft. minimum (15 ft. desirable) from curb face
All others	10 ft. minimum*(15 ft. desirable) from lane edge

* or as close to ROW line as is practical

** provide 2/5 of the luminaire mounting height behind the pole for "falling area" to prevent encroachment on the other travel lanes. See design guidelines.

1. "Recommended Foundation Lengths" table is for information purposes only. Foundation lengths shall be as shown on the plans, or as directed by the Engineer. Foundations will be paid for under Item 416, "Drilled Shaft Foundations," unless otherwise shown on the plans.
2. Erect roadway illumination assembly poles plumb and true. Form and level the top 6" of the foundation so the pole will be plumb. Use leveling nuts to plumb shoe base poles. Do not use shims or leveling nuts under transformer bases. Do not grout between baseplate and the foundation.
3. Ensure Class 2A and 2B fit for anchor bolts and nuts. Tap and chase nuts after galvanizing. Anchor bolt body with rolled threads need not be full size.
4. Use appropriate class of concrete as specified in Items 416 and 432.
5. Place riprap around the foundation when called for elsewhere in the plans. Riprap will be paid for under Item 432.
6. Locate breakaway roadway illumination assemblies as shown in the placement table, unless otherwise dimensioned on the plans. Protect non-breakaway illumination assemblies from vehicular impact (i.e. 2 ft. behind guard rail or mounted on traffic barrier), or located outside the clear zone, except that 2.5 ft. from curb face is minimum desired for light poles on city streets, 45 mph or less, see design guidelines for further information.
7. Use 8 hold down washers on transformer base poles as recommended by the manufacturer and supplied with base.
8. Install a minimum of 2 conduits in each foundation. See lighting layout sheets for locations of foundations with more than 2 conduits. Cap unused conduits in foundations on both ends.
9. Conduit location in foundations is critical for breakaway devices. Place conduits 2 in. apart on centerline as shown.
10. Bond anchor bolt to rebar cage with #6 bare stranded copper conductor. Use listed mechanical connectors rated for embedment in concrete.
11. Use rip rap on T-base foundations that are located on a sloped grades.

Texas Department of Transportation
Traffic Operations Division

ROADWAY ILLUMINATION DETAILS

(RDWY ILLUM FOUNDATIONS)

RID(FND)-07

©TxDOT January 2007

REVISIONS

DN: TXDOT	CK: TXDOT	DW: TXDOT	CK: TXDOT

CONT	SECT	JOB	HIGHWAY
2452	01	050	LP 1604
DIST	COUNTY		SHEET NO.
SAT	BEXAR		342

72C

DISCLAIMER:
The use of this standard is governed by the "Texas Engineering Practice Act". No warranty of any kind is made by TxDOT for any purpose whatsoever. TxDOT assumes no responsibility for the conversion of this standard to other formats or for incorrect results or damages resulting from its use.

DATE:
FILE:

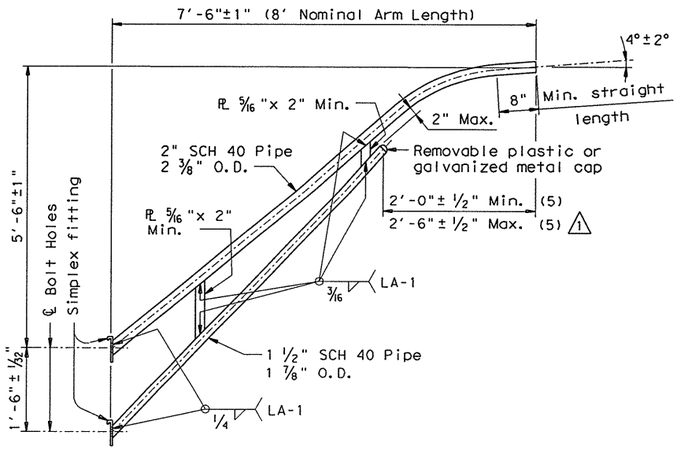

8-FOOT LUMINAIRE ARM

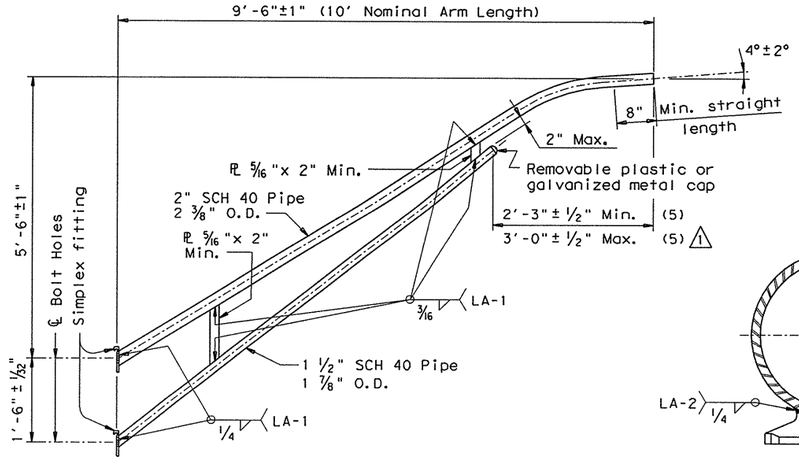

10-FOOT LUMINAIRE ARM

MATERIALS	
Pole or Arm Simplex	ASTM A27 GR 65-35 or A148 GR 80-50 or A576 GR 1021 (4) or A36 (Arm only)
Arm Pipes	ASTM A53 GR A or B or A500 GR B or A501 or A595 (2) or A715 GR 50
Arm Plates (3)	ASTM A36 or A572 GR50 (1) or A595 GR A or A588
Misc.	ASTM designations as noted

(1) ASTM A36M50 steel as described in Item 442 "Metal for Structures" may be used in lieu of A 572 GR 50.

(2) If A595 GR A material is used, arm need not be cold worked to A595 requiremants, but material must have 40 ksi minimum yield prior to fabrication.

(3) Either of the materials listed for pates may be used where the drawings do not specify a particular ASTM designation.

(4) A576 must be suitable for forging and also meet minimum tensile strength of 65 ksi, minimum yield of 35 ksi, and elongation in 2 inches of 22 percent.

(5) Dimensional limits are given to show acceptable variation in design. All of a Fabricator's production of a particular arm length shall have the same dimensions within specified tolerances.

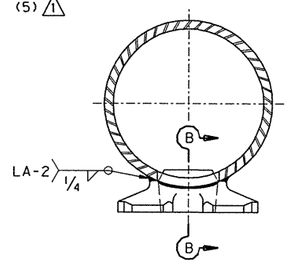

DIRECT ATTACHMENT DETAIL

GENERAL NOTES:

Design conforms to 1994 AASHTO Standard Specifications for Structural Supports for Highway Signs, Luminaires, and Traffic Signals and Interim Revisions thereto. Design Wind Speed equals 90 mph plus a 1.3 gust factor. Arms are designed to support a 75 lb. luminaire having an effective projected area (actual area times drag coefficient) of 1.5 sq. ft.

Materials and fabrication shall be in accordance with the Specificatons and with the details, dimensions, and weld procedures shown herein. Weld references call for preapproved weld procedures which the Fabricator must obtain prior to fabrication. In the absense of specified Fabricaton tolerances, dimensions shall be within the tolerances generally obtainable in normal fabrication practice.

Unless otherwise noted, all parts shall be galvanized after fabrication in accordance with the Specifications.

Special designs require submission of shop drawings in accordance with the item "Steel Structures".

Each pole simplex fitting shall be supplied with 2 A325 bolts and 2 lock washers of the size specified. The bolts and lock washers shall be secured to the pole with the other hardware items called for in the plans. When clamp attachment is specified, the Fabricator shall ship the clamp assembly securely attached to the pole at the location shown on the plans.

If clamp assemblies are ordered without poles, the Fabricator shall ship one upper and one lower clamp assembly together in a single package, including all nuts and washers required for the clamps and simplex fittings.

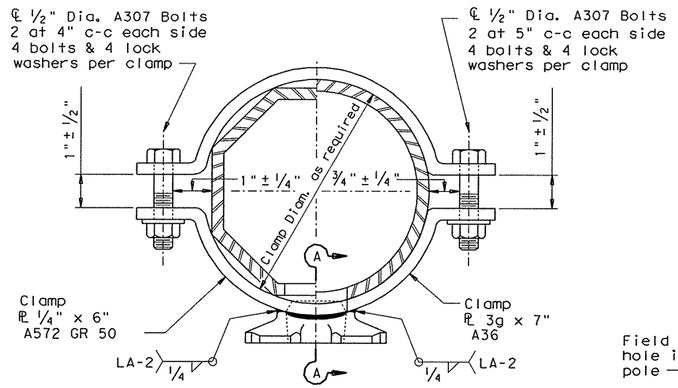

CLAMP ATTACHMENT DETAIL NO. 1 (HALF SECTION)

CLAMP ATTACHMENT DETAIL NO. 2 (HALF SECTION)

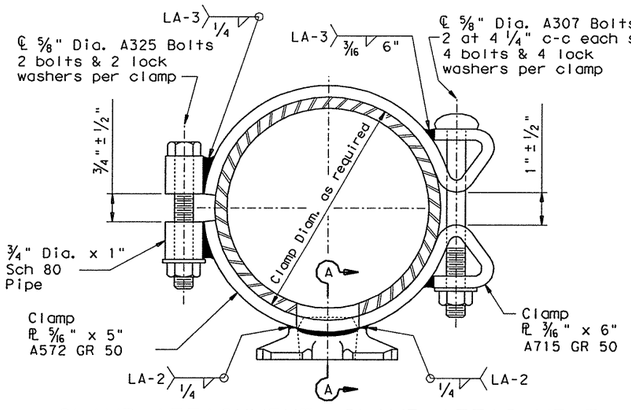

CLAMP ATTACHMENT DETAIL NO. 3 (HALF SECTION)

CLAMP ATTACHMENT DETAIL NO. 4 (HALF SECTION)

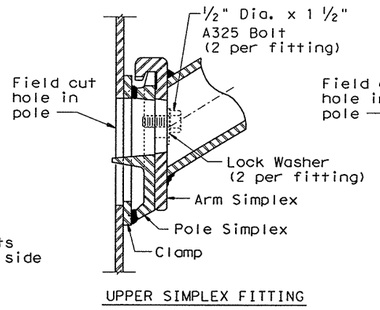

UPPER SIMPLEX FITTING

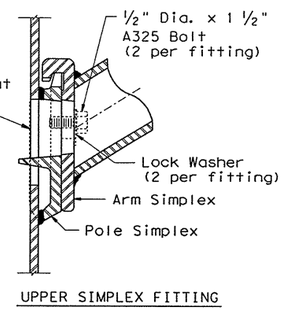

UPPER SIMPLEX FITTING

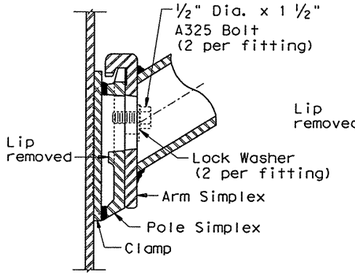

LOWER SIMPLEX FITTING

SECTON A-A

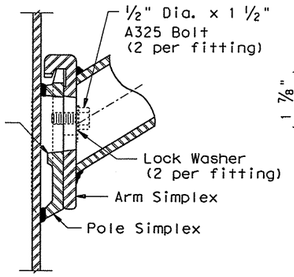

LOWER SIMPLEX FITTING

SECTON B-B

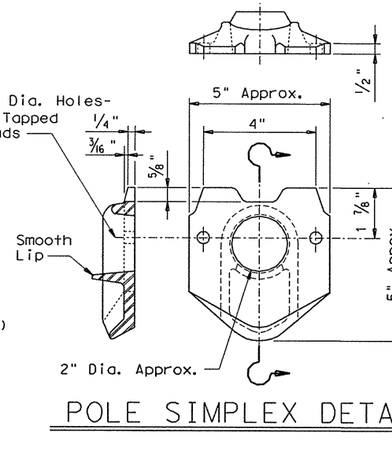

POLE SIMPLEX DETAIL

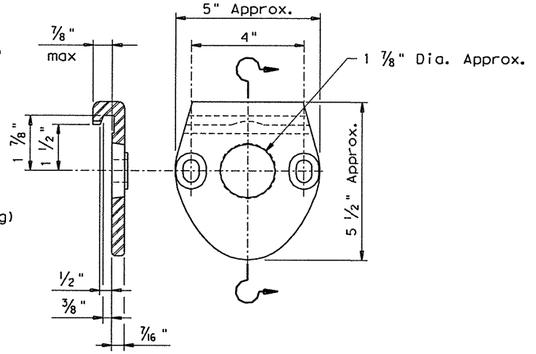

ARM SIMPLEX DETAIL

⚠1 1-99 - minor typo correction

Texas Department of Transportation
Traffic Operations Division

STANDARD ASSEMBLY DRAWINGS FOR LUMINAIRE SUPPORT STRUCTURES

ARM DETAILS

LUM-A-99

©TxDOT August 1995

REVISIONS	DN: TXDOT	CK: TXDOT	DW: TXDOT	CK: TXDOT
5-96	CONT	SECT	JOB	HIGHWAY
1-99	2452	01	050	LP 1604
	DIST	COUNTY		SHEET NO.
	SAT	BEXAR		343

Plotted on: 6/30/2010
Design filename: p:\74\00\04\design\civil\traffic\740004PM01.dgn

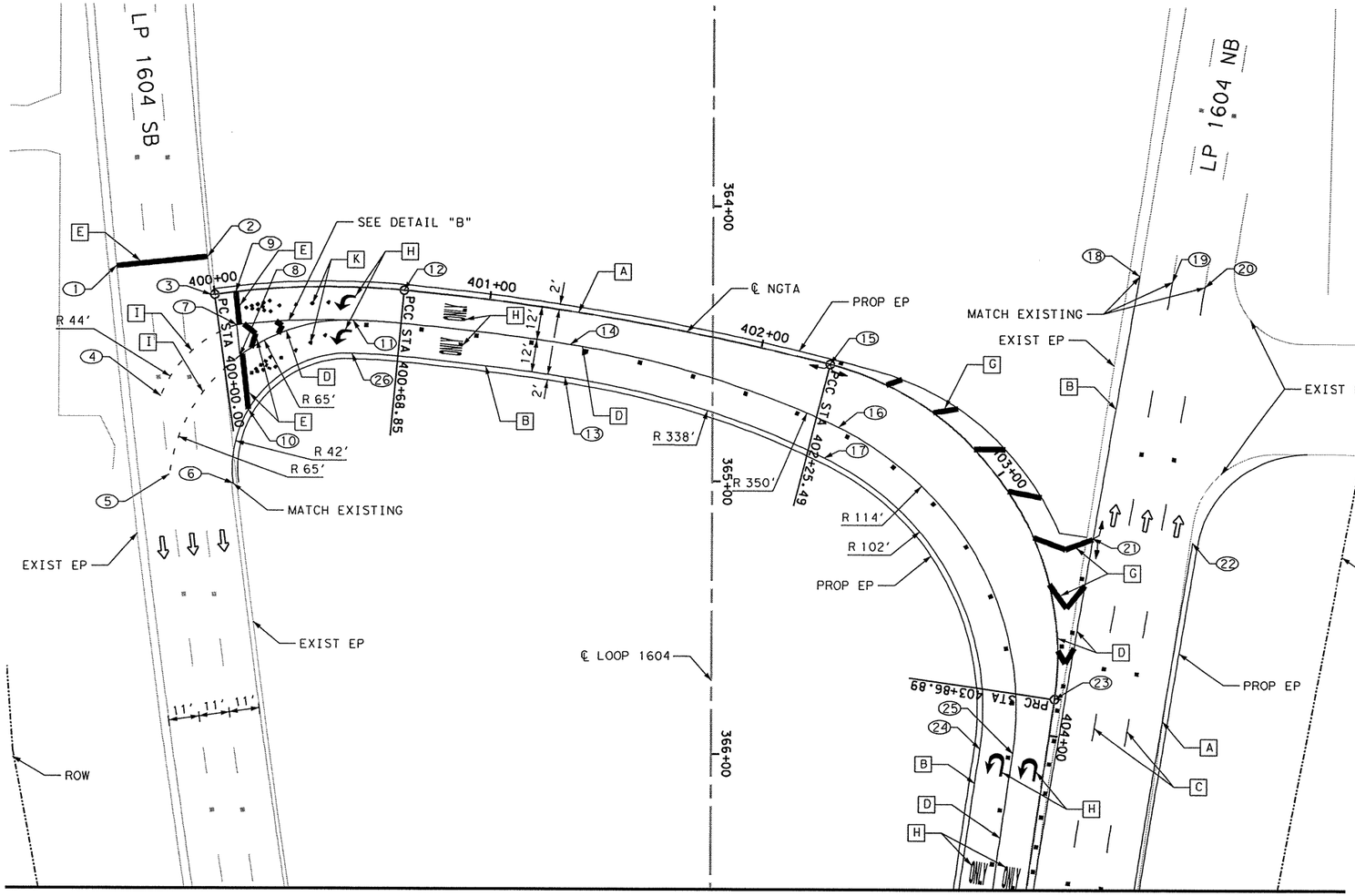

MATCHLINE STA. 366+50.00

PAVEMENT MARKINGS LEGEND

- [A] 6" SOLID WHITE STRIPE
- [B] 6" SOLID YELLOW STRIPE
- [C] 6" BROKEN WHITE STRIPE W/ TY II C-R @ 80' C-C
- [D] 8" SOLID WHITE STRIPE W/ TY II C-R @ 20' C-C
- [E] 24" SOLID WHITE STRIPE
- [F] 24" SOLID YELLOW X-HATCHING W/ TY II A-A @ 20' C-C & ROTATED 45°
- [G] 24" SOLID WHITE X-HATCHING W/ TY I C-R @ 20' C-C & ROTATED 45°
- [H] PREFABRICATED WORDS OR ARROWS (TYP.)
- [I] 4" DOT WHITE (DETAIL "A")
- [J] 4" DOT YELLOW (DETAIL "A")
- [K] WRONG WAY ARROW, 14 TY I-R (DETAIL "D")
- [L] 12" SOLID WHITE STRIPE W/ TY II C-R (DBL) @ 40' C-C
- [M] 4" SOLID WHITE STRIPE
- [N] 4" SOLID YELLOW STRIPE
- [O] 4" BROKEN WHITE STRIPE W/ TY II C-R @ 80' C-C
- [P] 4" DOUBLE WHITE STRIPE W/ TY II C-R (DBL) @ 20' C-C
- [Q] 8" SOLID WHITE STRIPE
- [R] 8" SOLID YELLOW STRIPE
- TRAFFIC FLOW ARROWS

NOTES:
1. FOR ADDITIONAL DETAILS SEE TxDOT TYPICAL STANDARD SHEETS.
2. EXISTING FEATURES ARE SHOWN SCREENED BACK, IE FADED.
3. ALL REFLECTIVE PAVEMENT MARKINGS SHALL RECEIVE A TY I AND TY II APPLICATION. APPLY TY II BEFORE APPLYING TY I MARKINGS.
4. ALL DIMENSIONS ARE TO FACE OF CURB AND/OR CENTER OF PAVEMENT MARKINGS, UNLESS OTHERWISE INDICATED.
5. SEE SHEET 375 FOR MISCELLANEOUS DETAILS "A" THROUGH "E".

STATE OF TEXAS · GILMER D. GASTON · 80472 · LICENSED PROFESSIONAL ENGINEER

GILMER D. GASTON P.E. — 6/30/2010 DATE

25 0 25 50
SCALE: PLAN - 1":50'

"LOOP 1604" ALIGNMENT

POINT	STATION	OFFSET
1	364+22.30	216.1
2	364+18.86	183.28
3	364+32.79	181.84
4	364+69.62	199.98
5	364+97.96	196.73
6	365+01.29	173.64

"NGTA" ALIGNMENT

POINT	STATION	OFFSET
7	400+06.57	12
8	400+06.47	23.25
9	400+07.68	0
10	400+07.42	43.21
11	400+50.70	12
12	400+68.85	0
13	401+31.14	24
14	401+31.14	12
15	402+25.49	0
16	402+36.40	21.24
17	402+34.71	33.17
18	402+84.77	-86.54
19	402+90.02	-93.81
20	402+94.90	-101.51
21	403+33.69	-19.91
22	403+42.87	-54.06
23	403+86.89	0
24	404+08.53	24
25	404+08.53	12
26	400+50.70	24

ITEM	DESCRIPTION	UNIT	QTY
0666-2006	REFL PAV MRK TY I (W) 4" (DOT)(100MIL)	LF	45
0666-2036	REFL PAV MRK TY I (W) 8" (SLD)(100MIL)	LF	837
0666-2048	REFL PAV MRK TY I (W) 24"(SLD)(100MIL)	LF	177
0666-2054	REFL PAV MRK TY I (W) (ARROW) (100MIL)	EA	2
0666-2093	REFL PAV MRK TY I(W)(UTURN ARW)(100MIL)	EA	2
0666-2096	REFL PAV MRK TY I (W) (WORD) (100MIL)	EA	4
0666-2189	PAVEMENT SEALER (4")(W)(DOT)	LF	45
0666-2191	PAVEMENT SEALER (8")(W)(SLD)	LF	837
0666-2195	PAVEMENT SEALER (24")(W)(SLD)	LF	177
0666-2219	PAVEMENT SEALER (ARROW)	EA	2
0666-2220	PAVEMENT SEALER (WORD)	EA	4
0666-2230	PAVEMENT SEALER UTURN ARROW	EA	2
0672-2014	REFL PAV MRKR TY I-R	EA	28
0672-2017	REFL PAV MRKR TY II-C-R	EA	55
8020-2005	REF PROF PAV MRK TY I (W) 6" (SLD)(100 MIL)	LF	356
8020-2009	REF PROF PAV MRK TY I (Y) 6" (SLD)(100 MIL)	LF	528
8251-2009	RE PM W / RET REQ TY I (W) 6" (BRK) (100MIL)	LF	113
8251-2034	PAVEMENT SEALER (6")(W)(BRK)	LF	113
8251-2034	PAVEMENT SEALER (6")(W)(SLD)	LF	356
8251-2034	PAVEMENT SEALER (6")(Y)(SLD)	LF	528

REV. NO.	DATE	DESCRIPTION	BY

ALAMO RMA

PAPE-DAWSON ENGINEERS
555 EAST RAMSEY | SAN ANTONIO, TEXAS 78216 | PHONE: 210.375.9000 FAX: 210.375.9010
TEXAS BOARD OF PROFESSIONAL ENGINEERS, FIRM REGISTRATION # 470

Texas Department of Transportation © 2010

LOOP 1604

PAVEMENT MARKING LAYOUT

BEGIN PROJECT TO STA. 366+50

SHEET 1 OF 31

DGN:	FED. RD. DIV. NO.	STATE	FEDERAL AID PROJECT NO.			HIGHWAY NO.
CHK DGN:	6	TEXAS	STP 2011(210)ES			LP 1604
DWG:	DIST.	COUNTY	CONT. NO.	SECT. NO.	JOB NO.	SHEET NO.
CHK DWG:	SAT	BEXAR	2452	01	050	344

Plotted on: 6/30/2010

Design Filename: p:\74\00\04\design\civil\traffic\740004PM02.dgn

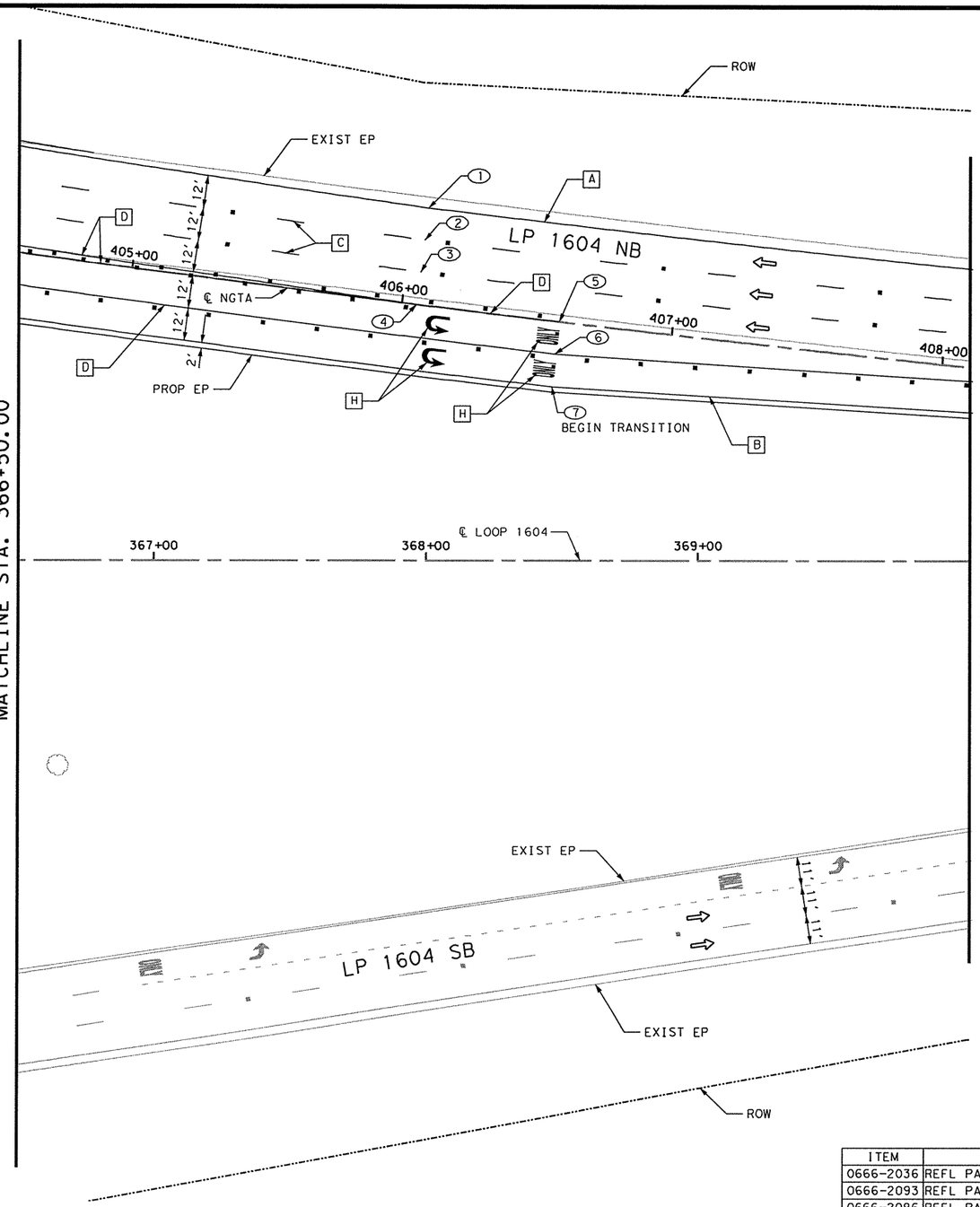

PAVEMENT MARKINGS LEGEND

- [A] 6" SOLID WHITE STRIPE
- [B] 6" SOLID YELLOW STRIPE
- [C] 6" BROKEN WHITE STRIPE W/ TY II C-R @ 80' C-C
- [D] 8" SOLID WHITE STRIPE W/ TY II C-R @ 20' C-C
- [E] 24" SOLID WHITE STRIPE
- [F] 24" SOLID YELLOW X-HATCHING W/ TY II A-A @ 20' C-C & ROTATED 45°
- [G] 24" SOLID WHITE X-HATCHING W/ TY I C-R @ 20' C-C & ROTATED 45°
- [H] PREFABRICATED WORDS OR ARROWS (TYP.)
- [I] 4" DOT WHITE (DETAIL "A")
- [J] 4" DOT YELLOW (DETAIL "A")
- [K] WRONG WAY ARROW, 14 TY I-R (DETAIL "D")
- [L] 12" SOLID WHITE STRIPE W/ TY II C-R (DBL) @ 40' C-C
- [M] 4" SOLID WHITE STRIPE
- [N] 4" SOLID YELLOW STRIPE
- [O] 4" BROKEN WHITE STRIPE W/ TY II C-R @ 80' C-C
- [P] 4" DOUBLE WHITE STRIPE W/ TY II C-R (DBL) @ 20' C-C
- [Q] 8" SOLID WHITE STRIPE
- [R] 8" SOLID YELLOW STRIPE

TRAFFIC FLOW ARROWS

NOTES:
1. FOR ADDITIONAL DETAILS SEE TxDOT TYPICAL STANDARD SHEETS.
2. EXISTING FEATURES ARE SHOWN SCREENED BACK, IE FADED.
3. ALL REFLECTIVE PAVEMENT MARKINGS SHALL RECEIVE A TY I AND TY II APPLICATION. APPLY TY II BEFORE APPLYING TY I MARKINGS.
4. ALL DIMENSIONS ARE TO FACE OF CURB AND/OR CENTER OF PAVEMENT MARKINGS, UNLESS OTHERWISE INDICATED.
5. SEE SHEET 375 FOR MISCELLANEOUS DETAILS "A" THROUGH "E".

STATE OF TEXAS · GILMER D. GASTON · 80472 · LICENSED PROFESSIONAL ENGINEER

GILMER D. GASTON P.E. — 6/30/2010 DATE

25 0 25 50

SCALE: PLAN - 1":50'

POINT	STATION	OFFSET
1	406+05.43	-36
2	406+05.43	-24
3	406+05.43	-12
4	406+05.43	0
5	406+58.07	0
6	406+57.75	12
7	406+58.07	24

ITEM	DESCRIPTION	UNIT	QTY
0666-2036	REFL PAV MRK TY I (W) 8" (SLD)(100MIL)	LF	700
0666-2093	REFL PAV MRK TY I(W)(UTURN ARW)(100MIL)	EA	2
0666-2096	REFL PAV MRK TY I (W) (WORD) (100MIL)	EA	2
0666-2191	PAVEMENT SEALER (8")(W)(SLD)	LF	700
0666-2220	PAVEMENT SEALER (WORD)	EA	2
0666-2230	PAVEMENT SEALER UTURN ARROW	EA	2
0672-2017	REFL PAV MRKR TY II-C-R	EA	43
8020-2005	REF PROF PAV MRK TY I (W) 6" (SLD)(100 MIL)	LF	353
8020-2009	REF PROF PAV MRK TY I (Y) 6" (SLD)(100 MIL)	LF	352
8251-2009	RE PM W / RET REQ TY I (W) 6" (BRK) (100MIL)	LF	176
8251-2034	PAVEMENT SEALER (6")(W)(BRK)	LF	176
8251-2034	PAVEMENT SEALER (6")(W)(SLD)	LF	353
8251-2034	PAVEMENT SEALER (6")(Y)(SLD)	LF	352

REV. NO.	DATE	DESCRIPTION	BY

ALAMO RMA

PAPE-DAWSON ENGINEERS
555 EAST RAMSEY | SAN ANTONIO, TEXAS 78216 | PHONE: 210.375.9000 FAX: 210.375.9010
TEXAS BOARD OF PROFESSIONAL ENGINEERS, FIRM REGISTRATION # 470

Texas Department of Transportation © 2010

LOOP 1604

PAVEMENT MARKING LAYOUT

STA. 366+50 TO STA. 370+00

SHEET 2 OF 31

DGN:	FED. RD. DIV. NO.	STATE	FEDERAL AID PROJECT NO.			HIGHWAY NO.
CHK DGN:	6	TEXAS	STP 2011(210)ES			LP 1604
DWG:	DIST.	COUNTY	CONT. NO.	SECT. NO.	JOB NO.	SHEET NO.
CHK DWG:	SAT	BEXAR	2452	01	050	345

Plotted on: 6/30/2010

Design Filename: p:\74\00\04\design\civil\traffic\740004PM03.dgn

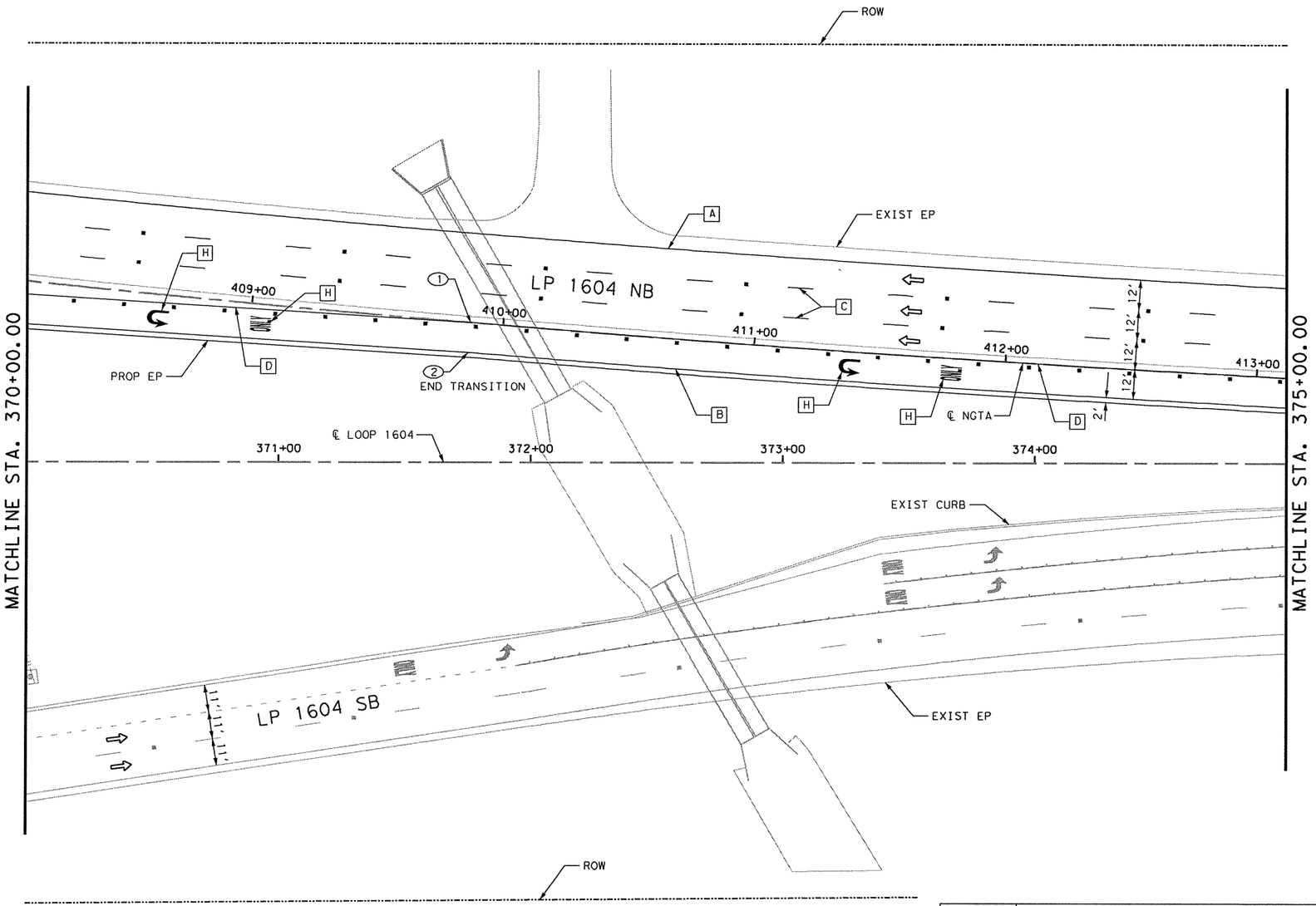

POINT	STATION	OFFSET
1	409+87.21	0
2	409+87.21	12

ITEM	DESCRIPTION	UNIT	QTY
0666-2036	REFL PAV MRK TY I (W) 8" (SLD)(100MIL)	LF	501
0666-2093	REFL PAV MRK TY I(W)(UTURN ARW)(100MIL)	EA	2
0666-2096	REFL PAV MRK TY I (W) (WORD) (100MIL)	EA	2
0666-2191	PAVEMENT SEALER (8")(W)(SLD)	LF	501
0666-2220	PAVEMENT SEALER (WORD)	EA	2
0666-2230	PAVEMENT SEALER UTURN ARROW	EA	2
0672-2017	REFL PAV MRKR TY II-C-R	EA	38
8020-2005	REF PROF PAV MRK TY I (W) 6" (SLD)(100 MIL)	LF	502
8020-2009	REF PROF PAV MRK TY I (Y) 6" (SLD)(100 MIL)	LF	501
8251-2009	RE PM W / RET REQ TY I (W) 6" (BRK) (100MIL)	LF	251
8251-2034	PAVEMENT SEALER (6")(W)(BRK)	LF	251
8251-2034	PAVEMENT SEALER (6")(W)(SLD)	LF	502
8251-2034	PAVEMENT SEALER (6")(Y)(SLD)	LF	501

PAVEMENT MARKINGS LEGEND

- A 6" SOLID WHITE STRIPE
- B 6" SOLID YELLOW STRIPE
- C 6" BROKEN WHITE STRIPE W/ TY II C-R @ 80' C-C
- D 8" SOLID WHITE STRIPE W/ TY II C-R @ 20' C-C
- E 24" SOLID WHITE STRIPE
- F 24" SOLID YELLOW X-HATCHING W/ TY II A-A @ 20' C-C & ROTATED 45°
- G 24" SOLID WHITE X-HATCHING W/ TY I C-R @ 20' C-C & ROTATED 45°
- H PREFABRICATED WORDS OR ARROWS (TYP.)
- I 4" DOT WHITE (DETAIL "A")
- J 4" DOT YELLOW (DETAIL "A")
- K WRONG WAY ARROW, 14 TY I-R (DETAIL "D")
- L 12" SOLID WHITE STRIPE W/ TY II C-R (DBL) @ 40' C-C
- M 4" SOLID WHITE STRIPE
- N 4" SOLID YELLOW STRIPE
- O 4" BROKEN WHITE STRIPE W/ TY II C-R @ 80' C-C
- P 4" DOUBLE WHITE STRIPE W/ TY II C-R (DBL) @ 20' C-C
- Q 8" SOLID WHITE STRIPE
- R 8" SOLID YELLOW STRIPE
- TRAFFIC FLOW ARROWS

NOTES:

1. FOR ADDITIONAL DETAILS SEE TxDOT TYPICAL STANDARD SHEETS.
2. EXISTING FEATURES ARE SHOWN SCREENED BACK, IE FADED.
3. ALL REFLECTIVE PAVEMENT MARKINGS SHALL RECEIVE A TY I AND TY II APPLICATION. APPLY TY II BEFORE APPLYING TY I MARKINGS.
4. ALL DIMENSIONS ARE TO FACE OF CURB AND/OR CENTER OF PAVEMENT MARKINGS, UNLESS OTHERWISE INDICATED.
5. SEE SHEET 375 FOR MISCELLANEOUS DETAILS "A" THROUGH "E".

STATE OF TEXAS GILMER D. GASTON 80472 LICENSED PROFESSIONAL ENGINEER

GILMER D. GASTON P.E. 6/30/2010 DATE

25 0 25 50

SCALE: PLAN - 1":50'

REV. NO.	DATE	DESCRIPTION	BY

ALAMO RMA

PAPE-DAWSON ENGINEERS

555 EAST RAMSEY | SAN ANTONIO, TEXAS 78216 | PHONE: 210.375.9000 FAX: 210.375.9010

TEXAS BOARD OF PROFESSIONAL ENGINEERS, FIRM REGISTRATION # 470

Texas Department of Transportation © 2010

LOOP 1604

PAVEMENT MARKING LAYOUT

STA. 370+00 TO STA. 375+00

SHEET 3 OF 31

DGN:	FED. RD. DIV. NO.	STATE	FEDERAL AID PROJECT NO.			HIGHWAY NO.
CHK DGN:	6	TEXAS	STP 2011(210)ES			LP 1604
DWG:	DIST.	COUNTY	CONT. NO.	SECT. NO.	JOB NO.	SHEET NO.
CHK DWG:	SAT	BEXAR	2452	01	050	346

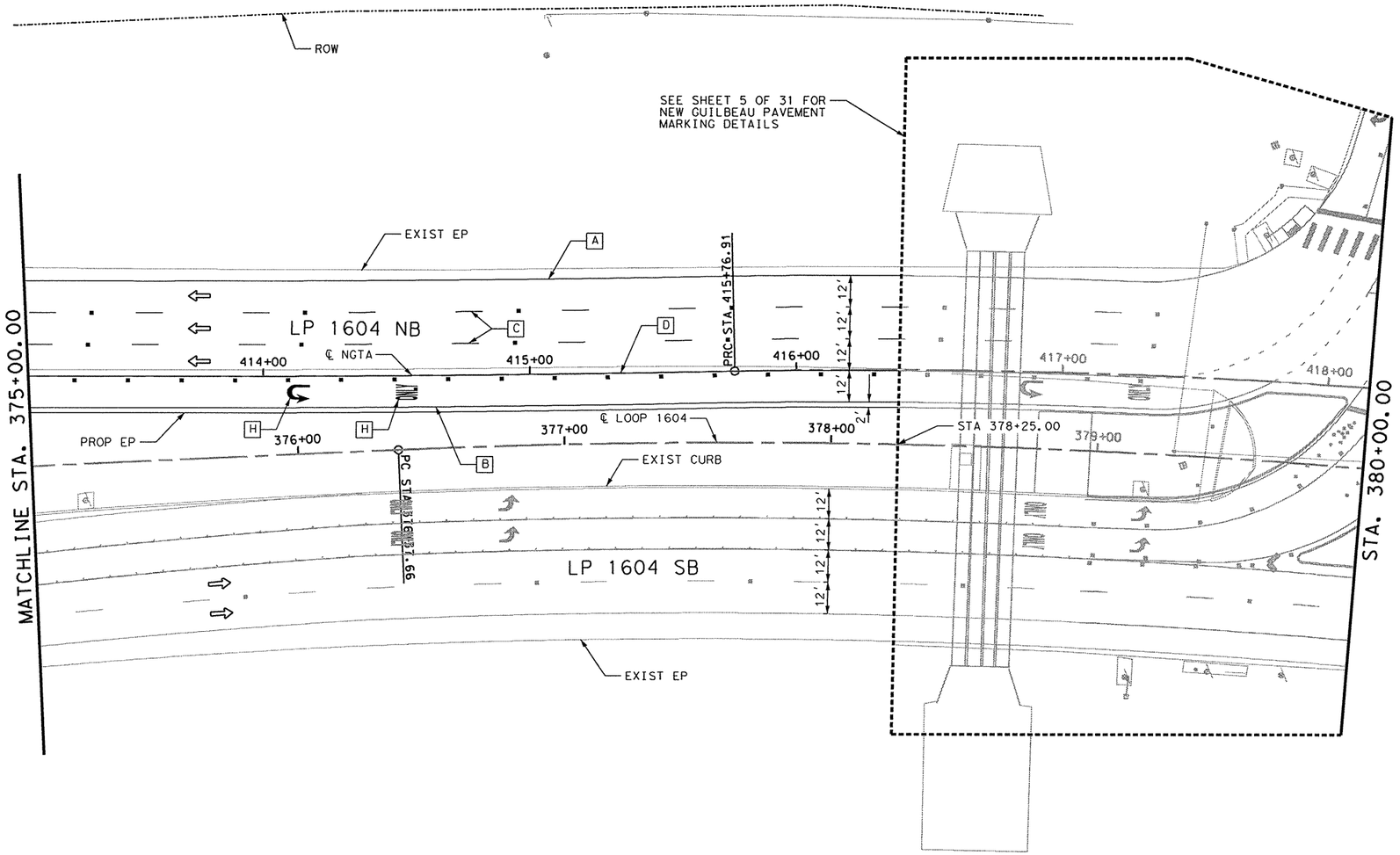

ITEM	DESCRIPTION	UNIT	QTY
0666-2036	REFL PAV MRK TY I (W) 8" (SLD)(100MIL)	LF	327
0666-2093	REFL PAV MRK TY I(W)(UTURN ARW)(100MIL)	EA	1
0666-2096	REFL PAV MRK TY I (W) (WORD) (100MIL)	EA	1
0666-2191	PAVEMENT SEALER (8")(W)(SLD)	LF	327
0666-2220	PAVEMENT SEALER (WORD)	EA	1
0666-2230	PAVEMENT SEALER UTURN ARROW	EA	1
0672-2017	REFL PAV MRKR TY II-C-R	EA	25
8020-2005	REF PROF PAV MRK TY I (W) 6" (SLD)(100 MIL)	LF	329
8020-2009	REF PROF PAV MRK TY I (Y) 6" (SLD)(100 MIL)	LF	326
8251-2009	RE PM W / RET REQ TY I (W) 6" (BRK) (100MIL)	LF	164
8251-2034	PAVEMENT SEALER (6")(W)(BRK)	LF	164
8251-2034	PAVEMENT SEALER (6")(W)(SLD)	LF	329
8251-2034	PAVEMENT SEALER (6")(Y)(SLD)	LF	326

PAVEMENT MARKINGS LEGEND

- A 6" SOLID WHITE STRIPE
- B 6" SOLID YELLOW STRIPE
- C 6" BROKEN WHITE STRIPE W/ TY II C-R @ 80' C-C
- D 8" SOLID WHITE STRIPE W/ TY II C-R @ 20' C-C
- E 24" SOLID WHITE STRIPE
- F 24" SOLID YELLOW X-HATCHING W/ TY II A-A @ 20' C-C & ROTATED 45°
- G 24" SOLID WHITE X-HATCHING W/ TY I C-R @ 20' C-C & ROTATED 45°
- H PREFABRICATED WORDS OR ARROWS (TYP.)
- I 4" DOT WHITE (DETAIL "A")
- J 4" DOT YELLOW (DETAIL "A")
- K WRONG WAY ARROW, 14 TY I-R (DETAIL "D")
- L 12" SOLID WHITE STRIPE W/ TY II C-R (DBL) @ 40' C-C
- M 4" SOLID WHITE STRIPE
- N 4" SOLID YELLOW STRIPE
- O 4" BROKEN WHITE STRIPE W/ TY II C-R @ 80' C-C
- P 4" DOUBLE WHITE STRIPE W/ TY II C-R (DBL) @ 20' C-C
- Q 8" SOLID WHITE STRIPE
- R 8" SOLID YELLOW STRIPE

TRAFFIC FLOW ARROWS

NOTES:
1. FOR ADDITIONAL DETAILS SEE TxDOT TYPICAL STANDARD SHEETS.
2. EXISTING FEATURES ARE SHOWN SCREENED BACK, IE FADED.
3. ALL REFLECTIVE PAVEMENT MARKINGS SHALL RECEIVE A TY I AND TY II APPLICATION. APPLY TY II BEFORE APPLYING TY I MARKINGS.
4. ALL DIMENSIONS ARE TO FACE OF CURB AND/OR CENTER OF PAVEMENT MARKINGS, UNLESS OTHERWISE INDICATED.
5. SEE SHEET 375 FOR MISCELLANEOUS DETAILS "A" THROUGH "E".

STATE OF TEXAS · GILMER D. GASTON · 80472 · LICENSED PROFESSIONAL ENGINEER

6/30/2010
GILMER D. GASTON P.E. — DATE

25 0 25 50
SCALE: PLAN - 1":50'

REV. NO.	DATE	DESCRIPTION	BY

ALAMO RMA

PAPE-DAWSON ENGINEERS
555 EAST RAMSEY | SAN ANTONIO, TEXAS 78216 | PHONE: 210.375.9000 FAX: 210.375.9010
TEXAS BOARD OF PROFESSIONAL ENGINEERS, FIRM REGISTRATION # 470

Texas Department of Transportation © 2010

LOOP 1604

PAVEMENT MARKING LAYOUT

STA. 375+00 TO STA. 380+00

SHEET 4 OF 31

DGN:	FED. RD. DIV. NO.	STATE	FEDERAL AID PROJECT NO.			HIGHWAY NO.
CHK DGN:	6	TEXAS	STP 2011(210)ES			LP 1604
DWG:	DIST.	COUNTY	CONT. NO.	SECT. NO.	JOB NO.	SHEET NO.
CHK DWG:	SAT	BEXAR	2452	01	050	347

Plotted on: 6/30/2010

Design Filename: p:\74\00\04\design\civil\traffic\740004PM04.dgn

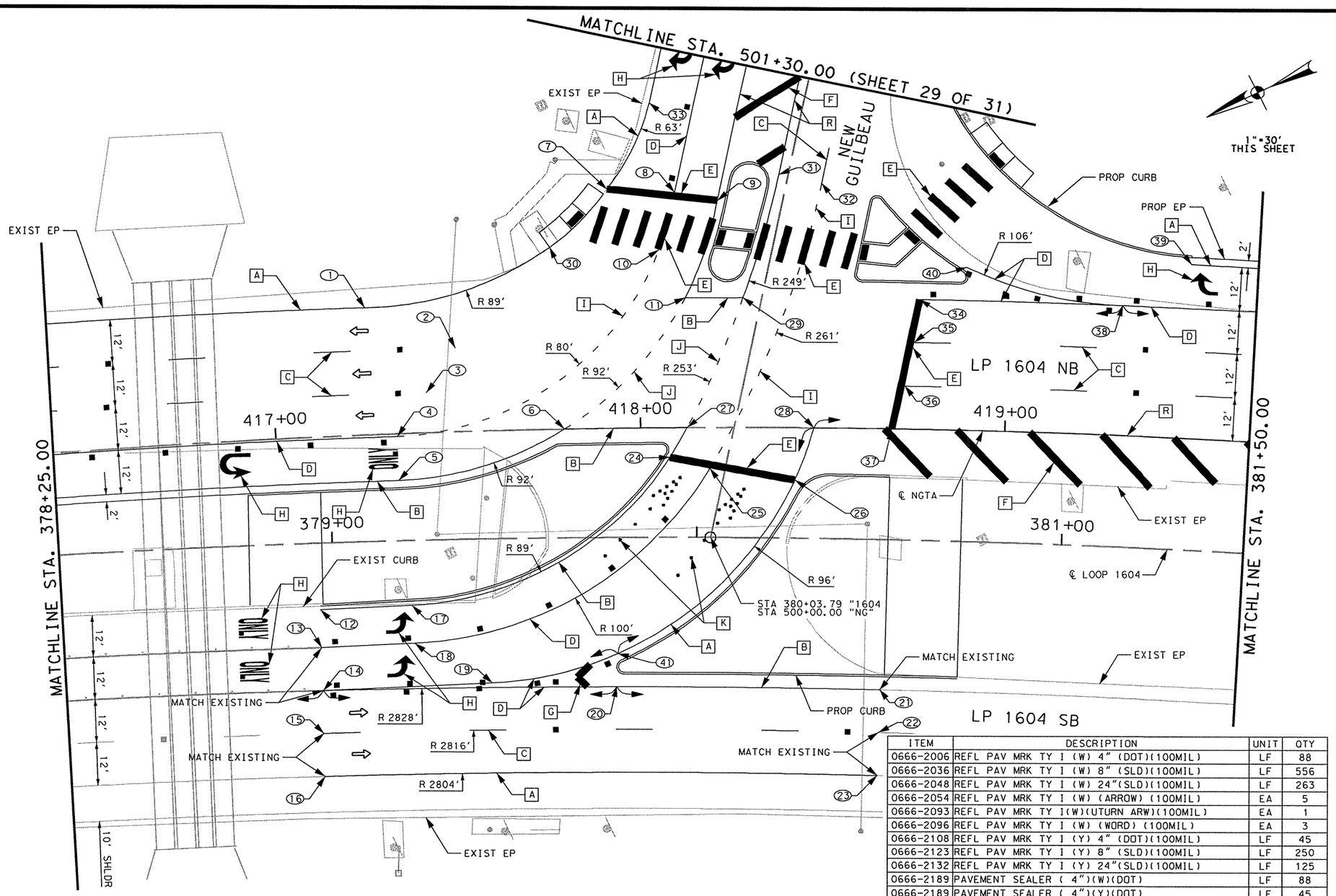

PAVEMENT MARKINGS LEGEND

- [A] 6" SOLID WHITE STRIPE
- [B] 6" SOLID YELLOW STRIPE
- [C] 6" BROKEN WHITE STRIPE W/ TY II C-R @ 80' C-C
- [D] 8" SOLID WHITE STRIPE W/ TY II C-R @ 20' C-C
- [E] 24" SOLID WHITE STRIPE
- [F] 24" SOLID YELLOW X-HATCHING W/ TY II A-A @ 20' C-C & ROTATED 45°
- [G] 24" SOLID WHITE X-HATCHING W/ TY I C-R @ 20' C-C & ROTATED 45°
- [H] PREFABRICATED WORDS OR ARROWS (TYP.)
- [I] 4" DOT WHITE (DETAIL "A")
- [J] 4" DOT YELLOW (DETAIL "A")
- [K] WRONG WAY ARROW, 14 TY I-R (DETAIL "D")
- [L] 12" SOLID WHITE STRIPE W/ TY II C-R (DBL) @ 40' C-C
- [M] 4" SOLID WHITE STRIPE
- [N] 4" SOLID YELLOW STRIPE
- [O] 4" BROKEN WHITE STRIPE W/ TY II C-R @ 80' C-C
- [P] 4" DOUBLE WHITE STRIPE W/ TY II C-R (DBL) @ 20' C-C
- [Q] 8" SOLID WHITE STRIPE
- [R] 8" SOLID YELLOW STRIPE
- TRAFFIC FLOW ARROWS

NOTES:
1. FOR ADDITIONAL DETAILS SEE TxDOT TYPICAL STANDARD SHEETS.
2. EXISTING FEATURES ARE SHOWN SCREENED BACK, IE FADED.
3. ALL REFLECTIVE PAVEMENT MARKINGS SHALL RECEIVE A TY I AND TY II APPLICATION. APPLY TY II BEFORE APPLYING TY I MARKINGS.
4. ALL DIMENSIONS ARE TO FACE OF CURB AND/OR CENTER OF PAVEMENT MARKINGS, UNLESS OTHERWISE INDICATED.
5. SEE SHEET 375 FOR MISCELLANEOUS DETAILS "A" THROUGH "E".

POINT	STATION	OFFSET	POINT	STATION	OFFSET	POINT	STATION	OFFSET	POINT	STATION	OFFSET
1	417+25.68	-35.27	14	417+09.92	70.31	27	418+12.83	0	40	418+88.45	-45.19
2	417+49.85	-23.15	15	417+09.46	82.31	28	418+47.48	0	41	417+93.01	62.33
3	417+41.58	-11.19	16	417+09.24	94.3	29	418+28.15	-36			
4	417+33.22	0.77	17	417+35.64	47.52	30	417+76.02	-50.36			
5	417+33.16	12.77	18	417+36.03	58.13	31	418+37.59	-70			
6	417+79.11	0	19	417+57.59	69.78	32	418+49.03	-67.6			
7	417+91.54	-66.08	20	417+92.54	71.59	33	418+03.07	-89.69			
8	418+09.73	-64.96	21	418+66.74	72.42	34	418+75.92	-36			
9	418+21.22	-62.68	22	418+66.63	84.42	35	418+74.69	-24			
10	418+05.42	-49.22	23	418+66.51	96.42	36	418+72.32	-12			
11	418+12.50	-36	24	418+08.02	8.09	37	418+68.94	0			
12	417+10.11	47.7	25	418+19.09	11.17	38	419+30.86	-36			
13	417+09.90	58.31	26	418+42.43	14.32	39	419+49.07	-48.19			

ITEM	DESCRIPTION	UNIT	QTY
0666-2006	REFL PAV MRK TY I (W) 4" (DOT)(100MIL)	LF	88
0666-2036	REFL PAV MRK TY I (W) 8" (SLD)(100MIL)	LF	556
0666-2048	REFL PAV MRK TY I (W) 24"(SLD)(100MIL)	LF	263
0666-2054	REFL PAV MRK TY I (W) (ARROW) (100MIL)	EA	5
0666-2093	REFL PAV MRK TY I(W)(UTURN ARW)(100MIL)	EA	1
0666-2096	REFL PAV MRK TY I (W) (WORD) (100MIL)	EA	3
0666-2108	REFL PAV MRK TY I (Y) 4" (DOT)(100MIL)	LF	45
0666-2123	REFL PAV MRK TY I (Y) 8" (SLD)(100MIL)	LF	250
0666-2132	REFL PAV MRK TY I (Y) 24"(SLD)(100MIL)	LF	125
0666-2189	PAVEMENT SEALER (4")(W)(DOT)	LF	88
0666-2189	PAVEMENT SEALER (4")(Y)(DOT)	LF	45
0666-2191	PAVEMENT SEALER (8")(W)(SLD)	LF	556
0666-2191	PAVEMENT SEALER (8")(Y)(SLD)	LF	250
0666-2195	PAVEMENT SEALER (24")(W)(SLD)	LF	263
0666-2195	PAVEMENT SEALER (24")(Y)(SLD)	LF	125
0666-2219	PAVEMENT SEALER (ARROW)	EA	5
0666-2220	PAVEMENT SEALER (WORD)	EA	3
0666-2230	PAVEMENT SEALER UTURN ARROW	EA	1
0672-2014	REFL PAV MRKR TY I-R	EA	28
0672-2015	REFL PAV MRKR TY II-A-A	EA	8
0672-2017	REFL PAV MRKR TY II-C-R	EA	38
8020-2005	REF PROF PAV MRK TY I (W) 6" (SLD)(100 MIL)	LF	439
8020-2009	REF PROF PAV MRK TY I (Y) 6" (SLD)(100 MIL)	LF	383
8251-2009	RE PM W / RET REQ TY I (W) 6" (BRK) (100MIL)	LF	146
8251-2034	PAVEMENT SEALER (6")(W)(BRK)	LF	146
8251-2034	PAVEMENT SEALER (6")(W)(SLD)	LF	439
8251-2034	PAVEMENT SEALER (6")(Y)(SLD)	LF	383

STATE OF TEXAS — GILMER D. GASTON — 80472 — LICENSED PROFESSIONAL ENGINEER

GILMER D. GASTON P.E. — 6/30/2010 DATE

SCALE: PLAN - 1":30'

REV. NO.	DATE	DESCRIPTION	BY

ALAMO RMA

PAPE-DAWSON ENGINEERS
555 EAST RAMSEY | SAN ANTONIO, TEXAS 78216 | PHONE: 210.375.9000 FAX: 210.375.9010
TEXAS BOARD OF PROFESSIONAL ENGINEERS, FIRM REGISTRATION # 470

Texas Department of Transportation © 2010

LOOP 1604

PAVEMENT MARKING LAYOUT

STA. 378+25 TO STA. 381+50

SHEET 5 OF 31

DGN:	FED. RD. DIV. NO.	STATE	FEDERAL AID PROJECT NO.			HIGHWAY NO.
CHK DGN:	6	TEXAS	STP 2011(210)ES			LP 1604
DWG:	DIST.	COUNTY	CONT. NO.	SECT. NO.	JOB NO.	SHEET NO.
CHK DWG:	SAT	BEXAR	2452	01	050	348

Plotted on: 6/30/2010

Design Filename: p:\74\00\04\design\civil\traffic\740004PM04A.dgn

Plotted on: 6/30/2010

Design Filename: p:\74\00\04\design\civil\traffic\740004PM05.dgn

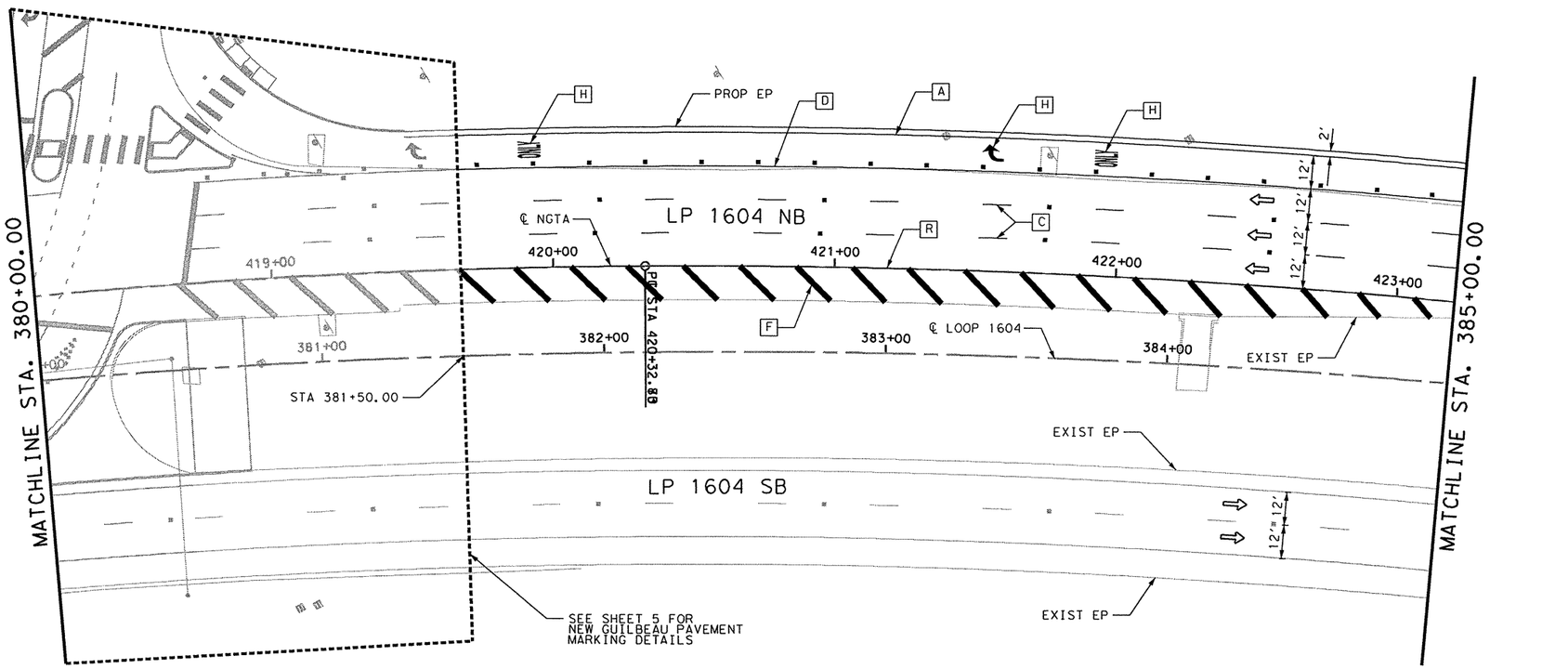

PAVEMENT MARKINGS LEGEND

- [A] 6" SOLID WHITE STRIPE
- [B] 6" SOLID YELLOW STRIPE
- [C] 6" BROKEN WHITE STRIPE W/ TY II C-R @ 80' C-C
- [D] 8" SOLID WHITE STRIPE W/ TY II C-R @ 20' C-C
- [E] 24" SOLID WHITE STRIPE
- [F] 24" SOLID YELLOW X-HATCHING W/ TY II A-A @ 20' C-C & ROTATED 45°
- [G] 24" SOLID WHITE X-HATCHING W/ TY I C-R @ 20' C-C & ROTATED 45°
- [H] PREFABRICATED WORDS OR ARROWS (TYP.)
- [I] 4" DOT WHITE (DETAIL "A")
- [J] 4" DOT YELLOW (DETAIL "A")
- [K] WRONG WAY ARROW, 14 TY I-R (DETAIL "D")
- [L] 12" SOLID WHITE STRIPE W/ TY II C-R (DBL) @ 40' C-C
- [M] 4" SOLID WHITE STRIPE
- [N] 4" SOLID YELLOW STRIPE
- [O] 4" BROKEN WHITE STRIPE W/ TY II C-R @ 80' C-C
- [P] 4" DOUBLE WHITE STRIPE W/ TY II C-R (DBL) @ 20' C-C
- [Q] 8" SOLID WHITE STRIPE
- [R] 8" SOLID YELLOW STRIPE

TRAFFIC FLOW ARROWS

NOTES:
1. FOR ADDITIONAL DETAILS SEE TxDOT TYPICAL STANDARD SHEETS.
2. EXISTING FEATURES ARE SHOWN SCREENED BACK, IE FADED.
3. ALL REFLECTIVE PAVEMENT MARKINGS SHALL RECEIVE A TY I AND TY II APPLICATION. APPLY TY II BEFORE APPLYING TY I MARKINGS.
4. ALL DIMENSIONS ARE TO FACE OF CURB AND/OR CENTER OF PAVEMENT MARKINGS, UNLESS OTHERWISE INDICATED.
5. SEE SHEET 375 FOR MISCELLANEOUS DETAILS "A" THROUGH "E".

STATE OF TEXAS
GILNER D. GASTON
80472
LICENSED PROFESSIONAL ENGINEER

GILNER D. GASTON P.E. — 6/30/2010 DATE

25 0 25 50
SCALE: PLAN - 1":50'

REV. NO.	DATE	DESCRIPTION	BY

ITEM	DESCRIPTION	UNIT	QTY
0666-2036	REFL PAV MRK TY I (W) 8" (SLD)(100MIL)	LF	358
0666-2054	REFL PAV MRK TY I (W) (ARROW) (100MIL)	EA	1
0666-2096	REFL PAV MRK TY I (W) (WORD) (100MIL)	EA	2
0666-2123	REFL PAV MRK TY I (Y) 8" (SLD)(100MIL)	LF	354
0666-2132	REFL PAV MRK TY I (Y) 24"(SLD)(100MIL)	LF	287
0666-2191	PAVEMENT SEALER (8")(W)(SLD)	LF	358
0666-2191	PAVEMENT SEALER (8")(Y)(SLD)	LF	354
0666-2195	PAVEMENT SEALER (24")(Y)(SLD)	LF	287
0666-2219	PAVEMENT SEALER (ARROW)	EA	1
0666-2220	PAVEMENT SEALER (WORD)	EA	2
0672-2015	REFL PAV MRKR TY II-A-A	EA	18
0672-2017	REFL PAV MRKR TY II-C-R	EA	27
8020-2005	REF PROF PAV MRK TY I (W) 6" (SLD)(100 MIL)	LF	360
8251-2009	RE PM W / RET REQ TY I (W) 6" (BRK) (100MIL)	LF	178
8251-2034	PAVEMENT SEALER (6")(W)(BRK)	LF	178
8251-2034	PAVEMENT SEALER (6")(W)(SLD)	LF	360

ALAMO RMA

PAPE-DAWSON ENGINEERS
555 EAST RAMSEY | SAN ANTONIO, TEXAS 78216 | PHONE: 210.375.9000 FAX: 210.375.9010
TEXAS BOARD OF PROFESSIONAL ENGINEERS, FIRM REGISTRATION # 470

Texas Department of Transportation
© 2010

LOOP 1604

PAVEMENT MARKING LAYOUT

STA. 380+00 TO STA. 385+00

SHEET 6 OF 31

DGN:	FED. RD. DIV. NO.	STATE	FEDERAL AID PROJECT NO.			HIGHWAY NO.
CHK DGN:	6	TEXAS	STP 2011(210)ES			LP 1604
DWG:	DIST.	COUNTY	CONT. NO.	SECT. NO.	JOB NO.	SHEET NO.
CHK DWG:	SAT	BEXAR	2452	01	050	349

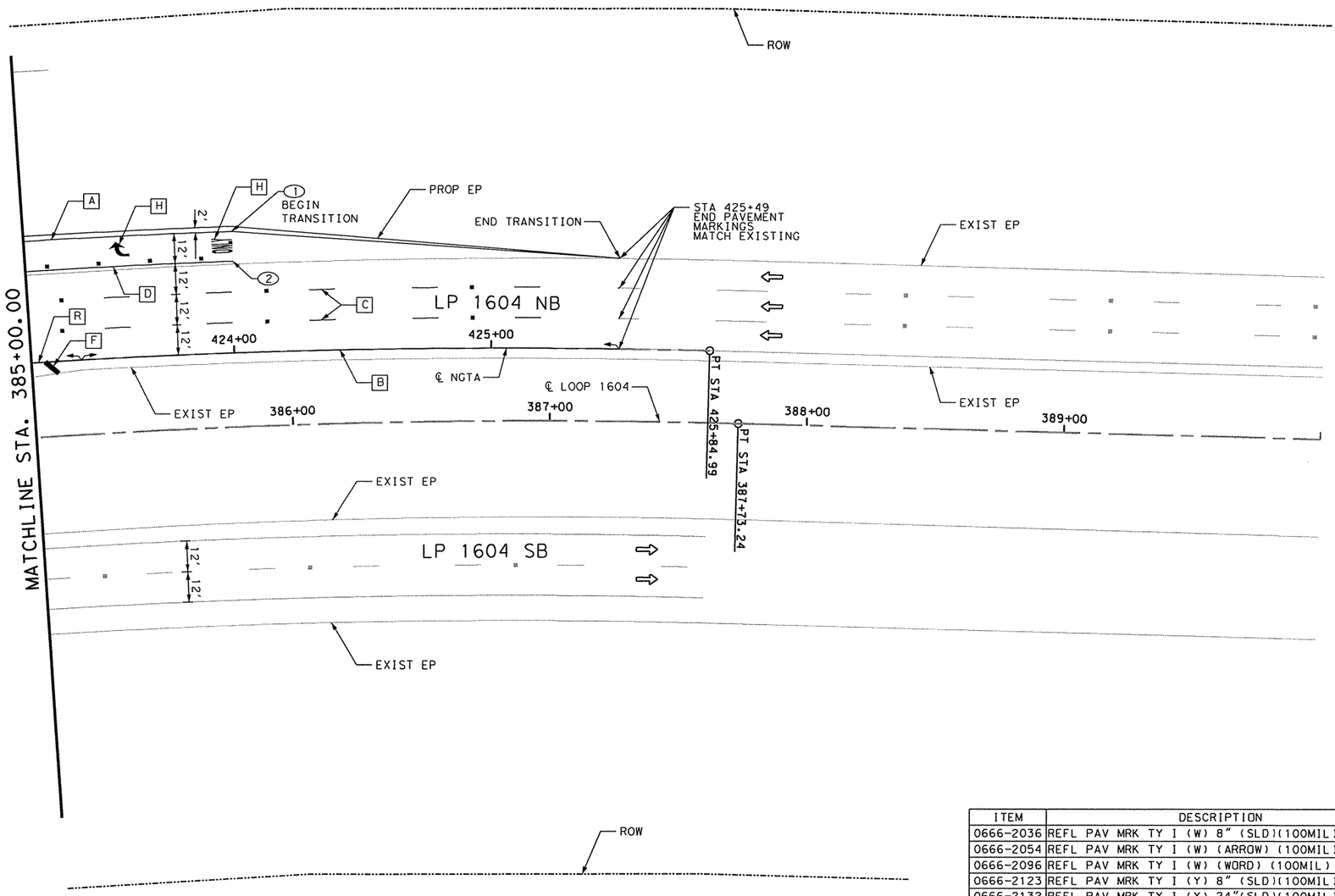

POINT	STATION	OFFSET
1	424+00.66	-48
2	424+00.66	-36

ITEM	DESCRIPTION	UNIT	QTY
0666-2036	REFL PAV MRK TY I (W) 8" (SLD)(100MIL)	LF	81
0666-2054	REFL PAV MRK TY I (W) (ARROW) (100MIL)	EA	1
0666-2096	REFL PAV MRK TY I (W) (WORD) (100MIL)	EA	1
0666-2123	REFL PAV MRK TY I (Y) 8" (SLD)(100MIL)	LF	20
0666-2132	REFL PAV MRK TY I (Y) 24"(SLD)(100MIL)	LF	7
0666-2191	PAVEMENT SEALER (8")(W)(SLD)	LF	81
0666-2191	PAVEMENT SEALER (8")(Y)(SLD)	LF	20
0666-2195	PAVEMENT SEALER (24")(Y)(SLD)	LF	7
0666-2219	PAVEMENT SEALER (ARROW)	EA	1
0666-2220	PAVEMENT SEALER (WORD)	EA	1
0672-2015	REFL PAV MRKR TY II-A-A	EA	1
0672-2017	REFL PAV MRKR TY II-C-R	EA	10
8020-2005	REF PROF PAV MRK TY I (W) 6" (SLD)(100 MIL)	LF	233
8020-2009	REF PROF PAV MRK TY I (Y) 6" (SLD)(100 MIL)	LF	209
8251-2009	RE PM W / RET REQ TY I (W) 6" (BRK) (100MIL)	LF	115
8251-2034	PAVEMENT SEALER (6")(W)(BRK)	LF	115
8251-2034	PAVEMENT SEALER (6")(W)(SLD)	LF	233
8251-2034	PAVEMENT SEALER (6")(Y)(SLD)	LF	209

PAVEMENT MARKINGS LEGEND

- [A] 6" SOLID WHITE STRIPE
- [B] 6" SOLID YELLOW STRIPE
- [C] 6" BROKEN WHITE STRIPE W/ TY II C-R @ 80' C-C
- [D] 8" SOLID WHITE STRIPE W/ TY II C-R @ 20' C-C
- [E] 24" SOLID WHITE STRIPE
- [F] 24" SOLID YELLOW X-HATCHING W/ TY II A-A @ 20' C-C & ROTATED 45°
- [G] 24" SOLID WHITE X-HATCHING W/ TY I C-R @ 20' C-C & ROTATED 45°
- [H] PREFABRICATED WORDS OR ARROWS (TYP.)
- [I] 4" DOT WHITE (DETAIL "A")
- [J] 4" DOT YELLOW (DETAIL "A")
- [K] WRONG WAY ARROW, 14 TY I-R (DETAIL "D")
- [L] 12" SOLID WHITE STRIPE W/ TY II C-R (DBL) @ 40' C-C
- [M] 4" SOLID WHITE STRIPE
- [N] 4" SOLID YELLOW STRIPE
- [O] 4" BROKEN WHITE STRIPE W/ TY II C-R @ 80' C-C
- [P] 4" DOUBLE WHITE STRIPE W/ TY II C-R (DBL) @ 20' C-C
- [Q] 8" SOLID WHITE STRIPE
- [R] 8" SOLID YELLOW STRIPE

⇦ TRAFFIC FLOW ARROWS

NOTES:
1. FOR ADDITIONAL DETAILS SEE TxDOT TYPICAL STANDARD SHEETS.
2. EXISTING FEATURES ARE SHOWN SCREENED BACK, IE FADED.
3. ALL REFLECTIVE PAVEMENT MARKINGS SHALL RECEIVE A TY I AND TY II APPLICATION. APPLY TY II BEFORE APPLYING TY I MARKINGS.
4. ALL DIMENSIONS ARE TO FACE OF CURB AND/OR CENTER OF PAVEMENT MARKINGS, UNLESS OTHERWISE INDICATED.
5. SEE SHEET 375 FOR MISCELLANEOUS DETAILS "A" THROUGH "E".

STATE OF TEXAS · GILMER D. GASTON · 80472 · LICENSED PROFESSIONAL ENGINEER

GILMER D. GASTON P.E. — 6/30/2010 DATE

25 0 25 50
SCALE: PLAN - 1":50'

REV. NO.	DATE	DESCRIPTION	BY

ALAMO RMA

PAPE-DAWSON ENGINEERS
555 EAST RAMSEY | SAN ANTONIO, TEXAS 78216 | PHONE: 210.375.9000 FAX: 210.375.9010
TEXAS BOARD OF PROFESSIONAL ENGINEERS, FIRM REGISTRATION # 470

Texas Department of Transportation © 2010

LOOP 1604

PAVEMENT MARKING LAYOUT

STA. 385+00 TO STA. 390+00

SHEET 7 OF 31

DGN:	FED. RD. DIV. NO.	STATE	FEDERAL AID PROJECT NO.			HIGHWAY NO.
CHK DGN:	6	TEXAS	STP 2011(210)ES			LP 1604
DWG:	DIST.	COUNTY	CONT. NO.	SECT. NO.	JOB NO.	SHEET NO.
CHK DWG:	SAT	BEXAR	2452	01	050	350

Plotted on: 6/30/2010
Design Filename: p:\741001\04\design\civil\traffic\740004PM06.dgn

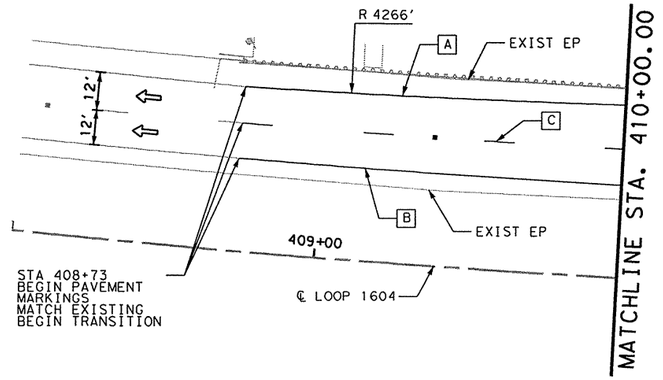

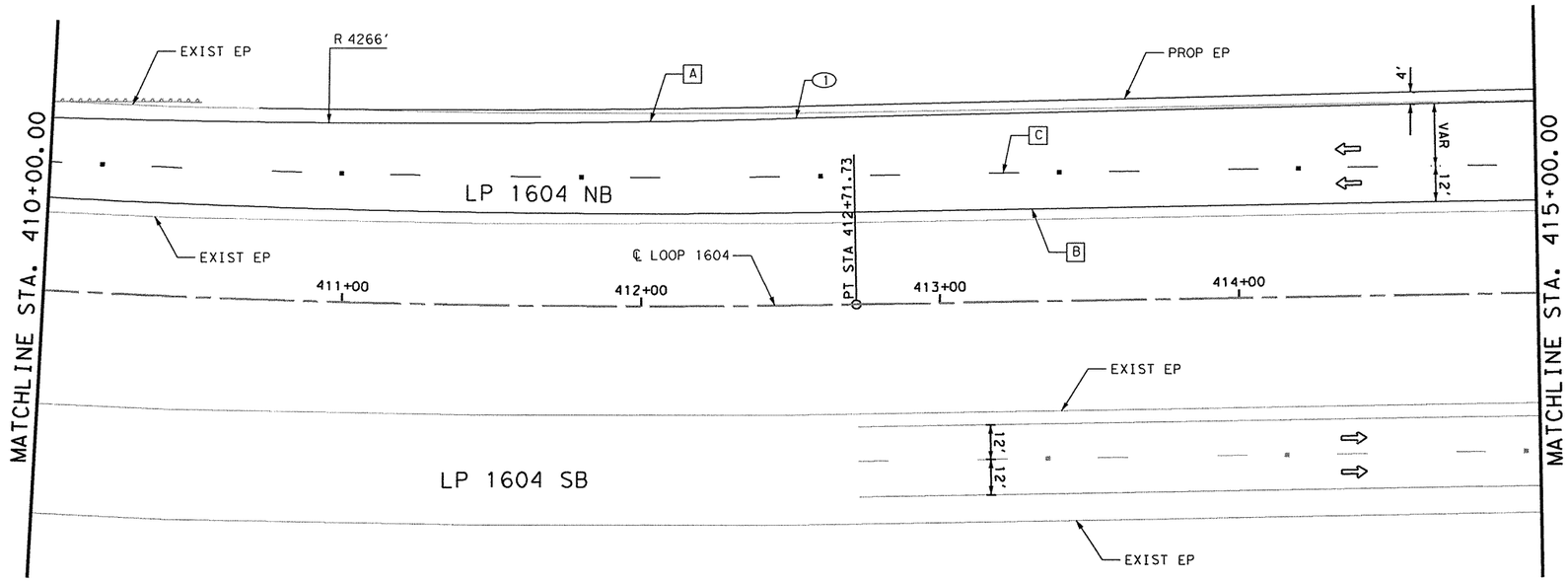

POINT	STATION	OFFSET
1	412+52.45	-62.86

ITEM	DESCRIPTION	UNIT	QTY
0672-2017	REFL PAV MRKR TY II-C-R	EA	8
8020-2005	REF PROF PAV MRK TY I (W) 6" (SLD)(100 MIL)	LF	621
8020-2009	REF PROF PAV MRK TY I (Y) 6" (SLD)(100 MIL)	LF	624
8251-2009	RE PM W / RET REQ TY I (W) 6" (BRK) (100MIL)	LF	156
8251-2034	PAVEMENT SEALER (6")(W)(BRK)	LF	156
8251-2034	PAVEMENT SEALER (6")(W)(SLD)	LF	621
8251-2034	PAVEMENT SEALER (6")(Y)(SLD)	LF	624

PAVEMENT MARKINGS LEGEND

- [A] 6" SOLID WHITE STRIPE
- [B] 6" SOLID YELLOW STRIPE
- [C] 6" BROKEN WHITE STRIPE W/ TY II C-R @ 80' C-C
- [D] 8" SOLID WHITE STRIPE W/ TY II C-R @ 20' C-C
- [E] 24" SOLID WHITE STRIPE
- [F] 24" SOLID YELLOW X-HATCHING W/ TY II A-A @ 20' C-C & ROTATED 45°
- [G] 24" SOLID WHITE X-HATCHING W/ TY I C-R @ 20' C-C & ROTATED 45°
- [H] PREFABRICATED WORDS OR ARROWS (TYP.)
- [I] 4" DOT WHITE (DETAIL "A")
- [J] 4" DOT YELLOW (DETAIL "A")
- [K] WRONG WAY ARROW, 14 TY I-R (DETAIL "D")
- [L] 12" SOLID WHITE STRIPE W/ TY II C-R (DBL) @ 40' C-C
- [M] 4" SOLID WHITE STRIPE
- [N] 4" SOLID YELLOW STRIPE
- [O] 4" BROKEN WHITE STRIPE W/ TY II C-R @ 80' C-C
- [P] 4" DOUBLE WHITE STRIPE W/ TY II C-R (DBL) @ 20' C-C
- [Q] 8" SOLID WHITE STRIPE
- [R] 8" SOLID YELLOW STRIPE

TRAFFIC FLOW ARROWS

NOTES:

1. FOR ADDITIONAL DETAILS SEE TxDOT TYPICAL STANDARD SHEETS.
2. EXISTING FEATURES ARE SHOWN SCREENED BACK, IE FADED.
3. ALL REFLECTIVE PAVEMENT MARKINGS SHALL RECEIVE A TY I AND TY II APPLICATION. APPLY TY II BEFORE APPLYING TY I MARKINGS.
4. ALL DIMENSIONS ARE TO FACE OF CURB AND/OR CENTER OF PAVEMENT MARKINGS, UNLESS OTHERWISE INDICATED.
5. SEE SHEET 375 FOR MISCELLANEOUS DETAILS "A" THROUGH "E".

STATE OF TEXAS · GILMER D. GASTON · 80472 · LICENSED PROFESSIONAL ENGINEER

GILMER D. GASTON P.E. — 6/30/2010 DATE

25 0 25 50

SCALE: PLAN - 1":50'

REV. NO.	DATE	DESCRIPTION	BY

ALAMO RMA

PAPE-DAWSON ENGINEERS

555 EAST RAMSEY | SAN ANTONIO, TEXAS 78216 | PHONE: 210.375.9000 FAX: 210.375.9010

TEXAS BOARD OF PROFESSIONAL ENGINEERS, FIRM REGISTRATION # 470

Texas Department of Transportation ©2010

LOOP 1604

PAVEMENT MARKING LAYOUT

STA. 410+00 TO STA. 415+00

SHEET 8 OF 31

DGN:	FED. RD. DIV. NO.	STATE	FEDERAL AID PROJECT NO.			HIGHWAY NO.
CHK DGN:	6	TEXAS	STP 2011(210)ES			LP 1604
DWG:	DIST.	COUNTY	CONT. NO.	SECT. NO.	JOB NO.	SHEET NO.
CHK DWG:	SAT	BEXAR	2452	01	050	351

Plotted on: 6/30/2010

Design Filename: p:\741001\04\design\civil\traffic\740004PM07.dgn

Plotted on: 6/30/2010

Design Filename: p:\74\00\04\design\civil\traffic\740004PM08.dgn

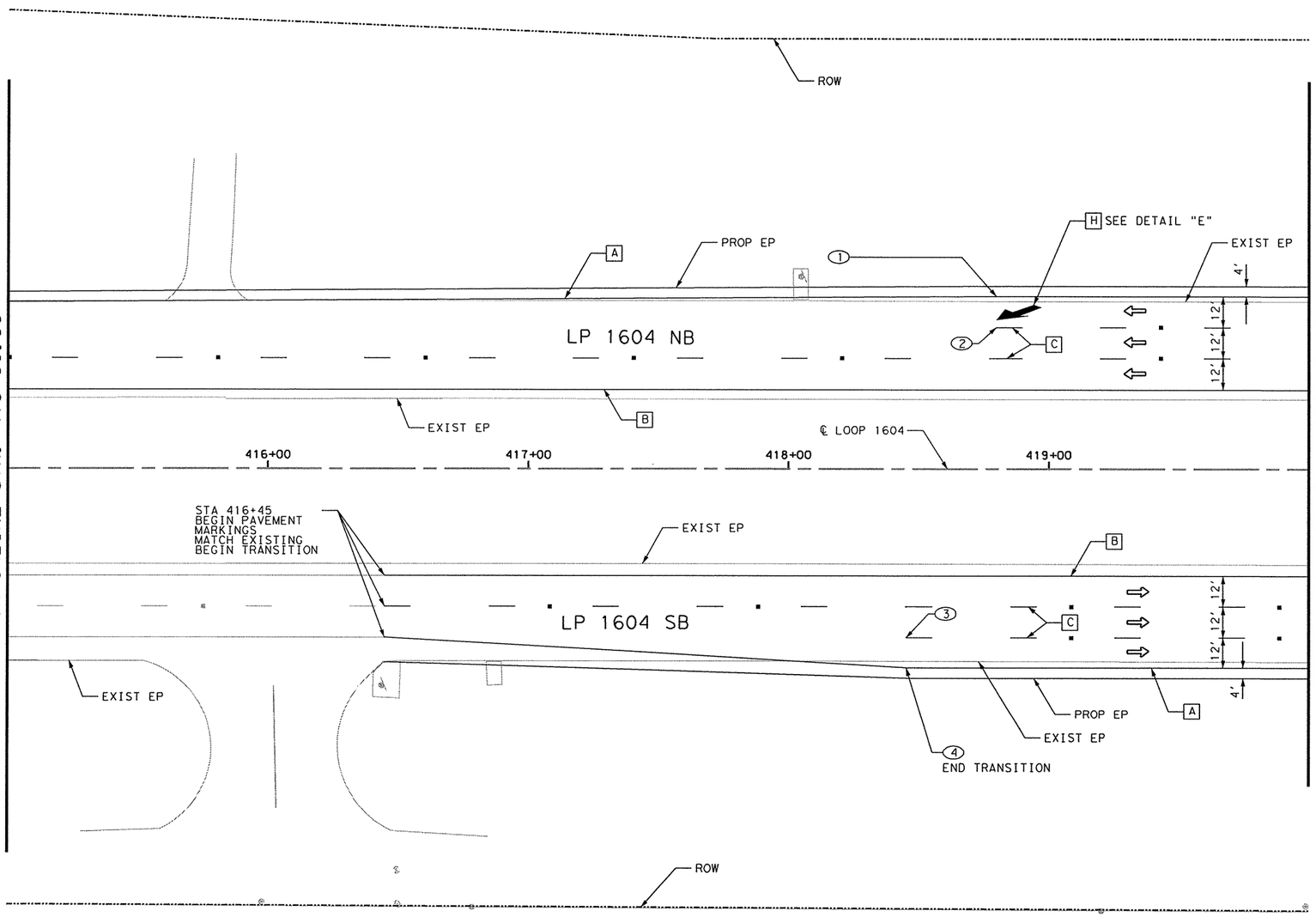

POINT	STATION	OFFSET
1	418+79.72	-67
2	418+79.72	-55
3	418+45.35	65.5
4	418+45.35	77.5

PAVEMENT MARKINGS LEGEND

- A 6" SOLID WHITE STRIPE
- B 6" SOLID YELLOW STRIPE
- C 6" BROKEN WHITE STRIPE W/ TY II C-R @ 80' C-C
- D 8" SOLID WHITE STRIPE W/ TY II C-R @ 20' C-C
- E 24" SOLID WHITE STRIPE
- F 24" SOLID YELLOW X-HATCHING W/ TY II A-A @ 20' C-C & ROTATED 45°
- G 24" SOLID WHITE X-HATCHING W/ TY I C-R @ 20' C-C & ROTATED 45°
- H PREFABRICATED WORDS OR ARROWS (TYP.)
- I 4" DOT WHITE (DETAIL "A")
- J 4" DOT YELLOW (DETAIL "A")
- K WRONG WAY ARROW, 14 TY I-R (DETAIL "D")
- L 12" SOLID WHITE STRIPE W/ TY II C-R (DBL) @ 40' C-C
- M 4" SOLID WHITE STRIPE
- N 4" SOLID YELLOW STRIPE
- O 4" BROKEN WHITE STRIPE W/ TY II C-R @ 80' C-C
- P 4" DOUBLE WHITE STRIPE W/ TY II C-R (DBL) @ 20' C-C
- Q 8" SOLID WHITE STRIPE
- R 8" SOLID YELLOW STRIPE

TRAFFIC FLOW ARROWS

NOTES:

1. FOR ADDITIONAL DETAILS SEE TxDOT TYPICAL STANDARD SHEETS.
2. EXISTING FEATURES ARE SHOWN SCREENED BACK, IE FADED.
3. ALL REFLECTIVE PAVEMENT MARKINGS SHALL RECEIVE A TY I AND TY II APPLICATION. APPLY TY II BEFORE APPLYING TY I MARKINGS.
4. ALL DIMENSIONS ARE TO FACE OF CURB AND/OR CENTER OF PAVEMENT MARKINGS, UNLESS OTHERWISE INDICATED.
5. SEE SHEET 375 FOR MISCELLANEOUS DETAILS "A" THROUGH "E".

STATE OF TEXAS
GILMER D. GASTON
80472
LICENSED
PROFESSIONAL ENGINEER

GILMER D. GASTON P.E. — 6/30/2010 DATE

25 0 25 50
SCALE: PLAN - 1":50'

REV. NO.	DATE	DESCRIPTION	BY

ALAMO RMA

PAPE-DAWSON ENGINEERS

555 EAST RAMSEY | SAN ANTONIO, TEXAS 78216 | PHONE: 210.375.9000 FAX: 210.375.9010

TEXAS BOARD OF PROFESSIONAL ENGINEERS, FIRM REGISTRATION # 470

Texas Department of Transportation ©2010

ITEM	DESCRIPTION	UNIT	QTY
0666-2054	REFL PAV MRK TY I (W) (ARROW) (100MIL)	EA	1
0666-2219	PAVEMENT SEALER (ARROW)	EA	1
0672-2017	REFL PAV MRKR TY II-C-R	EA	14
8020-2005	REF PROF PAV MRK TY I (W) 6" (SLD)(100 MIL)	LF	855
8020-2009	REF PROF PAV MRK TY I (Y) 6" (SLD)(100 MIL)	LF	855
8251-2009	RE PM W / RET REQ TY I (W) 6" (BRK) (100MIL)	LF	282
8251-2034	PAVEMENT SEALER (6")(W)(BRK)	LF	282
8251-2034	PAVEMENT SEALER (6")(W)(SLD)	LF	855
8251-2034	PAVEMENT SEALER (6")(Y)(SLD)	LF	855

LOOP 1604

PAVEMENT MARKING LAYOUT

STA. 415+00 TO STA. 420+00

SHEET 9 OF 31

DGN:	FED. RD. DIV. NO.	STATE	FEDERAL AID PROJECT NO.			HIGHWAY NO.
CHK DGN:	6	TEXAS	STP 2011(210)ES			LP 1604
DWG:	DIST.	COUNTY	CONT. NO.	SECT. NO.	JOB NO.	SHEET NO.
CHK DWG:	SAT	BEXAR	2452	01	050	352

Plotted on: 6/30/2010

Design Filename: p:\74\00\04\design\civil\traffic\740004PM09.dgn

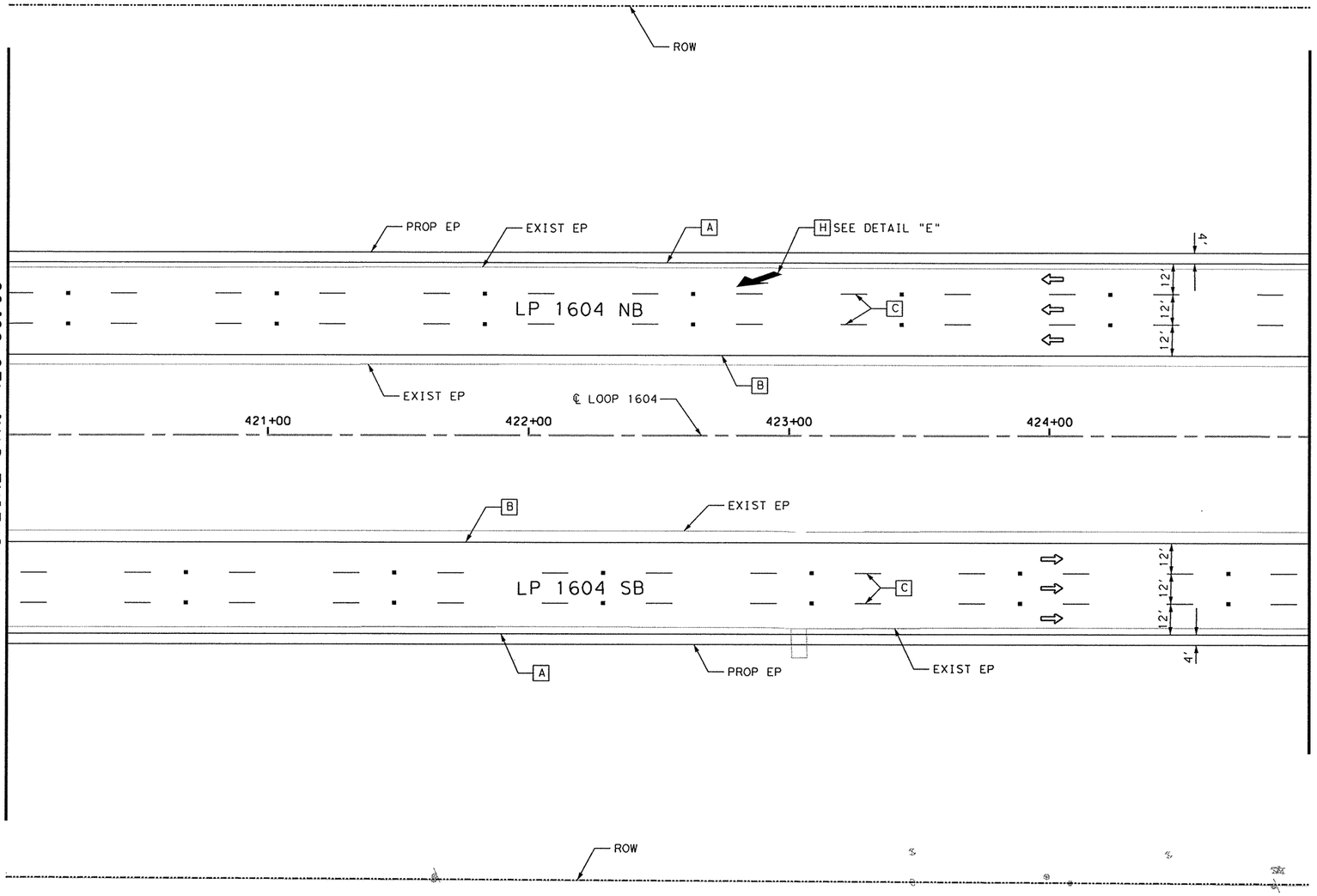

ITEM	DESCRIPTION	UNIT	QTY
0666-2054	REFL PAV MRK TY I (W) (ARROW) (100MIL)	EA	1
0666-2219	PAVEMENT SEALER (ARROW)	EA	1
0672-2017	REFL PAV MRKR TY II-C-R	EA	25
8020-2005	REF PROF PAV MRK TY I (W) 6" (SLD)(100 MIL)	LF	1000
8020-2009	REF PROF PAV MRK TY I (Y) 6" (SLD)(100 MIL)	LF	1000
8251-2009	RE PM W / RET REQ TY I (W) 6" (BRK) (100MIL)	LF	500
8251-2034	PAVEMENT SEALER (6")(W)(BRK)	LF	500
8251-2034	PAVEMENT SEALER (6")(W)(SLD)	LF	1000
8251-2034	PAVEMENT SEALER (6")(Y)(SLD)	LF	1000

PAVEMENT MARKINGS LEGEND

- A 6" SOLID WHITE STRIPE
- B 6" SOLID YELLOW STRIPE
- C 6" BROKEN WHITE STRIPE W/ TY II C-R @ 80' C-C
- D 8" SOLID WHITE STRIPE W/ TY II C-R @ 20' C-C
- E 24" SOLID WHITE STRIPE
- F 24" SOLID YELLOW X-HATCHING W/ TY II A-A @ 20' C-C & ROTATED 45°
- G 24" SOLID WHITE X-HATCHING W/ TY I C-R @ 20' C-C & ROTATED 45°
- H PREFABRICATED WORDS OR ARROWS (TYP.)
- I 4" DOT WHITE (DETAIL "A")
- J 4" DOT YELLOW (DETAIL "A")
- K WRONG WAY ARROW, 14 TY I-R (DETAIL "D")
- L 12" SOLID WHITE STRIPE W/ TY II C-R (DBL) @ 40' C-C
- M 4" SOLID WHITE STRIPE
- N 4" SOLID YELLOW STRIPE
- O 4" BROKEN WHITE STRIPE W/ TY II C-R @ 80' C-C
- P 4" DOUBLE WHITE STRIPE W/ TY II C-R (DBL) @ 20' C-C
- Q 8" SOLID WHITE STRIPE
- R 8" SOLID YELLOW STRIPE

TRAFFIC FLOW ARROWS

NOTES:
1. FOR ADDITIONAL DETAILS SEE TxDOT TYPICAL STANDARD SHEETS.
2. EXISTING FEATURES ARE SHOWN SCREENED BACK, IE FADED.
3. ALL REFLECTIVE PAVEMENT MARKINGS SHALL RECEIVE A TY I AND TY II APPLICATION. APPLY TY II BEFORE APPLYING TY I MARKINGS.
4. ALL DIMENSIONS ARE TO FACE OF CURB AND/OR CENTER OF PAVEMENT MARKINGS, UNLESS OTHERWISE INDICATED.
5. SEE SHEET 375 FOR MISCELLANEOUS DETAILS "A" THROUGH "E".

STATE OF TEXAS · GILMER D. GASTON · 80472 · LICENSED PROFESSIONAL ENGINEER

GILMER D. GASTON P.E. — 6/30/2010 DATE

SCALE: PLAN - 1":50'

REV. NO.	DATE	DESCRIPTION	BY

ALAMO RMA

PAPE-DAWSON ENGINEERS
555 EAST RAMSEY | SAN ANTONIO, TEXAS 78216 | PHONE: 210.375.9000 FAX: 210.375.9010
TEXAS BOARD OF PROFESSIONAL ENGINEERS, FIRM REGISTRATION # 470

Texas Department of Transportation © 2010

LOOP 1604

PAVEMENT MARKING LAYOUT

STA. 420+00 TO STA. 425+00

SHEET 10 OF 31

DGN:	FED. RD. DIV. NO.	STATE	FEDERAL AID PROJECT NO.			HIGHWAY NO.
CHK DGN:	6	TEXAS	STP 2011(210)ES			LP 1604
DWG:	DIST.	COUNTY	CONT. NO.	SECT. NO.	JOB NO.	SHEET NO.
CHK DWG:	SAT	BEXAR	2452	01	050	353

Plotted on: 6/30/2010

Design Filename: p:\74\00\04\design\civil\traffic\740004PM10.dgn

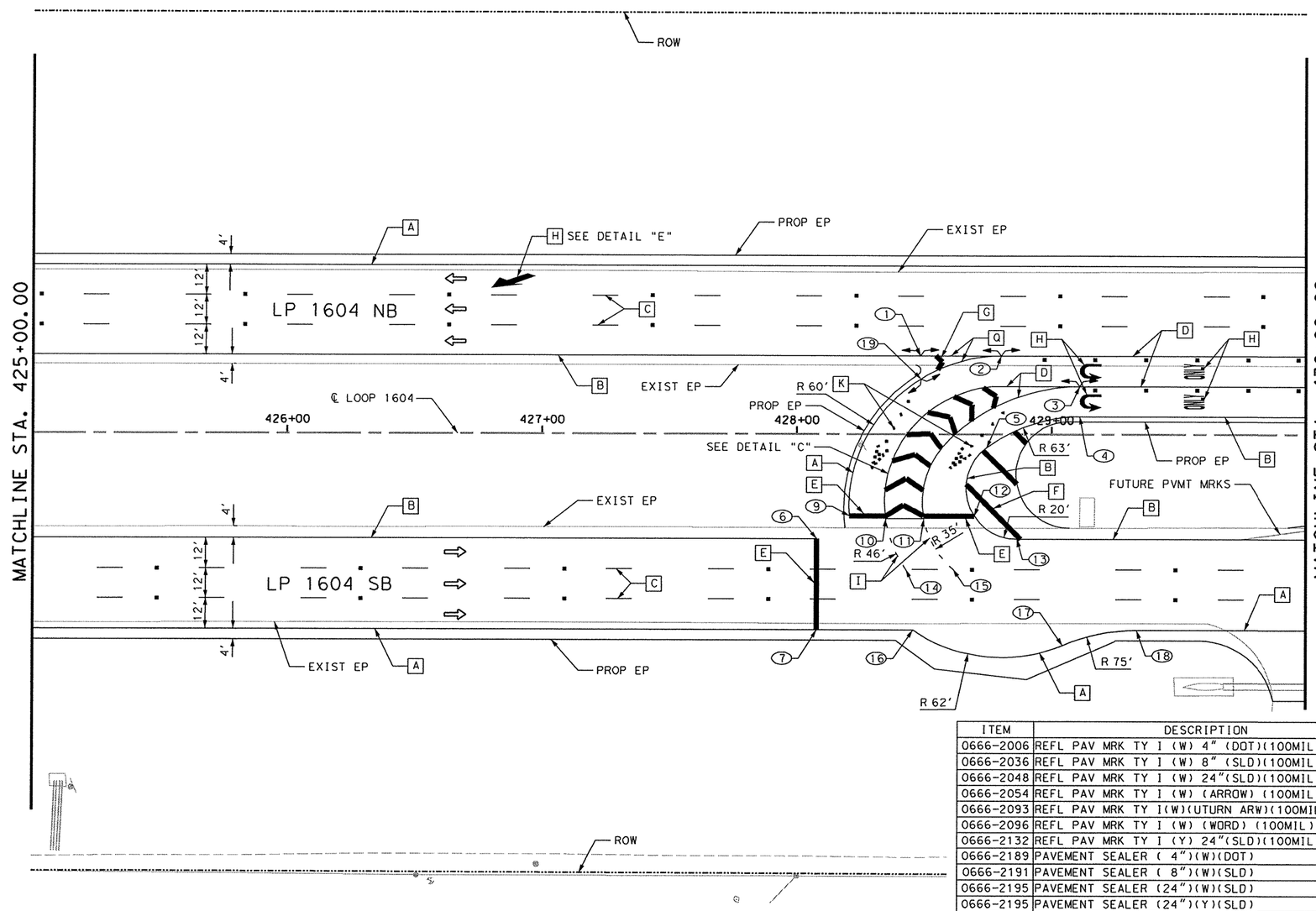

POINT	STATION	OFFSET	POINT	STATION	OFFSET
1	428+48.44	-31	12	428+69.59	32.5
2	428+80.06	-31	13	428+86.29	41.5
3	429+10.98	-19	14	428+42.89	53.5
4	429+11.06	-7	15	428+61.30	53.5
5	428+74.35	5.46	16	428+45.62	77.5
6	428+07.83	41.5	17	429+04.45	83.36
7	428+07.83	77.5	18	429+33.50	77.5
9	428+20.61	32.5	19	428+48.64	-21.84
10	428+34.95	33.5			
11	428+49.88	33.5			

ITEM	DESCRIPTION	UNIT	QTY
0666-2006	REFL PAV MRK TY I (W) 4" (DOT)(100MIL)	LF	23
0666-2036	REFL PAV MRK TY I (W) 8" (SLD)(100MIL)	LF	489
0666-2048	REFL PAV MRK TY I (W) 24"(SLD)(100MIL)	LF	187
0666-2054	REFL PAV MRK TY I (W) (ARROW) (100MIL)	EA	1
0666-2093	REFL PAV MRK TY I(W)(UTURN ARW)(100MIL)	EA	2
0666-2096	REFL PAV MRK TY I (W) (WORD) (100MIL)	EA	2
0666-2132	REFL PAV MRK TY I (Y) 24"(SLD)(100MIL)	LF	56
0666-2189	PAVEMENT SEALER (4")(W)(DOT)	LF	23
0666-2191	PAVEMENT SEALER (8")(W)(SLD)	LF	489
0666-2195	PAVEMENT SEALER (24")(W)(SLD)	LF	187
0666-2195	PAVEMENT SEALER (24")(Y)(SLD)	LF	56
0666-2219	PAVEMENT SEALER (ARROW)	EA	1
0666-2220	PAVEMENT SEALER (WORD)	EA	2
0666-2230	PAVEMENT SEALER UTURN ARROW	EA	2
0672-2014	REFL PAV MRKR TY I-R	EA	28
0672-2015	REFL PAV MRKR TY II-A-A	EA	4
0672-2017	REFL PAV MRKR TY II-C-R	EA	53
8020-2005	REF PROF PAV MRK TY I (W) 6" (SLD)(100 MIL)	LF	1068
8020-2009	REF PROF PAV MRK TY I (Y) 6" (SLD)(100 MIL)	LF	948
8251-2009	RE PM W / RET REQ TY I (W) 6" (BRK) (100MIL)	LF	500
8251-2034	PAVEMENT SEALER (6")(W)(BRK)	LF	500
8251-2034	PAVEMENT SEALER (6")(W)(SLD)	LF	1068
8251-2034	PAVEMENT SEALER (6")(Y)(SLD)	LF	948

PAVEMENT MARKINGS LEGEND

- A 6" SOLID WHITE STRIPE
- B 6" SOLID YELLOW STRIPE
- C 6" BROKEN WHITE STRIPE W/ TY II C-R @ 80' C-C
- D 8" SOLID WHITE STRIPE W/ TY II C-R @ 20' C-C
- E 24" SOLID WHITE STRIPE
- F 24" SOLID YELLOW X-HATCHING W/ TY II A-A @ 20' C-C & ROTATED 45°
- G 24" SOLID WHITE X-HATCHING W/ TY I C-R @ 20' C-C & ROTATED 45°
- H PREFABRICATED WORDS OR ARROWS (TYP.)
- I 4" DOT WHITE (DETAIL "A")
- J 4" DOT YELLOW (DETAIL "A")
- K WRONG WAY ARROW, 14 TY I-R (DETAIL "D")
- L 12" SOLID WHITE STRIPE W/ TY II C-R (DBL) @ 40' C-C
- M 4" SOLID WHITE STRIPE
- N 4" SOLID YELLOW STRIPE
- O 4" BROKEN WHITE STRIPE W/ TY II C-R @ 80' C-C
- P 4" DOUBLE WHITE STRIPE W/ TY II C-R (DBL) @ 20' C-C
- Q 8" SOLID WHITE STRIPE
- R 8" SOLID YELLOW STRIPE

TRAFFIC FLOW ARROWS

NOTES:
1. FOR ADDITIONAL DETAILS SEE TxDOT TYPICAL STANDARD SHEETS.
2. EXISTING FEATURES ARE SHOWN SCREENED BACK, IE FADED.
3. ALL REFLECTIVE PAVEMENT MARKINGS SHALL RECEIVE A TY I AND TY II APPLICATION. APPLY TY II BEFORE APPLYING TY I MARKINGS.
4. ALL DIMENSIONS ARE TO FACE OF CURB AND/OR CENTER OF PAVEMENT MARKINGS, UNLESS OTHERWISE INDICATED.
5. SEE SHEET 375 FOR MISCELLANEOUS DETAILS "A" THROUGH "E".

STATE OF TEXAS · GILMER D. GASTON · 80472 · LICENSED PROFESSIONAL ENGINEER

GILMER D. GASTON P.E. — 6/30/2010 DATE

25 0 25 50
SCALE: PLAN - 1":50'

REV. NO.	DATE	DESCRIPTION	BY

ALAMO RMA

PAPE-DAWSON ENGINEERS

555 EAST RAMSEY | SAN ANTONIO, TEXAS 78216 | PHONE: 210.375.9000 FAX: 210.375.9010

TEXAS BOARD OF PROFESSIONAL ENGINEERS, FIRM REGISTRATION # 470

Texas Department of Transportation © 2010

LOOP 1604

PAVEMENT MARKING LAYOUT

STA. 425+00 TO STA. 430+00

SHEET 11 OF 31

DGN:	FED. RD. DIV. NO.	STATE	FEDERAL AID PROJECT NO.			HIGHWAY NO.
CHK DGN:	6	TEXAS	STP 2011(210)ES			LP 1604
DWG:	DIST.	COUNTY	CONT. NO.	SECT. NO.	JOB NO.	SHEET NO.
CHK DWG:	SAT	BEXAR	2452	01	050	354

Plotted on: 6/30/2010

Design Filename: p:\74\00\04\design\civil\traffic\740004PM11.dgn

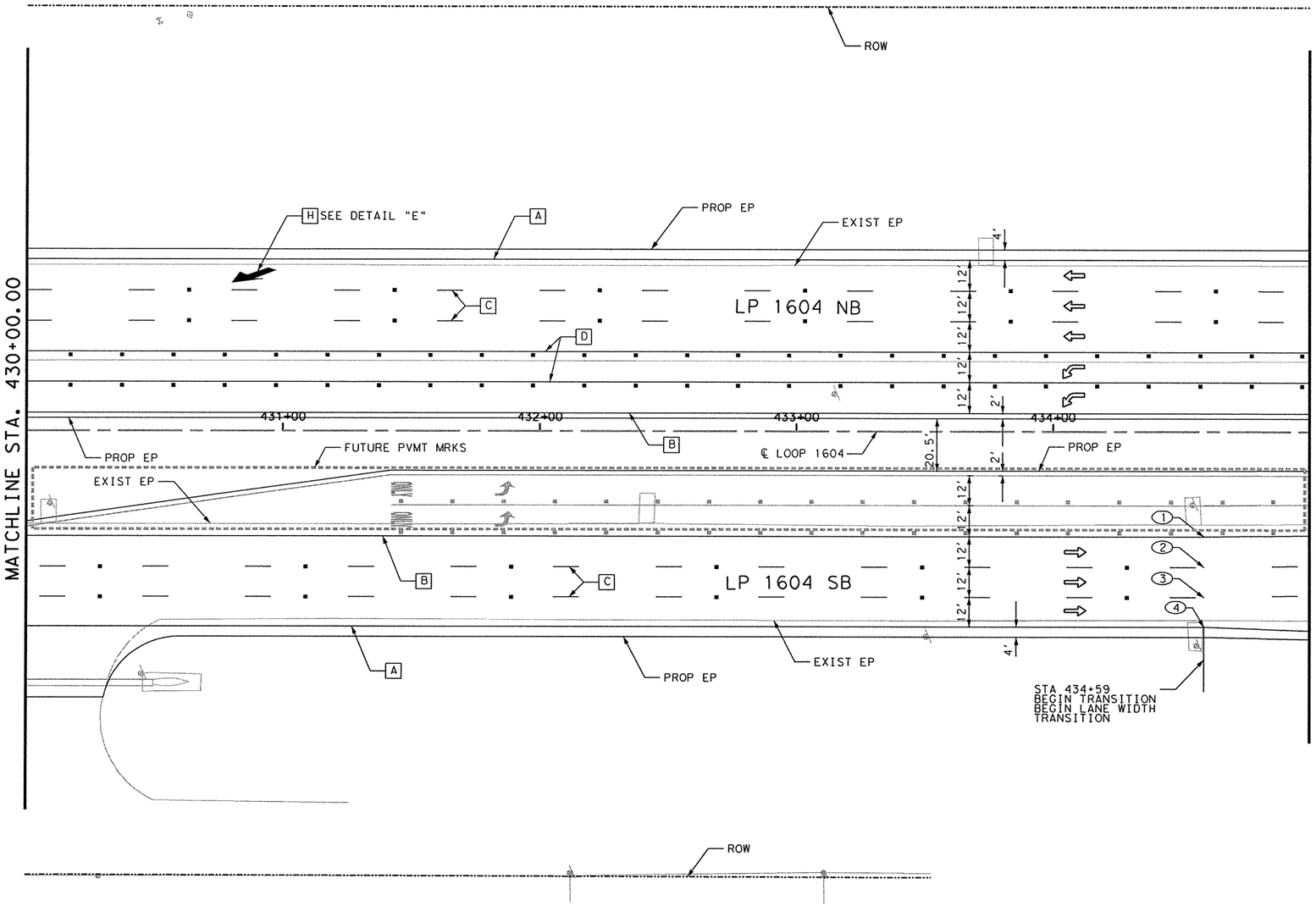

POINT	STATION	OFFSET
1	434+58.53	41.5
2	434+58.53	53.5
3	434+58.53	65.5
4	434+58.53	77.5

ITEM	DESCRIPTION	UNIT	QTY
0666-2036	REFL PAV MRK TY I (W) 8" (SLD)(100MIL)	LF	1000
0666-2054	REFL PAV MRK TY I (W) (ARROW) (100MIL)	EA	1
0666-2191	PAVEMENT SEALER (8")(W)(SLD)	LF	1000
0666-2219	PAVEMENT SEALER (ARROW)	EA	1
0672-2017	REFL PAV MRKR TY II-C-R	EA	75
8020-2005	REF PROF PAV MRK TY I (W) 6" (SLD)(100 MIL)	LF	1000
8020-2009	REF PROF PAV MRK TY I (Y) 6" (SLD)(100 MIL)	LF	1000
8251-2009	RE PM W / RET REQ TY I (W) 6" (BRK) (100MIL)	LF	500
8251-2034	PAVEMENT SEALER (6")(W)(BRK)	LF	500
8251-2034	PAVEMENT SEALER (6")(W)(SLD)	LF	1000
8251-2034	PAVEMENT SEALER (6")(Y)(SLD)	LF	1000

PAVEMENT MARKINGS LEGEND

- A 6" SOLID WHITE STRIPE
- B 6" SOLID YELLOW STRIPE
- C 6" BROKEN WHITE STRIPE W/ TY II C-R @ 80' C-C
- D 8" SOLID WHITE STRIPE W/ TY II C-R @ 20' C-C
- E 24" SOLID WHITE STRIPE
- F 24" SOLID YELLOW X-HATCHING W/ TY II A-A @ 20' C-C & ROTATED 45°
- G 24" SOLID WHITE X-HATCHING W/ TY I C-R @ 20' C-C & ROTATED 45°
- H PREFABRICATED WORDS OR ARROWS (TYP.)
- I 4" DOT WHITE (DETAIL "A")
- J 4" DOT YELLOW (DETAIL "A")
- K WRONG WAY ARROW, 14 TY I-R (DETAIL "D")
- L 12" SOLID WHITE STRIPE W/ TY II C-R (DBL) @ 40' C-C
- M 4" SOLID WHITE STRIPE
- N 4" SOLID YELLOW STRIPE
- O 4" BROKEN WHITE STRIPE W/ TY II C-R @ 80' C-C
- P 4" DOUBLE WHITE STRIPE W/ TY II C-R (DBL) @ 20' C-C
- Q 8" SOLID WHITE STRIPE
- R 8" SOLID YELLOW STRIPE

TRAFFIC FLOW ARROWS

NOTES:

1. FOR ADDITIONAL DETAILS SEE TxDOT TYPICAL STANDARD SHEETS.
2. EXISTING FEATURES ARE SHOWN SCREENED BACK, IE FADED.
3. ALL REFLECTIVE PAVEMENT MARKINGS SHALL RECEIVE A TY I AND TY II APPLICATION. APPLY TY II BEFORE APPLYING TY I MARKINGS.
4. ALL DIMENSIONS ARE TO FACE OF CURB AND/OR CENTER OF PAVEMENT MARKINGS, UNLESS OTHERWISE INDICATED.
5. SEE SHEET 375 FOR MISCELLANEOUS DETAILS "A" THROUGH "E".

STATE OF TEXAS
GILMER D. GASTON
80472
LICENSED
PROFESSIONAL ENGINEER

GILMER D. GASTON P.E. — 6/30/2010 DATE

25 0 25 50
SCALE: PLAN - 1":50'

REV. NO.	DATE	DESCRIPTION	BY

ALAMO RMA

PAPE-DAWSON ENGINEERS
555 EAST RAMSEY | SAN ANTONIO, TEXAS 78216 | PHONE: 210.375.9000 FAX: 210.375.9010
TEXAS BOARD OF PROFESSIONAL ENGINEERS, FIRM REGISTRATION # 470

Texas Department of Transportation
© 2010

LOOP 1604

PAVEMENT MARKING LAYOUT

STA. 430+00 TO STA. 435+00

SHEET 12 OF 31

DGN:	FED. RD. DIV. NO.	STATE	FEDERAL AID PROJECT NO.			HIGHWAY NO.
CHK DGN:	6	TEXAS	STP 2011(210)ES			LP 1604
DWG:	DIST.	COUNTY	CONT. NO.	SECT. NO.	JOB NO.	SHEET NO.
CHK DWG:	SAT	BEXAR	2452	01	050	355

Plotted on: 6/30/2010

Design Filename: p:\74\00\04\design\civil\traffic\740004PM12.dgn

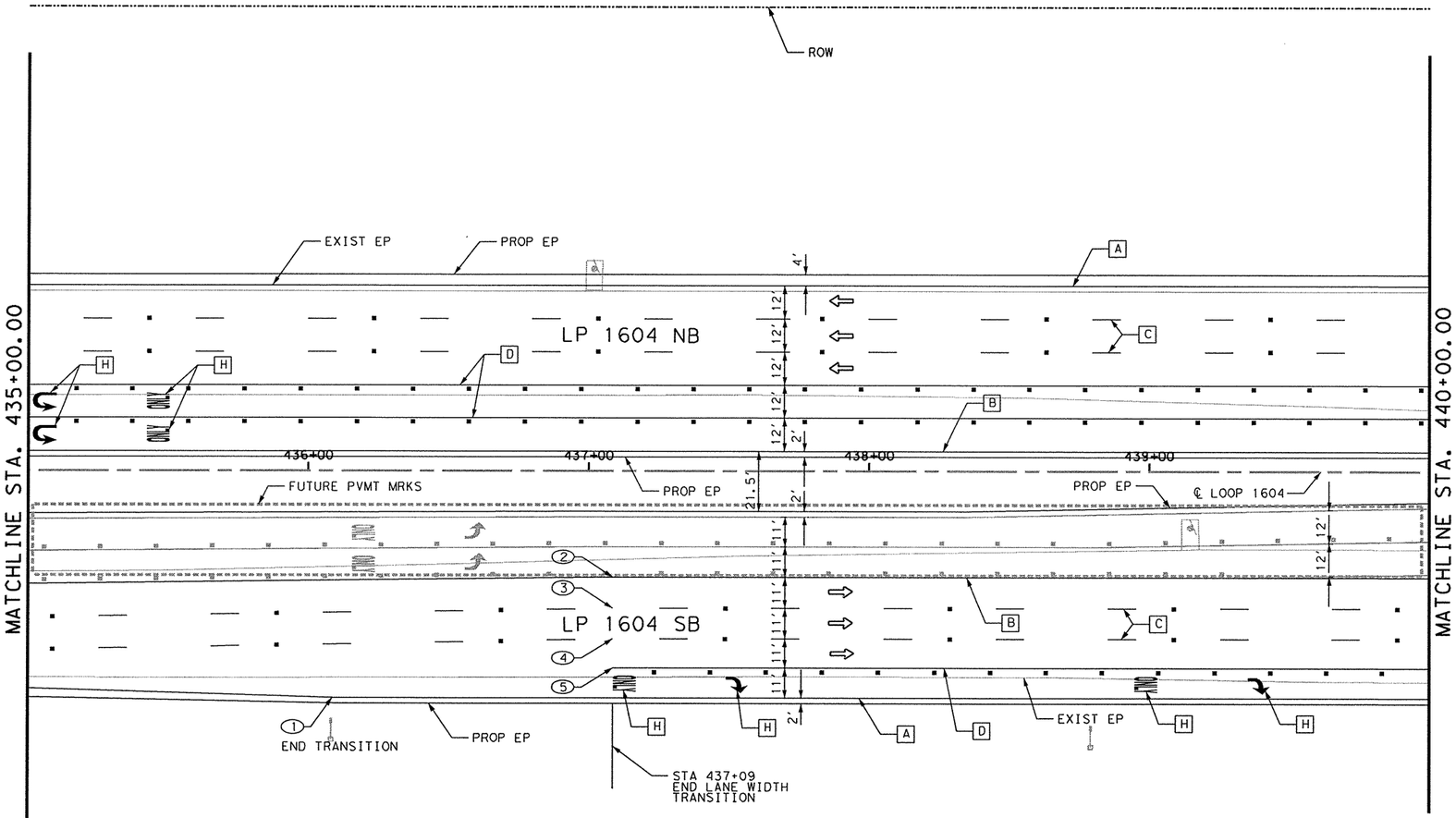

POINT	STATION	OFFSET
1	436+08.56	82.5
2	437+08.54	38.5
3	437+08.54	49.5
4	437+08.55	60.5
5	437+08.66	71.5

ITEM	DESCRIPTION	UNIT	QTY
0666-2036	REFL PAV MRK TY I (W) 8" (SLD)(100MIL)	LF	1291
0666-2054	REFL PAV MRK TY I (W) (ARROW) (100MIL)	EA	2
0666-2093	REFL PAV MRK TY I(W)(UTURN ARW)(100MIL)	EA	2
0666-2096	REFL PAV MRK TY I (W) (WORD) (100MIL)	EA	4
0666-2191	PAVEMENT SEALER (8")(W)(SLD)	LF	1291
0666-2219	PAVEMENT SEALER (ARROW)	EA	2
0666-2220	PAVEMENT SEALER (WORD)	EA	4
0666-2230	PAVEMENT SEALER UTURN ARROW	EA	2
0672-2017	REFL PAV MRKR TY II-C-R	EA	90
8020-2005	REF PROF PAV MRK TY I (W) 6" (SLD)(100 MIL)	LF	1000
8020-2009	REF PROF PAV MRK TY I (Y) 6" (SLD)(100 MIL)	LF	1000
8251-2009	RE PM W / RET REQ TY I (W) 6" (BRK) (100MIL)	LF	500
8251-2034	PAVEMENT SEALER (6")(W)(BRK)	LF	500
8251-2034	PAVEMENT SEALER (6")(W)(SLD)	LF	1000
8251-2034	PAVEMENT SEALER (6")(Y)(SLD)	LF	1000

PAVEMENT MARKINGS LEGEND

- [A] 6" SOLID WHITE STRIPE
- [B] 6" SOLID YELLOW STRIPE
- [C] 6" BROKEN WHITE STRIPE W/ TY II C-R @ 80' C-C
- [D] 8" SOLID WHITE STRIPE W/ TY II C-R @ 20' C-C
- [E] 24" SOLID WHITE STRIPE
- [F] 24" SOLID YELLOW X-HATCHING W/ TY II A-A @ 20' C-C & ROTATED 45°
- [G] 24" SOLID WHITE X-HATCHING W/ TY I C-R @ 20' C-C & ROTATED 45°
- [H] PREFABRICATED WORDS OR ARROWS (TYP.)
- [I] 4" DOT WHITE (DETAIL "A")
- [J] 4" DOT YELLOW (DETAIL "A")
- [K] WRONG WAY ARROW, 14 TY I-R (DETAIL "D")
- [L] 12" SOLID WHITE STRIPE W/ TY II C-R (DBL) @ 40' C-C
- [M] 4" SOLID WHITE STRIPE
- [N] 4" SOLID YELLOW STRIPE
- [O] 4" BROKEN WHITE STRIPE W/ TY II C-R @ 80' C-C
- [P] 4" DOUBLE WHITE STRIPE W/ TY II C-R (DBL) @ 20' C-C
- [Q] 8" SOLID WHITE STRIPE
- [R] 8" SOLID YELLOW STRIPE

⇦⇦ TRAFFIC FLOW ARROWS

NOTES:
1. FOR ADDITIONAL DETAILS SEE TxDOT TYPICAL STANDARD SHEETS.
2. EXISTING FEATURES ARE SHOWN SCREENED BACK, IE FADED.
3. ALL REFLECTIVE PAVEMENT MARKINGS SHALL RECEIVE A TY I AND TY II APPLICATION. APPLY TY II BEFORE APPLYING TY I MARKINGS.
4. ALL DIMENSIONS ARE TO FACE OF CURB AND/OR CENTER OF PAVEMENT MARKINGS, UNLESS OTHERWISE INDICATED.
5. SEE SHEET 375 FOR MISCELLANEOUS DETAILS "A" THROUGH "E".

STATE OF TEXAS · GILMER D. GASTON · 80472 · LICENSED PROFESSIONAL ENGINEER

GILMER D. GASTON P.E. — 6/30/2010 DATE

25 0 25 50

SCALE: PLAN - 1":50'

REV. NO.	DATE	DESCRIPTION	BY

ALAMO RMA

PAPE-DAWSON ENGINEERS
555 EAST RAMSEY | SAN ANTONIO, TEXAS 78216 | PHONE: 210.375.9000 FAX: 210.375.9010
TEXAS BOARD OF PROFESSIONAL ENGINEERS, FIRM REGISTRATION # 470

Texas Department of Transportation © 2010

LOOP 1604

PAVEMENT MARKING LAYOUT

STA. 435+00 TO STA. 440+00

SHEET 13 OF 31

DGN:	FED. RD. DIV. NO.	STATE	FEDERAL AID PROJECT NO.			HIGHWAY NO.
CHK DGN:	6	TEXAS	STP 2011(210)ES			LP 1604
DWG:	DIST.	COUNTY	CONT. NO.	SECT. NO.	JOB NO.	SHEET NO.
CHK DWG:	SAT	BEXAR	2452	01	050	356

Plotted on: 6/30/2010

Design Filename: p:\74\00\04\design\civil\traffic\74004PM13.dgn

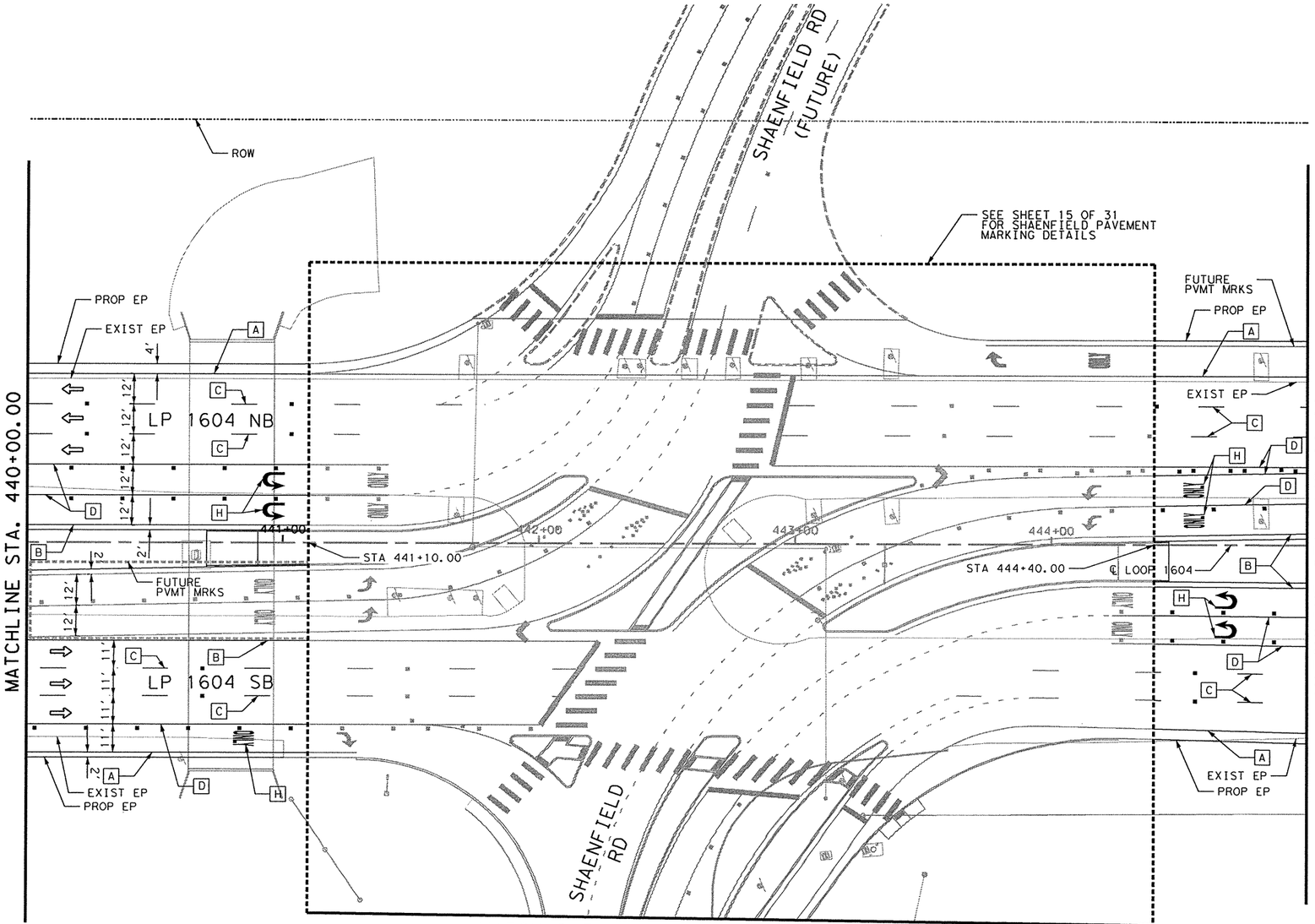

PAVEMENT MARKINGS LEGEND

- [A] 6" SOLID WHITE STRIPE
- [B] 6" SOLID YELLOW STRIPE
- [C] 6" BROKEN WHITE STRIPE W/ TY II C-R @ 80' C-C
- [D] 8" SOLID WHITE STRIPE W/ TY II C-R @ 20' C-C
- [E] 24" SOLID WHITE STRIPE
- [F] 24" SOLID YELLOW X-HATCHING W/ TY II A-A @ 20' C-C & ROTATED 45°
- [G] 24" SOLID WHITE X-HATCHING W/ TY I C-R @ 20' C-C & ROTATED 45°
- [H] PREFABRICATED WORDS OR ARROWS (TYP.)
- [I] 4" DOT WHITE (DETAIL "A")
- [J] 4" DOT YELLOW (DETAIL "A")
- [K] WRONG WAY ARROW, 14 TY I-R (DETAIL "D")
- [L] 12" SOLID WHITE STRIPE W/ TY II C-R (DBL) @ 40' C-C
- [M] 4" SOLID WHITE STRIPE
- [N] 4" SOLID YELLOW STRIPE
- [O] 4" BROKEN WHITE STRIPE W/ TY II C-R @ 80' C-C
- [P] 4" DOUBLE WHITE STRIPE W/ TY II C-R (DBL) @ 20' C-C
- [Q] 8" SOLID WHITE STRIPE
- [R] 8" SOLID YELLOW STRIPE

TRAFFIC FLOW ARROWS

NOTES:

1. FOR ADDITIONAL DETAILS SEE TxDOT TYPICAL STANDARD SHEETS.
2. EXISTING FEATURES ARE SHOWN SCREENED BACK, IE FADED.
3. ALL REFLECTIVE PAVEMENT MARKINGS SHALL RECEIVE A TY I AND TY II APPLICATION. APPLY TY II BEFORE APPLYING TY I MARKINGS.
4. ALL DIMENSIONS ARE TO FACE OF CURB AND/OR CENTER OF PAVEMENT MARKINGS, UNLESS OTHERWISE INDICATED.
5. SEE SHEET 375 FOR MISCELLANEOUS DETAILS "A" THROUGH "E".

STATE OF TEXAS
GILMER D. GASTON
80472
LICENSED PROFESSIONAL ENGINEER

GILMER D. GASTON P.E. — 6/30/2010 DATE

25 0 25 50
SCALE: PLAN - 1":50'

REV. NO.	DATE	DESCRIPTION	BY

ALAMO RMA

PAPE-DAWSON ENGINEERS
555 EAST RAMSEY | SAN ANTONIO, TEXAS 78216 | PHONE: 210.375.9000 FAX: 210.375.9010
TEXAS BOARD OF PROFESSIONAL ENGINEERS, FIRM REGISTRATION # 470

Texas Department of Transportation © 2010

ITEM	DESCRIPTION	UNIT	QTY
0666-2036	REFL PAV MRK TY I (W) 8" (SLD)(100MIL)	LF	630
0666-2093	REFL PAV MRK TY I(W)(UTURN ARW)(100MIL)	EA	4
0666-2096	REFL PAV MRK TY I (W) (WORD) (100MIL)	EA	3
0666-2191	PAVEMENT SEALER (8")(W)(SLD)	LF	630
0666-2220	PAVEMENT SEALER (WORD)	EA	3
0666-2230	PAVEMENT SEALER UTURN ARROW	EA	4
0672-2017	REFL PAV MRKR TY II-C-R	EA	40
8020-2005	REF PROF PAV MRK TY I (W) 6" (SLD)(100 MIL)	LF	340
8020-2009	REF PROF PAV MRK TY I (Y) 6" (SLD)(100 MIL)	LF	340
8251-2009	RE PM W / RET REQ TY I (W) 6" (BRK) (100MIL)	LF	170
8251-2034	PAVEMENT SEALER (6")(W)(BRK)	LF	170
8251-2034	PAVEMENT SEALER (6")(W)(SLD)	LF	340
8251-2034	PAVEMENT SEALER (6")(Y)(SLD)	LF	340

LOOP 1604

PAVEMENT MARKING LAYOUT

STA. 440+00 TO STA. 445+00

SHEET 14 OF 31

DGN:	FED. RD. DIV. NO.	STATE	FEDERAL AID PROJECT NO.			HIGHWAY NO.
CHK DGN:	6	TEXAS	STP 2011(210)ES			LP 1604
DWG:	DIST.	COUNTY	CONT. NO.	SECT. NO.	JOB NO.	SHEET NO.
CHK DWG:	SAT	BEXAR	2452	01	050	357

Plotted on: 6/30/2010

Design Filename: p:\74\00\04\design\civil\traffic\740004PM13A.dgn

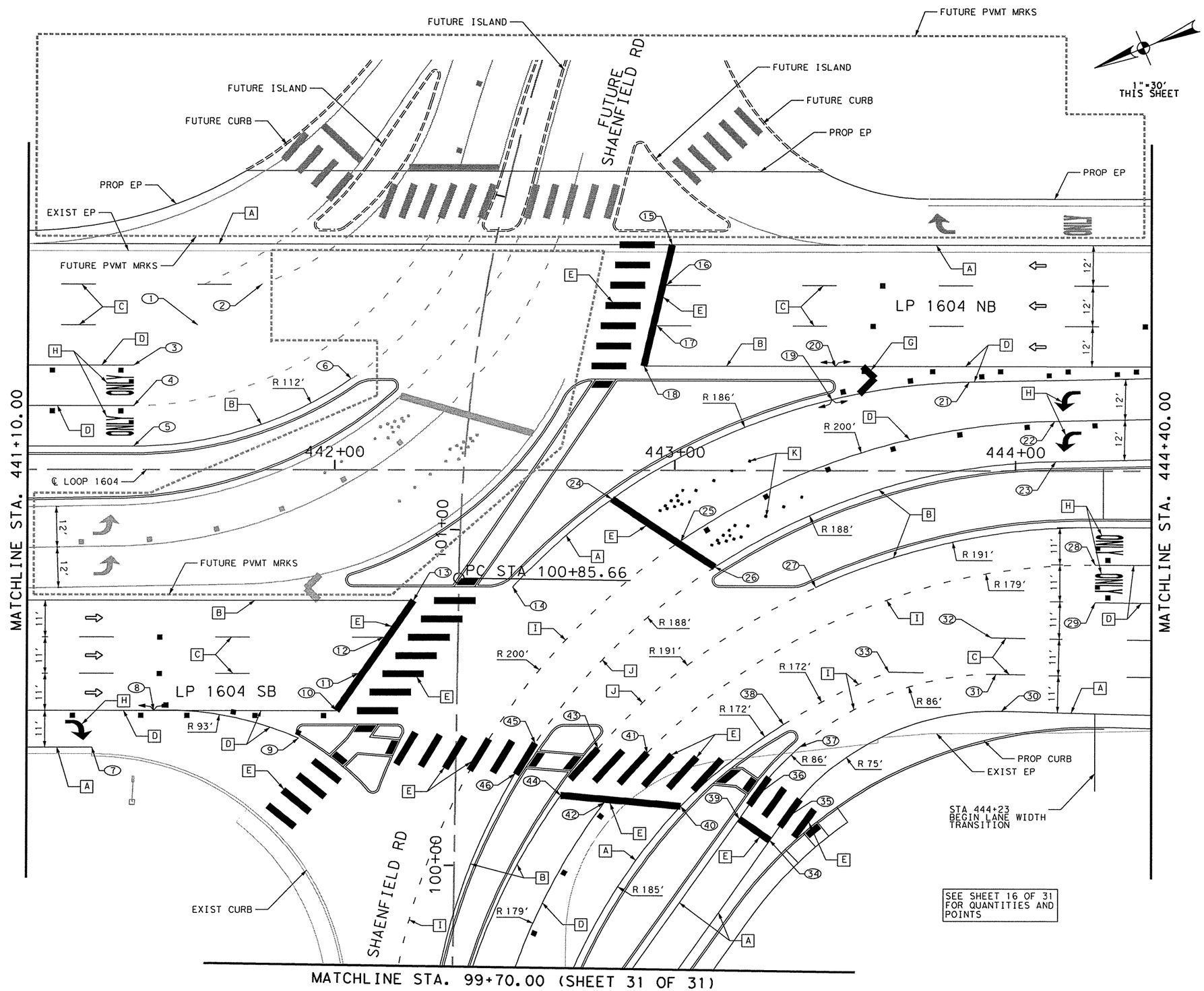

PAVEMENT MARKINGS LEGEND

- A — 6" SOLID WHITE STRIPE
- B — 6" SOLID YELLOW STRIPE
- C — 6" BROKEN WHITE STRIPE W/ TY II C-R @ 80' C-C
- D — 8" SOLID WHITE STRIPE W/ TY II C-R @ 20' C-C
- E — 24" SOLID WHITE STRIPE
- F — 24" SOLID YELLOW X-HATCHING W/ TY II A-A @ 20' C-C & ROTATED 45°
- G — 24" SOLID WHITE X-HATCHING W/ TY I C-R @ 20' C-C & ROTATED 45°
- H — PREFABRICATED WORDS OR ARROWS (TYP.)
- I — 4" DOT WHITE (DETAIL "A")
- J — 4" DOT YELLOW (DETAIL "A")
- K — WRONG WAY ARROW, 14 TY I-R (DETAIL "D")
- L — 12" SOLID WHITE STRIPE W/ TY II C-R (DBL) @ 40' C-C
- M — 4" SOLID WHITE STRIPE
- N — 4" SOLID YELLOW STRIPE
- O — 4" BROKEN WHITE STRIPE W/ TY II C-R @ 80' C-C
- P — 4" DOUBLE WHITE STRIPE W/ TY II C-R (DBL) @ 20' C-C
- Q — 8" SOLID WHITE STRIPE
- R — 8" SOLID YELLOW STRIPE

⇦⇨ TRAFFIC FLOW ARROWS

NOTES:
1. FOR ADDITIONAL DETAILS SEE TxDOT TYPICAL STANDARD SHEETS.
2. EXISTING FEATURES ARE SHOWN SCREENED BACK, IE FADED.
3. ALL REFLECTIVE PAVEMENT MARKINGS SHALL RECEIVE A TY I AND TY II APPLICATION. APPLY TY II BEFORE APPLYING TY I MARKINGS.
4. ALL DIMENSIONS ARE TO FACE OF CURB AND/OR CENTER OF PAVEMENT MARKINGS, UNLESS OTHERWISE INDICATED.
5. SEE SHEET 375 FOR MISCELLANEOUS DETAILS "A" THROUGH "E".

STATE OF TEXAS — GILMER D. GASTON — 80472 — LICENSED PROFESSIONAL ENGINEER

GILMER D. GASTON P.E. — 6/30/2010 DATE

15 0 15 30

SCALE: PLAN - 1":30'

REV. NO.	DATE	DESCRIPTION	BY

ALAMO RMA

PAPE-DAWSON ENGINEERS
555 EAST RAMSEY | SAN ANTONIO, TEXAS 78216 | PHONE: 210.375.9000 FAX: 210.375.9010
TEXAS BOARD OF PROFESSIONAL ENGINEERS, FIRM REGISTRATION # 470

Texas Department of Transportation © 2010

LOOP 1604

PAVEMENT MARKING LAYOUT

STA. 441+10 TO STA. 444+40

SHEET 15 OF 31

DGN:	FED. RD. DIV. NO.	STATE	FEDERAL AID PROJECT NO.			HIGHWAY NO.
CHK DGN:	6	TEXAS	STP 2011(210)ES			LP 1604
DWG:	DIST.	COUNTY	CONT. NO.	SECT. NO.	JOB NO.	SHEET NO.
CHK DWG:	SAT	BEXAR	2452	01	050	358

Plotted on: 6/30/2010

Design Filename: p:\74N00\04\design\civil\traffic\740004PM13B.dgn

POINT	STATION	OFFSET
1	441+59.70	-43
2	441+78.49	-55
3	441+40.90	-31
4	441+40.90	-19
5	441+40.90	-7
6	442+04.78	-27
7	441+28.98	82.5
8	441+47.08	71.5
9	441+89.59	79.74
10	442+00.73	71.5
11	442+07.06	60.5
12	442+14.53	49.5
13	442+23.37	38.5
14	442+52.37	34.5
15	442+99.10	-67
16	442+97.41	-55
17	442+94.63	-43
18	442+90.84	-31
19	443+46.06	-21.11
20	443+47.10	-31
21	443+86.28	-26.34
22	444+11.66	-14.84
23	444+11.90	-2.85
24	442+81.56	8.5
25	443+01.76	20.72
26	443+11.66	28.5
27	443+41.42	34.5
28	444+23.48	27.69
29	444+23.49	38.78
30	443+95.90	71.4
31	443+94.35	60.39
32	443+92.88	49.39
33	443+62.94	59.76
34	443+28.00	110.02
35	443+32.66	103.36
36	443+23.65	97.05
37	443+36.91	82.15
38	443+32.01	75.44
39	443+18.99	103.71
40	443+01.85	99.99
41	442+92.10	84.07
42	442+79.49	99.03
43	442+77.65	82.78
44	442+66.61	96.87
45	442+59.04	81.13
46	442+53.19	90.53

ITEM	DESCRIPTION	UNIT	QTY
0666-2006	REFL PAV MRK TY I (W) 4" (DOT)(100MIL)	LF	200
0666-2036	REFL PAV MRK TY I (W) 8" (SLD)(100MIL)	LF	618
0666-2048	REFL PAV MRK TY I (W) 24"(SLD)(100MIL)	LF	548
0666-2054	REFL PAV MRK TY I (W) (ARROW) (100MIL)	EA	3
0666-2096	REFL PAV MRK TY I (W) (WORD) (100MIL)	EA	4
0666-2108	REFL PAV MRK TY I (Y) 4" (DOT)(100MIL)	LF	78
0666-2189	PAVEMENT SEALER (4")(W)(DOT)	LF	200
0666-2189	PAVEMENT SEALER (4")(Y)(DOT)	LF	78
0666-2191	PAVEMENT SEALER (8")(W)(SLD)	LF	618
0666-2195	PAVEMENT SEALER (24")(W)(SLD)	LF	548
0666-2219	PAVEMENT SEALER (ARROW)	EA	3
0666-2220	PAVEMENT SEALER (WORD)	EA	4
0672-2014	REFL PAV MRKR TY I-R	EA	28
0672-2017	REFL PAV MRKR TY II-C-R	EA	42
8020-2005	REF PROF PAV MRK TY I (W) 6" (SLD)(100 MIL)	LF	812
8020-2009	REF PROF PAV MRK TY I (Y) 6" (SLD)(100 MIL)	LF	623
8251-2009	RE PM W / RET REQ TY I (W) 6" (BRK) (100MIL)	LF	183
8251-2034	PAVEMENT SEALER (6")(W)(BRK)	LF	183
8251-2034	PAVEMENT SEALER (6")(W)(SLD)	LF	812
8251-2034	PAVEMENT SEALER (6")(Y)(SLD)	LF	623

STATE OF TEXAS
GILMER D. GASTON
80472
LICENSED
PROFESSIONAL ENGINEER

GILMER D. GASTON P.E. — 6/30/2010 DATE

REV. NO.	DATE	DESCRIPTION	BY

ALAMO RMA

PAPE-DAWSON ENGINEERS

555 EAST RAMSEY | SAN ANTONIO, TEXAS 78216 | PHONE: 210.375.9000 FAX: 210.375.9010

TEXAS BOARD OF PROFESSIONAL ENGINEERS, FIRM REGISTRATION # 470

Texas Department of Transportation ©2010

LOOP 1604

PAVEMENT MARKING LAYOUT

STA. 441+10 TO STA. 444+40

SHEET 16 OF 31

DGN:	FED. RD. DIV. NO.	STATE	FEDERAL AID PROJECT NO.			HIGHWAY NO.
CHK DGN:	6	TEXAS	STP 2011(210)ES			LP 1604
DWG:	DIST.	COUNTY	CONT. NO.	SECT. NO.	JOB NO.	SHEET NO.
CHK DWG:	SAT	BEXAR	2452	01	050	359

Plotted on: 6/30/2010
Design Filename: p:\74\00\04\design\civil\traffic\740004PM14.dgn

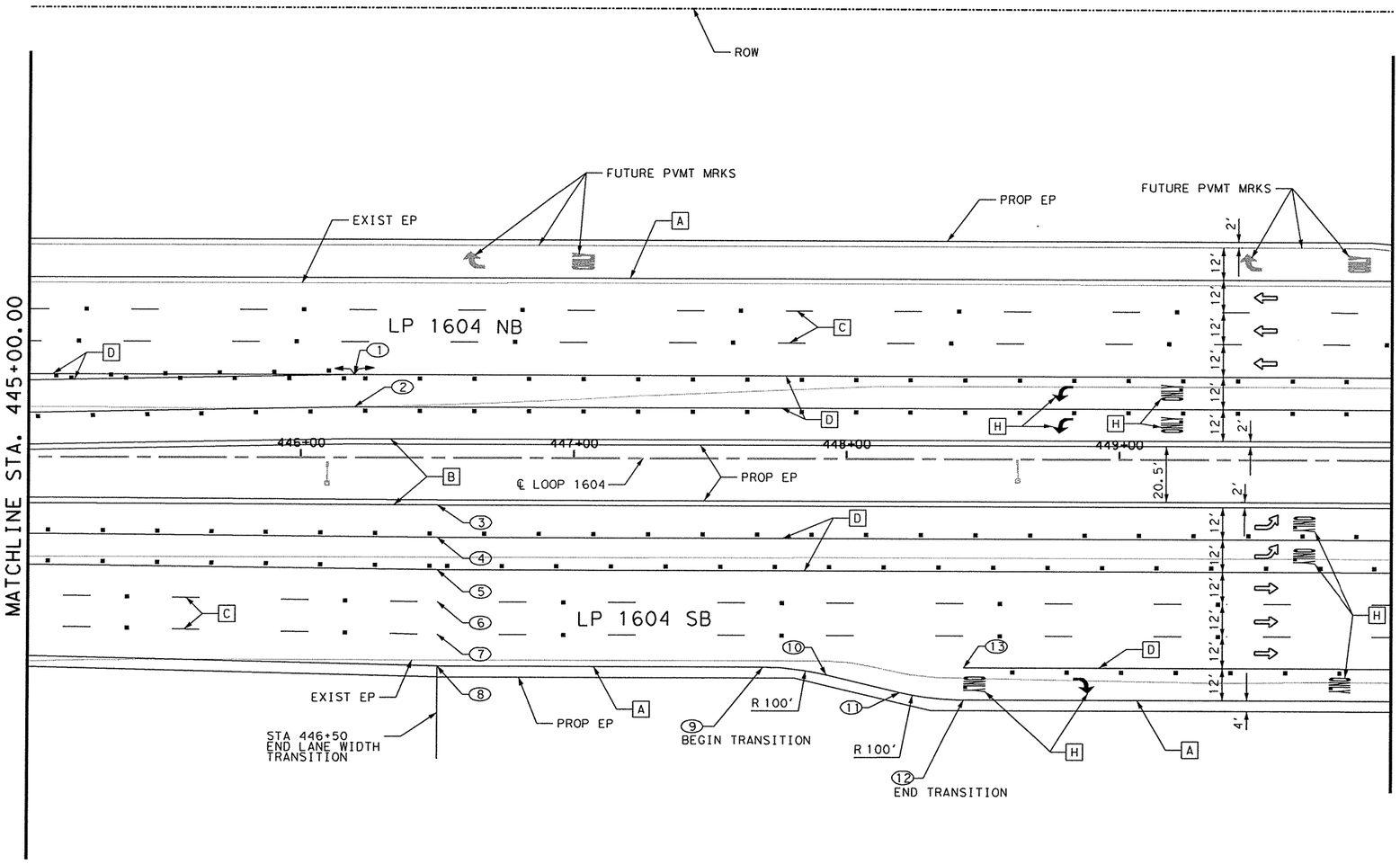

POINT	STATION	OFFSET	POINT	STATION	OFFSET
1	446+19.30	-31	11	448+19.75	86.74
2	446+19.42	-19	12	448+43.09	89.5
3	446+50.01	17.5	13	448+43.09	77.5
4	446+50.01	29.5			
5	446+50.02	41.5			
6	446+50.02	53.5			
7	446+50.03	65.5			
8	446+50.04	77.5			
9	447+69.42	77.5			
10	447+92.76	80.26			

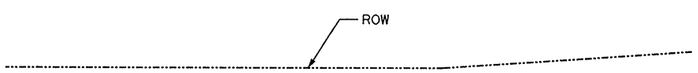

ITEM	DESCRIPTION	UNIT	QTY
0666-2036	REFL PAV MRK TY I (W) 8" (SLD)(100MIL)	LF	2277
0666-2054	REFL PAV MRK TY I (W) (ARROW) (100MIL)	EA	3
0666-2096	REFL PAV MRK TY I (W) (WORD) (100MIL)	EA	6
0666-2191	PAVEMENT SEALER (8")(W)(SLD)	LF	2277
0666-2219	PAVEMENT SEALER (ARROW)	EA	3
0666-2220	PAVEMENT SEALER (WORD)	EA	6
0672-2017	REFL PAV MRKR TY II-C-R	EA	133
8020-2005	REF PROF PAV MRK TY I (W) 6" (SLD)(100 MIL)	LF	1001
8020-2009	REF PROF PAV MRK TY I (Y) 6" (SLD)(100 MIL)	LF	1000
8251-2009	RE PM W / RET REQ TY I (W) 6" (BRK) (100MIL)	LF	500
8251-2034	PAVEMENT SEALER (6")(W)(BRK)	LF	500
8251-2034	PAVEMENT SEALER (6")(W)(SLD)	LF	1001
8251-2034	PAVEMENT SEALER (6")(Y)(SLD)	LF	1000

PAVEMENT MARKINGS LEGEND

- [A] 6" SOLID WHITE STRIPE
- [B] 6" SOLID YELLOW STRIPE
- [C] 6" BROKEN WHITE STRIPE W/ TY II C-R @ 80' C-C
- [D] 8" SOLID WHITE STRIPE W/ TY II C-R @ 20' C-C
- [E] 24" SOLID WHITE STRIPE
- [F] 24" SOLID YELLOW X-HATCHING W/ TY II A-A @ 20' C-C & ROTATED 45°
- [G] 24" SOLID WHITE X-HATCHING W/ TY I C-R @ 20' C-C & ROTATED 45°
- [H] PREFABRICATED WORDS OR ARROWS (TYP.)
- [I] 4" DOT WHITE (DETAIL "A")
- [J] 4" DOT YELLOW (DETAIL "A")
- [K] WRONG WAY ARROW, 14 TY I-R (DETAIL "D")
- [L] 12" SOLID WHITE STRIPE W/ TY II C-R (DBL) @ 40' C-C
- [M] 4" SOLID WHITE STRIPE
- [N] 4" SOLID YELLOW STRIPE
- [O] 4" BROKEN WHITE STRIPE W/ TY II C-R @ 80' C-C
- [P] 4" DOUBLE WHITE STRIPE W/ TY II C-R (DBL) @ 20' C-C
- [Q] 8" SOLID WHITE STRIPE
- [R] 8" SOLID YELLOW STRIPE
- TRAFFIC FLOW ARROWS

NOTES:
1. FOR ADDITIONAL DETAILS SEE TxDOT TYPICAL STANDARD SHEETS.
2. EXISTING FEATURES ARE SHOWN SCREENED BACK, IE FADED.
3. ALL REFLECTIVE PAVEMENT MARKINGS SHALL RECEIVE A TY I AND TY II APPLICATION. APPLY TY II BEFORE APPLYING TY I MARKINGS.
4. ALL DIMENSIONS ARE TO FACE OF CURB AND/OR CENTER OF PAVEMENT MARKINGS, UNLESS OTHERWISE INDICATED.
5. SEE SHEET 375 FOR MISCELLANEOUS DETAILS "A" THROUGH "E".

STATE OF TEXAS
GILMER D. GASTON
80472
LICENSED PROFESSIONAL ENGINEER

GILMER D. GASTON P.E. — 6/30/2010 DATE

25 0 25 50
SCALE: PLAN - 1":50'

REV. NO.	DATE	DESCRIPTION	BY

ALAMO RMA

PAPE-DAWSON ENGINEERS

555 EAST RAMSEY | SAN ANTONIO, TEXAS 78216 | PHONE: 210.375.9000 FAX: 210.375.9010

TEXAS BOARD OF PROFESSIONAL ENGINEERS, FIRM REGISTRATION # 470

Texas Department of Transportation
© 2010

LOOP 1604

PAVEMENT MARKING LAYOUT

STA. 445+00 TO STA. 450+00

SHEET 17 OF 31

DGN:	FED. RD. DIV. NO.	STATE	FEDERAL AID PROJECT NO.			HIGHWAY NO.
CHK DGN:	6	TEXAS	STP 2011(210)ES			LP 1604
DWG:	DIST.	COUNTY	CONT. NO.	SECT. NO.	JOB NO.	SHEET NO.
CHK DWG:	SAT	BEXAR	2452	01	050	360

Plotted on: 6/30/2010

Design Filename: p:\741\00\04\design\civil\traffic\740004PM15.dgn

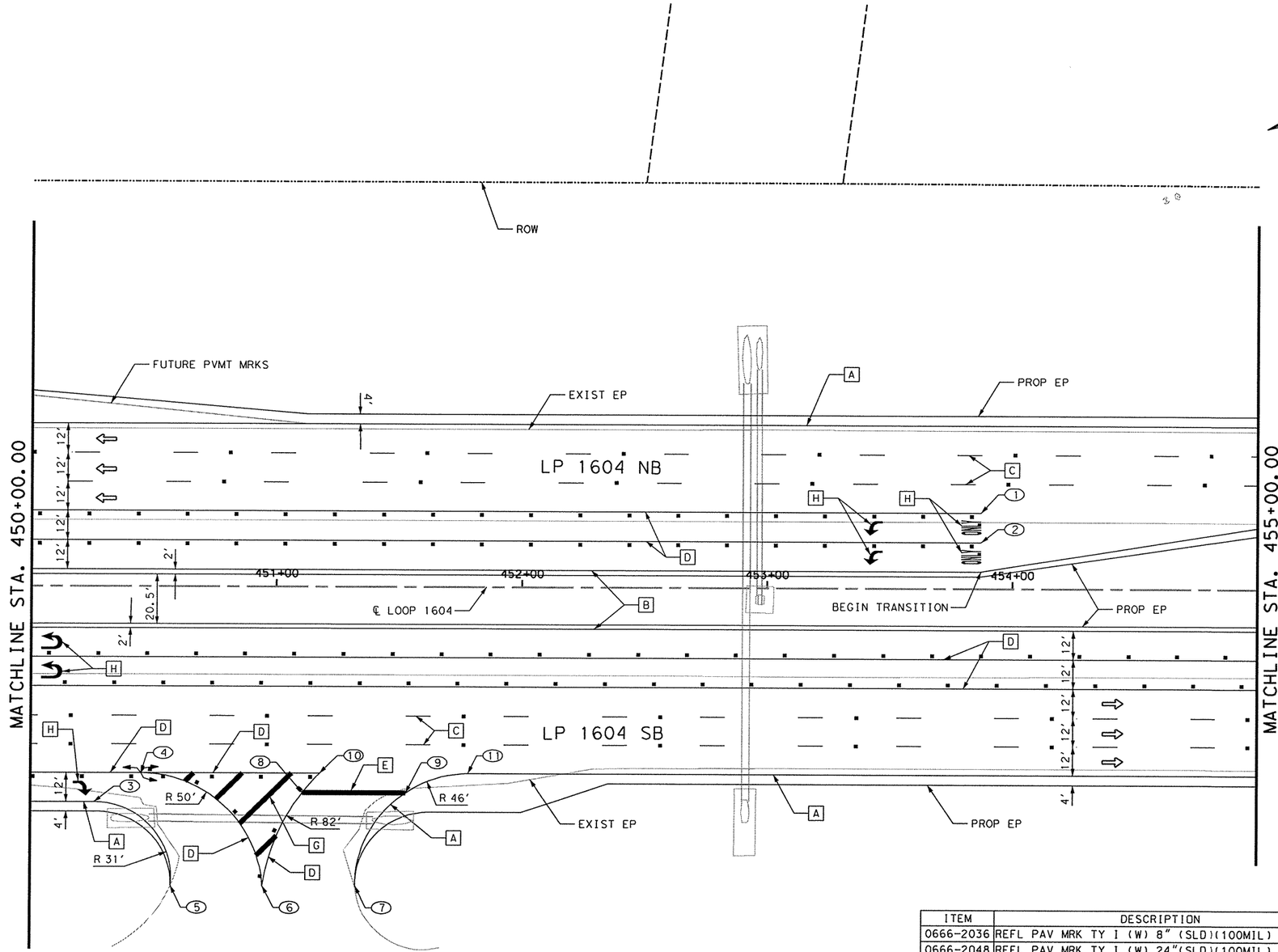

POINT	STATION	OFFSET	POINT	STATION	OFFSET
1	453+87.08	-31	11	451+78.19	77.5
2	453+87.09	-19			
3	450+25.82	89.5			
4	450+44.77	77.5			
5	450+57.10	124.31			
6	450+94.66	124.31			
7	451+32.19	124.31			
8	451+10.71	85.5			
9	451+52.54	85.5			
10	451+17.69	77.5			

PAVEMENT MARKINGS LEGEND

- [A] 6" SOLID WHITE STRIPE
- [B] 6" SOLID YELLOW STRIPE
- [C] 6" BROKEN WHITE STRIPE W/ TY II C-R @ 80' C-C
- [D] 8" SOLID WHITE STRIPE W/ TY II C-R @ 20' C-C
- [E] 24" SOLID WHITE STRIPE
- [F] 24" SOLID YELLOW X-HATCHING W/ TY II A-A @ 20' C-C & ROTATED 45°
- [G] 24" SOLID WHITE X-HATCHING W/ TY I C-R @ 20' C-C & ROTATED 45°
- [H] PREFABRICATED WORDS OR ARROWS (TYP.)
- [I] 4" DOT WHITE (DETAIL "A")
- [J] 4" DOT YELLOW (DETAIL "A")
- [K] WRONG WAY ARROW, 14 TY I-R (DETAIL "D")
- [L] 12" SOLID WHITE STRIPE W/ TY II C-R (DBL) @ 40' C-C
- [M] 4" SOLID WHITE STRIPE
- [N] 4" SOLID YELLOW STRIPE
- [O] 4" BROKEN WHITE STRIPE W/ TY II C-R @ 80' C-C
- [P] 4" DOUBLE WHITE STRIPE W/ TY II C-R (DBL) @ 20' C-C
- [Q] 8" SOLID WHITE STRIPE
- [R] 8" SOLID YELLOW STRIPE

TRAFFIC FLOW ARROWS

NOTES:
1. FOR ADDITIONAL DETAILS SEE TxDOT TYPICAL STANDARD SHEETS.
2. EXISTING FEATURES ARE SHOWN SCREENED BACK, IE FADED.
3. ALL REFLECTIVE PAVEMENT MARKINGS SHALL RECEIVE A TY I AND TY II APPLICATION. APPLY TY II BEFORE APPLYING TY I MARKINGS.
4. ALL DIMENSIONS ARE TO FACE OF CURB AND/OR CENTER OF PAVEMENT MARKINGS, UNLESS OTHERWISE INDICATED.
5. SEE SHEET 375 FOR MISCELLANEOUS DETAILS "A" THROUGH "E".

STATE OF TEXAS — GILMER D. GASTON — 80472 — LICENSED PROFESSIONAL ENGINEER

GILMER D. GASTON P.E. — 6/30/2010 DATE

25 0 25 50

SCALE: PLAN - 1":50'

ITEM	DESCRIPTION	UNIT	QTY
0666-2036	REFL PAV MRK TY I (W) 8" (SLD)(100MIL)	LF	2020
0666-2048	REFL PAV MRK TY I (W) 24"(SLD)(100MIL)	LF	103
0666-2054	REFL PAV MRK TY I (W) (ARROW) (100MIL)	EA	3
0666-2093	REFL PAV MRK TY I(W)(UTURN ARW)(100MIL)	EA	2
0666-2096	REFL PAV MRK TY I (W) (WORD) (100MIL)	EA	2
0666-2191	PAVEMENT SEALER (8")(W)(SLD)	LF	2020
0666-2195	PAVEMENT SEALER (24")(W)(SLD)	LF	103
0666-2219	PAVEMENT SEALER (ARROW)	EA	3
0666-2220	PAVEMENT SEALER (WORD)	EA	2
0666-2230	PAVEMENT SEALER UTURN ARROW	EA	2
0672-2017	REFL PAV MRKR TY II-C-R	EA	134
8020-2005	REF PROF PAV MRK TY I (W) 6" (SLD)(100 MIL)	LF	973
8020-2009	REF PROF PAV MRK TY I (Y) 6" (SLD)(100 MIL)	LF	1001
8251-2009	RE PM W / RET REQ TY I (W) 6" (BRK) (100MIL)	LF	500
8251-2034	PAVEMENT SEALER (6")(W)(BRK)	LF	500
8251-2034	PAVEMENT SEALER (6")(W)(SLD)	LF	973
8251-2034	PAVEMENT SEALER (6")(Y)(SLD)	LF	1001

REV. NO.	DATE	DESCRIPTION	BY

ALAMO RMA

PAPE-DAWSON ENGINEERS

555 EAST RAMSEY | SAN ANTONIO, TEXAS 78216 | PHONE: 210.375.9000 FAX: 210.375.9010

TEXAS BOARD OF PROFESSIONAL ENGINEERS, FIRM REGISTRATION # 470

Texas Department of Transportation © 2010

LOOP 1604

PAVEMENT MARKING LAYOUT

STA. 450+00 TO STA. 455+00

SHEET 18 OF 31

DGN:	FED. RD. DIV. NO.	STATE	FEDERAL AID PROJECT NO.			HIGHWAY NO.
CHK DGN:	6	TEXAS	STP 2011(210)ES			LP 1604
DWG:	DIST.	COUNTY	CONT. NO.	SECT. NO.	JOB NO.	SHEET NO.
CHK DWG:	SAT	BEXAR	2452	01	050	361

Plotted on: 6/30/2010

Design Filename: p:\74\00\04\design\civil\traffic\740004PM16.dgn

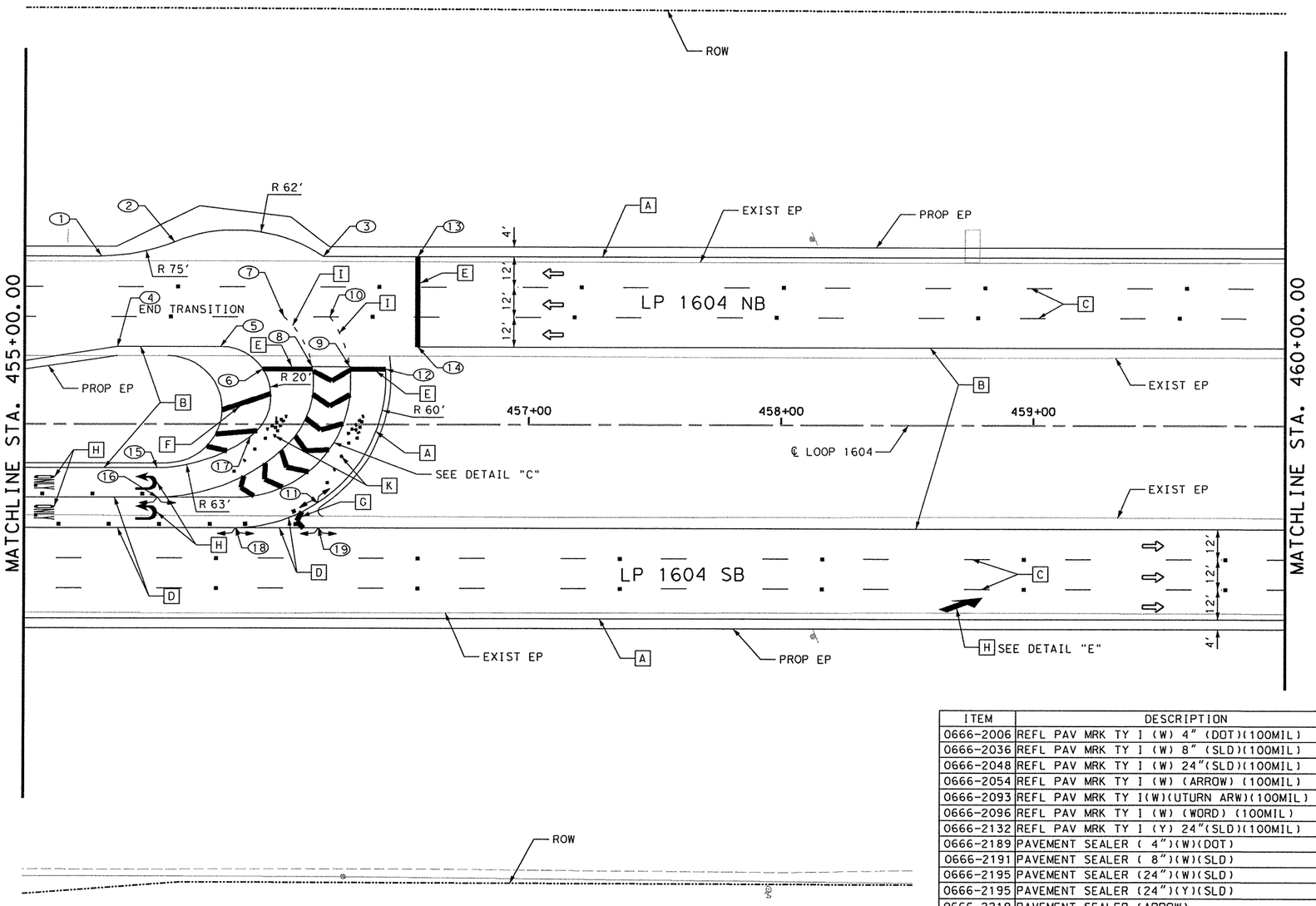

POINT	STATION	OFFSET	POINT	STATION	OFFSET
1	455+30.50	-67	11	456+16.49	31.61
2	455+59.55	-72.86	12	456+43.39	-22
3	456+18.38	-67	13	456+56.17	-67
4	455+37.08	-31	14	456+56.17	-31
5	455+77.71	-31	15	455+52.94	17.5
6	455+94.41	-22	16	455+53.02	29.5
7	456+02.70	-43	17	455+89.65	5.04
8	456+14.12	-23	18	455+83.94	41.5
9	456+29.05	-23	19	456+16.77	41.5
10	456+21.11	-43			

ITEM	DESCRIPTION	UNIT	QTY
0666-2006	REFL PAV MRK TY I (W) 4" (DOT)(100MIL)	LF	23
0666-2036	REFL PAV MRK TY I (W) 8" (SLD)(100MIL)	LF	420
0666-2048	REFL PAV MRK TY I (W) 24"(SLD)(100MIL)	LF	187
0666-2054	REFL PAV MRK TY I (W) (ARROW) (100MIL)	EA	1
0666-2093	REFL PAV MRK TY I(W)(UTURN ARW)(100MIL)	EA	2
0666-2096	REFL PAV MRK TY I (W) (WORD) (100MIL)	EA	2
0666-2132	REFL PAV MRK TY I (Y) 24"(SLD)(100MIL)	LF	47
0666-2189	PAVEMENT SEALER (4")(W)(DOT)	LF	23
0666-2191	PAVEMENT SEALER (8")(W)(SLD)	LF	420
0666-2195	PAVEMENT SEALER (24")(W)(SLD)	LF	187
0666-2195	PAVEMENT SEALER (24")(Y)(SLD)	LF	47
0666-2219	PAVEMENT SEALER (ARROW)	EA	1
0666-2220	PAVEMENT SEALER (WORD)	EA	2
0666-2230	PAVEMENT SEALER UTURN ARROW	EA	2
0672-2014	REFL PAV MRKR TY I-R	EA	28
0672-2015	REFL PAV MRKR TY II-A-A	EA	4
0672-2017	REFL PAV MRKR TY II-C-R	EA	54
8020-2005	REF PROF PAV MRK TY I (W) 6" (SLD)(100 MIL)	LF	1066
8020-2009	REF PROF PAV MRK TY I (Y) 6" (SLD)(100 MIL)	LF	948
8251-2009	RE PM W / RET REQ TY I (W) 6" (BRK) (100MIL)	LF	500
8251-2034	PAVEMENT SEALER (6")(W)(BRK)	LF	500
8251-2034	PAVEMENT SEALER (6")(W)(SLD)	LF	1066
8251-2034	PAVEMENT SEALER (6")(Y)(SLD)	LF	948

PAVEMENT MARKINGS LEGEND

- [A] 6" SOLID WHITE STRIPE
- [B] 6" SOLID YELLOW STRIPE
- [C] 6" BROKEN WHITE STRIPE W/ TY II C-R @ 80' C-C
- [D] 8" SOLID WHITE STRIPE W/ TY II C-R @ 20' C-C
- [E] 24" SOLID WHITE STRIPE
- [F] 24" SOLID YELLOW X-HATCHING W/ TY II A-A @ 20' C-C & ROTATED 45°
- [G] 24" SOLID WHITE X-HATCHING W/ TY I C-R @ 20' C-C & ROTATED 45°
- [H] PREFABRICATED WORDS OR ARROWS (TYP.)
- [I] 4" DOT WHITE (DETAIL "A")
- [J] 4" DOT YELLOW (DETAIL "A")
- [K] WRONG WAY ARROW, 14 TY I-R (DETAIL "D")
- [L] 12" SOLID WHITE STRIPE W/ TY II C-R (DBL) @ 40' C-C
- [M] 4" SOLID WHITE STRIPE
- [N] 4" SOLID YELLOW STRIPE
- [O] 4" BROKEN WHITE STRIPE W/ TY II C-R @ 80' C-C
- [P] 4" DOUBLE WHITE STRIPE W/ TY II C-R (DBL) @ 20' C-C
- [Q] 8" SOLID WHITE STRIPE
- [R] 8" SOLID YELLOW STRIPE

TRAFFIC FLOW ARROWS

NOTES:
1. FOR ADDITIONAL DETAILS SEE TxDOT TYPICAL STANDARD SHEETS.
2. EXISTING FEATURES ARE SHOWN SCREENED BACK, IE FADED.
3. ALL REFLECTIVE PAVEMENT MARKINGS SHALL RECEIVE A TY I AND TY II APPLICATION. APPLY TY II BEFORE APPLYING TY I MARKINGS.
4. ALL DIMENSIONS ARE TO FACE OF CURB AND/OR CENTER OF PAVEMENT MARKINGS, UNLESS OTHERWISE INDICATED.
5. SEE SHEET 375 FOR MISCELLANEOUS DETAILS "A" THROUGH "E".

STATE OF TEXAS · GILMER D. GASTON · 80472 · LICENSED · PROFESSIONAL ENGINEER

GILMER D. GASTON P.E. — 6/30/2010 DATE

25 0 25 50

SCALE: PLAN - 1":50'

REV. NO.	DATE	DESCRIPTION	BY

ALAMO RMA

PAPE-DAWSON ENGINEERS
555 EAST RAMSEY | SAN ANTONIO, TEXAS 78216 | PHONE: 210.375.9000 FAX: 210.375.9010
TEXAS BOARD OF PROFESSIONAL ENGINEERS, FIRM REGISTRATION # 470

Texas Department of Transportation © 2010

LOOP 1604

PAVEMENT MARKING LAYOUT

STA. 455+00 TO STA. 460+00

SHEET 19 OF 31

DGN:	FED. RD. DIV. NO.	STATE	FEDERAL AID PROJECT NO.			HIGHWAY NO.
CHK DGN:	6	TEXAS	STP 2011(210)ES			LP 1604
DWG:	DIST.	COUNTY	CONT. NO.	SECT. NO.	JOB NO.	SHEET NO.
CHK DWG:	SAT	BEXAR	2452	01	050	362

Plotted on: 6/30/2010

Design Filename: p:\74\00\04\design\civil\traffic\740004PM17.dgn

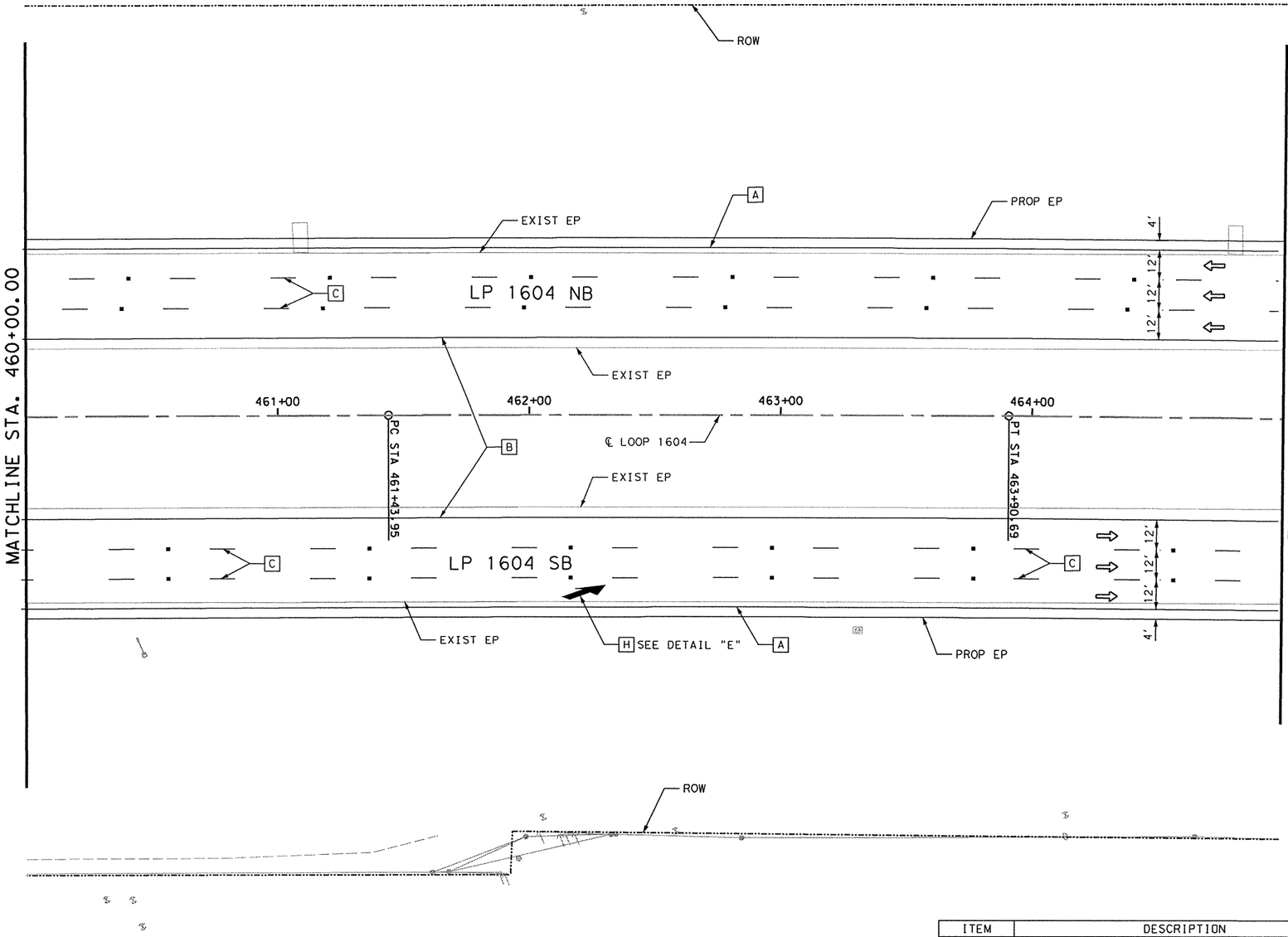

ITEM	DESCRIPTION	UNIT	QTY
0666-2054	REFL PAV MRK TY I (W) (ARROW) (100MIL)	EA	1
0666-2219	PAVEMENT SEALER (ARROW)	EA	1
0672-2017	REFL PAV MRKR TY II-C-R	EA	25
8020-2005	REF PROF PAV MRK TY I (W) 6" (SLD)(100 MIL)	LF	1000
8020-2009	REF PROF PAV MRK TY I (Y) 6" (SLD)(100 MIL)	LF	1000
8251-2009	RE PM W / RET REQ TY I (W) 6" (BRK) (100MIL)	LF	500
8251-2034	PAVEMENT SEALER (6")(W)(BRK)	LF	500
8251-2034	PAVEMENT SEALER (6")(W)(SLD)	LF	1000
8251-2034	PAVEMENT SEALER (6")(Y)(SLD)	LF	1000

PAVEMENT MARKINGS LEGEND

- A 6" SOLID WHITE STRIPE
- B 6" SOLID YELLOW STRIPE
- C 6" BROKEN WHITE STRIPE W/ TY II C-R @ 80' C-C
- D 8" SOLID WHITE STRIPE W/ TY II C-R @ 20' C-C
- E 24" SOLID WHITE STRIPE
- F 24" SOLID YELLOW X-HATCHING W/ TY II A-A @ 20' C-C & ROTATED 45°
- G 24" SOLID WHITE X-HATCHING W/ TY I C-R @ 20' C-C & ROTATED 45°
- H PREFABRICATED WORDS OR ARROWS (TYP.)
- I 4" DOT WHITE (DETAIL "A")
- J 4" DOT YELLOW (DETAIL "A")
- K WRONG WAY ARROW, 14 TY I-R (DETAIL "D")
- L 12" SOLID WHITE STRIPE W/ TY II C-R (DBL) @ 40' C-C
- M 4" SOLID WHITE STRIPE
- N 4" SOLID YELLOW STRIPE
- O 4" BROKEN WHITE STRIPE W/ TY II C-R @ 80' C-C
- P 4" DOUBLE WHITE STRIPE W/ TY II C-R (DBL) @ 20' C-C
- Q 8" SOLID WHITE STRIPE
- R 8" SOLID YELLOW STRIPE

TRAFFIC FLOW ARROWS

NOTES:
1. FOR ADDITIONAL DETAILS SEE TxDOT TYPICAL STANDARD SHEETS.
2. EXISTING FEATURES ARE SHOWN SCREENED BACK, IE FADED.
3. ALL REFLECTIVE PAVEMENT MARKINGS SHALL RECEIVE A TY I AND TY II APPLICATION. APPLY TY II BEFORE APPLYING TY I MARKINGS.
4. ALL DIMENSIONS ARE TO FACE OF CURB AND/OR CENTER OF PAVEMENT MARKINGS, UNLESS OTHERWISE INDICATED.
5. SEE SHEET 375 FOR MISCELLANEOUS DETAILS "A" THROUGH "E".

STATE OF TEXAS · GILMER D. GASTON · 80472 · LICENSED PROFESSIONAL ENGINEER

GILMER D. GASTON P.E. — 6/30/2010 DATE

25 0 25 50
SCALE: PLAN - 1":50'

REV. NO.	DATE	DESCRIPTION	BY

ALAMO RMA

PAPE-DAWSON ENGINEERS
555 EAST RAMSEY | SAN ANTONIO, TEXAS 78216 | PHONE: 210.375.9000 FAX: 210.375.9010
TEXAS BOARD OF PROFESSIONAL ENGINEERS, FIRM REGISTRATION # 470

Texas Department of Transportation ©2010

LOOP 1604

PAVEMENT MARKING LAYOUT

STA. 460+00 TO STA. 465+00

SHEET20 OF 31

DGN:	FED. RD. DIV. NO.	STATE	FEDERAL AID PROJECT NO.			HIGHWAY NO.
CHK DGN:	6	TEXAS	STP 2011(210)ES			LP 1604
DWG:	DIST.	COUNTY	CONT. NO.	SECT. NO.	JOB NO.	SHEET NO.
CHK DWG:	SAT	BEXAR	2452	01	050	363

Plotted on: 6/30/2010

Design Filename: p:\74\00\04\design\civil\traffic\740004PM18.dgn

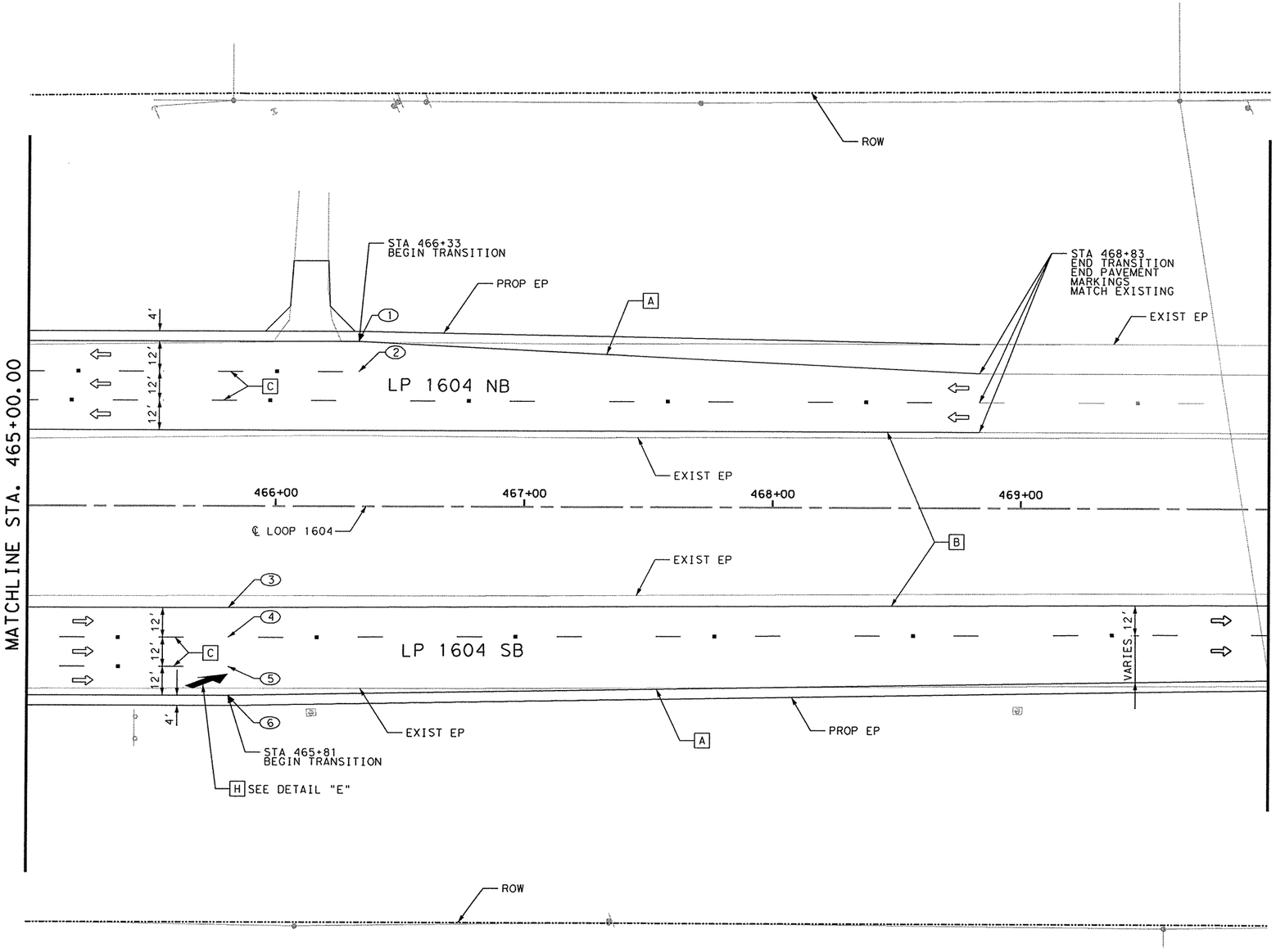

POINT	STATION	OFFSET
1	466+33.16	-67
2	466+33.16	-55
3	465+81.16	41.5
4	465+81.16	53.5
5	465+81.16	65.5
6	465+81.16	77.5

ITEM	DESCRIPTION	UNIT	QTY
0666-2054	REFL PAV MRK TY I (W) (ARROW) (100MIL)	EA	1
0666-2219	PAVEMENT SEALER (ARROW)	EA	1
0672-2017	REFL PAV MRKR TY II-C-R	EA	14
8020-2005	REF PROF PAV MRK TY I (W) 6" (SLD)(100 MIL)	LF	884
8020-2009	REF PROF PAV MRK TY I (Y) 6" (SLD)(100 MIL)	LF	883
8251-2009	RE PM W / RET REQ TY I (W) 6" (BRK) (100MIL)	LF	274
8251-2034	PAVEMENT SEALER (6")(W)(BRK)	LF	274
8251-2034	PAVEMENT SEALER (6")(W)(SLD)	LF	884
8251-2034	PAVEMENT SEALER (6")(Y)(SLD)	LF	883

PAVEMENT MARKINGS LEGEND

- [A] 6" SOLID WHITE STRIPE
- [B] 6" SOLID YELLOW STRIPE
- [C] 6" BROKEN WHITE STRIPE W/ TY II C-R @ 80' C-C
- [D] 8" SOLID WHITE STRIPE W/ TY II C-R @ 20' C-C
- [E] 24" SOLID WHITE STRIPE
- [F] 24" SOLID YELLOW X-HATCHING W/ TY II A-A @ 20' C-C & ROTATED 45°
- [G] 24" SOLID WHITE X-HATCHING W/ TY I C-R @ 20' C-C & ROTATED 45°
- [H] PREFABRICATED WORDS OR ARROWS (TYP.)
- [I] 4" DOT WHITE (DETAIL "A")
- [J] 4" DOT YELLOW (DETAIL "A")
- [K] WRONG WAY ARROW, 14 TY I-R (DETAIL "D")
- [L] 12" SOLID WHITE STRIPE W/ TY II C-R (DBL) @ 40' C-C
- [M] 4" SOLID WHITE STRIPE
- [N] 4" SOLID YELLOW STRIPE
- [O] 4" BROKEN WHITE STRIPE W/ TY II C-R @ 80' C-C
- [P] 4" DOUBLE WHITE STRIPE W/ TY II C-R (DBL) @ 20' C-C
- [Q] 8" SOLID WHITE STRIPE
- [R] 8" SOLID YELLOW STRIPE
- TRAFFIC FLOW ARROWS

NOTES:
1. FOR ADDITIONAL DETAILS SEE TxDOT TYPICAL STANDARD SHEETS.
2. EXISTING FEATURES ARE SHOWN SCREENED BACK, IE FADED.
3. ALL REFLECTIVE PAVEMENT MARKINGS SHALL RECEIVE A TY I AND TY II APPLICATION. APPLY TY II BEFORE APPLYING TY I MARKINGS.
4. ALL DIMENSIONS ARE TO FACE OF CURB AND/OR CENTER OF PAVEMENT MARKINGS, UNLESS OTHERWISE INDICATED.
5. SEE SHEET 375 FOR MISCELLANEOUS DETAILS "A" THROUGH "E".

STATE OF TEXAS
GILMER D. GASTON
80472
LICENSED
PROFESSIONAL ENGINEER

GILMER D. GASTON P.E. — 6/30/2010 DATE

25 0 25 50
SCALE: PLAN - 1":50'

REV. NO.	DATE	DESCRIPTION	BY

ALAMO RMA

PAPE-DAWSON ENGINEERS
555 EAST RAMSEY | SAN ANTONIO, TEXAS 78216 | PHONE: 210.375.9000 FAX: 210.375.9010
TEXAS BOARD OF PROFESSIONAL ENGINEERS, FIRM REGISTRATION # 470

Texas Department of Transportation
© 2010

LOOP 1604

PAVEMENT MARKING LAYOUT

STA. 465+00 TO STA. 470+00

SHEET 21 OF 31

DGN:	FED. RD. DIV. NO.	STATE	FEDERAL AID PROJECT NO.			HIGHWAY NO.
CHK DGN:	6	TEXAS	STP 2011(210)ES			LP 1604
DWG:	DIST.	COUNTY	CONT. NO.	SECT. NO.	JOB NO.	SHEET NO.
CHK DWG:	SAT	BEXAR	2452	01	050	364

Plotted on: 6/30/2010

Design Filename: p:\74X00\04\design\civil\traffic\740004PM19.dgn

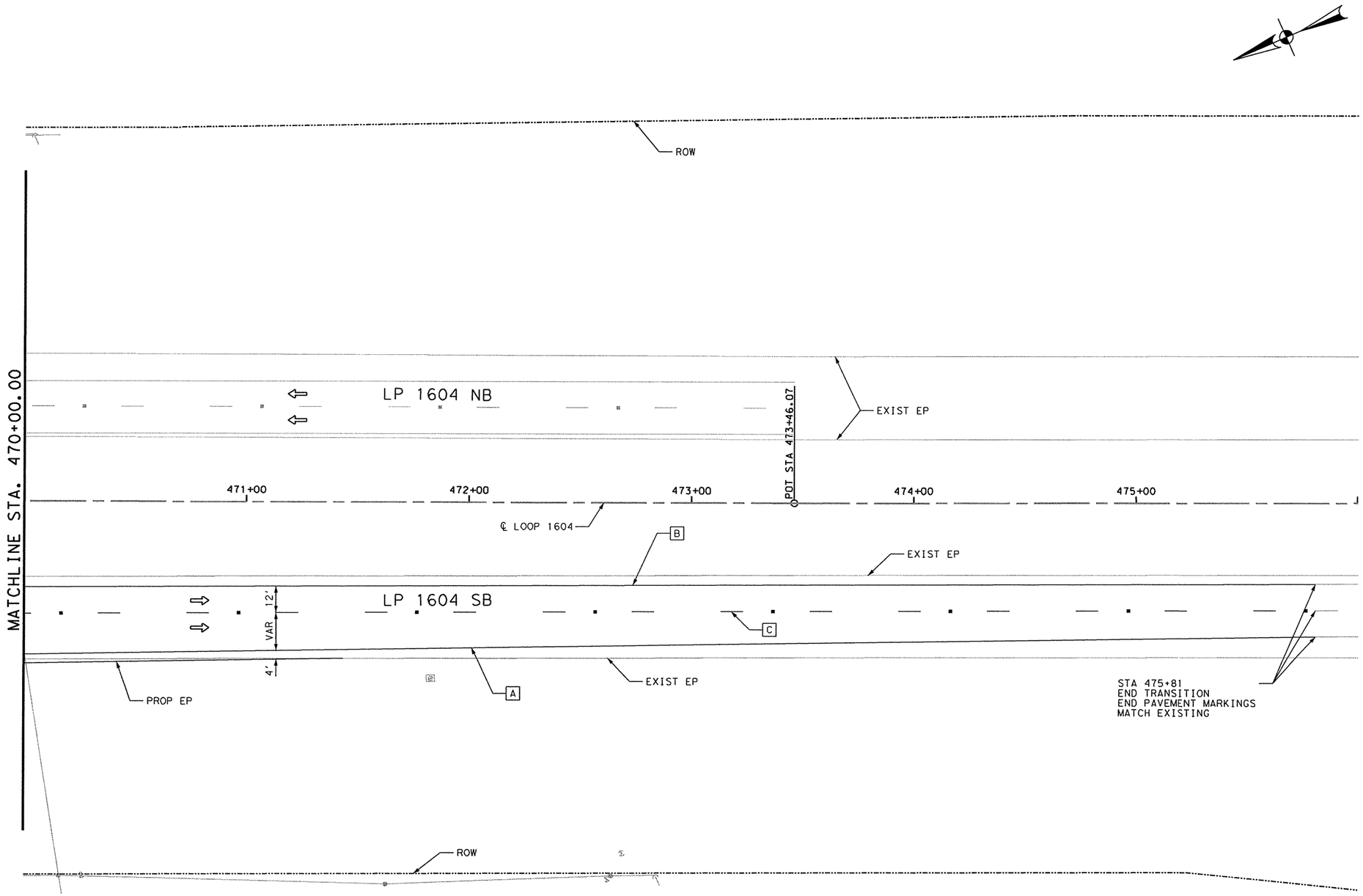

ITEM	DESCRIPTION	UNIT	QTY
0672-2017	REFL PAV MRKR TY II-C-R	EA	7
8020-2005	REF PROF PAV MRK TY I (W) 6" (SLD)(100 MIL)	LF	581
8020-2009	REF PROF PAV MRK TY I (Y) 6" (SLD)(100 MIL)	LF	581
8251-2009	RE PM W / RET REQ TY I (W) 6" (BRK) (100MIL)	LF	145
8251-2034	PAVEMENT SEALER (6")(W)(BRK)	LF	145
8251-2034	PAVEMENT SEALER (6")(W)(SLD)	LF	581
8251-2034	PAVEMENT SEALER (6")(Y)(SLD)	LF	581

PAVEMENT MARKINGS LEGEND

- [A] 6" SOLID WHITE STRIPE
- [B] 6" SOLID YELLOW STRIPE
- [C] 6" BROKEN WHITE STRIPE W/ TY II C-R @ 80' C-C
- [D] 8" SOLID WHITE STRIPE W/ TY II C-R @ 20' C-C
- [E] 24" SOLID WHITE STRIPE
- [F] 24" SOLID YELLOW X-HATCHING W/ TY II A-A @ 20' C-C & ROTATED 45°
- [G] 24" SOLID WHITE X-HATCHING W/ TY I C-R @ 20' C-C & ROTATED 45°
- [H] PREFABRICATED WORDS OR ARROWS (TYP.)
- [I] 4" DOT WHITE (DETAIL "A")
- [J] 4" DOT YELLOW (DETAIL "A")
- [K] WRONG WAY ARROW, 14 TY I-R (DETAIL "D")
- [L] 12" SOLID WHITE STRIPE W/ TY II C-R (DBL) @ 40' C-C
- [M] 4" SOLID WHITE STRIPE
- [N] 4" SOLID YELLOW STRIPE
- [O] 4" BROKEN WHITE STRIPE W/ TY II C-R @ 80' C-C
- [P] 4" DOUBLE WHITE STRIPE W/ TY II C-R (DBL) @ 20' C-C
- [Q] 8" SOLID WHITE STRIPE
- [R] 8" SOLID YELLOW STRIPE

⇦⇦ TRAFFIC FLOW ARROWS

NOTES:
1. FOR ADDITIONAL DETAILS SEE TxDOT TYPICAL STANDARD SHEETS.
2. EXISTING FEATURES ARE SHOWN SCREENED BACK, IE FADED.
3. ALL REFLECTIVE PAVEMENT MARKINGS SHALL RECEIVE A TY I AND TY II APPLICATION. APPLY TY II BEFORE APPLYING TY I MARKINGS.
4. ALL DIMENSIONS ARE TO FACE OF CURB AND/OR CENTER OF PAVEMENT MARKINGS, UNLESS OTHERWISE INDICATED.
5. SEE SHEET 375 FOR MISCELLANEOUS DETAILS "A" THROUGH "E".

STATE OF TEXAS
GILMER D. GASTON
80472
LICENSED
PROFESSIONAL ENGINEER

GILMER D. GASTON P.E. — 6/30/2010 DATE

25 0 25 50
SCALE: PLAN - 1":50'

REV. NO.	DATE	DESCRIPTION	BY

ALAMO RMA

PAPE-DAWSON ENGINEERS
555 EAST RAMSEY | SAN ANTONIO, TEXAS 78216 | PHONE: 210.375.9000 FAX: 210.375.9010
TEXAS BOARD OF PROFESSIONAL ENGINEERS, FIRM REGISTRATION # 470

Texas Department of Transportation
© 2010

LOOP 1604

PAVEMENT MARKING LAYOUT

STA. 470+00 TO END

DGN:	FED. RD. DIV. NO.	STATE	FEDERAL AID PROJECT NO.			HIGHWAY NO.
CHK DGN:	6	TEXAS	STP 2011(210)ES			LP 1604
DWG:	DIST.	COUNTY	CONT. NO.	SECT. NO.	JOB NO.	SHEET NO.
CHK DWG:	SAT	BEXAR	2452	01	050	365

Plotted on: 6/30/2010

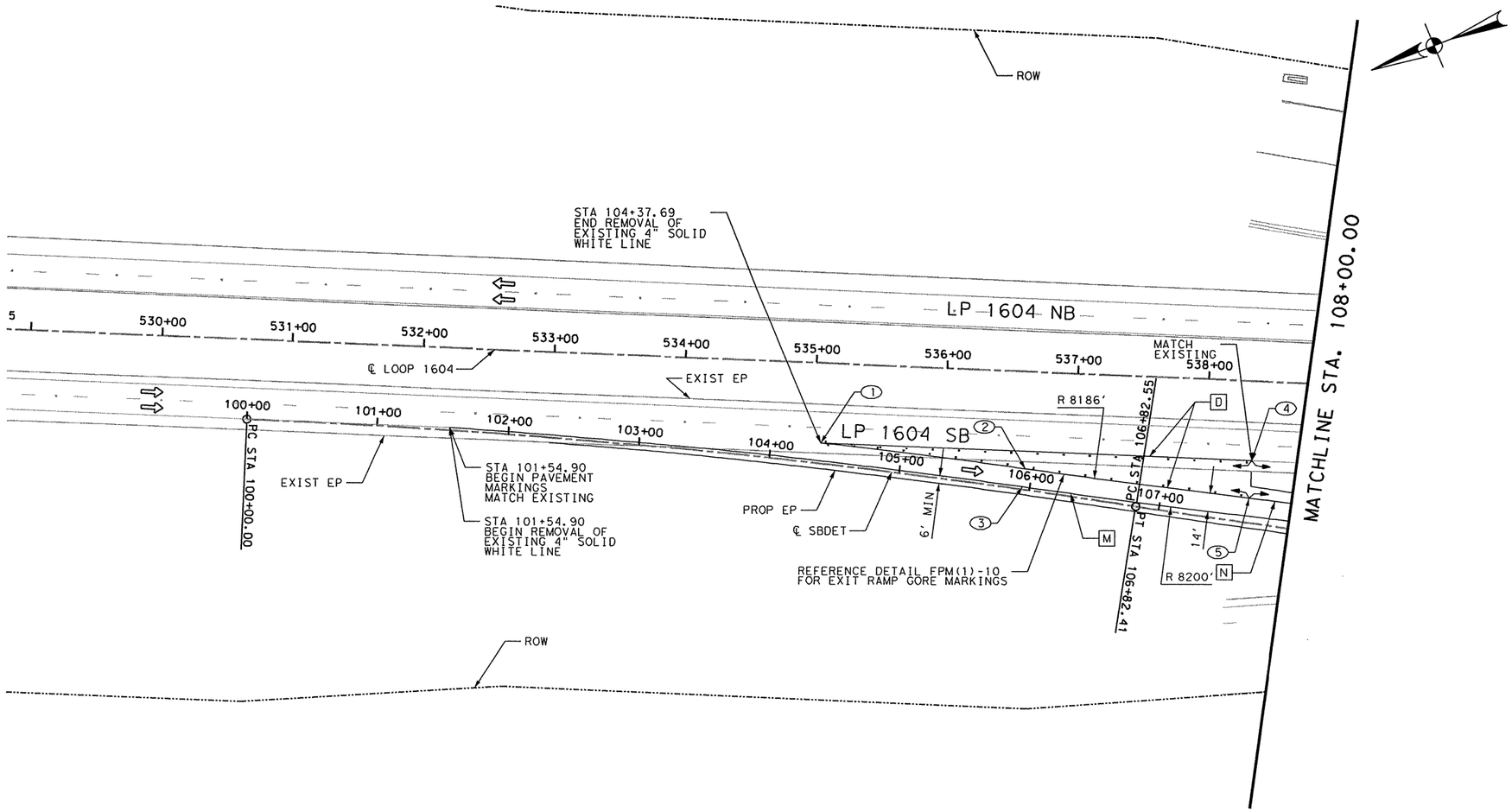

POINT	STATION	OFFSET
1	104+37.69	-16
2	105+94.50	-16
3	105+94.50	-2
4	107+65.23	-47.84
5	107+67.22	-19.11

PAVEMENT MARKINGS LEGEND

- [A] 6" SOLID WHITE STRIPE
- [B] 6" SOLID YELLOW STRIPE
- [C] 6" BROKEN WHITE STRIPE W/ TY II C-R @ 80' C-C
- [D] 8" SOLID WHITE STRIPE W/ TY II C-R @ 20' C-C
- [E] 24" SOLID WHITE STRIPE
- [F] 24" SOLID YELLOW X-HATCHING W/ TY II A-A @ 20' C-C & ROTATED 45°
- [G] 24" SOLID WHITE X-HATCHING W/ TY I C-R @ 20' C-C & ROTATED 45°
- [H] PREFABRICATED WORDS OR ARROWS (TYP.)
- [I] 4" DOT WHITE (DETAIL "A")
- [J] 4" DOT YELLOW (DETAIL "A")
- [K] WRONG WAY ARROW, 14 TY I-R (DETAIL "D")
- [L] 12" SOLID WHITE STRIPE W/ TY II C-R (DBL) @ 40' C-C
- [M] 4" SOLID WHITE STRIPE
- [N] 4" SOLID YELLOW STRIPE
- [O] 4" BROKEN WHITE STRIPE W/ TY II C-R @ 80' C-C
- [P] 4" DOUBLE WHITE STRIPE W/ TY II C-R (DBL) @ 20' C-C
- [Q] 8" SOLID WHITE STRIPE
- [R] 8" SOLID YELLOW STRIPE

TRAFFIC FLOW ARROWS

NOTES:
1. FOR ADDITIONAL DETAILS SEE TxDOT TYPICAL STANDARD SHEETS.
2. EXISTING FEATURES ARE SHOWN SCREENED BACK, IE FADED.
3. ALL REFLECTIVE PAVEMENT MARKINGS SHALL RECEIVE A TY I AND TY II APPLICATION. APPLY TY II BEFORE APPLYING TY I MARKINGS.
4. ALL DIMENSIONS ARE TO FACE OF CURB AND/OR CENTER OF PAVEMENT MARKINGS, UNLESS OTHERWISE INDICATED.
5. SEE SHEET 375 FOR MISCELLANEOUS DETAILS "A" THROUGH "E".

STATE OF TEXAS · GILMER D. GASTON · 80472 · LICENSED PROFESSIONAL ENGINEER

GILMER D. GASTON P.E. — 6/30/2010 DATE

50 0 50 100
SCALE: PLAN - 1":100'

REV. NO.	DATE	DESCRIPTION	BY

ALAMO RMA

PAPE-DAWSON ENGINEERS
555 EAST RAMSEY | SAN ANTONIO, TEXAS 78216 | PHONE: 210.375.9000 FAX: 210.375.9010
TEXAS BOARD OF PROFESSIONAL ENGINEERS, FIRM REGISTRATION # 470

Texas Department of Transportation ©2010

ITEM	DESCRIPTION	UNIT	QTY
0666-2012	REFL PAV MRK TY I (W) 4" (SLD)(100MIL)	LF	645
0666-2036	REFL PAV MRK TY I (W) 8" (SLD)(100MIL)	LF	660
0666-2111	REFL PAV MRK TY I (Y) 4" (SLD)(100MIL)	LF	33
0666-2189	PAVEMENT SEALER (4")(W)(SLD)	LF	645
0666-2189	PAVEMENT SEALER (4")(Y)(SLD)	LF	33
0666-2191	PAVEMENT SEALER (8")(W)(SLD)	LF	660
0672-2017	REFL PAV MRKR TY II-C-R	EA	33
0677-2001	ELIM EXT PAV MRK & MRKS (4")	LF	284
0678-2001	PAV SURF PREP FOR MRK (4")	LF	200
0678-2003	PAV SURF PREP FOR MRK (8")	LF	418

LOOP 1604

PAVEMENT MARKING LAYOUT

SOUTHBOUND EXIT RAMP

BEGIN SBDET TO STA. 108+00

DGN:	FED. RD. DIV. NO.	STATE	FEDERAL AID PROJECT NO.			HIGHWAY NO.
CHK DGN:	6	TEXAS	STP 2011(210)ES			LP 1604
DWG:	DIST.	COUNTY	CONT. NO.	SECT. NO.	JOB NO.	SHEET NO.
CHK DWG:	SAT	BEXAR	2452	01	050	366

Design Filename: p:\74\00\04\design\civil\traffic\740004PM20.dgn

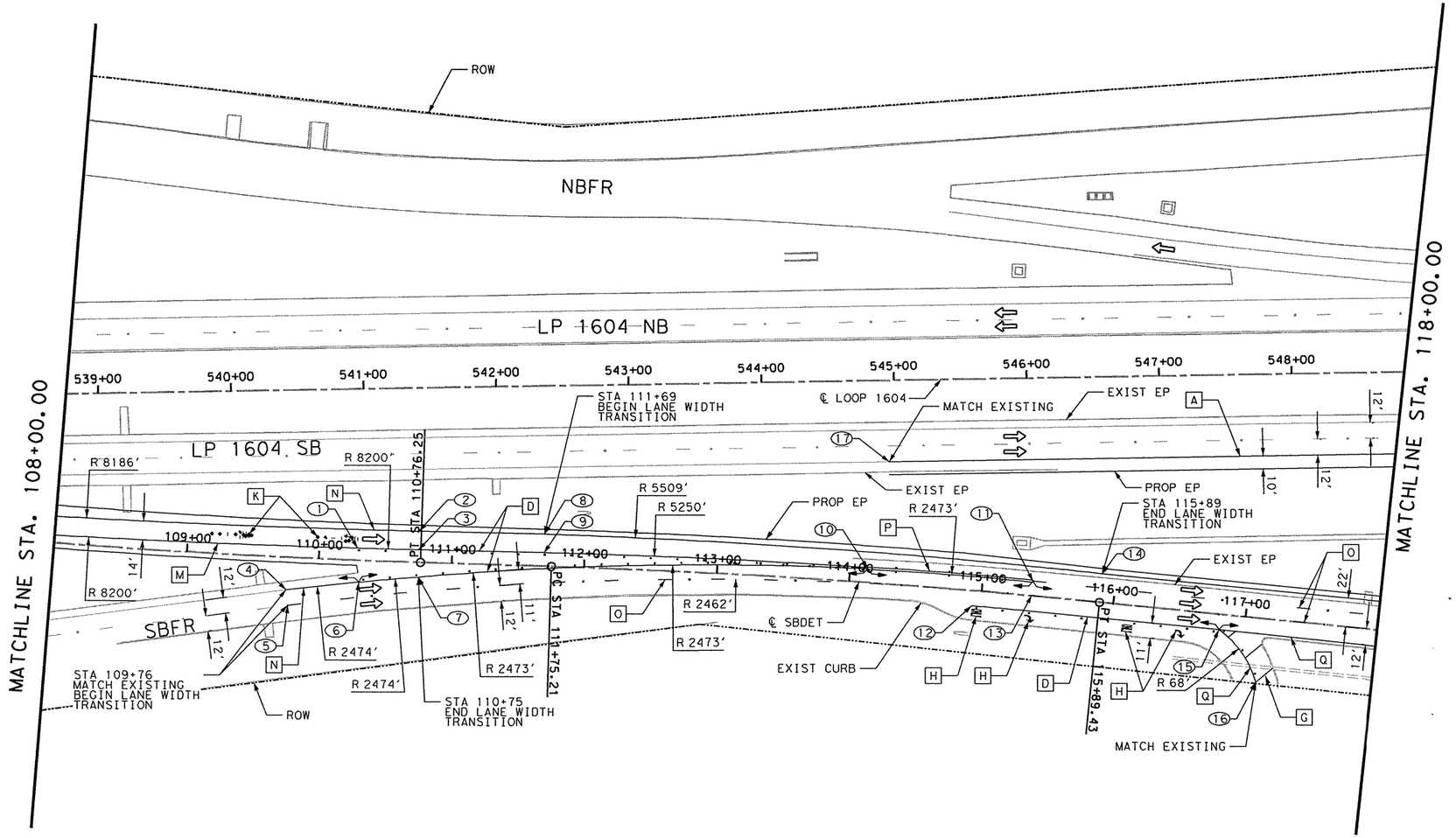

PAVEMENT MARKINGS LEGEND

- A 6" SOLID WHITE STRIPE
- B 6" SOLID YELLOW STRIPE
- C 6" BROKEN WHITE STRIPE W/ TY II C-R @ 80' C-C
- D 8" SOLID WHITE STRIPE W/ TY II C-R @ 20' C-C
- E 24" SOLID WHITE STRIPE
- F 24" SOLID YELLOW X-HATCHING W/ TY II A-A @ 20' C-C & ROTATED 45°
- G 24" SOLID WHITE X-HATCHING W/ TY I C-R @ 20' C-C & ROTATED 45°
- H PREFABRICATED WORDS OR ARROWS (TYP.)
- I 4" DOT WHITE (DETAIL "A")
- J 4" DOT YELLOW (DETAIL "A")
- K WRONG WAY ARROW, 14 TY I-R (DETAIL "D")
- L 12" SOLID WHITE STRIPE W/ TY II C-R (DBL) @ 40' C-C
- M 4" SOLID WHITE STRIPE
- N 4" SOLID YELLOW STRIPE
- O 4" BROKEN WHITE STRIPE W/ TY II C-R @ 80' C-C
- P 4" DOUBLE WHITE STRIPE W/ TY II C-R (DBL) @ 20' C-C
- Q 8" SOLID WHITE STRIPE
- R 8" SOLID YELLOW STRIPE

TRAFFIC FLOW ARROWS

NOTES:
1. FOR ADDITIONAL DETAILS SEE TxDOT TYPICAL STANDARD SHEETS.
2. EXISTING FEATURES ARE SHOWN SCREENED BACK, IE FADED.
3. ALL REFLECTIVE PAVEMENT MARKINGS SHALL RECEIVE A TY I AND TY II APPLICATION. APPLY TY II BEFORE APPLYING TY I MARKINGS.
4. ALL DIMENSIONS ARE TO FACE OF CURB AND/OR CENTER OF PAVEMENT MARKINGS, UNLESS OTHERWISE INDICATED.
5. SEE SHEET 375 FOR MISCELLANEOUS DETAILS "A" THROUGH "E".

STATE OF TEXAS
GILMER D. GASTON
80472
LICENSED
PROFESSIONAL ENGINEER

GILMER D. GASTON P.E. — 6/30/2010 DATE

50 0 50 100
SCALE: PLAN - 1":100'

"SBDET" ALIGNMENT

POINT	STATION	OFFSET
1	110+28.58	-9.22
2	110+74.39	-23.62
3	110+74.50	-9.63
4	109+76.24	24.99
5	109+78.32	36.8
6	110+30.47	16.75
7	110+75.00	11.29
8	111+69.26	-24.34
9	111+69.36	-10.34
10	114+13.29	-10.83

"LOOP 1604" ALIGNMENT

POINT	STATION	OFFSET
11	115+38.06	-11.22
12	114+93.27	11.64
13	115+37.97	-0.22
14	115+89.43	-22
15	116+81.02	12
16	117+12.47	48.41

POINT	STATION	OFFSET
17	544+95.40	62

ITEM	DESCRIPTION	UNIT	QTY
0666-2003	REFL PAV MRK TY I (W) 4" (BRK)(100MIL)	LF	272
0666-2012	REFL PAV MRK TY I (W) 4" (SLD)(100MIL)	LF	478
0666-2036	REFL PAV MRK TY I (W) 8" (SLD)(100MIL)	LF	1125
0666-2048	REFL PAV MRK TY I (W) 24"(SLD)(100MIL)	LF	40
0666-2054	REFL PAV MRK TY I (W) (ARROW) (100MIL)	EA	2
0666-2096	REFL PAV MRK TY I (W) (WORD) (100MIL)	EA	2
0666-2111	REFL PAV MRK TY I (Y) 4" (SLD)(100MIL)	LF	1056
0666-2189	PAVEMENT SEALER (4")(W)(SLD)	LF	478
0666-2189	PAVEMENT SEALER (4")(W)(BRK)	LF	272
0666-2189	PAVEMENT SEALER (4")(Y)(SLD)	LF	1056
0666-2191	PAVEMENT SEALER (8")(W)(SLD)	LF	1125
0666-2195	PAVEMENT SEALER (24")(W)(SLD)	LF	40
0666-2219	PAVEMENT SEALER (ARROW)	EA	2
0666-2220	PAVEMENT SEALER (WORD)	EA	2
0672-2014	REFL PAV MRKR TY I-R	EA	28
0672-2017	REFL PAV MRKR TY II-C-R	EA	75
0678-2002	PAV SURF PREP FOR MRK (6")	LF	382
8020-2005	REF PROF PAV MRK TY I (W) 6" (SLD)(100 MIL)	LF	382
8251-2034	PAVEMENT SEALER (6")(W)(SLD)	LF	382

REV. NO.	DATE	DESCRIPTION	BY

ALAMO RMA

PAPE-DAWSON ENGINEERS
555 EAST RAMSEY | SAN ANTONIO, TEXAS 78216 | PHONE: 210.375.9000 FAX: 210.375.9010
TEXAS BOARD OF PROFESSIONAL ENGINEERS, FIRM REGISTRATION # 470

Texas Department of Transportation
© 2010

LOOP 1604

PAVEMENT MARKING LAYOUT

SOUTHBOUND EXIT RAMP/FRONTAGE ROAD

STA. 34+00 TO STA. 44+00

SHEET 24 OF 31

DGN:	FED. RD. DIV. NO.	STATE	FEDERAL AID PROJECT NO.			HIGHWAY NO.
CHK DGN:	6	TEXAS	STP 2011(210)ES			LP 1604
DWG:	DIST.	COUNTY	CONT. NO.	SECT. NO.	JOB NO.	SHEET NO.
CHK DWG:	SAT	BEXAR	2452	01	050	367

Plotted on: 6/30/2010

Design Filename: p:\740004\design\civil\traffic\740004PM21.dgn

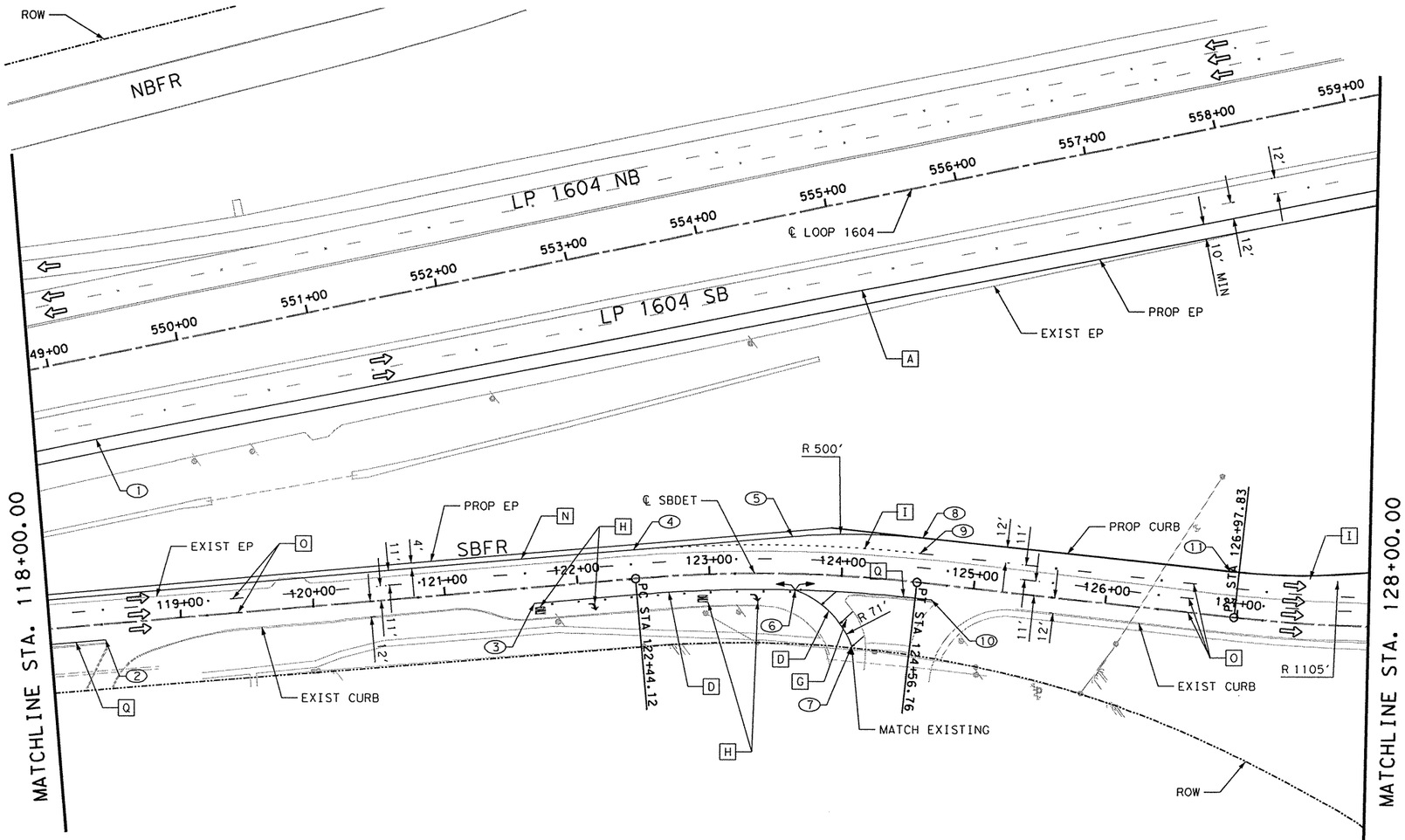

PAVEMENT MARKINGS LEGEND

- [A] 6" SOLID WHITE STRIPE
- [B] 6" SOLID YELLOW STRIPE
- [C] 6" BROKEN WHITE STRIPE W/ TY II C-R @ 80' C-C
- [D] 8" SOLID WHITE STRIPE W/ TY II C-R @ 20' C-C
- [E] 24" SOLID WHITE STRIPE
- [F] 24" SOLID YELLOW X-HATCHING W/ TY II A-A @ 20' C-C & ROTATED 45°
- [G] 24" SOLID WHITE X-HATCHING W/ TY I C-R @ 20' C-C & ROTATED 45°
- [H] PREFABRICATED WORDS OR ARROWS (TYP.)
- [I] 4" DOT WHITE (DETAIL "A")
- [J] 4" DOT YELLOW (DETAIL "A")
- [K] WRONG WAY ARROW, 14 TY I-R (DETAIL "D")
- [L] 12" SOLID WHITE STRIPE W/ TY II C-R (DBL) @ 40' C-C
- [M] 4" SOLID WHITE STRIPE
- [N] 4" SOLID YELLOW STRIPE
- [O] 4" BROKEN WHITE STRIPE W/ TY II C-R @ 80' C-C
- [P] 4" DOUBLE WHITE STRIPE W/ TY II C-R (DBL) @ 20' C-C
- [Q] 8" SOLID WHITE STRIPE
- [R] 8" SOLID YELLOW STRIPE

TRAFFIC FLOW ARROWS

NOTES:
1. FOR ADDITIONAL DETAILS SEE TxDOT TYPICAL STANDARD SHEETS.
2. EXISTING FEATURES ARE SHOWN SCREENED BACK, IE FADED.
3. ALL REFLECTIVE PAVEMENT MARKINGS SHALL RECEIVE A TY I AND TY II APPLICATION. APPLY TY II BEFORE APPLYING TY I MARKINGS.
4. ALL DIMENSIONS ARE TO FACE OF CURB AND/OR CENTER OF PAVEMENT MARKINGS, UNLESS OTHERWISE INDICATED.
5. SEE SHEET 375 FOR MISCELLANEOUS DETAILS "A" THROUGH "E".

STATE OF TEXAS · GILMER D. GASTON · 80472 · LICENSED PROFESSIONAL ENGINEER

GILMER D. GASTON P.E. — 6/30/2010 DATE

50 0 50 100
SCALE: PLAN - 1":100'

"LOOP 1604" ALIGNMENT

POINT	STATION	OFFSET
1	549+24.64	62

"SBDET" ALIGNMENT

POINT	STATION	OFFSET
2	118+41.41	12
3	121+66.70	12
4	122+44.12	-22
5	123+62.03	-28.6
6	123+65.21	12
7	124+11.18	53.43
8	124+57.46	-34
9	124+56.76	-22
10	124+69.23	12
11	126+91.45	-34

ITEM	DESCRIPTION	UNIT	QTY
0666-2003	REFL PAV MRK TY I (W) 4" (BRK)(100MIL)	LF	586
0666-2006	REFL PAV MRK TY I (W) 4" (DOT)(100MIL)	LF	109
0666-2036	REFL PAV MRK TY I (W) 8" (SLD)(100MIL)	LF	404
0666-2048	REFL PAV MRK TY I (W) 24"(SLD)(100MIL)	LF	40
0666-2054	REFL PAV MRK TY I (W) (ARROW) (100MIL)	EA	2
0666-2096	REFL PAV MRK TY I (W) (WORD) (100MIL)	EA	2
0666-2111	REFL PAV MRK TY I (Y) 4" (SLD)(100MIL)	LF	663
0666-2189	PAVEMENT SEALER (4")(W)(DOT)	LF	109
0666-2189	PAVEMENT SEALER (4")(W)(BRK)	LF	586
0666-2189	PAVEMENT SEALER (4")(Y)(SLD)	LF	663
0666-2191	PAVEMENT SEALER (8")(W)(SLD)	LF	404
0666-2195	PAVEMENT SEALER (24")(W)(SLD)	LF	40
0666-2219	PAVEMENT SEALER (ARROW)	EA	2
0666-2220	PAVEMENT SEALER (WORD)	EA	2
0672-2017	REFL PAV MRKR TY II-C-R	EA	46
0678-2002	PAV SURF PREP FOR MRK (6")	LF	1034
8020-2005	REF PROF PAV MRK TY I (W) 6" (SLD)(100 MIL)	LF	1034
8251-2034	PAVEMENT SEALER (6")(W)(SLD)	LF	1034

REV. NO.	DATE	DESCRIPTION	BY

ALAMO RMA

PAPE-DAWSON ENGINEERS
555 EAST RAMSEY | SAN ANTONIO, TEXAS 78216 | PHONE: 210.375.9000 FAX: 210.375.9010
TEXAS BOARD OF PROFESSIONAL ENGINEERS, FIRM REGISTRATION # 470

Texas Department of Transportation © 2010

LOOP 1604

PAVEMENT MARKING LAYOUT

SOUTHBOUND FRONTAGE ROAD

STA. 118+00 TO STA. 128+00

SHEET 25 OF 31

DGN:	FED. RD. DIV. NO.	STATE	FEDERAL AID PROJECT NO.			HIGHWAY NO.
CHK DGN:	6	TEXAS	STP 2011(210)ES			LP 1604
DWG:	DIST.	COUNTY	CONT. NO.	SECT. NO.	JOB NO.	SHEET NO.
CHK DWG:	SAT	BEXAR	2452	01	050	368

Plotted on: 6/30/2010

Design Filename: p:\74\00\04\design\civil\traffic\740004PM22.dgn

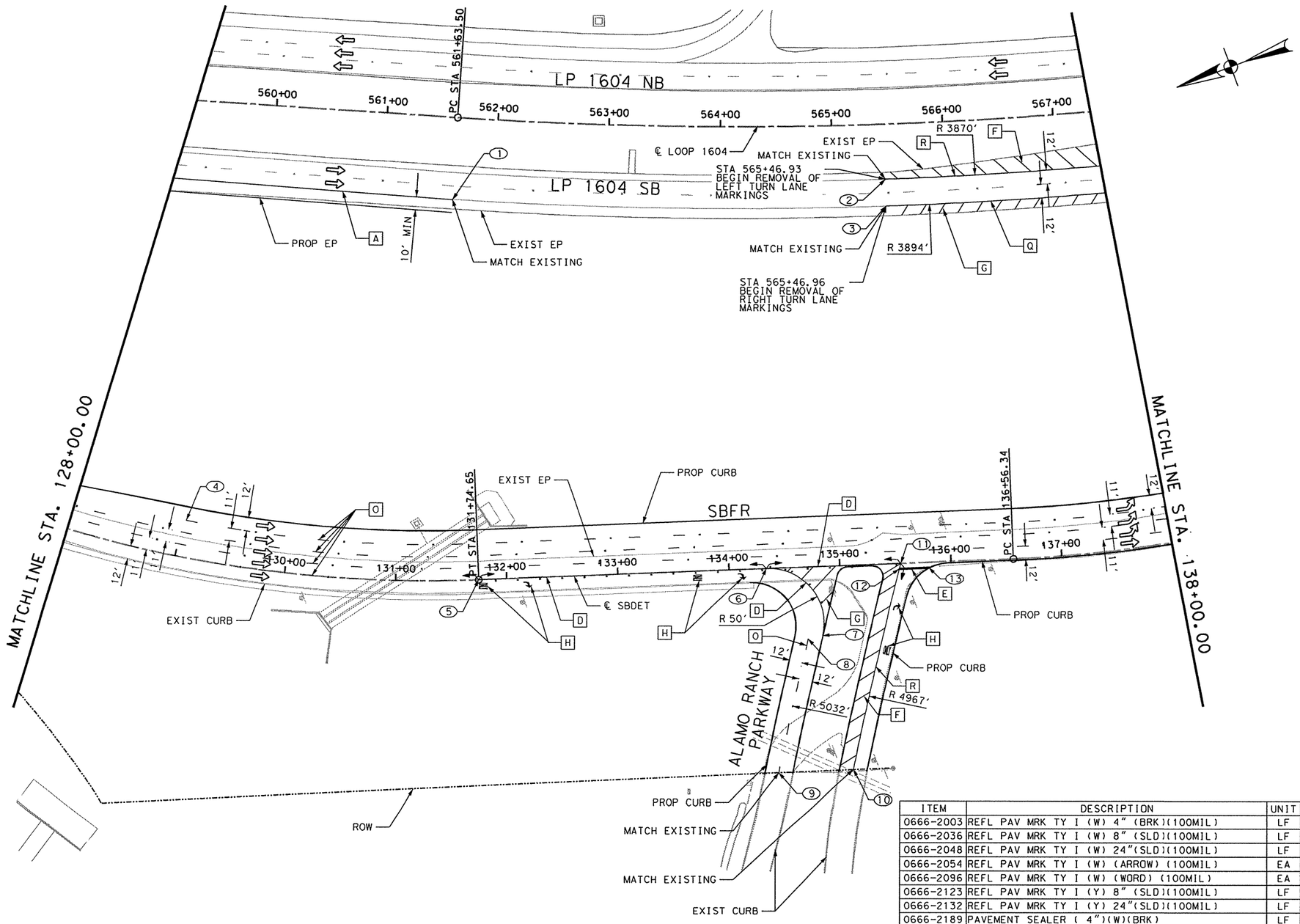

PAVEMENT MARKINGS LEGEND

- A 6" SOLID WHITE STRIPE
- B 6" SOLID YELLOW STRIPE
- C 6" BROKEN WHITE STRIPE W/ TY II C-R @ 80' C-C
- D 8" SOLID WHITE STRIPE W/ TY II C-R @ 20' C-C
- E 24" SOLID WHITE STRIPE
- F 24" SOLID YELLOW X-HATCHING W/ TY II A-A @ 20' C-C & ROTATED 45°
- G 24" SOLID WHITE X-HATCHING W/ TY I C-R @ 20' C-C & ROTATED 45°
- H PREFABRICATED WORDS OR ARROWS (TYP.)
- I 4" DOT WHITE (DETAIL "A")
- J 4" DOT YELLOW (DETAIL "A")
- K WRONG WAY ARROW, 14 TY I-R (DETAIL "D")
- L 12" SOLID WHITE STRIPE W/ TY II C-R (DBL) @ 40' C-C
- M 4" SOLID WHITE STRIPE
- N 4" SOLID YELLOW STRIPE
- O 4" BROKEN WHITE STRIPE W/ TY II C-R @ 80' C-C
- P 4" DOUBLE WHITE STRIPE W/ TY II C-R (DBL) @ 20' C-C
- Q 8" SOLID WHITE STRIPE
- R 8" SOLID YELLOW STRIPE

TRAFFIC FLOW ARROWS

NOTES:

1. FOR ADDITIONAL DETAILS SEE TxDOT TYPICAL STANDARD SHEETS.
2. EXISTING FEATURES ARE SHOWN SCREENED BACK, IE FADED.
3. ALL REFLECTIVE PAVEMENT MARKINGS SHALL RECEIVE A TY I AND TY II APPLICATION. APPLY TY II BEFORE APPLYING TY I MARKINGS.
4. ALL DIMENSIONS ARE TO FACE OF CURB AND/OR CENTER OF PAVEMENT MARKINGS, UNLESS OTHERWISE INDICATED.
5. SEE SHEET 375 FOR MISCELLANEOUS DETAILS "A" THROUGH "E".

STATE OF TEXAS
GILMER D. GASTON
80472
LICENSED
PROFESSIONAL ENGINEER

GILMER D. GASTON P.E. — 6/30/2010 DATE

50 0 50 100
SCALE: PLAN - 1":100'

"LOOP 1604" ALIGNMENT

POINT	STATION	OFFSET
1	561+63.50	74
2	565+46.93	50
3	565+46.96	74

"SBDET" ALIGNMENT

POINT	STATION	OFFSET
4	129+03.65	-33
5	131+74.65	0
6	134+33.81	0
7	134+82.07	63.07
8	134+68.96	65.57
9	134+37.76	187.34
10	135+04.75	187.05
11	135+54.73	0
12	135+53.29	5
13	135+79.67	5

ITEM	DESCRIPTION	UNIT	QTY
0666-2003	REFL PAV MRK TY I (W) 4" (BRK)(100MIL)	LF	842
0666-2036	REFL PAV MRK TY I (W) 8" (SLD)(100MIL)	LF	670
0666-2048	REFL PAV MRK TY I (W) 24"(SLD)(100MIL)	LF	210
0666-2054	REFL PAV MRK TY I (W) (ARROW) (100MIL)	EA	3
0666-2096	REFL PAV MRK TY I (W) (WORD) (100MIL)	EA	3
0666-2123	REFL PAV MRK TY I (Y) 8" (SLD)(100MIL)	LF	388
0666-2132	REFL PAV MRK TY I (Y) 24"(SLD)(100MIL)	LF	343
0666-2189	PAVEMENT SEALER (4")(W)(BRK)	LF	842
0666-2191	PAVEMENT SEALER (8")(W)(SLD)	LF	670
0666-2191	PAVEMENT SEALER (8")(Y)(SLD)	LF	388
0666-2195	PAVEMENT SEALER (24")(W)(SLD)	LF	210
0666-2195	PAVEMENT SEALER (24")(Y)(SLD)	LF	343
0666-2219	PAVEMENT SEALER (ARROW)	EA	3
0666-2220	PAVEMENT SEALER (WORD)	EA	3
0672-2015	REFL PAV MRKR TY II-A-A	EA	20
0672-2017	REFL PAV MRKR TY II-C-R	EA	84
0677-2001	ELIM EXT PAV MRK & MRKS (4")	LF	370
0678-2002	PAV SURF PREP FOR MRK (6")	LF	252
0678-2003	PAV SURF PREP FOR MRK (8")	LF	393
0678-2006	PAV SURF PREP FOR MRK (24")	LF	287
8020-2005	REF PROF PAV MRK TY I (W) 6" (SLD)(100 MIL)	LF	252
8251-2034	PAVEMENT SEALER (6")(W)(SLD)	LF	252

REV. NO.	DATE	DESCRIPTION	BY

ALAMO RMA

PAPE-DAWSON ENGINEERS

555 EAST RAMSEY | SAN ANTONIO, TEXAS 78216 | PHONE: 210.375.9000 FAX: 210.375.9010

TEXAS BOARD OF PROFESSIONAL ENGINEERS, FIRM REGISTRATION # 470

Texas Department of Transportation © 2010

LOOP 1604

PAVEMENT MARKING LAYOUT

SOUTHBOUND FRONTAGE ROAD

STA. 128+00 TO STA. 138+00

SHEET 26 OF 31

DGN:	FED. RD. DIV. NO.	STATE	FEDERAL AID PROJECT NO.			HIGHWAY NO.
CHK DGN:	6	TEXAS	STP 2011(210)ES			LP 1604
DWG:	DIST.	COUNTY	CONT. NO.	SECT. NO.	JOB NO.	SHEET NO.
CHK DWG:	SAT	BEXAR	2452	01	050	369

Plotted on: 6/30/2010

Design Filename: p:\74\00\04\design\civil\traffic\740004PM23.dgn

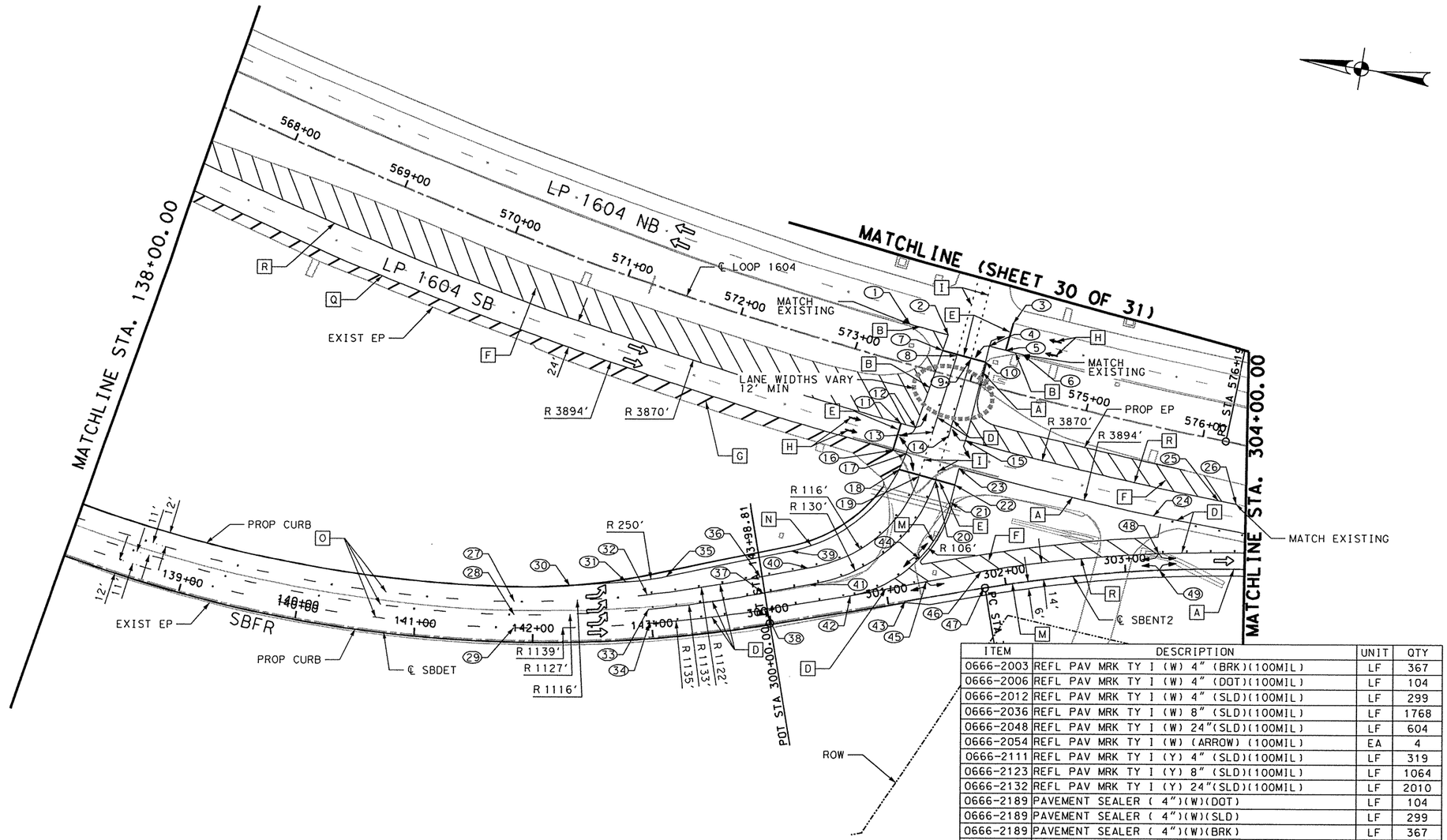

PAVEMENT MARKINGS LEGEND

- [A] 6" SOLID WHITE STRIPE
- [B] 6" SOLID YELLOW STRIPE
- [C] 6" BROKEN WHITE STRIPE W/ TY II C-R @ 80' C-C
- [D] 8" SOLID WHITE STRIPE W/ TY II C-R @ 20' C-C
- [E] 24" SOLID WHITE STRIPE
- [F] 24" SOLID YELLOW X-HATCHING W/ TY II A-A @ 20' C-C & ROTATED 45°
- [G] 24" SOLID WHITE X-HATCHING W/ TY I C-R @ 20' C-C & ROTATED 45°
- [H] PREFABRICATED WORDS OR ARROWS (TYP.)
- [I] 4" DOT WHITE (DETAIL "A")
- [J] 4" DOT YELLOW (DETAIL "A")
- [K] WRONG WAY ARROW, 14 TY I-R (DETAIL "D")
- [L] 12" SOLID WHITE STRIPE W/ TY II C-R (DBL) @ 40' C-C
- [M] 4" SOLID WHITE STRIPE
- [N] 4" SOLID YELLOW STRIPE
- [O] 4" BROKEN WHITE STRIPE W/ TY II C-R @ 80' C-C
- [P] 4" DOUBLE WHITE STRIPE W/ TY II C-R (DBL) @ 20' C-C
- [Q] 8" SOLID WHITE STRIPE
- [R] 8" SOLID YELLOW STRIPE

TRAFFIC FLOW ARROWS

NOTES:
1. FOR ADDITIONAL DETAILS SEE TxDOT TYPICAL STANDARD SHEETS.
2. EXISTING FEATURES ARE SHOWN SCREENED BACK, IE FADED.
3. ALL REFLECTIVE PAVEMENT MARKINGS SHALL RECEIVE A TY I AND TY II APPLICATION. APPLY TY II BEFORE APPLYING TY I MARKINGS.
4. ALL DIMENSIONS ARE TO FACE OF CURB AND/OR CENTER OF PAVEMENT MARKINGS, UNLESS OTHERWISE INDICATED.
5. SEE SHEET 375 FOR MISCELLANEOUS DETAILS "A" THROUGH "E".

ITEM	DESCRIPTION	UNIT	QTY
0666-2003	REFL PAV MRK TY I (W) 4" (BRK)(100MIL)	LF	367
0666-2006	REFL PAV MRK TY I (W) 4" (DOT)(100MIL)	LF	104
0666-2012	REFL PAV MRK TY I (W) 4" (SLD)(100MIL)	LF	299
0666-2036	REFL PAV MRK TY I (W) 8" (SLD)(100MIL)	LF	1768
0666-2048	REFL PAV MRK TY I (W) 24"(SLD)(100MIL)	LF	604
0666-2054	REFL PAV MRK TY I (W) (ARROW) (100MIL)	EA	4
0666-2111	REFL PAV MRK TY I (Y) 4" (SLD)(100MIL)	LF	319
0666-2123	REFL PAV MRK TY I (Y) 8" (SLD)(100MIL)	LF	1064
0666-2132	REFL PAV MRK TY I (Y) 24"(SLD)(100MIL)	LF	2010
0666-2189	PAVEMENT SEALER (4")(W)(DOT)	LF	104
0666-2189	PAVEMENT SEALER (4")(W)(SLD)	LF	299
0666-2189	PAVEMENT SEALER (4")(W)(BRK)	LF	367
0666-2189	PAVEMENT SEALER (4")(Y)(SLD)	LF	319
0666-2191	PAVEMENT SEALER (8")(W)(SLD)	LF	1768
0666-2191	PAVEMENT SEALER (8")(Y)(SLD)	LF	1064
0666-2195	PAVEMENT SEALER (24")(W)(SLD)	LF	604
0666-2195	PAVEMENT SEALER (24")(Y)(SLD)	LF	2010
0666-2219	PAVEMENT SEALER (ARROW)	EA	4
0672-2015	REFL PAV MRKR TY II-A-A	EA	50
0672-2017	REFL PAV MRKR TY II-C-R	EA	53
0677-2001	ELIM EXT PAV MRK & MRKS (4")	LF	1260
0677-2003	ELIM EXT PAV MRK & MRKS (8")	LF	1615
0677-2007	ELIM EXT PAV MRK & MRKS (24")	LF	140
0677-2008	ELIM EXT PAV MRK & MRKS (ARROW)	EA	9
0677-2018	ELIM EXT PAV MRK & MRKS (WORD)	EA	9
0678-2001	PAV SURF PREP FOR MRK (4")	LF	89
0678-2002	PAV SURF PREP FOR MRK (6")	LF	360
0678-2003	PAV SURF PREP FOR MRK (8")	LF	1670
0678-2006	PAV SURF PREP FOR MRK (24")	LF	2279
0678-2007	PAV SURF PREP FOR MRK (ARROW)	EA	4
8020-2005	REF PROF PAV MRK TY I (W) 6" (SLD)(100 MIL)	LF	322
8020-2009	REF PROF PAV MRK TY I (Y) 6" (SLD)(100 MIL)	LF	146
8251-2009	RE PM W / RET REQ TY I (W) 6" (BRK) (100MIL)	LF	367
8251-2034	PAVEMENT SEALER (6")(W)(BRK)	LF	367
8251-2034	PAVEMENT SEALER (6")(W)(SLD)	LF	322
8251-2034	PAVEMENT SEALER (6")(Y)(SLD)	LF	146

"LOOP 1604" ALIGNMENT

POINT	STATION	OFFSET
1	573+37.66	-33
2	573+71.53	-33
3	574+22.24	-57
4	574+07.78	-33
5	574+21.92	-33
6	574+36.98	-33
7	573+70.63	-19
8	573+83.19	-18.02
9	573+95.47	-18.01
10	574+08.07	-19
11	573+53.61	50
12	573+66.26	50
13	573+81.20	49.94
14	573+94.57	49.94
15	574+09.49	50
16	573+53.61	74
17	573+64.74	74
18	573+62.85	87.92
19	573+80.04	88.97
20	573+93.96	88.87
21	574+10.55	103.21
22	574+10.25	87.9
23	574+09.97	74
24	575+74.14	74
25	576+23.66	50
26	576+39.09	49.7

"SBDET" ALIGNMENT

POINT	STATION	OFFSET
27	141+83.74	-33
28	141+83.74	-22
29	141+83.74	-11
30	142+31.76	-46.17
31	142+80.26	-47.54
32	142+98.01	-35.8
33	142+98.01	-23.8
34	142+98.01	-11.8
35	143+15.64	-49.6
36	143+97.12	-39.31
37	143+97.22	-25.71
38	143+96.31	-12

"SBENT2" ALIGNMENT

POINT	STATION	OFFSET
39	300+27.20	-56.87
40	300+38.86	-40.45
41	300+36.98	-26.48
42	300+69.76	-11.74
43	301+13.99	0
44	301+31.57	-33.19
45	301+34.29	-13.05
46	301+81.15	-14
47	301+81.16	0
48	303+28.29	-14.01
49	303+28.29	-0.01

GILMER D. GASTON
80472
LICENSED
PROFESSIONAL ENGINEER
STATE OF TEXAS

7/6/2010
GILMER D. GASTON P.E.
DATE

50 0 50 100
SCALE: PLAN - 1":100'

REV. NO.	DATE	DESCRIPTION	BY

ALAMO RMA

PAPE-DAWSON ENGINEERS

555 EAST RAMSEY | SAN ANTONIO, TEXAS 78216 | PHONE: 210.375.9000 FAX: 210.375.9010

TEXAS BOARD OF PROFESSIONAL ENGINEERS, FIRM REGISTRATION # 470

Texas Department of Transportation © 2010

LOOP 1604

PAVEMENT MARKING LAYOUT

SOUTHBOUND FRONTAGE ROAD/ENTRANCE RAMP

STA. 138+00 "SBDET" TO STA. 304+00 "SBENT2"

SHEET 27 OF 31

DGN:	FED. RD. DIV. NO.	STATE	FEDERAL AID PROJECT NO.			HIGHWAY NO.
CHK DGN:	6	TEXAS	STP 2011(210)ES			LP 1604
DWG:	DIST.	COUNTY	CONT. NO.	SECT. NO.	JOB NO.	SHEET NO.
CHK DWG:	SAT	BEXAR	2452	01	050	370

Plotted on: 7/6/2010

Design filename: p:\741\00\04\design\civil\traffic\740004PM24.dgn

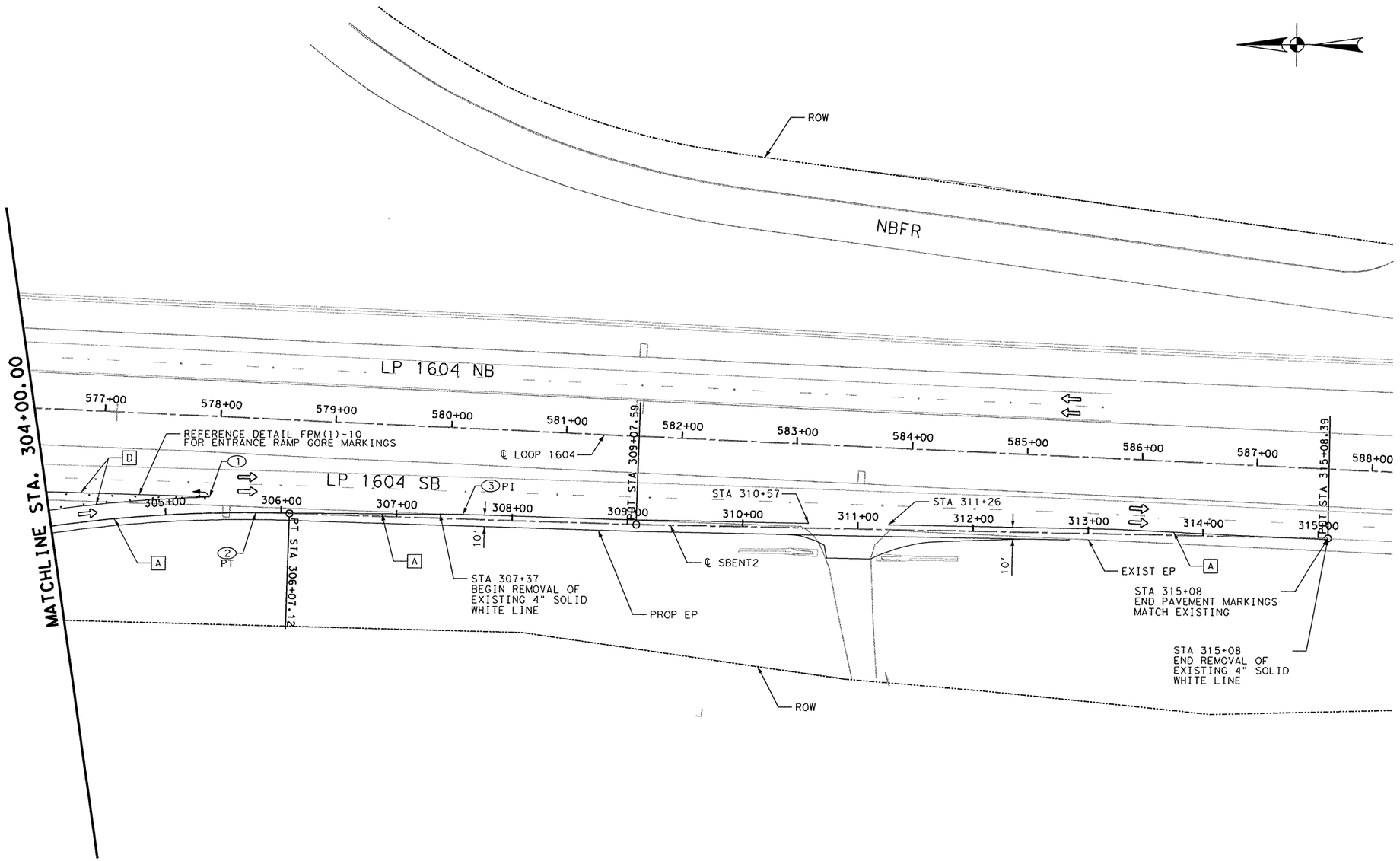

POINT	STATION	OFFSET
1	305+38.08	-14.01
2	305+77.84	0
3	309+07.75	-4

ITEM	DESCRIPTION	UNIT	QTY
0666-2036	REFL PAV MRK TY I (W) 8" (SLD)(100MIL)	LF	281
0666-2191	PAVEMENT SEALER (8")(W)(SLD)	LF	281
0672-2017	REFL PAV MRKR TY II-C-R	EA	14
0677-2001	ELIM EXT PAV MRK & MRKS (4")	LF	771
0678-2002	PAV SURF PREP FOR MRK (6")	LF	421
0678-2003	PAV SURF PREP FOR MRK (8")	LF	213
8020-2005	REF PROF PAV MRK TY I (W) 6" (SLD)(100 MIL)	LF	1108
8251-2034	PAVEMENT SEALER (6")(W)(SLD)	LF	1108

PAVEMENT MARKINGS LEGEND

- [A] 6" SOLID WHITE STRIPE
- [B] 6" SOLID YELLOW STRIPE
- [C] 6" BROKEN WHITE STRIPE W/ TY II C-R @ 80' C-C
- [D] 8" SOLID WHITE STRIPE W/ TY II C-R @ 20' C-C
- [E] 24" SOLID WHITE STRIPE
- [F] 24" SOLID YELLOW X-HATCHING W/ TY II A-A @ 20' C-C & ROTATED 45°
- [G] 24" SOLID WHITE X-HATCHING W/ TY I C-R @ 20' C-C & ROTATED 45°
- [H] PREFABRICATED WORDS OR ARROWS (TYP.)
- [I] 4" DOT WHITE (DETAIL "A")
- [J] 4" DOT YELLOW (DETAIL "A")
- [K] WRONG WAY ARROW, 14 TY I-R (DETAIL "D")
- [L] 12" SOLID WHITE STRIPE W/ TY II C-R (DBL) @ 40' C-C
- [M] 4" SOLID WHITE STRIPE
- [N] 4" SOLID YELLOW STRIPE
- [O] 4" BROKEN WHITE STRIPE W/ TY II C-R @ 80' C-C
- [P] 4" DOUBLE WHITE STRIPE W/ TY II C-R (DBL) @ 20' C-C
- [Q] 8" SOLID WHITE STRIPE
- [R] 8" SOLID YELLOW STRIPE
- TRAFFIC FLOW ARROWS

NOTES:
1. FOR ADDITIONAL DETAILS SEE TxDOT TYPICAL STANDARD SHEETS.
2. EXISTING FEATURES ARE SHOWN SCREENED BACK, IE FADED.
3. ALL REFLECTIVE PAVEMENT MARKINGS SHALL RECEIVE A TY I AND TY II APPLICATION. APPLY TY II BEFORE APPLYING TY I MARKINGS.
4. ALL DIMENSIONS ARE TO FACE OF CURB AND/OR CENTER OF PAVEMENT MARKINGS, UNLESS OTHERWISE INDICATED.
5. SEE SHEET 375 FOR MISCELLANEOUS DETAILS "A" THROUGH "E".

STATE OF TEXAS
GILMER B. CASTON
80472
LICENSED PROFESSIONAL ENGINEER

GILMER B. CASTON P.E. — 8/18/2010 DATE

50 0 50 100
SCALE: PLAN - 1":100'

REV. NO.	DATE	DESCRIPTION	BY

ALAMO RMA

PAPE-DAWSON ENGINEERS
555 EAST RAMSEY | SAN ANTONIO, TEXAS 78216 | PHONE: 210.375.9000 FAX: 210.375.9010
TEXAS BOARD OF PROFESSIONAL ENGINEERS, FIRM REGISTRATION # 470

Texas Department of Transportation
© 2010

LOOP 1604

PAVEMENT MARKING LAYOUT

SOUTHBOUND ENTRANCE RAMP
STA. 304+00 "SBENT2"
TO END OF PROJECT

SHEET 28 OF 31

DGN:	FED. RD. DIV. NO.	STATE	FEDERAL AID PROJECT NO.			HIGHWAY NO.
CHK DGN:	6	TEXAS	STP 2011(210)ES			LP 1604
DWG:	DIST.	COUNTY	CONT. NO.	SECT. NO.	JOB NO.	SHEET NO.
CHK DWG:	SAT	BEXAR	2452	01	050	371

Plotted on: 8/18/2010

Design Filename: p:\74\00\04\design\civil\TRAFFIC\740004PM25.dgn

Plotted on: 6/30/2010

Design Filename: p:\74\00\04\design\civil\traffic\740004PM26.dgn

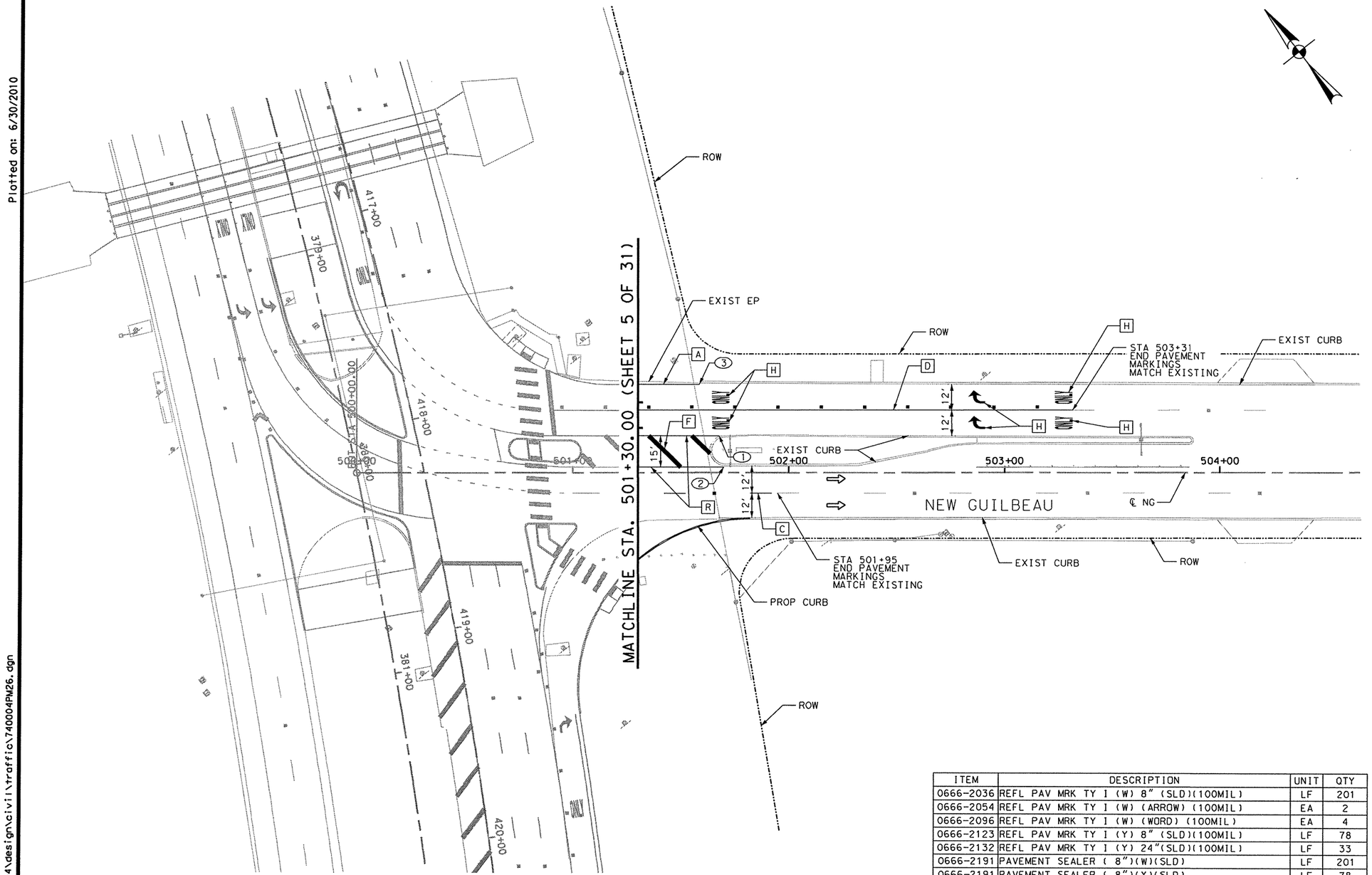

POINT	STATION	OFFSET
1	501+67.73	-17.47
2	501+69.88	-2.52
3	501+58.53	-41.47

ITEM	DESCRIPTION	UNIT	QTY
0666-2036	REFL PAV MRK TY I (W) 8" (SLD)(100MIL)	LF	201
0666-2054	REFL PAV MRK TY I (W) (ARROW) (100MIL)	EA	2
0666-2096	REFL PAV MRK TY I (W) (WORD) (100MIL)	EA	4
0666-2123	REFL PAV MRK TY I (Y) 8" (SLD)(100MIL)	LF	78
0666-2132	REFL PAV MRK TY I (Y) 24"(SLD)(100MIL)	LF	33
0666-2191	PAVEMENT SEALER (8")(W)(SLD)	LF	201
0666-2191	PAVEMENT SEALER (8")(Y)(SLD)	LF	78
0666-2195	PAVEMENT SEALER (24")(Y)(SLD)	LF	33
0666-2219	PAVEMENT SEALER (ARROW)	EA	2
0666-2220	PAVEMENT SEALER (WORD)	EA	4
0672-2015	REFL PAV MRKR TY II-A-A	EA	3
0672-2017	REFL PAV MRKR TY II-C-R	EA	11
0678-2003	PAV SURF PREP FOR MRK (8")	LF	136
0678-2007	PAV SURF PREP FOR MRK (ARROW)	EA	2
0678-2018	PAV SURF PREP FOR MRK (WORD)	EA	2
8020-2005	REF PROF PAV MRK TY I (W) 6" (SLD)(100 MIL)	LF	29
8251-2009	RE PM W / RET REQ TY I (W) 6" (BRK) (100MIL)	LF	16
8251-2034	PAVEMENT SEALER (6")(W)(BRK)	LF	16
8251-2034	PAVEMENT SEALER (6")(W)(SLD)	LF	29

PAVEMENT MARKINGS LEGEND

- [A] 6" SOLID WHITE STRIPE
- [B] 6" SOLID YELLOW STRIPE
- [C] 6" BROKEN WHITE STRIPE W/ TY II C-R @ 80' C-C
- [D] 8" SOLID WHITE STRIPE W/ TY II C-R @ 20' C-C
- [E] 24" SOLID WHITE STRIPE
- [F] 24" SOLID YELLOW X-HATCHING W/ TY II A-A @ 20' C-C & ROTATED 45°
- [G] 24" SOLID WHITE X-HATCHING W/ TY I C-R @ 20' C-C & ROTATED 45°
- [H] PREFABRICATED WORDS OR ARROWS (TYP.)
- [I] 4" DOT WHITE (DETAIL "A")
- [J] 4" DOT YELLOW (DETAIL "A")
- [K] WRONG WAY ARROW, 14 TY I-R (DETAIL "D")
- [L] 12" SOLID WHITE STRIPE W/ TY II C-R (DBL) @ 40' C-C
- [M] 4" SOLID WHITE STRIPE
- [N] 4" SOLID YELLOW STRIPE
- [O] 4" BROKEN WHITE STRIPE W/ TY II C-R @ 80' C-C
- [P] 4" DOUBLE WHITE STRIPE W/ TY II C-R (DBL) @ 20' C-C
- [Q] 8" SOLID WHITE STRIPE
- [R] 8" SOLID YELLOW STRIPE
- TRAFFIC FLOW ARROWS

NOTES:
1. FOR ADDITIONAL DETAILS SEE TxDOT TYPICAL STANDARD SHEETS.
2. EXISTING FEATURES ARE SHOWN SCREENED BACK, IE FADED.
3. ALL REFLECTIVE PAVEMENT MARKINGS SHALL RECEIVE A TY I AND TY II APPLICATION. APPLY TY II BEFORE APPLYING TY I MARKINGS.
4. ALL DIMENSIONS ARE TO FACE OF CURB AND/OR CENTER OF PAVEMENT MARKINGS, UNLESS OTHERWISE INDICATED.
5. SEE SHEET 375 FOR MISCELLANEOUS DETAILS "A" THROUGH "E".

STATE OF TEXAS
GILMER D. GASTON
80472
LICENSED
PROFESSIONAL ENGINEER

GILMER D. GASTON P.E. — 6/30/2010 DATE

25 0 25 50
SCALE: PLAN - 1":50'

REV. NO.	DATE	DESCRIPTION	BY

ALAMO RMA

PAPE-DAWSON ENGINEERS
555 EAST RAMSEY | SAN ANTONIO, TEXAS 78216 | PHONE: 210.375.9000 FAX: 210.375.9010
TEXAS BOARD OF PROFESSIONAL ENGINEERS, FIRM REGISTRATION # 470

Texas Department of Transportation
© 2010

LOOP 1604

PAVEMENT MARKING LAYOUT

NEW GUILBEAU RD

SHEET 29 OF 31

DGN:	FED. RD. DIV. NO.	STATE	FEDERAL AID PROJECT NO.			HIGHWAY NO.
CHK DGN:	6	TEXAS	STP 2011(210)ES			LP 1604
DWG:	DIST.	COUNTY	CONT. NO.	SECT. NO.	JOB NO.	SHEET NO.
CHK DWG:	SAT	BEXAR	2452	01	050	372

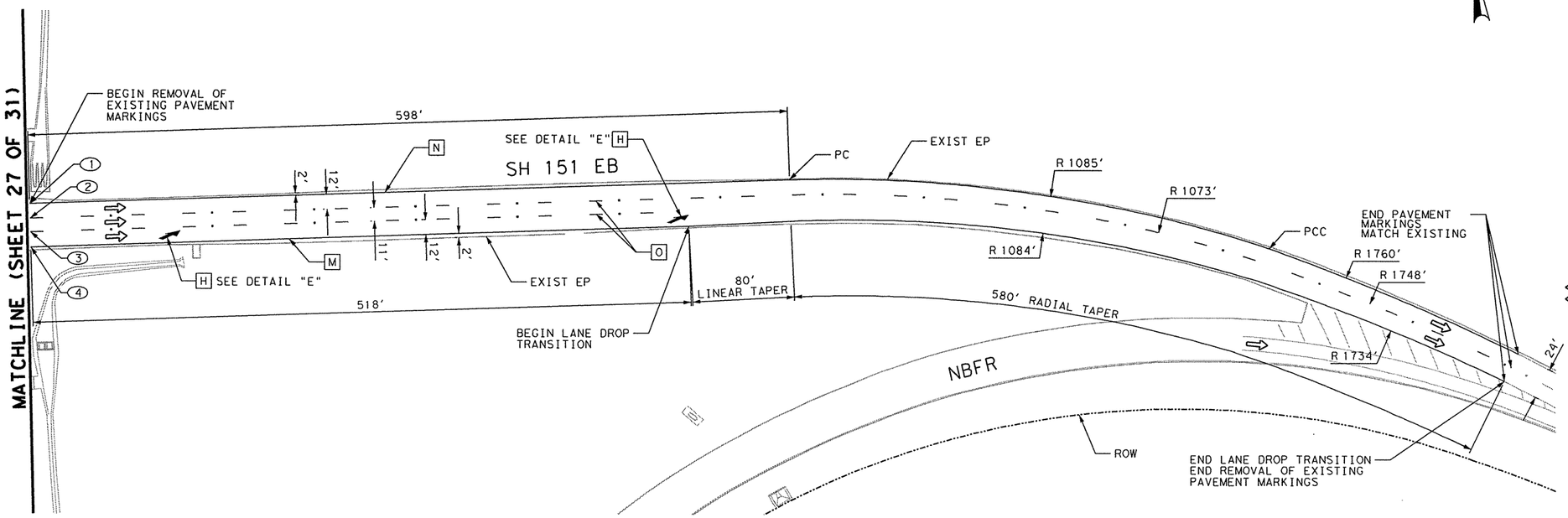

PAVEMENT MARKINGS LEGEND

- A 6" SOLID WHITE STRIPE
- B 6" SOLID YELLOW STRIPE
- C 6" BROKEN WHITE STRIPE W/ TY II C-R @ 80' C-C
- D 8" SOLID WHITE STRIPE W/ TY II C-R @ 20' C-C
- E 24" SOLID WHITE STRIPE
- F 24" SOLID YELLOW X-HATCHING W/ TY II A-A @ 20' C-C & ROTATED 45°
- G 24" SOLID WHITE X-HATCHING W/ TY I C-R @ 20' C-C & ROTATED 45°
- H PREFABRICATED WORDS OR ARROWS (TYP.)
- I 4" DOT WHITE (DETAIL "A")
- J 4" DOT YELLOW (DETAIL "A")
- K WRONG WAY ARROW, 14 TY I-R (DETAIL "D")
- L 12" SOLID WHITE STRIPE W/ TY II C-R (DBL) @ 40' C-C
- M 4" SOLID WHITE STRIPE
- N 4" SOLID YELLOW STRIPE
- O 4" BROKEN WHITE STRIPE W/ TY II C-R @ 80' C-C
- P 4" DOUBLE WHITE STRIPE W/ TY II C-R (DBL) @ 20' C-C
- Q 8" SOLID WHITE STRIPE
- R 8" SOLID YELLOW STRIPE

TRAFFIC FLOW ARROWS

NOTES:

1. FOR ADDITIONAL DETAILS SEE TxDOT TYPICAL STANDARD SHEETS.
2. EXISTING FEATURES ARE SHOWN SCREENED BACK, IE FADED.
3. ALL REFLECTIVE PAVEMENT MARKINGS SHALL RECEIVE A TY I AND TY II APPLICATION. APPLY TY II BEFORE APPLYING TY I MARKINGS.
4. ALL DIMENSIONS ARE TO FACE OF CURB AND/OR CENTER OF PAVEMENT MARKINGS, UNLESS OTHERWISE INDICATED.
5. SEE SHEET 375 FOR MISCELLANEOUS DETAILS "A" THROUGH "E".

STATE OF TEXAS · GILMER D. GASTON · 80472 · LICENSED PROFESSIONAL ENGINEER

GILMER D. GASTON P.E. — 6/30/2010 DATE

50 0 50 100

SCALE: PLAN - 1":100'

"LOOP 1604" ALIGNMENT

POINT	STATION	OFFSET
1	573+71.43	-89.77
2	573+83.72	-89.84
3	573+94.98	-89.88
4	574+07.27	-89.88

ITEM	DESCRIPTION	UNIT	QTY
0666-2003	REFL PAV MRK TY I (W) 4" (BRK)(100MIL)	LF	427
0666-2012	REFL PAV MRK TY I (W) 4" (SLD)(100MIL)	LF	1181
0666-2054	REFL PAV MRK TY I (W) (ARROW) (100MIL)	EA	2
0666-2111	REFL PAV MRK TY I (Y) 4" (SLD)(100MIL)	LF	1195
0666-2189	PAVEMENT SEALER (4")(W)(SLD)	LF	1181
0666-2189	PAVEMENT SEALER (4")(W)(BRK)	LF	427
0666-2189	PAVEMENT SEALER (4")(Y)(SLD)	LF	1195
0666-2219	PAVEMENT SEALER (ARROW)	EA	2
0672-2017	REFL PAV MRKR TY II-C-R	EA	21
0677-2001	ELIM EXT PAV MRK & MRKS (4")	LF	2680
0678-2001	PAV SURF PREP FOR MRK (4")	LF	2803
0678-2007	PAV SURF PREP FOR MRK (ARROW)	EA	2

REV. NO.	DATE	DESCRIPTION	BY

ALAMO RMA

PAPE-DAWSON ENGINEERS
555 EAST RAMSEY | SAN ANTONIO, TEXAS 78216 | PHONE: 210.375.9000 FAX: 210.375.9010
TEXAS BOARD OF PROFESSIONAL ENGINEERS, FIRM REGISTRATION # 470

Texas Department of Transportation © 2010

LOOP 1604

PAVEMENT MARKING LAYOUT

SH 151

SHEET 30 OF 31

DGN:	FED. RD. DIV. NO.	STATE	FEDERAL AID PROJECT NO.			HIGHWAY NO.
CHK DGN:	6	TEXAS	STP 2011(210)ES			LP 1604
DWG:	DIST.	COUNTY	CONT. NO.	SECT. NO.	JOB NO.	SHEET NO.
CHK DWG:	SAT	BEXAR	2452	01	050	373

Plotted on: 6/30/2010

Design Filename: p:\74\00\04\design\civil\traffic\740004PM27.dgn

Plotted on: 6/30/2010

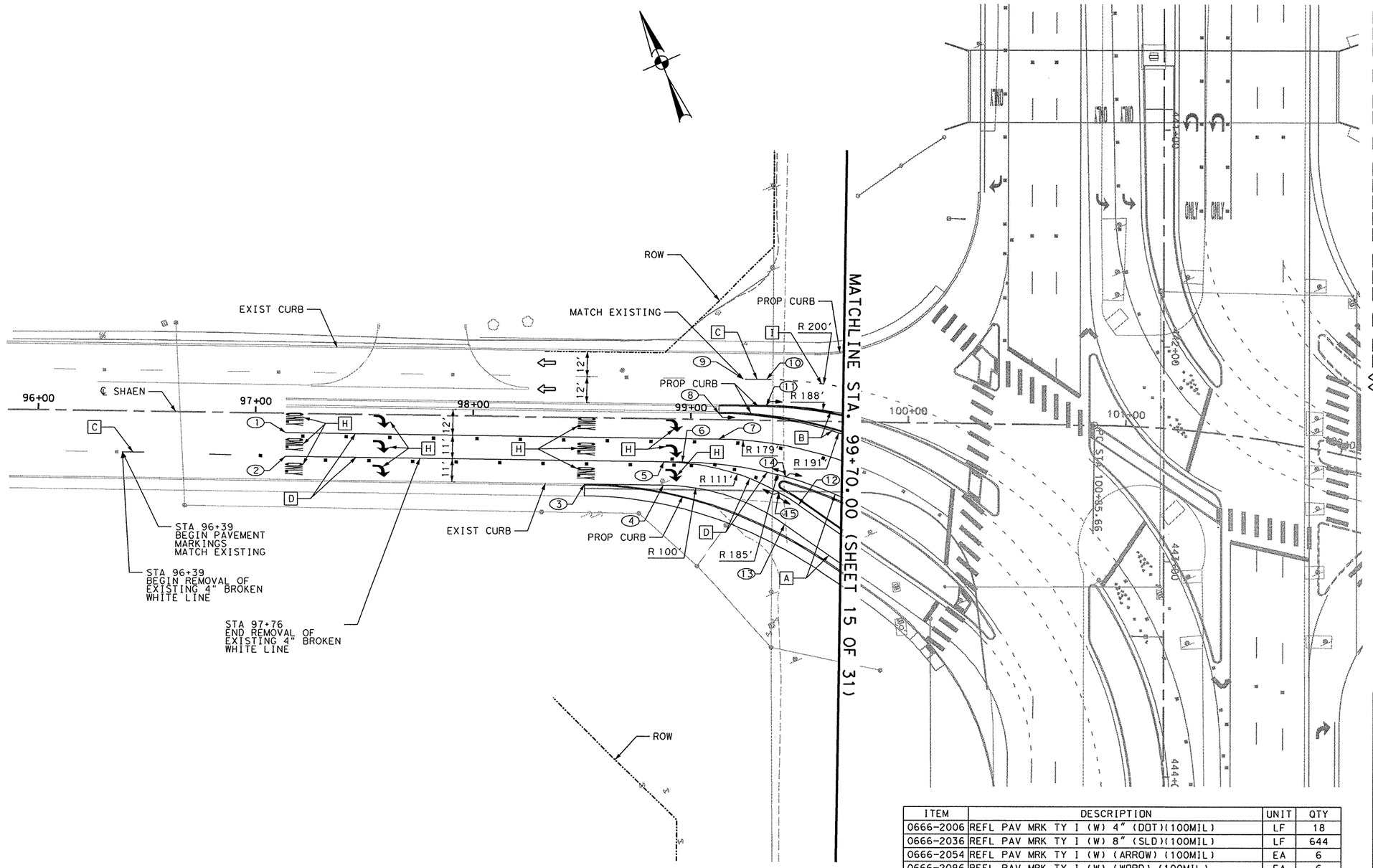

POINT	STATION	OFFSET	POINT	STATION	OFFSET
1	97+13.97	9	11	99+34.88	-7
2	97+13.97	20	12	99+50.33	39.24
3	98+51.74	31	13	99+44.14	48.33
4	98+87.87	31	14	99+44.20	26.3
5	98+87.87	20	15	99+41.25	33.67
6	98+96.33	20			
7	99+12.95	9			
8	99+12.95	-3			
9	99+23.91	-19			
10	99+34.88	-19			

PAVEMENT MARKINGS LEGEND

- [A] 6" SOLID WHITE STRIPE
- [B] 6" SOLID YELLOW STRIPE
- [C] 6" BROKEN WHITE STRIPE W/ TY II C-R @ 80' C-C
- [D] 8" SOLID WHITE STRIPE W/ TY II C-R @ 20' C-C
- [E] 24" SOLID WHITE STRIPE
- [F] 24" SOLID YELLOW X-HATCHING W/ TY II A-A @ 20' C-C & ROTATED 45°
- [G] 24" SOLID WHITE X-HATCHING W/ TY I C-R @ 20' C-C & ROTATED 45°
- [H] PREFABRICATED WORDS OR ARROWS (TYP.)
- [I] 4" DOT WHITE (DETAIL "A")
- [J] 4" DOT YELLOW (DETAIL "A")
- [K] WRONG WAY ARROW, 14 TY I-R (DETAIL "D")
- [L] 12" SOLID WHITE STRIPE W/ TY II C-R (DBL) @ 40' C-C
- [M] 4" SOLID WHITE STRIPE
- [N] 4" SOLID YELLOW STRIPE
- [O] 4" BROKEN WHITE STRIPE W/ TY II C-R @ 80' C-C
- [P] 4" DOUBLE WHITE STRIPE W/ TY II C-R (DBL) @ 20' C-C
- [Q] 8" SOLID WHITE STRIPE
- [R] 8" SOLID YELLOW STRIPE
- TRAFFIC FLOW ARROWS

NOTES:

1. FOR ADDITIONAL DETAILS SEE TxDOT TYPICAL STANDARD SHEETS.
2. EXISTING FEATURES ARE SHOWN SCREENED BACK, IE FADED.
3. ALL REFLECTIVE PAVEMENT MARKINGS SHALL RECEIVE A TY I AND TY II APPLICATION. APPLY TY II BEFORE APPLYING TY I MARKINGS.
4. ALL DIMENSIONS ARE TO FACE OF CURB AND/OR CENTER OF PAVEMENT MARKINGS, UNLESS OTHERWISE INDICATED.
5. SEE SHEET 375 FOR MISCELLANEOUS DETAILS "A" THROUGH "E".

STATE OF TEXAS
GILMER D. GASTON
80472
LICENSED PROFESSIONAL ENGINEER

GILMER D. GASTON P.E. — 6/30/2010 DATE

25 0 25 50
SCALE: PLAN - 1":50'

ITEM	DESCRIPTION	UNIT	QTY
0666-2006	REFL PAV MRK TY I (W) 4" (DOT)(100MIL)	LF	18
0666-2036	REFL PAV MRK TY I (W) 8" (SLD)(100MIL)	LF	644
0666-2054	REFL PAV MRK TY I (W) (ARROW) (100MIL)	EA	6
0666-2096	REFL PAV MRK TY I (W) (WORD) (100MIL)	EA	6
0666-2189	PAVEMENT SEALER (4")(W)(DOT)	LF	18
0666-2191	PAVEMENT SEALER (8")(W)(SLD)	LF	544
0666-2219	PAVEMENT SEALER (ARROW)	EA	6
0666-2220	PAVEMENT SEALER (WORD)	EA	6
0672-2017	REFL PAV MRKR TY II-C-R	EA	28
8020-2005	REF PROF PAV MRK TY I (W) 6" (SLD)(100 MIL)	LF	189
8020-2009	REF PROF PAV MRK TY I (Y) 6" (SLD)(100 MIL)	LF	93
8251-2009	RE PM W / RET REQ TY I (W) 6" (BRK) (100MIL)	LF	24
8251-2034	PAVEMENT SEALER (6")(W)(BRK)	LF	24
8251-2034	PAVEMENT SEALER (6")(W)(SLD)	LF	189
8251-2034	PAVEMENT SEALER (6")(Y)(SLD)	LF	93

REV. NO.	DATE	DESCRIPTION	BY

ALAMO RMA

PAPE-DAWSON ENGINEERS
555 EAST RAMSEY | SAN ANTONIO, TEXAS 78216 | PHONE: 210.375.9000 FAX: 210.375.9010
TEXAS BOARD OF PROFESSIONAL ENGINEERS, FIRM REGISTRATION # 470

Texas Department of Transportation © 2010

LOOP 1604

PAVEMENT MARKING LAYOUT

SHAENFIELD ROAD

BEGIN TO STA. 99+70.00

DGN:	FED. RD. DIV. NO.	STATE	FEDERAL AID PROJECT NO.			HIGHWAY NO.
CHK DGN:	6	TEXAS	STP 2011(210)ES			LP 1604
DWG:	DIST.	COUNTY	CONT. NO.	SECT. NO.	JOB NO.	SHEET NO.
CHK DWG:	SAT	BEXAR	2452	01	050	374

Design Filename: p:\74\00\04\design\civil\traffic\740004PM28.dgn

Plotted on: 6/30/2010

Design Filename: p:\74\00\04\design\civil\traffic\740004PM29.dgn

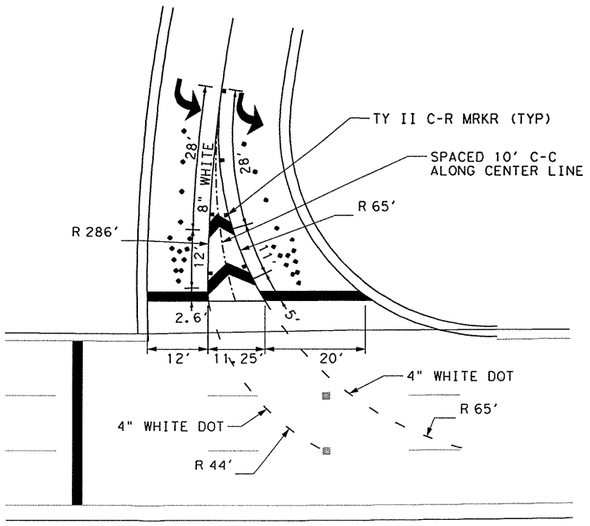

PAINTED ISLAND CHEVRON LAYOUT (TURNAROUND 1)
DETAIL "B"

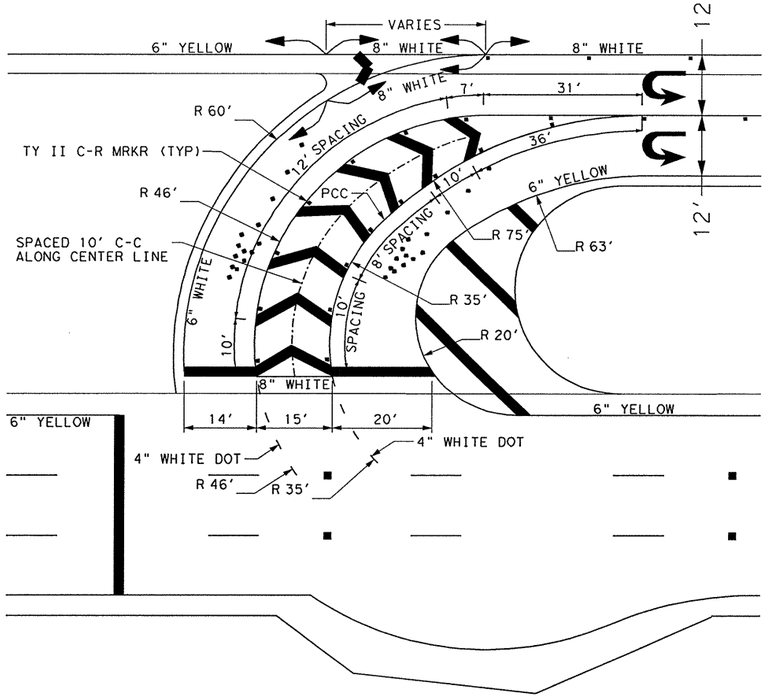

PAINTED ISLAND CHEVRON LAYOUT (TURNAROUNDS 2 & 3)
DETAIL "C"

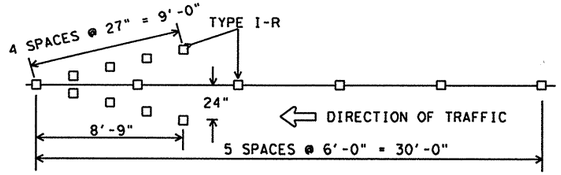

ALL RAISED MARKERS IN THE WRONG WAY ARROW SHALL BE TYPE I-R REFLECTORIZED PAVEMENT MARKERS WITH THE REFLECTORIZED SURFACE FACING THE WRONG WAY TRAFFIC. TYPE II-C-R SHALL NOT BE USED. REFLECTORIZED WRONG WAY ARROWS, NOT TO EXCEED TWO, MAY BE PLACED ON EXIT RAMPS. LOCATION OF THE ARROWS SHALL BE AS SHOWN IN THE PLANS OR AS DIRECTED BY THE ENGINEER.

WRONG WAY ARROW
DETAIL "D"

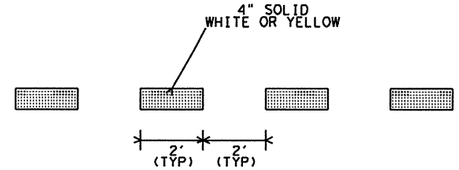

TYPICAL 4" DOT MARKING
DETAIL "A"

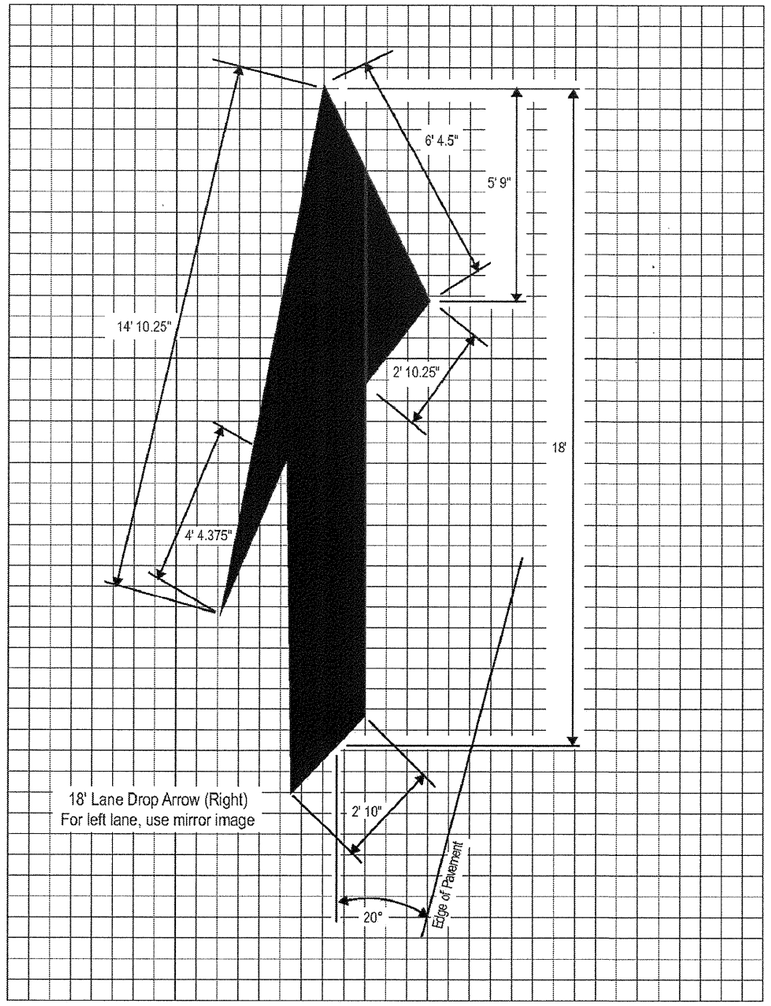

MERGE LEFT ARROW
DETAIL "E"

GILMER D. GASTON P.E. — 6/30/2010 DATE

REV. NO.	DATE	DESCRIPTION	BY

ALAMO RMA

PAPE-DAWSON ENGINEERS
555 EAST RAMSEY | SAN ANTONIO, TEXAS 78216 | PHONE: 210.375.9000 FAX: 210.375.9010
TEXAS BOARD OF PROFESSIONAL ENGINEERS, FIRM REGISTRATION # 470

Texas Department of Transportation
© 2010

LOOP 1604

PAVEMENT MARKING MISC DETAILS

SHEET 1 OF 1

DGN:	FED. RD. DIV. NO.	STATE	FEDERAL AID PROJECT NO.			HIGHWAY NO.
CHK DGN:	6	TEXAS	STP 2011(210)ES			LP 1604
DWG:	DIST.	COUNTY	CONT. NO.	SECT. NO.	JOB NO.	SHEET NO.
CHK DWG:	SAT	BEXAR	2452	01	050	375

DISCLAIMER
The use of this s rd is governed by the "Texas Engineering Practice Act". No warranty of any kind is made by TxD for any purpose whatsoever. TxDOT assumes no responsibility for the conversion of this standard to other formats or for incorrect results or damages resulting from its use.

DISPLAYED ACC:

TYPICAL TURNAROUND PAVEMENT MARKING DETAILS

* PROPOSED WHITE LEGENDS TEXT AND ARROW SIZE TO BE IN ACCORDANCE WITH THE TEXAS M.U.T.C.D.

RADIUS DETAIL

NOT TO SCALE

ALAMO RMA

San Antonio District Standard

TYPICAL PAVEMENT MARKING DETAILS

TPMD (1)

© 2007 *Texas Department of Transportation*

REVISIONS	FED. RD. DIV. NO.	FEDERAL AID PROJECT NO.		SHEET NO.
MAY-2004	6	2452-01-050		376
OCT-2007	STATE	DIST.	COUNTY	
3-2010	TEXAS	SAT	BEXAR	
	CONT.	SECT.	JOB	HIGHWAY NO.

DISCLAIMER:
...e use of this standard is governed by the "Texas Engineering Practice Act". No warranty of any kind is made by TxDOT for any purpose whatsoever. TxDOT assumes no responsibility for the conversion of this standard to other formats or for incorrect results or damages resulting from its use.

TRAFFIC LANE LINES PAVEMENT MARKING DETAILS

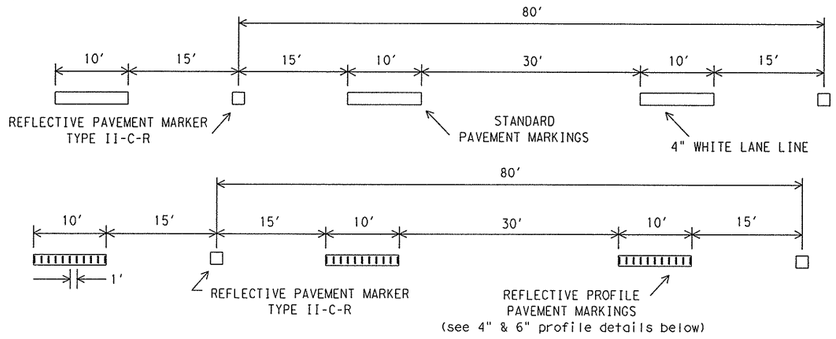

PAVEMENT MARKERS (REFL) TYPE II-C-R SHALL BE SPACED ON 80' CENTERS WITH THE CLEAR FACE TOWARD NORMAL TRAFFIC AND THE RED FACE TOWARD WRONG WAY TRAFFIC.

EDGELINE PAVEMENT MARKINGS

EDGELINES SHOULD TYPICALLY BE 4" WIDE AND THE MATERIALS SHALL BE AS SPECIFIED IN THE PLANS.
IF RAISED PROFILE PAVEMENT MARKINGS ARE USED SEE DETAILS BELOW.

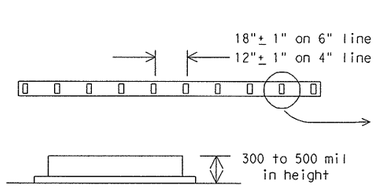

REFLECTIVE PROFILE PAVEMENT MARKINGS

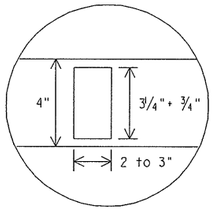

STANDARD 4" PROFILE DETAIL

OR

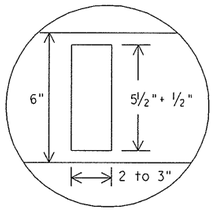

OPTIONAL 6" PROFILE DETAIL

WRONG WAY ARROW DETAIL

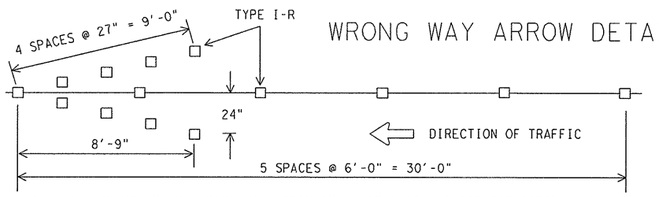

ALL RAISED MARKERS IN THE WRONG WAY ARROW SHALL BE TYPE I-R REFLECTORIZED PAVEMENT MARKERS WITH THE REFLECTORIZED SURFACE FACING THE WRONG WAY TRAFFIC. TYPE II-C-R SHALL NOT BE USED.

REFLECTORIZED WRONG WAY ARROWS, NOT TO EXCEED TWO, MAY BE PLACED ON EXIT RAMPS.
LOCATION OF THE ARROWS SHALL BE AS SHOWN IN THE PLANS OR AS DIRECTED BY THE ENGINEER.

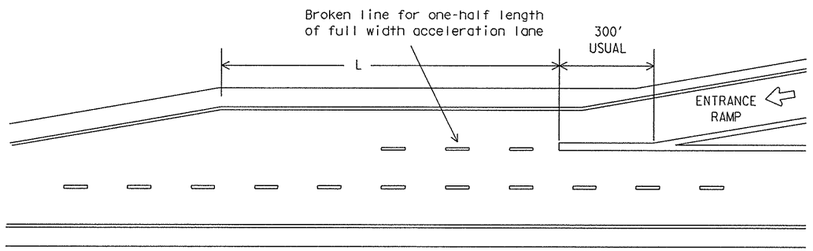

PARALLEL ACCELERATION LANE

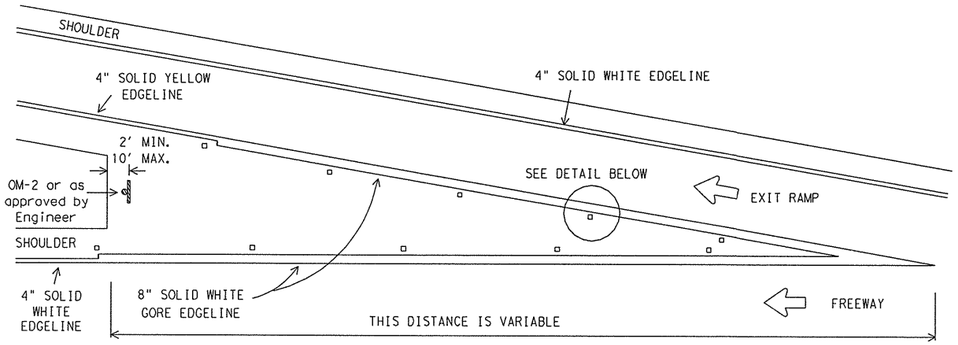

THE SHAPE OF THE GORE MARKING WILL VARY DEPENDING ON THE RAMP DESIGN AND WILL BE AS SHOWN IN THE PLANS OR AS DIRECTED BY THE ENGINEER. OM-2 OR SURFACE MOUNT OBJECT MARKER MOUNTING HEIGHT IS 36 INCHES.

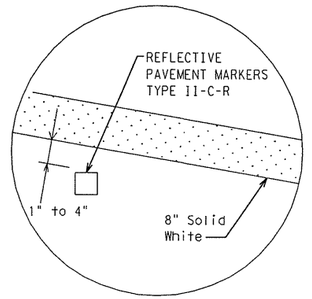

TYPICAL EXIT RAMP GORE MARKING

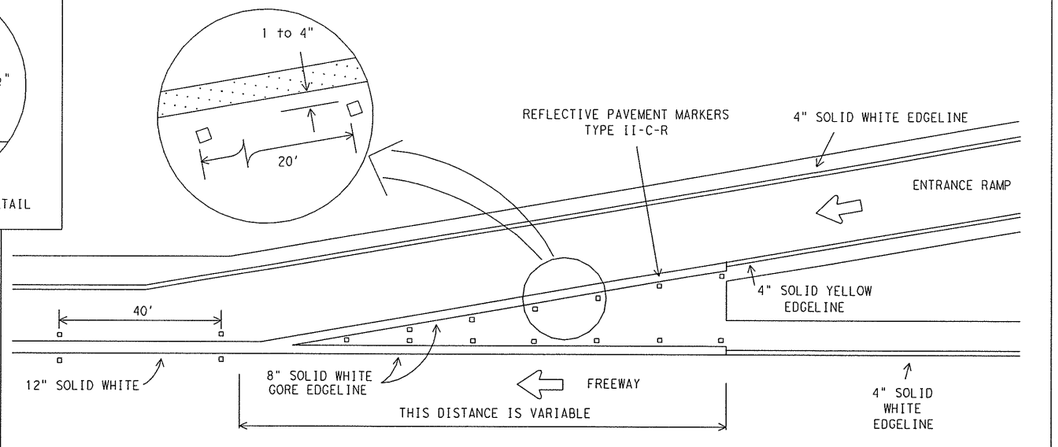

TYPICAL ENTRANCE RAMP GORE MARKING

EXTEND THE EDGELINE FROM RAMP UNTIL IT INTERSECTS WITH EDGELINE FROM MAIN LANES

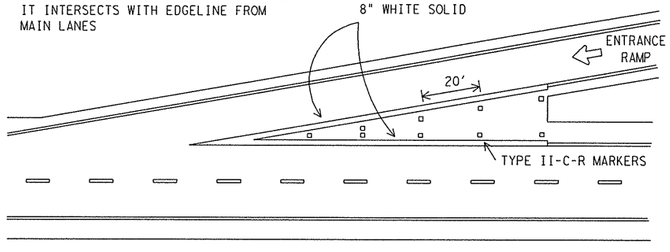

TAPERED ACCELERATION LANE

All pavement marking materials shall meet the required Departmental Material Specifications as specified by the plans.

SPECIFICATION REFERENCE TABLE

MATERIAL SPECIFICATIONS	
PAVEMENT MARKERS (REFLECT.)	DMS-4200
EPOXY	DMS-6100
BITUMINOUS ADHESIVE FOR PAVE. MKS.	DMS-6130

RAISED PAVEMENT MARKERS

(REFLECTORIZED)

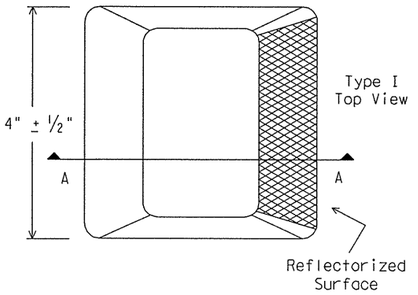

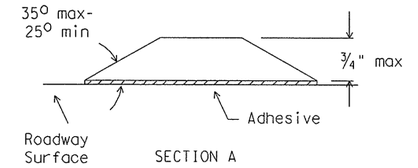

SECTION A

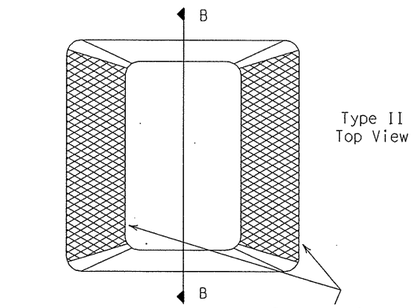

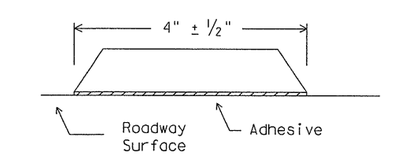

SECTION B

Texas Department of Transportation
Traffic Operations Division

TYPICAL STANDARD FREEWAY PAVEMENT MARKINGS WITH RAISED PAVEMENT MARKERS

FPM(1)-10

©TxDOT May 1974	DN: TXDOT	CK: TXDOT	DW: TXDOT	CK: TXDOT
REVISIONS	CONT	SECT	JOB	HIGHWAY
4-92 2-10	2492-04-038			
5-00	DIST	COUNTY		SHEET NO.
8-00		BEE		377
2-08				

234

DATE:
FILE:

TWO LANES WITH SHOULDERS

FOUR LANES WITH SHOULDERS

MULTI - LANES

MULTI - LANE WITH MEDIAN

TYPICAL RIGHT TURN ISLAND

WITH DELINEATION

INTERSECTION WITH RIGHT - TURN ISLANDS

TWO LANES

FOUR LANES

NOTES:

1. ALL LONGITUDINAL LINES FORMING CROSSWALK AND STOP LINES SHALL BE WHITE
*2. STOP LINES AS REQUIRED ON DETAILED PAVEMENT MARKING PLANS.
3. "D" IS EQUAL TO ONE HALF THE DISTANCE.

San Antonio District Standard

TYPICAL CROSSWALK DETAILS

TCD-05

Texas Department of Transportation

© 2006

REVISIONS	FED. RD. DIV. NO.	FEDERAL AID PROJECT NO.			SHEET NO.
DEC 1999 AUG 2005	6	2452-01-050			378
	STATE	DIST.	COUNTY		
	TEXAS	SAT			
	CONT.	SECT.	JOB	HIGHWAY NO.	

DISCLAIMER:
The use of this standard is governed by the "Texas Engineering Practice Act". No warranty of any kind is made by TxDOT for any purpose whatsoever. TxDOT assumes no responsibility for the conversion of this standard to other formats or for incorrect results or damages resulting from its use.

DATE:
FILE:

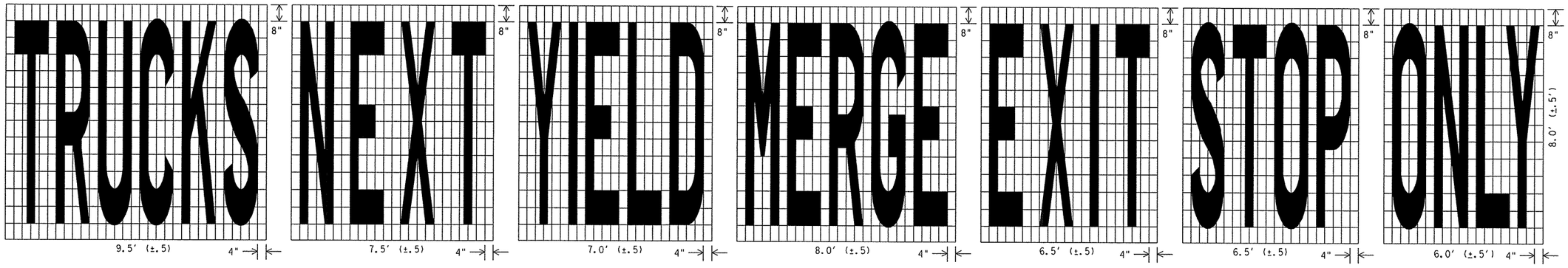

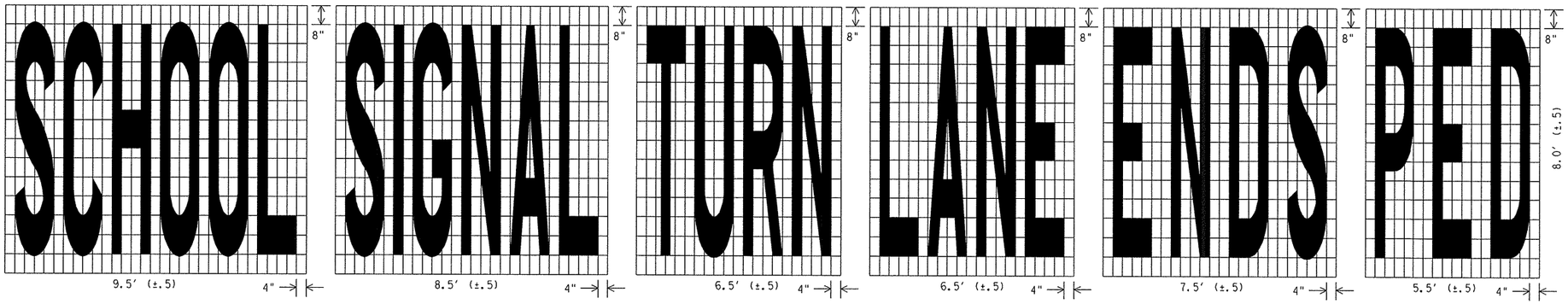

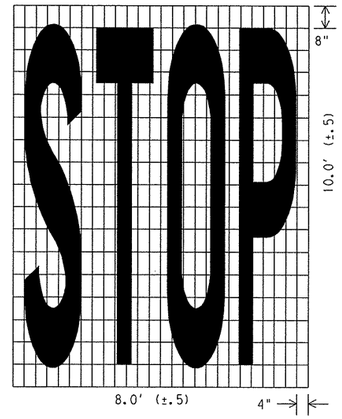

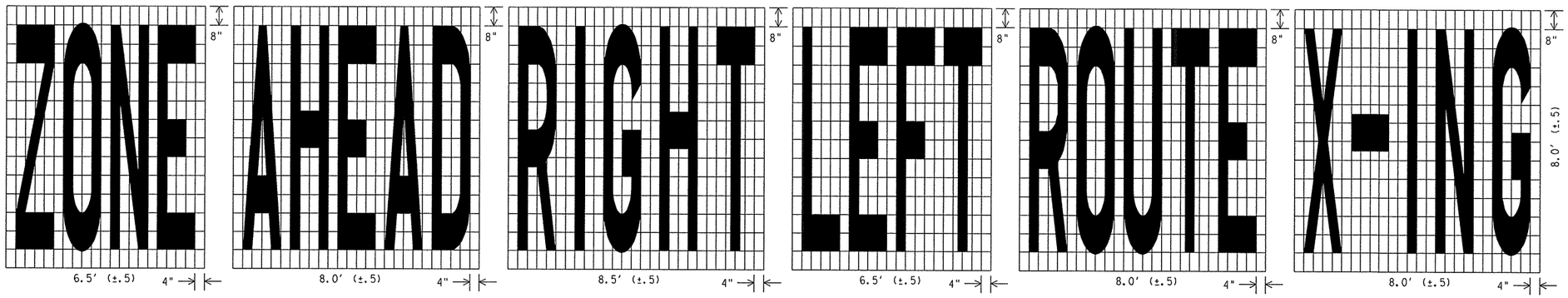

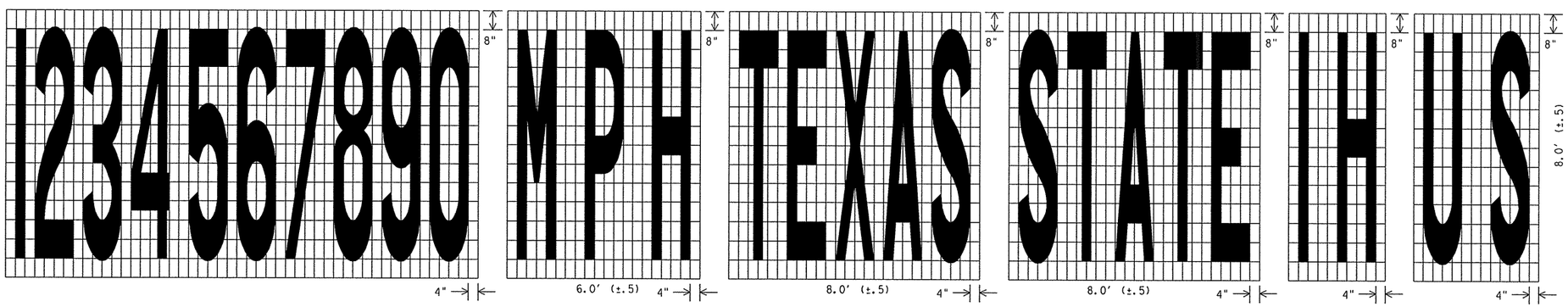

Texas Department of Transportation
Traffic Operations Division

STANDARD PAVEMENT MARKINGS (WORDS)

PM(5)-01

©TxDOT March 2001

DN: TXDOT	CK: TXDOT	DW: TXDOT	CK: TXDOT
REVISIONS	CONT	SECT	JOB	HIGHWAY
	2452	01	056	
	DIST	COUNTY		SHEET NO.
				379

226

DISCLAIMER:
The use of this standard is governed by the "Texas Engineering Practice Act". No warranty of any kind is made by TxDOT for any purpose whatsoever. TxDOT assumes no responsibility for the conversion of this standard to other formats or for incorrect results or damages resulting from its use.

DATE:
FILE:

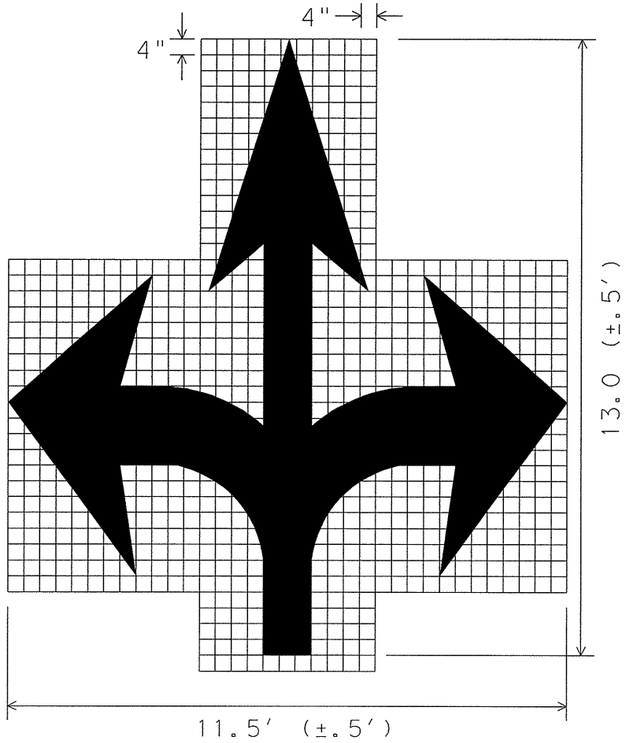

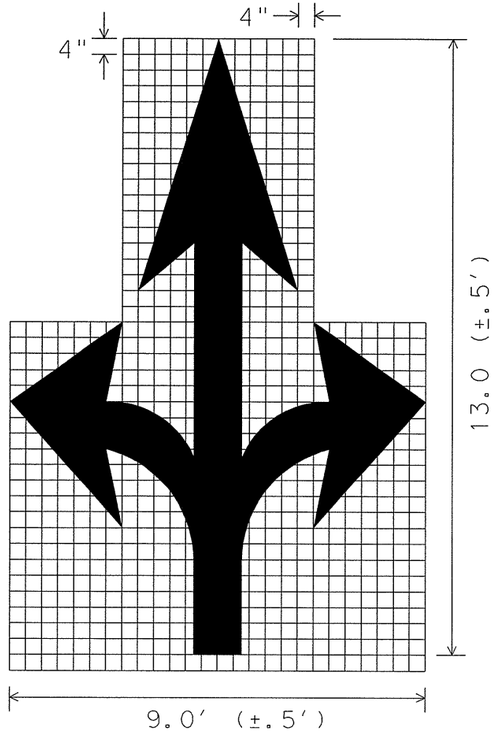

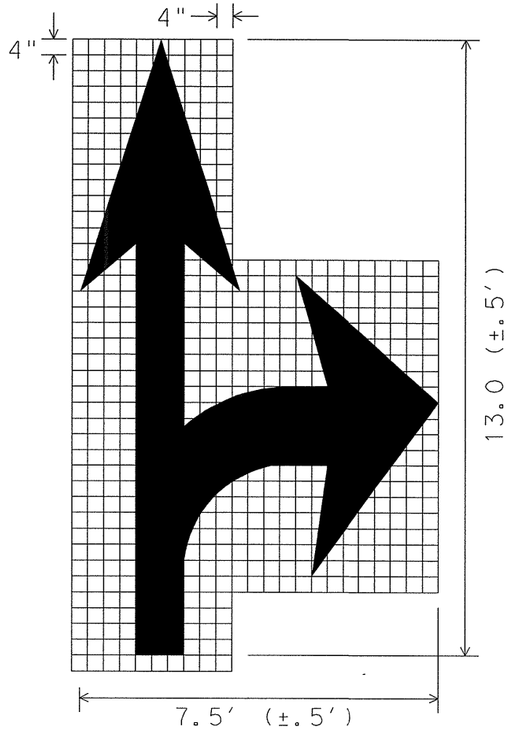

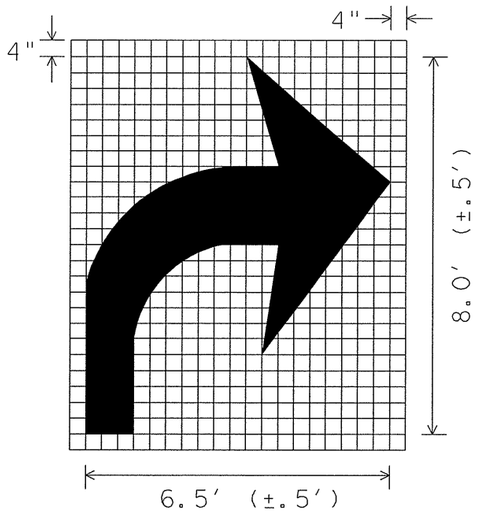

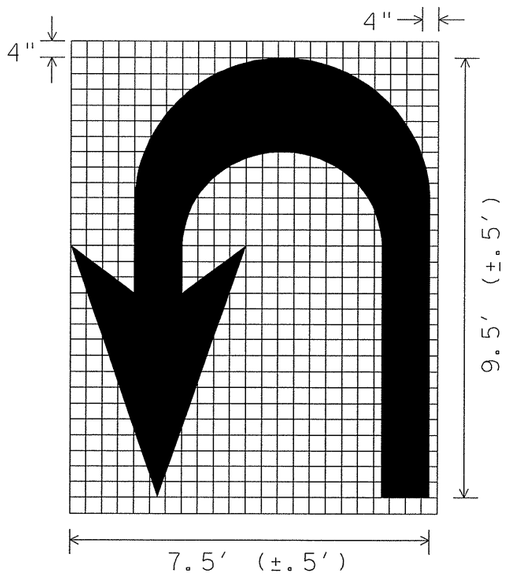

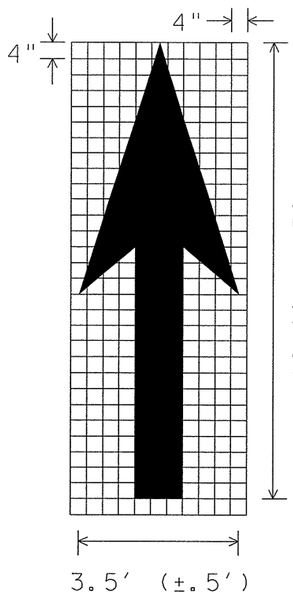

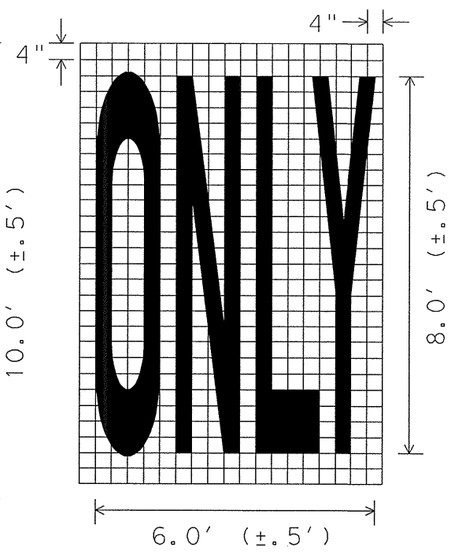

GENERAL NOTES;

1. Minimum 8 foot white markings should be used, unless otherwise noted. If message consists of more than one word, it should be placed with first word nearest the driver.
2. These details are standard size for normal installation; sizes may be reduced approximately one-third for low speed urban conditions; larger sizes may be needed for freeways, above average speed conditions or other critical locations.
3. The longitudinal space between markings should be at least four times the height of the markings, on low speed roads, but should not exceed ten times the height under any condition.
4. Markings considered appropriate for use when warranted include the following:
   A. Regulatory
      STOP
      RIGHT (LEFT) TURN ONLY
      25 MPH
      SYMBOL ARROWS
   B. Warning
      STOP AHEAD
      SIGNAL AHEAD
      SCHOOL
      SCHOOL X-ING
      PED X-ING
      R X R (see RCPM standard)
   C. Guide
      US XXX
      ROUTE XXX
      STATE XXX
      Other words or symbols may be necessary under certain conditions
5. Uncontrolled use of pavement markings can result in driver confusion. Word and symbol markings should be no more than three lines.
6. The word "STOP" shall not be used on the pavement unless accompanied by a Stop line and Stop sign. The word "STOP" shall not be placed on the pavement in advance to a stop line, unless every vehicle is required to stop at all times.
7. Pavement markings should generally be no more than one lane in width, with School messages being the exception. For details of School and School crossing pavement markings, refer to Part VII of the "Texas Manual on Uniform Traffic Control Devices".
8. Spacing between letters should be approximately 4 inches. The width of letters may vary depending on the width of the travel lanes.
9. Lane-Use arrow markings may be used to convey either guidance or mandatory messages. Arrows used to convey a mandatory movement must be accompanied by standard signs and the pavement marking word "ONLY".
10. Pavement markings are to be located as specified elsewhere in the plans.

SPACING BETWEEN LINES OF PAVEMENT MARKINGS	
MPH	SPACING
≤ 45	MINIMUM 4 TIMES THE LETTER HEIGHT
> 45	MINIMUM - 4 TIMES THE LETTER HEIGHT MAXIMUM - 10 TIMES THE LETTER HEIGHT

Texas Department of Transportation
Traffic Operations Division

STANDARD PAVEMENT MARKINGS (ARROWS)

PM(6)-01

© TxDOT March 2001
REVISIONS

DN: TXDOT	CK: TXDOT	DW: TXDOT	CK: TXDOT
CONT	SECT	JOB	HIGHWAY
		2452-01-056	
DIST	COUNTY		SHEET NO.
			380

22H

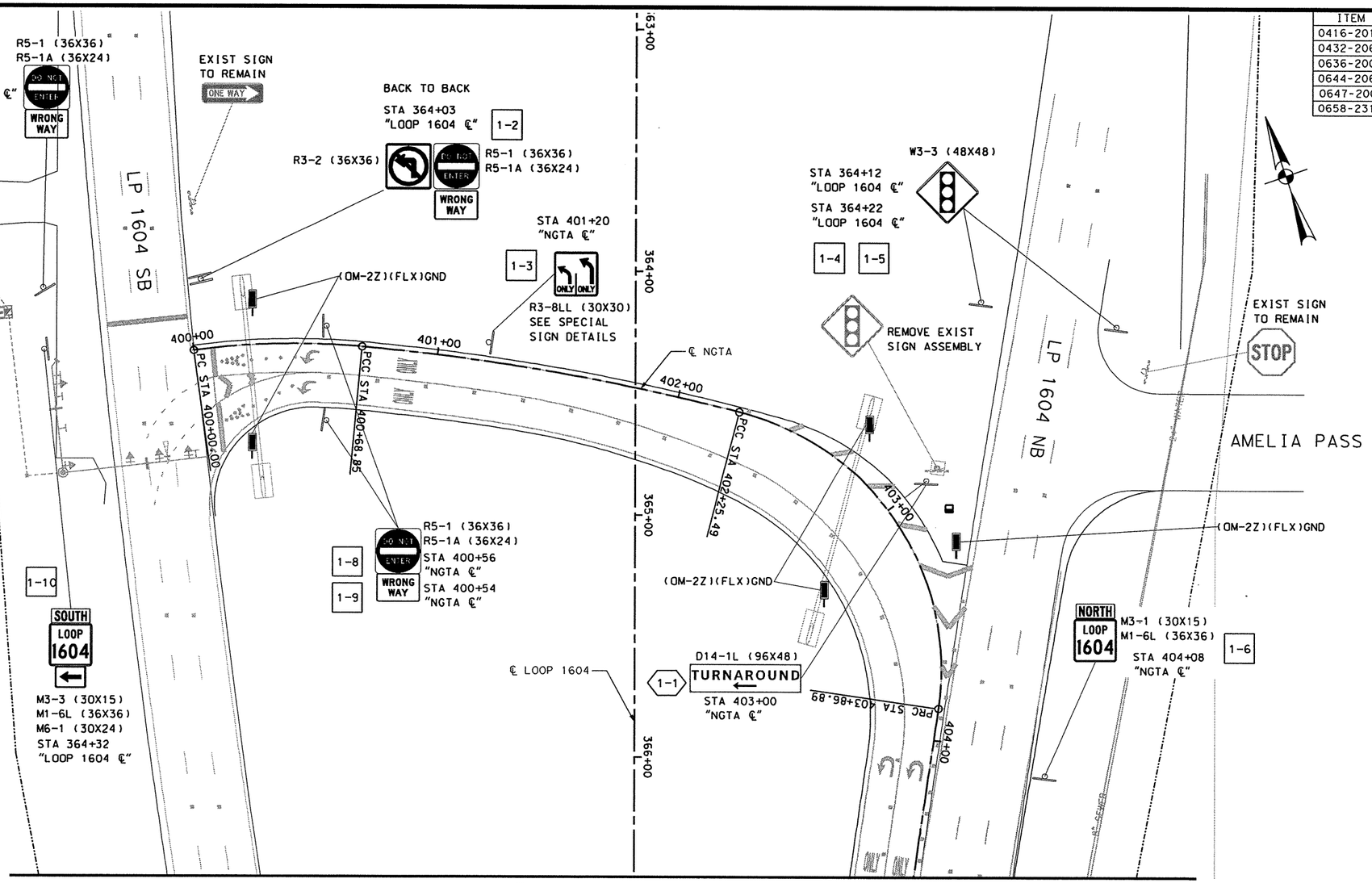

MATCHLINE STA. 366+50.00

ITEM	DESCRIPTION	UNIT	QTY
0416-2016	DRILL SHAFT (SIGN MTS)(12 IN)	LF	7
0432-2066	RIPRAP (CONC)(CL B)	CY	1.5
0636-2002	ALUMINUM SIGNS (TY G)	SF	32
0644-2060	REMOVE SM RD SN SUP & AM	EA	1
0647-2001	INSTALL LRSS (STRUCT STEEL)	LB	222
0658-2316	INSTL OM ASSM (OM-2Z)(FLX)GND	EA	5

RIP-RAP APRONS			
TYPE OF MOUNT	EA	MULTIPLIED BY C.Y.	TOTAL C.Y.
SINGLE POST	-	0.8	-
MULTI-POST	1	1.5	1.5
CLASS "B" CONCRETE GRAND TOTAL			1.5

LEGEND

- EXIST SIGN POST
- PROPOSED SIGN POST
- 1-4 SMALL ROAD AND GUIDE SIGN DESIGNATION
- 2-6 LARGE GUIDE SIGN DESIGNATION
- DELINEATORS
- OBJECT MARKERS
- SOLAR POWERED ROADSIDE FLASHING BEACON ASSEMBLY (SPRFBA)

REFER TO TRAFFIC SIGNAL PLAN SHEETS FOR ADDITIONAL SIGNS MOUNTED ON MAST ARMS

NOTES:

1. EXISTING SIGNS ARE SCREENED BACK AND ARE TO REMAIN AS IS UNLESS OTHERWISE NOTED.
2. ALL SIGN LOCATIONS ARE APPROXIMATE. EXACT LOCATIONS ARE TO BE STAKED BY THE CONTRACTOR AND APPROVED BY THE ENGINEER PRIOR TO CONSTRUCTION.
3. PAVEMENT MARKINGS ARE SHOWN FOR REFERENCE ONLY. SEE PAVEMENT MARKING SHEETS FOR DETAILS.
4. SEE LARGE SIGN SUMMARY AND THIS SHEET FOR LARGE SIGN QUANTITIES. SEE SMALL SIGN SUMMARY AND SMALL SIGN TALLY FOR SMALL SIGN QUANTITIES.

STATE OF TEXAS
GILMER D. GASTON
80472
LICENSED
PROFESSIONAL ENGINEER

GILMER D. GASTON P.E. — 6/26/2010 DATE

SCALE: PLAN - 1":50'

REV. NO.	DATE	DESCRIPTION	BY

ALAMO RMA

PAPE-DAWSON ENGINEERS
555 EAST RAMSEY | SAN ANTONIO, TEXAS 78216 | PHONE: 210.375.9000 FAX: 210.375.9010
TEXAS BOARD OF PROFESSIONAL ENGINEERS, FIRM REGISTRATION # 470

Texas Department of Transportation
© 2010

LOOP 1604

LARGE AND SMALL SIGN LAYOUT

BEGIN PROJECT TO STA. 366+50

SHEET 1 OF 26

DGN:	FED. RD. DIV. NO.	STATE	FEDERAL AID PROJECT NO.			HIGHWAY NO.
CHK DGN:	6	TEXAS	STP 2011(210)ES			LP 1604
DWG:	DIST.	COUNTY	CONT. NO.	SECT. NO.	JOB NO.	SHEET NO.
CHK DWG:	SAT	BEXAR	2452	01	050	381

Plotted on: 6/26/2010

Design Filename: p:\74\00\04\design\civil\traffic\740004SSL01.dgn

Plotted on: 6/26/2010

Design Filename: p:\74\00\04\design\civil\traffic\740004SSL02.dgn

ITEM	DESCRIPTION	UNIT	QTY
0416-2016	DRILL SHAFT (SIGN MTS)(12 IN)	LF	7
0432-2066	RIPRAP (CONC)(CL B)	CY	1.5
0636-2001	ALUMINUM SIGNS (TY A)	SF	6.9
0636-2002	ALUMINUM SIGNS (TY G)	SF	39
0647-2001	INSTALL LRSS (STRUCT STEEL)	LB	324.5

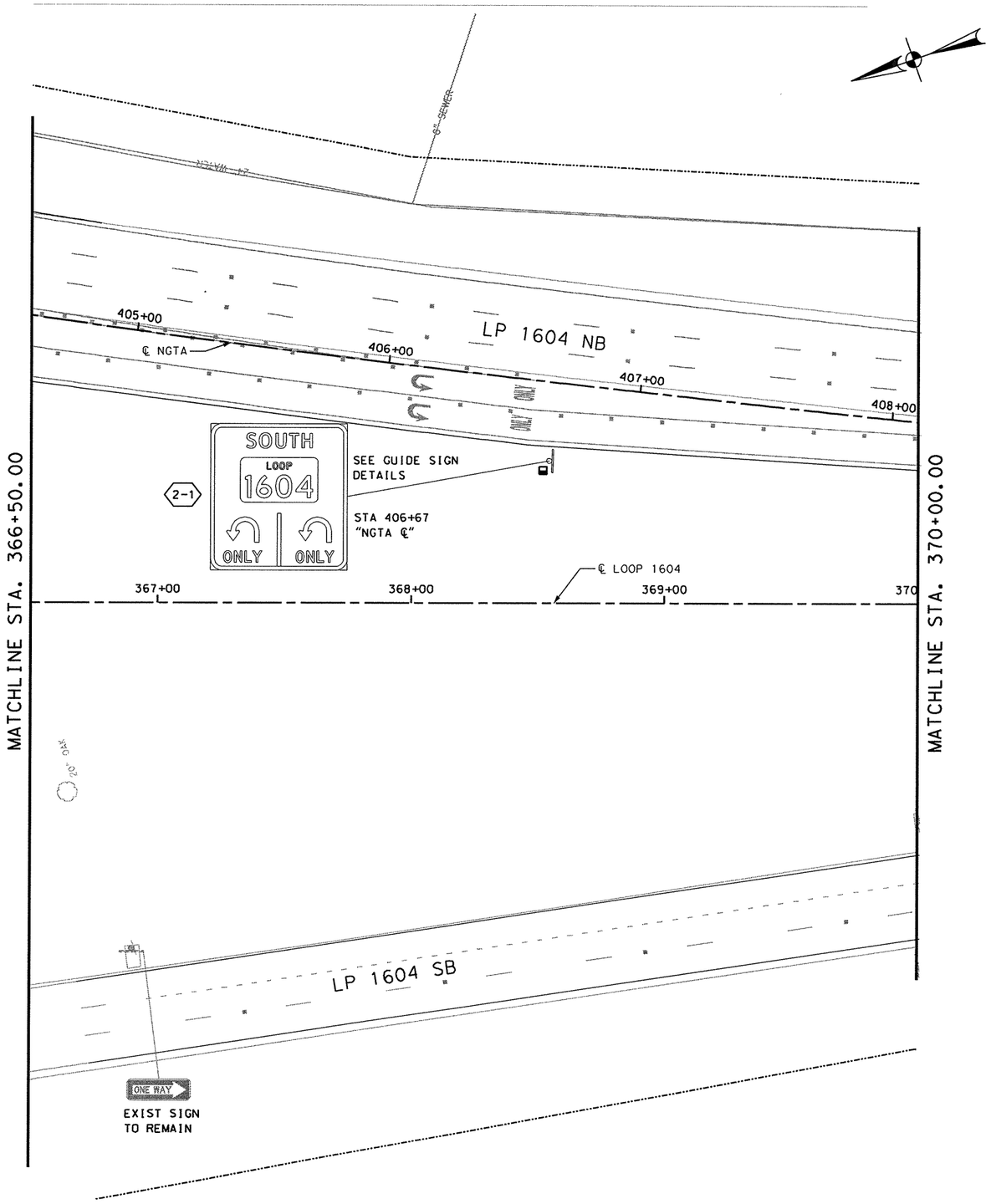

RIP-RAP APRONS			
TYPE OF MOUNT	EA	MULTIPLIED BY C.Y.	TOTAL C.Y.
SINGLE POST	–	0.8	–
MULTI-POST	1	1.5	1.5
CLASS "B" CONCRETE GRAND TOTAL			1.5

LEGEND

- EXIST SIGN POST
- PROPOSED SIGN POST
- 1-4 SMALL ROAD AND GUIDE SIGN DESIGNATION
- 2-6 LARGE GUIDE SIGN DESIGNATION
- DELINEATORS
- OBJECT MARKERS
- SOLAR POWERED ROADSIDE FLASHING BEACON ASSEMBLY (SPRFBA)

STATE OF TEXAS
GILMER D. GASTON
80472
LICENSED PROFESSIONAL ENGINEER

GILMER D. GASTON P.E. — 6/26/2010 DATE

SCALE: PLAN - 1":50'

NOTES:

1. EXISTING SIGNS ARE SCREENED BACK AND ARE TO REMAIN AS IS UNLESS OTHERWISE NOTED.
2. ALL SIGN LOCATIONS ARE APPROXIMATE. EXACT LOCATIONS ARE TO BE STAKED BY THE CONTRACTOR AND APPROVED BY THE ENGINEER PRIOR TO CONSTRUCTION.
3. PAVEMENT MARKINGS ARE SHOWN FOR REFERENCE ONLY. SEE PAVEMENT MARKING SHEETS FOR DETAILS.
4. SEE LARGE SIGN SUMMARY AND THIS SHEET FOR LARGE SIGN QUANTITIES. SEE SMALL SIGN SUMMARY AND SMALL SIGN TALLY FOR SMALL SIGN QUANTITIES.

REV. NO.	DATE	DESCRIPTION	BY

ALAMO RMA

PAPE-DAWSON ENGINEERS
555 EAST RAMSEY | SAN ANTONIO, TEXAS 78216 | PHONE: 210.375.9000 FAX: 210.375.9010
TEXAS BOARD OF PROFESSIONAL ENGINEERS, FIRM REGISTRATION # 470

Texas Department of Transportation ©2010

LOOP 1604

LARGE AND SMALL SIGN LAYOUT

STA. 366+50 TO STA. 370+00

SHEET 2 OF 26

DGN:	FED. RD. DIV. NO.	STATE	FEDERAL AID PROJECT NO.			HIGHWAY NO.
CHK DGN:	6	TEXAS	STP 2011(210)ES			LP 1604
DWG:	DIST.	COUNTY	CONT. NO.	SECT. NO.	JOB NO.	SHEET NO.
CHK DWG:	SAT	BEXAR	2452	01	050	382

Plotted on: 6/26/2010

ITEM	DESCRIPTION	UNIT	QTY
0658-2316	INSTL OM ASSM (OM-2Z)(FLX)GND	EA	4

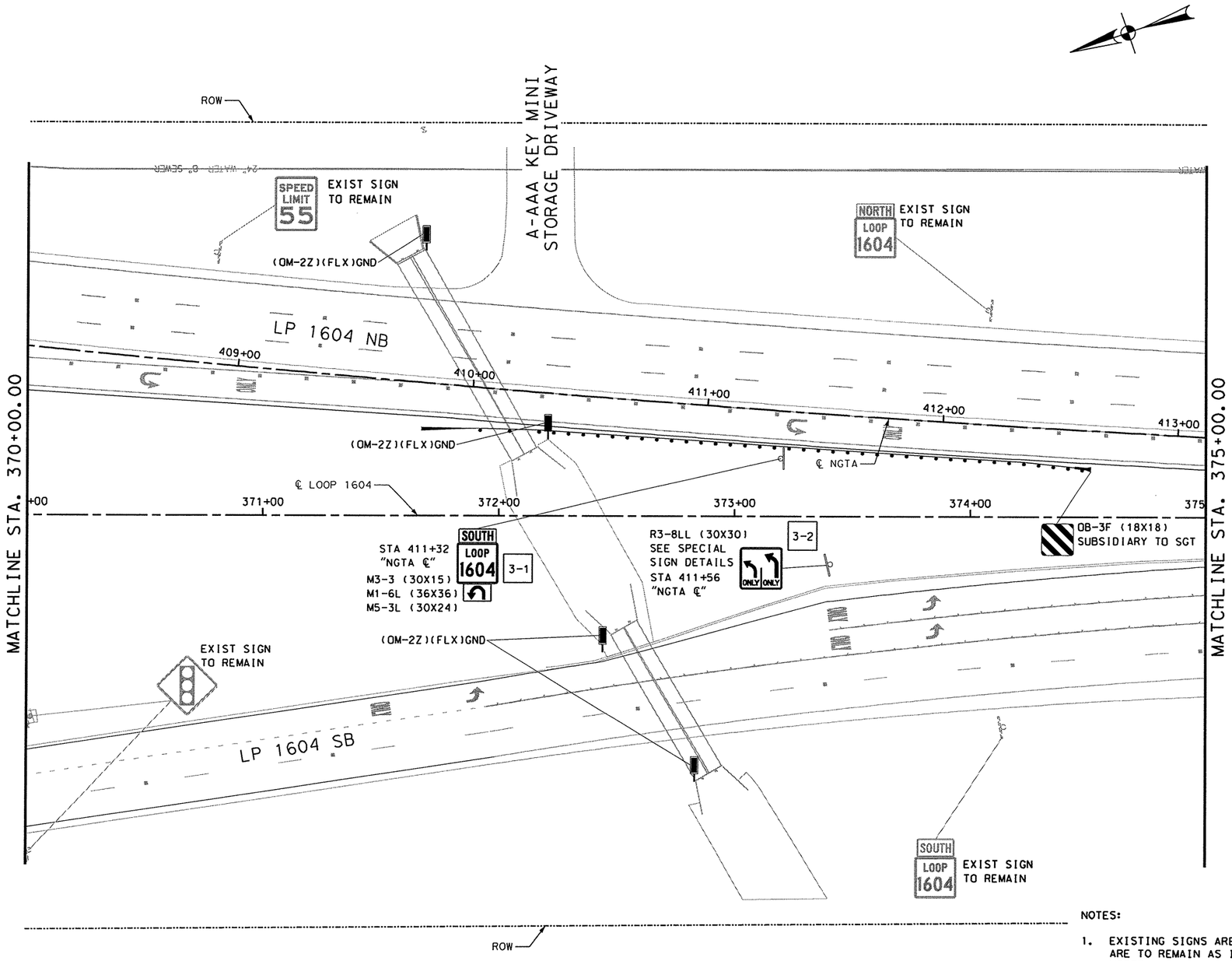

RIP-RAP APRONS				
TYPE OF MOUNT		EA	MULTIPLIED BY C.Y.	TOTAL C.Y.
SINGLE POST		-	0.8	-
MULTI-POST		-	1.5	-
CLASS "B" CONCRETE GRAND TOTAL				0.0

LEGEND

- EXIST SIGN POST
- PROPOSED SIGN POST
- 1-4 SMALL ROAD AND GUIDE SIGN DESIGNATION
- 2-6 LARGE GUIDE SIGN DESIGNATION
- DELINEATORS
- OBJECT MARKERS
- SOLAR POWERED ROADSIDE FLASHING BEACON ASSEMBLY (SPRFBA)

NOTES:

1. EXISTING SIGNS ARE SCREENED BACK AND ARE TO REMAIN AS IS UNLESS OTHERWISE NOTED.
2. ALL SIGN LOCATIONS ARE APPROXIMATE. EXACT LOCATIONS ARE TO BE STAKED BY THE CONTRACTOR AND APPROVED BY THE ENGINEER PRIOR TO CONSTRUCTION.
3. PAVEMENT MARKINGS ARE SHOWN FOR REFERENCE ONLY. SEE PAVEMENT MARKING SHEETS FOR DETAILS.
4. SEE LARGE SIGN SUMMARY AND THIS SHEET FOR LARGE SIGN QUANTITIES. SEE SMALL SIGN SUMMARY AND SMALL SIGN TALLY FOR SMALL SIGN QUANTITIES.

STATE OF TEXAS · GILMER D. GASTON · 80472 · LICENSED PROFESSIONAL ENGINEER

GILMER D. GASTON P.E. — 6/26/2010 DATE

SCALE: PLAN - 1":50'

REV. NO.	DATE	DESCRIPTION	BY

ALAMO RMA

PAPE-DAWSON ENGINEERS
555 EAST RAMSEY | SAN ANTONIO, TEXAS 78216 | PHONE: 210.375.9000 FAX: 210.375.9010
TEXAS BOARD OF PROFESSIONAL ENGINEERS, FIRM REGISTRATION # 470

Texas Department of Transportation © 2010

LOOP 1604

LARGE AND SMALL SIGN LAYOUT

STA. 370+00 TO STA. 375+00

SHEET 3 OF 26

DGN:	FED. RD. DIV. NO.	STATE	FEDERAL AID PROJECT NO.			HIGHWAY NO.
CHK DGN:	6	TEXAS	STP 2011(210)ES			LP 1604
DWG:	DIST.	COUNTY	CONT. NO.	SECT. NO.	JOB NO.	SHEET NO.
CHK DWG:	SAT	BEXAR	2452	01	050	383

Design Filename: p:\74\00\04\design\civil\traffic\740004SSL03.dgn

Plotted on: 6/26/2010

Design filename: p:\74\00\04\design\civil\traffic\740004SSL04.dgn

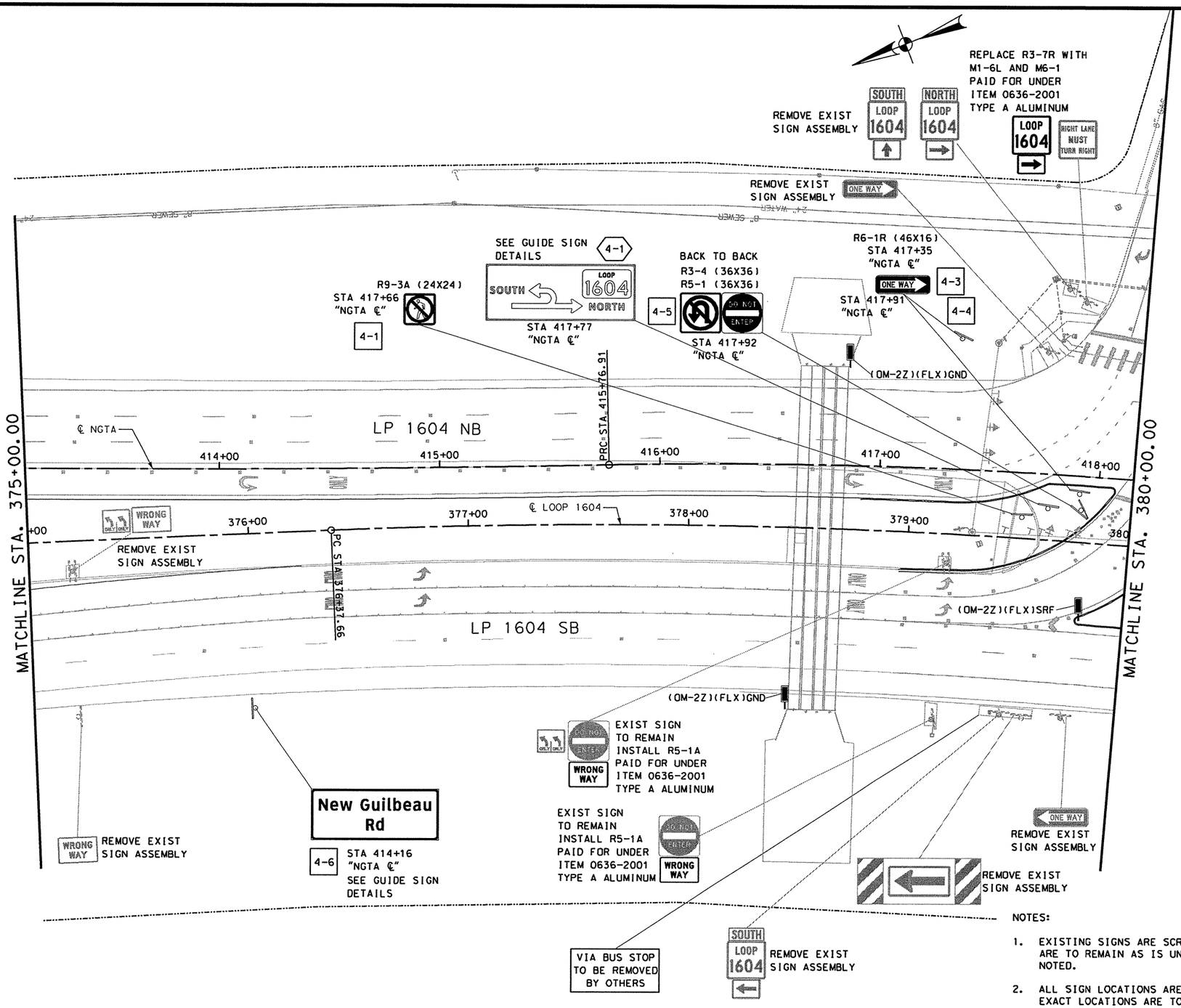

ITEM	DESCRIPTION	UNIT	QTY
0416-2016	DRILL SHAFT (SIGN MTS)(12 IN)	LF	7
0636-2001	ALUMINUM SIGNS (TY A)	SF	32.9
0636-2002	ALUMINUM SIGNS (TY G)	SF	42
0644-2060	REMOVE SM RD SN SUP & AM	EA	7
0647-2001	INSTALL LRSS (STRUCT STEEL)	LB	270.6
0658-2316	INSTL OM ASSM (OM-2Z)(FLX)GND	EA	2
0658-2318	INSTL OM ASSM (OM-2Z)(FLX)SRF	EA	1

RIP-RAP APRONS			
TYPE OF MOUNT	EA	MULTIPLIED BY C.Y.	TOTAL C.Y.
SINGLE POST	-	0.8	-
MULTI-POST	-	1.5	-
CLASS "B" CONCRETE GRAND TOTAL			0.0

LEGEND

- EXIST SIGN POST
- PROPOSED SIGN POST
- 1-4 SMALL ROAD AND GUIDE SIGN DESIGNATION
- 2-6 LARGE GUIDE SIGN DESIGNATION
- DELINEATORS
- OBJECT MARKERS
- SOLAR POWERED ROADSIDE FLASHING BEACON ASSEMBLY (SPRFBA)

REFER TO TRAFFIC SIGNAL PLAN SHEETS FOR ADDITIONAL SIGNS MOUNTED ON MAST ARMS

NOTES:

1. EXISTING SIGNS ARE SCREENED BACK AND ARE TO REMAIN AS IS UNLESS OTHERWISE NOTED.
2. ALL SIGN LOCATIONS ARE APPROXIMATE. EXACT LOCATIONS ARE TO BE STAKED BY THE CONTRACTOR AND APPROVED BY THE ENGINEER PRIOR TO CONSTRUCTION.
3. PAVEMENT MARKINGS ARE SHOWN FOR REFERENCE ONLY. SEE PAVEMENT MARKING SHEETS FOR DETAILS.
4. SEE LARGE SIGN SUMMARY AND THIS SHEET FOR LARGE SIGN QUANTITIES. SEE SMALL SIGN SUMMARY AND SMALL SIGN TALLY FOR SMALL SIGN QUANTITIES.

STATE OF TEXAS
GILMER D. GASTON
80472
LICENSED PROFESSIONAL ENGINEER

GILMER D. GASTON P.E. — 6/26/2010 DATE

SCALE: PLAN - 1":50'

REV. NO.	DATE	DESCRIPTION	BY

ALAMO RMA

PAPE-DAWSON ENGINEERS
555 EAST RAMSEY | SAN ANTONIO, TEXAS 78216 | PHONE: 210.375.9000 FAX: 210.375.9010
TEXAS BOARD OF PROFESSIONAL ENGINEERS, FIRM REGISTRATION # 470

Texas Department of Transportation © 2010

LOOP 1604

LARGE AND SMALL SIGN LAYOUT

STA. 375+00 TO STA. 380+00

SHEET 4 OF 26

DGN:	FED. RD. DIV. NO.	STATE	FEDERAL AID PROJECT NO.			HIGHWAY NO.
CHK DGN:	6	TEXAS	STP 2011(210)ES			LP 1604
DWG:	DIST.	COUNTY	CONT. NO.	SECT. NO.	JOB NO.	SHEET NO.
CHK DWG:	SAT	BEXAR	2452	01	050	384

Plotted on: 6/26/2010

Design Filename: p:\74\00\04\design\civil\traffic\740004SL05.dgn

ITEM	DESCRIPTION	UNIT	QTY
0416-2031	DRILL SHAFT (TRF SIG POLE) (30 IN)	LF	11.3
0636-2001	ALUMINUM SIGNS (TY A)	SF	37.5
0644-2060	REMOVE SM RD SN SUP & AM	EA	7
0658-2318	INSTL OM ASSM (OM-2Z)(FLX)SRF	EA	1
0686-2031	INS TRF SIG PL AM(S) 1 ARM (32')	EA	1

RIP-RAP APRONS			
TYPE OF MOUNT	EA	MULTIPLIED BY C.Y.	TOTAL C.Y.
SINGLE POST	-	0.8	-
MULTI-POST	-	1.5	-
CLASS "B" CONCRETE GRAND TOTAL			0.0

LEGEND

- EXIST SIGN POST
- PROPOSED SIGN POST
- 1-4 SMALL ROAD AND GUIDE SIGN DESIGNATION
- 2-6 LARGE GUIDE SIGN DESIGNATION
- DELINEATORS
- OBJECT MARKERS
- SOLAR POWERED ROADSIDE FLASHING BEACON ASSEMBLY (SPRFBA)

PLACE ±210 LF AWAY FROM STOP BAR
INSTALL OVER LANES ON SMA-80 POLE
SEE SHEET 410 FOR DETAILS

SOUTH LP 1604 | SOUTH LP 1604 | NORTH LP 1604

SEE GUIDE SIGN DETAILS

NEW GUILBEAU RD

5-7 R1-2 (48X48X48) STA 419+08 "NGTA ℄"

5-1 R4-7 (36X48) STA 418+25 "NGTA ℄"

(OM-2Z)(FLX)SRF

REMOVE EXIST SIGN ASSEMBLY

BACK TO BACK
R5-1 (36X36)
R5-1A (36X24)
R3-7R (30X30) STA 419+53 "NGTA ℄"
WRONG WAY
5-2

New Guilbeau Rd
SEE GUIDE SIGN DETAILS
STA 421+75 "NGTA ℄"
5-5

WRONG WAY REMOVE EXIST SIGN ASSEMBLY

REMOVE EXIST SIGN

LP 1604 NB

℄ NGTA

419+00 420+00 421+00 422+00 423+00

PC STA 420+32.88

℄ LOOP 1604

381+00 382+00 383+00 384+00 385

MATCHLINE STA. 380+00.00

MATCHLINE STA. 385+00.00

EXIST SIGN TO REMAIN
INSTALL R5-1A
PAID FOR UNDER ITEM 0636-2001 TYPE A ALUMINUM
WRONG WAY

WRONG WAY REMOVE EXIST SIGN ASSEMBLY

LP 1604 SB

STA 418+49 "NGTA ℄"
R5-1 (36X36)
5-6

REMOVE EXIST SIGN

R3-2 (36X36) STA 418+64 "NGTA ℄"
5-3

R9-3A (24X24) STA 418+59 "NGTA ℄"
5-4

REFER TO TRAFFIC SIGNAL PLAN SHEETS FOR ADDITIONAL SIGNS MOUNTED ON MAST ARMS

NOTES:

1. EXISTING SIGNS ARE SCREENED BACK AND ARE TO REMAIN AS IS UNLESS OTHERWISE NOTED.
2. ALL SIGN LOCATIONS ARE APPROXIMATE. EXACT LOCATIONS ARE TO BE STAKED BY THE CONTRACTOR AND APPROVED BY THE ENGINEER PRIOR TO CONSTRUCTION.
3. PAVEMENT MARKINGS ARE SHOWN FOR REFERENCE ONLY. SEE PAVEMENT MARKING SHEETS FOR DETAILS.
4. SEE LARGE SIGN SUMMARY AND THIS SHEET FOR LARGE SIGN QUANTITIES. SEE SMALL SIGN SUMMARY AND SMALL SIGN TALLY FOR SMALL SIGN QUANTITIES.

STATE OF TEXAS · GILMER D. GASTON · 80472 · LICENSED PROFESSIONAL ENGINEER

GILMER D. GASTON P.E. — 6/26/2010 DATE

SCALE: PLAN - 1":50'

REV. NO.	DATE	DESCRIPTION	BY

ALAMO RMA

PAPE-DAWSON ENGINEERS
555 EAST RAMSEY | SAN ANTONIO, TEXAS 78216 | PHONE: 210.375.9000 FAX: 210.375.9010
TEXAS BOARD OF PROFESSIONAL ENGINEERS, FIRM REGISTRATION # 470

Texas Department of Transportation ©2010

LOOP 1604

LARGE AND SMALL SIGN LAYOUT

STA. 375+00 TO STA. 380+00

SHEET 5 OF 26

DGN:	FED. RD. DIV. NO.	STATE	FEDERAL AID PROJECT NO.			HIGHWAY NO.
CHK DGN:	6	TEXAS	STP 2011(210)ES			LP 1604
DWG:	DIST.	COUNTY	CONT. NO.	SECT. NO.	JOB NO.	SHEET NO.
CHK DWG:	SAT	BEXAR	2452	01	050	385

Plotted on: 6/26/2010

Design Filename: p:\74\00\04\design\civil\traffic\740004SSL06.dgn

ITEM	DESCRIPTION	UNIT	QTY
0644-2060	REMOVE SM RD SN SUP & AM	EA	1

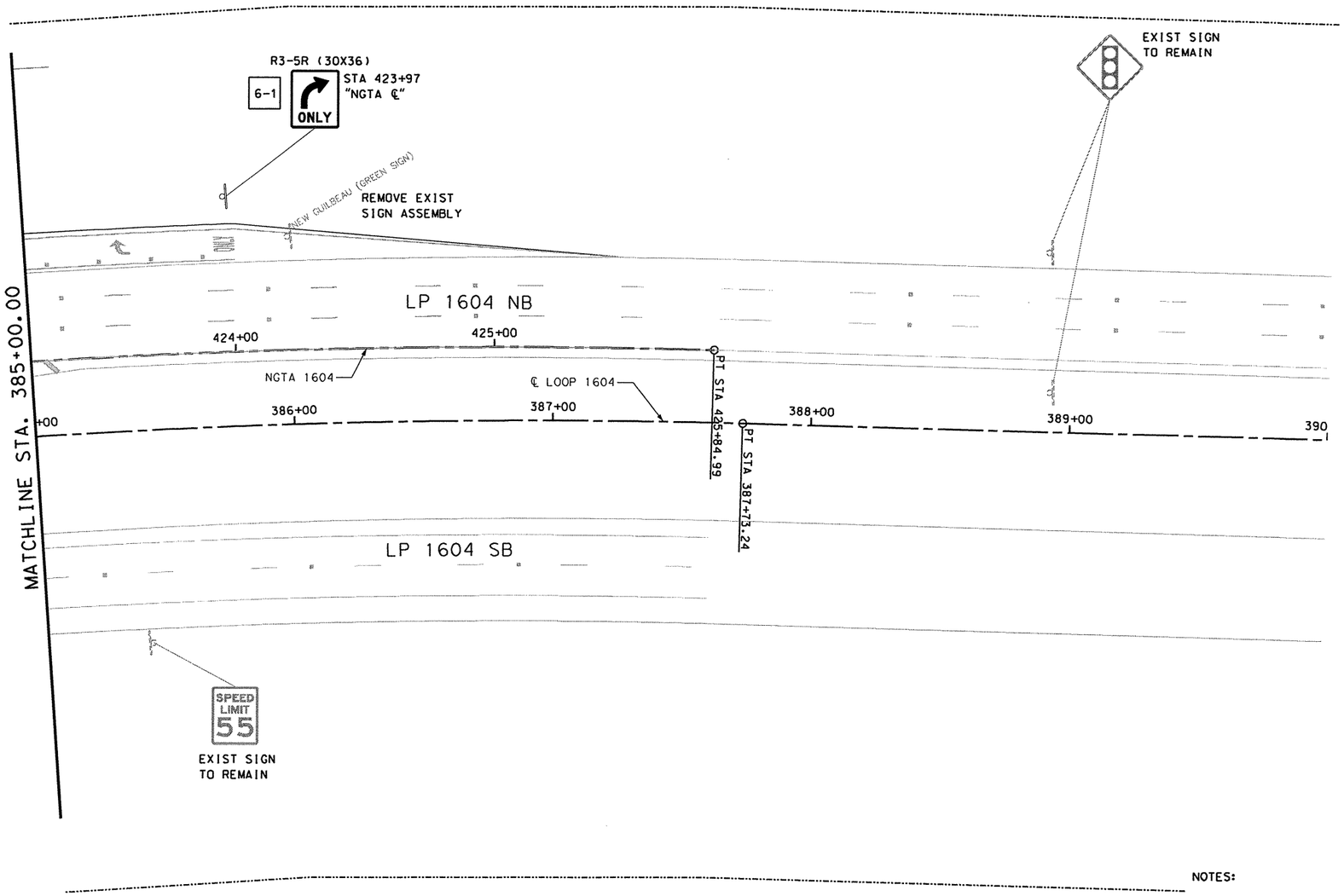

RIP-RAP APRONS				
TYPE OF MOUNT		EA	MULTIPLIED BY C.Y.	TOTAL C.Y.
SINGLE POST		-	0.8	-
MULTI-POST		-	1.5	-
CLASS "B" CONCRETE GRAND TOTAL				0.0

LEGEND

- EXIST SIGN POST
- PROPOSED SIGN POST
- 1-4 SMALL ROAD AND GUIDE SIGN DESIGNATION
- 2-6 LARGE GUIDE SIGN DESIGNATION
- DELINEATORS
- OBJECT MARKERS
- SOLAR POWERED ROADSIDE FLASHING BEACON ASSEMBLY (SPRFBA)

NOTES:

1. EXISTING SIGNS ARE SCREENED BACK AND ARE TO REMAIN AS IS UNLESS OTHERWISE NOTED.
2. ALL SIGN LOCATIONS ARE APPROXIMATE. EXACT LOCATIONS ARE TO BE STAKED BY THE CONTRACTOR AND APPROVED BY THE ENGINEER PRIOR TO CONSTRUCTION.
3. PAVEMENT MARKINGS ARE SHOWN FOR REFERENCE ONLY. SEE PAVEMENT MARKING SHEETS FOR DETAILS.
4. SEE LARGE SIGN SUMMARY AND THIS SHEET FOR LARGE SIGN QUANTITIES. SEE SMALL SIGN SUMMARY AND SMALL SIGN TALLY FOR SMALL SIGN QUANTITIES.

STATE OF TEXAS
GILMER D. GASTON
80472
LICENSED
PROFESSIONAL ENGINEER

GILMER D. GASTON P.E. — 6/26/2010 DATE

SCALE: PLAN - 1":50'

REV. NO.	DATE	DESCRIPTION	BY

ALAMO RMA

PAPE-DAWSON ENGINEERS

555 EAST RAMSEY | SAN ANTONIO, TEXAS 78216 | PHONE: 210.375.9000 FAX: 210.375.9010

TEXAS BOARD OF PROFESSIONAL ENGINEERS, FIRM REGISTRATION # 470

Texas Department of Transportation
© 2010

LOOP 1604

LARGE AND SMALL SIGN LAYOUT

STA. 380+00 TO STA. 385+00

SHEET 6 OF 26

DGN:	FED. RD. DIV. NO.	STATE	FEDERAL AID PROJECT NO.			HIGHWAY NO.
CHK DGN:	6	TEXAS	STP 2011(210)ES			LP 1604
DWG:	DIST.	COUNTY	CONT. NO.	SECT. NO.	JOB NO.	SHEET NO.
CHK DWG:	SAT	BEXAR	2452	01	050	386

Plotted on: 6/26/2010

Design Filename: p:\74\00\04\design\civil\traffic\740004SL07.dgn

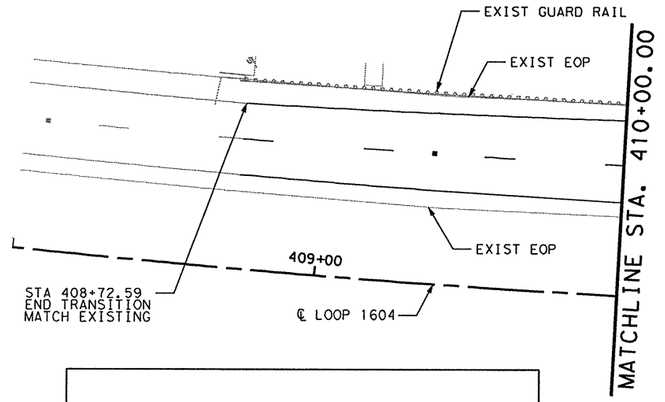

NO SIGNS THIS SHEET

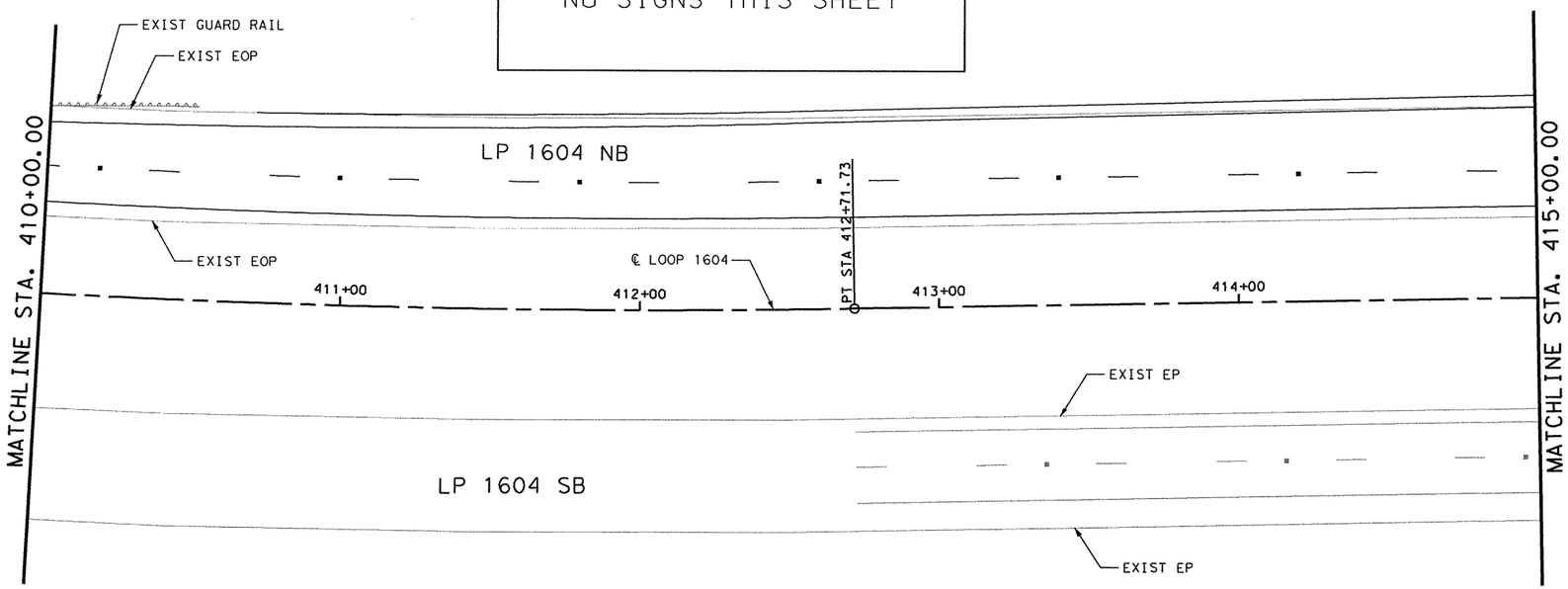

NO SIGNS THIS SHEET

RIP-RAP APRONS			
TYPE OF MOUNT	EA	MULTIPLIED BY C.Y.	TOTAL C.Y.
SINGLE POST		0.8	
MULTI-POST		1.5	
CLASS "B" CONCRETE GRAND TOTAL			

LEGEND

- EXIST SIGN POST
- PROPOSED SIGN POST
- 1-4 SMALL ROAD AND GUIDE SIGN DESIGNATION
- 2-6 LARGE GUIDE SIGN DESIGNATION
- DELINEATORS
- OBJECT MARKERS
- SOLAR POWERED ROADSIDE FLASHING BEACON ASSEMBLY (SPRFBA)

NOTES:

1. EXISTING SIGNS ARE SCREENED BACK AND ARE TO REMAIN AS IS UNLESS OTHERWISE NOTED.
2. ALL SIGN LOCATIONS ARE APPROXIMATE. EXACT LOCATIONS ARE TO BE STAKED BY THE CONTRACTOR AND APPROVED BY THE ENGINEER PRIOR TO CONSTRUCTION.
3. PAVEMENT MARKINGS ARE SHOWN FOR REFERENCE ONLY. SEE PAVEMENT MARKING SHEETS FOR DETAILS.
4. SEE LARGE SIGN SUMMARY AND THIS SHEET FOR LARGE SIGN QUANTITIES. SEE SMALL SIGN SUMMARY AND SMALL SIGN TALLY FOR SMALL SIGN QUANTITIES.

STATE OF TEXAS · GILMER D. GASTON · 80472 · LICENSED PROFESSIONAL ENGINEER

GILMER D. GASTON P.E. — 6/26/2010 DATE

25 0 25 50

SCALE: PLAN - 1":50'

REV. NO.	DATE	DESCRIPTION	BY

ALAMO RMA

PAPE-DAWSON ENGINEERS
555 EAST RAMSEY | SAN ANTONIO, TEXAS 78216 | PHONE: 210.375.9000 FAX: 210.375.9010
TEXAS BOARD OF PROFESSIONAL ENGINEERS, FIRM REGISTRATION # 470

Texas Department of Transportation © 2010

LOOP 1604

LARGE AND SMALL SIGN LAYOUT

STA. 410+00 TO STA. 415+00

SHEET 7 OF 26

DGN:	FED. RD. DIV. NO.	STATE	FEDERAL AID PROJECT NO.			HIGHWAY NO.
CHK DGN:	6	TEXAS	STP 2011(210)ES			LP 1604
DWG:	DIST.	COUNTY	CONT. NO.	SECT. NO.	JOB NO.	SHEET NO.
CHK DWG:	SAT	BEXAR	2452	01	050	387

Plotted on: 6/26/2010

Design Filename: p:\74\00\04\design\civil\traffic\740004SL08.dgn

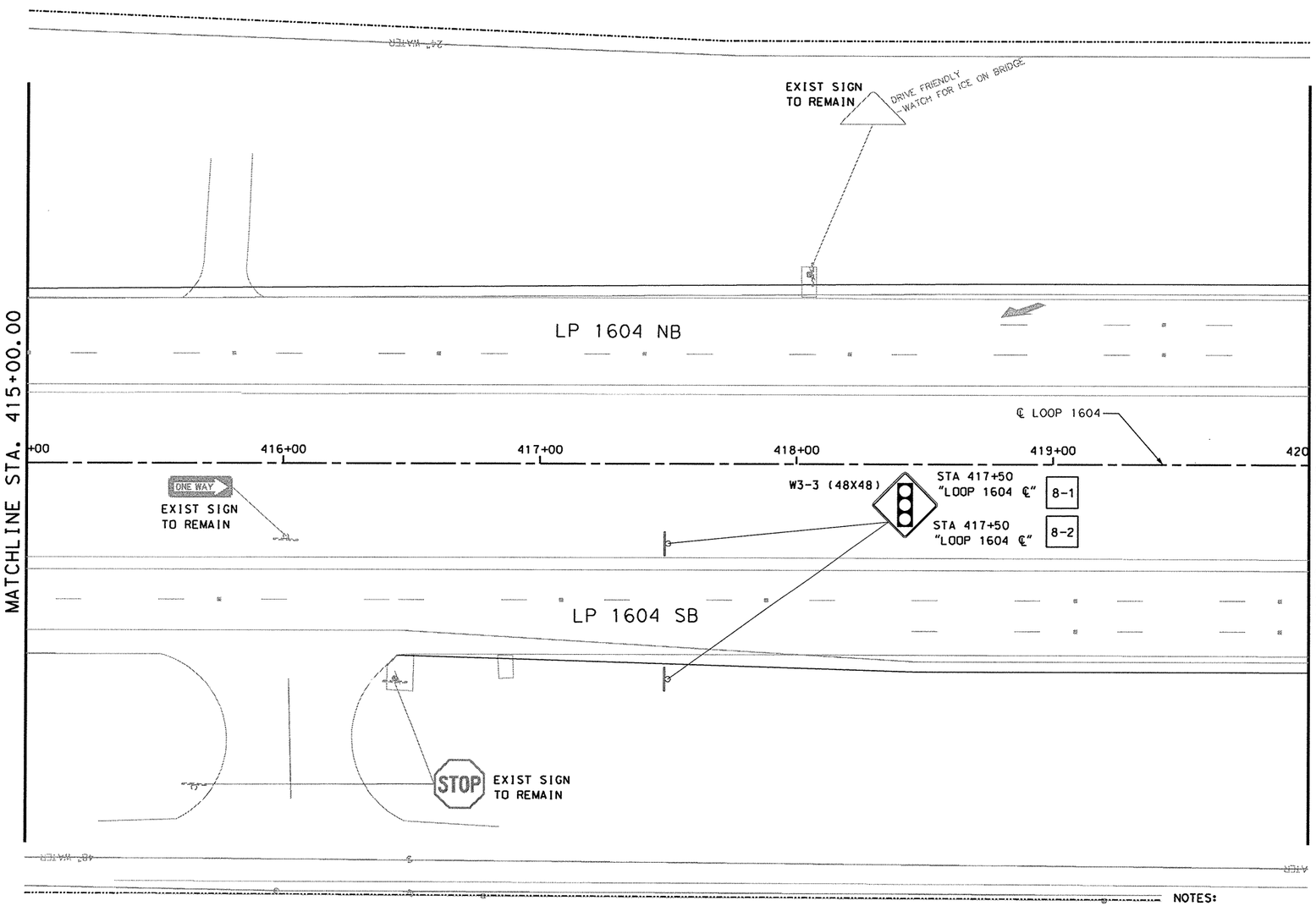

RIP-RAP APRONS				
TYPE OF MOUNT		EA	MULTIPLIED BY C.Y.	TOTAL C.Y.
SINGLE POST	⊖	-	0.8	-
MULTI-POST	▭	-	1.5	-
CLASS "B" CONCRETE GRAND TOTAL				0.0

LEGEND

- EXIST SIGN POST
- PROPOSED SIGN POST
- 1-4 SMALL ROAD AND GUIDE SIGN DESIGNATION
- 2-6 LARGE GUIDE SIGN DESIGNATION
- R.O.W.
- DELINEATORS
- DRAINAGE AREA BOUNDARY
- 850 EXISTING CONTOUR
- OBJECT MARKERS
- FLOW ARROW
- SOLAR POWERED ROADSIDE FLASHING BEACON ASSEMBLY (SPRFBA)

LEGEND

STATE OF TEXAS
GILMER D. GASTON
80472
LICENSED PROFESSIONAL ENGINEER

GILMER D. GASTON P.E. — 6/26/2010 DATE

SCALE: PLAN - 1":50'

REV. NO.	DATE	DESCRIPTION	BY

ALAMO RMA

PAPE-DAWSON ENGINEERS
555 EAST RAMSEY | SAN ANTONIO, TEXAS 78216 | PHONE: 210.375.9000 FAX: 210.375.9010
TEXAS BOARD OF PROFESSIONAL ENGINEERS, FIRM REGISTRATION # 470

Texas Department of Transportation
© 2010

NOTES:

1. EXISTING SIGNS ARE SCREENED BACK AND ARE TO REMAIN AS IS UNLESS OTHERWISE NOTED.
2. ALL SIGN LOCATIONS ARE APPROXIMATE. EXACT LOCATIONS ARE TO BE STAKED BY THE CONTRACTOR AND APPROVED BY THE ENGINEER PRIOR TO CONSTRUCTION.
3. PAVEMENT MARKINGS ARE SHOWN FOR REFERENCE ONLY. SEE PAVEMENT MARKING SHEETS FOR DETAILS.
4. SEE LARGE SIGN SUMMARY AND THIS SHEET FOR LARGE SIGN QUANTITIES. SEE SMALL SIGN SUMMARY AND SMALL SIGN TALLY FOR SMALL SIGN QUANTITIES.

LOOP 1604

LARGE AND SMALL SIGN LAYOUT

STA. 415+00 TO STA. 420+00

SHEET 8 OF 26

DGN:	FED. RD. DIV. NO.	STATE	FEDERAL AID PROJECT NO.			HIGHWAY NO.
CHK DGN:	6	TEXAS	STP 2011(210)ES			LP 1604
DWG:	DIST.	COUNTY	CONT. NO.	SECT. NO.	JOB NO.	SHEET NO.
CHK DWG:	SAT	BEXAR	2452	01	050	388

Plotted on: 6/26/2010

Design Filename: p:\74\00\04\design\civil\traffic\740004SSL09.dgn

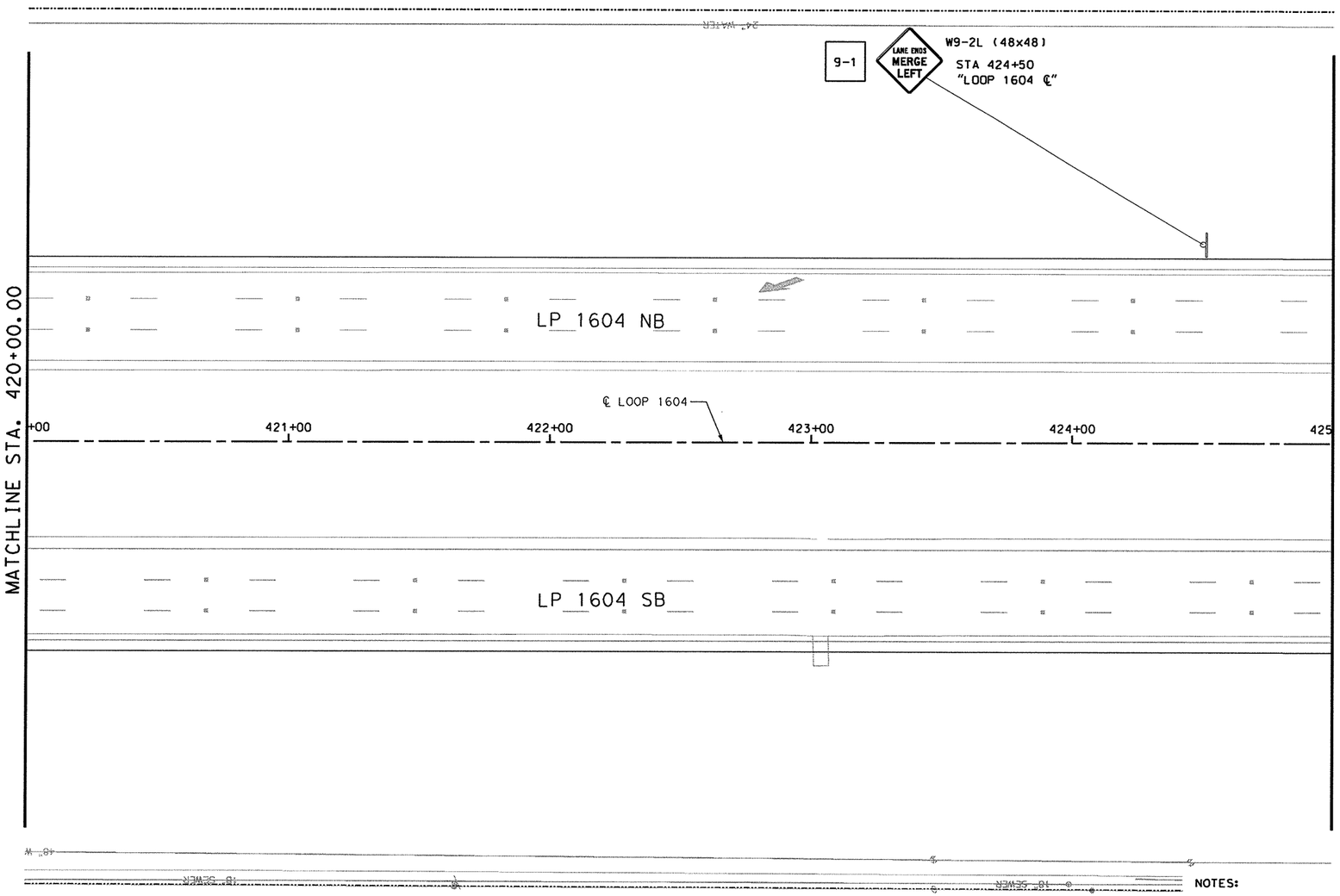

RIP-RAP APRONS			
TYPE OF MOUNT	EA	MULTIPLIED BY C.Y.	TOTAL C.Y.
SINGLE POST ◇	-	0.8	-
MULTI-POST ▣	-	1.5	-
CLASS "B" CONCRETE GRAND TOTAL			0.0

LEGEND

- EXIST SIGN POST
- PROPOSED SIGN POST
- 1-4 SMALL ROAD AND GUIDE SIGN DESIGNATION
- 2-6 LARGE GUIDE SIGN DESIGNATION
- DELINEATORS
- OBJECT MARKERS
- SOLAR POWERED ROADSIDE FLASHING BEACON ASSEMBLY (SPRFBA)

NOTES:

1. EXISTING SIGNS ARE SCREENED BACK AND ARE TO REMAIN AS IS UNLESS OTHERWISE NOTED.
2. ALL SIGN LOCATIONS ARE APPROXIMATE. EXACT LOCATIONS ARE TO BE STAKED BY THE CONTRACTOR AND APPROVED BY THE ENGINEER PRIOR TO CONSTRUCTION.
3. PAVEMENT MARKINGS ARE SHOWN FOR REFERENCE ONLY. SEE PAVEMENT MARKING SHEETS FOR DETAILS.
4. SEE LARGE SIGN SUMMARY AND THIS SHEET FOR LARGE SIGN QUANTITIES. SEE SMALL SIGN SUMMARY AND SMALL SIGN TALLY FOR SMALL SIGN QUANTITIES.

STATE OF TEXAS
GILMER D. GASTON
80472
LICENSED
PROFESSIONAL ENGINEER

GILMER D. GASTON P.E. — 6/26/2010 DATE

SCALE: PLAN - 1":50'

REV. NO.	DATE	DESCRIPTION	BY

ALAMO RMA

PAPE-DAWSON ENGINEERS
555 EAST RAMSEY | SAN ANTONIO, TEXAS 78216 | PHONE: 210.375.9000 FAX: 210.375.9010
TEXAS BOARD OF PROFESSIONAL ENGINEERS, FIRM REGISTRATION # 470

Texas Department of Transportation
© 2010

LOOP 1604

LARGE AND SMALL SIGN LAYOUT

STA. 420+00 TO STA. 425+00

SHEET 9 OF 26

DGN:	FED. RD. DIV. NO.	STATE	FEDERAL AID PROJECT NO.			HIGHWAY NO.
CHK DGN:	6	TEXAS	STP 2011(210)ES			LP 1604
DWG:	DIST.	COUNTY	CONT. NO.	SECT. NO.	JOB NO.	SHEET NO.
CHK DWG:	SAT	BEXAR	2452	01	050	389

Plotted on: 6/26/2010

Design Filename: p:\74\00\04\design\civil\traffic\740004SSL10.dgn

ITEM	DESCRIPTION	UNIT	QTY
0416-2016	DRILL SHAFT (SIGN MTS)(12 IN)	LF	7
0432-2066	RIPRAP (CONC)(CL B)	CY	1.5
0636-2002	ALUMINUM SIGNS (TY G)	SF	32
0647-2001	INSTALL LRSS (STRUCT STEEL)	LB	234.5
0658-2316	INSTL OM ASSM (OM-2Z)(FLX)GND	EA	4

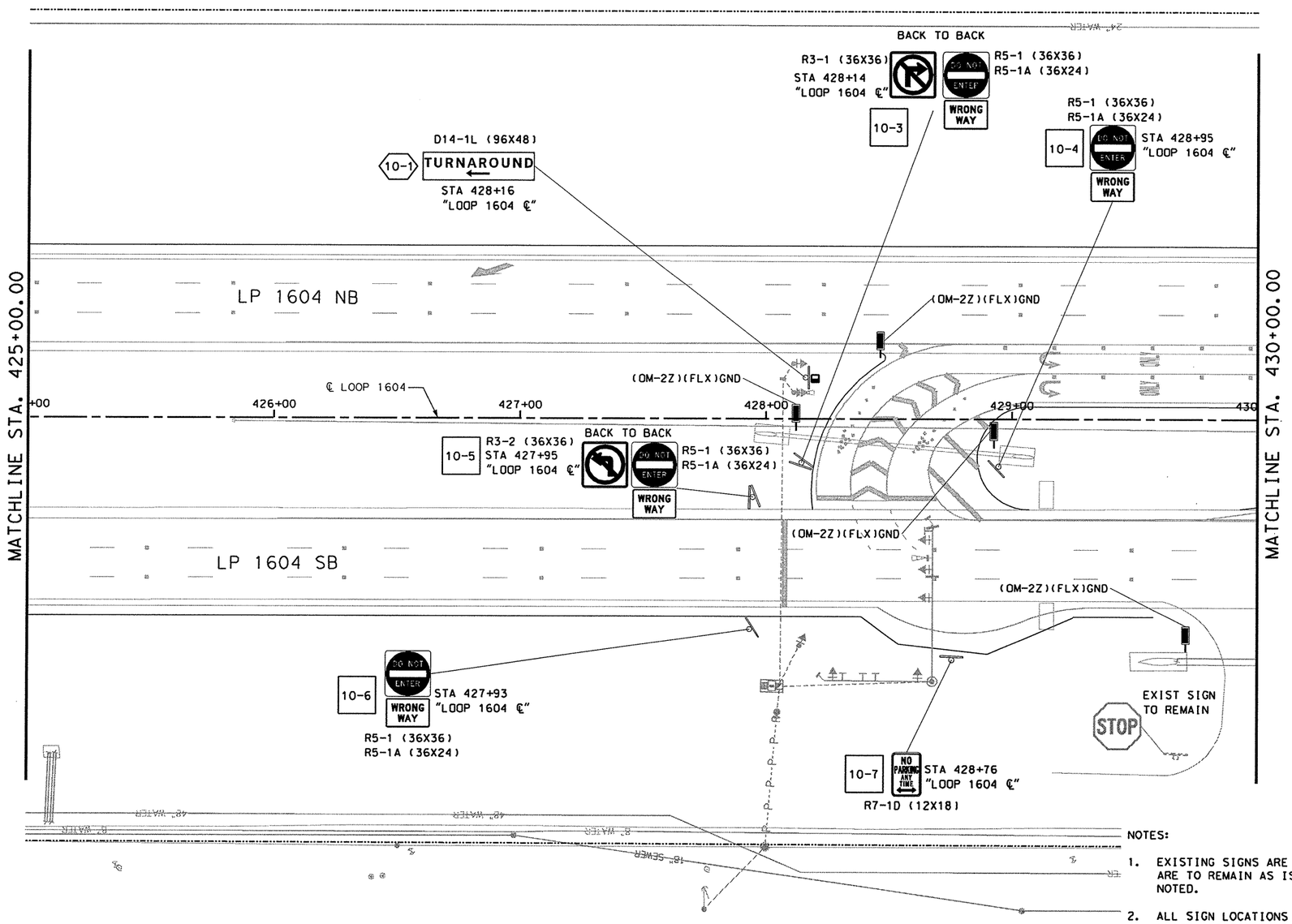

REFER TO TRAFFIC SIGNAL PLAN SHEETS FOR ADDITIONAL SIGNS MOUNTED ON MAST ARMS

RIP-RAP APRONS			
TYPE OF MOUNT	EA	MULTIPLIED BY C.Y.	TOTAL C.Y.
SINGLE POST	–	0.8	–
MULTI-POST	1	1.5	1.5
CLASS "B" CONCRETE GRAND TOTAL			1.5

LEGEND

- EXIST SIGN POST
- PROPOSED SIGN POST
- 1-4 SMALL ROAD AND GUIDE SIGN DESIGNATION
- 2-6 LARGE GUIDE SIGN DESIGNATION
- DELINEATORS
- OBJECT MARKERS
- SOLAR POWERED ROADSIDE FLASHING BEACON ASSEMBLY (SPRFBA)

NOTES:

1. EXISTING SIGNS ARE SCREENED BACK AND ARE TO REMAIN AS IS UNLESS OTHERWISE NOTED.
2. ALL SIGN LOCATIONS ARE APPROXIMATE. EXACT LOCATIONS ARE TO BE STAKED BY THE CONTRACTOR AND APPROVED BY THE ENGINEER PRIOR TO CONSTRUCTION.
3. PAVEMENT MARKINGS ARE SHOWN FOR REFERENCE ONLY. SEE PAVEMENT MARKING SHEETS FOR DETAILS.
4. SEE LARGE SIGN SUMMARY AND THIS SHEET FOR LARGE SIGN QUANTITIES. SEE SMALL SIGN SUMMARY AND SMALL SIGN TALLY FOR SMALL SIGN QUANTITIES.

STATE OF TEXAS
GILMER D. GASTON
80472
LICENSED
PROFESSIONAL ENGINEER

GILMER D. GASTON P.E. — 6/26/2010 DATE

SCALE: PLAN - 1":50'

REV. NO.	DATE	DESCRIPTION	BY

ALAMO RMA

PAPE-DAWSON ENGINEERS
555 EAST RAMSEY | SAN ANTONIO, TEXAS 78216 | PHONE: 210.375.9000 FAX: 210.375.9010
TEXAS BOARD OF PROFESSIONAL ENGINEERS, FIRM REGISTRATION # 470

Texas Department of Transportation © 2010

LOOP 1604

LARGE AND SMALL SIGN LAYOUT

STA. 425+00 TO STA. 430+00

SHEET 10 OF 26

DGN:	FED. RD. DIV. NO.	STATE	FEDERAL AID PROJECT NO.			HIGHWAY NO.
CHK DGN:	6	TEXAS	STP 2011(210)ES			LP 1604
DWG:	DIST.	COUNTY	CONT. NO.	SECT. NO.	JOB NO.	SHEET NO.
CHK DWG:	SAT	BEXAR	2452	01	050	390

Plotted on: 6/26/2010

Design Filename: p:\74\00\04\design\civil\traffic\740004SL11.dgn

ITEM	DESCRIPTION	UNIT	QTY
0416-2016	DRILL SHAFT (SIGN MTS)(12 IN)	LF	7
0432-2066	RIPRAP (CONC)(CL B)	CY	1.5
0636-2001	ALUMINUM SIGNS (TY A)	SF	6.9
0636-2002	ALUMINUM SIGNS (TY G)	SF	39
0644-2060	REMOVE SM RD SN SUP & AM	EA	2
0647-2001	INSTALL LRSS (STRUCT STEEL)	LB	324.5
0658-2316	INSTL OM ASSM (OM-2Z)(FLX)GND	EA	1

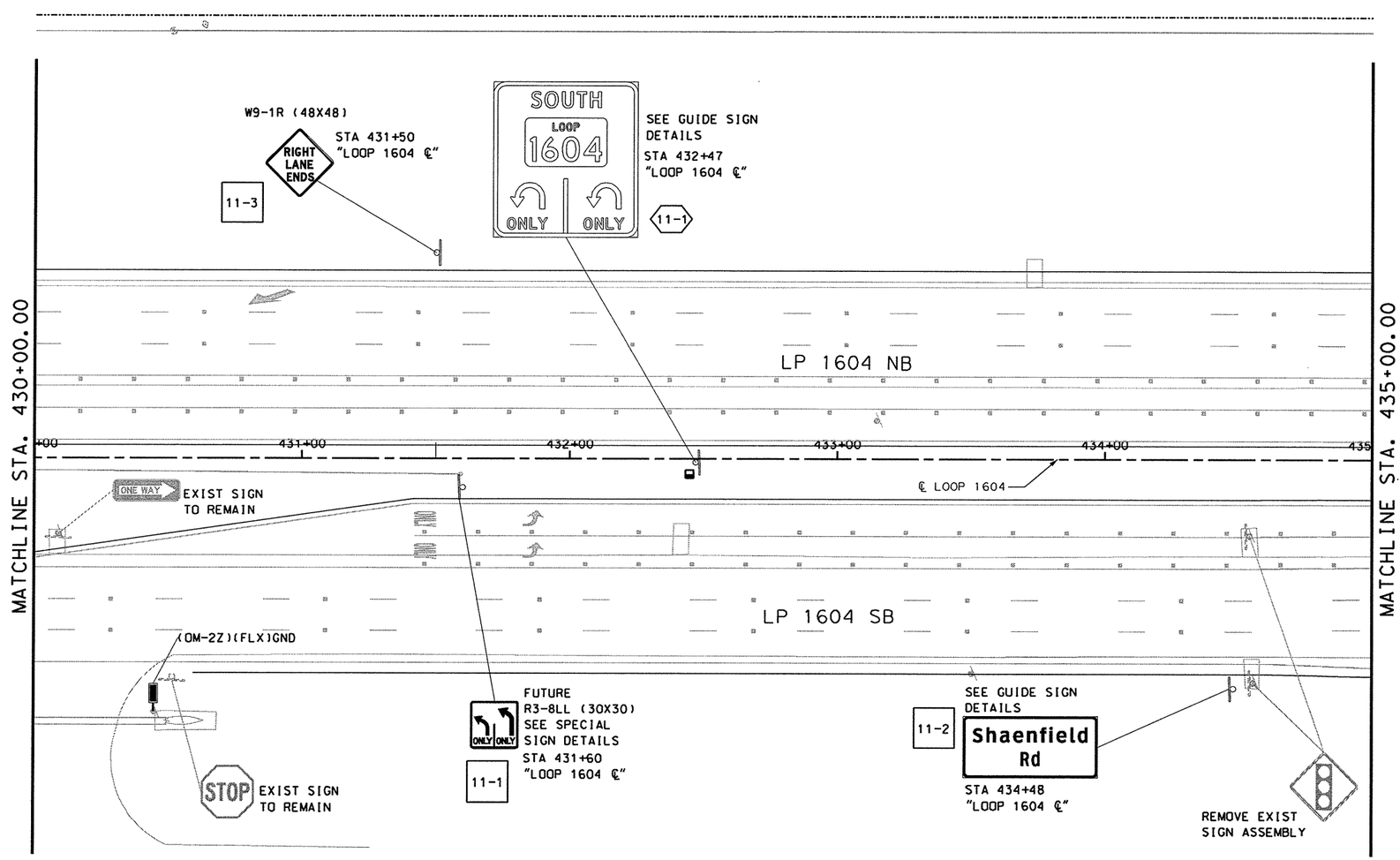

RIP-RAP APRONS				
TYPE OF MOUNT		EA	MULTIPLIED BY C.Y.	TOTAL C.Y.
SINGLE POST		-	0.8	-
MULTI-POST		1	1.5	1.5
CLASS "B" CONCRETE GRAND TOTAL				1.5

LEGEND

- EXIST SIGN POST
- PROPOSED SIGN POST
- 1-4 SMALL ROAD AND GUIDE SIGN DESIGNATION
- 2-6 LARGE GUIDE SIGN DESIGNATION
- DELINEATORS
- OBJECT MARKERS
- SOLAR POWERED ROADSIDE FLASHING BEACON ASSEMBLY (SPRFBA)

NOTES:

1. EXISTING SIGNS ARE SCREENED BACK AND ARE TO REMAIN AS IS UNLESS OTHERWISE NOTED.
2. ALL SIGN LOCATIONS ARE APPROXIMATE. EXACT LOCATIONS ARE TO BE STAKED BY THE CONTRACTOR AND APPROVED BY THE ENGINEER PRIOR TO CONSTRUCTION.
3. PAVEMENT MARKINGS ARE SHOWN FOR REFERENCE ONLY. SEE PAVEMENT MARKING SHEETS FOR DETAILS.
4. SEE LARGE SIGN SUMMARY AND THIS SHEET FOR LARGE SIGN QUANTITIES. SEE SMALL SIGN SUMMARY AND SMALL SIGN TALLY FOR SMALL SIGN QUANTITIES.

STATE OF TEXAS · GILMER D. GASTON · 80472 · LICENSED PROFESSIONAL ENGINEER

GILMER D. GASTON P.E. — 6/26/2010 DATE

SCALE: PLAN - 1":50'

REV. NO.	DATE	DESCRIPTION	BY

ALAMO RMA

PAPE-DAWSON ENGINEERS

555 EAST RAMSEY | SAN ANTONIO, TEXAS 78216 | PHONE: 210.375.9000 FAX: 210.375.9010

TEXAS BOARD OF PROFESSIONAL ENGINEERS, FIRM REGISTRATION # 470

Texas Department of Transportation © 2010

LOOP 1604

LARGE AND SMALL SIGN LAYOUT

STA. 430+00 TO STA. 435+00

SHEET 11 OF 26

DGN:	FED. RD. DIV. NO.	STATE	FEDERAL AID PROJECT NO.			HIGHWAY NO.
CHK DGN:	6	TEXAS	STP 2011(210)ES			LP 1604
DWG:	DIST.	COUNTY	CONT. NO.	SECT. NO.	JOB NO.	SHEET NO.
CHK DWG:	SAT	BEXAR	2452	01	050	391

Plotted on: 6/26/2010

Design Filename: p:\74\00\04\design\civil\traffic\740004SSL12.dgn

ITEM	DESCRIPTION	UNIT	QTY
0644-2060	REMOVE SM RD SN SUP & AM	EA	3

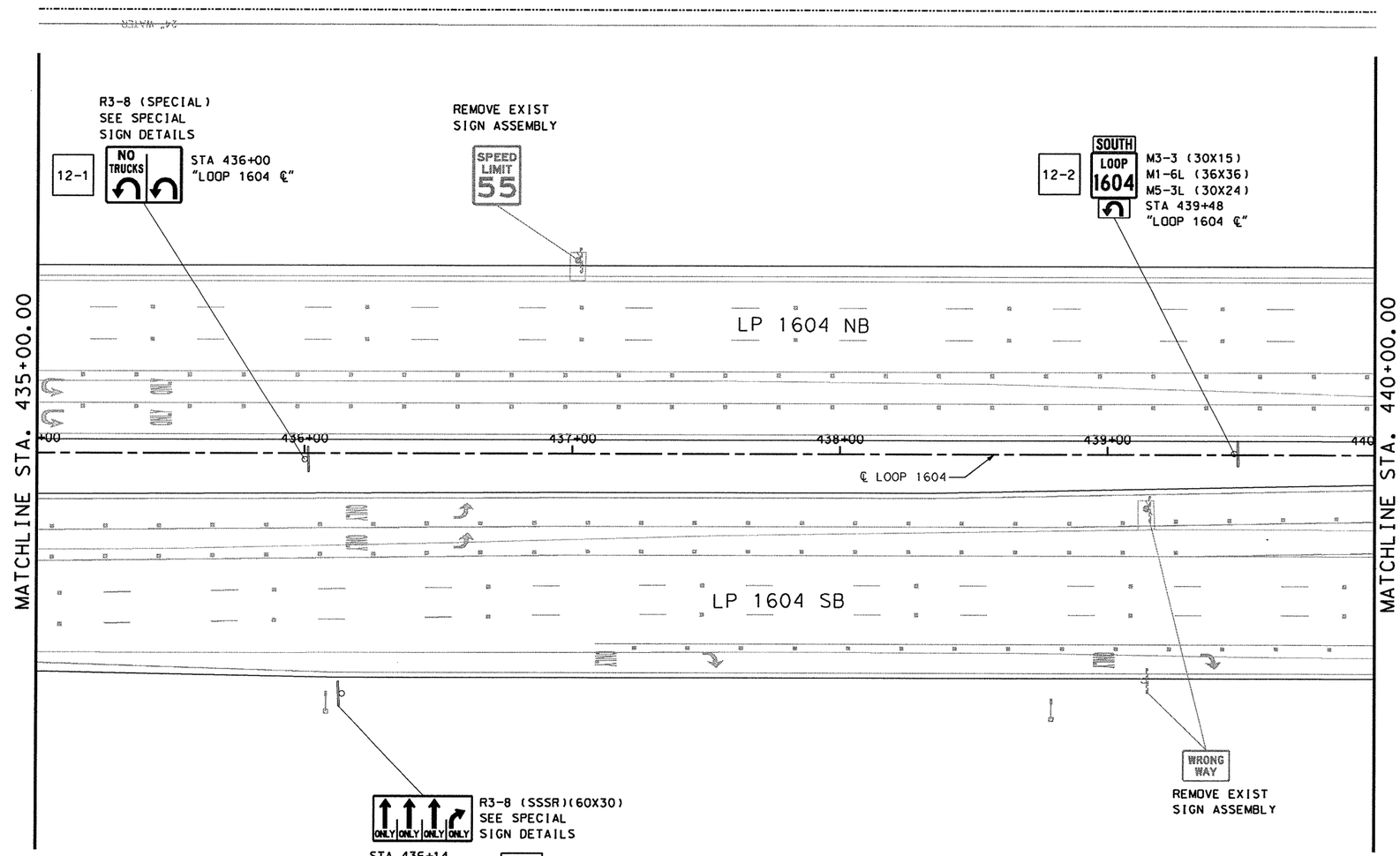

RIP-RAP APRONS			
TYPE OF MOUNT	EA	MULTIPLIED BY C.Y.	TOTAL C.Y.
SINGLE POST	-	0.8	-
MULTI-POST	-	1.5	-
CLASS "B" CONCRETE GRAND TOTAL			0.0

LEGEND

- EXIST SIGN POST
- PROPOSED SIGN POST
- 1-4 SMALL ROAD AND GUIDE SIGN DESIGNATION
- 2-6 LARGE GUIDE SIGN DESIGNATION
- DELINEATORS
- OBJECT MARKERS
- SOLAR POWERED ROADSIDE FLASHING BEACON ASSEMBLY (SPRFBA)

NOTES:

1. EXISTING SIGNS ARE SCREENED BACK AND ARE TO REMAIN AS IS UNLESS OTHERWISE NOTED.
2. ALL SIGN LOCATIONS ARE APPROXIMATE. EXACT LOCATIONS ARE TO BE STAKED BY THE CONTRACTOR AND APPROVED BY THE ENGINEER PRIOR TO CONSTRUCTION.
3. PAVEMENT MARKINGS ARE SHOWN FOR REFERENCE ONLY. SEE PAVEMENT MARKING SHEETS FOR DETAILS.
4. SEE LARGE SIGN SUMMARY AND THIS SHEET FOR LARGE SIGN QUANTITIES. SEE SMALL SIGN SUMMARY AND SMALL SIGN TALLY FOR SMALL SIGN QUANTITIES.

STATE OF TEXAS
GILMER D. GASTON
80472
LICENSED
PROFESSIONAL ENGINEER

GILMER D. GASTON P.E. — 6/26/2010 DATE

SCALE: PLAN - 1":50'

REV. NO.	DATE	DESCRIPTION	BY

ALAMO RMA

PAPE-DAWSON ENGINEERS
555 EAST RAMSEY | SAN ANTONIO, TEXAS 78216 | PHONE: 210.375.9000 FAX: 210.375.9010
TEXAS BOARD OF PROFESSIONAL ENGINEERS, FIRM REGISTRATION # 470

Texas Department of Transportation
© 2010

LOOP 1604

LARGE AND SMALL SIGN LAYOUT

STA. 435+00 TO STA. 440+00

SHEET 12 OF 26

DGN:	FED. RD. DIV. NO.	STATE	FEDERAL AID PROJECT NO.			HIGHWAY NO.
CHK DGN:	6	TEXAS	STP 2011(210)ES			LP 1604
DWG:	DIST.	COUNTY	CONT. NO.	SECT. NO.	JOB NO.	SHEET NO.
CHK DWG:	SAT	BEXAR	2452	01	050	392

Plotted on: 6/30/2010

Design Filename: p:\74\00\04\design\civil\TRAFFIC\740004SSL13.dgn

ITEM	DESCRIPTION	UNIT	QTY
0416-2016	DRILL SHAFT (SIGN MTS)(12 IN)	LF	7
0416-2032	DRILL SHAFT (TRF SIG POLE) (36 IN)	LF	13.2
0636-2001	ALUMINUM SIGNS (TY A)	SF	48.9
0636-2002	ALUMINUM SIGNS (TY G)	SF	42
0644-2060	REMOVE SM RD SN SUP & AM	EA	19
0647-2001	INSTALL LRSS (STRUCT STEEL)	LB	270.6
0658-2316	INSTL OM ASSM (OM-2Z)(FLX)GND	EA	2
0658-2318	INSTL OM ASSM (OM-2Z)(FLX)SRF	EA	3
0686-2039	INS TRF SIG PL AM(S) 1 ARM (40')	EA	1
0686-SUB1	ASTRO-BRAC MAST ARM WIND DAMPENER ASSM (AB-EQA17		1

RIP-RAP APRONS			
TYPE OF MOUNT	EA	MULTIPLIED BY C.Y.	TOTAL C.Y.
SINGLE POST	–	0.8	–
MULTI-POST	–	1.5	–
CLASS "B" CONCRETE GRAND TOTAL			0.0

LEGEND

- EXIST SIGN POST
- PROPOSED SIGN POST
- 1-4 SMALL ROAD AND GUIDE SIGN DESIGNATION
- 2-6 LARGE GUIDE SIGN DESIGNATION
- DELINEATORS
- OBJECT MARKERS
- SOLAR POWERED ROADSIDE FLASHING BEACON ASSEMBLY (SPRFBA)

GILMER D. GASTON 80472 LICENSED PROFESSIONAL ENGINEER — STATE OF TEXAS

6/30/2010
GILMER D. GASTON P.E. — DATE

SCALE: PLAN - 1":50'

REV. NO.	DATE	DESCRIPTION	BY

ALAMO RMA

PAPE-DAWSON ENGINEERS

555 EAST RAMSEY | SAN ANTONIO, TEXAS 78216 | PHONE: 210.375.9000 FAX: 210.375.9010

TEXAS BOARD OF PROFESSIONAL ENGINEERS, FIRM REGISTRATION # 470

Texas Department of Transportation © 2010

LOOP 1604

LARGE AND SMALL SIGN LAYOUT

STA. 440+00 TO STA. 445+00

SHEET 13 OF 26

DGN:	FED. RD. DIV. NO.	STATE	FEDERAL AID PROJECT NO.			HIGHWAY NO.
CHK DGN:	6	TEXAS	STP 2011(210)ES			LP 1604
DWG:	DIST.	COUNTY	CONT. NO.	SECT. NO.	JOB NO.	SHEET NO.
CHK DWG:	SAT	BEXAR	2452	01	050	393

NOTES:

1. EXISTING SIGNS ARE SCREENED BACK AND ARE TO REMAIN AS IS UNLESS OTHERWISE NOTED.
2. ALL SIGN LOCATIONS ARE APPROXIMATE. EXACT LOCATIONS ARE TO BE STAKED BY THE CONTRACTOR AND APPROVED BY THE ENGINEER PRIOR TO CONSTRUCTION.
3. PAVEMENT MARKINGS ARE SHOWN FOR REFERENCE ONLY. SEE PAVEMENT MARKING SHEETS FOR DETAILS.
4. SEE LARGE SIGN SUMMARY AND THIS SHEET FOR LARGE SIGN QUANTITIES. SEE SMALL SIGN SUMMARY AND SMALL SIGN TALLY FOR SMALL SIGN QUANTITIES.

REFER TO TRAFFIC SIGNAL PLAN SHEETS FOR ADDITIONAL SIGNS MOUNTED ON MAST ARMS

MATCHLINE STA. 440+00.00

MATCHLINE STA. 445+00.00

LP 1604 NB

LP 1604 SB

SHAENFIELD RD

FUTURE SHAENFIELD RD EXTENSION

441+00 442+00 443+00 444+00 445

℄ LOOP 1604

REMOVE EXIST SIGN ASSEMBLY

FUTURE STA 441+56 "LOOP 1604 ℄"

SEE GUIDE SIGN DETAILS

13-1

FUTURE R6-1R (48X16) STA 442+12 "LOOP 1604 ℄" 13-3

FUTURE R4-7 (36X48) STA 442+49 "LOOP 1604 ℄" 13-4

FUTURE R3-4(36X36) STA 442+10 "LOOP 1604 ℄" 13-2

(OM-2Z)(FLX)GND

(OM-2Z)(FLX)SRF

FUTURE PLACE ±145 LF AWAY FROM STOP BAR INSTALL OVER LANES ON SMA-80 POLE SEE SHEET 410 FOR DETAILS

SOUTH LP 1604 | SOUTH LP 1604 | Shaenfield Rd | NORTH LP 1604

SEE GUIDE SIGN DETAILS

BACK TO BACK R5-1 (36X36) R5-1A (36X24) RIGHT LANE MUST TURN RIGHT / DO NOT ENTER / WRONG WAY R3-7R (30X30) STA 444+39 "LOOP 1604 ℄" 13-8

R5-1 (36X36) R5-1A (36X24) STA 444+48 "LOOP 1604 ℄" 13-7

FUTURE R1-2 (48X48X48) 13-18

R5-1 (36X36) R5-1A (36X24) STA 442+70 "LOOP 1604 ℄" 13-5 13-6

STA 442+73 "LOOP 1604 ℄"

R5-1 (36X36) R5-1A (36X24) STA 441+11 "LOOP 1604 ℄" 13-9

R1-2 (48X48X48) STA 441+67 "LOOP 1604 ℄" 13-17

BACK TO BACK RIGHT LANE MUST TURN RIGHT / DO NOT ENTER / WRONG WAY R5-1 (36X36) R5-1A (36X24) R3-7R (30X30) 13-16

ONE WAY R6-1R (48X16) STA 443+02 "LOOP 1604 ℄" 13-14 STA 442+33 "LOOP 1604 ℄" 13-15

ONE WAY R6-1R (48X16) STA 443+10 "LOOP 1604 ℄" 13-13

R4-7 (36X48) STA 443+24 "LOOP 1604 ℄" 13-11

BACK TO BACK

STA 443+70 "LOOP 1604 ℄"

STA 442+70 "LOOP 1604 ℄" R4-7 (36X48) 13-12

NORTH LOOP 1604 SOUTH 13-2

SEE GUIDE SIGN DETAILS

FUTURE SIGN NORTH LP 1604 | Shaenfield Rd

PLACE ±285 LF AWAY FROM STOP BAR INSTALL OVER LANES ON SMA-80 POLE SEE SHEET 410 FOR DETAILS

SEE GUIDE SIGN DETAILS

NORTH LP 1604 | NORTH LP 1604 | SOUTH LP 1604 | SOUTH LP 1604

Plotted on: 6/26/2010

Design Filename: p:\74\00\04\design\civil\traffic\740004SSL14.dgn

ITEM	DESCRIPTION	UNIT	QTY
0644-2060	REMOVE SM RD SN SUP & AM	EA	2

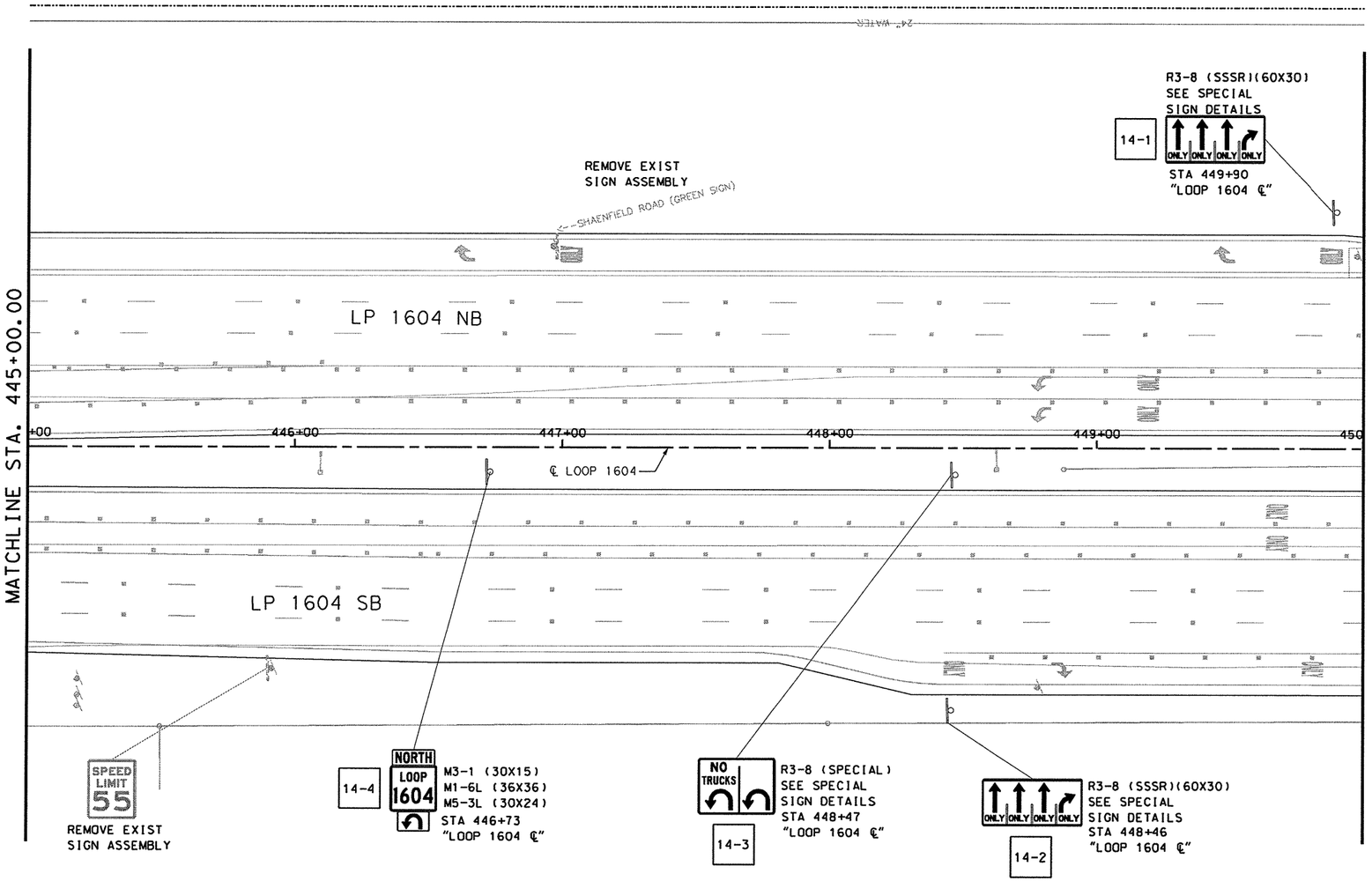

RIP-RAP APRONS			
TYPE OF MOUNT	EA	MULTIPLIED BY C.Y.	TOTAL C.Y.
SINGLE POST	-	0.8	-
MULTI-POST	-	1.5	-
CLASS "B" CONCRETE GRAND TOTAL			0.0

LEGEND

- EXIST SIGN POST
- PROPOSED SIGN POST
- 1-4 SMALL ROAD AND GUIDE SIGN DESIGNATION
- 2-6 LARGE GUIDE SIGN DESIGNATION
- DELINEATORS
- OBJECT MARKERS
- SOLAR POWERED ROADSIDE FLASHING BEACON ASSEMBLY (SPRFBA)

NOTES:

1. EXISTING SIGNS ARE SCREENED BACK AND ARE TO REMAIN AS IS UNLESS OTHERWISE NOTED.
2. ALL SIGN LOCATIONS ARE APPROXIMATE. EXACT LOCATIONS ARE TO BE STAKED BY THE CONTRACTOR AND APPROVED BY THE ENGINEER PRIOR TO CONSTRUCTION.
3. PAVEMENT MARKINGS ARE SHOWN FOR REFERENCE ONLY. SEE PAVEMENT MARKING SHEETS FOR DETAILS.
4. SEE LARGE SIGN SUMMARY AND THIS SHEET FOR LARGE SIGN QUANTITIES. SEE SMALL SIGN SUMMARY AND SMALL SIGN TALLY FOR SMALL SIGN QUANTITIES.

STATE OF TEXAS
GILMER D. GASTON
80472
LICENSED PROFESSIONAL ENGINEER

GILMER D. GASTON P.E. — 6/26/2010 DATE

SCALE: PLAN - 1":50'

REV. NO.	DATE	DESCRIPTION	BY

ALAMO RMA

PAPE-DAWSON ENGINEERS
555 EAST RAMSEY | SAN ANTONIO, TEXAS 78216 | PHONE: 210.375.9000 FAX: 210.375.9010
TEXAS BOARD OF PROFESSIONAL ENGINEERS, FIRM REGISTRATION # 470

Texas Department of Transportation © 2010

LOOP 1604

LARGE AND SMALL SIGN LAYOUT

STA. 445+00 TO STA. 450+00

SHEET 14 OF 26

DGN:	FED. RD. DIV. NO.	STATE	FEDERAL AID PROJECT NO.			HIGHWAY NO.
CHK DGN:	6	TEXAS	STP 2011(210)ES			LP 1604
DWG:	DIST.	COUNTY	CONT. NO.	SECT. NO.	JOB NO.	SHEET NO.
CHK DWG:	SAT	BEXAR	2452	01	050	394

Plotted on: 6/26/2010

Design Filename: p:\74\00\04\design\civil\traffic\740004SSL15.dgn

ITEM	DESCRIPTION	UNIT	QTY
0416-2016	DRILL SHAFT (SIGN MTS)(12 IN)	LF	7
0432-2066	RIPRAP (CONC)(CL B)	CY	1.5
0636-2001	ALUMINUM SIGNS (TY A)	SF	6.9
0636-2002	ALUMINUM SIGNS (TY G)	SF	39
0644-2058	RELOCATE SM RD SN SUP & AM TY S80	EA	1
0644-2060	REMOVE SM RD SN SUP & AM	EA	4
0647-2001	INSTALL LRSS (STRUCT STEEL)	LB	324.5
0658-2316	INSTL OM ASSM (OM-2Z)(FLX)GND	EA	6
0658-2318	INSTL OM ASSM (OM-2Z)(FLX)SRF	EA	3

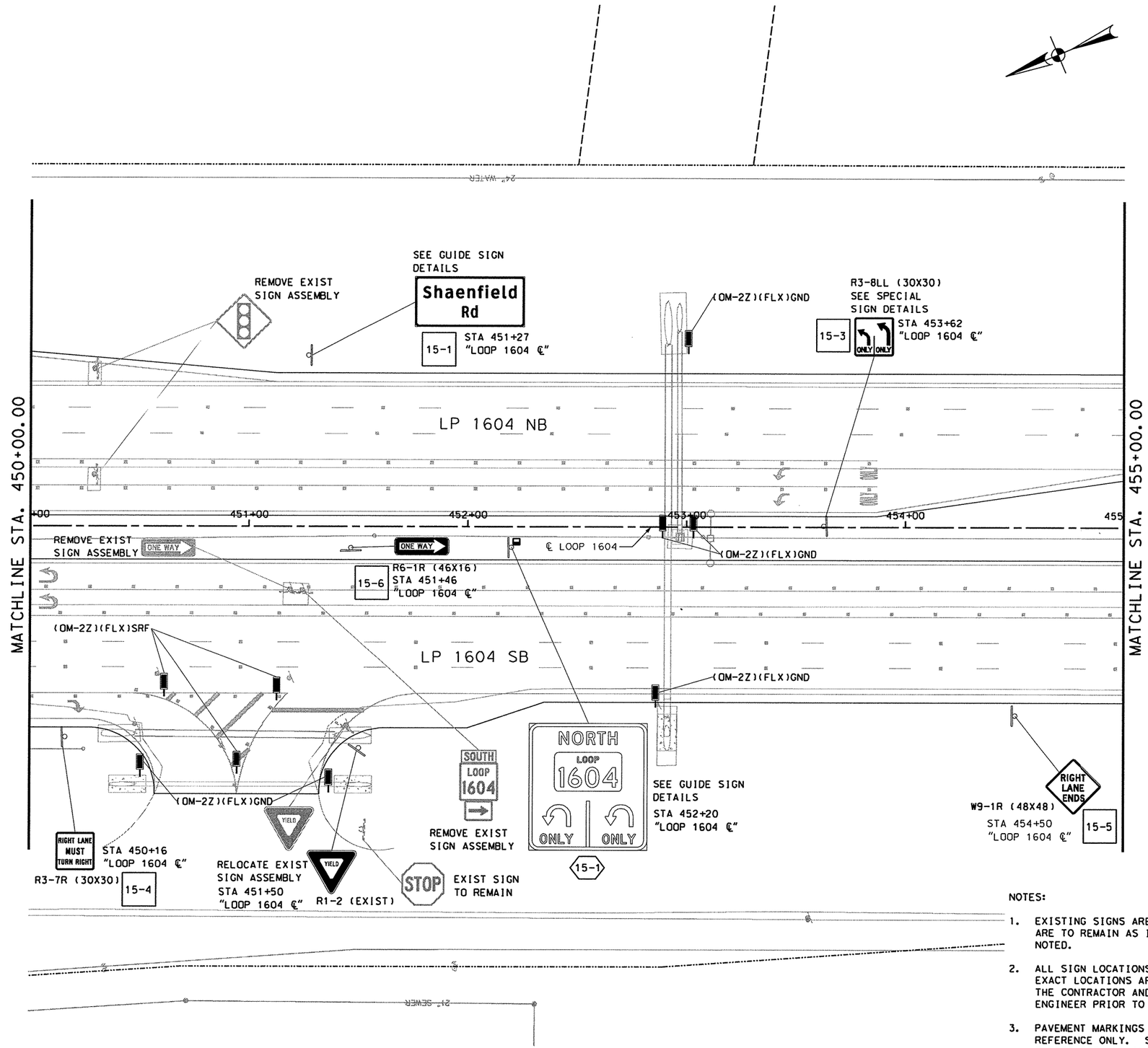

RIP-RAP APRONS			
TYPE OF MOUNT	EA	MULTIPLIED BY C.Y.	TOTAL C.Y.
SINGLE POST	–	0.8	–
MULTI-POST	1	1.5	1.5
CLASS "B" CONCRETE GRAND TOTAL			1.5

LEGEND

- EXIST SIGN POST
- PROPOSED SIGN POST
- 1-4 SMALL ROAD AND GUIDE SIGN DESIGNATION
- 2-6 LARGE GUIDE SIGN DESIGNATION
- DELINEATORS
- OBJECT MARKERS
- SOLAR POWERED ROADSIDE FLASHING BEACON ASSEMBLY (SPRFBA)

NOTES:

1. EXISTING SIGNS ARE SCREENED BACK AND ARE TO REMAIN AS IS UNLESS OTHERWISE NOTED.
2. ALL SIGN LOCATIONS ARE APPROXIMATE. EXACT LOCATIONS ARE TO BE STAKED BY THE CONTRACTOR AND APPROVED BY THE ENGINEER PRIOR TO CONSTRUCTION.
3. PAVEMENT MARKINGS ARE SHOWN FOR REFERENCE ONLY. SEE PAVEMENT MARKING SHEETS FOR DETAILS.
4. SEE LARGE SIGN SUMMARY AND THIS SHEET FOR LARGE SIGN QUANTITIES. SEE SMALL SIGN SUMMARY AND SMALL SIGN TALLY FOR SMALL SIGN QUANTITIES.

STATE OF TEXAS · GILMER D. GASTON · 80472 · LICENSED PROFESSIONAL ENGINEER

GILMER D. GASTON P.E. — 6/26/2010 DATE

SCALE: PLAN - 1":50'

REV. NO.	DATE	DESCRIPTION	BY

ALAMO RMA

PAPE-DAWSON ENGINEERS

555 EAST RAMSEY | SAN ANTONIO, TEXAS 78216 | PHONE: 210.375.9000 FAX: 210.375.9010

TEXAS BOARD OF PROFESSIONAL ENGINEERS, FIRM REGISTRATION # 470

Texas Department of Transportation © 2010

LOOP 1604

LARGE AND SMALL SIGN LAYOUT

STA. 450+00 TO STA. 455+00

SHEET 15 OF 26

DGN:	FED. RD. DIV. NO.	STATE	FEDERAL AID PROJECT NO.			HIGHWAY NO.
CHK DGN:	6	TEXAS	STP 2011(210)ES			LP 1604
DWG:	DIST.	COUNTY	CONT. NO.	SECT. NO.	JOB NO.	SHEET NO.
CHK DWG:	SAT	BEXAR	2452	01	050	395

Plotted on: 6/26/2010

ITEM	DESCRIPTION	UNIT	QTY
0416-2016	DRILL SHAFT (SIGN MTS)(12 IN)	LF	7
0432-2066	RIPRAP (CONC)(CL B)	CY	1.5
0636-2002	ALUMINUM SIGNS (TY G)	SF	32
0644-2058	RELOCATE SM RD SN SUP & AM TY S80	EA	1
0644-2060	REMOVE SM RD SN SUP & AM	EA	1
0647-2001	INSTALL LRSS (STRUCT STEEL)	LB	234.5
0658-2316	INSTL OM ASSM (OM-2Z)(FLX)GND	EA	1

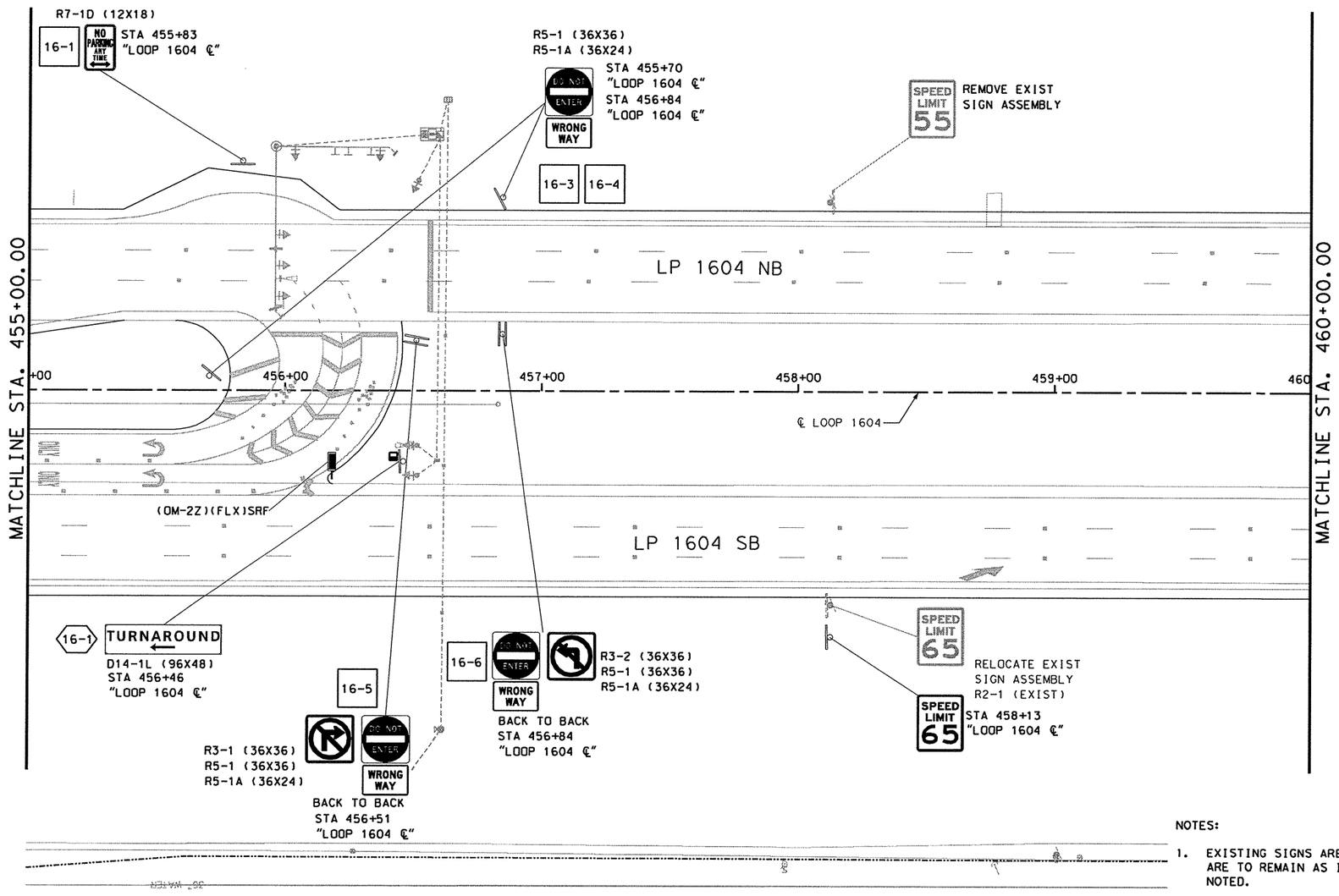

RIP-RAP APRONS			
TYPE OF MOUNT	EA	MULTIPLIED BY C.Y.	TOTAL C.Y.
SINGLE POST	-	0.8	-
MULTI-POST	1	1.5	1.5
CLASS "B" CONCRETE GRAND TOTAL			1.5

LEGEND

- EXIST SIGN POST
- PROPOSED SIGN POST
- 1-4 SMALL ROAD AND GUIDE SIGN DESIGNATION
- 2-6 LARGE GUIDE SIGN DESIGNATION
- DELINEATORS
- OBJECT MARKERS
- SOLAR POWERED ROADSIDE FLASHING BEACON ASSEMBLY (SPRFBA)

STATE OF TEXAS
GILMER D. GASTON
80472
LICENSED PROFESSIONAL ENGINEER

GILMER D. GASTON P.E. — 6/26/2010 DATE

SCALE: PLAN - 1":50'

REV. NO.	DATE	DESCRIPTION	BY

ALAMO RMA

PAPE-DAWSON ENGINEERS
555 EAST RAMSEY | SAN ANTONIO, TEXAS 78216 | PHONE: 210.375.9000 FAX: 210.375.9010
TEXAS BOARD OF PROFESSIONAL ENGINEERS, FIRM REGISTRATION # 470

Texas Department of Transportation ©2010

REFER TO TRAFFIC SIGNAL PLAN SHEETS FOR ADDITIONAL SIGNS MOUNTED ON MAST ARMS

NOTES:

1. EXISTING SIGNS ARE SCREENED BACK AND ARE TO REMAIN AS IS UNLESS OTHERWISE NOTED.
2. ALL SIGN LOCATIONS ARE APPROXIMATE. EXACT LOCATIONS ARE TO BE STAKED BY THE CONTRACTOR AND APPROVED BY THE ENGINEER PRIOR TO CONSTRUCTION.
3. PAVEMENT MARKINGS ARE SHOWN FOR REFERENCE ONLY. SEE PAVEMENT MARKING SHEETS FOR DETAILS.
4. SEE LARGE SIGN SUMMARY AND THIS SHEET FOR LARGE SIGN QUANTITIES. SEE SMALL SIGN SUMMARY AND SMALL SIGN TALLY FOR SMALL SIGN QUANTITIES.

LOOP 1604

LARGE AND SMALL SIGN LAYOUT

STA. 455+00 TO STA. 460+00

SHEET 16 OF 26

DGN:	FED. RD. DIV. NO.	STATE	FEDERAL AID PROJECT NO.			HIGHWAY NO.
CHK DGN:	6	TEXAS	STP 2011(210)ES			LP 1604
DWG:	DIST.	COUNTY	CONT. NO.	SECT. NO.	JOB NO.	SHEET NO.
CHK DWG:	SAT	BEXAR	2452	01	050	396

Design Filename: p:\74\00\04\design\civil\traffic\740004SSL16.dgn

Plotted on: 6/26/2010

Design Filename: p:\74\00\04\design\civil\traffic\740004SSL17.dgn

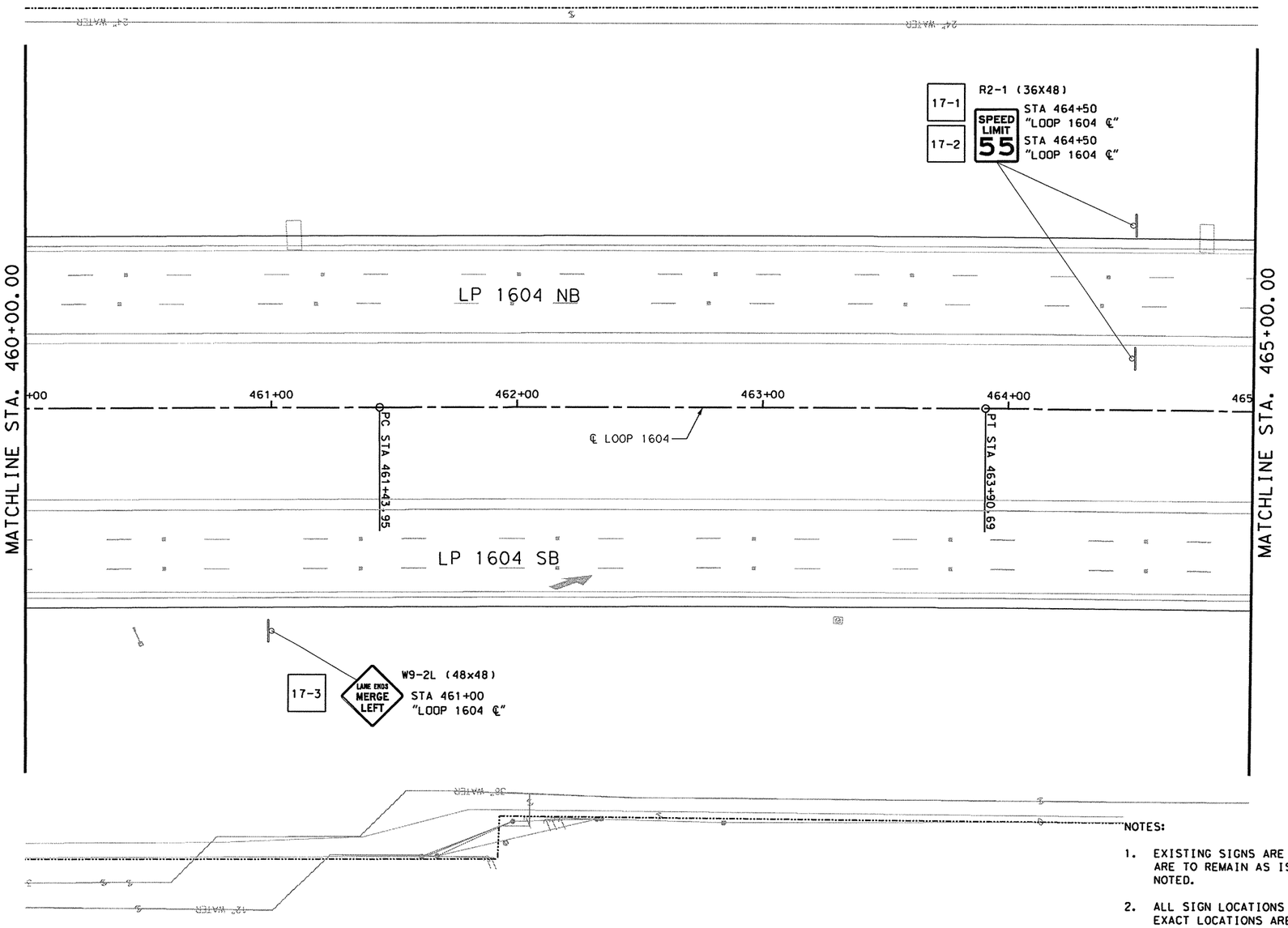

RIP-RAP APRONS				
TYPE OF MOUNT		EA	MULTIPLIED BY C.Y.	TOTAL C.Y.
SINGLE POST	⊖	–	0.8	–
MULTI-POST	▣	–	1.5	–
CLASS "B" CONCRETE GRAND TOTAL				0.0

LEGEND

- EXIST SIGN POST
- PROPOSED SIGN POST
- 1-4 SMALL ROAD AND GUIDE SIGN DESIGNATION
- 2-6 LARGE GUIDE SIGN DESIGNATION
- DELINEATORS
- OBJECT MARKERS
- SOLAR POWERED ROADSIDE FLASHING BEACON ASSEMBLY (SPRFBA)

STATE OF TEXAS · GILMER D. GASTON · 80472 · LICENSED PROFESSIONAL ENGINEER

GILMER D. GASTON P.E. — 6/26/2010 DATE

SCALE: PLAN - 1":50'

REV. NO.	DATE	DESCRIPTION	BY

NOTES:

1. EXISTING SIGNS ARE SCREENED BACK AND ARE TO REMAIN AS IS UNLESS OTHERWISE NOTED.
2. ALL SIGN LOCATIONS ARE APPROXIMATE. EXACT LOCATIONS ARE TO BE STAKED BY THE CONTRACTOR AND APPROVED BY THE ENGINEER PRIOR TO CONSTRUCTION.
3. PAVEMENT MARKINGS ARE SHOWN FOR REFERENCE ONLY. SEE PAVEMENT MARKING SHEETS FOR DETAILS.
4. SEE LARGE SIGN SUMMARY AND THIS SHEET FOR LARGE SIGN QUANTITIES. SEE SMALL SIGN SUMMARY AND SMALL SIGN TALLY FOR SMALL SIGN QUANTITIES.

ALAMO RMA

PAPE-DAWSON ENGINEERS
555 EAST RAMSEY | SAN ANTONIO, TEXAS 78216 | PHONE: 210.375.9000 FAX: 210.375.9010
TEXAS BOARD OF PROFESSIONAL ENGINEERS, FIRM REGISTRATION # 470

Texas Department of Transportation ©2010

LOOP 1604

LARGE AND SMALL SIGN LAYOUT

STA. 460+00 TO STA. 465+00

SHEET 17 OF 26

DGN:	FED. RD. DIV. NO.	STATE	FEDERAL AID PROJECT NO.			HIGHWAY NO.
CHK DGN:	6	TEXAS	STP 2011(210)ES			LP 1604
DWG:	DIST.	COUNTY	CONT. NO.	SECT. NO.	JOB NO.	SHEET NO.
CHK DWG:	SAT	BEXAR	2452	01	050	397

Plotted on: 6/26/2010

Design Filename: p:\74\00\04\design\civil\traffic\740004SSL18.dgn

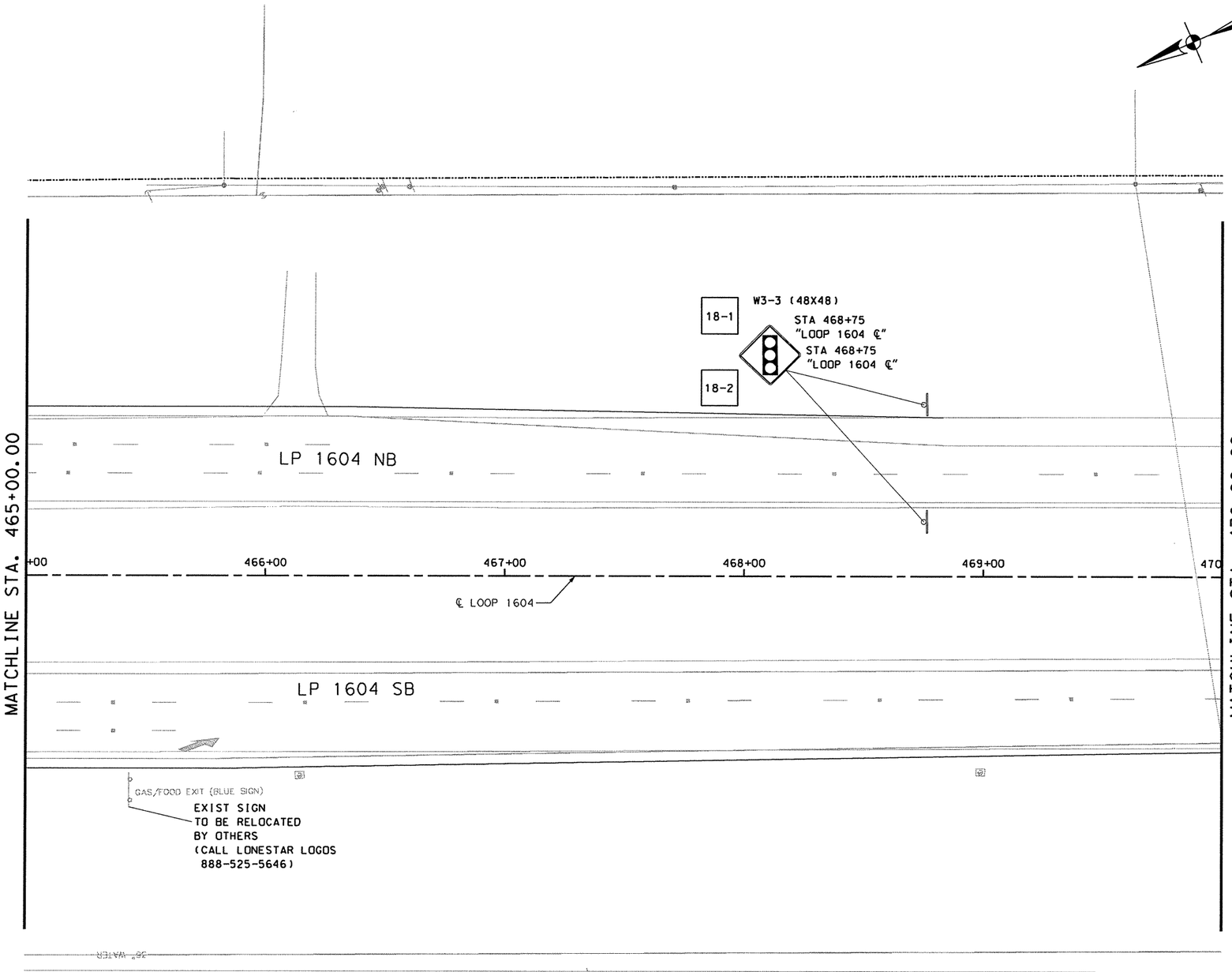

RIP-RAP APRONS			
TYPE OF MOUNT	EA	MULTIPLIED BY C.Y.	TOTAL C.Y.
SINGLE POST	–	0.8	–
MULTI-POST	–	1.5	–
CLASS "B" CONCRETE GRAND TOTAL			0.0

LEGEND

- EXIST SIGN POST
- PROPOSED SIGN POST
- 1-4 SMALL ROAD AND GUIDE SIGN DESIGNATION
- 2-6 LARGE GUIDE SIGN DESIGNATION
- DELINEATORS
- OBJECT MARKERS
- SOLAR POWERED ROADSIDE FLASHING BEACON ASSEMBLY (SPRFBA)

STATE OF TEXAS
GILMER D. GASTON
80472
LICENSED PROFESSIONAL ENGINEER

GILMER D. GASTON P.E. — 6/26/2010 DATE

SCALE: PLAN - 1":50'

REV. NO.	DATE	DESCRIPTION	BY

ALAMO RMA

PAPE-DAWSON ENGINEERS

555 EAST RAMSEY | SAN ANTONIO, TEXAS 78216 | PHONE: 210.375.9000 FAX: 210.375.9010

TEXAS BOARD OF PROFESSIONAL ENGINEERS, FIRM REGISTRATION # 470

Texas Department of Transportation © 2010

NOTES:

1. EXISTING SIGNS ARE SCREENED BACK AND ARE TO REMAIN AS IS UNLESS OTHERWISE NOTED.
2. ALL SIGN LOCATIONS ARE APPROXIMATE. EXACT LOCATIONS ARE TO BE STAKED BY THE CONTRACTOR AND APPROVED BY THE ENGINEER PRIOR TO CONSTRUCTION.
3. PAVEMENT MARKINGS ARE SHOWN FOR REFERENCE ONLY. SEE PAVEMENT MARKING SHEETS FOR DETAILS.
4. SEE LARGE SIGN SUMMARY AND THIS SHEET FOR LARGE SIGN QUANTITIES. SEE SMALL SIGN SUMMARY AND SMALL SIGN TALLY FOR SMALL SIGN QUANTITIES.

LOOP 1604

LARGE AND SMALL SIGN LAYOUT

STA. 465+00 TO STA. 470+00

SHEET 18 OF 26

DGN:	FED. RD. DIV. NO.	STATE	FEDERAL AID PROJECT NO.			HIGHWAY NO.
CHK DGN:	6	TEXAS	STP 2011(210)ES			LP 1604
DWG:	DIST.	COUNTY	CONT. NO.	SECT. NO.	JOB NO.	SHEET NO.
CHK DWG:	SAT	BEXAR	2452	01	050	398

NO SIGNS THIS SHEET

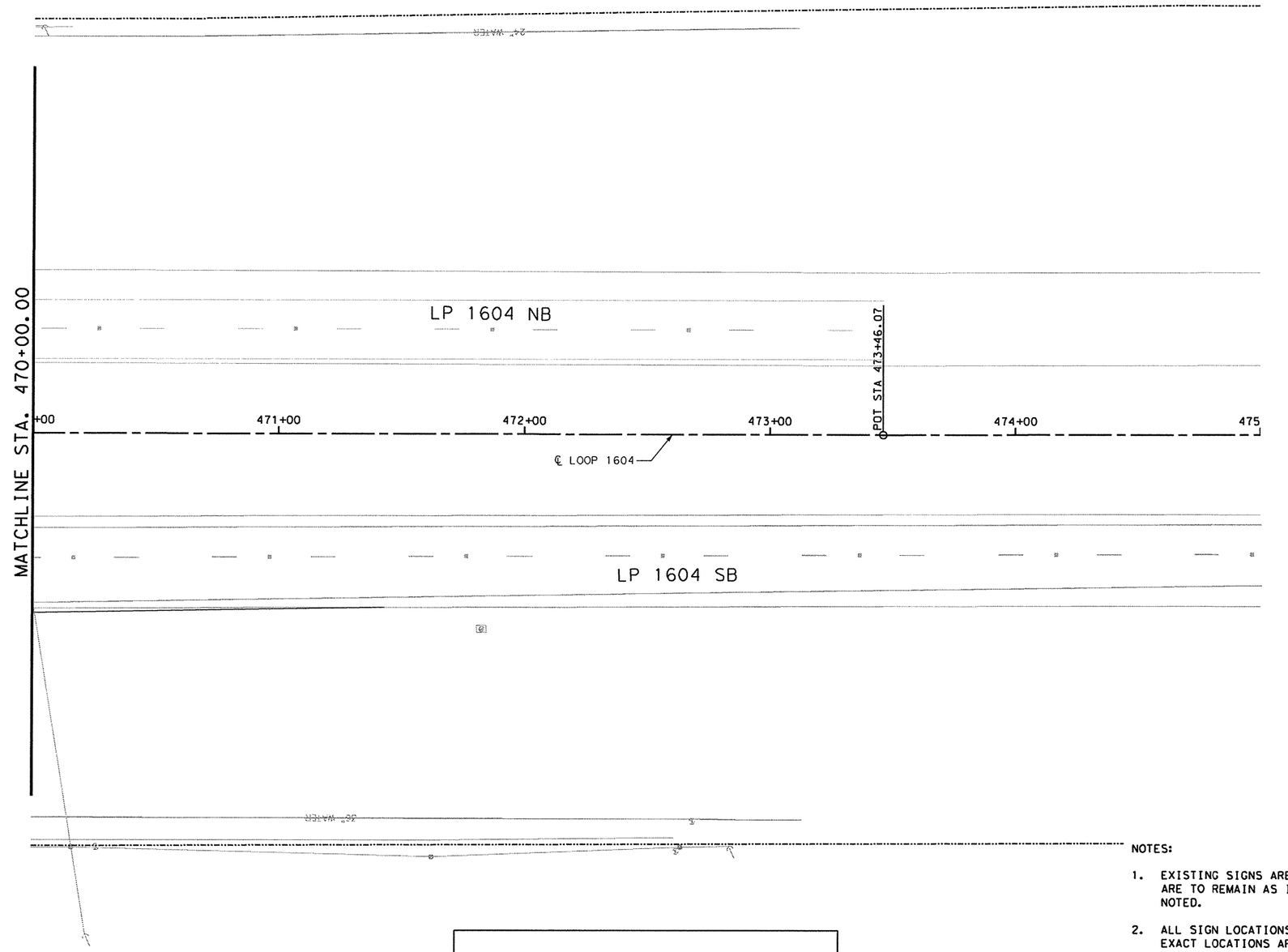

NO SIGNS THIS SHEET

RIP-RAP APRONS			
TYPE OF MOUNT	EA	MULTIPLIED BY C.Y.	TOTAL C.Y.
SINGLE POST	-	0.8	-
MULTI-POST	-	1.5	-
CLASS "B" CONCRETE GRAND TOTAL			0.0

LEGEND

- EXIST SIGN POST
- PROPOSED SIGN POST
- 1-4 SMALL ROAD AND GUIDE SIGN DESIGNATION
- 2-6 LARGE GUIDE SIGN DESIGNATION
- DELINEATORS
- OBJECT MARKERS
- SOLAR POWERED ROADSIDE FLASHING BEACON ASSEMBLY (SPRFBA)

NOTES:

1. EXISTING SIGNS ARE SCREENED BACK AND ARE TO REMAIN AS IS UNLESS OTHERWISE NOTED.
2. ALL SIGN LOCATIONS ARE APPROXIMATE. EXACT LOCATIONS ARE TO BE STAKED BY THE CONTRACTOR AND APPROVED BY THE ENGINEER PRIOR TO CONSTRUCTION.
3. PAVEMENT MARKINGS ARE SHOWN FOR REFERENCE ONLY. SEE PAVEMENT MARKING SHEETS FOR DETAILS.
4. SEE LARGE SIGN SUMMARY AND THIS SHEET FOR LARGE SIGN QUANTITIES. SEE SMALL SIGN SUMMARY AND SMALL SIGN TALLY FOR SMALL SIGN QUANTITIES.

STATE OF TEXAS · GILMER D. GASTON · 80472 · LICENSED PROFESSIONAL ENGINEER

GILMER D. GASTON P.E. — 6/26/2010 DATE

SCALE: PLAN - 1":50'

REV. NO.	DATE	DESCRIPTION	BY

ALAMO RMA

PAPE-DAWSON ENGINEERS

555 EAST RAMSEY | SAN ANTONIO, TEXAS 78216 | PHONE: 210.375.9000 FAX: 210.375.9010

TEXAS BOARD OF PROFESSIONAL ENGINEERS, FIRM REGISTRATION # 470

Texas Department of Transportation © 2010

LOOP 1604

LARGE AND SMALL SIGN LAYOUT

STA. 470+00 TO STA. 475+00

SHEET 19 OF 26

DGN:	FED. RD. DIV. NO.	STATE	FEDERAL AID PROJECT NO.			HIGHWAY NO.
CHK DGN:	6	TEXAS	STP 2011(210)ES			LP 1604
DWG:	DIST.	COUNTY	CONT. NO.	SECT. NO.	JOB NO.	SHEET NO.
CHK DWG:	SAT	BEXAR	2452	01	050	399

Plotted on: 6/26/2010

Design Filename: p:\74\00\04\design\civil\traffic\740004SSL19.dgn

Plotted on: 8/10/2010

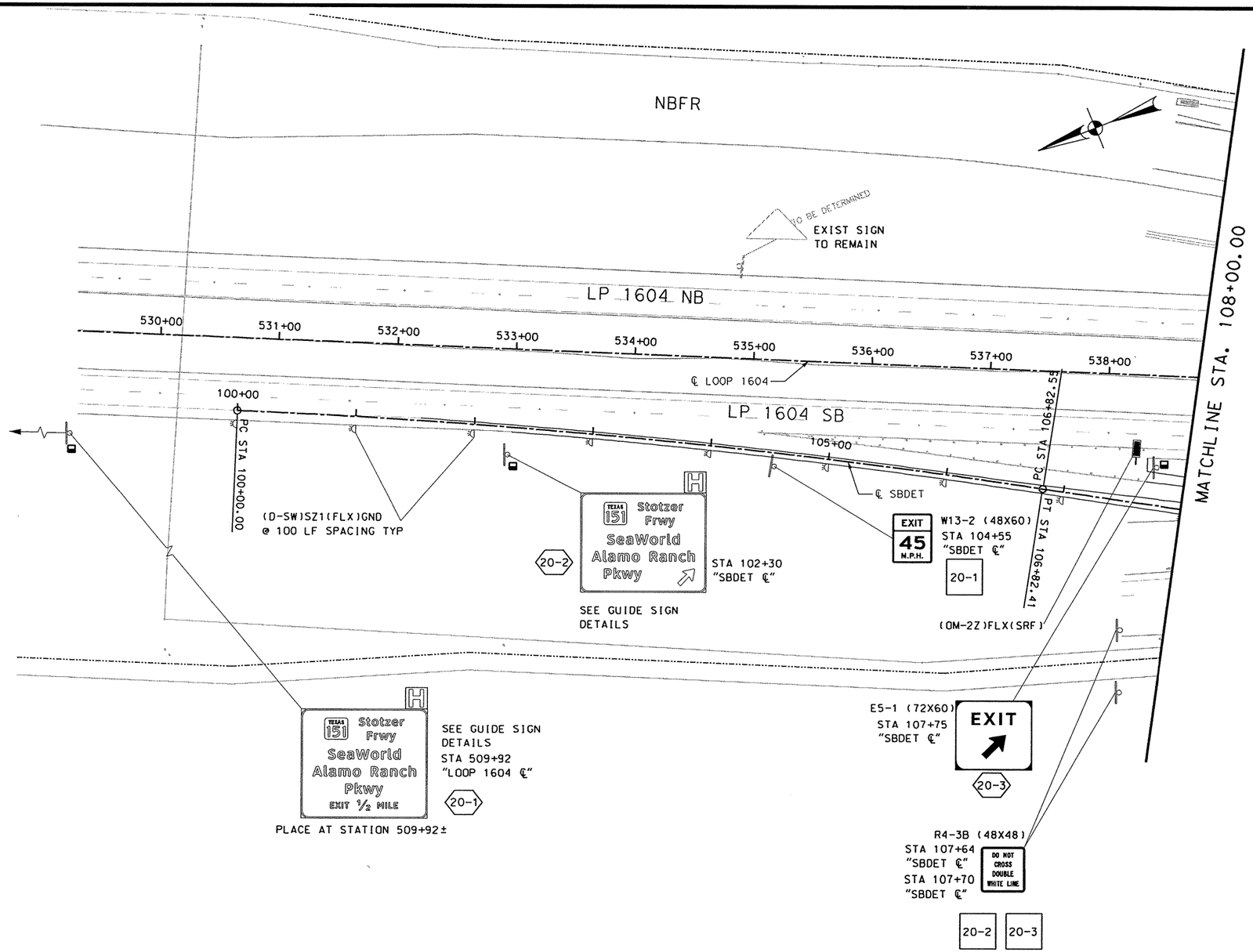

ITEM	DESCRIPTION	UNIT	QTY
0416-2016	DRILL SHAFT (SIGN MTS)(12 IN)	LF	7
0416-2018	DRILL SHAFT (SIGN MTS)(24 IN)	LF	40
0432-2066	RIPRAP (CONC)(CL B)	CY	4.5
0636-2001	ALUMINUM SIGNS (TY A)	SF	18.5
0636-2002	ALUMINUM SIGNS (TY G)	SF	502.5
0647-2001	INSTALL LRSS (STRUCT STEEL)	LB	2736.5
0658-2318	INSTL OM ASSM (OM-2Z)(FLX)SRF	EA	1
0658-2329	INSTL DEL ASSM (D-SW)SZ 1(FLX)GND	EA	8

RIP-RAP APRONS			
TYPE OF MOUNT	EA	MULTIPLIED BY C.Y.	TOTAL C.Y.
SINGLE POST	-	0.8	-
MULTI-POST	3	1.5	4.5
CLASS "B" CONCRETE GRAND TOTAL			4.5

LEGEND

- EXIST SIGN POST
- PROPOSED SIGN POST
- 1-4 SMALL ROAD AND GUIDE SIGN DESIGNATION
- 2-6 LARGE GUIDE SIGN DESIGNATION
- DELINEATORS
- OBJECT MARKERS
- SOLAR POWERED ROADSIDE FLASHING BEACON ASSEMBLY (SPRFBA)

STATE OF TEXAS
GILMER D. GASTON
80472
LICENSED
PROFESSIONAL ENGINEER

GILMER D. GASTON P.E. — 8/10/2010 DATE

SCALE: PLAN - 1":100'

REV. NO.	DATE	DESCRIPTION	BY

ALAMO RMA

PAPE-DAWSON ENGINEERS
555 EAST RAMSEY | SAN ANTONIO, TEXAS 78216 | PHONE: 210.375.9000 FAX: 210.375.9010
TEXAS BOARD OF PROFESSIONAL ENGINEERS, FIRM REGISTRATION # 470

Texas Department of Transportation
© 2010

NOTES:

1. EXISTING SIGNS ARE SCREENED BACK AND ARE TO REMAIN AS IS UNLESS OTHERWISE NOTED.
2. ALL SIGN LOCATIONS ARE APPROXIMATE. EXACT LOCATIONS ARE TO BE STAKED BY THE CONTRACTOR AND APPROVED BY THE ENGINEER PRIOR TO CONSTRUCTION.
3. PAVEMENT MARKINGS ARE SHOWN FOR REFERENCE ONLY. SEE PAVEMENT MARKING SHEETS FOR DETAILS.
4. SEE LARGE SIGN SUMMARY AND THIS SHEET FOR LARGE SIGN QUANTITIES. SEE SMALL SIGN SUMMARY AND SMALL SIGN TALLY FOR SMALL SIGN QUANTITIES.

LOOP 1604

LARGE AND SMALL SIGN LAYOUT

SBFR

STA. 24+00 TO STA. 34+00

SHEET 20 OF 26

DGN:	FED. RD. DIV. NO.	STATE	FEDERAL AID PROJECT NO.			HIGHWAY NO.
CHK DGN:	6	TEXAS	STP 2011(210)ES			LP 1604
DWG:	DIST.	COUNTY	CONT. NO.	SECT. NO.	JOB NO.	SHEET NO.
CHK DWG:	SAT	BEXAR	2452	01	050	400

Design Filename: p:\74\00\04\design\civil\traffic\740004SSL20.dgn

ITEM	DESCRIPTION	UNIT	QTY
0644-2060	REMOVE SM RD SN SUP & AM	EA	4
0647-2003	REMOVE LRSA	EA	2
0658-2263	INSTL DEL ASSM (D-SY)SZ 1(FLX)GND	EA	6
0658-2316	INSTL OM ASSM (OM-2Z)(FLX)GND	EA	5
0658-2318	INSTL OM ASSM (OM-2Z)(FLX)SRF	EA	1
0658-2329	INSTL DEL ASSM (D-SW)SZ 1(FLX)GND	EA	2

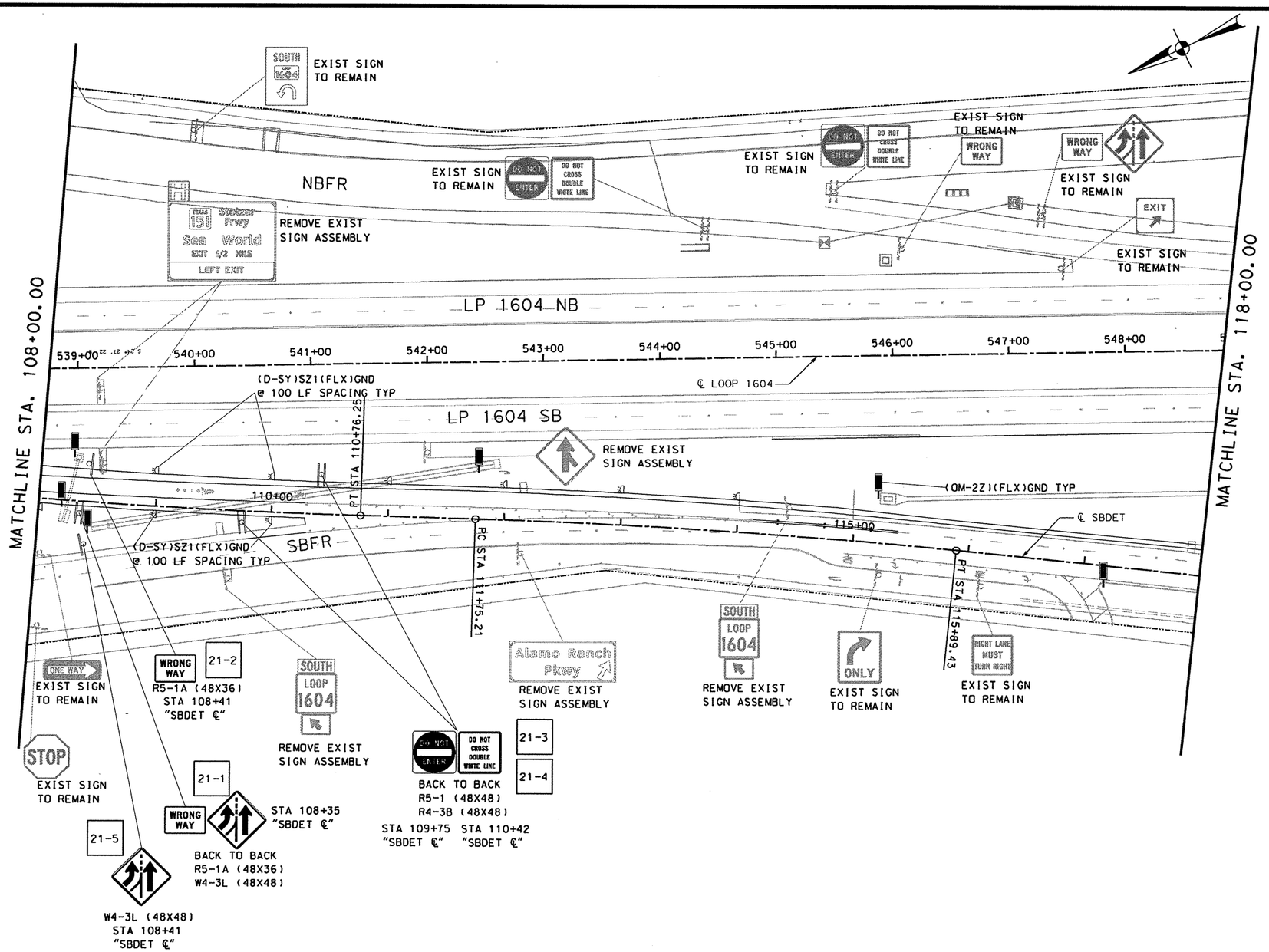

RIP-RAP APRONS			
TYPE OF MOUNT	EA	MULTIPLIED BY C.Y.	TOTAL C.Y.
SINGLE POST	-	0.8	-
MULTI-POST	-	1.5	-
CLASS "B" CONCRETE GRAND TOTAL			0.0

LEGEND

- EXIST SIGN POST
- PROPOSED SIGN POST
- 1-4 SMALL ROAD AND GUIDE SIGN DESIGNATION
- 2-6 LARGE GUIDE SIGN DESIGNATION
- DELINEATORS
- OBJECT MARKERS
- SOLAR POWERED ROADSIDE FLASHING BEACON ASSEMBLY (SPRFBA)

STATE OF TEXAS
GILMER D. GASTON
80472
LICENSED
PROFESSIONAL ENGINEER

GILMER D. GASTON P.E. 6/26/2010 DATE

SCALE: PLAN - 1":100'

NOTES:

1. EXISTING SIGNS ARE SCREENED BACK AND ARE TO REMAIN AS IS UNLESS OTHERWISE NOTED.
2. ALL SIGN LOCATIONS ARE APPROXIMATE. EXACT LOCATIONS ARE TO BE STAKED BY THE CONTRACTOR AND APPROVED BY THE ENGINEER PRIOR TO CONSTRUCTION.
3. PAVEMENT MARKINGS ARE SHOWN FOR REFERENCE ONLY. SEE PAVEMENT MARKING SHEETS FOR DETAILS.
4. SEE LARGE SIGN SUMMARY AND THIS SHEET FOR LARGE SIGN QUANTITIES. SEE SMALL SIGN SUMMARY AND SMALL SIGN TALLY FOR SMALL SIGN QUANTITIES.

REV. NO.	DATE	DESCRIPTION	BY

ALAMO RMA

PAPE-DAWSON ENGINEERS

555 EAST RAMSEY | SAN ANTONIO, TEXAS 78216 | PHONE: 210.375.9000 FAX: 210.375.9010

TEXAS BOARD OF PROFESSIONAL ENGINEERS, FIRM REGISTRATION # 470

Texas Department of Transportation © 2010

LOOP 1604

LARGE AND SMALL SIGN LAYOUT

SBFR

STA. 34+00 TO STA. 44+00

SHEET 21 OF 26

DGN:	FED. RD. DIV. NO.	STATE	FEDERAL AID PROJECT NO.			HIGHWAY NO.
CHK DGN:	6	TEXAS	STP 2011(210)ES			LP 1604
DWG:	DIST.	COUNTY	CONT. NO.	SECT. NO.	JOB NO.	SHEET NO.
CHK DWG:	SAT	BEXAR	2452	01	050	401

Plotted on: 6/26/2010

Design Filename: p:\74\00\04\design\civil\traffic\740004SSL21.dgn

Plotted on: 6/26/2010

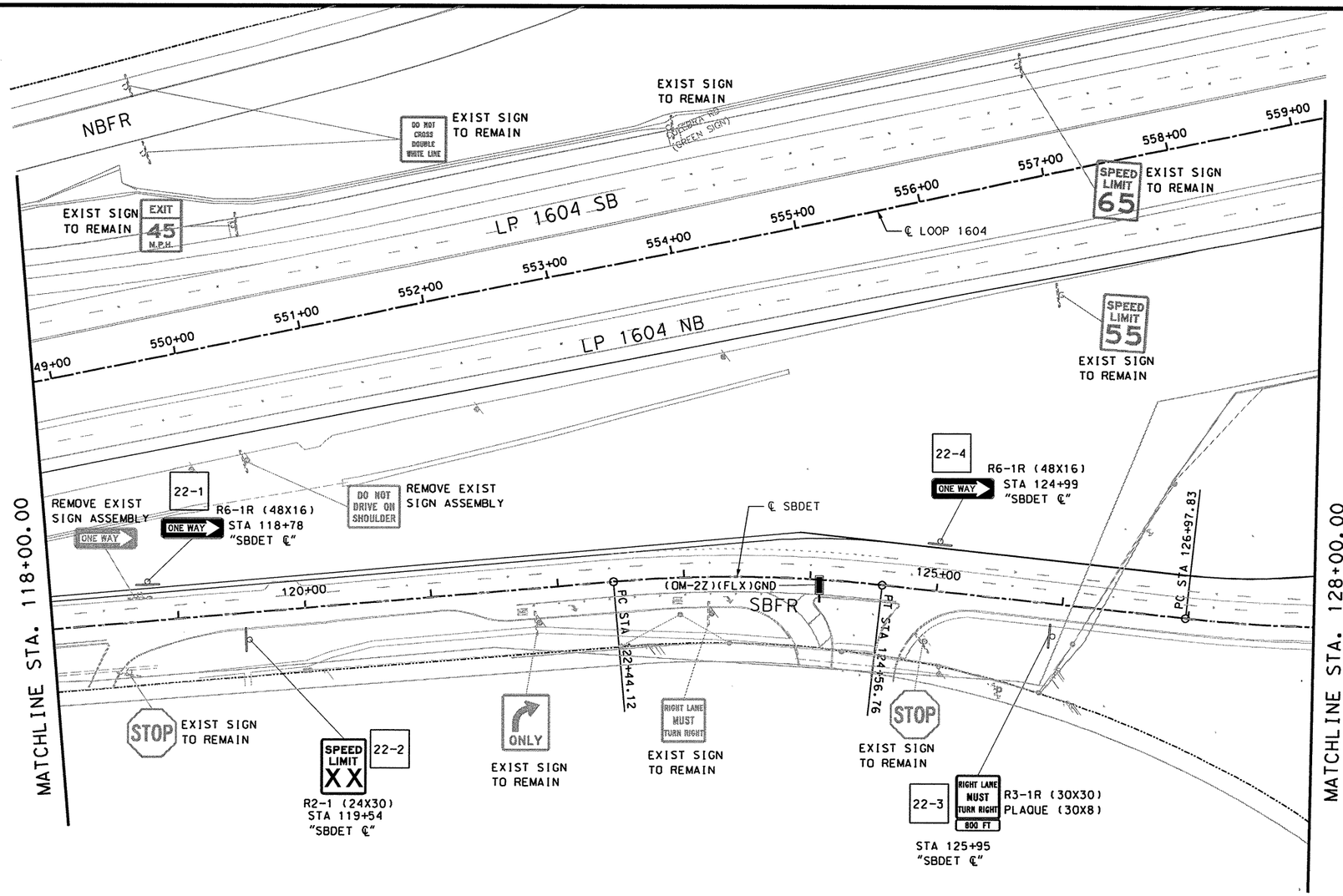

ITEM	DESCRIPTION	UNIT	QTY
0644-2060	REMOVE SM RD SN SUP & AM	EA	2
0658-2318	INSTL OM ASSM (OM-2Z)(FLX)SRF	EA	1

RIP-RAP APRONS			
TYPE OF MOUNT	EA	MULTIPLIED BY C.Y.	TOTAL C.Y.
SINGLE POST	-	0.8	-
MULTI-POST	-	1.5	-
CLASS "B" CONCRETE GRAND TOTAL			0.0

LEGEND

- EXIST SIGN POST
- PROPOSED SIGN POST
- 1-4 SMALL ROAD AND GUIDE SIGN DESIGNATION
- 2-6 LARGE GUIDE SIGN DESIGNATION
- DELINEATORS
- OBJECT MARKERS
- SOLAR POWERED ROADSIDE FLASHING BEACON ASSEMBLY (SPRFBA)

NOTES:

1. EXISTING SIGNS ARE SCREENED BACK AND ARE TO REMAIN AS IS UNLESS OTHERWISE NOTED.
2. ALL SIGN LOCATIONS ARE APPROXIMATE. EXACT LOCATIONS ARE TO BE STAKED BY THE CONTRACTOR AND APPROVED BY THE ENGINEER PRIOR TO CONSTRUCTION.
3. PAVEMENT MARKINGS ARE SHOWN FOR REFERENCE ONLY. SEE PAVEMENT MARKING SHEETS FOR DETAILS.
4. SEE LARGE SIGN SUMMARY AND THIS SHEET FOR LARGE SIGN QUANTITIES. SEE SMALL SIGN SUMMARY AND SMALL SIGN TALLY FOR SMALL SIGN QUANTITIES.

STATE OF TEXAS
GILMER D. GASTON
80472
LICENSED PROFESSIONAL ENGINEER

GILMER D. GASTON P.E. — 6/26/2010 DATE

SCALE: PLAN - 1":100'

REV. NO.	DATE	DESCRIPTION	BY

ALAMO RMA

PAPE-DAWSON ENGINEERS
555 EAST RAMSEY | SAN ANTONIO, TEXAS 78216 | PHONE: 210.375.9000 FAX: 210.375.9010
TEXAS BOARD OF PROFESSIONAL ENGINEERS, FIRM REGISTRATION # 470

Texas Department of Transportation
© 2010

LOOP 1604

LARGE AND SMALL SIGN LAYOUT

SBFR

STA. 44+00 TO STA. 54+00

SHEET 22 OF 26

DGN:	FED. RD. DIV. NO.	STATE	FEDERAL AID PROJECT NO.			HIGHWAY NO.
CHK DGN:	6	TEXAS	STP 2011(210)ES			LP 1604
DWG:	DIST.	COUNTY	CONT. NO.	SECT. NO.	JOB NO.	SHEET NO.
CHK DWG:	SAT	BEXAR	2452	01	050	402

Design Filename: p:\74\00104\design\civil\traffic\740004SSL22.dgn

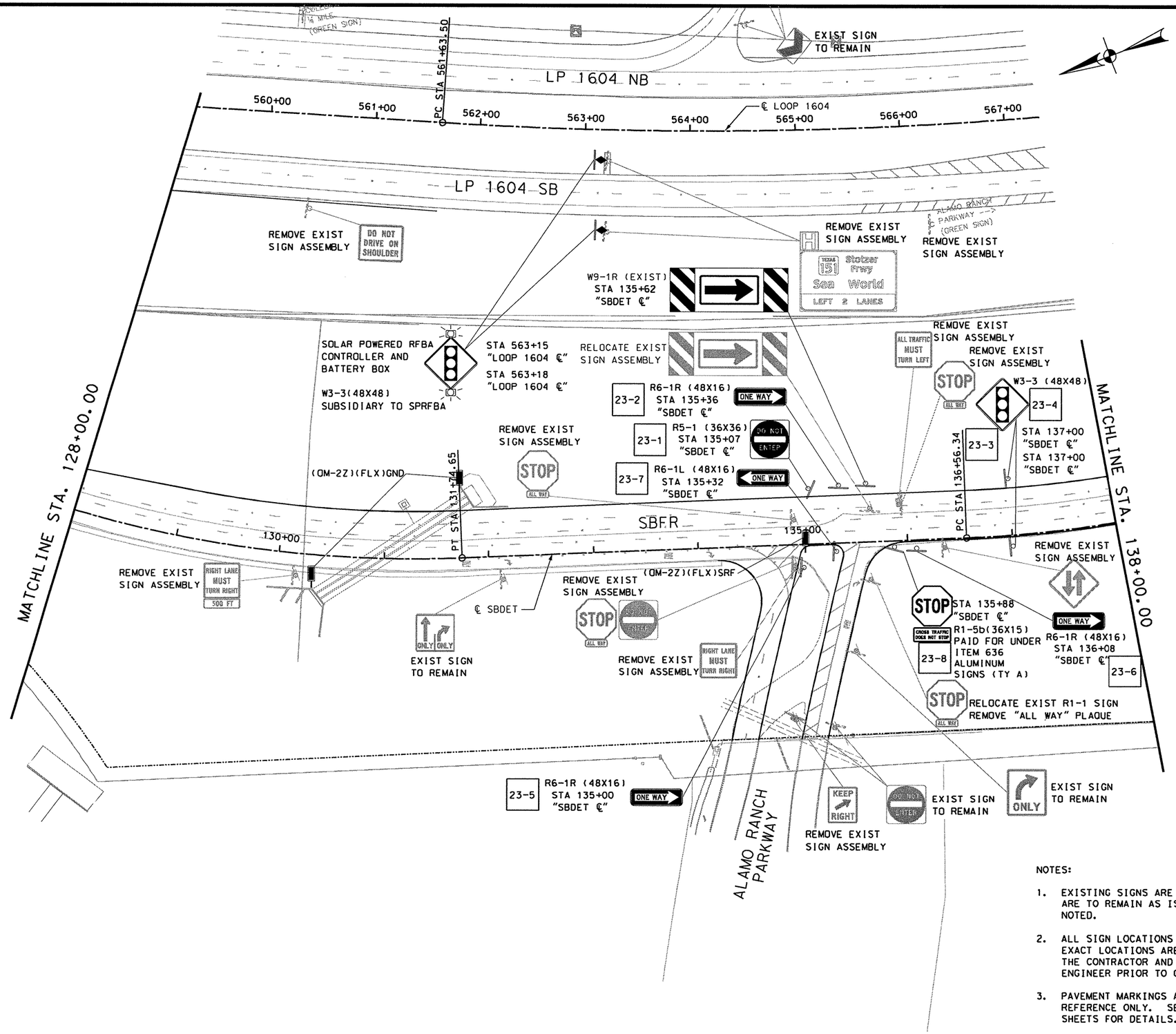

ITEM	DESCRIPTION	UNIT	QTY
0636-2001	ALUMINUM SIGNS (TY A)	SF	3.75
0644-2058	RELOCATE SM RD SN SUP & AM TY S80	EA	2
0644-2060	REMOVE SM RD SN SUP & AM	EA	10
0647-2003	REMOVE LRSA	EA	2
0658-2316	INSTL OM ASSM (OM-2Z)(FLX)GND	EA	2
0658-2318	INSTL OM ASSM (OM-2Z)(FLX)SRF	EA	1
0682-2025	VEH SIG SEC (12 IN) LED (YEL)	EA	4
0685-2004	INSTL RDSD FLSH BEACON ASSM(SOLAR PWRD)	EA	2

RIP-RAP APRONS			
TYPE OF MOUNT	EA	MULTIPLIED BY C.Y.	TOTAL C.Y.
SINGLE POST	-	0.8	-
MULTI-POST	-	1.5	-
CLASS "B" CONCRETE GRAND TOTAL			0.0

LEGEND

- EXIST SIGN POST
- PROPOSED SIGN POST
- 1-4 SMALL ROAD AND GUIDE SIGN DESIGNATION
- 2-6 LARGE GUIDE SIGN DESIGNATION
- DELINEATORS
- OBJECT MARKERS
- SOLAR POWERED ROADSIDE FLASHING BEACON ASSEMBLY (SPRFBA)

NOTES:

1. EXISTING SIGNS ARE SCREENED BACK AND ARE TO REMAIN AS IS UNLESS OTHERWISE NOTED.
2. ALL SIGN LOCATIONS ARE APPROXIMATE. EXACT LOCATIONS ARE TO BE STAKED BY THE CONTRACTOR AND APPROVED BY THE ENGINEER PRIOR TO CONSTRUCTION.
3. PAVEMENT MARKINGS ARE SHOWN FOR REFERENCE ONLY. SEE PAVEMENT MARKING SHEETS FOR DETAILS.
4. SEE LARGE SIGN SUMMARY AND THIS SHEET FOR LARGE SIGN QUANTITIES. SEE SMALL SIGN SUMMARY AND SMALL SIGN TALLY FOR SMALL SIGN QUANTITIES.

STATE OF TEXAS — GILMER D. GASTON — 80472 — LICENSED PROFESSIONAL ENGINEER

GILMER D. GASTON P.E. — 6/30/2010 DATE

SCALE: PLAN - 1":100'

REV. NO.	DATE	DESCRIPTION	BY

ALAMO RMA

PAPE-DAWSON ENGINEERS

555 EAST RAMSEY | SAN ANTONIO, TEXAS 78216 | PHONE: 210.375.9000 FAX: 210.375.9010

TEXAS BOARD OF PROFESSIONAL ENGINEERS, FIRM REGISTRATION # 470

Texas Department of Transportation © 2010

LOOP 1604

LARGE AND SMALL SIGN LAYOUT

SBFR

STA. 54+00 TO STA. 64+00

SHEET 23 OF 26

DGN:	FED. RD. DIV. NO.	STATE	FEDERAL AID PROJECT NO.			HIGHWAY NO.
CHK DGN:	6	TEXAS	STP 2011(210)ES			LP 1604
DWG:	DIST.	COUNTY	CONT. NO.	SECT. NO.	JOB NO.	SHEET NO.
CHK DWG:	SAT	BEXAR	2452	01	050	403

Plotted on: 6/30/2010

Design Filename: p:\74000\04\design\civil\TRAFFIC\740004SSL23.dgn

ITEM	DESCRIPTION	UNIT	QTY
0432-2066	RIPRAP (CONC)(CL B)	CY	1.5
0644-2060	REMOVE SM RD SN SUP & AM	EA	14
0658-2316	INSTL OM ASSM (OM-2Z)(FLX)GND	EA	7

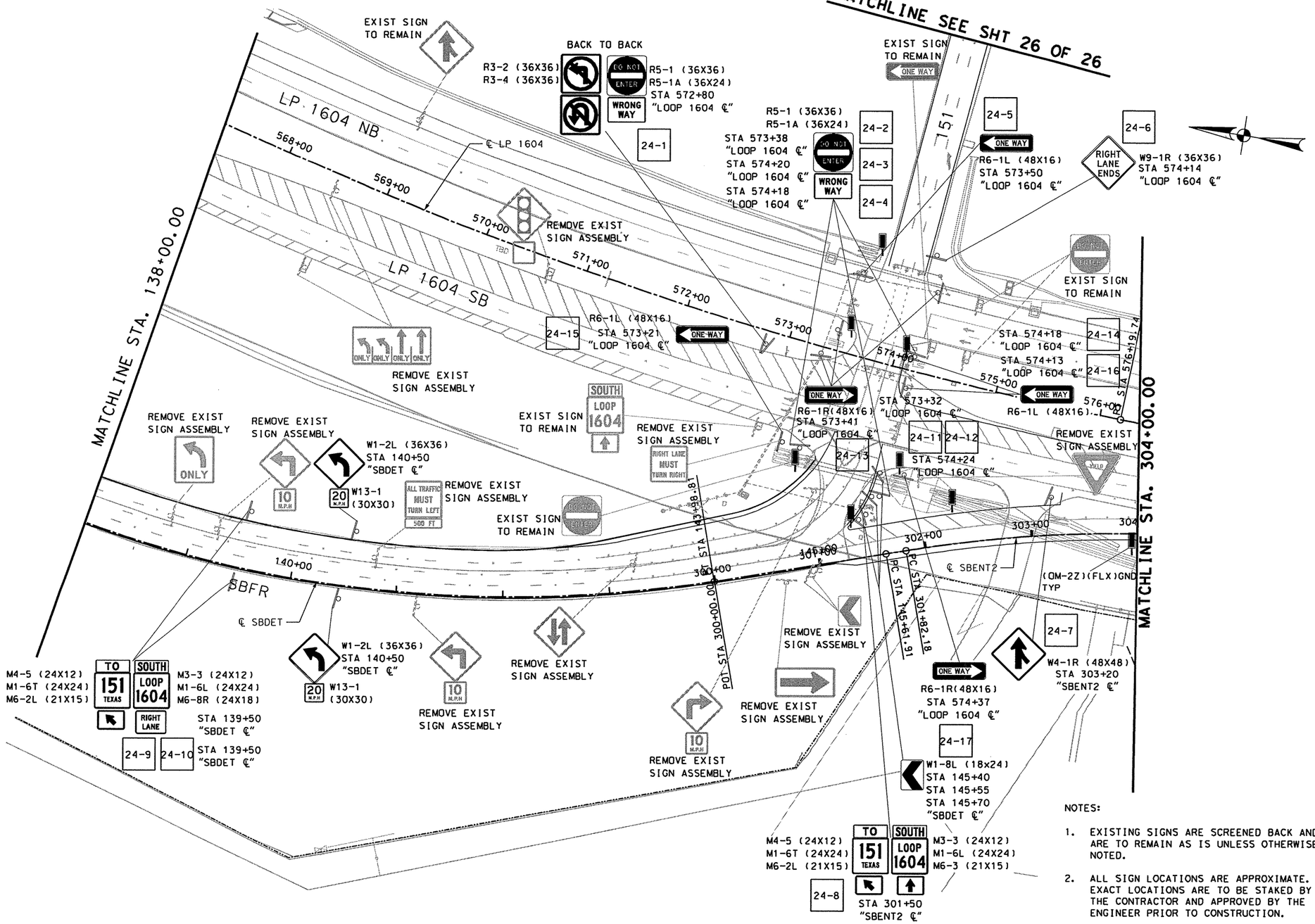

RIP-RAP APRONS			
TYPE OF MOUNT	EA	MULTIPLIED BY C.Y.	TOTAL C.Y.
SINGLE POST		0.8	
MULTI-POST		1.5	
CLASS "B" CONCRETE GRAND TOTAL			

LEGEND

EXIST SIGN POST	1	1.5	
PROPOSED SIGN POST		1.5	

- 1-4 SMALL ROAD AND GUIDE SIGN DESIGNATION
- 2-6 LARGE GUIDE SIGN DESIGNATION
- DELINEATORS
- OBJECT MARKERS
- SOLAR POWERED ROADSIDE FLASHING BEACON ASSEMBLY (SPRFBA)

REFER TO TRAFFIC SIGNAL PLAN SHEETS FOR ADDITIONAL SIGNS MOUNTED ON MAST ARMS

NOTES:

1. EXISTING SIGNS ARE SCREENED BACK AND ARE TO REMAIN AS IS UNLESS OTHERWISE NOTED.
2. ALL SIGN LOCATIONS ARE APPROXIMATE. EXACT LOCATIONS ARE TO BE STAKED BY THE CONTRACTOR AND APPROVED BY THE ENGINEER PRIOR TO CONSTRUCTION.
3. PAVEMENT MARKINGS ARE SHOWN FOR REFERENCE ONLY. SEE PAVEMENT MARKING SHEETS FOR DETAILS.
4. SEE LARGE SIGN SUMMARY AND THIS SHEET FOR LARGE SIGN QUANTITIES. SEE SMALL SIGN SUMMARY AND SMALL SIGN TALLY FOR SMALL SIGN QUANTITIES.

STATE OF TEXAS
GILMER D. GASTON
80472
LICENSED
PROFESSIONAL ENGINEER

GILMER D. GASTON P.E. — 6/29/2010 DATE

SCALE: PLAN - 1":100'

REV. NO.	DATE	DESCRIPTION	BY

ALAMO RMA

PAPE-DAWSON ENGINEERS
555 EAST RAMSEY | SAN ANTONIO, TEXAS 78216 | PHONE: 210.375.9000 FAX: 210.375.9010
TEXAS BOARD OF PROFESSIONAL ENGINEERS, FIRM REGISTRATION # 470

Texas Department of Transportation © 2010

LOOP 1604

LARGE AND SMALL SIGN LAYOUT

SBFR

STA. 64+00 TO STA. 74+00

SHEET 24 OF 26

DGN:	FED. RD. DIV. NO.	STATE	FEDERAL AID PROJECT NO.			HIGHWAY NO.
CHK DGN:	6	TEXAS	STP 2011(210)ES			LP 1604
DWG:	DIST.	COUNTY	CONT. NO.	SECT. NO.	JOB NO.	SHEET NO.
CHK DWG:	SAT	BEXAR	2452	01	050	404

Plotted on: 6/29/2010

Design filename: p:\74\00\04\design\civil\TRAFFIC\740004SSL24.dgn

Plotted on: 8/18/2010

Design Filename: p:\74\00\04\design\civil\TRAFFIC\7400045SL25.dgn

ITEM	DESCRIPTION	UNIT	QTY
0658-2316	INSTL OM ASSM (OM-2Z)(FLX)GND	EA	2

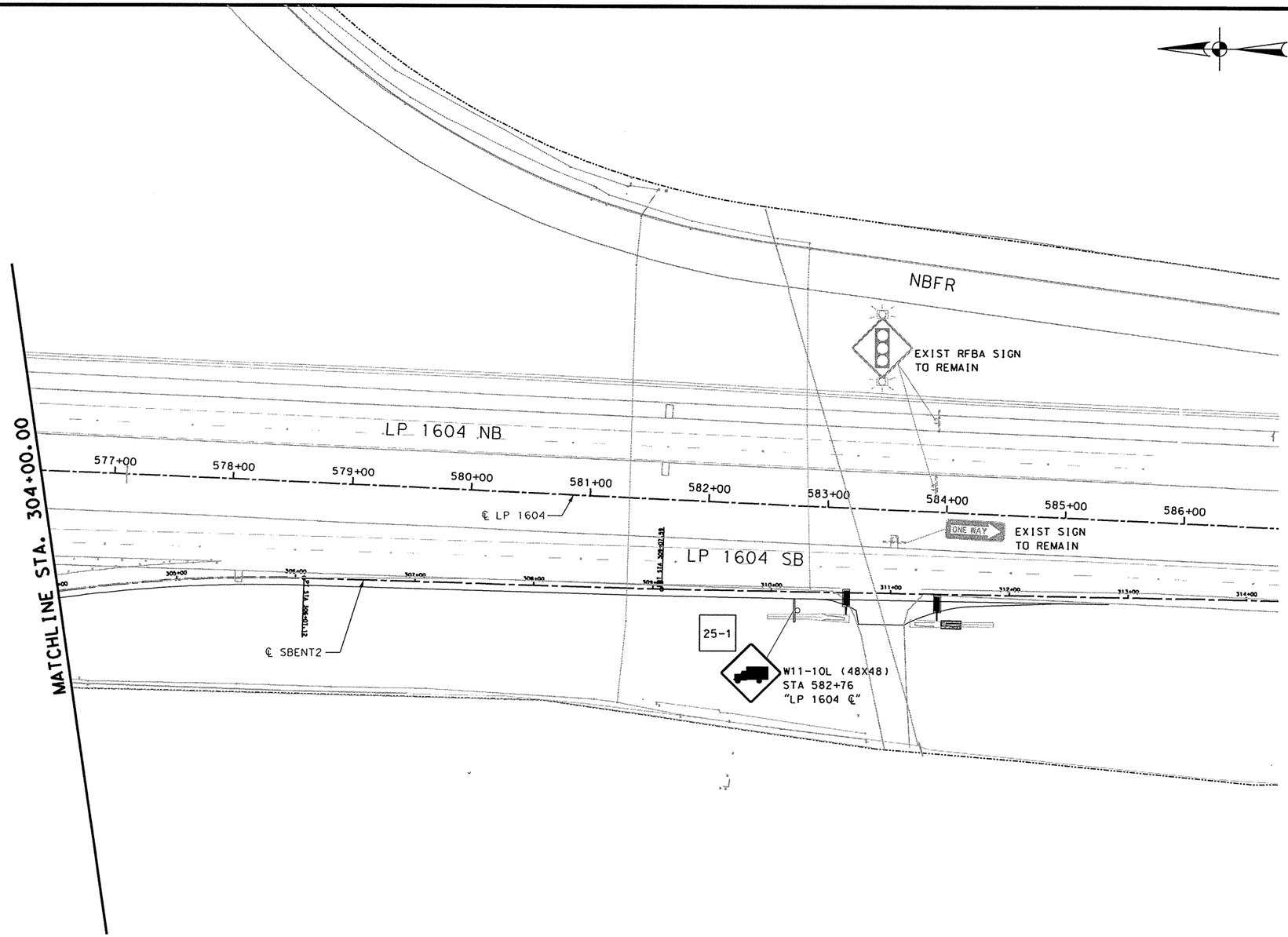

RIP-RAP APRONS			
TYPE OF MOUNT	EA	MULTIPLIED BY C.Y.	TOTAL C.Y.
SINGLE POST	–	0.8	–
MULTI-POST	1	1.5	–
CLASS "B" CONCRETE GRAND TOTAL			–

LEGEND

- EXIST SIGN POST
- PROPOSED SIGN POST
- 1-4 SMALL ROAD AND GUIDE SIGN DESIGNATION
- 2-6 LARGE GUIDE SIGN DESIGNATION
- DELINEATORS
- OBJECT MARKERS
- SOLAR POWERED ROADSIDE FLASHING BEACON ASSEMBLY (SPRFBA)

NOTES:

1. EXISTING SIGNS ARE SCREENED BACK AND ARE TO REMAIN AS IS UNLESS OTHERWISE NOTED.
2. ALL SIGN LOCATIONS ARE APPROXIMATE. EXACT LOCATIONS ARE TO BE STAKED BY THE CONTRACTOR AND APPROVED BY THE ENGINEER PRIOR TO CONSTRUCTION.
3. PAVEMENT MARKINGS ARE SHOWN FOR REFERENCE ONLY. SEE PAVEMENT MARKING SHEETS FOR DETAILS.
4. SEE LARGE SIGN SUMMARY AND THIS SHEET FOR LARGE SIGN QUANTITIES. SEE SMALL SIGN SUMMARY AND SMALL SIGN TALLY FOR SMALL SIGN QUANTITIES.

STATE OF TEXAS
GILMER D. GASTON
80472
LICENSED
PROFESSIONAL ENGINEER

GILMER D. GASTON P.E. — 6/18/2010 DATE

SCALE: PLAN - 1":100'

REV. NO.	DATE	DESCRIPTION	BY

ALAMO RMA

PAPE-DAWSON ENGINEERS

555 EAST RAMSEY | SAN ANTONIO, TEXAS 78216 | PHONE: 210.375.9000 FAX: 210.375.9010

TEXAS BOARD OF PROFESSIONAL ENGINEERS, FIRM REGISTRATION # 470

Texas Department of Transportation
© 2010

LOOP 1604

LARGE AND SMALL SIGN LAYOUT

SBFR

STA. 74+00 TO END OF PROJECT

SHEET 25 OF 26

DGN:	FED. RD. DIV. NO.	STATE	FEDERAL AID PROJECT NO.			HIGHWAY NO.
CHK DGN:	6	TEXAS	STP 2011(210)ES			LP 1604
DWG:	DIST.	COUNTY	CONT. NO.	SECT. NO.	JOB NO.	SHEET NO.
CHK DWG:	SAT	BEXAR	2452	01	050	405

Plotted on: 6/29/2010

Design Filename: p:\74\00\04\design\civil\traffic\740004SSL26.dgn

ITEM	DESCRIPTION	UNIT	QTY
0658-2329	INSTL DEL ASSM (D-SW)SZ 1(FLX)GND	EA	6

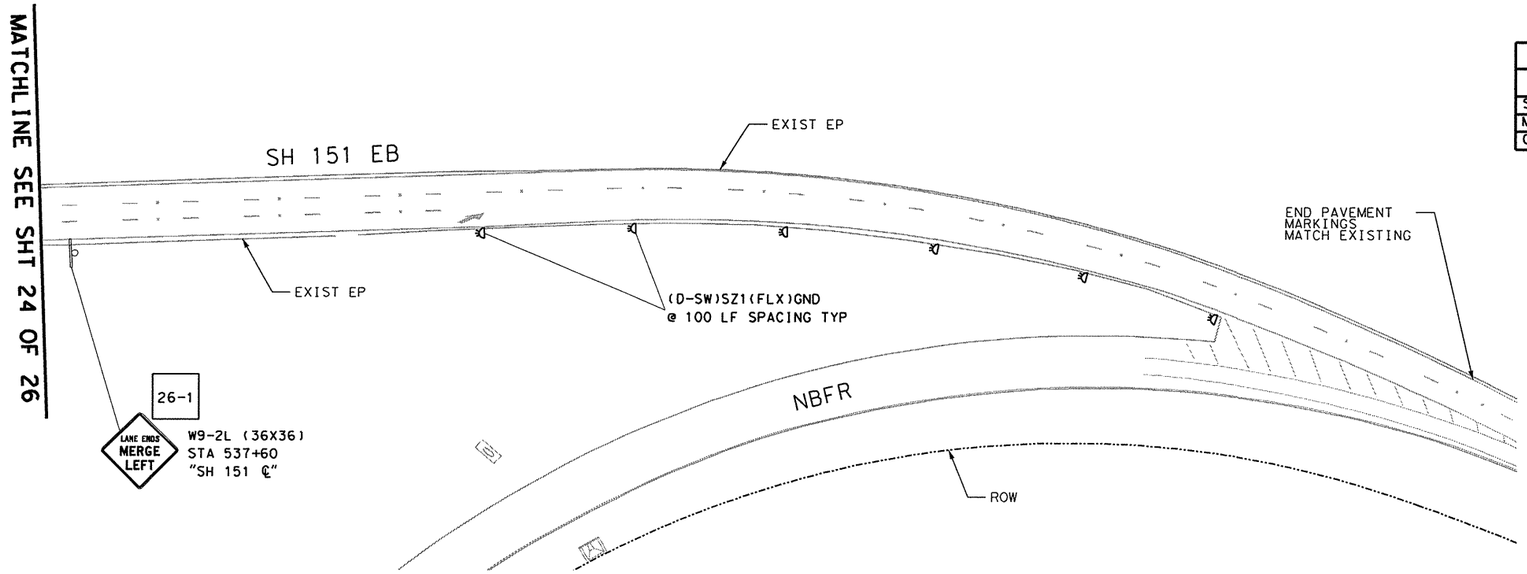

RIP-RAP APRONS				
TYPE OF MOUNT		EA	MULTIPLIED BY C.Y.	TOTAL C.Y.
SINGLE POST	○	–	0.8	–
MULTI-POST	□	–	1.5	–
CLASS "B" CONCRETE GRAND TOTAL				0.0

LEGEND

- EXIST SIGN POST
- PROPOSED SIGN POST
- 1-4 SMALL ROAD AND GUIDE SIGN DESIGNATION
- 2-6 LARGE GUIDE SIGN DESIGNATION
- DELINEATORS
- OBJECT MARKERS
- SOLAR POWERED ROADSIDE FLASHING BEACON ASSEMBLY (SPRFBA)

NOTES:

1. EXISTING SIGNS ARE SCREENED BACK AND ARE TO REMAIN AS IS UNLESS OTHERWISE NOTED.
2. ALL SIGN LOCATIONS ARE APPROXIMATE. EXACT LOCATIONS ARE TO BE STAKED BY THE CONTRACTOR AND APPROVED BY THE ENGINEER PRIOR TO CONSTRUCTION.
3. PAVEMENT MARKINGS ARE SHOWN FOR REFERENCE ONLY. SEE PAVEMENT MARKING SHEETS FOR DETAILS.
4. SEE LARGE SIGN SUMMARY AND THIS SHEET FOR LARGE SIGN QUANTITIES. SEE SMALL SIGN SUMMARY AND SMALL SIGN TALLY FOR SMALL SIGN QUANTITIES.

STATE OF TEXAS
GILMER D. GASTON
80472
LICENSED
PROFESSIONAL ENGINEER

GILMER D. GASTON P.E. — 6/29/2010 DATE

50 0 50 100
SCALE: PLAN - 1":100'

REV. NO.	DATE	DESCRIPTION	BY

ALAMO RMA

PAPE-DAWSON ENGINEERS
555 EAST RAMSEY | SAN ANTONIO, TEXAS 78216 | PHONE: 210.375.9000 FAX: 210.375.9010
TEXAS BOARD OF PROFESSIONAL ENGINEERS, FIRM REGISTRATION # 470

Texas Department of Transportation
© 2010

LOOP 1604

LARGE AND SMALL SIGN LAYOUT

SH 151

SHEET 26 OF 26

DGN:	FED. RD. DIV. NO.	STATE	FEDERAL AID PROJECT NO.			HIGHWAY NO.
CHK DGN:	6	TEXAS	STP 2011(210)ES			LP 1604
DWG:	DIST.	COUNTY	CONT. NO.	SECT. NO.	JOB NO.	SHEET NO.
CHK DWG:	SAT	BEXAR	2452	01	050	406

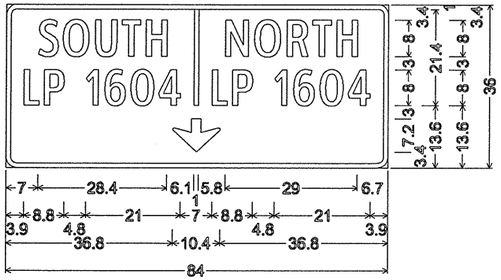

2.3" Radius, 1.0" Border, White on Green;
"SOUTH" ClearviewHwy-2-W 70% spacing;
"LP 1604" ClearviewHwy-2-W 70% spacing;
"NORTH" ClearviewHwy-2-W 70% spacing;
"LP 1604" ClearviewHwy-2-W 70% spacing;
Down Arrow 10.4" 270°;

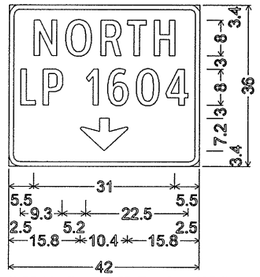

2.3" Radius, 1.0" Border, White on Green;
"NORTH" ClearviewHwy-2-W;
"LP 1604" ClearviewHwy-2-W;
Down Arrow 10.4" 270°;

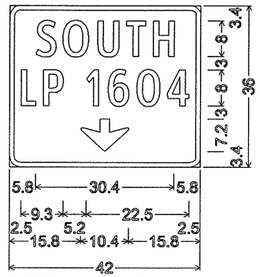

2.3" Radius, 1.0" Border, White on Green;
"SOUTH" ClearviewHwy-2-W;
"LP 1604" ClearviewHwy-2-W;
Down Arrow 10.4" 270°;

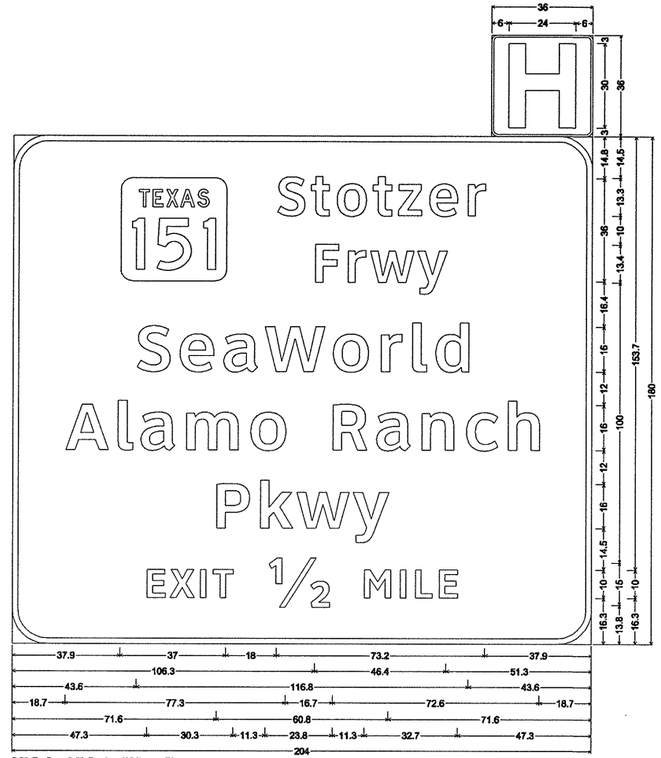

2.3" Radius, 0.8" Border, White on Blue;
Symbol RM085;
12.0" Radius, 2.0" Border, White on Green;
State Highway 151 M1-6T3B; "Stotzer" ClearviewHwy-5-W-R; "Frwy" ClearviewHwy-5-W-R; "SeaWorld" ClearviewHwy-5-W-R;
"Alamo Ranch" ClearviewHwy-5-W-R; "Pkwy" ClearviewHwy-5-W-R; "EXIT ½ MILE" ClearviewHwy-5-W-R;

FUTURE SIGN

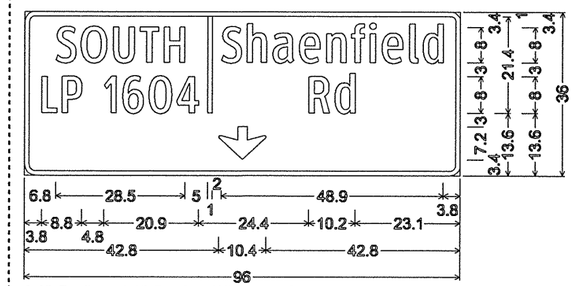

2.3" Radius, 1.0" Border, White on Green;
"SOUTH" ClearviewHwy-2-W 70% spacing;
"LP 1604" ClearviewHwy-2-W 70% spacing;
"Shaenfield" ClearviewHwy-2-W 70% spacing;
"Rd" ClearviewHwy-2-W 70% spacing;
Down Arrow 10.4" 270°;

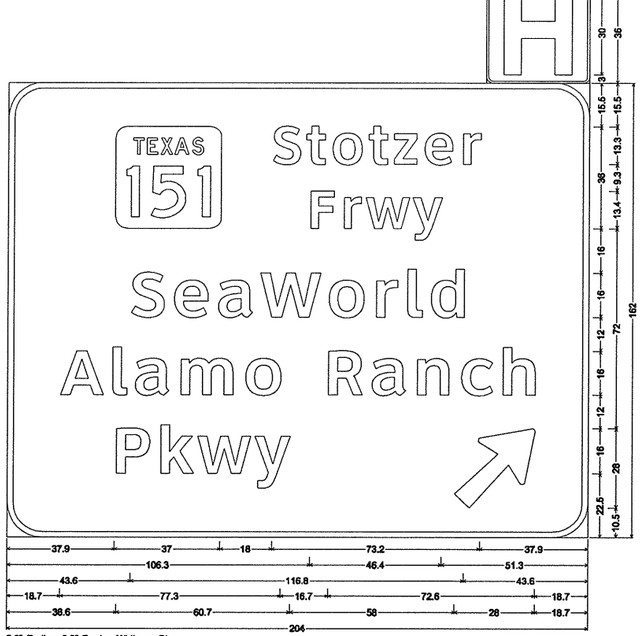

2.3" Radius, 0.8" Border, White on Blue;
Symbol RM085;
12.0" Radius, 2.0" Border, White on Green;
State Highway 151 M1-6T3B; "Stotzer" ClearviewHwy-5-W-R; "Frwy" ClearviewHwy-5-W-R; "SeaWorld" ClearviewHwy-5-W-R;
"Alamo Ranch" ClearviewHwy-5-W-R; "Pkwy" ClearviewHwy-5-W-R; Arrow A-3 - 35.6° 45°;

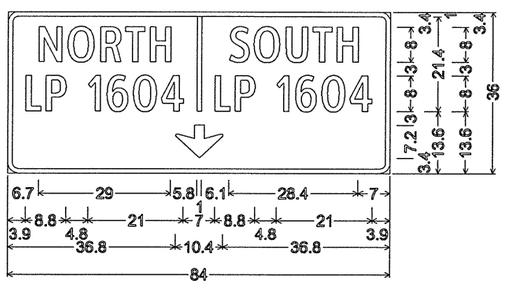

2.3" Radius, 1.0" Border, White on Green;
"NORTH" ClearviewHwy-2-W 70% spacing;
"LP 1604" ClearviewHwy-2-W 70% spacing;
"SOUTH" ClearviewHwy-2-W 70% spacing;
"LP 1604" ClearviewHwy-2-W 70% spacing;
Down Arrow 10.4" 270°;

FUTURE SIGN

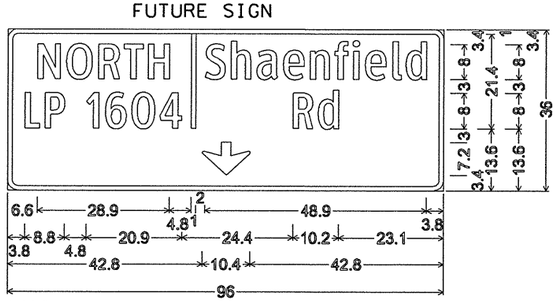

2.3" Radius, 1.0" Border, White on Green;
"NORTH" ClearviewHwy-2-W 70% spacing;
"LP 1604" ClearviewHwy-2-W 70% spacing;
"Shaenfield" ClearviewHwy-2-W 70% spacing;
"Rd" ClearviewHwy-2-W 70% spacing;
Down Arrow 10.4" 270°;

STATE OF TEXAS
GILMER D. GASTON
80472
LICENSED
PROFESSIONAL ENGINEER

GILMER D. GASTON P.E. — 6/26/2010 DATE

REV. NO.	DATE	DESCRIPTION	BY

ALAMO RMA

PAPE-DAWSON ENGINEERS
555 EAST RAMSEY | SAN ANTONIO, TEXAS 78216 | PHONE: 210.375.9000 FAX: 210.375.9010
TEXAS BOARD OF PROFESSIONAL ENGINEERS, FIRM REGISTRATION # 470

Texas Department of Transportation
© 2010

LOOP 1604

LARGE AND MISCELANEOUS SIGN DETAILS

DGN:	FED. RD. DIV. NO.	STATE	FEDERAL AID PROJECT NO.			HIGHWAY NO.
CHK DGN:	6	TEXAS	STP 2011(210)ES			LP 1604
DWG:	DIST.	COUNTY	CONT. NO.	SECT. NO.	JOB NO.	SHEET NO.
CHK DWG:	SAT	BEXAR	2452	01	050	407

Plotted on: 6/26/2010

Design Filename: p:\74\00\04\design\civil\traffic\740004SIGNDTL01.dgn

Plotted on: 6/26/2010

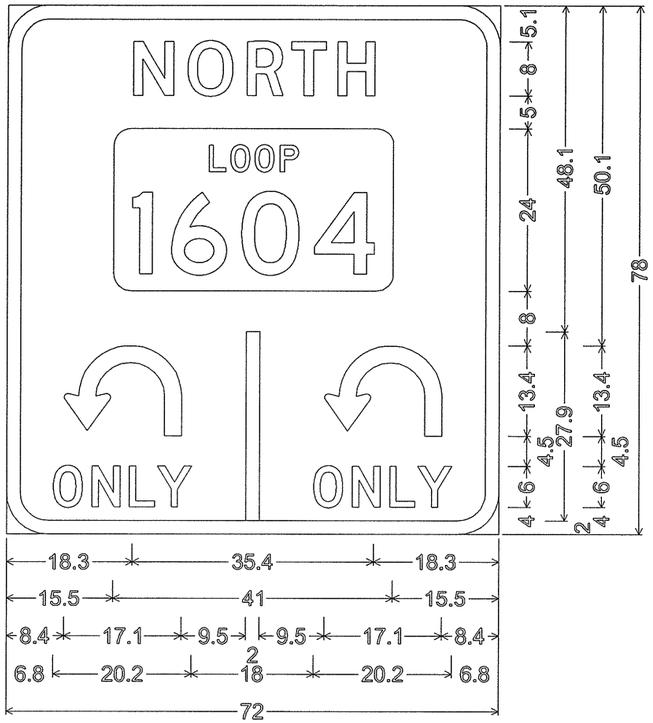

6.0" Radius, 2.0" Border, White on Green;
"NORTH" ClearviewHwy-3-W;
State Highway 1604 M1-6L4A; UL ir=5, s=2.5;
"ONLY" D; UL ir=5, s=2.5; "ONLY" D;

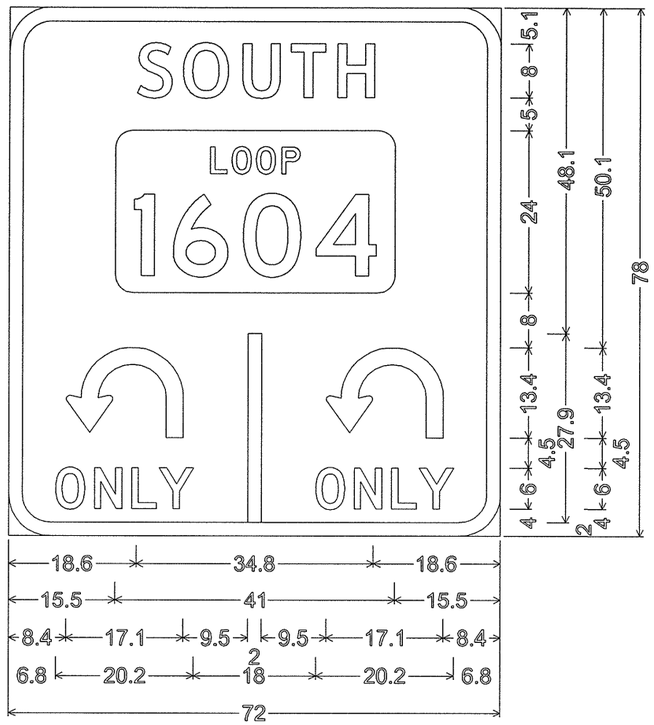

6.0" Radius, 2.0" Border, White on Green;
"SOUTH" ClearviewHwy-3-W;
State Highway 1604 M1-6L4A; UL ir=5, s=2.5;
"ONLY" D; UL ir=5, s=2.5; "ONLY" D;

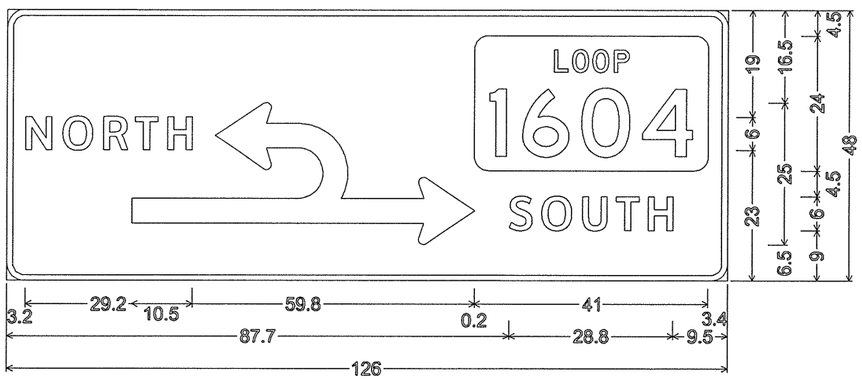

3.0" Radius, 1.0" Border, White on Green;
" " Black ClearviewHwy-4-W; "NORTH" ClearviewHwy-4-W;
U-TURN-THRU ARROW; State Highway 1604 M1-6L4A;
"SOUTH" ClearviewHwy-4-W; " " Black ClearviewHwy-4-W;

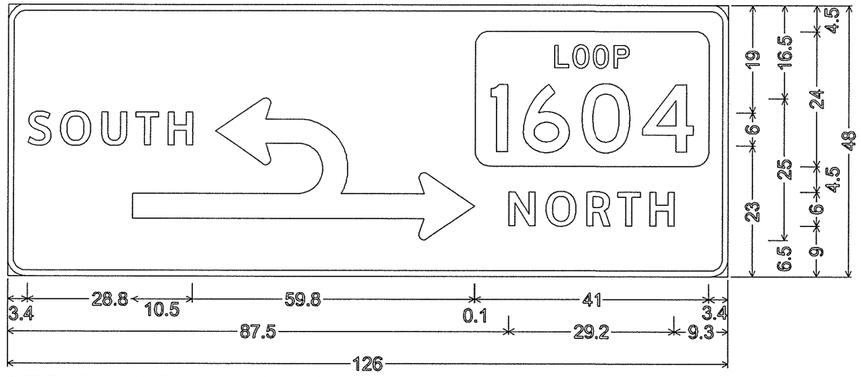

3.0" Radius, 1.0" Border, White on Green;
" " Black ClearviewHwy-4-W; "SOUTH" ClearviewHwy-4-W;
U-TURN-THRU ARROW; State Highway 1604 M1-6L4A;
"NORTH" ClearviewHwy-4-W; " " Black ClearviewHwy-4-W;

STATE OF TEXAS
GILMER D. GASTON
80472
LICENSED
PROFESSIONAL ENGINEER

GILMER D. GASTON P.E. 6/26/2010 DATE

REV. NO.	DATE	DESCRIPTION	BY

ALAMO RMA

PAPE-DAWSON ENGINEERS
555 EAST RAMSEY | SAN ANTONIO, TEXAS 78216 | PHONE: 210.375.9000 FAX: 210.375.9010
TEXAS BOARD OF PROFESSIONAL ENGINEERS, FIRM REGISTRATION # 470

Texas Department of Transportation
© 2010

LOOP 1604

LARGE AND MISCELANEOUS SIGN DETAILS

DGN:	FED. RD. DIV. NO.	STATE	FEDERAL AID PROJECT NO.			HIGHWAY NO.
CHK DGN:	6	TEXAS	STP 2011(210)ES			LP 1604
DWG:	DIST.	COUNTY	CONT. NO.	SECT. NO.	JOB NO.	SHEET NO.
CHK DWG:	SAT	BEXAR	2452	01	050	408

Design Filename: p:\74\00\04\design\civil\traffic\740004SIGNDTL02.dgn

Plotted on: 6/26/2010

Design Filename: p:\74\00\04\design\civil\traffic\740004SIGNDTL03.dgn

SIGNAL POLE AND MAST ARM SIGN DETAILS

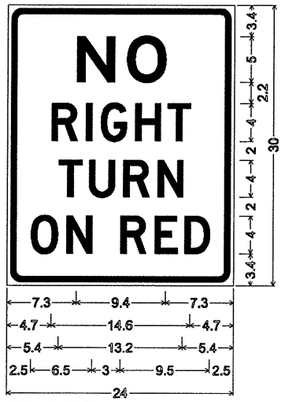

R10-11T_24x30;
0.6" Border, 0.4" Indent, Black on White;
"NO" E; "RIGHT" D; "TURN" D;
"ON RED" D;

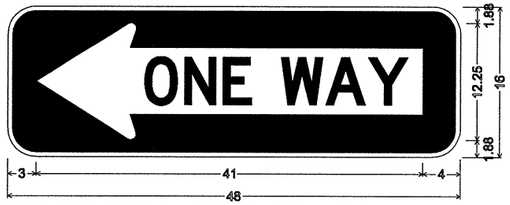

FR6-1L_48X16; 3.00" Radius, 0.50" Border, White on Black;
One Way;
Table of letter and object lefts.

3.00

R10-5_30x36;
1.5" Radius, 0.6" Border, 0.4" Indent, Black on White;
"TURN ON" C; "GREEN" D;
"ARROW" D; "ONLY" D;

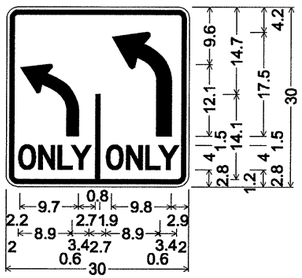

R3-8-LL_30x30;
1.9" Radius, 0.8" Border, 0.5" Indent, Black on White;
A ir=4.5, s=2;
"ONL Y" D 50% spacing;
LL ir=4.25, s=2.5;
"ONL Y" D 50% spacing;

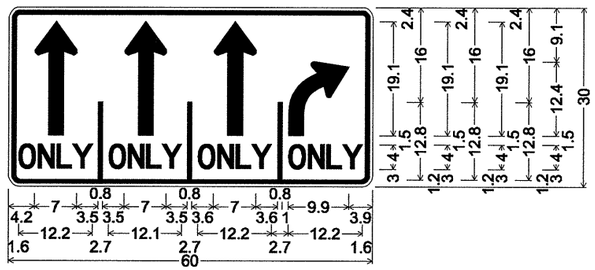

R3-8-CCCAR(SPECIAL)_60x30;
1.9" Radius, 0.8" Border, 0.5" Indent, Black on White;
C h=19.125, s=2.5; "ONLY" D 40% spacing;
C h=19.125, s=2.5; "ONLY" D 40% spacing;
C h=19.125, s=2.5; "ONLY" D 40% spacing;
AR ir=4.25, s=2.5; "ONLY" D 40% spacing;

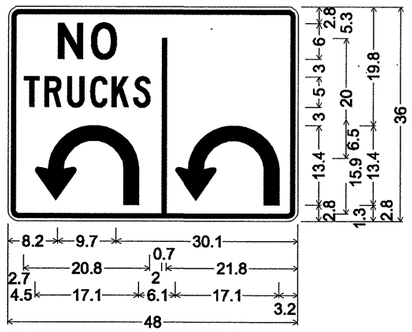

R3-8(DOUBLE U-TURN SPECIAL)_48x36;
1.9" Radius, 0.8" Border, 0.5" Indent, Black on White;
"NO" D; "TRUCKS" C; UL ir=5, s=2.5;
UL ir=5, s=2.5;

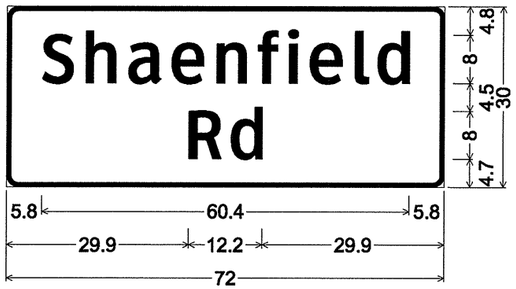

1.9" Radius, 0.8" Border, White on Green;
"Shaenfield" ClearviewHwy-3-W;
"Rd" ClearviewHwy-3-W;

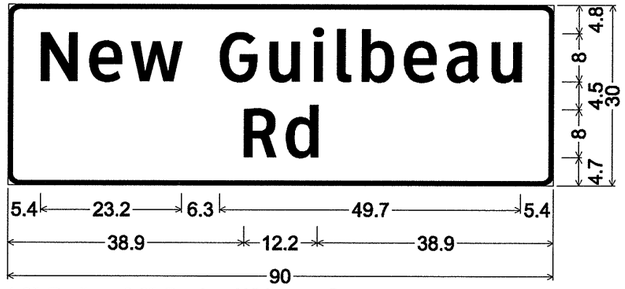

1.9" Radius, 0.8" Border, White on Green;
"New Guilbeau" ClearviewHwy-3-W;
"Rd" ClearviewHwy-3-W;

GILMER D. GASTON P.E. 6/26/2010 DATE

REV. NO.	DATE	DESCRIPTION	BY

ALAMO RMA

PAPE-DAWSON ENGINEERS

555 EAST RAMSEY | SAN ANTONIO, TEXAS 78216 | PHONE: 210.375.9000 FAX: 210.375.9010

TEXAS BOARD OF PROFESSIONAL ENGINEERS, FIRM REGISTRATION # 470

Texas Department of Transportation
© 2010

LOOP 1604

SMALL
SIGN DETAILS

DGN:	FED. RD. DIV. NO.	STATE	FEDERAL AID PROJECT NO.			HIGHWAY NO.
CHK DGN:	6	TEXAS	STP 2011(210)ES			LP 1604
DWG:	DIST.	COUNTY	CONT. NO.	SECT. NO.	JOB NO.	SHEET NO.
CHK DWG:	SAT	BEXAR	2452	01	050	409

Plotted on: 6/26/2010

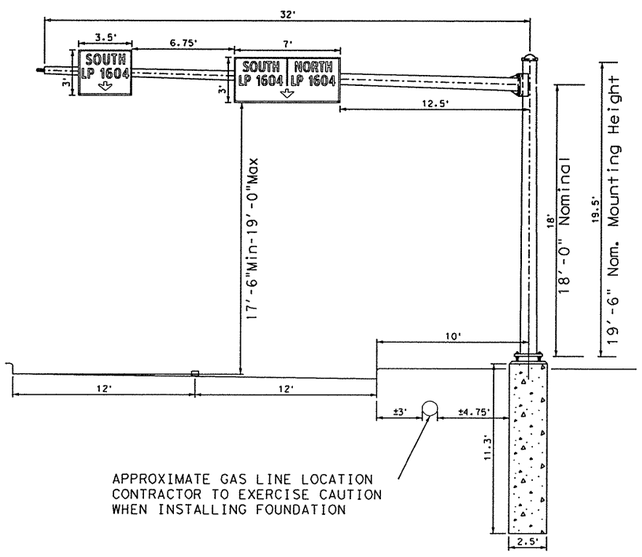

NEW GUILBEAU (WESTBOUND)
APPROX. 220' FROM STOP BAR

FUTURE

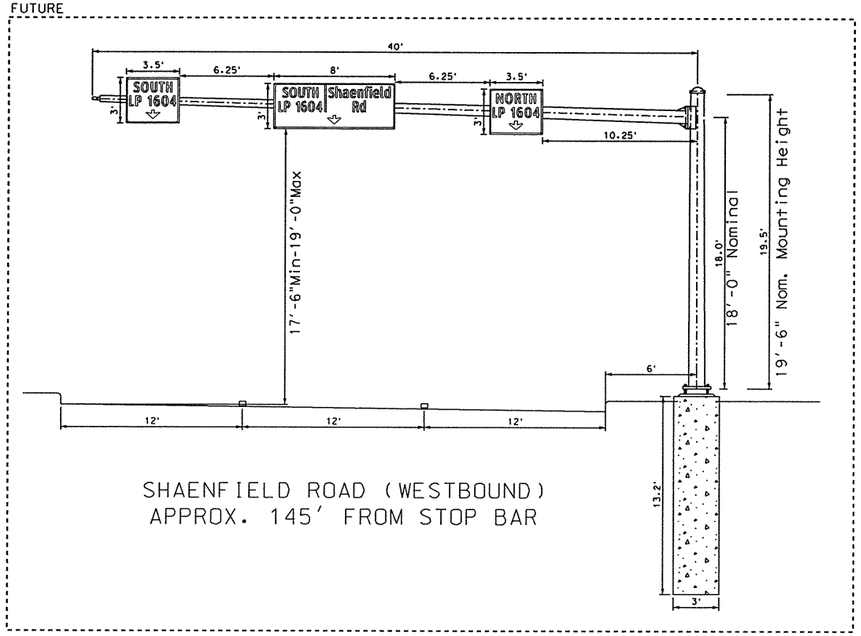

SHAENFIELD ROAD (WESTBOUND)
APPROX. 145' FROM STOP BAR

FOR SIGN POSITION
OVER ROADWAY

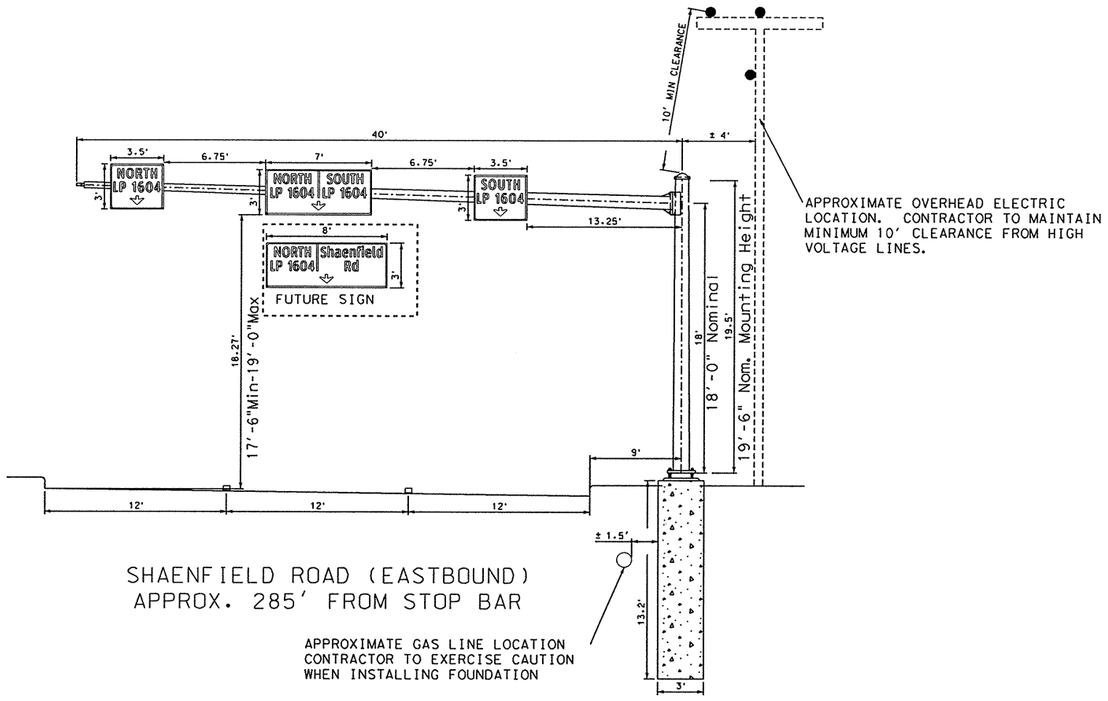

SHAENFIELD ROAD (EASTBOUND)
APPROX. 285' FROM STOP BAR

APPROXIMATE GAS LINE LOCATION
CONTRACTOR TO EXERCISE CAUTION
WHEN INSTALLING FOUNDATION

STATE OF TEXAS
GILMER D. GASTON
80472
LICENSED
PROFESSIONAL ENGINEER

GILMER D. GASTON P.E. — 6/26/2010 DATE

REV. NO.	DATE	DESCRIPTION	BY

ALAMO RMA

PAPE-DAWSON ENGINEERS
555 EAST RAMSEY | SAN ANTONIO, TEXAS 78216 | PHONE: 210.375.9000 FAX: 210.375.9010
TEXAS BOARD OF PROFESSIONAL ENGINEERS, FIRM REGISTRATION # 470

Texas Department of Transportation
© 2010

LOOP 1604

OVERHEAD SIGN ELEVATION

DGN:	FED. RD. DIV. NO.	STATE	FEDERAL AID PROJECT NO.			HIGHWAY NO.
CHK DGN:	6	TEXAS	STP 2011(210)ES			LP 1604
DWG:	DIST.	COUNTY	CONT. NO.	SECT. NO.	JOB NO.	SHEET NO.
CHK DWG:	SAT	BEXAR	2452	01	050	410

Design filename: p:\74\00\04\design\civil\traffic\740004OHSIGN01.dgn

TYPICAL ELEVATION
MULTIPLE POST

TYPICAL ELEVATION
OVERHEAD SIGN BRIDGE

TYPICAL ELEVATION
MONOTUBE SIGN STRUCTURE

NOTE: CLASS "B" CONCRETE RIPRAP TO BE PLACED AS SHOWN IN DETAILS AND APPROVED BY THE ENGINEER. THIS WORK SHALL BE DONE IN ACCORDANCE WITH ITEM 432.

TOP VIEW

SIDE VIEW ELEVATION

SIDE VIEW ELEVATION

OVERHEAD SIGN BRIDGE
ESTIMATED AT 1.2 CU. YDS. PER SITE

OVERHEAD SIGN BRIDGE
ESTIMATED AT 1.5 CU. YDS. PER SITE

SECTION

MULTIPLE POST GROUND MOUNT
ESTIMATED AT 2.0 CU. YDS. PER SITE

SECTION

SECTION

TOP VIEW

SECTION DETAIL

TOP VIEW

RIPRAP APRON DETAILS FOR SIGN FOUNDATIONS

San Antonio District Standard

RIP-RAP APRON DETAILS

© 2007 *Texas Department of Transportation*

REVISIONS	FED. RD. DIV. NO.	FEDERAL AID PROJECT NO.			SHEET NO.
9-99 1-03 4-06 10-07	6	XXX XXXX			411
	STATE	DIST.	COUNTY		
	TEXAS	SAT	BEXAR		
	CONT.	SECT.	JOB	HIGHWAY NO.	
	2452	01	050	LP 1604	

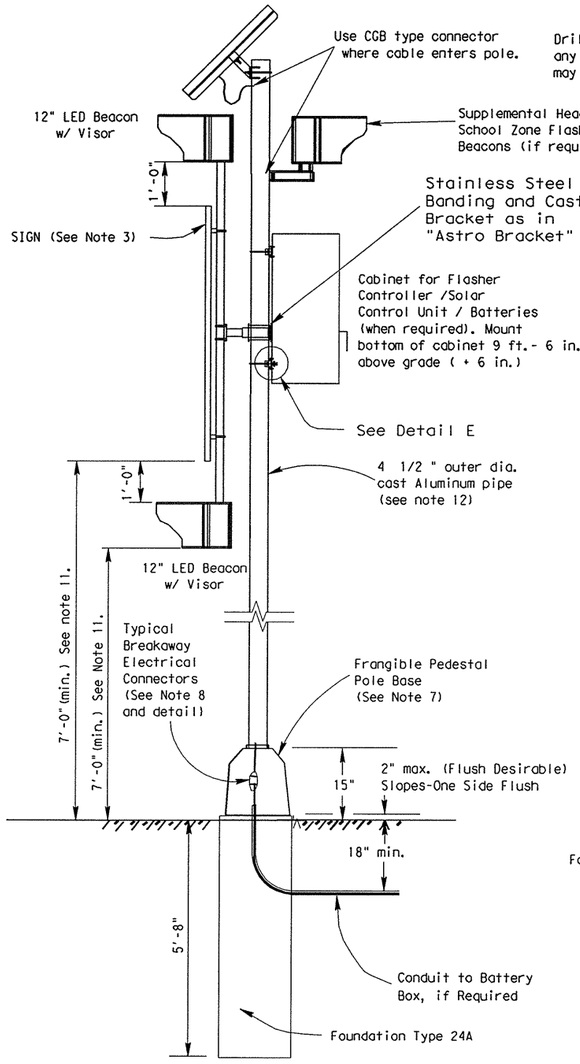

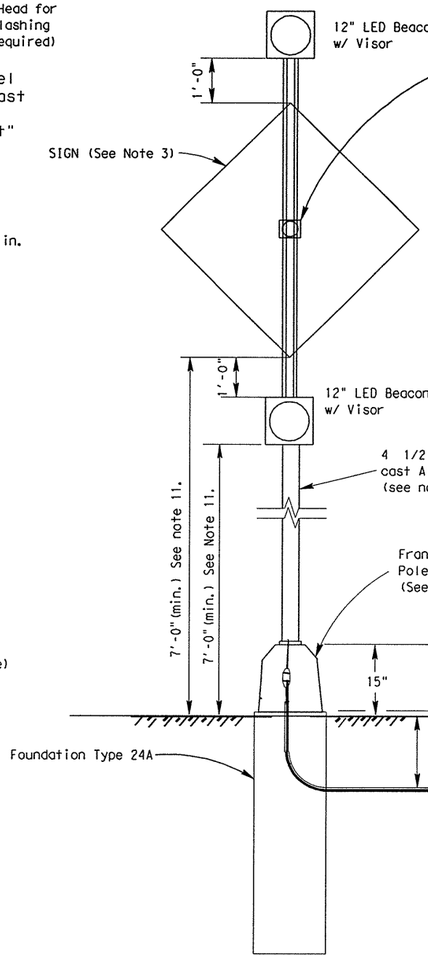

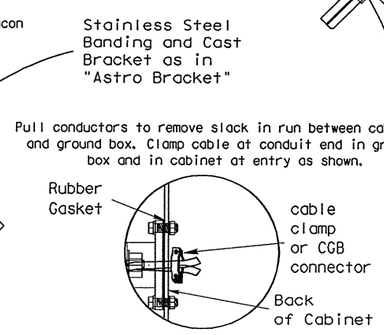

DETAIL E

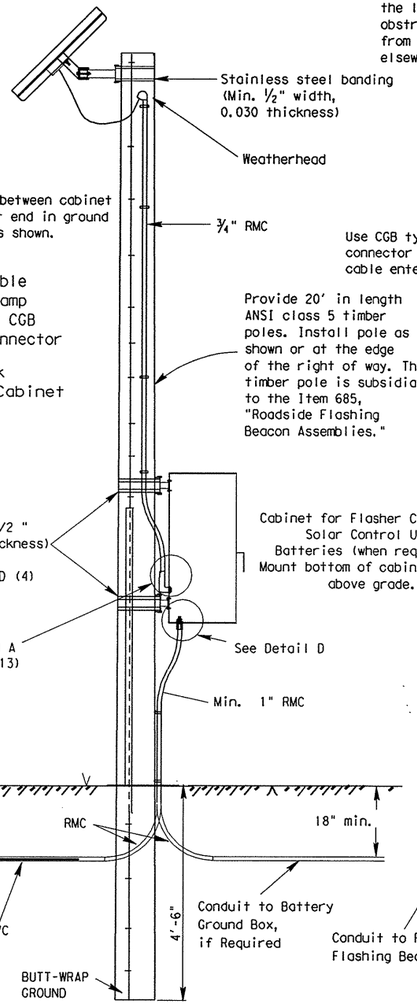

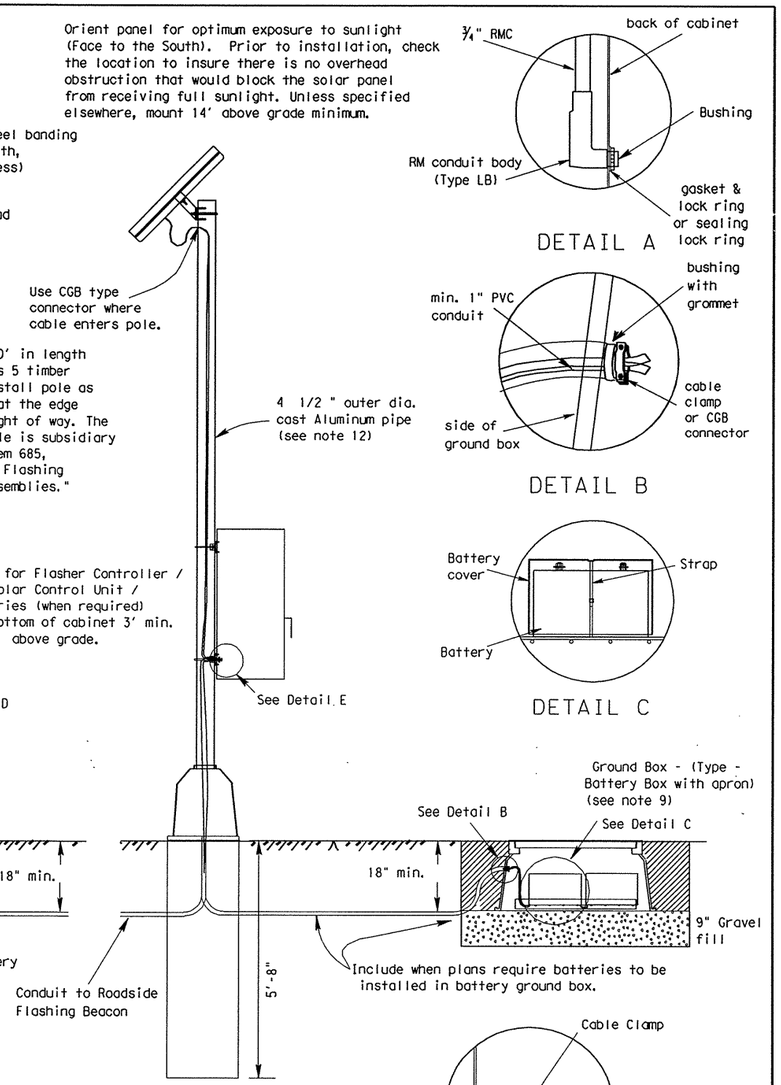

DETAIL A

DETAIL B

DETAIL C

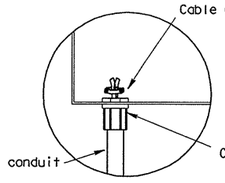

DETAIL D

NOTES:

1. Details show a typical warning sign with two flashing beacon heads, other arrangements are possible. When only one beacon is required, install the upper beacon.
2. See Item 685, "Roadside Flashing Beacon Assemblies" for further requirements.
3. See SMD standard sheets for lateral and vertical clearances and sign mounting details. Install signs as shown on the sign layout sheets.
4. Use materials specifically designed for attaching cabinets, beacon heads, solar panels, etc., to poles.
5. Install beacon heads as shown here, as shown elsewhere on the plans, or as directed. Use hardware specifically design for mounting beacon heads on poles.
6. Conduit in foundation and within 6 in. of foundation is subsidiary to the Item 685, "Roadside Flashing Beacon Assemblies."
7. Per manufacturer's recommendations, engage all threads on the pedestal pole base and pipe unless the pipe is fully seated into base. In high winds, use a pole and base collar assembly to add strength and prevent loosening on connection.
8. Provide non-fused watertight breakaway electrical connectors for breakaway poles. (Bussmann HET, Littelfuse LET, Ferraz-Shawmut FEBN, or approved equal).
9. Install the batteries in a Battery Box. Place the batteries on a 3/16 " thick plastic sheet and connect together. Place a plastic cover (Battery Bell Jar) over the top of each battery and secure the battery bell jar to the battery with a strap. The batteries, bell jars, straps and 3/16 " plastic sheet are subsidiary to the Item 685, "Roadside Flashing Beacon Assemblies." When required, install batteries in the flasher cabinet. Provide the number of batteries as required on the plans. Wire batteries according to manufacturers recommendations.
10. See standard sheet ED (13) for battery box details.
11. Provide clearance as shown above the sidewalk or pavement grade at the edge of the road. When a bottom beacon is not used, mount the sign at least 7 ft. above the sidewalk or pavement grade at the edge of the road.
12. Unless otherwise shown on the plans, pole shaft shall be one piece, schedule 40 Aluminum pipe, ASTM B429 or B221 (Alloy 6061-T6 only). Aluminum conduit will not develop the necessary strength and will not be allowed.
13. Locate the Type LB conduit body attachtment in the bottom third of the back of the cabinet.
14. See Standard Sheets ED(1)- ED(4) and ED(13) for additional requirements regarding the installation of conduit, cabinets, battery ground boxes, and wood poles.

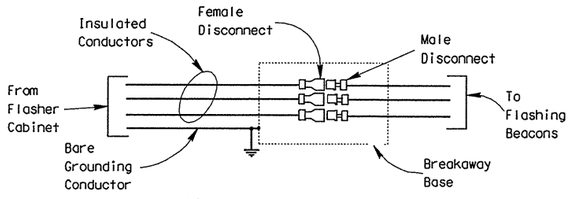

BREAKAWAY ELECTRICAL CONNECTORS

San Antonio District Standard

SOLAR POWERED ROADSIDE FLASHING BEACON ASSEMBLY DETAILS

SPRFB-06

© 2006 *Texas Department of Transportation*

REVISIONS	FED.RD. DIV.NO.	FEDERAL AID PROJECT NO.		SHEET NO.
FEB. 2006	6			412
OCT. 2007	STATE	DIST.	COUNTY	
	TEXAS	SAT	BEXAR	
	CONT.	SECT.	JOB	HIGHWAY NO.
	2452	01	050	LP 1604

11:14:39 AM
6/28/2010
p:\74\00\04\design\civil\standards\SPRFB.dgn
ACC:
DISPLAYED

DISCLAIMER:
The use of this standard is governed by the "Texas Engineering Practice Act". No warranty of any kind is made by TxDOT for any purpose whatsoever. TxDOT assumes no responsibility for the conversion of this standard to other formats or for incorrect results or damages resulting from its use.

REQUIREMENTS FOR OVERHEAD GUIDE SIGNS

TYPICAL EXAMPLES

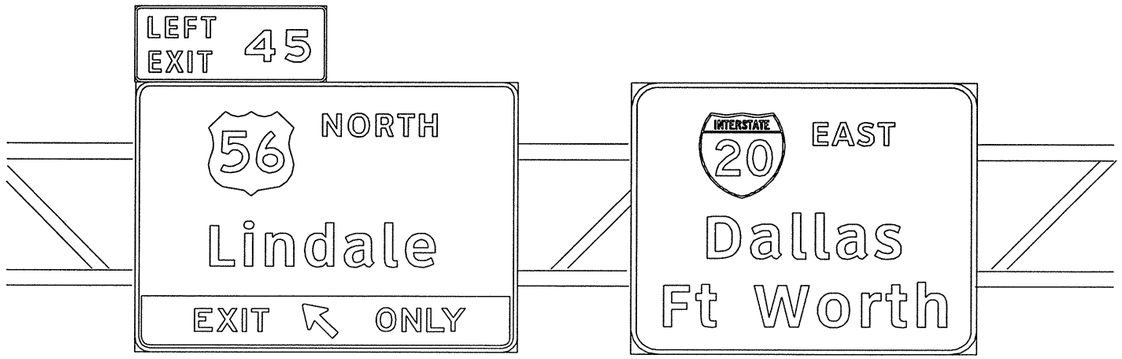

DEPARTMENTAL MATERIAL SPECIFICATIONS	
ALUMINUM SIGN BLANKS	DMS-7110
SIGN FACE MATERIALS	DMS-8300
FIBERGLASS SIGN SUBSTRATE	DMS-8305

OVERHEAD GUIDE SIGNS AND EXIT NUMBER PANELS

USAGE	COLOR	SIGN FACE MATERIAL
BACKGROUND	ALL	TYPE D SHEETING
LEGEND & BORDERS	WHITE	TYPE D SHEETING
LEGEND & BORDERS	BLACK	ACRYLIC NON-REFLECTIVE FILM

REQUIREMENTS FOR LARGE GROUND-MOUNTED GUIDE SIGNS

TYPICAL EXAMPLES

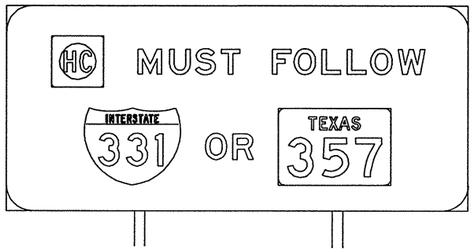

DEPARTMENTAL MATERIAL SPECIFICATIONS	
ALUMINUM SIGN BLANKS	DMS-7110
SIGN FACE MATERIALS	DMS-8300
FIBERGLASS SIGN SUBSTRATE	DMS-8305

LARGE GROUND-MOUNTED SIGNS AND EXIT NUMBER PANELS

USAGE	COLOR	SIGN FACE MATERIAL
BACKGROUND	ALL	TYPE C SHEETING
LEGEND & BORDERS	WHITE	TYPE D SHEETING
LEGEND & BORDERS	BLACK	ACRYLIC NON-REFLECTIVE FILM

GENERAL NOTES:

1. Signs to be furnished shall be as detailed elsewhere in the plans and/or as shown on sign summary sheet. Standard sign designs and arrow dimensions can be found in the "Standard Highway Sign Designs for Texas" (SHSD).
2. Black legend shall use the Federal Highway Administration (FHWA) Standard Highway Alphabets (B, C, D, E, Emod, or F).
   White legend shall use the Clearview Alphabet.
   The following Clearview fonts shall be used to replace the existing white FHWA lettering, when not specified in the SHSD or in the plans.
   - B CV-1W
   - C CV-2W
   - D CV-3W
   - E CV-4W
   - Emod CV-5WR
   - F CV-6W
3. Lateral spacing between letters and numerals shall conform with the SHSD, and any approved changes thereto. Lateral spacing of legend shall provide a balanced appearance when spacing is not shown.
4. Black legend shall be applied by screening process or cut-out acrylic non-reflective black film to background sheeting, or combination thereof.
5. White legend and borders for overhead guide signs shall be applied by screening process with transparent colored ink, transparent colored overlay film to white background sheeting or cut-out white sheeting to colored background sheeting, or combination thereof.
6. White legend and borders for large ground mounted guide signs shall be cut-out white sheeting applied to colored background sheeting.
7. Information regarding borders and radii for signs is found in the "Standard Highway Sign Designs for Texas". Dimensions shown and described for borders and corner radii on parent sign are nominal. Borders may vary in width as much as 1/2 inch. Corner radii above 3 inches may vary in width as much as 1 inch. Borders and corner radii within a parent sign must be of matching widths. The sign area outside the corner radius need not be trimmed or rounded if fabricated from an extruded material.
8. Sign substrate shall be any material that meets the Departmental Material Specification requirements of DMS-7110 or DMS-8305. Exit Number Panels attached above the parent sign shall be made with the same substrate and sheeting as the parent sign.
9. Mounting details of attachments to parent sign face are shown on Standard Plan Sheet TSR(5). Mounting details of exit number panels above parent sign are shown in the "SMD series" Standard Plan Sheets.
10. Background sheeting shall be applied to the substrate per sheeting manufacturer's recommendations. Sheeting will not be allowed to bridge the horizontal gap between panels.
11. Cut all legend, symbols, borders, and direct applied sign attachments at panel joints.

The Standard Highway Sign Designs for Texas (SHSD) can be found at the following website.

http://www.txdot.gov/publications/traffic.htm

Texas Department of Transportation
Traffic Operations Division

TYPICAL SIGN REQUIREMENTS

TSR(1)-08

©TxDOT October 2003

REVISIONS
12-03
9-08

DN: TXDOT	CK: TXDOT	DN: TXDOT	CK: TXDOT
CONT	SECT	JOB	HIGHWAY
2452	01	050	LP 1604
DIST	COUNTY		SHEET NO.
SAT	BEXAR		413

DATE:
FILE:

DISCLAIMER:
The use of this standard is governed by the "Texas Engineering Practice Act". No warranty of any kind is made by TxDOT for any purpose whatsoever. TxDOT assumes no responsibility for the conversion of this standard to other formats or for incorrect results or damages resulting from its use.

DATE:
FILE:

REQUIREMENTS FOR ATTACHMENTS TO GUIDE SIGNS

TYPICAL EXAMPLES

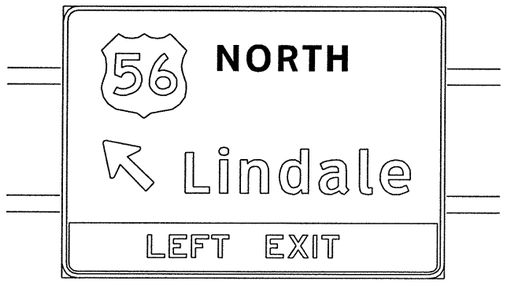

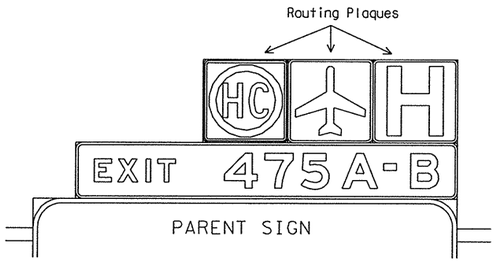

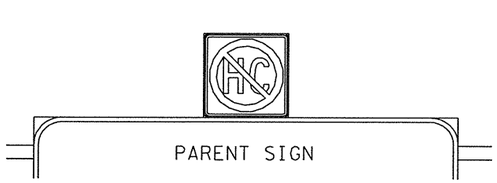

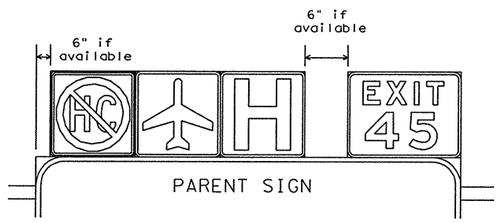

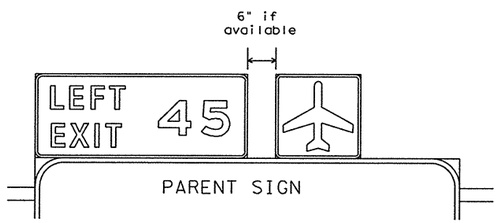

DEPARTMENTAL MATERIAL SPECIFICATIONS	
ALUMINUM SIGN BLANKS	DMS-7110
SIGN FACE MATERIALS	DMS-8300

USAGE	COLOR	SIGN FACE MATERIAL
BACKGROUND	ALL	TYPE D SHEETING
LEGEND & BORDERS	WHITE	TYPE D SHEETING
LEGEND & BORDERS	BLACK	ACRYLIC NON-REFLECTIVE FILM

GENERAL NOTES:

1. Signs to be furnished shall be as detailed elsewhere in the plans and/or as shown on sign tabulation sheet. Standard sign designs and arrow dimensions can be found in the "Standard Highway Sign Designs for Texas" (SHSD).
2. Route Marker legends (ie. IH, US, SH and FM shields) shall use the Federal Highway Administration (FHWA) Standard Highway Alphabets (B, C, D, E, Emod, or F).
3. Lateral spacing between letters and numerals shall conform with the SHSD, and any approved changes thereto. Lateral spacing of legend shall provide a balanced appearance when spacing is not shown.
4. Black legend and borders shall be applied by screening process or cut-out acrylic non-reflective black film to background sheeting, or combination thereof.
5. White legend and borders shall be applied by screening process with transparent colored ink, transparent colored overlay film to white background sheeting or cut-out white sheeting to colored background sheeting, or combination thereof.
6. Colored legend and borders shall be applied by screening process with transparent colored ink, transparent colored overlay film or colored sheeting to white background sheeting, or combination thereof.
7. Route markers and other attachments within the parent sign face shall be direct applied unless otherwise specified in the plans. Attachments not direct applied shall use 0.063 inch thick one piece sheet aluminum signs (Type A).
8. General Service Plaques shall be 0.080 inch thick and Routing Plaques shall be 0.100 inch thick.
9. The priority for Routing Plaques shall be (left to right) Hazardous Cargo, Airport then Hospital. See examples for mounting location.
10. Mounting details of attachments to parent signs face are shown on Standard Plan Sheet TSR(5). Mounting details of sign plaque attachments above and below parent sign are shown in the "SMD series" Standard Plan Sheets.
11. Plaques shall be horizontally centered at the top of the parent sign. If an exit number panel exists, the plaque shall be centered between the edge of the parent sign and the edge of the exit number panel. The plaque may be placed above the exit number panel when there is insufficient space.

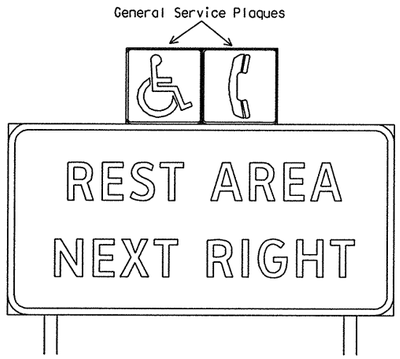

REQUIREMENTS FOR EXIT ONLY AND LEFT EXIT PANELS

TYPICAL EXAMPLES

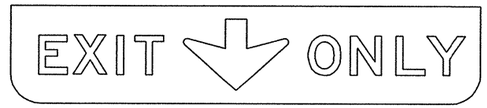

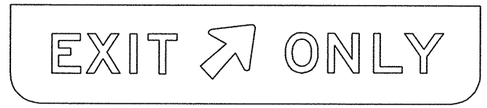

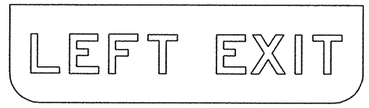

DEPARTMENTAL MATERIAL SPECIFICATIONS	
ALUMINUM SIGN BLANKS	DMS-7110
SIGN FACE MATERIALS	DMS-8300

OVERHEAD EXIT PANELS

USAGE	COLOR	SIGN FACE MATERIAL
BACKGROUND	YELLOW	TYPE E SHEETING
LEGEND	BLACK	ACRYLIC NON-REFLECTIVE FILM

GENERAL NOTES:

1. Signs to be furnished shall be as detailed elsewhere in the plans and/or as shown on sign tabulation sheet. Standard sign designs and arrow dimensions can be found in the "Standard Highway Sign Designs for Texas" (SHSD). Individual panel sizes shown in the plans may be adjusted to fit actual parent sign sizes if necessary.
2. Exit Panel legend shall use the Federal Highway Administration (FHWA) Standard Highway Alphabets E Series.
3. Lateral spacing between letters and numerals shall conform with the SHSD, and any approved changes thereto. Lateral spacing of legend shall provide a balanced appearance when spacing is not shown.
4. Black legend shall be applied by screening process or cut-out acrylic non-reflective black film to yellow background sheeting, or combination thereof.
5. Exit Only and Left Exit panels within the parent sign face shall be direct applied unless otherwise specified in the plans. Panels not direct applied shall use 0.063 inch thick one piece sheet aluminum signs (Type A).
6. Mounting details of Exit Only and Left Exit panel attachments to parent signs face are shown on Standard Plan Sheet TSR(5).

The Standard Highway Sign Designs for Texas (SHSD) can be found at the following website.

http://www.txdot.gov/publications/traffic.htm

Texas Department of Transportation
Traffic Operations Division

TYPICAL SIGN REQUIREMENTS

TSR(2)-08

©TxDOT October 2003

REVISIONS	DN: TXDOT	CK: TXDOT	DN: TXDOT	CK: TXDOT
12-03	CONT	SECT	JOB	HIGHWAY
9-08	2452	01	050	LP 1604
	DIST	COUNTY		SHEET NO.
	SAT	BEXAR		414

DISCLAIMER: The use of this standard is governed by the "Texas Engineering Practice Act". No warranty of any kind is made by TxDOT for any purpose whatsoever. TxDOT assumes no responsibility for the conversion of this standard to other formats or for incorrect results or damages resulting from its use.

REQUIREMENTS FOR E SERIES STANDARD GUIDE SIGNS

TYPICAL EXAMPLES

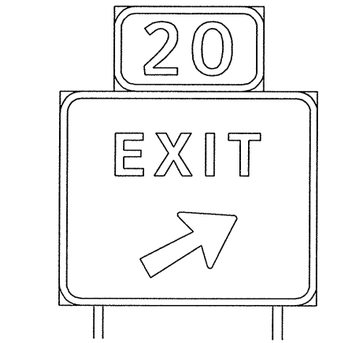

DEPARTMENTAL MATERIAL SPECIFICATIONS	
ALUMINUM SIGN BLANKS	DMS-7110
SIGN FACE MATERIALS	DMS-8300
FIBERGLASS SIGN SUBSTRATE	DMS-8305

GROUND-MOUNTED SIGNS

USAGE	COLOR	SIGN FACE MATERIAL
BACKGROUND	ALL	TYPE C SHEETING
LEGEND & BORDERS	WHITE	TYPE D SHEETING

GENERAL NOTES:

1. Signs to be furnished shall be as detailed elsewhere in the plans and/or as shown on sign tabulation sheet. Standard sign designs and arrow dimensions can be found in the "Standard Highway Sign Designs for Texas" (SHSD). Individual panel sizes shown in the plans may be adjusted to fit actual parent sign sizes if necessary.
2. White legend shall use the Clearview Alphabet.
   The following Clearview fonts shall be used to replace the existing white Federal Highway Administration (FHWA) Standard Highway Alphabets, when not specified in the SHSD, or in the plans.
   B CV-1W
   C CV-2W
   D CV-3W
   E CV-4W
   Emod CV-5WR
   F CV-6W
3. Lateral spacing between letters and numerals shall conform with the SHSD, and any approved changes thereto. Lateral spacing of legend shall provide a balanced appearance when spacing is not shown.
4. White legend, symbols and borders shall be cut-out white sheeting applied to colored background sheeting.
5. Information regarding borders and radii for signs is found in the "Standard Highway Sign Designs for Texas". Dimensions shown and described for borders and corner radii on parent sign are nominal. Borders may vary in width as much as 1/2 inch. Corner radii above 3 inches may vary in width as much as 1 inch. Borders and corner radii within a parent sign must be of matching widths. The sign area outside the corner radius need not be trimmed or rounded if fabricated from an extruded material.
6. Sign substrate shall be any material that meets the Departmental Material Specification requirements of DMS-7110, or DMS-8305. Exit Number Panels attached above the parent sign shall be made with the same substrate and sheeting as the parent sign.
7. Mounting details of attachments above and below parent sign are shown in the "SMD series" Standard Plan Sheets. Mounting details of roadside signs are shown in the "SMD series" Standard Plan Sheets.
8. Cut all legend, symbols, and borders at panel joints.

REQUIREMENTS FOR BLUE, BROWN & GREEN D AND I SERIES GUIDE SIGNS

TYPICAL EXAMPLES

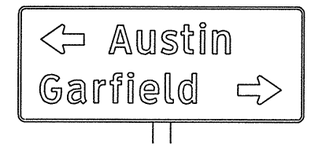

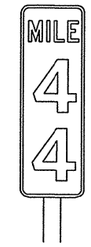

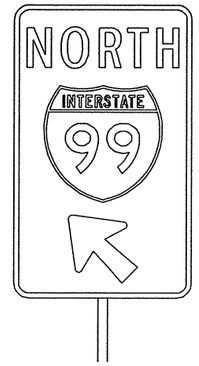

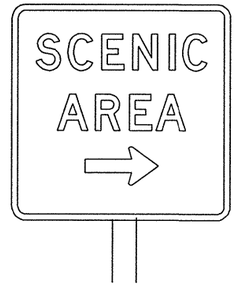

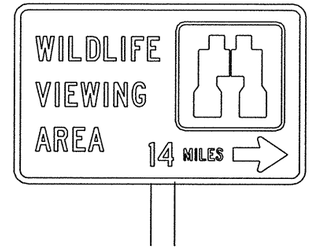

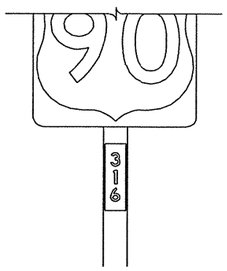

DEPARTMENTAL MATERIAL SPECIFICATIONS	
ALUMINUM SIGN BLANKS	DMS-7110
SIGN FACE MATERIALS	DMS-8300
FIBERGLASS SIGN SUBSTRATE	DMS-8305

Square Ft.	Min. Thickness
Less than 7.5	0.080
7.5 to 15	0.100
Greater than 15	0.125

GROUND-MOUNTED SIGNS

USAGE	COLOR	SIGN FACE MATERIAL
BACKGROUND	ALL	TYPE C SHEETING
LEGEND & BORDERS	WHITE	TYPE D SHEETING

GENERAL NOTES:

1. Signs to be furnished shall be as detailed elsewhere in the plans and/or as shown on sign tabulation sheet. Standard sign designs and arrow dimensions can be found in the "Standard Highway Sign Designs for Texas" (SHSD).
2. White legend shall use the Clearview Alphabet.
   The following Clearview fonts shall be used to replace the existing white Federal Highway Administration (FHWA) Standard Highway Alphabets, when not specified in the SHSD, or in the plans.
   B CV-1W
   C CV-2W
   D CV-3W
   E CV-4W
   Emod CV-5WR
   F CV-6W
3. Lateral spacing between letters and numerals shall conform with the SHSD, and any approved changes thereto. Lateral spacing of legend shall provide a balanced appearance when spacing is not shown.
4. White legend, symbols and borders shall be cut-out white sheeting applied to colored background sheeting.
5. Information regarding borders and radii for signs is found in the "Standard Highway Sign Designs for Texas". Dimensions shown and described for borders and corner radii on parent sign are nominal. Borders may vary in width as much as 1/2 inch. Corner radii above 3 inches may vary in width as much as 1 inch. Borders and corner radii within a parent sign must be of matching widths. The sign area outside the corner radius should be trimmed or rounded.
6. Sign substrate shall be any material that meets the Departmental Material Specification requirements of DMS-7110 or DMS 8305.
7. Mounting details of roadside signs are shown in the "SMD series" Standard Plan Sheets.

REQUIREMENTS FOR INDEPENDENT MOUNTED ROUTE MARKERS

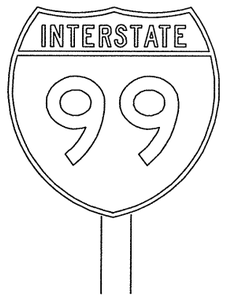

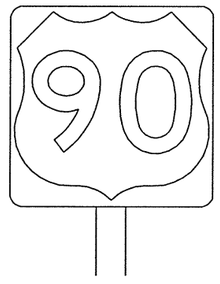

DEPARTMENTAL MATERIAL SPECIFICATIONS	
ALUMINUM SIGN BLANKS	DMS-7110
SIGN FACE MATERIALS	DMS-8300

USAGE	COLOR	SIGN FACE MATERIAL
BACKGROUND	ALL	TYPE C SHEETING
LEGEND & BORDERS	WHITE	TYPE C SHEETING
LEGEND & BORDERS	BLACK	ACRYLIC NON-REFLECTIVE FILM

GENERAL NOTES:

1. Signs to be furnished shall be as detailed elsewhere in the plans and/or as shown on sign tabulation sheet. Standard sign designs and arrow dimensions can be found in the "Standard Highway Sign Designs for Texas" (SHSD).
2. Route Marker legend (ie. IH, US, SH and FM shields) shall use the Federal Highway Administration (FHWA) Standard Highway Alphabets (B, C, D, E, Emod or F).
3. Lateral spacing between letters and numerals shall conform with the SHSD, and any approved changes thereto. Lateral spacing of legend shall provide a balanced appearance when spacing is not shown.
4. Black legend and borders shall be applied by screening process or cut-out acrylic non-reflective black film to white background sheeting, or combination thereof.
5. White legend and borders shall be applied by screening process with transparent colored ink, transparent colored overlay film to white background sheeting or cut-out white sheeting to colored background sheeting, or combination thereof.
6. Independent mounted Route Marker sign blanks, for 24 inch markers shall be 0.080 inch thick, and for 36 inch markers shall be 0.100 inch thick one piece sheet aluminum signs(Type A).
7. Mounting details for roadside mounted signs are shown in the "SMD series" Standard Plan Sheets.

The Standard Highway Sign Designs for Texas (SHSD) can be found at the following website.

http://www.txdot.gov/publications/traffic.htm

Texas Department of Transportation
Traffic Operations Division

TYPICAL SIGN REQUIREMENTS

TSR(3)-08

©TxDOT October 2003

REVISIONS	DN: TXDOT	CK: TXDOT	DN: TXDOT	CK: TXDOT
12-03	CONT	SECT	JOB	HIGHWAY
9-08	2452	01	050	LP 1604
	DIST	COUNTY		SHEET NO.
	SAT	BEXAR		415

DATE:
FILE:

DISCLAIMER:
The use of this standard is governed by the "Texas Engineering Practice Act". No warranty of any kind is made by TxDOT for any purpose whatsoever. TxDOT assumes no responsibility for the conversion of this standard to other formats or for incorrect results or damages resulting from its use.

REQUIREMENTS FOR REGULATORY SIGNS

TYPICAL EXAMPLES

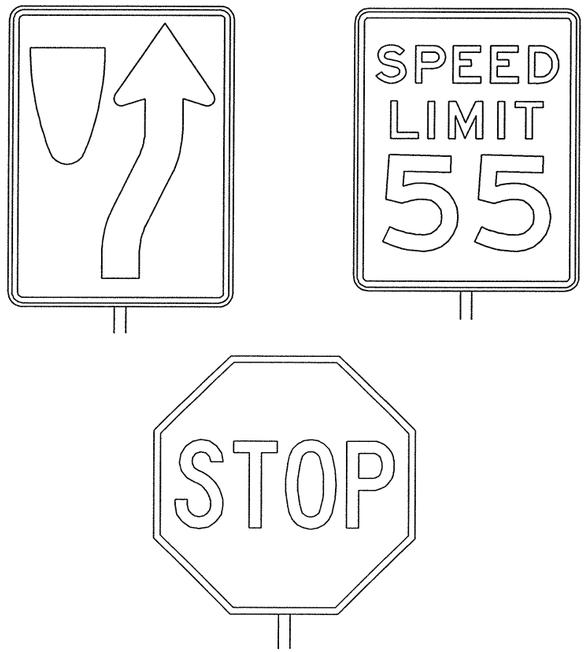

DEPARTMENTAL MATERIAL SPECIFICATIONS

ALUMINUM SIGN BLANKS DMS-7110

Square Ft.	Min. Thickness
Less than 7.5	0.080
7.5 to 15	0.100
Greater than 15	0.125

SIGN FACE MATERIALS DMS-8300

USAGE	COLOR	SIGN FACE MATERIAL
BACKGROUND	ALL	TYPE C SHEETING
LEGEND & BORDERS	WHITE	TYPE C SHEETING
LEGEND & BORDERS	BLACK	ACRYLIC NON-REFLECTIVE FILM

GENERAL NOTES:

1. Signs to be furnished shall be as detailed elsewhere in the plans and/or as shown on sign tabulation sheet. Standard sign designs and arrow dimensions can be found in the "Standard Highway Sign Designs for Texas" (SHSD).
2. Regulatory sign legend shall use the Federal Highway Administration (FHWA) Standard Highway Alphabets (B, C, D, E, Emod or F).
3. Lateral spacing between letters and numerals shall conform with the SHSD, and any approved changes thereto. Lateral spacing of legend shall provide a balanced appearance when spacing is not shown.
4. Black legend and borders shall be applied by screening process or cut-out acrylic non-reflective black film to white background sheeting, or combination thereof.
5. White legend and borders shall be applied by screening process with transparent colored ink, transparent colored overlay film to white background sheeting or cut-out white sheeting to colored background sheeting, or combination thereof.
6. Colored legend shall be applied by screening process with transparent colored ink, transparent colored overlay film or colored sheeting to background sheeting, or combination thereof.
7. Sign substrate shall be any material that meets the Departmental Material Specification requirements of DMS-7110.
8. Mounting details for roadside mounted signs are shown in the "SMD series" Standard Plan Sheets.

REQUIREMENTS FOR SCHOOL SIGNS

TYPICAL EXAMPLES

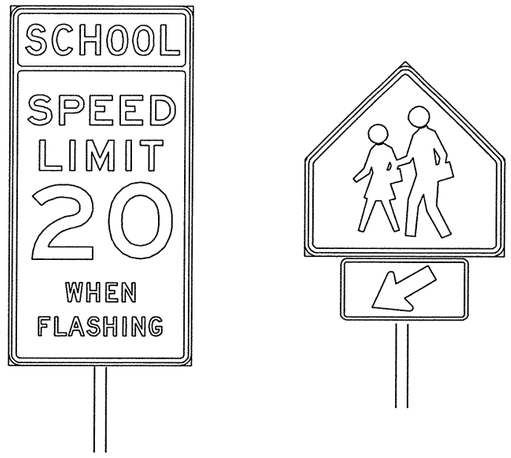

DEPARTMENTAL MATERIAL SPECIFICATIONS

ALUMINUM SIGN BLANKS DMS-7110

Square Ft.	Min. Thickness
Less than 7.5	0.080
7.5 to 15	0.100
Greater than 15	0.125

SIGN FACE MATERIALS DMS-8300

USAGE	COLOR	SIGN FACE MATERIAL
BACKGROUND	WHITE	TYPE C SHEETING
BACKGROUND	FLOR.YEL.GRN.	TYPE E SHEETING
LEGEND & BORDERS	BLACK	ACRYLIC NON-REFLECTIVE FILM

GENERAL NOTES:

1. Signs to be furnished shall be as detailed elsewhere in the plans and/or as shown on sign tabulation sheet. Standard sign designs and arrow dimensions can be found in the "Standard Highway Sign Designs for Texas" (SHSD).
2. School sign legend shall use the Federal Highway Administration (FHWA) Standard Highway Alphabets (B, C, D, E, Emod or F).
3. Lateral spacing between letters and numerals shall conform with the SHSD, and any approved changes thereto. Lateral spacing of legend shall provide a balanced appearance when spacing is not shown.
4. Black legend and borders shall be applied by screening process or cut-out acrylic non-reflective black film to background sheeting, or combination thereof.
5. Sign substrate shall be any material that meets the Departmental Material Specification requirements of DMS-7110.
6. Mounting details for roadside mounted signs are shown in the "SMD series" Standard Plan Sheets.

REQUIREMENTS FOR WARNING SIGNS

TYPICAL EXAMPLES

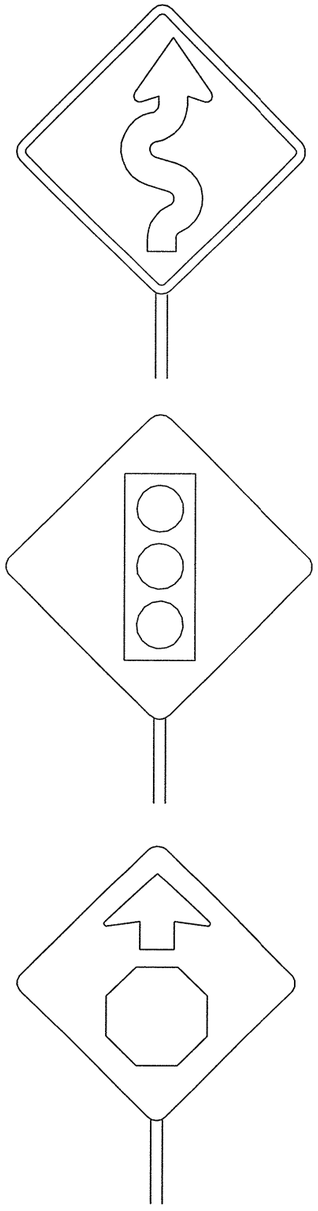

DEPARTMENTAL MATERIAL SPECIFICATIONS

ALUMINUM SIGN BLANKS DMS-7110

Square Ft.	Min. Thickness
Less than 7.5	0.080
7.5 to 15	0.100
Greater than 15	0.125

SIGN FACE MATERIALS DMS-8300

USAGE	COLOR	SIGN FACE MATERIAL
BACKGROUND	YELLOW	TYPE E SHEETING
LEGEND & BORDERS	BLACK	ACRYLIC NON-REFLECTIVE FILM
LEGEND & SYMBOLS	ALL OTHER	TYPE D SHEETING

GENERAL NOTES:

1. Signs to be furnished shall be as detailed elsewhere in the plans and/or as shown on sign tabulation sheet. Standard sign designs and arrow dimensions can be found in the "Standard Highway Sign Designs for Texas" (SHSD).
2. Warning sign legend shall use the Federal Highway Administration (FHWA) Standard Highway Alphabets (B, C, D, E, Emod, or F).
3. Lateral spacing between letters and numerals shall conform with the SHSD, and any approved changes thereto. Lateral spacing of legend shall provide a balanced appearance when spacing is not shown.
4. Black legend and borders shall be applied by screening process or cut-out acrylic non-reflective black film to yellow background sheeting, or combination thereof.
5. Colored legend and symbols shall be applied by screening process with transparent colored ink, transparent colored overlay film, or colored sheeting to white sheeting, or combination thereof. The colored legend or symbol is then applied to the yellow background sheeting.
6. Sign substrate shall be any material that meets the Departmental Material Specification requirements of DMS-7110.
7. Mounting details for roadside mounted signs are shown in the "SMD series" Standard Plan Sheets.

The Standard Highway Sign Designs for Texas (SHSD) can be found at the following website.

http://www.txdot.gov/publications/traffic.htm

Texas Department of Transportation
Traffic Operations Division

TYPICAL SIGN REQUIREMENTS

TSR(4)-08

©TxDOT October 2003

REVISIONS	ON: TXDOT	CK: TXDOT	ON: TXDOT	CK: TXDOT
12-03	CONT	SECT	JOB	HIGHWAY
9-08	2452	01	050	LP 1604
	DIST	COUNTY		SHEET NO.
	SAT	BEXAR		416

DATE:
FILE:

DISCLAIMER: The use of this standard is governed by the "Texas Engineering Practice Act". No warranty of any kind is made by TxDOT for any purpose whatsoever. TxDOT assumes no responsibility for the conversion of this standard to other formats or for incorrect results or damages resulting from its use.

DATE:
FILE:

MOUNTING DETAILS OF ATTACHMENTS TO GUIDE SIGN FACE ("EXIT ONLY" AND "LEFT EXIT" PANELS, ROUTE MARKERS AND OTHER ATTACHMENTS)

DIRECT APPLIED ATTACHMENT

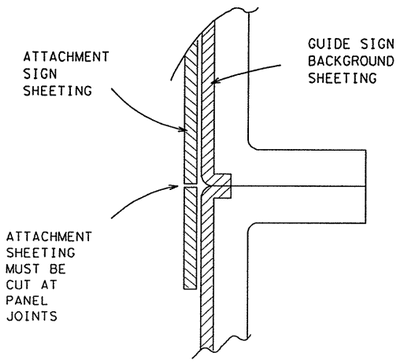

Sheeting for legend, symbols, and borders must be cut at panel joints.

Direct applied attachment signs will be subsidiary to "Aluminum Signs" or "Fiberglass Signs".

SCREW ATTACHMENT

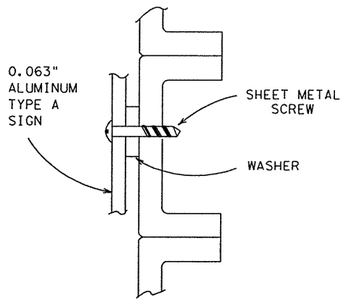

NUT/BOLT ATTACHMENT

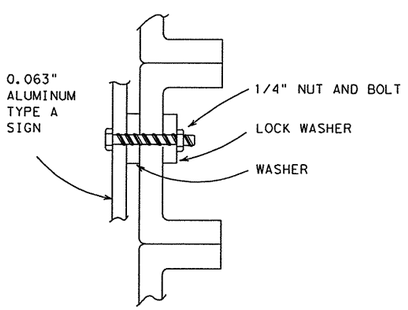

Furnish Type A aluminum sign attachments only when specified in the plans. These signs will be paid for under "Aluminum Signs".

SIGN BLANK PUNCHING DETAILS FOR ATTACHMENTS WHEN SPECIFIED TO BE TYPE A ALUMINUM SIGNS (FOR MOUNTING TO GUIDE SIGN FACE)

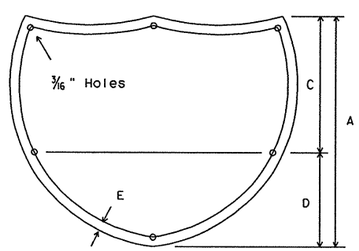

INTERSTATE ROUTE MARKERS

A	C	D	E
36	21	15	1 1/2
48	28	20	1 3/4

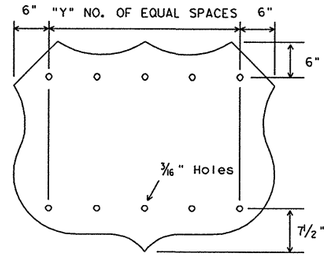

U.S. ROUTE MARKERS

Sign Size	"Y"
24x24	2
30x24	3
36x36	3
45x36	4
48x48	4
60x48	5

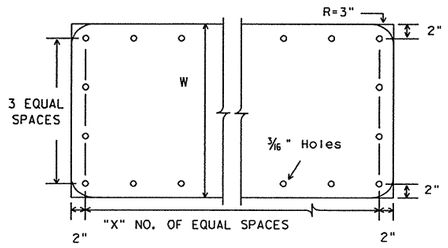

STATE ROUTE MARKERS

No. of Digits	W	X
4	24	4
4	36	5
4	48	6
3	24	3
3	36	4
3	48	5

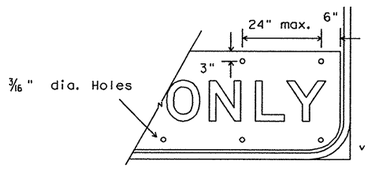

EXIT ONLY PANEL

ARROW DETAILS for Large Ground-Mounted and Overhead Guide Signs

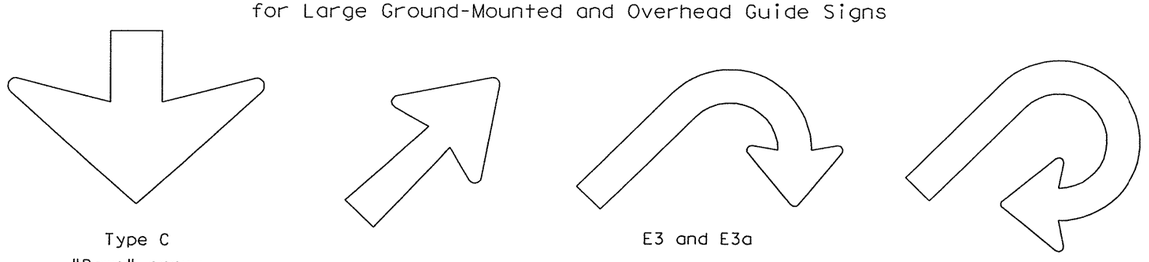

Type C "Down" arrow

E3 and E3a

E4 and E4a

TYPE	LETTER SIZE
A-1	10.67" U/L and 10" Caps
A-2	13.33" U/L and 12" Caps
A-3	16" U/L
B-1	10.67" U/L and 10" Caps
B-2	13.33" U/L and 12" Caps
B-3	16" U/L

CODE	USED ON SIGN NO.
E-3 & E-4	E5-3 and E5-4
E-3a & E-4a	E5-3a and E5-4a

Arrow dimensions are shown in the "Standard Highway Sign Designs for Texas" manual.

The Standard Highway Sign Designs for Texas (SHSD) can be found at the following website.

http://www.txdot.gov/publications/traffic.htm

ARROW DETAILS for Destination Signs

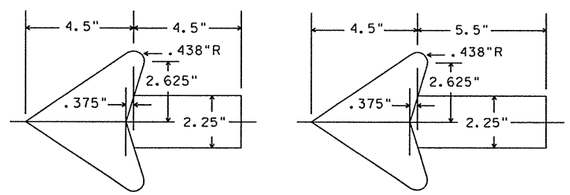

Standard arrow to be used with 6 inch letters.

Standard arrow to be used with 8 inch letters.

Texas Department of Transportation
Traffic Operations Division

TYPICAL SIGN REQUIREMENTS

TSR(5)-08

©TxDOT October 2003

REVISIONS
12-03
9-08

DN: TXDOT	CK: TXDOT	DN: TXDOT	CK: TXDOT
CONT	SECT	JOB	HIGHWAY
2452	01	050	LP 1604
DIST	COUNTY		SHEET NO.
SAT	BEXAR		417

DISCLAIMER:
The use of this standard is governed by the "Texas Engineering Practice Act". No warranty of any kind is made by TxDOT for any purpose whatsoever. TxDOT assumes no responsibility for the conversion of this standard to other formats or for incorrect results or damages resulting from its use.

DATE:
FILE:

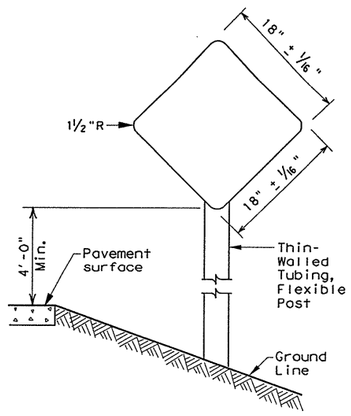

TYPE 1
18" x 18"
Yellow
Type E Sheeting

TYPE 4
18" x 18"
Red
Type D Sheeting

Use Sign blank 0.080" thick sheet aluminum conforming to ASTM B-209 Alloy 6061-T6. Use reflective sheeting in accordance with DMS 8300.

TYPES 1 and 4

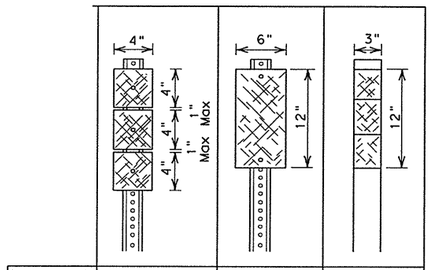

Number of Reflectors	X	Y	Z
Post	WC	WC	FLX

NOTES
1. All type 2 object markers are yellow
2. WC-wing channel post, 1.12 lbs/ft steel per ASTM A 1011 SS Gr 50, or ASTM A499
3. FLX-flexible post (embedded and surface mount)

Typically used on bridge rail approach ends, some bridge abutments and at bridge rail exits on two-lane, two-way roadways

TYPE 2

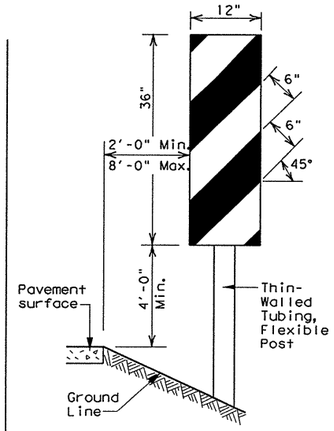

OM-3 Directions
L - Placed on Left Side
R - Placed on Right Side
C - Placed on Center

Use Sign blank .080" thick sheet aluminum conforming to ASTM B-209 Alloy 6061-T6. Use reflective sheeting in accordance with DMS 8300, Type E. Use at bridges with no approach rails.

TYPE 3

OBJECT MARKERS

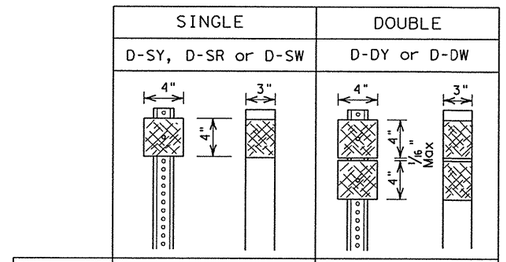

Number of Reflectors	S		D	
Post	WC	FLX	WC	FLX

NOTES
1. Reflector Units: W-White, R-Red, Y-Yellow
2. Length of post may vary to meet field conditions.
3. WC-wing channel post, 1.12 lbs/ft Steel per ASTM A 1011 SS Gr 50, or ASTM A499
4. FLX-flexible post (embedded and surface mount)

DELINEATORS

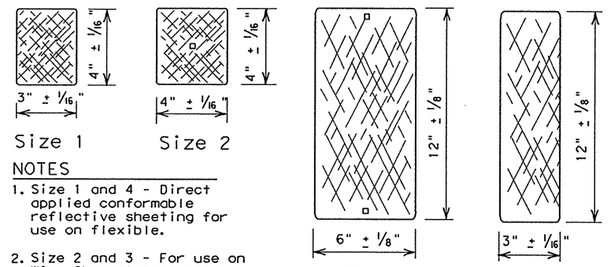

NOTES
1. Size 1 and 4 - Direct applied conformable reflective sheeting for use on flexible.
2. Size 2 and 3 - For use on Wing Channel post only. Use approved metal, plastic or fiberglass backplate with 17/64" square mounting holes.
3. Yellow, White & Red: Conformable Reflective Sheeting as per DMS 8300.

REFLECTOR UNIT SIZES

NOTES
1. A reflector unit or sheeting (per DMS 8600) attached to a bracket to facilitate the mounting of the reflector on concrete traffic barrier, railing, metal beam guard fence (MBGF) or other locations shown on the plans. A list of appoved barrier reflectors can be found at: www.txdot.gov
2. Yellow, White and Red: Conformable Reflective Sheeting as per DMS 8300.

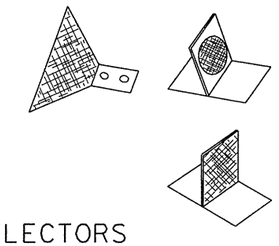

BARRIER REFLECTORS

D & OM DESCRIPTIVE CODES

INSTL DEL ASSM (D-XX)SZ X (XXX)XXX(XX)

NUMBER OF REFLECTORS
S = Single
D = Double

COLOR OF REFLECTORS
W = White
Y = Yellow
R = Red

REFLECTOR UNIT SIZE
1 or 2

TYPE OF POST OR DELINEATOR
WC = Wing Channel Post
FLX = Flexible Post
TYC = Barrier Reflector

TYPE OF MOUNT
GND = Embedded (drivable or set in concrete)
CTB = Concrete Barrier Mount
GF1 or GF2 = Guard Fence Attachment
SRF = Surface Mount

DIRECTION
If Required
BI = Bi-Directional
BR = Bi-Directional with red on back

INSTL OM ASSM (OM-XX) (XXX)XXX(XX)

TYPE OF OBJECT MARKER
1, 2, 3, or 4

NUMBER OF REFLECTORS OR DIRECTION
X = 3-Size 2 reflector units (Type 2 only)
Y = 1-Size 3 reflector unit (Type 2 only)
Z = 3-Size 1 or 1-Size 4 reflector unit(s) (Type 2 only)
L = Left Side (Type 3 Object Marker only)
R = Right Side (Type 3 Object Marker only)
C = Center (Type 3 Object Marker only)

TYPE OF POST
WC = Wing Channel Post
FLX = Flexible Post
TWT = Thin Walled Tubing

TYPE OF MOUNT
GND = Embedded (drivable or set in concrete)
SRF = Surface Mount

DIRECTION
If Required
BI = Bi-Directional

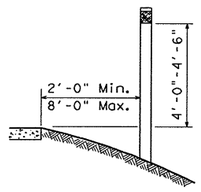

TYPICAL INSTALLATION

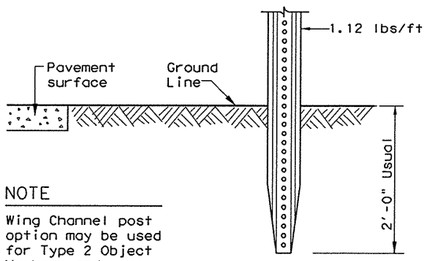

NOTE
Wing Channel post option may be used for Type 2 Object Markers and delineators only.

WING CHANNEL

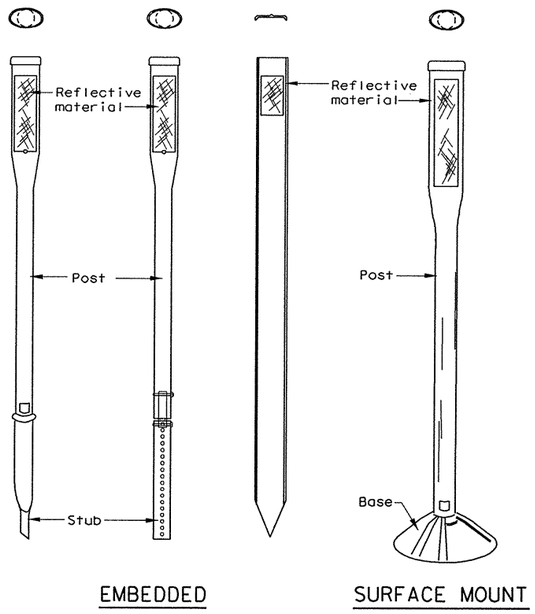

EMBEDDED SURFACE MOUNT

NOTES
1. See Material Producer List for approved devices.
2. Install to manufacturer's recommenations.

FLEXIBLE POSTS

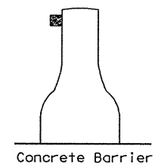

CTB

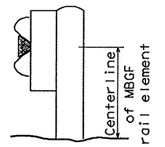

GF1

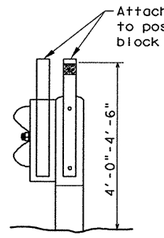

GF2

BARRIER REFLECTORS

GENERAL NOTES
1. Place delineators on a section of roadway the same distance from the edge of pavement.
2. Where a restriction prevents consistent placement from the pavement edge, place the affected object markers in line with the innermost edge of the obstruction.
3. When object markers are more than 8'-0" from the edge of the pavement, it may not be possible to maintain a height of 4'-0"-4'-6". If this is the case, place the object markers as close to the desired height as possible.
4. Install all delineators, object markers and barrier reflectors in accordance with the manufacturer's recommendation.

DEPARTMENTAL MATERIAL SPECIFICATIONS

FLEXIBLE DELINEATOR & OBJECT MARKER POSTS (EMBEDDED & SURFACE MOUNT TYPES)	DMS-4400
SIGN FACE MATERIALS	DMS-8300
DELINEATORS AND OBJECT MARKERS	DMS-8600

Texas Department of Transportation
Traffic Operations Division

DELINEATOR & OBJECT MARKER INSTALLATION AND MATERIAL DESCRIPTION D & OM(1)-10

©TxDOT August 2004

REVISIONS
10-09
4-10

DN: TXDOT	CK: TXDOT	DW: TXDOT	CK: TXDOT

CONT	SECT	JOB	HIGHWAY
2452	01	050	LP 1604
DIST	COUNTY		SHEET NO.
SAT	BEXAR		418

DISCLAIMER:
The use of this standard is governed by the "Texas Engineering Practice Act". No warranty of any kind is made by TxDOT for any purpose whatsoever. TxDOT assumes no responsibility for the conversion of this standard to other formats or for incorrect results or damages resulting from its use.

Type of Road or Condition		Condition for use				Delineator Spacing
		Required (shall be used)	Recommended (should be used)	Optional (may be used)	Prohibited (cannot be used)	
Freeways or Expressways	Tangent	D-SW on right or raised pavement markers				200-530 ft
	Curve	D-SW on right				see Table
	Ramp	D-SW on one side See Note 1 *	On outside of interchange ramp curves			
Other Than Freeways or Expressways	Tangent			D-SW on right or left side	D-SY or D-DY on left side of two-way roads	200-530 ft
	Curve					see Table
Acceleration and Deceleration Lanes			D-DW or D-DY			100 ft spacing
Crossovers			D-DY on left side of through road on far side of crossover			
Wrong-way				D-SR for wrong-way traffic		
Pavement Narrowing (lane merge)				D-SW (right) or D-SY (left) adjacent to affected lane for full length of transition See Note 2 **		
Truck escape ramps			D-SR on both sides of ramp			50 ft spacing
With guard fence, bridge rail, or concrete barrier						100 ft use min. of 3

General Notes: Unless indicated otherwise, the color of a delineators must conform to the color of the pavement edge line on the side of the road where the delineators are placed. Barrier markers can be used to replace required delineators. DS-R can be mounted on the back side of existing delineator posts.

* 1. Delineation required on one side either SY or SW.

** 2. Minimum of 3.

When degree of curve or radius is not known

Advisory Speed (MPH)	Spacing in Curve	Spacing in Strtawy	Chevron Spacing in Curve
	A	2xA	B
65	130	260	
60	110	220	
55	100	200	160
50	85	170	160
45	75	150	160
40	70	140	120
35	60	120	120
30	55	110	80
25	50	100	80
20	40	80	80
15	35	70	40

If the degree of curve is not known, delineator spacing may be determined based on the Advisory Speed of the curve. Use the delineator curve spacing for each Advisory Speed (MPH).

When degree of curve or radius is known

Degree of Curve	Feet			
	Radius of Curve	Spacing in Curve	Spacing in Strtawy	Chevron Spacing in Curve
		A	2A	B
1	5730	225	450	
2	2865	160	320	
3	1910	130	260	
4	1433	110	220	
5	1146	100	200	160
6	955	90	180	160
7	819	85	170	160
8	716	75	150	160
9	637	75	150	120
10	573	70	140	120
11	521	65	130	120
12	478	60	120	120
13	441	60	120	120
14	409	55	110	80
15	382	55	110	80
16	358	55	110	80
19	302	50	100	80
23	249	40	80	80
29	198	35	70	40
38	151	30	60	40
57	101	20	40	40

Curve delineator approach and departure spacing should include 3 delineators spaced at 2A. This spacing should be used during design preparation or when the degree of curve is known.

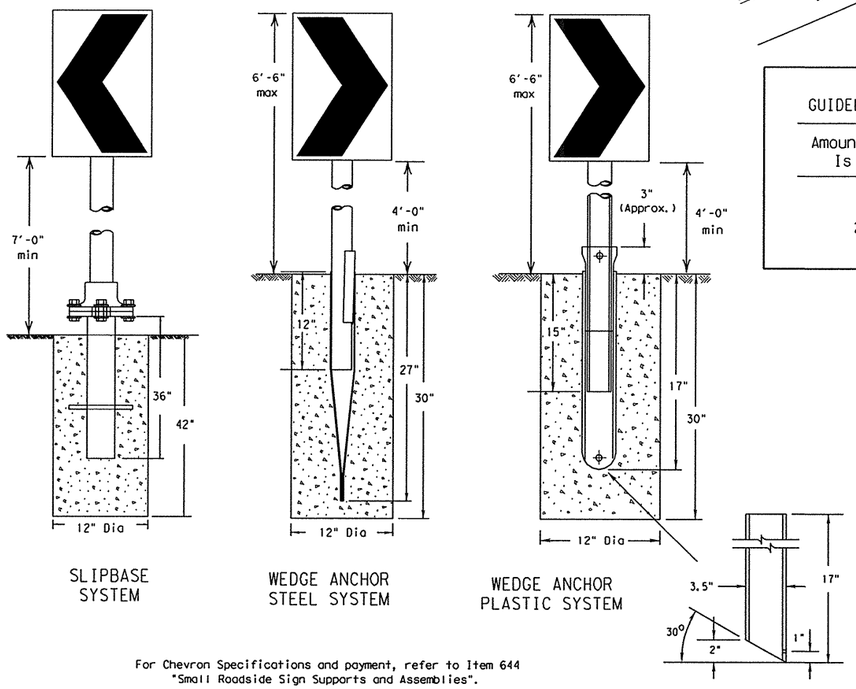

For Chevron Specifications and payment, refer to Item 644 "Small Roadside Sign Supports and Assemblies".

Suggested Spacing for Highway Delineators on Horizontal Curves △

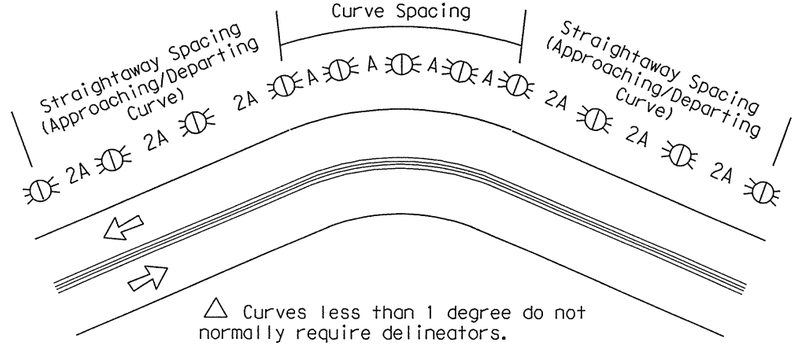

△ Curves less than 1 degree do not normally require delineators.

Suggested Spacing for Chevrons on Horizontal Curves △

The Chevron may be used to provide additional emphasis and guidance for a change in horizontal alignment. A Chevron may be used as a supplement to delineation.

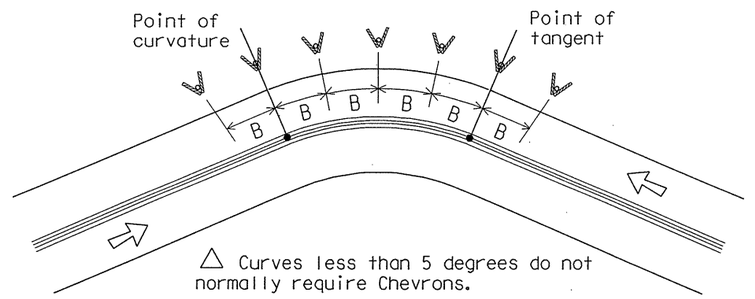

△ Curves less than 5 degrees do not normally require Chevrons.

GUIDELINES FOR USE OF WARNING DEVICES AT CURVES WITH ADVISORY SPEED LIMITS

Amount by which Advisory Speed Is less than Posted Speed	Warning Devices Needed
0 to 14 MPH	RPMs
15 to 24 MPH	RPMs and Delineators
25 MPH or greater	RPMs and Chevrons

Texas Department of Transportation
Traffic Operations Division

TYPICAL DELINEATOR & OBJECT MARKER PLACEMENT DETAILS

D & OM(2)-04

© TxDOT August 2004

REVISIONS

DN: TXDOT	CK: TXDOT	DW: TXDOT	CK: TXDOT

CONT	SECT	JOB	HIGHWAY
2452	01	050	LP 1604
DIST	COUNTY		SHEET NO.
SAT	BEXAR		419

DATE:
FILE:

DISCLAIMER:
The use of this standard is governed by the "Texas Engineering Practice Act". No warranty of any kind is made by TxDOT for any purpose whatsoever. TxDOT assumes no responsibility for the conversion of this standard to other formats or for incorrect results or damages resulting from its use.

DATE:
FILE:

Two-way, Two lane Roadway with Reduced Width Approach Rail

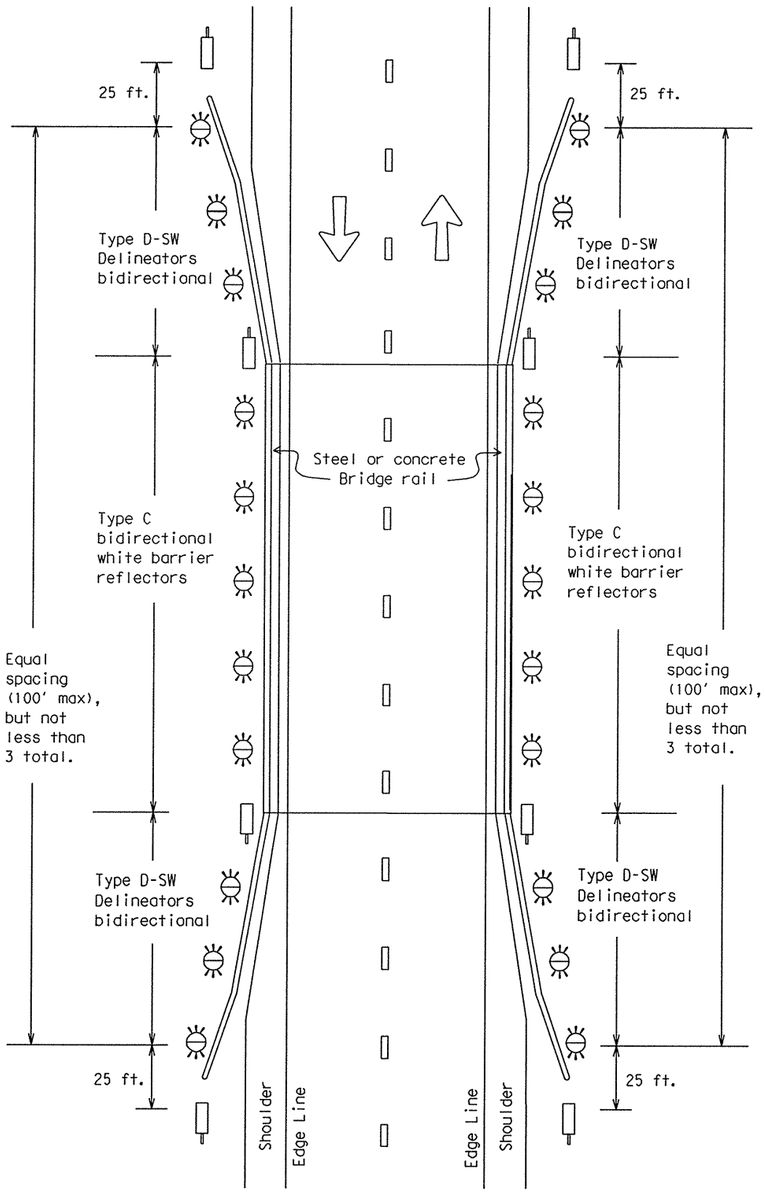

Two-way, Two lane Roadway with Metal Beam Guard Fence (MBGF)

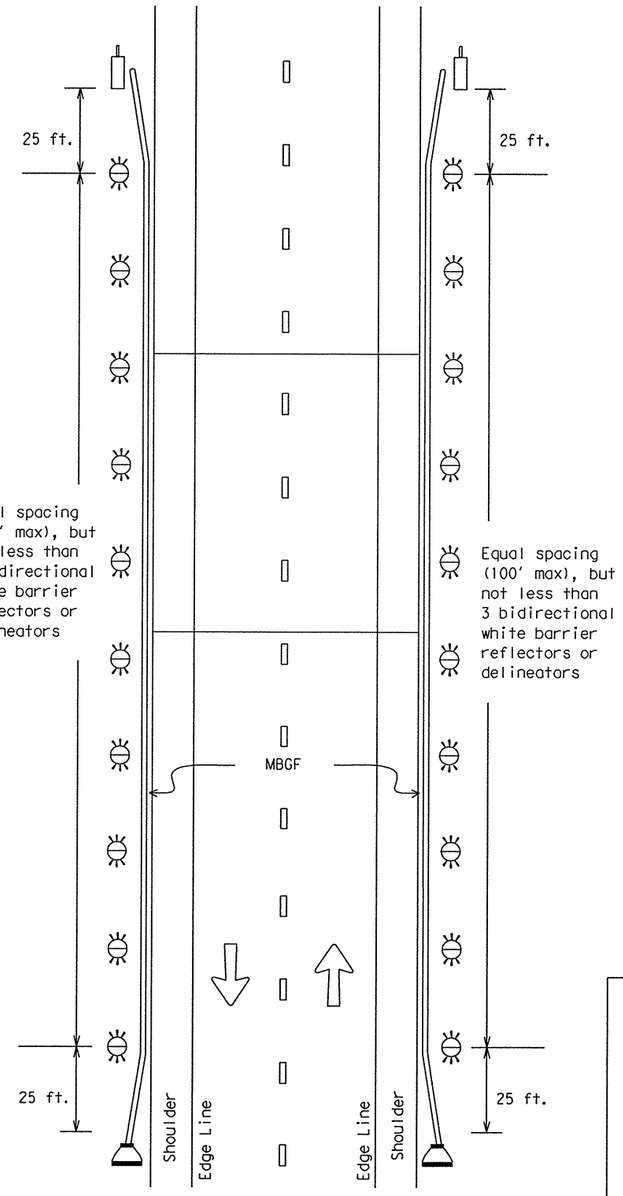

Terminal Ends include OB-3F. There is no need to install an OM-2 in front of terminal.

Two-way, Two lane Roadway Bridge with No Approach Rail

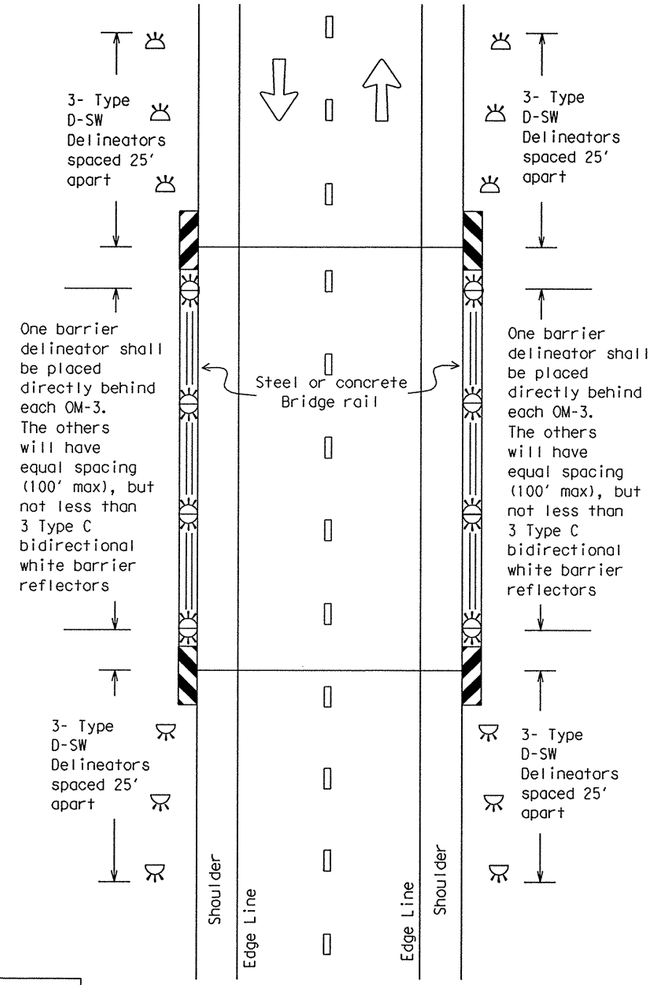

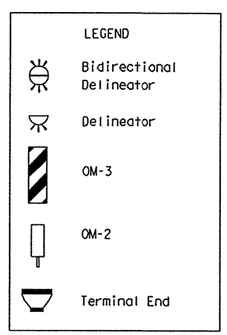

Texas Department of Transportation
Traffic Operations Division

DELINEATOR & OBJECT MARKER PLACEMENT DETAILS

D & OM(3)-04

©TxDOT August 2004
REVISIONS

DN: TXDOT	CK: TXDOT	DW: TXDOT	CK: TXDOT

CONT	SECT	JOB	HIGHWAY
2452	01	050	LP 1604
DIST	COUNTY		SHEET NO.
SAT	BEXAR		420

DISCLAIMER:
The use of this standard is governed by the "Texas Engineering Practice Act". No warranty of any kind is made by TxDOT for any purpose whatsoever. TxDOT assumes no responsibility for the conversion of this standard to other formats or for incorrect results or damages resulting from its use.

DATE:
FILE:

Continuous Concrete Barrier

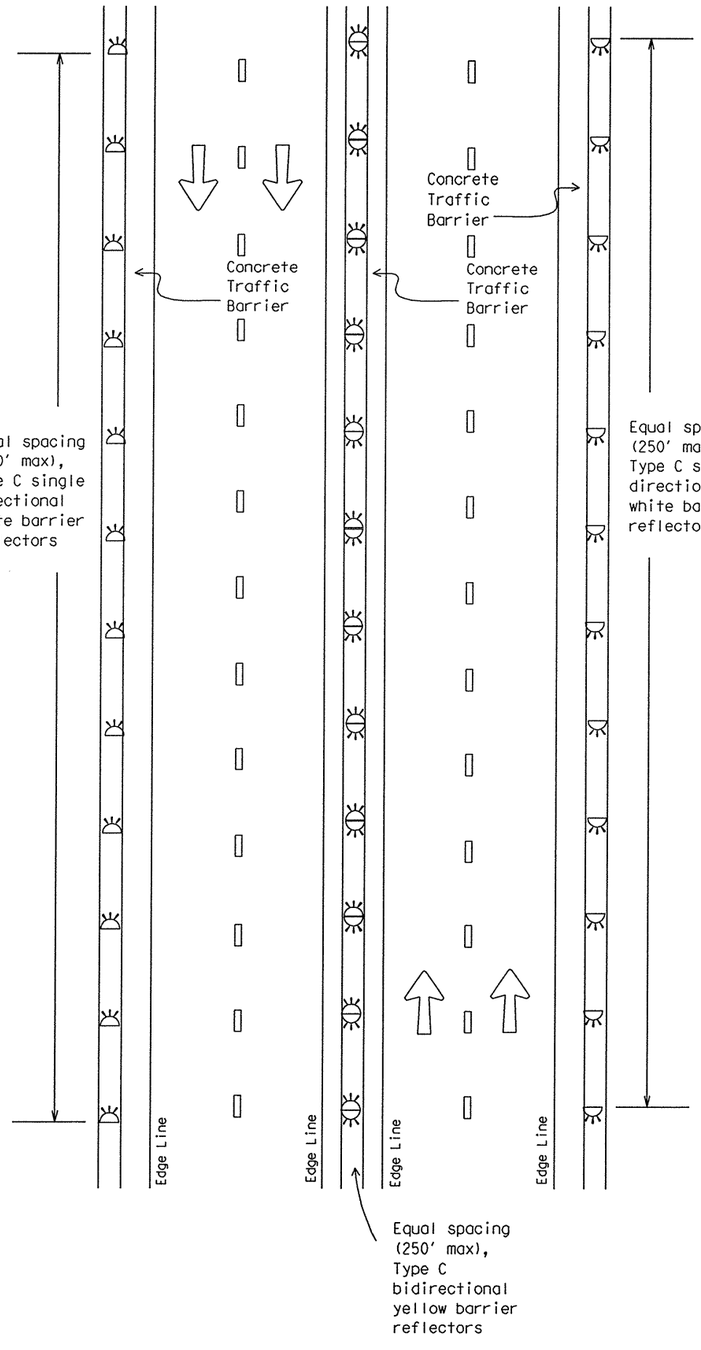

Multi-lane Undivided, Two-way Roadway with Metal Beam Guard Fence (MBGF)

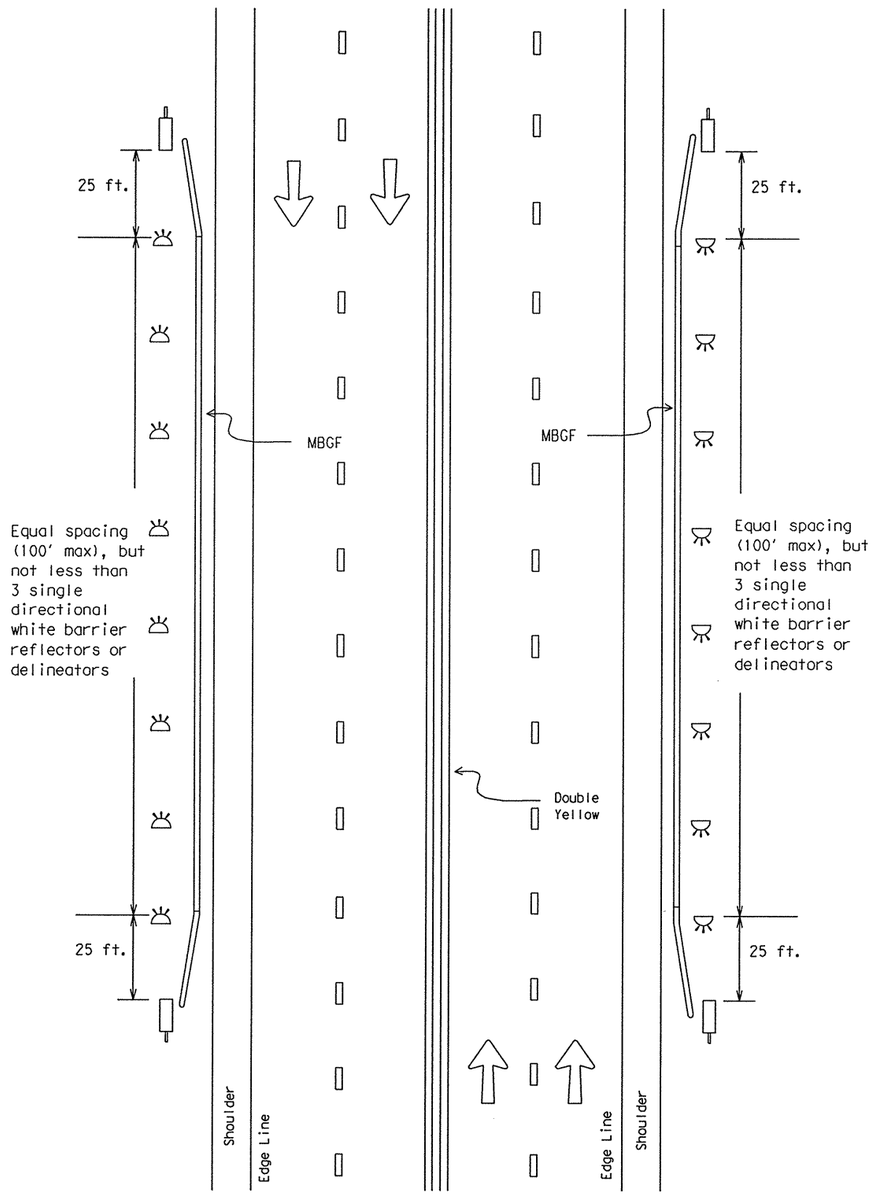

LEGEND

- Bidirectional Delineator
- Delineator
- OM-3
- OM-2

Texas Department of Transportation
Traffic Operations Division

DELINEATOR & OBJECT MARKER PLACEMENT DETAILS

D & OM(4)-04

©TxDOT August 2004

REVISIONS

DN: TXDOT	CK: TXDOT	DW: TXDOT	CK: TXDOT

CONT	SECT	JOB	HIGHWAY
2452	01	050	LP 1604
DIST	COUNTY		SHEET NO.
SAT	BEXAR		421

20D

DISCLAIMER:
The use of this standard is governed by the "Texas Engineering Practice Act". No warranty of any kind is made by TxDOT for any purpose whatsoever. TxDOT assumes no responsibility for the conversion of this standard to other formats or for incorrect results or damages resulting from its use.

DATE:
FILE:

Divided Roadway with Metal Beam Guard Fence

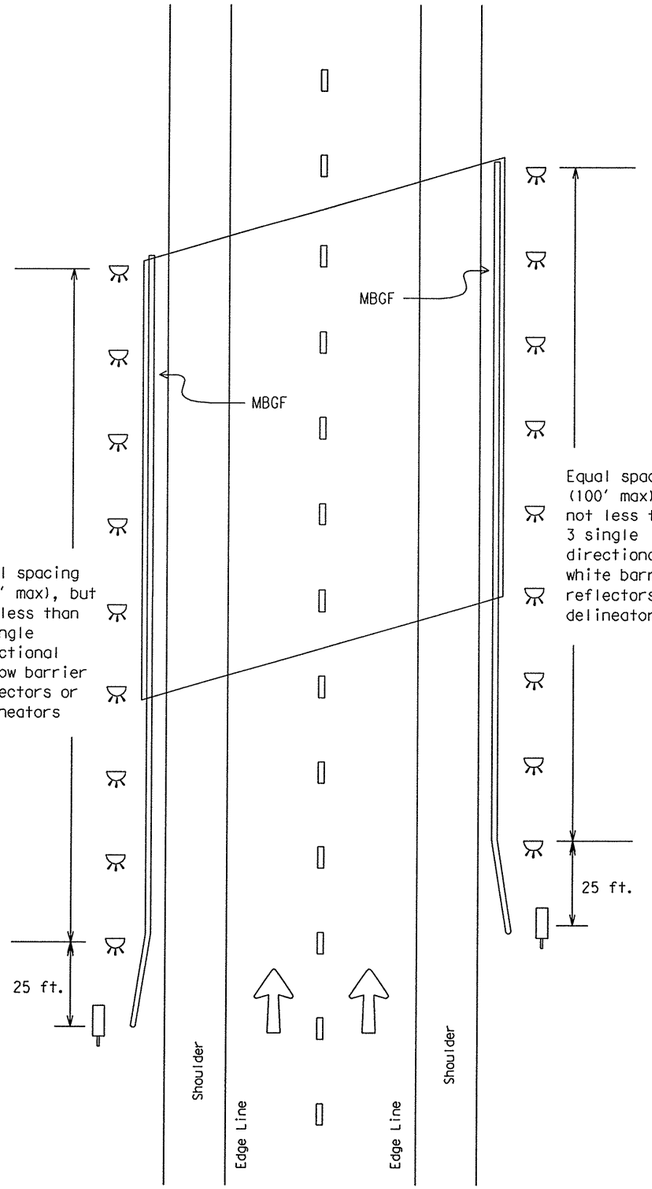

Freeway Delineation including Ramps

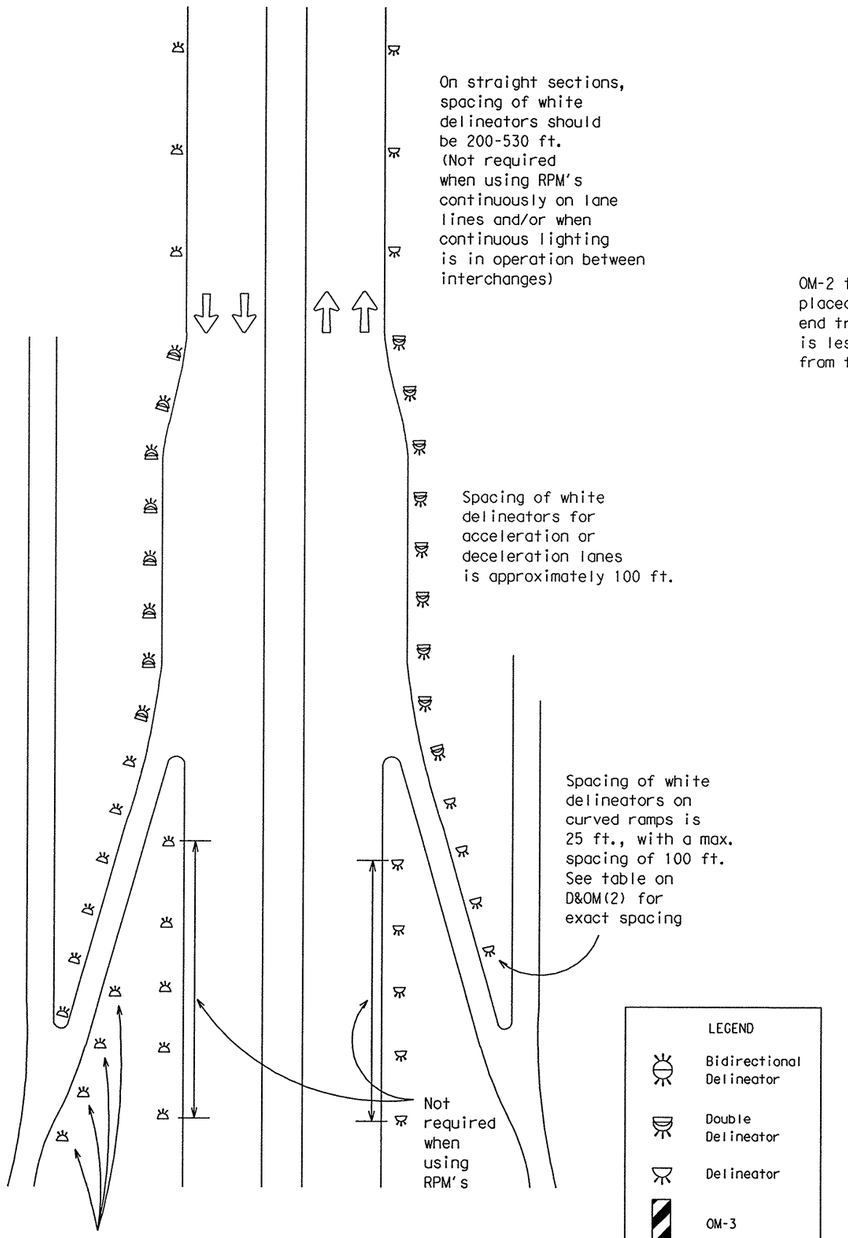

For Culverts without MBGF

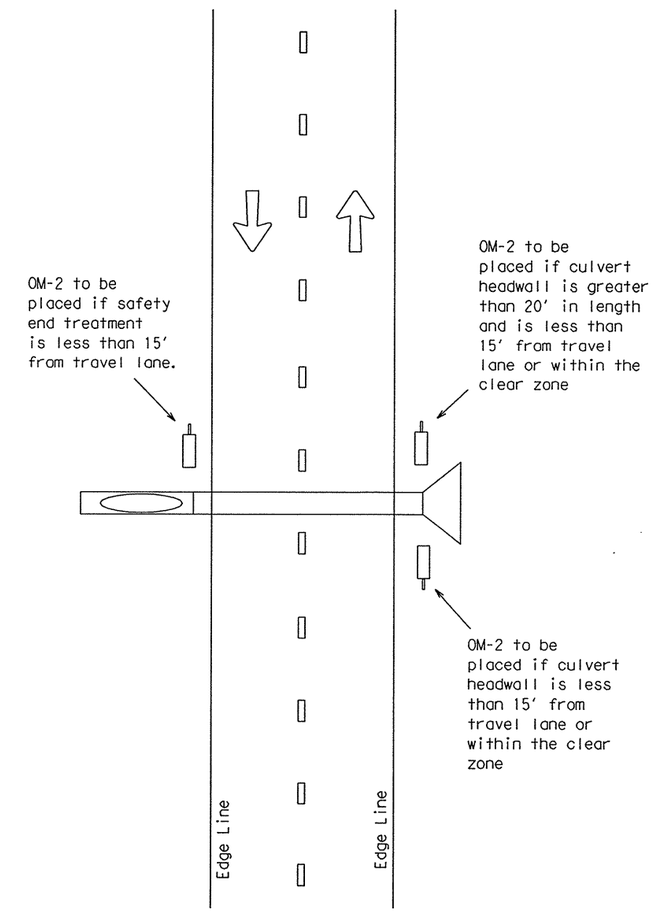

LEGEND

- Bidirectional Delineator
- Double Delineator
- Delineator
- OM-3
- OM-2

Texas Department of Transportation
Traffic Operations Division

DELINEATOR & OBJECT MARKER PLACEMENT DETAILS

D & OM(5)-04

© TxDOT August 2004
REVISIONS

DN: TXDOT	CK: TXDOT	DW: TXDOT	CK: TXDOT

CONT	SECT	JOB	HIGHWAY
2452	01	050	LP 1604

DIST	COUNTY	SHEET NO.
SAT	BEXAR	422

20E

DISCLAIMER:
The use of this standard is governed by the "Texas Engineering Practice Act". No warranty of any kind is made by TxDOT for any purpose whatsoever. TxDOT assumes no responsibility for the conversion of this standard to other formats or for incorrect results or damages resulting from its use.

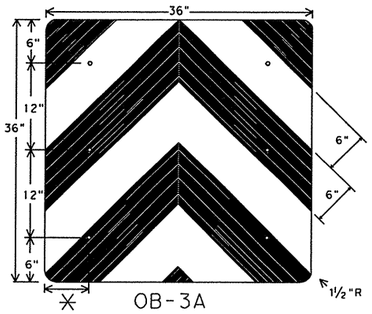

OB-3A

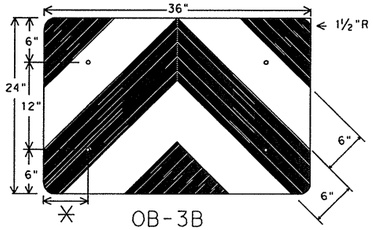

OB-3B

✳ adjust to fit attenuator per manufacturer's recommendation, or as directed by the Engineer.

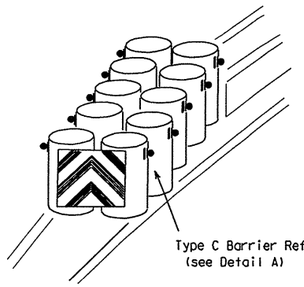

Object Marker blank to be 0.08" thick sheet aluminum conforming to ASTM B-209 Alloy 6061-T6 aluminum as per Specification DMS 7110.

Mounting should be flush with top of VIA.
Minimum size 36" x 24".

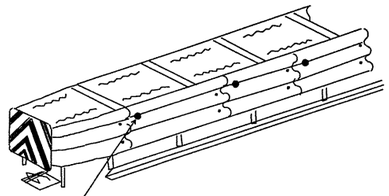

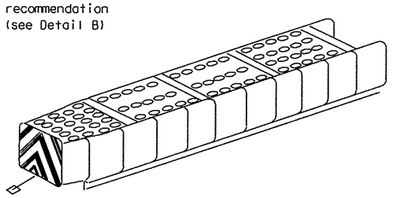

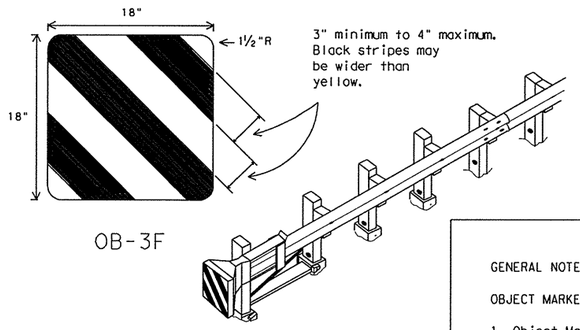

OB-3F

TYPICAL GUARDRAIL
END TREATMENT

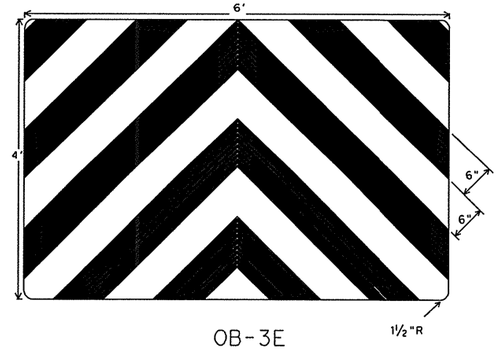

OB-3E

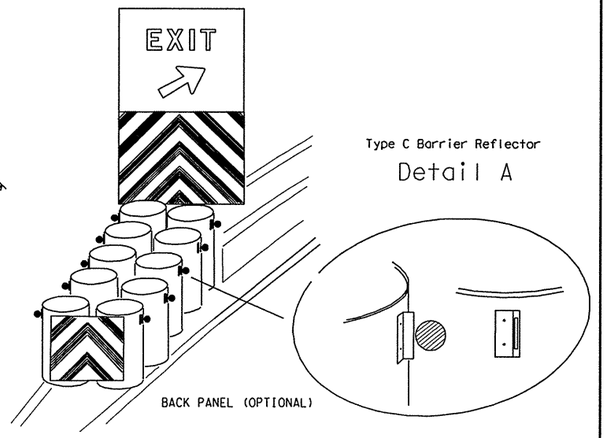

GENERAL NOTES:

1. Back panel will be mounted independent of the attenuator. The minimum mounting height is flush with the top of the attenuator.
2. Attenuator may have additional yellow reflective and black striping, and/or reflectors placed on sides. CHEVRONS (W1-8) may be erected to delineate roadway curvature beyond the attenuator. These additional devices will be installed if required elsewhere in the plans.
3. Mount Back Panel per details on SMD Standards, or as detailed elsewhere in the plans.

GENERAL NOTES:

OBJECT MARKERS

1. Object Markers shall conform to the Texas MUTCD and meet the color and reflectivity requirement of Department Material Specification DMS 8300, Type C. Background shall be yellow reflective and Chevron shall be black.
2. OB-3F is intended for use only with guardrail terminal ends. OM-BF may be fabricated from adhesive backed reflective sheeting applied directly to guardrail end treatment, or applied directly to an "end cap" as per the manufacturer's recommendation. Direct applied sheeting shall provide a smooth surface and have no wrinkles, air bubbles, cuts or tears.
3. Size may be reduced to fit smaller devices, however, the minimum size shall be:
   (a) 24 x 24 inch for attenuators, and
   (b) 18 x 18 inches for guardrail end treatments.
4. Pop rivets, screws, or nuts and bolts may be used to attach object markers and reflectors. Holes, slots or other openings may be cut or drilled through object markers to allow cable or other attachments.
5. When traffic passes only on one side of attenuator, only the OM-3 marker should be installed. OM-3 should be installed per the requirements of D & OM Standards with a minimum mounting height of 18 inches.

TYPE C REFLECTORS

1. Type C delineators shall consist of a Type A or Type B reflector unit (per DMS 8600) attached to a bracket to facilitate delineator mounting on attenuators, guardrails and concrete traffic barriers.
2. Type C reflectors may also be used to delineate side of attenuator, guardrail and concrete traffic barrier.
3. Type C reflectors shall meet the requirements of DMS 8600.

A list of approved Type C Delineators can be found at:

ftp//ftp.dot.state.tx.us/pub/txdot-info/cmd/mpl/typecdeln.pdf

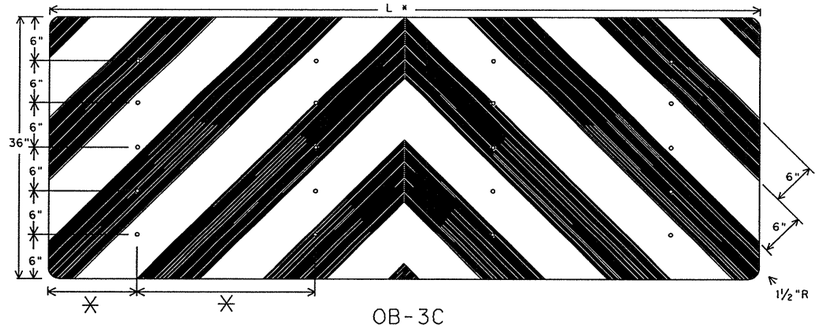

OB-3C

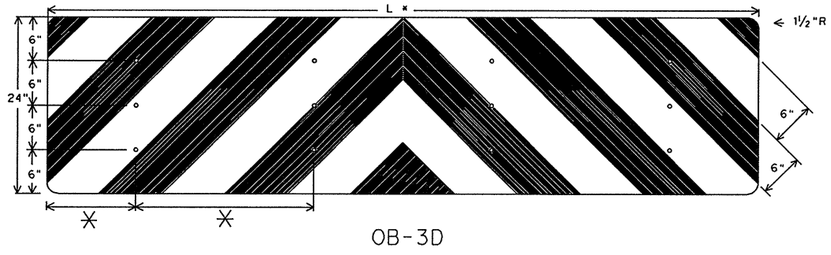

OB-3D

✳ spacing adjusted to attach through centerline of drum, per attenuator manufacturers recommendation, or as directed by the Engineer.

Mounting should be flush with top of attenuator.
Minimum size 96" x 24".

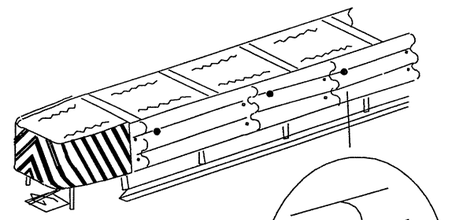

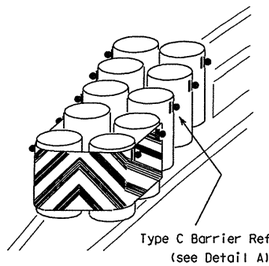

Texas Department of Transportation
Traffic Operations Division

DELINEATORS & OBJECT MARKERS FOR VEHICLE IMPACT ATTENUATORS

D & OM(VIA)-04

©TxDOT December 1989	DN: TXDOT	CK: TXDOT	DW: TXDOT	CK: TXDOT
REVISIONS	CONT	SECT	JOB	HIGHWAY
4-92	2452	01	050	LP 1604
8-95	DIST	COUNTY		SHEET NO.
4-98	SAT	BEXAR		423
8-04				

2OF

DATE:
FILE:

DISCLAIMER: The use of this standard is governed by the "Texas Engineering Practice Act". No warranty of any kind is made by TxDOT for any purpose whatsoever. TxDOT assumes no responsibility for the conversion of this standard to other formats or for incorrect results or damages resulting from its use.

SIGN SUPPORT DESCRIPTIVE CODES

(Descriptive Codes correspond to project estimate and quantities sheets)

SM RD SGN ASSM TY XXXXX(X)XX(X-XXXX)

Post Type
- FRP = Fiberglass Reinforced Plastic Pipe (see SMD(FRP))
- TWT = Thin-Walled Tubing (see SMD(TWT))
- 10BWG = 10 BWG Tubing (see SMD(SLIP-1) to (SLIP-3))
- S80 = Schedule 80 Pipe (see SMD(SLIP-1) to (SLIP-3))

Number of Posts (1 or 2)

Anchor Type
- UA = Universal Anchor - Concreted (see SMD(FRP) and (TWT))
- UB = Universal Anchor - Bolted down (see SMD(FRP) and (TWT))
- WS = Wedge Anchor Steel - (see SMD(TWT))
- WP = Wedge Anchor Plastic (see SMD(TWT))
- SA = Slipbase - Concreted (see SMD(SLIP-1) to (SLIP-3))
- SB = Slipbase - Bolted Down (see SMD(SLIP-1) to (SLIP-3))

Sign Mounting Designation
- P = Prefab. "Plain" (see SMD(SLIP-1) to (SLIP-3), (TWT), (FRP))
- T = Prefab. "T" (see SMD(SLIP-1) to (SLIP-3), (TWT))
- U = Prefab. "U" (see SMD(SLIP-1) to (SLIP-3))
- IF REQUIRED
- 1EXT or 2EXT = Number of Extensions (see SMD(SLIP-1) to (SLIP-3), (TWT))
- BM = Extruded Wind Beam (see SMD(SLIP-1) to (SLIP-3))
- WC = 1.12 #/ft Wing Channel (see SMD(SLIP-1) to (SLIP-3))
- EXAL = Extruded Aluminum Sign Panels (see SMD(SLIP-3))

REQUIRED CLEARANCE FOR BREAKAWAY SUPPORT

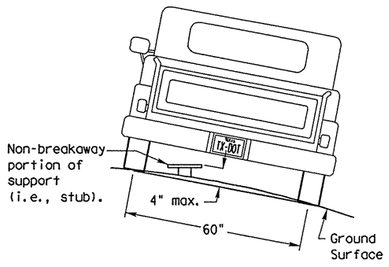

To avoid vehicle undercarriage snagging, any substantial remains of a breakaway support, when it is broken away, should not project more than 4 inches above a 60-inch chord (i.e., typical space between wheel paths).

No more than 2 sign posts should be located within a 7 ft. circle.

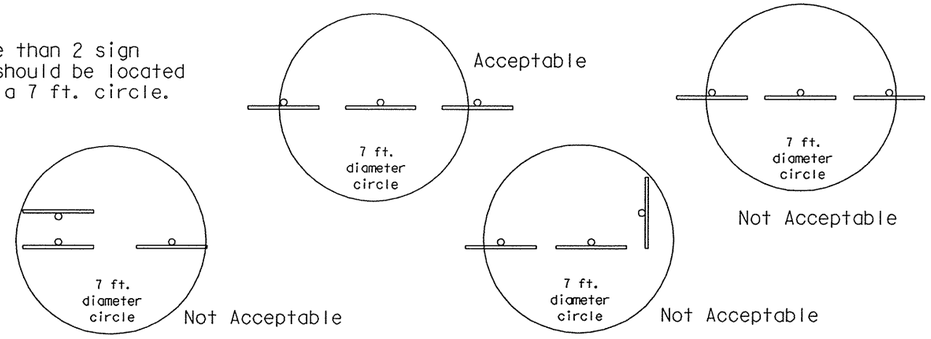

SIGN LOCATION

PAVED SHOULDERS

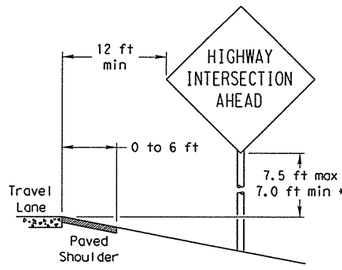

LESS THAN 6 FT. WIDE

When the shoulder is 6 ft. or less in width, the sign must be placed at least 12 ft. from the edge of the travel lane.

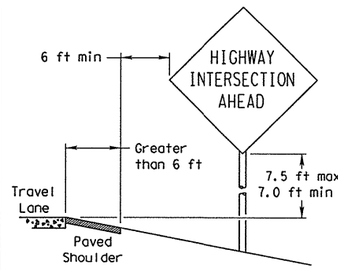

GREATER THAN 6 FT. WIDE

When the shoulder is greater than 6 ft in width, the sign must be placed at least 6 ft. from the edge of the shoulder.

BEHIND BARRIER

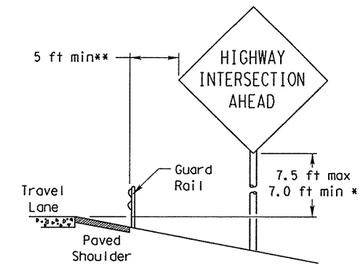

BEHIND GUARDRAIL

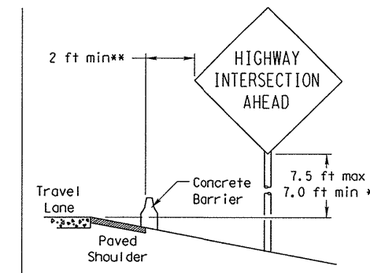

BEHIND CONCRETE BARRIER

**Sign clearance based on distance required for proper guard rail or concrete barrier performance.

T-INTERSECTION

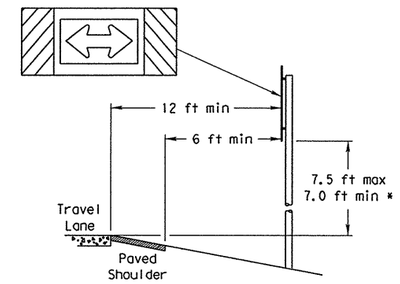

When this sign is needed at the end of a two-lane, two way roadway, the right edge of the sign should be in line with the centerline of the roadway. Place as close to ROW as practical.

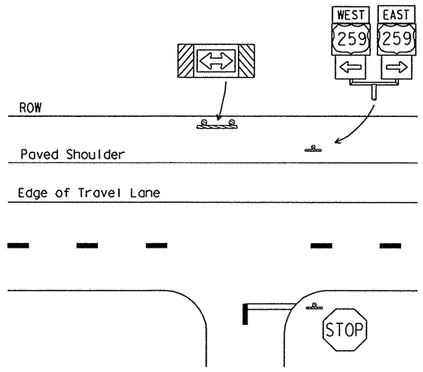

* Signs shall be mounted using the following condition that results in the greatest sign elevation:

(1) a minimum of 7 to a maximum of 7.5 feet above the edge of the travel lane or

(2) a minimum of 7 to a maximum of 7.5 feet above the grade at the base of the support when sign is installed on the backslope.

The maximum values may be increased when directed by the Engineer.

See the Traffic Operations Division website for detailed drawings of sign clamps, Triangular Slipbase System components and Wedge Anchor System components.

The website address is:
http://www.txdot.gov/publications/traffic.htm

TYPICAL SIGN ATTACHMENT DETAIL

Single Signs

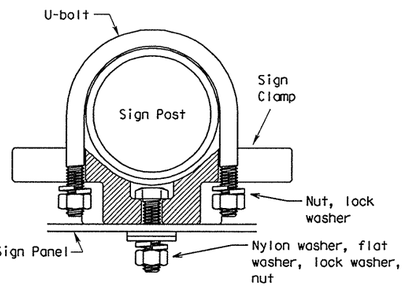

Back-to-Back Signs

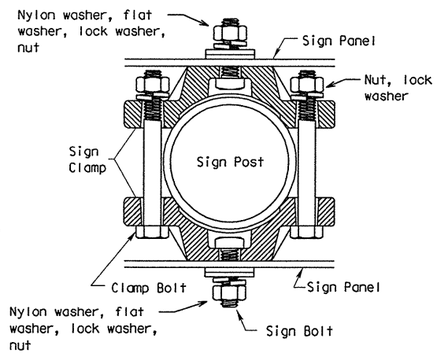

Bolts used to mount sign panels to the clamp are 5/16-18 UNC galvanized square head with nut, nylon washer, flat washer and lock washer. The bolt length is 1 inch for aluminum.

When two sign clamps are used to mount signs back-to-back, use a 5/16-18 UNC galvanized hex head per ASTM A307 with nut and helical-spring lock washer. The approximate bolt lengths for various post sizes and sign clamp types are given in the table at right. The bolt length may need to be adjusted depending upon field conditions.

Sign clamps may be either the specific size clamp or the universal clamp.

Pipe Diameter	Approximate Bolt Length	
	Specific Clamp	Universal Clamp
2" nominal	3"	3 or 3 1/2"
2 1/2" nominal	3 or 3 1/2"	3 1/2 or 4"
3" nominal	3 1/2 or 4"	4 1/2"

SIGNS WITH PLAQUES

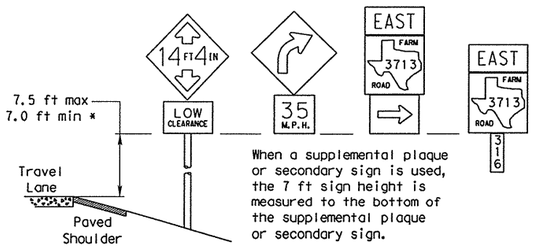

When a supplemental plaque or secondary sign is used, the 7 ft sign height is measured to the bottom of the supplemental plaque or secondary sign.

CURB & GUTTER OR RAISED ISLAND

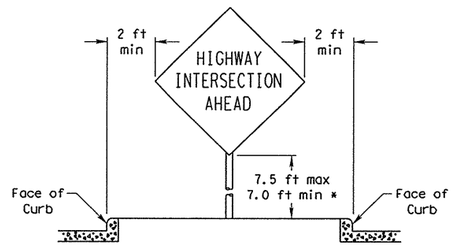

RESTRICTED RIGHT-OF-WAY

(When 6 ft min. is not possible.)

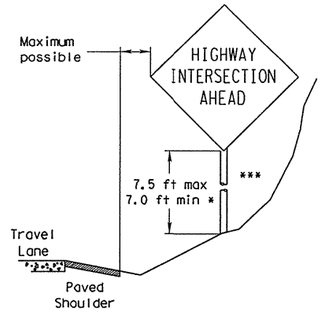

Right-of-way restrictions may be created by rocks, water, vegetation, forest, buildings, a narrow island, or other factors.

In situations where a lateral restriction prevents the minimum horizontal clearance from the edge of the travel lane, signs should be placed as far from the travel lane as practical.

*** Post may be shorter if protected by guardrail or if Engineer determines the post could not be hit due to extreme slope.

Texas Department of Transportation
Traffic Operations Division

SIGN MOUNTING DETAILS SMALL ROADSIDE SIGNS GENERAL NOTES & DETAILS

SMD(GEN)-08

©TxDOT July 2002

DN: TXDOT	CK: TXDOT	DN: TXDOT	CK: TXDOT
CONT	SECT	JOB	HIGHWAY
2452	01	050	LP 1604
DIST	COUNTY		SHEET NO.
SAT	BEXAR		424

9-08 REVISIONS

DATE:
FILE:

DISCLAIMER: The use of this standard is governed by the "Texas Engineering Practice Act". No warranty of any kind is made by TxDOT for any purpose whatsoever. TxDOT assumes no responsibility for the conversion of this standard to other formats or for incorrect results or damages resulting from its use.

TRIANGULAR SLIPBASE INSTALLATION GENERAL REQUIREMENTS

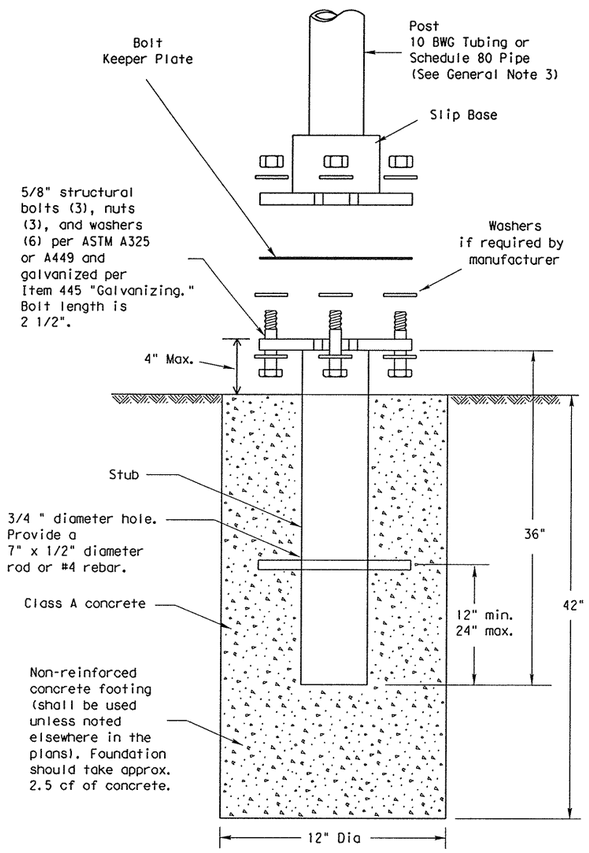

SM RD SGN ASSM TY XXXXX(X)SA(X-XXXX)

NOTE

There are various devices approved for the Triangular Slipbase System. Please reference the Material Producer List for approved slip base systems. http://www.txdot.gov/business/producer_list.htm The devices shall be installed per manufacturers' recommendations. Installation procedures shall be provided to the Engineer by Contractor.

GENERAL NOTES:

1. Slip base shall be permanently marked to indicate manufacturer. Method, design, and location of marking are subject to approval of the TxDOT Traffic Standards Engineer.
2. Material used as post with this system shall conform to the following specifications:
   10 BWG Tubing (2.875" outside diameter)
   0.134" nominal wall thickness
   Seamless or electric-resistance welded steel tubing or pipe
   Steel shall be HSLAS Gr 55 per ASTM A1011 or ASTM A1008
   Other steels may be used if they meet the following:
   55,000 PSI minimum yield strength
   70,000 PSI minimum tensile strength
   20% minimum elongation in 2"
   Wall thickness (uncoated) shall be within the range of 0.122" to 0.138"
   Outside diameter (uncoated) shall be within the range of 2.867" to 2.883"
   Galvanization per ASTM A123 or ASTM A653 G210. For precoated steel tubing (ASTM A653), recoat tube outside diameter weld seam by metallizing with zinc wire per ASTM B833.
   Schedule 80 Pipe (2.875" outside diameter)
   0.276" nominal wall thickness
   Steel tubing per ASTM A500 Gr C
   Other seamless or electric-resistance welded steel tubing or pipe with equivalent outside diameter and wall thickness may be used if they meet the following:
   46,000 PSI minimum yield strength
   62,000 PSI minimum tensile strength
   21% minimum elongation in 2"
   Wall thickness (uncoated) shall be within the range of 0.248" to 0.304"
   Outside diameter (uncoated) shall be within the range of 2.855" to 2.895"
   Galvanization per ASTM A123
3. See the Traffic Operations Division website for detailed drawings of sign clamps and Texas Universal Triangular Slipbase System components. The website address is:
   http://www.txdot.gov/publications/traffic.htm
4. Sign supports shall not be spliced except where shown. Sign support posts shall not be spliced.

ASSEMBLY PROCEDURE

Foundation
1. Prepare 12-inch diameter by 42-inch deep hole. If solid rock is encountered, the depth of the foundation may be reduced such that it is embedded a minimum of 18 inches into the solid rock.
2. The Engineer may permit batches of concrete less than 2 cubic yards to be mixed with a portable, motor-driven concrete mixer. For small placements less than 0.5 cubic yards, hand mixing in a suitable container may be allowed by Engineer. Concrete shall be Class A.
3. Push the pipe end of the slip base stub into the center of the concrete. Rotate the stub back and forth while pushing it down into the concrete to assure good contact between the concrete and stub. Continue to work the stub into the concrete until it is between 2 to 4 inches above the ground.
4. Plumb the stub. Allow a minimum of 4 days to set, unless otherwise directed by the Engineer.
5. The triangular slipbase system is multidirectional and is designed to release when struck from any direction.

Support
1. Cut support so that the bottom of the sign will be 7 to 7.5 feet above the edge of the travelway (i.e., edge of the closest lane) when slip plate is below the edge of pavement or 7 to 7.5 feet above slip plate when the slip plate is above the edge of the travelway. The cut shall be plumb and straight.
2. Attach sign to support using connections shown. When multiple signs are installed on the same support, ensure the minimum clearance between each sign is maintained. See SMD(SLIP-2) for clearances based on sign types.

CONCRETE ANCHOR

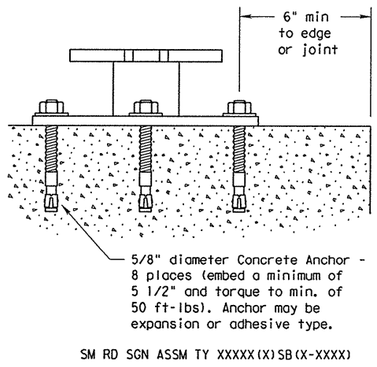

SM RD SGN ASSM TY XXXXX(X)SB(X-XXXX)

Concrete anchor consists of 5/8" diameter stud bolt with UNC series bolt threads on the upper end. Heavy hex nut per ASTM A563, and hardened washer per ASTM F436. The stud bolt shall have a minimum yield and ultimate tensile strength of 50 and 75 KSI, respectively. Nuts, bolts and washers shall be galvanized per Item 445, "Galvanizing." Adhesive type anchors shall have stud bolts installed with Type III epoxy per DMS-6100, "Epoxies and Adhesives." Adhesive anchors may be loaded after adequate epoxy cure time per the manufacturer's recommendations. Top of bolt shall extend at least flush with top of the nut when installed. The anchor, when installed in 4000 psi normal-weight concrete with a 5 1/2" minimum embedment, shall have a minimum allowable tension and shear of 3900 and 3100 psi, respectively.

Texas Department of Transportation
Traffic Operations Division

SIGN MOUNTING DETAILS SMALL ROADSIDE SIGNS TRIANGULAR SLIPBASE SYSTEM

SMD(SLIP-1)-08

©TxDOT July 2002

DN: TXDOT	CK: TXDOT	DW: TXDOT	CK: TXDOT

REVISIONS 9-08

CONT	SECT	JOB	HIGHWAY
2452	01	050	LP 1604

DIST	COUNTY	SHEET NO.
SAT	BEXAR	425

DATE:
FILE:

DISCLAIMER:
The use of this standard is governed by the "Texas Engineering Practice Act". No warranty of any kind is made by TxDOT for any purpose whatsoever. TxDOT assumes no responsibility for the conversion of this standard to other formats or for incorrect results or damages resulting from its use.

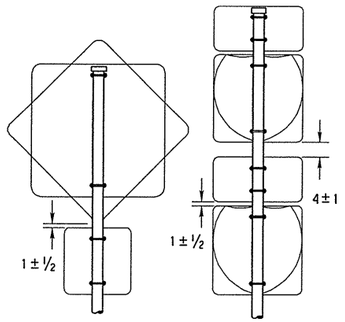

SM RD SGN ASSM TY XXXXX(1)XX(P)

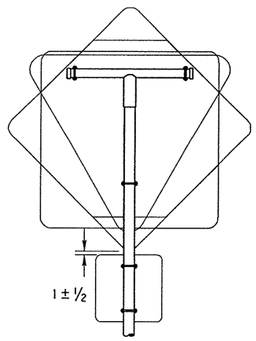

SM RD SGN ASSM TY XXXXX(1)XX(T)

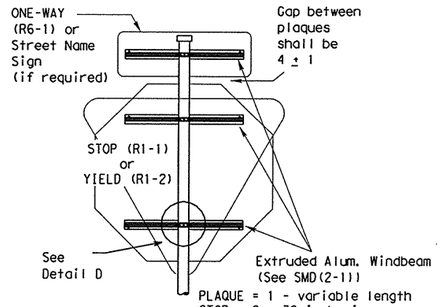

SM RD SGN ASSM TY XXXXX(1)XX(P-BM)

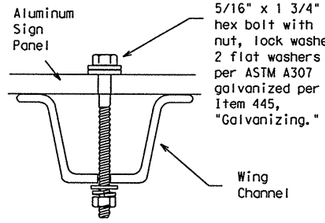

Detail A

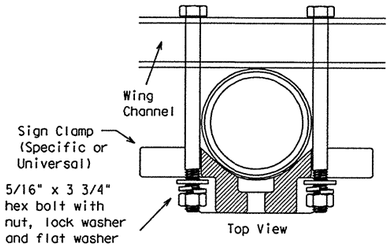

Detail B

GENERAL NOTES:

1.

SIGN SUPPORT	# OF POSTS	MAX. SIGN AREA
10 BWG	1	16 SF
10 BWG	2	32 SF
Sch 80	1	32 SF
Sch 80	2	64 SF

2. The Engineer may require that a Schedule 80 post be used in place of a 10 BWG where a sign height is abnormally high due to a fill slope.
3. Sign supports shall not be spliced except where shown. Sign support posts shall not be spliced.
4. Aluminum sign blanks shall conform to Departmental Material Specifications DMS-7110 and shall have the following minimum thicknesses: 0.080 for signs less than 7.5 sq. ft., 0.100 for signs 7.5 to 15 sq. ft., and 0.125 for signs greater than 15 sq. ft.
5. Signs that require specific supports due to reasons in addition to windloading are indicated on the "REQUIRED SUPPORT" table on this sheet.
6. For horizontal rectangular signs fabricated from flat aluminum, T-brackets are used for signs 24 inches or less in height. U-brackets are used for signs of greater height.
7. When two triangular slipbase supports are used to support a single sign, they shall not be "rigidly" connected to each other except through the sign panel. This will allow each support to act independently when impacted by an errant vehicle.
8. Wing channel shall meet ASTM A 1011 SS Gr 50 and be galvanized per ASTM A 123.
9. Excess pipe, wing channel, or windbeam shall be cut off so that it does not extend beyond the sign panel (i.e., excess support shall not be visible when the sign is viewed from the front.) Repair galvanized coating at cut support ends per Item 445, "Galvanizing."
10. Additional route markers may be added vertically, provided the total sign area does not exceed the maximum allowable amount per Note 1.
11. Additional sign clamp required on the "T-bracket" post for 24 inch height signs. Place the clamp 3 inches above bottom of sign when possible.
12. Post open ends shall be fitted with Friction Caps.
13. Sign blanks shall be the sizes and shapes shown on the plans.

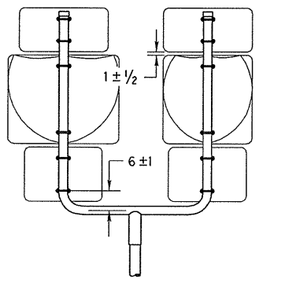

SM RD SGN ASSM TY XXXXX(1)XX(U)

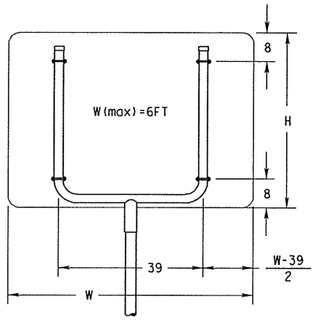

SM RD SGN ASSM TY XXXXX(1)XX(U)

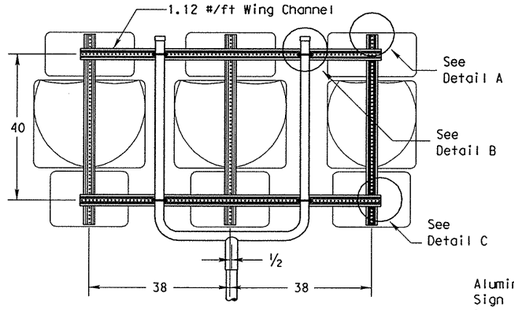

SM RD SGN ASSM TY XXXXX(1)XX(U-WC)
(See Note 11)

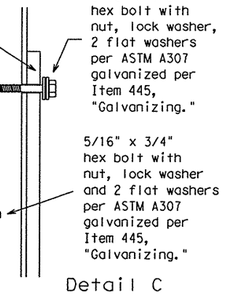

Detail C

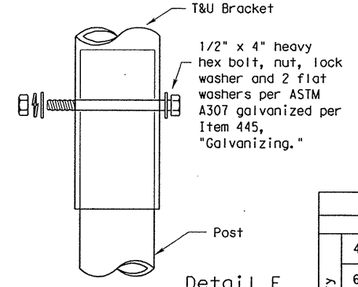

Detail E

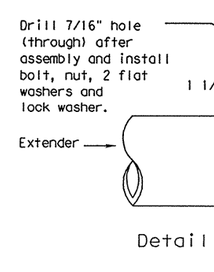

Detail F

Splices shall only be allowed behind the sign substrate.

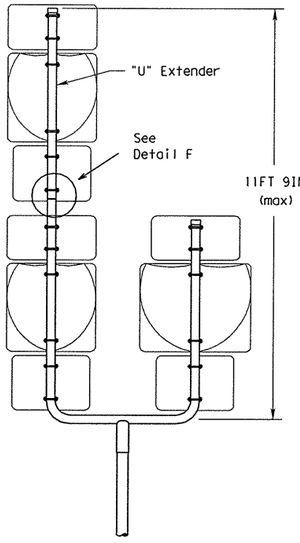

SM RD SGN ASSM TY S80(1)XX(U-1EXT)

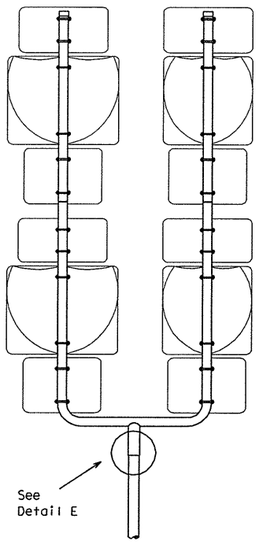

SM RD SGN ASSM TY S80(1)XX(U-2EXT)

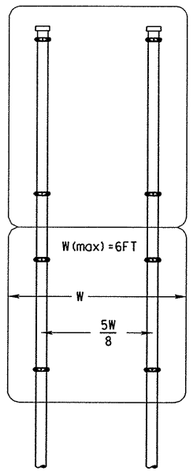

SM RD SGN ASSYM TY XXXXX(2)XX(P)

SIDE VIEW

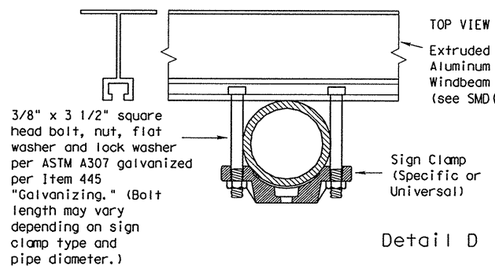

Detail D

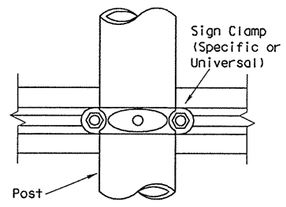

REQUIRED SUPPORT		
	SIGN DESCRIPTION	SUPPORT
Regulatory	48-inch STOP sign (R1-1)	TY 10BWG(1)XX(T) TY 10BWG(1)XX(P-BM)
	60-inch YIELD sign (R1-2)	TY 10BWG(1)XX(T) TY 10BWG(1)XX(P-BM)
	48x16-inch ONE-WAY sign (R6-1)	TY 10BWG(1)XX(T) TY 10BWG(1)XX(P-BM)
	36x48, 48x36, and 48x48-inch signs	TY 10BWG(1)XX(T)
	48x60-inch signs	TY S80(1)XX(T)
Warning	48x48-inch signs (diamond or square)	TY 10BWG(1)XX(T)
	48x60-inch signs	TY S80(1)XX(T)
	48-inch Advance School X-ing sign (S1-1)	TY 10BWG(1)XX(T)
	48-inch School X-ing sign (S2-1)	TY 10BWG(1)XX(T)
	Large Arrow sign (W1-6 & W1-7)	TY 10BWG(1)XX(T)

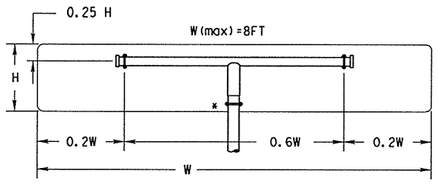

SM RD SGN ASSM TY XXXXX(1)XX(T)
(* - See Note 12)

All dimensions are in english unless detailed otherwise.

FRICTION CAP DETAIL

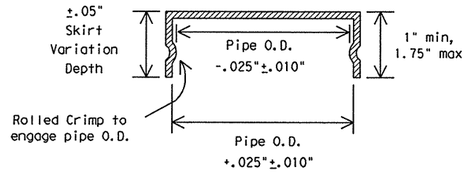

Friction caps may be manufactured from hot rolled or cold rolled steel sheets. The minimum sheet metal thickness shall be 24 gauge for all cap sizes.

The rim edges shall be reasonably straight and smooth. Caps shall be sized and formed in such a manner as to produce a drive-on friction fit and have no tendency to rock when seated on the pipe. The depth shall be sufficient to give positive protection against entrance of rainwater. They shall be free of sharp creases or indentations and show no evidence of metal fracture.

Caps shall have an electrodeposited coating of zinc in accordance with the requirements of ASTM B633 Class FE/ZN 8.

Texas Department of Transportation
Traffic Operations Division

SIGN MOUNTING DETAILS SMALL ROADSIDE SIGNS TRIANGULAR SLIPBASE SYSTEM

SMD(SLIP-2)-08

©TxDOT July 2002

DN: TXDOT	CK: TXDOT	DW: TXDOT	CK: TXDOT
CONT	SECT	JOB	HIGHWAY
2452	01	050	LP 1604
DIST	COUNTY		SHEET NO.
SAT	BEXAR		426

9-08 REVISIONS

DATE:
FILE:

DISCLAIMER:
The use of this standard is governed by the "Texas Engineering Practice Act". No warranty of any kind is made by TxDOT for any purpose whatsoever. TxDOT assumes no responsibility for the conversion of this standard to other formats or for incorrect results or damages resulting from its use.

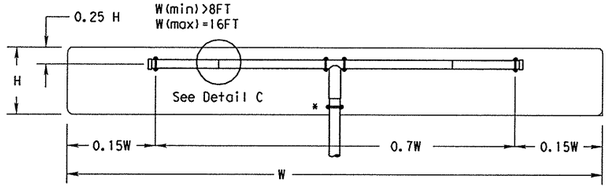

SM RD SGN ASSM TY XXXXX(1)XX(T-2EXT)
(* - See Note 12)

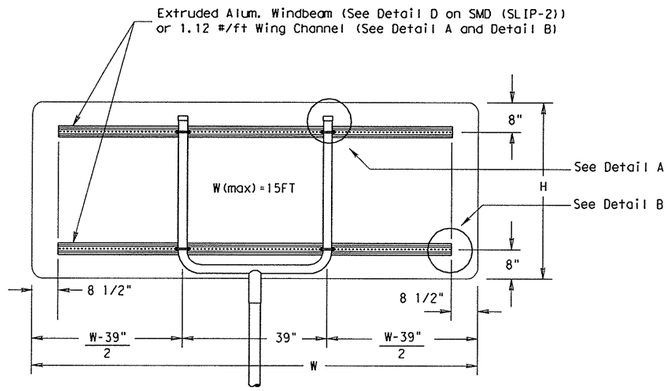

SM RD SGN ASSM TY XXXXX(1)XX(U-XX)

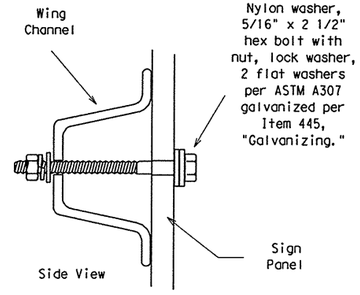

Detail B

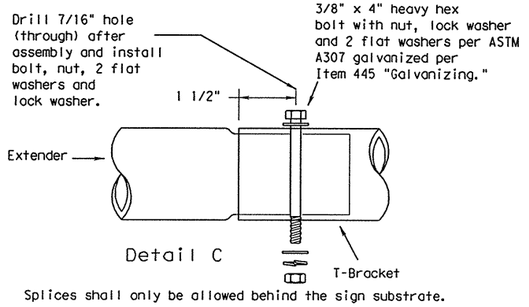

Detail C

Splices shall only be allowed behind the sign substrate.

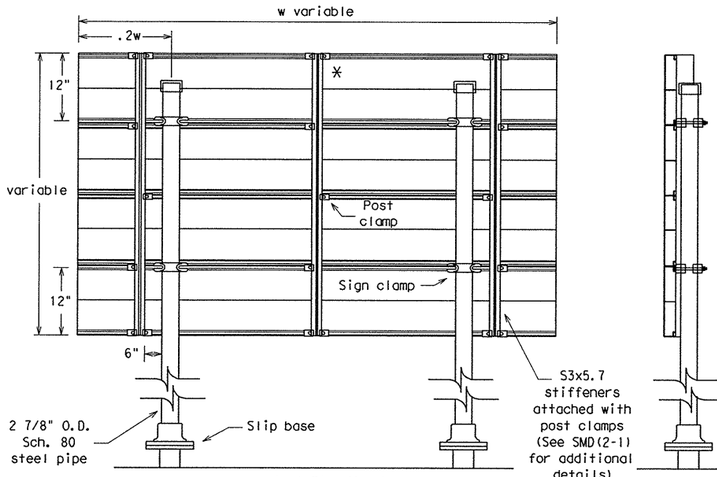

Typical Sign Mount
SM RD SGN ASSM TY S80(2)XX(P-EXAL)
* Additional stiffener placed at approximate center of signs when sign width is greater than 10'.

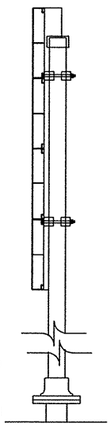

See Detail E
for clamp installation

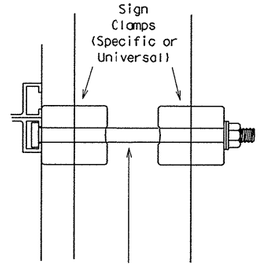

Detail E

Detail A

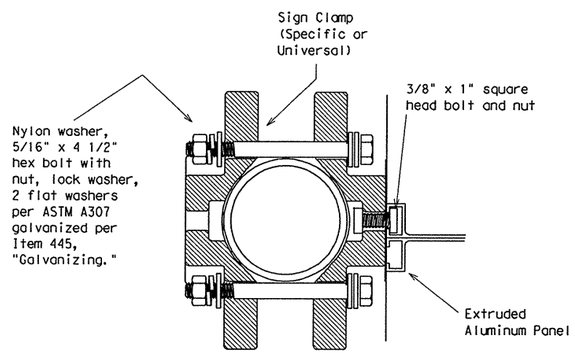

Detail D
EXTRUDED ALUMINUM SIGN WITH T BRACKET

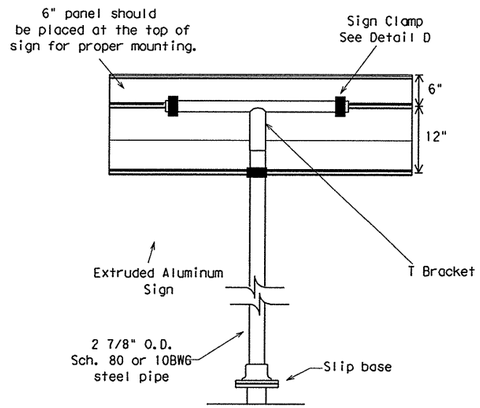

Extruded Aluminum Sign
With T Bracket

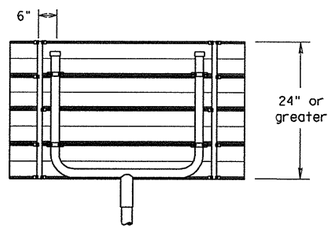

Use Extruded Alum. Windbeam as stiffeners
See SMD (2-1) for additional details

See Detail E
for clamp installation

GENERAL NOTES:

1.

SIGN SUPPORT	# OF POSTS	MAX. SIGN AREA
10 BWG	1	16 SF
10 BWG	2	32 SF
Sch 80	1	32 SF
Sch 80	2	64 SF

2. The Engineer may require that a Schedule 80 post be used in place of a 10 BWG where a sign height is abnormally high due to a fill slope.
3. Sign supports shall not be spliced except where shown. Sign support posts shall not be spliced.
4. Aluminum sign blanks shall conform to Departmental Material Specifications DMS-7110 and shall have the following minimum thicknesses: 0.080 for signs less than 7.5 sq. ft., 0.100 for signs 7.5 to 15 sq. ft., and 0.125 for signs greater than 15 sq. ft.
5. Signs that require specific supports due to reasons in addition to windloading are indicated on the "REQUIRED SUPPORT" table on this sheet.
6. For horizontal rectangular signs fabricated from flat aluminum, T-brackets are used for signs 24 inches or less in height. U-brackets are used for signs of greater height.
7. When two triangular slipbase supports are used to support a single sign, they shall not be "rigidly" connected to each other except through the sign panel. This will allow each support to act independently when impacted by an errant vehicle.
8. Wing channel shall meet ASTM A 1011 SS Gr 50 and be galvanized per ASTM A 123.
9. Excess pipe, wing channel, or windbeam shall be cut off so that it does not extend beyond the sign panel (i.e., excess support shall not be visible when the sign is viewed from the front.) Repair galvanized coating at cut support ends per Item 445, "Galvanizing."
10. Sign blanks shall be the sizes and shapes shown on the plans.
11. Additional sign clamp required on the "T-bracket" post for 24 inch high signs. Place the clamp 3 inches above bottom of sign when possible.
12. Post open ends shall be fitted with Friction Caps.

REQUIRED SUPPORT

	SIGN DESCRIPTION	SUPPORT
Regulatory	48-inch STOP sign (R1-1)	TY 10BWG(1)XX(T) TY 10BWG(1)XX(P-BM)
	60-inch YIELD sign (R1-2)	TY 10BWG(1)XX(T) TY 10BWG(1)XX(P-BM)
	48x16-inch ONE-WAY sign (R6-1)	TY 10BWG(1)XX(T) TY 10BWG(1)XX(P-BM)
	36x48, 48x36, and 48x48-inch signs	TY 10BWG(1)XX(T)
	48x60-inch signs	TY S80(1)XX(T)
Warning	48x48-inch signs (diamond or square)	TY 10BWG(1)XX(T)
	48x60-inch signs	TY S80(1)XX(T)
	48-inch Advance School X-ing sign (S1-1)	TY 10BWG(1)XX(T)
	48-inch School X-ing sign (S2-1)	TY 10BWG(1)XX(T)
	Large Arrow sign (W1-6 & W1-7)	TY 10BWG(1)XX(T)

Texas Department of Transportation
Traffic Operations Division

SIGN MOUNTING DETAILS SMALL ROADSIDE SIGNS TRIANGULAR SLIPBASE SYSTEM

SMD(SLIP-3)-08

©TxDOT July 2002

DN: TXDOT	CK: TXDOT	DW: TXDOT	CK: TXDOT

REVISIONS
9-08

CONT	SECT	JOB	HIGHWAY
2452	01	050	LP 1604
DIST	COUNTY		SHEET NO.
SAT	BEXAR		427

26D

DATE:
FILE:

DISCLAIMER:
The use of this standard is governed by the "Texas Engineering Practice Act". No warranty of any kind is made by TxDOT for any purpose whatsoever. TxDOT assumes no responsibility for the conversion of this standard to other formats or for incorrect results or damages resulting from its use.

DATE:
FILE:

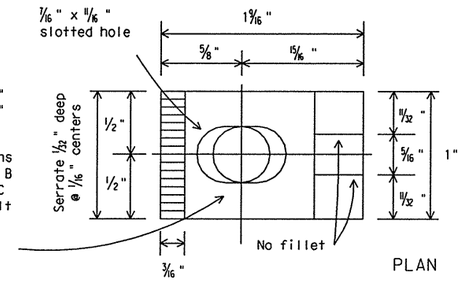

NOTE: centerline of hole for 3/8" diameter squarehead bolt x 2 1/4" long with a flat washer and self-locking nut, or lock washer and hex. nut. Bolt head dimensions shall be in accordance with ANSI B 18.2.1 as referred to in the AISC Manual of steel construction. Bolt assembly shall be galvanized.

PLAN

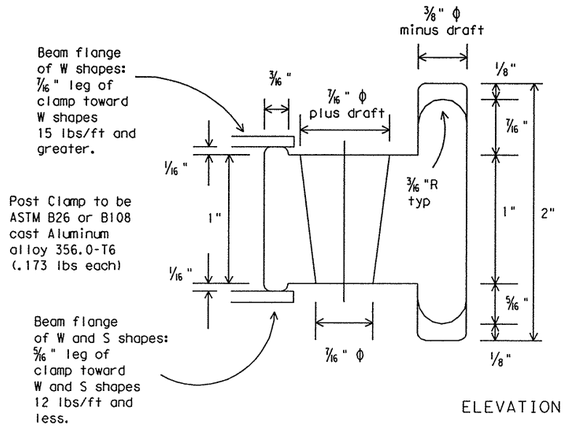

ELEVATION

POST CLAMP DETAIL

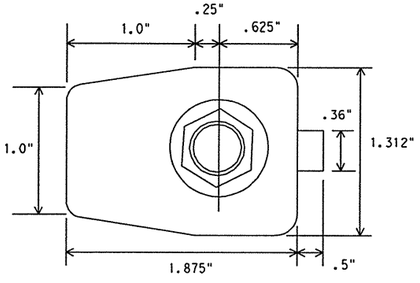

PLAN

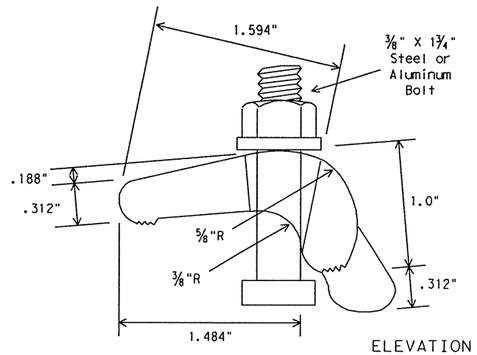

ELEVATION

ALTERNATE POST CLAMP DETAIL

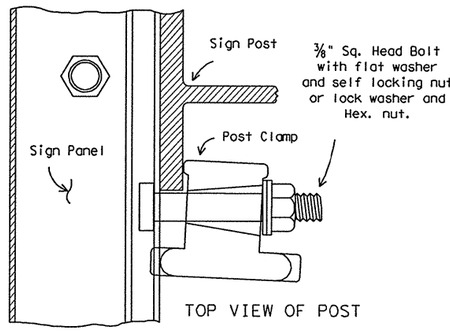

TOP VIEW OF POST

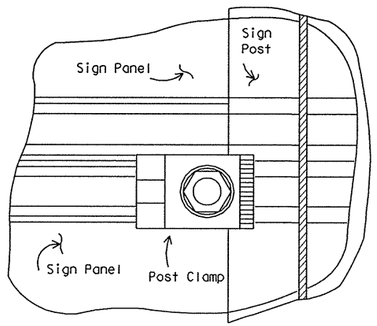

TOP VIEW OF CLAMP

DEPARTMENTAL MATERIAL SPECIFICATIONS

SIGN HARDWARE — DMS-7120

GENERAL NOTES:

1. Design conforms with AASHTO Specifications for the design and construction of structural supports for highway signs.
2. Materials and fabrication shall conform to the requirements of the Department material specifications.
3. Structural steel shall be "low-alloy steel" for non-bridge structures per Item 442, "Metal For Structures."
4. For fiberglass substrate connection details, see manufacturer's recommendations.

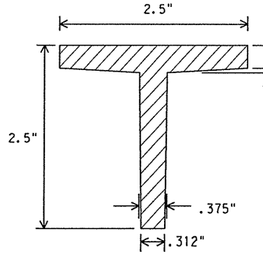

1.912 lbs/ft

ALUMINUM T SECTION OR APPROVED ALTERNATIVE

WINDBEAM CROSS SECTION

Windbeam to be extruded aluminum (1.175 lbs/ft) or approved alternative

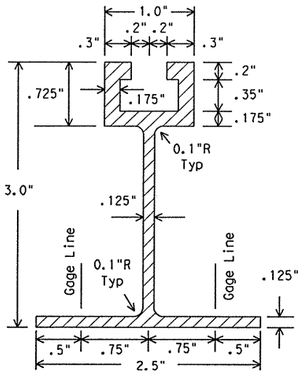

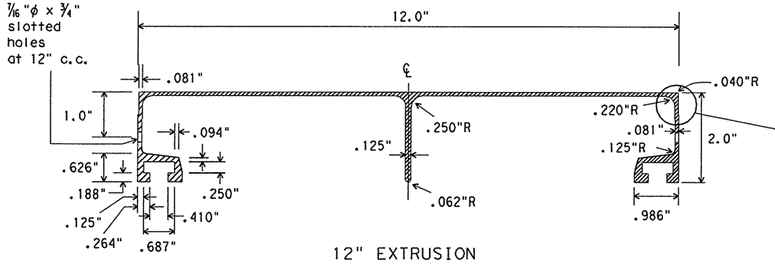

12" EXTRUSION

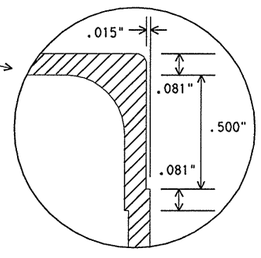

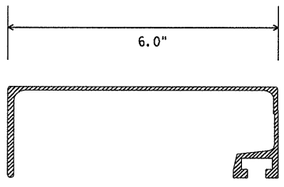

6" EXTRUSION

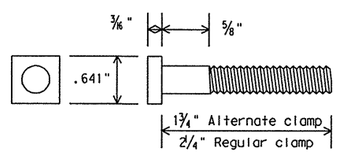

POST CLAMP BOLT DETAIL

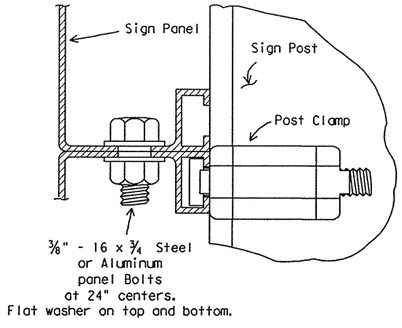

SIDE VIEW OF PANELS

CONNECTION DETAILS

ALUMINUM SIGN PANEL EXTRUSION DETAILS

Texas Department of Transportation
Traffic Operations Division

SIGN MOUNTING DETAILS- EXTRUDED ALUMINUM SIGN PANELS & HARDWARE

SMD(2-1)-08

©TxDOT 2001

REVISIONS	DN: TXDOT	CK: TXDOT	DN: TXDOT	CK: TXDOT
9-08	CONT	SECT	JOB	HIGHWAY
	2452	01	050	LP 1604
	DIST	COUNTY		SHEET NO.
	SAT	BEXAR		428

DISCLAIMER: The use of this standard is governed by the "Texas Engineering Practice Act". No warranty of any kind is made by TxDOT for any purpose whatsoever. TxDOT assumes no responsibility for the conversion of this standard to other formats or for incorrect results or damages resulting from its use.

DATE:
FILE:

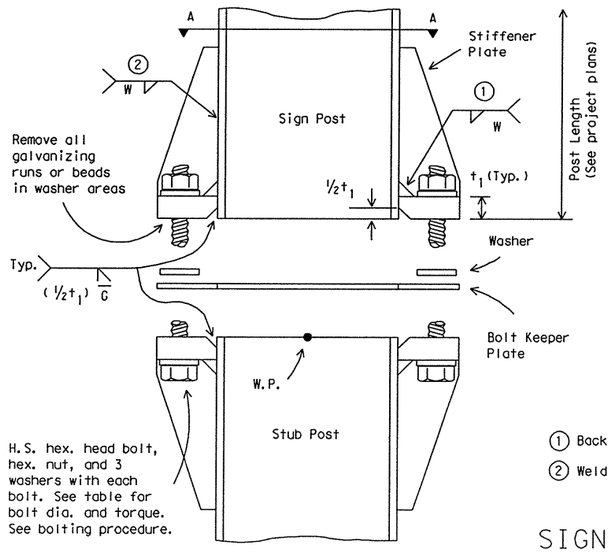

ELEVATION

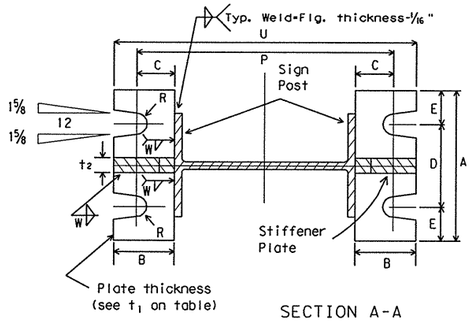

SECTION A-A

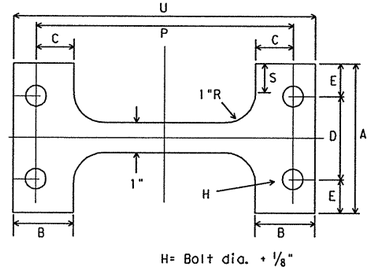

H= Bolt dia. + ⅛"

BOLT KEEPER PLATE
30 Ga galv. sheet steel

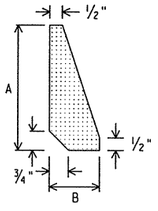

STIFFENER PLATE DETAIL

Steel Plate (thickness = t_2)

(See table for dimensions)

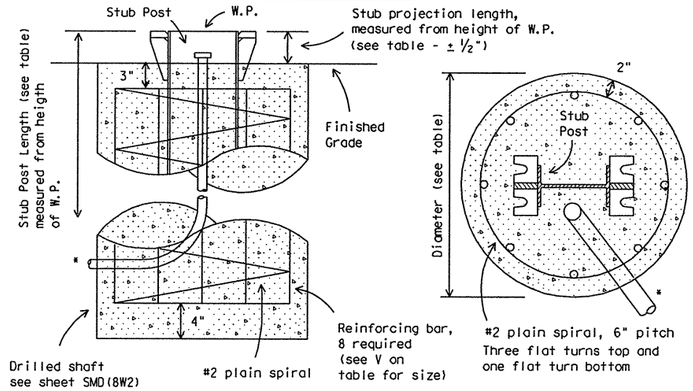

ELEVATION PLAN

FOUNDATION DETAIL

*Note: For signs with electrical apparatus, see ED(10) for conduit required in founation.

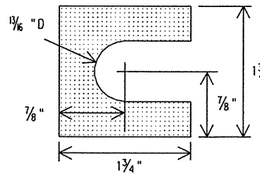

SHIM DETAIL

Furnish two .012"+ thick and two .032"+ thick shims per post. Shims shall be fabricated from brass shim stock or strip conforming to ASTM B36.

SIGN POST AND STUB POST

(For W Shapes)

① Back up weld to be made before installing stiffener plate

② Weld W may be continued across clips to seal joint

BOLTING PROCEDURE FOR ASSEMBLY OF BASE CONNECTION:

1. Assemble sign post, BOLT KEEPER PLATE and stub post with bolts and three flat washers per bolt as shown.
2. Shim as required to plumb post.
3. Tighten all bolts the maximum possible with a 12 to 15 inch wrench to clean bolt threads and to bed washers and shims.
4. Loosen each bolt in sequence and retighten bolts in a systematic order to the prescribed torque. Do not overtighten.
5. To prevent nut loosening, burr threads of bolt at junction with nut using a center punch.

Dimensions / Post Size	Base Connection Data Table: Bolt Size & Torque	A	B	C	D	E	t_1	t_2	W	R
W6x9	⅝"ϕ x 2¾" 440-450 inch pounds 36-38 foot pounds	5"	2"	1¼"	2¾"	1⅛"	¾"	½"	¼"	11/32"
W6x12										
W6x15										
W8x18										
W8x21	¾"ϕ x 3½" 740-750 inch pounds 62-63 foot pounds	6"	2¼"	1⅜"	3½"	1¼"	1"	¾"	5/16"	13/32"
W10x22										
W10x26										
W12x26										
S3x5.7	½"ϕ x 2½" 440-450 inch pounds 36-38 foot pounds	See Detail Below								
S4x7.7										

Perforated Fuse Plate Data Table												Bolt Keeper Data		
F	G	J	K	M	d_1	d_2	t_3	Bolt Dia.	Wt. (ea.) (lbs.)	Bolt length		P	S	U
4¼"	2"	4"	2¼"	1"	9/16"	¾"	¼"	½"	1.01	1½"		8⅜"	1"	9⅞"
												8½"		10"
5"	2½"	6"	3½"	1½"	11/16"	1¼"	⅜"	⅝"	2.51	2¼"		8½"		10"
5"	2½"	5¼"	2¾"	1¼"	11/16"	1 1/16"	⅜"	⅝"	2.26	2¼"		10⅝"		12⅛"
5½"	2½"	5¼"	2¾"	1¼"	13/16"	1"	½"	¾"	3.35	2¼"		11"	1½"	12¾"
6"	3"	5¾"	2¾"	1⅜"	13/16"	1⅛"	½"	¾"	4.03	2¼"		12⅞"		14⅝"
												13⅛"		14⅞"
6"	3"	6½"	3½"	1⅝"	13/16"	1 5/16"	½"	¾"	4.47	2¼"		15"		16¾"
3¾"	1½"	2⅝"	1½"	⅝"	9/16"	⅜"	¼"	½"	0.60	1½"		See Detail Below		

Foundation Data				
Stub length	Stub projection	Dr. Shaft diameter	Bar V Size	
2'-0"	3"	24"	#5	
2'-0"	3"		#5	
2'-6"	3"		#6	
2'-6"	3"		#7	
3'-0"	2½"		#8	
3'-0"	2½"		#9	
3'-0"	2½"		#10	
3'-0"	2½"		#11	
3'-3½"	3½"	12"	Non-reinforced ③	

③ Foundation design shall be Type G Mount, see SMD (TY G).

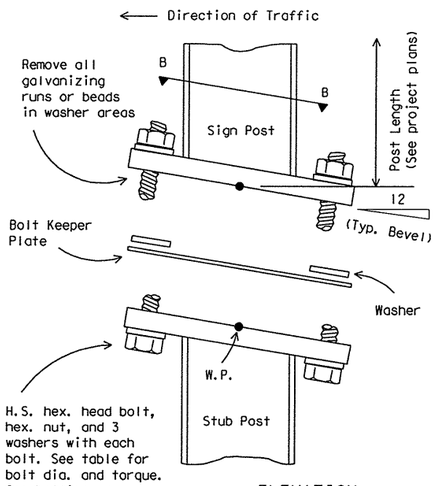

ELEVATION

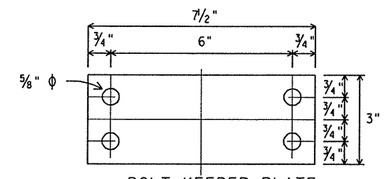

BOLT KEEPER PLATE
30 Ga galv. sheet steel

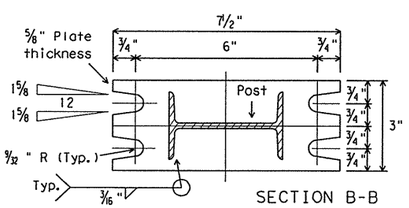

SECTION B-B

SIGN POST AND STUB POST

(For S4x7.7 and S3x5.7)

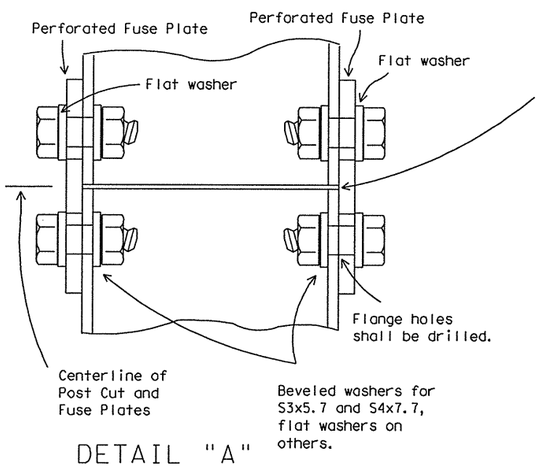

DETAIL "A"

Parts shall be saw cut either before galvanizing and the galvanized cut cleaned of zinc build-up, or saw cut after galvanizing and the cut surface repaired per Item 445, "Galvanizing."

PERFORATED FUSE PLATE DETAIL

Use H.S. hex head bolts, hex head nut and bevel or flat washer (where req'd) under nut. All holes shall be drilled, sub-punched and reamed. All plate cuts shall preferably be saw cuts. However, flame cutting will be permitted provided all edges are ground. Metal projecting beyond the plane of the plate face will not be permitted. Steel fuse plates shall conform to the requirements of ASTM A36. ASTM A572 Grade 50 or ASTM A588 may be substituted for A36 at the option of the fabricator. Mill test reports shall be submitted for Fuse Plates. Steel used shall have an ultimate tensile strength not to exceed 80 KSI. For alternative Fuse Plate contact Traffic Operations Division.

Texas Department of Transportation
Traffic Operations Division

SIGN MOUNTING DETAILS- LARGE ROADSIDE SIGNS FOUNDATION & STUB

SMD(2-2)-08

©TxDOT August 1995

DN: TXDOT	CK: TXDOT	DW: TXDOT	CK: TXDOT
REVISIONS	CONT	SECT	JOB	HIGHWAY
4-98	2452	01	050	LP 1604
9-08	DIST	COUNTY		SHEET NO.
	SAT	BEXAR		429

DISCLAIMER:
The use of this standard is governed by the "Texas Engineering Practice Act". No warranty of any kind is made by TxDOT for any purpose whatsoever. TxDOT assumes no responsibility for the conversion of this standard to other formats or for incorrect results or damages resulting from its use.

DATE:
FILE:

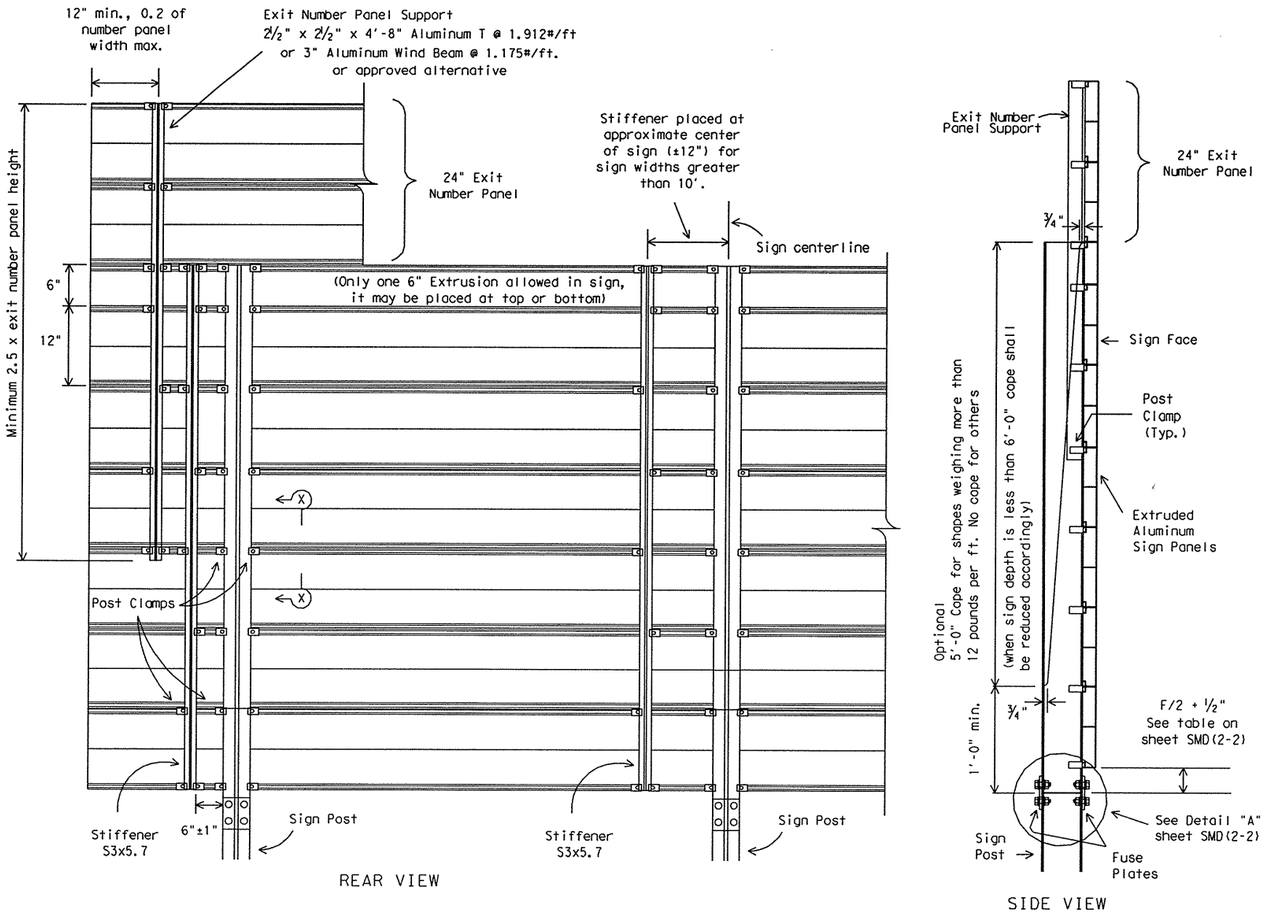

ALUMINUM PARENT SIGN & EXIT NUMBER PANEL MOUNTING DETAILS

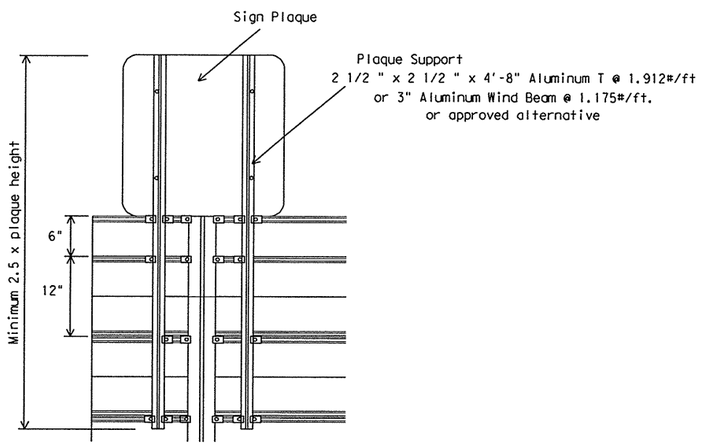

SIGN PLAQUE MOUNTING DETAIL TO ALUMINUM PARENT SIGN

30' or more desirable. May be reduced depending on cross section, viewing conditions and other related factors.

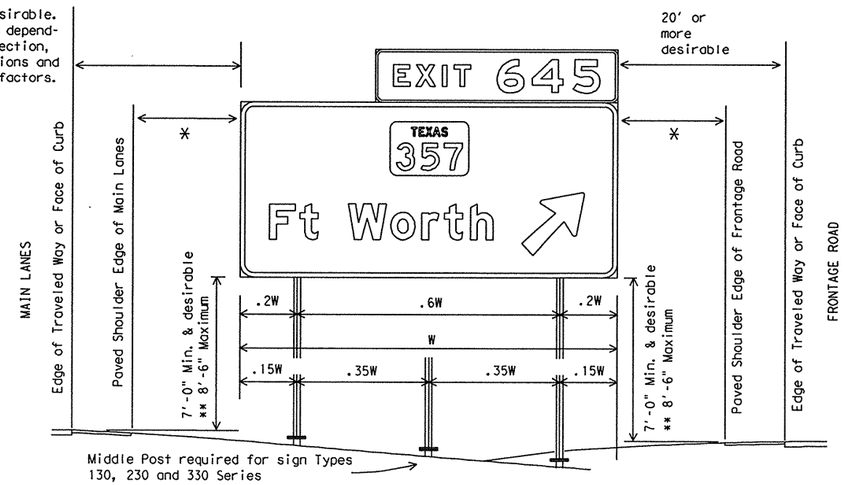

TYPICAL SIGN INSTALLATION AND LOCATION

LATERAL CLEARANCE NOTES:

Lateral clearances of signs mounted on median side of main lanes are the same as shown above where space will permit.

Where a sign is to be located behind guardrail, an allowable minimum clearance of five feet may be used, measured from the face of the guardrail to the near edge of sign.

* - 6' minimum and desirable may be used only in areas of limited lateral clearance and when approved by the Engineer.

POST SPACING NOTES:

Post spacing on a two post sign may vary a maximum of plus or minus 10% of total sign width to fit field conditions.

Post spacing on a three post sign may vary a maximum of plus or minus 5% of total sign width to fit field conditions.

SIGN HEIGHT NOTES:

** The 8' 6" maximum may be exceeded when placing signs on extreme slopes. In these conditions, a 7' minimum from natural ground to bottom of sign must be maintained.

DEPARTMENTAL MATERIAL SPECIFICATIONS	
ALUMINUM SIGN BLANKS	DMS-7110
SIGN HARDWARE	DMS-7120

GENERAL NOTES:

1. Exit number panel shall be mounted to the right hand side of the parent sign for right exits and to the left hand side for left exits. The number panel shall be mounted with two uprights so its right edge is even with the right edge of the parent sign or vice-versa for left hand exits.
2. Exit number panel support shall be symmetrical about number panel centerline.
3. Exit number panel support shall be ASTM A36 structural steel galvanized after fabrication, or ASTM B221 aluminum alloy 6061-T6 or approved alternative.
4. All bolts, nuts and washers shall be galvanized per ASTM Designation: B695 Class 50, or A153 Class C or D.
5. Posts, parent sign panels, and exit number panels shall comply with notes on sheets SMD(2-1) and SMD(2-2).
6. Signs (such as exit number panels) attached above a parent sign shall be made of the same type material as the parent sign. General Service and Routing signs may be fabricated from flat sheet aluminum.
7. Exit number panel support and other connection hardware required to fasten exit number panel to parent sign shall be subsidiary to "Aluminum Signs" or "Fiberglass Signs."
8. For fiberglass sign installation details, see manufacturer's recommendations.

Texas Department of Transportation
Traffic Operations Division

SIGN MOUNTING DETAILS-LARGE ROADSIDE SIGNS

SMD(2-3)-08

©TxDOT August 1995

REVISIONS
9-08

DN: TXDOT	CK: TXDOT	DN: TXDOT	CK: TXDOT
CONT	SECT	JOB	HIGHWAY
2452	01	050	LP 1604
DIST	COUNTY		SHEET NO.
SAT	BEXAR		430

27C

DISCLAIMER:
The use of this standard is governed by the "Texas Engineering Practice Act". No warranty of any kind is made by TxDOT for any purpose whatsoever. TxDOT assumes no responsibility for the conversion of this standard to other formats or for incorrect results or damages resulting from its use.

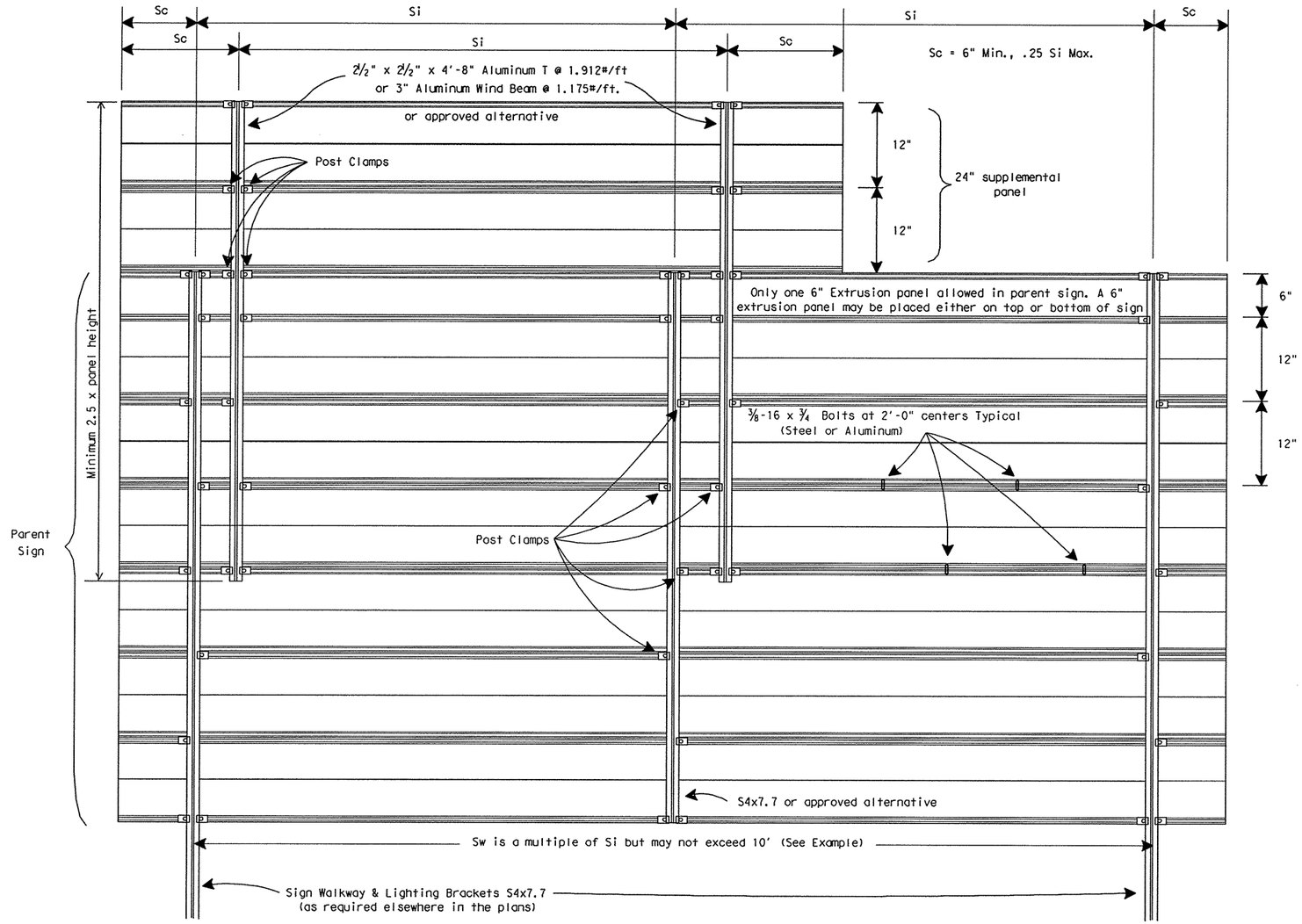

REAR VIEW

EXAMPLES (FOR DETERMINING Si and Sw)

NO.	ZONE	"d"	EXIT PANEL	WALKWAY	Si	Sw	COMMENT
1	1	15.0	YES	YES	4.5	9.0	Sw=2x(Si)
2	2	14.0	YES	NO	7.5	7.5	Sw = Si
3	1	15.0	NO	NO	8.5	8.5	Sw = Si
4	3	14.0	NO	YES	10.0	10.0	Sw = Si

Values shown for Si are maximum values. Si may be varied for different sign lengths and Truss mounting conditions. Sw should not exceed two times Si(Max.) or 10 feet.

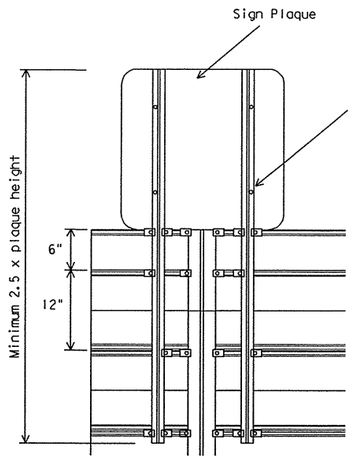

SIGN PLAQUE MOUNTING DETAIL

MAXIMUM SIGN SUPPORT SPACING "Si" (FEET)

"d" Deepest Sign in Group (Ft.)	EXTRUDED ALUMINUM SIGN PANELS															
	WITH EXIT NUMBER PANELS								WITHOUT EXIT NUMBER PANELS							
	WITH WALKWAYS				WITHOUT WALKWAYS				WITH WALKWAYS				WITHOUT WALKWAYS			
	WIND ZONE				WIND ZONE				WIND ZONE				WIND ZONE			
	1	2	3	4	1	2	3	4	1	2	3	4	1	2	3	4
15	4.5	7	8	10	5	7	8	10	7	8	9	10	8.5	10	10	10
14	6	7.5	9.5	10	6	7.5	9.5	10	8	9	10	10	10	10	10	10
13	7.5	9	10	10	7.5	9	10	10	9	10	10	10	10	10	10	10
12	8.5	10	10	10	8.5	10	10	10	10	10	10	10	10	10	10	10
11 or less	10	10	10	10	10	10	10	10	10	10	10	10	10	10	10	10

For fiberglass sign installations, see manufacturer's recommendations.

Texas Department of Transportation
Traffic Operations Division

SIGN MOUNTING DETAILS- OVERHEAD SIGNS EXTRUDED ALUMINUM

SMD(2-4)-08

©TxDOT December 1995

DN: TXDOT	CK: TXDOT	DN: TXDOT	CK: TXDOT

REVISIONS
9-08

CONT	SECT	JOB	HIGHWAY
2452	01	050	LP 1604
DIST	COUNTY		SHEET NO.
SAT	BEXAR		431

27D

DATE:
FILE:

DISCLAIMER: The use of this standard is governed by the "Texas Engineering Practice Act". No warranty of any kind is made by TxDOT for any purpose whatsoever. TxDOT assumes no responsibility for the conversion of this standard to other formats or for incorrect results or damages resulting from its use.

DATE:
FILE:

WING CHANNEL CLAMP DETAIL FOR TYPE G MOUNT

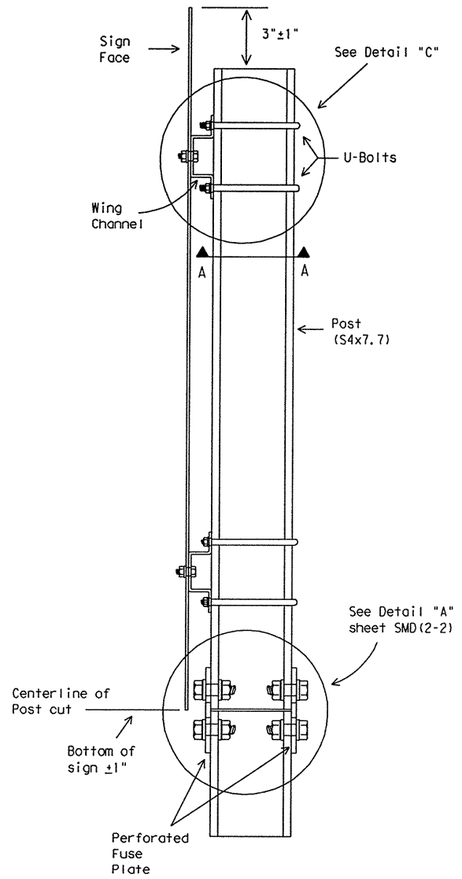

SIDE VIEW

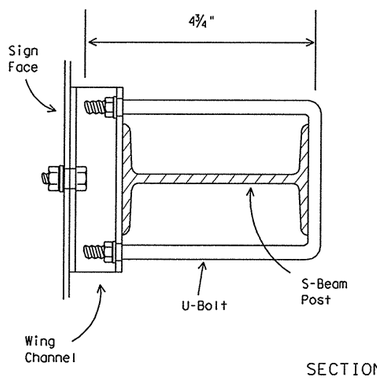

SECTION A-A

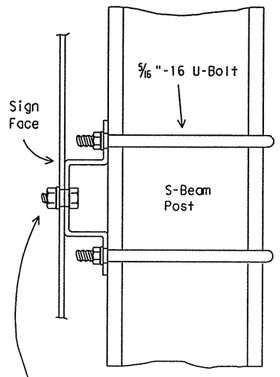

Galvanized steel or aluminum self-locking hex. head nut. 3/8 " - 16 x 3/4 " hex. head bolt for sheet metal. 3/8 " - 16 x 1 1/4 " hex. head bolt for plywood. 3/8 " galvanized medium washer.

DETAIL "C"

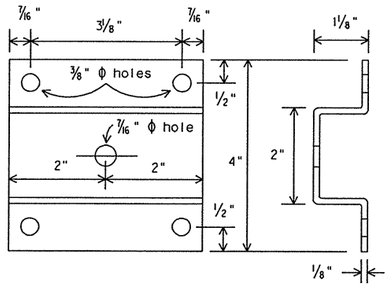

WING CHANNEL

Wing channel, 4" width x 1⅛" depth x ⅛" thickness, shall be aluminum (ASTM B221 6061-T6 or B308 6061-T6), galvanized steel (ASTM A36) or stainless steel (ASTM A167 type 304, No. 2B finish).

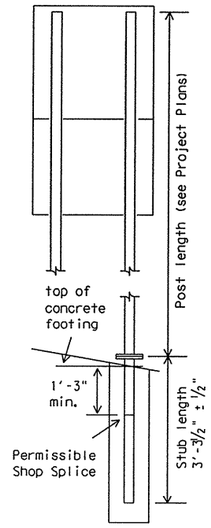

The weight of one S4x7.7 post is equal to 112.2 lbs. plus 7.7 lbs./ft x (post length in feet minus 10 ft). The weight of 112.2 lbs. includes 10 feet of post length, post foundation stub, related connection plates, friction fuse plate, and all high strength bolts, nuts and washers.

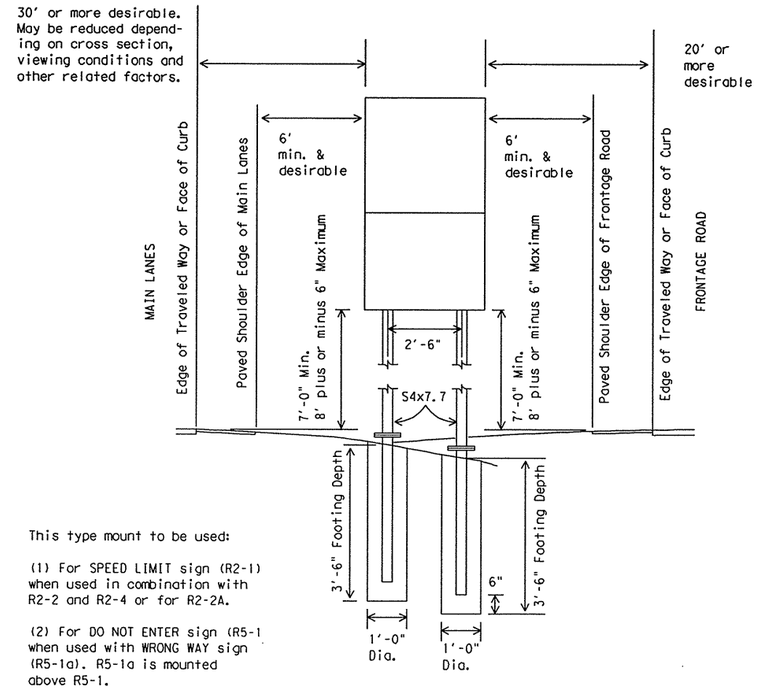

This type mount to be used:

(1) For SPEED LIMIT sign (R2-1) when used in combination with R2-2 and R2-4 or for R2-2A.

(2) For DO NOT ENTER sign (R5-1 when used with WRONG WAY sign (R5-1a). R5-1a is mounted above R5-1.

DEPARTMENTAL MATERIAL SPECIFICATIONS
SIGN HARDWARE DMS-7120

GENERAL NOTES:

1. Design conforms with AASHTO Specifications for the design and construction of structural supports for highway signs.
2. Materials and fabrication shall conform to the requirements of the Department material specifications.
3. Structural steel shall be "Low-Alloy Steel" for non-bridge structures per Item 442, "Metal For Structures."
4. Parts shall be saw cut either before galvanizing and the galvanized cut cleaned of zinc build-up, or saw cut after galvanizing and the cut surface repaired per Item 445, "Galvanizing." (Cut surface will not be treated until plate is installed and all bolts fully tightened.)

Texas Department of Transportation
Traffic Operations Division

SIGN MOUNTING DETAILS, TYPE G SUPPORT

SMD(TY G)-08

©TxDOT August 1995

REVISIONS	DN: TXDOT	CK: TXDOT	DN: TXDOT	CK: TXDOT
1-97	CONT	SECT	JOB	HIGHWAY
9-08	2452	01	050	LP 1604
	DIST	COUNTY		SHEET NO.
	SAT	BEXAR		432

DISCLAIMER: The use of this standard is governed by the "Texas Engineering Practice Act". No warranty of any kind is made by TxDOT for any purpose whatsoever. TxDOT assumes no responsibility for the conversion of this standard to other formats or for incorrect results or damages resulting from its use.

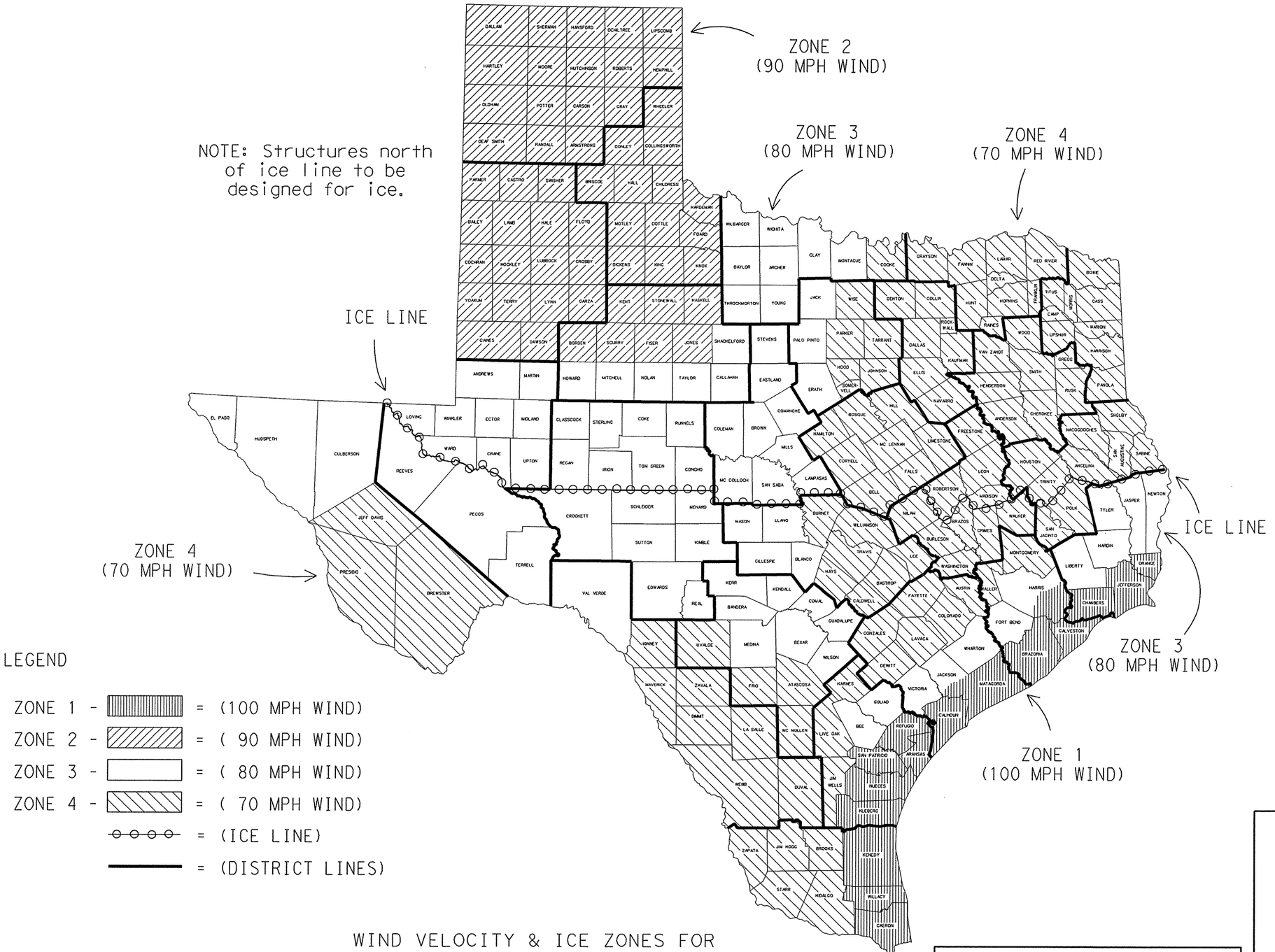

LEGEND

ZONE 1 - = (100 MPH WIND)
ZONE 2 - = (90 MPH WIND)
ZONE 3 - = (80 MPH WIND)
ZONE 4 - = (70 MPH WIND)
= (ICE LINE)
= (DISTRICT LINES)

FOR HARRIS CO. ONLY
Zone line is just North of US 90, around on the North, West and South sides of IH 610 and down the West side of SH 288.

FOR JACKSON CO. ONLY
Zone line is just North of SH 616.

WIND VELOCITY & ICE ZONES FOR OVERHEAD SIGN SUPPORTS

Based on 50 Year Mean Recurrence Interval of Fastest Mile Wind Velocity at 33 feet height.

THIS SHEET TO BE INCLUDED IN ALL P.S.&E.'s WITH OVERHEAD SIGN SUPPORTS

Texas Department of Transportation
Traffic Operations Division

WIND VELOCITY AND ICE ZONES

WV & IZ-96

©TxDOT April 1996
REVISIONS

DN: TXDOT	CK: TXDOT	DN: TXDOT	CK: TXDOT

CONT	SECT	JOB	HIGHWAY
2452	01	050	LP 1604
DIST	COUNTY		SHEET NO.
SAT	BEXAR		433

DATE:
FILE:

During the design phase of project development the following environmental permits, issues and commitments have been developed during coordination with resource agencies, local governmental entities and the general public. Any change orders and/or deviations to the final design must be reported to the Engineer prior to commencement of construction activities, as additional environmental clearances may be required.

I. Clean Water Act, Section 402 National Pollutant Discharge Elimination System
(Addresses MS4 requirements)

☐ No Action Required ☒ Required Action

Action No.	Waters of the US/Station # R/L of Centerline	Commitment
1.		Compliance with TPDES and SW3P NOI permit required
2.		
3.		
4.		
5.		

II. Clean Water Act, Section 401 and 404 Compliance

Filling, dredging or excavating in any water bodies, rivers, creeks, streams, wetlands or wet areas is prohibited unless specified in the USACE permit and approved by the Engineer.

Any material originating from a USACE jurisdictional water will be used within the project limits in an upland area. Any material to be placed in a USACE jurisdictional water is to originate from an upland area within the project limits or as approved by the Engineer.

☒ No Permit Required ☐ 404 Permit and 401 Certification Required

The Contractor must adhere to all of the terms and conditions associated with the following permit(s):

Permit	Required Action	Waters of the US	Applicable Plan Sheet Title
1.			
2.			
3.			
4.			
5.			

III. Cultural Resources

Refer to TxDOT Standard Specifications in the event historical issues or archeological artifacts are found during construction. Upon discovery of archeological artifacts (bones, burnt rock, flint, pottery, etc.) cease work in the immediate area and contact the Engineer immediately.

☐ No Action Required ☐ Required Action

Action No.	Station # R/L of Centerline	Commitment
1.		
2.		
3.		
4.		
5.		

IV. Hazardous Materials or Contamination Issues

If potentially hazardous material and/or contaminated media (i.e. soil, groundwater, surface water, sediment, building materials) are unexpectedly encountered during construction, cease work in the immediate area and contact the Engineer immediately.

☒ No Action Required ☐ Required Action

Action No.	Station # R/L of Centerline	Commitment
1.		
2.		
3.		
4.		
5.		

V. Federal Listed, and Proposed Threatened and Endangered Species, Critical Habitat, State Listed Species, Candidate Species and Migratory Birds

☐ No Action Required ☒ Required Action

Action No.	Station # R/L of Centerline	Commitment
1.		MIGRATORY BIRD NESTS: Schedule construction activities as needed to meet the following requirements: A. Do not remove or destroy any active migratory bird nests (nests containing eggs and/or flightless birds) at any time of year. Inactive nests may be removed except on/in structures where special requirements apply. B. On/in structures, if there are any active nests, they shall not be removed until all nests become inactive. After inactive nests are removed and/or before nest activity begins, deterrent materials may be applied to the structures to prevent future nest building.
2.		Contractor shall be prepared to prevent migratory birds from building nests between Feb 15 and Oct 1.
3.		All clearing of potential habitat located between Sta 556+00, 280′ RT and Sta 575+00, 190′ RT (the Alamo Ranch Parkway area) must take place outside of the nesting season for the golden-cheeked warbler (between September 2nd and February 28th, while the species is not nesting).
4.		Work will cease in the immediate area if a karst feature is encountered. An individual possessing a Section 10 (a)(1)(A) permit will be used to assess the feature. If a federally protected species is documented, formal consultation with the USFWS will be initiated.
5.		Install temporary fencing and implement a "no mow" zone surrounding the entrance to the Clandestine Cupola Cave.

LISTED SPECIES

If any of the listed species are observed, cease work in the immediate area, do not disturb species or habitat and contact the Engineer immediately. The work may not remove active nests from bridges and other structures during nesting season of the birds associated with the nests.

If caves or sinkholes are discovered, cease work in the immediate area, and contact the Engineer immediately.

VI. Vegetation Resources

☒ No Action Required ☐ Required Action

Action No.	Station # R/L of Centerline	Commitment
1.		Only 1.19 acres of mature, woody vegetation to be removed from Sta 556+00, 280′ RT to Sta 575+00, 190′ RT (the Alamo Ranch Pkwy area). Refer to the roadway PLAN SHEETs for limits of tree protection.
2.		
3.		
4.		
5.		

VII. Edwards Aquifer

☒ No Action Required ☐ Required Action

Action No.	Station # R/L of Centerline	Commitment

VIII. Other Environmental Issues

☐ No Action Required ☒ Required Action

Action No.	Station # R/L of Centerline	Commitment
1.		Minimize particulate matter emissions through use of fugitive dust control measures such as covering or treating disturbed areas with dust suppression techniques, sprinkling, covering loaded trucks, and other dust abatement controls, as appropriate.

ALAMO RMA

Texas Department of Transportation
© 2010

LOOP 1604

ENVIRONMENTAL PERMITS, ISSUES AND COMMITMENTS (EPIC)

FED. RD. DIV. NO.	PROJECT NO.		HIGHWAY NO.
6	STP 2011(210)ES		LP1604
STATE	DISTRICT	COUNTY	
TEXAS	SAT	BEXAR	
CONTROL	SECTION	JOB	SHEET NO.
2452	01	050	434

01/06

Note to Designer:
1. Do not alter Sheet Design or Font style, size or weight - match text attributes.
2. If additional space is needed for a numbered section, fence and adjust sections up or down as needed for proportioning and readability but do not relocate from it's relative position.

Note to Designer:
1. Do not alter Sheet Design or F
2. If additional space is needed
up or down as needed for proport
it's relative position.

yle, size or weight - match text attributes.
numbered section, fence and adjust sections
or proportioning and readability but do not relocate from

A. GENERAL SITE DATA

1. PROJECT LIMITS: *From SH 16 (Bandera Rd) to 0.4 MI. South of SH 151*

2. PROJECT SITE MAPS:
   - * Project Latitude 29°32'04" N Project Longitude 98°40'55"W
   - * Project Location Map: Shown on Title Sheet
   - * Drainage Patterns: Shown on Drainage Area Maps (Sheets 149 – 151)
   - * Approx. Slopes Anticipated After Major Gradings and Areas of Soil Disturbance: Shown on Typical Sections (Sheets 12 – 18)
   - * Major Controls and Locations of Stabilization Practices: Shown on SW3P Sheets (Sheets 436 – 447)
   - * Project Specific Locations: Off-site waste, borrow, or storage areas are not part of this SW3P.
   - * Surface Waters and Discharge Locations: Shown on Drainage and Culvert Layout Sheets (Sheets 158 – 161)

3. PROJECT DESCRIPTION: *For work consisting of operational improvements and reconfiguration of intersections at New Guilbeau, Shaenfield and SH 151 to include grading, base, structures, pavement markings, and signals*

   * *Joint-bid utilities are covered by this SW3P*
   Non-Joint Bid Utilities are not part of this SW3P.

4. FOR MAJOR SOIL DISTURBING ACTIVITIES SEQUENCE OF EVENTS:

   1. Install controls down-slope of work area and initiate inspection and maintenance activities.

   2. Begin phased construction with interim stabilization practices. Adjust erosion and sedimentation controls during construction to meet requirements and changing conditions and as directed/approved by the Engineer.

   3. Major soil disturbing activities may include but are not limited to: right-of-way preparation, cut and/or fill to improve roadway profile, final grading and placement of topsoil and the following (if marked):

   - _X_ *Placement of road base*
   - _X_ *Extensive ditch grading*
   - _X_ *Upgrading or replacing culverts or bridges*
   - ____ *Temporary detour road(s)*
   - _X_ *Other: storm sewer*

5. EXISTING AND PROPOSED CONDITIONS:

   Description of existing vegetative cover: The existing vegetation is primarily weeds and some grass
   Percentage of existing vegetative cover: 75%
   Existing vegetative cover: (mark one)
   - _X_ *Thick or uniformly established*
   - ____ *Thin and Patchy*
   - ____ *None or minimal cover*

   Description of soils: The existing soil is primarily Lewisville Silty Clay, Patrick Soils, and Tarrant Assoc Soils 5% to 15% slopes

   Site Acreage: 120.05 *Acreage disturbed: 8.15*
   Site runoff coefficient (pre-construction): 0.50 *Site runoff coefficient (post-construction): 0.53*

6. RECEIVING WATERS: *(Mark all that apply)*

   _X_ *A classified stream does not pass through project.*

   ____ *A classified stream passes through project. Name* _____ *Segment Number* _____

   Name of receiving waters that will receive discharges from disturbed areas of the project: TRIBUTARIES OF CULEBRA CREEK

   Site is in a Municipal Separate Storm Sewer System (MS4).
   MS4 Operator (name): TXDOT

B. BEST MANAGEMENT PRACTICES

General timing or sequence for implementation of BMPs shall be as required and/or as directed/approved by the Engineer to provide adequate controls. BMPs shown on plan sheets are to be considered "proposed" unless/until install date is shown. BMPs are to reduce sediments from road construction activities.

1. SOIL STABILIZATION PRACTICES: (Select T = Temporary or P = Permanent, as applicable)

P/T	SEEDING	P	PRESERVATION OF NATURAL RESOURCES
____	MULCHING (Hay or Straw)	____	FLEXIBLE CHANNEL LINER
____	BUFFER ZONES	____	RIGID CHANNEL LINER
____	PLANTING	____	SOIL RETENTION BLANKET
____	COMPOST/MULCH FILTER BERM	P	COMPOST MANUFACTURED TOPSOIL
____	SODDING	____	OTHER: (Specify Practice)

2. STRUCTURAL PRACTICES: (Select T = Temporary or P = Permanent, as applicable)

- T SILT FENCES
- ____ HAY BALES
- T ROCK FILTER DAMS
- ____ DIVERSION, INTERCEPTOR, OR PERIMETER DIKES
- ____ DIVERSION, INTERCEPTOR, OR PERIMETER SWALES
- ____ DIVERSION DIKE AND SWALE COMBINATIONS
- ____ PIPE SLOPE DRAINS
- ____ PAVED FLUMES
- T ROCK BEDDING AT CONSTRUCTION EXIT
- ____ TIMBER MATTING AT CONSTRUCTION EXIT
- ____ CHANNEL LINERS
- ____ SEDIMENT TRAPS
- ____ SEDIMENT BASINS
- ____ STORM INLET SEDIMENT TRAP
- ____ STONE OUTLET STRUCTURES
- P CURBS AND GUTTERS
- P STORM SEWERS
- ____ VELOCITY CONTROL DEVICES
- ____ OTHER: *(Specify Practice)*

3. STORM WATER MANAGEMENT:

The proposed facility was designed in consideration of hydraulic design standards to convey stormwater in a manner that is protective of public safety and property. The control of erosion from the facility is inherent to the design. Additional factors affecting post-construction stormwater at the project location include: (mark all that apply)

- _X_ *Existing or new vegetation provides natural filtration.*
- _X_ *The design includes provisions for permanent erosion controls provided by strategically placed pervious and impervious surfaces.*
- ____ *Project includes permanent sedimentation controls (other than grass).*
- _X_ *Velocities do not require dissipation devices.*
- ____ *Velocity-dissipation devices included in the design.*
- ____ *Other :* _____

4. NON-STORM WATER DISCHARGES:

Off-site discharges are prohibited except as follows:

1. *Discharges from fire fighting activities and/or fire hydrant flushings.*
2. *Vehicle, external building, and pavement wash water where detergents and soaps are not used and where spills or leaks of toxic or hazardous materials have not occurred (unless all spilled material has been removed).*
3. *Plain water used to control dust.*
4. *Plain water originating from potable water sources.*
5. *Uncontaminated groundwater, spring water or accumulated stormwater.*
6. *Foundation or footing drains where flows are not contaminated with process materials such as solvents.*
7. *Other:* _____

Concrete truck wash water discharges on the site should be prohibited or minimized. If allowed by the Engineer, they must be managed in a manner so as not to contaminate surface water. They must not be located in areas of concentrated flow. Concrete truck wash-out locations must be shown on the SW3P Layout and included in the inspections.

Hazardous material spill/leak shall be prevented or minimized. At a minimum, this includes asphalt products, fuels, oils, lubricants, solvents, paints, acids, concrete curing compounds and chemical additives for soil stabilization. BMPs shall be implemented to the storage areas of these products. All spills must be cleaned and disposed properly and reported to the Engineer. Report any release at or above the reportable quantity during a 24 hour period to the National Response Center at 1-800-424-8802.

C. OTHER REQUIREMENTS & PRACTICES

1. MAINTENANCE:
   All erosion and sediment controls shall be maintained in good working order. If a repair is necessary, it shall be performed before the next anticipated storm event but no later than 7 calendar days after the surrounding exposed ground has dried sufficiently to prevent further damage from equipment. If maintenance prior to the next anticipated storm event is impracticable, maintenance must be scheduled and accomplished as soon as practicable. Disturbed areas on which construction activities have ceased, temporarily or permanently, shall be stabilized within 14 calendar days unless they are scheduled to and do resume within 21 calendar days. The areas adjacent to creeks and drainageways shall have priority followed by protecting storm sewer inlets.
2. INSPECTION:
   For areas of the construction site that have not been finally stabilized, areas used for storage of materials, structural control measures, and locations where vehicles enter or exit the site, personnel provided by the permittee and familiar with the SW3P must inspect disturbed areas at least once every fourteen (14) calendar days and within twenty four (24) hours of the end of a storm of 0.5 inches or greater. As an alternative to the above-described inspection schedule of once every fourteen (14) calendar days and within twenty four (24) hours of a storm of 0.5 inches or greater, the SW3P may be developed to require that these inspections will occur at least once every seven (7) calendar days. If this alternative schedule is developed, the inspection must occur on a specifically defined day, regardless of whether or not there has been rainfall since the previous inspection. An Inspection and Maintenance Report shall be prepared for each inspection and the controls shall be revised on the SW3P within seven (7) calendar days following the inspection.
3. WASTE MATERIALS:
   All non-hazardous municipal waste materials such as litter, rubbish, trash and garbage located on or originating from the project shall be collected and stored in a securely lidded metal dumpster, provided by the Contractor. The dumpster shall be emptied as necessary or as required by local regulation and the trash shall be hauled to a permitted disposal facility. The burying of non-hazardous municipal waste on the project shall not be permitted. Construction material waste sites, stockpiles and haul roads shall be constructed to minimize and control the amount of sediment that may enter receiving waters. Construction material waste sites shall not be located in any wetland, water body or stream bed. Construction staging areas and vehicle maintenance areas shall be constructed in a manner to minimize the runoff of pollutants.
4. OFFSITE VEHICLE TRACKING:
   Off-site vehicle tracking of sediments and the generation of dust must be minimized. Excess sediments on road shall be removed on a regular basis as directed/approved by the Engineer.
5. OTHER:
   See the EPIC sheet for additional environmental information.

ALAMO RMA

PAPE-DAWSON ENGINEERS

555 EAST RAMSEY | SAN ANTONIO, TEXAS 78216 | PHONE: 210.375.9000 FAX: 210.375.9010
TEXAS BOARD OF PROFESSIONAL ENGINEERS, FIRM REGISTRATION # 470

Texas Department of Transportation © 2010

STATE OF TEXAS
SCOTT D. ARMSTRONG
69320
LICENSED PROFESSIONAL ENGINEER

Signature of Registrant & Date , P.E. 7/7/2010

REVISION DATE: 08/04

LOOP 1604

STORM WATER POLLUTION PREVENTION PLAN (SW3P)

FED. RD. DIV. NO.	FEDERAL AID PROJECT NO.		HIGHWAY NO.
6	STP 2011(210)ES		LP 1604
STATE	DISTRICT	COUNTY	
TEXAS	SAT	BEXAR	
CONTROL	SECTION	JOB	SHEET NO.
2452	01	050	435

ITEM	DESCRIPTION	UNIT	QTY
0506-2002	ROCK FILTER DAMS (INSTALL) (TY 2)	LF	50
0506-2009	ROCK FILTER DAMS (REMOVE)	LF	50
0506-2016	CONSTRUCTION EXITS (INSTALL) (TY 1)	SY	80
0506-2019	CONSTRUCTION EXITS (REMOVE)	SY	80
0506-2024	BACKHOE WORK (EROSION & SEDM CONT)	HR	5
0506-2026	FRNT END LOADER WORK (ERSN & SEDM CONT)	HR	5

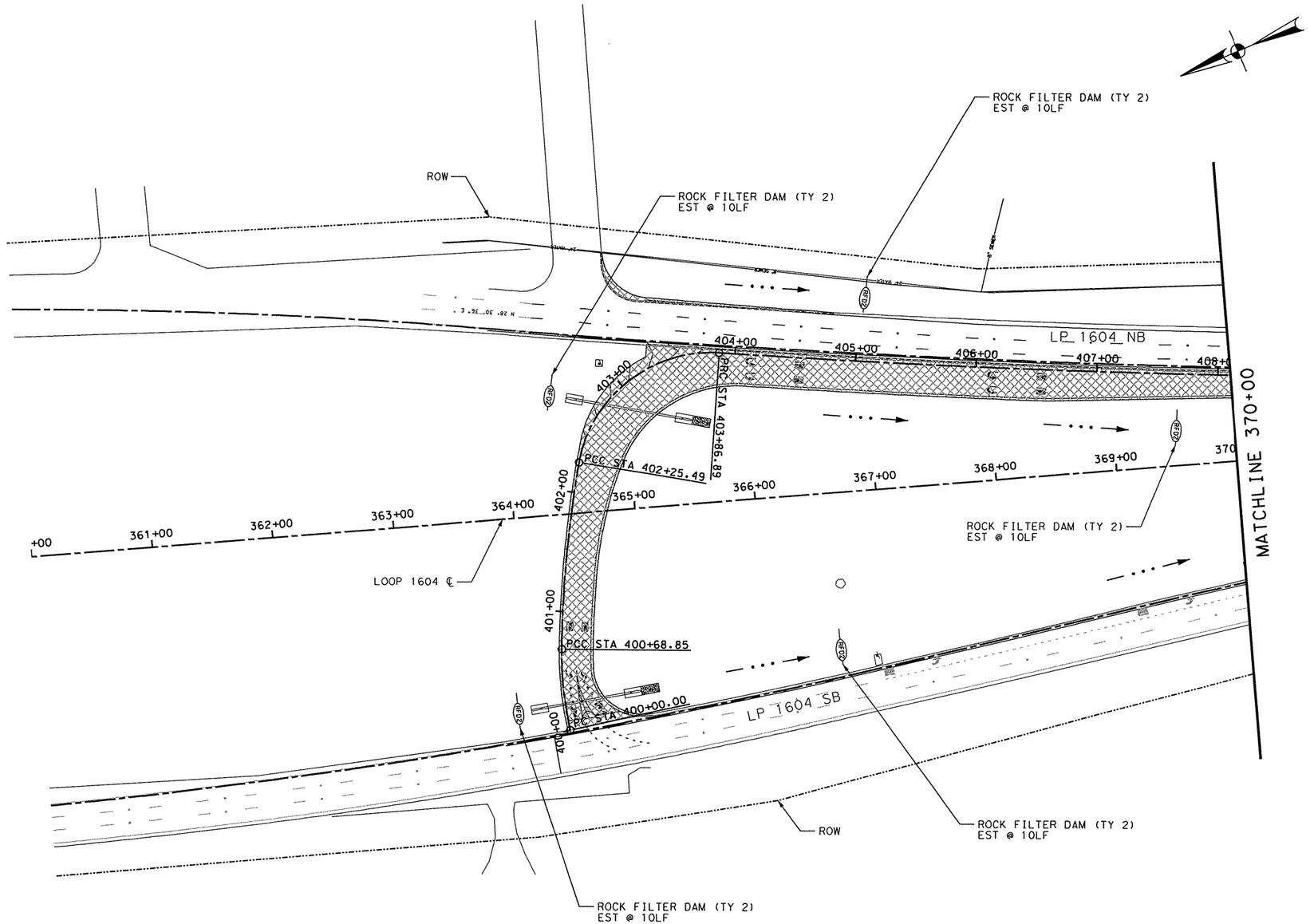

LEGEND

- FLOW ARROW
- ROCK FILTER DAM (TYPE 2)
- SANDBAGS
- TEMP SED CONT FENCE
- CONSTRUCTION EXIT
- CONSTRUCTION AREA

1. CONSTRUCTION EXITS SHALL BE FIELD LOCATED AS APPROVED BY THE ENGINEER ONCE CONSTRUCTION HAS BEGUN.
2. SW3P MEASURES SHALL BE ADJUSTED IN FIELD TO ADHERE TO FIELD AND CONSTRUCTION CONDITIONS.
3. BACKHOE WORK AND FRONT END LOADER WORK ESTIMATED AT 2 HRS PER 20 LF OF SEDIMENT CONTROL FENCE AND ROCK FILTER DAM INSTALLATION.

STATE OF TEXAS
SCOTT D. ARMSTRONG
69320
LICENSED PROFESSIONAL ENGINEER

SCOTT D. ARMSTRONG, P.E. — 6/28/2010 DATE

50 0 50 100
SCALE: PLAN - 1":100'

REV. NO.	DATE	DESCRIPTION	BY

ALAMO RMA

PAPE-DAWSON ENGINEERS
555 EAST RAMSEY | SAN ANTONIO, TEXAS 78216 | PHONE: 210.375.9000 FAX: 210.375.9010
TEXAS BOARD OF PROFESSIONAL ENGINEERS, FIRM REGISTRATION # 470

Texas Department of Transportation
© 2010

LOOP 1604

STORM WATER POLLUTION PREVENTION PLAN

BEGIN PROJECT TO STA 370+00

SHEET 1 OF 12

DGN:	FED. RD. DIV. NO.	STATE	FEDERAL AID PROJECT NO.			HIGHWAY NO.
CHK DGN:	6	TEXAS	STP 2011(210)ES			LP 1604
DWG:	DIST.	COUNTY	CONT. NO.	SECT. NO.	JOB NO.	SHEET NO.
CHK DWG:	SAT	BEXAR	2452	01	050	436

Plotted on: 6/28/2010

Design Filename: p:\74\00\04\design\civil\sw3p\740004SW3P01.dgn

Plotted on: 6/28/2010

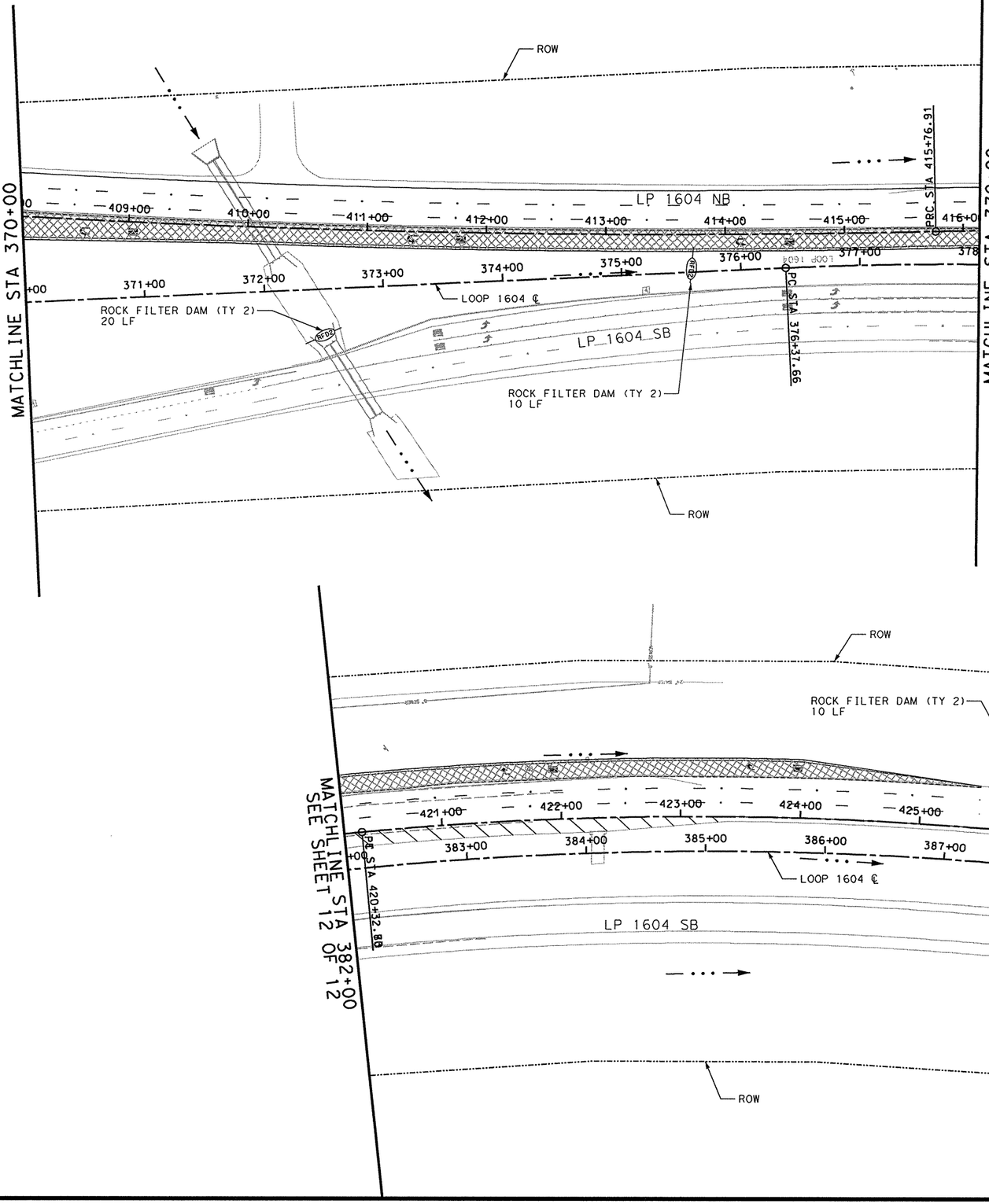

ITEM	DESCRIPTION	UNIT	QTY
0506-2002	ROCK FILTER DAMS (INSTALL) (TY 2)	LF	40
0506-2009	ROCK FILTER DAMS (REMOVE)	LF	40
0506-2016	CONSTRUCTION EXITS (INSTALL) (TY 1)	SY	80
0506-2019	CONSTRUCTION EXITS (REMOVE)	SY	80
0506-2024	BACKHOE WORK (EROSION & SEDM CONT)	HR	4
0506-2026	FRNT END LOADER WORK (ERSN & SEDM CONT)	HR	4

LEGEND

- FLOW ARROW
- ROCK FILTER DAM (TYPE 2)
- SANDBAGS
- TEMP SED CONT FENCE
- CONSTRUCTION EXIT
- CONSTRUCTION AREA

1. CONSTRUCTION EXITS SHALL BE FIELD LOCATED AS APPROVED BY THE ENGINEER ONCE CONSTRUCTION HAS BEGUN.
2. SW3P MEASURES SHALL BE ADJUSTED IN FIELD TO ADHERE TO FIELD AND CONSTRUCTION CONDITIONS.
3. BACKHOE WORK AND FRONT END LOADER WORK ESTIMATED AT 2 HRS PER 20 LF OF SEDIMENT CONTROL FENCE AND ROCK FILTER DAM INSTALLATION.

STATE OF TEXAS
SCOTT D. ARMSTRONG
69320
LICENSED
PROFESSIONAL ENGINEER

SCOTT D. ARMSTRONG, P.E. — 6/28/2010 DATE

50 0 50 100
SCALE: PLAN - 1":100'

REV. NO.	DATE	DESCRIPTION	BY

ALAMO RMA

PAPE-DAWSON ENGINEERS
555 EAST RAMSEY | SAN ANTONIO, TEXAS 78216 | PHONE: 210.375.9000 FAX: 210.375.9010
TEXAS BOARD OF PROFESSIONAL ENGINEERS, FIRM REGISTRATION # 470

Texas Department of Transportation
© 2010

LOOP 1604

STORM WATER POLLUTION PREVENTION PLAN

STA. 370+00 TO STA. 390+00

SHEET 2 OF 12

DGN:	FED. RD. DIV. NO.	STATE	FEDERAL AID PROJECT NO.			HIGHWAY NO.
CHK DGN:	6	TEXAS	STP 2011(210)ES			LP 1604
DWG:	DIST.	COUNTY	CONT. NO.	SECT. NO.	JOB NO.	SHEET NO.
CHK DWG:	SAT	BEXAR	2452	01	050	437

Design Filename: p:\74\00\04\design\civil\sw3p\740004SW3P02.dgn

Plotted on: 6/28/2010

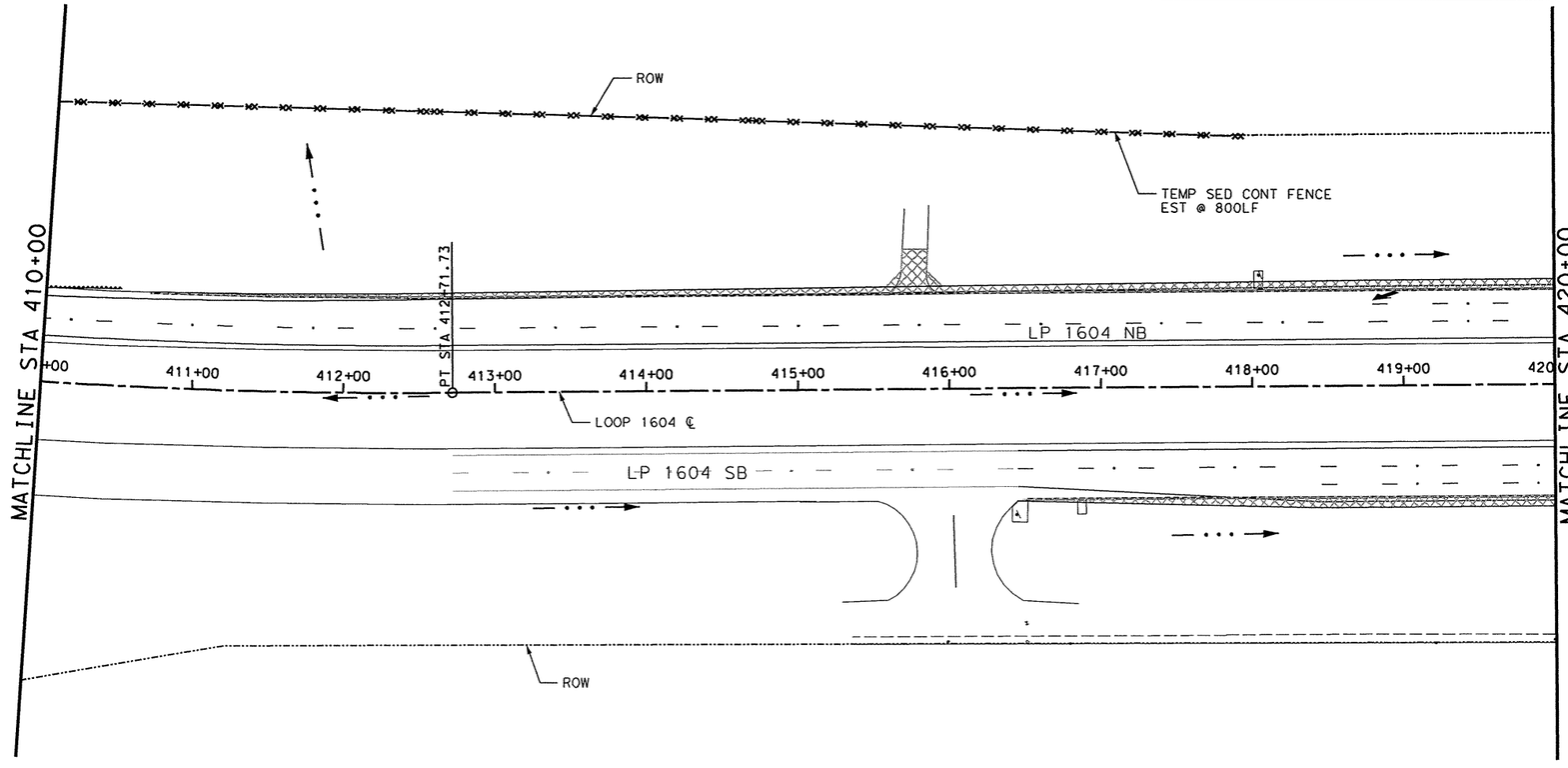

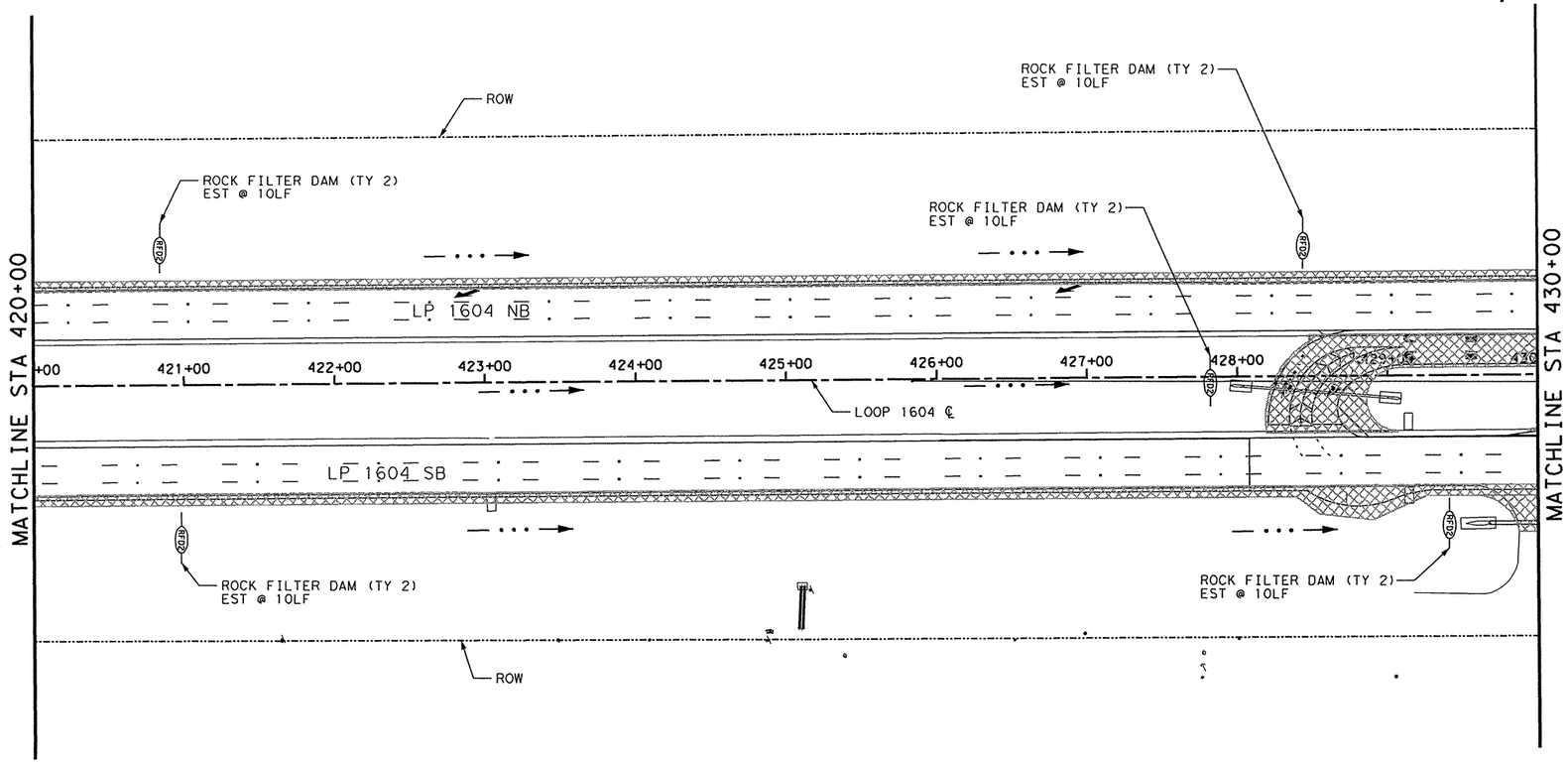

ITEM	DESCRIPTION	UNIT	QTY
0506-2002	ROCK FILTER DAMS (INSTALL) (TY 2)	LF	50
0506-2009	ROCK FILTER DAMS (REMOVE)	LF	50
0506-2016	CONSTRUCTION EXITS (INSTALL) (TY 1)	SY	80
0506-2019	CONSTRUCTION EXITS (REMOVE)	SY	80
0506-2024	BACKHOE WORK (EROSION & SEDM CONT)	HR	85
0506-2026	FRNT END LOADER WORK (ERSN & SEDM CONT)	HR	85
0506-2034	TEMPORARY SEDIMENT CONTROL FENCE	LF	800

LEGEND

- FLOW ARROW
- ROCK FILTER DAM (TYPE 2)
- SANDBAGS
- TEMP SED CONT FENCE
- CONSTRUCTION EXIT
- CONSTRUCTION AREA

1. CONSTRUCTION EXITS SHALL BE FIELD LOCATED AS APPROVED BY THE ENGINEER ONCE CONSTRUCTION HAS BEGUN.
2. SW3P MEASURES SHALL BE ADJUSTED IN FIELD TO ADHERE TO FIELD AND CONSTRUCTION CONDITIONS.
3. BACKHOE WORK AND FRONT END LOADER WORK ESTIMATED AT 2 HRS PER 20 LF OF SEDIMENT CONTROL FENCE AND ROCK FILTER DAM INSTALLATION.

STATE OF TEXAS
SCOTT D. ARMSTRONG
69320
LICENSED PROFESSIONAL ENGINEER

SCOTT D. ARMSTRONG, P.E. — 6/28/2010 DATE

50 0 50 100
SCALE: PLAN - 1":100'

REV. NO.	DATE	DESCRIPTION	BY

ALAMO RMA

PAPE-DAWSON ENGINEERS
555 EAST RAMSEY | SAN ANTONIO, TEXAS 78216 | PHONE: 210.375.9000 FAX: 210.375.9010
TEXAS BOARD OF PROFESSIONAL ENGINEERS, FIRM REGISTRATION # 470

Texas Department of Transportation
© 2010

LOOP 1604

STORM WATER POLLUTION PREVENTION PLAN

STA. 410+00 TO STA. 430+00

SHEET 3 OF 12

DGN:	FED. RD. DIV. NO.	STATE	FEDERAL AID PROJECT NO.			HIGHWAY NO.
CHK DGN:	6	TEXAS	STP 2011(210)ES			LP 1604
DWG:	DIST.	COUNTY	CONT. NO.	SECT. NO.	JOB NO.	SHEET NO.
CHK DWG:	SAT	BEXAR	2452	01	050	438

Design Filename: p:\741\00\04\design\civil\sw3p\741000405W3P03.dgn

Plotted on: 6/28/2010

Design Filename: p:\74\00\04\design\civil\sw3p\740004SW3P04.dgn

ITEM	DESCRIPTION	UNIT	QTY
0506-2002	ROCK FILTER DAMS (INSTALL) (TY 2)	LF	60
0506-2009	ROCK FILTER DAMS (REMOVE)	LF	60
0506-2024	BACKHOE WORK (EROSION & SEDM CONT)	HR	164
0506-2026	FRNT END LOADER WORK (ERSN & SEDM CONT)	HR	164
0506-2034	TEMPORARY SEDIMENT CONTROL FENCE	LF	1574

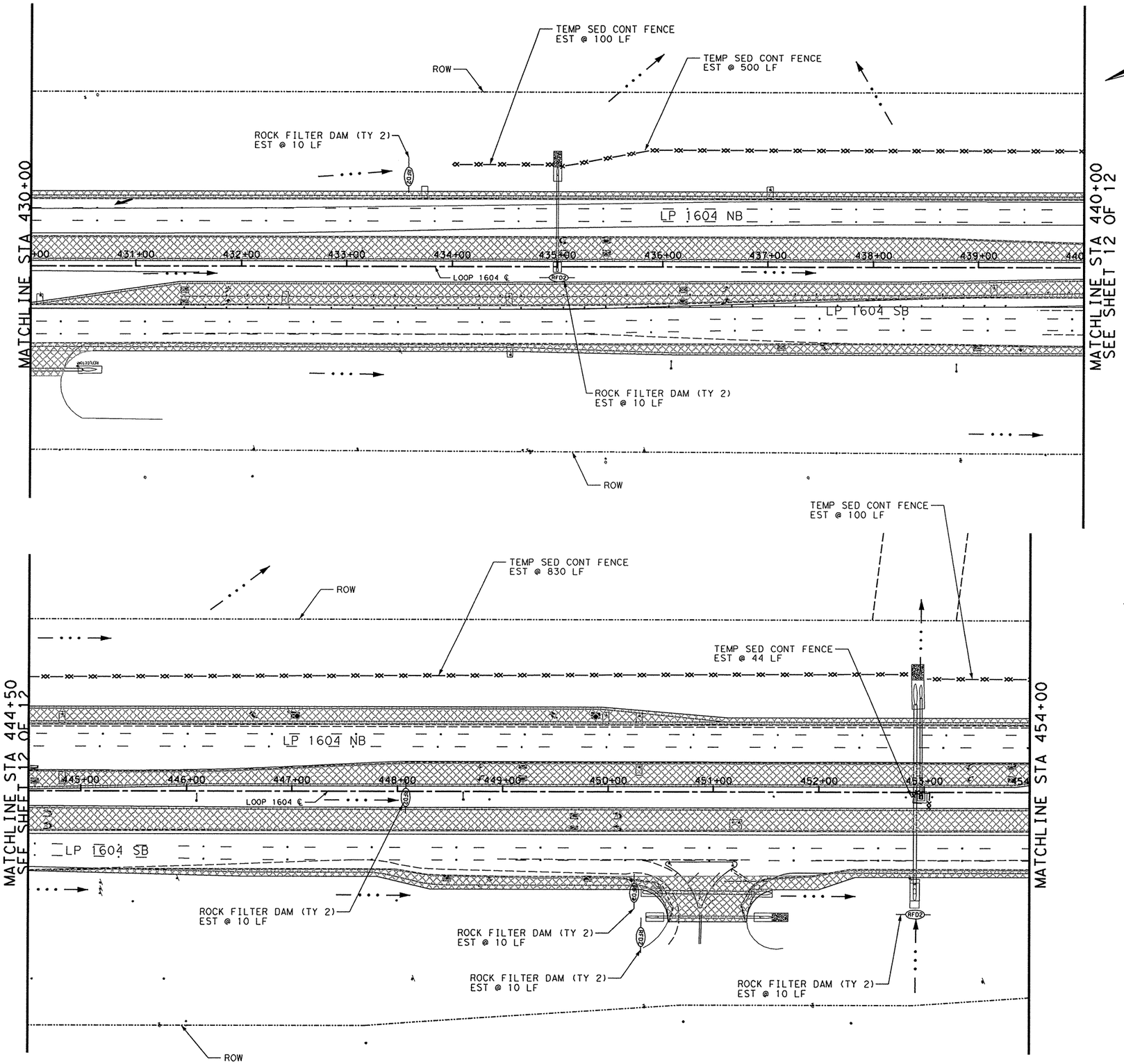

LEGEND

- FLOW ARROW
- ROCK FILTER DAM (TYPE 2)
- SANDBAGS
- TEMP SED CONT FENCE
- CONSTRUCTION EXIT
- CONSTRUCTION AREA

1. CONSTRUCTION EXITS SHALL BE FIELD LOCATED AS APPROVED BY THE ENGINEER ONCE CONSTRUCTION HAS BEGUN.
2. SW3P MEASURES SHALL BE ADJUSTED IN FIELD TO ADHERE TO FIELD AND CONSTRUCTION CONDITIONS.
3. BACKHOE WORK AND FRONT END LOADER WORK ESTIMATED AT 2 HRS PER 20 LF OF SEDIMENT CONTROL FENCE AND ROCK FILTER DAM INSTALLATION.

STATE OF TEXAS
SCOTT D. ARMSTRONG
69320
LICENSED PROFESSIONAL ENGINEER

SCOTT D. ARMSTRONG, P.E. — 6/28/2010 DATE

50 0 50 100
SCALE: PLAN - 1":100'

REV. NO.	DATE	DESCRIPTION	BY

ALAMO RMA

PAPE-DAWSON ENGINEERS
555 EAST RAMSEY | SAN ANTONIO, TEXAS 78216 | PHONE: 210.375.9000 FAX: 210.375.9010
TEXAS BOARD OF PROFESSIONAL ENGINEERS, FIRM REGISTRATION # 470

Texas Department of Transportation
© 2010

LOOP 1604
STORM WATER POLLUTION PREVENTION PLAN

STA. 430+00 TO STA. 454+00

SHEET 4 OF 12

DGN:	FED. RD. DIV. NO.	STATE	FEDERAL AID PROJECT NO.			HIGHWAY NO.
CHK DGN:	6	TEXAS	STP 2011(210)ES			LP 1604
DWG:	DIST.	COUNTY	CONT. NO.	SECT. NO.	JOB NO.	SHEET NO.
CHK DWG:	SAT	BEXAR	2452	01	050	439

Plotted on: 6/28/2010

Design Filename: p:\74\00\04\design\civil\sw3p\740004SW3P05.dgn

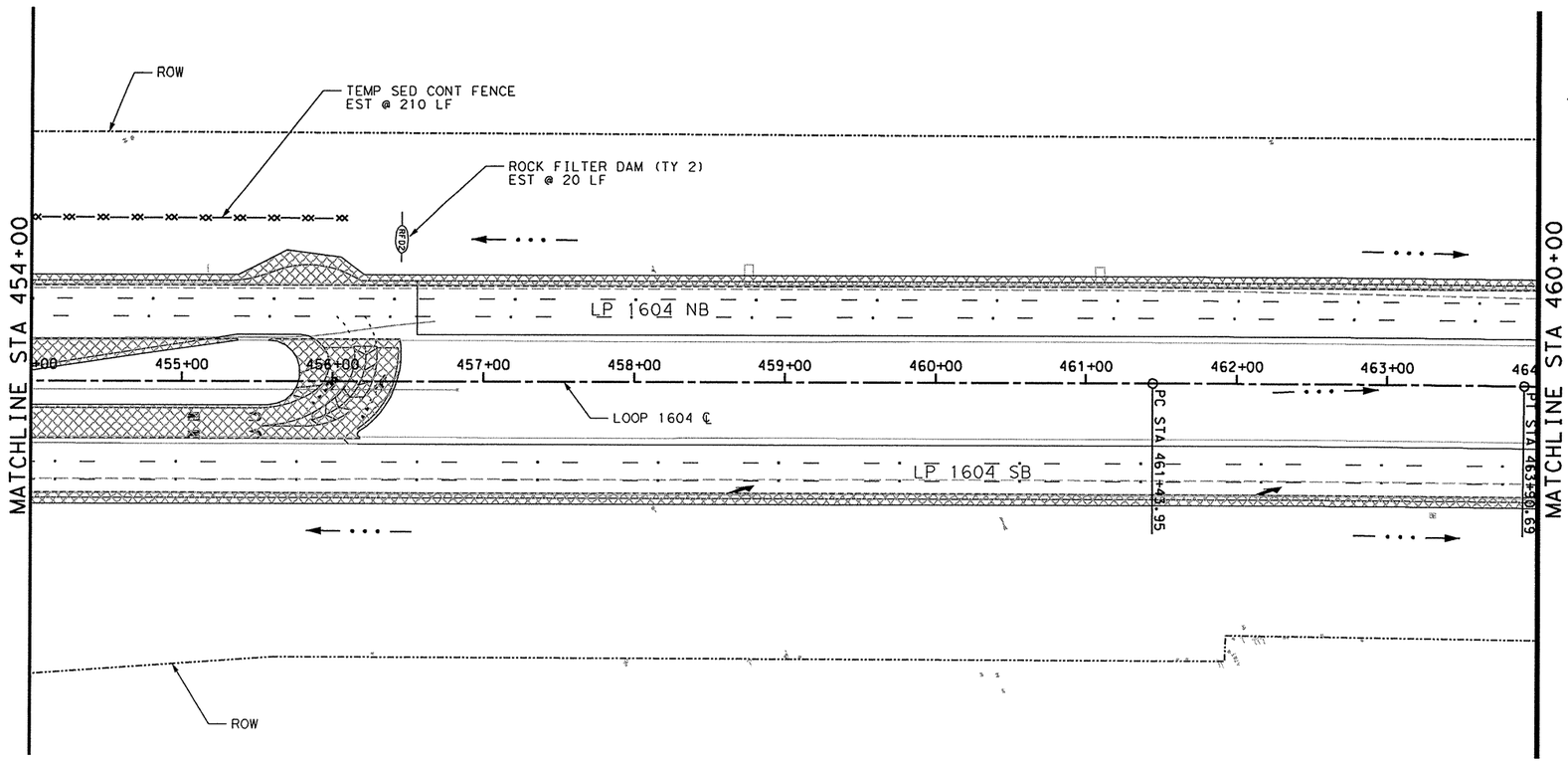

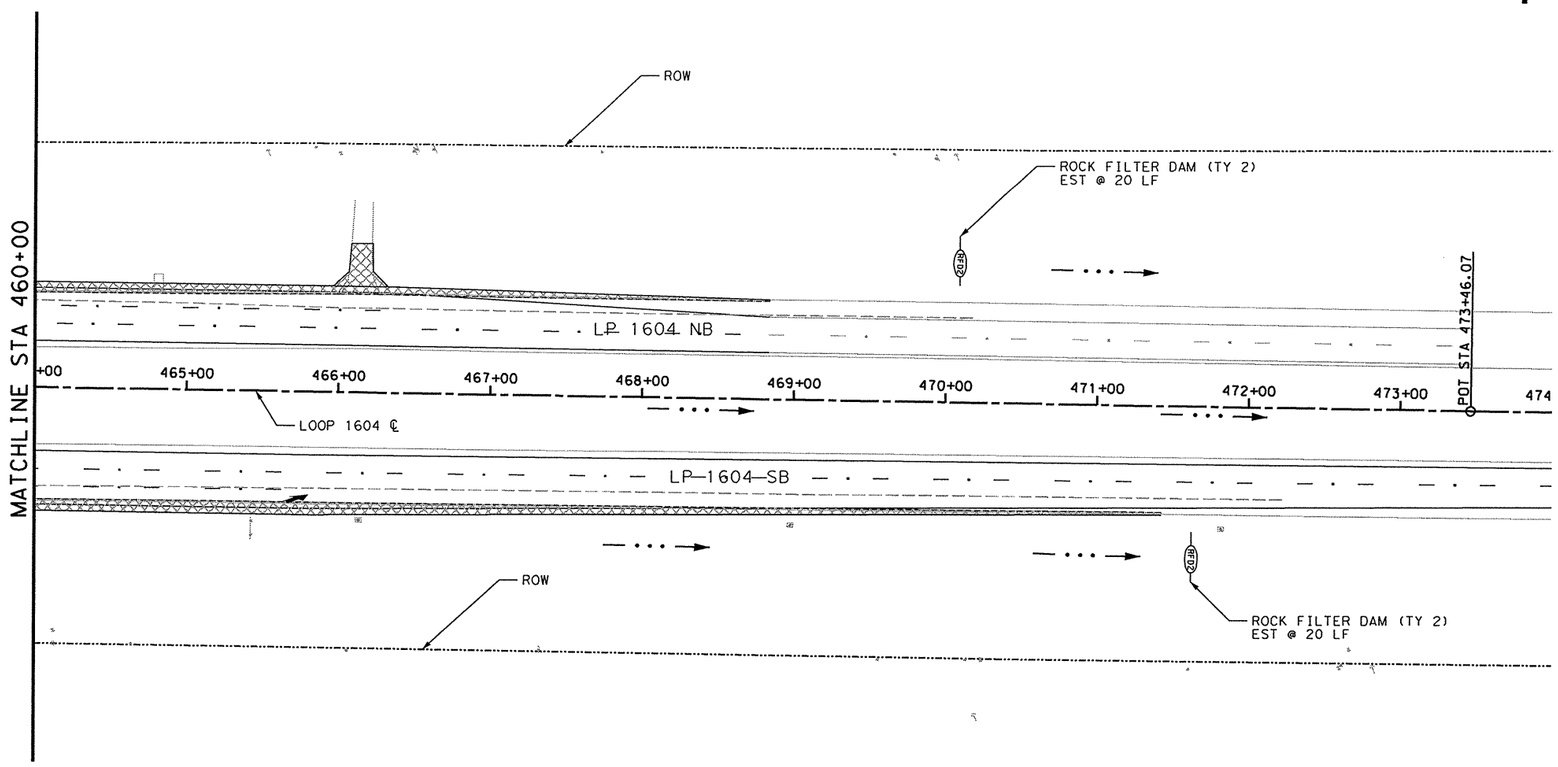

ITEM	DESCRIPTION	UNIT	QTY
0506-2002	ROCK FILTER DAMS (INSTALL) (TY 2)	LF	60
0506-2009	ROCK FILTER DAMS (REMOVE)	LF	60
0506-2016	CONSTRUCTION EXITS (INSTALL) (TY 1)	SY	80
0506-2019	CONSTRUCTION EXITS (REMOVE)	SY	80
0506-2024	BACKHOE WORK (EROSION & SEDM CONT)	HR	27
0506-2026	FRNT END LOADER WORK (ERSN & SEDM CONT)	HR	27
0506-2034	TEMPORARY SEDIMENT CONTROL FENCE	LF	210

LEGEND

- FLOW ARROW
- ROCK FILTER DAM (TYPE 2)
- SANDBAGS
- TEMP SED CONT FENCE
- CONSTRUCTION EXIT
- CONSTRUCTION AREA

1. CONSTRUCTION EXITS SHALL BE FIELD LOCATED AS APPROVED BY THE ENGINEER ONCE CONSTRUCTION HAS BEGUN.
2. SW3P MEASURES SHALL BE ADJUSTED IN FIELD TO ADHERE TO FIELD AND CONSTRUCTION CONDITIONS.
3. BACKHOE WORK AND FRONT END LOADER WORK ESTIMATED AT 2 HRS PER 20 LF OF SEDIMENT CONTROL FENCE AND ROCK FILTER DAM INSTALLATION.

STATE OF TEXAS
SCOTT D. ARMSTRONG
69320
LICENSED PROFESSIONAL ENGINEER

SCOTT D. ARMSTRONG, P.E. — 6/28/2010 DATE

50 0 50 100
SCALE: PLAN - 1":100'

REV. NO.	DATE	DESCRIPTION	BY

ALAMO RMA

PAPE-DAWSON ENGINEERS
555 EAST RAMSEY | SAN ANTONIO, TEXAS 78216 | PHONE: 210.375.9000 FAX: 210.375.9010
TEXAS BOARD OF PROFESSIONAL ENGINEERS, FIRM REGISTRATION # 470

Texas Department of Transportation © 2010

LOOP 1604

STORM WATER POLLUTION PREVENTION PLAN

STA. 454+00 TO STA. 474+00

SHEET 5 OF 12

DGN:	FED. RD. DIV. NO.	STATE	FEDERAL AID PROJECT NO.			HIGHWAY NO.
CHK DGN:	6	TEXAS	STP 2011(210)ES			LP 1604
DWG:	DIST.	COUNTY	CONT. NO.	SECT. NO.	JOB NO.	SHEET NO.
CHK DWG:	SAT	BEXAR	2452	01	050	440

ITEM	DESCRIPTION	UNIT	QTY
0506-2002	ROCK FILTER DAMS (INSTALL) (TY 2)	LF	20
0506-2009	ROCK FILTER DAMS (REMOVE)	LF	20
0506-2016	CONSTRUCTION EXITS (INSTALL) (TY 1)	SY	80
0506-2019	CONSTRUCTION EXITS (REMOVE)	SY	80
0506-2024	BACKHOE WORK (EROSION & SEDM CONT)	HR	2
0506-2026	FRNT END LOADER WORK (ERSN & SEDM CONT)	HR	2

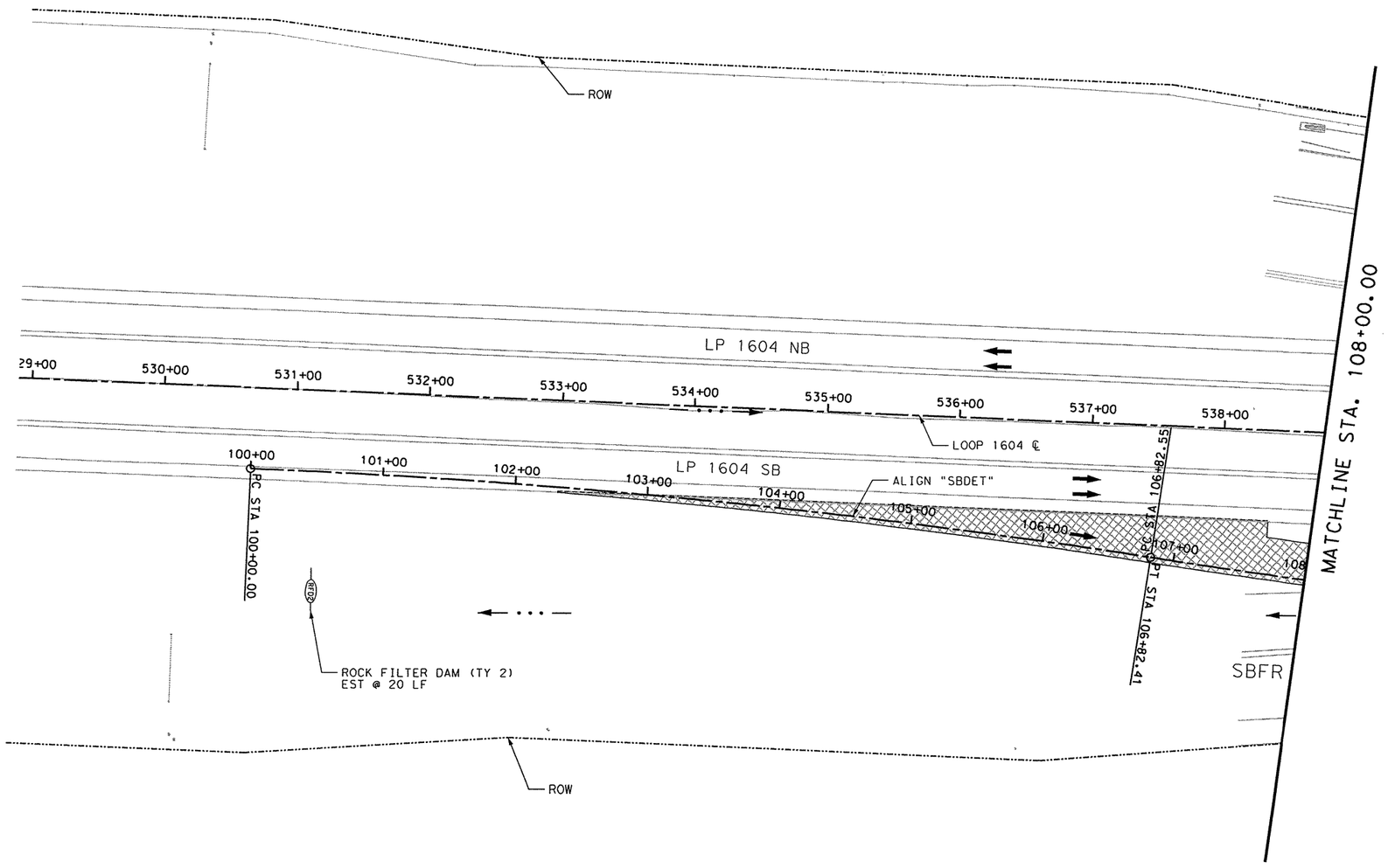

LEGEND

- FLOW ARROW
- ROCK FILTER DAM (TYPE 2)
- SANDBAGS
- TEMP SED CONT FENCE
- CONSTRUCTION EXIT
- CONSTRUCTION AREA

1. CONSTRUCTION EXITS SHALL BE FIELD LOCATED AS APPROVED BY THE ENGINEER ONCE CONSTRUCTION HAS BEGUN.
2. SW3P MEASURES SHALL BE ADJUSTED IN FIELD TO ADHERE TO FIELD AND CONSTRUCTION CONDITIONS.
3. BACKHOE WORK AND FRONT END LOADER WORK ESTIMATED AT 2 HRS PER 20 LF OF SEDIMENT CONTROL FENCE AND ROCK FILTER DAM INSTALLATION.

STATE OF TEXAS
SCOTT D. ARMSTRONG
69320
LICENSED PROFESSIONAL ENGINEER

SCOTT D. ARMSTRONG, P.E. — 6/28/2010 DATE

SCALE: PLAN - 1":100'

REV. NO.	DATE	DESCRIPTION	BY

ALAMO RMA

PAPE-DAWSON ENGINEERS

555 EAST RAMSEY | SAN ANTONIO, TEXAS 78216 | PHONE: 210.375.9000 FAX: 210.375.9010

TEXAS BOARD OF PROFESSIONAL ENGINEERS, FIRM REGISTRATION # 470

Texas Department of Transportation ©2010

LOOP 1604

STORM WATER POLLUTION PREVENTION PLAN

SBFR

STA. 100+00 TO STA. 108+00

SHEET 6 OF 12

DGN:	FED. RD. DIV. NO.	STATE	FEDERAL AID PROJECT NO.			HIGHWAY NO.
CHK DGN:	6	TEXAS	STP 2011(210)ES			LP 1604
DWG:	DIST.	COUNTY	CONT. NO.	SECT. NO.	JOB NO.	SHEET NO.
CHK DWG:	SAT	BEXAR	2452	01	050	441

Plotted on: 6/28/2010

Design Filename: p:\74\00\04\design\civil\sw3p\740004SW3P06.dgn

ITEM	DESCRIPTION	UNIT	QTY
0506-2002	ROCK FILTER DAMS (INSTALL) (TY 2)	LF	15
0506-2009	ROCK FILTER DAMS (REMOVE)	LF	15
0506-2024	BACKHOE WORK (EROSION & SEDM CONT)	HR	10
0506-2026	FRNT END LOADER WORK (ERSN & SEDM CONT)	HR	10
0506-2034	TEMPORARY SEDIMENT CONTROL FENCE	LF	78

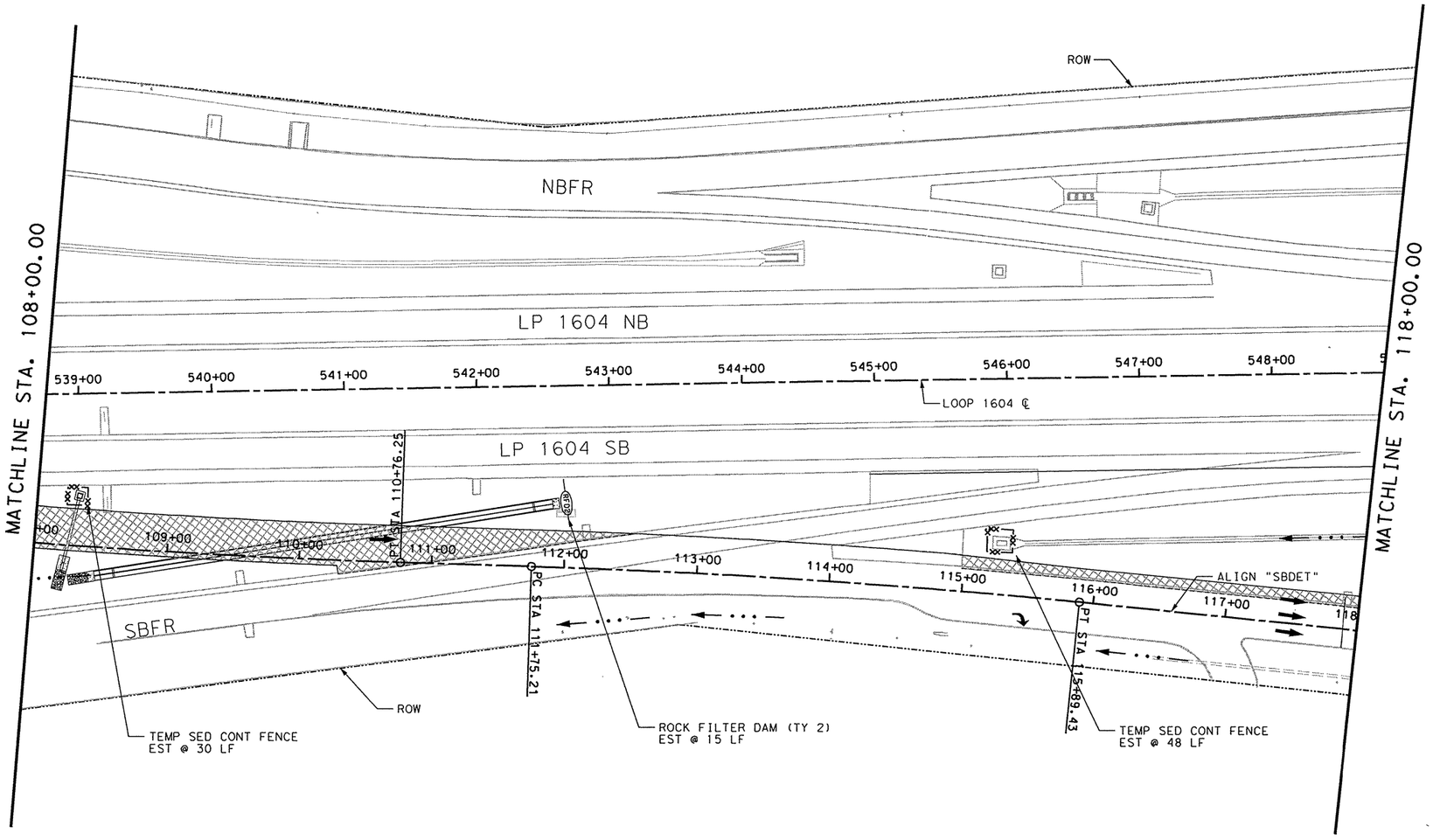

LEGEND

- FLOW ARROW
- ROCK FILTER DAM (TYPE 2)
- SANDBAGS
- TEMP SED CONT FENCE
- CONSTRUCTION EXIT
- CONSTRUCTION AREA

1. CONSTRUCTION EXITS SHALL BE FIELD LOCATED AS APPROVED BY THE ENGINEER ONCE CONSTRUCTION HAS BEGUN.
2. SW3P MEASURES SHALL BE ADJUSTED IN FIELD TO ADHERE TO FIELD AND CONSTRUCTION CONDITIONS.
3. BACKHOE WORK AND FRONT END LOADER WORK ESTIMATED AT 2 HRS PER 20 LF OF SEDIMENT CONTROL FENCE AND ROCK FILTER DAM INSTALLATION.

STATE OF TEXAS · SCOTT D. ARMSTRONG · 69320 · LICENSED PROFESSIONAL ENGINEER

SCOTT D. ARMSTRONG, P.E. — 6/28/2010 DATE

SCALE: PLAN - 1":100'

REV. NO.	DATE	DESCRIPTION	BY

ALAMO RMA

PAPE-DAWSON ENGINEERS

555 EAST RAMSEY | SAN ANTONIO, TEXAS 78216 | PHONE: 210.375.9000 FAX: 210.375.9010

TEXAS BOARD OF PROFESSIONAL ENGINEERS, FIRM REGISTRATION # 470

Texas Department of Transportation © 2010

LOOP 1604

STORM WATER POLLUTION PREVENTION PLAN

SBFR

STA. 108+00 TO STA. 118+00

SHEET 7 OF 12

DGN:	FED. RD. DIV. NO.	STATE	FEDERAL AID PROJECT NO.			HIGHWAY NO.
CHK DGN:	6	TEXAS	STP 2011(210)ES			LP 1604
DWG:	DIST.	COUNTY	CONT. NO.	SECT. NO.	JOB NO.	SHEET NO.
CHK DWG:	SAT	BEXAR	2452	01	050	442

Plotted on: 6/28/2010

Design Filename: p:\74\00\04\design\civil\sw3p\740004SW3P07.dgn

Plotted on: 6/28/2010

Design Filename: p:\74\00\04\design\civil\sw3p\740004SW3P08.dgn

ITEM	DESCRIPTION	UNIT	QTY
0506-2002	ROCK FILTER DAMS (INSTALL) (TY 2)	LF	10
0506-2009	ROCK FILTER DAMS (REMOVE)	LF	10
0506-2024	BACKHOE WORK (EROSION & SEDM CONT)	HR	1
0506-2026	FRNT END LOADER WORK (ERSN & SEDM CONT)	HR	1

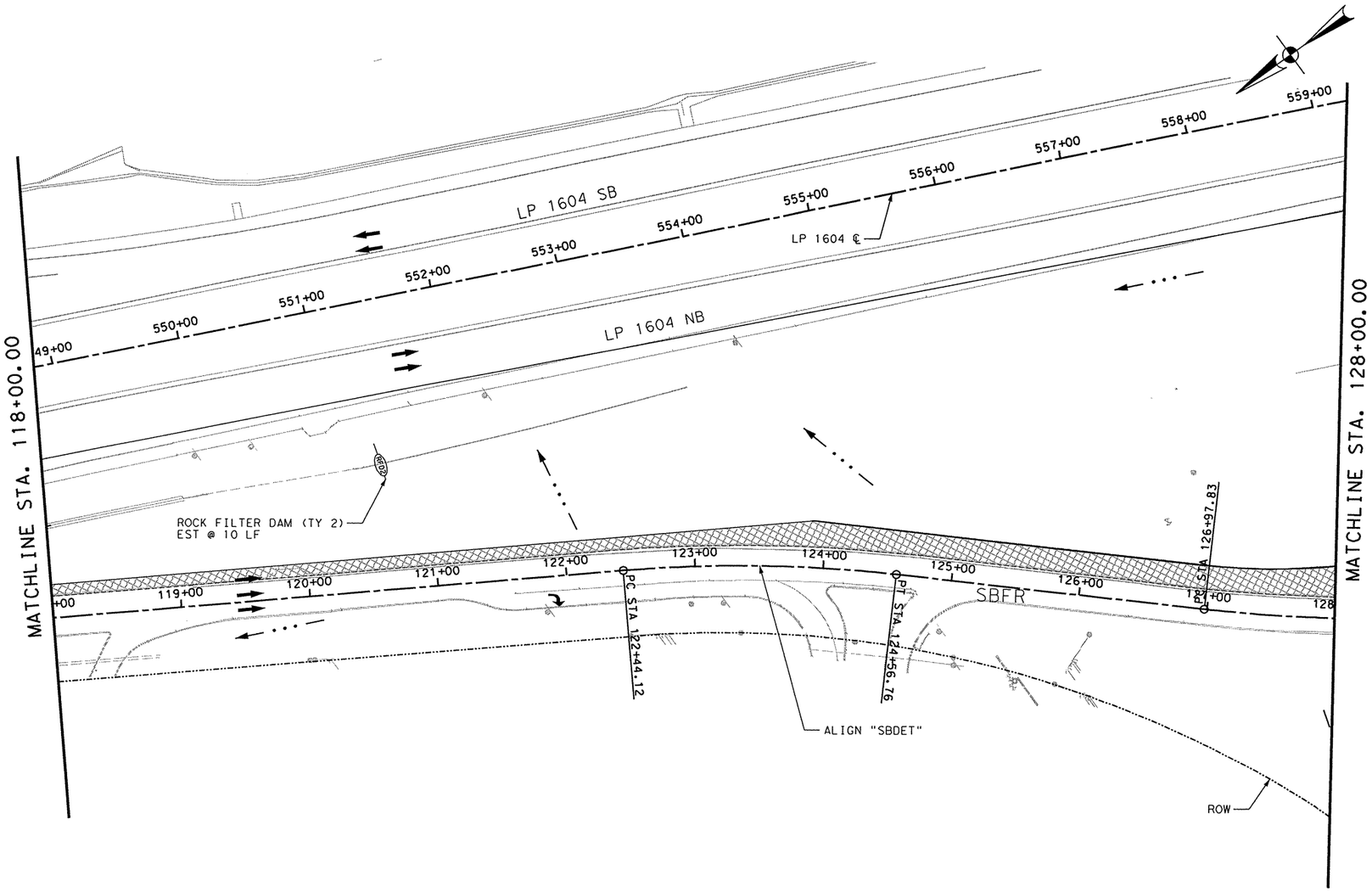

LEGEND

- FLOW ARROW
- ROCK FILTER DAM (TYPE 2)
- SANDBAGS
- TEMP SED CONT FENCE
- CONSTRUCTION EXIT
- CONSTRUCTION AREA

1. CONSTRUCTION EXITS SHALL BE FIELD LOCATED AS APPROVED BY THE ENGINEER ONCE CONSTRUCTION HAS BEGUN.
2. SW3P MEASURES SHALL BE ADJUSTED IN FIELD TO ADHERE TO FIELD AND CONSTRUCTION CONDITIONS.
3. BACKHOE WORK AND FRONT END LOADER WORK ESTIMATED AT 2 HRS PER 20 LF OF SEDIMENT CONTROL FENCE AND ROCK FILTER DAM INSTALLATION.

STATE OF TEXAS
SCOTT D. ARMSTRONG
69320
LICENSED PROFESSIONAL ENGINEER

SCOTT D. ARMSTRONG, P.E. — 6/28/2010 DATE

SCALE: PLAN - 1":100'

REV. NO.	DATE	DESCRIPTION	BY

ALAMO RMA

PAPE-DAWSON ENGINEERS

555 EAST RAMSEY | SAN ANTONIO, TEXAS 78216 | PHONE: 210.375.9000 FAX: 210.375.9010

TEXAS BOARD OF PROFESSIONAL ENGINEERS, FIRM REGISTRATION # 470

Texas Department of Transportation
© 2010

LOOP 1604

STORM WATER POLLUTION PREVENTION PLAN

SBFR

STA. 118+00 TO STA. 128+00

SHEET 8 OF 12

DGN:	FED. RD. DIV. NO.	STATE	FEDERAL AID PROJECT NO.			HIGHWAY NO.
CHK DGN:	6	TEXAS	STP 2011(210)ES			LP 1604
DWG:	DIST.	COUNTY	CONT. NO.	SECT. NO.	JOB NO.	SHEET NO.
CHK DWG:	SAT	BEXAR	2452	01	050	443

Plotted on: 7/7/2010

Design Filename: p:\74\00\04\design\civil\sw3p\740004SW3P09.dgn

ITEM	DESCRIPTION	UNIT	QTY
0506-2002	ROCK FILTER DAMS (INSTALL) (TY 2)	LF	300
0506-2009	ROCK FILTER DAMS (REMOVE)	LF	300
0506-2024	BACKHOE WORK (EROSION & SEDM CONT)	HR	28
0506-2026	FRNT END LOADER WORK (ERSN & SEDM CONT)	HR	28
0506-2034	TEMPORARY SEDIMENT CONTROL FENCE	LF	32
0506-2036	SANDBAGS FOR EROSION CONTROL (6 IN)	LF	160

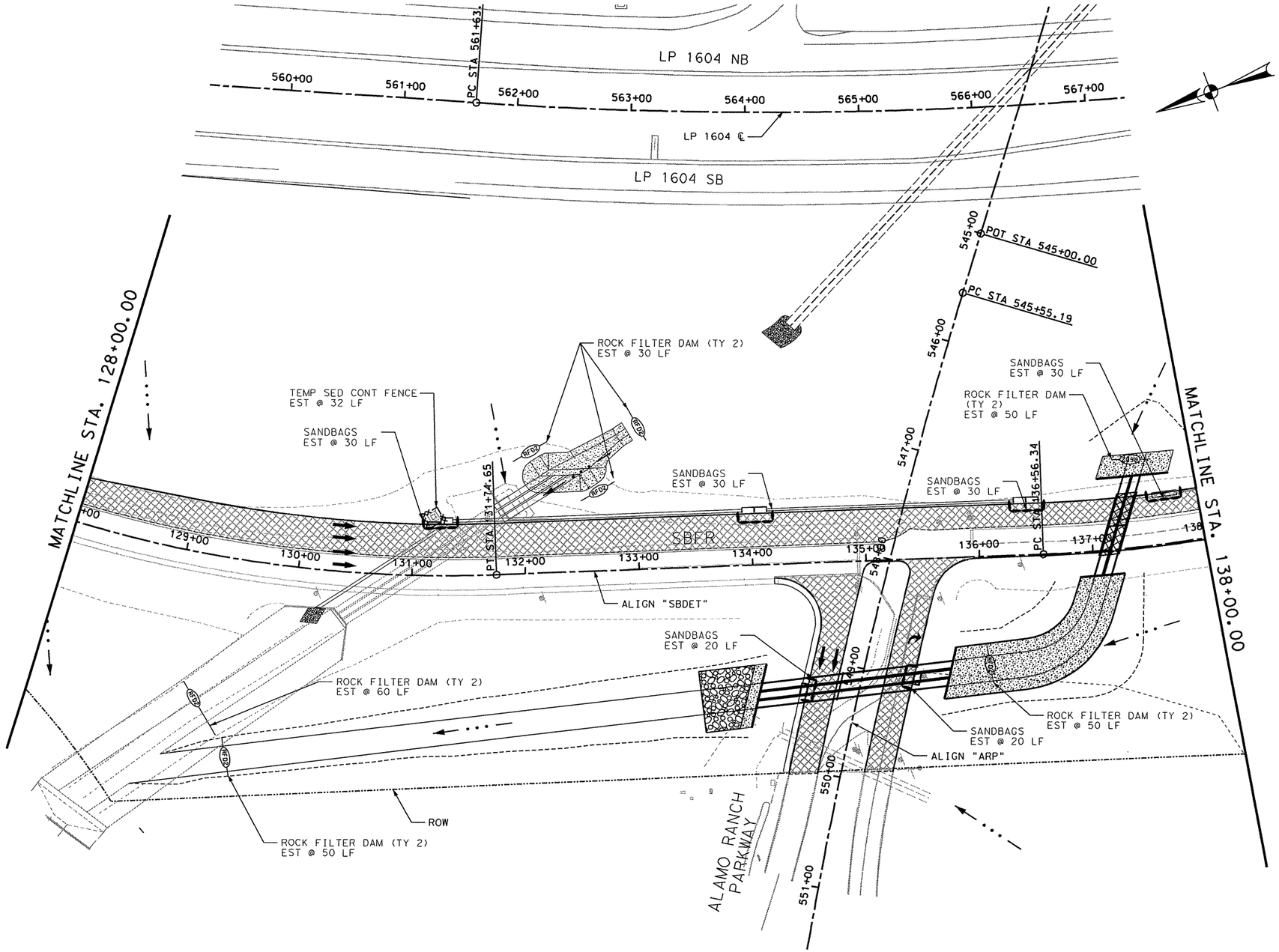

LEGEND

- FLOW ARROW
- ROCK FILTER DAM (TYPE 2)
- SANDBAGS
- TEMP SED CONT FENCE
- CONSTRUCTION EXIT
- CONSTRUCTION AREA

1. CONSTRUCTION EXITS SHALL BE FIELD LOCATED AS APPROVED BY THE ENGINEER ONCE CONSTRUCTION HAS BEGUN.
2. SW3P MEASURES SHALL BE ADJUSTED IN FIELD TO ADHERE TO FIELD AND CONSTRUCTION CONDITIONS.
3. BACKHOE WORK AND FRONT END LOADER WORK ESTIMATED AT 2 HRS PER 20 LF OF SEDIMENT CONTROL FENCE AND ROCK FILTER DAM INSTALLATION.

STATE OF TEXAS
SCOTT D. ARMSTRONG
69320
LICENSED PROFESSIONAL ENGINEER

SCOTT D. ARMSTRONG, P.E. — 7/7/2010 DATE

SCALE: PLAN - 1":100'

REV. NO.	DATE	DESCRIPTION	BY

ALAMO RMA

PAPE-DAWSON ENGINEERS

555 EAST RAMSEY | SAN ANTONIO, TEXAS 78216 | PHONE: 210.375.9000 FAX: 210.375.9010

TEXAS BOARD OF PROFESSIONAL ENGINEERS, FIRM REGISTRATION # 470

Texas Department of Transportation
© 2010

LOOP 1604

STORM WATER POLLUTION PREVENTION PLAN

SBFR

STA. 128+00 TO STA. 138+00

SHEET 9 OF 12

DGN:	FED. RD. DIV. NO.	STATE	FEDERAL AID PROJECT NO.			HIGHWAY NO.
CHK DGN:	6	TEXAS	STP 2011(210)ES			LP 1604
DWG:	DIST.	COUNTY	CONT. NO.	SECT. NO.	JOB NO.	SHEET NO.
CHK DWG:	SAT	BEXAR	2452	01	050	444

Plotted on: 7/7/2010

Design Filename: p:\74\00\04\design\civil\sw3p\740004SW3P10.dgn

ITEM	DESCRIPTION	UNIT	QTY
0506-2002	ROCK FILTER DAMS (INSTALL) (TY 2)	LF	20
0506-2009	ROCK FILTER DAMS (REMOVE)	LF	20
0506-2024	BACKHOE WORK (EROSION & SEDM CONT)	HR	2
0506-2026	FRNT END LOADER WORK (ERSN & SEDM CONT)	HR	2
0506-2036	SANDBAGS FOR EROSION CONTROL (6 IN)	LF	60

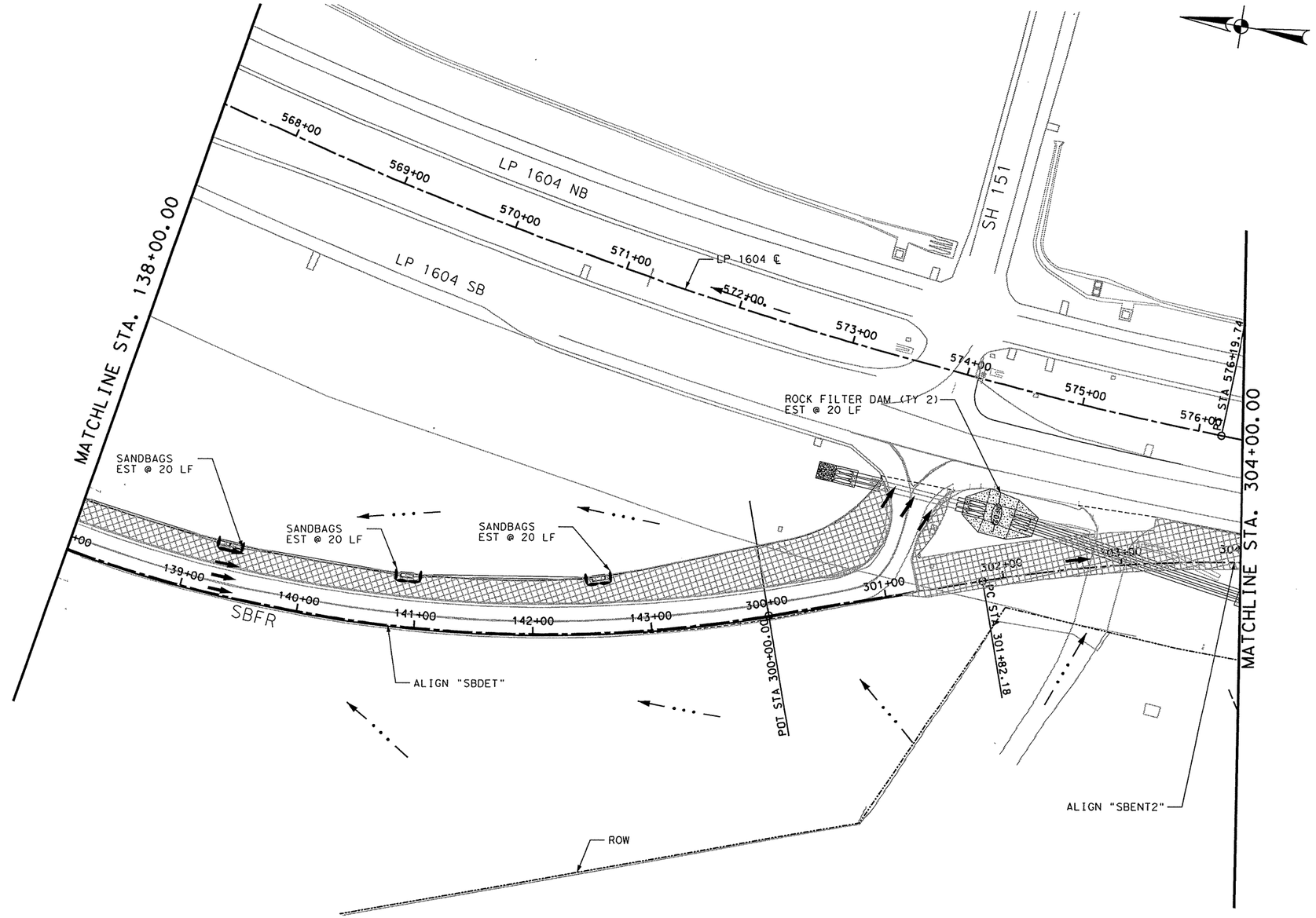

LEGEND

- FLOW ARROW
- ROCK FILTER DAM (TYPE 2)
- SANDBAGS
- TEMP SED CONT FENCE
- CONSTRUCTION EXIT
- CONSTRUCTION AREA

1. CONSTRUCTION EXITS SHALL BE FIELD LOCATED AS APPROVED BY THE ENGINEER ONCE CONSTRUCTION HAS BEGUN.
2. SW3P MEASURES SHALL BE ADJUSTED IN FIELD TO ADHERE TO FIELD AND CONSTRUCTION CONDITIONS.
3. BACKHOE WORK AND FRONT END LOADER WORK ESTIMATED AT 2 HRS PER 20 LF OF SEDIMENT CONTROL FENCE AND ROCK FILTER DAM INSTALLATION.

STATE OF TEXAS
SCOTT D. ARMSTRONG
69320
LICENSED PROFESSIONAL ENGINEER

SCOTT D. ARMSTRONG, P.E. — 7/7/2010 DATE

SCALE: PLAN - 1":100'

REV. NO.	DATE	DESCRIPTION	BY

ALAMO RMA

PAPE-DAWSON ENGINEERS

555 EAST RAMSEY | SAN ANTONIO, TEXAS 78216 | PHONE: 210.375.9000 FAX: 210.375.9010

TEXAS BOARD OF PROFESSIONAL ENGINEERS, FIRM REGISTRATION # 470

Texas Department of Transportation
© 2010

LOOP 1604

STORM WATER POLLUTION PREVENTION PLAN

SBFR

STA. 138+00 "SBDET"
TO STA. 304+00 "SBENT2"

SHEET 10 OF 12

DGN:	FED. RD. DIV. NO.	STATE	FEDERAL AID PROJECT NO.			HIGHWAY NO.
CHK DGN:	6	TEXAS	STP 2011(210)ES			LP 1604
DWG:	DIST.	COUNTY	CONT. NO.	SECT. NO.	JOB NO.	SHEET NO.
CHK DWG:	SAT	BEXAR	2452	01	050	445

ITEM	DESCRIPTION	UNIT	QTY
0506-2002	ROCK FILTER DAMS (INSTALL) (TY 2)	LF	20
0506-2009	ROCK FILTER DAMS (REMOVE)	LF	20
0506-2016	CONSTRUCTION EXITS (INSTALL) (TY 1)	SY	80
0506-2019	CONSTRUCTION EXITS (REMOVE)	SY	80
0506-2024	BACKHOE WORK (EROSION & SEDM CONT)	HR	20
0506-2026	FRNT END LOADER WORK (ERSN & SEDM CONT)	HR	20
0506-2034	TEMPORARY SEDIMENT CONTROL FENCE	LF	180

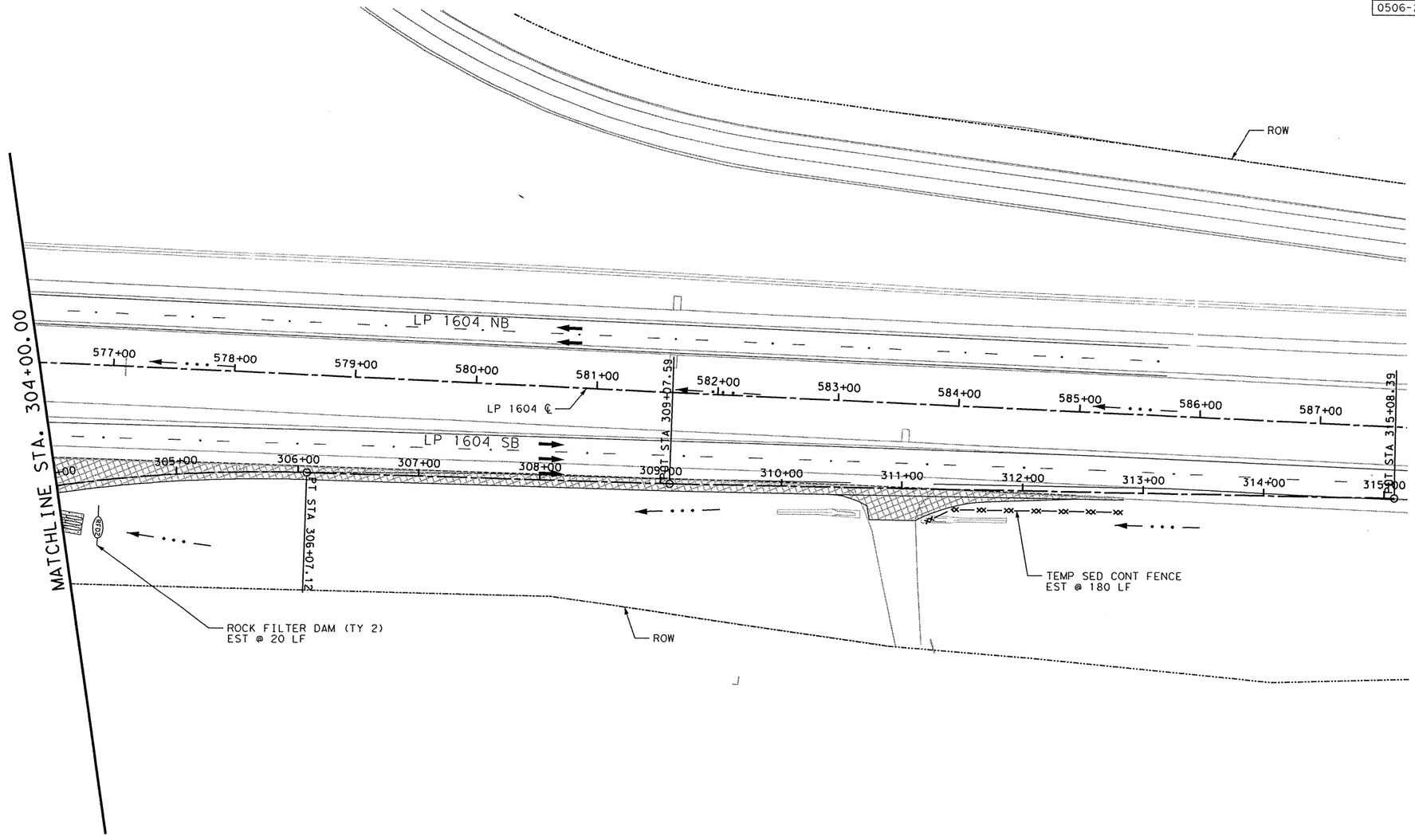

LEGEND

- FLOW ARROW
- ROCK FILTER DAM (TYPE 2)
- SANDBAGS
- TEMP SED CONT FENCE
- CONSTRUCTION EXIT
- CONSTRUCTION AREA

1. CONSTRUCTION EXITS SHALL BE FIELD LOCATED AS APPROVED BY THE ENGINEER ONCE CONSTRUCTION HAS BEGUN.
2. SW3P MEASURES SHALL BE ADJUSTED IN FIELD TO ADHERE TO FIELD AND CONSTRUCTION CONDITIONS.
3. BACKHOE WORK AND FRONT END LOADER WORK ESTIMATED AT 2 HRS PER 20 LF OF SEDIMENT CONTROL FENCE AND ROCK FILTER DAM INSTALLATION.

STATE OF TEXAS
SCOTT D. ARMSTRONG
69320
LICENSED PROFESSIONAL ENGINEER

SCOTT D. ARMSTRONG, P.E. — 8/18/2010 DATE

SCALE: PLAN - 1":100'

REV. NO.	DATE	DESCRIPTION	BY

ALAMO RMA

PAPE-DAWSON ENGINEERS
555 EAST RAMSEY | SAN ANTONIO, TEXAS 78216 | PHONE: 210.375.9000 FAX: 210.375.9010
TEXAS BOARD OF PROFESSIONAL ENGINEERS, FIRM REGISTRATION # 470

Texas Department of Transportation
© 2010

LOOP 1604

STORM WATER POLLUTION PREVENTION PLAN

SBFR

STA. 304+00 "SBENT2" TO END OF PROJECT

SHEET 11 OF 12

DGN:	FED. RD. DIV. NO.	STATE	FEDERAL AID PROJECT NO.			HIGHWAY NO.
CHK DGN:	6	TEXAS	STP 2011(210)ES			LP 1604
DWG:	DIST.	COUNTY	CONT. NO.	SECT. NO.	JOB NO.	SHEET NO.
CHK DWG:	SAT	BEXAR	2452	01	050	446

Plotted on: 8/18/2010

Design Filename: p:\74\00\04\design\civil\sw3p\740004SW3P11.dgn

ITEM	DESCRIPTION	UNIT	QTY
0506-2002	ROCK FILTER DAMS (INSTALL) (TY 2)	LF	60
0506-2009	ROCK FILTER DAMS (REMOVE)	LF	60
0506-2024	BACKHOE WORK (EROSION & SEDM CONT)	HR	99
0506-2026	FRNT END LOADER WORK (ERSN & SEDM CONT)	HR	99
0506-2034	TEMPORARY SEDIMENT CONTROL FENCE	LF	928

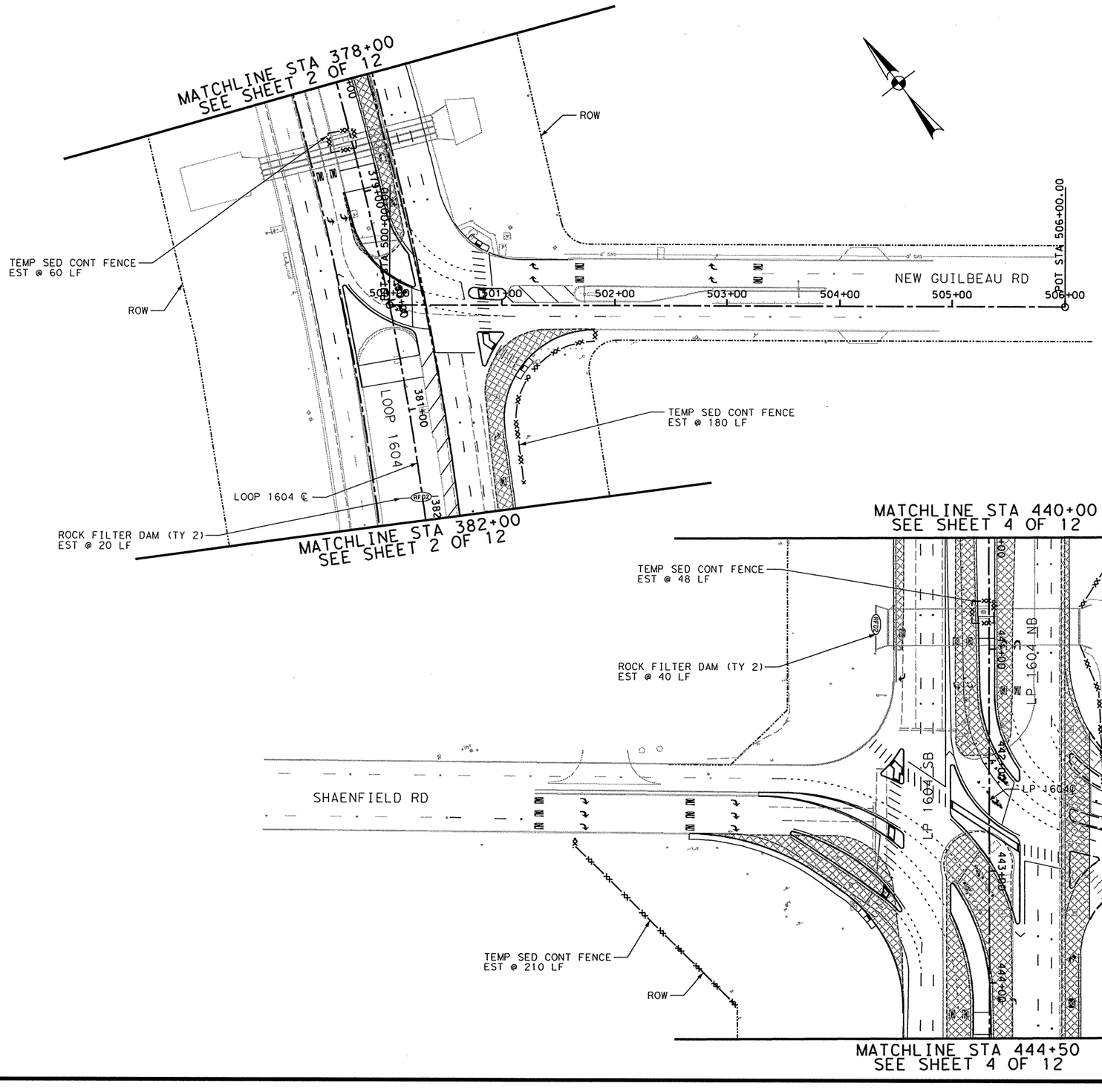

LEGEND

- FLOW ARROW
- RFD2 — ROCK FILTER DAM (TYPE 2)
- SANDBAGS
- TEMP SED CONT FENCE
- CONSTRUCTION EXIT
- CONSTRUCTION AREA

1. CONSTRUCTION EXITS SHALL BE FIELD LOCATED AS APPROVED BY THE ENGINEER ONCE CONSTRUCTION HAS BEGUN.
2. SW3P MEASURES SHALL BE ADJUSTED IN FIELD TO ADHERE TO FIELD AND CONSTRUCTION CONDITIONS.
3. BACKHOE WORK AND FRONT END LOADER WORK ESTIMATED AT 2 HRS PER 20 LF OF SEDIMENT CONTROL FENCE AND ROCK FILTER DAM INSTALLATION.

STATE OF TEXAS
SCOTT D. ARMSTRONG
69320
LICENSED PROFESSIONAL ENGINEER

SCOTT D. ARMSTRONG, P.E. — 6/28/2010 DATE

50 0 50 100
SCALE: PLAN - 1":100'

REV. NO.	DATE	DESCRIPTION	BY

ALAMO RMA

PAPE-DAWSON ENGINEERS

555 EAST RAMSEY | SAN ANTONIO, TEXAS 78216 | PHONE: 210.375.9000 FAX: 210.375.9010

TEXAS BOARD OF PROFESSIONAL ENGINEERS, FIRM REGISTRATION # 470

Texas Department of Transportation ©2010

LOOP 1604

STORM WATER POLLUTION PREVENTION PLAN

NEW GUILBEAU RD
SHAENFIELD RD

SHEET 12 OF 12

DGN:	FED. RD. DIV. NO.	STATE	FEDERAL AID PROJECT NO.			HIGHWAY NO.
CHK DGN:	6	TEXAS	STP 2011(210)ES			LP 1604
DWG:	DIST.	COUNTY	CONT. NO.	SECT. NO.	JOB NO.	SHEET NO.
CHK DWG:	SAT	BEXAR	2452	01	050	447

Plotted on: 6/28/2010

Design Filename: p:\74\00\04\design\civil\sw3p\740004SW3P12.dgn

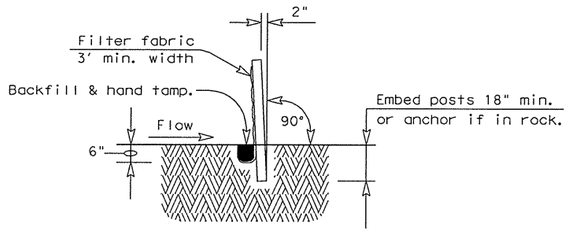

SECTION A-A

GENERAL NOTES

1. The guidelines shown hereon are suggestions only and may be modified by the Engineer.

PLAN SHEET LEGEND

Sediment Control Fence —— SCF ——

SEDIMENT CONTROL FENCE USAGE GUIDELINES

A sediment control fence may be constructed near the downstream perimeter of a disturbed area along a contour to intercept sediment from overland runoff. A 2 year storm frequency may be used to calculate the flow rate to be filtered.

Sediment control fence should be sized to filter a max. flow through rate of 100 GPM/FT^2. Sediment control fence is not recommended to control erosion from a drainage area larger than 2 acres.

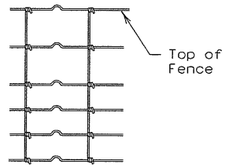

Galv. Hinge joint knot woven mesh (12.5 Ga. Min.) requires a minimum of five horizontal wires spaced at a max.12 inches apart and all vertical wires spaced at a max. 12 inches apart.

Hinge Joint Knot Woven Mesh (Option)

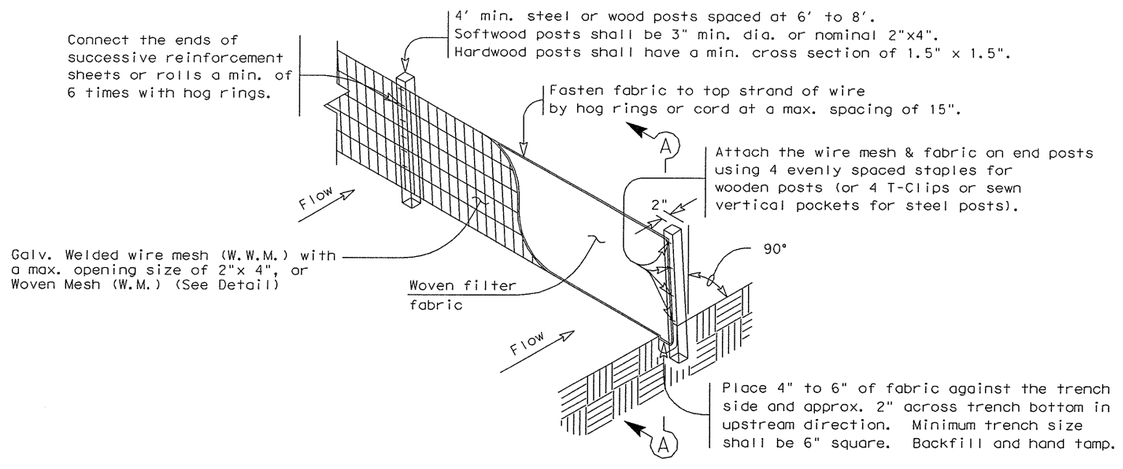

TEMPORARY SEDIMENT CONTROL FENCE

SCF

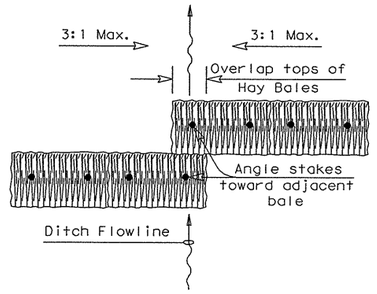

PLAN VIEW

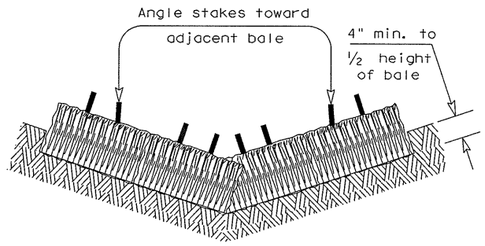

PROFILE VIEW

PLANS SHEET LEGEND

Baled Hay —— BH ——

BALED HAY USAGE GUIDELINES

A Baled Hay installation may be constructed near the downstream perimeter of a disturbed area along a contour to intercept sediment from overland runoff. A two year storm frequency may be used to calculate the flow rate to be filtered. The installation should be sized to filter a maximum flow thru rate of 5 GPM/FT^2 of cross sectional area. Baled hay may be used at the following locations:

1. Where the runoff approaching the baled hay flows over disturbed soil for less than 100'. If the slope of the disturbed soil exceeds 10%, the length of slope upstream the baled hay should be less than 50'.
2. Where the installation will be required for less than 3 months.
3. Where the contributing drainage area is less than ½ acre.

For Baled Hay installations in small ditches, the additional following considerations apply:

1. The ditch sideslopes should be graded as flat as possible to maximize the drainage flowrate thru the hay.
2. The ditch should be graded large enough to contain the overtopping drainage when sediment has filled to the top of the baled hay.

Bales should be replaced usually every 2 months or more often during wet weather when loss of structural integrity is accelerated.

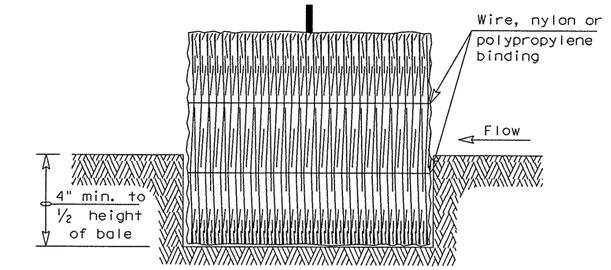

SECTION B-B

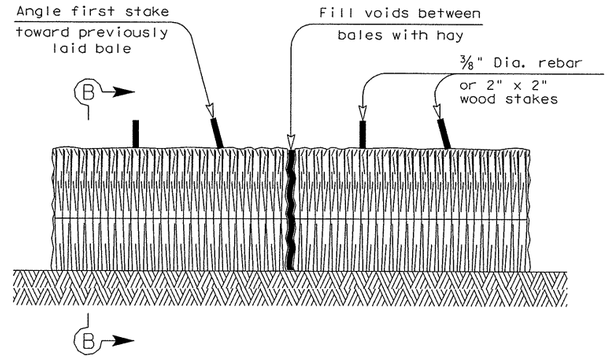

BALED HAY FOR EROSION CONTROL

BH

GENERAL NOTES

1. Hay bales shall be a minimum of 30" in length and weigh a minimum of 50 Lbs.
2. Hay bales shall be bound by either wire or nylon or polypropylene string. The bales shall be composed entirely of vegetative matter.
3. Hay bales shall be embedded in the soil a minimum of 4" and where possible ½ the height of the bale.
4. Hay bales shall be placed in a row with ends tightly abutting the adjacent bales. The bales shall be placed with bindings parallel to the ground.
5. Hay bales shall be securely anchored in place with ⅜" Dia. rebar or 2" x 2" wood stakes, driven through the bales. The first stake shall be angled towards the previously laid bale to force the bales together.
6. The guidelines shown hereon are suggestions only and may be modified by the Engineer.

Texas Department of Transportation
Design Division (Roadway)

TEMPORARY EROSION, SEDIMENT AND WATER POLLUTION CONTROL MEASURES

FENCE & BALED HAY

EC(1)-09

FILE: ec109.dgn	DN: HEJ	CK: HEJ	DW: BGD / TV	CK:
©TxDOT JUNE 1993	DISTRICT	FEDERAL AID PROJECT		SHEET
REVISIONS: Language added to the end of the standard sheet note for silt fence to allow for the use of the new backing.		2452-9-050		
	COUNTY	CONTROL	SECT	JOB	HIGHWAY
	BEXAR				448

DISCLAIMER:
The use of this standard is governed by the "Texas Engineering Practice Act". No warranty of any kind is made by TxDOT for any purpose whatsoever. TxDOT assumes no responsibility for the conversion of this standard to other formats or for incorrect results or damages resulting from its use.

LEVELS DIS.

DISCLAIMER:
The use of this standard is governed by the "Texas Engineering Practice Act". No warranty of any kind is made by TxDOT for any purpose whatsoever. TxDOT assumes no responsibility for the conversion of this standard to other formats or for incorrect results or damages resulting from its use.

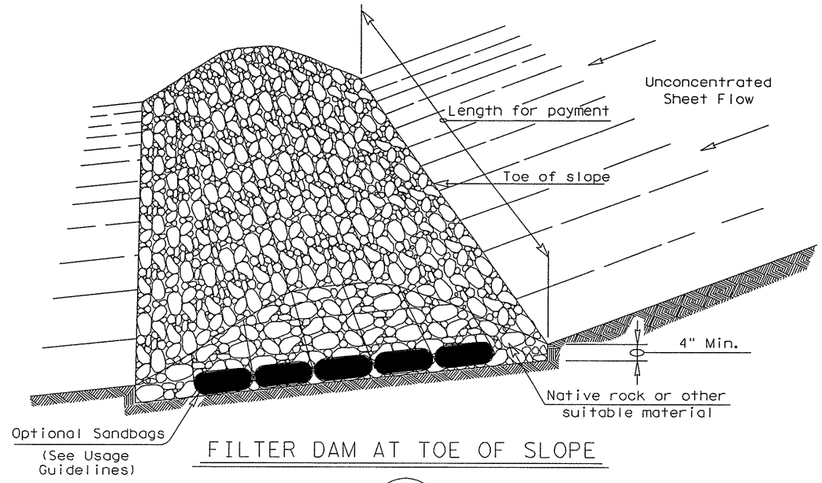

FILTER DAM AT TOE OF SLOPE

RFD1
TYPE 1

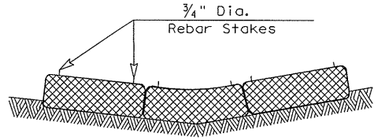

SECTION B-B

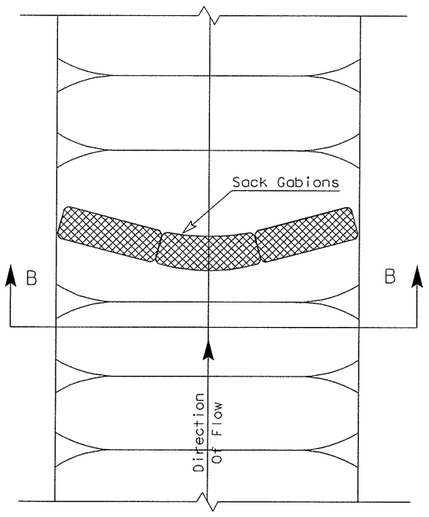

PLAN VIEW

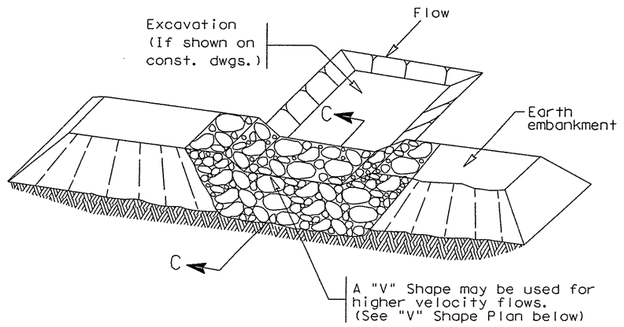

FILTER DAM AT SEDIMENT TRAP

RFD1 OR RFD2
TYPE 1 OR TYPE 2

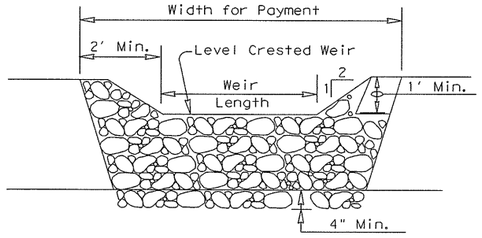

PROFILE

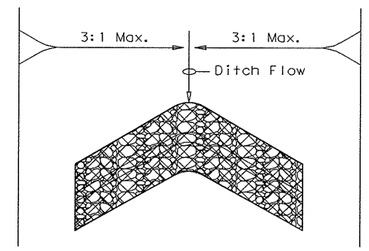

"V" SHAPE
(Plan View)

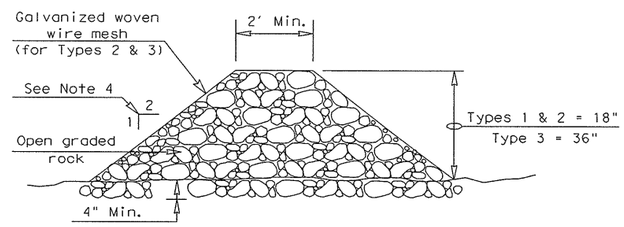

SECTION C-C

PLANS SHEET LEGEND

Type 1 Rock Filter Dam — RFD1
Type 2 Rock Filter Dam — RFD2
Type 3 Rock Filter Dam — RFD3

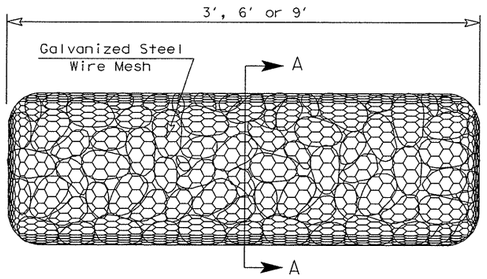

TYPE 4 (SACK GABIONS)

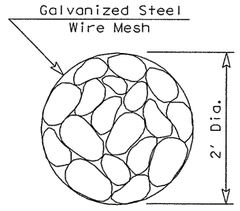

SECTION A-A

ROCK FILTER DAM USAGE GUIDELINES

Rock Filter Dams should be constructed downstream from disturbed areas to intercept sediment from overland runoff and/or concentrated flow. The dams should be sized to filter a maximum flow through rate of 60 GPM/FT^2 of cross sectional area. A 2 year storm frequency may be used to calculate the flow rate.

Type 1 (18" high with no wire mesh): Type 1 may be used at the toe of slopes, around inlets, in small ditches, and at dike or swale outlets. This type of dam is recommended to control erosion from a drainage area of 5 acres or less. Type 1 may not be used in concentrated high velocity flows (approx. 8 Ft/Sec or more) in which aggregate wash out may occur. Sandbags may be used at the embedded foundation (4" deep min.) for better filtering efficiency of low flows if called for on the plans or directed by the Engineer.

Type 2 (18" high with wire mesh): Type 2 may be used in ditches and at dike or swale outlets.

Type 3 (36" high with wire mesh): Type 3 may be used in stream flow and should be secured to the stream bed.

Type 4 (Sack gabions): Type 4 May be used in ditches and smaller channels to form an erosion control dam.

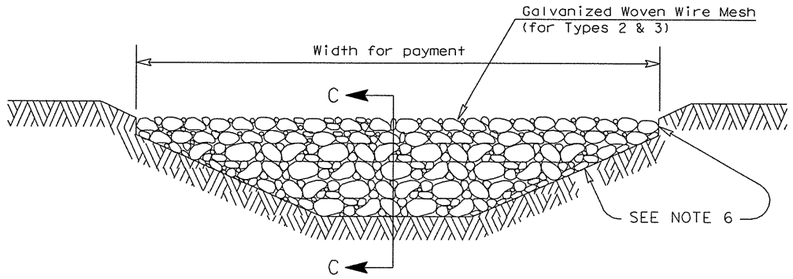

FILTER DAM AT CHANNEL SECTIONS

RFD1 OR RFD2 OR RFD3
TYPE 1 OR TYPE 2

GENERAL NOTES

1. If shown on the plans or directed by the Engineer, filter dams should be placed near the toe of slopes where erosion is anticipated, upstream and/or downstream at drainage structures, and in roadway ditches and channels to collect sediment.
2. Materials (aggregate, wire mesh, sandbags, etc.) shall be as indicated by the specification for "Rock Filter Dams for Erosion and Sedimentation Control".
3. The rock filter dam dimensions shall be as indicated on the SW3P plans.
4. Side slopes should be 2:1 or flatter. Dams within the safety zone shall have sideslopes of 6:1 or flatter.
5. Maintain a minimum of 1' between top of rock filter dam weir and top of embankment for filter dams at sediment traps.
6. Filter dams should be embedded a minimum of 4" into existing ground.
7. The sediment trap for ponding of sediment laden runoff shall be of the dimensions shown on the plans.
8. Rock filter dam types 2 & 3 shall be secured with 20 gauge galvanized woven wire mesh with 1" diameter hexagonal openings. The aggregate shall be placed on the mesh to the height & slopes specified. The mesh shall be folded at the upstream side over the aggregate and tightly secured to itself on the downstream side using wire ties or hog rings. In stream use the mesh should be secured or staked to the stream bed prior to aggregate placement.
9. Sack Gabions should be staked down with ¾" dia. rebar stakes.
10. Flow outlet should be onto a stabilized area (vegetation, rock, etc.).
11. The guidelines shown hereon are suggestions only and may be modified by the Engineer.

LEVELS DIS.

Texas Department of Transportation
Design Division (Roadway)

TEMPORARY EROSION, SEDIMENT AND WATER POLLUTION CONTROL MEASURES

ROCK FILTER DAMS

EC(2)-93

FILE: EC293.DGN	DN: HEJ	CK: HEJ	DW: BGD	CK:
©TxDOT JUNE 1993	DISTRICT	FEDERAL AID PROJECT		SHEET
REVISIONS		2452-01-050		
	COUNTY	CONTROL	SECT	JOB	HIGHWAY
	BEE				449

DISCLAIMER:
The use of this standard is governed by the "Texas Engineering Practice Act". No warranty of any kind is made by TxDOT for any purpose whatsoever. TxDOT assumes no responsibility for the conversion of this standard to other formats or for incorrect results or damages resulting from its use.

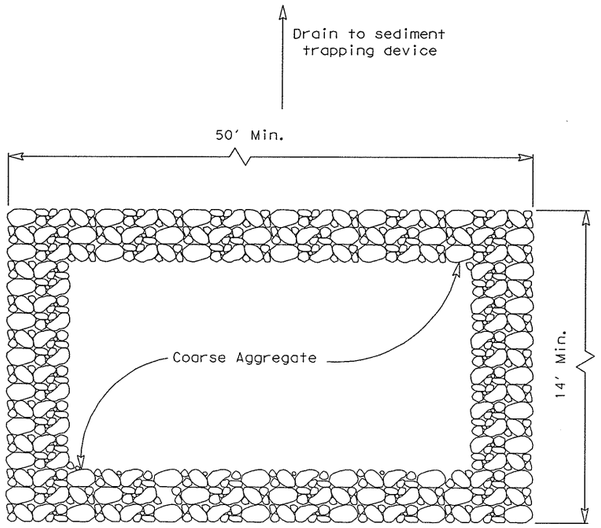

PLAN

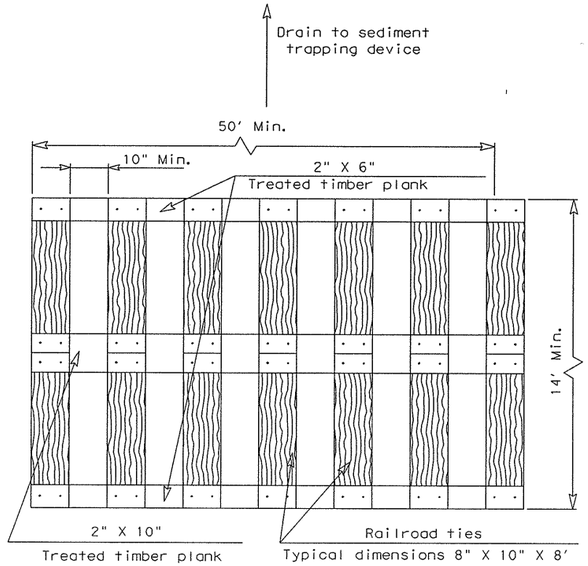

PLAN

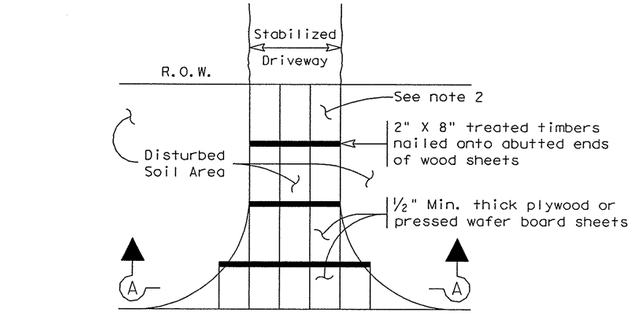

Paved Roadway

PLAN

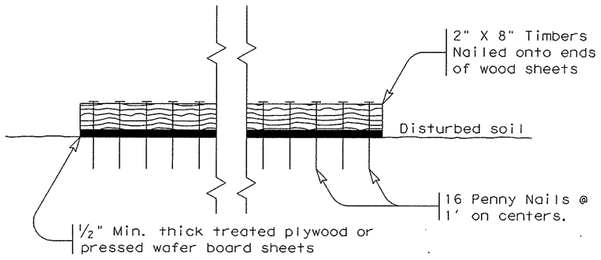

SECTION A-A

CONSTRUCTION EXIT (TYPE 3)

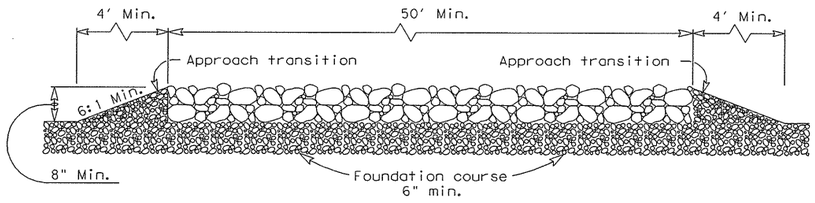

PROFILE

CONSTRUCTION EXIT (TYPE 1)

GENERAL NOTES

1. The length of the type 1 construction exit shall be as indicated on the plans, but not less than 50'.
2. The coarse aggregate should be open graded with a size of 4" to 8".
3. The approach transitions should be no steeper than 6:1 and constructed as directed by the Engineer.
4. The construction exit foundation course shall be flexible base, bituminous concrete, portland cement concrete or other material as approved by the Engineer.
5. The construction exit shall be graded to allow drainage to a sediment trapping device.
6. The guidelines shown hereon are suggestions only and may be modified by the Engineer.

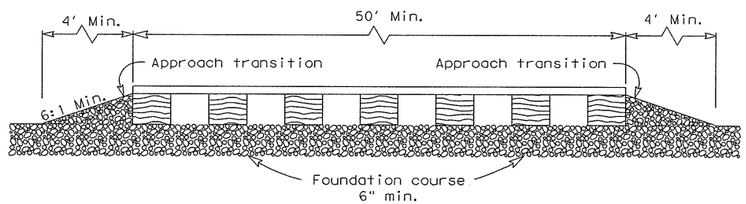

PROFILE

CONSTRUCTION EXIT (TYPE 2)

GENERAL NOTES

1. The length of the type 2 construction exit shall be as indicated on the plans, but not less than 50'.
2. The treated timber planks shall be attached to the railroad ties with ½"x 6" min. lag bolts. Other fasteners may be used as approved by the Engineer.
3. The treated timber planks shall be #2 grade min., and should be free from large and loose knots.
4. The approach transitions shall be no steeper than 6:1 and constructed as directed by the Engineer.
5. The construction exit foundation course shall be flexible base, bituminous concrete, portland cement concrete or other material as approved by the Engineer.
6. The construction exit should be graded to allow drainage to a sediment trapping device.
7. The guidelines shown hereon are suggestions only and may be modified by the Engineer.

GENERAL NOTES

1. The length of the type 3 construction exit shall be as shown on the plans, or as directed by the Engineer.
2. The type 3 construction exit may be constructed from open graded crushed stone with a size of two to four inches spread a min. of 4" thick to the limits shown on the plans.
3. The treated timber planks shall be #2 grade min., and should be free from large and loose knots.
4. The guidelines shown hereon are suggestions only and may be modified by the Engineer.

Texas Department of Transportation
Design Division (Roadway)

TEMPORARY EROSION, SEDIMENT AND WATER POLLUTION CONTROL MEASURES

CONSTRUCTION EXITS

EC(3)-93

FILE: EC393.DGN	DN: HEJ	CK: HEJ	DW: BGD	CK:
©TxDOT JUNE 1993	DISTRICT	FEDERAL AID PROJECT		SHEET
REVISIONS		2452-01-058		
	COUNTY	CONTROL	SECT	JOB	HIGHWAY
	BEXAR				450

LEVELS DISABLED