FED ROAD DIV	STATE	PROJECT NO.	SHEE
6	TEXAS		1
STATE DIST	COUNTY	STATE CONTROL NO.	HIGHWAY
YKM	GONZALES, ETC	1442-03-016, ETC	FM 1680

STATE OF TEXAS
TEXAS DEPARTMENT OF TRANSPORTATION

PLANS OF PROPOSED STATE HIGHWAY IMPROVEMENT

FOR THE CONSTRUCTION OF RESTORATION OF EXISTING ROAD
CONSISTING OF RESTORE ROADWAY

INDEX OF SHEETS

SHEET NO.	DESCRIPTION
	GENERAL
1	TITLE SHEET
2-4	TYPICAL SECTIONS
5, 5A-	GENERAL NOTES & BASIS OF ESTIMATE
6	ESTIMATE & QUANTITY SHEET
7	SUMMARY OF ROADWAY QUANTITIES
8-10	SUMMARY OF DRIVEWAY, TURNOUT, AND MAILBOX QUANTITIES
11-16	SUMMARY OF CENTERLINE STRUCTURES
17-19	SUMMARY OF SMALL SIGNS
20	SUMMARY OF MISCELLANEOUS QUANTITIES
	TRAFFIC CONTROL PLAN
	STANDARDS SHEETS
21	* TCP-ONE LANE ROADWAY (YKM DIST)
22	* TCP - UNSURFACED ROADWAY (YKM DIST)
23	* TCP (2-1)-98
24-25	* TCP (3-1) & (3-3)-98
26	* TCP (7-1)-98
27	* WZ (STPM)-03
28-39	* BC (1)-07 THRU BC (12)-07
	ROADWAY
40	INTERSECTION & DRIVEWAY DETAILS
	STANDARDS SHEETS
41	* MBGF-03A
42	* SGT(7)-03A
43	* SGT(8)-03A
44-46	* MB-06(1) YKM
	DRAINAGE DETAILS
47	DRAINAGE AREA MAP
48-49	HYDRAULIC DATA
50-54	CULVERT LAYOUT
55-64	CULVERT PROFILES
	STANDARDS SHEETS
65-69	* SCC-MD, SCC-5&6, SCC-7, & SCC-10
70-75	* SCP-MD, SCP-4, SCP-5, SCP-6, SCP-7, & SCP-10
76-77	* MC-MD & MC-7-10
78	BCS
79-81	* SETB-FW-0
82-84	* SETB-FW-S
85	* PW
86-87	* SETP-CD
88	* SETP-PD
	TRAFFIC ITEMS
	STANDARDS SHEETS
89-91	* D&OM (1), (3), & (5)-04
92-93	* PM(1)-03 & PM(2)-08
94	* RCPM-96
95-98	* SMD (GEN)-08 & SMD(SLIP-1)-(SLIP-3)-08
	ENVIRONMENTAL PERMITS, ISSUES AND COMMITMENTS
99	SW3P
100	ENVIRONMENTAL PERMITS, ISSUES AND COMMITMENTS
101	TCEQ 401 WATER QUALITY CERTIFICATION
	STANDARDS SHEETS
102-104	* EC (1)-93 - EC (3)-93

N

0 2 4 8
SCALE IN MILES

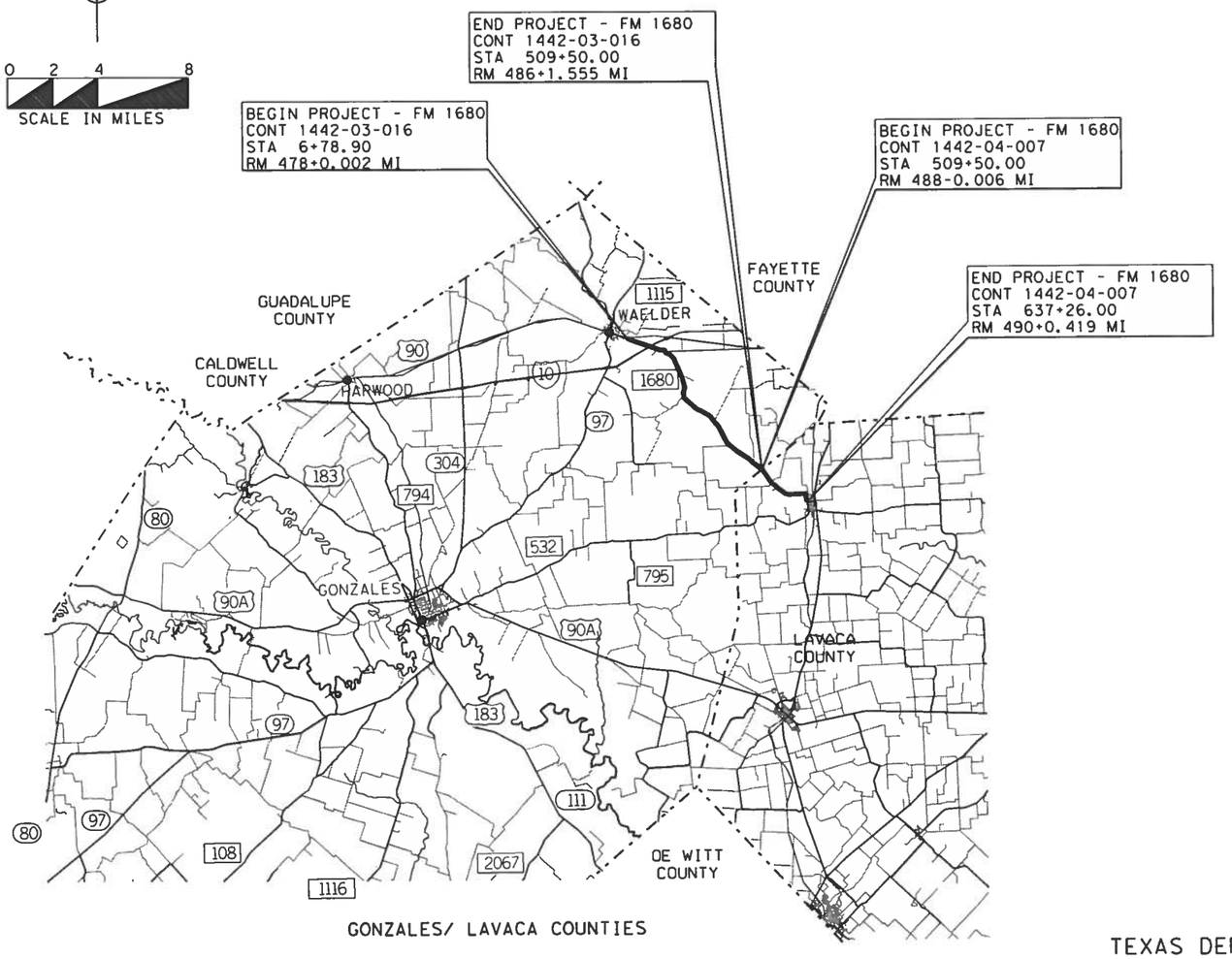

GONZALES/ LAVACA COUNTIES

YOAKUM DISTRICT

ADT: 320 VPD (2006)
590 VPD (2026)
DESIGN SPEED: N/A

CSJ: 1442-03-016
HIGHWAY: FM 1680
LIMITS: FROM US 90 TO LAVACA C/L
ROADWAY LENGTH = 50335.67 FT = 9.533 MI
BRIDGE LENGTH = 69.33 FT = 0.013 MI
TOTAL LENGTH = 50405.00 FT = 9.546 MI

CSJ: 1442-04-007
HIGHWAY: FM 1680
LIMITS: FROM GONZALES C/L TO MOULTON C-L
ROADWAY LENGTH = 12776.00 FT = 2.419 MI
BRIDGE LENGTH = 0.00 FT = 0.000 MI
TOTAL LENGTH = 12776.00 FT = 2.419 MI

CONTRACTOR: _____
DATE OF LETTING: _____
DATE WORK BEGAN: _____
DATE WORK COMPLETED: _____
DATE WORK ACCEPTED: _____
LIST OF APPROVED FIELD CHANGES:

THIS IS TO CERTIFY THAT THE CONSTRUCTION WORK WAS PERFORMED IN ACCORDANCE WITH THE PLANS, CONTRACT AND LISTED FIELD CHANGES.

_____ _____
AREA ENGINEER DATE

YOAKUM DISTRICT 13

COUNTY GONZALES, ETC PROJ NO. _____
HWY NO. FM 1680, ETC LETTING DATE _____
DATE ACCEPTED _____

* THE STANDARD SHEETS SPECIFICALLY IDENTIFIED ABOVE HAVE BEEN SELECTED BY ME OR UNDER MY RESPONSIBLE SUPERVISION AS BEING APPLICABLE TO THIS PROJECT.

OLEN D. HOWARD, PE — 4/6/09 DATE

SPECIFICATIONS ADOPTED BY THE TEXAS DEPARTMENT OF TRANSPORTATION, JUNE 1, 2004 AND SPECIFICATION ITEMS LISTED AND DATED AS FOLLOWS, SHALL GOVERN ON THIS PROJECT: FEDERAL-AID CONSTRUCTION CONTRACTS (FORM FHWA 1273, MARCH 1994)

© 2009 by Texas Department of Transportation
all rights reserved.

STATE OF TEXAS
OLEN D. HOWARD
69804
REGISTERED
PROFESSIONAL ENGINEER

EXCEPTIONS: STA 111+88.00 - STA 111+97.00 (-9.0')
EQUATIONS: STA 267+83.9 BK = STA 266+41.0 FWD (+142.9')
RAILROAD CROSSING: 1 RR GRADE CROSSING RETAINED

TEXAS DEPARTMENT OF TRANSPORTATION

SUBMITTED FOR LETTING 4/6/09
PROJECT MANAGER
JACOBS ENGINEERING GROUP, INC.
TBPE FIRM NO. 2966

APPROVED FOR LETTING
DIRECTOR, DESIGN DIVISION

RECOMMENDED FOR LETTING
DISTRICT ENGINEER

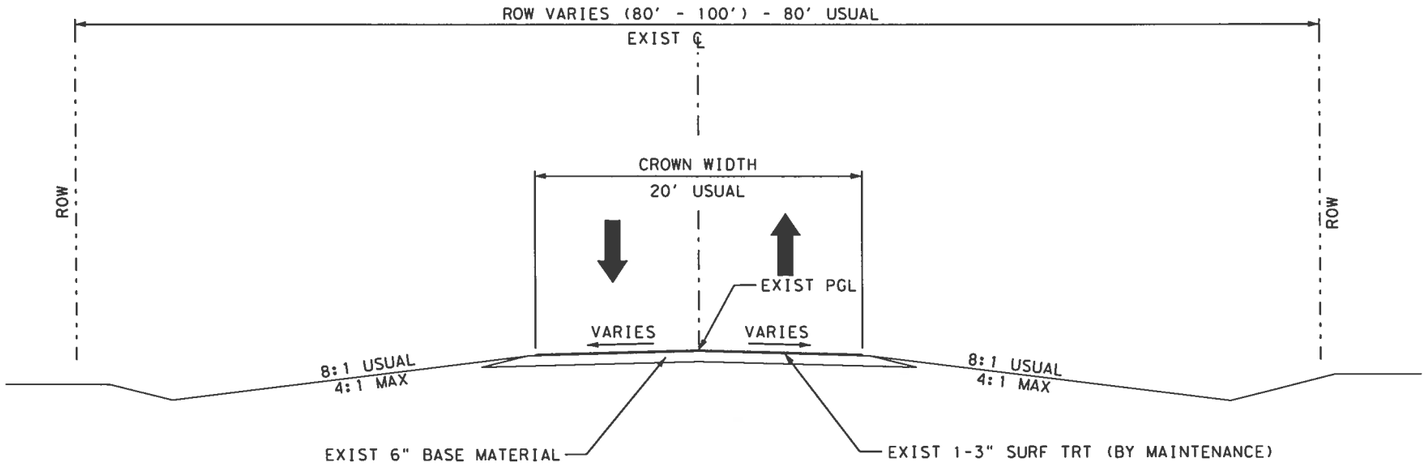

EXIST SECTION

STA 6+78.90 TO STA 509+50.00
US 90 TO LAVACA C/L
CSJ:1442-03-016
NOT TO SCALE

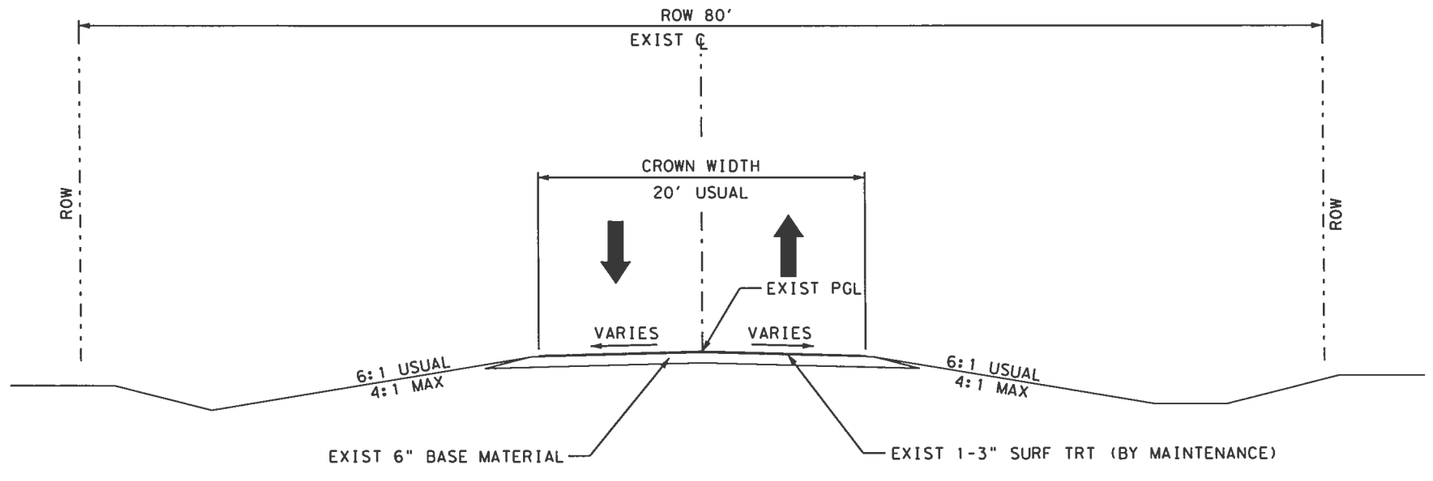

EXIST SECTION

STA 509+50.00 TO STA 637+26.00
GONZALES C/L TO MOULTON C-L
CSJ: 1442-04-007
NOT TO SCALE

NOTE:

1. LIMITS OF PEACH CREEK BRIDGE
   STA 289+12.00 TO STA 290+32.00.

4/2/09

STATE OF TEXAS
OLEN D. HOWARD
69804
REGISTERED
PROFESSIONAL ENGINEER

© 2009 Texas Department of Transportation

JACOBS
5995 Rogerdale Road
Houston, TX 77052-3495
(832) 351-7230 www.jacobs.com

FM 1680
TYPICAL SECTIONS

SHEET 1 OF

FED. RD. DIV. NO.	PROJECT NO.		SHEET NO.
6			2
STATE	DIST.	COUNTY	
TEXAS	YKM	GONZALES, ETC	
CONT	SECT	JOB	HIGHWAY NO.
1442	03	016, ETC	FM 1680

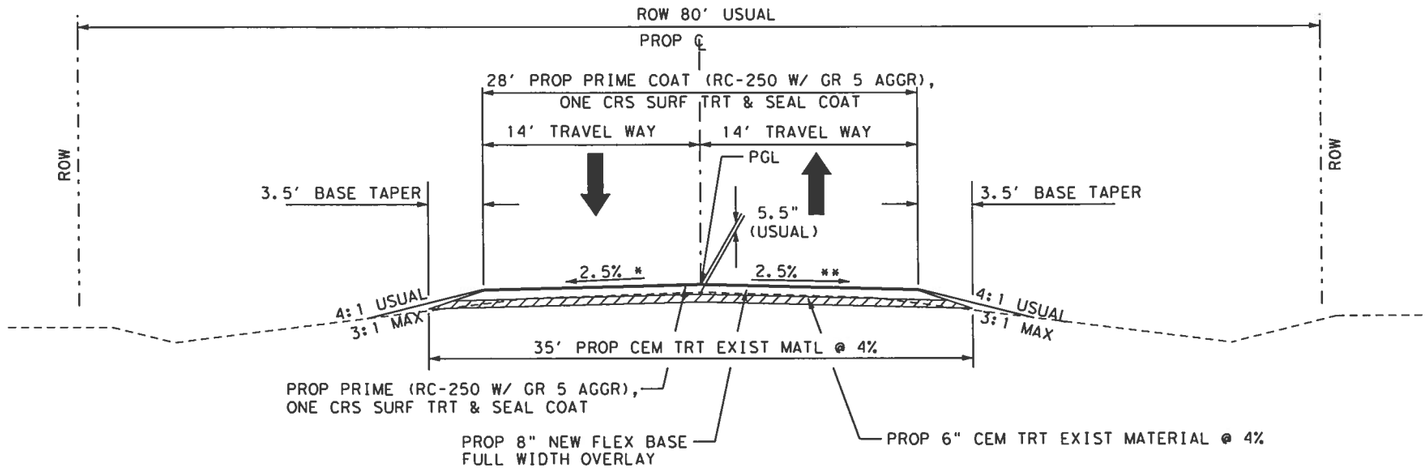

PROPOSED SECTION

STA 6+78.90 TO STA 509+50.00
US 90 TO LAVACA C/L
CSJ 1442-03-016
NOT TO SCALE

NOTES:

1. EXCEPTION: STA 111+88.00 TO STA 111+97.00 (-9.0')
   (AT RAILROAD)

2. EXCEPTION: STA 283+00.00 TO STA 297+00.00 (-1400.0')
   (AT PEACH CREEK BRIDGE)

   EXCEPTION IS FOR FLEX BASE, PRIME COAT, AND OCST.

* LEFT SIDE

MATCH EXIST CS	FROM STA	TO STA
-2.5% TO -3.0%	7+70.70	10+15.30
-3.0% TO -2.5%	13+37.00	13+49.00
-2.5% TO -5.2%	18+17.00	18+29.00
-5.2% TO -2.5%	94+61.00	95+27.00
-2.5% TO 6.9%	98+64.00	99+30.00
6.9% TO -2.5%	102+02.00	104+32.00
-2.5% TO -6.8%	109+02.00	111+32.00
-6.8% TO -2.5%	112+61.00	113+66.00
-2.5% TO 4.2%	116+48.00	117+53.00
4.2% TO -2.5%	118+73.00	120+37.00
-2.5% TO 3.9%	123+15.00	124+79.00
3.9% TO -2.5%	132+65.00	134+21.00
-2.5% TO 2.6%	139+36.00	140+92.00
2.6% TO -2.5%	142+83.00	144+08.00
-2.5% TO 3.8%	146+34.00	147+59.00
3.8% TO -2.5%	187+06.00	188+60.00
-2.5% TO 2.8%	191+99.00	193+53.00
2.8% TO -2.5%	210+79.00	212+09.00
-2.5% TO -3.5%	221+71.00	223+01.00
-3.5% TO -2.5%	227+36.00	227+60.00
-2.5% TO -3.1%	248+32.00	248+56.00
-3.1% TO -2.5%	276+86.00	277+01.00
-2.5% TO 2.7%	284+04.00	284+19.00
2.7% TO -2.5%	291+05.00	292+32.00
-2.5% TO 5.2%	292+94.00	294+21.00
5.2% TO -2.5%	313+97.00	315+85.00
-2.5% TO -4.1%	322+96.00	324+84.00
-4.1% TO -2.5%	336+25.00	336+64.00
-2.5% TO 3.4%	339+47.00	339+86.00
3.4% TO -2.5%	346+98.00	347+93.00
-2.5% TO -4.7%	355+61.00	357+05.00
-4.7% TO -2.5%	391+53.00	392+07.00
-2.5% TO -3.8%	403+33.00	403+87.00
-3.8% TO -2.5%	431+50.00	431+82.00
-2.5% TO 5.5%	433+53.00	433+85.00
5.5% TO -2.5%	460+65.00	462+61.00
-2.5% TO -4.1%	467+53.00	469+49.00
-4.1% TO -2.5%	473+14.00	473+53.00
-2.5% TO 4.3%	475+92.00	476+31.00
	502+55.00	504+21.00

** RIGHT SIDE

MATCH EXIST CS	FROM STA	TO STA
-2.5% TO 3.0%	7+70.70	10+15.30
3.0% TO -2.5%	12+15.00	13+49.00
-2.5% TO 5.2%	18+17.00	19+51.00
5.2% TO -2.5%	93+39.00	95+27.00
-2.5% TO -6.9%	98+64.00	100+52.00
-6.9% TO -2.5%	103+24.00	104+32.00
-2.5% TO 6.8%	109+02.00	110+10.00
6.8% TO -2.5%	111+39.00	113+66.00
-2.5% TO -4.2%	116+48.00	118+75.00
-4.2% TO -2.5%	119+95.00	120+37.00
-2.5% TO -3.9%	123+15.00	123+57.00
-3.9% TO -2.5%	133+87.00	134+21.00
-2.5% TO -2.6%	139+36.00	139+70.00
-2.6% TO -2.5%	144+06.00	144+08.00
-2.5% TO -3.8%	146+34.00	146+36.00
-3.8% TO -2.5%	188+28.00	188+60.00
-2.5% TO -2.8%	191+99.00	192+31.00
-2.8% TO -2.5%	212+02.00	212+09.00
-2.5% TO 3.5%	221+71.00	221+78.00
3.5% TO -2.5%	226+13.00	227+60.00
-2.5% TO 3.1%	248+32.00	249+79.00
3.1% TO -2.5%	275+64.00	277+01.00
-2.5% TO -2.7%	284+04.00	285+41.00
-2.7% TO -2.5%	292+27.00	292+32.00
-2.5% TO -5.2%	292+94.00	292+99.00
-5.2% TO -2.5%	315+19.00	315+85.00
-2.5% TO 4.1%	322+96.00	323+62.00
4.1% TO -2.5%	335+03.00	336+64.00
-2.5% TO -3.4%	339+47.00	341+08.00
-3.4% TO -2.5%	347+71.00	347+93.00
-2.5% TO 4.7%	355+61.00	355+83.00
4.7% TO -2.5%	390+31.00	392+07.00
-2.5% TO 3.8%	403+33.00	405+09.00
3.8% TO -2.5%	430+28.00	431+82.00
-2.5% TO -5.5%	433+53.00	435+07.00
-5.5% TO -2.5%	461+88.00	462+61.00
-2.5% TO 4.1%	467+53.00	468+26.00
4.1% TO -2.5%	471+92.00	473+53.00
-2.5% TO -4.3%	475+92.00	477+53.00
	503+77.00	504+21.00

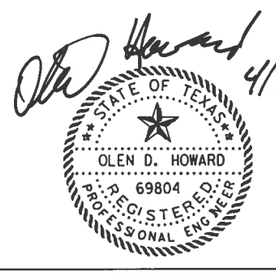

© 2009 Texas Department of Transportation

JACOBS
5995 Rogerdale Road
Houston, TX 77052-3495
(832) 351-7230 www.jacobs.com

FM 1680

TYPICAL SECTIONS

SHEET 2 OF

FED. RD. DIV. NO.	PROJECT NO.		SHEET NO.
6			3
STATE	DIST.	COUNTY	
TEXAS	YKM	GONZALES, ETC	
CONT	SECT	JOB	HIGHWAY NO.
1442	03	016, ETC	FM 1680

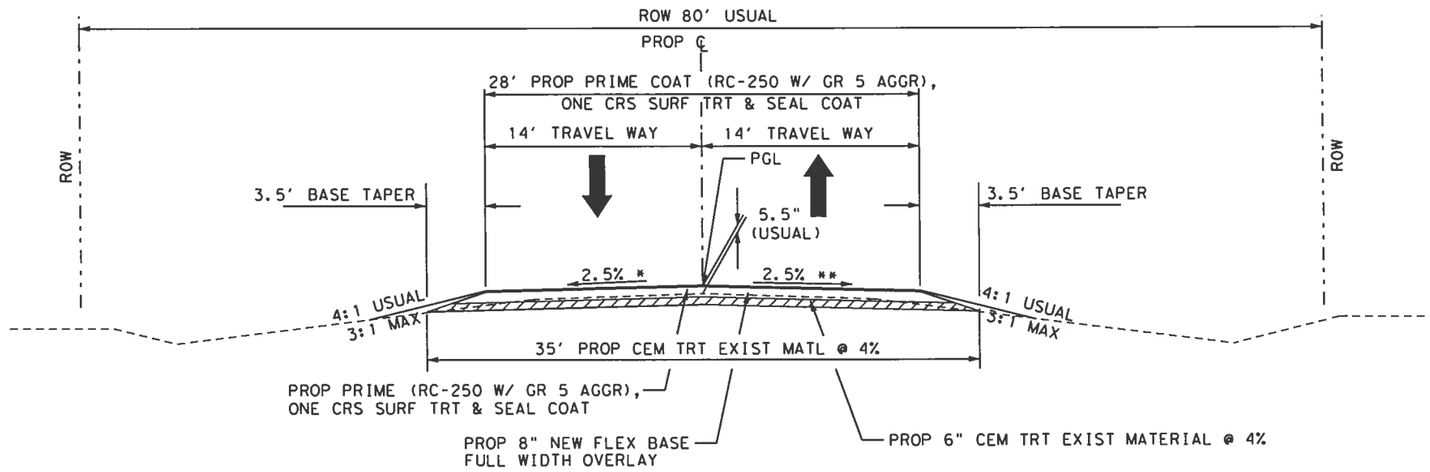

PROPOSED SECTION

STA 509+50.00 TO STA 637+26.00
GONZALES C/L TO MOULTON C-L
CSJ 1442-04-007
NOT TO SCALE

NOTES:

1. EXCEPTION: STA 111+88.00 TO STA 111+97.00 (-9.0')
   (AT RAILROAD)

2. EXCEPTION: STA 283+00.00 TO STA 297+00.00 (-1400.0')
   (AT PEACH CREEK BRIDGE)

   EXCEPTION IS FOR FLEX BASE, PRIME COAT, AND OCST.

* LEFT SIDE

4.3% TO -2.5%	FROM STA 511+65.00	TO STA 513+31.00
-2.5% TO -4.0%	FROM STA 542+77.00	TO STA 543+14.00
-4.0% TO -2.5%	FROM STA 549+48.00	TO STA 549+85.00
-2.5% TO 1.9%	FROM STA 551+78.00	TO STA 552+86.00
1.9% TO -2.5%	FROM STA 557+73.00	TO STA 558+81.00
-2.5% TO -3.4%	FROM STA 570+84.00	TO STA 571+06.00
-3.4% TO -2.5%	FROM STA 573+30.00	TO STA 573+52.00
-2.5% TO -4.0%	FROM STA 584+47.00	TO STA 584+84.00
-4.0% TO -2.5%	FROM STA 602+69.00	TO STA 603+06.00
MATCH EXIST CS	FROM STA 636+55.90	TO STA 637+26.00

** RIGHT SIDE

-4.3% TO -2.5%	FROM STA 511+65.00	TO STA 512+09.00
-2.5% TO 4.0%	FROM STA 541+55.00	TO STA 543+14.00
4.0% TO -2.5%	FROM STA 549+48.00	TO STA 551+07.00
-2.5% TO -2.5%	FROM STA 552+86.00	TO STA 552+86.00
-2.5% TO -2.5%	FROM STA 557+73.00	TO STA 557+73.00
-2.5%TO 3.4%	FROM STA 569+62.00	TO STA 571+06.00
3.4% TO -2.5%	FROM STA 573+30.00	TO STA 574+74.00
-2.5% TO 4.0%	FROM STA 583+25.00	TO STA 584+84.00
4.0% TO -2.5%	FROM STA 602+69.00	TO STA 604+28.00
MATCH EXIST CS	FROM STA 636+55.90	TO STA 637+26.00

4/2/09

STATE OF TEXAS
OLEN D. HOWARD
69804
REGISTERED
PROFESSIONAL ENGINEER

© 2009 Texas Department of Transportation

JACOBS
5995 Rogerdale Road
Houston, TX 77052-3495
(832) 351-7230 www.jacobs.com

FM 1680

TYPICAL SECTIONS

SHEET 3 OF

FED. RD. DIV. NO.	PROJECT NO.		SHEET NO.
6			4
STATE	DIST.	COUNTY	
TEXAS	YKM	GONZALES, ETC	
CONT	SECT	JOB	HIGHWAY NO.
1442	03	016, ETC	FM 1680

SUMMARY OF ROADWAY QUANTITIES

LIMITS FROM STATION TO STATION	ITEM 247 FLEX BASE			ITEM 275 CEMENT TREATMENT				ITEM 316								REMARKS
										PRIME		OCST		SEAL COAT		
	WIDTH * (FT)	AREA * (SY)	(CMPL IN PLC) (TY E GR 1) (FNAL POS) (CY)	WIDTH * (FT)	AREA * (SY)	CEMENT (4%) (128 LB/CF) ** (TON)	CEMENT TREAT (EXIST MATL) (6") (SY)	WIDTH * (FT)	AREA * (SY)	ASPH RC-250 (0.20 GAL/SY) (GAL)	AGGR GR 5 (1CY/ 140 SY) (CY)	ASPH (0.40 GAL/SY) (GAL)	AGGR GR 3 (1CY/ 85 SY) (CY)	ASPH (0.34 GAL/SY) (GAL)	AGGR GR 4 (1CY/ 130 SY) (CY)	
CSJ: 1442-03-016																
6+78.90 - 111+88.00	30.0	35145	7934	35.0	39702	457	39702	28.0	32810	6562	234	13124	386	11155	252	SEE NOTE 1
111+97.00 - 267+83.90	30.0	51956	11546	35.0	60616	698	60616	28.0	48493	9699	346	19397	571	16487	373	
266+41.00 - 299+23.50	30.0	10942	2431	35.0	12765	147	12765	28.0	10212	2042	73	4085	120	3472	79	
299+23.50 - 299+46.50	30.0	77	26					28.0	72	14	1	29	1	24	1	SEE NOTE 2
299+46.50 - 309+08.50	30.0	3207	713	35.0	3741	43	3741	28.0	2993	599	21	1197	35	1018	23	
309+08.50 - 309+31.50	30.0	77	26					28.0	72	14	1	29	1	24	1	SEE NOTE 2
309+31.50 - 386+95.33	30.0	25879	5751	35.0	30193	348	30193	28.0	24154	4831	173	9662	284	8212	186	
386+95.33 - 387+18.66	30.0	78	22					28.0	73	15	1	29	1	25	1	SEE NOTE 3
387+18.66 - 509+50.00	30.0	40771	9060	35.0	47566	548	47566	28.0	38053	7611	272	15221	448	12938	293	
SUBTOTAL CSJ: 1442-03-016			37509			2241	194583			31387	1122	62773	1847	53355	1209	
CSJ: 1442-04-007																
509+50.00 - 637+26.00	30.0	42587	9574	35.0	49684	572	49684	28.0	39748	7950	284	15899	468	13514	306	SEE NOTE 4
SUBTOTAL CSJ: 1442-04-007			9574			572	49684			7950	284	15899	468	13514	306	
PROJECT TOTAL			47083			2813	244267			39337	1406	78672	2315	66869	1515	

* FOR CONTRACTOR'S INFORMATION ONLY
** 128 #/CF PRORATED FOR COMBINING FLEX BASE AND SUBGRADE.

NOTES:

1. QUANTITY INCLUDES LONGITUDINAL PAVEMENT TAPER AND CORNER RADII AT US 90.
2. PLACE 12" BASE ACROSS CULVERT.
3. PLACE 10" BASE ACROSS CULVERT.
4. QUANTITY INCLUDES LONGITUDINAL PAVEMENT TAPER.

© 2009 Texas Department of Transportation

JACOBS
5995 Rogerdale Road
Houston, TX 77052-3495
(832) 351-7230 www.jacobs.com

FM 1680

SUMMARY OF ROADWAY QUANTITIES

SHEET 1 OF

FED. RD. DIV. NO.	PROJECT NO.		SHEET NO.
6			7
STATE	DIST.	COUNTY	
TEXAS	YKM	GONZALES, ETC	
CONT	SECT	JOB	HIGHWAY NO.
1442	03	016, ETC	FM 1680

SUMMARY OF DRIVEWAY, TURNOUT AND MAILBOX QUANTITIES

LOCATION	LT/ RT	"W" (FT)	"X" (FT)	"R" (FT)	*ITEM 247 FL BS (CIP) (TY E GR 1) (FNAL POS) (CY)	*ITEM 316 ASPH (RC-250) (0.20 GAL /SY) (GAL)	*ITEM 316 AGGR GR 5 (1 CY/ 140 SY) (CY)	*ITEM 316 ASPH (0.40 GAL / SY) (GAL)	*ITEM 316 AGGR GR 3 (1 CY/ 85 SY) (CY)	*ITEM 316 ASPH (0.34 GAL / SY) (GAL)	*ITEM 316 AGGR GR 4 (1 CY/ 130 SY) (CY)	ITEM 530 INTERSECT (SURF TRT) (SY)	ITEM 530 DRIVEWAYS (SURF TRT) (SY)	ITEM 530 TURNOUT (SURF TRT) (SY)	ITEM 530 DRIVEWAY (CONC) (SY)	ITEM 560 MAILBOX ASSEMBLY SINGLE (EA)	ITEM 560 MAILBOX ASSEMBLY DOUBLE (EA)	ITEM 560 MAILBOX ASSEMBLY MULT (EA)	REMARKS
10+40	L	15			2.3	5.5	0.2	11.0	0.3				27.8						
28+78	R	26			3.3	7.9	0.3	15.8	0.5				40.0						
61+28	L	18			2.6	6.2	0.2	12.5	0.4				31.1						
89+62	R	37			4.4	10.6	0.4	21.1	0.6				52.2						
90+14	R	16			4.8	3.8	0.1	7.7	0.2							1			MB TURNOUT AT DRIVEWAY
90+38	L	16			2.4	5.8	0.2	11.5	0.3				28.9						
93+30	R	20			7.5	6.0	0.2	12.0	0.4							1			MB TURNOUT
93+30	L	20			2.8	6.7	0.2	13.4	0.4				33.3						
110+33	L	25			3.2	7.7	0.3	15.4	0.5				38.9						
110+91	R	28	30	35/35	12.6	30.2	1.1	60.5	1.7	51.4	1.2	151.2							CR 415
110+91	L	23	30	35/35	11.3	27.1	1.0	54.2	1.5	46.1	1.0	135.6							CR 415
119+71	R	15			2.3	5.5	0.2	11.0	0.3				27.8						
120+03	R	15			2.3	5.5	0.2	11.0	0.3				27.8						
134+23	L	30			3.7	8.9	0.3	17.8	0.5				44.4						
138+55	R	18	30	20/20	6.6	15.8	0.6	31.7	0.9	26.9	0.6	79.2							CR 418
140+11	L	18			2.6	6.2	0.2	12.5	0.4				31.1						
143+32	L	15			2.3	5.5	0.2	11.0	0.3				27.8						
143+65	L	15			2.3	5.5	0.2	11.0	0.3				27.8						
144+35	L	22			3.0	7.2	0.3	14.4	0.4				35.6						
151+36	R	18			2.6	6.2	0.2	12.5	0.4				31.1						
174+58	R	28			3.5	8.4	0.3	16.8	0.5				42.2						
182+15	L	16			2.4	5.8	0.2	11.5	0.3				28.9						
182+93	L	37	30	25/60	18.7	44.9	1.6	89.8	2.5	76.3	1.7	224.4							CR 417
182+93	R	20			7.5	6.0	0.2	12.0	0.4					30.0		1			MB TURNOUT
193+91	R	15			2.3	5.5	0.2	11.0	0.3				27.8						
205+40	L	15			2.3	5.5	0.2	11.0	0.3				27.8						
214+80	L	16			2.4	5.8	0.2	11.5	0.3				28.9						
223+56	R	28			3.5	8.4	0.3	16.8	0.5				42.2						
228+11	L	15			2.3	5.5	0.2	11.0	0.3				27.8						
229+41	L	15			2.3	5.5	0.2	11.0	0.3				27.8						
230+26	R	30			3.7	8.9	0.3	17.8	0.5				44.4						
239+54	R	28	30	30/50	14.5	34.8	1.2	69.6	1.9	59.2	1.3	174.0							CR 420
244+48	R	16			2.4	5.8	0.2	11.5	0.3				28.9						
264+03	R	26			3.3	7.9	0.3	15.8	0.5				40.0						
267+40	L	17			2.5	6.0	0.2	12.0	0.4				30.0						
285+44	R	15			2.3	5.5	0.2	11.0	0.3				27.8						
292+44	R	15			2.3	5.5	0.2	11.0	0.3				27.8						
293+28	L	15			2.3	5.5	0.2	11.0	0.3				27.8						
308+41	L	16			2.4	5.8	0.2	11.5	0.3				28.9						
321+60	L	52	30	60/60	28.8	69.1	2.5	138.2	3.8	117.5	2.7	345.6							CR 405
329+16	R	18			2.6	6.2	0.2	12.5	0.4				31.1						
331+23	R	21	15	10/10											41.5				
336+68	R	15			2.3	5.5	0.2	11.0	0.3				27.8						
336+72	L	20			2.8	6.7	0.2	13.4	0.4				33.3						
336+83	R	21			5.6	4.5	0.2	9.0	0.3					22.3				1	MB TURNOUT AT DRIVEWAY
338+07	R	20			2.8	6.7	0.2	13.4	0.4				33.3						
355+47	L	15			2.3	5.5	0.2	11.0	0.3				27.8						
355+73	L	20			2.8	6.7	0.2	13.4	0.4				33.3						
355+90	R	22			3.0	7.2	0.3	14.4	0.4				35.6						
355+62	R	18			5.1	4.1	0.1	8.2	0.2					20.3			1		MB TURNOUT AT DRIVEWAY
366+24	R	16			4.8	3.8	0.1	7.7	0.2					19.0		1			MB TURNOUT AT DRIVEWAY
366+50	R	20			2.8	6.7	0.2	13.4	0.4				33.3						
373+90	L	15			2.3	5.5	0.2	11.0	0.3				27.8						
383+28	R	22			3.0	7.2	0.3	14.4	0.4				35.6						
383+35	L	18			2.6	6.2	0.2	12.5	0.4				31.1						
383+77	R	20			7.5	6.0	0.2	12.0	0.4					30.0		1			MB TURNOUT
384+63	L	18			2.6	6.2	0.2	12.5	0.4				31.1						
405+11	L	15			2.3	5.5	0.2	11.0	0.3				27.8						
407+43	L	15			2.3	5.5	0.2	11.0	0.3				27.8						
409+50	R	34	30	30/50	16.2	38.9	1.4	77.8	2.2	66.1	1.5	194.4							CR 398
410+75	L	17			2.5	6.0	0.2	12.0	0.4				30.0						
416+05	L	16			2.4	5.8	0.2	11.5	0.3				28.9						
424+43	R	15			2.3	5.5	0.2	11.0	0.3				27.8						
SUB-TOTAL					279.5	601.8	21.3	1203.9	34.3	443.5	10.0	1304.4	1538.0	121.6	41.5	5.0	1.0	1.0	

* FOR CONTRACTOR'S INFORMATION ONLY

NOTE:

1. SEE "INTERSECTION & DRIVEWAY DETAILS" FOR ADDITIONAL INFORMATION.

© 2009 Texas Departme of Transporta

JACOBS
5995 Rogerdale Road
Houston, TX 77052-3495
(832) 351-7230 www.jacobs.com

FM 1680
SUMMARY OF DRIVEWA
TURNOUT AND MAILBO
QUANTITIES

SHEET 1

FED. RD. DIV. NO.	PROJECT NO.	SHE NO
6		8

STATE	DIST.	COUNTY
TEXAS	YKM	GONZALES, ETC

CONT	SECT	JOB	HIGHWAY NO.
1442	03	016, ETC	FM 1680

SUMMARY OF DRIVEWAY, TURNOUT AND MAILBOX QUANTITIES

LOCATION	LT/ RT	"W" (FT)	"X" (FT)	"R" (FT)	*ITEM 247 FL BS (CIP) TY E GR 1) (FNAL POS) (CY)	*ITEM 316 ASPH (RC-250) (0.20 GAL /SY) (GAL)	*ITEM 316 AGGR GR 5 (1 CY/ 140 SY) (CY)	*ITEM 316 ASPH (0.40 GAL / SY) (GAL)	*ITEM 316 AGGR GR 3 (1 CY/ 85 SY) (CY)	*ITEM 316 ASPH (0.34 GAL / SY) (GAL)	*ITEM 316 AGGR GR 4 (1 CY/ 130 SY) (CY)	ITEM 530 INTERSECT (SURF TRT) (SY)	ITEM 530 DRIVEWAYS (SURF TRT) (SY)	ITEM 530 TURNOUT (SURF TRT) (SY)	ITEM 530 DRIVEWAY (CONC) (SY)	ITEM 560 MAILBOX ASSEMBLY SINGLE (EA)	ITEM 560 MAILBOX ASSEMBLY DOUBLE (EA)	ITEM 560 MAILBOX ASSEMBLY MULT (EA)	REMARKS
448+42	R	15			2.3	5.5	0.2	11.0	0.3				27.8						
455+66	R	24			3.1	7.4	0.3	14.9	0.4				37.8						
468+65	R	28			3.5	8.4	0.3	16.8	0.5				42.2						
482+54	L	33	30	30/60	18.1	43.4	1.6	86.9	2.4	73.8	1.7	217.2							CR 400
482+98	R	20			7.5	6.0	0.2	12.0	0.4					30.0		1			MB TURNOUT
483+55	R	52			5.7	13.7	0.5	27.4	0.8				68.9						
486+81	L	30	30	30/55	16.1	38.6	1.4	77.3	2.1	65.7	1.5	193.2							CR 286
491+31	R	24			3.1	7.4	0.3	14.9	0.4				37.8						
498+87	L	15			2.3	5.5	0.2	11.0	0.3				27.8						
501+11	R	15			2.3	5.5	0.2	11.0	0.3				27.8						
SUB-TOTAL					66.3	146.9	5.4	294.2	8.2	139.5	3.2	410.4	297.9	30.0	0.0	1.0	0.0	0.0	
CSJ: 1442-03-016 TOTAL					345.8	748.7	26.7	1498.1	42.5	583.0	13.2	1714.8	1835.9	151.6	41.5	6.0	1.0	1.0	
516+38	L	45	30	30/60	21.4	51.4	1.8	102.7	2.9	87.3	2.0	256.8							CR 286
516+72	R	20			7.5	6.0	0.2	12.0	0.4					30.0		1			MB TURNOUT
518+81	R	26			8.5	6.8	0.2	13.6	1.2				40.0						
519+12	R	16			4.8	3.8	0.1	7.7	0.2					19.0		1			MB TURNOUT AT DRIVEWAY
547+36	R	20			7.5	6.0	0.2	12.0	0.4					30.0		1			MB TURNOUT
547+37	L	15			2.3	5.5	0.2	11.0	0.3				27.8						
548+17	R	48			5.4	13.0	0.5	25.9	0.8				64.4						
548+35	L	27	30	50/35	14.9	35.8	1.3	71.5	2.0	60.8	1.4	178.8							CR 285
548+72	R	180			35.6	28.5	1.0	57.0	1.7					427.8				1	MB TO AT DW & HIST MRKR
550+71	R	53	30	30/50	21.5	51.6	1.8	103.2	2.9	87.7	2.0	258.0							CR 287
554+24	R	15			2.3	5.5	0.2	11.0	0.3				27.8						
554+52	L	25			3.2	7.7	0.3	15.4	0.5				38.9						
556+96	L	21			2.9	7.0	0.2	13.9	0.4				34.4						
569+33	R	17			2.5	6.0	0.2	12.0	0.4				30						
570+11	R	18			2.6	6.2	0.2	12.5	0.4				31.1						
570+51	L	16			2.4	5.8	0.2	11.5	0.3				28.9						
573+50	R	24	30	30/15	8.9	21.4	0.8	42.7	1.2	36.3	0.8	106.8							CR 1680A
573+92	R	20			7.5	6.0	0.2	12.0	0.4					30.0		1			MB TURNOUT
577+32	R	19			2.7	6.5	0.2	13.0	0.4				32.2						
591+08	R	16			4.8	3.8	0.1	7.7	0.2					19.0		1			MB TURNOUT AT DRIVEWAY
591+48	R	27			3.4	8.2	0.3	16.3	0.5				41.1						
592+14	L	20			2.8	6.7	0.2	13.4	0.4				33.3						
594+58	R	16			2.4	5.8	0.2	11.5	0.3				28.9						
594+80	R	16			4.8	3.8	0.1	7.7	0.2					19.0		1			MB TURNOUT AT DRIVEWAY
597+98	R	17			2.5	6.0	0.2	12.0	0.4				30.0						
598+35	R	16			4.8	3.8	0.1	7.7	0.2					19.0		1			MB TURNOUT AT DRIVEWAY
598+96	R	24			3.1	7.4	0.3	14.9	0.4				37.8						
599+24	R	16			4.8	3.8	0.1	7.7	0.2					19.0		1			MB TURNOUT AT DRIVEWAY
600+83	R	21			2.9	7.0	0.2	13.9	0.4				34.4						
602+21	R	22			3.0	7.2	0.3	14.4	0.4				35.6						
602+42	R	16			4.8	3.8	0.1	7.7	0.2					19.0		1			MB TURNOUT AT DRIVEWAY
SUB-TOTAL					208.5	347.8	12.0	695.5	20.9	272.1	6.2	800.4	596.6	631.8	0.0	9.0	0.0	1.0	

* FOR CONTRACTOR'S INFORMATION ONLY

NOTE:

1. SEE "INTERSECTION & DRIVEWAY DETAILS" FOR ADDITIONAL INFORMATION.

© 2009 Texas Department of Transportation

JACOBS
5995 Rogerdale Road
Houston, TX 77052-3495
(832) 351-7230 www.jacobs.com

FM 1680
SUMMARY OF DRIVEWAY TURNOUT AND MAILBOX QUANTITIES
SHEET 2

FED. RD. DIV. NO.	PROJECT NO.	SHEET NO.
6		9

STATE	DIST.	COUNTY
TEXAS	YKM	GONZALES, ETC

CONT	SECT	JOB	HIGHWAY NO.
1442	03	016, ETC	FM 1680

SUMMARY OF DRIVEWAY, TURNOUT AND MAILBOX QUANTITIES

LOCATION	LT/ RT	"W" (FT)	"X" (FT)	"R" (FT)	*ITEM 247 FL BS (CIP) (TY E GR 1) (FNAL POS) (CY)	*ITEM 316 ASPH (RC-250) (0.20 GAL /SY) (GAL)	*ITEM 316 AGGR GR 5 (1 CY/ 140 SY) (CY)	*ITEM 316 ASPH (0.40 GAL / SY) (GAL)	*ITEM 316 AGGR GR 3 (1 CY/ 85 SY) (CY)	*ITEM 316 ASPH (0.34 GAL / SY) (GAL)	*ITEM 316 AGGR GR 4 (1 CY/ 130 SY) (CY)	ITEM 530 INTERSECT (SURF TRT) (SY)	ITEM 530 DRIVEWAYS (SURF TRT) (SY)	ITEM 530 TURNOUT (SURF TRT) (SY)	ITEM 530 DRIVEWAY (CONC) (SY)	ITEM 560 MAILBOX ASSEMBLY SINGLE (EA)	ITEM 560 MAILBOX ASSEMBLY DOUBLE (EA)	ITEM 560 MAILBOX ASSEMBLY MULT (EA)	REMARKS
603+40	R	19			2.7	6.5	0.2	13.0	0.4				32.2						
606+30	L	15			2.3	5.5	0.2	11.0	0.3				27.8						
615+18	L	15			2.3	5.5	0.2	11.0	0.3				27.8						
615+38	L	24			6.1	4.9	0.2	9.8	0.3					24.3			1		MB TURNOUT AT DRIVEWAY
615+56	L	16			2.4	5.8	0.2	11.5	0.3				28.9						
618+39	R	15			2.3	5.5	0.2	11.0	0.3				27.8						
618+55	R	16			4.8	3.8	0.1	7.7	0.2					19.0		1			MB TURNOUT AT DRIVEWAY
619+91	L	15			2.3	5.5	0.2	11.0	0.3				27.8						
620+29	L	20			7.5	6.0	0.2	12.0	0.4					30.0		1			MB TURNOUT
623+94	L	15			2.3	5.5	0.2	11.0	0.3				27.8						
624+90	L	21			2.9	7.0	0.2	13.9	0.4				34.4						
627+35	L	23			3.1	7.4	0.3	14.9	0.4				36.7						
629+98	L	34			4.1	9.8	0.4	19.7	0.6				48.9						
630+48	L	15			2.3	5.5	0.2	11.0	0.3				27.8						
630+64	R	15			2.3	5.5	0.2	11.0	0.3				27.8						
630+95	R	18			5.1	4.1	0.1	8.2	0.2					20.3			1		MB TURNOUT AT DRIVEWAY
631+38	R	24	15	10/10											46.5				
633+26	L	15			2.3	5.5	0.2	11.0	0.3				27.8						
635+67	R	20	15	10/10											50.8				
636+38	L	21			2.9	7.0	0.2	13.9	0.4				34.4						
636+45	R	20			7.5	6.0	0.2	12.0	0.4					30.0		1			MB TURNOUT
636+87	L	17			2.5	6.0	0.2	12.0	0.4				30.0						
SUB-TOTAL					70.0	118.3	4.1	236.6	6.8	0.0	0.0	0.0	467.9	123.6	97.3	3	2	0	
CSJ: 1442-04-007 TOTAL					278.5	466.1	16.1	932.1	27.7	272.1	6.2	800.4	1064.5	755.4	97.3	12	2	1	
TOTAL					624	1215	43	2430	70	855	19	2515	2900	907	139	18	3	2	

* FOR CONTRACTOR'S INFORMATION ONLY

NOTE:

1. SEE "INTERSECTION & DRIVEWAY DETAILS" FOR ADDITIONAL INFORMATION.

© 2009 Texas Departm of Transporta

JACOBS
5995 Rogerdale Road
Houston, TX 77052-3495
(832) 351-7230 www.jacobs.com

FM 1680
SUMMARY OF DRIVEWA
TURNOUT AND MAILBO
QUANTITIES
SHEET

FED. RD. DIV. NO.	PROJECT NO.	SH N
6		1

STATE	DIST.	COUNTY
TEXAS	YKM	GONZALES, ETC

CONT	SECT	JOB	HIGHWAY NO.
1442	03	016, ETC	FM 1680

SUMMARY OF CENTERLINE STRUCTURES (CSJ 1442-03-016)

LOCATION	EXISTING STRUCTURE	PROPOSED	ITEM 400			ITEM 432		ITEM 462 CONC BOX CULVERT								ITEM 464 RC PIPE				ITEM 466 WINGWALL	
			STRUCT EXCAV (BOX) (CY)*	CEM STABIL BKFL (CY)	CUT & RESTORING PAV (ASPHT) (SY)	RIPRAP (STONE COMMON) (DRY) (12 IN) (CY)	RIPRAP (CONC) (5 IN) (CY)	4 FT X 3 FT (LF)	5 FT X 4 FT (LF)	6 FT X 3 FT (LF)	6 FT X 5 FT (LF)	7 FT X 3 FT (LF)	7 FT X 7 FT (LF)	10 FT X 6 FT (LF)	10 FT X 7 FT (LF)	RCP (CL III) (18 IN) (LF)	RCP (CL III) (24 IN) (LF)	RCP (CL III) (30 IN) (LF)	RCP (CL III) (36 IN) (LF)	(PW) (HW= 7 FT) (EA)	(PW) (HW= 8 FT) (EA)
22+80.50	1-10' X 34.8' CONC BRIDGE	REMOVE EXIST BRIDGE AND CONSTRUCT 2- 5' X 4' X 38' CBC & ADD 4:1 SET LT & RT USING SCP-5, SCP-MD, BCS, & SETB-FW-0	22.3	15.0	35.4		9.4		76.0												
81+89.50	1- 2' X2' X 25.3' CBC W/ HEADWALLS EA END	REMOVE EXIST STRUCT AND CONSTRUCT 1- 4' X 3' X 39' CBC W/ 4:1 SET LT & RT USING SCP-4, SCP-MD, BCS, & SETB-FW-0	14.7	11.8	17.1		3.6	39.0													
101+53	)-)8" X 56' RCP	REMOVE 8' RT AND EXT 16' RT & ADD 4:1 SET LT & RT USING SETP-CD														16.0					
107+50	1- 18" X 44' RCP	EXT 3' RT & ADD 4:1 SET LT & RT USING SETP-CD														3.0					
111+45	)- 18" X 4)' (43.6' ALONG SKEW) RCP	ADD 4:1 SET LT & RT USING SETP-CD																			
)12+)1	1-)8" X 57.15' (60.5' ALONG SKEW) RCP	REMOVE 4.5' LT (5' ALONG SKEW) & ADD 4:1 SET LT & RT USING SETP-CD																			
126+00	1- 24" X 40' RCP	EXT 4' LT AND 1' RT & ADD 4:1 SET LT & RT USING SETP-CD															5.0				
163+37	1- 24" X 40' RCP	REMOVE 8' RT AND EXT 2' LT AND 18' RT & ADD 4:1 SET LT AND 3:1 SET RT USING SETP-CD															20.0				
)95+92	1- 24" X 40' RCP	EXT 2' LT AND 4' RT & ADD 4:1 SET LT & RT USING SETP-CD															6.0				
210+00	1- 18" X 40' RCP	EXT)' LT AND 4' RT & ADD 4:1 SET LT & RT USING SETP-CD														5.0					
237+60	2- 30" X 52' RCP	REMOVE 4' LT & 3' RT AND EXT 4' LT & ADD 4:1 SET LT & RT USING SETP-CD																8.0			
SUBTOTAL			37.0	26.8	52.5	0.0	13.0	39.0	76.0	0.0	0.0	0.0	0.0	0.0	0.0	24.0	31.0	8.0	0.0	0	0

* CONTRACTOR INFORMATION ONLY

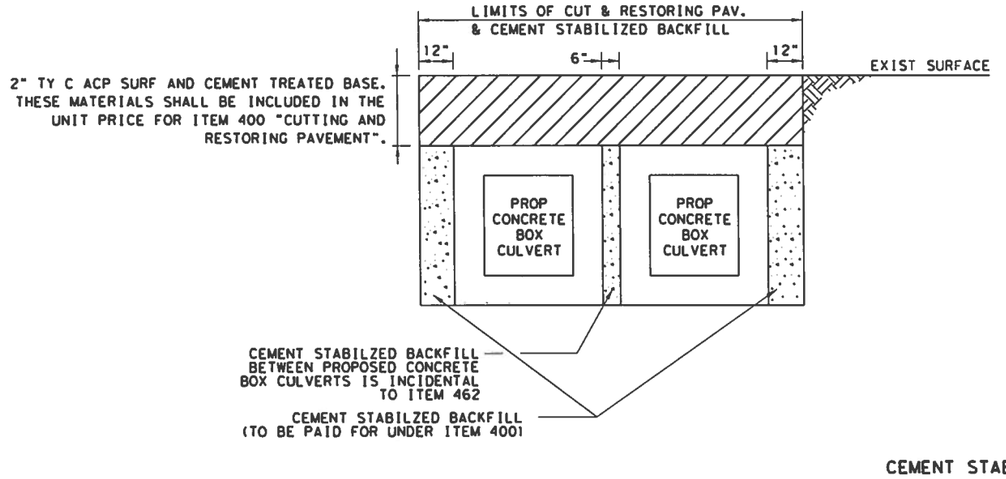

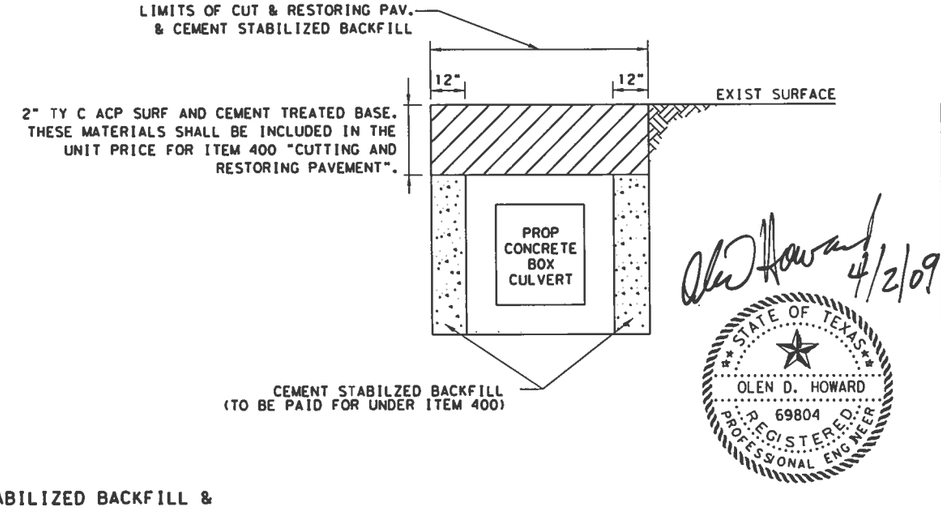

CEMENT STABILIZED BACKFILL &
CUT AND RESTORING PAVEMENT DETAILS

© 2009 Texas Department of Transportation

JACOBS
5995 Rogerdale Road
Houston, TX 77052-3495
(832) 351-7230 www.jacobs.com

OLEN D. HOWARD 4/2/09
STATE OF TEXAS
OLEN D. HOWARD
69804
REGISTERED PROFESSIONAL ENGINEER

FM 1680
SUMMARY OF
CENTERLINE STRUCTURE

SHEET 1 OF 11

FED. RD. DIV. NO.	PROJECT NO.	SHEET NO.
6		11

STATE	DIST.	COUNTY
TEXAS	YKM	GONZALES, ETC

CONT	SECT	JOB	HIGHWAY NO.
1442	03	016, ETC	FM 1680

SUMMARY OF CENTERLINE STRUCTURES (CSJ 1442-03-016)

LOCATION	EXISTING STRUCTURE	PROPOSED	ITEM 466 WINGWALL		ITEM 467 SAFETY END TREATMENT														ITEM 496	
			(PW) (HW= 9 FT) (EA)	(PW) (HW= 10 FT) (EA)	TY I (S=6FT) (HW=4FT) (3:1) (C) (EA)	TY I (S=6FT) (HW=6FT) (3:1) (C) (EA)	TY I (S=7FT) (HW=4FT) (3:1) (C) (EA)	TY I (S=7FT) (HW=5FT) (3:1) (C) (EA)	TY I (S=10FT) (HW=7FT) (3:1) (C) (EA)	TY I (S=4FT) (HW=4FT) (4:1) (C) (EA)	TY I (S=5FT) (HW=5FT) (4:1) (C) (EA)	TY I (S=7FT) (HW=4FT) (4:1) (C) (EA)	TY I (S=7FT) (HW=5FT) (4:1 (C) (EA)	(TY II) (18 IN) (RCP) (4:1) (C) (EA)	(TY II) (24 IN) (RCP) (4:1) (C) (EA)	(TY II) (24 IN) (RCP) (3:1) (C) (EA)	(TY II) (30 IN) (RCP) (4:1) (C) (EA)	(TY II) (36 IN) (RCP) (4:1) (C) (EA)	REMOV STR (BOX CULVERT) (EA)	REMOV STR (BRIDGE 0 - 99 FT LENGTH) (EA)
22+80.50	1-10' X 34.8' CONC BRIDGE	REMOVE EXIST BRIDGE AND CONSTRUCT 2- 5' X 4' X 38' CBC & ADD 4:1 SET LT & RT USING SCP-5, SCP-MD, BCS, & SETB-FW-0									4									1
81+89.50	1- 2' X2' X 25.3' CBC W/ HEADWALLS EA END	REMOVE EXIST STRUCT AND CONSTRUCT 1- 4' X 3' X 39' CBC W/ 4:1 SET LT & RT USING SCP-4, SCP-MD, BCS, & SETB-FW-0								2									1	
101+53	1- 18" X 56' RCP	REMOVE 8' RT AND EXT 16' RT & ADD 4:1 SET LT & RT USING SETP-CD												2						
107+50	1- 18" X 44' RCP	EXT 3' RT & ADD 4:1 SET LT & RT USING SETP-CD												2						
111+45	1- 18" X 41' (43.6' ALONG SKEW) RCP	ADD 4:1 SET LT & RT USING SETP-CD												2						
112+11	1- 18" X 57.15' (60.5' ALONG SKEW) RCP	REMOVE 4.5' LT (5' ALONG SKEW) & ADD 4:1 SET LT & RT USING SETP-CD												2						
126+00	1- 24" X 40' RCP	EXT 4' LT AND 1' RT & ADD 4:1 SET LT & RT USING SETP-CD													2					
163+37	1- 24" X 40' RCP	REMOVE 8' RT AND EXT 2' LT AND 18' RT & ADD 4:1 SET LT AND 3:1 SET RT USING SETP-CD													1	1				
195+92	1- 24" X 40' RCP	EXT 2' LT AND 4' RT & ADD 4:1 SET LT & RT USING SETP-CD													2					
210+00	1- 18" X 40' RCP	EXT 1' LT AND 4' RT & ADD 4:1 SET LT & RT USING SETP-CD												2						
237+60	2- 30" X 52' RCP	REMOVE 4' LT & 3' RT AND EXT 4' LT & ADD 4:1 SET LT & RT USING SETP-CD															4			
SUBTOTAL			0	0	0	0	0	0	0	2	4	0	0	10	5	1	4	0	1	1

© 2009 Texas Department of Transportation

JACOBS
5995 Rogerdale Road
Houston, TX 77052-3495
(832) 351-7230 www.jacobs.com

FM 1680
SUMMARY OF
CENTERLINE STRUCTURE

SHEET 2 OF

FED. RD. DIV. NO.	PROJECT NO.		SHEET NO.
6			12
STATE	DIST.	COUNTY	
TEXAS	YKM	GONZALES, ETC	
CONT	SECT	JOB	HIGHWAY NO.
1442	03	016, ETC	FM 1680

SUMMARY OF CENTERLINE STRUCTURES (CSJ 1442-03-016)

LOCATION	EXISTING STRUCTURE	PROPOSED	ITEM 400			ITEM 432		ITEM 462 CONC BOX CULVERT								ITEM 464 RC PIPE				ITEM 466 WINGWALL	
			STRUCT EXCAV (BOX)* (CY)*	CEM STABIL BKFL (CY)	CUT & RESTORING PAV (ASPH) (SY)	RIPRAP (STONE COMMON) (DRY) (12 IN) (CY)	RIPRAP (CONC) (5 IN) (CY)	4 FT X 3 FT (LF)	5 FT X 4 FT (LF)	6 FT X 3 FT (LF)	6 FT X 5 FT (LF)	7 FT X 3 FT (LF)	7 FT X 7 FT (LF)	10 FT X 6 FT (LF)	10 FT X 7 FT (LF)	RCP (CL III) (18 IN) (LF)	RCP (CL III) (24 IN) (LF)	RCP (CL III) (30 IN) (LF)	RCP (CL III) (36 IN) (LF)	(PW) (HW=7 FT) (EA)	(PW) (HW=8 FT) (EA)
248+94	1- 24" X 44' RCP	ADD 4:1 SET LT & RT USING SETP-CD				1.5															
258+46	1- 24" X 40' RCP	EXT 2' LT AND 3' RT & ADD 4:1 SET LT & RT USING SETP-CD															5.0				
330+00	1- 24" X 40' RCP	ADD 4:1 SET LT & RT USING SETP-CD																			
370+00	1- 7' X 3' X 27.3' CBC W/ WINGWALLS EA END	REMOVE EXIST WINGWALLS EA END AND EXT 5' LT AND 15' RT & ADD 4:1 SET LT & 3:1 SET RT USING SCC-7, SCC-MD, BCS, & SETB-FW-0					3.7					20.0									
380+00	1- 30" X 40' RCP	REMOVE 4' LT AND EXT 4' LT AND 2' RT & ADD 4:1 SET LT & RT USING SETP-CD				2.0												6.0			
439+28	1- 10' X 7' X 27.3' CBC W/ WINGWALLS EA END	REMOVE EXIST WINGWALLS EA END AND EXT 15.5' LT AND RT AND ADD 1-7'X7'X58.3' CBC (STA 438+17.75) & ADD PARALLEL WINGWALLS LT & RT USING SCC-7, SCC-10, SCC-MD, OR SCP-7, SCP-10, SCP-MD, BCS, & PW	198.0	27.0	24.0								58.3		31.0						2
448+10	1- 18" X 42' (48.5' ALONG SKEW) RCP	EXT 1.7' RT & ADD 4:1 SET LT & RT USING SETP-CD											-			1.7					
452+54	1- 6' X 5' X 27.3' (32' ALONG SKEW) CBC W/ WINGWALLS EA END	REMOVE EXIST WINGWALLS EA END AND EXT 14.85' RT (15.95' ALONG SKEW) AND 5.63' LT (6.5' ALONG SKEW) AND ADD 1-6' X 5' X 47.48' (54.45' ALONG SKEW) CBC & ADD 3:1 SET LT & PARALLEL WINGWALLS RT USING SCC-5&6, SCC-MD, OR SCP-6, SCP-MD, SETB-FW-S, BCS, & PW	125.4	18.7	21.2		4.4				77.0									1	
469+85	1- 18" X 36' RCP	EXT 3' LT AND 4' RT & ADD 4:1 SET LT & RT USING SETP-CD														7.0					
496+00	1- 18" X 36' RCP	EXT 3' LT AND 2' RT & ADD 4:1 SET LT & RT USING SETP-CD														5.0					
504+70	1- 36" X 43' (60.8' ALONG SKEW) RCP	ADD 4:1 SET LT & RT USING SETP-CD																			
SUBTOTAL			323.4	45.7	45.2	3.5	8.1	0.0	0.0	0.0	77.0	20.0	58.3	0.0	31.0	13.7	5.0	6.0	0.0	1	2
CSJ: 1442-03-016 TOTAL			360.4	72.5	97.7	3.5	45.1	39.0	76.0	0.0	77.0	20.0	58.3	0.0	31.0	38.0	36.0	14.0	0.0	1	2

*CONTRACTOR INFORMATION ONLY

SUMMARY OF BRIDGE CLASS STRUCTURES (CSJ 1442-03-016)

STR NO.	LOCATION	EXISTING STRUCTURE	PROPOSED	ITEM 432	ITEM 462 CONC BOX CULVERT			ITEM 466 WINGWALL		ITEM 467 SAFETY END TREATMENT	
				RIPRAP (CONC) (5 IN) (CY)	7 FT X 4 FT (LF)	7 FT X 5 FT (LF)	7 FT X 7 FT (LF)	(PW) (HW=7 FT) (EA)	(PW) (HW=8 FT) (EA)	TY I (S=7FT) (HW=5FT) (3:1) (C) (EA)	TY I (S=7FT) (HW=5FT) (4:1) (C) (EA)
NBI# 130900144203002	299+23.50 - 299+46.50	3- 7' X 4' X 27.3' CBC W/ WINGWALLS EA END	REMOVE EXIST WINGWALLS EA END AND EXT 5' LT AND 8' RT & ADD 4:1 SET LT & 3:1 SET RT USING MC-7-10, MC-MD, BCS, & SETB-FW-0	12.0	39.0					3	3
NBI# 130900144203003	309+08.50 - 309+31.50	3- 7' X 4' X 27.3' CBC W/ WINGWALLS EA END	REMOVE EXIST WINGWALLS EA END AND EXT 4' LT AND 9' RT & ADD 4:1 SET LT & 3:1 SET RT USING MC-7-10, MC-MD, BCS, & SETB-FW-0	12.0	39.0					3	3
NBI# 130900144203004	386+95.33 - 387+18.66	3- 7' X 5' X 27.3' CBC W/ WINGWALLS EA END	REMOVE EXIST WINGWALLS EA END AND EXT 14' LT W/ 3-7'x7' CBC & 17' RT W/ 3-7'X5' CBC AND ADD PARALLEL WINGWALLS LT & RT USING MC-7-10, MC-MD, OR SCP-7, SCP-MD, BCS & PW			51.0	42.0		2		
SUBTOTAL				24.0	78.0	51.0	42.0		2	6	6

© 2009 Texas Department of Transportation

JACOBS
5995 Rogerdale Road
Houston, TX 77052-3495
(832) 351-7230 www.jacobs.com

FM 1680
SUMMARY OF CENTERLINE STRUCTURE

SHEET 3 OF

FED. RD. DIV. NO.	PROJECT NO.		SHEET NO.
6			13
STATE	DIST.	COUNTY	
TEXAS	YKM	GONZALES, ETC	
CONT	SECT	JOB	HIGHWAY NO.
1442	03	016, ETC	FM 1680

SUMMARY OF CENTERLINE STRUCTURES (CSJ 1442-03-016)

LOCATION	EXISTING STRUCTURE	PROPOSED	ITEM 466 WINGWALL		ITEM 467 SAFETY END TREATMENT														ITEM 496	
			(PW) (HW=9 FT) (EA)	(PW) (HW=10 FT) (EA)	TY I (S=6FT) (HW=4FT) (3:1) (C) (EA)	TY I (S=6FT) (HW=6FT) (3:1) (C) (EA)	TY I (S=7FT) (HW=4FT) (3:1) (C) (EA)	TY I (S=7FT) (HW=5FT) (3:1) (C) (EA)	TY I (S=10FT) (HW=7FT) (3:1) (C) (EA)	TY I (S=4FT) (HW=4FT) (4:1) (C) (EA)	TY I (S=5FT) (HW=5FT) (4:1) (C) (EA)	TY I (S=7FT) (HW=4FT) (4:1) (C) (EA)	TY I (S=7FT) (HW=5FT) (4:1) (C) (EA)	(TY II) (18 IN) (RCP) (4:1) (C) (EA)	(TY II) (24 IN) (RCP) (4:1) (C) (EA)	(TY II) (24 IN) (RCP) (3:1) (C) (EA)	(TY II) (30 IN) (RCP) (4:1) (C) (EA)	(TY II) (36 IN) (RCP) (4:1) (C) (EA)	REMOV STR (BOX CULVERT) (EA)	REMOV STR (BRIDGE O - 99 FT LENGTH) (EA)
248+94	1- 24" X 44' RCP	ADD 4:1 SET LT & RT USING SETP-CD													2					
258+46	1- 24" X 40' RCP	EXT 2' LT AND 3' RT & ADD 4:1 SET LT & RT USING SETP-CD													2					
330+00	1- 24" X 40' RCP	ADD 4:1 SET LT & RT USING SETP-CD													2					
370+00	1- 7' X 3' X 27.3' CBC W/ WINGWALLS EA END	REMOVE EXIST WINGWALLS EA END AND EXT 5' LT AND 15' RT & ADD 4:1 SET LT & 3:1 SET RT USING SCC-7, SCC-MD, BCS, & SETB-FW-0					1					1								
380+00	1- 30" X 40' RCP	REMOVE 4' LT AND EXT 4' LT AND 2' RT & ADD 4:1 SET LT & RT USING SETP-CD															2			
439+28	1- 10' X 7' X 27.3' CBC W/ WINGWALLS EA END	REMOVE EXIST WINGWALLS EA END AND EXT 15.5' LT AND RT AND ADD 1-7'X7'X58.3' CBC (STA 438+17.75) & ADD PARALLEL WINGWALLS LT & RT USING SCC-7, SCC-10, SCC-MD, OR SCP-7, SCP-10, SCP-MD, BCS, & PW																		
448+10	1- 18" X 42' (48.5' ALONG SKEW) RCP	EXT 1.7' RT & ADD 4:1 SET LT & RT USING SETP-CD												2						
452+54	1- 6' X 5' X 27.3' (32' ALONG SKEW) CBC W/ WINGWALLS EA END	REMOVE EXIST WINGWALLS EA END AND EXT 14.85' RT (15.95' ALONG SKEW) AND 5.63' LT (6.5' ALONG SKEW) AND ADD 1-6' X 5' X 47.48' (54.45' ALONG SKEW) CBC & ADD 3:1 SET LT & PARALLEL WINGWALLS RT USING SCC-5&6, SCC-MD, OR SCP-6, SCP-MD, SETB-FW-S, BCS, & PW				1														
469+85	1- 18" X 36' RCP	EXT 3' LT AND 4' RT & ADD 4:1 SET LT & RT USING SETP-CD												2						
496+00	1- 18" X 36' RCP	EXT 3' LT AND 2' RT & ADD 4:1 SET LT & RT USING SETP-CD												2						
504+70	1- 36" X 43' (60.8' ALONG SKEW) RCP	ADD 4:1 SET LT & RT USING SETP-CD																2		
SUBTOTAL			0	0	0	1	1	0	0	0	0	1	0	6	6	0	2	2	0	0
CSJ: 1442-03-016 TOTAL			0	0	0	1	1	0	0	2	4	1	0	16	11	1	6	2	1	1

© 2009 Texas Department of Transportation

JACOBS
5995 Rogerdale Road
Houston, TX 77052-3495
(832) 351-7230 www.jacobs.com

FM 1680
SUMMARY OF
CENTERLINE STRUCTURE

SHEET 4 C

FED. RD. DIV. NO.	PROJECT NO.	SHEET NO.
6		14

STATE	DIST.	COUNTY
TEXAS	YKM	GONZALES, ETC

CONT	SECT	JOB	HIGHWAY NO.
1442	03	016, ETC	FM 1680

SUMMARY OF CENTERLINE STRUCTURES (CSJ 1442-04-007)

LOCATION	EXISTING STRUCTURE	PROPOSED	ITEM 400			ITEM 432		ITEM 462 CONC BOX CULVERT									ITEM 464 RC PIPE			
			STRUCT EXCAV (BOX) (CY) *	CEM STABIL BKFL (CY)	CUT & RESTORING PAV (ASPH) (SY)	RIPRAP (STONE COMMON) (DRY) (12 IN) (CY)	RIPRAP (CONC) (5 IN) (CY)	4 FT X 3 FT (LF)	5 FT X 4 FT (LF)	6 FT X 3 FT (LF)	6 FT X 5 FT (LF)	7 FT X 3 FT (LF)	7 FT X 4 FT (LF)	7 FT X 5 FT (LF)	7 FT X 7 FT (LF)	10 FT X 6 FT (LF)	10 FT X 7 FT (LF)	RCP (CL III) (18 IN) (LF)	RCP (CL III) (24 IN) (LF)	RCP (CL III) (30 IN) (LF)	RCP (CL III) (36 IN) (LF)
509+50	2- 7' X 6' X 29.3' CBC W/ WINGWALLS EA END	REMOVE EXIST WINGWALLS EA END AND EXT 12.5' LT AND 15' RT W/ 7' X 7' CBC AND ADD 1-7' X 7' X 56.8' CBC (STA 509+38.62) & ADD PARALLEL WINGWALLS LT & RT USING MC-7-10, MC-MD, BCS, & PW				6.0									111.8						
530+40	1- 10' X 6' X 29.3' CBC W/ WINGWALLS EA END	REMOVE EXIST WINGWALLS EA END AND EXT 5' LT AND 15' RT & ADD 3:1 SET LT & PARALLEL WINGWALLS RT USING SCC-10, SCC-MD, BCS, SET-FW-0, & PW					4.8									20.0					
582+00	2- 7' X 4' X 27.3' CBC W/ WINGWALLS EA END	REMOVE EXIST WINGWALLS EA END AND EXT 5' LT AND 7' RT & ADD 4:1 SET LT & 3:1 SET RT USING MC-7-10, MC-MD, BCS, & SETB-FW-0					8.8						24.0								
605+62	1- 6' X 5' X 29.3' CBC W/ WINGWALLS EA END	REMOVE EXIST WINGWALLS EA END AND EXT 6' LT AND 8' RT & ADD 3:1 SET LT & RT USING SCC-5&6, SCC-MD, BCS, & SETB-FW-0					5.6				14.0										
611+66	1- 6' X 3' X 40.3' CBC W/ WINGWALLS EA END	REMOVE EXIST WINGWALLS EA END AND EXT 5.2' LT AND 4.4' RT & ADD 3:1 SET LT & RT USING SCC-5&6, SCC-MD, BCS, & SETB-FW-0					2.6			9.6											
633+52	1- 36" X 40' RCP	REMOVE 2' LT AND EXT 5' RT & ADD 4:1 SET LT & RT USING SETP-CD																			5.0
SUBTOTAL			0.0	0.0	0.0	6.0	21.8	0.0	0.0	9.6	14.0	0.0	24.0	0.0	111.8	20.0	0.0	0.0	0.0	0.0	5.0
CSJ: 1442-04-007 TOTAL			0.0	0.0	0.0	6.0	21.8	0.0	0.0	9.6	14.0	0.0	24.0	0.0	111.8	20.0	0.0	0.0	0.0	0.0	5.0
PROJECT TOTAL			360.4	72.5	97.7	9.5	66.9	39.0	76.0	9.6	91.0	20.0	102.0	51.0	212.1	20.0	31.0	38.0	36.0	14.0	5.0

© 2009 Texas Department of Transportation

JACOBS
5995 Rogerdale Road
Houston, TX 77052-3495
(832) 351-7230 www.jacobs.com

FM 1680
SUMMARY OF
CENTERLINE STRUCTURE

SHEET 5 OF

FED. RD. DIV. NO.	PROJECT NO.	SHEET NO.
6		15

STATE	DIST.	COUNTY	
TEXAS	YKM	GONZALES, ETC	
CONT	SECT	JOB	HIGHWAY NO.
1442	03	016, ETC	FM 1680

SUMMARY OF CENTERLINE STRUCTURES (CSJ 1442-04-007)

LOCATION	EXISTING STRUCTURE	PROPOSED	ITEM 466 WINGWALL				ITEM 467 SAFETY END TREATMENT												ITEM 496	
			(PW) (HW= 7 FT) (EA)	(PW) (HW= 8 FT) (EA)	(PW) (HW= 9 FT) (EA)	(PW) (HW= 10 FT) (EA)	TY I (S=6FT) (HW=4FT) (3:1) (C) (EA)	TY I (S=6FT) (HW=6FT) (3:1) (C) (EA)	TY I (S=7FT) (HW=4FT) (3:1) (C) (EA)	TY I (S=7FT) (HW=5FT) (3:1) (C) (EA)	TY I (S=10FT) (HW=7FT) (3:1) (C) (EA)	TY I (S=4FT) (HW=4FT) (4:1) (C) (EA)	TY I (S=5FT) (HW=5FT) (4:1) (C) (EA)	TY I (S=7FT) (HW=4FT) (4:1) (C) (EA)	TY I (S=7FT) (HW=5FT) (4:1) (C) (EA)	(TY III) (18 IN) (RCP) (4:1) (C) (EA)	(TY II) (24 IN) (RCP) (4:1) (C) (EA)	(TY III) (30 IN) (RCP) (4:1) (C) (EA)	(TY III) (36 IN) (RCP) (4:1) (C) (EA)	REMOV STR (BOX CULVERT) (EA)	REMOV STR (BRIDGE O - 99 FT LENGTH) (EA)
509+50	2- 7' X 6' X 29.3' CBC W/ WINGWALLS EA END	REMOVE EXIST WINGWALLS EA END AND EXT 12.5' LT AND 15' RT W/ 7' X 7' CBC AND ADD 1-7' X 7' X 56.8' CBC (STA 509+38.62) & ADD PARALLEL WINGWALLS LT & RT USING MC-7-10, MC-MD, BCS, & PW		1	1															
530+40	1- 10' X 6' X 29.3' CBC W/ WINGWALLS EA END	REMOVE EXIST WINGWALLS EA END AND EXT 5' LT AND 15' RT & ADD 3:1 SET LT & PARALLEL WINGWALLS RT USING SCC-10, SCC-MD, BCS, SETB-FW-0, & PW				1					1										
582+00	2- 7' X 4' X 27.3' CBC W/ WINGWALLS EA END	REMOVE EXIST WINGWALLS EA END AND EXT 5' LT AND 7' RT & ADD 4:1 SET LT & 3:1 SET RT USING MC-7-10, MC-MD, BCS, & SETB-FW-0								2					2					
605+62	1- 6' X 5' X 29.3' CBC W/ WINGWALLS EA END	REMOVE EXIST WINGWALLS EA END AND EXT 6' LT AND 8' RT & ADD 3:1 SET LT & RT USING SCC-5&6, SCC-MD, BCS, & SETB-FW-0						2												
611+66	1- 6' X 3' X 40.3' CBC W/ WINGWALLS EA END	REMOVE EXIST WINGWALLS EA END AND EXT 5.2' LT AND 4.4' RT & ADD 3:1 SET LT & RT USING SCC-5&6, SCC-MD, BCS, & SETB-FW-0					2													
633+52	1- 36" X 40' RCP	REMOVE 2' LT AND EXT 5' RT & ADD 4:1 SET LT & RT USING SETP-CD																	2	
SUBTOTAL			0	1	1	1	2	2	0	2	1	0	0	0	2	0	0	0	2	0	0
CSJ: 1442-04-007 TOTAL			0	1	1	1	2	2	0	2	1	0	0	0	2	0	0	0	2	0	0
PROJECT TOTAL			1	3	1	1	2	3	1	8	1	2	4	1	8	16	11	6	4	1	1

© 2009 Texas Department of Transportation

JACOBS
5995 Rogerdale Road
Houston, TX 77052-3495
(832) 351-7230 www.jacobs.com

FM 1680
SUMMARY OF CENTERLINE STRUCTURE

SHEET 6 O

FED. RD. DIV. NO.	PROJECT NO.	SHEET NO.
6		16

STATE	DIST.	COUNTY
TEXAS	YKM	GONZALES, ETC

CONT	SECT	JOB	HIGHWAY NO.
1442	03	016, ETC	FM 1680

DISCLAIMER
The use of this standard is governed by the "Texas Engineering Practice Act". No warranty of any kind is made by TxDOT for any purpose whatsoever. TxDOT assumes no responsibility for the conversion of this standard to other formats or for incorrect results or damages resulting from its use.

SUMMARY OF SMALL SIGNS

SM RD SGN ASSM TY XXXXX(X)XX(X-XXXX)

- Post Type: FRP = Fiberglass; TWT = Thin-Wall; 10BWG = 10 BWG; S80 = Sch 80
- Posts: (1 or 2)
- Anchor Type: UA = Univer-Conc; UB = Univer-Bolt; WA = Wedge-Conc; SA = Slip-Conc; SB = Slip-Bolt
- Mounting Designation: P = Prefab. "Plain"; T = Prefab. "T"; U = Prefab. "U"
- 1EXT or 2EXT = # of Ext.; BM = Extruded Wind Beam; WC = 1.12 #/ft Wing Chan.; EXAL = Extruded Alum. signs

SIGN NO.	SIGN TEXT	SIGN DIMENSIONS (W X H)	Post Type	Posts	Anchor Type	Mounting Designation		ITEM 644 INS SM RD SN SUP & AM (EA) TY S80(1) SA(T)	TY S80(1) SA(U)	TY 10BWG(1) SA(P)	TY 10BWG(1) SA(T)	TY 10BWG(1) SA(U)	TY 10BWG(2) SA(P)	TY 10BWG(1) SA(T-EXAL)	ITEM 644 REMOV SM RD SN SUP & AM (EA)
	CSJ 1442-03-016														
	STOP	30X30	10 BWG	1	SA	P				1					1
	SOUTH FARM ROAD 1680 RM 478	24X12 24X24 3X10	10 BWG	1	SA	P				1					1
	ROAD CLOSED HIGH WATER (FOLD)	36X48	10 BWG	1	SA	T					1				1
	WEIGHT LIMIT GROSS 58,420 LBS	24X36	10 BWG	1	SA	P				1					1
	← WAELDER FLATONIA →	72X30	10 BWG	1	SA	T					1				1
	SPEED LIMIT 60	24X30	10 BWG	1	SA	P				1					1
	TRUCK SPEED LIMIT 60 NIGHT 55	36X54 36X36	S80	1	SA	T		1							1
	STOP AHEAD	36X36	10 BWG	1	SA	P				1					1
	25 MPH *	36X36 24X24	10 BWG	1	SA	P				1					1
	JCT US 90	21X15 24X24	10 BWG	1	SA	P				1					1
	WAELDER CITY LIMIT POP. 947	42X24	10 BWG	1	SA	T					1				1
	35 MPH *	36X36 24X24	10 BWG	1	SA	P				1					1
	UNEVEN TRACKS	36X36	10 BWG	1	SA	P				1					1
	RAILROAD CROSSING	36X36	10 BWG	1	SA	P				1					1
	← CO RD 415	36X36	10 BWG	1	SA	P				1					1
	STOP SIGN	30X30	10 BWG	1	SA	P				1					1
	FARM ROAD 1680 RM 480	24X24 3X10	10 BWG	1	SA	P				1					1
	CO RD 415 →	36X36	10 BWG	1	SA	P				1					1
	RAILROAD CROSSING	36X36	10 BWG	1	SA	P				1					1
	UNEVEN TRACKS	36X36	10 BWG	1	SA	P				1					1
	35 MPH *	36X36 24X24	10 BWG	1	SA	P				1					1
	CO RD 418W →	36X36	10 BWG	1	SA	P				1					1
	STOP SIGN	30X30	10 BWG	1	SA	P				1					1
	← CO RD 418W	36X36	10 BWG	1	SA	P				1					1
	← CO RD 417	36X36	10 BWG	1	SA	P				1					1
	STOP SIGN	30X30	10 BWG	1	SA	P				1					1
	CO RD 417 →	36X36	10 BWG	1	SA	P				1					1
	FARM ROAD 1680 RM 482	24X24 3X10	10 BWG	1	SA	P				1					1
	CO RD 420 →	36X36	10 BWG	1	SA	P				1					1
	STOP SIGN	30X30	10 BWG	1	SA	P				1					1
	← CO RD 420	36X36	10 BWG	1	SA	P				1					1
	ROAD CLOSED AHEAD (FOLDING)	36X30	10 BWG	1	SA	P				1					1
	WATCH FOR WATER ON ROAD	36X36	10 BWG	1	SA	P				1					1
	WATER OVER ROAD (FOLDING)	36X36	10 BWG	1	SA	P				1					1
	FLOOD GAUGE	18X12	10 BWG	1	SA	P				1					1
	← CO RD 405	36X36	10 BWG	1	SA	P				1					1
	STOP SIGN	30X30	10 BWG	1	SA	P				1					1
	FARM ROAD 1680 RM 484	24X24 3X10	10 BWG	1	SA	P				1					1
	CO RD 405 →	36X36	10 BWG	1	SA	P				1					1
	WATER OVER ROAD (FOLDING)	24X24	10 BWG	1	SA	P				1					1
	ROAD CLOSED AHEAD (FOLDING)	36X30	10 BWG	1	SA	P				1					1
							SUBTOTAL	1	0	37	3	0	0	0	41

* BALL BANK CURVES PRIOR TO INSTALLATION OF SIGN TO DETERMINE APPROPRIATE ADVISORY SPEED TO BE POSTED.

SHEET 1 OF

Texas Department of Transpor

©

SUMMARY OF SMALL SIGNS

FED. RD. DIV. NO.	PROJECT NO.	
6		
STATE	DIST.	COUNTY
TEXAS	YKM	GONZALES, ET
CONT	SECT	JOB / HIGH
1442	03	016, ETC / FM

LEVELS DISPLAYED
1 2 3 4 | 7 8 | 9 10 11 12 13 14 15 16
17 18 19 20 21 22 23 24 25 26 27 28 29 30 31 32
33 34 35 36 37 38 39 40 41 42 43 44 45 46 47 48
49 50 51 52 53 54 55 56 57 58 59 60 61 62 63

ACC:

DISCLAIMER
The use of this standard is governed by the "Texas Engineering Practice Act". No warranty of any kind is made by TxDOT for any purpose whatsoever. TxDOT assumes no responsibility for the conversion of this standard to other formats or for incorrect results or damages resulting from its use.

SUMMARY OF SMALL SIGNS

SM RD SGN ASSM TY XXXXX(X)XX(X-XXXX)

- Post Type: FRP = Fiberglass; TWT = Thin-Wall 10BWG = 10 BWG; S80 = Sch 80
- Posts: (1 or 2)
- Anchor Type: UA = Univer-Conc; UB = Univer-Bolt; WA = Wedge-Conc; SA = Slip-Conc; SB = Slip-Bolt
- Mounting Designation: P = Prefab. "Plain"; T = Prefab. "T"; U = Prefab. "U"
- 1EXT or 2EXT = # of Ext. BM = Extruded Wind Beam; WC = 1.12 #/ft Wing Chan. EXAL = Extruded Alum. signs

SIGN NO.	SIGN TEXT	SIGN DIMENSIONS (W X H)	Post Type	Posts	Anchor Type	Mounting Designation		ITEM 644 INS SM RD SN SUP & AM (EA) TY S80(1) SA(T)	TY S80(1) SA(U)	TY 10BWG(1) SA(P)	TY 10BWG(1) SA(T)	TY 10BWG(1) SA(U)	TY 10BWG(2) SA(P)	TY 10BWG(1) SA(T-EXAL)	ITEM 644 REMOV SM RD SN SUP & AM (EA)
	WATCH FOR WATER ON ROAD	36X36	10 BWG	1	SA	P				1					1
	CO RD 398 →	36X36	10 BWG	1	SA	P				1					1
	STOP SIGN	30X30	10 BWG	1	SA	P				1					1
	← CO RD 398	36X36	10 BWG	1	SA	P				1					1
	FARM ROAD 1680 RM 486	24X24 3X10	10 BWG	1	SA	P				1					1
	← CO RD 400	36X36	10 BWG	1	SA	P				1					1
	STOP SIGN	30X30	10 BWG	1	SA	P				1					1
	← CO RD 286	36X36	10 BWG	1	SA	P				1					1
	CO RD 400 →	36X36	10 BWG	1	SA	P				1					1
	STOP SIGN	30X30	10 BWG	1	SA	P				1					1
	CO RD 286 →	36X36	10 BWG	1	SA	P				1					1
	← CO RD 286	36X36	10 BWG	1	SA	P				1					1
							SUBTOTAL	0	0	12	0	0	0	0	12
							CSJ: 1442-03-016 TOTAL	1	0	49	3	0	0	0	53
	CSJ 1442-04-007														
	LAVACA COUNTY LINE GONZALES COUNTY LINE	60X24 72X24	10 BWG	1	SA	T					1				1
	FARM ROAD 1680 RM 488	24X24 3X10	10 BWG	1	SA	P				1					1
	HISTORICAL MARKER 1 MILE ON RIGHT 3771	48X48	S80	1	SA	T		1							1
	ADOPT A HIGHWAY NEXT 2 MILES ST. JOSEPH'S CHURCH YOUTH FOLDING	24X48 36X36	10 BWG	1	SA	T					1				1
	STOP SIGN	30X30	10 BWG	1	SA	P				1					1
	CO RD 286 →	36X36	10 BWG	1	SA	P				1					1
	OLD MOULTON	60X12	10 BWG	1	SA	T					1				1
	CO RD ← 285 287 →	36X36	10 BWG	1	SA	P				1					1
	STOP SIGN	30X30	10 BWG	1	SA	P				1					1
	HISTORICAL MARKER → 3771	48X48	S80	1	SA	T		1							1
	CO RD ← 287 285 →	36X36	10 BWG	1	SA	P				1					1
	OLD MOULTON	60X12	10 BWG	1	SA	T					1				1
	CO RD 1680A →	36X36	10 BWG	1	SA	P				1					1
	STOP SIGN	30X30	10 BWG	1	SA	P				1					1
	← CO RD 1680A	36X36	10 BWG	1	SA	P				1					1
	OLD MOULTON CEMETERY →	60X18	10 BWG	1	SA	T					1				1
	HISTORICAL MARKER 1 MILE ON LEFT 3771	48X48	S80	1	SA	T		1							1
	FARM ROAD 1680 RM 490	24X24 3X10	10 BWG	1	SA	P				1					1
	SPEED LIMIT 45	36X36	10 BWG	1	SA	P				1					1
	ADOPT A HIGHWAY NEXT 2 MILES ST. JOSEPH'S CHURCH YOUTH FOLDING	24X48 36X36	10 BWG	1	SA	T					1				1
	TRUCK SPEED LIMIT 60 NIGHT 55	36X54 36X36	S80	1	SA	T		1							1
	SPEED LIMIT 45	24X30	10 BWG	1	SA	P				1					1
	SPEED LIMIT 60	24X30	10 BWG	1	SA	P				1					1
	ROAD CLOSED HIGH WATER (FOLDI	36X36	10 BWG	1	SA	P				1					1
							SUBTOTAL	4	0	14	6	0	0	0	24

LEVELS DISPLAYED ACC:

	1	2	3	4		7	8	9	10	11	12	13	14	15	16
17	18	19	20	21	22	23	24	25	26	27	28	29	30	31	32
33	34	35	36	37	38	39	40	41	42	43	44	45	46	47	48
49	50	51	52	53	54	55	56	57	58	59	60	61	62	63	

* BALL BANK CURVES PRIOR TO INSTALLATION OF SIGN TO DETERMINE APPROPRIATE ADVISORY SPEED TO BE POSTED.

SHEET 2 OF

Texas Department of Transpor

©

SUMMARY OF SMALL SIGNS

FED. RD. DIV. NO.	PROJECT NO.	
6		
STATE	DIST.	COUNTY
TEXAS	YKM	GONZALES, ETC
CONT	SECT	JOB
1442	03	016, ETC

SUMMARY OF SMALL SIGNS

SM RD SGN ASSM TY XXXXX(X)XX(X-XXXX)

- Post Type: FRP = Fiberglass; TWT = Thin-Wall; 10BWG = 10 BWG; S80 = Sch 80
- Posts (1 or 2)
- Anchor Type: UA = Univer-Conc; UB = Univer-Bolt; WA = Wedge-Conc; SA = Slip-Conc; SB = Slip-Bolt
- Mounting Designation: P = Prefab. "Plain"; T = Prefab. "T"; U = Prefab. "U"
- 1EXT or 2EXT = # of Ext. BM = Extruded Wind Beam; WC = 1.12 #/ft Wing Chan.; EXAL = Extruded Alum. signs

SIGN NO.	SIGN TEXT	SIGN DIMENSIONS (W X H)	Post Type	Posts (1 or 2)	Anchor Type	Mounting Designation	1EXT or 2EXT	ITEM 644 INS SM RD SN SUP & AM (EA) TY S80(1) SA(T)	TY S80(1) SA(U)	TY 10BWG(1) SA(P)	TY 10BWG(1) SA(T)	TY 10BWG(1) SA(U)	TY 10BWG(2) SA(P)	TY 10BWG(1) SA(T-EXAL)	ITEM 644 REMOV SM RD SN SUP & AM (EA)
	SPEED LIMIT 35	24X30	10 BWG	1	SA	P				1					1
	SPEED LIMIT 45	24X30	10 BWG	1	SA	P				1					1
	MOULTON CITY LIMIT POP. 944 MOULTON CITY LIMIT POP. 944	42X24	10 BWG	1	SA	T					1				1
	SUBTOTAL							0	0	2	1	0	0	0	3
	CSJ: 1442-04-007 TOTAL							4	0	16	7	0	0	0	27
	PROJECT TOTAL							5	0	65	10	0	0	0	80

* BALL BANK CURVES PRIOR TO INSTALLATION OF SIGN TO DETERMINE APPROPRIATE ADVISORY SPEED TO BE POSTED.

SHEET 3 OF

Texas Department of Transpor

©

SUMMARY OF SMALL SIGNS

FED. RD. DIV. NO.	PROJECT NO.	
6		
STATE	DIST.	COUNTY
TEXAS	YKM	GONZALES, ETC
CONT	SECT	JOB / HIGH
1442	03	016, ETC / FM

DISCLAIMER
The use of this standard is governed by the "Texas Engineering Practice Act". No warranty of any kind is made by TxDOT for any purpose whatsoever. TxDOT assumes no responsibility for the conversion of this standard to other formats or for incorrect results or damages resulting from its use.

LEVELS DISPLAYED

																															ACC:
1	2	3	4		7	8	9	10	11	12	13	14	15	16	17	18	19	20	21	22	23	24	25	26	27	28	29	30	31	32	
33	34	35	36	37	38	39	40	41	42	43	44	45	46	47	48																
49	50	51	52	53	54	55	56	57	58	59	60	61	62	63																	

SUMMARY OF EROSION CONTROL

LOCATION	ITEM 506 ROCK FILTER DAMS (INSTALL) (TY 3)	ITEM 506 ROCK FILTER DAMS (REMOVE)	ITEM 506 CONSTRUCTION EXITS (INSTALL) (TY 2)	ITEM 506 CONSTRUCTION EXITS (REMOVE)	ITEM 506 TEMPORARY SEDIMENT CONTROL FENCE	ITEM 506 EXCAV (EROSN & SED CONT IN PLACE)
	LF	LF	SY	SY	LF	CY
6+91.60			78	78	30	1
22+80.50	50	50			60	2
81+89.50	50	50			60	2
101+53	50	50			60	2
107+50	50	50			60	2
111+45	50	50			60	2
112+11	50	50			60	2
126+00	50	50			60	2
163+37	50	50			60	2
195+92	50	50			60	2
210+00	50	50			60	2
237+60	50	50			60	2
248+94	50	50			60	2
258+46	50	50			60	2
299+23.50 - 299+46.50	50	50			60	2
309+08.50 - 309+31.50	50	50			60	2
330+00	50	50			60	2
370+00	50	50			60	2
380+00	50	50			60	2
386+95.33 - 387+18.66	50	50			60	2
439+28	50	50			60	2
448+10	50	50			60	2
452+54	50	50			60	2
469+85	50	50			60	2
496+00	50	50			60	2
504+70	50	50			60	2
CSJ: 1442-03-016 TOTAL	1250	1250	78	78	1530	51
509+50	50	50			60	2
530+40	50	50			60	2
582+00	50	50			60	2
605+62	50	50			60	2
611+66	50	50			60	2
633+52	50	50			60	2
637+26			78	78	30	1
CSJ: 1442-04-007 TOTAL	300	300	78	78	390	13
PROJECT TOTAL	1550	1550	156	156	1920	64

SUMMARY OF TREE REMOVAL

LOCATION	SIZE	TYPE	ITEM 100 PREP ROW (TREE) 5"-12"	12"-24"	> 24"
249+24 RT	36"	POST OAK			1
268+65 RT	28"	POST OAK			1
315+36 RT	11"	LIVE OAK	1		
315+80 RT	18"	POST OAK		1	
318+64 RT	18"	LIVE OAK		1	
319+43 RT	16"	LIVE OAK		1	
471+89 RT	30"	LIVE OAK			1
CSJ: 1442-03-016 SUBTOTAL			1	3	3
PROJECT TOTAL			1	3	3

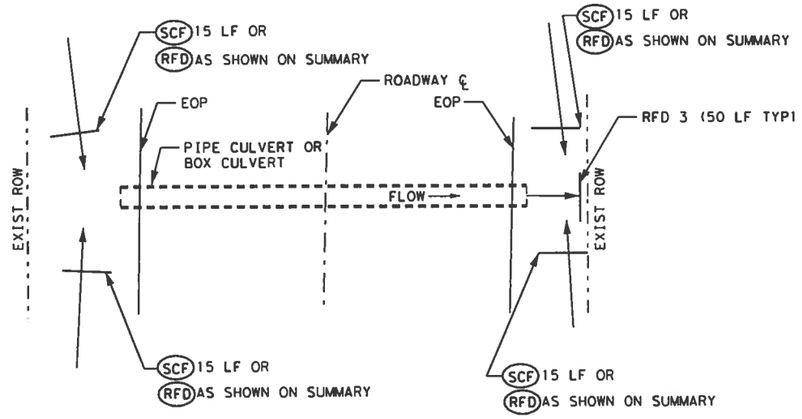

SW3P TYPICAL
DETAILS (CENTERLINE CULVERT)

4/2/09

STATE OF TEXAS
OLEN D. HOWARD
69804
REGISTERED
PROFESSIONAL ENGINEER

©2009 Texas Department of Transportation

JACOBS
5995 Rogerdale Road
Houston, TX 77052-3495
(832) 351-7230 www.jacobs.com

FM 1680
SUMMARY OF MISCELLANEOUS QUANTITIES

SHEET 1 OF

FED. RD. DIV. NO.	PROJECT NO.	SHEET NO.
6		20

STATE	DIST.	COUNTY	
TEXAS	YKM	GONZALES, ETC	
CONT	SECT	JOB	HIGHWAY NO.
1442	03	016, ETC	FM 1680

The requirement for shadow vehicles will be listed in the project GENERAL NOTES, Item 502, Barricades, Signs and Traffic Handling.

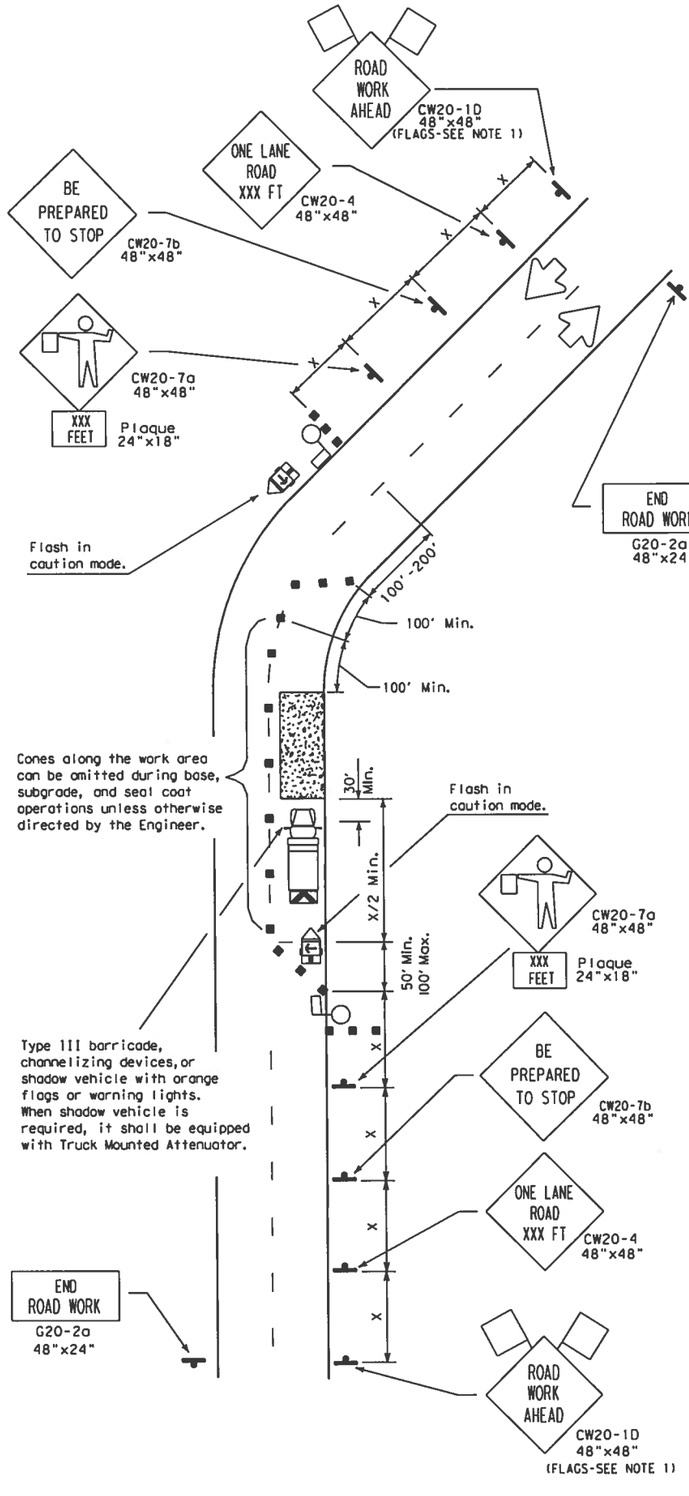

LEGEND

Type III Barricade ■ ■ Channelizing Devices Fl

Heavy Work Vehicle Truck Mounted Attenuator

Trailer Mounted Flashing Arrow Panel (M) Portable Changeable Message Sign

Flagger Sign Post

Posted Speed*	Formula	Minimum Desirable Taper Lengths ** 10' Offset	11' Offset	12' Offset	Suggested Maximum Spacing of Device On a Taper	On a Tangent	Minimum Sign Spacin X Distance
30	$L=\frac{WS^2}{60}$	150'	165'	180'	30'	60'-75'	120'
35		205'	225'	245'	35'	70'-90'	160'
40		265'	295'	320'	40'	80'-100'	240'
45	L=WS	450'	495'	540'	45'	90'-110'	320'
50		500'	550'	600'	50'	100'-125'	400'
55		550'	605'	660'	55'	110'-140'	500'
60		600'	660'	720'	60'	120'-150'	*600'
65		650'	715'	780'	65'	130'-165'	*700'
70		700'	770'	840'	70'	140'-175'	*800'

* Conventional Roads Only
** Taper lengths have been rounded off.
L=Length of Taper (ft) W=Width of Offset (ft) S=Posted Speed (MPH)

TYPICAL USAGE:				
MOBILE	SHORT DURATION	SHORT TERM STATIONARY	INTERMEDIATE TERM STATIONARY	LONG TERM STATIONARY
	✓	✓	✓	

GENERAL NOTES:

1. Flags attached to signs are REQUIRED.
2. Flaggers should use two-way radios or other methods of communication to control traffic.
3. Unless otherwise directed by the Engineer, on the two lane highways with a minimum detour width of 20', two pilots cars with G20-4 signs will be REQUIRED to maintain two-way traffic. If the 20' detour is not available, one pilot car with a G20-4 sign will be REQUIRED to maintain one-way traffic.
4. The trailer mounted flasher arrow panel will not be required for minor operations of less than one hour.

STANDARD PLANS
TEXAS DEPARTMENT OF TRANSPORTATIO

TRAFFIC CONTROL PLAN

(YKM. DISTRICT)
TCP - ONE LANE ROADWA

© 2003 TxDOT

Dsn-LR	Ck-PF	Dsn-DP	Ck-PF	REG NO.

REVISIONS
3-97
10-01
9-03

STATE DISTRICT	FEDERAL REGION	PROJECT NUMBER
YKM	6	

COUNTY	CONTROL	SECTION	JOB
GONZALES, ETC	1442	03	016, ETC

8-98 (D137011) TCP22.DGN

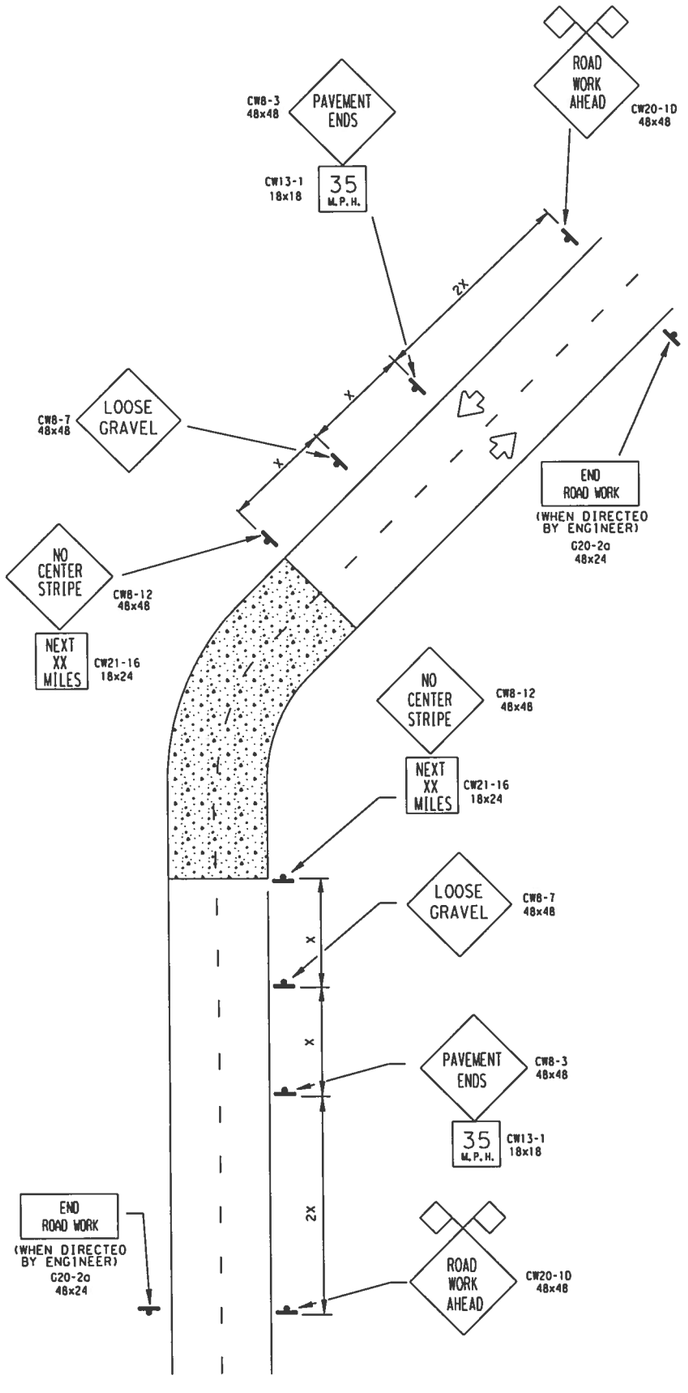

LEGEND

Type III Barricade ■ ■ Channelizing Devices

Heavy Work Vehicle Truck Mounted Attenuator

Trailer Mounted Flashing Arrow Panel (M) Portable Changeable Message Sign

Flagger Sign Post

Posted Speed *	Formula	Minimum Desirable Taper Lengths ** 10' Offset	11' Offset	12' Offset	Suggested Maximum Spacing of Device On a Taper	On a Tangent	Minimum Sign Spacing x Distance
30	$L = \frac{WS^2}{60}$	150'	165'	180'	30'	60'-75'	120'
35		205'	225'	245'	35'	70'-90'	160'
40		265'	295'	320'	40'	80'-100'	240'
45	L=WS	450'	495'	540'	45'	90'-110'	320'
50		500'	550'	600'	50'	100'-125'	400'
55		550'	605'	660'	55'	110'-140'	500'
60		600'	660'	720'	60'	120'-150'	*600'
65		650'	715'	780'	65'	130'-165'	*700'
70		700'	770'	840'	70'	140'-175'	*800'

* Conventional Roads Only

** Taper lengths have been rounded off.
L=Length of Taper (m) W=Width of Offset (m) S=Posted Speed (MPH)

SIGN SPACING SHALL BE IN ACCORDANCE WITH CURRENT BC STANDARDS.

©2002 TxDOT

STANDARD PLANS
TEXAS DEPARTMENT OF TRANSPORTATIO

TRAFFIC CONTROL PLAN

(YKM. DISTRICT)

TCP - UNSURFACED ROADWA

ORIG DRAW DATE: December 1985	DN: LR	CK: MT	DW: DN	CK: MT	REG NO.
REVISIONS	STATE DISTRICT	FEDERAL REGION	PROJECT NUMBER		
3-22-99	YKM	6			
	COUNTY		CONTROL	SECTION	JOB
	GONZALES, ETC		1442	03	016, ETC

DISCLAIMER
The use of this standard is governed by the "Texas Engineering Practice Act". No warranty of any kind is made by TxDOT for any purpose whatsoever. TxDOT assumes no responsibility for the conversion of this standard to other formats or for incorrect results or damages resulting from its use.

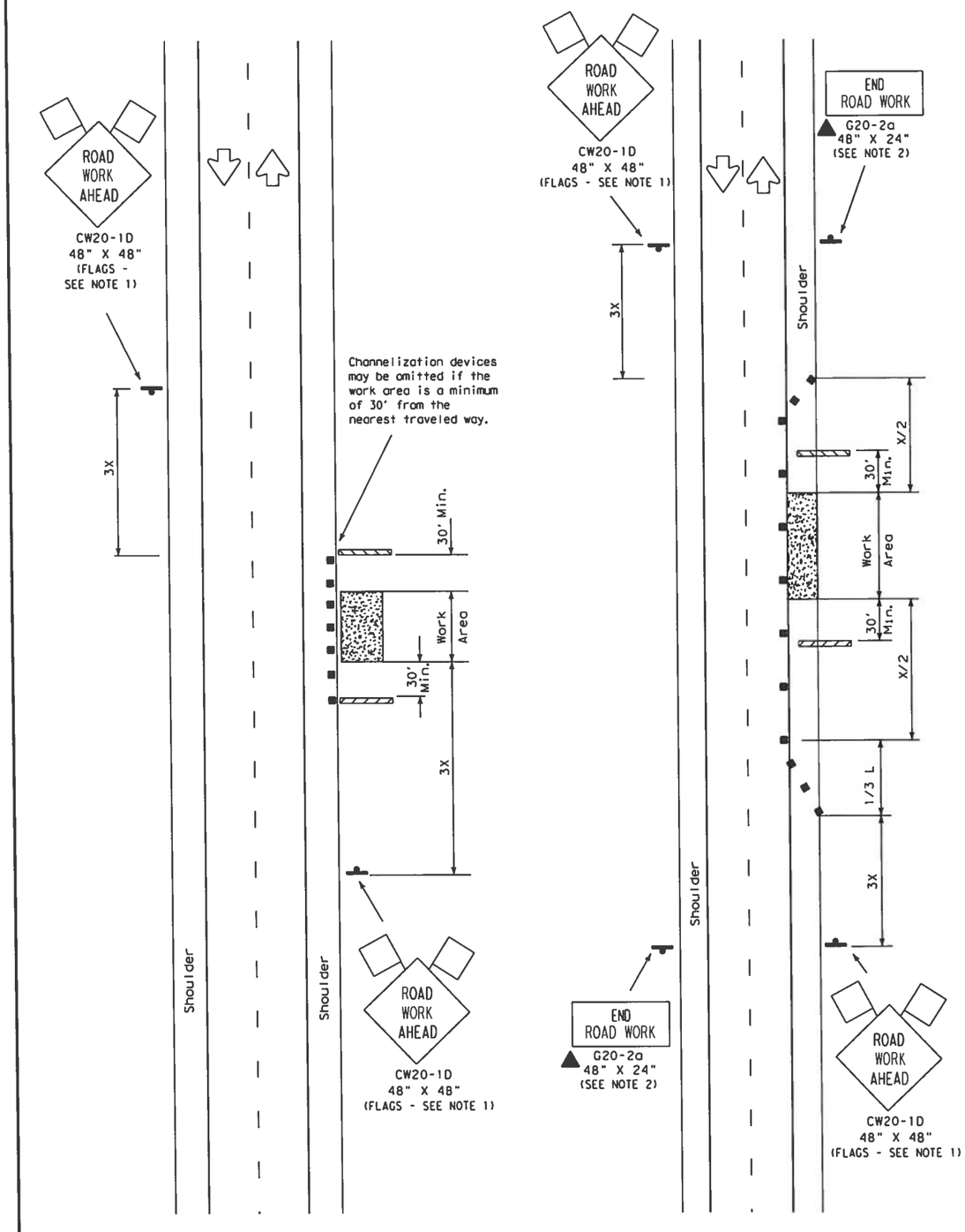

TCP (2-1a)

Work Area Near Shoulder

TCP (2-1b)

Work Area on Shoulder

TCP (2-1c)

Work Vehicles on Shoulder

LEGEND

Type III Barricade ■ ■ Channelizing Devices

Heavy Work Vehicle Truck Mounted Attenuator

Trailer Mounted Flashing Arrow Panel (M) Portable Changeable Message Sign

Flagger Sign Post

Posted Speed *	Formula	Minimum Desirable Taper Lengths * * 10' Offset	11' Offset	12' Offset	Suggested Maximum Spacing of Device On a Taper	On a Tangent	Minimum Sign Spaci x Distance
30	$L = \frac{WS^2}{60}$	150'	165'	180'	30'	60'-75'	120'
35		205'	225'	245'	35'	70'-90'	160'
40		265'	295'	320'	40'	80'-100'	240'
45	L=WS	450'	495'	540'	45'	90'-110'	320'
50		500'	550'	600'	50'	100'-125'	400'
55		550'	605'	660'	55'	110'-140'	500'
60		600'	660'	720'	60'	120'-150'	* 600'
65		650'	715'	780'	65'	130'-165'	* 700'
70		700'	770'	840'	70'	140'-175'	* 800'

* Conventional Roads Only

* * Taper lengths have been rounded off.
L=Length of Taper (FT.) W=Width of Offset (FT.) S=Posted Speed (MP

TYPICAL USAGE: MOBILE	SHORT DURATION	SHORT TERM STATIONARY	INTERMEDIATE TERM STATIONARY	LONG TERM STATIONARY
	✓	✓	✓	✓

GENERAL NOTES:

1. Unless otherwise stated in the plans, flags attached to signs are REQUIRED.
2. All traffic control devices illustrated are REQUIRED, except thos denoted with the triangle symbol may be omitted when stated elsew in the plans.
3. Type III barricades are required on both sides of work area at all times. (See BC Standards for barricade details.)
4. Stockpiled material should be placed a minimum 30' from nearest traveled way.
5. On high speed facilities advance warning signs should be installe approximately 3X from the work area or from the beginning of a la or shoulder taper. On low speed facilities the advance warning s should be placed on the "X" minimum distance.

Only pre-qualified products shall be used. A list of compliar products and their sources may be obtained by writing or faxing:

Standards Engineer
Traffic Operations Division - TE
Texas Department of Transportation
125 East 11th Street
Austin, Texas 78701-2483
Phone (512) 416-3335
Fax (512) 416-3161
E-mail TRF-STANDARD@mailgw.dot.state.tx.us

STANDARD PLANS
TEXAS DEPARTMENT OF TRANSPORTATIO
Traffic Operations Division

TRAFFIC CONTROL PLAN

TCP(2-1)-

© TxDOT December 1985

DSN: LR	CK: MT	DW: DN	CK: MT	MCG NO.

REVISIONS	STATE DISTRICT	FEDERAL REGION	PROJECT NUMBER
2-94	YKM	6	
8-95			
1-97			
4-98			

COUNTY	CONTROL	SECTION	JOB	
GONZALES, ETC	1442	03	016, ETC	FA

DN:	
CK:	
DW:	
CK:	

DATE:	
ACC:	
FILE:	

LEVELS DISPLAYED

1	2	3	4	5	6	7	8	9	10	11	12	13	14	15	16
17	18	19	20	21	22	23	24	25	26	27	28	29	30	31	32
33	34	35	36	37	38	39	40	41	42	43	44	45	46	47	48
49	50	51	52	53	54	55	56	57	58	59	60	61	62	63	

DISCLAIMER
The use of this standard is governed by the "Texas Engineering Practice Act". No warranty of any kind is made by TxDOT for any purpose whatsoever. TxDOT assumes no responsibility for the conversion of this standard to other formats or for incorrect results or damages resulting from its use.

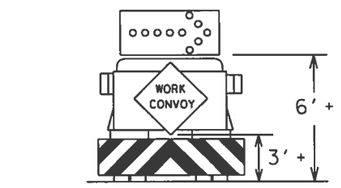

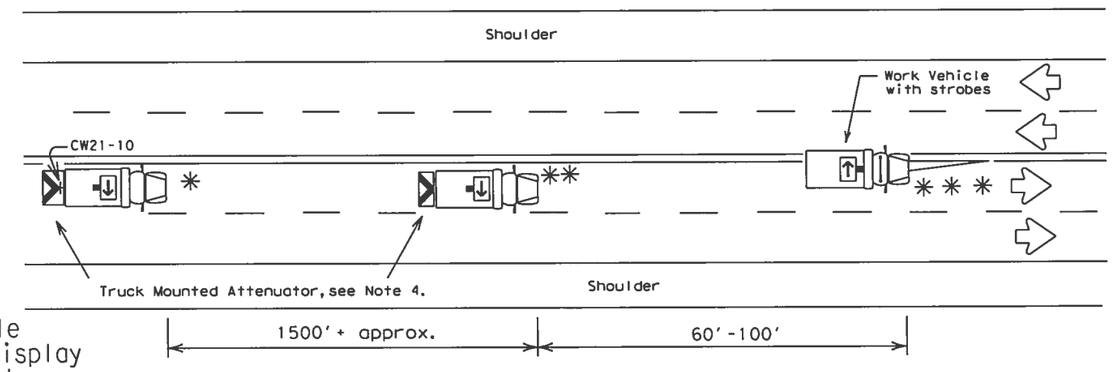

Typical Trail Vehicle
with RIGHT Directional display
Flashing Arrow Panel

TCP (3-1a)
Undivided Multilane Roadway

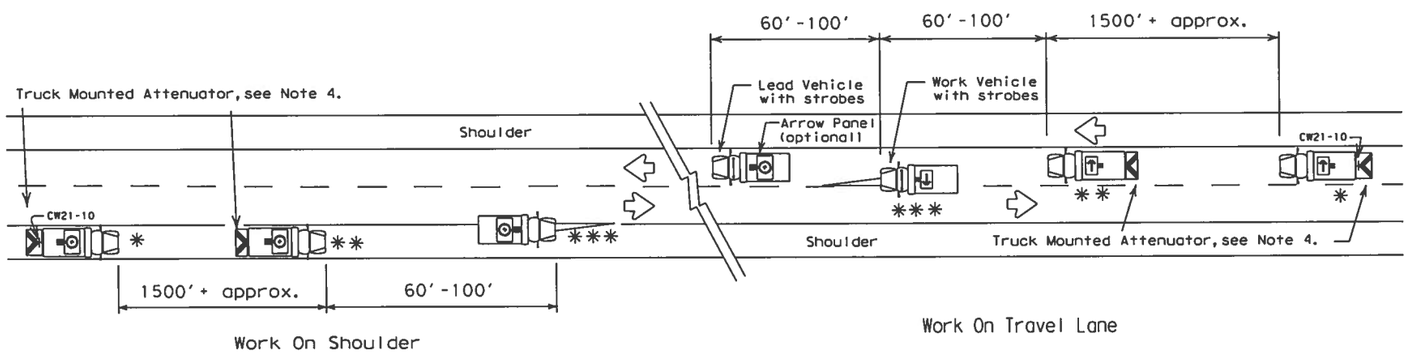

Work On Shoulder

Work On Travel Lane

TCP (3-1b)
Two-Way Roadway With Paved Shoulders

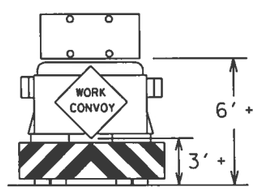

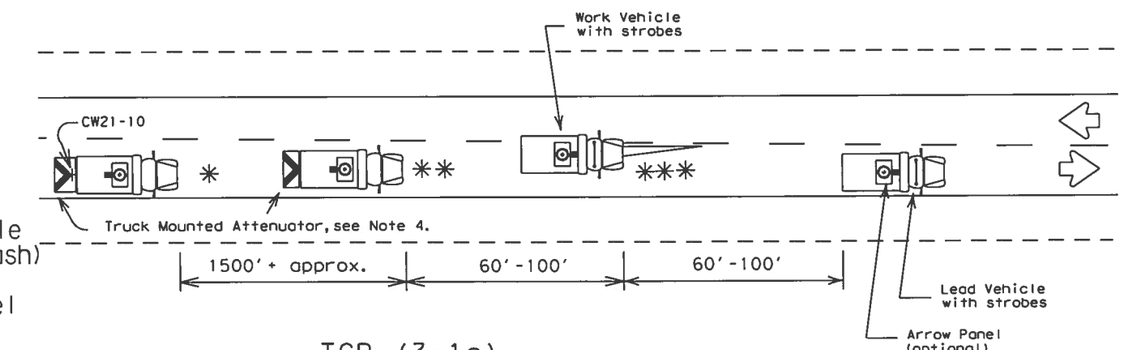

Typical Trail Vehicle
with (four corner flash)
CAUTION display
Flashing Arrow Panel

TCP (3-1c)
Two-Way Roadway Without Paved Shoulders

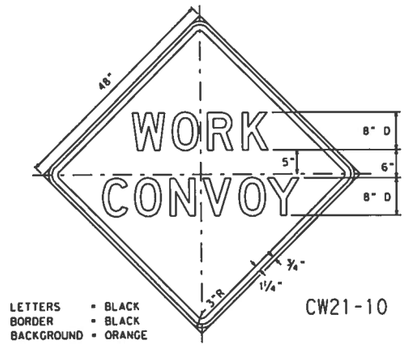

Legend:

- ✱ TRAIL VEHICLE
- ✱✱ SHADOW VEHICLE
- ✱✱✱ WORK VEHICLE
- Truck mounted attenuator
- HEAVY WORK VEHICLE

Arrow Panel Displays

- RIGHT Directional
- LEFT Directional
- RIGHT or LEFT Directional
- CAUTION mode

GENERAL NOTES:

1. TRAIL, SHADOW, LEAD, and work vehicles shall be equipped with arrow panels as illustrated. The Engineer will determine if the LEAD VEHICLE and/or TRAIL VEHICLE are required based on prevailing roadway conditions, traffic volume, and sight distance restrictions.
2. All traffic control devices shall be in accordance with the "Texas Manual on Uniform Traffic Control Devices (TMUTCD), latest edition.
3. The use of yellow rotating beacons or strobe lights on vehicles are required unless otherwise stated elsewhere in the plans.
4. The use of truck mounted attenuators (TMA) on the SHADOW VEHICLE and the TRAIL VEHICLE are required.
5. Optional striping on the back panel of all truck mounted attenuators shall be 8" red and white reflective sheeting placed in an inverted "V" design. Reflective sheeting shall meet or exceed the reflectivity and color requirements of DEPARTMENTAL MATERIAL SPECIFICATION D-9-8300, TYPE C.
6. Flashing Arrow Panels shall be Type B or Type C as per BC Standards. The panel operation shall be controlled from inside the vehicle.
7. Each vehicle shall have two-way radio communication capability.
8. When work convoys must change lanes, the TRAIL VEHICLE should change lanes first to shadow the other convoy vehicles.
9. Vehicle spacing between TRAIL VEHICLE and SHADOW VEHICLE will vary depending on sight distance restrictions. Motorists approaching the work convoy should be able to see the TRAIL VEHICLE in time to slow down and/or change lanes as they approach the TRAIL VEHICLE.

Only pre-qualified products shall be used. A list of compliant products and their sources may be obtained by writing or faxing:

Standards Engineer
Traffic Operations Division - TE
Texas Department of Transportation
125 East 11th Street
Austin, Texas 78701-2483
Phone (512) 416-3335
Fax (512) 416-3161
E-mail TRF-STANDARD@mailgw.dot.state.tx.us

Shadow and trail vehicle shall be equipped with Truck Mounted Attenuator.

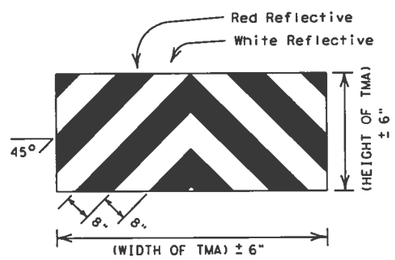

OPTIONAL STRIPING FOR TMA

STRIPING FOR TMA WILL BE REQUIRED ON ALL PROJECTS AWARDED AFTER JANUARY 1, 2000

STANDARD PLANS
TEXAS DEPARTMENT OF TRANSPORTATIO
Traffic Operations Division

TRAFFIC CONTROL PLAN
MOBILE OPERATIONS
UNDIVIDED HIGHWAYS

TCP(3-1)-9

©TxDOT December 1985

DN:	CK:	DW:	CK:
LR		DN	DM

REVISIONS	STATE DISTRICT	FEDERAL REGION	PROJECT NUMBER
2-94	YKM	6	
8-95	COUNTY	CONTROL	SECTION	JOB
1-97	GONZALES, ETC	1442	03	016, ETC
4-98				

LEVELS DISPLAYED
1 2 3 4 5 6 7 8 9 10 11 12 13 14 15 16
17 18 19 20 21 22 23 24 25 26 27 28 29 30 31 32
33 34 35 36 37 38 39 40 41 42 43 44 45 46 47 48
49 50 51 52 53 54 55 56 57 58 59 60 61 62 63

DATE:
ACC:
FILE:

DISCLAIMER
The use of this standard is governed by the "Texas Engineering Practice Act". No warranty of any kind is made by TxDOT for any purpose whatsoever. TxDOT assumes no responsibility for the conversion of this standard to other formats or for incorrect results or damages resulting from its use.

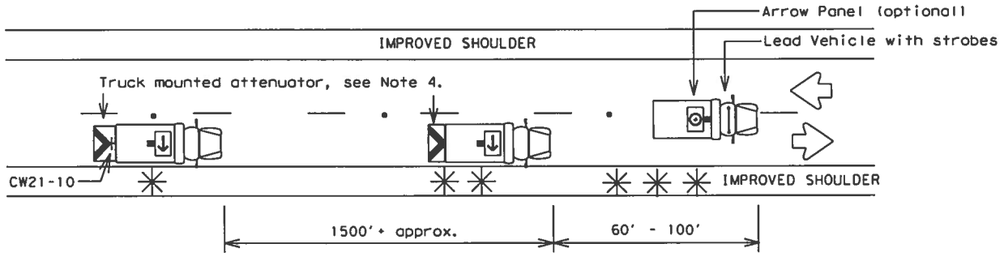

Two Lane Highway With Paved Shoulders (work on travel lane)

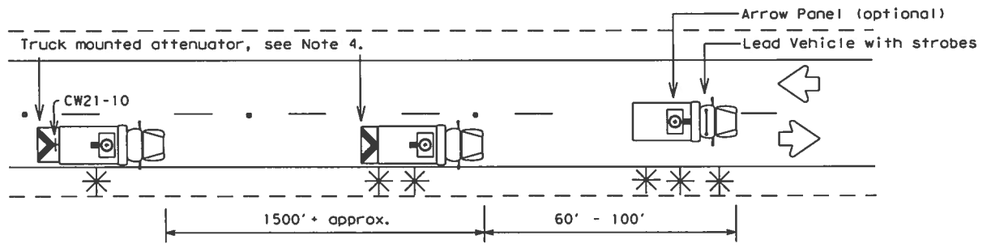

Two Lane Highway Without Paved Shoulders (work on travel lane)

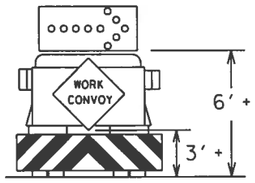

TYPICAL TRAIL VEHICLE
RIGHT Directional display
Flashing Arrow Panel

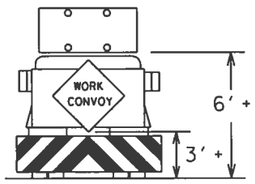

TYPICAL TRAIL VEHICLE
with (four corner flash)
CAUTION display
Flashing Arrow Panel

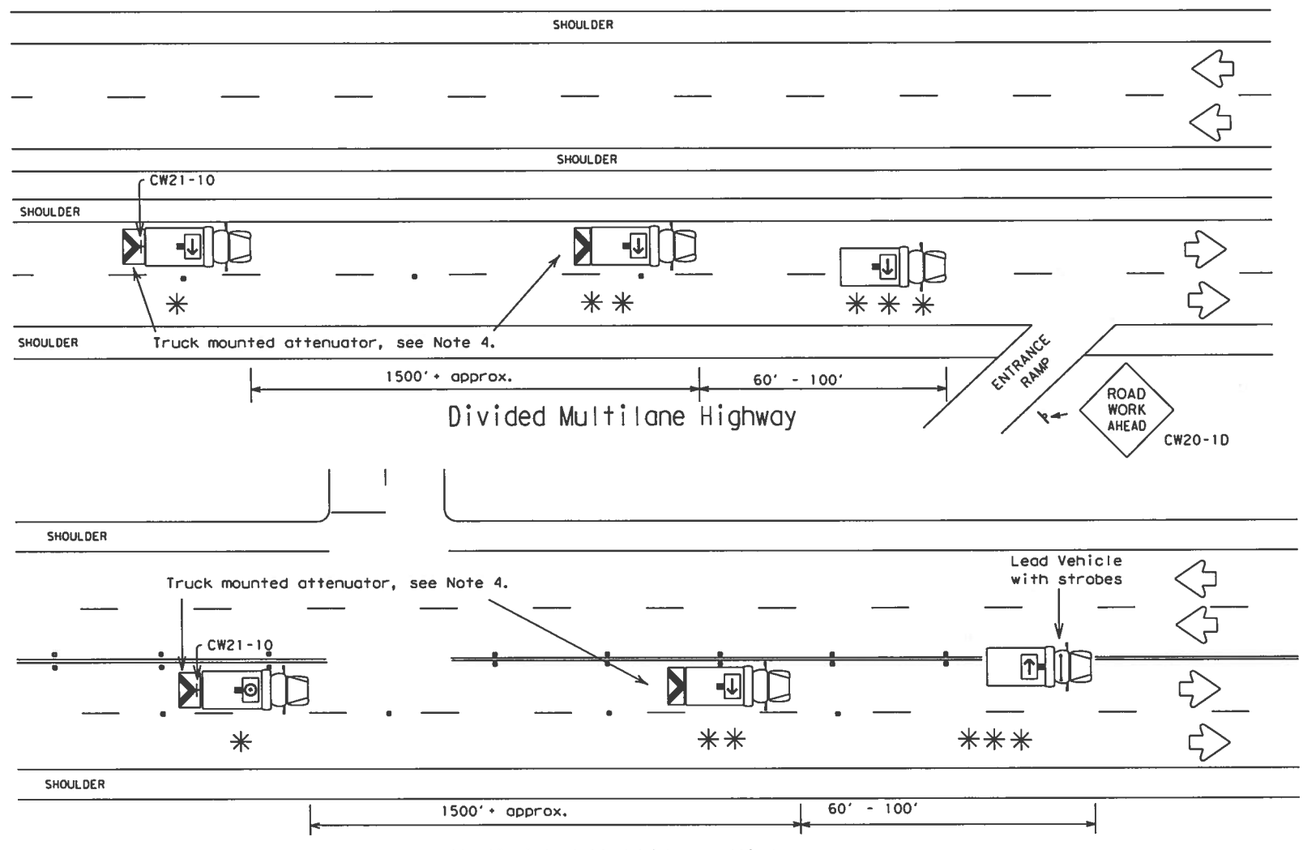

Divided Multilane Highway

Undivided Multilane Highway

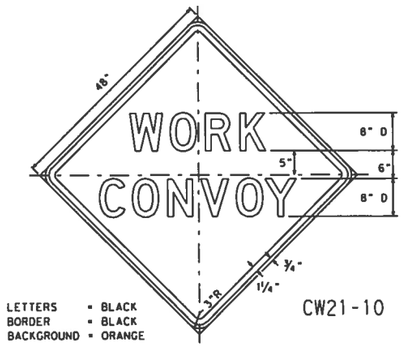

Legend:

- * TRAIL VEHICLE
- ** SHADOW VEHICLE
- *** WORK VEHICLE
- Truck mounted attenuator
- HEAVY WORK VEHICLE

Arrow Panel Displays
- RIGHT Directional
- LEFT Directional
- RIGHT or LEFT Directional
- CAUTION mode

GENERAL NOTES:

1. TRAIL, SHADOW, LEAD, and work vehicles shall be equipped with arrow panels as illustrated. The Engineer will determine if the LEAD VEHICLE and/or TRAIL VEHICLE are required based on prevailing roadway conditions, traffic volume, and sight distance restrictions.
2. All traffic control devices shall be in accordance with the "Texas Manual on Uniform Traffic Control Devices (TMUTCD), latest edition.
3. The use of yellow rotating beacons or strobe lights on vehicles are required unless otherwise stated elsewhere in the plans.
4. The use of truck mounted attenuators (TMA) on the SHADOW VEHICLE and the TRAIL VEHICLE are required.
5. Optional striping on the back panel of all truck mounted attenuators shall be 8" red and white reflective sheeting placed in an inverted "V" design. Reflective sheeting shall meet or exceed the reflectivity and color requirements of DEPARTMENTAL MATERIAL SPECIFICATION D-9-8300, TYPE C.
6. Flashing Arrow Panels shall be Type B or Type C as per BC Standards. The panel operation shall be controlled from inside the vehicle.
7. Each vehicle shall have two-way radio communication capability.
8. When work convoys must change lanes, the TRAIL VEHICLE should change lanes first to shadow the other convoy vehicles.
9. Vehicle spacing between TRAIL VEHICLE and SHADOW VEHICLE will vary depending on sight distance restrictions. Motorists approaching the work convoy should be able to see the TRAIL VEHICLE in time to slow down and/or change lanes as they approach the TRAIL VEHICLE.

Only pre-qualified products shall be used. A list of compliant products and their sources may be obtained by writing or faxing:

Standards Engineer
Traffic Operations Division - TE
Texas Department of Transportation
125 East 11th Street
Austin, Texas 78701-2483
Phone (512) 416-3335
Fax (5121 416-3161
E-mail TRF-STANDARD@mailgw.dot.state.tx.us

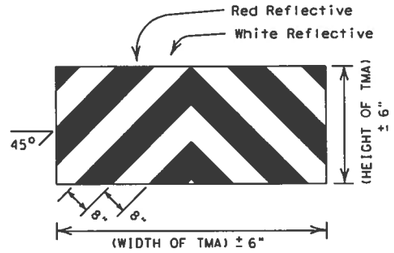

OPTIONAL STRIPING FOR TMA

STRIPING FOR TMA WILL BE REQUIRED ON ALL PROJECTS AWARDED AFTER JANUARY 1, 2000

Shadow and trail vehicle shall be equipped with Truck Mounted Attenuator.

STANDARD PLANS
TEXAS DEPARTMENT OF TRANSPORTATIO
Traffic Operations Division

TRAFFIC CONTROL PLAN MOBILE OPERATIONS RAISED PAVEMENT MARKER INSTALLATION

TCP(3-3)-

© TxDOT September 1987	DN-LR	CK-	DW-DN	CK-DW	MCG NO.

REVISIONS	STATE DISTRICT	FEDERAL REGION	PROJECT NUMBER				
2-94	YKM	6					
8-95	COUNTY		CONTROL	SECTION	JOB		
1-97	GONZALES, ETC		1442	03	016, ETC		F
4-98							

DN:
CK:
DW:
CK:

DATE:
ACC:
FILE:

LEVELS DISPLAYED
1 2 3 4 5 6 7 8 9 10 11 12 13 14 15 16
17 18 19 20 21 22 23 24 25 26 27 28 29 30 31 32
33 34 35 36 37 38 39 40 41 42 43 44 45 46 47 48
49 50 51 52 53 54 55 56 57 58 59 60 61 62 63

DISCLAIMER
The use of this standard is governed by the "Texas Engineering Practice Act". No warranty of any kind is made by TxDOT for any purpose whatsoever. TxDOT assumes no responsibility for the conversion of this standard to other formats or for incorrect results or damages resulting from its use.

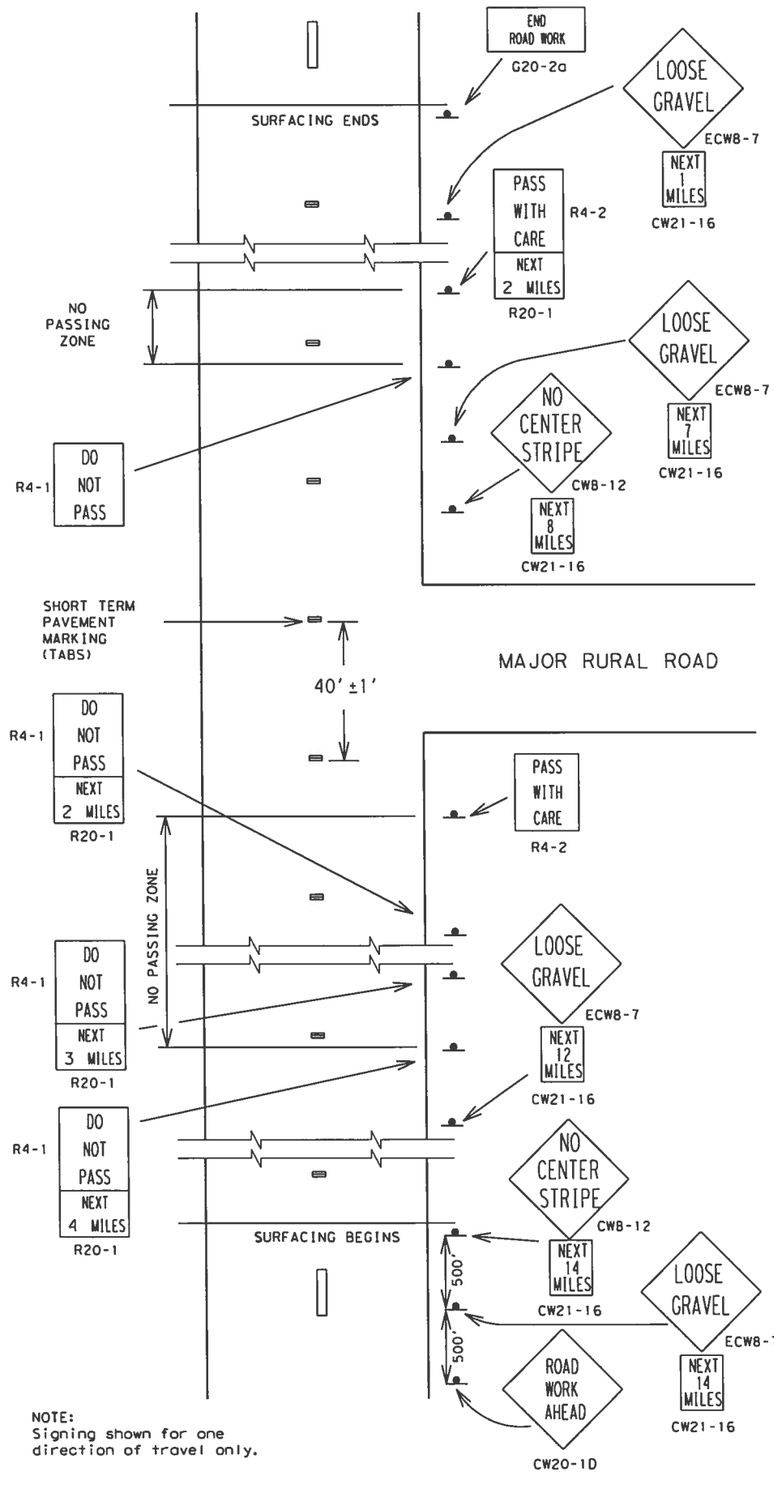

NOTE:
Signing shown for one direction of travel only.

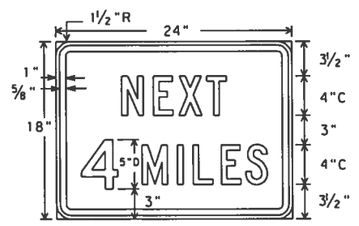

R20-1
24"x18"

Legend - Black
Border - Black
Background - White Refl.

FOR USE WITH REGULATORY SIGNS ONLY

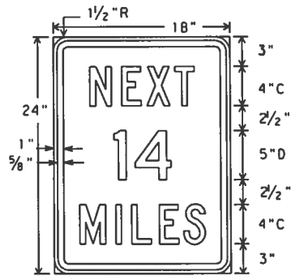

CW21-16
18"x24"

Legend - Black
Border - Black
Background - Orange Refl.

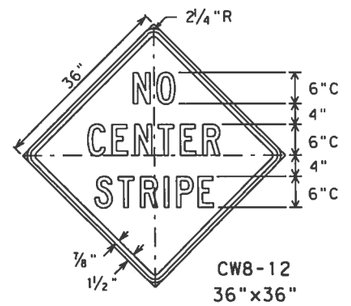

CW8-12
36"x36"

Legend - Black
Border - Black
Background - Orange Refl.

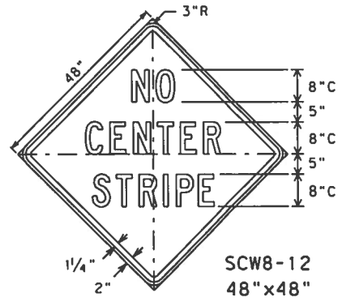

SCW8-12
48"x48"

Legend - Black
Border - Black
Background - Orange Refl.

FOR USE WITH CONSTRUCTION WARNING SIGNS ONLY

TEMPORARY FLEXIBLE-REFLECTIVE ROADWAY MARKER TABS

for surfacing projects only

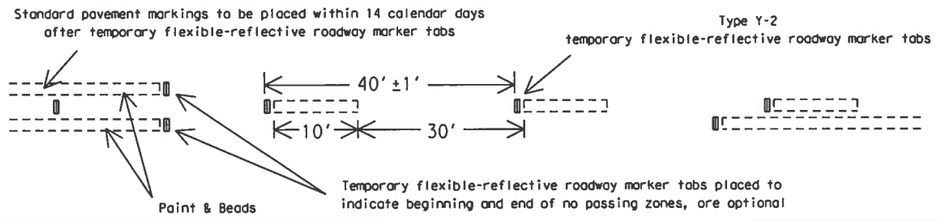

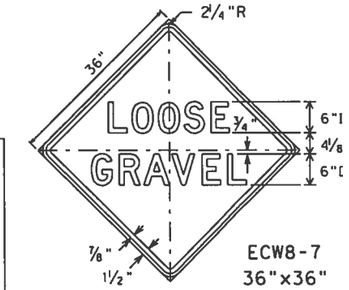

ECW8-7
36"x36"

Legend - Black
Border - Black
Background - Orange Refl.

GENERAL NOTES

The traffic control devices detailed on this sheet will be furnished and erected as directed by the Engineer on sections of roadway where the surfacing operation has covered or obliterated existing pavement markings. These traffic control devices are to be used to supplement those required by BC Standards.

"DO NOT PASS" SIGN (R4-1) and NO-PASSING ZONES

Prior to the beginning of construction, all currently striped no-passing zones should be signed with the DO NOT PASS sign (R4-1) and PASS WITH CARE sign (R4-2) placed at the beginning and end of each zone for each direction of travel except as otherwise provided herein. Signs marking these individual no-passing zones need not be covered prior to construction if the signs supplement the existing pavement markings.

At the discretion of the Engineer, in areas of numerous no-passing zones, several zones may be combined and signed as a single zone. If passing is to be prohibited over one or more lengthy sections, a DO NOT PASS sign and a NEXT XX MILES sign (R20-1) may be used at the beginning of such zones. The DO NOT PASS and NEXT XX MILES signs should be repeated every mile to the end of the no-passing zone. In areas where there is considerable distance between no-passing zones, the end of a no-passing zone may be signed with a PASS WITH CARE and NEXT XX MILES sign.

Depending on traffic volumes and length of sections, it may be desirable to prohibit passing throughout the project to prevent damage to windshields and lights. The DO NOT PASS and NEXT XX MILES sign should be used and repeated as often as necessary for this purpose. Where several existing zones are to be combined into one individual no-passing zone, the sign at the beginning of the zone should be covered until the surfacing operation has passed this location so as not to have the DO NOT PASS sign conflict with existing pavement markings. Also, unless one days operation completes the entire length of such combined zones, care must be taken to place DO NOT PASS and PASS WITH CARE signs in order to sign the beginning and end of the no-passing zones in the area where the surfacing operation has stopped for the day.

R4-1 and R4-2 signs should be mounted on fixed supports as detailed on BC Standards. These signs are to remain in place until standard pavement markings are placed.

"NO CENTER STRIPE" SIGN (CW21-15)

At the time construction activity obliterates the existing centerline (low volume roads may not have an existing centerline), a NO CENTER STRIPE sign (CW8-12) should be erected at each end of the work area and just beyond major rural intersections and other location deemed necessary by the Engineer. Where possible, the signs erected at each end of the work area should be located in such a manner that drivers can read the sign and immediately see the change to no centerline. The NO CENTER STRIPE sign should be supplemented with the NEXT XX MILES sign (CW21-16) mounted below it.

The NO CENTER STRIPE sign should be erected as detailed on BC Standards. These signs are to remain in place until standard pavement markings are placed.

"LOOSE GRAVEL" SIGN (ECW8-7)

When construction begins, a LOOSE GRAVEL sign (ECW8-7) should be erected at each end of the work area and repeated at intervals of approximately two (2) miles in rural areas and closer in urban areas. The LOOSE GRAVEL sign should be supplemented with the NEXT XX MILES sign (CW21-16) mounted below it.

The LOOSE GRAVEL sign should be erected as detailed on BC Standards. They should remain in place until the loose gravel condition no longer exists.

PAVEMENT MARKINGS

Short term pavement markings for surfacing projects shall use Temporary Flexible-reflective Roadway Marker Tabs. Tabs are to be installed to provide true alignment for striping crews or as directed by the Engineer. Tabs will be placed at the spacing indicated. Tabs should be applied to the pavement no more than two (2) days before the surfacing is applied. After the surfacing is rolled and swept the cover over the reflective strip shall be removed. Tabs shall NOT be used to simulate edge lines.

Only pre-qualified products shall be used. A list of complian products and their sources may be obtained by writing or faxing:

Standards Engineer
Traffic Operations Division - TE
Texas Department of Transportation
125 East 11th Street
Austin, Texas 78701-2483
Phone (512) 416-3335
Fax (512) 416-3161
E-mail TRF-STANDARD@mailgw.dot.state.tx.us

TYPICAL USAGE:				
MOBILE	SHORT DURATION	SHORT TERM STATIONARY	INTERMEDIATE TERM STATIONARY	LONG TE STATION
	✓	✓	✓	✓

STANDARD PLANS
TEXAS DEPARTMENT OF TRANSPORTATIO
Traffic Operations Division

TRAFFIC CONTROL DETAILS for SURFACING OPERATIONS

TCP(7-1)-9

©TxDOT March 1991

DN: LR	CK: MT	DW: DN	CK:	MSC NO.

REVISIONS	STATE DISTRICT	FEDERAL REGION	PROJECT NUMBER
4-92	YKM	6	
1-97			
4-98			

COUNTY	CONTROL	SECTION	JOB	
GONZALES, ETC	1442	03	016, ETC	FI

DN:
CK:
DW:
CK:
DATE:
ACC:
FILE:

LEVELS DISPLAYED
1 2 3 4 5 6 7 8 9 10 11 12 13 14 15 16
17 18 19 20 21 22 23 24 25 26 27 28 29 30 31 32
33 34 35 36 37 38 39 40 41 42 43 44 45 46 47 48
49 50 51 52 53 54 55 56 57 58 59 60 61 62 63

DISCLAIMER
The use of this standard is governed by the "Texas Engineering Practice Act". No warranty of any kind is made by TxDOT for any purpose whatsoever. TxDOT assumes no responsibility for the conversion of this standard to other formats or for incorrect results or damages resulting from its use.

WORK ZONE SHORT TERM PAVEMENT MARKINGS DETAILS

SOLID LINES

DOUBLE NO-PASSING LINE

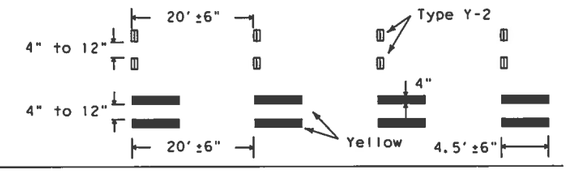

SINGLE NO-PASSING LINE or CHANNELIZATION LINE

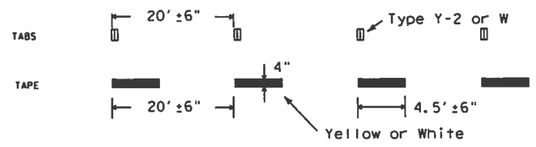

BROKEN LINE

(FOR CENTER LINE OR LANE LINE.)

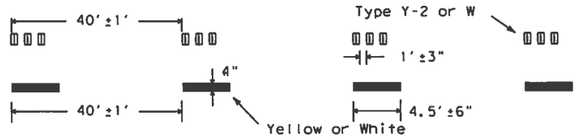

NOTES:

1. Short term pavement markings may be prefabricated markings (stick down tapel or temporary flexible-reflective roadway marker tabs unless otherwise specified elsewhere in plans.
2. Short term pavement markings shall NOT be used to simulate edge lines.
3. Dimensions indicated on this sheet are typical and approximate. Variations in size and height may occur between markers or devices made by manufacturers, by as much as 1/4 inch, unless otherwise noted.
4. Temporary flexible-reflective roadway marker tabs will require normal maintenance replacement when used on roadways with an ADT per lane of up to 7500 vehicles with no more than 10% truck mix. When roadways exceed these values, additional maintenance replacement of devices should be planned.
5. No segment of roadway open to traffic shall remain without permanent pavement markings for a period greater than 14 calendar days. The Contractor will be responsible for maintaining short term pavement markings until permanent pavement markings are in place. When the Contractor is responsible for placement of permanent pavement markings, no segment of roadway shall remain without permanent pavement markings for a period greater than 14 calendar days unless weather conditions prohibit placement. Permanent pavement markings shall be placed as soon as weather permits.
6. For two lane, two-way roadways, DO NOT PASS signs shall be erected to mark the beginning of sections where passing is prohibited and PASS WITH CARE signs shall be erected to mark the beginning of sections where passing is permitted. Signs shall be in accordance with the "Texas Manual on Uniform Traffic Control Devices" (TMUTCD) and may be used to indicate the limits of no-passing zones for up to 14 calendar days. Permanent pavement markings should then be placed.
7. For low volume two lane, two-way roadways of 4000 ADT or less, no-passing lines may be omitted when approved by the Engineer. DO NOT PASS and PASS WITH CARE signs shall be erected (see note 6).

TEMPORARY FLEXIBLE-REFLECTIVE ROADWAY MARKER TABS (TABS)

1. Temporary flexible-reflective roadway marker tabs detailed on this sheet will be designated Type Y-2 (two amber reflective surfaces with yellow body); Type Y (one amber reflective surface with yellow body); and Type W (one white or silver reflective surface with white body). Additional details may be found on BC(II).
2. Tabs shall meet requirements of Departmental Material Specification DMS-8242.
3. When dry, tabs shall be visible for a minimum distance of 200 feet during normal daylight hours and when illuminated by automobile low-beam head light at night, unless sight distance is restricted by roadway geometrics.
4. No two consecutive tabs nor four tabs per 1000 feet of line shall be missing or fail to meet the visual performance requirements of Note 3.

REMOVABLE - PREFABRICATED PAVEMENT MARKINGS

1. Removable prefabricated pavement markings shall meet the requirements of DMS-8241. A list of prequalified products can be found at the following web site:
   ftp://ftp.dot.state.tx.us/pub/txdot-info/gsd/pdf/pavemark.pdf

NON REMOVABLE - PREFABRICATED PAVEMENT MARKINGS

1. Non-removable prefabricated pavement markings (foil back) shall meet the requirements of DMS-8240 or the TXDOT Purchase Specification No. 55D-74-89. A list of prequalified products and a copy of the TXDOT Purchase Specifications can be found at web sites:
   ftp://ftp.dot.state.tx.us/pub/txdot-info/gsd/pdf/pavement.pdf
   ftp://ftp.dot.state.tx.us/pub/txdot-info/gsd/pdf/tss/tss377.pdf

RAISED PAVEMENT MARKERS

1. All raised pavement markers used for work zone markings shall meet the requirements of Item 672, "RAISED PAVEMENT MARKERS" and Departmental Material Specification DMS-4200.
2. A list of prequalified reflective raised pavement markers can be found at the following web site:
   ftp://ftp.dot.state.tx.us/pub/txdot-info/gsd/pdf/dms4200preq.pdf

LEVELS DISPLAYED ACC:

	1	2	3	4	5	6	7	8	9	10	11	12	13	14	15	16
1	1	2	4	8	16	32	64	128	256	512	1024	2048	4096	8192	16384	32768
2	65536	131072	262144	524288	1048576	2097152	4194304	8388608	16777216	33554432	67108864	134217728	268435456	536870912	1073741824	2147483648
3	4294967296	8589934592	17179869184	34359738368	68719476736	137438953472	274877906944	549755813888	1099511627776	2199023255552	4398046511104	8796093022208	17592186044416	35184372088832	70368744177664	140737488355328

WORK ZONE SHORT TERM PAVEMENT MARKINGS PATTERNS

CENTER LINE & NO-PASSING ZONE BARRIER LINES FOR TWO LANE TWO-WAY HIGHWAYS

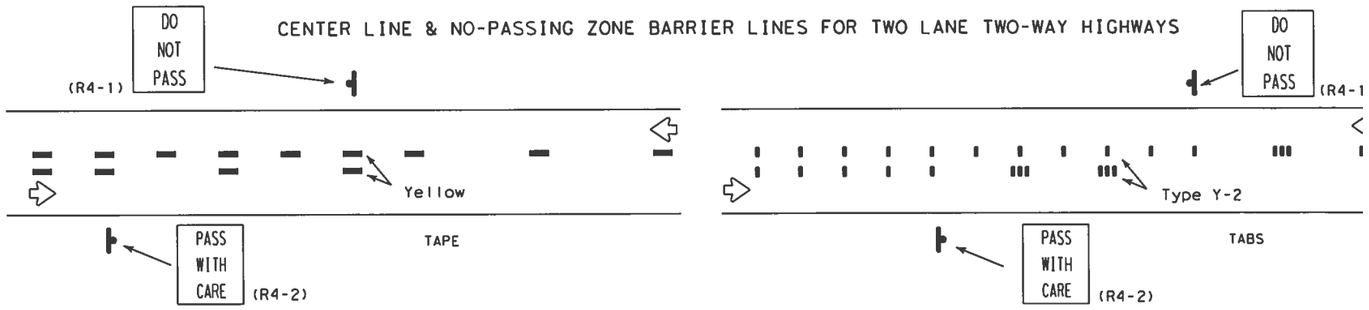

LANE LINES FOR DIVIDED HIGHWAY

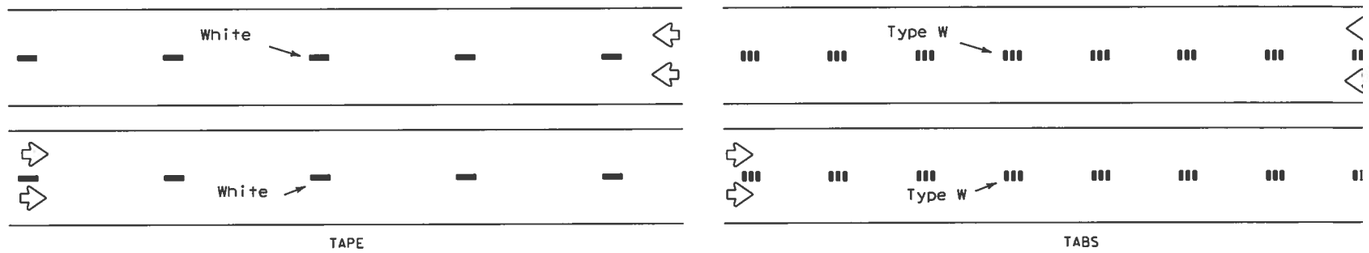

LANE & CENTER LINES FOR MULTILANE UNDIVIDED HIGHWAYS

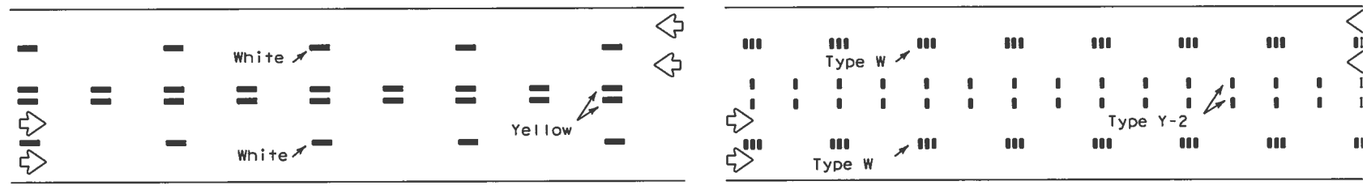

TWO-WAY LEFT TURN LANE

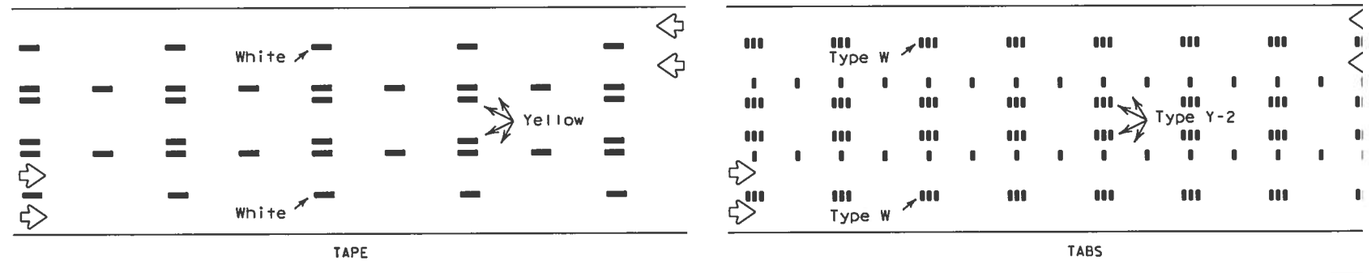

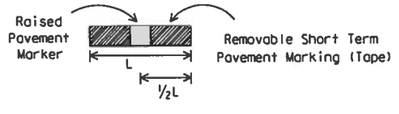

If raised pavement markers are used to supplement REMOVABLE short term markings, the markers shall be applied to the top of the tape at the approximate mid length of the tape. This allows an easier removal of raised markers and tape.

DEPARTMENT MATERIAL SPECIFICATIONS

PREFABRICATED PAVEMENT MARKINGS-PERMANENT	DMS-8240
PREFABRICATED PAVEMENT MARKINGS-REMOVABLE	DMS-8241
TEMPORARY FLEXIBLE-REFLECTIVE ROADWAY MARKER TABS	DMS-8242
PAVEMENT MARKERS (REFLECTORIZED)	DMS-4200

STANDARD PLANS
TEXAS DEPARTMENT OF TRANSPORTATIO
Traffic Operations Division

WORK ZONE SHORT TERM PAVEMENT MARKINGS

WZ(STPM)-0

© TxDOT April 1992

DN-LR	CK-	DW-DN	CK-MT	MSG NO.

REVISIONS	STATE DISTRICT	FEDERAL REGION	PROJECT NUMBER			
1-97	YKM	6				
3-03	COUNTY		CONTROL	SECTION	JOB	
	GONZALES, ETC		1442	03	016, ETC	FM

DISCLAIMER
The use of this standard is governed by the "Texas Engineering Practice Act". No warranty of any kind is made by TxDOT for any purpose whatsoever. TxDOT assumes no responsibility for the conversion of this standard to other formats or for incorrect results or damages resulting from its use.

Barricade and Construction (BC) Standard Sheets General Notes:

1. The Barricade and Construction Standard Sheets (BC sheets) are intended to show typical examples for placement of temporary traffic control devices, construction pavement markings, and typical work zone signs. The information contained in these sheets meet or exceed the requirements shown in the "Texas Manual on Uniform Traffic Control Devices" (TMUTCD).
2. The development and design of the Traffic Control Plan (TCP) is the responsibility of the Engineer.
3. The Contractor may propose changes to the TCP that are signed and sealed by a licensed professional engineer for approval. The Engineer may develop, sign and seal Contractor proposed changes.
4. The Contractor is responsible for installing and maintaining the traffic control devices as shown in the plans. The Contractor may not move or change the approximate location of any device without the approval of the Engineer.
5. Geometric design of lane shifts and detours should, when possible, meet the applicable design criteria contained in manuals such as the American Association of State Highway and Transportation Officials (AASHTO), "A Policy on Geometric Design of Highways and Streets", the TxDOT "Roadway Design Manual" or engineering judgment.
6. When projects abut, the Engineer(s) may omit the END ROAD WORK, TRAFFIC FINES DOUBLE, and other advance warning signs if the signing would be redundant and the work areas appear continuous to the motorists. If the adjacent project is completed first, the Contractor shall erect the necessary warning signs as shown on these sheets, the TCP sheets or as directed by the Engineer. The BEGIN ROAD WORK NEXT X MILES sign shall be revised to show appropriate work zone distance.
7. The Engineer may require duplicate warning signs on the median side of divided highways where median width will permit and traffic volumes justify the signing.
8. All signs shall be constructed in accordance with the details found in the "Standard Highway Sign Designs for Texas," latest edition. Sign details not shown in this manual shall be shown in the plans or the Engineer shall provide a detail to the Contractor before the sign is manufactured.
9. The temporary traffic control devices shown in the illustrations of the BC sheets are examples. As necessary, the Engineer will determine the most appropriate traffic control devices to be used.
10. As shown on BC(2), the OBEY WARNING SIGNS STATE LAW sign and the WORK ZONE TRAFFIC FINES DOUBLE sign with plaque shall be erected in advance of the CSJ limits. The BEGIN ROAD WORK NEXT X MILES, CONTRACTOR and END ROAD WORK signs shall be erected at or near the CSJ limits.
11. Except for devices required by Note 10, traffic control devices should be in place only while work is actually in progress or a definite need exists.
12. The Engineer has the final decision on the location of all traffic control devices.
13. Inactive equipment and work vehicles, including workers' private vehicles must be parked away from travel lanes. They should be as close to the right-of-way line as possible, or located behind a barrier or guardrail, or as approved by the Engineer.

Worker Safety Apparel Notes:

1. Workers on foot who are exposed to traffic or to construction equipment within the right-of-way shall wear high-visibility safety apparel meeting the requirements of ISEA "American National Standard for High-Visibility Apparel" labeled as ANSI 107-2004 standard performance for Class 2 or 3 risk exposure. Class 3 garments should be considered for high traffic volume work areas or night time work.

Only pre-qualified products shall be used. The "Compliant Work Zone Traffic Control Devices List" (CWZTCD) describes prequalified products and their sources and may be found on-line at the web address given below or by contacting:

Texas Department of Transportation
Traffic Operations Division - TE
Phone (512) 416-3134

WEB ADDRESSES FOR REFERENCED DOCUMENTS

Compliant Work Zone Traffic Control Devices List (CWZTCD)
http://www.txdot.gov/publications/traffic.htm

Texas Manual on Uniform Traffic Control Devices (TMUTCD)
http://www.txdot.gov/publications/traffic.htm

Standard Highway Sign Designs for Texas (SHSD)
http://www.txdot.gov/publications/traffic.htm

Traffic Engineering Standard Sheets
http://www.txdot.gov/business/disclaim.htm

Material Producer List
http://www.txdot.gov/business/producer_list.htm

Departmental Material Specifications (DMS)
http://www.txdot.gov/services/construction/material_specifications/

Roadway Design Manual
http://www.txdot.gov/services/general_services/manuals.htm

STANDARD PLANS
TEXAS DEPARTMENT OF TRANSPORTATION
Traffic Operations Division

BARRICADE AND CONSTRUCTI
GENERAL NOTES AND REQUIREMENTS

1 of 12 BC(1)-07

©TxDOT 11-4-02	DN: TxDOT	CK: TxDOT	DW: TxDOT	CK: T

REVISIONS	STATE DISTRICT	FEDERAL REGION	PROJECT NUMBER
4-03	YKM	6	
9-07			

COUNTY	CONTROL	SECTION	JOB	H
GONZALES, ETC.	1442	03	016, ETC	FM

LEVELS DISPLAYED
1 2 3 4 5 6 7 8 9 10 11 12 13 14 15 16
17 18 19 20 21 22 23 24 25 26 27 28 29 30 31 32
33 34 35 36 37 38 39 40 41 42 43 44 45 46 47 48
49 50 51 52 53 54 55 56 57 58 59 60 61 62 63
ACC:

DISCLAIMER
The use of this standard is governed by the "Texas Engineering Practice Act". No warranty of any kind is made by TxDOT for any purpose whatsoever. TxDOT assumes no responsibility for the conversion of this standard to other formats or for incorrect results or damages resulting from its use.

TYPICAL LOCATION OF CROSSROAD SIGNS

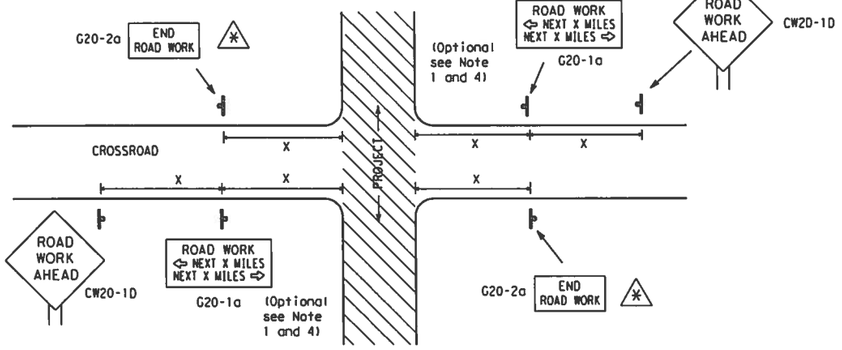

✱ May be mounted on back of CW20-1D sign with approval of engineer. (See note 2 below)

1. The typical minimum signing on a crossroad approach should be a CW20-1D ROAD WORK AHEAD sign and a G20-2a END ROAD WORK sign, unless noted otherwise in plans.
2. The Engineer may use the reduced size 36" x 36" ROAD WORK AHEAD (CW20-1D) sign mounted back to back with the reduced size 36" x 18" END ROAD WORK (G20-2a) sign on low volume crossroads (see Note 4 under "Typical Construction Warning Sign Size and Spacing"). See the "Standard Highway Sign Designs for Texas" manual for sign details. The Engineer may omit the advance warning signs on low volume crossroads. The Engineer will determine whether a road is low volume. This information shall be shown in the plans.
3. Based on existing field conditions, the Engineer/Inspector may require additional signs such as FLAGGER AHEAD, LOOSE GRAVEL, or other appropriate signs. When additional signs are required, these signs will be considered part of the minimum requirements. The Engineer/Inspector will determine the proper location and spacing of any sign not shown on the BC sheets, Traffic Control Plan sheets or the Work Zone Standard Sheets.
4. The G20-1a sign shall be required at high volume crossroads to advise motorists of the length of construction in either direction from the intersection. The Engineer will determine whether a roadway is considered high volume.
5. Additional traffic control devices may be shown elsewhere in the plans for higher volume crossroads.
6. When work occurs in the intersection area, appropriate traffic control devices, as shown elsewhere in the plans or as determined by the Engineer/Inspector, shall be in place.

T-INTERSECTION

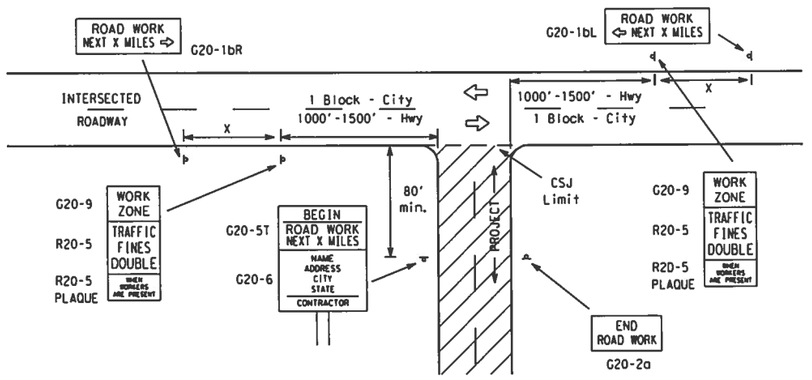

CSJ LIMITS AT T-INTERSECTION

1. The Engineer will determine the types and location of any additional traffic control devices, such as a flagger and accompanying signs, or other signs, that should be used when work is being performed at or near an intersection.
2. If construction closes the road at a T-intersection the Contractor shall place the G20-6 "Contractor Name" sign behind the Type III Barricades for the road closure (see BC(10) also). The G20-1bL and G20-1bR signs shall be replaced by the detour signing called for in the plans.

TYPICAL CONSTRUCTION WARNING SIGN SIZE AND SPACING [1,5,6]

SIZE

Sign Number or Series	Conventional Road	Expressway/ Freeway
CW20 [4], CW21, CW22, CW23, CW25	48" x 48"	48" x 48"
CW1, CW2, CW7, CW8, CW9, CW11, CW14	36" x 36"	48" x 48"
CW3, CW4, CW5, CW6, CW8-3, CW10, CW12	48" x 48"	48" x 48"

SPACING

Posted Speed	Sign Spacing "X" △
MPH	Feet (Apprx.)
30	120
35	160
40	240
45	320
50	400
55	500 [2]
60	600 [2]
65	700 [2]
70	800 [2]
75	900 [2]
80	1000 [2]
✱	✱ [3]

✱ For typical sign spacings on divided highways, expressways and freeways, see Part 6 of the "Texas Manual on Uniform Traffic Control Devices" (TMUTCD) typical application diagrams or TCP Standard Sheets.
△ Minimum distance from work area to first Advance Warning sign nearest the work area and/or distance between each additional sign.

General Notes:

1. Special or larger size signs may be used as necessary.
2. Distance between signs should be increased as required to have 1500 feet advance warning.
3. Distance between signs should be increased as required to have ½ mile or more advance warnir
4. 36" x 36" ROAD WORK AHEAD (CW20-1D) signs may be used on low volume crossroads at the discret of the Engineer. See Note 2 under "Typical Location of Crossroad Signs".
5. Only diamond shaped warning sign sizes are indicated.
6. See sign size listing in "TMUTCD", Sign Appendix or the "Standard Highway Sign Designs for Te manual for complete list of available sign design sizes.

WORK AREAS IN MULTIPLE LOCATIONS WITHIN CSJ LIMITS

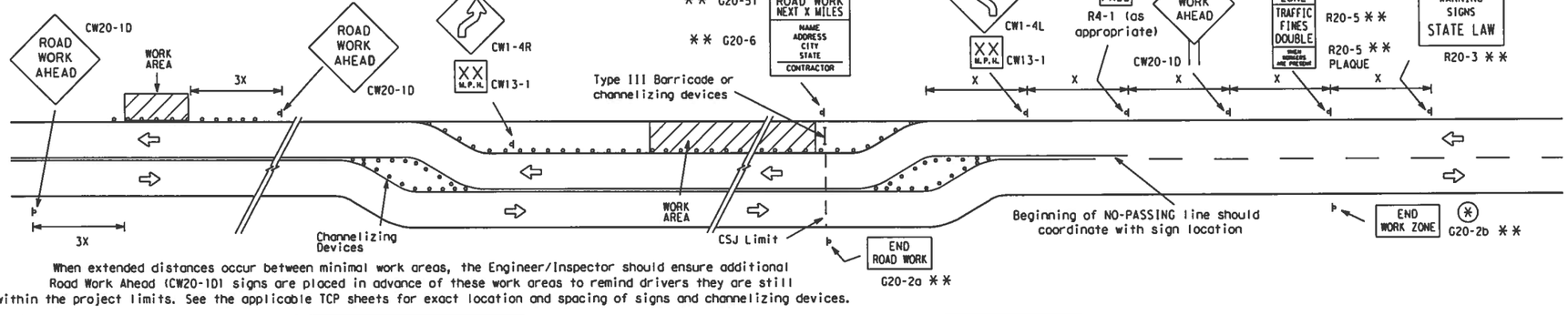

When extended distances occur between minimal work areas, the Engineer/Inspector should ensure additional Road Work Ahead (CW20-1D) signs are placed in advance of these work areas to remind drivers they are still within the project limits. See the applicable TCP sheets for exact location and spacing of signs and channelizing devices.

SAMPLE LAYOUT OF SIGNING FOR WORK BEGINNING AT THE CSJ LIMITS

SAMPLE LAYOUT OF SIGNING FOR WORK BEGINNING DOWNSTREAM OF THE CSJ LIMITS

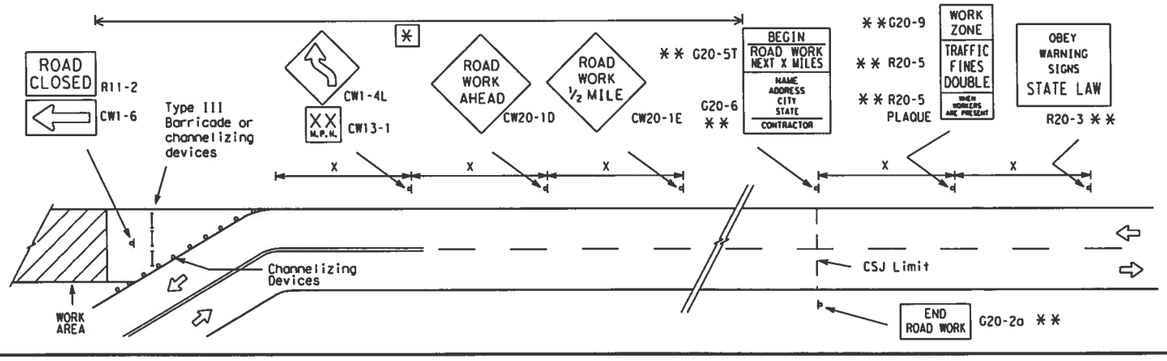

NOTES

The Contractor shall determine the appropriate distance to be placed on the G20-1 series signs and G20-5T sign for each specific project. This distance shall replace the "X" and shall be rounded to the nearest whole mile with the approval of the Engineer. No decimals shall be used.

✱ The G20-9T and G20-2b shall be used when advance signs are required outside the CSJ Limits. They inform the motorist of entering or leaving a work zone where traffic fines may double if workers are present.

** Required CSJ Limit signing. See Note 10 on BC(1).

✱ Area for placement of "ROAD WORK AHEAD" sign and other signs or devices as called for on the Traffic Control Plan.

LEGEND

- Sign
- O O Channelizing Devices
- I Type III Barricade
- X See Typical Construction Warning Sign Size and Spacing chart or the TMUTCD for sign spacing requirements.

R20-3
Legend/Border - Black
Background - White

STANDARD PLANS
TEXAS DEPARTMENT OF TRANSPORTATIO
Traffic Operations Division

BARRICADE AND CONSTRUCTI PROJECT LIMIT STANDARD

2 of 12 BC(2)-0

© TxDOT 11-4-02	DN: TxDOT	CK: TxDOT	DW: TxDOT	CK: T
REVISIONS 9-07	STATE DISTRICT: YKM	FEDERAL REGION: 6	PROJECT NUMBER	
	COUNTY: GONZALES, ETC.	CONTROL: 1442	SECTION: 03	JOB: 016, ETC

LEVELS DISPLAYED
1 2 3 4 5 6 7 8 9 10 11 12 31 41 51 61
17 18 19 20 21 22 23 24 25 26 27 28 29 30 32 33
33 34 35 36 37 38 39 40 41 42 43 44 45 46 47 48
49 50 51 52 53 54 55 56 57 58 59 60 61 62 63

ACC:

TYPICAL APPLICATION OF WORK ZONE SPEED LIMIT SIGNS

Work zone speed limits shall be regulatory, established in accordance with the "Procedures for Establishing Speed Zones," and approved by the Texas Transportation Commission, or by City Ordinance when within Incorporated City Limits.

Reduced speeds should only be posted in the vicinity of work activity and not throughout the entire project.

Regulatory work zone speed signs (R2-1) shall be removed or covered during periods when they are not needed.

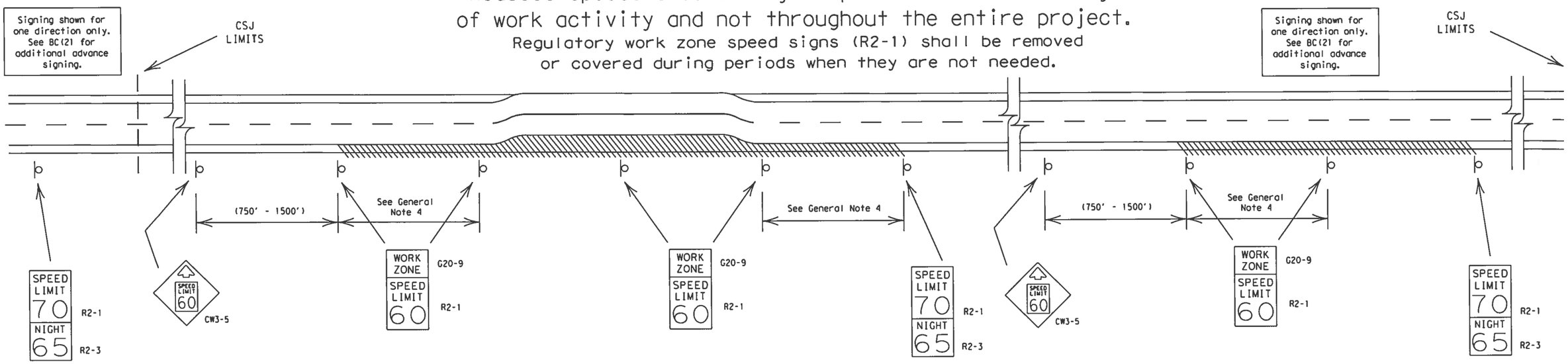

GUIDANCE FOR USE:

LONG/INTERMEDIATE TERM WORK ZONE SPEED LIMITS

This type of work zone speed limit should be included on the design of the traffic control plans when restricted geometrics with a lower design speed are present in the work zone and modification of the geometrics to a higher design speed is not feasible.

Long/Intermediate Term Work Zone Speed Limit signs, when approved as described above, should be posted and visible to the motorist when work activity is present. Work activity may also be defined as a change in the roadway that requires a reduced speed for motorists to safely negotiate the work area, including:

a) rough road or damaged pavement surface
b) substantial alteration of roadway geometrics (diversions)
c) construction detours
d) grade
e) width
f) other conditions readily apparent to the driver

As long as any of these conditions exist, the work zone speed limit signs should remain in place.

SHORT TERM WORK ZONE SPEED LIMITS

This type of work zone speed limit should be included on the design of the traffic control plans when workers or equipment are not behind concrete barrier, when work activity is within 15 feet of pavement edge or actually on the pavement.

Short Term Work Zone Speed Limit signs should be posted and visible to the motorists only when work activity is present. When work activity is not present, signs shall be removed or covered.
(See Removing or Covering on BC(4)).

GENERAL NOTES:

1. Regulatory work zone speed limits should be used only for sections of construction projects where speed control is of major importance.
2. Regulatory work zone speed limit signs shall be placed on supports at a 7 foot minimum mounting height.
3. Speed zone signs are illustrated for one direction of travel and are normally posted for each direction of travel.
4. Frequency of work zone speed limit signs should be:
   40 mph and greater 0.2 to 2 miles
   35 mph and less 0.2 to 1 mile
5. Regulatory speed limit signs shall have black legend and border on a white reflective background (See "Reflective Sheeting" on BC(4)).
6. Fabrication, errection and maintenance of the CW3-5 sign, G20-9 plaque and the R2-1 and R2-3 signs shall not be paid for directly, but shall be considered subsidiary to Item 502.
7. Turning signs from view, laying signs over or down will not be allowed, unless otherwise noted.
8. Techniques that may help reduce traffic speeds include but are not limited to:
   A. Law enforcement.
   B. Flagger stationed next to sign.
   C. Portable changeable message sign (PCMS).
   D. Low-power (drone) radar transmitter.
   E. Speed monitor trailers or signs.
9. Speeds shown on details above are for illustration only.
   Work Zone Speed Limits should only be posted as approved for each project.

DISCLAIMER
The use of this standard is governed by the "Texas Engineering Practice Act". No warranty of any kind is made by TxDOT for any purpose whatsoever. TxDOT assumes no responsibility for the conversion of this standard to other formats or for incorrect results or damages resulting from its use.

LEVELS DISPLAYED

1	2	3	4	5	6	7	8	9	10	11	12	13	14	15	16
17	18	19	20	21	22	23	24	25	26	27	28	29	30	31	32
33	34	35	36	37	38	39	40	41	42	43	44	45	46	47	48
49	50	51	52	53	54	55	56	57	58	59	60	61	62	63	

ACC:

STANDARD PLANS
Texas Department of Transportatio
Traffic Operations Division

BARRICADE AND CONSTRUCTI
WORK ZONE SPEED LIMIT
STANDARD

3 of 12 BC(3)-07

© TxDOT 11-4-02	DN: TxDOT	CK: TxDOT	DW: TxDOT	CK:
REVISIONS 9-07	STATE DISTRICT YKM	FEDERAL REGION 6	PROJECT NUMBER	
	COUNTY GONZALES, ETC.	CONTROL 1442	SECTION 03	JOB 016, ETC

DISCLAIMER
The use of this standard is governed by the "Texas Engineering Practice Act". No warranty of any kind is made by TxDOT for any purpose whatsoever. TxDOT assumes no responsibility for the conversion of this standard to other formats or for incorrect results or damages resulting from its use.

TYPICAL MINIMUM CLEARANCES FOR LONG TERM AND INTERMEDIATE TERM SIGNS

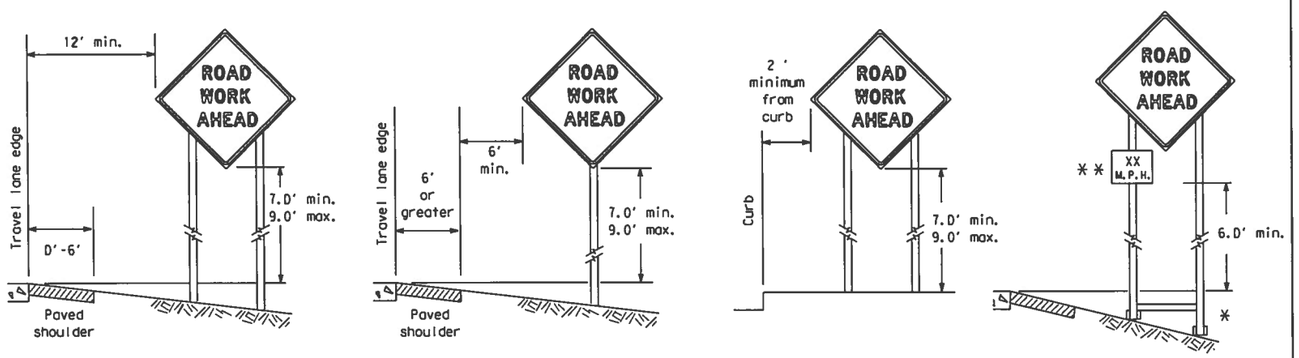

* When placing skid supports on unlevel ground, the leg post lengths must be adjusted so the sign appears straight and plumb. Objects shall NOT be placed under skids as a means of leveling.

** When plaques are placed on dual-leg supports, they should be attached to the upright nearest the travel lane. Supplemental plaques (advisory or distance) should not cover the surface of the parent sign.

ATTACHMENT FOR SIGN SUPPORTS

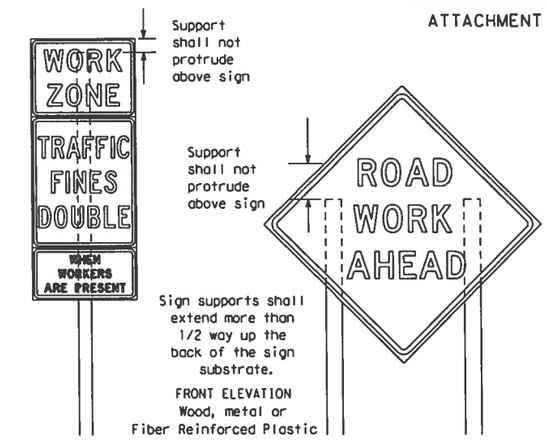

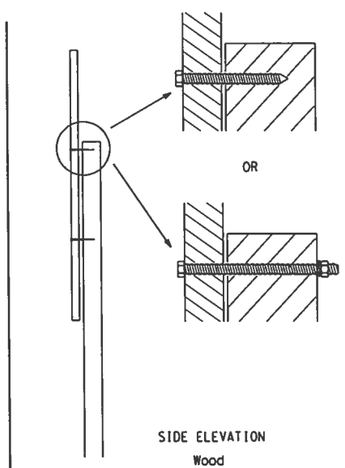

Attachment to wooden supports will be by bolts and nuts or screws. Use TxDOT's or manufacturer's recommended procedures for attaching sign substrates to other types of sign supports

Nails will NOT be allowed.

Each sign shall be attached directly to the sign support. Multiple signs shall not be joined or spliced by any means. Wood supports shall not be extended or repaired by splicing or other means.

Splicing embedded perforated square metal tubing in order to extend post height will only be allowed when the splice is made using four bolts, two above and two below the spice point. Splice must be located entirely behind the sign substrate, not near the base of the support. Splice insert lengths should be at least 5 times nominal post size, centered on the splice and of at least the same guage material.

STOP/SLOW PADDLES

1. STOP/SLOW paddles are the primary method to control traffic by flaggers. The STOP/SLOW paddle size should be 24" x 24" as detailed below.
2. When used at night, the STOP/SLOW paddle shall be retroreflectorized.
3. STOP/SLOW paddles may be attached to a staff with a minimum length of 6' to the bottom of the sign.
4. Any lights incorporated into the STOP or SLOW paddle faces shall only be as specifically described in Section 6E.03 Hand Signaling Devices in the TMUTCD.

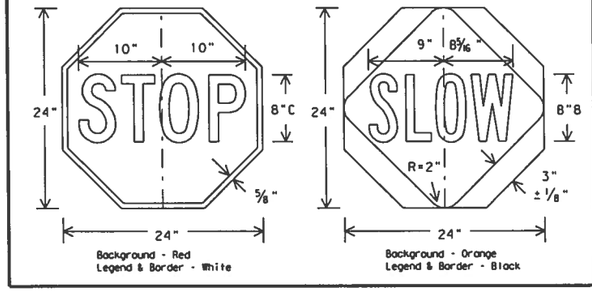

CONTRACTOR REQUIREMENTS FOR MAINTAINING PERMANENT SIGNS WITHIN THE PROJECT LIMITS

1. Permanent signs are used to give notice of traffic laws or regulations, call attention to conditions that are potentially hazardous to traffic operations, show route designations, destinations, directions, distances, services, points of interest, and other geographical, recreational, or cultural information. Drivers proceeding through a work zone need the same, if not better route guidance as normally installed on a roadway without construction.
2. When permanent regulatory or warning signs conflict with work zone conditions, remove or cover the permanent signs until the permanent sign message matches the roadway condition.
3. When existing permanent signs are moved and relocated due to construction purposes, they shall be visible to motorists at all times.
4. If existing signs are to be relocated on their original supports, they shall be installed on crashworthy bases as shown on the SMD Standard sheets. The signs shall meet the required mounting heights shown on the BC Sheets or the SMD Standards. This work should be paid for under the appropriate pay item for relocating existing signs.
5. If permanent signs are to be removed and relocated using temporary supports, the Contractor shall use crashworthy supports as shown on the BC sheets or the CWZTCD. The signs shall meet the required mounting heights shown on the BC Sheets or the SMD Standards during construction. This work should be paid for under the appropriate pay item for relocating existing signs.
6. Any sign or traffic control device that is struck or damaged by the Contractor or his/her construction equipment shall be replaced as soon as possible by the Contractor to ensure proper guidance for the motorists. This will be subsidiary to Item 502.

GENERAL NOTES FOR WORK ZONE SIGNS

1. Contractor shall install and maintain signs in a straight and plumb condition and/or as directed by the Engineer.
2. Wooden sign posts shall be painted white.
3. Barricades shall NOT be used as sign supports.
4. Nails shall NOT be used to attach signs to any support.
5. All signs shall be installed in accordance with the plans or as directed by the Engineer. Signs shall be used to regulate, warn, and guide the traveling public safely through the work zone.
6. The Contractor may furnish either the sign design shown in the plans or in the "Standard Highway Sign Designs for Texas" (SHSD). The Engineer/Inspector may require the Contractor to furnish other work zone signs that are shown in the TMUTCD but may have been omitted from the plans. Any variation in the plans shall be documented by written agreement between the Engineer and the Contractor's Responsible Person. All changes must be documented in writing before being implemented. This can include documenting the changes in the Inspector's TxDOT diary and having both the Inspector and Contractor initial and date the agreed upon changes.
7. The Contractor shall furnish sign supports listed in the "Compliant Work Zone Traffic Control Device List" (CWZTCD). The Contractor shall install the sign support in accordance with the manufacturer's recommendations. If there is a question regarding installation procedures, the Contractor shall furnish the Engineer a copy of the manufacturer's installation recommendations so the Engineer can verify the correct procedures are being followed.
8. The Contractor is responsible for installing signs on approved supports and replacing signs with damaged or cracked substrates and/or damaged or marred reflective sheeting as directed by the Engineer/Inspector.
9. Identification markings may be shown only on the back of the sign substrate. The maximum height of letters and/or company logos used for identification shall be 1 inch.
10. The Contractor shall replace damaged wood posts. New or damaged wood sign posts shall not be spliced.

DURATION OF WORK (as defined by the "Texas Manual on Uniform Traffic Control Devices" Part 6)

1. The types of sign supports, sign mounting height, the size of signs, and the type of sign substrates can vary based on the type of work being performed. The Engineer is responsible for selecting the appropriate size sign for the type of work being performed. The Contractor is responsible for ensuring the sign support, sign mounting height and substrate meets manufacturer's recommendations in regard to crashworthiness and duration of work requirements.
   a. Long-term stationary - work that occupies a location more than 3 days.
   b. Intermediate-term stationary - work that occupies a location more than one daylight period up to 3 days, or nighttime work lasting more than one hour.
   c. Short-term stationary - daytime work that occupies a location for more than 1 hour in a single daylight period.
   d. Short, duration - work that occupies a location up to 1 hour.
   e. Mobile - work that moves continuously or intermittently (stopping for up to approximately 15 minutes.)

SIGN MOUNTING HEIGHT

1. The bottom of Long-term/Intermediate-term signs shall be at least 7 feet, but not more than 9 feet, above the paved surface, except as shown for supplemental plaques mounted below other signs.
2. The bottom of Short-term/Short Duration signs shall be a minimum of 1 foot above the pavement surface but no more than 2 feet above the ground.
3. Long-term/Intermediate-term Signs may be used in lieu of Short-term/Short Duration signing.
4. Short-term/Short Duration signs shall be used only during daylight and shall be removed at the end of the workday. or raised to appropriate Long-term/Intermediate sign height.
5. Regulatory signs shall be mounted at least 7 feet, but not more than 9 feet, above the paved surface regardless of work duration.

SIZE OF SIGNS

1. The Engineer may allow the use of smaller size construction warning signs on secondary roads or city streets where speeds are low if the sign size is listed as an option on the "Typical Construction Warning Sign Size and Spacing" chart shown on BC(2).
2. The Contractor shall furnish the sign sizes shown in plans, the BC Sheets, the TCP sheets or as directed by the Engineer.

SIGN SUBSTRATES

1. The Contractor shall ensure the sign substrate is installed in accordance with the manufacturer's recommendations for the type of sign support that is being used. The CWZTCD lists each substrate that can be used on the different types and models of sign supports.
2. "Mesh" type materials are NOT an approved sign substrate, regardless of the tightness of the weave.
3. All wooden individual sign panels fabricated from 2 or more pieces shall have one or more plywood cleat, 1/2" thick by 6" wide, fastened to the back of the sign and extending fully across the sign. The cleat shall be attached to the back of the sign using wood screws that do not penetrate the face of the sign panel. The screws shall be placed on both sides of the splice and spaced at 6" centers. The Engineer may approve other methods of splicing the sign face.

REFLECTIVE SHEETING

1. All signs shall be retroreflective and constructed of sheeting meeting the color and retro-reflectivity requirements of DMS-8300 for rigid signs or DMS-8310 for roll-up signs. The web address for DMS specifications is shown on BC(1).
2. White sheeting, meeting the requirements of DMS-8300 Type C (High Specific Intensity), shall be used for signs with a white background.
3. Orange sheeting, meeting the requirements of DMS-8300 Type E (Fluorescent Prismatic), shall be used for rigid signs with orange backgrounds.

SIGN LETTERS

1. All sign letters and numbers shall be clear, and open rounded type uppercase alphabet letters as approved by the Federal Highway Administration (FHWA) and as published in the "Standard Highway Sign Design for Texas" manual. Signs, letters and numbers shall be of first class workmanship in accordance with Department Standards and Specifications.

REMOVING OR COVERING

1. When sign messages may be confusing or do not apply, the signs shall be removed or completely covered.
2. Long-term stationary or intermediate stationary signs installed on square metal tubing may be turned away from traffic 90 degrees when the sign message is not applicable. This type of sign support meets the crashworthiness standards regardless of the direction of impact. This technique may not be used for signs installed in the median of divided highways or near any intersections where the sign may be seen from approaching traffic.
3. Signs installed on wooden skids shall not be turned at 90 degree angles to the roadway. These signs should be removed or completely covered when not required.
4. When signs are covered, the material used shall be opaque, such as heavy mil black plastic, or other materials which will cover the entire sign face and maintain their opaque properties under automobile headlights at night, without damaging the sign sheeting.
5. Burlap shall NOT be used to cover signs.
6. Duct tape or other adhesive material shall NOT be affixed to a sign face. These materials can damage the retroreflectivity of sheeting.
7. Signs and anchor stubs shall be removed and holes backfilled upon completion of work.

SIGN SUPPORT WEIGHTS

1. Where sign supports require the use of weights to keep from turning over, the use of sandbags with dry, cohesionless sand is recommended.
2. The sandbags will be tied shut to keep the sand from spilling and to maintain a constant weight.
3. Rock, concrete, iron, steel or other solid objects shall not be permitted for use as sign support weights.
4. Sandbags should weigh a minimum of 35 lbs and a maximum of 50 lbs.
5. Sandbags shall be made of a durable material that tears upon vehicular impact.
6. Rubber (such as tire inner tubes) shall NOT be used for sandbags.
7. Rubber ballasts designed for channelizing devices should not be used for ballast on portable sign supports. Sign supports designed and manufactured with rubber bases may be used when shown on the CWZTCD list.
8. Sandbags shall only be placed along or laid over the base supports of the traffic control device and shall not be suspended above ground level or hung with rope, wire, chains or other fasteners. Sandbags shall be placed along the length of the skids to weigh down the sign support.
9. Sandbags shall NOT be placed under the skid and shall not be used to level sign supports placed on slopes.

STANDARD PLANS
Texas Department of Transportation
Traffic Operations Division

BARRICADE AND CONSTRUCTION TEMPORARY SIGN NOTES STANDARD

4 of 12 BC(4)-0

© TxDOT 11-4-02	Dn: TxDOT	Ck: TxDOT	Dn: TxDOT	Ck:

REVISIONS	STATE DISTRICT	FEDERAL REGION	PROJECT NUMBER
9-07	YKM	6	

COUNTY	CONTROL	SECTION	JOB
GONZALES, ETC.	1442	03	016, ETC

LEVELS DISPLAYED
1 2 3 4 5 6 7 8 9 10 11 12 13 14 15 16
17 18 19 20 21 22 23 24 25 26 27 28 29 30 31 32
33 34 35 36 37 38 39 40 41 42 43 44 45 46 47 48
49 50 51 52 53 54 55 56 57 58 59 60 61 62 63

ACC:

DISCLAIMER
The use of this standard is governed by the "Texas Engineering Practice Act". No warranty of any kind is made by TxDOT for any purpose whatsoever. TxDOT assumes no responsibility for the conversion of this standard to other formats or for incorrect results or damages resulting from its use.

SKID MOUNTED WOOD SIGN SUPPORTS

LONG/INTERMEDIATE TERM STATIONARY - PORTABLE SKID MOUNTED SIGN SUPPORTS □

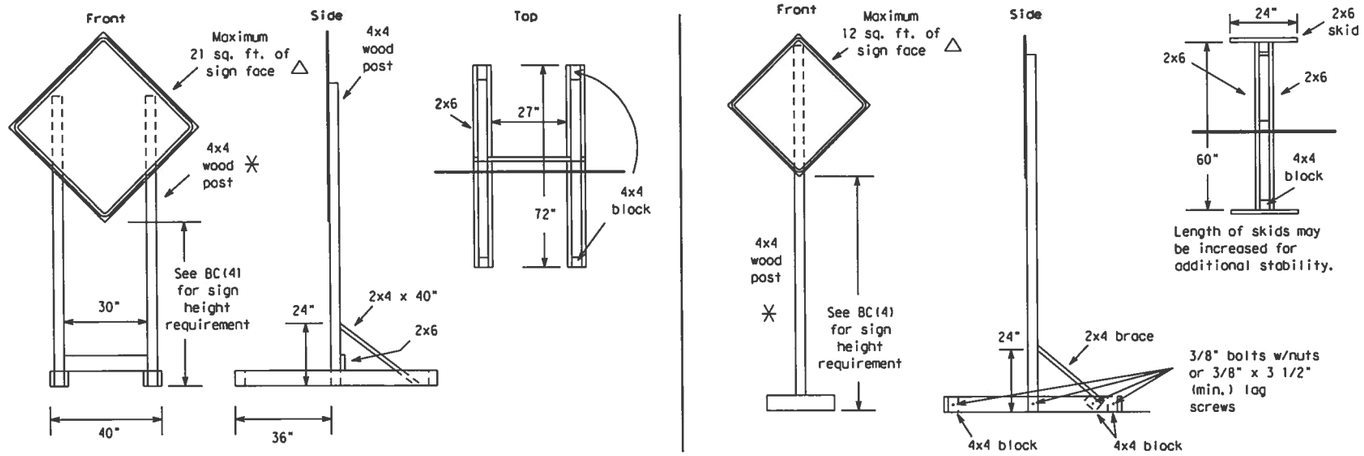

SKID MOUNTED PERFORATED SQUARE STEEL TUBING SIGN SUPPORTS

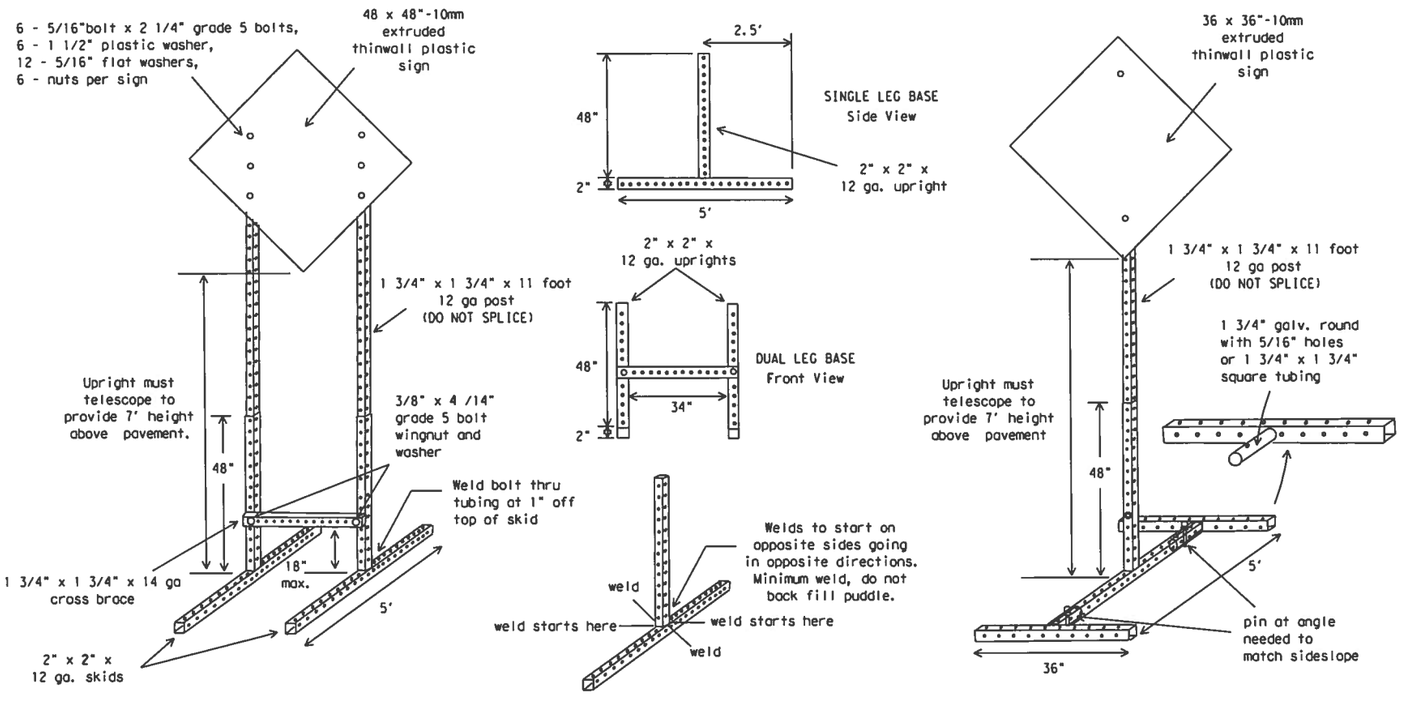

WEDGE ANCHORS

Both steel and plastic Wedge Anchor Systems as shown on the SMD Standard Sheets may be used as temporary sign supports for signs up to 10 square feet of sign face. They may be set in concrete or in sturdy soils if approved by the Engineer. (See web address for "Traffic Engineering Standard Sheets" on BC(1)).

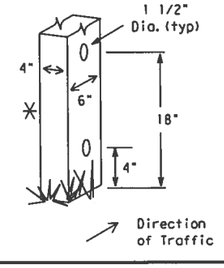

WOOD POST SYSTEM FOR GROUND MOUNTED SIGN SUPPORTS

Nominal Post Size	No. of Posts	Maximum Sq. feet of Sign Face	Minimum Soil Embedment	Drilled Hole(s) Required
4 x 4	1	12	36"	NO
4 x 4	2	21	36"	NO
4 x 6	1	21	36"	YES
4 x 6	2	36	36"	YES

GROUND MOUNTED SIGN SUPPORTS

Refer to the CWZTCD and the manufacturer's installation procedure for each type sign support. The maximum sign square footage shall adhere to the manufacturer's recommendation. Two post installations can be used for larger signs.

PERFORATED SQUARE METAL TUBING

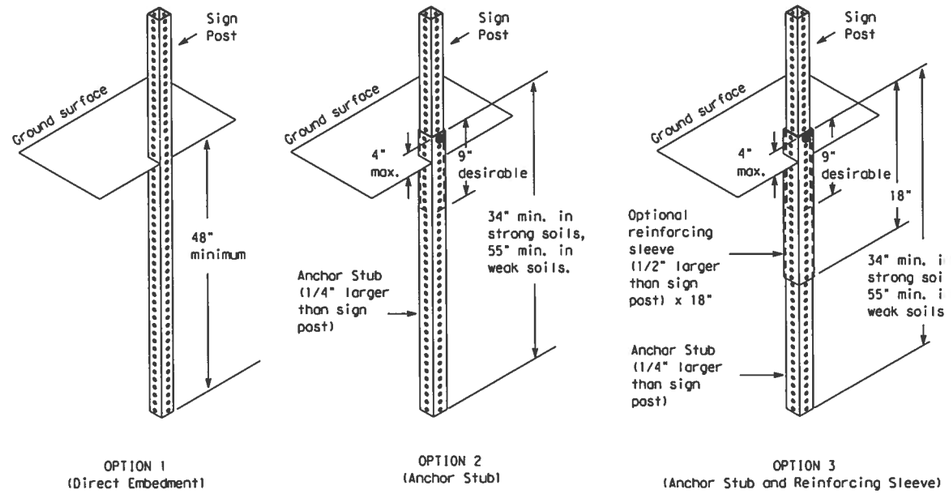

WING CHANNEL

Lap-splice/base bolted anchor

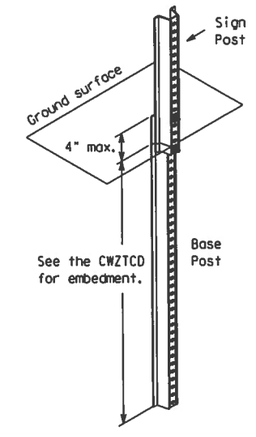

GENERAL NOTES

1. Nails may be used in the assembly of wooden sign supports, but 3/8" bolts with nuts or 3/8" x 3 1/2" lag screws must be used on every joint for final connection.
2. More details of approved Long/Intermediate and Short Term supports can be found on the CWZTCD list. See BC(1) for website location.
3. No more than 2 sign posts shall be placed within a 7 ft. circle, except for specific materials noted on the CWZTCD List.
4. When project is completed, all sign supports and foundations shall be removed from the project site. This will be considered subsidiary to Item 5D2.

□ See BC(4) for definition of "Work Duration."

✳ Wood sign posts MUST be one piece. Splicing will NOT be allowed. Posts shall be painted white.

△ See the CWZTCD for the type of sign substrate that can be used for each approved sign support.

STANDARD PLANS
Texas Department of Transportatio
Traffic Operations Division

BARRICADE AND CONSTRUCT TYPICAL SIGN SUPPORT STANDARD

5 of 12 BC(5)-C

©TxDOT 11-4-02	DN: TxDOT	CK: TxDOT	DW: TxDOT	CK:
REVISIONS 9-07	STATE DISTRICT: YKM	FEDERAL REGION: 6	PROJECT NUMBER	
COUNTY: GONZALES, ETC.	CONTROL: 1442	SECTION: 03	JOB: 016, ETC	FI

ACC:
LEVELS DISPLAYED
1 2 3 4 5 6 7 8 9 10 11 12 21 31 41 51 61
17 18 19 20 21 22 23 24 25 26 27 28 29 30 31 32
33 34 35 36 37 38 39 40 41 42 43 44 45 46 47 48
49 50 51 52 53 54 55 56 57 58 59 60 61 62 63

DISCLAIMER
The use of this standard is governed by the "Texas Engineering Practice Act". No warranty of any kind is made by TxDOT for any purpose whatsoever. TxDOT assumes no responsibility for the conversion of this standard to other formats or for incorrect results or damages resulting from its use.

LEVELS DISPLAYED

ACC:

PORTABLE CHANGEABLE MESSAGE SIGNS

1. The Engineer/Inspector shall approve all messages used on portable changeable message signs (PCMS).
2. Messages on PCMS should contain no more than 8 words (about four to eight characters per word), not including simple words such as "TO," "FOR," "AT," etc.
3. Messages should consist of a single phase, or two phases that alternate. Three-phase messages are not allowed. Each phase of the message should convey a single thought, and must be understood by itself.
4. Use the word "EXIT" to refer to an exit ramp on a freeway; i.e., "EXIT CLOSED." Do not use the term "RAMP."
5. Always use the route or interstate designation (IH, US, SH, FM) along with the number when referring to a roadway.
6. When in use the bottom of a stationary PCMS message panel should be a minimum 7 feet above the roadway, where possible.
7. The message term "WEEKEND" should be used only if the work is to start on Saturday morning and end by Sunday evening at midnight. Actual days and hours of work should be displayed on the PCMS if work is to begin on Friday evening and/or continue into Monday morning.
8. The Engineer/Inspector may select one of two options which are available for displaying a two-phase message on a PCMS. Each phase may be displayed for either four seconds each or for three seconds each.
9. Do not "flash" messages or words included in a message. The message should be steady burn or continuous while displayed.
10. Do not present redundant information on a two-phase message; i.e., keeping two lines of the message the same and changing the third line.
11. Do not use the word "Danger" in message.
12. Do not display the message "LANES SHIFT LEFT" or "LANES SHIFT RIGHT" on a PCMS. Drivers do not understand the message.
13. Do not display messages that scroll horizontally or vertically across the face of the sign.
14. The following table lists abbreviated words and two-word phrases that are acceptable for use on a PCMS. Both words in a phrase must be displayed together. Words or phrases not on this list should not be abbreviated.
15. PCMS character height should be at least 18 inches for trailer mounted units. They should be visible from at least 1/2 (.5) mile and the text should be legible from at least 720 feet. Truck mounted units must have a character height of 10 inches and must be legible from at least 400 feet.
16. Each line of text should be centered on the message board rather than left or right justified.
17. If disabled, the PCMS should default to an illegible display that will not alarm motorists and will only be used to alert workers that the PCMS has malfunctioned. A pattern such as a series of horizontal solid bars is appropriate.

Word or Phrase	Abb.	Word or Phrase	Abb.
Access Road	ACCS RD	Major	MAJ
Air Quality	AIR QLTY	Miles	MI
Alternate	ALT	Miles Per Hour	MPH
Avenue	AVE	Minor	MNR
Best Route	BEST RTE	Monday	MON
Boulevard	BLVD	Normal	NORM
Bridge	BRDG	North	N
Cannot	CANT	Northbound	(route) N
Center	CNTR	Parking	PKING
Construction Ahead	CONST AHEAD	Parking Lot	PRK LOT
Detour Route	DETOUR RTE	Road	RD
Do Not	DONT	Right Lane	RGT LN
East	E	Saturday	SAT
Eastbound	(route) E	Service Road	SERV RD
Emergency	EMER	Shoulder	SHLDR
Emergency Vehicle	EMER VEH	Slippery	SLIP
Entrance, Enter	ENT	South	S
Express Lanes	EXP LANE	Southbound	(route) S
Expressway	EXPWY	Speed	SPD
XXXX Feet	XXXX FT	Street	ST
Fog Ahead	FOG AHD	Sunday	SUN
Freeway	FRWY, FWY	Telephone	PHONE
Freeway Blocked	FWY BLKD	Temporary	TEMP
Friday	FRI	Thursday	THURS
Hazardous Driving	HAZ DRIVING	To Downtown	TO DWNTN
Hazardous Material	HAZMAT	Traffic	TRAF
High-Occupancy Vehicle	HOV	Travelers	TRVLRS
Highway	HWY	Tuesday	TUES
Hours	HR	Time Minutes	TIME MIN
Information	INFO	Upper Level	UPPR LVL
It Is	ITS	Vehicle	VEH
Junction	JCT	Warning	WARN
Left	LFT	Wednesday	WED
Left Lane	LFT LN	Weight Limit	WT LIMIT
Lane Closed	LN CLSD	West	W
Lower Level	LOWR LVL	Westbound	(route) W
Maintenance	MAINT	Wet Pavement	WET PVMT
		Will Not	WONT

Roadway designation * IH-number, US-number, SH-number, FM-number

WHEN NOT IN USE, REMOVE THE PCMS FROM THE RIGHT-OF-WAY OR PLACE THE PCMS BEHIND BARRIER OR GUARDRAIL WITH SIGN PANEL TURNED PARALLEL TO TRAFFIC

RECOMMENDED PHASES AND FORMATS FOR PCMS MESSAGES DURING ROADWORK ACTIVITIES

(The Engineer may approve other messages not specifically covered here.)

Phase 1: Condition Lists

Road/Lane/Ramp Closure List

FREEWAY CLOSED X MILE	FRONTAGE ROAD CLOSED
ROAD CLOSED AT SH XXX	SHOULDER CLOSED XXX FT
ROAD CLSD AT FM XXXX	RIGHT LN CLOSED XXX FT
RIGHT X LANES CLOSED	RIGHT X LANES OPEN
CENTER LANE CLOSED	DAYTIME LANE CLOSURES
NIGHT LANE CLOSURES	I-XX SOUTH EXIT CLOSED
VARIOUS LANES CLOSED	EXIT XXX CLOSED X MILE
EXIT CLOSED	RIGHT LN TO BE CLOSED
MALL DRIVEWAY CLOSED	X LANES CLOSED TUE - FRI
XXXXXXXX BLVD CLOSED	

Other Condition List

ROADWORK XXX FT	ROAD REPAIRS XXXX FT
FLAGGER XXXX FT	LANE NARROWS XXXX FT
RIGHT LN NARROWS XXXX FT	TWO-WAY TRAFFIC XX MILE
MERGING TRAFFIC XXXX FT	CONST TRAFFIC XXX FT
LOOSE GRAVEL XXXX FT	UNEVEN LANES XXXX FT
DETOUR X MILE	ROUGH ROAD XXXX FT
ROADWORK PAST SH XXXX	ROADWORK NEXT FRI-SUN
BUMP XXXX FT	US XXX EXIT X MILES
TRAFFIC SIGNAL XXXX FT	LANES SHIFT *

* LANES SHIFT in Phase 1 must be used with STAY IN LANE in Phase 2.

Phase 2: Possible Component Lists

Action to Take/Effect on Travel List

MERGE RIGHT	FORM X LINES RIGHT
DETOUR NEXT X EXITS	USE XXXXX RD EXIT
USE EXIT XXX	USE EXIT I-XX NORTH
STAY ON US XXX SOUTH	USE I-XX E TO I-XX N
TRUCKS USE US XXX N	WATCH FOR TRUCKS
WATCH FOR TRUCKS	EXPECT DELAYS
EXPECT DELAYS	PREPARE TO STOP
REDUCE SPEED XXX FT	END SHOULDER USE
USE OTHER ROUTES	WATCH FOR WORKERS
STAY IN LANE *	

Location List

AT FM XXXX
BEFORE RAILROAD CROSSING
NEXT X MILES
PAST US XXX EXIT
XXXXXXX TO XXXXXXX
US XXX TO FM XXXX

Warning List

SPEED LIMIT XX MPH
MAXIMUM SPEED XX MPH
MINIMUM SPEED XX MPH
ADVISORY SPEED XX MPH
RIGHT LANE EXIT
USE CAUTION
DRIVE SAFELY
DRIVE WITH CARE

** Advance Notice List

TUE-FRI XX AM- X PM
APR XX- XX X PM-X AM
BEGINS MONDAY
BEGINS MAY XX
MAY X-X XX PM - XX AM
NEXT FRI-SUN
XX AM TO XX PM
NEXT TUE AUG XX
TONIGHT XX PM- XX AM

** See Application Guidelines Note 6.

Application Guidelines

1. Only 1 or 2 phases are to be used on a PCMS.
2. The 1st phase (or both) should be selected from the "Road/Lane/Ramp Closure List" and the "Other Condition List".
3. A 2nd phase can be selected from the "Action to Take/Effect on Travel, Location, General Warning, or Advance Notice Phase Lists".
4. A Location Phase is necessary only if a distance or location is not included in the first phase selected.
5. If two PCMS are used in sequence, they must be separated by a minimum of 1000 ft. Each PCMS shall be limted to two phases, and should be understandable by themselves.
6. For advance notice, when the current date is within seven days of the actual work date, calendar days should be replaced with days of the week. Advance notification should typically be for no more than one week prior to the work

Wording Alternatives

1. The words RIGHT, LEFT and ALL can be interchanged as appropriate.
2. Roadway designations IH, US, SH, FM and LP can be interchanged as appropriate.
3. EAST, WEST, NORTH and SOUTH (or abbreviations E, W, N and S) can be interchanged as appropriate.
4. Highway names and numbers replaced as appropriate.
5. ROAD, HIGHWAY and FREEWAY can be interchanged as needed.
6. AHEAD may be used instead of distances if necessary.
7. FT and MI, MILE and MILES interchanged as appropriate.
8. AT, BEFORE and PAST interchanged as needed.
9. Distances or AHEAD can be eliminated from the message if a location phase is used.

PCMS SIGNS WITHIN THE R.O.W. SHALL BE BEHIND GUARDRAIL OR CONCRETE BARRIER OR SHALL HAVE A MINIMUM OF FOUR (4) PLASTIC DRUMS PLACED PERPENDICULAR TO TRAFFIC ON THE UPSTREAM SIDE OF THE PCMS.

FULL MATRIX PCMS SIGNS

1. When Full Matrix PCMS signs are used, the character height and legibility/visibility requirements shall be maintained as listed in Note 15 under "PORTABLE CHANGEABLE MESSAGE SIGNS" above.
2. When symbol signs, such as the CW20-7a Flagger Symbol, are represented graphically on the Full Matrix PCMS sign and, with the approval of the Engineer, it shall maintain the legibility/visibility requirement listed above.
3. When symbol signs are represented graphically on the Full Matrix PCMS, they shall only supplement the use of the static sign represented, and shall not substitute for, or replace that sign.
4. A full matrix PCMS may be used to simulate a flashing arrow panel provided it meets the visibility, flash rate and dimming requirements on BC(7), for the same size arrow.

STANDARD PLANS
Texas Department of Transportatio
Traffic Operations Division

BARRICADE AND CONSTRUCTI
PORTABLE CHANGEABLE
MESSAGE SIGN (PCMS)
STANDARD

6 of 12 BC(6)-0

©TxDOT 11-4-02	DN: TxDOT	CK: TxDOT	DW: TxDOT	CK:
REVISIONS 9-07	STATE DISTRICT: YKM	FEDERAL REGION: 6	PROJECT NUMBER	
	COUNTY: GONZALES, ETC.	CONTROL: 1442	SECTION: 03	JOB: 016, ETC

DISCLAIMER
The use of this standard is governed by the "Texas Engineering Practice Act". No warranty of any kind is made by TxDOT for any purpose whatsoever. TxDOT assumes no responsibility for the conversion of this standard to other formats or for incorrect results or damages resulting from its use.

BARRIER REFLECTORS FOR CONCRETE TRAFFIC BARRIER AND ATTENUATORS

1. Barrier Reflectors shall be prequalified, and conform to the color and reflectivity requirements of DMS-8600. A list of prequalified Barrier Reflectors (Type C Delineators) can be found at the Material Producer List web address shown on BC(1).
2. Color of Barrier Reflectors shall be as specified in the TMUTCD. The cost of the reflectors shall be considered subsidiary to Item 502.

CONCRETE TRAFFIC BARRIER (CTB)

3. Where traffic is on one side of the CTB, two (2) Barrier Reflectors shall be mounted in approximately the midsection of each section of CTB. An alternate mounting location is uniformly spaced at one end of each CTB. This will allow for attachment of a barrier grapple without damaging the reflector. The Barrier Reflector mounted on the side of the CTB shall be located directly below the reflector mounted on top of the barrier, as shown in the detail above.
4. Where CTB separates two-way traffic, three barrier reflectors shall be mounted on each section of CTB. The reflector unit on top shall have two yellow reflective faces (Bi-Directional)while the reflectors on each side of the barrier shall have one yellow reflective face, as shown in the detail above.
5. When CTB separates traffic traveling in the same direction, no barrier reflectors will be required on top of the CTB.
6. Barrier Reflector units shall be yellow or white in color to match the edgeline being supplemented. Yellow Barrier Reflectors shall be made with Type E Fluorescent Prismatic Yellow Retroreflective Sheeting. White reflectors shall be made with Type D White Prismatic sheeting.
7. Maximum spacing of Barrier Reflectors is forty (40) feet.
8. Pavement markers or temporary flexible-reflective roadway marker tabs shall NOT be used as CTB delineation.
9. Attachment of Barrier Reflectors to CTB shall be per manufacturer's recommendations.
10. Missing or damaged Barrier Reflectors shall be replaced as directed by the Engineer.
11. Single slope barriers shall be delineated as shown on the above detail.

LOW PROFILE CONCRETE BARRIER (LPCB)

Max. spacing of surface mount flexible delineators is 20 feet. Attach the delineators as per manufacturer's recommendations.

DELINEATION OF END TREATMENTS

	APPROACHING TRAFFIC	
	BOTH SIDES	ONE SIDE
DELINEATION	OM-1	OM-3 or Vertical Panel

END TREATMENTS FOR CTB'S USED IN WORK ZONES

End treatments used on CTB's in work zones shall meet crashworthy standards as defined in the National Cooperative Highway Research Report 350. Refer to the CWZTCD List for approved end treatments and manufacturers.

TYPICAL FLASHING ARROW PANEL

Arrow Panels may be located behind channelizing devices in place for a shoulder taper or merging taper, otherwise they shall be delineated with four (4) channelizing devices placed perpendicular to traffic on the upstream side of traffic.

1. The Flashing Arrow Panel should be used for all lane closures on multi-lane roadways, or slow moving maintenance or construction activities on the travel lanes.
2. Flashing Arrow Panels should not be used on two-lane, two-way roadways, detours, diversions or work on shoulders unless the "CAUTION" display (see detail below) is used.
3. The Engineer/Inspector shall choose all appropriate signs, barricades and/or other traffic control devices that should be used in conjunction with the Flashing Arrow Panel.
4. The Flashing Arrow Panel should be able to display the following symbols:

Flashing RIGHT (LEFT) ARROW

Flashing DOUBLE ARROW

Flashing CAUTION

5. The "CAUTION" display consists of four corner lamps flashing simultaneously.
6. The straight line caution display is NOT ALLOWED.
7. The Flashing Arrow Panel shall be capable of minimum 50 percent dimming from rated lamp voltage. The flashing rate of the lamps shall not be less than 25 nor more than 40 flashes per minute.
8. Minimum lamp "on time" shall be approximately 50 percent for the flashing arrow and equal intervals of 25 percent for each sequential phase of the flashing chevron.
9. The sequential arrow display is NOT ALLOWED.
10. The flashing arrow display is the TxDOT standard; however, the sequential Chevron display may be used during daylight operations.

Sequential Chevron

REQUIREMENTS

TYPE	MINIMUM SIZE	MINIMUM NUMBER OF PANEL LAMPS	MINIMUM VISIBILITY DISTANCE
B	30 x 60	13	3/4 mile
C	48 x 96	15	1 mile

ATTENTION: Flashing Arrow Panels shall be equipped with automatic dimming devices.

WHEN NOT IN USE, REMOVE THE ARROW PANEL FROM THE RIGHT-OF-WAY OR PLACE THE ARROW PANEL BEHIND CONCRETE TRAFFIC BARRIER OR GUARDRAIL.

11. The Flashing Arrow Panel shall be mounted on a vehicle, trailer or other suitable support.
12. A Flashing Arrow Panel SHALL NOT BE USED to laterally shift traffic.
13. A full matrix PCMS may be used to simulate a Flashing Arrow Panel provided it meets visibility, flash rate and dimming requirements on this sheet for the same size arrow.
14. Minimum mounting height of trailer mounted arrow panels should be 7 feet from roadway to bottom of panel.

Type C Warning Light or approved substitute mounted adjacent to the travel way.

Warning reflector may be round or square.Must have a reflective surface area of at least 30 square inches

WARNING LIGHTS

1. Warning lights shall meet the requirements of the TMUTCD.
2. Warning lights shall NOT be installed on barricades.
3. Type A-Low Intensity Flashing Warning Lights are commonly used with drums. They are intended to warn of or mark a potentially hazardous area. Their use shall be as indicated on this sheet and/or other sheets of the plans by the designation "FL". The Type A Warning Lights shall not be used with signs manufactured with Type E Sheeting (Fluorescent Prismatic) meeting the requirements of Departmental Material Specification DMS-8300.
4. Type-C and Type D 360 degree Steady Burn Lights are intended to be used in a series for delineation to supplement other traffic control devices. Their use shall be as indicated on this sheet and/or other sheets of the plans by the designation "SB".
5. The Engineer/Inspector or the plans shall specify the location and type of warning lights to be installed on the traffic control devices.
6. When required by the Engineer, the Contractor shall furnish a copy of the warning lights certification. The warning light manufacturer will certify the warning lights meet the requirements of the latest ITE Purchase Specifications for Flashing and Steady-Burn Warning Lights.
7. When used to delineate curves, Type-C and Type D Steady Burn Lights should only be placed on the outside of the curve, not the inside.

WARNING LIGHTS MOUNTED ON PLASTIC DRUMS

1. Type A flashing warning lights are intended to warn drivers that they are approaching or are in a potentially hazardous area.
2. Type A random flashing warning lights are not intended for delineation and shall not be used in a series.
3. A series of sequential flashing warning lights placed on channelizing devices to form a merging taper may be used for delineation. If used, the successive flashing of the sequential warning lights should occur from the beginning of the taper to the end of the merging taper in order to identify the desired vehicle path. The rate of flashing for each light shall be 65 flashes per minute, plus or minus 10 flashes.
4. Type C and D steady-burn warning lights are intended to be used in a series to delineate the edge of the travel lane on detours, on lane changes, on lane closures, and on other similar conditions.
5. Type A, Type C and Type D warning lights shall be installed at locations as detailed on other sheets in the plans.
6. Warning lights shall not be installed on a drum that has a sign, chevron or vertical panel.
7. The maximum spacing for warning lights on drums should be identical to the channelizing device spacing.

WARNING REFLECTORS MOUNTED ON PLASTIC DRUMS AS A SUBSTITUTE FOR TYPE C (STEADY BURN) WARNING LIGHTS

1. A warning reflector or approved substitute may be mounted on a plastic drum as a substitute for a Type C, steady burn warning light at the discretion of the Contractor unless otherwise noted in the plans.
2. The warning reflector shall be yellow in color and shall be manufactured using a sign substrate approved for use with plastic drums listed on the CWZTCD.
3. The warning reflector shall have a minimum retroreflective surface area (one-side) of 30 square inches.
4. Round reflectors shall be fully reflectorized, including the area where attached to the drum.
5. Square substrates must have a minimum of 30 square inches of reflectorized sheeting. They do not have to be reflectorized where it attaches to the drum.
6. The side of the warning reflector facing approaching traffic shall have sheeting meeting the color and retroreflectivity requirements for DMS 8300-Type D (Non-fluorescent Prismatic).
7. When used near two-way traffic, both sides of the warning reflector shall be reflectorized.
8. The warning reflector should be mounted on the side of the handle nearest approaching traffic.
9. The maximum spacing for warning reflectors should be identical to the channelizing device spacing requirements.

TRUCK-MOUNTED ATTENUATORS

1. Truck-mounted attenuators (TMA) used on TxDOT facilities must meet the requirements outlined in the National Cooperative Highway Research Report No. 350 (NCHRP 350).
2. Refer to the CWZTCD for the requirements of Level 2 or Level 3 TMAs.
3. Refer to the dates shown in the CWZTCD to ensure that the TMA meets the age requirements and the crashworthin criteria established by the Federal Highway Administration (FHWA) for TMAs.
4. Refer to the CWZTCD for a list of approved TMAs.
5. TMAs are required on freeways unless otherwise noted in the plans.
6. A TMA should be used anytime that it can be positioned approximately 30 to 100 feet in advance of the area of crew exposure without adversely affecting the work performance.
7. The only reason a TMA should not be required is when a work area is spread down the roadway and the work crew an extended distance from the TMA.

LEVELS DISPLAYED

1	2	3	4	5	6	7	8	9	10	11	12	13	14	15	16
17	18	19	20	21	22	23	24	25	26	27	28	29	30	31	32
33	34	35	36	37	38	39	40	41	42	43	44	45	46	47	48
49	50	51	52	53	54	55	56	57	58	59	60	61	62	63	

ACC:

STANDARD PLANS
Texas Department of Transportatio
Traffic Operations Division

BARRICADE AND CONSTRUCTI
ARROW PANEL, REFLECTORS,
WARNING LIGHTS & ATTENUA
STANDARD

7 of 12 BC(7)-0

©TxDOT 11-4-02	DN: TxDOT	CK: TxDOT	DW: TxDOT	CK:

REVISIONS	STATE DISTRICT	FEDERAL REGION	PROJECT NUMBER	
9-07	YKM	6		
	COUNTY	CONTROL	SECTION	JOB
	GONZALES, ETC.	1442	03	016, ETC

DISCLAIMER
The use of this standard is governed by the "Texas Engineering Practice Act". No warranty of any kind is made by TxDOT for any purpose whatsoever. TxDOT assumes no responsibility for the conversion of this standard to other formats or for incorrect results or damages resulting from its use.

LEVELS DISPLAYED ACC:

1	2	3	4	5	6	7	8	9	10	11	12	13	14	15	16
17	18	19	20	21	22	23	24	25	26	27	28	29	30	31	32
33	34	35	36	37	38	39	40	41	42	43	44	45	46	47	48
49	50	51	52	53	54	55	56	57	58	59	60	61	62	63	

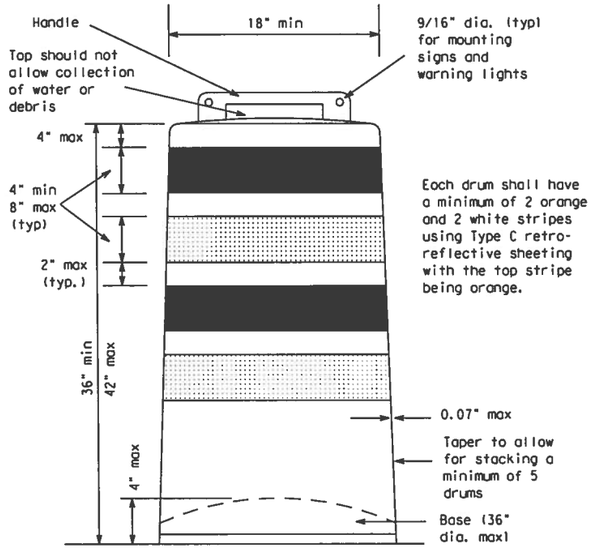

GENERAL NOTES

1. For long term stationary work zones on freeways, drums shall be used as the primary channelizing device.
2. For intermediate term stationary work zones on freeways, drums should be used as the primary channelizing device but may be replaced in tangent sections by vertical panels, or 42" two-piece cones. In tangent sections one-piece cones may be used with the approval of the Engineer but only if personnel are present on the project at all times to maintain the cones in proper position and location.
3. For short term stationary work zones on freeways, drums are the preferred channelizing device but may be replaced in tapers, transitions and tangent sections by vertical panels, two-piece cones or one-piece cones as approved by the Engineer.
4. Drums and all related items shall comply with the requirements of the current version of the "Texas Manual on Uniform Traffic Control Devices" (TMUTCD) and the "Compliant Work Zone Traffic Control Devices List" (CWZTCD).
5. Drums, bases, and related materials shall exhibit good workmanship and shall be free from objectionable marks or defects that would adversely affect their appearance or serviceability.
6. The Contractor shall have a maximum of 24 hours to replace any plastic drums identified for replacement by the Engineer/Inspector. The replacement device must be an approved device.

GENERAL DESIGN REQUIREMENTS

Prequalified plastic drums shall meet the following requirements:

1. Plastic drums shall be a two-piece design; the "body" of the drum shall be the top portion and the "base" shall be the bottom.
2. The body and base shall lock together in such a manner that the body separates from the base when impacted by a vehicle traveling at a speed of 20 MPH or greater but prevents accidental separation due to normal handling and/or air turbulence created by passing vehicles.
3. Plastic drums shall be constructed of lightweight flexible, and deformable materials. The Contractor shall NOT use metal drums or single piece plastic drums as channelization devices or sign supports.
4. Drums shall present a profile that is a minimum of 18 inches in width at the 36 inch height when viewed from any direction. The height of drum unit (body installed on base) shall be a minimum of 36 inches and a maximum of 42 inches.
5. The top of the drum shall have a built-in handle for easy pickup and shall be designed to drain water and not collect debris. The handle shall have a minimum of two widely spaced 9/16 inch diameter holes to allow attachment of a warning light, warning reflector unit or approved compliant sign.
6. The exterior of the drum body shall have a minimum of four alternating orange and white retroreflective circumferential stripes not less than 4 inches nor greater than 8 inches in width. Any non-reflectorized space between any two adjacent stripes shall not exceed 2 inches in width.
7. Bases shall have a maximum width of 36 inches, a maximum height of 4 inches, and a minimum of two footholds of sufficient size to allow base to be held down while separating the drum body from the base.
8. Plastic drums shall be constructed of ultra-violet stabilized, orange, high-density polyethylene (HDPE) or other approved material.
9. Drum body shall have a minimum unballasted weight of 7.7 lbs. and maximum unballasted weight of 11 lbs. The wall of the drum body shall be a minimum of 0.07 inch in thickness. Weight of any drum supplied shall not vary more than 0.5 lb. from that of the prequalified sample.
10. Drum and base shall be marked with manufacturer's name and model number.

RETROREFLECTIVE SHEETING

1. The stripes used on drums shall be constructed of sheeting meeting the color and retroreflectivity requirements of Departmental Materials Specification DMS-8300, "Flat Surface Reflective Sheeting." High Specific Intensity (Type C) retroreflective sheeting shall be supplied unless otherwise specified in the plans.
2. The sheeting shall be suitable for use on and shall adhere to the drum surface such that, upon vehicular impact, the sheeting shall remain adhered in-place and exhibit no delaminating, cracking, or loss of retroreflectivity other than that loss due to abrasion of the sheeting surface.

BALLAST

1. Unballasted bases shall be large enough to hold up to 50 lbs. of sand. This base, when filled with the ballast material, should weigh between 35 lbs (minimum) and 50 lbs (maximum). The ballast may be sand in one to three sandbags separate from the base, sand in a sand-filled plastic base, or other ballasting devices as approved by the Engineer. Stacking of sandbags will be allowed, however height of sandbags above pavement surface may not exceed 12 inches.
2. Bases with built-in ballast shall weigh between 40 lbs. and 50 lbs. Built-in ballast can be constructed of an integral crumb rubber base or a solid rubber base.
3. The ballast shall not be heavy objects, water, or any material that would become hazardous to motorists, pedestrians, or workers when the drum is struck by a vehicle.
4. When used in regions susceptible to freezing, drums shall have drainage holes in the bottoms so that water will not collect and freeze becoming a hazard when struck by a vehicle.
5. Ballast shall not be placed on top of drums.
6. Adhesives may be used to secure base of drums to pavement.

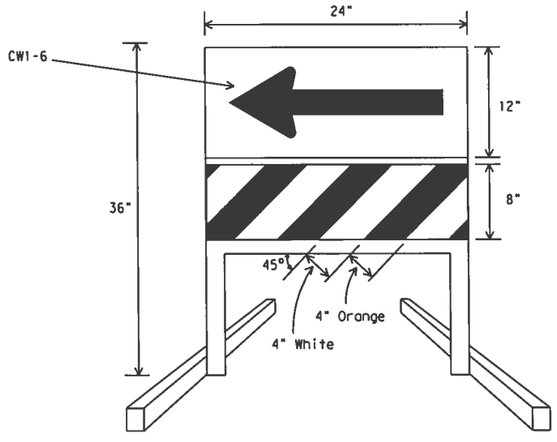

DIRECTION INDICATOR BARRICADE

1. The Direction Indicator Barricade may be used in tapers, transitions, and other areas where specific directional guidance to drivers is necessary.
2. If used, the Direction Indicator Barricade should be used in series to direct the driver through the transition and into the intended travel lane.
3. The Direction Indicator Barricade shall consist of One-Direction Large Arrow (CW1-6) sign in the size shown with a black arrow on a background of Type E Fluorescent Prismatic Orange above a rail with Type C High Specific Intensity retroreflective sheeting in alternation 4" white and orange stripes sloping downward at an angle of 45 degrees in the direction road users are to pass.
4. Double arrows on the Direction Indicator Barricade will not be allowed.
5. Approved manufacturers are shown on the CWZTCD List. Ballast shall be as approved by the manufacturers instructions.

18" x 24" Sign
(Maximum Sign Dimension)
Chevron CW1-8, Opposing Traffic Lane Divider, Driveway sign D70a, Keep Right R4 series or other signs as approved by Engineer

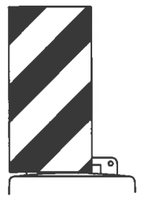

12" x 24"
Vertical Panel
mount with diagonals sloping down towards travel way

Plywood, Aluminum or Metal sign substrates shall NOT be used on plastic drums

SIGNS, CHEVRONS, AND VERTICAL PANELS MOUNTED ON PLASTIC DRUMS

1. Signs used on plastic drums shall be manufactured using substrates listed on the CWZTCD.
2. Chevrons and other work zone signs with an orange background shall be manufactured with Type E (Fluorescent Prismatic) sheeting meeting the color and retroreflectivity requirements of DMS-8300, "Sign Face Material," unless otherwise specified in the plans.
3. Vertical Panels shall be manufactured with orange and white sheeting meeting the requirements of DMS-8300 Type C (High Specific Intensity). Diagonal stripes on Vertical Panels shall slope down toward the intended traveled lane.
4. Other sign messages (text or symbolic) may be used as approved by the Engineer. Sign dimensions shall not exceed 18 inches in width or 24 inches in height.
5. Signs shall be installed using a 1/2 inch bolt (nominal) and nut, two washers, and one locking washer for each connection.
6. Mounting bolts and nuts shall be fully engaged and adequately torqued. Bolts should not extend more than 1/2 inch beyond nuts.
7. Chevrons may be placed on drums on the outside of curves, on merging tapers or on shifting tapers. When used in these locations they may be placed on every drum or spaced not more than on every third drum. A minimum of three (3) should be used at each location called for in the plans.
8. R9-9, R9-10, R9-11 and R9-11a Sidewalk Closed signs which are 24 inches wide may be mounted on plastic drums, with approval of the Engineer.

STANDARD PLANS
Texas Department of Transportatio
Traffic Operations Division

BARRICADE AND CONSTRUCTI CHANNELIZING DEVICES STANDARD

8 of 12 BC(8)-0

©TxDOT 11-4-02	DN: TxDOT	CK: TxDOT	DW: TxDOT	CK:

REVISIONS	STATE DISTRICT	FEDERAL REGION	PROJECT NUMBER				
4-03	YKM	6					
9-07	COUNTY		CONTROL	SECTION	JOB		
	GONZALES, ETC.		1442	03	016, ETC		FN

DISCLAIMER
The use of this standard is governed by the "Texas Engineering Practice Act". No warranty of any kind is made by TxDOT for any purpose whatsoever. TxDOT assumes no responsibility for the conversion of this standard to other formats or for incorrect results or damages resulting from its use.

CHANNELIZING DEVICES

VERTICAL PANELS (VPs)

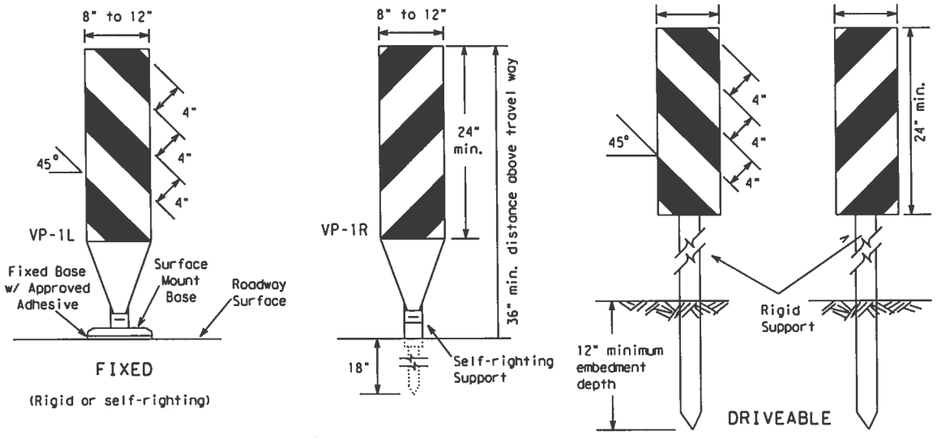

1. Vertical Panels (VP's) are normally used to channelize traffic or divide opposing lanes of traffic.
2. VP's may be used in daytime or nighttime situations. They may be used at the edge of shoulder drop-offs and other areas such as lane transitions where positive daytime and nighttime delineation is required. The Engineer/Inspector shall refer to the Roadway Design Manual Appendix B "Treatment of Pavement Drop-offs in Work Zones" for additional guidelines on the use of VP's for drop-offs.
3. VP's should be mounted back to back if used at the edge of cuts adjacent to two-way two lane roadways. Stripes are to be reflective orange and reflective white and should always slope downward toward the travel lane.
4. VP's used on expressways and freeways or other high speed roadways, shall have a minimum of 270 square inches of retroreflective area facing traffic.
5. Self-righting supports are available with portable base. See "Compliant Work Zone Traffic Control Devices List" (CWZTCD).
6. Sheeting for the VP's shall be retroreflective Type C (High Specific Intensity) conforming to Departmental Material Specification DMS-8300, unless noted otherwise.
7. Where the height of reflective material on the vertical panel is greater than 36 inches, a panel stripe of 6 inches shall be used.

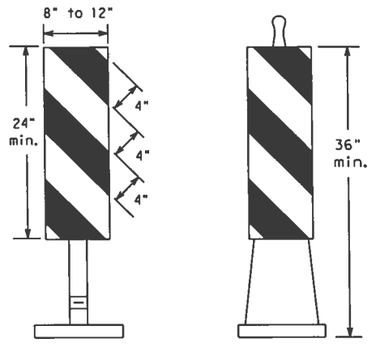

PORTABLE

CHEVRONS

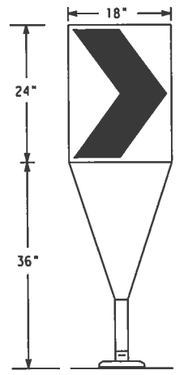

Fixed Base w/ Approved Adhesive (Driveable Base, or Flexible Support can be used)

1. The chevron shall be a vertical rectangle with a minimum size of 12 by 18 inches.
2. Chevrons are intended to give notice of a sharp change of alignment with the direction of travel and provide additional emphasis and guidance for vehicle operators with regard to changes in horizontal alignment of the roadway.
3. Chevrons, when used, shall be erected on the outside of a sharp curve or turn, or on the far side of an intersection. They shall be in line with and at right angles to approaching traffic. Spacing should be such that the motorist always has three in view, until the change in alignment eliminates its need.
4. To be effective, the chevron should be visible for at least 500 feet.
5. Chevrons shall be orange with a black nonreflective legend. Sheeting for the chevron shall be retroreflective Type E (Fluorescent Prismatic) conforming to Departmental Material Specification DMS-8300, unless noted otherwise. The legend shall be block vinyl non-reflective decal sheeting meeting the requirements of DMS-8300.
6. For Long Term Stationary use on tapers or transitions on freeways and divided highways self-righting chevrons may be used to supplement plastic drums but not to replace plastic drums.

OPPOSING TRAFFIC LANE DIVIDERS (OTLD)

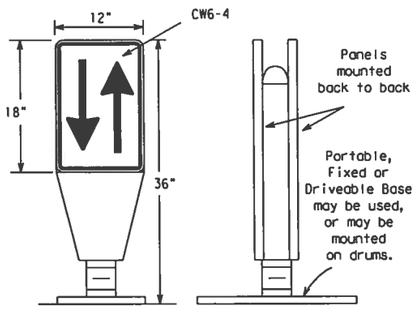

1. Opposing Traffic Lane Dividers (OTLD) are delineation devices designed to convert a normal one-way roadway section to two-way operation. OTLD's are used on temporary centerlines. The upward and downward arrows on the sign's face indicate the direction of traffic on either side of the divider. The base is secured to the pavement with an adhesive or rubber weight to minimize movement caused by a vehicle impact or wind gust.
2. The OTLD may be used in combination with simple tubular markers or VPs.
3. Spacing between the OTLD shall not exceed 500 feet. Tubular markers or VPs placed between the OTLD's should not exceed 100 foot spacing.
4. The OTLD shall be orange with a black non-reflective legend. Sheeting for the OTLD shall be retroreflective Type E (Fluorescent Prismatic) conforming to Departmental Material Specification DMS-8300, unless noted otherwise. The legend shall be black vinyl non-reflective decal sheeting meeting the requirements of DMS-8300.

GENERAL NOTES:

1. Work Zone channelizing devices illustrated on this sheet may be installed in close proximity to traffic and are suitable for use on high or low speed roadways. The Engineer/Inspector shall ensure that spacing and placement is uniform and in accordance with the "Texas Manual on Uniform Traffic Control Devices" (TMUTCD).
2. Channelizing devices shown on this sheet may have a driveable, fixed or portable base. The requirement for self-righting channelizing devices must be specified in the General Notes or other plan sheets.
3. Channelizing devices on self-righting supports should be used in work zone areas where channelizing devices are frequently impacted by errant vehicle or vehicle related wind gusts making alignment of the channelizing devices difficult to maintain. Locations of these devices shall be detailed elsewhere in the plans. These devices shall conform to the TMUTCD and the "Compliant Work Zone Traffic Control Devices List" (CWZTCD).
4. The Contractor shall maintain devices in a clean condition and replace damaged, nonreflective, faded, or broken devices and bases as required by the Engineer/Inspector. The Contractor shall be required to maintain prope device spacing and alignment.
5. Portable bases shall be fabricated from virgin and/or recycled rubber. The portable bases shall weigh approximately 35 lbs.
6. Pavement surfaces shall be prepared in a manner that ensures proper bondin between the adhesives, the fixed mount bases and the pavement surface. Adhesives shall be prepared and applied according to the manufacturer's recommendations.
7. The installation and removal of channelizing devices shall not cause detrimental effects to the final pavement surfaces, including pavement surface discoloration or surface integrity. Driveable bases shall not be permitted on final pavement surfaces. The Engineer/Inspector shall approve all application and removal procedures of fixed bases.
8. Examples on this sheet are commonly used channelizing devices in work zone For other devices, refer to the CWZTCD.

Posted Speed	Formula	Minimum Desirable Taper Lengths ** 10' Offset	11' Offset	12' Offset	Suggested Maximum Spacing of Channelizing Devices On a Taper	On a Tangent
30	$L = \frac{WS^2}{60}$	150'	165'	180'	30'	60'-75'
35		205'	225'	245'	35'	70'-90'
40		265'	295'	320'	40'	80'-100
45	L=WS	450'	495'	540'	45'	90'-110
50		500'	550'	600'	50'	100'-125
55		550'	605'	660'	55'	110'-140
60		600'	660'	720'	60'	120'-150
65		650'	715'	780'	65'	130'-165
70		700'	770'	840'	70'	140'-175
75		750'	825'	900'	75'	150'-185
80		800'	880'	960'	80'	160'-195

** Taper lengths have been rounded off.
L=Length of Taper (FT.) W=Width of Offset (FT.)
S=Posted Speed (MPH)

HOLLOW OR WATER BALLASTED SYSTEMS USED AS LONGITUDINAL CHANNELIZING DEVICES OR BARRIERS

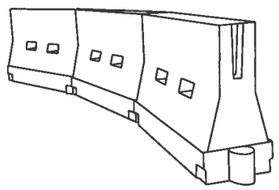

LONGITUDINAL CHANNELIZING DEVICES

1. Longitudinal channelizing devices are crashworthy, lightweight, deformable devices that are highly visible, have good target value and can be connected together. **They are not designed to contain or redirect a vehicle on impact.**
2. Longitudinal channelizing devices may be used instead of a line of cones or drums.
3. Longitudinal channelizing devices shall be placed in accordance to application and installation requirements specific to the device, and used only when shown on the CWZTCD list.
4. Longitudinal channelizing devices should not be used to provide positive protection for obstacles, pedestrians or workers.
5. Longitudinal channelizing devices shall be retroreflective, or supplemented with retroreflective delineation as required for temporary barriers on BC(7)-07.

WATER BALLASTED SYSTEMS USED AS BARRIERS

1. Water ballasted systems used as barriers shall not be used solely to channelize road users, but also to protect the work space per the appropriate NCHRP 350 crashworthiness requirements based on roadway speed and barrier application.
2. Water ballasted systems used to channelize vehicular traffic shall be supplemented with retroreflective delineation or channelizing devices to improve daytime/nighttime visibility. They may also be supplemented with pavement markings.
3. Water ballasted systems used as barriers shall be placed in accordance to application and installation requirements specific to the device, and used only when shown on the CWZTCD list.
4. Water ballasted systems used as barriers should not be used for a merging taper except in low speed (less than 45 MPH) urban areas. When used on a taper in a low speed urban area, the taper shall be delineated and the taper length should be designed to optimize road user operations considering the available geometric conditions.
5. When water ballasted systems used as barriers have blunt ends exposed to traffic, they should be attenuated as per manufacturer recommendations or flared to point outside the clear zone.

If used to channelize pedestrians, longitudinal channelizing devices or water ballasted systems must have a continuous detectable bottom for users of long canes and the top of the unit shall be not less than 32 inches in height.

VERTICAL PANELS & OPPOSING TRAFFIC LANE DIVIDERS SEPARATING TWO-WAY TRAFFIC (Typical application)

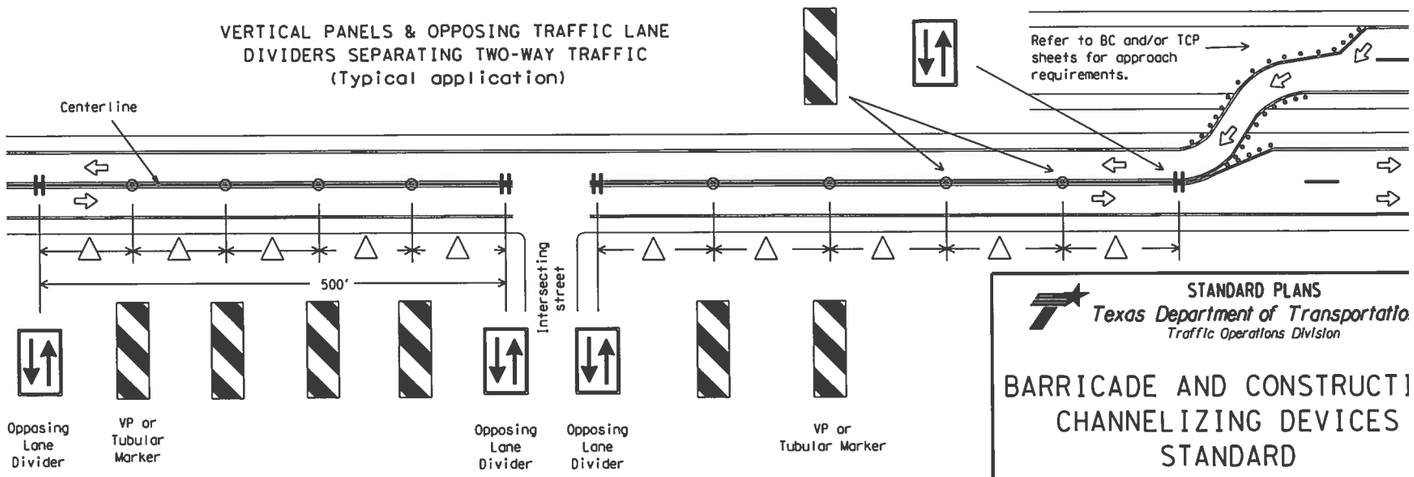

△ Spacing between the VP's or tubular markers shall not exceed 100 feet. On roadways with speeds less than 45 MPH, spacing between the tubular markers or VP's shall be as shown on the channelizing spacing table shown on this page. If the table shows spacing greater than 100 feet based on the roadway speed, then use a maximum of 100 feet spacing between the tubular markers or VP's. Every fifth channelizing device shall be an OTLD, except when the OLTD must be spaced closer to accomodate an intersection. Spacing between the OTLD shall not exceed 500 feet.

STANDARD PLANS
Texas Department of Transportatio
Traffic Operations Division

BARRICADE AND CONSTRUCTI
CHANNELIZING DEVICES
STANDARD

9 of 12 BC(9)-0

© TxDOT 11-4-02	DN: TxDOT	CK: TxDOT	DW: TxDOT	CK:
REVISIONS 9-07	STATE DISTRICT: YKM	FEDERAL REGION: 6	PROJECT NUMBER	
COUNTY: GONZALES, ETC.	CONTROL: 1442	SECTION: 03	JOB: 016, ETC	FA

LEVELS DISPLAYED
1 2 3 4 5 6 7 8 9 10 11 12 13 14 15 16 17 18 19 20 21 22 23 24 25 26 27 28 29 30 31 32 33 34 35 36 37 38 39 40 41 42 43 44 45 46 47 48 49 50 51 52 53 54 55 56 57 58 59 60 61 62 63

ACC:

DISCLAIMER
The use of this standard is governed by the "Texas Engineering Practice Act". No warranty of any kind is made by TxDOT for any purpose whatsoever. TxDOT assumes no responsibility for the conversion of this standard to other formats or for incorrect results or damages resulting from its use.

TYPE III BARRICADES

1. Refer to the Compliant Work Zone Traffic Control Devices List (CWZTCD) for details of the Type III Barricades and a list of all materials used in the construction of Type III Baricades.
2. Type III Barricades shall be used at each end of construction projects closed to all traffic.
3. Barricades extending across a roadway should have stripes that slope downward in the direction toward which traffic must turn in detouring. When both right and left turns are provided, the chevron striping may slope downward in both directions from the center of the barricade. Where no turns are provided at a closed road striping should slope downward in both directions toward the center of roadway.
4. Striping of rails, for the right side of the roadway, should slope downward to the left. For the left side of the roadway, striping should slope downward to the right.
5. Identification markings may be shown only on the back of the barricade rails. The maximum height of letters and/or company logos used for identification shall be 1".
6. Barricades shall not be placed parallel to traffic unless an adequate clear zone is provided.
7. Warning lights shall NOT be installed on barricades.
8. Where barricades require the use of weights to keep from turning over, the use of sandbags with dry, cohesionless sand is recommended. The sandbags will be tied shut to keep the sand from spilling and to maintain a constant weight. Sand bags shall not be stacked in a manner that covers any portion of a barricade rails reflective sheeting. Rock, concrete, iron, steel or other solid objects will NOT be permitted. Sandbags should weigh a minimum of 35 lbs and a maximum of 50 lbs. Sandbags shall be made of a durable material that tears upon vehicular impact. Rubber (such as tire inner tubes) shall not be used for sandbags. Sandbags shall only be placed along or upon the base supports of the device and shall not be suspended above ground level or hung with rope, wire, chains or other fasteners.
9. Sheeting for barricades shall be retroreflective Type C (High Specific Intensity) conforming to Departmental Material Specfication DMS-8300 unless otherwise noted.

Barricades shall NOT be used as a sign support.

TYPICAL STRIPING DETAIL FOR BARRICADE RAIL

TYPICAL PANEL DETAIL FOR SKID OR POST TYPE BARRICADES

Stiffner may be inside or outside of support, but no more than 2 stiffeners shall be allowed on one barricade.

TYPE III BARRICADE (POST AND SKID) TYPICAL APPLICATION

Each roadway of a divided highway shall be barricaded in the same manner.

PERSPECTIVE VIEW

The three rails on Type III barricades shall be reflectorized orange and reflective white stripes on one side facing one-way traffic and both sides for two-way traffic.
Barricade striping should slant downward in the direction of detour.

PLAN VIEW

1. Signs should be mounted on independent supports at a 7 foot mounting height in center of roadway. The signs should be a minimum of 10 feet behind Type III Barricades.
2. Advance signing shall be as specified elsewhere in the plans.

CULVERT WIDENING OR OTHER ISOLATED WORK WITHIN THE PROJECT LIMITS

PERSPECTIVE VIEW

1. Where positive redirectional capability is provided, drums may be omitted.
2. Plastic construction fencing may be used with drums for safety as required in the plans.
3. Vertical Panels on flexible supp[orts] may be substituted for drums when t[he] shoulder width is less than 4 feet.
4. When the shoulder width is great[er] than 12 feet, steady-burn lights may be omitted if drums are used.
5. Drums must extend the length of the culvert widening.

PLAN VIEW

Increase number of plastic drums on the side of approaching traffic if the crown width makes it necessary. (minimum of 2 and maximum of 4 drums)

Legend
- Plastic drum
- Plastic drum with steady burn li[ght] or yellow warning reflector
- (SB) Steady burn warning light or yellow warning reflector

CONES

Two-Piece cones

One-Piece cones   Tubular Marker

28" Cones shall have a minimum weight of 9 1/2 lbs.

42" 2-piece cones shall have a minimum weight of 30 lbs. including base.

1. Traffic cones and tubular markers shall be a minimum of 28 inches in height when used either on freeways or at nighttime.
2. Cones or tubular markers shall be predominantly orange, fluorescent red-orange, or fluorescent yellow-orange. They should be kept clean and bright for maximum visibility.
3. Cones used only for daytime operations do not require the reflectorized bands.
4. Cones and tubular markers used for nighttime operations shall be reflectorized. Reflectorized material shall have a smooth, sealed outer surface that displays the same approximate color during the day and night. The reflectorized bands shall be retroreflective Type C (High Specific Intensity) conforming to Departmental Material Specification DMS-8300, unless otherwise noted.
5. When used at night, appropriate personnel shall ensure that cones and tubular markers remain in their proper location and in an upright position.
6. Reflectorization of 28"cones shall consist of a minimum 6 inch band placed at least 3 inches but not more than 4 inches from the top, supplemented by a minimum 4 inch band spaced a minimum of 2 inches below the 6 inch band.
7. Reflectorization of 42" cones shall be provided by alternating 4 to 6" orange and white stripes with orange on top.
8. Reflectorization of tubular markers shall be a minimum of two 3 inch bands placed a maximum of 2 inches from the top with a maximum of 6 inches between bands.
9. One-piece cones or tubular markers are generally suitable for temporary usage (up to 8 hours) with other channelization devices such as vertical panels, drums or two-piece cones for long term usage. Care should be taken to ensure they remain in their proper location and in an upright position.
10. Cones or tubular markers used on each project shall be of the same size and shape.
11. The handle may be designed as a hook or other shape, fabricated from non-rigid materials similar to the cone material, and may extend up to a maximum of 8 inches above the top of cone. Length of the handle shall not be considered with regard to the overall height of the cone.

EDGELINE CHANNELIZER

1. This device is intended only for use in place of a vertical panel [to] channelize traffic by indicating the edge of the travel lane. It i[s] not intended to be used in transitions or tapers.
2. This device shall not be used to separate lanes of traffic (opposi[ng] or otherwise) or warn of objects.
3. This device is based on a 42 inch, two-piece cone with an alternat[ing] striping pattern: four 4 inch retroreflective bands, with an approximate 2 inch gap between bands. The color of the band shoul[d] correspond to the color of the edgeline (yellow for left edgeline, white for right edgeline) for which the device is substituted or f[or] which it supplements. The reflectorized bands shall be retroreflec[tive] Type C encapsulated bead (High Specific Intensity) conforming to Departmental Material Specification DMS-8300, unless otherwise not[ed].
4. The base must weigh a minimum of 30 lbs.

TRAFFIC CONTROL FOR MATERIAL STOCKPILES

LEVELS DISPLAYED | ACC:

1	2	3	4	5	6	7	8	9	10	11	12	13	14	15	16
17	18	19	20	21	22	23	24	25	26	27	28	29	30	31	32
33	34	35	36	37	38	39	40	41	42	43	44	45	46	47	48
49	50	51	52	53	54	55	56	57	58	59	60	61	62	63	

STANDARD PLANS
Texas Department of Transportatio[n]
Traffic Operations Division

BARRICADE AND CONSTRUCT[ION] CHANNELIZING DEVICES STANDARD

10 of 12   BC(10)-(

©TxDOT 11-4-02

DN: TxDOT	CK: TxDOT	DW: TxDOT	CK:

REVISIONS	STATE DISTRICT	FEDERAL REGION	PROJECT NUMBER
9-07	YKM	6	

COUNTY	CONTROL	SECTION	JOB
GONZALES, ETC.	1442	03	016, ETC

DISCLAIMER
The use of this standard is governed by the "Texas Engineering Practice Act". No warranty of any kind is made by TxDOT for any purpose whatsoever. TxDOT assumes no responsibility for the conversion of this standard to other formats or for incorrect results or damages resulting from its use.

WORK ZONE PAVEMENT MARKINGS

GENERAL

1. The Contractor shall be responsible for maintaining work zone and existing pavement markings, in accordance with the standard specifications and special provisions, on all roadways open to traffic within the CSJ limits unless otherwise stated in the plans.
2. Color, patterns and dimensions shall be in conformance with the "Texas Manual on Uniform Traffic Control Devices" (TMUTCD).
3. Additional supplemental pavement marking details may be found in the plans or specifications.
4. Pavement markings shall be installed in accordance with the TMUTCD and as shown on the plans.
5. When short term markings are required on the plans, short term markings shall conform with the TMUTCD, the plans and details as shown on the Standard Plan Sheet WZ(STPM).
6. When standard pavement markings are not in place and the roadway is opened to traffic, DO NOT PASS signs shall be erected to mark the beginning of the sections where passing is prohibited and PASS WITH CARE signs at the beginning of sections where passing is permitted.
7. All work zone pavement markings shall be installed in accordance with Item 662, "Work Zone Pavement Markings."

RAISED PAVEMENT MARKERS

1. Raised pavement markers are to be placed according to the patterns on BC(12).
2. All raised pavement markers used for work zone markings shall meet the requirements of Item 672, "RAISED PAVEMENT MARKERS" and Departmental Material Specification DMS-4200 or DMS-4300.

PREFABRICATED PAVEMENT MARKINGS

1. Removable prefabricated pavement markings shall meet the requirements of DMS-8241.
2. Non-removable prefabricated pavement markings (foil back) shall meet the requirements of DMS-8240.

MAINTAINING WORK ZONE PAVEMENT MARKINGS

1. The Contractor will be responsible for maintaining work zone pavement markings within the work limits.
2. Work zone pavement markings shall be inspected in accordance with the frequency and reporting requirements of work zone traffic control device inspections as required by Form 599.
3. The markings should provide a visible reference for a minimum distance of 300 feet during normal daylight hours and 160 feet when illuminated by automobile low-beam headlights at night, unless sight distance is restricted by roadway geometrics.
4. Markings failing to meet this criteria within the first 30 days after placement shall be replaced at the expense of the Contractor as per Specification Item 662.

REMOVAL OF PAVEMENT MARKINGS

1. Pavement markings that are no longer applicable, could create confusion or direct a motorist toward or into the closed portion of the roadway, shall be removed or obliterated before the roadway is opened to traffic.
2. The above shall not apply to detours in place for less than two weeks, where flaggers and/or sufficient channelizing devices are used in lieu of markings to outline the detour route.
3. Pavement markings shall be removed to the fullest extent possible, so as not to leave a discernable marking. This shall be by any method approved by TxDOT Specification Item 677 for "Eliminating Existing Pavement Markings and Markers".
4. The removal of pavement markings may require resurfacing or seal coating portions of the roadway.
5. Subject to the approval of the Engineer, any method that proves to be successful on a particular type pavement may be used.
6. Blast cleaning may be used but will not be required unless specifically shown in the plans.
7. Over-painting of the markings SHALL NOT BE permitted.
8. Removal of raised pavement markers shall be as directed by the Engineer.
9. Removal of existing pavement markings and markers will be paid for directly in accordance with Item 677, "ELIMINATING EXISTING PAVEMENT MARKINGS AND MARKERS," unless otherwise stated in the plans.
10. Black-out marking tape may be used to cover conflicting existing markings for periods less than two weeks when approved by the Engineer.

Temporary Flexible-Reflective Roadway Marker Tabs

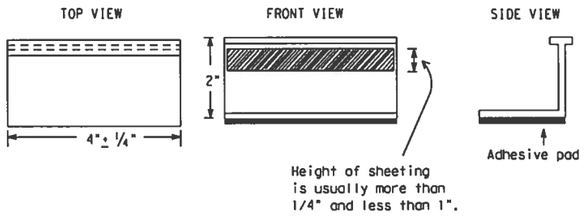

STAPLES OR NAILS SHALL NOT BE USED TO SECURE TEMPORARY FLEXIBLE-REFLECTIVE ROADWAY MARKER TABS TO THE PAVEMENT SURFACE

1. Temporary flexible-reflective roadway marker tabs used as guidemarks shall meet the requirements of DMS-8242.
2. Tabs detailed on this sheet are to be inspected and accepted by the Engineer or designated representative. Sampling and testing is not normally required, however at the option of the Engineer, either "A" or "B" below may be imposed to assure quality before placement on the roadway.
   A. Select five (5) or more tabs at random from each lot or shipment and submit to the Construction Division, Materials and Pavement Section to determine specification compliance.
   B. Select five (5) tabs and perform the following test. Affix five (5) tabs at 24 inch intervals on an asphaltic pavement in a straight line. Using a medium size passenger vehicle or pickup, run over the markers with the front and rear tires at a speed of 35 to 40 miles per hour, four (4) times in each direction. No more than one (1) out of the five (5) reflective surfaces shall be lost or displaced as a result of this test.
3. Small design variances may be noted between tab manufacturers.
4. See Standard Sheet WZ(STPM) for tab placement on new pavements. See Standard Sheet TCP(7-1) for tab placement on seal coat work.

Raised Pavement Markers used as Guidemarks

1. Raised pavement markers used as guidemarks shall be from the approved product list, and meet the requirements of DMS-4200.
2. All temporary construction raised pavement markers provided on a project shall be of the same manufacturer.
3. Adhesive for guidemarks shall be bituminous material hot applied or butyl rubber pad for all surfaces, or thermoplastic for concrete surfaces.

Guidemarks shall be designated as:
YELLOW - (two amber reflective surfaces with yellow body).
WHITE - (one silver reflective surface with white body).

DEPARTMENTAL MATERIAL SPECIFICATIONS

PAVEMENT MARKERS (REFLECTORIZED)	DMS-4200
TRAFFIC BUTTONS	DMS-4300
EPOXY AND ADHESIVES	DMS-6100
BITUMINOUS ADHESIVE FOR PAVEMENT MARKERS	DMS-6130
PREFABRICATED PAVEMENT MARKINGS-PERMANENT	DMS-8240
PREFABRICATED PAVEMENT MARKINGS-REMOVABLE	DMS-8241
TEMPORARY FLEXIBLE-REFLECTIVE ROADWAY MARKER TABS	DMS-8242

A list of prequalified reflective raised pavement markers, non-reflective traffic buttons, roadway marker tabs and other pavement markings can be found at the Material Producer List web address shown on BC(1).

LEVELS DISPLAYED
1 2 3 4 5 6 7 8 9 10 11 12 13 14 15 16
17 18 19 20 21 22 23 24 25 26 27 28 29 30 31 32
33 34 35 36 37 38 39 40 41 42 43 44 45 46 47 48
49 50 51 52 53 54 55 56 57 58 59 60 61 62 63
ACC:

STANDARD PLANS
Texas Department of Transportation
Traffic Operations Division

BARRICADE AND CONSTRUCTION
PAVEMENT MARKINGS
STANDARD

11 of 12 BC(11)-0

© TxDOT February 1998

DN: TxDOT	CK: TxDOT	DW: TxDOT	CK:

REVISIONS	STATE DISTRICT	FEDERAL REGION	PROJECT NUMBER
2-98	YKM	6	
1-02			
11-02	COUNTY	CONTROL	SECTION	JOB
9-07	GONZALES, ETC.	1442	03	016, ETC

DISCLAIMER
The use of this standard is governed by the "Texas Engineering Practice Act". No warranty of any kind is made by TxDOT for any purpose whatsoever. TxDOT assumes no responsibility for the conversion of this standard to other formats or for incorrect results or damages resulting from its use.

PAVEMENT MARKING PATTERNS

CENTER LINE & NO-PASSING ZONE BARRIER LINES FOR TWO-LANE, TWO-WAY HIGHWAYS

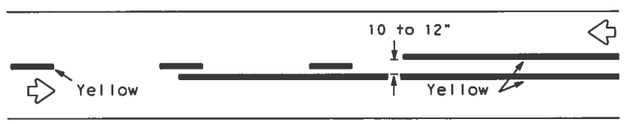

REFLECTORIZED PAVEMENT MARKINGS - PATTERN A

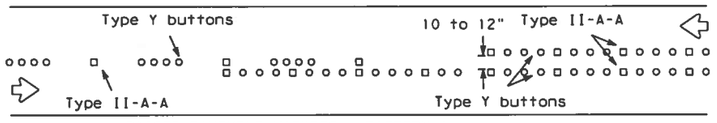

RAISED PAVEMENT MARKERS - PATTERN A

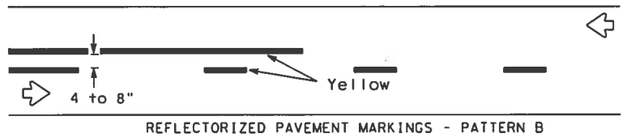

REFLECTORIZED PAVEMENT MARKINGS - PATTERN B

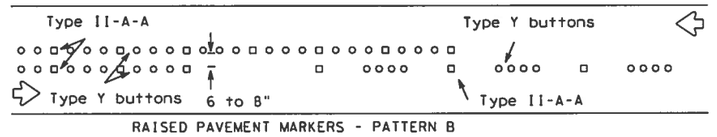

RAISED PAVEMENT MARKERS - PATTERN B

Pattern A is the TXDOT Standard, however Pattern B may be used if approved by the Engineer.
Prefabricated markings may be substituted for reflectorized pavement markings.

EDGE & LANE LINES FOR DIVIDED HIGHWAY

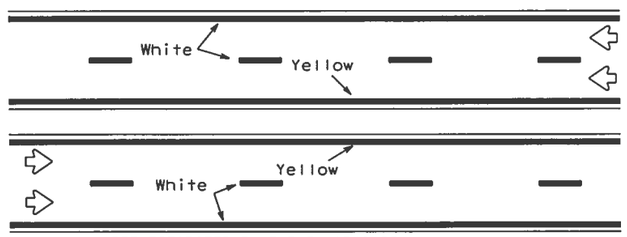

REFLECTORIZED PAVEMENT MARKINGS

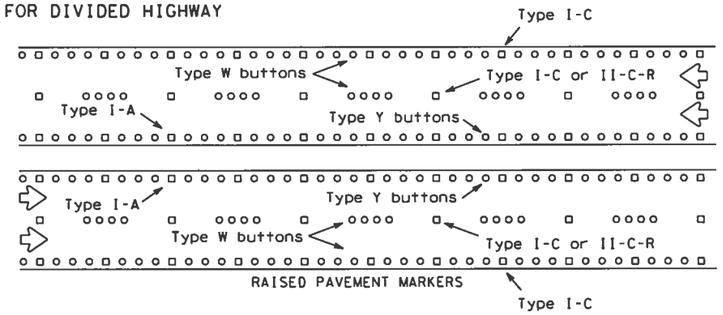

RAISED PAVEMENT MARKERS

Prefabricated markings may be substituted for reflectorized pavement markings.

LANE & CENTER LINES FOR MULTILANE UNDIVIDED HIGHWAYS

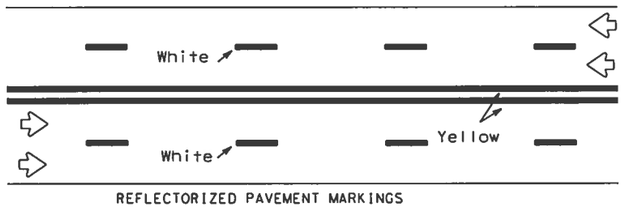

REFLECTORIZED PAVEMENT MARKINGS

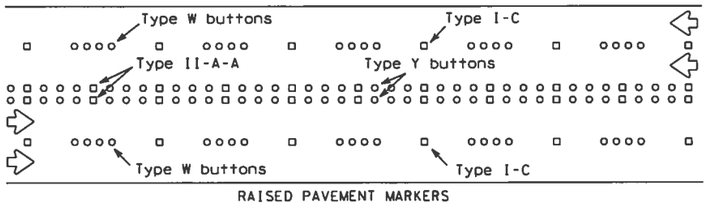

RAISED PAVEMENT MARKERS

Prefabricated markings may be substituted for reflectorized pavement markings.

TWO-WAY LEFT TURN LANE

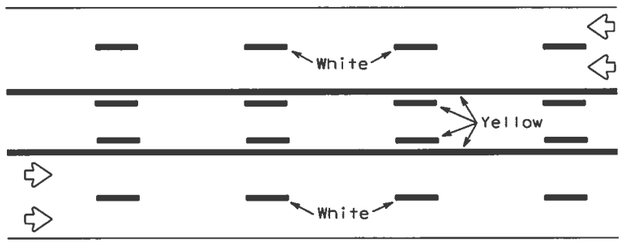

REFLECTORIZED PAVEMENT MARKINGS

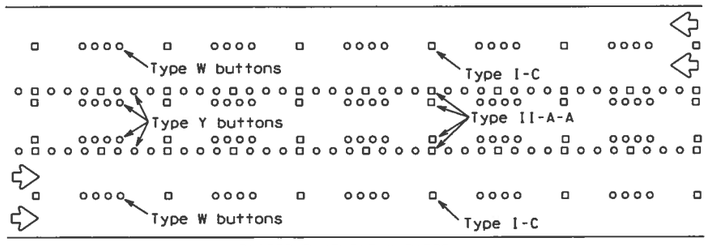

RAISED PAVEMENT MARKERS

Prefabricated markings may be substituted for reflectorized pavement markings.

LEVELS DISPLAYED
1 2 3 4 5 6 7 8 9 10 11 12 13 14 15 16 17 18 19 20 21 22 23 24 25 26 27 28 29 30 31 32 33 34 35 36 37 38 39 40 41 42 43 44 45 46 47 48 49 50 51 52 53 54 55 56 57 58 59 60 61 62 63 64 65 66 67 68 69 70 71 72 73 74 75 76 77 78 79 80 81 82 83 84 85 86 87 88 89 90 91 92 93 94 95 96 97 98 99 100 101 102 103 104 105 106 107 108 109 110 111 112 113 114 115 116 117 118 119 120 121 122 123 124 125 126 127 128 129 130 131 132 133 134 135 136 137 138 139 140 141 142 143 144 145 146 147 148 149 150 151 152 153 154 155 156 157 158 159 160 161 162 163 164 165 166 167 168 169 170 171 172 173 174 175 176 177 178 179 180 181 182 183 184 185 186 187 188 189 190 191 192 193 194 195 196 197 198 199 200 201 202 203 204 205 206 207 208 209 210 211 212 213 214 215 216 217 218 219 220 221 222 223 224 225 226 227 228 229 230 231 232 233 234 235 236 237 238 239 240 241 242 243 244 245 246 247 248 249 250 251 252 253 254 255 256 257 258 259 260 261 262 263 264 265 266 267 268 269 270 271 272 273 274 275 276 277 278 279 280 281 282 283 284 285 286 287 288 289 290 291 292 293 294 295 296 297 298 299 300 301 302 303 304 305 306 307 308 309 310 311 312 313 314 315 316 317 318 319 320 321 322 323 324 325 326 327 328 329 330 331 332 333 334 335 336 337 338 339 340 341 342 343 344 345 346 347 348 349 350 351 352 353 354 355 356 357 358 359 360 361 362 363 364 365 366 367 368 369 370 371 372 373 374 375 376 377 378 379 380 381 382 383 384 385 386 387 388 389 390 391 392 393 394 395 396 397 398 399 400 401 402 403 404 405 406 407 408 409 410 411 412 413 414 415 416 417 418 419 420 421 422 423 424 425 426 427 428 429 430 431 432 433 434 435 436 437 438 439 440 441 442 443 444 445 446 447 448 449 450 451 452 453 454 455 456 457 458 459 460 461 462 463 464 465 466 467 468 469 470 471 472 473 474 475 476 477 478 479 480 481 482 483 484 485 486 487 488 489 490 491 492 493 494 495 496 497 498 499 500 501 502 503 504 505 506 507 508 509 510 511 512 513 514 515 516 517 518 519 520 521 522 523 524 525 526 527 528 529 530 531 532 533 534 535 536 537 538 539 540 541 542 543 544 545 546 547 548 549 550 551 552 553 554 555 556 557 558 559 560 561 562 563 564 565 566 567 568 569 570 571 572 573 574 575 576 577 578 579 580 581 582 583 584 585 586 587 588 589 590 591 592 593 594 595 596 597 598 599 600 601 602 603 604 605 606 607 608 609 610 611 612 613 614 615 616 617 618 619 620 621 622 623 624 625 626 627 628 629 630 631 632 633 634 635 636 637 638 639 640 641 642 643 644 645 646 647 648 649 650 651 652 653 654 655 656 657 658 659 660 661 662 663 664 665 666 667 668 669 670 671 672 673 674 675 676 677 678 679 680 681 682 683 684 685 686 687 688 689 690 691 692 693 694 695 696 697 698 699 700 701 702 703 704 705 706 707 708 709 710 711 712 713 714 715 716 717 718 719 720 721 722 723 724 725 726 727 728 729 730 731 732 733 734 735 736 737 738 739 740 741 742 743 744 745 746 747 748 749 750 751 752 753 754 755 756 757 758 759 760 761 762 763 764 765 766 767 768 769 770 771 772 773 774 775 776 777 778 779 780 781 782 783 784 785 786 787 788 789 790 791 792 793 794 795 796 797 798 799 800 801 802 803 804 805 806 807 808 809 810 811 812 813 814 815 816 817 818 819 820 821 822 823 824 825 826 827 828 829 830 831 832 833 834 835 836 837 838 839 840 841 842 843 844 845 846 847 848 849 850 851 852 853 854 855 856 857 858 859 860 861 862 863 864 865 866 867 868 869 870 871 872 873 874 875 876 877 878 879 880 881 882 883 884 885 886 887 888 889 890 891 892 893 894 895 896 897 898 899 900 901 902 903 904 905 906 907 908 909 910 911 912 913 914 915 916 917 918 919 920 921 922 923 924 925 926 927 928 929 930 931 932 933 934 935 936 937 938 939 940 941 942 943 944 945 946 947 948 949 950 951 952 953 954 955 956 957 958 959 960 961 962 963 964 965 966 967 968 969 970 971 972 973 974 975 976 977 978 979 980 981 982 983 984 985 986 987 988 989 990 991 992 993 994 995 996 997 998 999 1000 1001 1002 1003 1004 1005 1006 1007 1008 1009 1010 1011 1012 1013 1014 1015 1016 1017 1018 1019 1020 1021 1022 1023 1024 1025 1026 1027 1028 1029 1030 1031 1032 1033 1034 1035 1036 1037 1038 1039 1040 1041 1042 1043 1044 1045 1046 1047 1048 1049 1050 1051 1052 1053 1054 1055 1056 1057 1058 1059 1060 1061 1062 1063 1064 1065 1066 1067 1068 1069 1070 1071 1072 1073 1074 1075 1076 1077 1078 1079 1080 1081 1082 1083 1084 1085 1086 1087 1088 1089 1090 1091 1092 1093 1094 1095 1096 1097 1098 1099 1100 1101 1102 1103 1104 1105 1106 1107 1108 1109 1110 1111 1112 1113 1114 1115 1116 1117 1118 1119 1120 1121 1122 1123 1124 1125 1126 1127 1128 1129 1130 1131 1132 1133 1134 1135 1136 1137 1138 1139 1140 1141 1142 1143 1144 1145 1146 1147 1148 1149 1150 1151 1152 1153 1154 1155 1156 1157 1158 1159 1160 1161 1162 1163 1164 1165 1166 1167 1168 1169 1170 1171 1172 1173 1174 1175 1176 1177 1178 1179 1180 1181 1182 1183 1184 1185 1186 1187 1188 1189 1190 1191 1192 1193 1194 1195 1196 1197 1198 1199 1200 1201 1202 1203 1204 1205 1206 1207 1208 1209 1210 1211 1212 1213 1214 1215 1216 1217 1218 1219 1220 1221 1222 1223 1224 1225 1226 1227 1228 1229 1230 1231 1232 1233 1234 1235 1236 1237 1238 1239 1240 1241 1242 1243 1244 1245 1246 1247 1248 1249 1250 1251 1252 1253 1254 1255 1256 1257 1258 1259 1260 1261 1262 1263 1264 1265 1266 1267 1268 1269 1270 1271 1272 1273 1274 1275 1276 1277 1278 1279 1280 1281 1282 1283 1284 1285 1286 1287 1288 1289 1290 1291 1292 1293 1294 1295 1296 1297 1298 1299 1300 1301 1302 1303 1304 1305 1306 1307 1308 1309 1310 1311 1312 1313 1314 1315 1316 1317 1318 1319 1320 1321 1322 1323 1324 1325 1326 1327 1328 1329 1330 1331 1332 1333 1334 1335 1336 1337 1338 1339 1340 1341 1342 1343 1344 1345 1346 1347 1348 1349 1350 1351 1352 1353 1354 1355 1356 1357 1358 1359 1360 1361 1362 1363 1364 1365 1366 1367 1368 1369 1370 1371 1372 1373 1374 1375 1376 1377 1378 1379 1380 1381 1382 1383 1384 1385 1386 1387 1388 1389 1390 1391 1392 1393 1394 1395 1396 1397 1398 1399 1400 1401 1402 1403 1404 1405 1406 1407 1408 1409 1410 1411 1412 1413 1414 1415 1416 1417 1418 1419 1420 1421 1422 1423 1424 1425 1426 1427 1428 1429 1430 1431 1432 1433 1434 1435 1436 1437 1438 1439 1440 1441 1442 1443 1444 1445 1446 1447 1448 1449 1450 1451 1452 1453 1454 1455 1456 1457 1458 1459 1460 1461 1462 1463 1464 1465 1466 1467 1468 1469 1470 1471 1472 1473 1474 1475 1476 1477 1478 1479 1480 1481 1482 1483 1484 1485 1486 1487 1488 1489 1490 1491 1492 1493 1494 1495 1496 1497 1498 1499 1500 1501 1502 1503 1504 1505 1506 1507 1508 1509 1510 1511 1512 1513 1514 1515 1516 1517 1518 1519 1520 1521 1522 1523 1524 1525 1526 1527 1528 1529 1530 1531 1532 1533 1534 1535 1536 1537 1538 1539 1540 1541 1542 1543 1544 1545 1546 1547 1548 1549 1550 1551 1552 1553 1554 1555 1556 1557 1558 1559 1560 1561 1562 1563 1564 1565 1566 1567 1568 1569 1570 1571 1572 1573 1574 1575 1576 1577 1578 1579 1580 1581 1582 1583 1584 1585 1586 1587 1588 1589 1590 1591 1592 1593 1594 1595 1596 1597 1598 1599 1600 1601 1602 1603 1604 1605 1606 1607 1608 1609 1610 1611 1612 1613 1614 1615 1616 1617 1618 1619 1620 1621 1622 1623 1624 1625 1626 1627 1628 1629 1630 1631 1632 1633 1634 1635 1636 1637 1638 1639 1640 1641 1642 1643 1644 1645 1646 1647 1648 1649 1650 1651 1652 1653 1654 1655 1656 1657 1658 1659 1660 1661 1662 1663 1664 1665 1666 1667 1668 1669 1670 1671 1672 1673 1674 1675 1676 1677 1678 1679 1680 1681 1682 1683 1684 1685 1686 1687 1688 1689 1690 1691 1692 1693 1694 1695 1696 1697 1698 1699 1700 1701 1702 1703 1704 1705 1706 1707 1708 1709 1710 1711 1712 1713 1714 1715 1716 1717 1718 1719 1720 1721 1722 1723 1724 1725 1726 1727 1728 1729 1730 1731 1732 1733 1734 1735 1736 1737 1738 1739 1740 1741 1742 1743 1744 1745 1746 1747 1748 1749 1750 1751 1752 1753 1754 1755 1756 1757 1758 1759 1760 1761 1762 1763 1764 1765 1766 1767 1768 1769 1770 1771 1772 1773 1774 1775 1776 1777 1778 1779 1780 1781 1782 1783 1784 1785 1786 1787 1788 1789 1790 1791 1792 1793 1794 1795 1796 1797 1798 1799 1800 1801 1802 1803 1804 1805 1806 1807 1808 1809 1810 1811 1812 1813 1814 1815 1816 1817 1818 1819 1820 1821 1822 1823 1824 1825 1826 1827 1828 1829 1830 1831 1832 1833 1834 1835 1836 1837 1838 1839 1840 1841 1842 1843 1844 1845 1846 1847 1848 1849 1850 1851 1852 1853 1854 1855 1856 1857 1858 1859 1860 1861 1862 1863 1864 1865 1866 1867 1868 1869 1870 1871 1872 1873 1874 1875 1876 1877 1878 1879 1880 1881 1882 1883 1884 1885 1886 1887 1888 1889 1890 1891 1892 1893 1894 1895 1896 1897 1898 1899 1900 1901 1902 1903 1904 1905 1906 1907 1908 1909 1910 1911 1912 1913 1914 1915 1916 1917 1918 1919 1920 1921 1922 1923 1924 1925 1926 1927 1928 1929 1930 1931 1932 1933 1934 1935 1936 1937 1938 1939 1940 1941 1942 1943 1944 1945 1946 1947 1948 1949 1950 1951 1952 1953 1954 1955 1956 1957 1958 1959 1960 1961 1962 1963 1964 1965 1966 1967 1968 1969 1970 1971 1972 1973 1974 1975 1976 1977 1978 1979 1980 1981 1982 1983 1984 1985 1986 1987 1988 1989 1990 1991 1992 1993 1994 1995 1996 1997 1998 1999 2000 2001 2002 2003 2004 2005 2006 2007 2008 2009 2010 2011 2012 2013 2014 2015 2016 2017 2018 2019 2020 2021 2022 2023 2024 2025 2026 2027 2028 2029 2030 2031 2032 2033 2034 2035 2036 2037 2038 2039 2040 2041 2042 2043 2044 2045 2046 2047 2048 2049 2050 2051 2052 2053 2054 2055 2056 2057 2058 2059 2060 2061 2062 2063 2064 2065 2066 2067 2068 2069 2070 2071 2072 2073 2074 2075 2076 2077 2078 2079 2080 2081 2082 2083 2084 2085 2086 2087 2088 2089 2090 2091 2092 2093 2094 2095 2096 2097 2098 2099 2100 2101 2102 2103 2104 2105 2106 2107 2108 2109 2110 2111 2112 2113 2114 2115 2116 2117 2118 2119 2120 2121 2122 2123 2124 2125 2126 2127 2128 2129 2130 2131 2132 2133 2134 2135 2136 2137 2138 2139 2140 2141 2142 2143 2144 2145 2146 2147 2148 2149 2150 2151 2152 2153 2154 2155 2156 2157 2158 2159 2160 2161 2162 2163 2164 2165 2166 2167 2168 2169 2170 2171 2172 2173 2174 2175 2176 2177 2178 2179 2180 2181 2182 2183 2184 2185 2186 2187 2188 2189 2190 2191 2192 2193 2194 2195 2196 2197 2198 2199 2200 2201 2202 2203 2204 2205 2206 2207 2208 2209 2210 2211 2212 2213 2214 2215 2216 2217 2218 2219 2220 2221 2222 2223 2224 2225 2226 2227 2228 2229 2230 2231 2232 2233 2234 2235 2236 2237 2238 2239 2240 2241 2242 2243 2244 2245 2246 2247 2248 2249 2250 2251 2252 2253 2254 2255 2256 2257 2258 2259 2260 2261 2262 2263 2264 2265 2266 2267 2268 2269 2270 2271 2272 2273 2274 2275 2276 2277 2278 2279 2280 2281 2282 2283 2284 2285 2286 2287 2288 2289 2290 2291 2292 2293 2294 2295 2296 2297 2298 2299 2300 2301 2302 2303 2304 2305 2306 2307 2308 2309 2310 2311 2312 2313 2314 2315 2316 2317 2318 2319 2320 2321 2322 2323 2324 2325 2326 2327 2328 2329 2330 2331 2332 2333 2334 2335 2336 2337 2338 2339 2340 2341 2342 2343 2344 2345 2346 2347 2348 2349 2350 2351 2352 2353 2354 2355 2356 2357 2358 2359 2360 2361 2362 2363 2364 2365 2366 2367 2368 2369 2370 2371 2372 2373 2374 2375 2376 2377 2378 2379 2380 2381 2382 2383 2384 2385 2386 2387 2388 2389 2390 2391 2392 2393 2394 2395 2396 2397 2398 2399 2400 2401 2402 2403 2404 2405 2406 2407 2408 2409 2410 2411 2412 2413 2414 2415 2416 2417 2418 2419 2420 2421 2422 2423 2424 2425 2426 2427 2428 2429 2430 2431 2432 2433 2434 2435 2436 2437 2438 2439 2440 2441 2442 2443 2444 2445 2446 2447 2448 2449 2450 2451 2452 2453 2454 2455 2456 2457 2458 2459 2460 2461 2462 2463 2464 2465 2466 2467 2468 2469 2470 2471 2472 2473 2474 2475 2476 2477 2478 2479 2480 2481 2482 2483 2484 2485 2486 2487 2488 2489 2490 2491 2492 2493 2494 2495 2496 2497 2498 2499 2500 2501 2502 2503 2504 2505 2506 2507 2508 2509 2510 2511 2512 2513 2514 2515 2516 2517 2518 2519 2520 2521 2522 2523 2524 2525 2526 2527 2528 2529 2530 2531 2532 2533 2534 2535 2536 2537 2538 2539 2540 2541 2542 2543 2544 2545 2546 2547 2548 2549 2550 2551 2552 2553 2554 2555 2556 2557 2558 2559 2560 2561 2562 2563 2564 2565 2566 2567 2568 2569 2570 2571 2572 2573 2574 2575 2576 2577 2578 2579 2580 2581 2582 2583 2584 2585 2586 2587 2588 2589 2590 2591 2592 2593 2594 2595 2596 2597 2598 2599 2600 2601 2602 2603 2604 2605 2606 2607 2608 2609 2610 2611 2612 2613 2614 2615 2616 2617 2618 2619 2620 2621 2622 2623 2624 2625 2626 2627 2628 2629 2630 2631 2632 2633 2634 2635 2636 2637 2638 2639 2640 2641 2642 2643 2644 2645 2646 2647 2648 2649 2650 2651 2652 2653 2654 2655 2656 2657 2658 2659 2660 2661 2662 2663 2664 2665 2666 2667 2668 2669 2670 2671 2672 2673 2674 2675 2676 2677 2678 2679 2680 2681 2682 2683 2684 2685 2686 2687 2688 2689 2690 2691 2692 2693 2694 2695 2696 2697 2698 2699 2700 2701 2702 2703 2704 2705 2706 2707 2708 2709 2710 2711 2712 2713 2714 2715 2716 2717 2718 2719 2720 2721 2722 2723 2724 2725 2726 2727 2728 2729 2730 2731 2732 2733 2734 2735 2736 2737 2738 2739 2740 2741 2742 2743 2744 2745 2746 2747 2748 2749 2750 2751 2752 2753 2754 2755 2756 2757 2758 2759 2760 2761 2762 2763 2764 2765 2766 2767 2768 2769 2770 2771 2772 2773 2774 2775 2776 2777 2778 2779 2780 2781 2782 2783 2784 2785 2786 2787 2788 2789 2790 2791 2792 2793 2794 2795 2796 2797 2798 2799 2800 2801 2802 2803 2804 2805 2806 2807 2808 2809 2810 2811 2812 2813 2814 2815 2816 2817 2818 2819 2820 2821 2822 2823 2824 2825 2826 2827 2828 2829 2830 2831 2832 2833 2834 2835 2836 2837 2838 2839 2840 2841 2842 2843 2844 2845 2846 2847 2848 2849 2850 2851 2852 2853 2854 2855 2856 2857 2858 2859 2860 2861 2862 2863 2864 2865 2866 2867 2868 2869 2870 2871 2872 2873 2874 2875 2876 2877 2878 2879 2880 2881 2882 2883 2884 2885 2886 2887 2888 2889 2890 2891 2892 2893 2894 2895 2896 2897 2898 2899 2900 2901 2902 2903 2904 2905 2906 2907 2908 2909 2910 2911 2912 2913 2914 2915 2916 2917 2918 2919 2920 2921 2922 2923 2924 2925 2926 2927 2928 2929 2930 2931 2932 2933 2934 2935 2936 2937 2938 2939 2940 2941 2942 2943 2944 2945 2946 2947 2948 2949 2950 2951 2952 2953 2954 2955 2956 2957 2958 2959 2960 2961 2962 2963 2964 2965 2966 2967 2968 2969 2970 2971 2972 2973 2974 2975 2976 2977 2978 2979 2980 2981 2982 2983 2984 2985 2986 2987 2988 2989 2990 2991 2992 2993 2994 2995 2996 2997 2998 2999 3000 3001 3002 3003 3004 3005 3006 3007 3008 3009 3010 3011 3012 3013 3014 3015 3016 3017 3018 3019 3020 3021 3022 3023 3024 3025 3026 3027 3028 3029 3030 3031 3032 3033 3034 3035 3036 3037 3038 3039 3040 3041 3042 3043 3044 3045 3046 3047 3048 3049 3050 3051 3052 3053 3054 3055 3056 3057 3058 3059 3060 3061 3062 3063 3064 3065 3066 3067 3068 3069 3070 3071 3072 3073 3074 3075 3076 3077 3078 3079 3080 3081 3082 3083 3084 3085 3086 3087 3088 3089 3090 3091 3092 3093 3094 3095 3096 3097 3098 3099 3100 3101 3102 3103 3104 3105 3106 3107 3108 3109 3110 3111 3112 3113 3114 3115 3116 3117 3118 3119 3120 3121 3122 3123 3124 3125 3126 3127 3128 3129 3130 3131 3132 3133 3134 3135 3136 3137 3138 3139 3140 3141 3142 3143 3144 3145 3146 3147 3148 3149 3150 3151 3152 3153 3154 3155 3156 3157 3158 3159 3160 3161 3162 3163 3164 3165 3166 3167 3168 3169 3170 3171 3172 3173 3174 3175 3176 3177 3178 3179 3180 3181 3182 3183 3184 3185 3186 3187 3188 3189 3190 3191 3192 3193 3194 3195 3196 3197 3198 3199 3200 3201 3202 3203 3204 3205 3206 3207 3208 3209 3210 3211 3212 3213 3214 3215 3216 3217 3218 3219 3220 3221 3222 3223 3224 3225 3226 3227 3228 3229 3230 3231 3232 3233 3234 3235 3236 3237 3238 3239 3240 3241 3242 3243 3244 3245 3246 3247 3248 3249 3250 3251 3252 3253 3254 3255 3256 3257 3258 3259 3260 3261 3262 3263 3264 3265 3266 3267 3268 3269 3270 3271 3272 3273 3274 3275 3276 3277 3278 3279 3280 3281 3282 3283 3284 3285 3286 3287 3288 3289 3290 3291 3292 3293 3294 3295 3296 3297 3298 3299 3300 3301 3302 3303 3304 3305 3306 3307 3308 3309 3310 3311 3312 3313 3314 3315 3316 3317 3318 3319 3320 3321 3322 3323 3324 3325 3326 3327 3328 3329 3330 3331 3332 3333 3334 3335 3336 3337 3338 3339 3340 3341 3342 3343 3344 3345 3346 3347 3348 3349 3350 3351 3352 3353 3354 3355 3356 3357 3358 3359 3360 3361 3362 3363 3364 3365 3366 3367 3368 3369 3370 3371 3372 3373 3374 3375 3376 3377 3378 3379 3380 3381 3382 3383 3384 3385 3386 3387 3388 3389 3390 3391 3392 3393 3394 3395 3396 3397 3398 3399 3400 3401 3402 3403 3404 3405 3406 3407 3408 3409 3410 3411 3412 3413 3414 3415 3416 3417 3418 3419 3420 3421 3422 3423 3424 3425 3426 3427 3428 3429 3430 3431 3432 3433 3434 3435 3436 3437 3438 3439 3440 3441 3442 3443 3444 3445 3446 3447 3448 3449 3450 3451 3452 3453 3454 3455 3456 3457 3458 3459 3460 3461 3462 3463 3464 3465 3466 3467 3468 3469 3470 3471 3472 3473 3474 3475 3476 3477 3478 3479 3480 3481 3482 3483 3484 3485 3486 3487 3488 3489 3490 3491 3492 3493 3494 3495 3496 3497 3498 3499 3500 3501 3502 3503 3504 3505 3506 3507 3508 3509 3510 3511 3512 3513 3514 3515 3516 3517 3518 3519 3520 3521 3522 3523 3524 3525 3526 3527 3528 3529 3530 3531 3532 3533 3534 3535 3536 3537 3538 3539 3540 3541 3542 3543 3544 3545 3546 3547 3548 3549 3550 3551 3552 3553 3554 3555 3556 3557 3558 3559 3560 3561 3562 3563 3564 3565 3566 3567 3568 3569 3570 3571 3572 3573 3574 3575 3576 3577 3578 3579 3580 3581 3582 3583 3584 3585 3586 3587 3588 3589 3590 3591 3592 3593 3594 3595 3596 3597 3598 3599 3600 3601 3602 3603 3604 3605 3606 3607 3608 3609 3610 3611 3612 3613 3614 3615 3616 3617 3618 3619 3620 3621 3622 3623 3624 3625 3626 3627 3628 3629 3630 3631 3632 3633 3634 3635 3636 3637 3638 3639 3640 3641 3642 3643 3644 3645 3646 3647 3648 3649 3650 3651 3652 3653 3654 3655 3656 3657 3658 3659 3660 3661 3662 3663 3664 3665 3666 3667 3668 3669 3670 3671 3672 3673 3674 3675 3676 3677 3678 3679 3680 3681 3682 3683 3684 3685 3686 3687 3688 3689 3690 3691 3692 3693 3694 3695 3696 3697 3698 3699 3700 3701 3702 3703 3704 3705 3706 3707 3708 3709 3710 3711 3712 3713 3714 3715 3716 3717 3718 3719 3720 3721 3722 3723 3724 3725 3726 3727 3728 3729 3730 3731 3732 3733 3734 3735 3736 3737 3738 3739 3740 3741 3742 3743 3744 3745 3746 3747 3748 3749 3750 3751 3752 3753 3754 3755 3756 3757 3758 3759 3760 3761 3762 3763 3764 3765 3766 3767 3768 3769 3770 3771 3772 3773 3774 3775 3776 3777 3778 3779 3780 3781 3782 3783 3784 3785 3786 3787 3788 3789 3790 3791 3792 3793 3794 3795 3796 3797 3798 3799 3800 3801 3802 3803 3804 3805 3806 3807 3808 3809 3810 3811 3812 3813 3814 3815 3816 3817 3818 3819 3820 3821 3822 3823 3824 3825 3826 3827 3828 3829 3830 3831 3832 3833 3834 3835 3836 3837 3838 3839 3840 3841 3842 3843 3844 3845 3846 3847 3848 3849 3850 3851 3852 3853 3854 3855 3856 3857 3858 3859 3860 3861 3862 3863 3864 3865 3866 3867 3868 3869 3870 3871 3872 3873 3874 3875 3876 3877 3878 3879 3880 3881 3882 3883 3884 3885 3886 3887 3888 3889 3890 3891 3892 3893 3894 3895 3896 3897 3898 3899 3900 3901 3902 3903 3904 3905 3906 3907 3908 3909 3910 3911 3912 3913 3914 3915 3916 3917 3918 3919 3920 3921 3922 3923 3924 3925 3926 3927 3928 3929 3930 3931 3932 3933 3934 3935 3936 3937 3938 3939 3940 3941 3942 3943 3944 3945 3946 3947 3948 3949 3950 3951 3952 3953 3954 3955 3956 3957 3958 3959 3960 3961 3962 3963 3964 3965 3966 3967 3968 3969 3970 3971 3972 3973 3974 3975 3976 3977 3978 3979 3980 3981 3982 3983 3984 3985 3986 3987 3988 3989 3990 3991 3992 3993 3994 3995 3996 3997 3998 3999 4000 4001 4002 4003 4004 4005 4006 4007 4008 4009 4010 4011 4012 4013 4014 4015 4016 4017 4018 4019 4020 4021 4022 4023 4024 4025 4026 4027 4028 4029 4030 4031 4032 4033 4034 4035 4036 4037 4038 4039 4040 4041 4042 4043 4044 4045 4046 4047 4048 4049 4050 4051 4052 4053 4054 4055 4056 4057 4058 4059 4060 4061 4062 4063 4064 4065 4066 4067 4068 4069 4070 4071 4072 4073 4074 4075 4076 4077 4078 4079 4080 4081 4082 4083 4084 4085 4086 4087 4088 4089 4090 4091 4092 4093 4094 4095 4096

ACC:

STANDARD WORK ZONE PAVEMENT MARKINGS DETAILS

SOLID LINES

DOUBLE NO-PASSING LINE

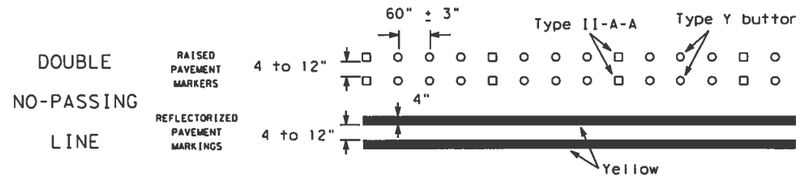

EDGE LINE OR SINGLE NO-PASSING LINE

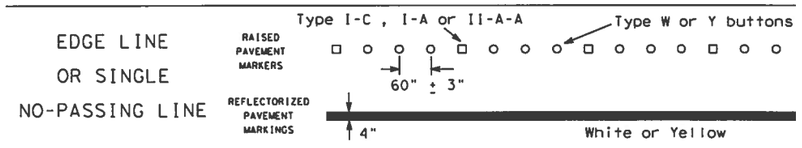

WIDE LINE

(FOR LEFT TURN CHANNELIZING LINE OR CHANNELIZING LINE USED TO DISCOURAGE LANE CHANGING.)

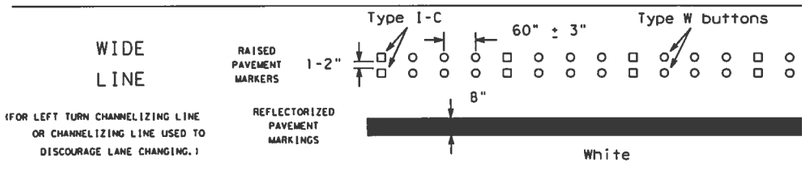

BROKEN LINE

(FOR CENTER LINE OR LANE LINE.)

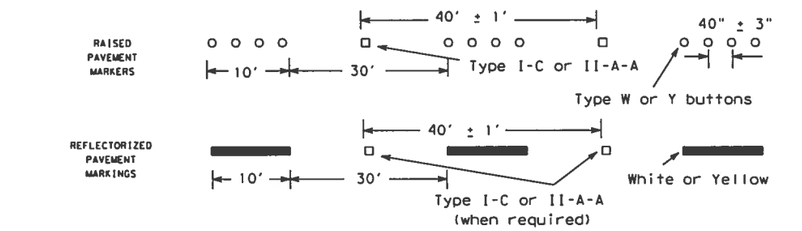

REMOVABLE MARKINGS WITH RAISED PAVEMENT MARKERS

If raised pavement markers are used to supplement REMOVABLE markings, the markers shall be applied to the top of the tape at the approximate mid length of tape used for broken lines or at 20 foot spacing for solid lines. This allows an easier removal of raised pavement markers and tape.

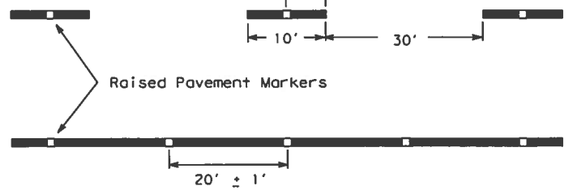

Centerline only - not to be used on edge lines

Raised pavement markers used as standard pavement markings shall be from the approved products list and meet the requirements of Item 672 "RAISED PAVEMENT MARKERS."

STANDARD PLANS
Texas Department of Transportatio
Traffic Operations Division

BARRICADE AND CONSTRUCT
PAVEMENT MARKING PATTER
STANDARD

12 of 12 BC(12)-0

© TxDOT February 1998

Dsn- TxDOT	Ck- TxDOT	Dsn- TxDOT	Ck-

REVISIONS	STATE DISTRICT	FEDERAL REGION	PROJECT NUMBER
1-97	YKM	6	
2-98			
11-02	COUNTY	CONTROL	SECTION	JOB
9-07	GONZALES, ETC.	1442	03	016, ETC

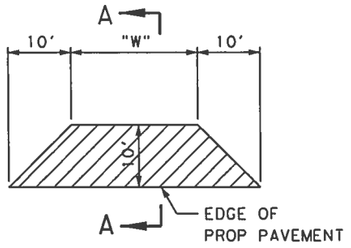

PRIVATE DRIVEWAY (SURF TRT)

SCALE: N T S

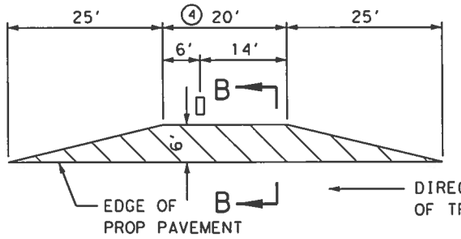

TURNOUTS (SURF TRT) (MAILBOX)

SCALE: N T S

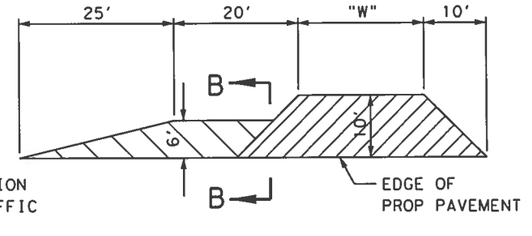

MAILBOX TURNOUT AT DRIVEWAY

SCALE: N T S

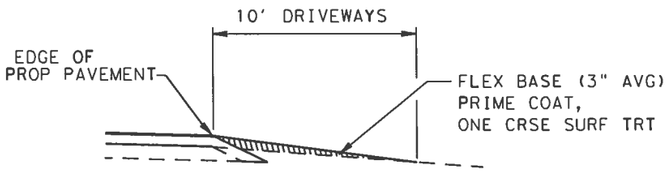

SECTION A-A

SCALE: N T S

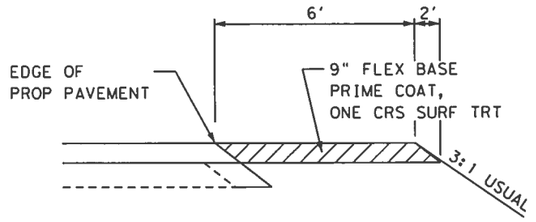

SECTION B-B

SCALE: N T S

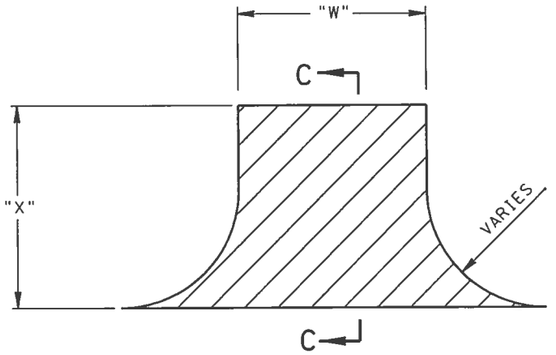

COUNTY ROAD (INTERSECTION)

SCALE: N T S

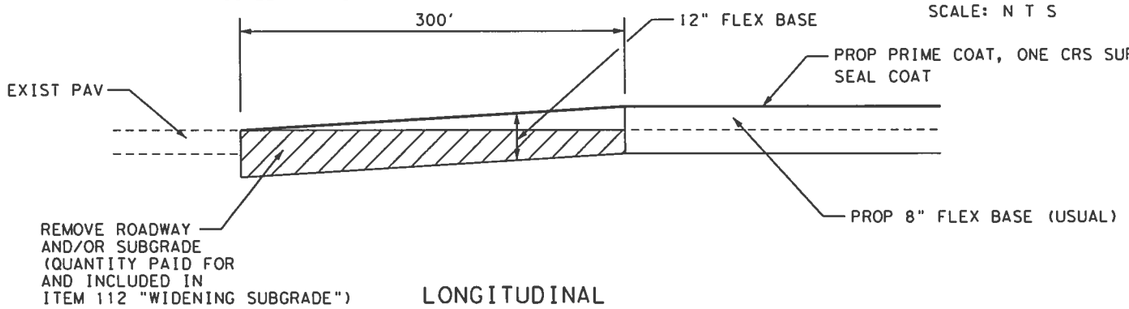

LONGITUDINAL
PAVEMENT TAPER DETAIL

SCALE: N T S

STA 6+78.90 TO STA 9+78.90 (CSJ 1442-03-016)
STA 634+26.00 TO STA 637+26.00 (CSJ 1442-04-007)

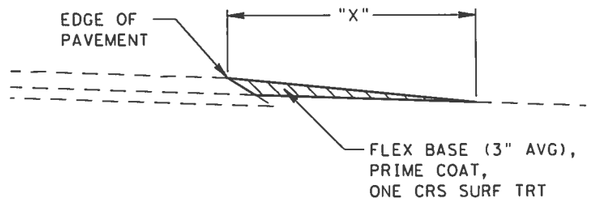

SECTION C-C

SCALE: N T S

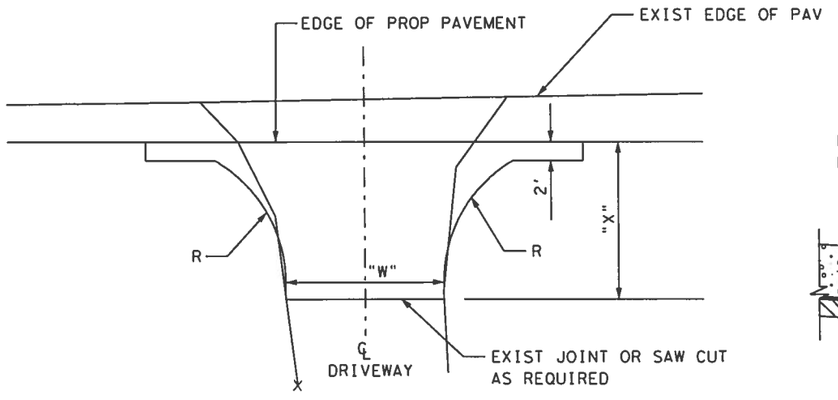

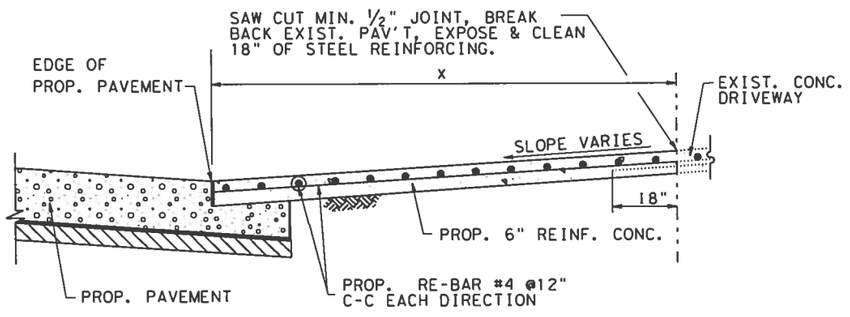

CONCRETE DRIVEWAY DETAIL

SCALE: N T S

NOTES:

1. APPLICATION RATE FOR PRIME COAT: RC-250 = 0.20 GAL/SY; GR 5 AGGREGATE = 1 CY/140 SY
2. APPLICATION RATE FOR ONE CRS SURF TRT: ASPHALT = 0.40 GAL/SY; GR 3 = 1 CY/85 SY
3. APPLICATION RATE FOR SEAL COAT: ASPHALT = 0.34 GAL/SY; GR 4 AGGREGATE = 1 CY/130 SY
4. MAILBOX TURNOUT SHALL BE LENGTHENED FOR DOUBLE AND MULTIPLE MAILBOXES AS FOLLOWS:
   DOUBLE = 20' + 2' = 22'
   MULTIPLE = 20' + 5' = 25'

Olen D. Howard 4/2/09

STATE OF TEXAS
OLEN D. HOWARD
69804
REGISTERED
PROFESSIONAL ENGINEER

© 2009 Texas Department of Transportation

JACOBS
5995 Rogerdale Road
Houston, TX 77052-3495
(832) 351-7230 www.jacobs.com

FM 1680

INTERSECTION & DRIVEWAY DETAILS

FED. RD. DIV. NO.	PROJECT NO.		SHEET NO.
6			40
STATE	DIST.	COUNTY	
TEXAS	YKM	GONZALES, ETC	
CONT	SECT	JOB	HIGHWAY NO.
1442	03	016, ETC	FM 1680

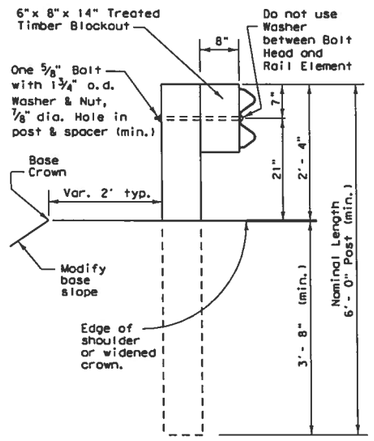

TYPICAL POST

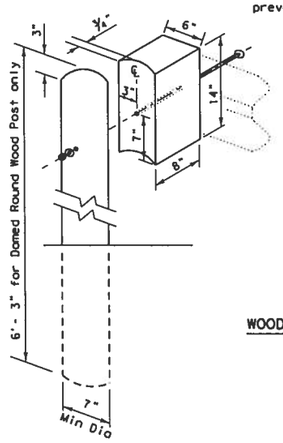

WOOD BLOCKOUT TO ROUND WOOD POST DETAIL

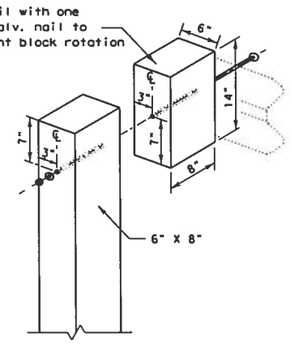

WOOD BLOCKOUT TO RECTANGULAR WOOD POST DETAIL

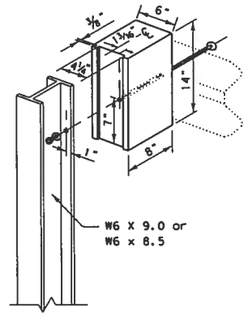

WOOD BLOCKOUT TO STEEL POST DETAIL

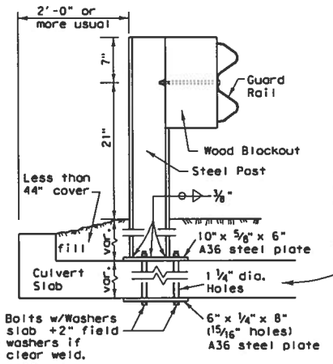

LOW FILL CULVERT POST MOUNTING OPTION

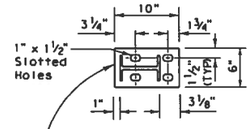

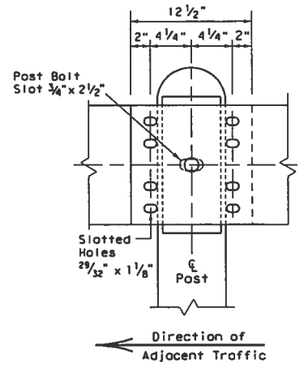

RAIL SPLICE

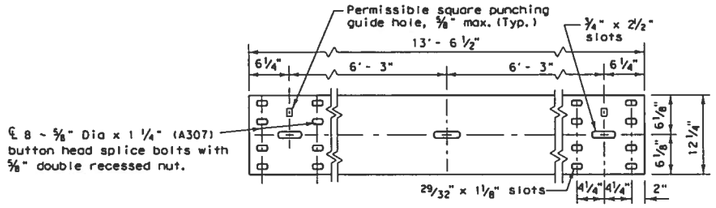

ELEVATION OF NOMINAL 12 1/2 FOOT GUARDRAIL

(25 foot sections may also be supplied)

GENERAL NOTES

1. The exact position of guard fence shall be as shown elsewhere on the plans or as directed by the Engineer. Guard fence shall be transitioned to a smooth connection with other guard fence or structure railing as shown elsewhere on plans.
2. Rail element shall meet all requirements of AASHTO M-180 except as modifie on the plans. The terminal connectors shall be of the same material, but shall not be less than 10 gauge. Contractor shall verify that the locations of bolt holes match those in th Terminal Connector prior to ordering of materials.
3. Unless otherwise shown in the plans, guard fence placed in the vicinity of curbs shall be blocked out so that the face of curb is located directly below or behind the face of the blockout. Rail placed over curbs shall be installed so that the post bolt is located approximately 21-inches above the gutter pan or roadway surface.
4. Unless otherwise shown in the plans, MBGF shall be placed with the face of rail directly above the shoulder edge (or curbface) except for upstream end treatments.
5. At the option of the Contractor, the rail elements for the guard fence may be furnished in either 12 1/2 or 25 foot nominal lengths with post bolt slots for connection to posts.
6. The terminal anchor post shall be set in Class "A" concrete in (unless otherwise shown on plans) in accordance with Item, "Portland Cement Concrete". Concrete shall be subsidiary to the bid item requiring construction of the terminal rail section and anchorage system.
7. An anchor other than to a terminal anchor post shall consist of a connection similar to the rail splice or similar to the terminal connector.
8. Galvanized washers used with the eight 5/8" splice bolts and nuts that are provided for terminal connectors and/or terminal anchor posts shall be 1 3/4"x 3"x 3/16", or 1" i.d. and 2" o.d. x 0.134" (ANSI B27.2) narrow Type A plain washers.
9. Special fabrication will be required at installations having a curvature of less than 150' radius.
10. Button head post bolts (A307) shall be of sufficient length to extend thro the full thickness of the nut and no more than 3/4" beyond it. Button head splice bolts (A307) are 5/8"x 1 1/4" with a 5/8" double recessed nut. Fittings (bolts, nuts, and washers) shall be in accordance with Item, Metal for Structures". Fittings shall be subsidiary.
11. Crown will be widened to accommodate guard fence.
12. If guardrail is placed on a side slope away from the pavement edge, then t slope rate between the edge of the pavement and the face of the barrier wi be 1V:10H or flatter.
13. Posts shall not be set full depth in concrete.
14. Where solid rock is encountered or where shown on the plans, the diameter of the holes shall be approximately 12 inches, the backfilling shall be with a cohesionless material, and embedment depth shall be 1'-6" or more as directed by the Engineer.
15. Unless otherwise directed by the Engineer, a composite material post and/o blockout from the Department approved list of suppliers may be substituted a post and/or blockout of similar dimensions. The list of approved supplie of posts and blockouts will be maintained by the Construction Division, TxD

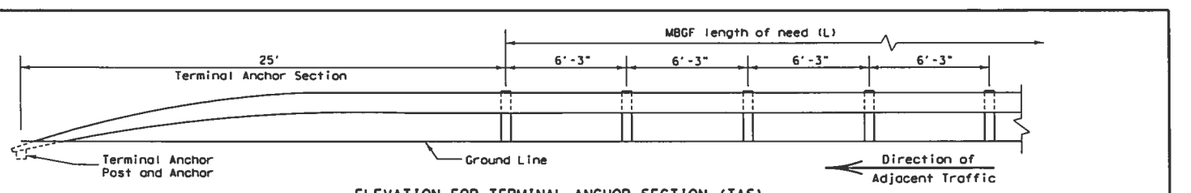

ELEVATION FOR TERMINAL ANCHOR SECTION (TAS)

(Terminal anchor sections are only for downstream guardrail end anchorage usage outside the horizontal clearance area of opposing traffic)

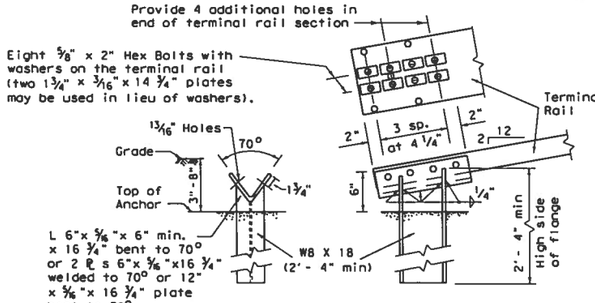

Note: This post requires four additional holes (shop or field) in the terminal rail member with eight 5/8" bolts and washer plates as shown for attachment.

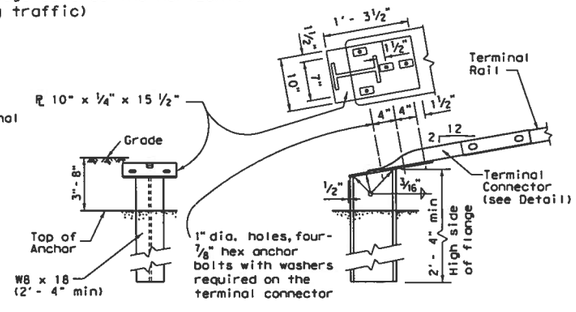

Note: This optional post requires the use of the 10 ga. terminal connector with four 7/8" hex bolts for attachment to the anchor post.

TERMINAL ANCHOR POST OPTIONS

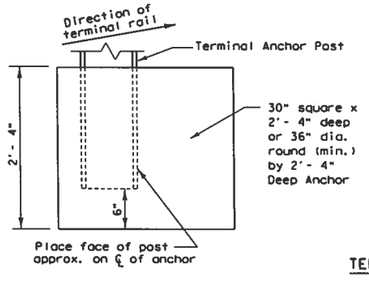

Notes:

Either post may be used with either anchor.

No construction joint is allowed in the concrete anchor.

Terminal rail may be bolted to post and in twist position prior to placing concrete anchor.

If concrete anchor is precast, the area should be compacted as directed by the Engineer, when placed in the field.

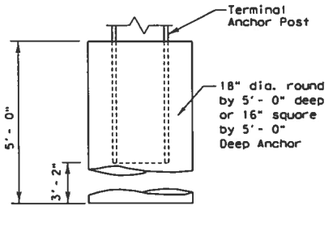

TERMINAL CONCRETE ANCHOR OPTIONS

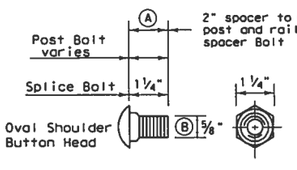

SPLICE BOLT

(A) 1 1/4" spacer to steel post hex bolt. 2" rail to spacer button head bolt.

(B) (7/8" hex bolts required for terminal connector)

TERMINAL CONNECTOR : The terminal connector may also be used on the MBGF(TL2) transition (See MBGF(TL2) Standard Sheet), or on the downstream end of a concrete rail located outside the horizontal clearance area of opposing traffic. (See BED Standard Sheet)

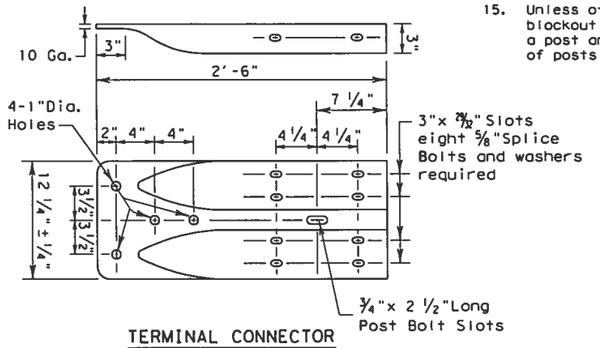

TERMINAL CONNECTOR

R = Radius
D = Diameter

Texas Department of Transportati
Design Division (Roadway)

METAL BEAM GUARD FEN

MBGF-03A

FILE: mbgf03a.dgn	DN: MAM	CK: MAM	DW: RAR	CK: MAM
©TxDOT JULY 1994	DIST	PROJECT NUMBER		
REVISIONS				
	COUNTY	CONTROL	SECT	JOB
	GONZALES, ETC	1442	03	016, ETC

DISCLAIMER:
The use of this standard is governed by the "Texas Engineering Practice Act". No warranty of any kind is made by TxDOT for any purpose whatsoever. TxDOT assumes no responsibility for the conversion of this standard to other formats or for incorrect results or damages resulting from its use.

LEVELS DISPLAYED

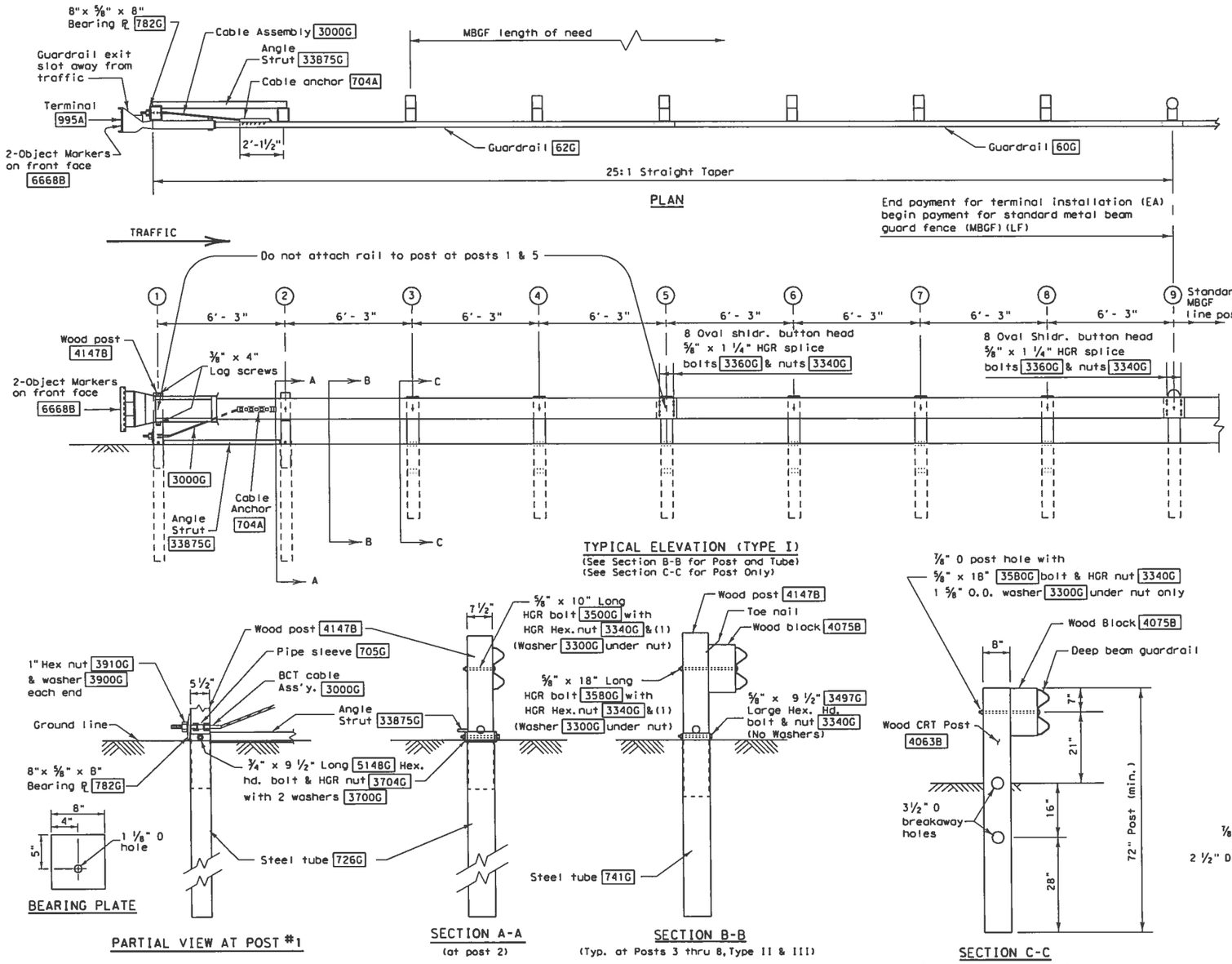

TYPICAL ELEVATION (TYPE I)
(See Section B-B for Post and Tube)
(See Section C-C for Post Only)

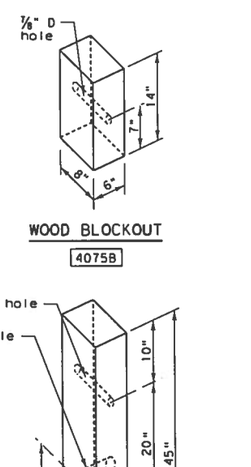

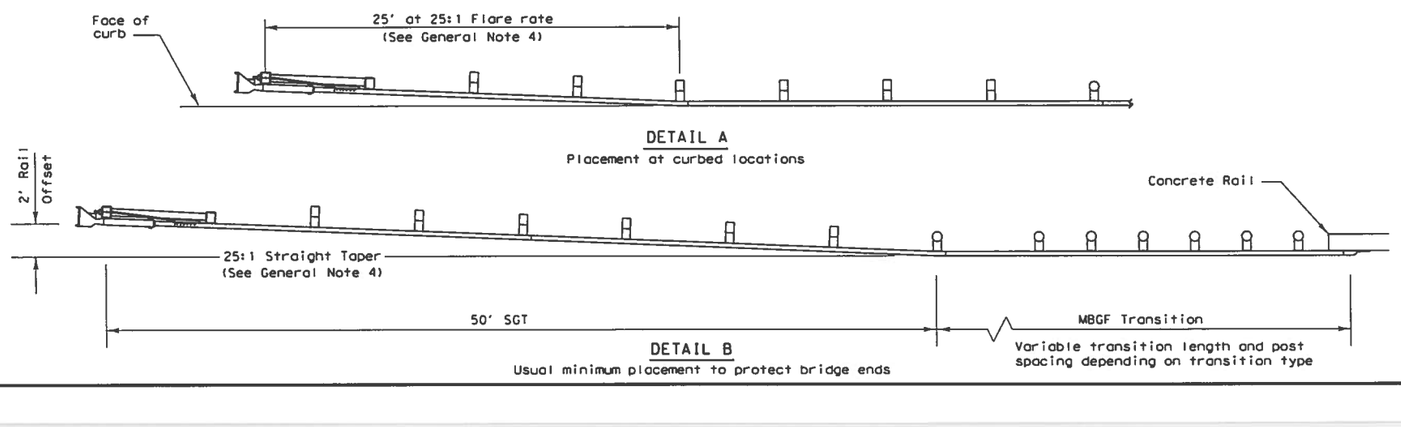

GENERAL NOTES

1. The Type of SGT unit will be specified elsewhere in the plans. Numbers in circles indicate post position. The Type of SGT unit chosen is a maintenance consideration and does not affect the systems performance.

Post & Tube Options		Post Only
Type I	Posts ① thru ②	Posts ③ thru ⑧
Type II	Posts ① thru ④	Posts ⑤ thru ⑧
Type III	Posts ① thru ⑧	None

2. If the SGT system must be placed on a radius, the minimum radius is 150 feet.
3. All bolts, nuts, cable assemblies, cable anchors, steel tubes & bearing plates shall be galvaniz
4. For non-curb installations, the MBGF will be flared at a rate of 25:1 over the first 50 foot of the system to prevent the terminal head from encroaching on the shoulder. The flare may be decreased or eliminated for specific installations if directed by the Engineer. A 25:1 flare rat will be used at curb sections, beginning at post number 5 and ending at post number one.
5. The steel tubes shall not protrude more than 4 inches above ground. Site grading may be necessar to meet this requirement.
6. The steel tubes may be driven with an approved driving head. They shall not be driven with the wood post in the tube. If the steel tubes are placed in drilled holes, the backfill material must be satisfactorily compacted to prevent tube settlement.
7. When rock excavation is encountered, a 12 inch diameter post hole, 20 inches deep may be used if approved by the Engineer. Granular material will be placed in the bottom of the hole approximate 2 ½ inches deep to provide drainage. The steel tube sleeves will be field cut to 20 inches in le placed in the hole and backfilled with adequately compacted material excavated from the hole.
8. The breakaway cable assembly must be taut. A locking device, (vice grips or channel lock pliers) should be used to prevent the cable from twisting when tightening the nuts.
9. The wood blockouts shall be "toe nailed" to the rectangular wood posts to prevent them from turning when the wood shrinks.
10. For curb installations, the soil tubes and posts shall be installed at the proper ground elevation behind the curb. The posts will then require field drilling new holes to accommodate the rail to post connection bolt to maintain the proper height of the rail above the gutter pan. The excess post length above the rail will be removed if directed by the Engineer.
11. An object marker shall be installed on the front of the impact head as detailed on O&OM(VIA).
12. A special site evaluation should be considered, prior to using this end treatment where there is less than 25 feet between the extrusion side of the end treatment and any adjacent driving lane.

BILL OF MATERIAL

Code #	Post & Tube Options Type I Qty.	Type II Qty.	Type III Qty.	DESCRIPTION
62G	1	1	1	#1 Deep Beam Guardrail (12 Ga) at 25'
60G	1	1	1	#2 Deep Beam Guardrail (12 Ga) at 25'
726G	2	2	2	Steel Tube - 6"x 8"x 72"x 1/8" min
741G	0	2	6	Steel Tube - 6" x 8" x 54" x 1/8" min
4147B	2	4	8	Wood Posts - 5 ½" x 7 ½" x 45"
4063B	6	4	0	Wood CRT Posts - 6"x 8"x 72"
4075B	6	6	6	Wood Block - 6"x 8"x 14"
705G	1	1	1	Pipe Sleeve - 2" std. pipe x 5 ½"
782G	1	1	1	Bearing Plate - 8"x 8"x 5/8"
704A	1	1	1	Cable Anchor
3000G	1	1	1	Cable Assembly (¾" x 78")
33875G	1	1	1	Angle Strut
995A	1	1	1	ET-2000 Plus Guardrail Terminal
				HARDWARE
5148G	2	2	2	¾" x 9 ½" Hex Hd (Top of tubes 1&2)A
3300G	7	7	7	5/8" Washers
3478G	2	2	2	5/8" x 7 ½" Hex Bolt
3500G	1	1	1	5/8" x 10" Post Bolt (Post 2 of LET)
3580G	6	6	6	5/8" x 18" HGR Post Bolt (posts ③ thru
3360G	16	16	16	5/8" x 1 ¼" HGR Splice Bolt
3340G	25	27	31	5/8" HGR Nut (16-spl, 7-posts)
4228G	2	2	2	5/8" x 4" Lag Screw
3910G	2	2	2	1" Hex Nut (Anchor Cable)
3900G	2	2	2	1" Washer (Anchor Cable)
6668B	2	2	2	Object Marker (12" x 12")
3700G	4	4	4	¾" Washer
3704G	2	2	2	¾" Heavy Hex Nut
3497G	0	2	6	5/8" x 9 ½" Hex Hd (Top of Tubes 3-8)A

POST & TUBE OPTIONS	
Type I	Posts ① thru ②
Type II	Posts ① thru ④
Type III	Posts ① thru ⑧

R = Radius
D = Diameter

Texas Department of Transportati
Design Division (Roadway)

SINGLE GUARDRAIL TERMIN
(ET-2000 PLUS)
(WOOD POST)
SGT(7)-03A

FILE: sgt703a.dgn	DN: MAM	CK: MAM	DW: BGD	CK:
©TxDOT APRIL 1997	DIST	PROJECT NUMBER		
REVISIONS				
	COUNTY	CONTROL	SECT	JOB
	GONZALES, ETC	1442	03	016, ETC

LEVELS DISPLAYED

DISCLAIMER:
The use of this standard is governed by the "Texas Engineering Practice Act". No warranty of any kind is made by TxDOT for any purpose whatsoever. TxDOT assumes no responsibility for the conversion of this standard to other formats or for incorrect results or damages resulting from its use.

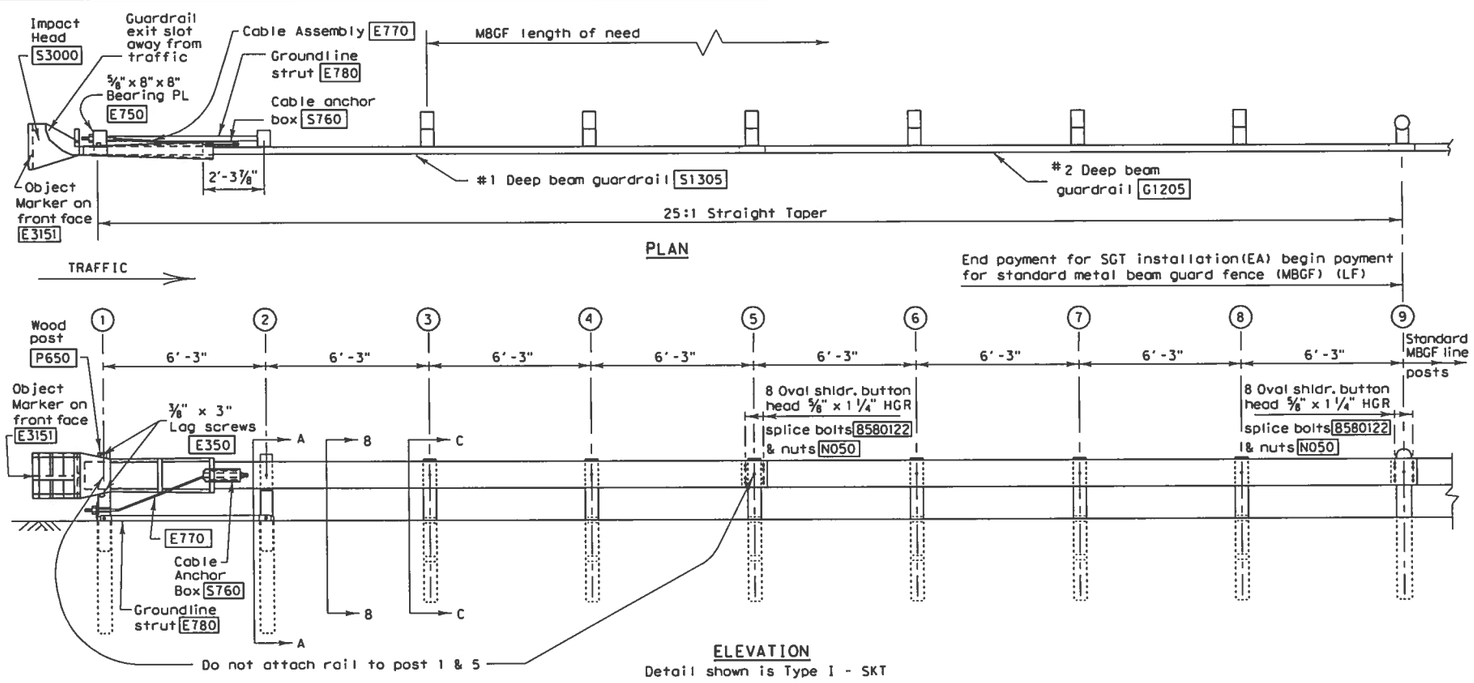

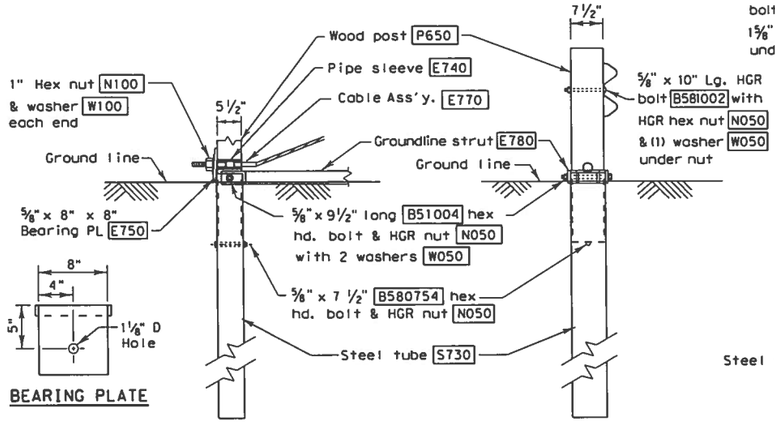

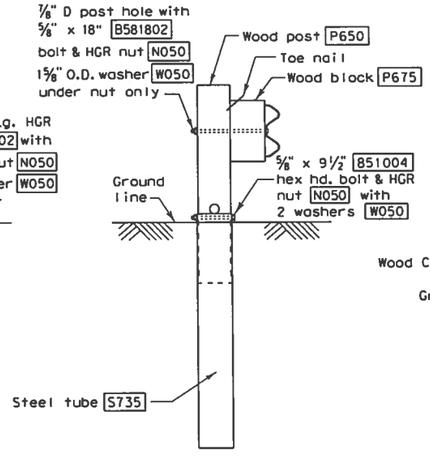

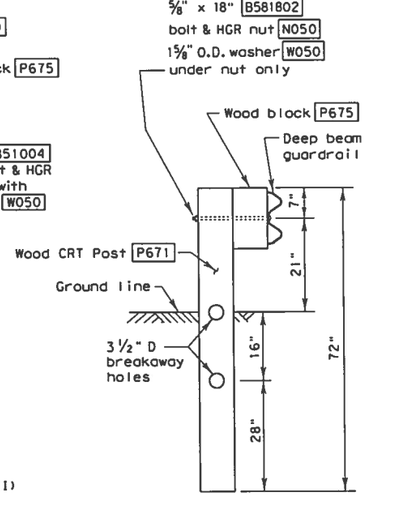

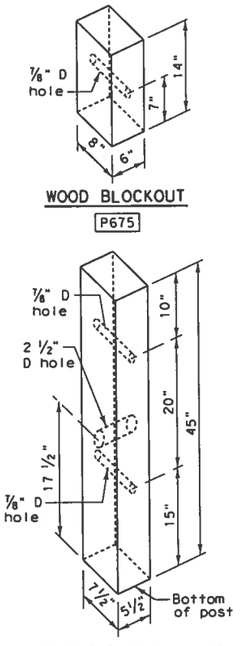

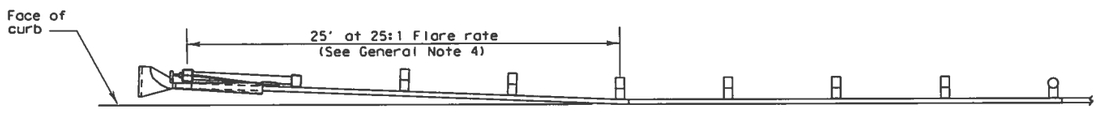

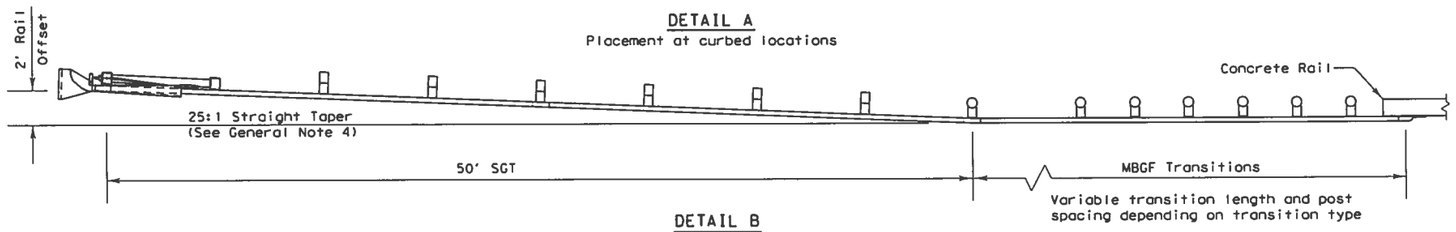

GENERAL NOTES

1. The Type of SGT unit will be specified elsewhere in the plans. Numbers in circles indicate post position. The Type of SGT unit chosen is a maintenance consideration and does not affect the systems performance.

	Post & Tube Options	Post Only
Type I	Posts ① thru ②	Posts ③ thru ⑧
Type II	Posts ① thru ④	Posts ⑤ thru ⑧
Type III	Posts ① thru ⑧	None

2. If the SGT system must be placed on a radius, the minimum radius is 150 feet.
3. All bolts, nuts cable assemblies, cable anchors, steel tubes & bearing plates shall be galvanized.
4. For non-curb installations, the MBGF will be flared at a rate of 25:1 over the first 50 foot of the system to prevent the terminal head from encroaching on the shoulder. The flare may be decreased or eliminated for specific installations if directed by the Engineer. A 25:1 flare rate will be used at curb sections, beginning at post number 5 and ending at post number one.
5. The steel tubes shall not protrude more than 4 inches above ground. Site grading may be necessary to meet this requirement.
6. The steel tubes may be driven with an approved driving head. They shall not be driven with the wood post in the tube. If the steel tubes are placed in drilled holes, the backfill material must be satisfactorily compacted to prevent tube settlement.
7. When rock excavation is encountered, a 12 inch diameter post hole, 20 inches into the rock may be used if approved by the Engineer. Granular material will be placed in the bottom of the hole approximately 2 ½ inches deep to provide drainage. The steel tube sleeves will be field cut to less than 20 inches in length, placed in the hole and backfilled with adequately compacted mater excavated from the hole.
8. The breakaway cable assembly must be taut. A locking device, (vice grips or channel lock pliers) should be used to prevent the cable from twisting when tightening the nuts.
9. The wood blockouts shall be "toe nailed" to the rectangular wood posts to prevent them from turning when the wood shrinks.
10. For curb installations, the soil tubes and posts shall be installed at the proper ground elevation behind the curb. The posts will then require field drilling new holes to accommodate the rail to post connection bolt to maintain the proper height of the rail above the gutter pan. The excess post length above the rail will be removed if directed by the Engineer.
11. An object marker shall be installed on the front of the impact head as detailed on D&OM(VIA).
12. A special site evaluation should be considered, prior to using this end treatment where there is less than 25 feet between the outlet side of the end treatment and any adjacent driving lane.

BILL OF MATERIAL

Code #	Post & Tube Options: Type I Qty.	Type II Qty.	Type III Qty.	DESCRIPTION
S1305	1	1	1	#1 Deep Beam Guardrail (12 Ga.)
G1205	1	1	1	#2 Deep Beam Guardrail (12 Ga.)
S730	2	2	2	Steel Tube - 6" x 8" x 72" x 3/16" or 1/8"
S735	0	2	6	Steel Tube - 6" x 8" x 54" x 3/16" or 1/8"
P650	2	4	8	Wood Posts - 5 1/2" x 7 1/2" x 45"
P671	6	4	0	Wood CRT Posts - 6" x 8" x 72"
P675	6	6	6	Wood Blockouts - 6" x 8" x 14"
E740	1	1	1	Pipe Sleeve - 2" Std. Pipe x 5 1/2"
E750	1	1	1	Bearing Plate - 5/8" x 8" x 8"
S760	1	1	1	Cable Anchor Box
E770	1	1	1	Cable Assembly
E780	1	1	1	Groundline Strut
S3000	1	1	1	Impact Head
				HARDWARE
B580754	2	2	2	5/8" x 7 1/2" Hex Hd. Bolt
B51004	2	4	8	5/8" x 9 1/2" Hex Hd. Bolt (Top of Tubes)
W050	11	15	23	5/8" Washers
B581002	1	1	1	5/8" x 10" HGR Post Bolt (Post 2)
B580122	16	16	16	5/8" x 1 1/4" HGR Splice Bolt
B581802	6	6	6	5/8" x 18" HGR Post Bolt (Posts ③ thru ⑧)
N050	27	29	33	5/8" HGR Nut (16-Spl, 7-Posts, 2-Strut)
E350	2	2	2	3/8" x 3" Lag Screw
N100	2	2	2	1" Hex Nut (Anchor Cable)
W100	2	2	2	1" Washer (Anchor Cable)
SB58A	8	8	8	Cable Anchor Box Shoulder Bolts
N055A	8	8	8	½" A325 Structural Nut
W050A	16	16	16	½" A325 Structural Washer
E3151	1	1	1	Object Marker - (18" x 18")

POST & TUBE OPTIONS	
Type I	post ① thru ②
Type II	post ① thru ④
Type III	post ① thru ⑧

R = Radius
D = Diameter

Texas Department of Transportation
Design Division (Roadway)

SINGLE GUARDRAIL TERMIN
(SKT 350)(WOOD POST)

SGT(8)-03A

FILE: sgt803a.dgn	DN: MAM	CK: MAM	DW: BGD	CK: MAM
©TxDOT July 2001	DIST	FEDERAL AID PROJECT		
REVISIONS				
	COUNTY	CONTROL	SECT	JOB
	GONZALES, ETC	1442	03	016, ET

DISCLAIMER:
The use of this standard is governed by the "Texas Engineering Practice Act". No warranty of any kind is made by TxDOT for any purpose whatsoever. TxDOT assumes no responsibility for the conversion of this standard to other formats or for incorrect results or damages resulting from its use.

LEVELS DISPLAYED

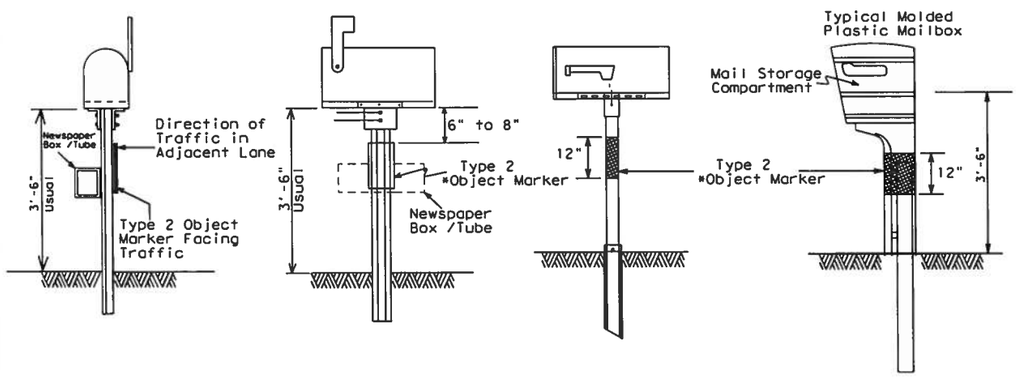

SINGLE AND DOUBLE MAILBOX MOUNT

FOR SUPPORT/FOUNDATION
DETAILS SEE SHEET 3 OF 3

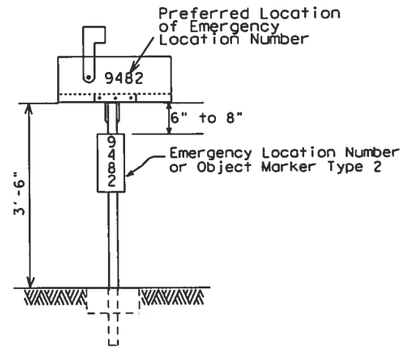

Location Number shall be placed on a yellow, type A plate with class 1 flat surface reflective sheeting in accordance with DMS 8600. (Same type plate as used for the type 2 Object Marker) The color of numbers shall be black. Recommended sign size 6" by 15"

PLACEMENT OF EMERGENCY LOCATION NUMBER

Mailboxes shall be made of light weight sheet metal or light weight plastic. Heavy steel, cast iron or decorative mailboxes shall not be used on the state highway system.

TYPICAL MAILBOX SIZE				LIGHT WEIGHT MATERIAL	
				SHEET METAL	**PLASTIC
	LENGTH	WIDTH	HEIGHT	MAXIMUM WEIGHT	
SIZE	INCHES			POUNDS	
SMALL	19 ½	6	7	5	5
MEDIUM	22 ½	8	11 ½	7	7
LARGE	23 ½*	11 ½*	13 ½*	10	10

* Maximum allowed dimensions for mailbox
** Excluding Molded Plastic on 4 X 4 Post

MAILBOX SIZES

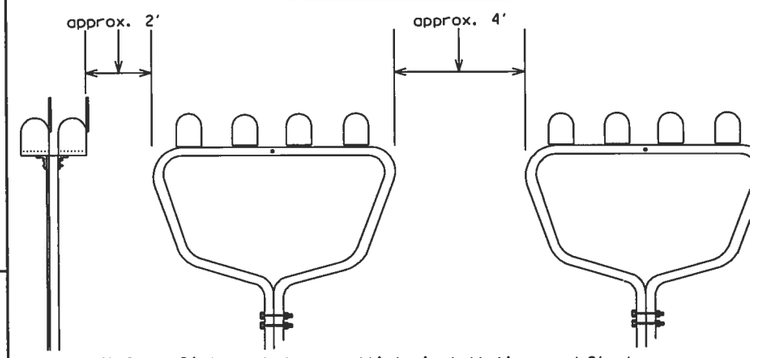

4' Clear Distance between multiple installations and 2' clearance between double or single installations and the multiple installation. DHT #'s 164116 or 149339.

MULTIPLE MAILBOX PLACEMENT

* Type 2 object marker in accordance with standard D&OM (1) or tube type post wrapped with 12 " Sheeting Fluorescent yellow in accordance with DMS 8600 for tubular post needed to produce a smooth wrap around tube. DHT 161812.

NOTE: - ALL WELDS ¼" AROUND ALL JOINTS.
POWDERCOAT WHITE

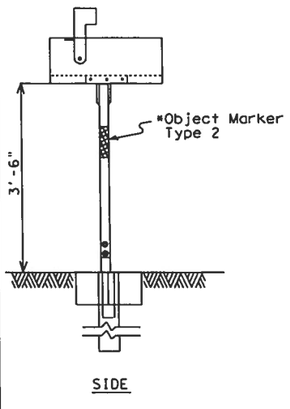

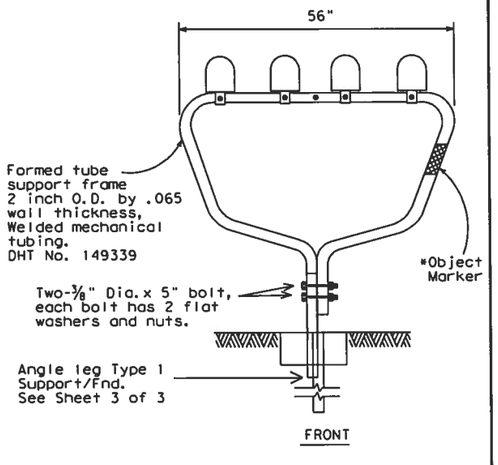

FOR SUPPORT/FOUNDATION
DETAILS SEE SHEET 3 OF 3

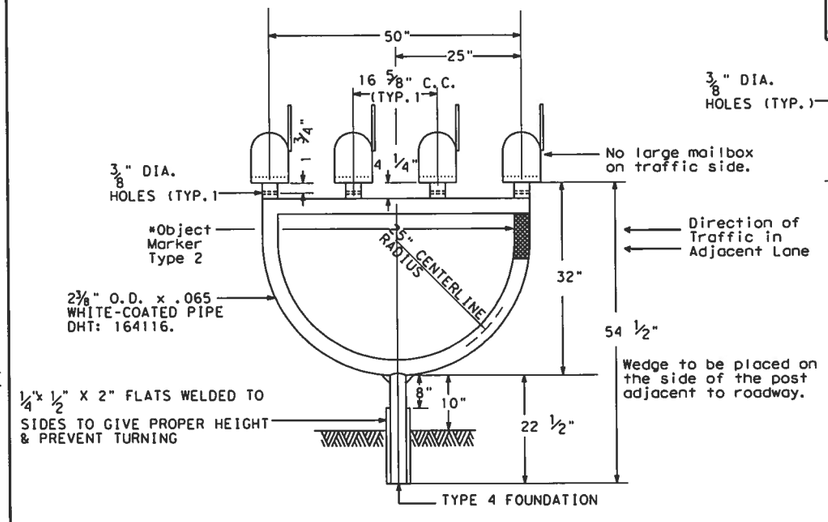

MULTIPLE MAILBOX MOUNT

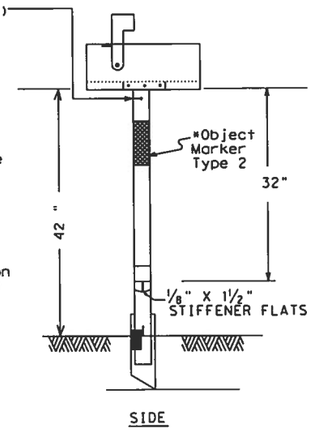

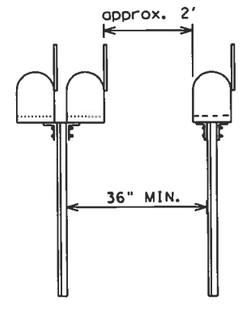

Clear Distance between single or double mount posts. (Normally when 3 or more mailboxes are one location, a multiple support is used).

SINGLE & DOUBLE MAILBOX PLACEME

NEWSPAPER RECEPTACLE

A light weight receptacle for newspaper delivery should be attached to the post of single and double mailboxes if the receptacle:

a. Does not touch the mailbox.

b. Does not present a hazard to traffic or delivery of the mail.

c. Does not extend beyond the front of the mailbox.

d. Does not display advertising, except the publication title.

FOR SUPPORT/FOUNDATION
DETAILS SEE SHEET 3 OF 3

Note on DHT Number

See Table of Applicable DHT Numbers on sheet 3 of 3 for DHT description.

INDEX OF MAILBOX DETAIL SHEETS

1 of 3 MAILBOX MOUNTING AND SPACING
2 of 3 MAILBOX BRACKET CONNECTING DETAILS
3 0f 3 MAILBOX SUPPORT / FOUNDATION

DISCLAIMER:
The use of this standard is governed by the "Texas Engineering Practice Act". No warranty of any kind is made by TxDOT for any purpose whatsoever. TxDOT assumes no responsibility for the conversion of this standard to other formats or for incorrect results or damages resulting from its use.

FILE: MB-06(1).dgn

LEVELS DISPLAYED
1 2 3 4 5 6 7 8 9 10 11 12 13 14 15 16
17 18 19 20 21 22 23 24 25 26 27 28 29 30 31 32
33 34 35 36 37 38 39 40 41 42 43 44 45 46 47 48
49 50 51 52 53 54 55 56 57 58 59 60 61 62 63

REVISIONS
04/03/06: Added New Multiply Mount, DHT: 164116.
04/03/06: Added general note numbers 6 & 7.
Sheet & title block renumbered.
11/14/05: Deleted sheet 4

08/02/06: Added Maximum weight for typical mailbox size.

Standard Plans

Texas Department of Transportation

MAILBOX MOUNTING AND SPACING

MB-06(1) YKM

Sheet 1 of 3

FILE: MB06(1).DGN	DN: JEO	CK: LJB	DW: JEO	CK: JG	NEG:
©TxDOT NOVEMBER 2006	DIST	FED REG	PROJECT NO.		
	YKM	6			
	COUNTY		CONTROL	SECT	JOB
	GONZALES, ETC.		1442	03	016, ETC

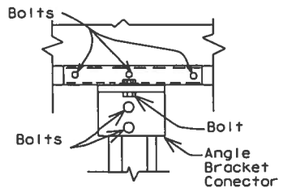

For bolt sizes see details below for "SMALL MAILBOX" and "MEDIUM AND LARGE MAILBOXES"

SINGLE MAILBOX CONNECTION

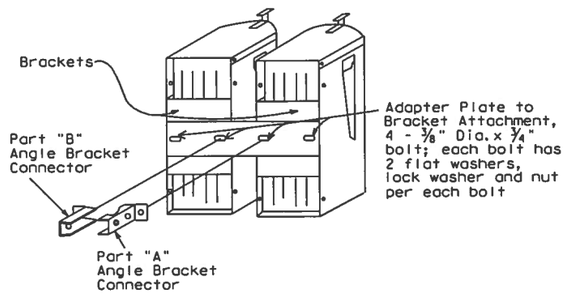

DOUBLE MAILBOX CONNECTION

(Not permitted for Large Mailboxes)

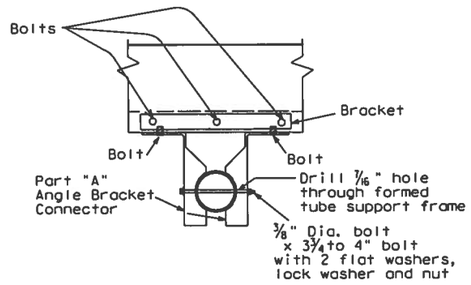

MULTIPLE MAILBOX CONNECTION

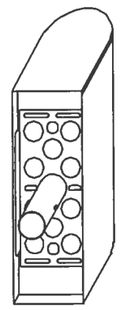

WELDED SINGLE MAILBOX BRACKET CONNECTION

To be used with 2 3/8" OD RR or thinwall Steel posts.

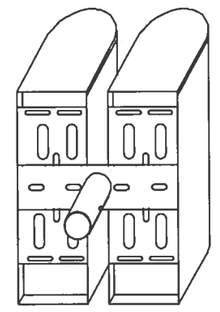

WELDED DOUBLE MAILBOX BRACKET CONNECTION WITH ADAPTER PLATE

To be used with thinwall Steel posts. Not to be used with RR posts.

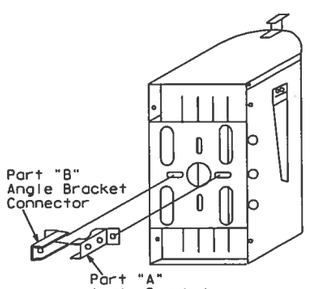

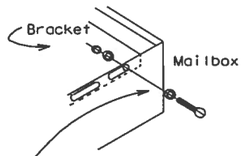

Bracket to mailbox attachment: 6 - 1/4" Dia. x 3/4" bolt w/ 2 flat washers and nut per each bolt.

Angle to bracket attachment: 2 - 3/8" Dia. x 3/4" bolt with 2 flat washers, lock washer and nut per each bolt.

Angle to 2 - 3/8" Dia. x 2 1/2" bolt with 2 flat washers, lock washer and nut per each bolt.

SMALL MAILBOX

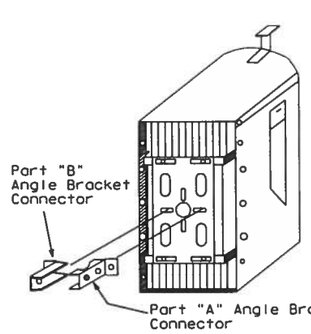

Use both Parts "A" and "B" Angle Bracket Connectors for Winged Channel Posts

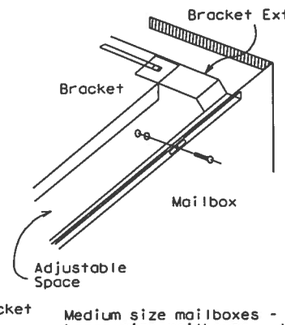

Bracket to mailbox attachment: 6 - 1/4" Dia. x 3/4" bolt w/2 flat washers and nut per each bolt.

Bracket to bracket extension attachment: 2 - 1/4" Dia. x 3/4" carriage bolt w/ flat washer, lock washer and nut per bolt (4 bolts required if 2 bracket extensions are used).

Angle to bracket attachment: 2 - 3/8" Dia. x 3/4" bolt w/2 flat washers, lock washer and nut per each bolt.

Angle to mailbox support attachment: 2 - 3/8" Dia. x 2 1/2" bolt w/2 flat washers, lock washer, and nut per each bolt.

Medium size mailboxes - one extension bracket
Large size mailboxes - two extension brackets

MEDIUM AND LARGE MAILBOXES

GENERAL NOTES

1. Connecting hardware detailed on this sheet is for the hardware that the Department stocks at the Regional Warehouses. This hardware is available to the contractor only when so stated elsewhere in the plans or specification.
2. Hardware for mounting mailboxes to the support/foundation furnished by industry should be used when shown on the Maintenance Divisions "Approved Products List." Only mailbox hardware that have been crash tested in accordance with NCHRP Report 350, will be on the approved list.
3. Hardware furnished by industry shall be erected in accordance with the manufacturer's recommendation.
4. Bracket and bracket extension shall be constructed of 14 gauge galvanized steel sheet metal.
5. The angles, brackets and adapter plates shall be constructed of 12 gauge galvanized steel sheet metal.
6. Items with evidence of damage to the galvanized coating or wet storage stains (white rust) will not be accepted.

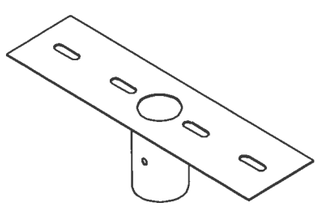

DHT 162323

For use with galvanized thinwall steel posts DHT # 143426 or powder-coated thinwall steel post DHT # 162911.

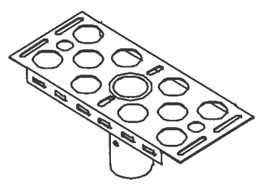

DHT 161443

For use with RCR post DHT # 161442 or galvanized thinwall steel post DHT # 143426 or powder-coated thinwall steel post. DHT # 162911.

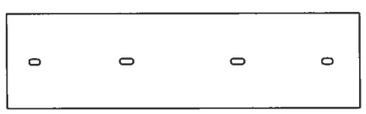

DHT #3789

Used for mounting two Mailboxes on the same post.

Note on DHT Number

See Table of Applicable DHT Numbers on sheet 3 of 3 for DHT description and unit of measure.

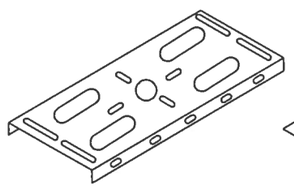

DHT 148939

Mailbox Bracket

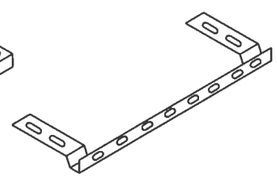

DHT 148938

Used for extending 6" wide bracket to attach larger mailboxes.

Bracket Extension

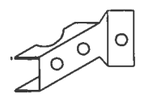

DHT 159489

Part "A" Angle Bracket Connector

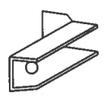

DHT 159490

Part "B" Angle Bracket Connector

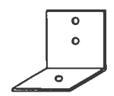

DHT 2917

Angle Bracket For Temporary Mailbox

HARDWARE AT TXDOT REGIONAL WAREHOUSES

Brackets and adapter plate shown in this section should be available to the Contractor when stated elsewhere in plans or specifications.

DISCLAIMER:
The use of this standard is governed by the "Texas Engineering Practice Act". No warranty of any kind is made by TxDOT for any purpose whatsoever. TxDOT assumes no responsibility for the conversion of this standard to other formats or for incorrect results or damages resulting from its use.

FILE: MB-06-(1).dgn

LEVELS DISPLAYED

1	2	3	4	5	6	7	8	9	10	11	12	13	14	15	16
17	18	19	20	21	22	23	24	25	26	27	28	29	30	31	32
33	34	35	36	37	38	39	40	41	42	43	44	45	46	47	48
49	50	51	52	53	54	55	56	57	58	59	60	61	62	63	

Standard Plans

Texas Department of Transportation

MAILBOX BRACKET CONNECTING DETAILS

MB-06(1) YKM

Sheet 2 of 3

FILE: MB06(1).DGN	DN: LJB	CK: JEO	DW:	CK: JC	HEG:	
© TxDOT NOVEMBER 2006	DIST	FED REG	PROJECT NO.			SHEET
REVISIONS	YKM	6				45
02/02/05 06/08/05: Added general note numbers 6 & 7. Sheet & title block renumbered. 11/14/05: Deleted sheet4.	COUNTY		CONTROL	SECT	JOB	HIGHWAY
	GONZALES, ETC.		1442	03	016, ETC	FM 1

DISCLAIMER:
The use of this standard is governed by the Texas Engineering Practice Act". No warranty of any kind is made by TxDOT for any purpose whatsoever. TxDOT assumes no responsibility for the conversion of this standard to other formats or for incorrect results or damages resulting from its use.

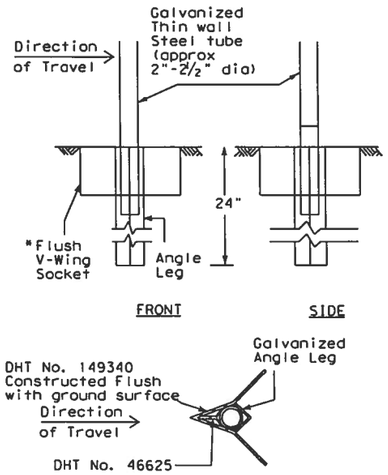

TYPE 1 SUPPORT/FOUNDATION

THIN WALL STEEL TUBE w/ V-LOC ANCHORAGE

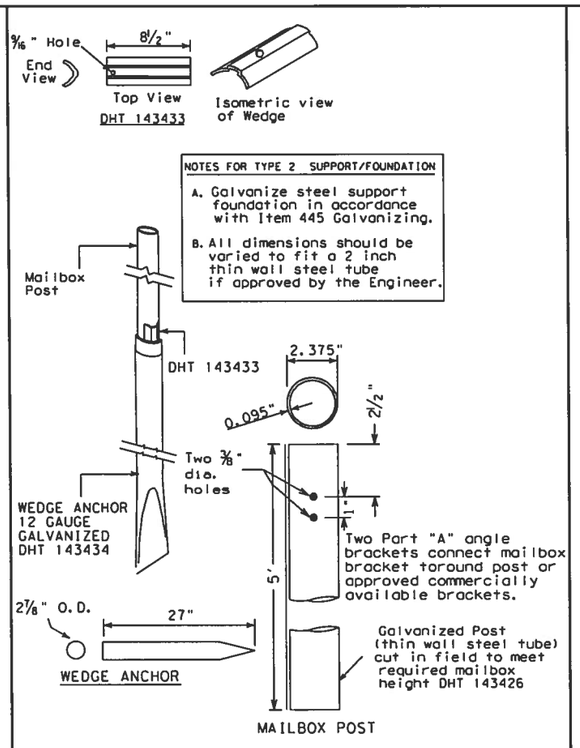

TYPE 2 SUPPORT/FOUNDATION

THIN WALL STEEL TUBE w/ WEDGE ANCHOR SYSTEM

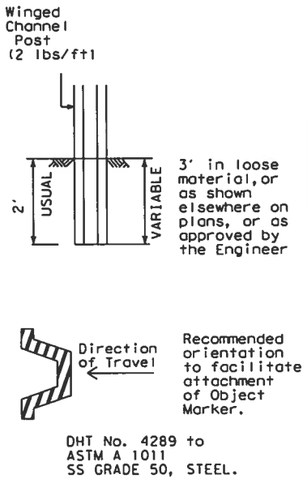

TYPE 3 SUPPORT/FOUNDATION

WINGED CHANNEL POST

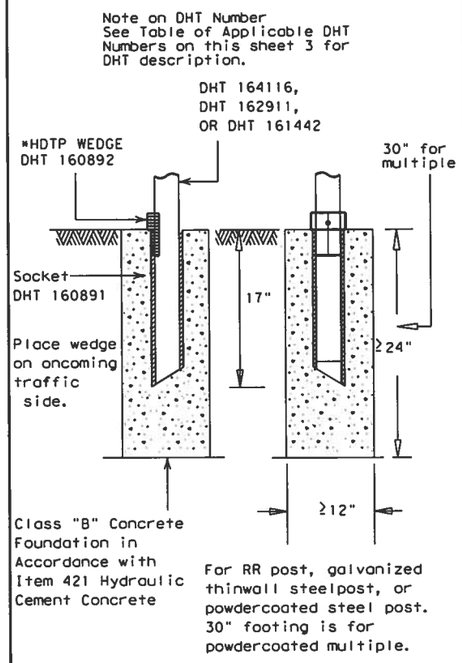

TYPE 4 SUPPORT/FOUNDATION

FOR WHITECOATED STEEL POST, MULTIPLE POST, AND RECYCLED RUBBER.

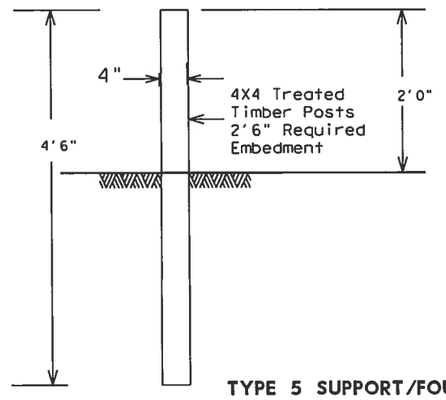

TYPE 5 SUPPORT/FOUNDATION

FOR ONE PIECE MOLDED PLASTIC MAILBOX

ONE PIECE MOLDED PLASTIC MAILBOXES

Molded Plastic Mailboxes shall be installed on 4"x4" treated timber posts only. The use of steel pipe or structural tubing in place of timber post is prohibited

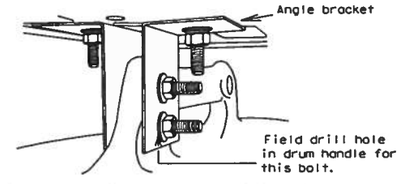

Placed on approved plastic drum as shown in the Compliant Work Zone Traffic Control Devices (CWZTCD).
Existing attachment hardware shall be used unless damaged. Damaged hardware shall be replaced.

TYPE 6 TEMPORARY MAILBOX SUPPORT

CONNECTION DETAIL

MAILBOX SUMMARY

QUANTITY CSJ 1442-03-016	QUANTITY CSJ 1442-04-007	ITEM 560 - DESCRIPTION
		MAILBOX INSTALL - SP (TIM - POST) TY 5 FND
		MAILBOX INSTALL - S (TWG - POST) TY 1 FND
6	12	MAILBOX INSTALL - S (WC - POST) TY 3 FND
		MAILBOX INSTALL - S (TWG - POST) TY 2 FND
		MAILBOX INSTALL - S (RR - POST) TY 4 FND
1	2	MAILBOX INSTALL - D (WC - POST) TY 3 FND
		MAILBOX INSTALL - D (TWG - POST) TY 1 FND
		MAILBOX INSTALL - D (TWG - POST) TY 2 FND
		MAILBOX INSTALL - M (TWW - POST) TY 4 FND
1	1	MAILBOX INSTALL - M (TWG - POST) TY 1 FND

*HDTP: High density thermoplastic polyesters

MAILBOX INSTALL - X (XXX - POST) TY X FND - XX (OPTIONAL)

Type of Mailbox
- S = Single
- D = Double
- M = Multiple
- SP = Single Plastic

Type of Post
- WC = Winged Channel Post
- RR = Recycled Rubber
- TWW = Thin Walled White Tubing
- TWG = Thin Walled Galvanized Tubing
- TIM = Timber

Type of Foundation
- Ty 1 = V-Loc
- Ty 2 = Wedge Anchor Steel System
- Ty 3 = Winged Channel post
- Ty 4 = Wedge Anchor Plastic System
- Ty 5 = 4 X 4 Post

Type of Bracket
- AB = Angle Bracket.
- TB = 2.375" Tube Bracket

GENERAL NOTES
1. Erect post plumb or vertical.
2. When galvanized part is required galvanize in accordance with Item 445.
3. Type 1, 2, 3, or 4 supports or foundation can be used for single or double mailbox installations. The RCR post shou be used only for a single installation with a small mail The Type 5 support/foundation is used for the single mol plastic mailbox. The Type 4 support/foundation is used fo the 2.375" O.D. RCR post, thin wall steel post, and white multiple mailbox post.
4. The Type 1 support/foundation can be used for a multiple mailbox mount. DHT 149339
5. The Type 4 support should be used with thin wall steel pipe for the medium, large and double mailbox installations.
6. Use a concrete footing as shown or when directed. Concrete footing will be required when soils do not hold the support/foundations in a stable condition.
7. A 2.375" O.D. galvanized thin wall posts can be used for Ty 1, 2 & 4.
8. When specified elsewhere in the plans, a 2.375" O.D. galvanized thin wall powder coated white post DHT-162911 should be used for the medium, large, and double mailbox installations.

Standard Plans

Texas Department of Transportation

MAILBOX SUPPORT/ FOUNDATION

MB-06(1) YKM

Sheet 3 of 3

FILE: MB06(1).DGN	DN: JEO	CK: LJB	DW: JEO	CK: JG	MEG:

© TxDOT NOVEMBER 2006

DIST	FED REG	PROJECT NO.			
YKM	6				
COUNTY		CONTROL	SECT	JOB	H
GONZALES, ETC.		1442	03	016, ETC	FI

REVISIONS
02/02/05 05/08/05: Added general note numbers 6 & 7. Sheet & title block renumbered. 11/14/05: Deleted sheet4. 08/03/06: Added DHT table, Mailbox descriptive codes and bid items.

FILE: MB-06-(1).dgn

LEVELS DISPLAYED
1 2 3 4 5 6 7 8 9 10 11 12 13 14 15 16
17 18 32 33 34 35 36 37 38 39 40 41 42 43 44 45 46 47 48
49 50 51 52 53 54 55 56 57 58 59 60 61 62 63

DISCHARGE FOR STANDARD FREQUENCY INTERVALS

(USING RATIONAL FORMULA OR REGIONAL REGRESSION EQUATIONS FOR ESTIMATION OF PEAK FLOW FREQUENCY)

DRAINAGE ID	1**	2**	3**	4***	5***	6**	7***	8***	9***	10***	11**	12***	13**	14**
DRAINAGE AREA (ACRES)	185.4	140.5	24.3	262.4	6156.8	102.3	1491.2	630.4	399.2	533.1	195.0	275.2	93.5	55.0
TIME OF CONCENTRATION (MIN)	119	97	16	-	-	79	-	-	-	-	85	-	49	44
REGION NUMBER	-	-	-	9	9	-	9	9	9	9	-	9	-	-
BASIN SHAPE FACTOR	-	-	-	5.13	6.44	-	7.57	2.28	6.54	3.63	-	3.93	-	-
CHANNEL SLOPE (FT/MILE)	-	-	-	21.00	33.00	-	26.00	70.00	69.31	63.00	-	54.00	-	-
COUNTY	GONZALES										LAVACA			

FLOW FREQUENCY	RUN-OFF CO-EFFICIENT	INTENSITY (IN/HR) 1	2	3	6	10	12	13	Q cfs	Q cfs	Q cfs	Q cfs	Q cfs	Q cfs	Q cfs	Q cfs	Q cfs	Q cfs	Q cfs	Q cfs	Q cfs	Q cfs
2 YEAR	0.31	1.26	1.62	4.72	1.70	1.61	2.38	2.56	72.2	63.7	35.6	174	915	53.9	434	276	217	253	97.4	178	69.0	43.6
5 YEAR	0.31	1.62	2.09	5.93	2.18	2.07	3.03	3.26	93.2	82.0	44.7	242	1934	69.1	707	677	389	530	125.1	328	87.9	55.6
10 YEAR	0.31	1.90	2.43	6.69	2.54	2.41	3.49	3.74	109.4	95.8	50.4	318	3053	80.5	1002	1141	592	844	145.8	495	101.3	63.8
25 YEAR	0.36	2.23	2.85	7.80	2.97	2.83	4.09	4.38	149.1	112.4	68.3	414	4855	109.5	1417	1945	893	1349	198.4	744	137.6	86.7
50 YEAR	0.40	2.54	3.23	8.68	3.36	3.20	4.60	4.92	188.3	127.2	84.4	487	6492	137.6	1753	2715	1146	1803	249.6	956	172.0	108.3
100 YEAR	0.41	2.81	3.57	9.63	3.72	3.54	5.09	5.45	213.6	141.1	95.9	559	8407	156.1	2111	3654	1423	2329	283.1	1190	195.1	122.8

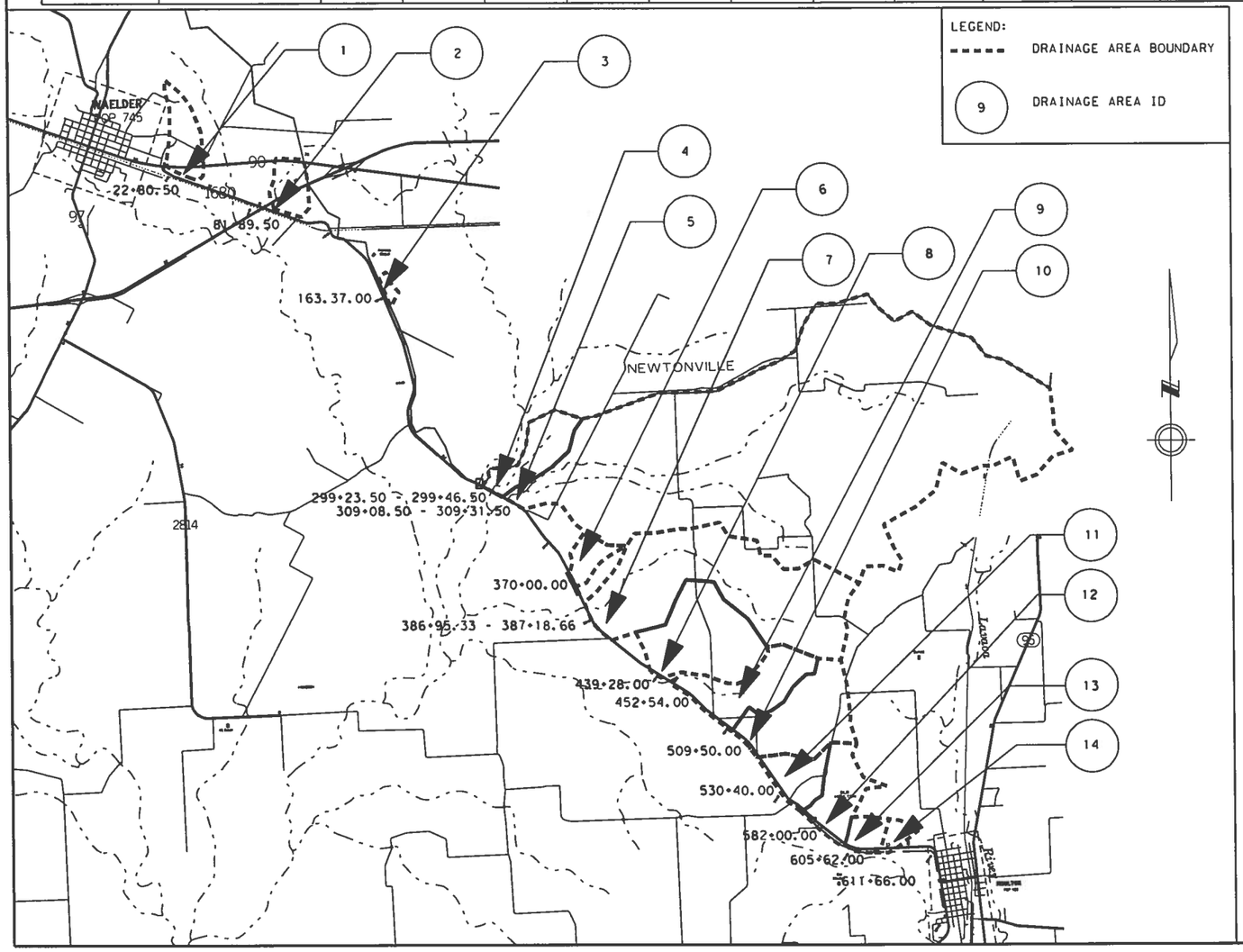

* RUNOFF COEFFICIENT FOR RURAL WATERSHEDS
TXDOT - HYDRAULIC DESIGN MANUAL, MAR 2004

** PEAK FLOWS COMPUTED USING RATIONAL METHOD - TXDOT HYDRAULIC DESIGN MANUAL, MAR 2004

*** PEAK FLOW ESTIMATED USING REGIONAL REGRESSION EQUATION - TXDOT HYDRAULIC DESIGN MANUAL, MAR 2004

0 8000 16000

4/2/09

STATE OF TEXAS
DLEN D. HOWARD
69804
REGISTERED
PROFESSIONAL ENGINEER

© 2009 Texas Department of Transportation

JACOBS
5995 Rogerdale Road
Houston, TX 77052-3495
(832) 351-7230 www.jacobs.com

FM 1680

DRAINAGE AREA MAP

FED. RD. DIV. NO.	PROJECT NO.	SHEET NO.
6		47

STATE	DIST.	COUNTY
TEXAS	YKM	GONZALES, ETC

CONT	SECT	JOB	HIGHWAY NO.
1442	03	016, ETC	FM 1680

HYDRAULIC DATA FOR CSJ: 1442-03-016

STATION	EXISTING STRUCTURE	DRAINAGE AREA (ACRES)	Q		EXIST HW EL*		ALLOWABLE HW (FEET)	SLOPE	K_e	n	EXIST VEL		EXIST TW EL	
			10 YEAR (CFS)	100 YEAR (CFS)	10 YEAR (FEET)	100 YEAR (FEET)					10 YEAR (FT/S)	100 YEAR (FT/S)	10 YEAR (FEET)	100 YEAR (FEET)
22+80.50	1-10' X 34.8' CONC BRIDGE	185.4	109.4	213.6	97.50	98.61	101.14	0.0287	0.40	0.035	3.06	5.56	97.13	98.61
81+89.50	1- 2' X 2' X 25.3' CBC W/ HEADWALLS EA END	165.0	95.8	141.1	100.98	101.05	100.82	0.0190	0.20	0.012	9.23	9.34	98.29	98.44
163+37	1- 24" X 40' RCP	24.3	50.4	95.9	101.56	101.62	101.57	0.0526	0.50	0.012	12.84	12.93	95.03	95.38
299+23.50 - 299+46.50	3- 7' X 4' X 27.3' CBC W/ WINGWALLS EA END	262.4	318	559	** 105.99	** 109.36	102.42	0.0015	0.040	0.012	1.01	2.73	** 105.93	** 109.34
309+08.50 - 309+31.50	3- 7' X 4' X 27.3' CBC W/ WINGWALLS EA END	6156.8	3053	8407	** 105.40	** 108.77	101.88	0.0018	0.040	0.012	2.29	2.76	** 105.34	** 108.75
370+00	1- 7' X 3' X 27.3' CBC W/ WINGWALLS EA END	102.3	80.5	156.1	82.09	83.96	83.91	0.0066	0.70	0.012	8.44	10.11	78.16	78.88
386+95.33 - 387+18.66	3- 7' X 5' X 27.3' CBC W/ WINGWALLS EA END	1491.2	1002	2111	96.12	98.77	95.69	0.0004	0.70	0.012	7.44	0.95	94.47	98.75
439+28	1- 10' X 7' X 27.3' CBC W/ WINGWALLS EA END	630.4	1141	3654	101.31	102.47	100.78	0.0044	0.40	0.012	10.35	9.69	98.91	100.37
452+54	1- 6' X 5' X 27.3' (32' ALONG SKEW) CBC W/ WINGWALLS EA END	399.2	592	1423	108.89	109.78	108.62	0.0041	0.40	0.012	11.16	10.65	106.02	107.21

STATION	PROPOSED STRUCTURE	DRAINAGE AREA (ACRES)	Q		PROP HW EL*		ALLOWABLE HW (FEET)	SLOPE	K_e	n	PROP VEL		PROP TW EL	
			10 YEAR (CFS)	100 YEAR (CFS)	10 YEAR (FEET)	100 YEAR (FEET)					10 YEAR (FT/S)	100 YEAR (FT/S)	10 YEAR (FEET)	100 YEAR (FEET)
22+80.50	REMOVE EXIST BRIDGE AND CONSTRUCT 2- 5' X 4' X 38' CBC & ADD 4:1 SET LT & RT USING SCP-5, SCP-MD, BCS, & SETB-FW-0	185.4	109.4	213.6	98.26	99.68	101.60	0.0050	0.40	0.012	7.87	9.53	97.13	97.39
81+89.50	REMOVE EXIST STRUCT AND CONSTRUCT 1- 4' X 3' X 39' CBC W/ 4:1 SET LT & RT USING SCP-4, SCP-MD, BCS, & SETB-FW-0	165.0	95.8	141.1	100.93	101.39	101.28	0.0128	0.40	0.012	11.56	11.78	98.29	98.44
163+37	REMOVE 8' RT AND EXT 2' LT AND 18' RT & ADD 4:1 SET LT AND 3:1 SET RT USING SETP-CD	24.3	50.4	95.9	99.60	102.09	102.03	0.0752	0.70	0.012	16.04	8.08	95.03	95.38
299+23.50 - 299+46.50	REMOVE EXIST WINGWALLS EA END AND EXT 5' LT AND 8' RT & ADD 4:1 SET LT & 3:1 SET RT USING MC-7-10, MC-MD, BCS, & SETB-FW-0	262.4	318	559	** 106.00	** 109.35	102.88	0.0258	0.040	0.012	1.56	3.06	** 105.98	** 109.27
309+08.50 - 309+31.50	REMOVE EXIST WINGWALLS EA END AND EXT 4' LT AND 9' RT & ADD 4:1 SET LT & 3:1 SET RT USING MC-7-10, MC-MD, BCS, & SETB-FW-0	6156.8	3053	8407	** 105.41	** 108.76	102.34	0.0409	0.040	0.012	2.47	2.80	** 105.39	** 108.68
370+00	REMOVE EXIST WINGWALLS EA END AND EXT 5' LT AND 15' RT & ADD 4:1 SET LT & 3:1 SET RT USING SCC-7, SCC-MD, BCS, & SETB-FW-0	102.3	80.5	156.1	81.80	83.49	84.37	0.0691	0.40	0.012	5.77	7.43	78.16	78.88
386+95.33 - 387+18.66	REMOVE EXIST WINGWALLS EA END AND EXT 14' LT AND 17' RT & ADD PARALLEL WINGWALLS LT & RT USING MC-7-10, MC-MD, BCS, & PW	1491.2	1002	2111	94.46	98.76	96.15	0.0601	0.020	0.012	9.54	12.22	94.47	98.75
439+28	REMOVE EXIST WINGWALLS EA END AND EXT 15.5' LT AND RT AND ADD 1-7'X 7' X 58.3' CBC (STA 438+17.75) & ADD PARALLEL WINGWALLS LT & RT USING SCC-7, SCC-10, SCC-MD, OR SCP-7, SCP-10, SCP-MD, BCS, & PW	630.4	1141	3654	100.75	102.66	101.24	0.0218	0.40	0.012	10.19	12.39	98.91	100.37
452+54	REMOVE EXIST WINGWALLS EA END AND EXT 14.85' RT (15.95' ALONG SKEW) AND 5.63' LT (6.5' ALONG SKEW) AND ADD 1-6'X5'X47.48' (54.45' ALONG SKEW) CBC & ADD 3:1 SET LT AND PARALLEL WINGWALLS RT USING SCC-5&6, SCC-MD, OR SCP-6, SCP-MD, SETB-FW-S, BCS, & PW	399.2	592	1423	108.94	109.91	109.08	0.0416	0.40	0.012	9.87	11.02	106.02	107.21

* HEADWATER ELEVATIONS WERE CALCULATED USING THE TxDOT CULVERT PROGRAM, VERSION 1.1

** HW AND TW ARE EXTRACTED FROM A HEC-RAS MODEL CREATED FOR PEACH CREEK. PLEASE REFER TO HYROLOGIC & HYDRAULIC STUDY FOR FM 1680 AT PEACH CREEK, STR # 130900144203001, CSJ 144203015.

Olen D. Howard 4/2/09

STATE OF TEXAS
OLEN D. HOWARD
69804
REGISTERED PROFESSIONAL ENGINEER

© 2009 Texas Department of Transportation

JACOBS
5995 Rogerdale Road
Houston, TX 77052-3495
(832) 351-7230 www.jacobs.com

FM 1680
HYDRAULIC DATA

SHEET 1

FED. RD. DIV. NO.	PROJECT NO.	SHEET NO.
6		48

STATE	DIST.	COUNTY
TEXAS	YKM	GONZALES, ETC

CONT	SECT	JOB	HIGHWAY NO.
1442	03	016, ETC	FM 1680

HYDRAULIC DATA FOR CSJ: 1442-04-007

STATION	EXISTING STRUCTURE	DRAINAGE AREA (ACRES)	Q		EXIST HW EL*		ALLOWABLE HW (FEET)	SLOPE	K_e	n	EXIST VEL		EXIST TW EL	
			10 YEAR (CFS)	100 YEAR (CFS)	10 YEAR (FEET)	100 YEAR (FEET)					10 YEAR (FT/S)	100 YEAR (FT/S)	10 YEAR (FEET)	100 YEAR (FEET)
509+50	2- 7' X 6' X 29.3' CBC W/ WINGWALLS EA END	533.1	844.0	2329	120.55	122.74	119.89	0.0314	0.70	0.012	16.02	17.06	112.44	114.32
530+40	1- 10' X 6' X 29.3' CBC W/ WINGWALLS EA END	195.0	145.8	283.1	130.70	132.77	136.62	0.0137	0.40	0.012	10.37	12.31	126.70	127.23
582+00	2- 7' X 4' X 27.3' CBC W/ WINGWALLS EA END	275.2	495	1190	164.31	165.35	164.22	0.0015	0.40	0.012	7.68	0.68	162.32	165.34
605+62	1- 6' X 5' X 29.3' CBC W/ WINGWALLS EA END	93.5	101.3	195.1	96.26	98.06	100.43	0.0280	0.40	0.012	12.24	14.18	93.66	94.05
611+66	1- 6' X 3' X 40.3' CBC W/ WINGWALLS EA END	55.0	63.8	122.8	98.28	99.77	101.74	0.0574	0.40	0.012	14.36	16.21	96.16	96.51
STATION	PROPOSED STRUCTURE	DRAINAGE AREA (ACRES)	Q		PROP HW EL*		ALLOWABLE HW (FEET)	SLOPE	K_e	n	PROP VEL		PROP TW EL	
			10 YEAR (CFS)	100 YEAR (CFS)	10 YEAR (FEET)	100 YEAR (FEET)					10 YEAR (FT/S)	100 YEAR (FT/S)	10 YEAR (FEET)	100 YEAR (FEET)
509+50	REMOVE EXIST WINGWALLS EA END AND EXT 12.5' LT AND 15' RT W/ 7' X 7' CBC AND ADD 1-7' X 7' X 56.8' CBC (STA 509+38.62) & ADD 3:1 SET LT & PARALLEL WINGWALLS RT USING SCC-7, SCC-MD, BCS, SETB-FW-0, & PW	533.1	844.0	2329	118.56	122.31	120.35	0.0791	0.40	0.012	10.43	11.70	112.44	114.32
530+40	REMOVE EXIST WINGWALLS EA END AND EXT 5' LT AND 15' RT & ADD 3:1 SET LT & PARALLEL WINGWALLS RT USING SCC-10, SCC-MD, BCS, SET-FW-0, & PW	195.0	145.8	283.1	129.46	132.68	137.08	0.0685	0.40	0.012	7.77	9.69	126.70	127.23
582+00	REMOVE EXIST WINGWALLS EA END AND EXT 5' LT AND 7' RT & ADD 4:1 SET LT & 3:1 SET RT USING MCC-7-10, MC-MD, BCS, & SETB-FW-0	275.2	495	1190	162.88	165.35	164.68	0.0326	0.40	0.012	8.84	9.58	162.32	165.34
605+62	REMOVE EXIST WINGWALLS EA END AND EXT 6' LT AND 8' RT & ADD 3:1 SET LT & RT USING SCC-5&6, SCC-MD, BCS, & SETB-FW-0	93.5	101.3	195.1	96.44	98.24	100.89	0.0231	0.40	0.012	12.51	14.43	93.66	94.05
611+66	REMOVE EXIST WINGWALLS EA END AND EXT 5.2' LT AND 4.4' RT & ADD 3:1 SET LT & RT USING SCC-5&6, SCC-MD, BCS, & SETB-FW-0	55.0	63.8	122.8	98.59	100.08	102.20	0.0524	0.40	0.012	4.33	7.30	96.16	96.51

* HEADWATER ELEVATIONS WERE CALCULATED USING THE TxDOT CULVERT PROGRAM, VERSION 1.1

Olen Howard 4/2/09

STATE OF TEXAS
OLEN D. HOWARD
69804
REGISTERED
PROFESSIONAL ENGINEER

© 2009 Texas Department of Transportation

JACOBS
5995 Rogerdale Road
Houston, TX 77052-3495
(832) 351-7230 www.jacobs.com

FM 1680
HYDRAULIC DATA

SHEET 2

FED. RD. DIV. NO.	PROJECT NO.		SHEET NO.
6			49
STATE	DIST.	COUNTY	
TEXAS	YKM	GONZALES, ETC	
CONT	SECT	JOB	HIGHWAY NO.
1442	03	016, ETC	FM 1680

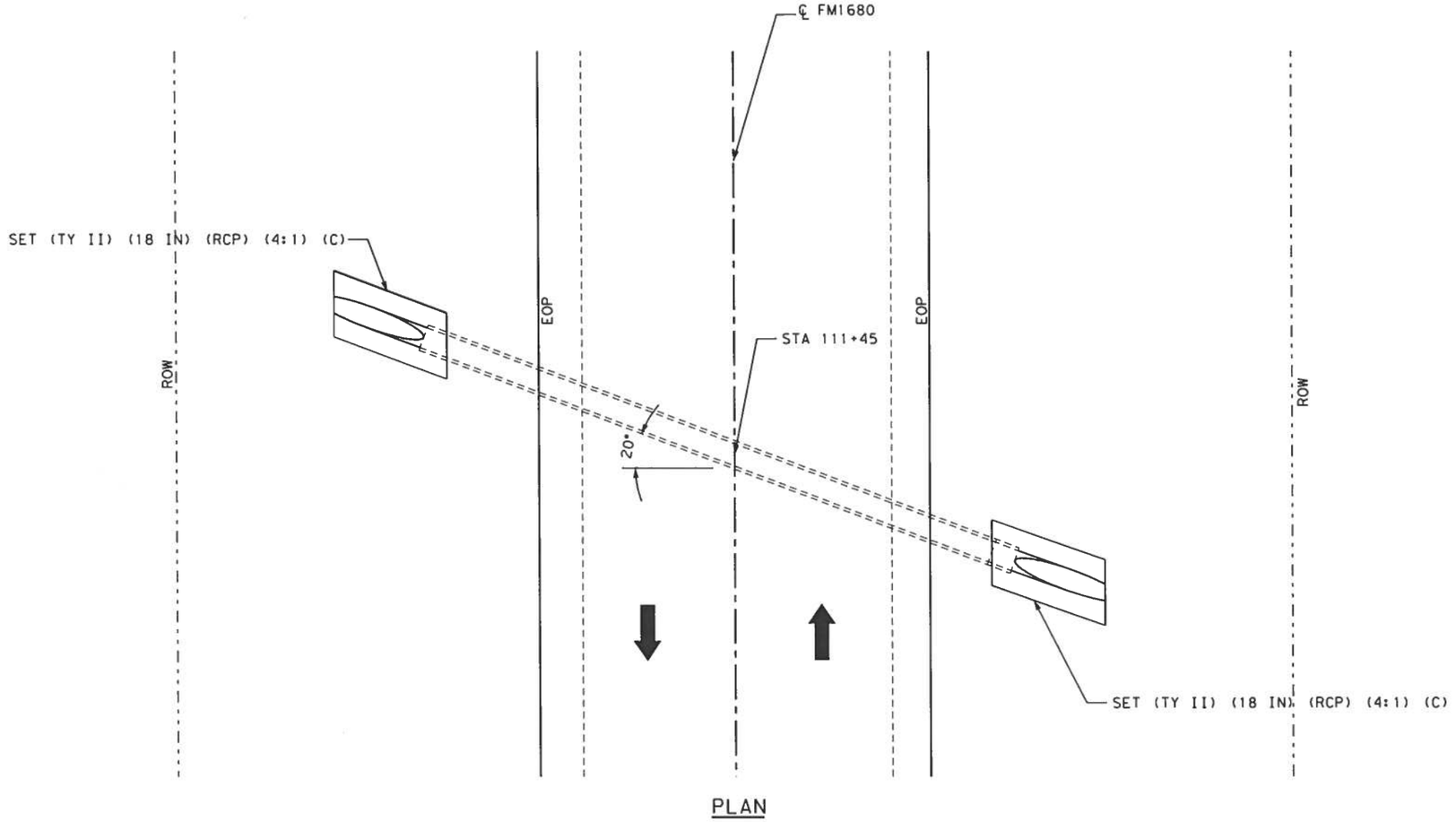

PLAN

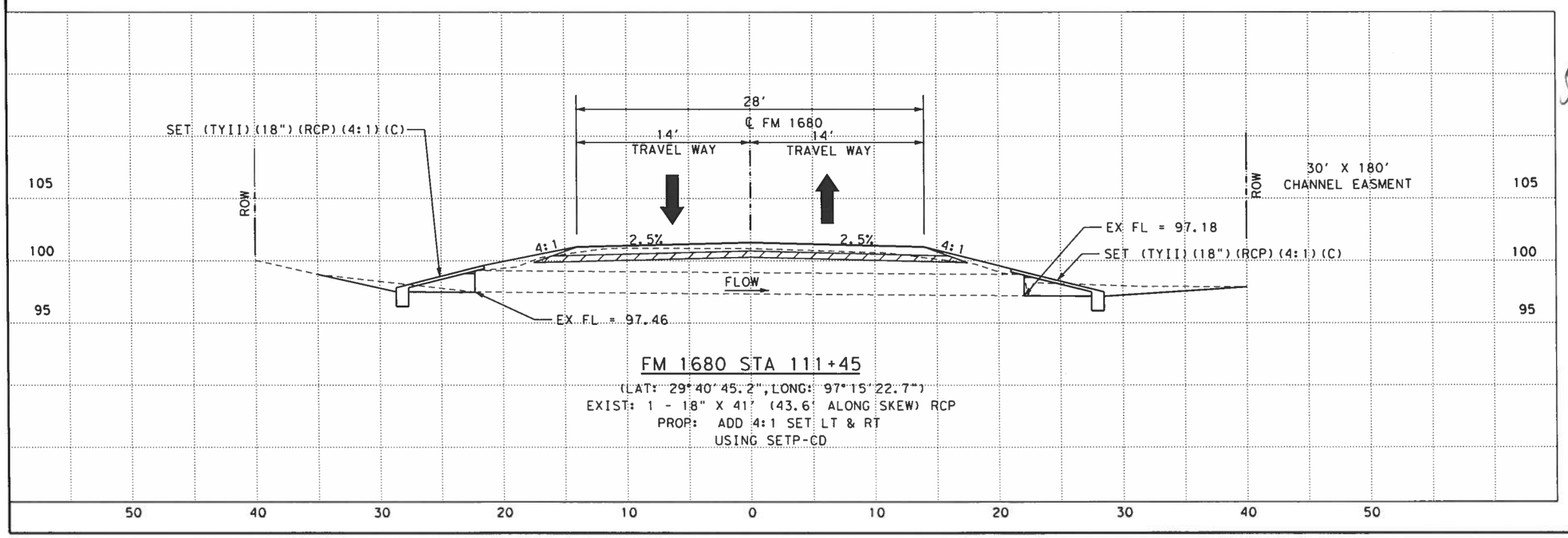

FM 1680 STA 111+45

(LAT: 29°40'45.2", LONG: 97°15'22.7")
EXIST: 1 - 18" X 41' (43.6' ALONG SKEW) RCP
PROP: ADD 4:1 SET LT & RT
USING SETP-CD

0 10 20
HORIZONTAL SCALE

0 10 20
VERTICAL SCALE

STATE OF TEXAS
OLEN D. HOWARD
69804
REGISTERED PROFESSIONAL ENGINEER

4/1/09

© 2009 Texas Department of Transportation

JACOBS
5995 Rogerdale Road
Houston, TX 77052-3495
(832) 351-7230 www.jacobs.com

FM 1680 CULVERT LAYOUT STA 111+45

SHEET 1

FED. RD. DIV. NO.	PROJECT NO.	SHEET NO.
6		50

STATE	DIST.	COUNTY
TEXAS	YKM	GONZALES, ETC

CONT	SECT	JOB	HIGHWAY NO.
1442	03	016, ETC	FM 1680

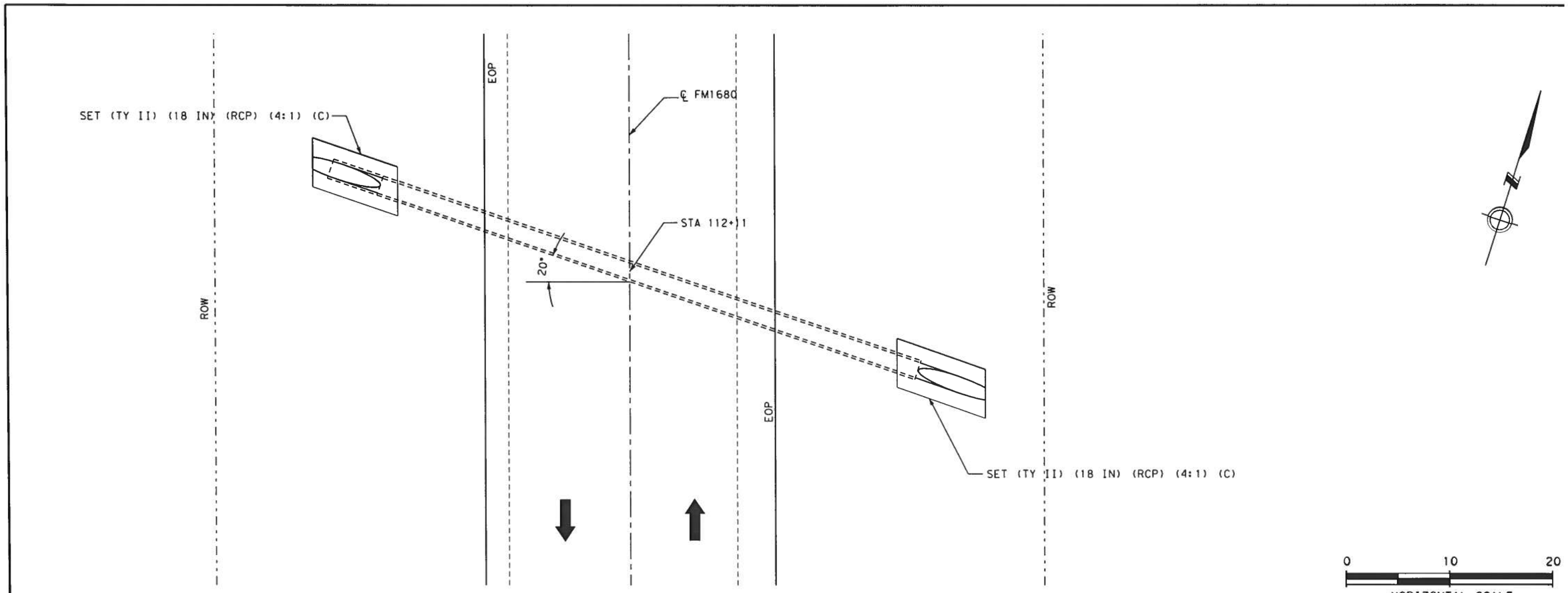

PLAN

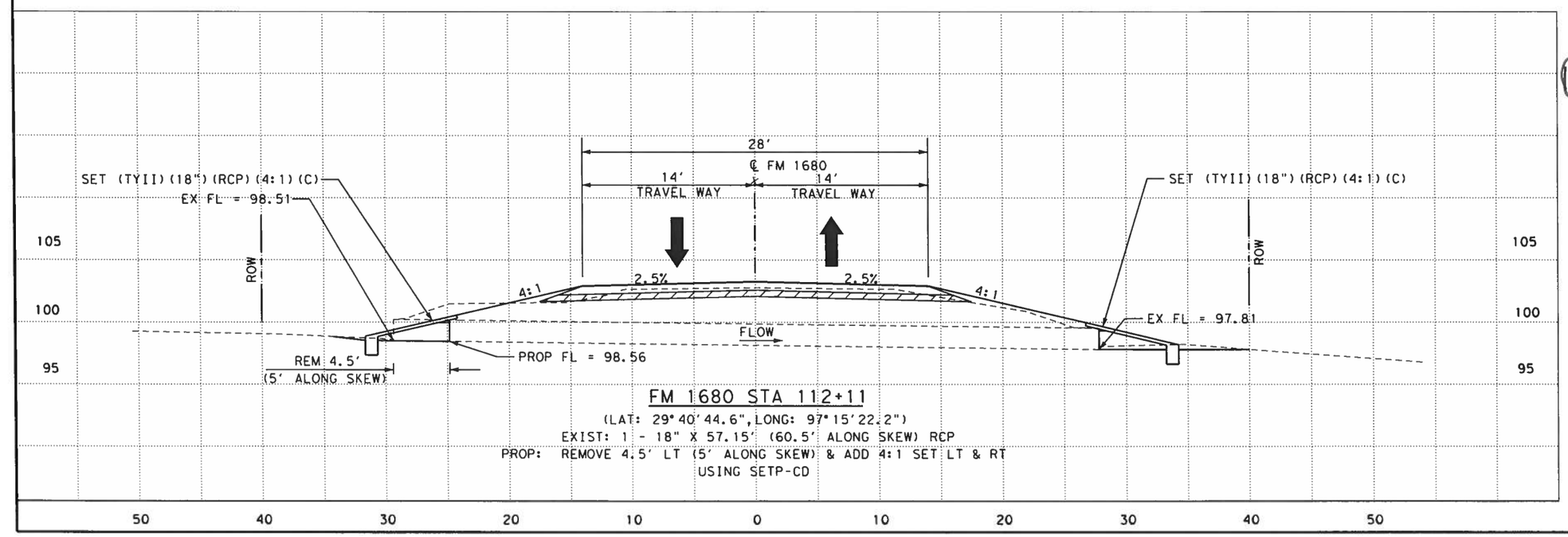

FM 1680 STA 112+11

(LAT: 29°40'44.6", LONG: 97°15'22.2")

EXIST: 1 - 18" X 57.15' (60.5' ALONG SKEW) RCP

PROP: REMOVE 4.5' LT (5' ALONG SKEW) & ADD 4:1 SET LT & RT USING SETP-CD

0 10 20

VERTICAL SCALE

4/2/09

STATE OF TEXAS
OLEN D. HOWARD
69804
REGISTERED PROFESSIONAL ENGINEER

© 2009 Texas Departm of Transporta

JACOBS
5995 Rogerdale Road
Houston, TX 77052-3495
(832) 351-7230 www.jacobs.com

FM 1680
CULVERT LAYOUT STA 112+11

SHEET 2

FED. RD. DIV. NO.	PROJECT NO.	SHE
6		51

STATE	DIST.	COUNTY
TEXAS	YKM	GONZALES, ETC

CONT	SECT	JOB	HIGHWAY NO.
1442	03	016, ETC	FM 1680

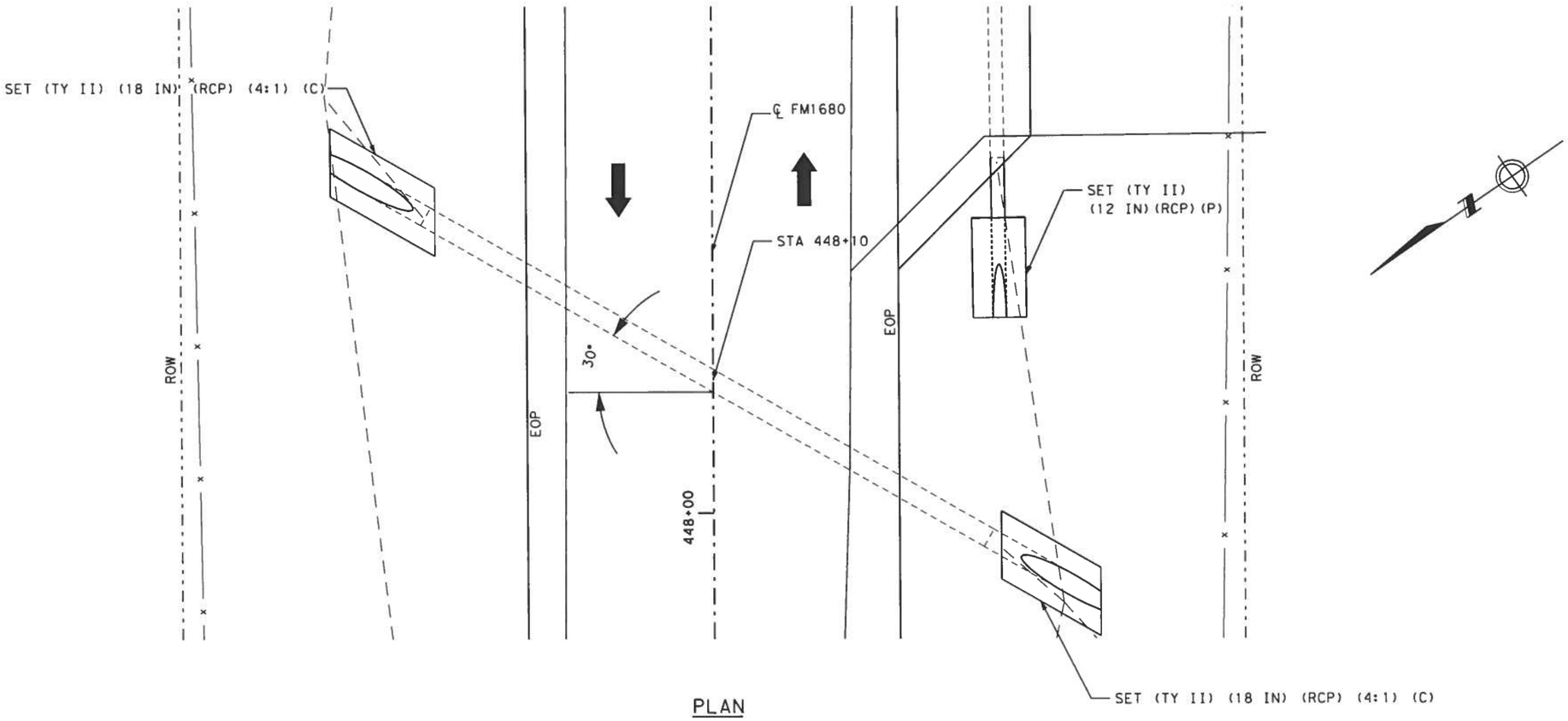

PLAN

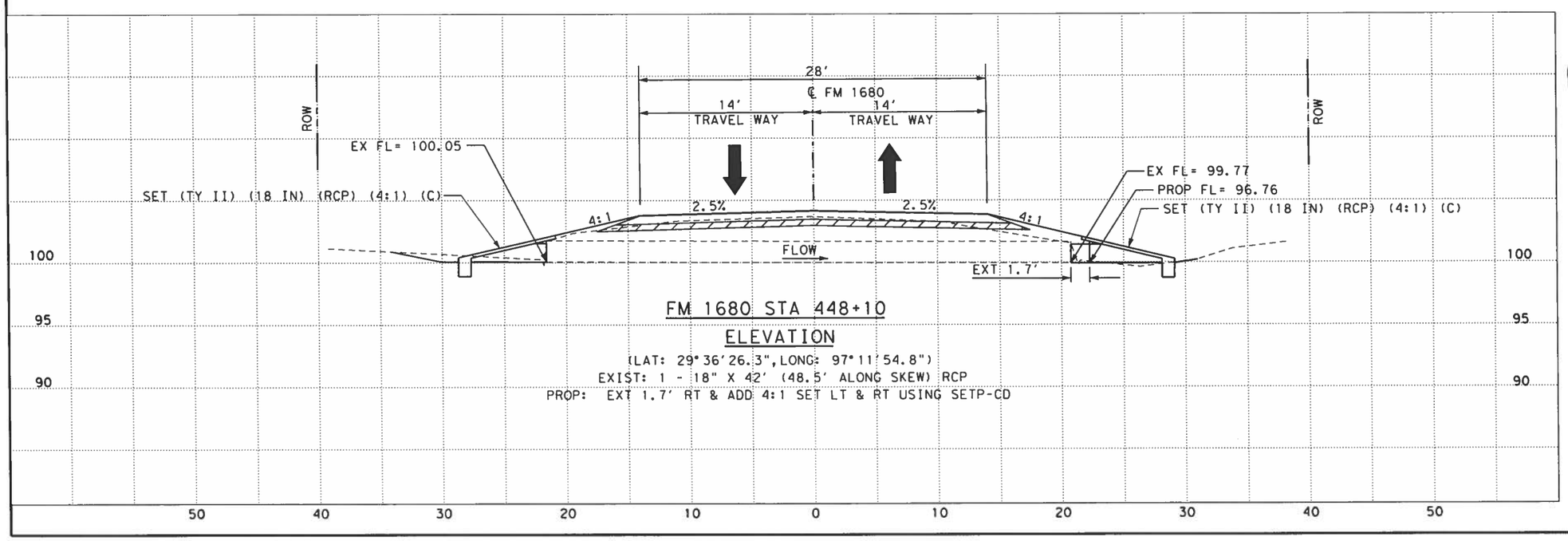

FM 1680 STA 448+10

ELEVATION

(LAT: 29°36'26.3", LONG: 97°11'54.8")
EXIST: 1 - 18" X 42' (48.5' ALONG SKEW) RCP
PROP: EXT 1.7' RT & ADD 4:1 SET LT & RT USING SETP-CD

0 10 20
HORIZONTAL SCALE

0 10 20
VERTICAL SCALE

Olen D. Howard 4/2/09

STATE OF TEXAS
OLEN D. HOWARD
69804
REGISTERED
PROFESSIONAL ENGINEER

© 2009 Texas Department of Transportation

JACOBS
5995 Rogerdale Road
Houston, TX 77052-3495
(832) 351-7230 www.jacobs.com

FM 1680
CULVERT LAYOUT
STA 448+10

SHEET 3

FED. RD. DIV. NO.	PROJECT NO.	SHE NO
6		52

STATE	DIST.	COUNTY
TEXAS	YKM	GONZALES, ETC

CONT	SECT	JOB	HIGHWAY NO.
1442	03	016, ETC	FM 1680

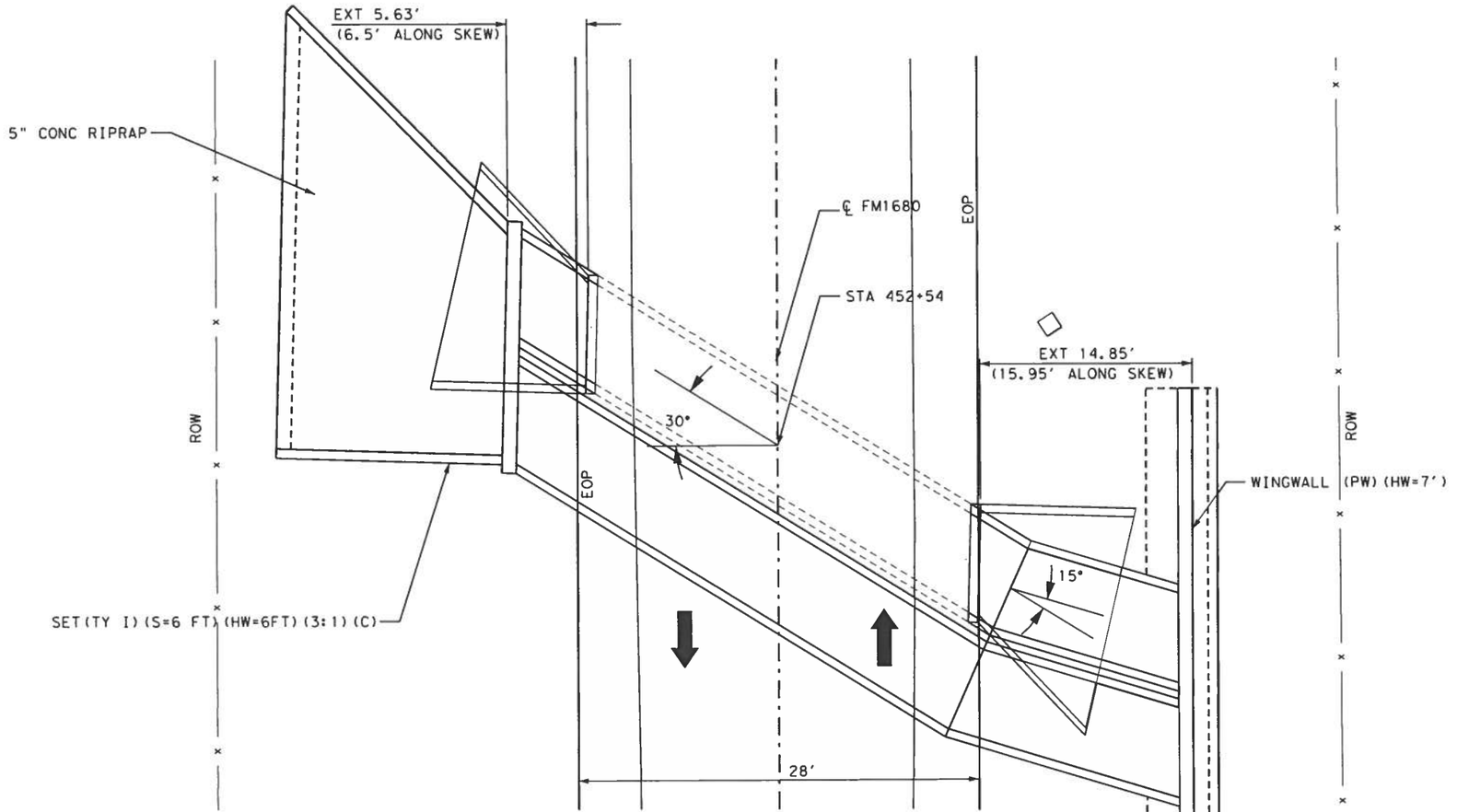

PLAN

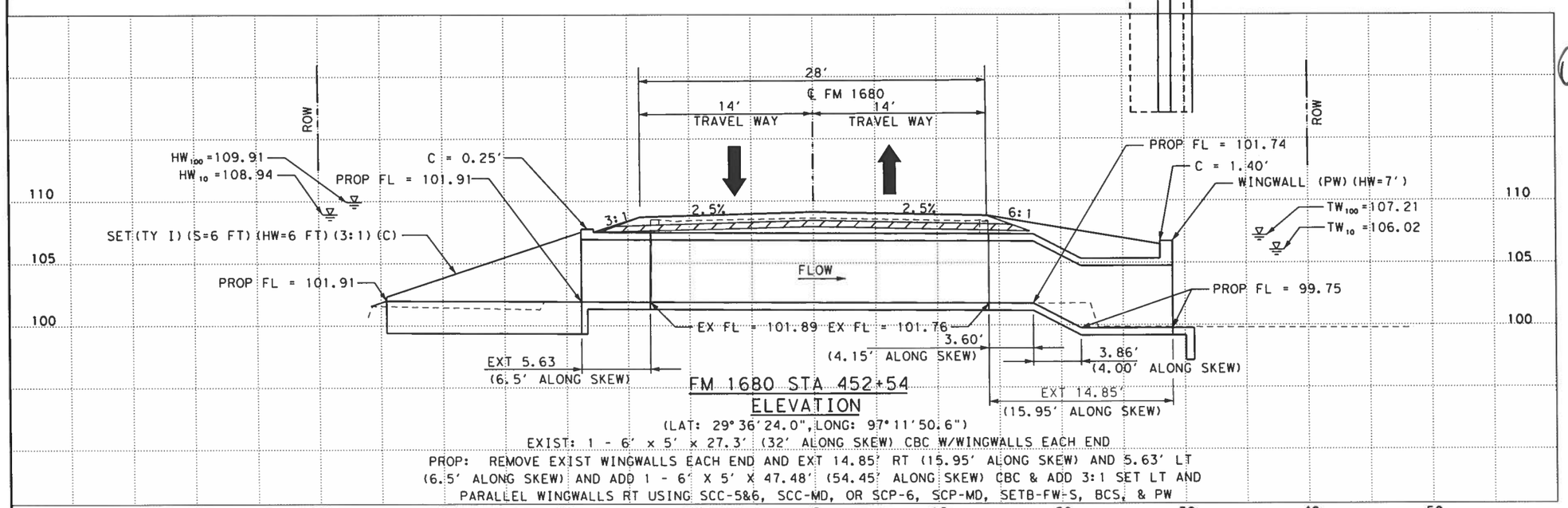

FM 1680 STA 452+54
ELEVATION

(LAT: 29°36'24.0", LONG: 97°11'50.6")

EXIST: 1 - 6' x 5' x 27.3' (32' ALONG SKEW) CBC W/WINGWALLS EACH END

PROP: REMOVE EXIST WINGWALLS EACH END AND EXT 14.85' RT (15.95' ALONG SKEW) AND 5.63' LT (6.5' ALONG SKEW) AND ADD 1 - 6' X 5' X 47.48' (54.45' ALONG SKEW) CBC & ADD 3:1 SET LT AND PARALLEL WINGWALLS RT USING SCC-5&6, SCC-MD, OR SCP-6, SCP-MD, SETB-FW-S, BCS, & PW

0 10 20
HORIZONTAL SCALE

0 10 20
VERTICAL SCALE

Olen D. Howard
4/8/09

STATE OF TEXAS
OLEN D. HOWARD
69804
REGISTERED
PROFESSIONAL ENGINEER

© 2009 Texas Department of Transportation

JACOBS
5995 Rogerdale Road
Houston, TX 77052-3495
(832) 351-7230 www.jacobs.com

FM 1680
CULVERT LAYOUT
STA 452+54

SHEET 4

FED. RD. DIV. NO.	PROJECT NO.	SHE NO.
6		53

STATE	DIST.	COUNTY	
TEXAS	YKM	GONZALES, ETC	
CONT	SECT	JOB	HIGHWAY NO.
1442	03	016, ETC	FM 1680

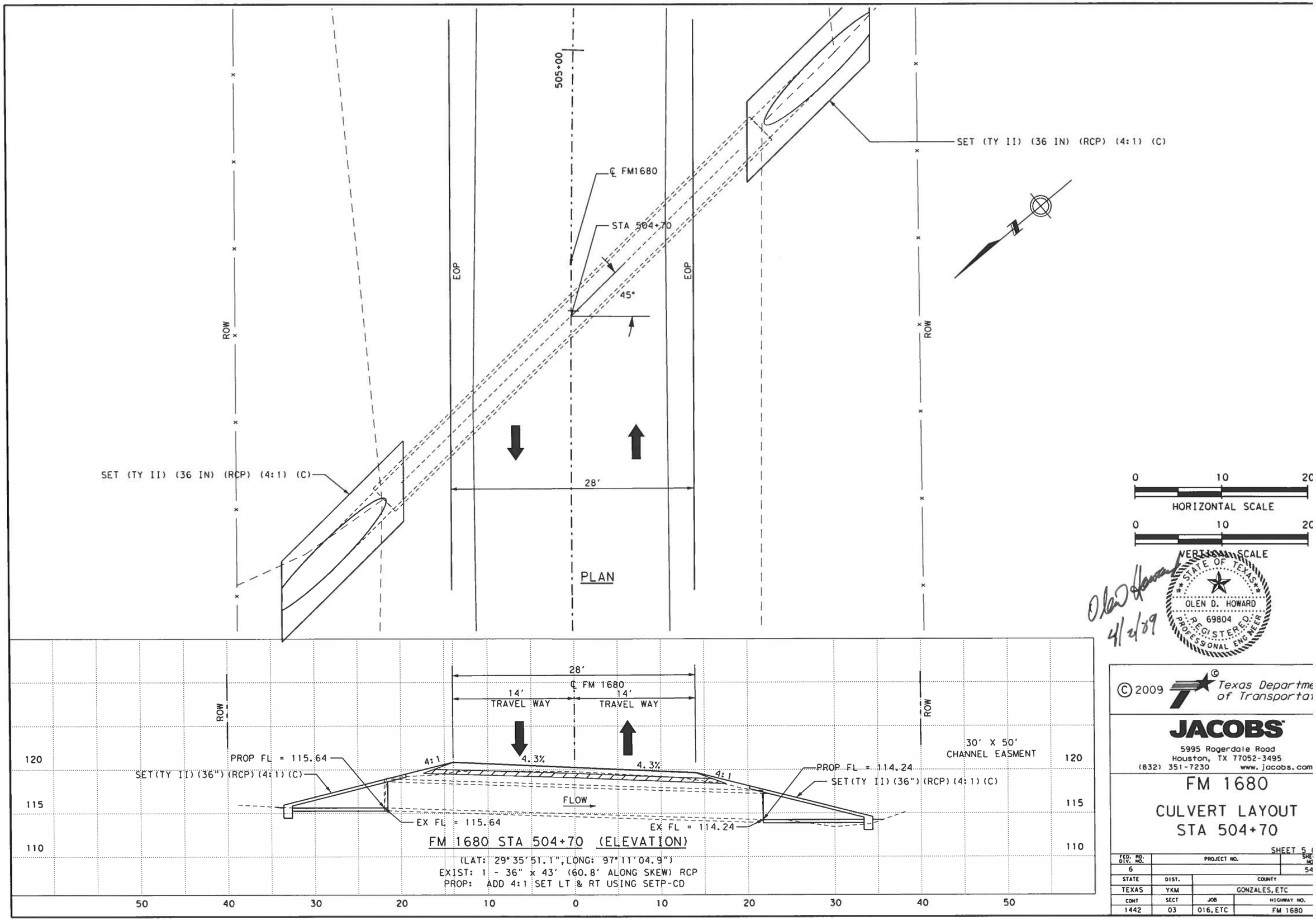

FM 1680 STA 504+70 (ELEVATION)

(LAT: 29°35'51.1", LONG: 97°11'04.9")
EXIST: 1 - 36" x 43' (60.8' ALONG SKEW) RCP
PROP: ADD 4:1 SET LT & RT USING SETP-CD

0 10 20
HORIZONTAL SCALE

0 10 20
VERTICAL SCALE

Olen D. Howard 4/2/09

STATE OF TEXAS
OLEN D. HOWARD
R. 69804
REGISTERED
PROFESSIONAL ENGINEER

© 2009 Texas Department of Transportation

JACOBS
5995 Rogerdale Road
Houston, TX 77052-3495
(832) 351-7230 www.jacobs.com

FM 1680

CULVERT LAYOUT STA 504+70

SHEET 5

FED. RD. DIV. NO.	PROJECT NO.	SHEET NO.
6		54

STATE	DIST.	COUNTY	
TEXAS	YKM	GONZALES, ETC	
CONT	SECT	JOB	HIGHWAY NO.
1442	03	016, ETC	FM 1680

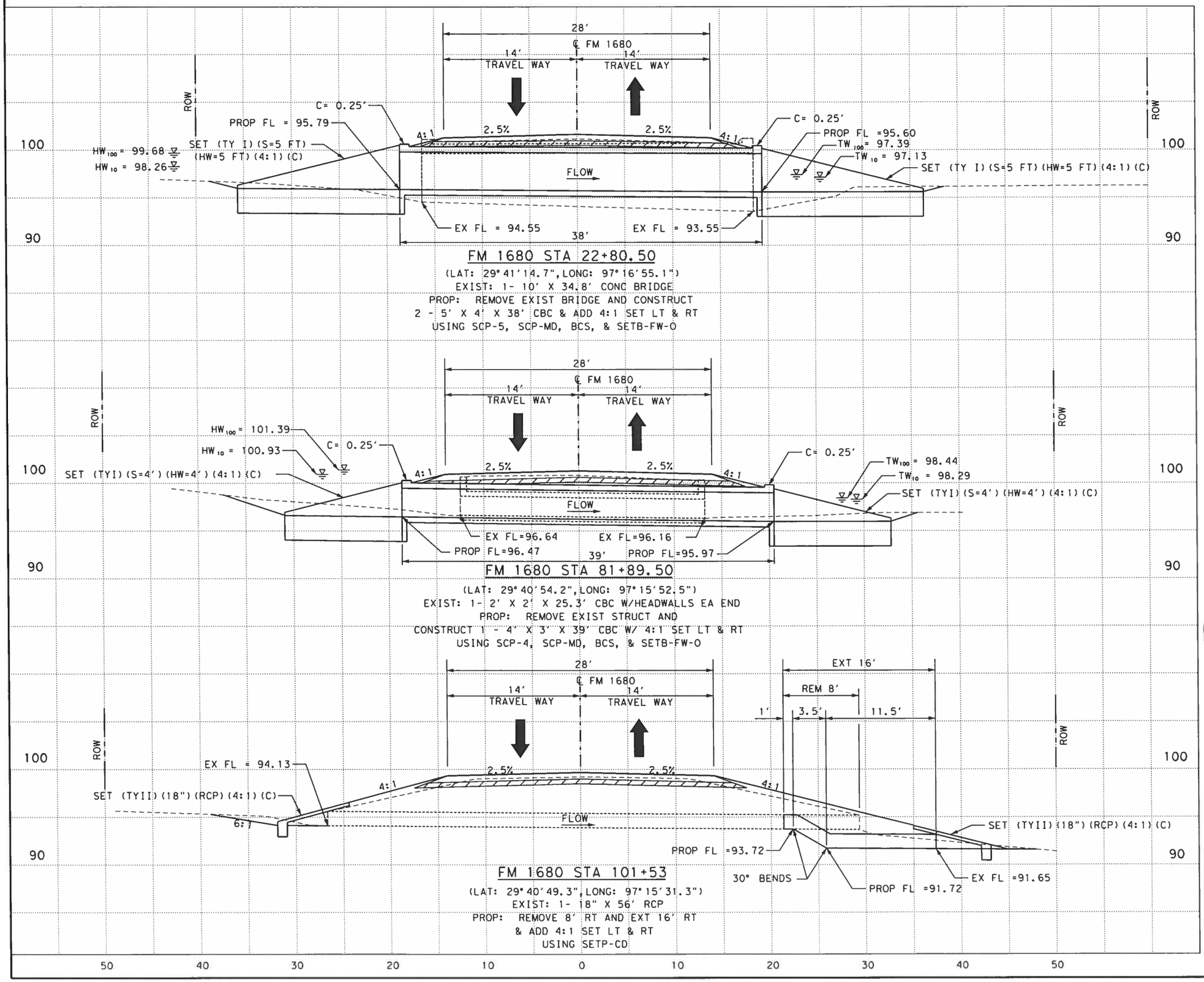

0 10 20
HORIZONTAL SCALE

0 10 20
VERTICAL SCALE

4/2/09

STATE OF TEXAS
OLEN D. HOWARD
69804
REGISTERED PROFESSIONAL ENGINEER

© 2009 Texas Department of Transportation

JACOBS
5995 Rogerdale Road
Houston, TX 77052-3495
(832) 351-7230 www.jacobs.com

FM 1680
CULVERT PROFILES STA 22+80.50, 81+89. & 101+53

SHEET 1

FED. RD. DIV. NO.	PROJECT NO.	SHE NO
6		55

STATE	DIST.	COUNTY
TEXAS	YKM	GONZALES, ETC

CONT	SECT	JOB	HIGHWAY NO.
1442	03	016, ETC	FM 1680

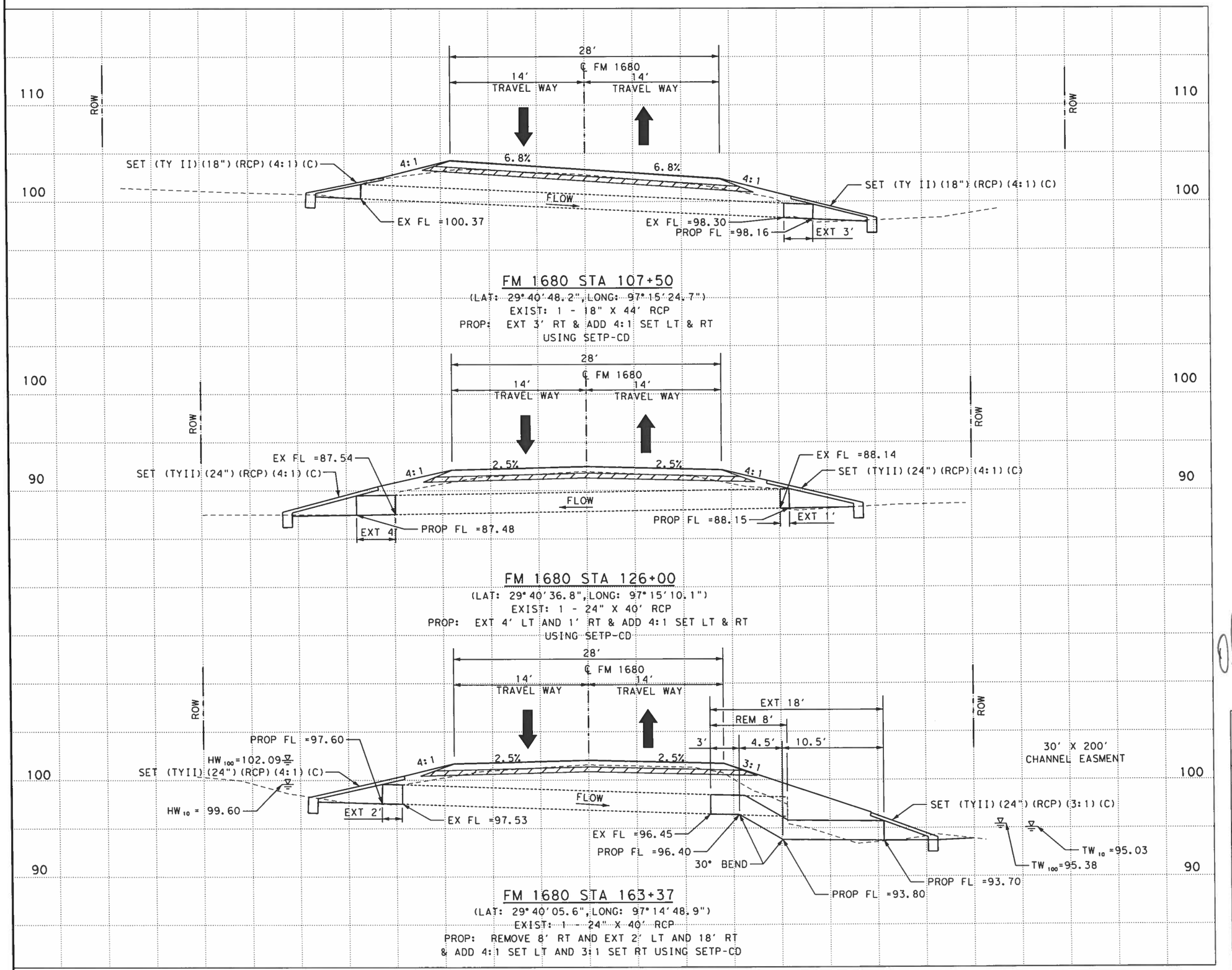

0 10 20
HORIZONTAL SCALE

0 10 20
VERTICAL SCALE

4/2/09

STATE OF TEXAS
OLEN D. HOWARD
69804
REGISTERED
PROFESSIONAL ENGINEER

© 2009 Texas Department of Transportation

JACOBS
5995 Rogerdale Road
Houston, TX 77052-3495
(832) 351-7230 www.jacobs.com

FM 1680
CULVERT PROFILES STA 107+50, 126+00 & 163+37

SHEET 2

FED. RD. DIV. NO.	PROJECT NO.	SHEET NO.
6		56

STATE	DIST.	COUNTY
TEXAS	YKM	GONZALES, ETC

CONT	SECT	JOB	HIGHWAY NO.
1442	03	016, ETC	FM 1680

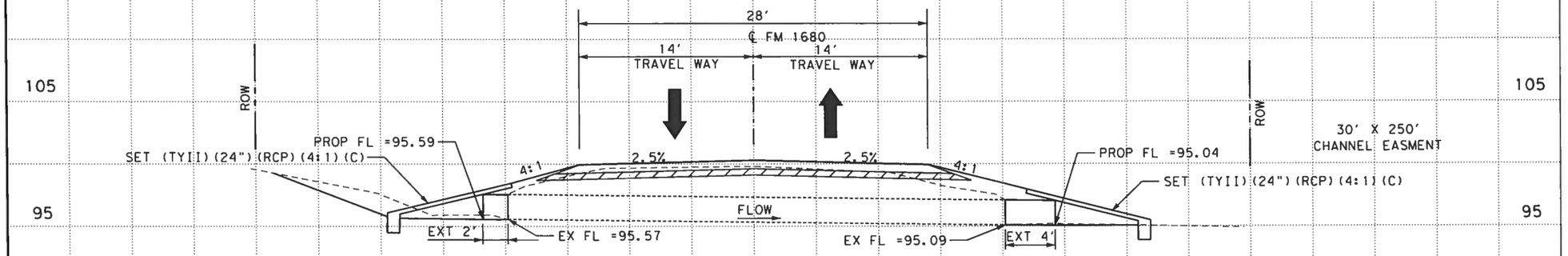

FM 1680 STA 195+92

(LAT: 29°39'34.8", LONG: 97°14'35.8")
EXIST: 1 - 24" X 40' RCP
PROP: EXT 2' LT AND 4' RT & ADD 4:1 SET LT & RT
USING SETP-CD

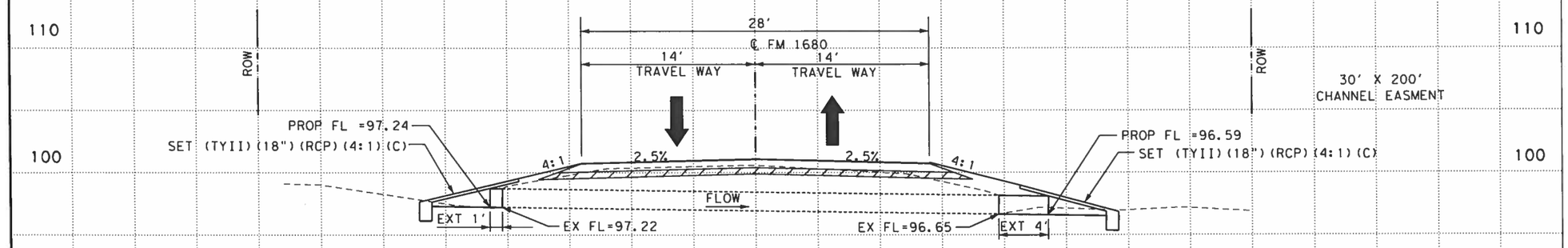

FM 1680 STA 210+00

(LAT: 29°39'22.0", LONG: 97°14'32.2")
EXIST: 1 - 18" X 40' RCP
PROP: EXT 1' LT AND 4' RT & ADD 4:1 SET LT & RT
USING SETP-CD

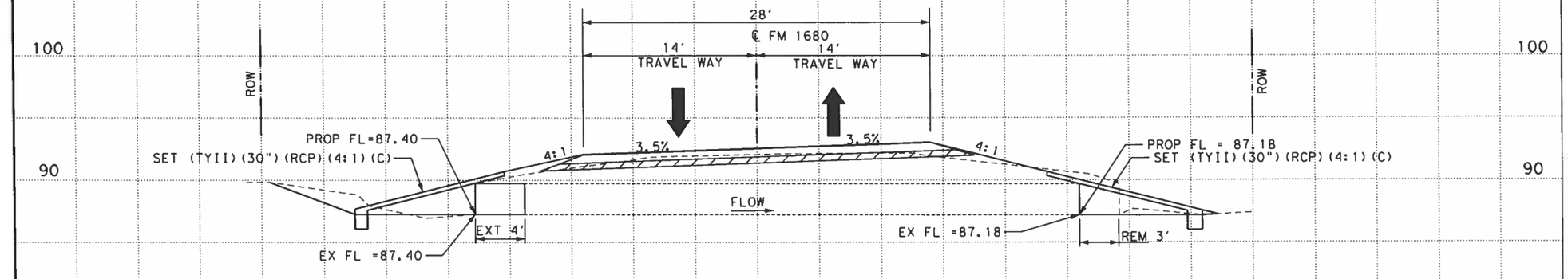

FM 1680 STA 237+60

(LAT: 29°38'53.3", LONG: 97°14'32.9")
EXIST: 2 - 30" X 52' RCP
PROP: REMOVE 4' LT & 3' RT AND
EXT 4' LT & ADD 4:1 SET LT & RT
USING SETP-CD

50 40 30 20 10 0 10 20 30 40 50

0 10 20
HORIZONTAL SCALE

0 10 20
VERTICAL SCALE

STATE OF TEXAS
OLEN D. HOWARD
69804
REGISTERED PROFESSIONAL ENGINEER
4/4/09

© 2009 Texas Department of Transportation

JACOBS
5995 Rogerdale Road
Houston, TX 77052-3495
(832) 351-7230 www.jacobs.com

FM 1680

CULVERT PROFILES STA 195+92, 210+00 & 237+60

SHEET 3

FED. RD. DIV. NO.	PROJECT NO.	SHEET NO.
6		57

STATE	DIST.	COUNTY
TEXAS	YKM	GONZALES, ETC

CONT	SECT	JOB	HIGHWAY NO.
1442	03	016, ETC	FM 1680

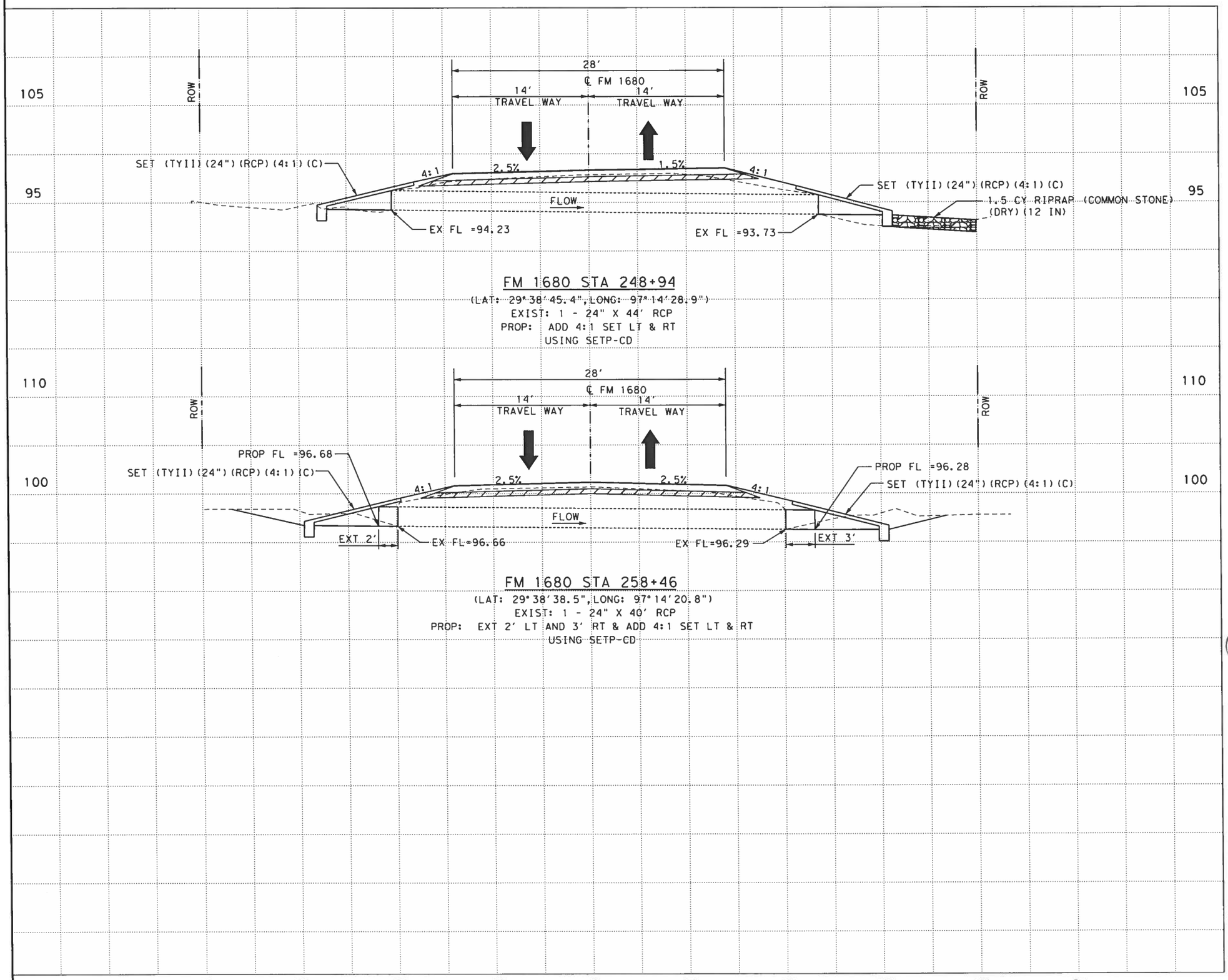

FM 1680 STA 248+94

(LAT: 29°38'45.4", LONG: 97°14'28.9")
EXIST: 1 - 24" X 44' RCP
PROP: ADD 4:1 SET LT & RT
USING SETP-CD

FM 1680 STA 258+46

(LAT: 29°38'38.5", LONG: 97°14'20.8")
EXIST: 1 - 24" X 40' RCP
PROP: EXT 2' LT AND 3' RT & ADD 4:1 SET LT & RT
USING SETP-CD

50 40 30 20 10 0 10 20 30 40 50

0 10 20
HORIZONTAL SCALE
0 10 20
VERTICAL SCALE

STATE OF TEXAS
OLEN D. HOWARD
69804
REGISTERED PROFESSIONAL ENGINEER
4/2/09

© 2009 Texas Department of Transportation

JACOBS
5995 Rogerdale Road
Houston, TX 77052-3495
(832) 351-7230 www.jacobs.com

FM 1680

CULVERT PROFILES STA 248+94 & 258+4

SHEET 4

FED. RD. DIV. NO.	PROJECT NO.	SHE NO
6		58

STATE	DIST.	COUNTY
TEXAS	YKM	GONZALES, ETC

CONT	SECT	JOB	HIGHWAY NO.
1442	03	016, ETC	FM 1680

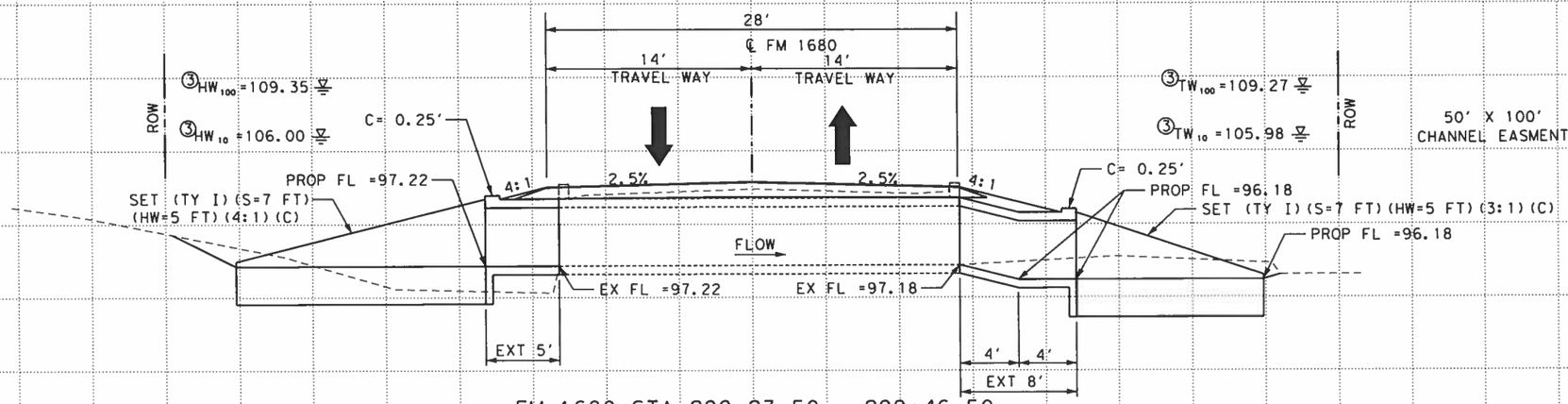

FM 1680 STA 299+23.50 - 299+46.50

(LAT: 29°38'14.3", LONG: 97°13'42.1")
EXIST: 3 - 7' X 4' X 27.3' CBC W/WINGWALLS EA END
PROP: REMOVE EXIST WINGWALLS EA END AND
EXT 5' LT AND 8' RT & ADD 4:1 SET LT & 3:1 SET RT
USING MC-7-10, MC-MD, BCS, & SETB-FW-0

NBI # 130900144203002

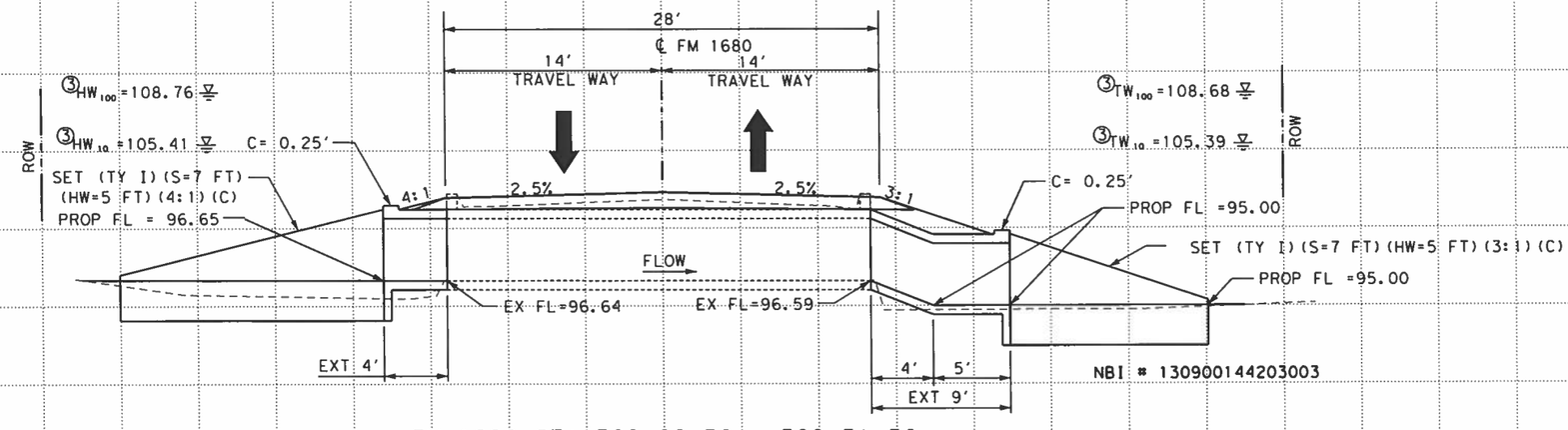

FM 1680 STA 309+08.50 - 309+31.50

(LAT: 29°38'09.2", LONG: 97°13'32.2")
EXIST: 3 - 7' X 4' X 27.3' CBC W/WINGWALLS EA END
PROP: REMOVE EXIST WINGWALLS EA END AND
EXT 4' LT AND 9' RT & ADD 4:1 SET LT & 3:1 SET RT
USING MC-7-10, MC-MD, BCS, & SETB-FW-0

NBI # 130900144203003

50 40 30 20 10 0 10 20 30 40 50

NOTES:

1. NBI # 130900144203002
2. NBI # 130900144203003
3. HW AND TW ARE EXTRACTED FROM A HEC-RAS MODEL CREATED FOR PEACH CREEK. PLEASE REFER TO HYROLOGIC & HYDRAULIC STUDY FOR FM 1680 AT PEACH CREEK, STR # 130900144203001, CSJ 144203015.

0 10 20
HORIZONTAL SCALE
0 10 20
VERTICAL SCALE

OLEN D. HOWARD
69804
REGISTERED PROFESSIONAL ENGINEER
STATE OF TEXAS
4/2/09

© 2009 Texas Department of Transportation

JACOBS
5995 Rogerdale Road
Houston, TX 77052-3495
(832) 351-7230 www.jacobs.com

FM 1680
CULVERT PROFILES STA 299+23.50-299+46.5 & 309+08.50-309+31.5

SHEET 5

FED. RD. DIV. NO.	PROJECT NO.	SHEET NO.
6		59

STATE	DIST.	COUNTY
TEXAS	YKM	GONZALES, ETC

CONT	SECT	JOB	HIGHWAY NO.
1442	03	016, ETC	FM 1680

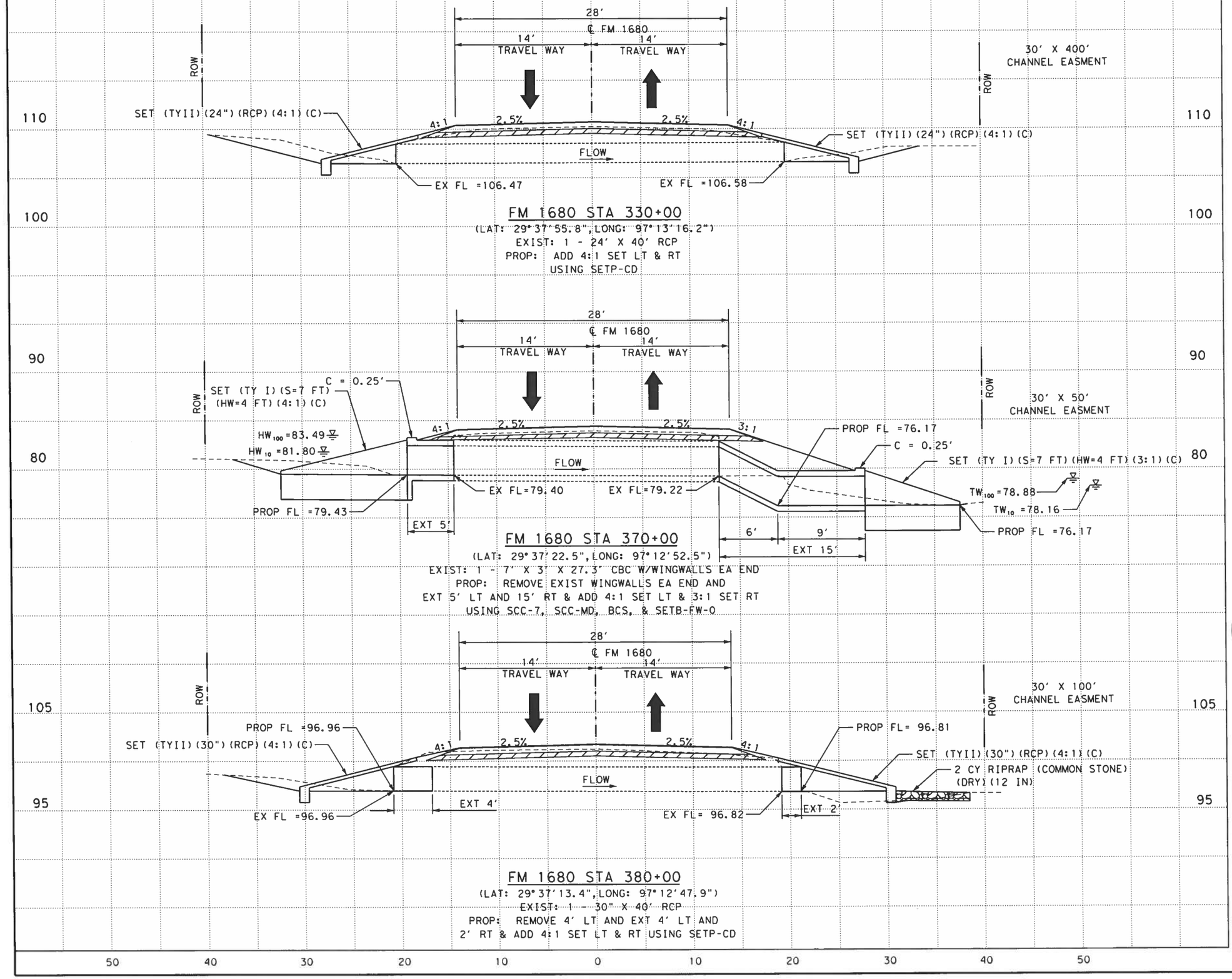

0 10 20
HORIZONTAL SCALE

0 10 20
VERTICAL SCALE

OLEN D. HOWARD
REGISTERED PROFESSIONAL ENGINEER
STATE OF TEXAS
69804
4/2/09

© 2009 Texas Department of Transportation

JACOBS
5995 Rogerdale Road
Houston, TX 77052-3495
(832) 351-7230 www.jacobs.com

FM 1680
CULVERT PROFILES STA 330+00, 370+00 380+00

SHEET 6

FED. RD. DIV. NO.	PROJECT NO.	SHEET NO.
6		60

STATE	DIST.	COUNTY
TEXAS	YKM	GONZALES, ETC

CONT	SECT	JOB	HIGHWAY NO.
1442	03	016, ETC	FM 1680

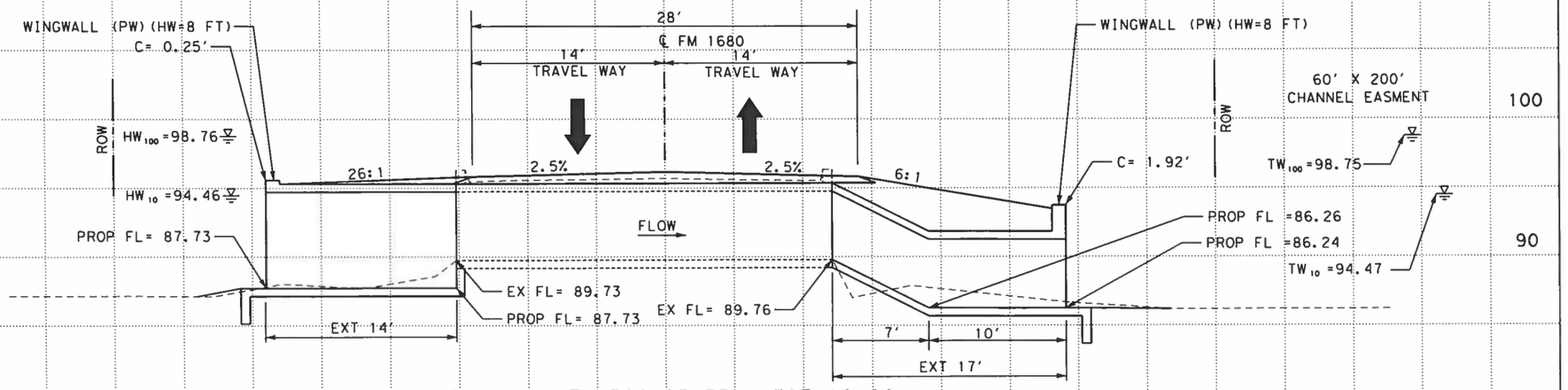

FM 1680 STA 386+95.33 - 387+18.66

(LAT: 29°37'07.1", LONG: 97°12'44.5")
EXIST: 3 - 7' X 5' X 27.3' CBC W/WINGWALLS EA END
PROP: REMOVE EXIST WINGWALLS EA END AND
EXT 14' LT W/ 3 - 7' X 7' CBC & 17' RT W/ 3 - 7' X 5' CBC
AND ADD PARALLEL WINGWALLS LT & RT
USING MC-7-10, MC-MD OR SCP-7, SCP-MD AND BCS & PW

NBI # 130900144203004

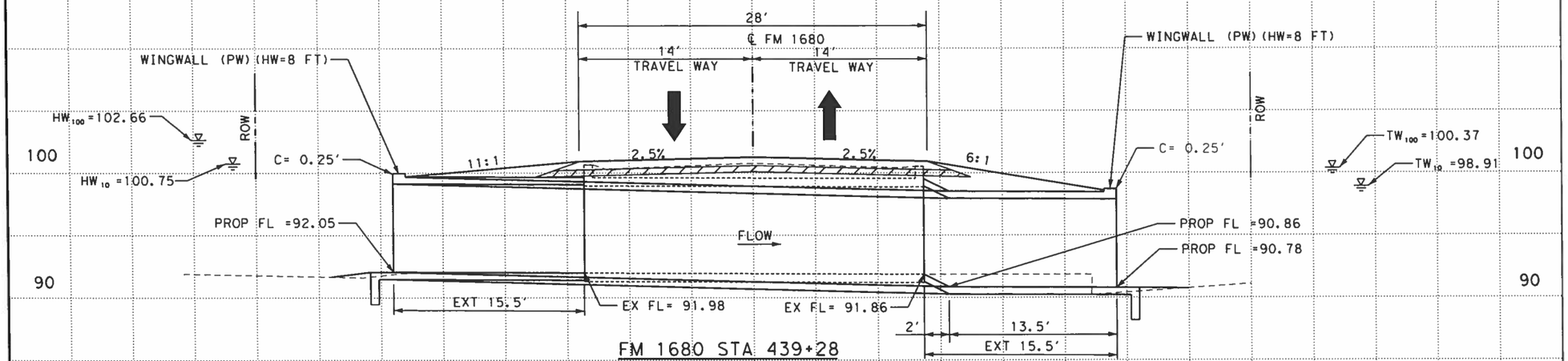

FM 1680 STA 439+28

(LAT: 29°36'31.3", LONG: 97°12'03.2")
EXIST: 1 - 10' X 7' X 27.3' CBC W/WINGWALLS EA END
PROP: REMOVE EXIST WINGWALLS EA END AND EXT 15.5' LT
AND RT AND ADD 1-7' X 7' X 58.3' CBC (STA 438+17.75) & ADD
PARALLEL WINGWALLS LT & RT USING SCC-7, SCC-10, SCC-MD,
OR SCP-7, SCP-10, SCP-MD, BCS & PW

50 40 30 20 10 0 10 20 30 40 50

0 10 20
HORIZONTAL SCALE
0 10 20
VERTICAL SCALE

4/2/09

STATE OF TEXAS
OLEN D. HOWARD
69804
REGISTERED PROFESSIONAL ENGINEER

© 2009 Texas Department of Transportation

JACOBS
5995 Rogerdale Road
Houston, TX 77052-3495
(832) 351-7230 www.jacobs.com

FM 1680

CULVERT PROFILES STA 386+95.33-387+18. & 439+28

SHEET 7 (

FED. RD. DIV. NO.	PROJECT NO.	SHEET NO.
6		61

STATE	DIST.	COUNTY
TEXAS	YKM	GONZALES, ETC

CONT	SECT	JOB	HIGHWAY NO.
1442	03	016, ETC	FM 1680

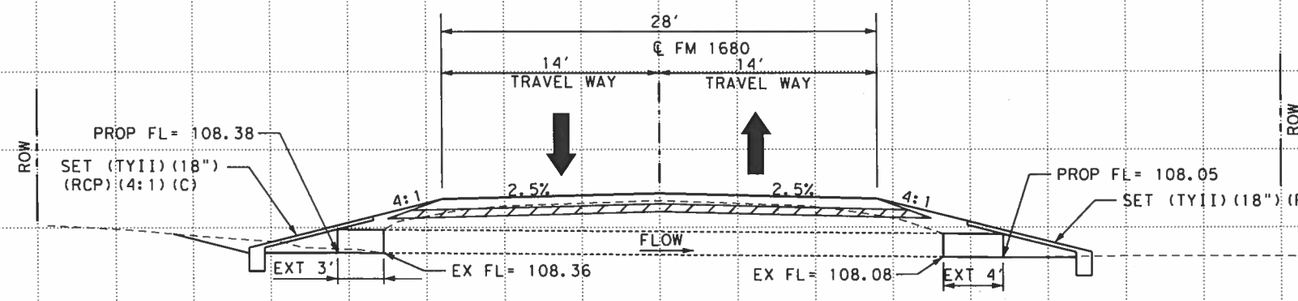

FM 1680 STA 469+85

(LAT: 29°36'13.7", LONG: 97°17'34.9")

EXIST: 1 - 18" X 36' RCP

PROP: EXT 3' LT AND 4' RT & ADD 4:1 SET LT & RT USING SETP-CD

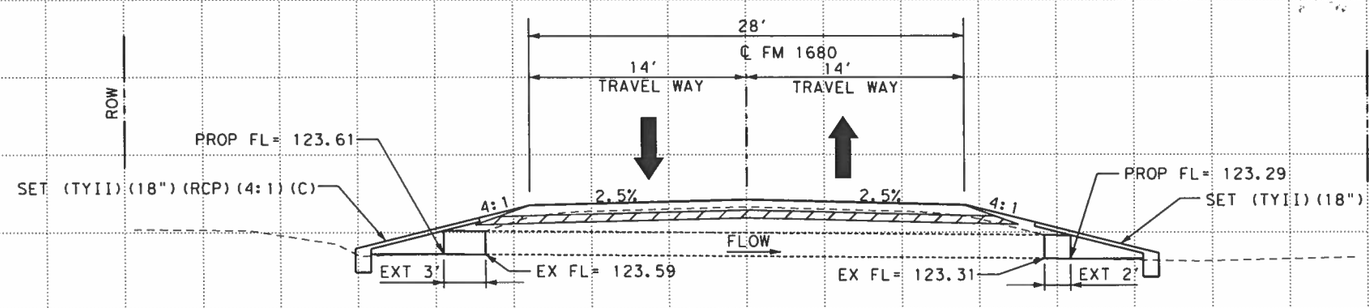

FM 1680 STA 496+00

(LAT: 29°35'56.7", LONG: 97°11'12.2")

EXIST: 1 - 18" X 36' RCP

PROP: EXT 3' LT AND 2' RT & ADD 4:1 SET LT & RT USING SETP-CD

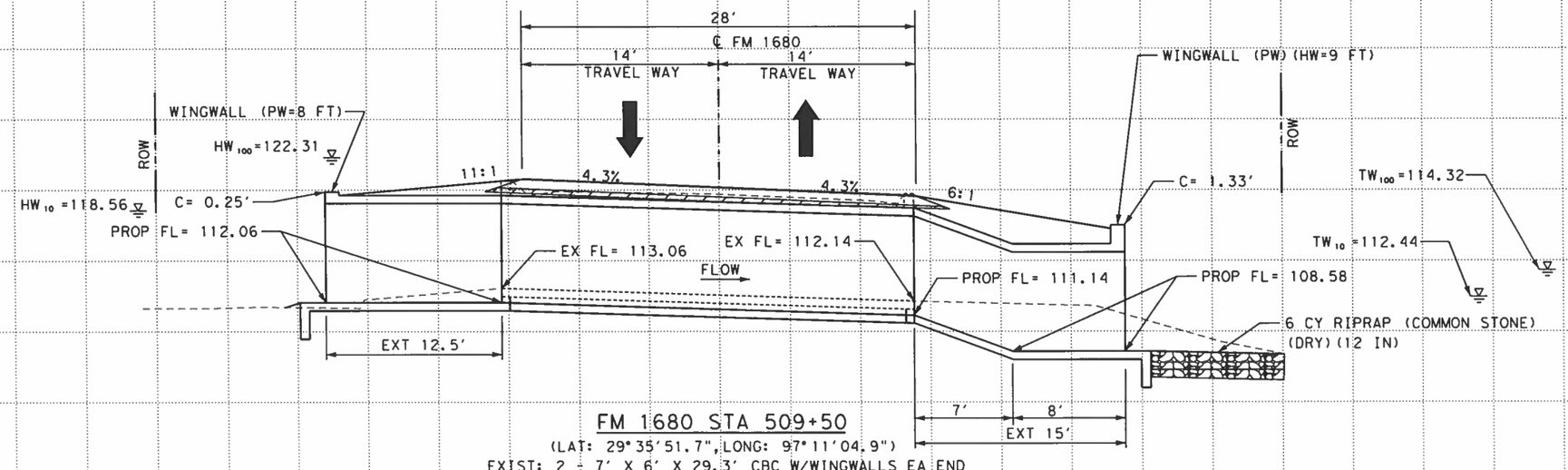

FM 1680 STA 509+50

(LAT: 29°35'51.7", LONG: 97°11'04.9")

EXIST: 2 - 7' X 6' X 29.3' CBC W/WINGWALLS EA END

PROP: REMOVE EXIST WINGWALLS EA END AND EXT 12.5' LT AND 15' RT W/ 7' X 7' CBC AND ADD 1-7' X 7' X 56.8' CBC (STA 509+38.62) & ADD PARALLEL WINGWALLS LT & RT USING MC-7-10, MC-MD, BCS, & PW

50 40 30 20 10 0 10 20 30 40 50

0 10 20

HORIZONTAL SCALE

0 10 20

VERTICAL SCALE

Olen D. Howard 4/2/09

STATE OF TEXAS
OLEN D. HOWARD
69804
REGISTERED PROFESSIONAL ENGINEER

© 2009 Texas Department of Transportation

JACOBS
5995 Rogerdale Road
Houston, TX 77052-3495
(832) 351-7230 www.jacobs.com

FM 1680
CULVERT PROFILES STA 469+85, 496+00 509+50

SHEET 8 (

FED. RD. DIV. NO.	PROJECT NO.	SHEET NO
6		62

STATE	DIST.	COUNTY
TEXAS	YKM	GONZALES, ETC

CONT	SECT	JOB	HIGHWAY NO.
1442	03	016, ETC	FM 1680

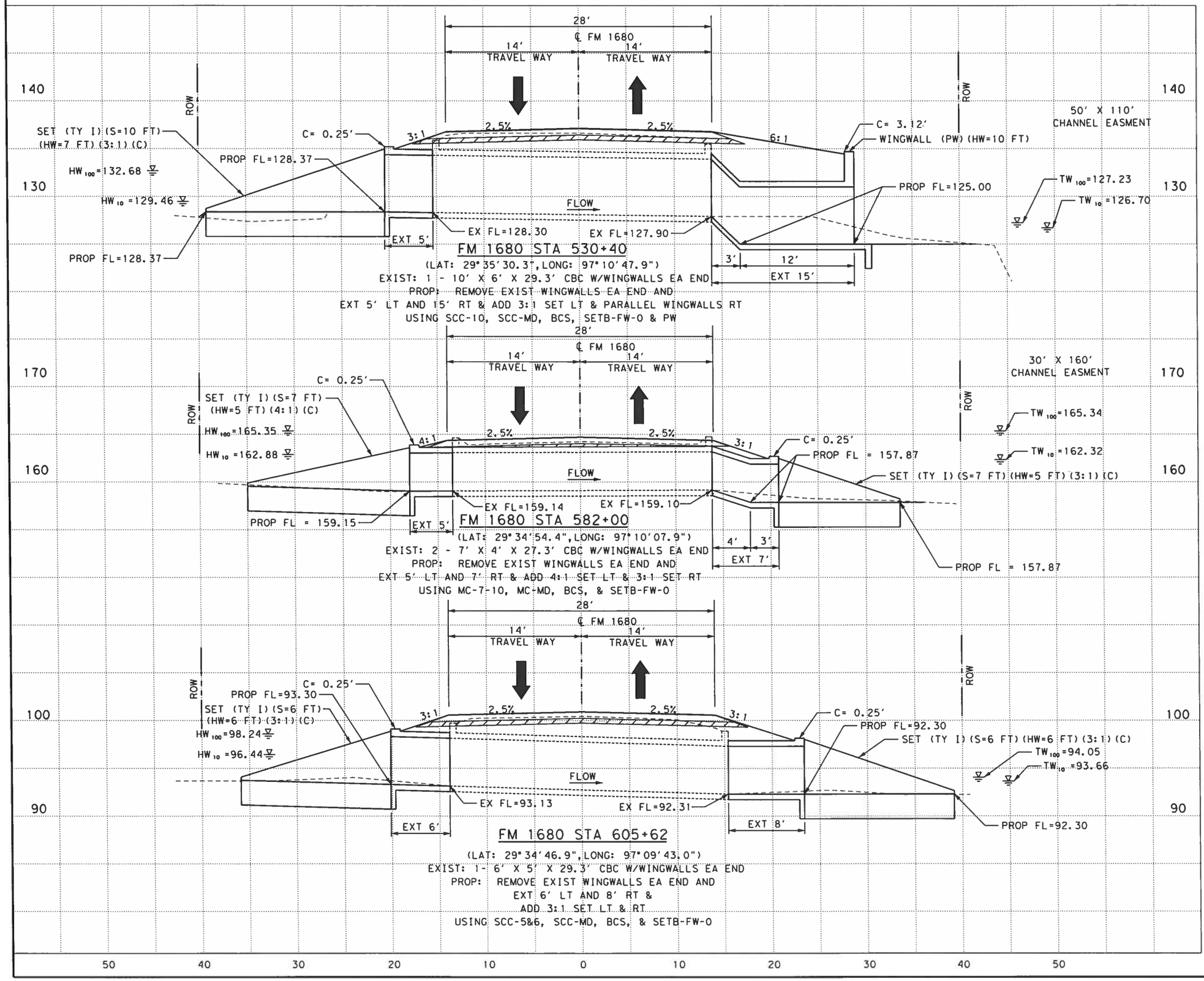

© 2009 Texas Department of Transportation

JACOBS
5995 Rogerdale Road
Houston, TX 77052-3495
(832) 351-7230 www.jacobs.com

FM 1680
CULVERT PROFILES STA 530+40, 582+00, 605+62

SHEET 9 OF

FED. RD. DIV. NO.	PROJECT NO.	SHEET NO.
6		63

STATE	DIST.	COUNTY	
TEXAS	YKM	GONZALES, ETC	
CONT	SECT	JOB	HIGHWAY NO.
1442	03	016, ETC	FM 1680

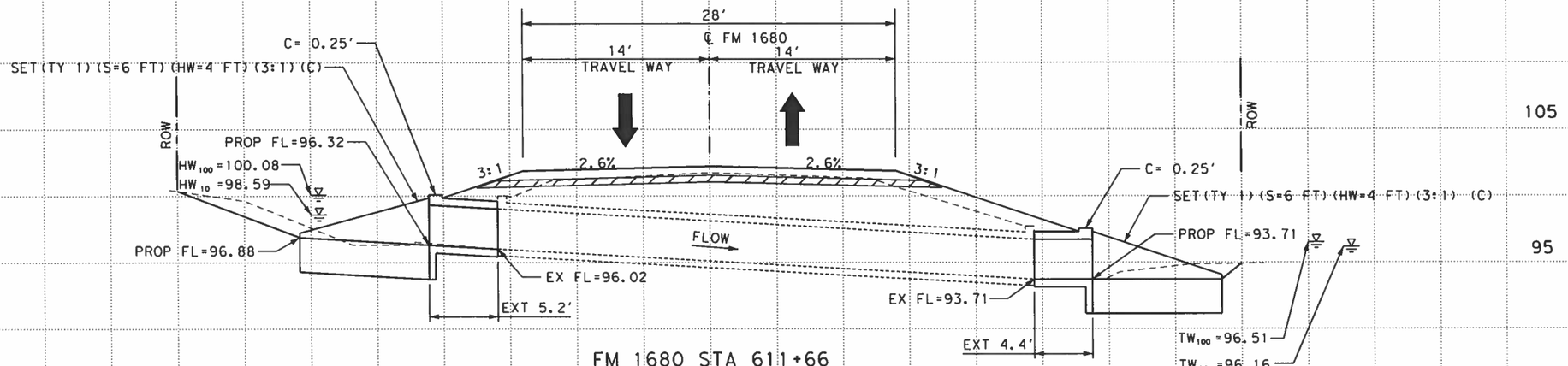

FM 1680 STA 611+66

(LAT: 29°34'46.9", LONG: 97°09'36.0")
EXIST: 1 - 6' X 3' X 40.3' CBC W/WINGWALLS EA END
PROP: REMOVE EXIST WINGWALLS EA END AND EXT 5.2' LT AND 4.4' RT &
ADD 3:1 SET LT & RT USING SCC-5&6, SCC-MD, BCS, & SETB-FW-0

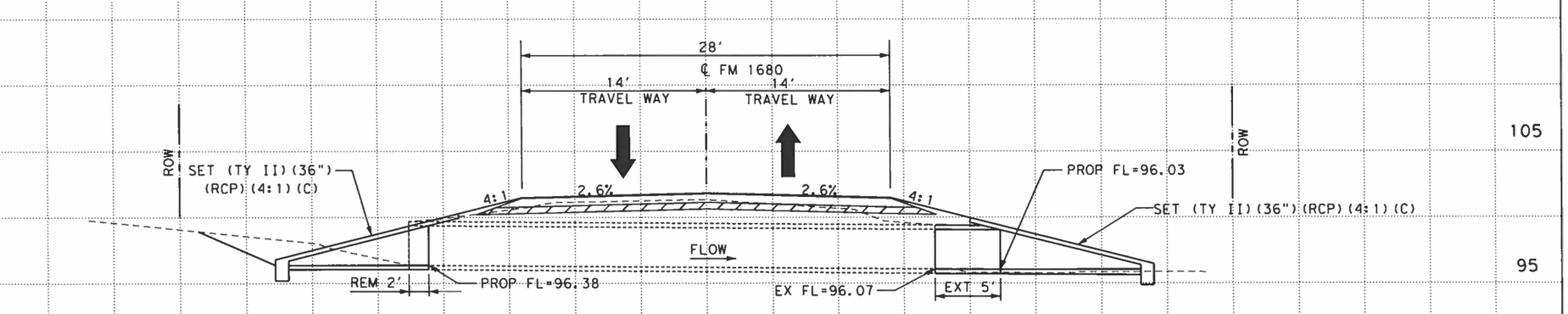

FM 1680 STA 633+52

(LAT: 29°34'47.1", LONG: 97°09'11.2")
EXIST: 1 - 36" X 40' RCP
PROP: REMOVE 2' LT AND EXT 5' RT &
ADD 4:1 SET LT & RT USING SETP-CD

50 40 30 20 10 0 10 20 30 40 50

0 10 20
HORIZONTAL SCALE

0 10 20
VERTICAL SCALE

STATE OF TEXAS
OLEN D. HOWARD
69804
REGISTERED PROFESSIONAL ENGINEER
4/2/09

© 2009 Texas Department of Transportation

JACOBS
5995 Rogerdale Road
Houston, TX 77052-3495
(832) 351-7230 www.jacobs.com

FM 1680

CULVERT PROFILES STA 611+66 & 633+5

SHEET 10

FED. RD. DIV. NO.	PROJECT NO.		SHEET NO.
6			64
STATE	DIST.	COUNTY	
TEXAS	YKM	GONZALES, ETC	
CONT	SECT	JOB	HIGHWAY NO.
1442	03	016, ETC	FM 1680

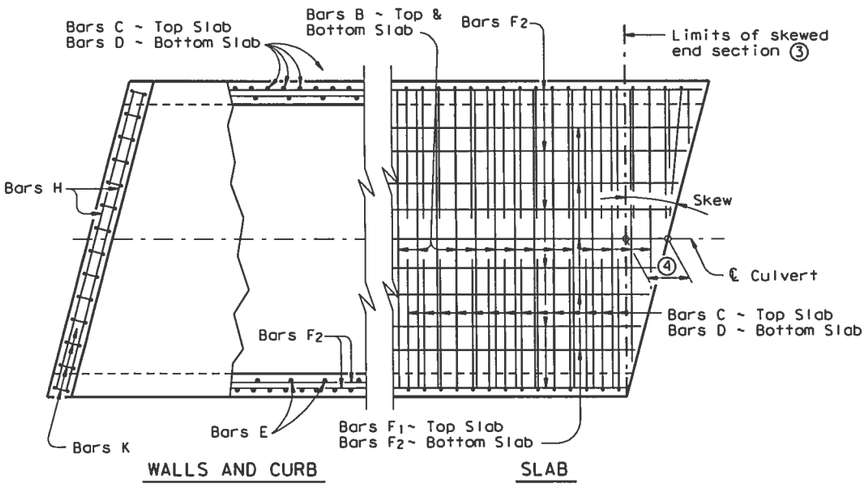

PLAN OF SKEWED ENDS ~ FROM 0° TO 15°⑦

② When the spacing between Bars B becomes less than half of the normal spacing, bars shall be cut to avoid fouling

③ The length of Bars B and E will vary in the skewed end sections

④ [One half of overall width] x [Tan of the skew angle]

⑤ Bars F_1 and F_2 shall be continuous through the angle section. They shall be bent to remain parallel to the walls of the Box Culvert.

⑥ When necessary to avoid fouling in acute corners, the slab extension leg of Bars C and Bars D may be shortened to a minimum of 1'-6" for skews of 30° and 45°.

⑦ For skews of 15° or less, the contractor has the option of placing Bars B, C and D parallel to the skewed end while maintaining spacing along centerline box. Lengths of Bars B shown on the standards shall be increased to accommodate the skew.

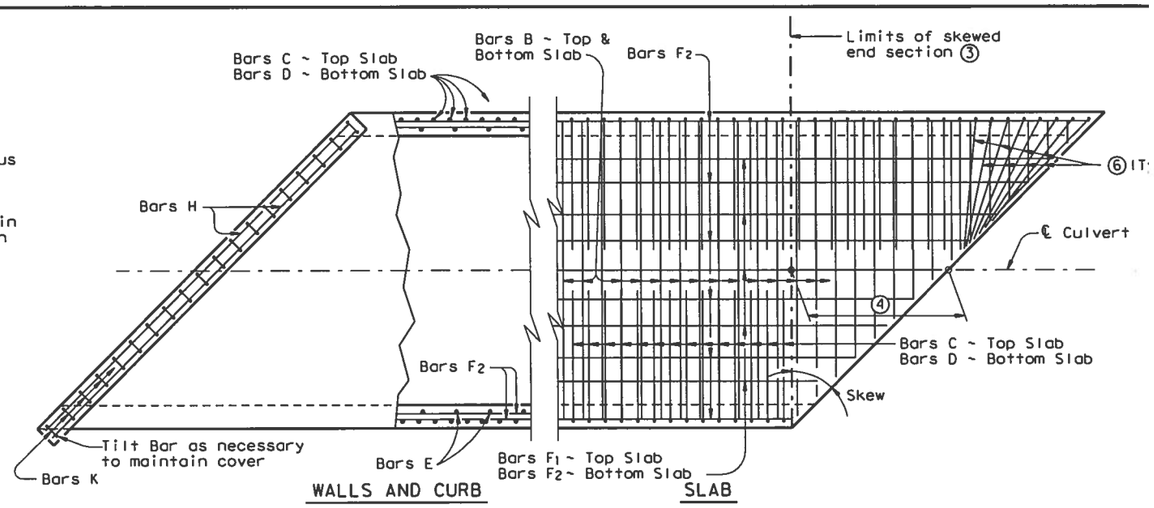

PLAN OF SKEWED ENDS ~ OVER 30° TO 45°

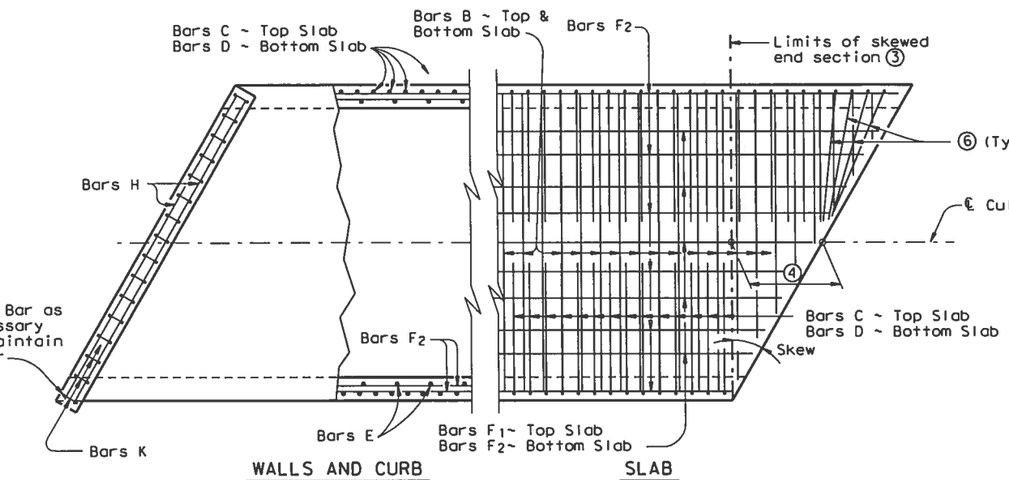

PLAN OF SKEWED ENDS ~ OVER 15° TO 30°

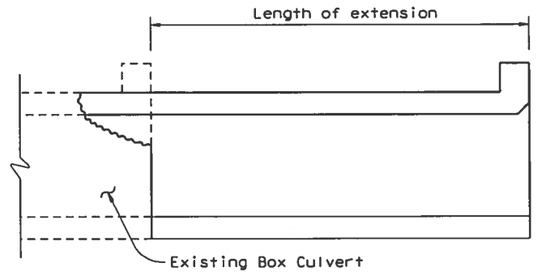

LENGTHENING DETAIL①

① For box culverts with less than 2'-0" of fill, the top slab shall be broken back to provide a minimum 1'-10" lap of the existing longitudinal bars with the longitudinal bars in the extension. If the depth of fill is 2'-0" or greater, the top slab shall be broken back to provide a 1'-0" minimum embedment of existing longitudinal reinforcing into the extension. Alternatively, if the fill height is greater than 2'-0", the existing curb may be left in place and 2'-0" long #6 bars shall be drilled and grouted 1'-0" into the existing top slab at 1'-6" center to center spacing. Wings and apron shall be broken back as necessary to install the extension. Exposed wingwall and apron reinforcing may be removed or cleaned and included in the extension. When lengthening existing box culverts with dimensions different than current standard dimensions, horizontal and vertical transitions shall be formed as directed by the Engineer. Bottom slabs shall match to maintain an uninterrupted flow line. Existing and new reinforcing shall be field bent into transition maintaining specified cover requirements.

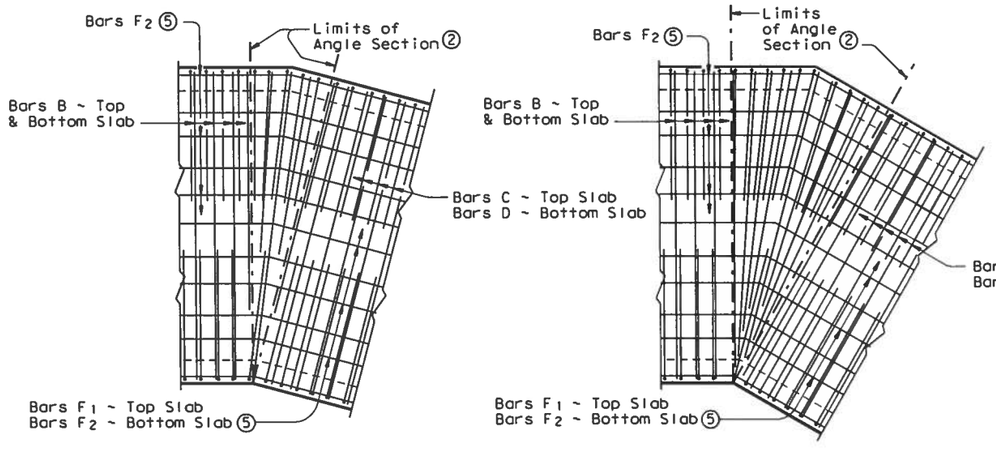

PLAN OF ANGLE SECTION ~ FROM 0° TO 15°

PLAN OF ANGLE SECTION ~ OVER 15° TO 30°

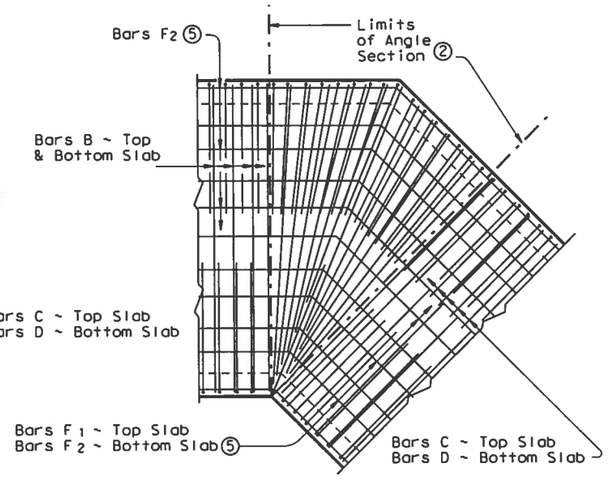

PLAN OF ANGLE SECTION ~ OVER 30° TO 45°

GENERAL NOTES:

Designed according to current AASHTO Standard and Interim Specifications.

All reinforcing steel shall be Grade 60.

All concrete shall be Class "C" with these exceptions: use Class "S" for top slabs of culverts with overlay, with 1-to-2 course surface treatment, or with the top slab as the final riding surface.

Class "C" concrete shall have a minimum compressive strength of 3,600 psi. Class "S" concrete shall have a minimum compres strength of 4,000 psi.

The use of permanent forms is not allowed.

Refer to Single Box Culverts Cast-in-Place standard for deta of straight sections of culvert. For skewed sections and angl sections refer to Single Box Culverts Cast-in-Place standard f slab and wall dimensions, bar sizes, maximum bar spacing, and any other details not shown. For Skewed ends with curbs, adju length of Bars H, number of Bars K, curb concrete volume and reinforcing steel weight by dividing the values shown on the culvert standards by the cosine of the skew angle.

Laps for Bars H, when required, shall be 1'-9" for uncoated bars and 2'-7" for epoxy coated.

HS20 LOADING

DISCLAIMER:
The use of this standard is governed by the "Texas Engineering Practice Act". No warranty of any kind is made by TxDOT for any purpose whatsoever. TxDOT assumes no responsibility for the conversion of this standard to other formats or for incorrect results or damages resulting from its use.

LEVELS DISPLAYED

ACC:

Texas Department of Transportatio
Bridge Division

SINGLE BOX CULVERTS CAST-IN-PLACE MISCELLANEOUS DETAI

SCC-MD

FILE: sccmdste.dgn	DN: CAF	CK: LMW	DW: BWH/TxDOT	CK:
©TxDOT May 2005	DISTRICT	PROJECT NUMBER		
REVISIONS	YKM			
	COUNTY	CONTROL	SECT	JOB
	GONZALES, ETC	1442	03	016, ETC

DISCLAIMER:
The use of this standard is governed by the "Texas Engineering Practice Act". No warranty of any kind is made by TxDOT for any purpose whatsoever. TxDOT assumes no responsibility for the conversion of this standard to other formats or for incorrect results or damages resulting from its use.

BILLS OF REINFORCING STEEL (For Box Length = 40 feet)

SECTION DIMENSIONS				FILL HEIGHT ⑤	Bars B					Bars C							Bars D							Bars E~#4 at 18" Max			Bars F_1 ~#4				Bars F_2~#4 at 18" Max			Bars H 4~#4		Bars K		QUANTITIES: Per foot of Barrel		Curb		Total	
S	H	T	U		No.	Size	Spa	Length	Weight	No.	Size	Spa	Length	Weight	"X"	"Y"	No.	Size	Spa	Length	Weight	"Y"	"Z"	No.	Length	Wt	No.	Spa	Length	Wt	No.	Length	Wt	Length	Wt	No.	Wt	Conc (CY)	Reinf (Lb)	Conc (CY)	Reinf (Lb)	Conc (CY)	Re
5'-0"	2'-0"	7"	7"	26'	194	#5	5"	5'-11"	1,197	162	#5	6"	5'- 2"	873	2'- 5"	2'- 9"	162	#5	6"	5'- 4"	901	2'- 9"	2'- 7"	56	2'-0"	75	8	7"	39'-9"	212	22	39'-9"	584	5'-11"	16	14	40	0.353	96.1	0.5	56	14.6	3
5'-0"	2'-0"	8"	7"	30'	194	#5	5"	5'-11"	1,197	194	#4	5"	5'- 0"	648	2'- 6"	2'- 6"	194	#4	5"	4'- 9"	616	2'- 6"	2'- 3"	56	2'-0"	75	4	18"	39'-9"	106	22	39'-9"	584	5'-11"	16	14	40	0.391	80.7	0.5	56	16.1	3
5'-0"	3'-0"	7"	7"	26'	194	#5	5"	5'-11"	1,197	194	#4	5"	5'-11"	767	3'- 5"	2'- 6"	194	#4	5"	4'- 8"	605	2'- 6"	2'- 2"	56	3'-0"	112	8	7"	39'-9"	212	26	39'-9"	690	5'-11"	16	14	40	0.396	89.6	0.5	56	16.3	3
5'-0"	3'-0"	8"	7"	30'	194	#5	5"	5'-11"	1,197	194	#4	5"	6'- 0"	778	3'- 6"	2'- 6"	194	#4	5"	4'- 9"	616	2'- 6"	2'- 3"	56	3'-0"	112	4	18"	39'-9"	106	26	39'-9"	690	5'-11"	16	14	40	0.434	87.5	0.5	56	17.9	3
5'-0"	4'-0"	7"	7"	26'	194	#5	5"	5'-11"	1,197	194	#4	5"	6'-11"	896	4'- 5"	2'- 6"	194	#4	5"	4'- 8"	605	2'- 6"	2'- 2"	56	4'-0"	150	8	7"	39'-9"	212	26	39'-9"	690	5'-11"	16	14	40	0.439	93.8	0.5	56	18.1	3
5'-0"	4'-0"	8"	7"	30'	194	#5	5"	5'-11"	1,197	194	#4	5"	7'- 0"	907	4'- 6"	2'- 6"	194	#4	5"	4'- 9"	616	2'- 6"	2'- 3"	56	4'-0"	150	4	18"	39'-9"	106	26	39'-9"	690	5'-11"	16	14	40	0.477	91.7	0.5	56	19.6	3
5'-0"	5'-0"	7"	7"	26'	194	#5	5"	5'-11"	1,197	194	#4	5"	7'-11"	1,026	5'- 5"	2'- 6"	194	#4	5"	4'- 8"	605	2'- 6"	2'- 2"	56	5'-0"	187	8	7"	39'-9"	212	30	39'-9"	797	5'-11"	16	14	40	0.483	100.6	0.5	56	19.8	4
5'-0"	5'-0"	8"	7"	30'	194	#5	5"	5'-11"	1,197	194	#4	5"	8'- 0"	1,037	5'- 6"	2'- 6"	194	#4	5"	4'- 9"	616	2'- 6"	2'- 3"	56	5'-0"	187	4	18"	39'-9"	106	30	39'-9"	797	5'-11"	16	14	40	0.521	98.5	0.5	56	21.3	3
6'-0"	3'-0"	7"	7"	20'	194	#5	5"	6'-11"	1,400	162	#5	6"	6'- 6"	1,098	3'- 5"	3'- 1"	162	#5	6"	5'- 8"	957	3'- 1"	2'- 7"	56	3'-0"	112	10	7"	39'-9"	266	29	39'-9"	770	6'-11"	18	16	45	0.439	115.1	0.5	63	18.1	4
6'-0"	3'-0"	8"	7"	26'	162	#6	6"	6'-11"	1,683	162	#5	6"	6'- 7"	1,112	3'- 6"	3'- 1"	162	#5	6"	5'- 9"	972	3'- 1"	2'- 8"	56	3'-0"	112	5	18"	39'-9"	133	29	39'-9"	770	6'-11"	18	16	45	0.484	119.6	0.5	63	19.9	4
6'-0"	3'-0"	9"	8"	30'	162	#6	6"	7'- 1"	1,724	162	#5	6"	6'- 8"	1,126	3'- 7"	3'- 1"	162	#5	6"	5'-10"	986	3'- 1"	2'- 9"	56	3'-0"	112	5	18"	39'-9"	133	29	39'-9"	770	7'- 1"	19	18	51	0.556	121.3	0.5	70	22.7	4
6'-0"	4'-0"	7"	7"	20'	194	#5	5"	6'-11"	1,400	194	#4	5"	7'- 3"	940	4'- 5"	2'-10"	194	#4	5"	5'- 0"	648	2'-10"	2'- 2"	56	4'-0"	150	10	7"	39'-9"	266	29	39'-9"	770	6'-11"	18	16	45	0.483	104.4	0.5	63	19.8	4
6'-0"	4'-0"	8"	7"	26'	194	#6	5"	6'-11"	2,015	162	#5	6"	7'- 7"	1,281	4'- 6"	3'- 1"	162	#5	6"	5'- 9"	972	3'- 1"	2'- 8"	56	4'-0"	150	5	18"	39'-9"	133	29	39'-9"	770	6'-11"	18	16	45	0.527	133.0	0.5	63	21.6	5
6'-0"	4'-0"	9"	8"	30'	162	#6	6"	7'- 1"	1,724	162	#5	6"	7'- 8"	1,295	4'- 7"	3'- 1"	162	#5	6"	5'-10"	986	3'- 1"	2'- 9"	56	4'-0"	150	5	18"	39'-9"	133	29	39'-9"	770	7'- 1"	19	18	51	0.605	126.5	0.5	70	24.7	5
6'-0"	5'-0"	7"	7"	20'	194	#5	5"	6'-11"	1,400	194	#4	5"	8'- 3"	1,069	5'- 5"	2'-10"	194	#4	5"	5'- 0"	648	2'-10"	2'- 2"	56	5'-0"	187	10	7"	39'-9"	266	33	39'-9"	876	6'-11"	18	16	45	0.526	111.2	0.5	63	21.5	4
6'-0"	5'-0"	8"	7"	26'	194	#6	5"	6'-11"	2,015	162	#5	6"	8'- 7"	1,450	5'- 6"	3'- 1"	162	#5	6"	5'- 9"	972	3'- 1"	2'- 8"	56	5'-0"	187	5	18"	39'-9"	133	33	39'-9"	876	6'-11"	18	16	45	0.570	140.8	0.5	63	23.3	5
6'-0"	5'-0"	9"	8"	30'	194	#6	5"	7'- 1"	2,064	162	#5	6"	8'- 8"	1,464	5'- 7"	3'- 1"	162	#5	6"	5'-10"	986	3'- 1"	2'- 9"	56	5'-0"	187	5	18"	39'-9"	133	33	39'-9"	876	7'- 1"	19	18	51	0.654	142.8	0.5	70	26.7	5
6'-0"	6'-0"	7"	7"	20'	194	#5	5"	6'-11"	1,400	194	#4	5"	9'- 3"	1,199	6'- 5"	2'-10"	194	#4	5"	5'- 0"	648	2'-10"	2'- 2"	56	6'-0"	224	10	7"	39'-9"	266	37	39'-9"	982	6'-11"	18	16	45	0.569	118.0	0.5	63	23.3	4
6'-0"	6'-0"	8"	7"	26'	194	#6	5"	6'-11"	2,015	162	#5	6"	9'- 7"	1,619	6'- 6"	3'- 1"	162	#5	6"	5'- 9"	972	3'- 1"	2'- 8"	56	6'-0"	224	5	18"	39'-9"	133	37	39'-9"	982	6'-11"	18	16	45	0.613	148.6	0.5	63	25.0	6
6'-0"	6'-0"	9"	8"	30'	194	#6	5"	7'- 1"	2,064	162	#5	6"	9'- 8"	1,633	6'- 7"	3'- 1"	162	#5	6"	5'-10"	986	3'- 1"	2'- 9"	56	6'-0"	224	5	18"	39'-9"	133	37	39'-9"	982	7'- 1"	19	18	51	0.704	150.6	0.5	70	28.7	6

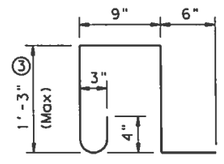

BARS K ~ #4
(Spa = 1'-0" Max)
(Length = 4'-3")

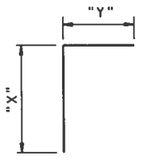

BARS C

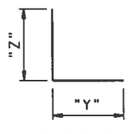

BARS D

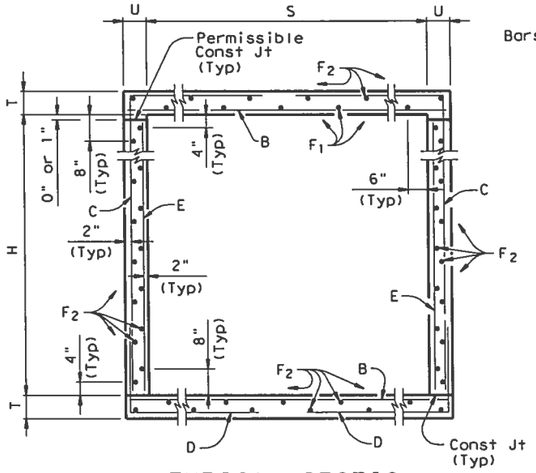

TYPICAL SECTION

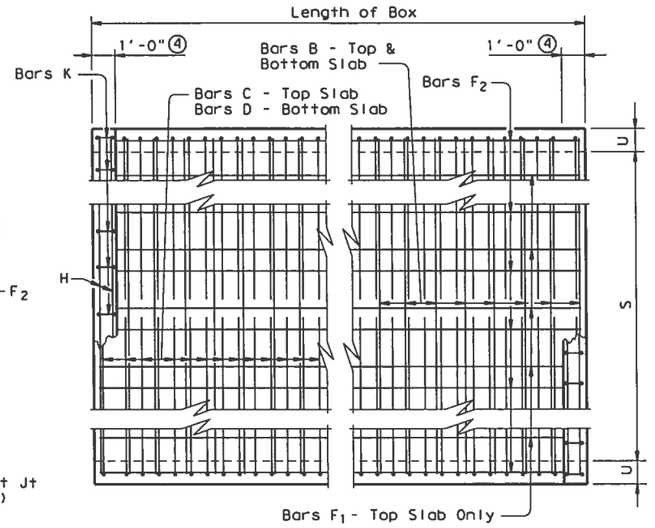

PLAN OF REINF STEEL

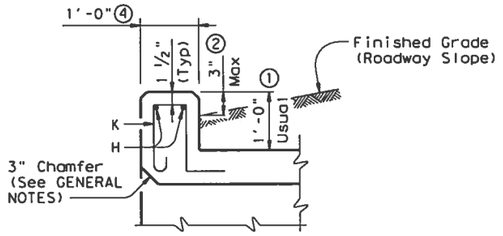

SECTION THRU CURB

① 0" min to 5'-0" max. Estimated curb heights are shown elsewhere in the plans. For structures without railing and curbs taller than 1'-0", refer to ECD standard. For structures with T6 bridge rail, refer to T6-CM standard. For structures with bridge rail, other than T6, refer to RAC standard.

② For vehicle safety, the following requirements must be met:
- For structures without bridge rail, curbs shall project no more than 3" above finished grade.
- For structures with bridge rail, curbs shall be flush with finished grade.

Curb heights shall be reduced, if necessary, to meet the above requirements. No changes will be made in quantities and no additional compensation will be allowed for this work.

③ For curbs less than 1'-0" high, tilt bars K or reduce bar height as necessary to maintain cover. For curbs less than 3" high, bars K may be omitted.

④ 1'-0" typical. 2'-0" when RAC standard is referred to elsewhere in the plans.

⑤ For each box size, minimum fill height shown shall be used for all culverts with less than 2'-0" of fill.

GENERAL NOTES:

Designed according to current AASHTO Standard and Interim Specifications.

Designed to the maximum fill heights shown.

All reinforcing steel shall be Grade 60.

All concrete shall be Class "C" with these exceptions: use Class "S" for top slabs of culverts with overlay, with 1-to-2 course surface treatment, or with the top slab as the final riding surface.

Class "C" concrete shall have a minimum compressive strength of 3,600 psi. Class "S" concrete shall have a minimum compressi strength of 4,000 psi.

The use of permanent forms is not allowed.

Reinforcing bars shall be adjusted to provide a minimum of 1 ¼ inches clear cover.

The bottom edge of the top slab shall be chamfered 3 inches at the entrance.

Construction joints shown at the flow line may be raised a maximum of 6 inches at the Contractor's option. If this option is used, Bars E may be cut off or raised, and Bars C and D may be reversed.

See Standard SCC-MD for skewed ends, angle sections and lengthening details.

HS20 LOADING

Texas Department of Transportatio
Bridge Division

SINGLE BOX CULVERTS CAST-IN-PLACE 0' TO 30' FILL

SCC-5 & 6

FILE: scc56ste.dgn	DN: GAF	CK: LWW	DW: BWH/TxDOT	CK:	
©TxDOT May 2005	DISTRICT	PROJECT NUMBER			
REVISIONS	YKM				
	COUNTY	CONTROL	SECT	JOB	
	GONZALES, ETC	1442	03	016, ETC	

LEVELS DISPLAYED
ACC:
1

DISCLAIMER:
The use of this standard is governed by the "Texas Engineering Practice Act". No warranty of any kind is made by TxDOT for any purpose whatsoever. TxDOT assumes no responsibility for the conversion of this standard to other formats or for incorrect results or damages resulting from its use.

SECTION DIMENSIONS				FILL HEIGHT ⑤	BILLS OF REINFORCING STEEL (For Box Length = 40 feet)																											QUANTITIES					
					Bars B					Bars C							Bars D							Bars E~#4 at 18" Max			Bars F_1 ~#4				Bars F_2~#4 at 18" Max			Bars H 4~#4		Bars K		Per foot of Barrel		Curb		Total	
S	H	T	U		No.	Size	Spa	Length	Weight	No.	Size	Spa	Length	Weight	"X"	"Y"	No.	Size	Spa	Length	Weight	"Y"	"Z"	No.	Length	Wt	No.	Spa	Length	Wt	No.	Length	Wt	Length	Wt	No.	Wt	Conc (CY)	Reinf (Lb)	Conc (CY)	Reinf (Lb)	Conc (CY)	Re
7'-0"	3'-0"	7"	7"	16'	162	#6	6"	7'-11"	1,926	194	#5	5"	6'-11"	1,400	3'- 5"	3'- 6"	194	#5	5"	6'- 1"	1,231	3'- 6"	2'- 7"	56	3'-0"	112	12	7"	39'-9"	319	31	39'-9"	823	7'-11"	21	18	51	0.483	145.3	0.6	72	19.9	5
7'-0"	3'-0"	8"	7"	20'	162	#6	6"	7'-11"	1,926	194	#5	5"	7'- 0"	1,416	3'- 6"	3'- 6"	194	#5	5"	6'- 2"	1,248	3'- 6"	2'- 8"	56	3'-0"	112	5	18"	39'-9"	133	31	39'-9"	823	7'-11"	21	18	51	0.533	141.5	0.6	72	21.9	5
7'-0"	3'-0"	9"	8"	23'	162	#6	6"	8'- 1"	1,967	194	#5	5"	7'- 1"	1,433	3'- 7"	3'- 6"	194	#5	5"	6'- 3"	1,265	3'- 6"	2'- 9"	56	3'-0"	112	5	18"	39'-9"	133	31	39'-9"	823	8'- 1"	22	20	57	0.611	143.3	0.6	79	25.0	5
7'-0"	3'-0"	10"	8"	30'	194	#6	5"	8'- 1"	2,355	194	#5	5"	7'- 2"	1,450	3'- 8"	3'- 6"	194	#5	5"	6'- 4"	1,281	3'- 6"	2'-10"	56	3'-0"	112	5	18"	39'-9"	133	31	39'-9"	823	8'- 1"	22	20	57	0.663	153.9	0.6	79	27.1	6
7'-0"	4'-0"	7"	7"	16'	162	#6	6"	7'-11"	1,926	162	#5	6"	7'-11"	1,338	4'- 5"	3'- 6"	162	#5	6"	6'- 1"	1,028	3'- 6"	2'- 7"	56	4'-0"	150	12	7"	39'-9"	319	31	39'-9"	823	7'-11"	21	18	51	0.526	139.6	0.6	72	21.6	5
7'-0"	4'-0"	8"	7"	20'	194	#6	5"	7'-11"	2,307	162	#5	6"	8'- 0"	1,352	4'- 6"	3'- 6"	162	#5	6"	6'- 2"	1,042	3'- 6"	2'- 8"	56	4'-0"	150	5	18"	39'-9"	133	31	39'-9"	823	7'-11"	21	18	51	0.576	145.2	0.6	72	23.6	5
7'-0"	4'-0"	9"	8"	23'	194	#6	5"	8'- 1"	2,355	162	#5	6"	8'- 1"	1,366	4'- 7"	3'- 6"	162	#5	6"	6'- 3"	1,056	3'- 6"	2'- 9"	56	4'-0"	150	5	18"	39'-9"	133	31	39'-9"	823	8'- 1"	22	20	57	0.660	147.1	0.6	79	27.0	5
7'-0"	4'-0"	10"	8"	30'	194	#6	5"	8'- 1"	2,355	194	#5	5"	8'- 2"	1,652	4'- 8"	3'- 6"	194	#5	5"	6'- 4"	1,281	3'- 6"	2'-10"	56	4'-0"	150	5	18"	39'-9"	133	31	39'-9"	823	8'- 1"	22	20	57	0.712	159.9	0.6	79	29.1	6
7'-0"	5'-0"	7"	7"	16'	162	#6	6"	7'-11"	1,926	162	#5	6"	8'-11"	1,507	5'- 5"	3'- 6"	162	#5	6"	6'- 1"	1,028	3'- 6"	2'- 7"	56	5'-0"	187	12	7"	39'-9"	319	35	39'-9"	929	7'-11"	21	18	51	0.569	147.4	0.6	72	23.4	5
7'-0"	5'-0"	8"	7"	20'	194	#6	5"	7'-11"	2,307	162	#5	6"	9'- 0"	1,521	5'- 6"	3'- 6"	162	#5	6"	6'- 2"	1,042	3'- 6"	2'- 8"	56	5'-0"	187	5	18"	39'-9"	133	35	39'-9"	929	7'-11"	21	18	51	0.619	153.0	0.6	72	25.4	6
7'-0"	5'-0"	9"	8"	23'	194	#6	5"	8'- 1"	2,355	162	#5	6"	9'- 1"	1,535	5'- 7"	3'- 6"	162	#5	6"	6'- 3"	1,056	3'- 6"	2'- 9"	56	5'-0"	187	5	18"	39'-9"	133	35	39'-9"	929	8'- 1"	22	20	57	0.710	154.9	0.6	79	29.0	6
7'-0"	5'-0"	10"	8"	30'	194	#6	5"	8'- 1"	2,355	194	#5	5"	9'- 2"	1,855	5'- 8"	3'- 6"	194	#5	5"	6'- 4"	1,281	3'- 6"	2'-10"	56	5'-0"	187	5	18"	39'-9"	133	35	39'-9"	929	8'- 1"	22	20	57	0.761	168.5	0.6	79	31.0	6
7'-0"	6'-0"	7"	7"	16'	194	#6	5"	7'-11"	2,307	162	#5	6"	9'-11"	1,676	6'- 5"	3'- 6"	162	#5	6"	6'- 1"	1,028	3'- 6"	2'- 7"	56	6'-0"	224	12	7"	39'-9"	319	39	39'-9"	1,036	7'-11"	21	18	51	0.612	164.8	0.6	72	25.1	6
7'-0"	6'-0"	8"	7"	20'	194	#6	5"	7'-11"	2,307	162	#5	6"	10'- 0"	1,690	6'- 6"	3'- 6"	162	#5	6"	6'- 2"	1,042	3'- 6"	2'- 8"	56	6'-0"	224	5	18"	39'-9"	133	39	39'-9"	1,036	7'-11"	21	18	51	0.663	160.8	0.6	72	27.1	6
7'-0"	6'-0"	9"	8"	23'	194	#6	5"	8'- 1"	2,355	162	#5	6"	10'- 1"	1,704	6'- 7"	3'- 6"	162	#5	6"	6'- 3"	1,056	3'- 6"	2'- 9"	56	6'-0"	224	5	18"	39'-9"	133	39	39'-9"	1,036	8'- 1"	22	20	57	0.759	162.7	0.6	79	31.0	6
7'-0"	6'-0"	10"	8"	30'	194	#6	5"	8'- 1"	2,355	194	#5	5"	10'- 2"	2,057	6'- 8"	3'- 6"	194	#5	5"	6'- 4"	1,281	3'- 6"	2'-10"	56	6'-0"	224	5	18"	39'-9"	133	39	39'-9"	1,036	8'- 1"	22	20	57	0.811	177.2	0.6	79	33.0	7
7'-0"	7'-0"	7"	7"	16'	194	#6	5"	7'-11"	2,307	162	#5	6"	10'-11"	1,845	7'- 5"	3'- 6"	162	#5	6"	6'- 1"	1,028	3'- 6"	2'- 7"	56	7'-0"	262	12	7"	39'-9"	319	39	39'-9"	1,036	7'-11"	21	18	51	0.655	169.9	0.6	72	26.8	6
7'-0"	7'-0"	8"	7"	20'	194	#6	5"	7'-11"	2,307	194	#5	5"	11'- 0"	2,226	7'- 6"	3'- 6"	194	#5	5"	6'- 2"	1,248	3'- 6"	2'- 8"	56	7'-0"	262	5	18"	39'-9"	133	39	39'-9"	1,036	7'-11"	21	18	51	0.706	180.3	0.6	72	28.8	7
7'-0"	7'-0"	9"	8"	23'	194	#6	5"	8'- 1"	2,355	162	#5	6"	11'- 1"	1,873	7'- 7"	3'- 6"	162	#5	6"	6'- 3"	1,056	3'- 6"	2'- 9"	56	7'-0"	262	5	18"	39'-9"	133	39	39'-9"	1,036	8'- 1"	22	20	57	0.809	167.9	0.6	79	33.0	6
7'-0"	7'-0"	10"	8"	30'	194	#6	5"	8'- 1"	2,355	194	#5	5"	11'- 2"	2,259	7'- 8"	3'- 6"	194	#5	5"	6'- 4"	1,281	3'- 6"	2'-10"	56	7'-0"	262	5	18"	39'-9"	133	39	39'-9"	1,036	8'- 1"	22	20	57	0.860	183.2	0.6	79	35.0	7

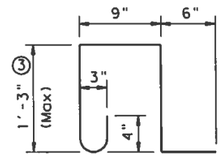

BARS K ~ #4
(Spa = 1'-0" Max)
(Length = 4'-3")

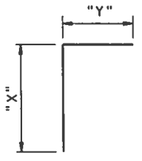

BARS C

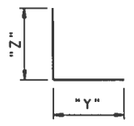

BARS D

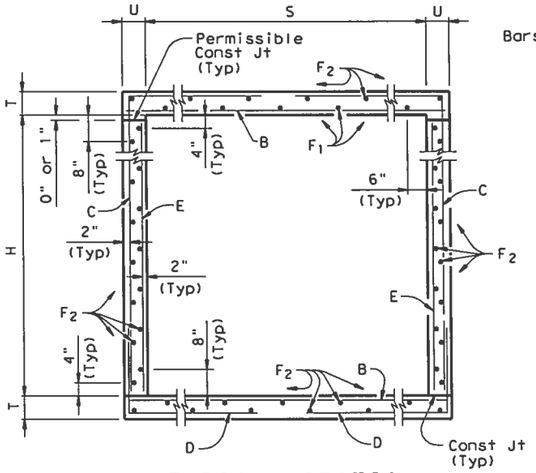

TYPICAL SECTION

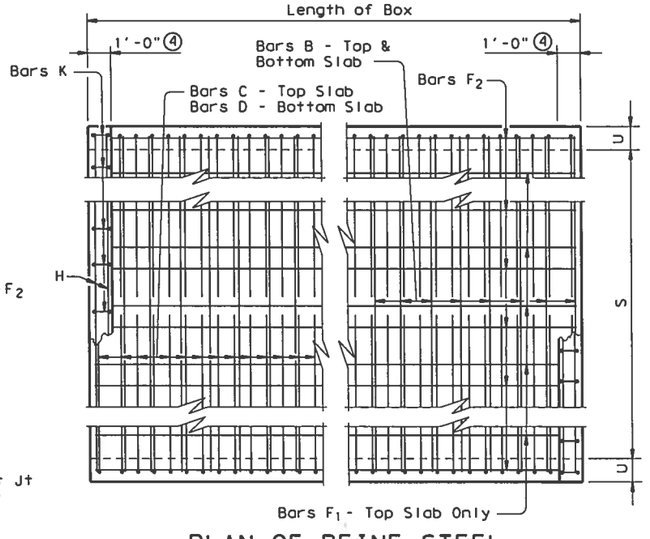

PLAN OF REINF STEEL

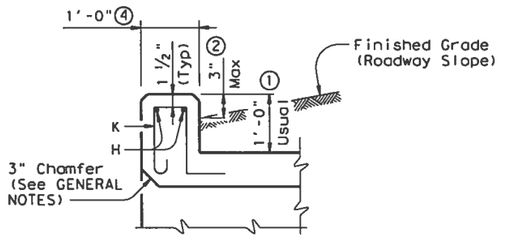

SECTION THRU CURB

① 0" min to 5'-0" max. Estimated curb heights are shown elsewhere in the plans. For structures without railing and curbs taller than 1'-0", refer to ECD standard. For structures with T6 bridge rail, refer to T6-CM standard. For structures with bridge rail, other than T6, refer to RAC standard.

② For vehicle safety, the following requirements must be met:
- For structures without bridge rail, curbs shall project no more than 3" above finished grade.
- For structures with bridge rail, curbs shall be flush with finished grade.

Curb heights shall be reduced, if necessary, to meet the above requirements. No changes will be made in quantities and no additional compensation will be allowed for this work.

③ For curbs less than 1'-0" high, tilt bars K or reduce bar height as necessary to maintain cover. For curbs less than 3" high, bars K may be omitted.

④ 1'-0" typical. 2'-0" when RAC standard is referred to elsewhere in the plans.

⑤ For each box size, minimum fill height shown shall be used for all culverts with less than 2'-0" of fill.

GENERAL NOTES:

Designed according to current AASHTO Standard and Interim Specifications.

Designed to the maximum fill heights shown.

All reinforcing steel shall be Grade 60.

All concrete shall be Class "C" with these exceptions: use Class "S" for top slabs of culverts with overlay, with 1-to-2 course surface treatment, or with the top slab as the final riding surface.

Class "C" concrete shall have a minimum compressive strength of 3,600 psi. Class "S" concrete shall have a minimum compressi strength of 4,000 psi.

The use of permanent forms is not allowed.

Reinforcing bars shall be adjusted to provide a minimum of 1 ¼ inches clear cover.

The bottom edge of the top slab shall be chamfered 3 inches at the entrance.

Construction joints shown at the flow line may be raised a maximum of 6 inches at the Contractor's option. If this option is used, Bars E may be cut off or raised, and Bars C and D may be reversed.

See Standard SCC-MD for skewed ends, angle sections and lengthening details.

HS20 LOADING

Texas Department of Transportatio
Bridge Division

SINGLE BOX CULVERTS CAST-IN-PLACE 0' TO 30' FILL

SCC-7

FILE: scc07ste.dgn	DN: GAF	CK: LWW	DW: BWH/TxDOT	CK:
©TxDOT May 2005	DISTRICT	PROJECT NUMBER		
REVISIONS	YKM			
	COUNTY	CONTROL	SECT	JOB
	GONZALES, ETC	1442	03	016, ETC

ACC:

LEVELS DISPLAYED
1

DISCLAIMER:
The use of this standard is governed by the "Texas Engineering Practice Act". No warranty of any kind is made by TxDOT for any purpose whatsoever. TxDOT assumes no responsibility for the conversion of this standard to other formats or for incorrect results or damages resulting from its use.

SECTION DIMENSIONS				FILL HEIGHT ⑤	BILLS OF REINFORCING STEEL (For Box Length = 40 feet)																																QUANTITIES					
					Bars B					Bars C							Bars D							Bars E~#4 at 18" Max			Bars F_1 ~#4				Bars F_2~#4 at 18" Max			Bars H 4~#4		Bars K		Per foot of Barrel		Curb		Total	
S	H	T	U		No.	Size	Spa	Length	Weight	No.	Size	Spa	Length	Weight	"X"	"Y"	No.	Size	Spa	Length	Weight	"Y"	"Z"	No.	Length	Wt	No.	Spa	Length	Wt	No.	Length	Wt	Length	Wt	No.	Wt	Conc (CY)	Reinf (Lb)	Conc (CY)	Reinf (Lb)	Conc (CY)	Re
10'-0"	5'-0"	7"	7"	7'	138	#7	7"	10'-11"	3,079	194	#5	5"	10'- 8"	2,158	5'- 5"	5'- 3"	194	#5	5"	7'-10"	1,585	5'- 3"	2'- 7"	56	5'-0"	187	17	7"	39'-9"	451	41	39'-9"	1,089	10'-11"	29	24	68	0.699	213.7	0.8	97	28.8	8
10'-0"	5'-0"	8"	7"	10'	194	#6	5"	10'-11"	3,181	194	#5	5"	10'- 9"	2,175	5'- 6"	5'- 3"	194	#5	5"	7'-11"	1,602	5'- 3"	2'- 8"	56	5'-0"	187	7	18"	39'-9"	186	41	39'-9"	1,089	10'-11"	29	24	68	0.767	210.5	0.8	97	31.5	8
10'-0"	5'-0"	9"	8"	13'	194	#6	5"	11'- 1"	3,230	194	#5	5"	10'-10"	2,192	5'- 7"	5'- 3"	194	#5	5"	8'- 0"	1,619	5'- 3"	2'- 9"	56	5'-0"	187	7	18"	39'-9"	186	41	39'-9"	1,089	11'- 1"	30	26	74	0.877	212.6	0.8	104	35.9	8
10'-0"	5'-0"	10"	8"	16'	162	#7	6"	11'- 1"	3,670	194	#5	5"	10'-11"	2,209	5'- 8"	5'- 3"	194	#5	5"	8'- 1"	1,636	5'- 3"	2'-10"	56	5'-0"	187	7	18"	39'-9"	186	41	39'-9"	1,089	11'- 1"	30	26	74	0.947	224.4	0.8	104	38.7	9
10'-0"	5'-0"	11"	9"	20'	194	#7	5"	11'- 3"	4,461	162	#6	6"	11'- 0"	2,677	5'- 9"	5'- 3"	162	#6	6"	8'- 7"	2,089	5'- 3"	3'- 4"	56	5'-0"	187	7	18"	39'-9"	186	41	39'-9"	1,089	11'- 3"	30	26	74	1.059	267.2	0.9	104	43.3	10
10'-0"	5'-0"	12"	10"	23'	194	#7	5"	11'- 5"	4,527	162	#6	6"	11'- 1"	2,697	5'-10"	5'- 3"	162	#6	6"	8'- 8"	2,109	5'- 3"	3'- 5"	56	5'-0"	187	7	18"	39'-9"	186	41	39'-9"	1,089	11'- 5"	31	26	74	1.173	269.9	0.9	105	47.8	10
10'-0"	5'-0"	13"	11"	26'	194	#7	5"	11'- 7"	4,593	194	#6	5"	11'- 2"	3,254	5'-11"	5'- 3"	194	#6	5"	8'- 9"	2,550	5'- 3"	3'- 6"	56	5'-0"	187	7	18"	39'-9"	186	41	39'-9"	1,089	11'- 7"	31	26	74	1.289	296.5	0.9	105	52.5	11
10'-0"	5'-0"	14"	12"	30'	194	#7	5"	11'- 9"	4,659	194	#6	5"	11'- 3"	3,278	6'- 0"	5'- 3"	194	#6	5"	8'-10"	2,574	5'- 3"	3'- 7"	56	5'-0"	187	7	18"	39'-9"	186	41	39'-9"	1,089	11'- 9"	31	26	74	1.407	299.3	0.9	105	57.2	12
10'-0"	6'-0"	7"	7"	7'	162	#7	6"	10'-11"	3,615	194	#5	5"	11'- 8"	2,361	6'- 5"	5'- 3"	194	#5	5"	7'-10"	1,585	5'- 3"	2'- 7"	56	6'-0"	224	19	6"	39'-9"	505	45	39'-9"	1,195	10'-11"	29	24	68	0.742	237.1	0.8	97	30.5	9
10'-0"	6'-0"	8"	7"	10'	194	#6	5"	10'-11"	3,181	194	#5	5"	11'- 9"	2,378	6'- 6"	5'- 3"	194	#5	5"	7'-11"	1,602	5'- 3"	2'- 8"	56	6'-0"	224	7	18"	39'-9"	186	45	39'-9"	1,195	10'-11"	29	24	68	0.811	219.2	0.8	97	33.2	8
10'-0"	6'-0"	9"	8"	13'	194	#6	5"	11'- 1"	3,230	194	#5	5"	11'-10"	2,394	6'- 7"	5'- 3"	194	#5	5"	8'- 0"	1,619	5'- 3"	2'- 9"	56	6'-0"	224	7	18"	39'-9"	186	45	39'-9"	1,195	11'- 1"	30	26	74	0.926	221.2	0.8	104	37.8	8
10'-0"	6'-0"	10"	8"	16'	194	#7	5"	11'- 1"	4,395	194	#5	5"	11'-11"	2,411	6'- 8"	5'- 3"	194	#5	5"	8'- 1"	1,636	5'- 3"	2'-10"	56	6'-0"	224	7	18"	39'-9"	186	45	39'-9"	1,195	11'- 1"	30	26	74	0.996	251.2	0.8	104	40.6	10
10'-0"	6'-0"	11"	9"	20'	194	#7	5"	11'- 3"	4,461	162	#6	6"	12'- 0"	2,920	6'- 9"	5'- 3"	162	#6	6"	8'- 7"	2,089	5'- 3"	3'- 4"	56	6'-0"	224	7	18"	39'-9"	186	45	39'-9"	1,195	11'- 3"	30	26	74	1.114	276.9	0.9	104	45.5	11
10'-0"	6'-0"	12"	10"	23'	194	#7	5"	11'- 5"	4,527	162	#6	6"	12'- 1"	2,940	6'-10"	5'- 3"	162	#6	6"	8'- 8"	2,109	5'- 3"	3'- 5"	56	6'-0"	224	7	18"	39'-9"	186	45	39'-9"	1,195	11'- 5"	31	26	74	1.235	279.5	0.9	105	50.3	11
10'-0"	6'-0"	13"	11"	26'	194	#7	5"	11'- 7"	4,593	162	#6	6"	12'- 2"	2,960	6'-11"	5'- 3"	162	#6	6"	8'- 9"	2,129	5'- 3"	3'- 6"	56	6'-0"	224	7	18"	39'-9"	186	45	39'-9"	1,195	11'- 7"	31	26	74	1.357	282.2	0.9	105	55.2	11
10'-0"	6'-0"	14"	12"	30'	194	#7	5"	11'- 9"	4,659	194	#6	5"	12'- 3"	3,570	7'- 0"	5'- 3"	194	#6	5"	8'-10"	2,574	5'- 3"	3'- 7"	56	6'-0"	224	7	18"	39'-9"	186	45	39'-9"	1,195	11'- 9"	31	26	74	1.481	310.2	0.9	105	60.1	12
10'-0"	7'-0"	7"	7"	7'	162	#7	6"	10'-11"	3,615	194	#5	5"	12'- 8"	2,563	7'- 5"	5'- 3"	194	#5	5"	7'-10"	1,585	5'- 3"	2'- 7"	56	7'-0"	262	19	6"	39'-9"	505	45	39'-9"	1,195	10'-11"	29	24	68	0.785	243.1	0.8	97	32.2	9
10'-0"	7'-0"	8"	7"	10'	162	#7	6"	10'-11"	3,615	194	#5	5"	12'- 9"	2,580	7'- 6"	5'- 3"	194	#5	5"	7'-11"	1,602	5'- 3"	2'- 8"	56	7'-0"	262	7	18"	39'-9"	186	45	39'-9"	1,195	10'-11"	29	24	68	0.854	236.0	0.8	97	35.0	9
10'-0"	7'-0"	9"	8"	13'	162	#7	6"	11'- 1"	3,670	194	#5	5"	12'-10"	2,597	7'- 7"	5'- 3"	194	#5	5"	8'- 0"	1,619	5'- 3"	2'- 9"	56	7'-0"	262	7	18"	39'-9"	186	45	39'-9"	1,195	11'- 1"	30	26	74	0.975	238.2	0.8	104	39.8	9
10'-0"	7'-0"	10"	8"	16'	194	#7	5"	11'- 1"	4,395	194	#5	5"	12'-11"	2,614	7'- 8"	5'- 3"	194	#5	5"	8'- 1"	1,636	5'- 3"	2'-10"	56	7'-0"	262	7	18"	39'-9"	186	45	39'-9"	1,195	11'- 1"	30	26	74	1.045	257.2	0.8	104	42.6	10
10'-0"	7'-0"	11"	9"	20'	194	#7	5"	11'- 3"	4,461	162	#6	6"	13'- 0"	3,163	7'- 9"	5'- 3"	162	#6	6"	8'- 7"	2,089	5'- 3"	3'- 4"	56	7'-0"	262	7	18"	39'-9"	186	45	39'-9"	1,195	11'- 3"	30	26	74	1.170	283.9	0.9	104	47.7	11
10'-0"	7'-0"	12"	10"	23'	194	#7	5"	11'- 5"	4,527	162	#6	6"	13'- 1"	3,183	7'-10"	5'- 3"	162	#6	6"	8'- 8"	2,109	5'- 3"	3'- 5"	56	7'-0"	262	7	18"	39'-9"	186	45	39'-9"	1,195	11'- 5"	31	26	74	1.296	286.6	0.9	105	52.7	11
10'-0"	7'-0"	13"	11"	26'	194	#7	5"	11'- 7"	4,593	162	#6	6"	13'- 2"	3,204	7'-11"	5'- 3"	162	#6	6"	8'- 9"	2,129	5'- 3"	3'- 6"	56	7'-0"	262	7	18"	39'-9"	186	45	39'-9"	1,195	11'- 7"	31	26	74	1.425	289.2	0.9	105	57.9	11
10'-0"	7'-0"	14"	12"	30'	194	#7	5"	11'- 9"	4,659	162	#6	6"	13'- 3"	3,224	8'- 0"	5'- 3"	162	#6	6"	8'-10"	2,149	5'- 3"	3'- 7"	56	7'-0"	262	7	18"	39'-9"	186	45	39'-9"	1,195	11'- 9"	31	26	74	1.556	291.9	0.9	105	63.1	11

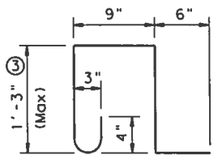

BARS K ~ #4
(Spa = 1'-0" Max)
(Length = 4'-3")

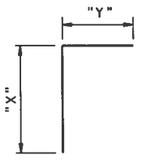

BARS C

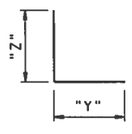

BARS D

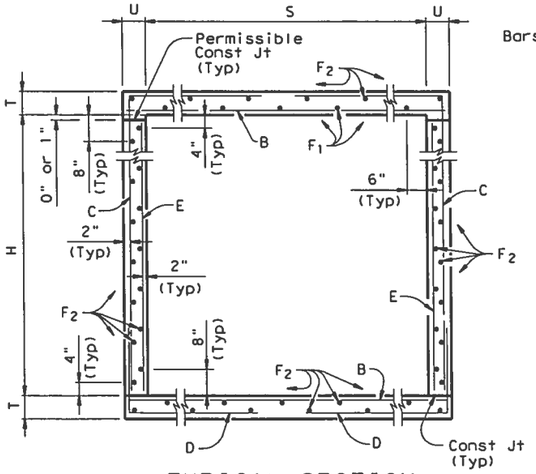

TYPICAL SECTION

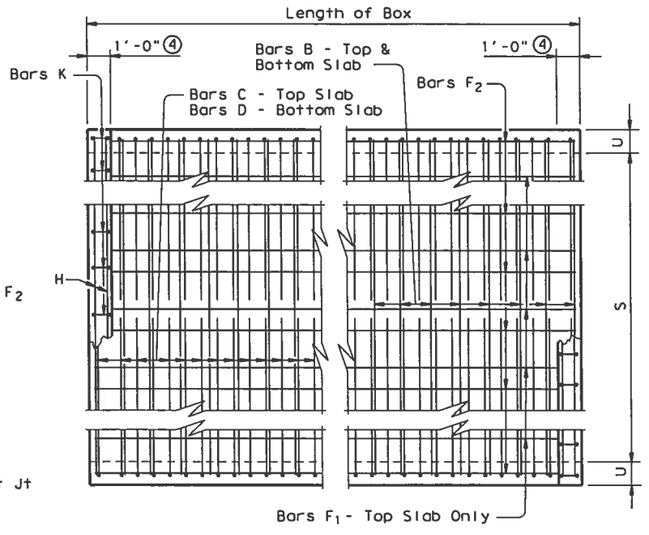

PLAN OF REINF STEEL

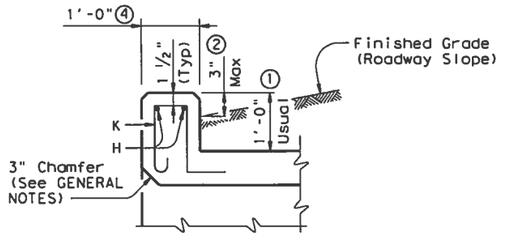

SECTION THRU CURB

① 0" min to 5'-0" max. Estimated curb heights are shown elsewhere in the plans. For structures without railing and curbs taller than 1'-0", refer to ECD standard. For structures with T6 bridge rail, refer to T6-CM standard. For structures with bridge rail, other than T6, refer to RAC standard.

② For vehicle safety, the following requirements must be met:
- For structures without bridge rail, curbs shall project no more than 3" above finished grade.
- For structures with bridge rail, curbs shall be flush with finished grade.

Curb heights shall be reduced, if necessary, to meet the above requirements. No changes will be made in quantities and no additional compensation will be allowed for this work.

③ For curbs less than 1'-0" high, tilt bars K or reduce bar height as necessary to maintain cover. For curbs less than 3" high, bars K may be omitted.

④ 1'-0" typical. 2'-0" when RAC standard is referred to elsewhere in the plans.

⑤ For each box size, minimum fill height shown shall be used for all culverts with less than 2'-0" of fill.

GENERAL NOTES:

Designed according to current AASHTO Standard and Interim Specifications.

Designed to the maximum fill heights shown.

All reinforcing steel shall be Grade 60.

All concrete shall be Class "C" with these exceptions: use Class "S" for top slabs of culverts with overlay, with 1-to-2 course surface treatment, or with the top slab as the final riding surface.

Class "C" concrete shall have a minimum compressive strength of 3,600 psi. Class "S" concrete shall have a minimum compressi strength of 4,000 psi.

The use of permanent forms is not allowed.

Reinforcing bars shall be adjusted to provide a minimum of 1 ¼ inches clear cover.

The bottom edge of the top slab shall be chamfered 3 inches at the entrance.

Construction joints shown at the flow line may be raised a maximum of 6 inches at the Contractor's option. If this option is used, Bars E may be cut off or raised, and Bars C and D may be reversed.

See Standard SCC-MD for skewed ends, angle sections and lengthening details.

HS20 LOADING SHEET 1 OF

Texas Department of Transportatio
Bridge Division

SINGLE BOX CULVERTS CAST-IN-PLACE 0' TO 30' FILL

SCC-10

FILE: scc10ste.dgn	DN: GAF	CK: LMW	DW: BWH/TxDOT	CK:
©TxDOT May 2005	DISTRICT	PROJECT NUMBER		
REVISIONS	YKM			
	COUNTY	CONTROL	SECT	JOB
	GONZALES, ETC	1442	03	016, ETC

ACC:
LEVELS DISPLAYED
1

DISCLAIMER:
The use of this standard is governed by the "Texas Engineering Practice Act". No warranty of any kind is made by TxDOT for any purpose whatsoever. TxDOT assumes no responsibility for the conversion of this standard to other formats or for incorrect results or damages resulting from its use.

ACC:

LEVELS DISPLAYED

1

BILLS OF REINFORCING STEEL (For Box Length = 40 feet)

SECTION DIMENSIONS				FILL HEIGHT ⑤	Bars B					Bars C							Bars D							Bars E~#4 at 18" Max			Bars F_1 ~#4				Bars F_2~#4 at 18" Max			Bars H 4~#4		Bars K		QUANTITIES: Per foot of Barrel		Curb		Total	
S	H	T	U		No.	Size	Spa	Length	Weight	No.	Size	Spa	Length	Weight	"X"	"Y"	No.	Size	Spa	Length	Weight	"Y"	"Z"	No.	Length	Wt	No.	Spa	Length	Wt	No.	Length	Wt	Length	Wt	No.	Wt	Conc (CY)	Reinf (Lb)	Conc (CY)	Reinf (Lb)	Conc (CY)	Re (L
10'-0"	8'-0"	7"	7"	7'	162	#7	6"	10'-11"	3,615	194	#5	5"	13'- 8"	2,765	8'- 5"	5'- 3"	194	#5	5"	7'-10"	1,585	5'- 3"	2'- 7"	56	8'-0"	299	19	6"	39'-9"	505	49	39'-9"	1,301	10'-11"	29	24	68	0.828	251.8	0.8	97	33.9	10
10'-0"	8'-0"	8"	7"	10'	162	#7	6"	10'-11"	3,615	194	#5	5"	13'- 9"	2,782	8'- 6"	5'- 3"	194	#5	5"	7'-11"	1,602	5'- 3"	2'- 8"	56	8'-0"	299	7	18"	39'-9"	186	49	39'-9"	1,301	10'-11"	29	24	68	0.897	244.6	0.8	97	36.7	9
10'-0"	8'-0"	9"	8"	13'	162	#7	6"	11'- 1"	3,670	194	#5	5"	13'-10"	2,799	8'- 7"	5'- 3"	194	#5	5"	8'- 0"	1,619	5'- 3"	2'- 9"	56	8'-0"	299	7	18"	39'-9"	186	49	39'-9"	1,301	11'- 1"	30	26	74	1.025	246.9	0.8	104	41.8	9
10'-0"	8'-0"	10"	8"	16'	194	#7	5"	11'- 1"	4,395	194	#5	5"	13'-11"	2,816	8'- 8"	5'- 3"	194	#5	5"	8'- 1"	1,636	5'- 3"	2'-10"	56	8'-0"	299	7	18"	39'-9"	186	49	39'-9"	1,301	11'- 1"	30	26	74	1.095	265.8	0.8	104	44.6	10
10'-0"	8'-0"	11"	9"	20'	194	#7	5"	11'- 3"	4,461	162	#6	6"	14'- 0"	3,407	8'- 9"	5'- 3"	162	#6	6"	8'- 7"	2,089	5'- 3"	3'- 4"	56	8'-0"	299	7	18"	39'-9"	186	49	39'-9"	1,301	11'- 3"	30	26	74	1.225	293.6	0.9	104	49.9	11
10'-0"	8'-0"	12"	10"	23'	194	#7	5"	11'- 5"	4,527	162	#6	6"	14'- 1"	3,427	8'-10"	5'- 3"	162	#6	6"	8'- 8"	2,109	5'- 3"	3'- 5"	56	8'-0"	299	7	18"	39'-9"	186	49	39'-9"	1,301	11'- 5"	31	26	74	1.358	296.2	0.9	105	55.2	11
10'-0"	8'-0"	13"	11"	26'	194	#7	5"	11'- 7"	4,593	162	#6	6"	14'- 2"	3,447	8'-11"	5'- 3"	162	#6	6"	8'- 9"	2,129	5'- 3"	3'- 6"	56	8'-0"	299	7	18"	39'-9"	186	49	39'-9"	1,301	11'- 7"	31	26	74	1.493	298.9	0.9	105	60.6	12
10'-0"	8'-0"	14"	12"	30'	194	#7	5"	11'- 9"	4,659	162	#6	6"	14'- 3"	3,467	9'- 0"	5'- 3"	162	#6	6"	8'-10"	2,149	5'- 3"	3'- 7"	56	8'-0"	299	7	18"	39'-9"	186	49	39'-9"	1,301	11'- 9"	31	26	74	1.630	301.5	0.9	105	66.1	12
10'-0"	9'-0"	7"	7"	7'	162	#7	6"	10'-11"	3,615	194	#5	5"	14'- 8"	2,968	9'- 5"	5'- 3"	194	#5	5"	7'-10"	1,585	5'- 3"	2'- 7"	56	9'-0"	337	19	6"	39'-9"	505	53	39'-9"	1,407	10'-11"	29	24	68	0.871	260.4	0.8	97	35.6	10
10'-0"	9'-0"	8"	7"	10'	162	#7	6"	10'-11"	3,615	162	#6	6"	14'- 9"	3,589	9'- 6"	5'- 3"	162	#6	6"	8'- 4"	2,028	5'- 3"	3'- 1"	56	9'-0"	337	7	18"	39'-9"	186	53	39'-9"	1,407	10'-11"	29	24	68	0.940	279.1	0.8	97	38.4	11
10'-0"	9'-0"	9"	8"	13'	162	#7	6"	11'- 1"	3,670	162	#6	6"	14'-10"	3,609	9'- 7"	5'- 3"	162	#6	6"	8'- 5"	2,048	5'- 3"	3'- 2"	56	9'-0"	337	7	18"	39'-9"	186	53	39'-9"	1,407	11'- 1"	30	26	74	1.074	281.4	0.8	104	43.8	11
10'-0"	9'-0"	10"	8"	16'	194	#7	5"	11'- 1"	4,395	162	#6	6"	14'-11"	3,630	9'- 8"	5'- 3"	162	#6	6"	8'- 6"	2,068	5'- 3"	3'- 3"	56	9'-0"	337	7	18"	39'-9"	186	53	39'-9"	1,407	11'- 1"	30	26	74	1.144	300.6	0.8	104	46.6	12
10'-0"	9'-0"	11"	9"	20'	194	#7	5"	11'- 3"	4,461	162	#6	6"	15'- 0"	3,650	9'- 9"	5'- 3"	162	#6	6"	8'- 7"	2,089	5'- 3"	3'- 4"	56	9'-0"	337	7	18"	39'-9"	186	53	39'-9"	1,407	11'- 3"	30	26	74	1.281	303.3	0.9	104	52.1	12
10'-0"	9'-0"	12"	10"	23'	194	#7	5"	11'- 5"	4,527	162	#6	6"	15'- 1"	3,670	9'-10"	5'- 3"	162	#6	6"	8'- 8"	2,109	5'- 3"	3'- 5"	56	9'-0"	337	7	18"	39'-9"	186	53	39'-9"	1,407	11'- 5"	31	26	74	1.420	305.9	0.9	105	57.7	12
10'-0"	9'-0"	13"	11"	26'	194	#7	5"	11'- 7"	4,593	162	#6	6"	15'- 2"	3,690	9'-11"	5'- 3"	162	#6	6"	8'- 9"	2,129	5'- 3"	3'- 6"	56	9'-0"	337	7	18"	39'-9"	186	53	39'-9"	1,407	11'- 7"	31	26	74	1.561	308.6	0.9	105	63.3	12
10'-0"	9'-0"	14"	12"	30'	194	#7	5"	11'- 9"	4,659	194	#6	5"	15'- 3"	4,444	10'- 0"	5'- 3"	194	#6	5"	8'-10"	2,574	5'- 3"	3'- 7"	56	9'-0"	337	7	18"	39'-9"	186	53	39'-9"	1,407	11'- 9"	31	26	74	1.704	340.2	0.9	105	69.1	13
10'-0"	10'-0"	7"	7"	7'	162	#7	6"	10'-11"	3,615	162	#6	6"	15'- 8"	3,812	10'- 5"	5'- 3"	162	#6	6"	8'- 3"	2,007	5'- 3"	3'- 0"	56	10'-0"	374	19	6"	39'-9"	505	53	39'-9"	1,407	10'-11"	29	24	68	0.915	293.0	0.8	97	37.4	11
10'-0"	10'-0"	8"	7"	10'	194	#7	5"	10'-11"	4,329	194	#6	5"	15'- 9"	4,589	10'- 6"	5'- 3"	194	#6	5"	8'- 4"	2,428	5'- 3"	3'- 1"	56	10'-0"	374	7	18"	39'-9"	186	53	39'-9"	1,407	10'-11"	29	24	68	0.984	332.8	0.8	97	40.2	13
10'-0"	10'-0"	9"	8"	13'	162	#7	6"	11'- 1"	3,670	162	#6	6"	15'-10"	3,853	10'- 7"	5'- 3"	162	#6	6"	8'- 5"	2,048	5'- 3"	3'- 2"	56	10'-0"	374	7	18"	39'-9"	186	53	39'-9"	1,407	11'- 1"	30	26	74	1.123	288.5	0.8	104	45.7	11
10'-0"	10'-0"	10"	8"	16'	194	#7	5"	11'- 1"	4,395	162	#6	6"	15'-11"	3,873	10'- 8"	5'- 3"	162	#6	6"	8'- 6"	2,068	5'- 3"	3'- 3"	56	10'-0"	374	7	18"	39'-9"	186	53	39'-9"	1,407	11'- 1"	30	26	74	1.193	307.6	0.8	104	48.5	12
10'-0"	10'-0"	11"	9"	20'	194	#7	5"	11'- 3"	4,461	194	#6	5"	16'- 0"	4,662	10'- 9"	5'- 3"	194	#6	5"	8'- 7"	2,501	5'- 3"	3'- 4"	56	10'-0"	374	7	18"	39'-9"	186	53	39'-9"	1,407	11'- 3"	30	26	74	1.336	339.8	0.9	104	54.3	13
10'-0"	10'-0"	12"	10"	23'	194	#7	5"	11'- 5"	4,527	194	#6	5"	16'- 1"	4,686	10'-10"	5'- 3"	194	#6	5"	8'- 8"	2,525	5'- 3"	3'- 5"	56	10'-0"	374	7	18"	39'-9"	186	53	39'-9"	1,407	11'- 5"	31	26	74	1.481	342.6	0.9	105	60.1	13
10'-0"	10'-0"	13"	11"	26'	194	#7	5"	11'- 7"	4,593	194	#6	5"	16'- 2"	4,711	10'-11"	5'- 3"	194	#6	5"	8'- 9"	2,550	5'- 3"	3'- 6"	56	10'-0"	374	7	18"	39'-9"	186	53	39'-9"	1,407	11'- 7"	31	26	74	1.629	345.5	0.9	105	66.1	13
10'-0"	10'-0"	14"	12"	30'	194	#7	5"	11'- 9"	4,659	194	#6	5"	16'- 3"	4,735	11'- 0"	5'- 3"	194	#6	5"	8'-10"	2,574	5'- 3"	3'- 7"	56	10'-0"	374	7	18"	39'-9"	186	53	39'-9"	1,407	11'- 9"	31	26	74	1.778	348.4	0.9	105	72.0	14

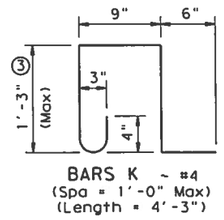

BARS K ~ #4
(Spa = 1'-0" Max)
(Length = 4'-3")

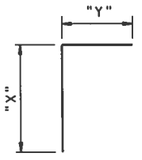

BARS C

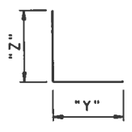

BARS D

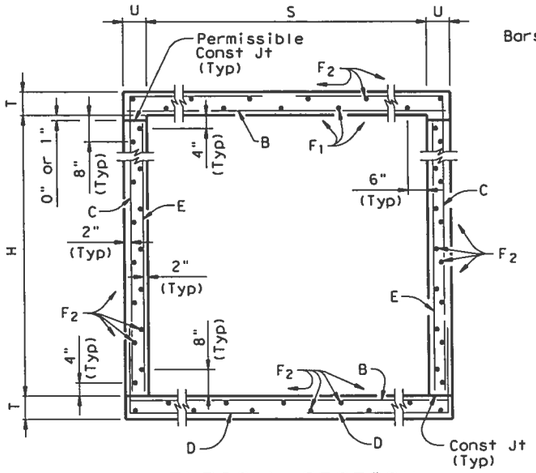

TYPICAL SECTION

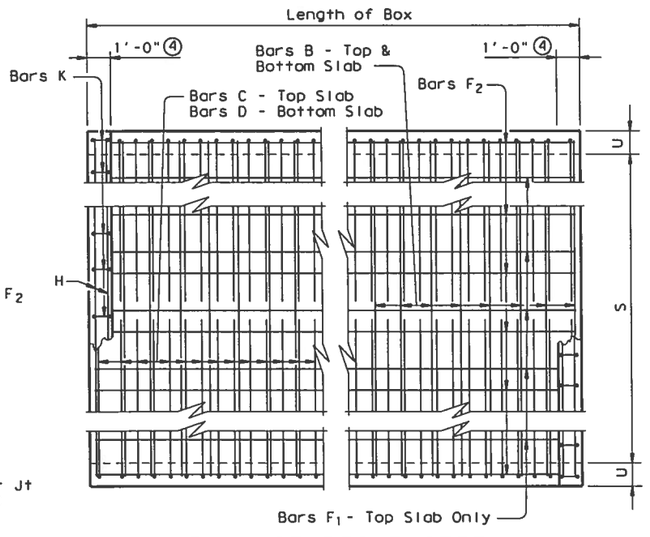

PLAN OF REINF STEEL

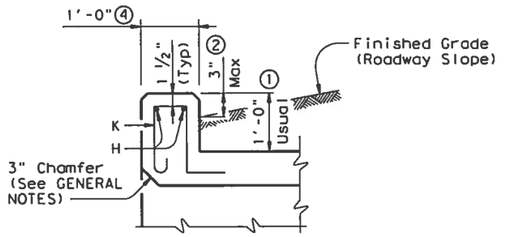

SECTION THRU CURB

① 0" min to 5'-0" max. Estimated curb heights are shown elsewhere in the plans. For structures without railing and curbs taller than 1'-0", refer to ECD standard. For structures with T6 bridge rail, refer to T6-CM standard. For structures with bridge rail, other than T6, refer to RAC standard.

② For vehicle safety, the following requirements must be met:
- For structures without bridge rail, curbs shall project no more than 3" above finished grade.
- For structures with bridge rail, curbs shall be flush with finished grade.

Curb heights shall be reduced, if necessary, to meet the above requirements. No changes will be made in quantities and no additional compensation will be allowed for this work.

③ For curbs less than 1'-0" high, tilt bars K or reduce bar height as necessary to maintain cover. For curbs less than 3" high, bars K may be omitted.

④ 1'-0" typical. 2'-0" when RAC standard is referred to elsewhere in the plans.

⑤ For each box size, minimum fill height shown shall be used for all culverts with less than 2'-0" of fill.

GENERAL NOTES:

Designed according to current AASHTO Standard and Interim Specifications.

Designed to the maximum fill heights shown.

All reinforcing steel shall be Grade 60.

All concrete shall be Class "C" with these exceptions: use Class "S" for top slabs of culverts with overlay, with 1-to-2 course surface treatment, or with the top slab as the final riding surface.

Class "C" concrete shall have a minimum compressive strength of 3,600 psi. Class "S" concrete shall have a minimum compressi strength of 4,000 psi.

The use of permanent forms is not allowed.

Reinforcing bars shall be adjusted to provide a minimum of 1 ¼ inches clear cover.

The bottom edge of the top slab shall be chamfered 3 inches at the entrance.

Construction joints shown at the flow line may be raised a maximum of 6 inches at the Contractor's option. If this option is used, Bars E may be cut off or raised, and Bars C and D may be reversed.

See Standard SCC-MD for skewed ends, angle sections and lengthening details.

HS20 LOADING

Texas Department of Transportatio
Bridge Division

SINGLE BOX CULVERTS CAST-IN-PLACE 0' TO 30' FILL

SCC-10

FILE: scc10ste.dgn	DN: GAF	CK: LWW	DW: BWH/TxDOT	CK:
©TxDOT May 2005	DISTRICT	PROJECT NUMBER		
REVISIONS	YKM			
	COUNTY	CONTROL	SECT	JOB
	GONZALES, ETC	1442	03	016, ETC

DISCLAIMER:
The use of this standard is governed by the "Texas Engineering Practice Act". No warranty of any kind is made by TxDOT for any purpose whatsoever. TxDOT assumes no responsibility for the conversion of this standard to other formats or for incorrect results or damages resulting from its use.

ACC:

LEVELS DISPLAYED

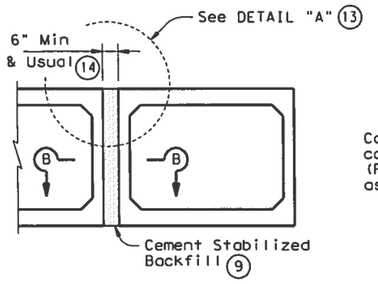

MULTIPLE UNIT PLACEMENT

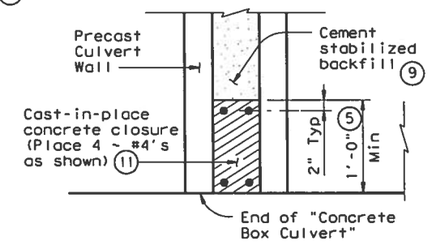

SECTION B-B

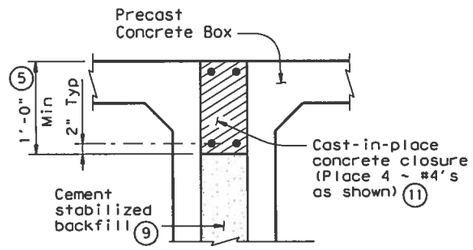

DETAIL "A" (13)

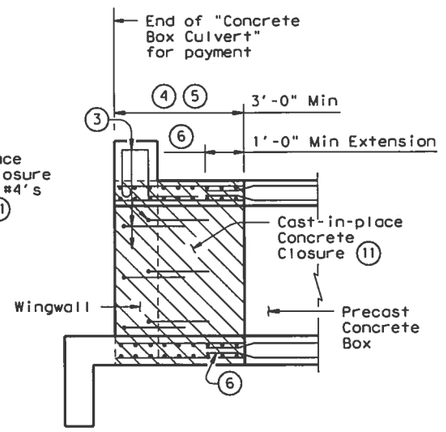

WINGWALL CONNECTION

(Also applies to Safety End Treatment)

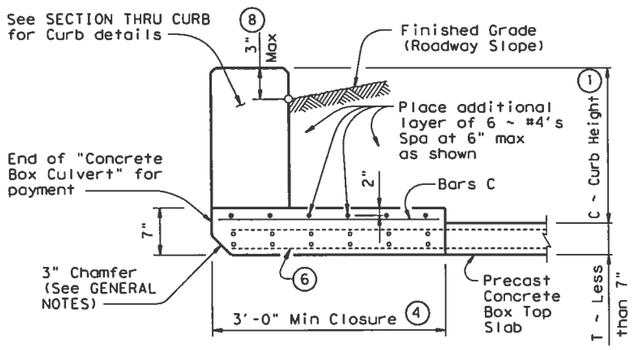

SECTION THRU TOP SLABS LESS THAN 7"

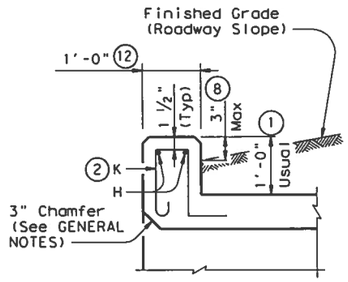

SECTION THRU CURB

(10) QUANTITIES PER FOOT OF CURB	
Reinforcing Steel	4.18 Lb
Concrete	0.037 CY

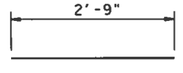

BARS C ~ #4
(Spa = 1'-0" Max)

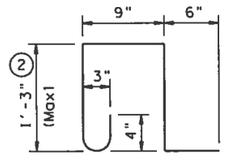

BARS K ~ #4
(Spa = 1'-0" Max)
(Length = 4'-3")

(1) 0" min to 5'-0" max. Estimated curb heights are shown elsewhere in the plans. For structures without railing and curbs taller than 1'-0", refer to ECD standard. For structures with T6 bridge rail, refer to T6-CM standard. For structures with bridge rail, other than T6, refer to RAC standard.

(2) For curbs less than 1'-0" high, tilt Bars K or reduce bar height as necessary to maintain cover. For curbs less than 3" high, Bars K may be omitted.

(3) Curb, Wingwall or Safety End Treatment reinforcing shall extend into concrete closure. Any reinforcing that does not fit into the closure shall be bent or trimmed as necessary.

(4) Cast-in-place concrete closure shall be 3'-0" min. Boxes shall be cast short or broken back in the field. All reinforcing in the closure shall be the same size and spacing as in the precast box section. Except where shown otherwise, the cast-in-place closure shall be flush with the inside and outside faces of the precast box section.

(5) For multiple unit placements the length of the closure for the interior walls may be adjusted as necessary. The length of the top slab, bottom slab, and exterior wall closure shall not be less than 3'-0". See Section B-B detail when interior walls are cast full length.

(6) Precast box reinforcing shall extend a minimum of 1'-0" into concrete closure (Typ).

(7) Bands of reinforcing matching the inside and outside face reinforcing shall be placed in the gaps of the top and bottom slabs. A band matching the outside face reinforcing of the wall shall be placed in the gaps of the walls (placed in the outside face only). The bands shall be tack welded to the exposed reinforcing at each point of contact.

(8) For vehicle safety, the following requirements must be met:
- For structures without bridge rail, curbs shall project no more than 3" above finished grade.
- For structures with bridge rail, curbs shall be flush with finished grade.

Curb heights shall be reduced, if necessary, to meet the above requirements. No changes will be made in quantities and no additional compensation will be allowed for this work.

(9) Cement Stabilized Backfill between boxes is considered part of the Box Culvert for payment.

(10) All curb concrete and reinforcing is considered part of the Box Culvert for payment.

(11) Any additional concrete and reinforcing required for the closures shall be considered as subsidiary to the Concrete Box Culvert.

(12) 1'-0" typical. 2'-0" when RAC standard is referred to elsewhere in the plans.

(13) For multiple unit placement with overlay, with 1 to 2 course surfac treatment, or with the top slab as the final riding surface, provid wall closure as shown in DETAIL "A".

(14) This dimension may be increased with approval of the Engineer to al the precast boxes to be tunneled or jacked in accordance with Item "Jacking, Boring, or Tunneling Pipe or Box". No payment will be ma for any additional material in the gap between adjacent boxes.

GENERAL NOTES:

Designed according to current AASHTO Standard and Interim Specifications.

All closure concrete shall be Class "C" with a minimum compressive strength of 3600 psi and shall be placed according to the Item, "Concrete Structures".

Any additional concrete required for the closures shall be considered as subsidiary to the Concrete Box Culvert.

Refer to the Single Box Culverts Precast standard for details not shown.

The bottom edge of the top slab closure shall be chamfered 3 inches at the entrance.

HS20 LOADING

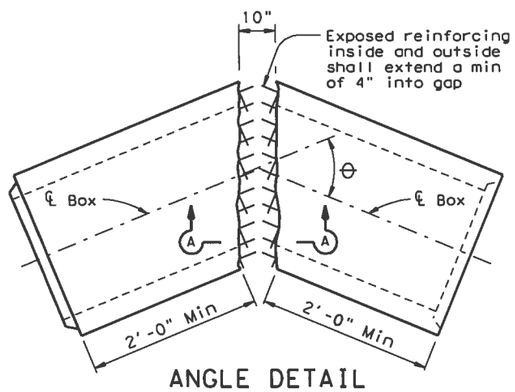

ANGLE DETAIL

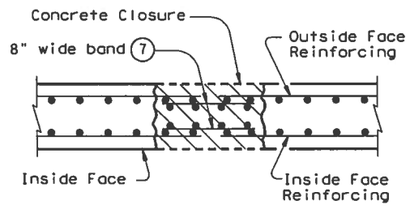

SECTION A-A

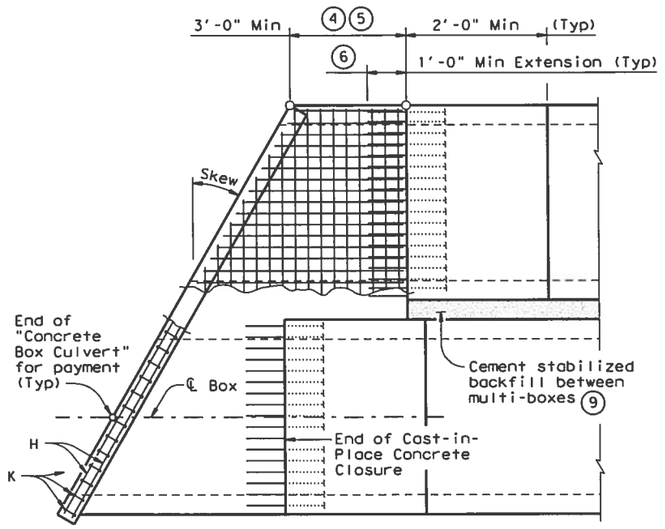

PLAN OF SKEWED ENDS

(Showing multi-box placement)

Texas Department of Transportation
Bridge Division

BOX CULVERTS PRECAST MISCELLANEOUS DETAIL

SCP-MD

FILE: scpmdste.dgn	DN: GAF	CK: LMW	DW: BWH/TxDOT	CK:
© TxDOT May 2005	DISTRICT	PROJECT NUMBER		
REVISIONS	YKM			
	COUNTY	CONTROL	SECT	JOB
	GONZALES, ETC	1442	03	016, ETC

DISCLAIMER:
The use of this standard is governed by the "Texas Engineering Practice Act". No warranty of any kind is made by TxDOT for any purpose whatsoever. TxDOT assumes no responsibility for the conversion of this standard to other formats or for incorrect results or damages resulting from its use.

LEVELS DISPLAYED | ACC:

BOX DATA

SECTION DIMENSIONS					Fill Height	M (Min)	REINFORCING (in^2/ft) ②								① Lift Weight (Tons)
S (ft)	H (ft)	T_T (in)	T_B (in)	T_S (in)	(ft)	(in)	A_{S1}	A_{S2}	A_{S3}	A_{S4}	A_{S5}	A_{S6}	A_{S7}	A_{S8}	
4	2	7.5	6	5	<2	-	0.18	0.40	0.20	0.12	0.20	0.18	0.18	0.14	4.5
4	2	5	5	5	2<3	38	0.21	0.23	0.20	0.12	-	-	-	-	3.6
4	2	5	5	5	3-5	38	0.12	0.12	0.12	0.12	-	-	-	-	3.6
4	2	5	5	5	10	38	0.12	0.12	0.13	0.12	-	-	-	-	3.6
4	2	5	5	5	15	38	0.14	0.17	0.18	0.12	-	-	-	-	3.6
4	2	5	5	5	20	38	0.19	0.23	0.23	0.12	-	-	-	-	3.6
4	2	5	5	5	25	38	0.23	0.28	0.28	0.12	-	-	-	-	3.6
4	2	5	5	5	30	38	0.28	0.33	0.33	0.12	-	-	-	-	3.6
4	2	5	5	5	35	38	0.33	0.38	0.39	0.12	-	-	-	-	3.6
4	3	7.5	6	5	<2	-	0.18	0.45	0.23	0.12	0.22	0.18	0.18	0.14	5.0
4	3	5	5	5	2<3	38	0.16	0.28	0.25	0.12	-	-	-	-	4.1
4	3	5	5	5	3-5	38	0.12	0.12	0.13	0.12	-	-	-	-	4.1
4	3	5	5	5	10	38	0.12	0.14	0.15	0.12	-	-	-	-	4.1
4	3	5	5	5	15	38	0.12	0.20	0.20	0.12	-	-	-	-	4.1
4	3	5	5	5	20	38	0.14	0.26	0.26	0.12	-	-	-	-	4.1
4	3	5	5	5	25	38	0.17	0.32	0.32	0.12	-	-	-	-	4.1
4	3	5	5	5	30	38	0.21	0.38	0.38	0.12	-	-	-	-	4.1
4	3	5	5	5	35	38	0.25	0.44	0.44	0.12	-	-	-	-	4.1
4	4	7.5	6	5	<2	-	0.18	0.47	0.25	0.12	0.23	0.18	0.18	0.14	5.5
4	4	5	5	5	2<3	38	0.13	0.31	0.28	0.12	-	-	-	-	4.6
4	4	5	5	5	3-5	38	0.12	0.14	0.15	0.12	-	-	-	-	4.6
4	4	5	5	5	10	38	0.12	0.15	0.16	0.12	-	-	-	-	4.6
4	4	5	5	5	15	38	0.12	0.21	0.22	0.12	-	-	-	-	4.6
4	4	5	5	5	20	38	0.12	0.27	0.28	0.12	-	-	-	-	4.6
4	4	5	5	5	25	38	0.14	0.33	0.34	0.12	-	-	-	-	4.6
4	4	5	5	5	30	38	0.17	0.39	0.40	0.12	-	-	-	-	4.6
4	4	5	5	5	35	38	0.20	0.45	0.46	0.12	-	-	-	-	4.6

① For Box Length = 8'-0"

② A_{S1} thru A_{S4}, A_{S7} and A_{S8} are minimum required areas of reinforcement per linear foot of box length. A_{S6} and A_{S5} are minimum required areas of reinforcement per linear foot of box width.

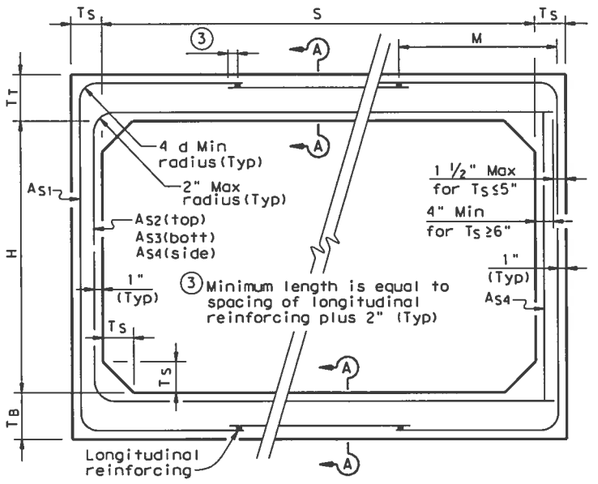

CORNER OPTION "A" CORNER OPTION "B"

FILL HEIGHT 2 FT AND GREATER

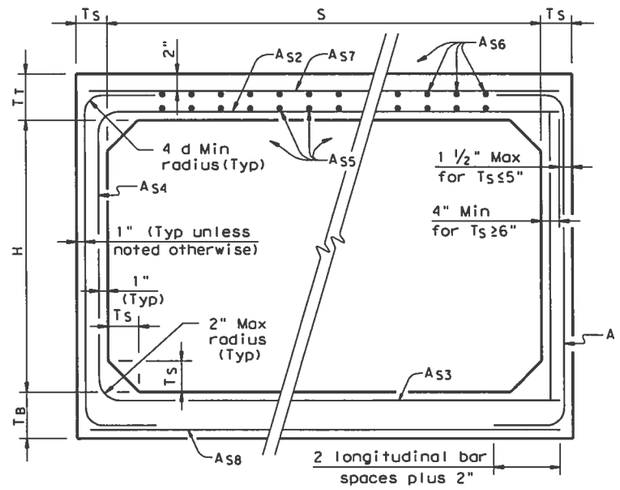

CORNER OPTION "A" CORNER OPTION "B"

FILL HEIGHT LESS THAN 2 FT

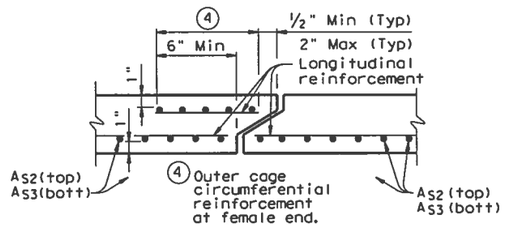

SECTION A-A

(TOP AND BOTTOM SLAB JOINT REINFORCEMENT)

GENERAL NOTES:

Designs shown conform to ASTM C1433.

Refer to ASTM C1433 for information or details not shown.

All concrete shall be Class "H" Concrete with a minimum compressive strength of 5,000 psi.

See SCP-MD standard sheet for miscellaneous details and notes not shown.

In lieu of furnishing the designs shown on this sheet, the contractor may furnish an alternate design that is equal to or exceeds the box design for the design fill height in the table. Shop plans for alternate designs shall be submitted in accordance with Item "Precast Concrete Structures".

HS20 LOADING

Texas Department of Transportation
Bridge Division

SINGLE BOX CULVERT PRECAST
4'-0" SPAN

SCP-4

FILE: scp04ste.dgn	DN: GAF	CK: LWW	DW: BWH/TxDOT	CK:
©TxDOT May 2005	DISTRICT	PROJECT NUMBER		
REVISIONS 06-06 - Revised reinforcing. 08-07 - General notes.	YKM			
	COUNTY	CONTROL	SECT	JOB
	GONZALES, ETC	1442	03	016, ETC

DISCLAIMER:
The use of this standard is governed by the "Texas Engineering Practice Act". No warranty of any kind is made by TxDOT for any purpose whatsoever. TxDOT assumes no responsibility for the conversion of this standard to other formats or for incorrect results or damages resulting from its use.

BOX DATA

SECTION DIMENSIONS					Fill Height	M (Min)	REINFORCING (in²/ft) ②								① Lift Weight (Tons)
S (ft)	H (ft)	T_T (in)	T_B (in)	T_S (in)	(ft)	(in)	A_{S1}	A_{S2}	A_{S3}	A_{S4}	A_{S5}	A_{S6}	A_{S7}	A_{S8}	
5	3	8	7	6	<2	-	0.19	0.44	0.22	0.14	0.21	0.19	0.19	0.17	6.6
5	3	6	6	6	2<3	45	0.21	0.29	0.22	0.14	-	-	-	-	5.7
5	3	6	6	6	3-5	36	0.14	0.14	0.14	0.14	-	-	-	-	5.7
5	3	6	6	6	10	36	0.14	0.17	0.17	0.14	-	-	-	-	5.7
5	3	6	6	6	15	35	0.17	0.24	0.24	0.14	-	-	-	-	5.7
5	3	6	6	6	20	35	0.21	0.31	0.31	0.14	-	-	-	-	5.7
5	3	6	6	6	25	35	0.26	0.38	0.38	0.14	-	-	-	-	5.7
5	3	6	6	6	30	35	0.31	0.45	0.45	0.14	-	-	-	-	5.7
5	3	6	6	6	35	35	0.37	0.52	0.53	0.14	-	-	-	-	5.7
5	4	8	7	6	<2	-	0.19	0.48	0.24	0.14	0.22	0.19	0.19	0.17	7.2
5	4	6	6	6	2<3	45	0.18	0.33	0.25	0.14	-	-	-	-	6.3
5	4	6	6	6	3-5	45	0.14	0.16	0.16	0.14	-	-	-	-	6.3
5	4	6	6	6	10	36	0.14	0.19	0.19	0.14	-	-	-	-	6.3
5	4	6	6	6	15	35	0.14	0.26	0.27	0.14	-	-	-	-	6.3
5	4	6	6	6	20	35	0.18	0.33	0.34	0.14	-	-	-	-	6.3
5	4	6	6	6	25	35	0.21	0.41	0.42	0.14	-	-	-	-	6.3
5	4	6	6	6	30	35	0.26	0.49	0.49	0.14	-	-	-	-	6.3
5	4	6	6	6	35	35	0.30	0.56	0.57	0.14	-	-	-	-	6.3
5	5	8	7	6	<2	-	0.19	0.50	0.26	0.14	0.24	0.19	0.19	0.17	7.8
5	5	6	6	6	2<3	45	0.16	0.35	0.28	0.14	-	-	-	-	6.9
5	5	6	6	6	3-5	45	0.14	0.17	0.18	0.14	-	-	-	-	6.9
5	5	6	6	6	10	45	0.14	0.20	0.21	0.14	-	-	-	-	6.9
5	5	6	6	6	15	36	0.14	0.27	0.28	0.14	-	-	-	-	6.9
5	5	6	6	6	20	35	0.15	0.35	0.36	0.14	-	-	-	-	6.9
5	5	6	6	6	25	35	0.19	0.42	0.44	0.14	-	-	-	-	6.9
5	5	6	6	6	30	35	0.22	0.50	0.51	0.14	-	-	-	-	6.9
5	5	6	6	6	35	35	0.26	0.58	0.59	0.14	-	-	-	-	6.9
5	2	8	7	6	<2	-	0.20	0.31	0.20	0.14	0.22	0.19	0.19	0.17	6.0
5	2	6	6	6	30	44	0.39	0.33	0.34	0.14	-	-	-	-	5.1

⑤

① For Box Length = 8'-0"

② A_{S1} thru A_{S4}, A_{S7} and A_{S8} are minimum required areas of reinforcement per linear foot of box length. A_{S6} and A_{S5} are minimum required areas of reinforcement per linear foot of box width.

⑤ These designs were created by TxDOT and are not shown in the ASTM Specifications.

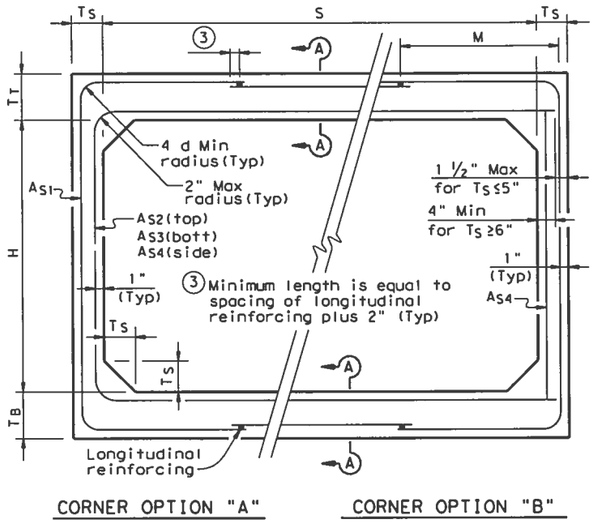

CORNER OPTION "A" CORNER OPTION "B"

FILL HEIGHT 2 FT AND GREATER

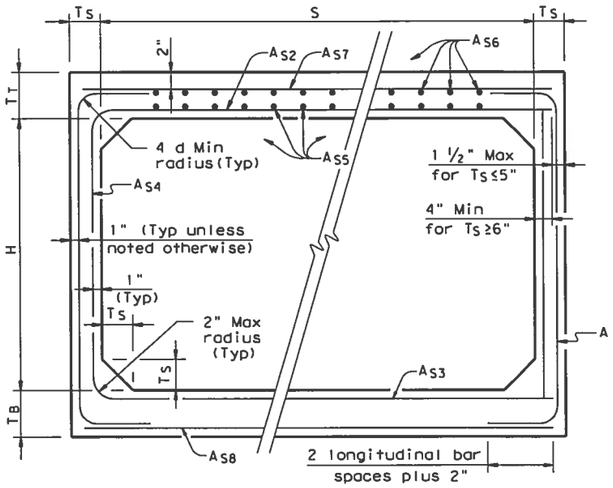

CORNER OPTION "A" CORNER OPTION "B"

FILL HEIGHT LESS THAN 2 FT

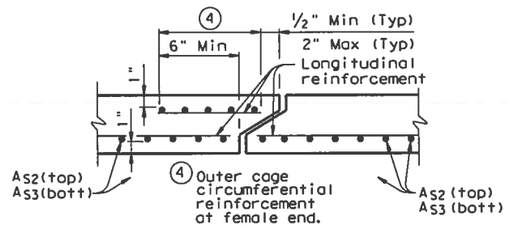

SECTION A-A

(TOP AND BOTTOM SLAB JOINT REINFORCEMENT)

GENERAL NOTES:

Designs shown conform to ASTM C1433.

Refer to ASTM C1433 for information or details not shown.

All concrete shall be Class "H" Concrete with a minimum compressive strength of 5,000 psi.

See SCP-MD standard sheet for miscellaneou details and notes not shown.

In lieu of furnishing the designs shown o this sheet, the contractor may furnish an alternate design that is equal to or exceeds the box design for the design fill height i the table. Shop plans for alternate design shall be submitted in accordance with Item "Precast Concrete Structures".

HS20 LOADING

Texas Department of Transportatio
Bridge Division

SINGLE BOX CULVERT PRECAST
5'-0" SPAN

SCP-5

FILE: scp05ste.dgn	DN: CAF	CK: LMW	DW: BWH/TxDOT	CK	
© TxDOT May 2005	DISTRICT	PROJECT NUMBER			
REVISIONS 06-06 - Revised reinforcing. 08-07 - General notes.	YKM				
	COUNTY	CONTROL	SECT	JOB	
	GONZALES, ETC	1442	03	016, ET	

LEVELS DISPLAYED | ACC:

DISCLAIMER:
The use of this standard is governed by the "Texas Engineering Practice Act". No warranty of any kind is made by TxDOT for any purpose whatsoever. TxDOT assumes no responsibility for the conversion of this standard to other formats or for incorrect results or damages resulting from its use.

LEVELS DISPLAYED | ACC:

BOX DATA

SECTION DIMENSIONS					Fill Height	M (Min)	REINFORCING (in^2/ft) ②								① Lift Weight (Tons)
S (ft)	H (ft)	T_T (in)	T_B (in)	T_S (in)	(ft)	(in)	A_{S1}	A_{S2}	A_{S3}	A_{S4}	A_{S5}	A_{S6}	A_{S7}	A_{S8}	
6	3	8	7	7	<2	-	0.23	0.45	0.20	0.17	0.19	0.19	0.19	0.17	7.9
6	3	7	7	7	2<3	43	0.24	0.30	0.20	0.17	-	-	-	-	7.5
6	3	7	7	7	3-5	40	0.17	0.17	0.17	0.17	-	-	-	-	7.5
6	3	7	7	7	10	39	0.17	0.20	0.20	0.17	-	-	-	-	7.5
6	3	7	7	7	15	38	0.23	0.27	0.28	0.17	-	-	-	-	7.5
6	3	7	7	7	20	38	0.30	0.35	0.36	0.17	-	-	-	-	7.5
6	3	7	7	7	25	38	0.36	0.44	0.44	0.17	-	-	-	-	7.5
6	3	7	7	7	30	38	0.43	0.52	0.52	0.17	-	-	-	-	7.5
6	3	7	7	7	35	38	0.50	0.60	0.60	0.17	-	-	-	-	7.5
6	4	8	7	7	<2	-	0.19	0.49	0.23	0.17	0.21	0.19	0.19	0.17	8.6
6	4	7	7	7	2<3	43	0.21	0.33	0.23	0.17	-	-	-	-	8.2
6	4	7	7	7	3-5	40	0.17	0.17	0.17	0.17	-	-	-	-	8.2
6	4	7	7	7	10	39	0.17	0.22	0.23	0.17	-	-	-	-	8.2
6	4	7	7	7	15	38	0.20	0.30	0.31	0.17	-	-	-	-	8.2
6	4	7	7	7	20	38	0.25	0.39	0.40	0.17	-	-	-	-	8.2
6	4	7	7	7	25	38	0.30	0.48	0.49	0.17	-	-	-	-	8.2
6	4	7	7	7	30	38	0.36	0.57	0.58	0.17	-	-	-	-	8.2
6	4	7	7	7	35	38	0.42	0.66	0.67	0.17	-	-	-	-	8.2
6	5	8	7	7	<2	-	0.19	0.52	0.25	0.17	0.22	0.19	0.19	0.17	9.3
6	5	7	7	7	2<3	52	0.19	0.36	0.26	0.17	-	-	-	-	8.9
6	5	7	7	7	3-5	43	0.17	0.19	0.19	0.17	-	-	-	-	8.9
6	5	7	7	7	10	39	0.17	0.23	0.24	0.17	-	-	-	-	8.9
6	5	7	7	7	15	38	0.17	0.32	0.33	0.17	-	-	-	-	8.9
6	5	7	7	7	20	38	0.22	0.41	0.43	0.17	-	-	-	-	8.9
6	5	7	7	7	25	38	0.26	0.51	0.52	0.17	-	-	-	-	8.9
6	5	7	7	7	30	38	0.31	0.60	0.61	0.17	-	-	-	-	8.9
6	5	7	7	7	35	38	0.36	0.69	0.71	0.17	-	-	-	-	8.9
6	6	8	7	7	<2	-	0.19	0.54	0.27	0.17	0.23	0.19	0.19	0.17	10.0
6	6	7	7	7	2<3	52	0.17	0.38	0.28	0.17	-	-	-	-	9.6
6	6	7	7	7	3-5	52	0.17	0.20	0.20	0.17	-	-	-	-	9.6
6	6	7	7	7	10	43	0.17	0.24	0.26	0.17	-	-	-	-	9.6
6	6	7	7	7	15	39	0.17	0.33	0.35	0.17	-	-	-	-	9.6
6	6	7	7	7	20	38	0.19	0.43	0.44	0.17	-	-	-	-	9.6
6	6	7	7	7	25	38	0.23	0.52	0.54	0.17	-	-	-	-	9.6
6	6	7	7	7	30	38	0.27	0.61	0.63	0.17	-	-	-	-	9.6
6	6	7	7	7	35	38	0.32	0.71	0.73	0.17	-	-	-	-	9.6

① For Box Length = 8'-0"

② A_{S1} thru A_{S4}, A_{S7} and A_{S8} are minimum required areas of reinforcement per linear foot of box length. A_{S6} and A_{S5} are minimum required areas of reinforcement per linear foot of box width.

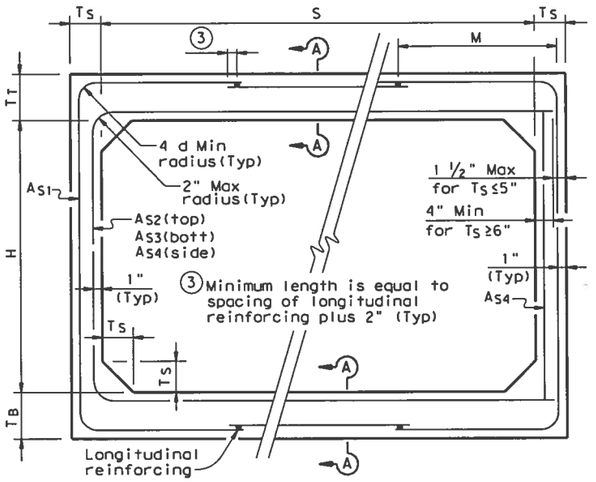

CORNER OPTION "A" CORNER OPTION "B"

FILL HEIGHT 2 FT AND GREATER

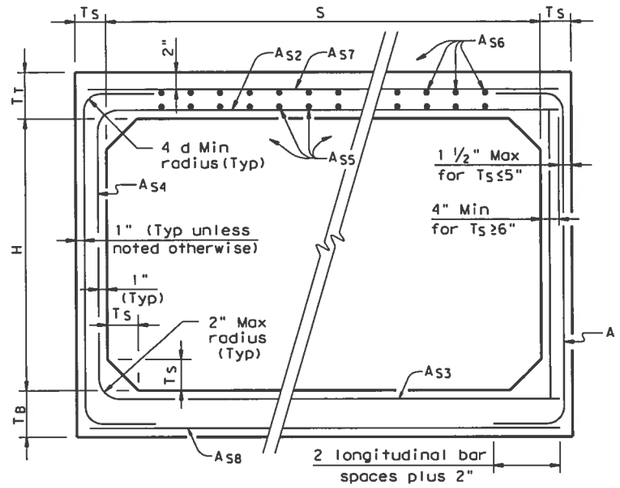

CORNER OPTION "A" CORNER OPTION "B"

FILL HEIGHT LESS THAN 2 FT

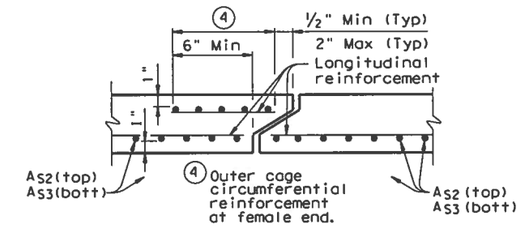

SECTION A-A

(TOP AND BOTTOM SLAB JOINT REINFORCEMENT)

GENERAL NOTES:

Designs shown conform to ASTM C1433. Refer to ASTM C1433 for information or details not shown.

All concrete shall be Class "H" Concrete with a minimum compressive strength of 5,000 psi.

See SCP-MD standard sheet for miscellaneous details and notes not shown.

In lieu of furnishing the designs shown on this sheet, the contractor may furnish an alternate design that is equal to or exceeds the box design for the design fill height in the table. Shop plans for alternate designs shall be submitted in accordance with Item "Precast Concrete Structures".

HS20 LOADING

Texas Department of Transportation
Bridge Division

SINGLE BOX CULVERT PRECAST
6'-0" SPAN

SCP-6

FILE: scp06ste.dgn	DN: GAF	CK: LMW	DW: BWH/TxDOT	CK:
©TxDOT May 2005	DISTRICT	PROJECT NUMBER		
REVISIONS 06-06 - Revised reinforcing. 08-07 - General notes.	YKM			
	COUNTY	CONTROL	SECT	JOB
	GONZALES, ETC	1442	03	016, ETC

DISCLAIMER:
The use of this standard is governed by the "Texas Engineering Practice Act". No warranty of any kind is made by TxDOT for any purpose whatsoever. TxDOT assumes no responsibility for the conversion of this standard to other formats or for incorrect results or damages resulting from its use.

BOX DATA

SECTION DIMENSIONS					Fill Height	M (Min)	REINFORCING (in^2/ft) ②								① Lift Weight (Tons)
S (ft)	H (ft)	T_T (in)	T_B (in)	T_S (in)	(ft)	(in)	A_{S1}	A_{S2}	A_{S3}	A_{S4}	A_{S5}	A_{S6}	A_{S7}	A_{S8}	
7	4	8	8	8	<2	-	0.26	0.49	0.21	0.19	0.19	0.19	0.19	0.19	10.4
7	4	8	8	8	2<3	47	0.24	0.33	0.22	0.19	-	-	-	-	10.4
7	4	8	8	8	3-5	43	0.19	0.19	0.19	0.19	-	-	-	-	10.4
7	4	8	8	8	10	43	0.19	0.25	0.25	0.19	-	-	-	-	10.4
7	4	8	8	8	15	41	0.26	0.34	0.35	0.19	-	-	-	-	10.4
7	4	8	8	8	20	41	0.33	0.44	0.45	0.19	-	-	-	-	10.4
7	4	8	8	8	25	41	0.40	0.54	0.55	0.19	-	-	-	-	10.4
7	4	8	8	8	30	41	0.47	0.64	0.65	0.19	-	-	-	-	10.4
7	4	8	8	8	35	41	0.55	0.75	0.75	0.19	-	-	-	-	10.4
7	5	8	8	8	<2	-	0.23	0.52	0.24	0.19	0.21	0.19	0.19	0.19	11.2
7	5	8	8	8	2<3	59	0.22	0.36	0.25	0.19	-	-	-	-	11.2
7	5	8	8	8	3-5	43	0.19	0.20	0.20	0.19	-	-	-	-	11.2
7	5	8	8	8	10	43	0.19	0.27	0.28	0.19	-	-	-	-	11.2
7	5	8	8	8	15	41	0.23	0.37	0.38	0.19	-	-	-	-	11.2
7	5	8	8	8	20	41	0.29	0.48	0.49	0.19	-	-	-	-	11.2
7	5	8	8	8	25	41	0.35	0.58	0.59	0.19	-	-	-	-	11.2
7	5	8	8	8	30	41	0.41	0.69	0.70	0.19	-	-	-	-	11.2
7	5	8	8	8	35	41	0.47	0.80	0.81	0.19	-	-	-	-	11.2
7	6	8	8	8	<2	-	0.21	0.54	0.26	0.19	0.22	0.19	0.19	0.19	12.0
7	6	8	8	8	2<3	59	0.20	0.39	0.27	0.19	-	-	-	-	12.0
7	6	8	8	8	3-5	47	0.19	0.22	0.22	0.19	-	-	-	-	12.0
7	6	8	8	8	10	43	0.19	0.28	0.30	0.19	-	-	-	-	12.0
7	6	8	8	8	15	41	0.20	0.39	0.40	0.19	-	-	-	-	12.0
7	6	8	8	8	20	41	0.26	0.50	0.51	0.19	-	-	-	-	12.0
7	6	8	8	8	25	41	0.31	0.61	0.62	0.19	-	-	-	-	12.0
7	6	8	8	8	30	41	0.36	0.72	0.73	0.19	-	-	-	-	12.0
7	6	8	8	8	35	41	0.42	0.83	0.85	0.19	-	-	-	-	12.0
7	7	8	8	8	<2	-	0.19	0.56	0.27	0.19	0.22	0.19	0.19	0.19	12.8
7	7	8	8	8	2<3	59	0.19	0.41	0.29	0.19	-	-	-	-	12.8
7	7	8	8	8	3-5	59	0.19	0.23	0.23	0.19	-	-	-	-	12.8
7	7	8	8	8	10	47	0.19	0.29	0.31	0.19	-	-	-	-	12.8
7	7	8	8	8	15	43	0.19	0.40	0.42	0.19	-	-	-	-	12.8
7	7	8	8	8	20	41	0.24	0.51	0.53	0.19	-	-	-	-	12.8
7	7	8	8	8	25	41	0.28	0.62	0.64	0.19	-	-	-	-	12.8
7	7	8	8	8	30	41	0.33	0.73	0.75	0.19	-	-	-	-	12.8
7	7	8	8	8	35	41	0.38	0.84	0.87	0.19	-	-	-	-	12.8
7	3	8	8	8	<2	-	0.28	0.36	0.24	0.19	0.21	0.19	0.19	0.19	9.6
7	3	8	8	8	30	58	0.53	0.49	0.50	0.19	-	-	-	-	9.6

⑤

① For Box Length = 8'-0"

② A_{S1} thru A_{S4}, A_{S7} and A_{S8} are minimum required areas of reinforcement per linear foot of box length. A_{S6} and A_{S5} are minimum required areas of reinforcement per linear foot of box width.

⑤ These designs were created by TxDOT and are not shown in the ASTM Specifications.

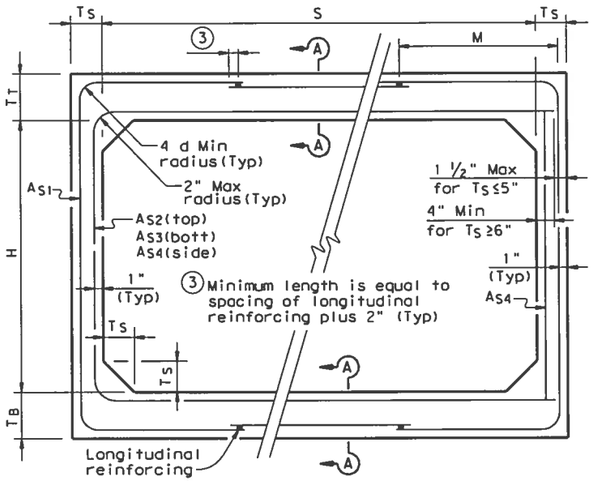

CORNER OPTION "A" CORNER OPTION "B"

FILL HEIGHT 2 FT AND GREATER

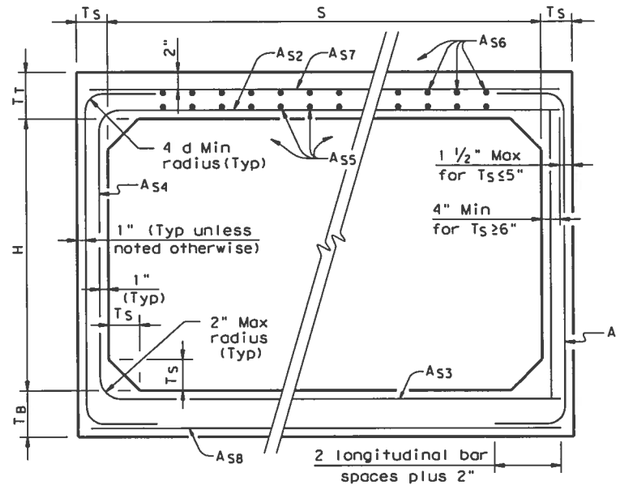

CORNER OPTION "A" CORNER OPTION "B"

FILL HEIGHT LESS THAN 2 FT

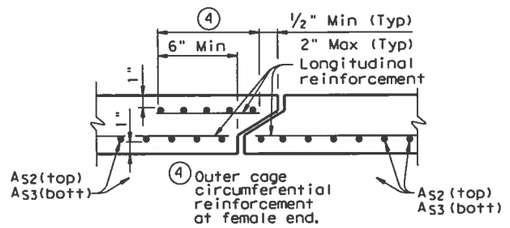

SECTION A-A

(TOP AND BOTTOM SLAB JOINT REINFORCEMENT)

GENERAL NOTES:

Designs shown conform to ASTM C1433.

Refer to ASTM C1433 for information or details not shown.

All concrete shall be Class "H" Concrete with a minimum compressive strength of 5,000 psi.

See SCP-MD standard sheet for miscellaneou details and notes not shown.

In lieu of furnishing the designs shown o this sheet, the contractor may furnish an alternate design that is equal to or exceed the box design for the design fill height i the table. Shop plans for alternate design shall be submitted in accordance with Item "Precast Concrete Structures".

HS20 LOADING

Texas Department of Transportatio
Bridge Division

SINGLE BOX CULVERT PRECAST
7'-0" SPAN

SCP-7

FILE: scp07ste.dgn	DN: GAF	CK: LMW	DW: BWH/TxDOT	CK
©TxDOT May 2005	DISTRICT	PROJECT NUMBER		
REVISIONS 06-06 - Revised reinforcing. 08-07 - General notes.	YKM			
	COUNTY	CONTROL	SECT	JOB
	GONZALES, ETC	1442	03	016, ET

LEVELS DISPLAYED
ACC:

DISCLAIMER:
The use of this standard is governed by the "Texas Engineering Practice Act". No warranty of any kind is made by TxDOT for any purpose whatsoever. TxDOT assumes no responsibility for the conversion of this standard to other formats or for incorrect results or damages resulting from its use.

LEVELS DISPLAYED

ACC:

BOX DATA

SECTION DIMENSIONS					Fill Height	M (Min)	REINFORCING (in²/ft) ②								① Lift Weight (Tons)
S (ft)	H (ft)	T_T (in)	T_B (in)	T_S (in)	(ft)	(in)	A_{S1}	A_{S2}	A_{S3}	A_{S4}	A_{S5}	A_{S6}	A_{S7}	A_{S8}	
10	5	10	10	10	<2	-	0.29	0.51	0.24	0.24	0.24	0.24	0.24	0.24	17.5
10	5	10	10	10	2<3	58	0.30	0.41	0.27	0.24	-	-	-	-	17.5
10	5	10	10	10	3-5	52	0.24	0.26	0.27	0.24	-	-	-	-	17.5
10	5	10	10	10	10	52	0.35	0.39	0.41	0.24	-	-	-	-	17.5
10	5	10	10	10	15	47	0.47	0.55	0.56	0.24	-	-	-	-	17.5
10	5	10	10	10	20	47	0.60	0.70	0.72	0.24	-	-	-	-	17.5
10	5	10	10	10	25	47	0.73	0.86	0.87	0.24	-	-	-	-	17.5
10	5	10	10	10	30	47	0.86	1.02	1.03	0.24	-	-	-	-	17.5
10	6	10	10	10	<2	-	0.27	0.53	0.27	0.24	0.24	0.24	0.24	0.24	18.5
10	6	10	10	10	2<3	58	0.27	0.43	0.29	0.24	-	-	-	-	18.5
10	6	10	10	10	3-5	52	0.24	0.28	0.30	0.24	-	-	-	-	18.5
10	6	10	10	10	10	52	0.32	0.42	0.44	0.24	-	-	-	-	18.5
10	6	10	10	10	15	47	0.43	0.58	0.60	0.24	-	-	-	-	18.5
10	6	10	10	10	20	47	0.55	0.75	0.77	0.24	-	-	-	-	18.5
10	6	10	10	10	25	47	0.66	0.91	0.93	0.24	-	-	-	-	18.5
10	7	10	10	10	<2	-	0.25	0.55	0.29	0.24	0.24	0.24	0.24	0.24	19.5
10	7	10	10	10	2<3	64	0.26	0.45	0.32	0.24	-	-	-	-	19.5
10	7	10	10	10	3-5	58	0.24	0.30	0.32	0.24	-	-	-	-	19.5
10	7	10	10	10	10	52	0.30	0.44	0.47	0.24	-	-	-	-	19.5
10	7	10	10	10	15	47	0.40	0.61	0.64	0.24	-	-	-	-	19.5
10	7	10	10	10	20	47	0.51	0.78	0.81	0.24	-	-	-	-	19.5
10	7	10	10	10	25	47	0.61	0.96	0.98	0.24	-	-	-	-	19.5
10	8	10	10	10	<2	-	0.24	0.57	0.31	0.24	0.24	0.24	0.24	0.24	20.5
10	8	10	10	10	2<3	64	0.25	0.47	0.34	0.24	-	-	-	-	20.5
10	8	10	10	10	3-5	58	0.24	0.32	0.34	0.24	-	-	-	-	20.5
10	8	10	10	10	10	52	0.28	0.46	0.49	0.24	-	-	-	-	20.5
10	8	10	10	10	15	47	0.37	0.63	0.67	0.24	-	-	-	-	20.5
10	8	10	10	10	20	47	0.47	0.81	0.84	0.24	-	-	-	-	20.5
10	8	10	10	10	25	47	0.57	0.99	1.02	0.24	-	-	-	-	20.5
10	9	10	10	10	<2	-	0.24	0.59	0.34	0.24	0.24	0.24	0.24	0.24	21.5
10	9	10	10	10	2<3	79	0.24	0.49	0.36	0.24	-	-	-	-	21.5
10	9	10	10	10	3-5	64	0.24	0.33	0.36	0.24	-	-	-	-	21.5
10	9	10	10	10	10	58	0.27	0.48	0.52	0.24	-	-	-	-	21.5
10	9	10	10	10	15	47	0.35	0.65	0.69	0.24	-	-	-	-	21.5
10	9	10	10	10	20	47	0.44	0.83	0.87	0.24	-	-	-	-	21.5
10	9	10	10	10	25	47	0.53	1.01	1.05	0.24	-	-	-	-	21.5
10	10	10	10	10	<2	-	0.24	0.60	0.36	0.24	0.24	0.24	0.24	0.24	22.5
10	10	10	10	10	2<3	79	0.24	0.51	0.39	0.24	-	-	-	-	22.5
10	10	10	10	10	3-5	70	0.24	0.35	0.39	0.24	-	-	-	-	22.5
10	10	10	10	10	10	64	0.25	0.49	0.54	0.24	-	-	-	-	22.5
10	10	10	10	10	15	52	0.34	0.67	0.72	0.24	-	-	-	-	22.5
10	10	10	10	10	20	52	0.42	0.85	0.90	0.24	-	-	-	-	22.5
10	10	10	10	10	25	47	0.51	1.03	1.08	0.24	-	-	-	-	22.5

① For Box Length = 8'-0"

② A_{S1} thru A_{S4}, A_{S7} and A_{S8} are minimum required areas of reinforcement per linear foot of box length. A_{S6} and A_{S5} are minimum required areas of reinforcement per linear foot of box width.

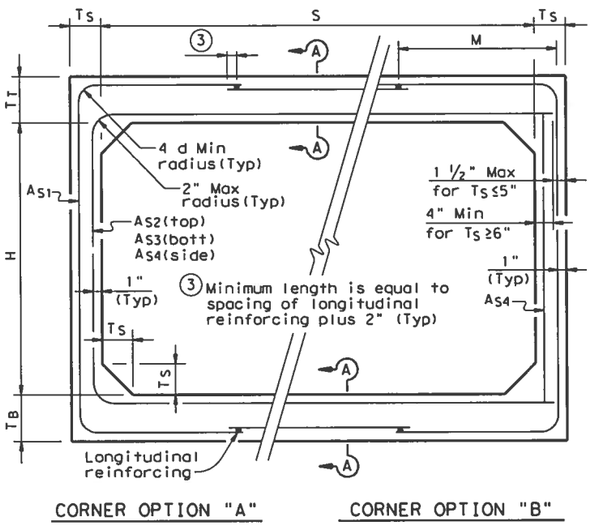

CORNER OPTION "A" CORNER OPTION "B"

FILL HEIGHT 2 FT AND GREATER

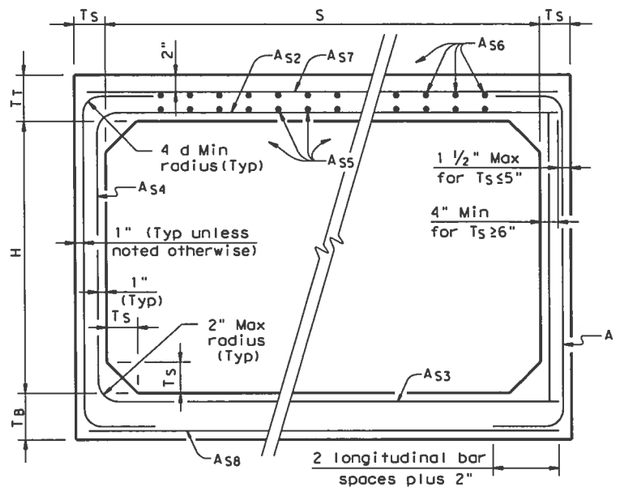

CORNER OPTION "A" CORNER OPTION "B"

FILL HEIGHT LESS THAN 2 FT

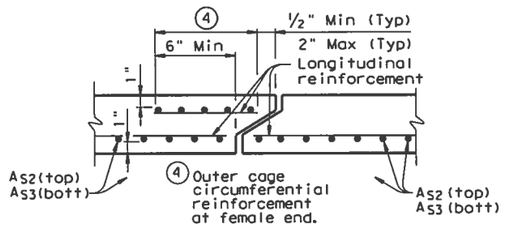

SECTION A-A

(TOP AND BOTTOM SLAB JOINT REINFORCEMENT)

GENERAL NOTES:

Designs shown conform to ASTM C1433. Refer to ASTM C1433 for information or details not shown.

All concrete shall be Class "H" Concrete with a minimum compressive strength of 5,000 psi.

See SCP-MD standard sheet for miscellaneou details and notes not shown.

In lieu of furnishing the designs shown or this sheet, the contractor may furnish an alternate design that is equal to or exceeds the box design for the design fill height in the table. Shop plans for alternate designs shall be submitted in accordance with Item "Precast Concrete Structures".

HS20 LOADING

Texas Department of Transportatio
Bridge Division

SINGLE BOX CULVERT PRECAST
10'-0" SPAN

SCP-10

FILE: scp10ste.dgn	DN: GAF	CK: LMW	DW: BWH/TxDOT	CK:
©TxDOT May 2005	DISTRICT	PROJECT NUMBER		
REVISIONS 06-06 - Revised reinforcing. 08-07 - General notes.	YKM			
	COUNTY	CONTROL	SECT	JOB
	GONZALES, ETC	1442	03	016, ETC

DISCLAIMER:
The use of this standard is governed by the "Texas Engineering Practice Act". No warranty of any kind is made by TxDOT for any purpose whatsoever. TxDOT assumes no responsibility for the conversion of this standard to other formats or for incorrect results or damages resulting from its use.

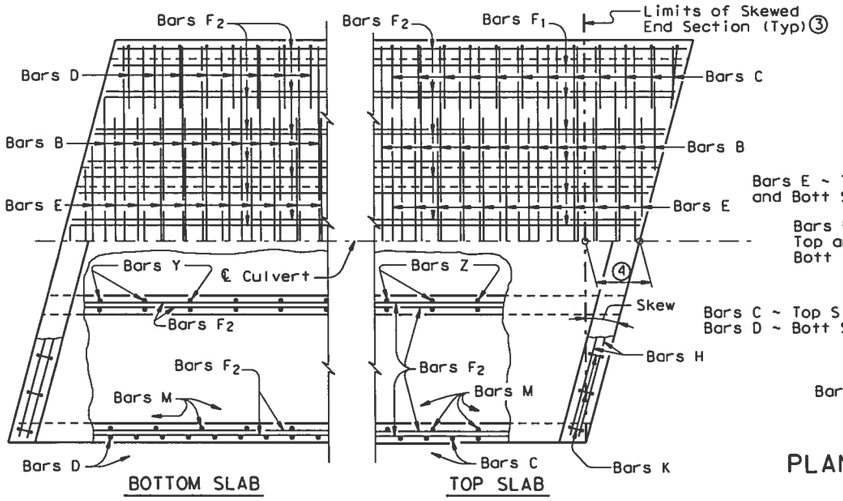

PLAN OF SKEWED ENDS ~ FROM 0° TO 15° ⑦

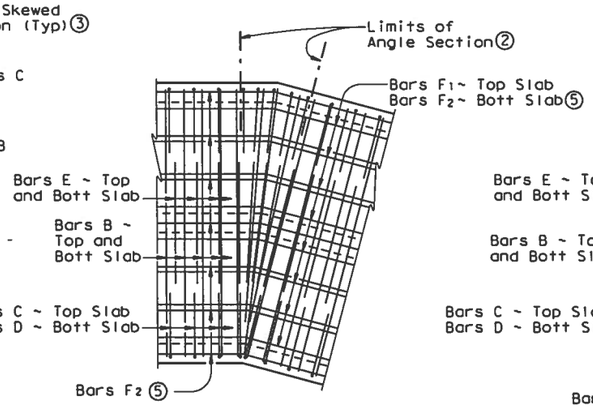

PLAN OF ANGLE SECTION ~ FROM 0° TO 15°

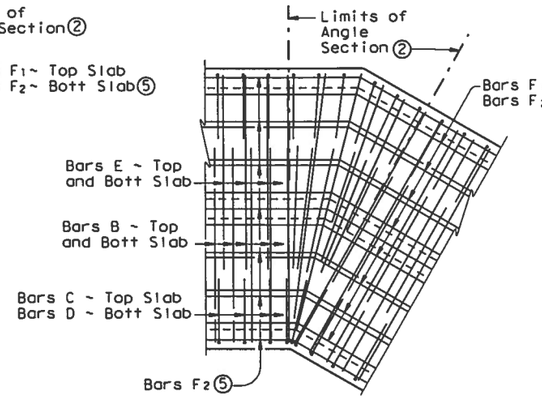

PLAN OF ANGLE SECTION ~ OVER 15° TO 30°

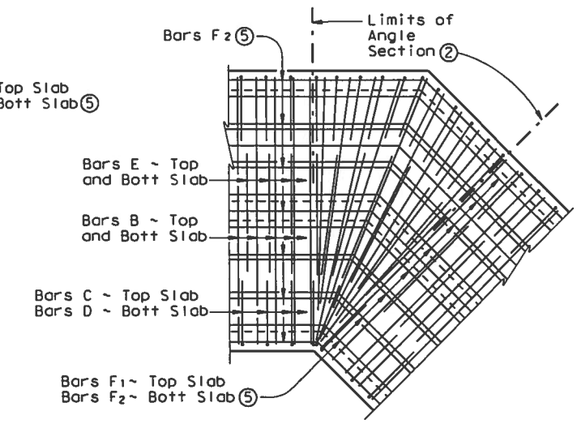

PLAN OF ANGLE SECTION ~ OVER 30° TO 45°

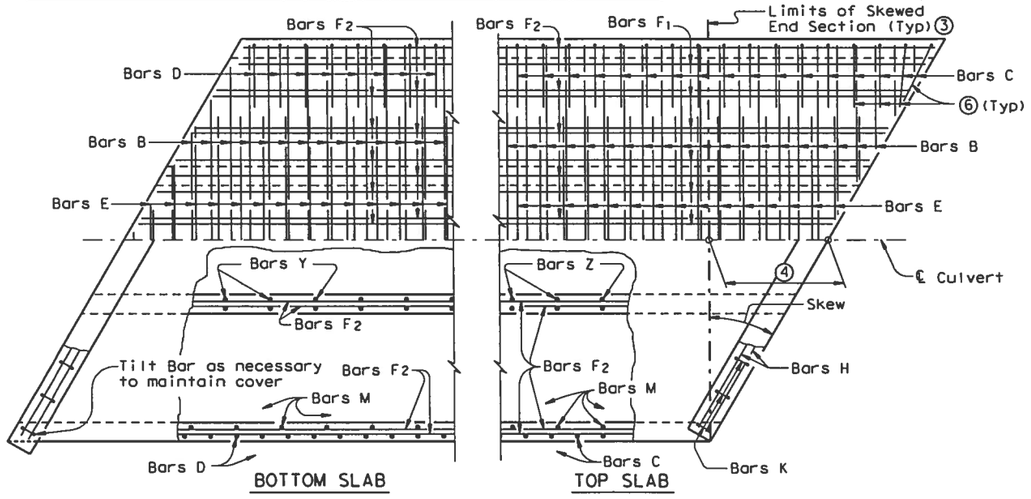

PLAN OF SKEWED ENDS ~ OVER 15° TO 30°

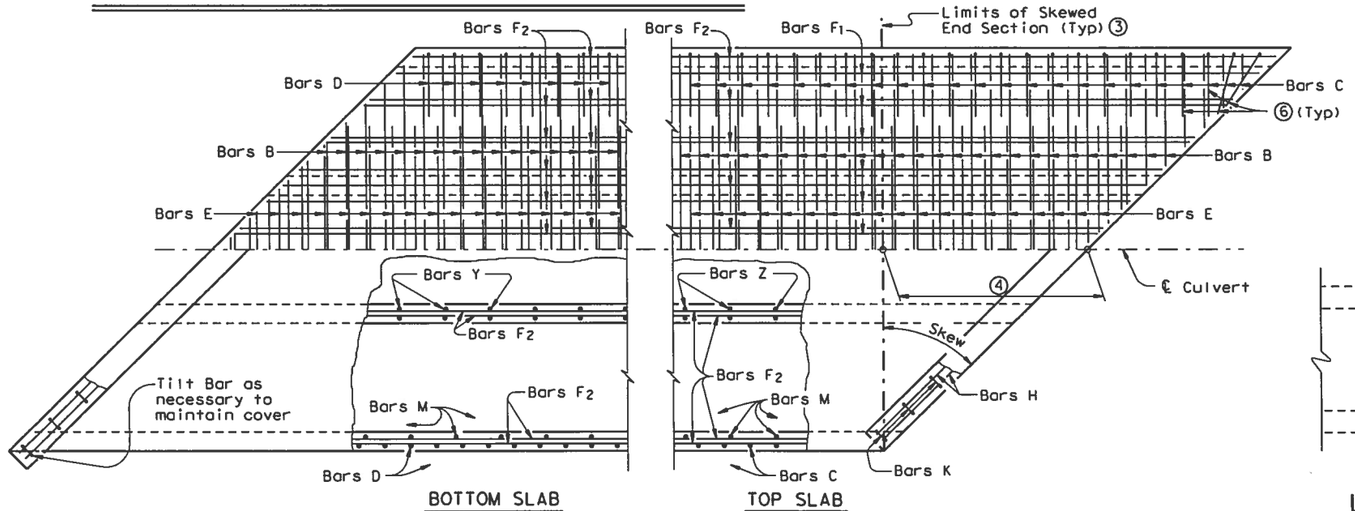

PLAN OF SKEWED ENDS ~ OVER 30° TO 45°

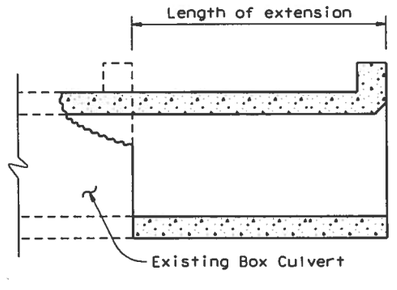

LENGTHENING DETAIL ①

GENERAL NOTES:

Designed according to current AASHTO Standard and Interim Specifications.

All reinforcing steel shall be Grade 60.

All concrete shall be Class "C" with these exceptions: use Class "S" for top slabs of culverts with overlay, with 1-to-2 course surface treatment, or with the top slab as the final riding surface.

Class "C" concrete shall have a minimum compressive strength of 3,600 psi. Class "S" concrete shall have a minimum compressive strength of 4,000 psi.

Refer to Multiple Box Culverts Cast-in-Place standard for details of straight sections of culvert. For skewed sections and angle sections refer to Multiple Box Culverts Cast-in-Place standard for slab and wall dimensions, bar sizes, maximum bar spacing, and any other details not shown. For Skewed ends with curbs, adjust length of Bars H, number of Bars K, curb concrete volume and reinforcing steel weight by dividing the values shown on the culvert standards by the cosine of the skew angle.

The use of permanent forms is not allowed.

Laps for Bars H, when required, shall be 1'-9" for uncoated bars and 2'-7" for epoxy coated.

① For box culverts with less than 2'-0" of fill, the top slab shall be broken back to provide a minimum 1'-10" lap of the existing longitudinal bars with the longitudinal bars in the extension. If the depth of fill is 2'-0" or greater, the top slab shall be broken back to provide a 1'-0" minimum embedment of existing longitudinal reinforcing into the extension. Alternatively, if the fill height is greater than 2'-0", the existing curb may be left in place and 2'-0" long #6 bars shall be drilled and groute 1'-0" into the existing top slab at 1'-6" center to center spacin Wings and apron shall be broken back as necessary to install the extension. Exposed wingwall and apron reinforcing may be removed or cleaned and included in the extension. When lengthening existing box culverts with dimensions different than current standard dimensions, horizontal and vertical transitions shall be formed as directed by the Engineer. Bottom slabs shall match to maintain an uninterrupted flow line. Existing and new reinforcing shall be field bent into transition maintaining specified cover requirements. For top slabs of culverts with overlay, with 1-to-2 course surface treatment, or with the top slab as the final riding surface, the "H" dimension may be adjusted to provide a smooth riding surface.

② When the spacing between Bars B or Bars E becomes less than half of the normal spacing, bars shall be cut to avoid fouling

③ The length of Bars B and E will vary in the skewed end sections

④ [One half of overall width] x [Tan of the skew angle]

⑤ Bars F1 and F2 shall be continuous through the angle section. Th shall be bent to remain parallel to the walls of the Box Culvert.

⑥ When necessary to avoid fouling in acute corners, the slab extens leg of Bars C and Bars D may be shortened to a minimum of 1'-6" for skews of 30° and 45°.

⑦ For skews of 15° or less, the contractor has the option of placir Bars B, C, D and E parallel to the skewed end while maintaining spacing along centerline box. Lengths of Bars B and E shown on the standards shall be increased to accommodate the skew.

HS20 LOADING

Texas Department of Transportation
Bridge Division

MULTIPLE BOX CULVERTS CAST-IN-PLACE MISCELLANEOUS DETAILS

MC-MD

FILE: mc-mdste.dgn	DN: CAF	CK: LMW	DW: BWH/TxDOT	CK:	
©TxDOT May 2005	DISTRICT	PROJECT NUMBER			
REVISIONS	YKM				
	COUNTY	CONTROL	SECT	JOB	H
	GONZALES, ETC	1442	03	016, ETC	F

ACTIVE FILE LEVELS DISPLAYED
1 2 3 4 5 7 8 9 10 11 12 13 14 15 16 17 18 19 20 21 22 23 24 25 26 27 28 29 30 31 32 33 34 35 36 37 38 39 40 41 42 43 44 45 46 47 48 49 50 51 52 53 54 55 56 57 58 59 60 61 62 63

COMMENTS:

DISCLAIMER:
The use of this standard is governed by the "Texas Engineering Practice Act". No warranty of any kind is made by TxDOT for any purpose whatsoever. TxDOT assumes no responsibility for the conversion of this standard to other formats or for incorrect results or damages resulting from its use.

BILLS OF REINFORCING STEEL (For Box Length = 40 feet)

NUMBER OF SPANS	SECTION DIMENSIONS				Bars B					Bars C & D							Bars E					Bars F_1 ~#4				Bars F_2 ~#4 at 1'-6" Max				Bars M~#4 at 1'-6" Max			Bars Y & Z~#4 at 10" Max					Bars H 4~#4		Bars K	
	S	H	T	U	No.	Size	Spa	Length	Wt	No.	Size	Spa	Bar C Length	Bar C Wt	Bar D Length	Bar D Wt	No.	Size	Spa	Length	Wt	No.	Spa	Length	Wt	No.	Length	Wt	No.	Length	Wt	No.	Bar Y Length	Bar Y Wt	Bar Z Length	Bar Z Wt	Length	Weight	No.	Weight
2	7'-0"	3'-0"	7"	7"	194	#5	5"	15'- 6"	3,136	162	#4	6"	8'-11"	965	7'- 8"	830	194	#5	5"	8'- 0"	1,619	20	8"	39'-9"	531	54	39'-9"	1,434	56	3'- 0"	112	49	4'- 6"	147	7'- 0"	229	15'- 6"	41	34	97
3	7'-0"	3'-0"	7"	7"	194	#5	5"	23'- 1"	4,671	162	#4	6"	8'-11"	965	7'- 8"	830	194	#5	5"	15'- 7"	3,153	30	8"	39'-9"	797	77	39'-9"	2,045	56	3'- 0"	112	98	4'- 6"	295	7'- 0"	458	23'- 1"	62	48	136
4	7'-0"	3'-0"	7"	7"	194	#5	5"	30'- 8"	6,205	162	#4	6"	8'-11"	965	7'- 8"	830	194	#5	5"	23'- 2"	4,688	40	8"	39'-9"	1,062	100	39'-9"	2,655	56	3'- 0"	112	147	4'- 6"	442	7'- 0"	687	30'- 8"	82	64	182
5	7'-0"	3'-0"	7"	7"	194	#5	5"	38'- 3"	7,740	162	#4	6"	8'-11"	965	7'- 8"	830	194	#5	5"	30'- 9"	6,222	50	8"	39'-9"	1,328	123	39'-9"	3,266	56	3'- 0"	112	196	4'- 6"	589	7'- 0"	916	38'- 3"	102	80	227
6	7'-0"	3'-0"	7"	7"	194	#5	5"	45'-10"	9,274	162	#4	6"	8'-11"	965	7'- 8"	830	194	#5	5"	38'- 4"	7,756	60	8"	39'-9"	1,593	146	39'-9"	3,877	56	3'- 0"	112	245	4'- 6"	736	7'- 0"	1,146	45'-10"	122	94	267
2	7'-0"	4'-0"	7"	7"	194	#5	5"	15'- 6"	3,136	162	#4	6"	9'-11"	1,073	7'- 8"	830	194	#5	5"	8'- 0"	1,619	20	8"	39'-9"	531	54	39'-9"	1,434	56	4'- 0"	150	49	4'- 6"	147	9'- 0"	295	15'- 6"	41	34	97
3	7'-0"	4'-0"	7"	7"	194	#5	5"	23'- 1"	4,671	162	#4	6"	9'-11"	1,073	7'- 8"	830	194	#5	5"	15'- 7"	3,153	30	8"	39'-9"	797	77	39'-9"	2,045	56	4'- 0"	150	98	4'- 6"	295	9'- 0"	589	23'- 1"	62	48	136
4	7'-0"	4'-0"	7"	7"	194	#5	5"	30'- 8"	6,205	162	#4	6"	9'-11"	1,073	7'- 8"	830	194	#5	5"	23'- 2"	4,688	40	8"	39'-9"	1,062	100	39'-9"	2,655	56	4'- 0"	150	147	4'- 6"	442	9'- 0"	884	30'- 8"	82	64	182
5	7'-0"	4'-0"	7"	7"	194	#5	5"	38'- 3"	7,740	162	#4	6"	9'-11"	1,073	7'- 8"	830	194	#5	5"	30'- 9"	6,222	50	8"	39'-9"	1,328	123	39'-9"	3,266	56	4'- 0"	150	196	4'- 6"	589	9'- 0"	1,178	38'- 3"	102	80	227
6	7'-0"	4'-0"	7"	7"	194	#5	5"	45'-10"	9,274	162	#4	6"	9'-11"	1,073	7'- 8"	830	194	#5	5"	38'- 4"	7,756	60	8"	39'-9"	1,593	146	39'-9"	3,877	56	4'- 0"	150	245	4'- 6"	736	9'- 0"	1,473	45'-10"	122	94	267
2	7'-0"	5'-0"	7"	7"	194	#5	5"	15'- 6"	3,136	162	#4	6"	10'-11"	1,181	7'- 8"	830	194	#5	5"	8'- 0"	1,619	20	8"	39'-9"	531	60	39'-9"	1,593	56	5'- 0"	187	49	4'- 6"	147	11'- 0"	360	15'- 6"	41	34	97
3	7'-0"	5'-0"	7"	7"	194	#5	5"	23'- 1"	4,671	162	#4	6"	10'-11"	1,181	7'- 8"	830	194	#5	5"	15'- 7"	3,153	30	8"	39'-9"	797	85	39'-9"	2,257	56	5'- 0"	187	98	4'- 6"	295	11'- 0"	720	23'- 1"	62	48	136
4	7'-0"	5'-0"	7"	7"	194	#5	5"	30'- 8"	6,205	162	#4	6"	10'-11"	1,181	7'- 8"	830	194	#5	5"	23'- 2"	4,688	40	8"	39'-9"	1,062	110	39'-9"	2,921	56	5'- 0"	187	147	4'- 6"	442	11'- 0"	1,080	30'- 8"	82	64	182
5	7'-0"	5'-0"	7"	7"	194	#5	5"	38'- 3"	7,740	162	#4	6"	10'-11"	1,181	7'- 8"	830	194	#5	5"	30'- 9"	6,222	50	8"	39'-9"	1,328	135	39'-9"	3,585	56	5'- 0"	187	196	4'- 6"	589	11'- 0"	1,440	38'- 3"	102	80	227
6	7'-0"	5'-0"	7"	7"	194	#5	5"	45'-10"	9,274	162	#4	6"	10'-11"	1,181	7'- 8"	830	194	#5	5"	38'- 4"	7,756	60	8"	39'-9"	1,593	160	39'-9"	4,248	56	5'- 0"	187	245	4'- 6"	736	11'- 0"	1,800	45'-10"	122	94	267
2	7'-0"	6'-0"	7"	7"	194	#5	5"	15'- 6"	3,136	162	#4	6"	11'-11"	1,290	7'- 8"	830	194	#5	5"	8'- 0"	1,619	20	8"	39'-9"	531	66	39'-9"	1,752	56	6'- 0"	224	49	4'- 6"	147	13'- 0"	426	15'- 6"	41	34	97
3	7'-0"	6'-0"	7"	7"	194	#5	5"	23'- 1"	4,671	162	#4	6"	11'-11"	1,290	7'- 8"	830	194	#5	5"	15'- 7"	3,153	30	8"	39'-9"	797	93	39'-9"	2,469	56	6'- 0"	224	98	4'- 6"	295	13'- 0"	851	23'- 1"	62	48	136
4	7'-0"	6'-0"	7"	7"	194	#5	5"	30'- 8"	6,205	162	#4	6"	11'-11"	1,290	7'- 8"	830	194	#5	5"	23'- 2"	4,688	40	8"	39'-9"	1,062	120	39'-9"	3,186	56	6'- 0"	224	147	4'- 6"	442	13'- 0"	1,277	30'- 8"	82	64	182
5	7'-0"	6'-0"	7"	7"	194	#5	5"	38'- 3"	7,740	162	#4	6"	11'-11"	1,290	7'- 8"	830	194	#5	5"	30'- 9"	6,222	50	8"	39'-9"	1,328	147	39'-9"	3,903	56	6'- 0"	224	196	4'- 6"	589	13'- 0"	1,702	38'- 3"	102	80	227
6	7'-0"	6'-0"	7"	7"	194	#5	5"	45'-10"	9,274	162	#4	6"	11'-11"	1,290	7'- 8"	830	194	#5	5"	38'- 4"	7,756	60	8"	39'-9"	1,593	174	39'-9"	4,620	56	6'- 0"	224	245	4'- 6"	736	13'- 0"	2,128	45'-10"	122	94	267
2	7'-0"	7'-0"	7"	7"	194	#5	5"	15'- 6"	3,136	162	#4	6"	12'-11"	1,398	7'- 8"	830	194	#5	5"	8'- 0"	1,619	20	8"	39'-9"	531	66	39'-9"	1,752	56	7'- 0"	262	49	4'- 6"	147	15'- 0"	491	15'- 6"	41	34	97
3	7'-0"	7'-0"	7"	7"	194	#5	5"	23'- 1"	4,671	162	#4	6"	12'-11"	1,398	7'- 8"	830	194	#5	5"	15'- 7"	3,153	30	8"	39'-9"	797	93	39'-9"	2,469	56	7'- 0"	262	98	4'- 6"	295	15'- 0"	982	23'- 1"	62	48	136
4	7'-0"	7'-0"	7"	7"	194	#5	5"	30'- 8"	6,205	162	#4	6"	12'-11"	1,398	7'- 8"	830	194	#5	5"	23'- 2"	4,688	40	8"	39'-9"	1,062	120	39'-9"	3,186	56	7'- 0"	262	147	4'- 6"	442	15'- 0"	1,473	30'- 8"	82	64	182
5	7'-0"	7'-0"	7"	7"	194	#5	5"	38'- 3"	7,740	162	#4	6"	12'-11"	1,398	7'- 8"	830	194	#5	5"	30'- 9"	6,222	50	8"	39'-9"	1,328	147	39'-9"	3,903	56	7'- 0"	262	196	4'- 6"	589	15'- 0"	1,964	38'- 3"	102	80	227
6	7'-0"	7'-0"	7"	7"	194	#5	5"	45'-10"	9,274	162	#4	6"	12'-11"	1,398	7'- 8"	830	194	#5	5"	38'- 4"	7,756	60	8"	39'-9"	1,593	174	39'-9"	4,620	56	7'- 0"	262	245	4'- 6"	736	15'- 0"	2,455	45'-10"	122	94	267

QUANTITIES

Per foot of Barrel		Curb		Total	
Conc (CY)	Reinf (Lb)	Conc (CY)	Reinf (Lb)	Conc (CY)	Re
0.875	225.1	1.2	138	36.2	9
1.267	333.2	1.7	198	52.4	13
1.660	441.2	2.3	264	68.7	17
2.052	549.2	2.9	329	85.0	22
2.445	657.2	3.4	389	101.2	26
0.940	230.4	1.2	138	38.8	9
1.354	340.1	1.7	198	55.9	13
1.768	449.7	2.3	264	73.0	18
2.182	559.4	2.9	329	90.2	22
2.596	669.1	3.4	389	107.2	27
1.005	239.6	1.2	138	41.4	9
1.440	352.3	1.7	198	59.3	14
1.876	464.9	2.3	264	77.3	18
2.312	577.6	2.9	329	95.4	23
2.747	690.1	3.4	389	113.3	27
1.069	248.9	1.2	138	44.0	10
1.527	364.5	1.7	198	62.8	14
1.984	480.1	2.3	264	81.7	19
2.441	595.7	2.9	329	100.5	24
2.899	711.3	3.4	389	119.4	28
1.134	254.2	1.2	138	46.6	10
1.613	371.4	1.7	198	66.2	15
2.092	488.7	2.3	264	86.0	19
2.571	605.9	2.9	329	105.7	24
3.050	723.1	3.4	389	125.4	29

H	Bar Dimensions "X"	Bar Dimensions "Y"
3'-0"	3'-5"	2'-2"
4'-0"	4'-5"	2'-2"
5'-0"	5'-5"	2'-2"
6'-0"	6'-5"	2'-2"
7'-0"	7'-5"	2'-2"

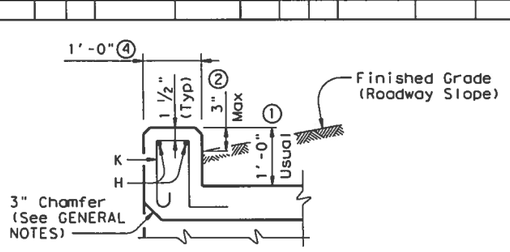

SECTION THRU CURB

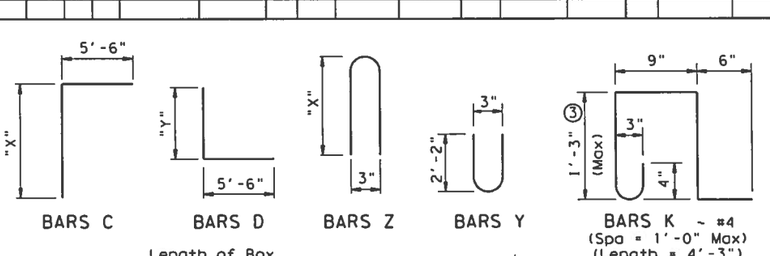

BARS C BARS D BARS Z BARS Y BARS K ~ #4 (Spa = 1'-0" Max) (Length = 4'-3")

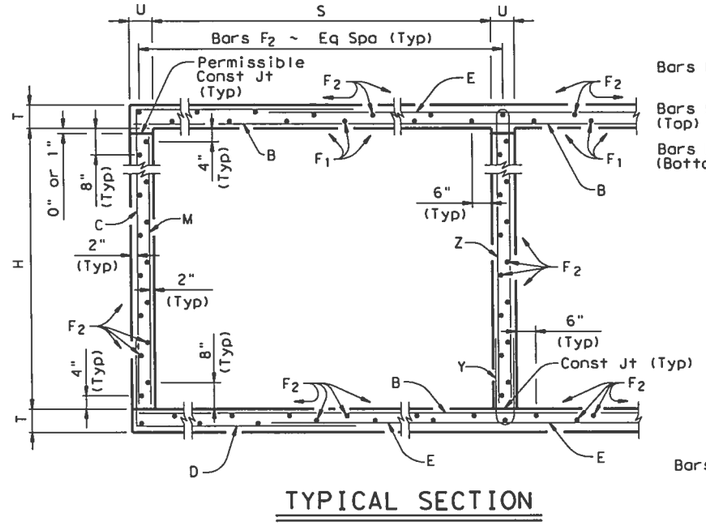

TYPICAL SECTION

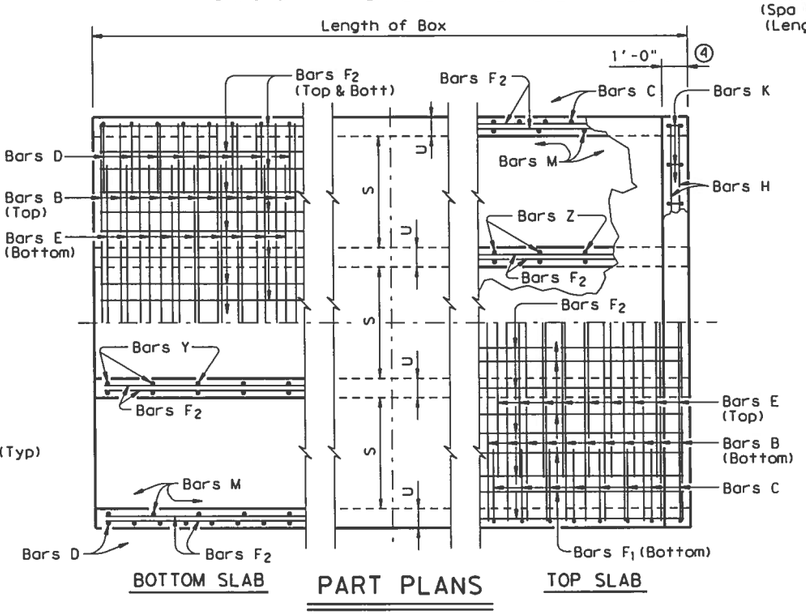

BOTTOM SLAB PART PLANS TOP SLAB

GENERAL NOTES:

Designed according to current AASHTO Standard and Interim Specifications.
Designed to the maximum fill height shown.
All reinforcing steel shall be Grade 60.
All concrete shall be Class "C" with these exceptions: use Class "S" for top slabs of culverts with overlay, with 1-to-2 course surface treatment, or with the top slab as the final riding surface.
Class "C" concrete shall have a minimum compressive strength of 3,600 psi. Class "S" concrete shall have a minimum compressive strength of 4,000 psi.
The use of permanent forms is not allowed.
The bottom edge of the top slab shall be chamfered 3" at the entrance.
Reinforcing bars shall be adjusted to provide a minimum of 1 ¼" clear cover at the Contractor's option. If this option is used, Bars M may be cut off or raised, Bars C and D may be reversed, and Bars Y and Z may be reversed.
See standard MC-MD for skewed ends, angle sections and lengthening details.

① 0" min to 5'-0" max. Estimated curb heights are shown elsewhere in the plans. For structures without railing and curbs taller than 1'-0", refer to ECD standard. For structures with T6 bridge rail, refer to T6-CM standard. For structures with bridge rail, other than T6, refer to RAC standard.

② For vehicle safety, the following requirements must be met:
- For structures without bridge rail, curbs shall project no more than 3" above finished grade.
- For structures with bridge rail, curbs shall be flush with finished grade.

Curb heights shall be reduced, if necessary, to meet the above requirements. No changes will be made in quantities and no additional compensation will be allowed for this work.

③ For curbs less than 1'-0" high, tilt bars K or reduce bar height as necessary to maintain cover. For curbs less than 3" high, bars K may be omitted.

④ 1'-0" typical. 2'-0" when RAC standard is referred to elsewhere in the plans.

HS20 LOADING

Texas Department of Transportation
Bridge Division

MULTIPLE BOX CULVERT CAST-IN-PLACE 7'-0" SPAN 0' TO 10' FILL

MC-7-10

FILE: mc710ste.dgn	DN: GAF	CK: LMW	DW: BWH/TxDOT	CK
©TxDOT May 2005	DISTRICT	PROJECT NUMBER		
REVISIONS	YKM			
	COUNTY	CONTROL	SECT	JOB
	GONZALES, ETC	1442	03	016, ETC

ACC:
LEVELS DISPLAYED
1

Culvert Station and/or Creek name followed by applicable end (Lt, Rt or Both)	Description of Box Culvert No. Spans ~ Span X Height	Max Fill Height (Ft)	Applicable Box Culvert Standard (4)	Applicable Wingwall or End Treatment Standard	Skew Angle (0°, 15°, 30° or 45°)	Side Slope or Channel Slope Ratio (SL:1)	T Culvert Top Slab Thickness (In)	U Culvert Wall Thickness (In)	C Estimated Curb Height (Ft)	Hw (1) Height of Wingwall (Ft)	A Curb to End of Wingwall (Ft)	B Offset of End of Wingwall (Ft)	Lw Length of Longest Wingwall (Ft)	Ltw Culvert Toewall Length (Ft)	Atw Anchor Toewall Length (Ft)	Riprap Apron (C.Y.)	Class (2) "C" Conc (Curb) (C.Y.)	Class (3) "C" Conc (Wingwall) (C.Y.)	Total Wingwall Area (S.F.)
STA 22+80.5 (Both)	2 ~ 5'x 4'	1.5'	SCP-5	SETB-FW-0	0°	4:1	8"	6"	0.250'	4.667'	17.333'	10.007'	20.015'	N/A	31.515'	9.4	0.2	18.0	N/A
STA 81+89.50 (Both)	1 ~ 4'x 3'	1.5'	SCP-4	SETB-FW-0	0°	4:1	8"	5"	0.250'	3.667'	13.333'	7.698'	15.396'	N/A	19.396'	3.6	0.0	11.4	N/A
STA 299+23.50 - STA 299+46.50 (Lt)	3 ~ 7'x 4'	1.5'	MC-7-10	SETB-FW-0	0°	4:1	7"	7"	0.250'	4.583'	17.000'	9.815'	19.630'	N/A	41.797'	7.2	0.2	9.7	N/A
STA 299+23.50 - STA 299+46.50 (Rt)	3 ~ 7'x 4'	1.5'	MC-7-10	SETB-FW-0	0°	3:1	7"	7"	0.250'	4.583'	12.750'	7.361'	14.722'	N/A	36.889'	4.8	0.2	7.6	N/A
STA 309+08.50 - STA 309+31.50 (Rt)	3 ~ 7'x 4'	1.5'	MC-7-10	SETB-FW-0	0°	3:1	7"	7"	0.250'	4.583'	12.750'	7.361'	14.722'	N/A	36.889'	4.8	0.2	7.6	N/A
STA 309+08.50 - STA 309+31.50 (Lt)	3 ~ 7'x 4'	1.5'	MC-7-10	SETB-FW-0	0°	4:1	7"	7"	0.250'	4.583'	17.000'	9.815'	19.630'	N/A	41.797'	7.2	0.2	9.7	N/A
STA 370+00 (Lt)	1 ~ 7'x 3'	1.5'	SCC-7	SETB-FW-0	0°	4:1	7"	7"	0.250'	3.583'	13.000'	7.506'	15.011'	N/A	22.011'	2.3	0.1	5.8	N/A
STA 370+00 (Rt)	1 ~ 7'x 3'	1.5'	SCC-7	SETB-FW-0	0°	3:1	7"	7"	0.250'	3.583'	9.750'	5.629'	11.258'	N/A	18.258'	1.4	0.1	4.4	N/A
STA 386+95.33 - STA 387+18.66 (Lt)	3 ~ 7'x 7'	1'	MC-7-10	PW	0°	2:1	7"	7"	0.250'	7.833'	N/A	N/A	15.667'	23.333'	N/A	0.0	0.2	17.3	245
STA 386+95.33 - STA 387+18.66 (Rt)	3 ~ 7'x 5'	1'	MC-7-10	PW	0°	2:1	7"	7"	1.920'	7.500'	N/A	N/A	15.000'	23.333'	N/A	0.0	1.7	15.7	225
STA 439+28 (Both)	1 ~10'x 7' 1 ~7'x 7'	1.75'	SCC-10	PW	0°	2:1	7"	7"	0.250'	7.833'	N/A	N/A	15.667'	19.833'	N/A	0.0	0.4	34.5	490
STA 452+54 (Rt)	2 ~ 6'x 5'	1.5'	MC-6-16	PW	15°	2:1	7"	7"	1.400'	6.979'	N/A	N/A	14.451'	14.235'	N/A	0.0	0.7	13.8	202
STA 452+54 (Lt)	2 ~ 6'x 5'	1.5'	MC-6-16	SETB-FW-S	30°	3:1	7"	7"	0.250'	5.583'	15.750'	15.750'	22.274'	N/A	30.280'	4.4	0.1	9.0	N/A
STA 509+50 (Lt)	3 ~ 7'x 7'	1.5'	MC-7-10	PW	0°	2:1	7"	7"	0.250'	7.833'	N/A	N/A	15.667'	23.333'	N/A	0.0	0.2	17.3	245
STA 509+50 (Rt)	3 ~ 7'x 7'	1.5'	MC-7-10	PW	0°	2:1	7"	7"	1.330'	8.917'	N/A	N/A	17.833'	23.333'	N/A	0.0	1.1	22.8	318
STA 530+40 (Lt)	1 ~10'x 6'	2.5'	SCC-10	SETB-FW-0	0°	3:1	7"	7"	0.250'	6.583'	18.750'	10.825'	21.651'	N/A	31.651'	4.8	0.1	11.1	N/A
STA 530+40 (Rt)	1 ~10'x 6'	2.5'	SCC-10	PW	0°	2:1	7"	7"	3.120'	9.708'	N/A	N/A	19.417'	11.167'	N/A	0.0	1.3	25.3	377
STA 582+00 (Lt)	2 ~ 7'x 4'	1'	MC-7-10	SETB-FW-0	0°	4:1	7"	7"	0.250'	4.583'	17.000'	9.815'	19.630'	N/A	34.213'	5.3	0.1	9.1	N/A
STA 582+00 (Rt)	2 ~ 7'x 4'	1'	MC-7-10	SETB-FW-0	0°	3:1	7"	7"	0.250'	4.583'	12.750'	7.361'	14.722'	N/A	29.306'	3.5	0.1	7.0	N/A
STA 605+62 (Both)	1 ~ 6'x 5'	3'	SCC-5&6	SETB-FW-0	0°	3:1	7"	7"	0.250'	5.583'	15.750'	9.093'	18.187'	N/A	24.187'	5.6	0.2	16.6	N/A
STA 611+66 (Both)	1 ~ 6'x 3'	4'	SCC-5&6	SETB-FW-0	0°	3:1	7"	7"	0.250'	3.583'	9.750'	5.629'	11.258'	N/A	17.258'	2.6	0.2	8.8	N/A

DISCLAIMER:
The use of this standard is governed by the "Texas Engineering Practice Act". No warranty of any kind is made by TxDOT for any purpose whatsoever. TxDOT assumes no responsibility for the conversion of this standard to other formats or for incorrect results or damages resulting from its use.

COMMENTS:

LEVELS DISPLAYED
1 2 3 4 5 6 7 8 9 10 11 12 13 14 15 16
17 18 19 20 21 22 23 24 25 26 27 28 29 30 31 32
33 34 35 36 37 38 39 40 41 42 43 44 45 46 47 48
49 50 51 52 53 54 55 56 57 58 59 60 61 62 63

NOTES:

Skew Angle = 0° for SW-0, FW-0, SETB-CD, SETB-SW-0, and SETB-FW-0 standards.
30° Maximum for Safety End Treatment

SL:1 = Horizontal:1 Vertical
Side Slope at culvert for Flared or Straight Wingwalls. Channel Slope for Parallel Wingwalls.
Slope shall be 3:1 or flatter for Safety End Treatments.

T = Box Culvert Top Slab Thickness. Dimension can be found on the applicable Box Culvert Standard.

U = Box Culvert Wall Thickness. Dimension can be found on the applicable Box Culvert Standard.

C = Curb Height.

See applicable wing or end treatment standards for calculations of Hw, A, B, Lw, Ltw, Atw, and Total Wingwall Area.
Hw = Height of Wingwall.
A = Distance from Face of Curb to End of Wingwall (Not applicable to Parallel or Straight Wingwalls).
B = Offset of End of Wingwall (Not applicable to Parallel or Straight Wingwalls).
Lw = Length of Longest Wingwall.
Ltw = Length of Culvert Toewall (Not applicable when using Riprap Apron).
Atw = Length of Anchor Toewall (Applicable to Safety End Treatment only).
Total Wingwall Area = Wingwall area in S.F. for two wingwalls (one structure end) if Lt or Rt.
Area for four wingwalls (two structure ends) if Both.

(1) The wall heights shown will be rounded to the nearest Foot for bidding purposes.

(2) Concrete volume shown is for box culvert curb only. For curbs using the RAC standard, quantities shown must be increased by a factor of 2. If Class "S" concrete is required for the top slab of the culvert, the curb concrete shall also be Class "S". Curb concrete is considered part of the Box Culvert for payment.

(3) Concrete volume shown is total of wing, footing, culvert toewall (if any), anchor toewall (if any) and wingwall toewall. Riprap apron, culvert and curb quantities are not included.

(4) Regardless of the type of culvert shown on this sheet, the Contractor shall have the option of furnishing cast-in-place or precast culverts unless otherwise shown elsewhere on the plans. If the Contractor elects to provide culverts of a different type than those shown on this sheet, it shall be the Contractor's responsibility to make the necessary adjustments to the dimensions and quantities shown.

SPECIAL NOTE:

This sheet is a supplement to the Box Culvert standards. It is to be filled out by the culvert specifier and provides dimensions for the construction of the Box Culvert Wingwalls and Safety End Treatments.

An Excel 97 spreadsheet to assist in completing this table can be downloaded from the Bridge Standards (English) web page on the TxDOT web site. The completed sheet shall be signed, sealed, and dated by a licensed Professional Engineer.

STATE OF TEXAS
OLEN D. HOWARD
69804
REGISTERED
PROFESSIONAL ENGINEER

Olen D Howard 4/2/09

Texas Department of Transportation
Bridge Division

BOX CULVERT SUPPLEMENTAL WINGS AND END TREATMENTS

BCS

FILE: bcsstdel.dgn	DN: TxDOT	CK: TxDOT	DW: TxDOT	CK: C
©TxDOT May 2005	DISTRICT	PROJECT NUMBER		
REVISIONS	YKM			
	COUNTY	CONTROL	SECT	JOB
	GONZALES, ETC.	1442	03	016, ETC

TABLE OF DIMENSIONS & REINFORCING STEEL
(Wings for One Structure End)

Dimensions					Variable Reinforcing				Estimated Quantities (3) per ft of wing length (2~Wings)	
					Bars J1		Bars J2			
Maximum Wingwall Height Hw (9)	W	X	Y	Z	Size	Spa	Size	Spa	Reinf (LB/Ft)	Conc (CY/Ft)
2'-6"	2'- 5"	1'- 0"	9"	7"	#4	1'-0"	#4	1'-0"	33.73	0.248
3'-0"	2'- 5"	1'- 0"	9"	7"	#4	1'-0"	#4	1'-0"	37.07	0.261
3'-6"	2'- 5"	1'- 0"	9"	7"	#4	1'-0"	#4	1'-0"	37.74	0.273
4'-0"	2'- 5"	1'- 0"	9"	7"	#4	1'-0"	#4	1'-0"	38.41	0.285
4'-6"	3'- 2"	1'- 6"	1'- 0"	7"	#4	1'-0"	#4	1'-0"	41.75	0.330
5'-0"	3'- 2"	1'- 6"	1'- 0"	7"	#4	1'-0"	#4	1'-0"	45.09	0.343
5'-6"	3'- 2"	1'- 6"	1'- 0"	7"	#4	1'-0"	#4	1'-0"	45.75	0.355
6'-0"	3'- 2"	1'- 6"	1'- 0"	7"	#4	1'-0"	#4	1'-0"	46.42	0.367
7'-0"	3'- 8"	1'- 9"	1'- 3"	7"	#4	1'-0"	#4	1'-0"	52.77	0.414
8'-0"	4'- 2"	2'- 0"	1'- 6"	8"	#5	1'-0"	#4	1'-0"	60.19	0.486
9'-0"	4'- 8"	2'- 3"	1'- 9"	8"	#4	6"	#4	6"	81.49	0.535
10'-0"	5'- 2"	2'- 6"	2'- 0"	8"	#5	6"	#4	6"	97.25	0.584
11'-0"	5'- 8"	2'- 9"	2'- 3"	8"	#6	6"	#5	6"	133.65	0.634
12'-0"	6'- 2"	3'- 0"	2'- 6"	9"	#7	6"	#5	6"	162.29	0.721

TABLE OF WING WALL REINFORCING (2~Wings)

Bar	Size	No.	Spa
D	#5	~	1'-0"
E	#4	~	1'-0"
F	#4	~	1'-0"
G	#6	4	~
M	#4	4	~
P	#4	~	1'-0"
R	#5	6	~
V	#4	~	1'-0"

TABLE OF ESTIMATED CULVERT TOEWALL QUANTITIES

Bar	Size	No.	Spa
L	#4	~	1'-6"
Q	#4	1	~
Reinf (Lb/Ft)			2.45
Conc (CY/Ft)			0.037

TABLE OF ESTIMATED ANCHOR TOEWALL QUANTITIES

Bar	Size	No.	Spa
K	#4	~	1'-0"
N	#5	6	~
OL	#4	6	~
Reinf (Lb/Ft)			9.82
Conc (CY/Ft)			0.074

(1) Extend Bars P 3'-0" minimum into bottom slab of Box Culvert.

(2) Adjust to fit as necessary to maintain 1 1/4" clear cover and 4" minimum between bars.

(3) Quantities shown are based on an average wing height for two wings (one structure end). To determine total quantities for two wings multiply the tabulated values by Lw.

(4) Recommended values of Slope are: 3:1, 4:1, & 6:1. Slope shall be 3:1 or flatter.

(5) When shown elsewhere on the plans, a 5" deep concrete riprap shall be constructed. Unless otherwise shown on the plans or directed by the Engineer, construction joints or grooved joints, oriented in the direction of flow, and shall extend across the full distance of the riprap, at intervals of approximately 20'. When such riprap is provided, the culvert toewall shown in SECTION B-B will not be required. Payment for riprap shall be as required by Item 432, "Riprap".

(6) At Contractor's option, Culvert Toewall may be ended flush with Wingwall Toewall. Adjust reinforcing from that shown as necessary.

(7) 3" min to 5'-0" max. Estimated curb heights are shown elsewhere in the plans. For structures without railing and curbs taller than 1'-0", refer to ECD standard.

(8) For vehicle safety, curbs shall project no more than 3" above finished grade. Curb heights shall be reduced, if necessary, to meet these requirements. No changes will be made in quantities and no additional compensation will be allowed for this work.

(9) See "Table Of Maximum Wing Heights" for various slopes. Height is limited based on a 33'-6" maximum safety pipe runner length.

TABLE OF MAXIMUM (9) WING HEIGHTS (Hw max)

Side Slope	Hw max
3:1	11'- 5"
4:1	8'-10"
6:1	6'- 1"

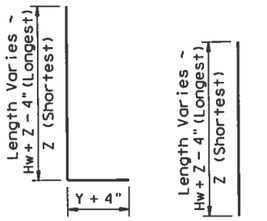

BARS J1 BARS V

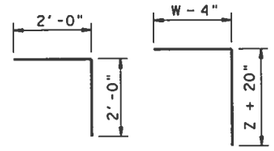

BARS L BARS J2

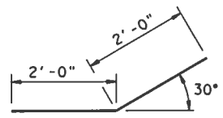

BARS D

BARS R

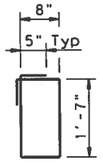

BARS K
(Length = 5'-4")

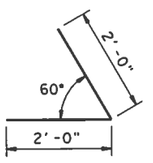

BARS OL

WING DIMENSION CALCULATIONS:

Formulas: (All values are in Feet)
Hw = H + T + C - 0.250' (9)
A = (Hw - 0.333') (SL)
B = (A) (Tangent 30°)
Lw = (A) ÷ (Cosine 30°)

For Cast-in-place culverts:
Ltw = (N) (S) + (N+1) (U)
For Precast culverts:
Ltw = (N) (2U+S) + (N-1) (0.500')

Lc = (Ltw) - (2U)
Atw = (Lc) + (2B)
Total Wingwall Area (Two Wings ~ S.F.)
= (Hw + 0.333'1 (Lw)

Hw = Height of Wingwall
SL:1 = Side Slope Ratio (Horizontal : 1 Vertica
Lw = Length of Wingwall
Ltw = Culvert Toewall Length
Lc = Culvert Curb between Wings
Atw = Anchor Toewall Length
N = Number of Culvert Spans

See applicable box culvert standard for H, S T, and U values. See Table of Maximum Wall Heights for limits on Hw.

GENERAL NOTES:

Designed according to current AASHTO Standard and Interim Specifications.
The Safety End Treatments shown herein are intended for use in those installations where o of control vehicles are likely to traverse the openings approximately perpendicular to the Pipe Runners.
Pipe Runners are designed for a traversing load of 1,800 pounds at yield as recommended by Research Report 280-1, "Safety Treatment of Roadside Cross-Drainage Structures", Texas Transportation Institute, March 1981.
All reinforcing steel shall be Grade 60.
All concrete shall be Class "C" and shall have a minimum compressive strength of 3600 psi
All reinforcing bars shall be adjusted to provide a minimum of 1 1/4" clear cover.
When structure is founded on solid rock, depth of toewalls for culverts and wingwalls may be reduced or eliminated as directed by the Engineer.
See BCS sheet for additional dimensions and information.
All bolts, nuts, washers, brackets, angles, and pipe runners are considered parts of the Safety End Treatment for payment.
Pipe Runners shall conform to the requirement of ASTM A53 (Type E or S, Grade B), ASTM A500 (Grade B), or API 5LX52.
Bolts and nuts shall conform to ASTM A307. Steel plates shall conform to ASTM A36. All steel components, except reinforcing, shall be galvanized. Galvanizing damaged during transport or construction shall be repaired in accordance with the specifications.
The quantities for concrete and reinforcing steel resulting from the formulas given on this sheet are for Contractor's information only.

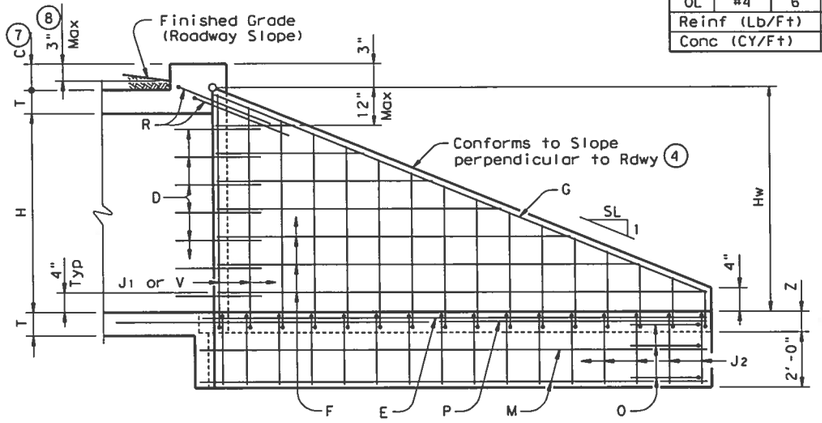

INSIDE ELEVATION OF WINGWALL

(Showing reinforcing. Culvert and Culvert Toewall reinforcing not shown for clarity.)

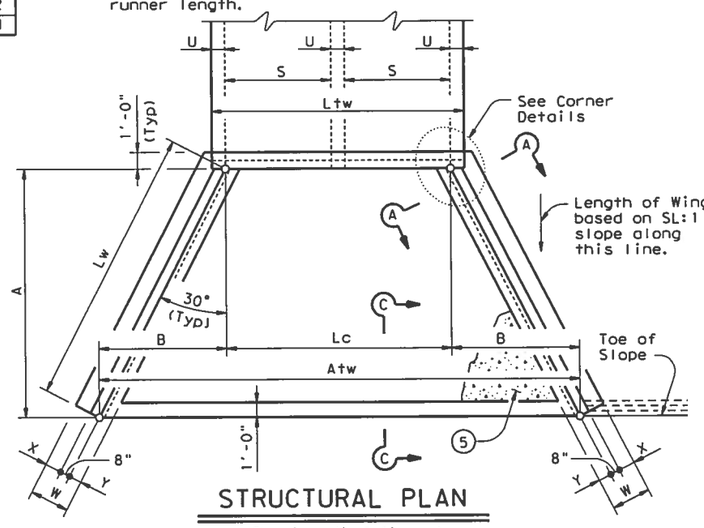

STRUCTURAL PLAN

(Showing dimensions.)

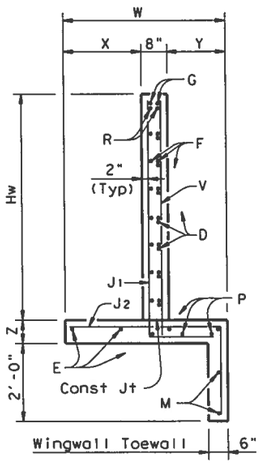

SECTION A-A

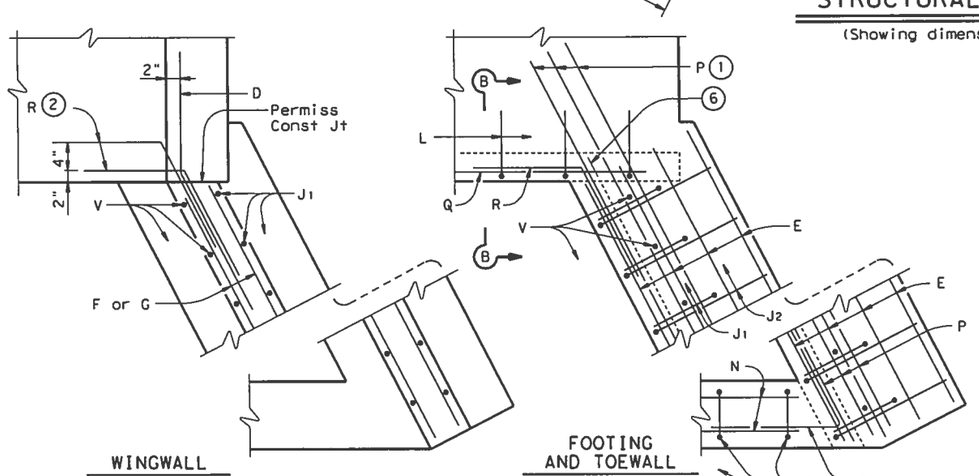

CORNER DETAILS

(Culvert and Culvert Toewall reinforcing not shown for clarity.)

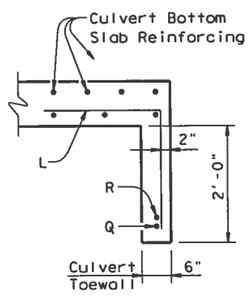

SECTION B-B (5)

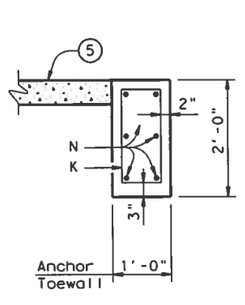

SECTION C-C

SHEET 1 O

Texas Department of Transportatio
Bridge Division

SAFETY END TREATMEN WITH FLARED WINGS

FOR 0° SKEW BOX CULVERTS
TYPE I ~ CROSS DRAINAGE

SETB-FW-0

FILE: setbf0se.dgn	DN: GAF	CK: CAT	DW: TxDOT	CK
© TxDOT May 2005	DISTRICT	PROJECT NUMBER		
REVISIONS	YKM			
	COUNTY	CONTROL	SECT	JOB
	GONZALES, ETC	1442	03	016, ET

DISCLAIMER:
The use of this standard is governed by the "Texas Engineering Practice Act". No warranty of any kind is made by TxDOT for any purpose whatsoever. TxDOT assumes no responsibility for the conversion of this standard to other formats or for incorrect results or damages resulting from its use.

COMMENTS:

LEVELS DISPLAYED
1

DISCLAIMER:
The use of this standard is governed by the "Texas Engineering Practice Act". No warranty of any kind is made by TxDOT for any purpose whatsoever. TxDOT assumes no responsibility for the conversion of this standard to other formats or for incorrect results or damages resulting from its use.

COMMENTS:

LEVELS DISPLAYED

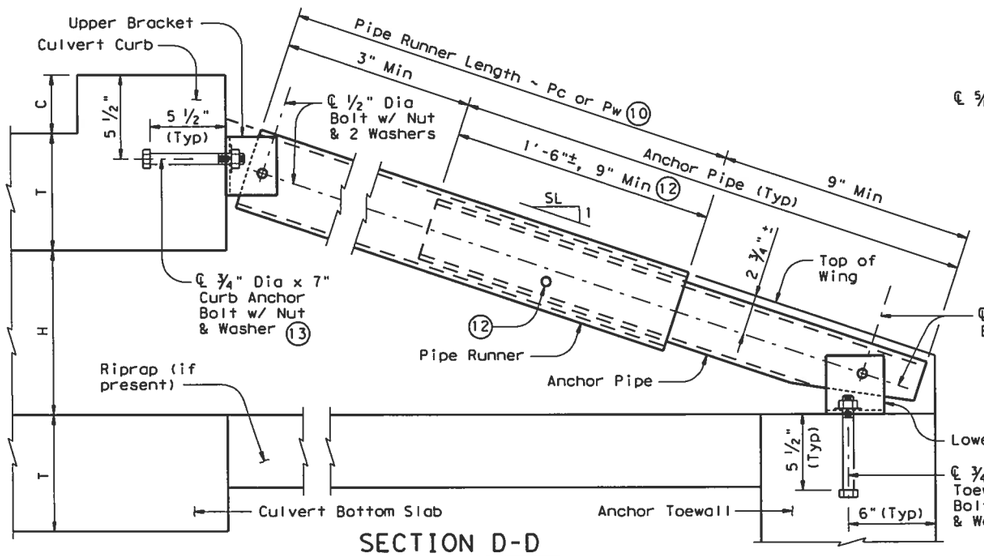

SECTION D-D

(Showing Curb Pipe Runner. Except for upper bracket, Wingwall Pipe Runners are similar.)

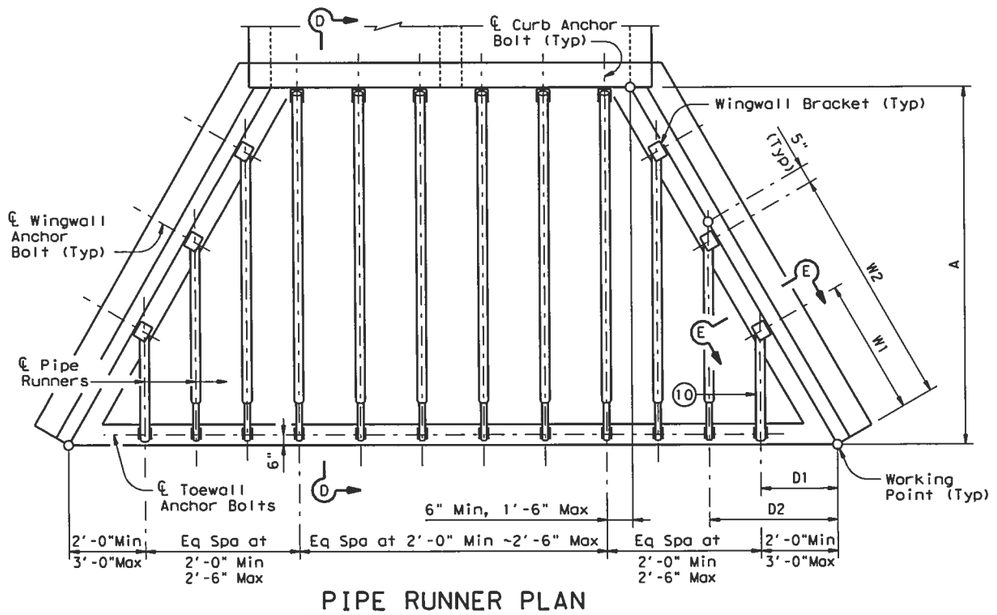

PIPE RUNNER PLAN

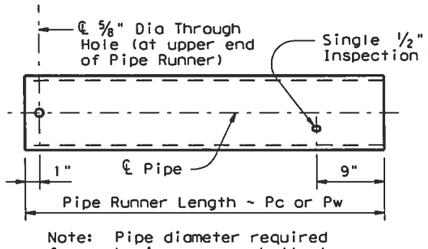

Note: Pipe diameter required for curb pipe runner shall also be used for wingwall pipe runner.

PIPE RUNNER DETAILS

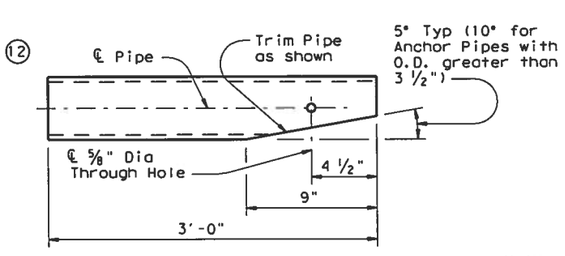

ANCHOR PIPE DETAILS

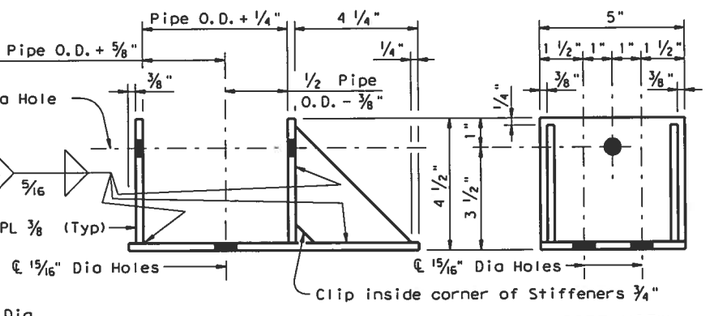

ELEVATION SIDE VIEW

¾" Anchor Bolt shall be installed in hole nearest to the culvert curb. Other bolt hole is intended for use on the opposite hand wingwall.

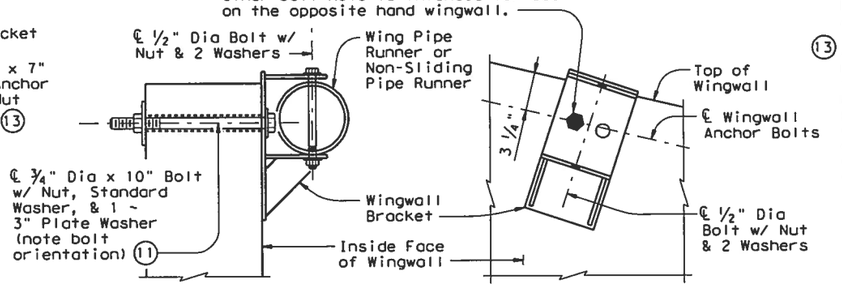

SECTION E-E (Showing installed bracket.)

ELEVATION (Showing installed bracket normal to Wall. Pipe not shown for clarity.)

Note: Wingwall Bracket shall match the Upper Curb Bracket size.

WINGWALL BRACKET DETAILS

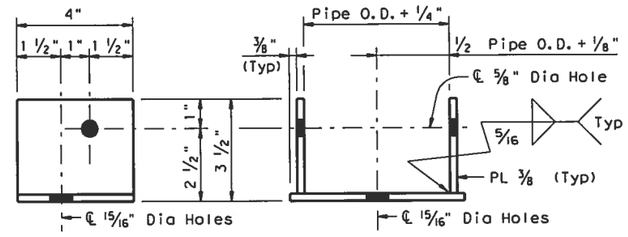

SIDE VIEW ELEVATION

Note: Upper and Lower Brackets shall, except for the brackets used with Non-Sliding Pipe Runners, match the required pipe diameters as shown in the table.

UPPER & LOWER BRACKET DETAILS

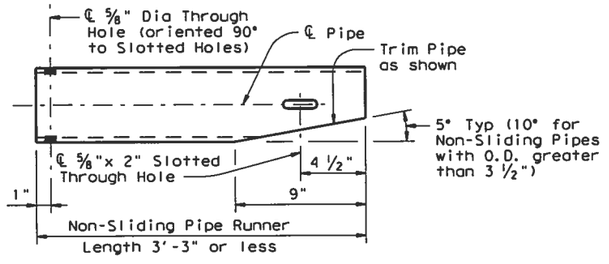

Note: Pipe size shall be same as required for curb pipe runner. Adjust the corresponding Lower Bracket accordingly.

NON-SLIDING PIPE RUNNER DETAILS

MAXIMUM PIPE RUNNER LENGTHS & REQUIRED PIPE RUNNER SIZES

Maximum Pipe Runner Length (Pc or Pw)	Required Pipe Runner Size			Required Anchor Pipe Size		
	Pipe Size	Pipe O.D.	Pipe I.D.	Pipe Size	Pipe O.D.	P I
9'-4"	3" STD	3.500"	3.068"	2" STD	2.375"	2.
19'-0"	4" STD	4.500"	4.026"	3" STD	3.500"	3.
33'-6"	5" STD	5.563"	5.047"	4" STD	4.500"	4.

(10) If Pipe Runner Length Pw is 1'-9" or less, a single Non-Sliding Pipe Runner shall replace the normal Pipe Runner and Anchor Pipe. See NON-SLIDING PIPE RUNNER DETAILS for additional information.

(11) At Contractor's option, ⅞" diameter hole may be formed or cored drilled. Percussion drilling is not permitted. Adjust placement of reinforcing steel as necessary to avoid bolt holes.

(12) After installation of Pipe Runner, the ½" inspec hole shall be utilized to ensure that the lap of Anchor Pipe with the Pipe Runner is adequate.

(13) At Contractor's option, an epoxy anchorage system may be used. Anchorage system chosen must be abl to achieve an ultimate tensile resistance of 20 k Anchor diameter shall be ¾". The Contractor mus provide evidence to the Engineer that this can be achieved. Evidence of adequate tensile resistanc can be based on the manufacturer's published valu of ultimate tensile strength (anchor spacing and distance must be accounted for). Anchor installa including hole size, drilling, and clean-out, mus in accordance with the manufacturer's recommendat

PIPE RUNNER DIMENSION CALCULATIONS:

Formulas: (All values are in Feet)

W"n" = (2.000) (D"n") - (0.416)
Pw"n" = (D"n") (K2) - (2.063)
Pw1 Non-Sliding Pipe Runner (If required) = (D1) (K2) - (0.563)
Pc = (A) (K1) - (1.688)

W"n"= Distance from Working Point to centerli Anchor Bolt measured along bottom inside face of Wing
D"n"= Distance from Working Point to centerli Pipe Runner measured along outside face of Anchor Toewall
Pw = Wingwall Pipe Runner Length
Pc = Curb Pipe Runner Length
K = Constant Values for use in formulas

Slope SL:1	K1	K2
3:1	~ 1.054	~ 1.826
4:1	~ 1.031	~ 1.785
6:1	~ 1.014	~ 1.756

"n" = Wing Pipe Runner Number

SHEET 2 C

Texas Department of Transportati
Bridge Division

SAFETY END TREATMEN WITH FLARED WINGS

FOR 0° SKEW BOX CULVERTS TYPE I ~ CROSS DRAINAGE

SETB-FW-0

FILE: setbf0se.dgn	DN: GAF	CK: CAT	DW: TxDOT	C
©TxDOT May 2005	DISTRICT	PROJECT NUMBER		
REVISIONS	YKM			
	COUNTY	CONTROL	SECT	JOB
	GONZALES, ETC	1442	03	016, E

Culvert Station and/or Creek name followed by applicable end (Lt, Rt or Both) (14)	Lc (Ft)	L1 (Ft)	L2			D1 (Ft)	L3			W1 (Ft)	L4			L5 (Ft)	Curb Pipe Runner (Pc)		Longest Wing Pipe Runner (Pw) (Ft)	Shortest Wing Pipe Runner (Pw) (Ft)	Non-Sliding Wing Pipe Runner (if applicable) (Ft)	Curb, Wing, and/or Non-Sliding Pipe Runners		3'-0" Anchor Pipe	
			No. Spa	Spa at (Ft)	Overall Length (Ft)		No. Spa	Spa at (Ft)	Overall Length (Ft)		No. Spa	Spa at (Ft)	Overall Length (Ft)		No.	Length (Ft)				Size (3",4" or 5")	Total (14) Length (Ft)	Size (2",3" or 4")	Total (14) Length (Ft)
STA 22+80.5 (Both)	11.500'	0.500'	5	2.100'	10.500'	2.000'	4	2.127'	8.507'	3.583'	3	4.254'	12.761'	3.670'	6	16.188'	12.896'	5.313'	3.000'	4"	315.500'	3"	72.000'
STA 81+89.50 (Both)	4.000'	1.000'	1	2.000'	2.000'	2.000'	3	2.233'	6.698'	3.583'	2	4.465'	8.931'	2.882'	2	12.063'	9.479'	5.500'	3.000'	4"	120.167'	3"	36.000'
STA 299+23.50 - STA 299+46.50(Lt)	22.167'	0.500'	9	2.352'	21.167'	3.000'	3	2.438'	7.315'	5.583'	2	4.877'	9.753'	4.293'	10	15.833'	12.000'	3.292'	N/A	4"	204.208'	3"	48.000'
STA 299+23.50 - STA 299+46.50(Rt)	22.167'	0.500'	9	2.352'	21.167'	3.000'	2	2.431'	4.861'	5.583'	1	4.861'	4.861'	4.278'	10	11.750'	7.854'	3.417'	N/A	4"	140.042'	3"	42.000'
STA 309+08.50 - STA 309+31.50(Rt)	22.167'	0.500'	9	2.352'	21.167'	3.000'	2	2.431'	4.861'	5.583'	1	4.861'	4.861'	4.278'	10	11.750'	7.854'	3.417'	N/A	4"	140.042'	3"	42.000'
STA 309+08.50 - STA 309+31.50(Lt)	22.167'	0.500'	9	2.352'	21.167'	3.000'	3	2.438'	7.315'	5.583'	2	4.877'	9.753'	4.293'	10	15.833'	12.000'	3.292'	N/A	4"	204.208'	3"	48.000'
STA 370+00 (Lt)	7.000'	0.500'	3	2.000'	6.000'	2.000'	3	2.002'	6.006'	3.583'	2	4.004'	8.007'	3.420'	4	11.708'	8.646'	5.083'	3.000'	4"	80.292'	3"	24.000'
STA 370+00 (Rt)	7.000'	0.500'	3	2.000'	6.000'	2.000'	2	2.065'	4.129'	3.583'	1	4.129'	4.129'	3.546'	4	8.583'	5.354'	N/A	3.083'	3"	51.208'	2"	18.000'
STA 530+40 (Lt)	10.000'	0.500'	4	2.250'	9.000'	3.000'	4	2.081'	8.325'	5.583'	3	4.163'	12.488'	3.579'	5	18.083'	14.813'	3.417'	N/A	4"	163.333'	3"	39.000'
STA 582+00 (Lt)	14.583'	0.500'	6	2.264'	13.583'	3.000'	3	2.438'	7.315'	5.583'	2	4.877'	9.753'	4.293'	7	15.833'	12.000'	3.292'	N/A	4"	156.708'	3"	39.000'
STA 582+00 (Rt)	14.583'	0.500'	6	2.264'	13.583'	3.000'	2	2.431'	4.861'	5.583'	1	4.861'	4.861'	4.278'	7	11.750'	7.854'	3.417'	N/A	4"	104.792'	3"	33.000'
STA 605+62 (Both)	6.000'	0.500'	2	2.500'	5.000'	3.000'	3	2.198'	6.593'	5.583'	2	4.396'	8.791'	3.812'	3	14.917'	11.438'	3.417'	N/A	4"	178.625'	3"	54.000'
STA 611+66 (Both)	6.000'	0.500'	2	2.500'	5.000'	2.000'	2	2.065'	4.129'	3.583'	1	4.129'	4.129'	3.546'	3	8.583'	5.354'	N/A	3.083'	3"	85.250'	2"	30.000'

PIPE RUNNER LAYOUT

(14) Quantities shown are for one structure end if Lt or Rt. Quantities shown are for two structure ends if Both.

(15) If the outermost Wing Pipe Runner is a Non-Sliding Pipe Runner, the next outermost Wing Pipe Runner shall be considered the Shortest.

SPECIAL NOTE:

This tabular sheet is to be filled out by the culvert specifier and provides information for the construction details and quantities of Pipe Runners.

An Excel 97 spreadsheet to assist in completing this table can be downloaded from the Bridge Standards (English) web page on the TxDOT web site. The completed sheet shall be signed, sealed, and dated by a licensed Professional Engineer.

Note that the tabular quantities are given for estimating purposes only. It is likely that these quantities will change due to field conditions. Therefore, all dimensions shall be verified by the Contractor in the field prior to fabrication of the Safety End Treatment components.

DISCLAIMER:
The use of this standard is governed by the "Texas Engineering Practice Act". No warranty of any kind is made by TxDOT for any purpose whatsoever. TxDOT assumes no responsibility for the conversion of this standard to other formats or for incorrect results or damages resulting from its use.

LEVELS DISPLAYED
COMMENTS:

STATE OF TEXAS
OLEN D. HOWARD
69804
REGISTERED
PROFESSIONAL ENGINEER

Olen Howard 4/2/09

Texas Department of Transportation
Bridge Division

SAFETY END TREATMENT WITH FLARED WINGS

FOR 0° SKEW BOX CULVERTS TYPE I ~ CROSS DRAINAGE

SETB-FW-0

FILE: setbf0se.dgn	DN: TxDOT	CK: TxDOT	DW: TxDOT	CK:
©TxDOT May 2005	DISTRICT	PROJECT NUMBER		
REVISIONS	YKM			
	COUNTY	CONTROL	SECT	JOB
	GONZALES, ETC	1442	03	016, ETC

DISCLAIMER:
The use of this standard is governed by the "Texas Engineering Practice Act". No warranty of any kind is made by TxDOT for any purpose whatsoever. TxDOT assumes no responsibility for the conversion of this standard to other formats or for incorrect results or damages resulting from its use.

TABLE OF DIMENSIONS & REINFORCING STEEL
(Wings for One Structure End)

Dimensions					Variable Reinforcing				Estimated (3) Quantities per ft of wing length (2-Wings)	
					Bars J1		Bars J2			
Maximum Wingwall Height (10) Hw	W	X	Y	Z	Size	Spa	Size	Spa	Reinf (Lb/Ft)	Conc (CY/Ft)
2'-6"	2'- 5"	1'- 0"	9"	7"	#4	1'-0"	#4	1'-0"	33.73	0.248
3'-0"	2'- 5"	1'- 0"	9"	7"	#4	1'-0"	#4	1'-0"	37.07	0.261
3'-6"	2'- 5"	1'- 0"	9"	7"	#4	1'-0"	#4	1'-0"	37.74	0.273
4'-0"	2'- 5"	1'- 0"	9"	7"	#4	1'-0"	#4	1'-0"	38.41	0.285
4'-6"	3'- 2"	1'- 6"	1'- 0"	7"	#4	1'-0"	#4	1'-0"	41.75	0.330
5'-0"	3'- 2"	1'- 6"	1'- 0"	7"	#4	1'-0"	#4	1'-0"	45.09	0.343
5'-6"	3'- 2"	1'- 6"	1'- 0"	7"	#4	1'-0"	#4	1'-0"	45.75	0.355
6'-0"	3'- 2"	1'- 6"	1'- 0"	7"	#4	1'-0"	#4	1'-0"	46.42	0.367
7'-0"	3'- 8"	1'- 9"	1'- 3"	7"	#4	1'-0"	#4	1'-0"	52.77	0.414
8'-0"	4'- 2"	2'- 0"	1'- 6"	8"	#5	1'-0"	#4	1'-0"	60.19	0.486
9'-0"	4'- 8"	2'- 3"	1'- 9"	8"	#4	6"	#4	6"	81.49	0.535
10'-0"	5'- 2"	2'- 6"	2'- 0"	8"	#5	6"	#4	6"	97.25	0.584
11'-0"	5'- 8"	2'- 9"	2'- 3"	8"	#6	6"	#5	6"	133.65	0.634
12'-0"	6'- 2"	3'- 0"	2'- 6"	9"	#7	6"	#5	6"	162.29	0.721

TABLE OF WINGWALL REINFORCING (2-Wings)

Bar	Size	No.	Spa
DL & DS	#5	~	1'-0"
E	#4	~	1'-0"
F	#4	~	1'-0"
G	#6	4	~
M	#4	4	~
P	#4	~	1'-0"
RL	#5	3	~
RS	#5	3	~
V	#4	~	1'-0"

TABLE OF ESTIMATED CULVERT TOEWALL QUANTITIES

Bar	Size	No.	Spa
L	#4	~	1'-6"
Q	#4	1	~
Reinf (Lb/Ft)			2.45
Conc (CY/Ft)			0.037

TABLE OF ESTIMATED ANCHOR TOEWALL QUANTITIES

Bar	Size	No.	Spa
K	#4	~	1'-0"
N	#5	6	~
OL	#4	3	~
OS	#4	3	~
Reinf (Lb/Ft)			9.82
Conc (CY/Ft)			0.074

1. Extend Bars P 3'-0" minimum into bottom slab of Box Culvert.
2. Adjust to fit as necessary to maintain 1 1/4" clear cover and 4" minimum between bars.
3. Quantities shown are based on an average wing height for two wings (one structure end). To determine total quantities for two wings multiply the tabulated values by 0.5(A + Lw).
4. Recommended values of Slope are: 3:1, 4:1, & 6:1. Slope shall be 3:1 or flatter.
5. When shown elsewhere on the plans, a 5" deep concrete riprap shall be constructed. Unless otherwise shown on the plans or directed by the Engineer, construction joints or grooved joints, oriented in the direction of flow, and shall extend across the full distance of the riprap, at intervals of approximately 20'. When such riprap is provided, the culvert toewall shown in SECTION B-B will not be required. Payment for riprap shall be as required by Item 432, "Riprap".
6. At Contractor's option, Culvert Toewall may be ended flush with Wingwall Toewall. Adjust reinforcing from that shown as necessary.
7. 3" min to 5'-0" max. Estimated curb heights are shown elsewhere in the plans. For structures without railing and curbs taller than 1'-0", refer to ECD standard.
8. For vehicle safety, curbs shall project no more than 3" above finished grade. Curb heights shall be reduced, if necessary, to meet these requirements. No changes will be made in quantities and no additional compensation will be allowed for this work.
9. Culvert Skew (limited to 15° or 30°)
10. See "Table Of Maximum Wing Heights" for various slopes. Height is limited based on a 33'-6" maximum safety pipe runner length.
11. Typical Wingwall angle for all skews.

TABLE OF MAXIMUM (10) WING HEIGHTS (Hw max)

Side Slope	Hw max
3:1	11'- 5"
4:1	8'-10"
6:1	6'- 1"

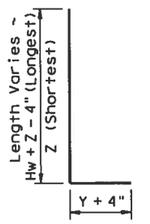

WING DIMENSION CALCULATIONS:

Formulas: (All values are in Feet)

Hw = H + T + C - 0.250' (10)
A = (Hw - 0.333') (SL)
B = (A) [Tangent (θ + 15°)]
Lw = (A) ÷ [Cosine (θ + 15°)]

For Cast-in-place culverts:
Ltw = [(N) (S) + (N+1) (U)] ÷ (Cosine θ)
For Precast culverts:
Ltw = [(N) (2U + S) + (N - 1) (0.500')] ÷ (Cosine

Lc = (Ltw) - (2U) ÷ (Cosine θ)
Atw = (Lc) + (B)
Total Wingwall Area (Two Wings ~ S.F.)
= (0.5) (Hw + 0.333') (Lw + A)

Hw = Height of Wingwall
SL:1 = Side Slope Ratio (Horizontal : 1 Vertica
Lw = Length of Wingwall
Ltw = Culvert Toewall Length
Lc = Culvert Curb between Wings
Atw = Anchor Toewall Length
N = Number of Culvert Spans
θ = Culvert Skew

See applicable box culvert standard for H, S, T, and U values. See Table of Maximum Wall Heights for limits on Hw.

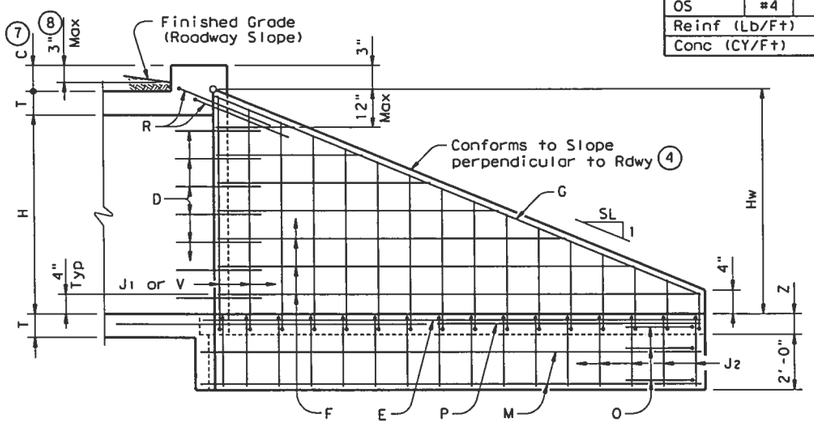

INSIDE ELEVATION OF WINGWALL

(Showing reinforcing. Culvert and Culvert Toewall reinforcing not shown for clarity.)

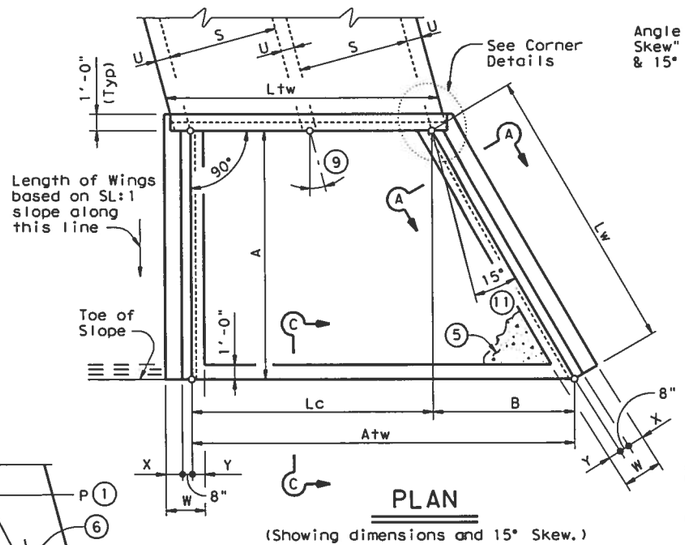

PLAN

(Showing dimensions and 15° Skew.)

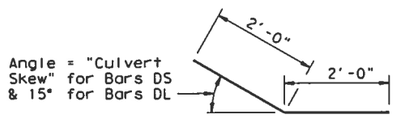

BARS DS & DL
(DS ~ Short Wing & DL ~ Long Wing)

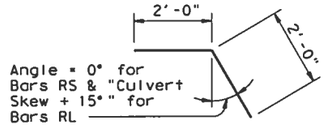

BARS RS & RL
(RS ~ Short Wing & RL ~ Long Wing)

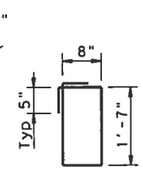

BARS K
(Length = 5'-4")

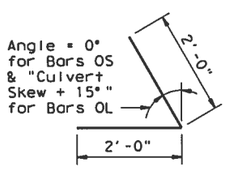

BARS OS & OL
(OS ~ Short Wing & OL ~ Long Wing)

GENERAL NOTES:

Designed according to current AASHTO Standard and Interim Specifications.

The Safety End Treatments shown herein are intended for use in those installations where o of control vehicles are likely to traverse the openings approximately perpendicular to the Pipe Runners.

Pipe Runners are designed for a traversing load of 1,800 pounds at yield as recommended by Research Report 280-1, "Safety Treatment of Roadside Cross-Drainage Structures", Texas Transportation Institute, March 1981.

All reinforcing steel shall be Grade 60.

All concrete shall be Class "C" and shall have a minimum compressive strength of 3600 psi

All reinforcing bars shall be adjusted to provide a minimum of 1 1/4" clear cover.

When structure is founded on solid rock, depth of toewalls for culverts and wingwalls may be reduced or eliminated as directed by the Engineer.

See BCS sheet for additional dimensions and information.

All bolts, nuts, washers, brackets, angles, and pipe runners are considered parts of the Safety End Treatment for payment.

Pipe Runners shall conform to the requirement of ASTM A53 (Type E or S, Grade B), ASTM A500 (Grade B), or API 5LX52.

Bolts and nuts shall conform to ASTM A307. Steel plates shall conform to ASTM A36. All steel components, except reinforcing, shall be galvanized. Galvanizing damaged during transport or construction shall be repaired in accordance with the specifications.

The quantities for concrete and reinforcing steel resulting from the formulas given on this sheet are for Contractor's information only.

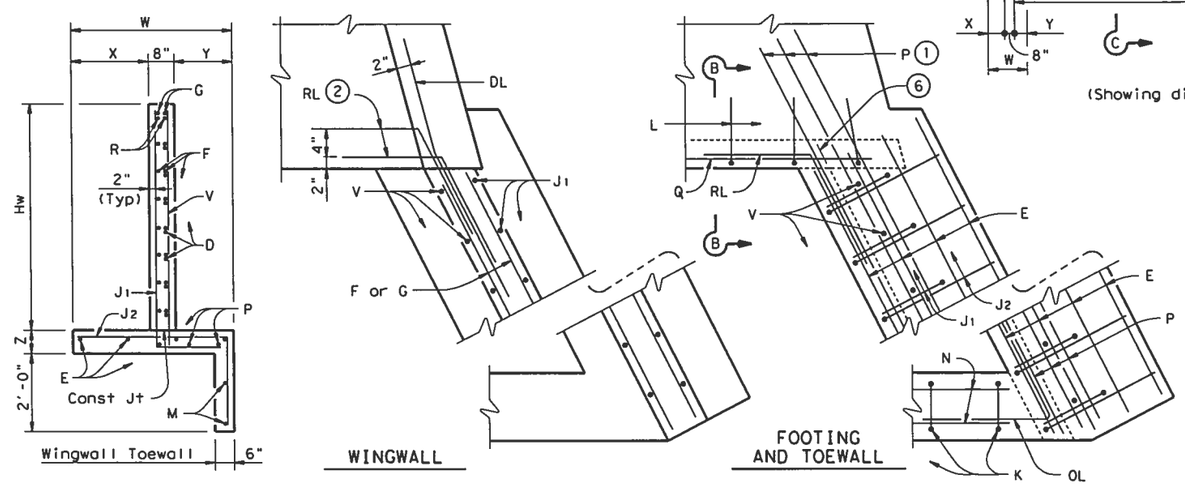

SECTION A-A

CORNER DETAILS

(Culvert and Culvert Toewall reinforcing not shown for clarity.)

FOOTING AND TOEWALL

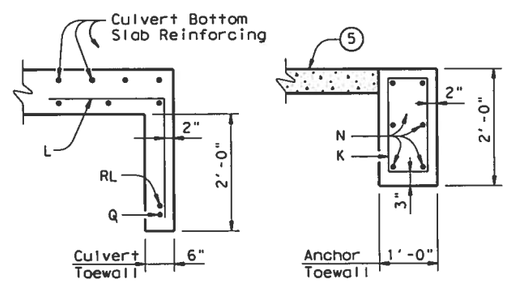

SECTION B-B (5)

SECTION C-C

SHEET 1

Texas Department of Transportat
Bridge Division

SAFETY END TREATMEN WITH FLARED WINGS

FOR 15° & 30° SKEW BOX CULVE TYPE I ~ CROSS DRAINAGE

SETB-FW-S

FILE: setbfsse.dgn	DN: GAF	CK: CAT	DW: TxDOT	
© TxDOT May 2005	DISTRICT	PROJECT NUMBER		
REVISIONS	YKM			
	COUNTY	CONTROL	SECT	JOB
	GONZALES, ETC	1442	03	016,

ACC:
LEVELS DISPLAYED
1

DISCLAIMER:
The use of this standard is governed by the "Texas Engineering Practice Act". No warranty of any kind is made by TxDOT for any purpose whatsoever. TxDOT assumes no responsibility for the conversion of this standard to other formats or for incorrect results or damages resulting from its use.

LEVELS DISPLAYED | ACC:

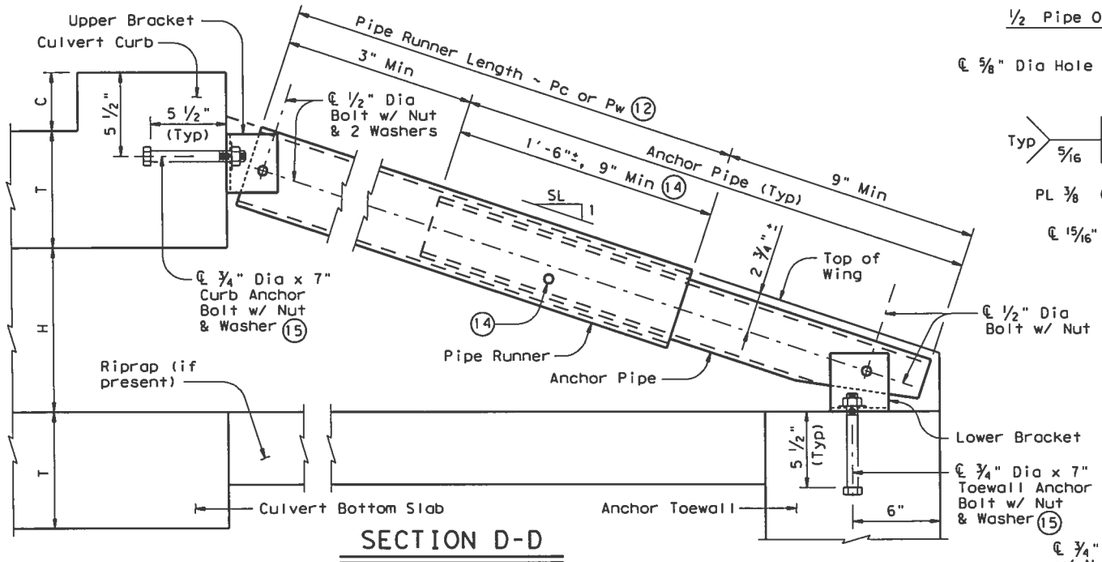

SECTION D-D

(Showing Curb Pipe Runner. Except for upper bracket, Wingwall Pipe Runners are similar.)

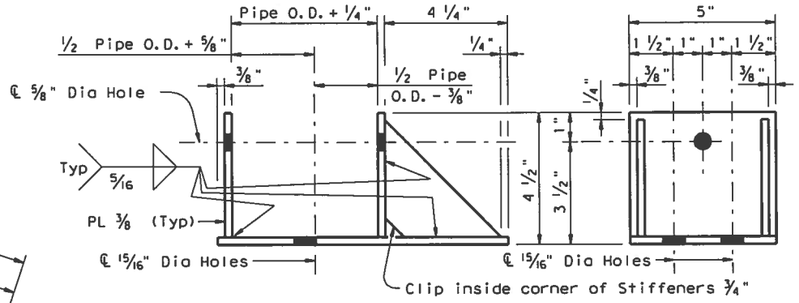

ELEVATION SIDE VIEW

¾" Anchor Bolt shall be installed in hole nearest to the culvert curb. Other bolt hole is intended for use on the opposite hand wingwall.

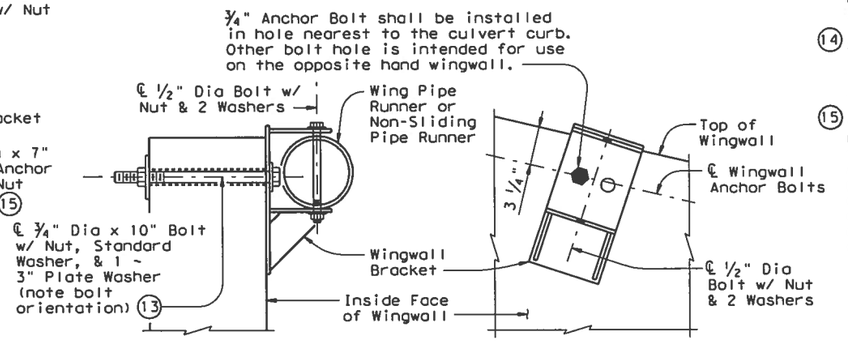

SECTION E-E (Showing installed bracket.)

ELEVATION (Showing installed bracket normal to Wall. Pipe not shown for clarity.)

Note: Wingwall Bracket shall match the Upper Curb Bracket size.

WINGWALL BRACKET DETAILS

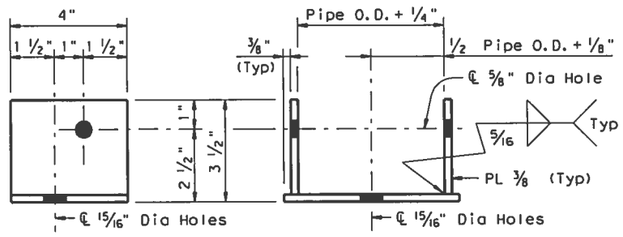

SIDE VIEW ELEVATION

Note: Upper and Lower Brackets shall, except for the brackets used with Non-Sliding Pipe Runners, match the required pipe diameters as shown in the table.

UPPER & LOWER BRACKET DETAILS

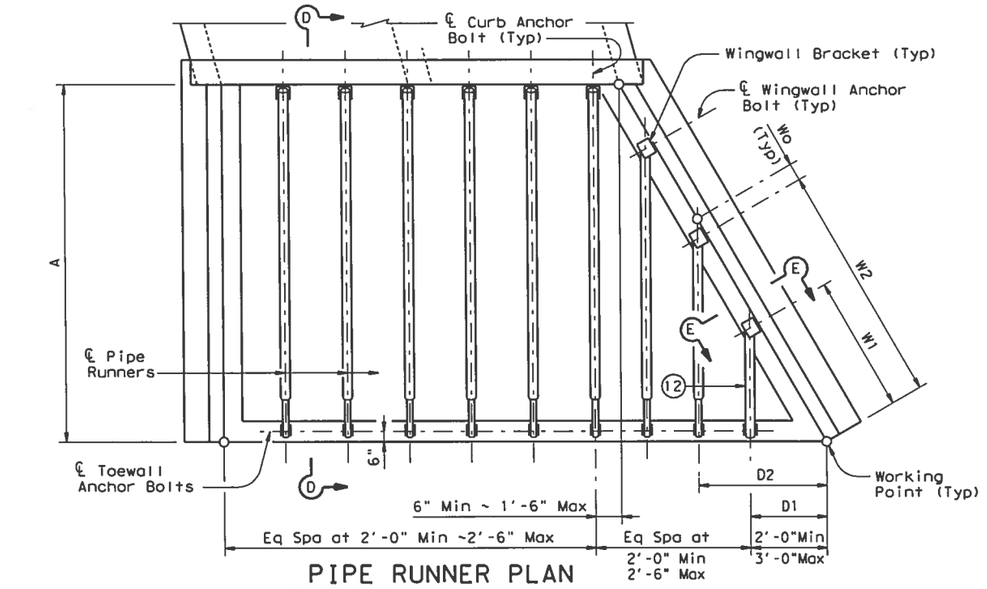

PIPE RUNNER PLAN

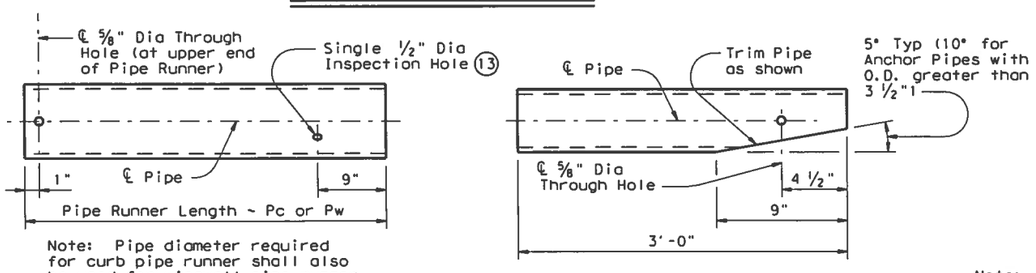

PIPE RUNNER DETAILS

ANCHOR PIPE DETAILS

Note: Pipe size shall be same as required for curb pipe runner. Adjust the corresponding Lower Bracket accordingly.

NON-SLIDING PIPE RUNNER DETAILS

MAXIMUM PIPE RUNNER LENGTHS & REQUIRED PIPE RUNNER AND ANCHOR PIPE SIZES

Maximum Pipe Runner Length (Pc or Pw)	Required Pipe Runner Size			Required Anchor Pipe Size		
	Pipe Size	Pipe O.D.	Pipe I.D.	Pipe Size	Pipe O.D.	Pi I.
9'-4"	3" STD	3.500"	3.068"	2" STD	2.375"	2.(
19'-0"	4" STD	4.500"	4.026"	3" STD	3.500"	3.(
33'-6"	5" STD	5.563"	5.047"	4" STD	4.500"	4.(

(12) If Pipe Runner Length Pw is 1'-9" or less, a single Non-Sliding Pipe Runner shall replace the normal Pipe Runner and Anchor Pipe. See NON-SLIDING PIPE RUNNER DETAILS for additional information.

(13) At Contractor's option, ⅞" diameter hole may be formed or cored drilled. Percussion drilling is not permitted. Adjust placement of reinforcing steel as necessary to avoid bolt holes.

(14) After installation of Pipe Runner, the ½" inspection hole shall be utilized to ensure that the lap of the Anchor Pipe with the Pipe Runner is adequate.

(15) At Contractor's option, an epoxy anchorage system may be used. Anchorage system chosen must be able to achieve an ultimate tensile resistance of 20 k Anchor diameter shall be ¾". The Contractor must provide evidence to the Engineer that this can be achieved. Evidence of adequate tensile resistance can be based on the manufacturer's published value of ultimate tensile strength (anchor spacing and e distance must be accounted for). Anchor installa including hole size, drilling, and clean-out, mus in accordance with the manufacturer's recommendat

PIPE RUNNER DIMENSION CALCULATIONS:

Formulas:
W"n" = (K3) (D"n") - (Wo)
Pw"n" = (D"n") (K2) - (2.063)
Pw1 Non-Sliding Pipe Runner (If required) = (D1) (K2) - (0.563)
Pc = (A) (K1) - (1.688)

W"n"= Distance from Working Point to centerlin Anchor Bolt measured along bottom inside face of Wing
D"n"= Distance from Working Point to centerlin Pipe Runner measured along outside face of Anchor Toewall
Pw = Wingwall Pipe Runner Length
Pc = Curb Pipe Runner Length
K = Constant Values for use in formulas

Slope SL:1	K1	K2~15° Skew	K2~30° Skew
3:1	~ 1.054	~ 1.826	~ 1.054
4:1	~ 1.031	~ 1.785	~ 1.031
6:1	~ 1.014	~ 1.756	~ 1.014

K3 = 15° Skew ~ 2.000
30° Skew ~ 1.414
"n" = Wing Pipe Runner Number
Wo = 15° Skew ~ 5"
30° Skew ~ 2 ½"

SHEET 2 O

Texas Department of Transportatio
Bridge Division

SAFETY END TREATMEN WITH FLARED WINGS

FOR 15° & 30° SKEW BOX CULVER TYPE I ~ CROSS DRAINAGE

SETB-FW-S

FILE: setbfsse.dgn	DN: GAF	CK: CAT	DW: TxDOT	CK
©TxDOT May 2005	DISTRICT	PROJECT NUMBER		
REVISIONS	YKM			
	COUNTY	CONTROL	SECT	JOB
	GONZALES, ETC	1442	03	016, ET

Culvert Station and/or Creek name followed by applicable end (Lt, Rt or Both) (16)	Lc	L1	L2			D1	L3			W1	L4			L5	Curb Pipe Runner (Pc)		Longest Wing Pipe Runner (Pw)	Shortest Wing Pipe Runner (Pw)	Non-Sliding Wing Pipe Runner (if applicable)	Curb, Wing, and/or Non-Sliding Pipe Runners		3'-0" Anchor Pipe	
	(Ft)	(Ft)	No. Spa	Spa at (Ft)	Overall Length (Ft)	(Ft)	No. Spa	Spa at (Ft)	Overall Length (Ft)	(Ft)	No. Spa	Spa at (Ft)	Overall Length (Ft)	(Ft)	No.	Length (Ft)	(Ft)	(Ft)	(Ft)	Size (3", 4" or 5")	Total Length (16) (Ft)	Size (2", 3" or 4")	Total Length (16) (Ft)
STA 452+54 (Lt)	14.530'	0.500'	6	2.338'	14.030'	3.000'	6	2.208'	13.250'	4.034'	5	3.123'	15.613'	2.627'	6	14.917'	12.729'	3.417'	2.604'	4"	132.469'	3"	33.000'

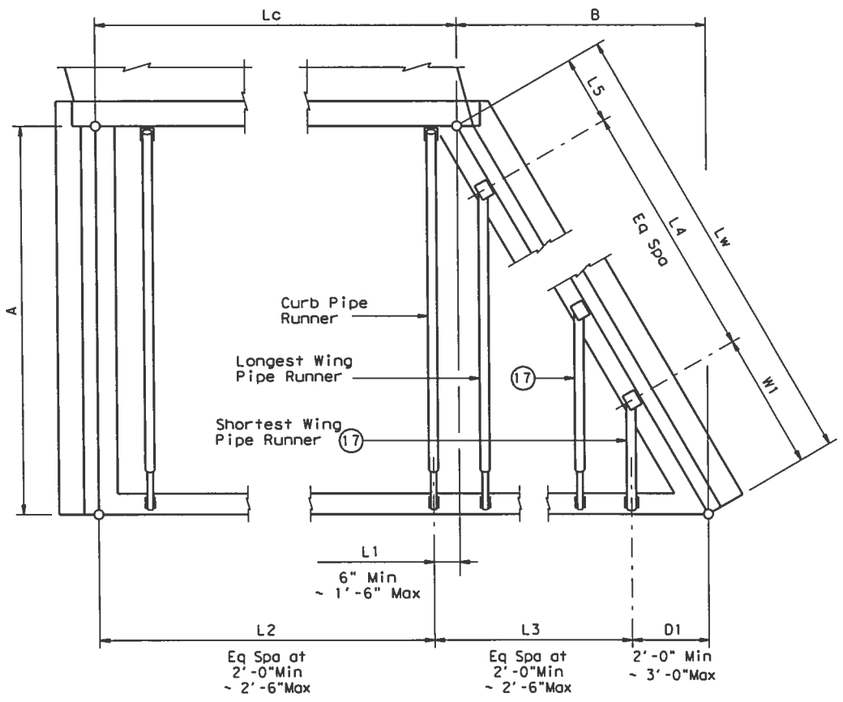

PIPE RUNNER LAYOUT

Note: Right forward culvert skew shown, actual culvert skew may be opposite hand.

(16) Quantities shown are for one structure end if Lt or Rt. Quantities shown are for two structure ends if Both.

(17) If the outermost Wing Pipe Runner is a Non-Sliding Pipe Runner, the next outermost Wing Pipe Runner shall be considered the Shortest.

SPECIAL NOTE:

This tabular sheet is to be filled out by the culvert specifier and provides information for the construction details and quantities of Pipe Runners.

An Excel 97 spreadsheet to assist in completing this table can be downloaded from the Bridge Standards (English) web page on the TxDOT web site. The completed sheet shall be signed, sealed, and dated by a licensed Professional Engineer.

Note that the tabular quantities are given for estimating purposes only. It is likely that these quantities will change due to field conditions. Therefore, all dimensions shall be verified by the Contractor in the field prior to fabrication of the Safety End Treatment components.

DISCLAIMER:
The use of this standard is governed by the "Texas Engineering Practice Act". No warranty of any kind is made by TxDOT for any purpose whatsoever. TxDOT assumes no responsibility for the conversion of this standard to other formats or for incorrect results or damages resulting from its use.

LEVELS DISPLAYED
1 2 3 4 5 6 7 8 9 10 11 12 13 14 15 16
17 18 19 20 21 22 23 24 25 26 27 28 29 30 31 32
33 34 35 36 37 38 39 40 41 42 43 44 45 46 47 48
49 50 51 52 53 54 55 56 57 58 59 60 61 62 63

ACC:

STATE OF TEXAS
OLEN D. HOWARD
69804
REGISTERED PROFESSIONAL ENGINEER
Olen Howard 4/2/09

SHEET 3 OF

Texas Department of Transportation
Bridge Division

SAFETY END TREATMENT WITH FLARED WINGS

FOR 15° & 30° SKEW BOX CULVERT TYPE I ~ CROSS DRAINAGE

SETB-FW-S

FILE: setbfsse.dgn	DN: TxDOT	CK: TxDOT	DW: TxDOT	CK:
© TxDOT May 2005	DISTRICT	PROJECT NUMBER		
REVISIONS	YKM			
	COUNTY	CONTROL	SECT	JOB
	GONZALES, ETC	1442	03	016, ETC

DISCLAIMER:
The use of this standard is governed by the "Texas Engineering Practice Act". No warranty of any kind is made by TxDOT for any purpose whatsoever. TxDOT assumes no responsibility for the conversion of this standard to other formats or for incorrect results or damages resulting from its use.

TABLE OF DIMENSIONS & REINFORCING STEEL
(Wings for One Structure End)

Dimensions					Variable Reinforcing				Estimated ④ Quantities per ft of wing (2~Wings)		Estimated Quantities per ft of Toewall (1~Toewall)	
					Bars J1		Bars J2					
Maximum Wingwall Height Hw	W	X	Y	Z	Size	Spa	Size	Spa	Reinf (Lb/Ft)	Conc (CY/Ft)	Reinf (Lb/Ft)	Conc (CY/Ft)
2'-6"	2'-10"	10"	1'- 0"	7"	#4	1'-0"	#4	1'-0"	43.13	0.406	6.85	0.071
2'-9"	2'-10"	10"	1'- 0"	7"	#4	1'-0"	#4	1'-0"	43.80	0.424	6.85	0.071
3'-0"	2'-10"	10"	1'- 0"	7"	#4	1'-0"	#4	1'-0"	44.47	0.444	6.85	0.071
3'-3"	2'-10"	10"	1'- 0"	7"	#4	1'-0"	#4	1'-0"	47.81	0.462	6.85	0.071
3'-6"	2'-10"	10"	1'- 0"	7"	#4	1'-0"	#4	1'-0"	48.48	0.480	6.85	0.071
4'-0"	3'- 2"	1'- 2"	1'- 0"	7"	#4	1'-0"	#4	1'-0"	50.26	0.532	6.85	0.071
4'-6"	3'- 2"	1'- 2"	1'- 0"	7"	#4	1'-0"	#4	1'-0"	54.27	0.568	6.85	0.071
5'-0"	3'- 9"	1'- 7"	1'- 2"	7"	#4	1'-0"	#4	1'-0"	57.94	0.632	6.96	0.075
5'-6"	3'- 9"	1'- 7"	1'- 2"	7"	#4	1'-0"	#4	1'-0"	61.95	0.668	6.96	0.075
6'-0"	4'- 4"	2'- 0"	1'- 4"	7"	#5	1'-0"	#5	1'-0"	75.16	0.730	7.07	0.078
6'-6"	4'- 4"	2'- 0"	1'- 4"	7"	#5	1'-0"	#5	1'-0"	79.54	0.768	7.07	0.078
7'-0"	5'- 0"	2'- 3"	1'- 9"	8"	#5	1'-0"	#5	1'-0"	86.65	0.864	8.07	0.093
7'-6"	5'- 0"	2'- 3"	1'- 9"	8"	#5	1'-0"	#5	1'-0"	91.03	0.902	8.07	0.093
8'-0"	5'- 6"	2'- 8"	1'-10"	8"	#5	6"	#5	6"	133.54	0.962	8.13	0.095
8'-6"	5'- 6"	2'- 8"	1'-10"	8"	#5	6"	#5	6"	138.96	1.000	8.13	0.095
9'-6"	6'- 0"	2'-10"	2'- 2"	9"	#5	6"	#5	6"	151.43	1.136	8.41	0.110
10'-6"	6'- 5"	3'- 0"	2'- 5"	9"	#6	6"	#5	6"	190.76	1.234	8.57	0.117
11'-6"	7'- 2"	3'- 6"	2'- 8"	11"	#6	6"	#6	6"	224.62	1.438	9.52	0.140
12'-6"	7'- 8"	3'- 9"	2'-11"	1'- 0"	#7	6"	#6	6"	277.90	1.592	9.74	0.157
13'-6"	8'- 2"	4'- 0"	3'- 2"	1'- 2"	#8	6"	#6	6"	343.21	1.804	10.02	0.186
14'-6"	8'-10"	4'- 5"	3'- 5"	1'- 4"	#9	6"	#6	6"	427.43	2.046	10.30	0.218
15'-6"	9'- 6"	4'-10"	3'- 8"	1'- 6"	#9	6"	#7	6"	484.01	2.302	11.24	0.253
16'-0"	9'-11"	5'- 0"	3'-11"	1'- 7"	#9	6"	#7	6"	500.21	2.448	11.47	0.279

TABLE OF WINGWALL REINFORCING (2~Wings)

Bar	Size	No.	Spa
D1	#5	~	1'-0"
D2	#5	~	1'-0"
E1	#4	~	1'-0"
F	#4	~	1'-0"
G	#5	~	1'-0"
M1	#4	4	~
P	#4	~	1'-0"
V	#4	~	1'-0"

TABLE OF TOEWALL REINFORCING

Bar	Size	No	Spa
J3	#4	~	1'-0"
M2	#4	2	~
E2	#4	~	1'-0"

WING DIMENSION CALCULATIONS:

Formulas: (All values are in Feet)

Hw = H + T + C

Lw = (Hw) (SL) ÷ Cosine (Φ)

For Cast-in-place culverts:

Ltw = [(N) (S) + (N + 1) (U)] ÷ (Cosine Φ)

For Precast culverts:

Ltw = [(N) (2 U + S) + (N − 1) (0.5')] ÷ (Cosine Φ)

Total Wingwall Area (Two Wings ~ S.F.) = (2) (Hw) (Lw)

Hw = Height of Wingwall
Lw = Length of Wingwall
Ltw = Culvert Toewall Length
N = Number of Culvert Spans
SL:1 = Channel Slope ratio. (Horizontal: 1 Vertical, Usual value is 2:1)
Φ = Culvert Skew

See applicable box culvert standard for S, H, T and U values.

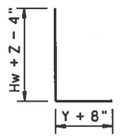

BARS J1

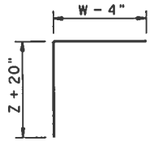

BARS J2

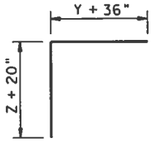

BARS J3

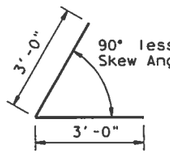

BARS D1

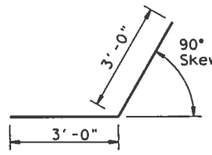

BARS D2

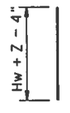

BARS V

GENERAL NOTES:

Designed according to current AASHTO Standard and Interim Specifications.

All reinforcing steel shall be Grade 60.

All concrete shall be Class "C" and shall have a minimum compressive strength of 3600 psi.

All reinforcing bars shall be adjusted to provide a minimum of 1 ¼" clear cover.

When structure is founded on solid rock, depth of toewalls for culverts and wingwalls may be reduced or eliminated as directed by the Engineer.

See BCS sheet for additional dimensions and information.

The quantities for concrete and reinforcing steel resulting from the formulas given on this sheet are for Contractor's information only.

① Skew Angle = 0°
② At discharge end, chamfer may be ¾".
③ For 15° Skew ~ 1"
For 30° Skew ~ 2"
For 45° Skew ~ 3"
④ Quantities shown are for two wings. To determine total quantities for two wings, multiply the tabulated values by Lw.
⑤ Provide weepholes for Hw = 5'-0" and greater. Fill around weepholes with coarse gravel.
⑥ Extend Bars E1 1'-6" minimum into the bottom slab of the culvert.
⑦ Lap Bars M1 1'-6" minimum with Bars M2.
⑧ Bars G shall be equally spaced at 1'-0" maximum, placed as shown. There shall be at least 4 Bars G per wing.
⑨ 0" min to 5'-0" max. For T6 or C6 Rail, see T6-CM standard for additional details. For all other ra types, refer to the RAC standard. For curbs withou rail and greater than 1'-0" high, see ECD standard for additional details. Estimated curb heights ar shown elsewhere in the plans.
⑩ For vehicle safety, the following requirements mus be met:
- For structures without bridge rail, curbs shall project no more than 3" above finished grade.
- For structures with bridge rail, curbs shall be flush with finished grade.

Curb heights shall be reduced, if necessary, to me the above requirements. No changes will be made i quantities and no additional compensation will be allowed for this work.
⑪ 1'-0" typical. 2'-0" typical when RAC standard is referenced elsewhere in the plans.

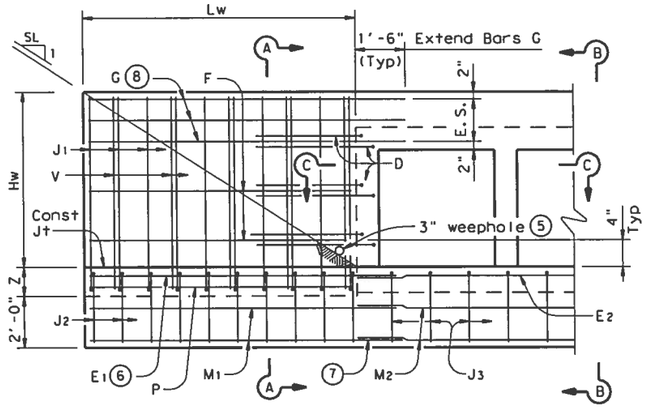

PARTIAL ELEVATION

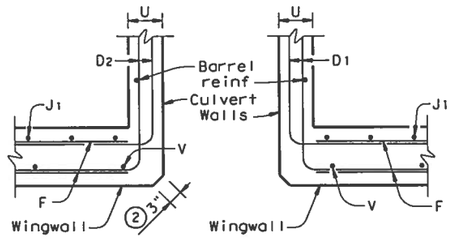

SECTION C-C

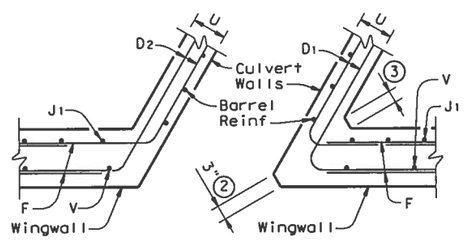

SECTION C-C

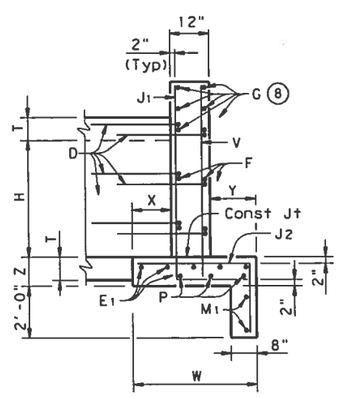

SECTION A-A
(Showing Wing Reinf)

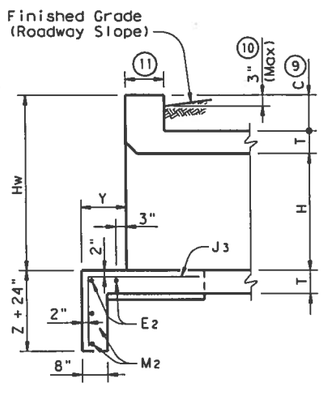

SECTION B-B
(Showing Toewall Reinf)

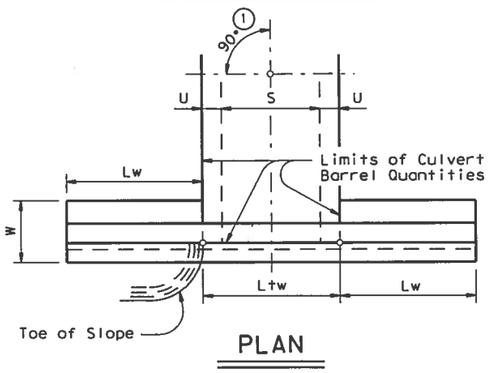

PLAN

DETAILS FOR NON-SKEWED BOX CULVERTS

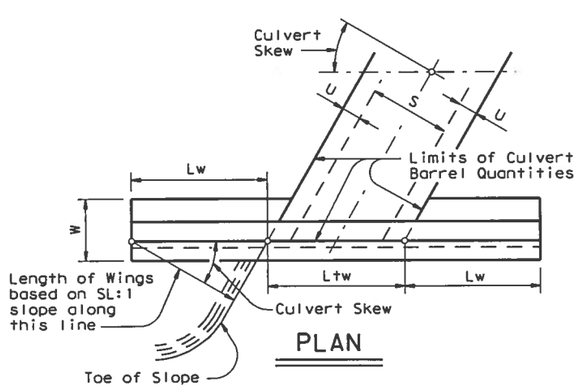

PLAN

DETAILS FOR SKEWED BOX CULVERTS
(Showing 30° Skew)

Texas Department of Transportation
Bridge Division

CONCRETE WINGWALLS
WITH PARALLEL WINGS FOR SKEWED AND NON-SKEWED BOX CULVERTS

PW

FILE: pwstde01.dgn	DN: GAF	CK: CAT	DW: TxDOT	CK	
© TxDOT May 2005	DISTRICT	PROJECT NUMBER			
REVISIONS	YKM				
	COUNTY	CONTROL	SECT	JOB	
	GONZALES, ETC	1442	03	016, ET	

LEVELS DISPLAYED
ACC:
1

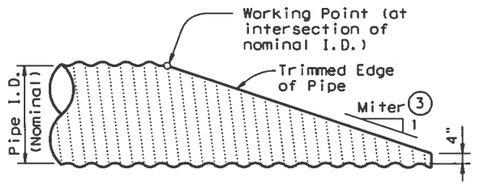

NOTE: All Pipe Runners, calculations, and dimensions are based on the pipe culverts mitered as shown in this detail. Alternate styles of mitered ends will require that appropriate adjustments be made to the values presented on this standard.

SIDE ELEVATION OF TYPICAL PIPE CULVERT MITER

(Showing Corrugated Metal Pipe Culvert. Details of Concrete Pipe Culvert are similar.)

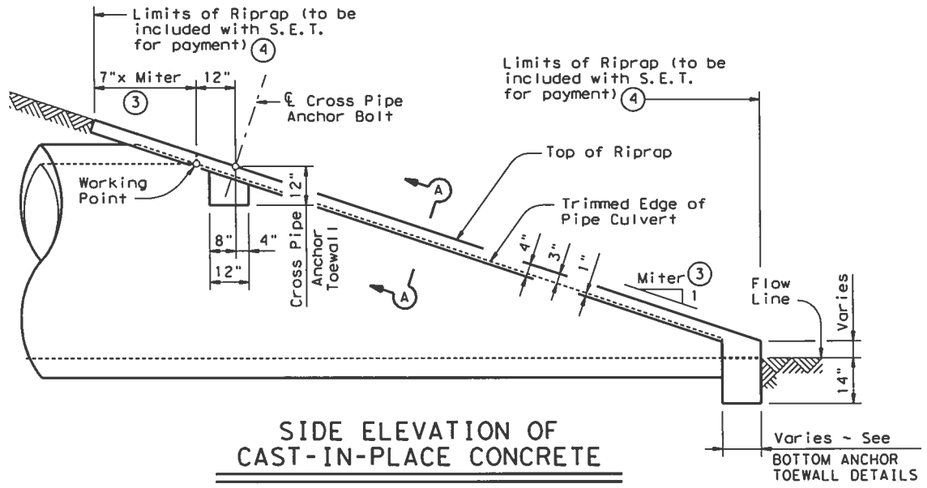

SIDE ELEVATION OF CAST-IN-PLACE CONCRETE

(Showing Concrete Pipe Culvert. Details of Corrugated Metal Pipe Culvert are similar. Pipe Runners not shown for clarity)

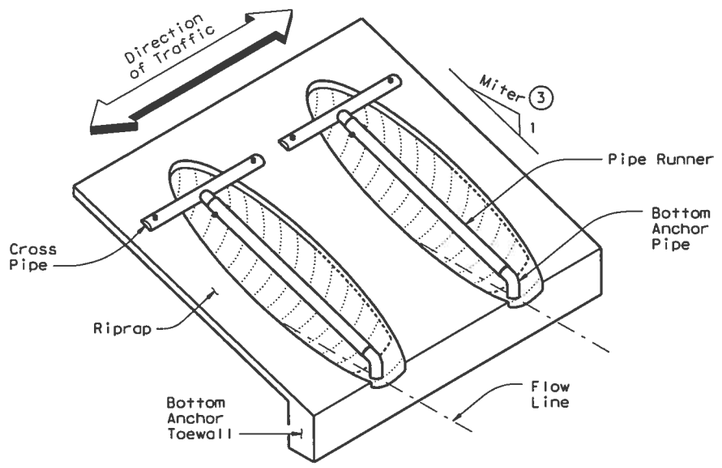

ISOMETRIC VIEW OF TYPICAL INSTALLATION

(Showing installation with no skew.)

CROSS PIPE LENGTHS & PIPE RUNNER LENGTHS (1)(2)

Nominal Culvert I.D.	Pipe Culvert Spa ~ G	Cross Pipe Length	Pipe Runner Length											
			3:1 Side Slope				4:1 Side Slope				6:1 Side Slope			
			0° Skew	15° Skew	30° Skew	45° Skew	0° Skew	15° Skew	30° Skew	45° Skew	0° Skew	15° Skew	30° Skew	45°
24"	1'- 7"	3'- 5"	N/A	N/A	N/A	5'-10"	N/A	N/A	N/A	8'- 1"	N/A	N/A	N/A	12'
27"	1'- 8"	3'- 8"	N/A	N/A	5'- 5"	6'-11"	N/A	N/A	7'- 7"	9'- 7"	N/A	N/A	11'-11"	14'
30"	1'-10"	3'-11"	N/A	N/A	6'- 4"	8'- 0"	N/A	N/A	8'- 9"	11'- 0"	N/A	N/A	13'- 8"	17'
33"	1'-11"	4'- 2"	6'- 2"	6'- 5"	7'- 3"	9'- 1"	8'- 6"	8'-10"	10'- 0"	12'- 5"	13'- 3"	13'- 9"	15'- 5"	19'
36"	2'- 1"	4'- 5"	6'-11"	7'- 3"	8'- 2"	10'- 2"	9'- 6"	9'-11"	11'- 2"	13'-10"	14'- 9"	15'- 3"	17'- 2"	21'
42"	2'- 4"	4'-11"	8'- 6"	8'-10"	9'-11"	12'- 4"	11'- 7"	12'- 0"	13'- 6"	16'- 8"	17'- 9"	18'- 5"	20'- 8"	25'
48"	2'- 7"	5'- 5"	10'- 1"	10'- 5"	11'- 9"	N/A	13'- 7"	14'- 2"	15'-10"	N/A	20'- 9"	21'- 6"	24'- 2"	N/
54"	3'- 0"	5'-11"	11'- 8"	12'- 1"	N/A	N/A	15'- 8"	16'- 3"	N/A	N/A	23'-10"	24'- 8"	N/A	N/
60"	3'- 3"	6'- 5"	13'- 3"	N/A	N/A	N/A	17'- 9"	N/A	N/A	N/A	26'-10"	N/A	N/A	N/

TYPICAL PIPE CULVERT MITERS (3)

Side Slope	0° Skew	15° Skew	30° Skew	45° Skew
3:1	3:1	3.106:1	3.464:1	4.243:1
4:1	4:1	4.141:1	4.619:1	5.657:1
6:1	6:1	6.212:1	6.928:1	8.485:1

CONDITIONS WHERE PIPE RUNNERS (2) ARE NOT REQUIRED

Nominal Culvert I.D.	Single Pipe Culvert	Multiple Pipe Culverts
12" thru 21"	Skews thru 45°	Skews thru 45°
24"	Skews thru 45°	Skews thru 30°
27"	Skews thru 30°	Skews thru 15°
30"	Skews thru 15°	Skews thru 15°
33"	Skews thru 15°	Always required
36"	Normal (No Skew)	Always required
42" to 60"	Always required	Always required

STANDARD PIPE SIZES & MAX PIPE RUNNER LENGTHS

Pipe Size	Pipe O.D.	Pipe I.D.	Max P Runn Leng
2" STD	2.375"	2.067"	N/
3" STD	3.500"	3.068"	10'-
4" STD	4.500"	4.026"	19'-
5" STD	5.563"	5.047"	34'-

ESTIMATED CONCRETE RIPRAP QUANTITIES (CY) (5)

Nominal Culvert I.D.	3:1 Side Slope				4:1 Side Slope				6:1 Side Slope			
	0° Skew	15° Skew	30° Skew	45° Skew	0° Skew	15° Skew	30° Skew	45° Skew	0° Skew	15° Skew	30° Skew	45°
12"	0.4	0.4	0.5	0.5	0.5	0.5	0.5	0.6	0.7	0.7	0.7	0.
15"	0.5	0.5	0.5	0.6	0.6	0.6	0.6	0.7	0.7	0.7	0.8	0.
18"	0.5	0.5	0.6	0.6	0.6	0.7	0.7	0.8	0.8	0.8	0.9	1.
21"	0.6	0.6	0.6	0.7	0.7	0.7	0.8	0.9	0.9	0.9	1.0	1.
24"	0.6	0.7	0.7	0.8	0.8	0.8	0.8	1.0	1.0	1.0	1.1	1.
27"	0.7	0.7	0.8	0.9	0.8	0.9	0.9	1.1	1.1	1.1	1.2	1.
30"	0.8	0.8	0.8	0.9	0.9	0.9	1.0	1.2	1.2	1.2	1.3	1.
33"	0.8	0.8	0.9	1.0	1.0	1.0	1.1	1.3	1.3	1.4	1.5	1.
36"	0.9	0.9	0.9	1.1	1.1	1.1	1.2	1.4	1.4	1.5	1.6	1.
42"	1.0	1.0	1.1	1.3	1.2	1.3	1.3	1.6	1.6	1.7	1.8	2.
48"	1.1	1.1	1.2	N/A	1.4	1.4	1.5	N/A	1.9	1.9	2.1	N/
54"	1.3	1.3	N/A	N/A	1.6	1.6	N/A	N/A	2.1	2.1	N/A	N/
60"	1.4	N/A	N/A	N/A	1.7	N/A	N/A	N/A	2.3	N/A	N/A	N/

(1) Size of Pipe Runner shall be as shown in the tables. Cross Pipe shall be the same size as the Pipe Runner. Cross Pipe Stub Out and Bottom Anchor Pipe shall be the next smaller size pipe as shown in the STANDARD PIPE SIZES table.

(2) This standard allows for the placement of only one pipe runner across each culvert pipe opening. In order to limit the clear opening to be traversed by an errant vehicle, the following conditions must be met:

For 60" culvert pipes, the skew must not exceed 0°.
For 54" culvert pipes, the skew must not exceed 15°.
For 48" culvert pipes, the skew must not exceed 30°.
For all culvert pipe sizes 42" and less, the skew must not exceed 45°.

If the above conditions cannot be met, the designer should consider using a safety end treatment with flared wings. For further information, refer to the TxDOT "Roadway Design Manual".

(3) Miter = Slope of Mitered Pipe Culvert End

(4) Riprap placed beyond the limits shown will be paid as Concrete Riprap in accordance with Item 432, "Riprap".

(5) Quantities shown are for one end of one reinforced Concrete Pipe Culvert. For multiple Pipe Culverts or for Corrugated Metal Pipe Culverts, quantities will need to be adjusted. Riprap quantities are for Contractor's information only.

DISCLAIMER:
The use of this standard is governed by the "Texas Engineering Practice Act". No warranty of any kind is made by TxDOT for any purpose whatsoever. TxDOT assumes no responsibility for the conversion of this standard to other formats or for incorrect results or damages resulting from its use.

LEVELS DISPLAYED | ACC:

SHEET 1 OF

Texas Department of Transportation
Bridge Division

SAFETY END TREATMENT
FOR 12" DIA TO 60" DIA PIPE CULVERTS TYPE II ~ CROSS DRAINAGE

SETP-CD

FILE: setpcdse.dgn	DN: GAF	CK: CAT	DW: JRP	CK
© TxDOT May 2005	DISTRICT	PROJECT NUMBER		
REVISIONS	YKM			
	COUNTY	CONTROL	SECT	JOB
	GONZALES, ETC	1442	03	016, ET

DISCLAIMER:
The use of this standard is governed by the "Texas Engineering Practice Act". No warranty of any kind is made by TxDOT for any purpose whatsoever. TxDOT assumes no responsibility for the conversion of this standard to other formats or for incorrect results or damages resulting from its use.

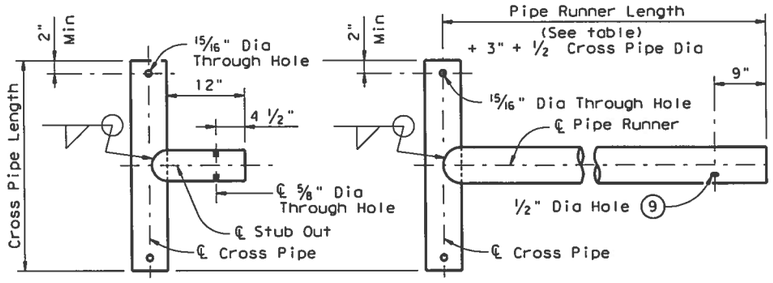

OPTION A1 OPTION A2

CROSS PIPE AND CONNECTIONS DETAILS

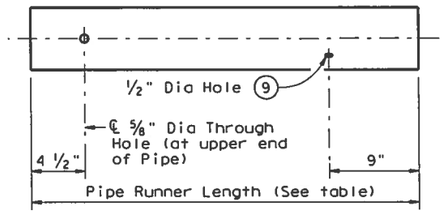

NOTE: The separate Pipe Runner shown is required when Cross Pipe Connection Option A1 is used.

PIPE RUNNER DETAILS

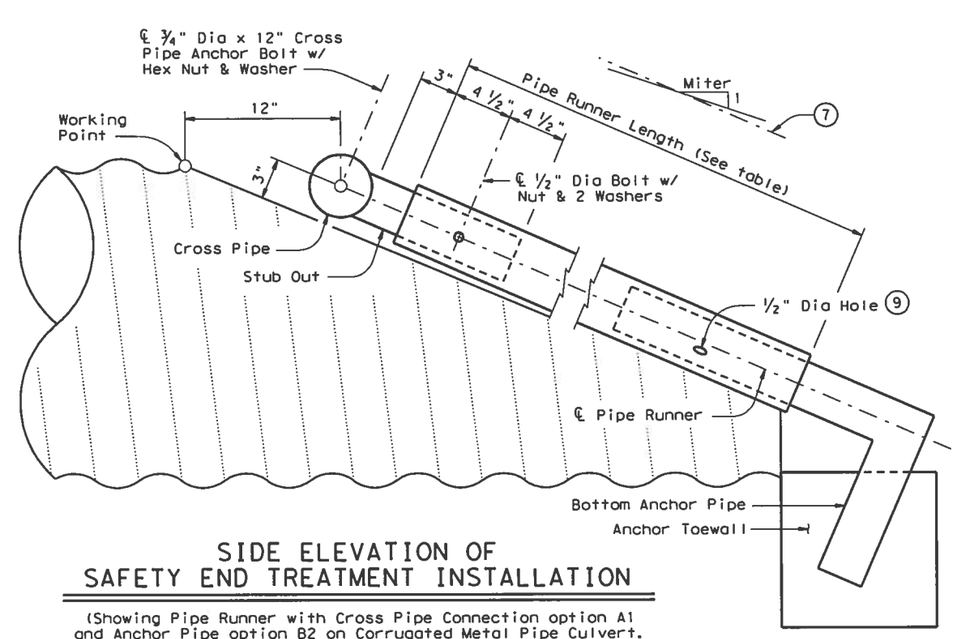

SIDE ELEVATION OF SAFETY END TREATMENT INSTALLATION

(Showing Pipe Runner with Cross Pipe Connection option A1 and Anchor Pipe option B2 on Corrugated Metal Pipe Culvert. Concrete Pipe Culvert details are similar. Riprap not shown for clarity)

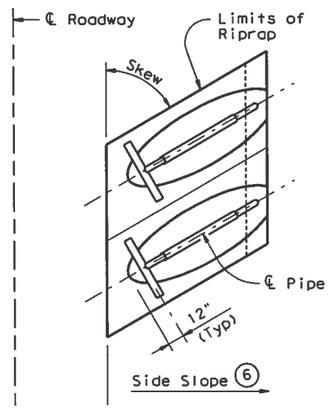

PLAN OF SKEWED INSTALLATION

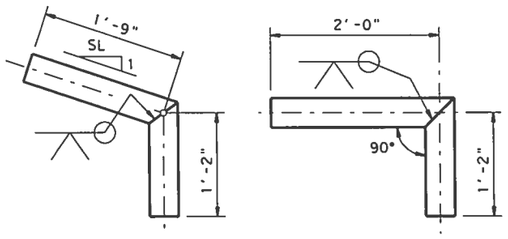

OPTION B1 OPTION B2

BOTTOM ANCHOR PIPE DETAILS (10)

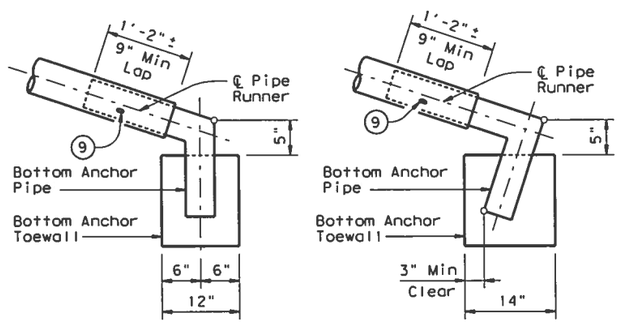

OPTION B1 OPTION B2

BOTTOM ANCHOR TOEWALL DETAILS

(Culvert & Riprap not shown for clarity)

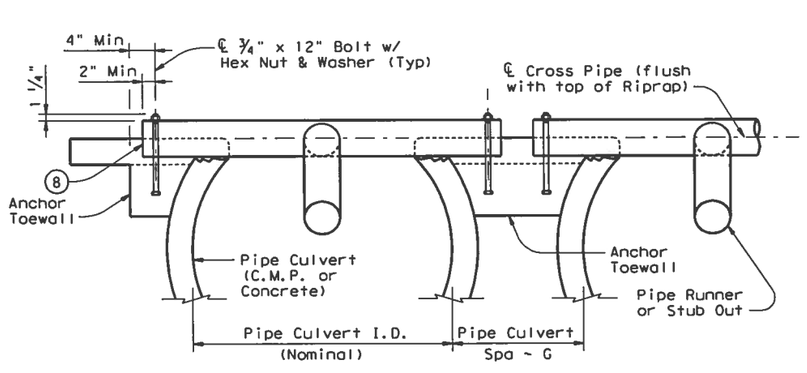

SHOWING CROSS PIPE & ANCHOR TOEWALL

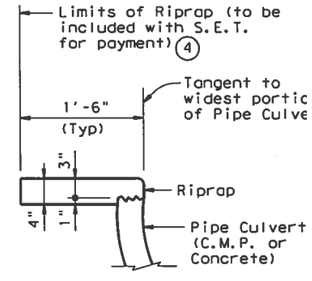

SHOWING TYPICAL PIPE CULVERT & RIPRAP

SECTION A-A

(6) Recommended values of side slope are 3:1, 4:1, & 6:1. All quantities, calculations, and dimensions shown herein are based on these recommended values. Slope of 3:1 or flatter is required for vehicle safety.

(7) Note that actual slope of Pipe Runner may vary slightly from Side Slope of Riprap and trimmed Culvert Pipe edge.

(8) Care shall be taken to ensure that Riprap concrete does not flow into the Cross Pipe so as to permit disassembly of the bolted connection to allow cleanout access.

(9) After installation, the 1/2" hole shall be inspected to ensure that the lap of the Pipe Runner with the Bottom Anchor Pipe is adequate.

(10) At fabricator's option, a heat bend to a smooth 5" radius or a manufactured elbow (of the same material as the Runner) may be substituted for the mitered and welded joint in the Bottom Anchor Pipe.

GENERAL NOTES:

Pipe Runners are designed for a traversing load of 1,800 pounds at yield as recommended by Research Report 280-1, "Safety Treatment of Roadside Cross-Drainage Structures", Texas Transportation Institute, March 1981.

The Safety End Treatments shown herein are intended for use in those installations where out of control vehicles are likely to traverse the openings approximately perpendicular to the Pipe Runners.

Riprap and all necessary inverts shall be Concrete Riprap conforming to the requirements of Item 432, "Riprap".

Payment for riprap and toewall is included in the Price Bid for each Safety End Treatment.

Pipe Runners, Cross Pipes, and Anchor Pipes shall conform to the requirements of ASTM A53 (Type E or S, Grade B), ASTM A500 (Grade B), or API 5LX52.

Bolts and nuts shall conform to ASTM A307.

All steel components, except concrete reinforcing, shall be galvanized after fabrication. Galvanizing damaged during transport or construction shall be repaired in accordance with the specifications.

ACC:

LEVELS DISPLAYED

1

SHEET 2 OF

Texas Department of Transportatio
Bridge Division

SAFETY END TREATMEN

FOR 12" DIA TO 60" DIA
PIPE CULVERTS
TYPE II ~ CROSS DRAINAGE

SETP-CD

FILE: setpcdse.dgn	DN: GAF	CK: CAT	DW: JRP	CK			
©TxDOT May 2005	DISTRICT	PROJECT NUMBER					
REVISIONS	YKM						
	COUNTY		CONTROL	SECT	JOB		
	GONZALES, ETC		1442	03	016, ETC		

DISCLAIMER:
The use of this standard is governed by the "Texas Engineering Practice Act". No warranty of any kind is made by TxDOT for any purpose whatsoever. TxDOT assumes no responsibility for the conversion of this standard to other formats or for incorrect results or damages resulting from its use.

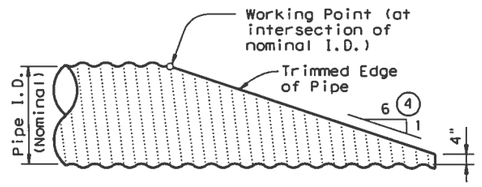

NOTE: All Cross Pipes, calculations, and dimensions are based on the pipe culverts mitered as shown in this detail. Alternate styles of mitered ends will require that appropriate adjustments be made to the values presented on this standard.

SIDE ELEVATION OF TYPICAL PIPE CULVERT MITER

(Showing Corrugated Metal Pipe Culvert.)
(Details at Concrete Pipe Culvert are similar.)

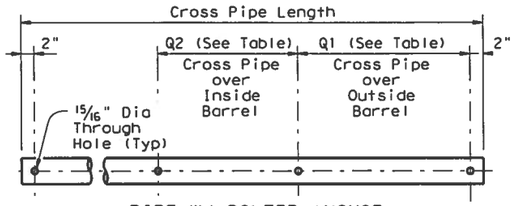

PIPE W/ BOLTED ANCHOR

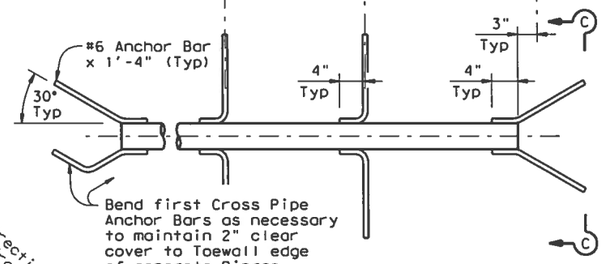

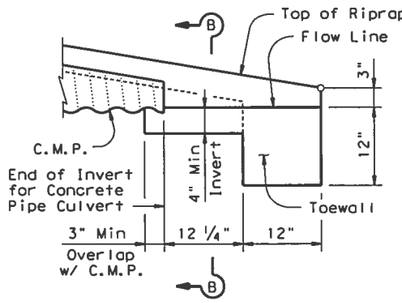

DETAIL "A"

(Showing Invert with Corrugated Metal Pipe Culvert. Concrete Pipe Culvert details are similar. Cross Pipes not shown for clarity.)

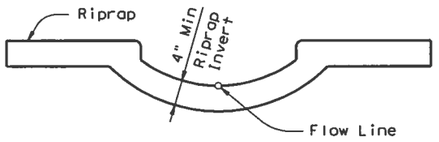

SECTION B-B

(Cross Pipes not shown for clarity.)

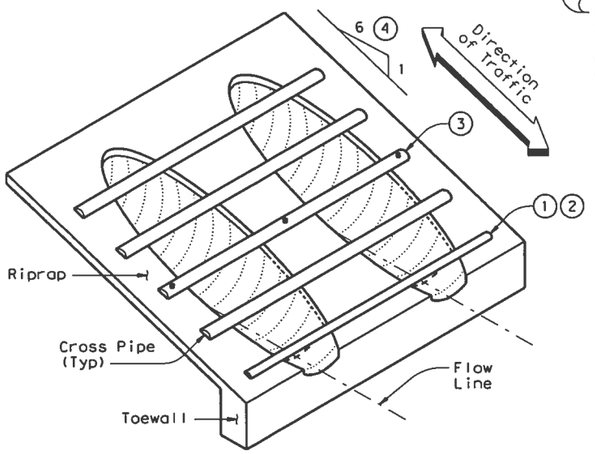

ISOMETRIC VIEW OF TYPICAL INSTALLATION

PIPE W/ ANCHOR BARS

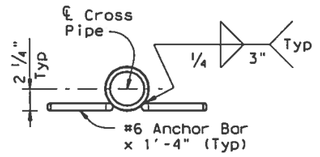

SECTION C-C

CROSS PIPE DETAILS

CROSS PIPE LENGTHS, REQUIRED PIPE SIZES, & RIPRAP QUANTITIES (2)							
Nominal Culvert I.D.	Conc Riprap (CY) (6)	Pipe Culvert Spa ~ G	Single Barrel ~ Q1	Multi-Barrel ~ Q1	Q2	Conditions for use of Cross Pipes	Cross Pipe Size
12"	0.6	9"	N/A	2'- 1"	1'- 9"	3 or more Pipe Culverts	3" St (3.500" O
15"	0.7	11"	N/A	2'- 5"	2'- 2"		
18"	0.8	1'- 2"	N/A	2'-10"	2'- 8"		
21"	0.9	1'- 4"	N/A	3'- 2"	3'- 1"		
24"	0.9	1'- 7"	N/A	3'- 6"	3'- 7"		
27"	1.0	1'- 8"	N/A	3'-10"	3'-11"	3 or more Pipe Culverts	
30"	1.1	1'-10"	N/A	4'- 2"	4'- 4"	2 or more Pipe Culverts	3 1/2" S (4.000" O
33"	1.2	1'-11"	4'- 2"	4'- 5"	4'- 8"	All Pipe Culverts	
36"	1.3	2'- 1"	4'- 5"	4'- 9"	5'- 1"	All Pipe Culverts	4" St (4.500" O
42"	1.5	2'- 4"	4'-11"	5'- 5"	5'-10"		
48"	1.7	2'- 7"	5'- 5"	6'- 0"	6'- 7"	All Pipe Culverts	5" St (5.563" O
54"	2.0	3'- 0"	5'-11"	6'- 9"	7'- 6"		
60"	2.2	3'- 3"	6'- 5"	7'- 4"	8'- 3"		
66"	2.4	3'- 3"	6'-11"	7'-10"	8'- 9"		
72"	2.7	3'- 4"	7'- 5"	8'- 5"	9'- 4"		

(1) The proper installation of the first Cross Pipe is critic for vehicle safety. The top of the first Cross Pipe must be placed at no more than 6" above the flow line.

(2) Size of Cross Pipes, except the first bottom pipe, shall be as shown in the PIPE SIZE table. The first bottom pipe shall be 3 1/2" Standard Pipe (4" O.D.).

(3) The third Cross Pipe from the bottom of the Culvert shall always be installed using a bolted connection. Care shal be taken to ensure that Riprap concrete does not flow int the Cross Pipe so as to permit disassembly of the bolted connection to allow cleanout access. At the Contractor's option, all other Cross Pipes may also be installed using the bolted connection details.

(4) Match Cross Slope as shown elsewhere in the plans. Cross Slope of 6:1 or flatter is required for vehicle safety.

(5) Riprap placed beyond the limits shown will be paid as Concrete Riprap in accordance with Item 432, "Riprap".

(6) Quantities shown are for one end of one reinforced Concre Pipe Culvert. For multiple pipe culverts or for Corrugat Metal Pipe Culverts, quantities will need to be adjusted. Riprap quantities are for Contractor's information only.

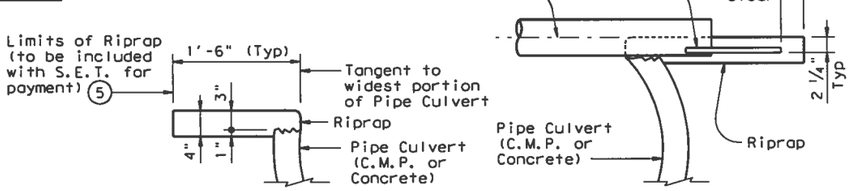

SHOWING TYPICAL PIPE CULVERT & RIPRAP

SHOWING CROSS PIPE WITH ANCHOR BAR

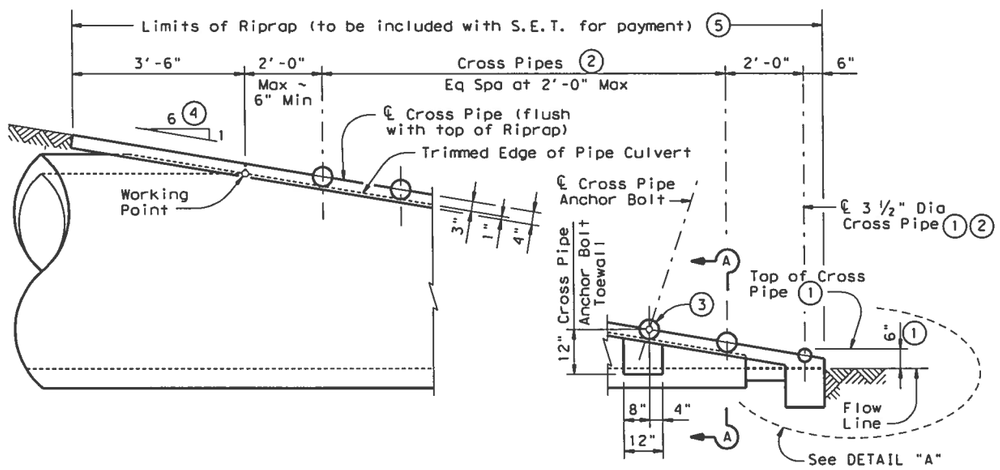

SIDE ELEVATION OF CAST-IN-PLACE CONCRETE

(Showing Concrete Pipe Culvert.)
(Details at Corrugated Metal Pipe Culvert are similar.)

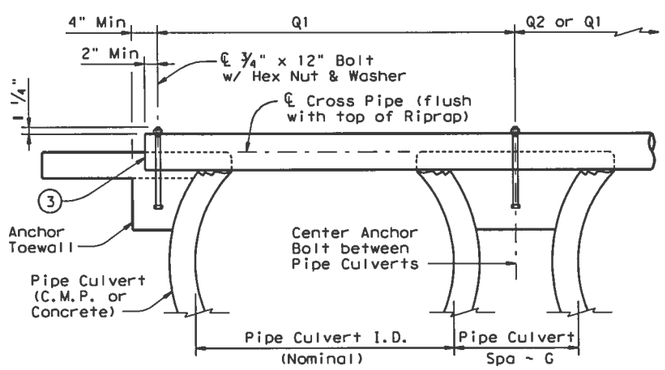

SHOWING CROSS PIPE WITH BOLTED ANCHOR

SECTION A-A

GENERAL NOTES:

Cross Pipes are designed for a traversing load of 10,000 pounds at yield as recommended by Research Report 280-2F, "Safety Treatment of of Roadside Parallel-Drainage Structures", Texas Transportation Institute, March 1981.

Safety End Treatments shown herein are intende for use in those installations where out of cont vehicles are likely to traverse the openings approximately perpendicular to the Cross Pipes.

Riprap and all necessary inverts shall be Concrete Riprap conforming to the requirements of Item 432, "Riprap".

Payment for riprap and toewall is included in the Price Bid for each Safety End Treatment.

Cross Pipes shall conform to the requirements of ASTM A53 (Type E or S, Grade B), ASTM A500 (Grade B), or API 5LX52.

Bolts and nuts shall conform to ASTM A307.

All steel components, except concrete reinforcing, shall be galvanized after fabrication. Galvanizing damaged during transport or construction shall be repaired in accordance with the specifications.

Texas Department of Transportatio
Bridge Division

SAFETY END TREATMEN
FOR 12" DIA TO 72" DIA PIPE CULVERTS TYPE II ~ PARALLEL DRAINAGE

SETP-PD

FILE: setppdse.dgn	DN: GAF	CK: CAT	DW: JRP	CK			
©TxDOT May 2005	DISTRICT	PROJECT NUMBER					
REVISIONS	YKM						
	COUNTY		CONTROL	SECT	JOB		
	GONZALES, ETC		1442	03	016, ET		

LEVELS DISPLAYED ACC:

DISCLAIMER
The use of this standard is governed by the "Texas Engineering Practice Act". No warranty of any kind is made by TxDOT for any purpose whatsoever. TxDOT assumes no responsibility for the conversion of this standard to other formats or for incorrect results or damages resulting from its use.

OBJECT MARKERS

TYPES 1 and 4

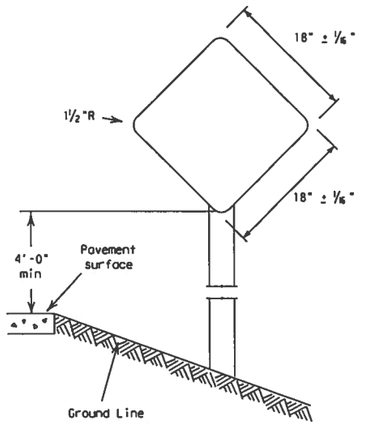

TYPE 1
18" x 18"
Yellow Type E Sheeting

TYPE 4
18" x 18"
Red Type D Sheeting

Use Sign blank 0.080" thick sheet aluminum conforming to ASTM B-209 Alloy 6061-T6. Use reflective sheeting in accordance with DMS 8300.

TYPE 2

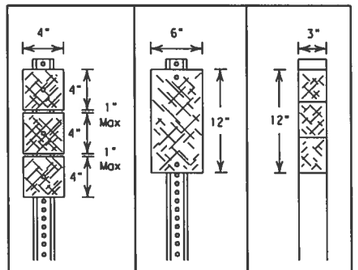

Number of Reflectors	X	Y	Z
Post	WC	WC	FLX/RCR

ALL TYPE 2 OBJECT MARKERS ARE YELLOW

WC-wing channel post (1.12 lbs/ft) per ASTM A 1011 SS Gr 50

FLX/RCR-flexible post (driveable and surface mount) or recycled rubber

Typically used on bridge rail approach ends, some bridge abutments and at bridge rail exits on two-lane, two-way roadways

TYPE 3

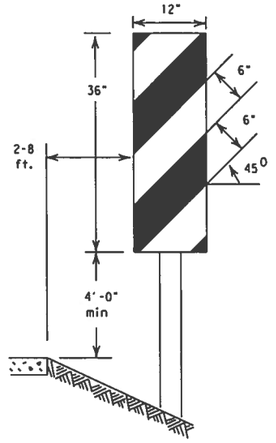

Use Sign blank .080" thick sheet aluminum conforming to ASTM B-209 Alloy 6061-T6. Use reflective sheeting in accordance with DMS 8300, Type E. Use at bridges with no approach rails.

DELINEATORS

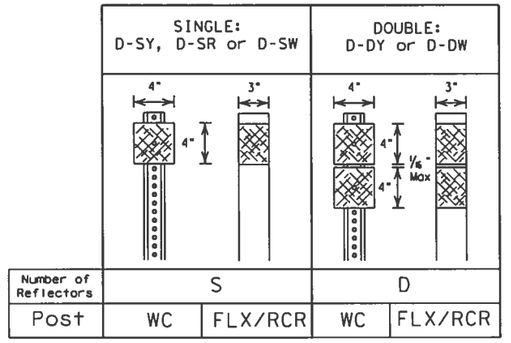

Number of Reflectors	S		D	
Post	WC	FLX/RCR	WC	FLX/RCR

Length of post may vary to meet field conditions.

REFLECTOR UNITS: W-white, R-red or Y-yellow

WC-wing channel post (1.12 lbs/ft) per ASTM A 1011 SS Gr 50

FLX/RCR-flexible post (driveable and surface mount) or recycled rubber.

REFLECTOR UNIT SIZES

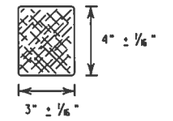

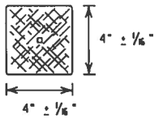

For use on Winged Channel posts only. Use approved metal, plastic or fiberglass backplate with 17/64" square mounting hole.

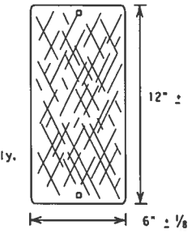

For use on Winged Channel posts Use approved metal, plastic or fiberglass backplate with 17/64 square mounting hole.

REFLECTIVE SHEETING
Yellow - DMS 8300, Type E White - DMS 8300, Type D
Red- - DMS 8300, Type D

TYPE C BARRIER REFLECTORS

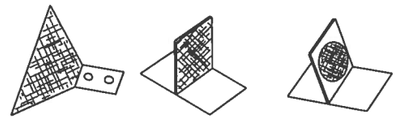

REFLECTIVE SHEETING
Yellow - DMS 8300, Type
White - DMS 8300, Type

Mounting holes - 17/64

A Type A or B reflector unit (per DMS 8600) attached to a bracket to facilitate the mounting of the reflector on concrete traffic barrier, railing, metal beam guard fe (MBGF) or other locations shown on the plans. A list of approved Type C reflectors be found at:
ftp://ftp.dot.state.tx.us/pub/txdot-info/cmd/mpl/typcdeln.pdf

D & OM DESCRIPTIVE CODES

INSTL DEL ASSM (D-XX)SZ X(XXX)XXX(XX)

- Number of Reflectors
  - S = Single
  - D = Double
- Color of Reflectors
  - W = White
  - Y = Yellow
- Reflector Unit Size
  - 1 or 2
- Type of Post
  - WC = Wing Channel Post
  - FLX = Flexible Post
  - RCR = Recycled Rubber
  - TYC = Type C Barrier Reflector
- Type of Installations
  - GND = Ground Mount
  - CTB = Concrete Barrier Mount (Type C only)
  - GF1, GF2, GF3 = Guard Fence Attachment
  - SRF = Surface Mount
  - SLF = Self Righting
- Direction
  - IF REQUIRED
  - BI = Bi-Directional
  - BR = Bi-Directional with red on back

INSTL OM ASSM (OM-XX)(XXX)XXX(XX)

- Type of Object Marker
  - 1, 2, 3, or 4
- Number of Reflectors
  - X = 3 each Size 2 reflector units (Type 2 only)
  - Y = 1 Size 3 reflector unit (Type 2 only)
  - Z = 3 each Size 1 reflector units (Type 2 only)
  - L = Left Side (Type 3 Object Marker only)
  - R = Right Side (Type 3 Object Marker only)
- Type of Post
  - WC = Wing Channel Post
  - FLX = Flexible Post
  - RCR = Recycled Rubber
  - TWT = Thin Walled Tubing
- Type of Mount
  - GND = Ground Mount
  - WP = Wedge Anchor Plastic System
  - SRF = Surface Mount
  - SLF = Self Righting
  - WS = Wedge Anchor Steel System
- Direction
  - IF REQUIRED
  - BI = Bi-Directional

LEVELS DISPLAYED	ACC:
1 2 3 4 5 6 7 8 9 10 11 12 13 14 15 16	
17 18 19 20 21 22 23 24 25 26 27 28 29 30 31 32	
33 34 35 36 37 38 39 40 41 42 43 44 45 46 47 48	
49 50 51 52 53 54 55 56 57 58 59 60 61 62 63	

TYPES OF INSTALLATIONS

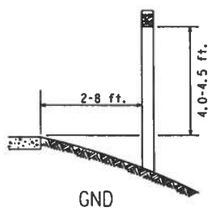

GND

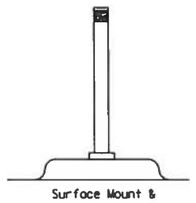

Surface Mount & Self Righting Surface Mount

SLF & SRF

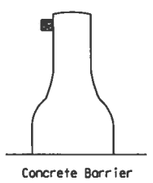

Concrete Barrier

CTB
(Type C only)

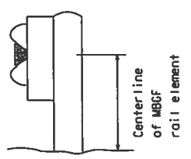

GF1
(Type C only)

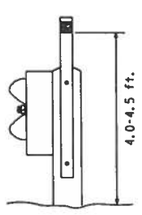

GF2

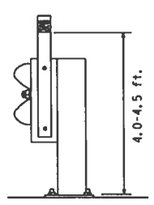

MBGF at low fill culvert

GF3

GROUND MOUNT DETAILS

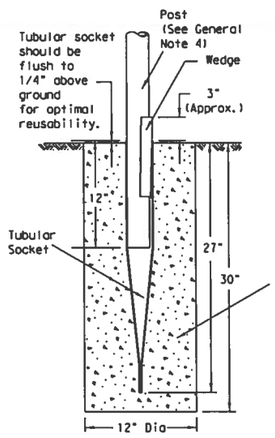

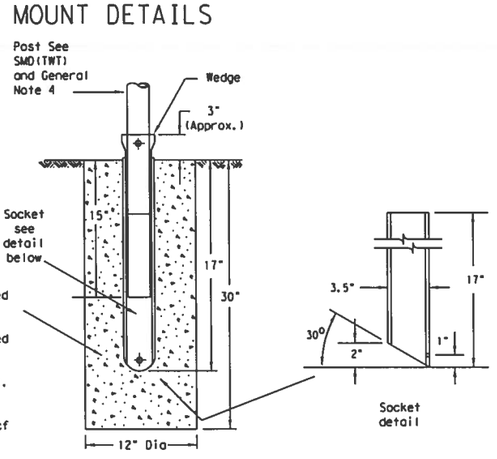

WEDGE ANCHOR STEEL SYSTEM

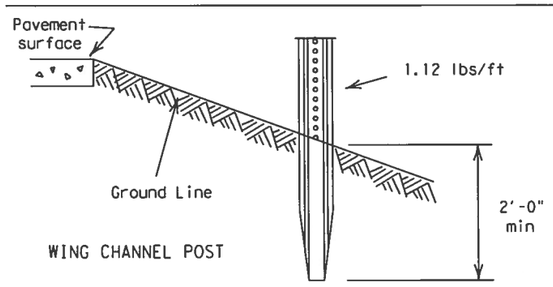

WING CHANNEL POST

WEDGE ANCHOR PLASTIC SYSTEM

NOTE: Wing Channel post option is to be used for Type 2 Object Markers and delineators only

GENERAL NOTES

1. Place delineators on a section of roadway the distance from the edge of pavement.
2. Where a restriction prevents consistent placem from the pavement edge, place the affected object markers in line with the innermost edge the obstruction.
3. When object markers are more than 8 ft from th edge of the pavement, it may not be possible t maintain a height of 4.0-4.5 ft. If this is th case, place the object markers as close to the desired height as possible.
4. Install all delineators, object markers and barrier reflectors in accordance with the manufacturer's recommendation.

DEPARTMENTAL MATERIAL SPECIFICATIONS

FLEXIBLE DELINEATOR & OBJECT MARKER POSTS (DRIVEABLE & SURFACE MOUNT TYPES)	DMS-
FLAT SURFACE REFLECTIVE SHEETING	DMS-
DELINEATORS AND OBJECT MARKERS	DMS-

STANDARD PLANS
Texas Department of Transportatio
Traffic Operations Division

DELINEATOR & OBJECT MARKER INSTALLATION AND MATERIAL DESCRIPTION D & OM(1)-

©TxDOT August 2004	Dn-DAS	Ck-GRB	Dw-FDN	Ck-
REVISIONS	STATE DISTRICT: YKM	FEDERAL REGION: 6	PROJECT NUMBER	
COUNTY: GONZALES, ETC.	CONTROL: 1442	SECTION: 03	JOB: 016, ETC	F

DISCLAIMER
The use of this standard is governed by the "Texas Engineering Practice Act". No warranty of any kind is made by TxDOT for any purpose whatsoever. TxDOT assumes no responsibility for the conversion of this standard to other formats or for incorrect results or damages resulting from its use.

Two-way, Two lane Roadway with Reduced Width Approach Rail

Two-way, Two lane Roadway with Metal Beam Guard Fence (MBGF)

Terminal Ends include OB-3F.
There is no need to install an OM-2 in front of terminal.

Two-way, Two lane Roadway Bridge with No Approach Rail

STANDARD PLANS
Texas Department of Transportatio
Traffic Operations Division

DELINEATOR & OBJECT MARKER PLACEMENT DETAILS

D & OM(3)-C

©TxDOT August 2004	DN: DAS	CK: GRB	DW: FDN
REVISIONS	STATE DISTRICT: YKM	FEDERAL REGION: 6	PROJECT NUMBER
COUNTY: GONZALES, ETC.	CONTROL: 1442	SECTION: 03	JOB: 016, ETC

LEVELS DISPLAYED

1	2	3	4	5	6	7	8	9	10	11	12	13	14	15	16
17	18	19	20	21	22	23	24	25	26	27	28	29	30	31	32
33	34	35	36	37	38	39	40	41	42	43	44	45	46	47	48
49	50	51	52	53	54	55	56	57	58	59	60	61	62	63	

ACC:

DISCLAIMER
The use of this standard is governed by the "Texas Engineering Practice Act". No warranty of any kind is made by TxDOT for any purpose whatsoever. TxDOT assumes no responsibility for the conversion of this standard to other formats or for incorrect results or damages resulting from its use.

LEVELS DISPLAYED

ACC:	1	2	3	4	5	6	7	8	9	10	11	12	13	14	15	16
	17	18	19	20	21	22	23	24	25	26	27	28	29	30	31	32
	33	34	35	36	37	38	39	40	41	42	43	44	45	46	47	48
	49	50	51	52	53	54	55	56	57	58	59	60	61	62	63	

Divided Roadway with Metal Beam Guard Fence

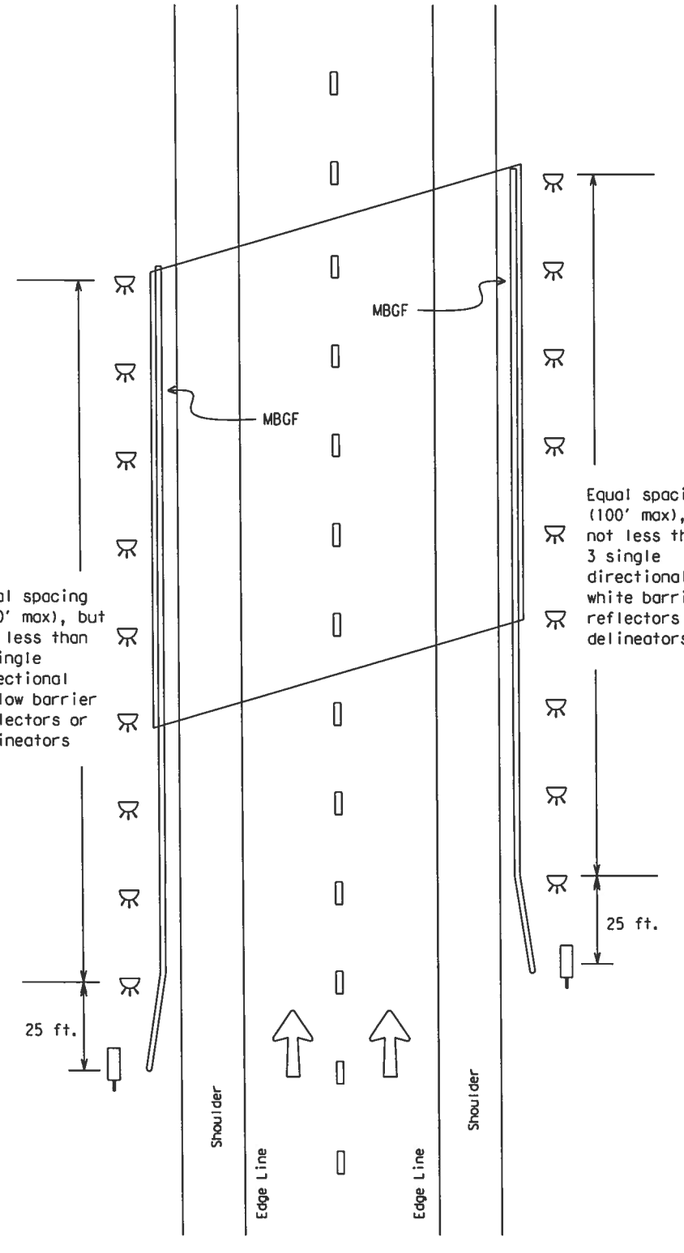

Freeway Delineation including Ramps

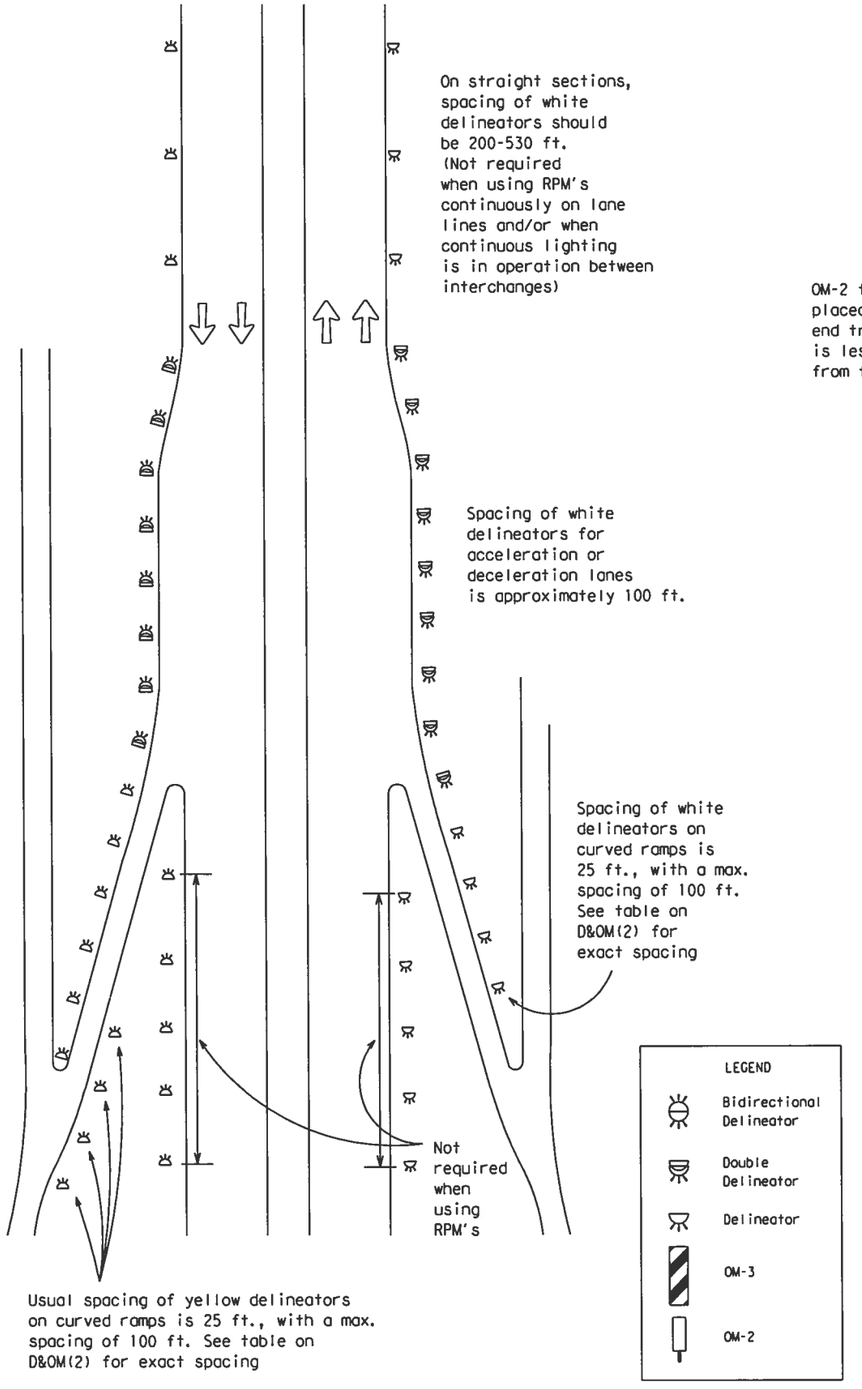

For Culverts without MBGF

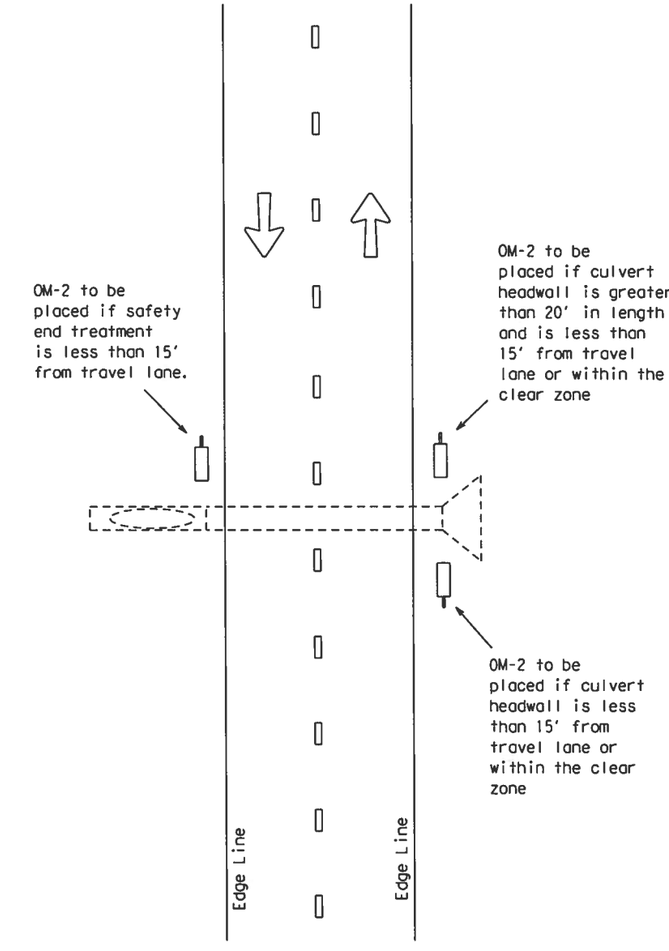

LEGEND

- Bidirectional Delineator
- Double Delineator
- Delineator
- OM-3
- OM-2

STANDARD PLANS
Texas Department of Transportatio
Traffic Operations Division

DELINEATOR & OBJECT MARKER PLACEMENT DETAILS

D & OM(5)-C

©TxDOT August 2004	DN: DAS	CK: GRB	DW: FDN	CK:
REVISIONS	STATE DISTRICT: YKM	FEDERAL REGION: 6	PROJECT NUMBER	
	COUNTY: GONZALES, ETC.	CONTROL: 1442	SECTION: 03	JOB: 016, ETC

DISCLAIMER
The use of this standard is governed by the "Texas Engineering Practice Act". No warranty of any kind is made by TxDOT for any purpose whatsoever. TxDOT assumes no responsibility for the conversion of this standard to other formats or for incorrect results or damages resulting from its use.

TWO LANE TWO-WAY ROADWAY WITH OR WITHOUT SHOULDERS

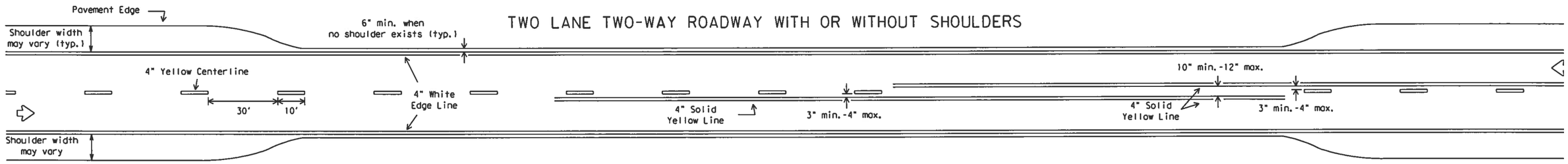

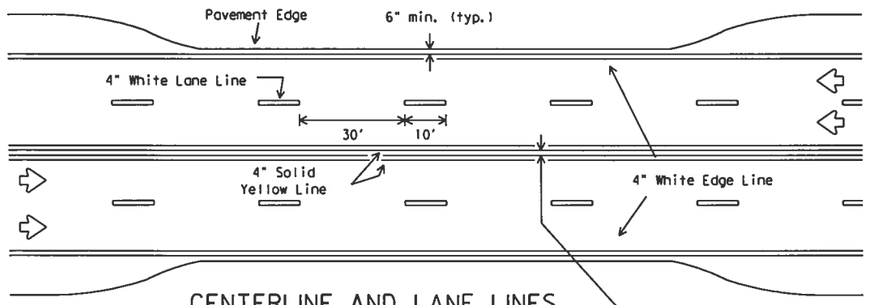

CENTERLINE AND LANE LINES FOUR LANE TWO-WAY ROADWAY WITH OR WITHOUT SHOULDERS

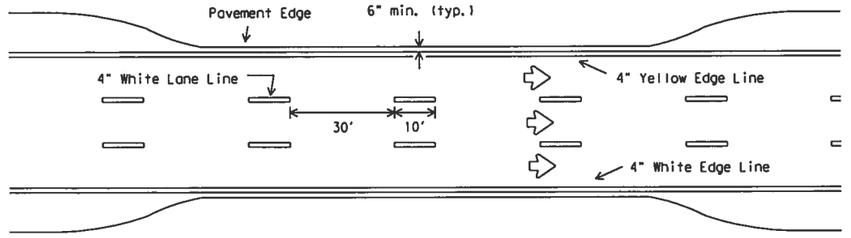

EDGE LINE AND LANE LINES ONE-WAY ROADWAY WITH OR WITHOUT SHOULDERS

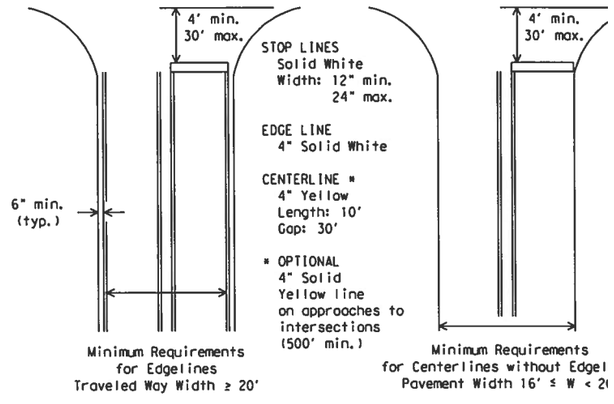

GUIDE FOR PLACEMENT OF STOP LINES, EDGE LINE & CENTERLINE

Based on Traveled Way and Pavement Widths for Undivided Highways

FOUR LANE DIVIDED ROADWAY INTERSECTIONS

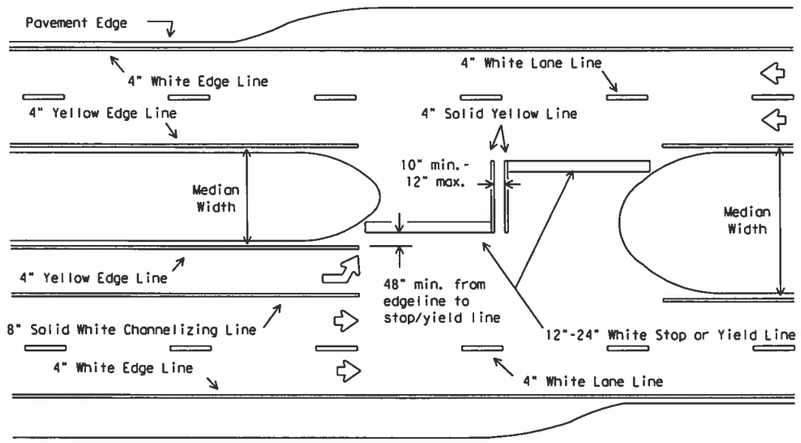

All medians shall be field measured to determine the location of necessary striping. Stop/Yield bars and centerlines shall be placed when the median width is greater than 30 ft. The median width is defined as the area between two roadways of a divided highway measured from edge of traveled way to edge of traveled way. The median excludes turn lanes. The median width might be different between intersections, interchanges and of opposite approaches of the same intersection. The narrow median width will be the controlling width to determine if markings are required.

ROADWAYS WITH REDUCED SHOULDER WIDTHS ACROSS BRIDGE OR CULVERT

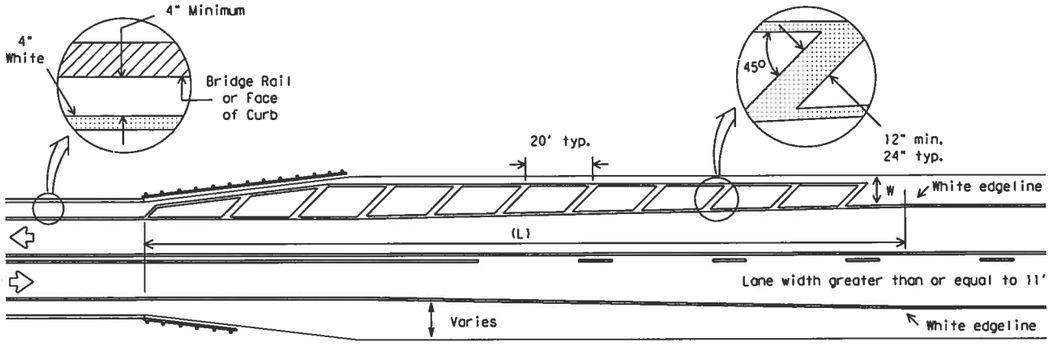

NOTES:

1. No-passing zone on bridge approach is optional but if used, it shall be a minimum 500 feet long.
2. For crosshatching length (L) see Table 1.
3. The width of the offset (W) and the required crosshatching width is the full shoulder width in advance of the bridge.
4. The crosshatching should be required if the shoulder width in advance of the bridge is 4 foot or wider and any reduction in shoulder width across the bridge occurs.
5. For guard fence details, refer elsewhere in the plans.

TABLE 1 - TYPICAL LENGTH (

Posted Speed *	Formula
30, 35, 40	$L = \frac{WS^2}{60}$
45, 50, 55, 60, 65, 70	L=WS

* 85th Percentile Speed may be used on roads where traffic speeds normally exceed the posted speed limit. Crosshatching length should be rounded up to nearest 5 foot increment.

L=Length of Crosshatching (FT.) W=Width of Offset (FT.)
S=Posted Speed (MPH)

EXAMPLES:

An 8 foot shoulder in advance of a bridge reduces
4 feet on a 70 MPH roadway. The length of the cro
hatching should be:
L = 8 x 70 = 560 ft.
A 4 foot shoulder in advance of a bridge reduces
2 feet on a 40 MPH roadway. The length of the cro
hatching should be:
L = 4(40)² / 60 = 106.67 ft. rounded to 110

GENERAL NOTES:

Edgeline striping shall be as shown in the plans or as directed by the Engineer. The edgeline should typically be placed a minimum of 6 inches from the edge of pavement. This distance may vary due to pavement raveling or other conditions. Edgelines are not required in curb and gutter sections of roadways.

The traveled way includes only that portion of the roadway used for vehicular travel and not the parking lanes, sidewalks, berms and shoulders. The traveled ways shall be measured from the inside of edgeline to inside of edgeline of a two lane roadway.

All pavement marking materials shall meet the required Deportmental Material Specifications as specified by the plans.

SPECIFICATION REFERENCE TABLE

MATERIAL SPECIFICATIONS	
PAVEMENT MARKERS (REFLECT.)	DMS-4200
EPOXY	DMS-6100
BITUMINOUS ADHESIVE FOR PAVEMENT MARKERS	DMS-6130

YIELD LINES

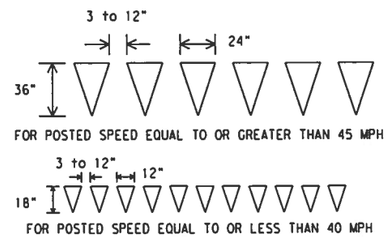

STANDARD PLANS
Texas Department of Transportatio
Traffic Operations Division

TYPICAL STANDARD PAVEMENT MARKINGS

PM(1)-

© TxDOT November 1978

DN: BAS	CK: GRB	DW: FDN	CK: CAL	MCG HC

REVISIONS	STATE DISTRICT	FEDERAL REGION	PROJECT NUMBER
8-95	YKM	6	
5-00			
8-00	COUNTY	CONTROL	SECTION	JOB
3-03	GONZALAS, ETC.	1442	03	016, ETC

LEVELS DISPLAYED ACC:

1	2	3	4	5	6	7	8	9	10	11	12	13	14	15	16	
17	18	19	20	21	22	23	24	25	26	27	28	29	30	31	32	
33	34	35	36	37	38	39	40	41	42	43	44	45	46	47	48	
49	50	51	52	53	54	55	56	57	58	59	60	61	62	63		

DISCLAIMER
The use of this standard is governed by the "Texas Engineering Practice Act". No warranty of any kind is made by TxDOT for any purpose whatsoever. TxDOT assumes no responsibility for the conversion of this standard to other formats or for incorrect results or damages resulting from its use.

REFLECTIVE RAISED PAVEMENT MARKERS FOR VEHICLE POSITIONING GUIDANCE

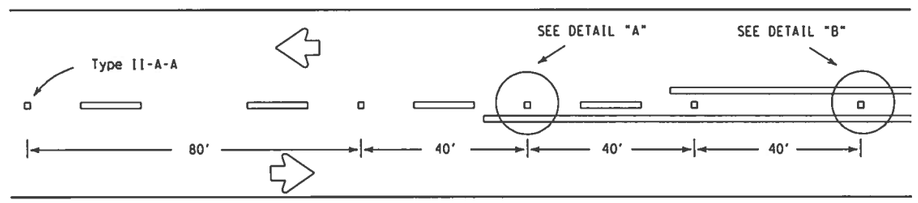

CENTERLINE FOR ALL TWO LANE ROADWAYS

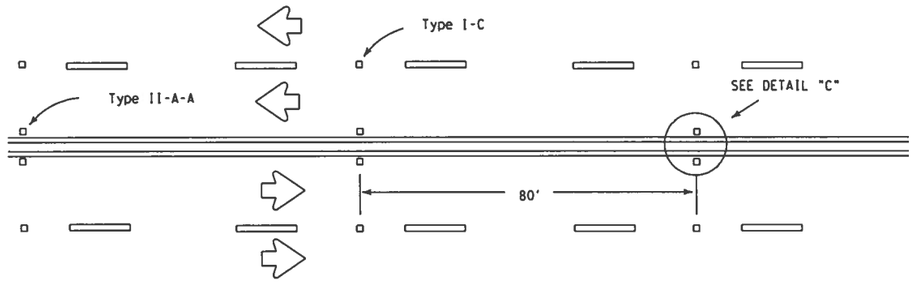

CENTERLINE & LANE LINES FOR FOUR LANE TWO-WAY HIGHWAYS

Raised pavement marker Type I-C, clear face toward normal traffic, shall be placed on 80-foot centers.

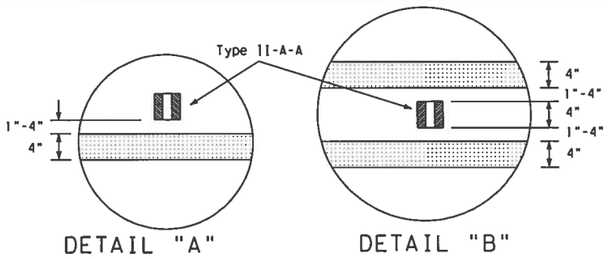

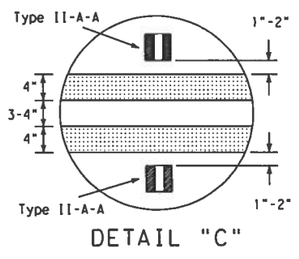

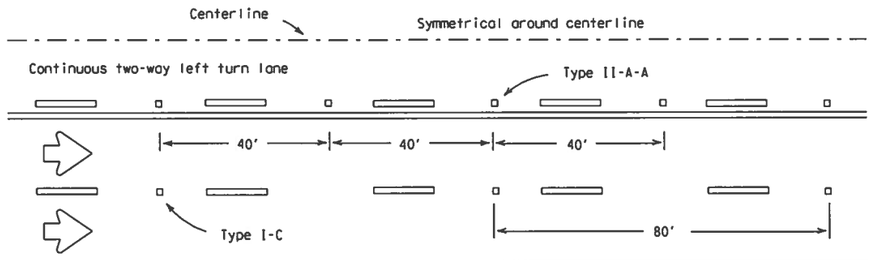

CENTERLINE AND LANE LINES FOR TWO-WAY LEFT TURN LANE

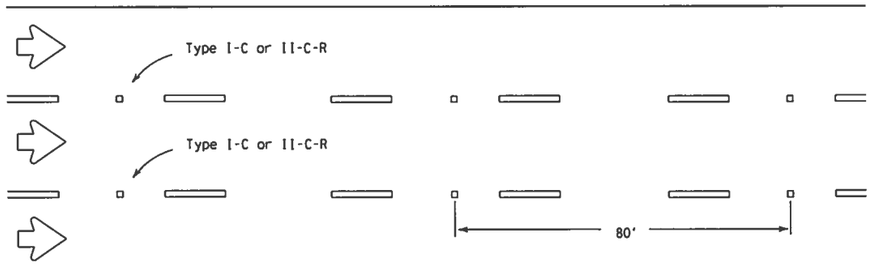

LANE LINES FOR ONE-WAY ROADWAY (NON-FREEWAY FACILITIES)

Raised pavement markers Type II-C-R shall have clear face toward normal traffic and red face toward wrong-way traffic.

RAISED PAVEMENT MARKERS

(REFLECTORIZED)

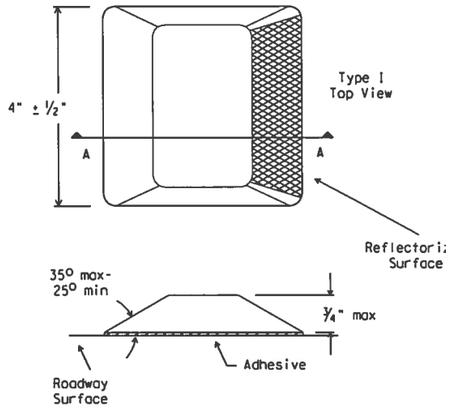

SECTION A

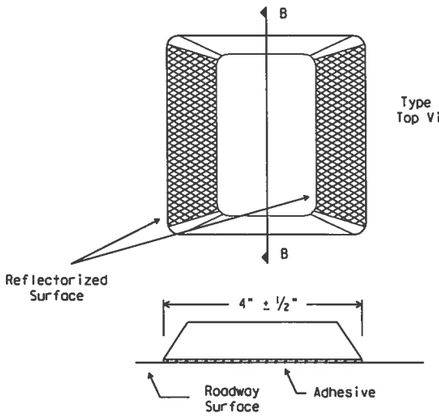

SECTION B

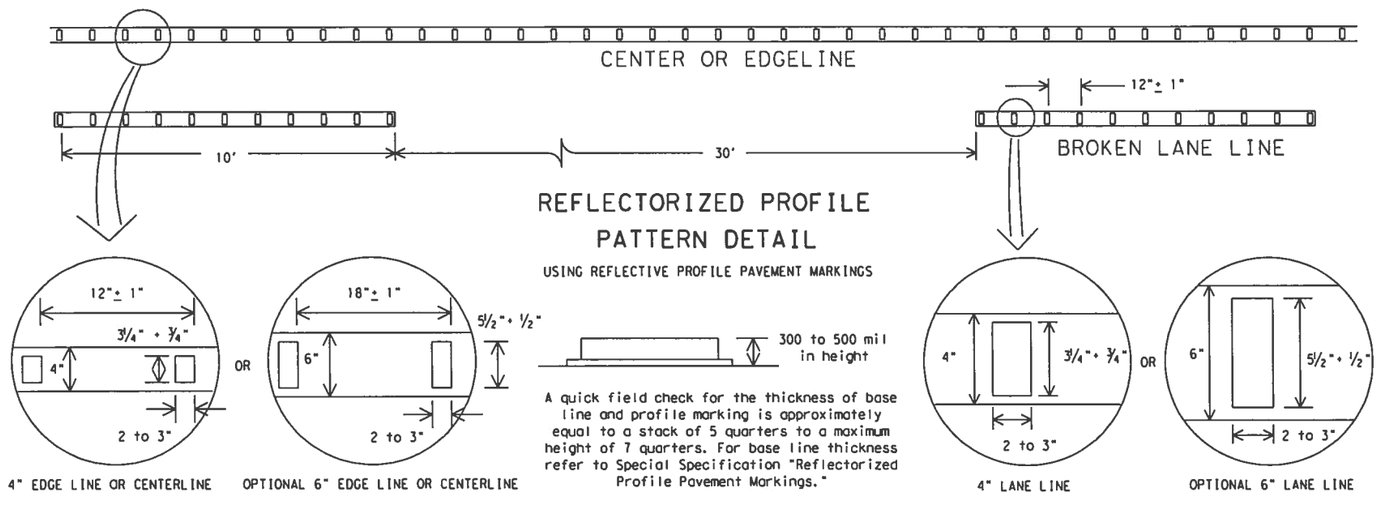

REFLECTORIZED PROFILE PATTERN DETAIL

USING REFLECTIVE PROFILE PAVEMENT MARKINGS

A quick field check for the thickness of base line and profile marking is approximately equal to a stack of 5 quarters to a maximum height of 7 quarters. For base line thickness refer to Special Specification "Reflectorized Profile Pavement Markings."

GENERAL NOTES:

All raised pavement markers placed in broken lines shall be placed in line with and midway between the stripes.

On concrete pavements the raised pavement markers should be placed to one side of the longitudinal joints.

All pavement marking materials shall meet the required Departmental Material Specifications as specified by the plans.

SPECIFICATION REFERENCE TABLE

MATERIAL SPECIFICATIONS	
PAVEMENT MARKERS (REFLECT.)	DMS-4200
EPOXY	DMS-6100
BITUMINOUS ADHESIVE FOR PAVEMENT MARKERS	DMS-6130

LEVELS DISPLAYED
1 2 3 4 5 6 7 8 9 10 11 12 13 14 15 16 17 18 19 20 21 22 23 24 25 26 27 28 29 30 31 32 33 34 35 36 37 38 39 40 41 42 43 44 45 46 47 48 49 50 51 52 53 54 55 56 57 58 59 60 61 62 63

ACC:

STANDARD PLANS
Texas Department of Transportation
Traffic Operations Division

POSITION GUIDANCE USING RAISED MARKERS

REFLECTORIZED PROFILE MARKINGS

PM(2)-(

© TxDOT April 1977	DN: BAS	CK: GRB	DW: FDN	CK:

REVISIONS	STATE DISTRICT	FEDERAL REGION	PROJECT NUMBER			
4-92	YKM	6				
5-00	COUNTY		CONTROL	SECTION	JOB	
8-00	GONZALAS, ETC.		1442	03	016, ETC	FE
2-08						

DISCLAIMER
The use of this standard is governed by the "Texas Engineering Practice Act". No warranty of any kind is made by TxDOT for any purpose whatsoever. TxDOT assumes no responsibility for the conversion of this standard to other formats or for incorrect results or damages resulting from its use.

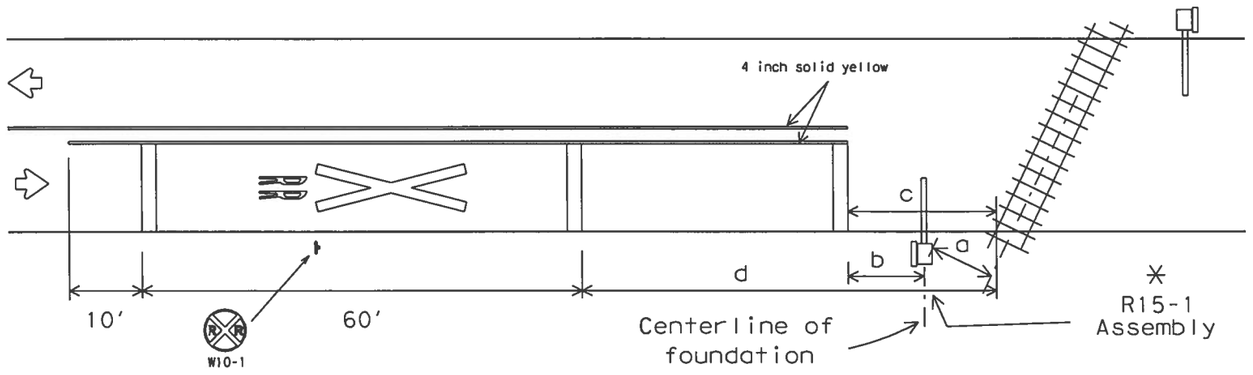

Two Lane, Two-Way

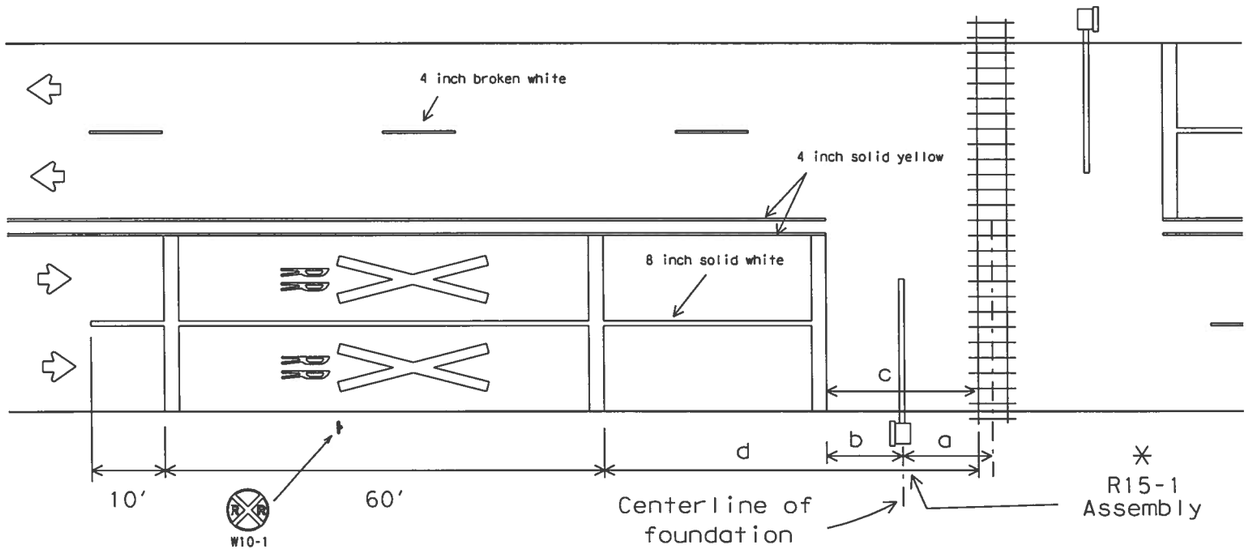

Undivided Multilane Roadway

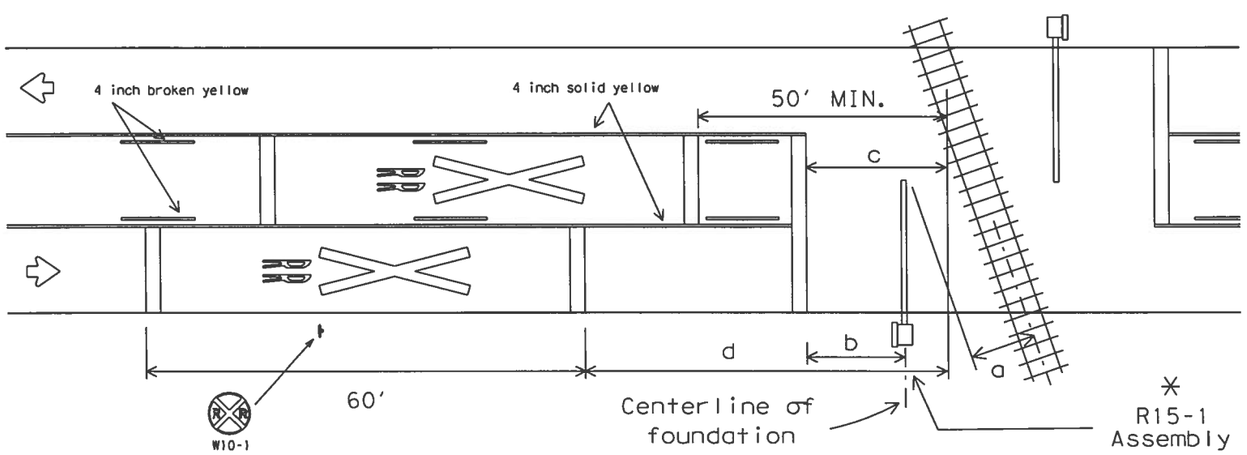

Two-Way Left Turn Lane (TWLTL)

a =

12 feet minimum, 15 feet usual, if active warning devices are present. Distance "a" should be measured from the centerline of * R15-1 assembly to the centerline of nearest track.

b =

Stop lines should be approximately 8 feet in advance of active warning devices (Type A, E or F). Stop line should be approximately 15 feet from near rail if only passive devices (R15-1, plus R15-2 when applicable) are present.

c =

15 feet desirable minimum. R15-1 should be placed between stop line and rails with adequate distance provided for "a".

* d =

Approach Speed(mph)	Desirable Placement (feet)
20	145
25	220
30	295
35	370
40	445
45	520
50	595
55	670
60	745
65	820
70	900

* Local conditions may require alternate placement locations.

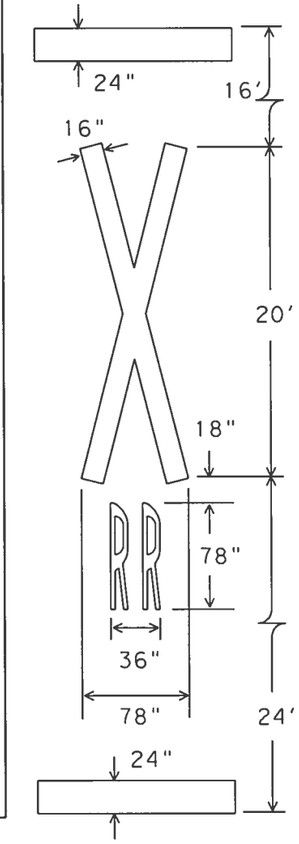

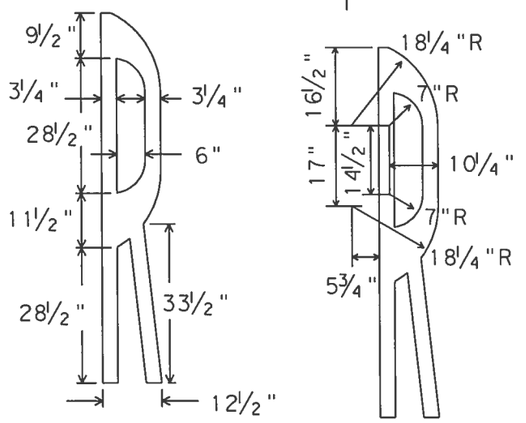

ESTIMATED QUANTITIES

(for Contractor Information ONLY)

24 INCH WHITE TRANSVERSE MARKINGS AND STOP LINES

No. of Approach Lanes (Include TWLTL)	LANE WIDTH (FT) 11	12	13	14
1	33	36	39	42
2	66	72	78	84
3	99	108	117	126
4	132	144	156	168

4 INCH SOLID YELLOW NO PASSING LINE = "d" - "c" + 70

For: Two Lane, Two-Way, Single Lane Approach per Directio

8 INCH SOLID WHITE LANE LINE = "d" - "a" + 70

For: Two-Way or One-Way Traffic, 2 or More Approach Lanes in Same Direction (Do NOT Include TWLTL)

GENERAL NOTES

1. The pavement markings on an approach to a railroad grade crossing shall consist of:
   a. The RR Xing symbol,
   b. Three transverse 24" lines, and
   c. Lane lines: a solid no passing line for two-way traffic approaches, or solid lane lines for multilane approaches.
2. For bidding purposes, the RR Xing symbol will be measured paid for as for each lane in place. The transverse marking and lane lines will be measured and paid for by the lineal foot.
3. Centerlines shall be yellow, other markings shall be white.
4. Approach lanes less than 8 foot width shall NOT have markin
5. Markings should NOT be placed where less than 110 feet of approach roadway is available for placement.
6. RR Xing symbols should be placed approximately in the cent the approach lane.
7. All transverse markings, including stop lines, shall be pl at right angles to the centerline and across all approach lanes.
8. Existing non-standard markings shall be removed to the ful extent possible so as not to leave a discernable marking, any method approved by the engineer. OVERPAINTING WILL NOT ALLOWED.
9. Additional markings and placement details may be found in the TMUTCD, Appendix H.
10. The Engineer may require additional longitudinal markings the distance between the stop lines is greater than 80 fee Markings are not required across or between the rails unle specified elsewhere in the plans.

* R15-1 Assembly

May consist of one or more of the following:

R15-1	Crossbuck Sign
R15-2	Multiple Track Sign
Type A	Mast Flashers
Type E	Cantilevers
Type F	Gates

STANDARD PLANS
TEXAS DEPARTMENT OF TRANSPORTATIO
Traffic Operations Division

RAILROAD CROSSING PAVEMENT MARKING TYPICAL DETAILS

RCPM-

© TxDOT August 1990

DN: LR/MT	CK:	DW: DN	CK:	HEC NO.

REVISIONS	STATE DISTRICT	FEDERAL REGION	PROJECT NUMBER
12-90 2-96	YKM	6	
5-91	COUNTY	CONTROL	SECTION	JOB
4-92	GONZALES, ETC	1442	03	016, ETC
8-95				

ACC:

LEVELS DISPLAYED

1	2	3	4	5	6	7	8	9	10	11	20	30	40	50	60	
70	80	90	100	110	120	130	140	150	160	170	180	190	200	210	220	230
330	335	336	337	338	339	340	341	342	343	344	345	346	347	348		
950	951	952	953	954	955	956	957	958	959	960	961	962	963			

DISCLAIMER
The use of this standard is governed by the "Texas Engineering Practice Act". No warranty of any kind is made by TxDOT for any purpose whatsoever. TxDOT assumes no responsibility for the conversion of this standard to other formats or for incorrect results or damages resulting from its use.

LEVELS DISPLAYED
ACC:

SIGN SUPPORT DESCRIPTIVE CODES

(Descriptive Codes correspond to project estimate and quantities sheets)

SM RD SGN ASSM TY XXXXX(X)XX(X-XXXX)

Post Type

- FRP = Fiberglass Reinforced Plastic Pipe (see SMD(FRP))
- TWT = Thin-Walled Tubing (see SMD(TWT))
- 10BWG = 10 BWG Tubing (see SMD(SLIP-1) to (SLIP-3))
- S80 = Schedule 80 Pipe (see SMD(SLIP-1) to (SLIP-3))

Number of Posts (1 or 2)

Anchor Type

- UA = Universal Anchor - Concreted (see SMD(FRP) and (TWT))
- UB = Universal Anchor - Bolted down (see SMD(FRP) and (TWT))
- WS = Wedge Anchor Steel - (see SMD(TWT))
- WP = Wedge Anchor Plastic (see SMD(TWT))
- SA = Slipbase - Concreted (see SMD(SLIP-1) to (SLIP-3))
- SB = Slipbase - Bolted Down (see SMD(SLIP-1) to (SLIP-3))

Sign Mounting Designation

- P = Prefab. "Plain" (see SMD(SLIP-1) to (SLIP-3), (TWT), (FRP))
- T = Prefab. "T" (see SMD(SLIP-1) to (SLIP-3), (TWT))
- U = Prefab. "U" (see SMD(SLIP-1) to (SLIP-3))

IF REQUIRED

- 1EXT or 2EXT = Number of Extensions (see SMD(SLIP-1) to (SLIP-3), (TWT))
- BM = Extruded Wind Beam (see SMD(SLIP-1) to (SLIP-3))
- WC = 1.12 #/ft Wing Channel (see SMD(SLIP-1) to (SLIP-3))
- EXAL = Extruded Aluminum Sign Panels (see SMD(SLIP-3))

REQUIRED CLEARANCE FOR BREAKAWAY SUPPORT

To avoid vehicle undercarriage snagging, any substantial remains of a breakaway support, when it is broken away, should not project more than 4 inches above a 60-inch chord (i.e., typical space between wheel paths).

No more than 2 sign posts should be located within a 7 ft. circle.

SIGN LOCATION

PAVED SHOULDERS

LESS THAN 6 FT. WIDE

When the shoulder is 6 ft. or less in width, the sign must be placed at least 12 ft. from the edge of the travel lane.

GREATER THAN 6 FT. WIDE

When the shoulder is greater than 6 ft in width, the sign must be placed at least 6 ft. from the edge of the shoulder.

T-INTERSECTION

When this sign is needed at the end of a two-lane, two way roadway, the right edge of the sign should be in line with the centerline of the roadway. Place as close to ROW as practical.

BEHIND BARRIER

BEHIND GUARDRAIL

BEHIND CONCRETE BARRIER

**Sign clearance based on distance required for proper guard rail or concrete barrier performance.

* Signs shall be mounted using the following condition that results in the greatest sign elevation:

(1) a minimum of 7 to a maximum of 7.5 feet above th edge of the travel lane or

(2) a minimum of 7 to a maximum of 7.5 feet above th grade at the base of the support when sign is installed on the backslope.

The maximum values may be increased when directed by the Engineer.

See the Traffic Operations Division website for deta drawings of sign clamps, Triangular Slipbase System components and Wedge Anchor System components.

The website address is:
http://www.txdot.gov/publications/traffic.htm

TYPICAL SIGN ATTACHMENT DETAIL

Single Signs

Back-to-Back Signs

Bolts used to mount sign panels to the clamp are 5/16-18 UNC galvanized square head with nut, nylon washer, flat washer and lock washer. The bolt length is 1 inch for aluminum.

When two sign clamps are used to mount signs back-to-back, use a 5/16-18 UNC galvanized hex head per ASTM A307 with nut and helical-spring lock washer. The approximate bolt lengths for various post sizes and sign clamp types are given in the table at right. The bolt length may need to be adjusted depending upon field conditions.

Sign clamps may be either the specific size clamp or the universal clamp.

Pipe Diameter	Approximate Bolt Length	
	Specific Clamp	Universal Clamp
2" nominal	3"	3 or 3 1/2"
2 1/2" nominal	3 or 3 1/2"	3 1/2 or 4"
3" nominal	3 1/2 or 4"	4 1/2"

SIGNS WITH PLAQUES

When a supplemental plaque or secondary sign is used, the 7 ft sign height is measured to the bottom of the supplemental plaque or secondary sign.

CURB & GUTTER OR RAISED ISLAND

RESTRICTED RIGHT-OF-WAY

(When 6 ft min. is not possible.)

Right-of-way restrictions may be created by rocks, water, vegetation, forest, buildings, a narrow island, or other factors.

In situations where a lateral restriction prevents the minimum horizontal clearance from the edge of the travel lane, signs should be placed as far from the travel lane as practical.

*** Post may be shorter if protected by guardrail or if Engineer determines the post could not be hit due to extreme slope.

STANDARD PLANS
TEXAS DEPARTMENT OF TRANSPORTATIO
Traffic Operations Division

SIGN MOUNTING DETAILS SMALL ROADSIDE SIGNS GENERAL NOTES & DETAIL

SMD(GEN)-0

©TxDOT July 2002	DN: TxDOT	CK: TxDOT	DW: TxDOT	CK: 1
REVISIONS 9-08	STATE DISTRICT: YKM	FEDERAL REGION: 6	PROJECT NUMBER	
	COUNTY: GONZALES, ETC	CONTROL: 1442	SECTION: 03	JOB: 016, ETC

DISCLAIMER
The use of this standard is governed by the "Texas Engineering Practice Act". No warranty of any kind is made by TxDOT for any purpose whatsoever. TxDOT assumes no responsibility for the conversion of this standard to other formats or for incorrect results or damages resulting from its use.

TRIANGULAR SLIPBASE INSTALLATION GENERAL REQUIREMENTS

SM RD SGN ASSM TY XXXXX(X)SA(X-XXXX)

NOTE

There are various devices approved for the Triangular Slipbase System. Please reference the Material Producer List for approved slip base systems.
http://www.txdot.gov/business/producer_list.htm
The devices shall be installed per manufacturers' recommendations. Installation procedures shall be provided to the Engineer by Contractor.

GENERAL NOTES:

1. Slip base shall be permanently marked to indicate manufacturer. Method, design, and location of marking are subject to approval of the TxDOT Traffic Standards Engineer.
2. Material used as post with this system shall conform to the following specifications:
   10 BWG Tubing (2.875" outside diameter)
   - 0.134" nominal wall thickness
   - Seamless or electric-resistance welded steel tubing or pipe
   - Steel shall be HSLAS Gr 55 per ASTM A1011 or ASTM A1008
   - Other steels may be used if they meet the following:
     - 55,000 PSI minimum yield strength
     - 70,000 PSI minimum tensile strength
     - 20% minimum elongation in 2"
   - Wall thickness (uncoated) shall be within the range of 0.122" to 0.138"
   - Outside diameter (uncoated) shall be within the range of 2.867" to 2.883"
   - Galvanization per ASTM A123 or ASTM A653 G210. For precoated steel tubing (ASTM A653), recoat tube outside diameter weld seam by metallizing with zinc wire per ASTM B833.

   Schedule 80 Pipe (2.875" outside diameter)
   - 0.276" nominal wall thickness
   - Steel tubing per ASTM A500 Gr C
   - Other seamless or electric-resistance welded steel tubing or pipe with equivalent outside diameter and wall thickness may be used if they meet the following:
     - 46,000 PSI minimum yield strength
     - 62,000 PSI minimum tensile strength
     - 21% minimum elongation in 2"
   - Wall thickness (uncoated) shall be within the range of 0.248" to 0.304"
   - Outside diameter (uncoated) shall be within the range of 2.855" to 2.895"
   - Galvanization per ASTM A123
3. See the Traffic Operations Division website for detailed drawings of sign clamps and Texas Universal Triangular Slipbase System components. The website address is:
   http://www.txdot.gov/publications/traffic.htm
4. Sign supports shall not be spliced except where shown. Sign support posts shall not be spliced.

ASSEMBLY PROCEDURE

Foundation
1. Prepare 12-inch diameter by 42-inch deep hole. If solid rock is encountered, the depth of the foundation may be reduced such that it is embedded a minimum of 18 inches into the solid rock.
2. The Engineer may permit batches of concrete less than 2 cubic yards to be mixed with a portable, motor-driven concrete mixer. For small placements less than 0.5 cubic yards, hand mixing in a suitable container may be allowed by Engineer. Concrete shall be Class A.
3. Push the pipe end of the slip base stub into the center of the concrete. Rotate the stub back and forth while pushing it down into the concrete to assure good contact between the concrete and stub. Continue to work the stub into the concrete until it is between 2 to 4 inches above the ground.
4. Plumb the stub. Allow a minimum of 4 days to set, unless otherwise directed by the Engineer.
5. The triangular slipbase system is multidirectional and is designed to release when struck from any direction.

Support
1. Cut support so that the bottom of the sign will be 7 to 7.5 feet above the edge of the travelway (i.e., edge of the closest lane) when slip plate is below the edge of pavement or 7 to 7.5 feet above slip plate when the slip plate is above the edge of the travelway. The cut shall be plumb and straight.
2. Attach sign to support using connections shown. When multiple signs are installed on the same support, ensure the minimum clearance between each sign is maintained. See SMD(SLIP-2) for clearances based on sign types.

CONCRETE ANCHOR

SM RD SGN ASSM TY XXXXX(X)SB(X-XXXX)

Concrete anchor consists of 5/8" diameter stud bolt with UNC series bolt threads on the upper end. Heavy hex nut per ASTM A563, and hardened washer per ASTM F436. The stud bolt shall have a minimum yield and ultimate tensile strength of 50 and 75 KSI, respectively. Nuts, bolts and washers shall be galvanized per Item 445, "Galvanizing." Adhesive type anchors shall have stud bolts installed with Type III epoxy per DMS-6100, "Epoxies and Adhesives." Adhesive anchors may be loaded after adequate epoxy cure time per the manufacturer's recommendations. Top of bolt shall extend at least flush with top of the nut when installed. The anchor, when installed in 4000 psi normal-weight concrete with a 5 1/2" minimum embedment, shall have a minimum allowable tension and shear of 3900 and 3100 psi, respectively.

STANDARD PLANS
Texas Department of Transportatio
Traffic Operations Division

SIGN MOUNTING DETAILS
SMALL ROADSIDE SIGNS
TRIANGULAR SLIPBASE SYS

SMD(SLIP-1)-C

©TxDOT July 2002	DN: TxDOT	CK: TxDOT	DW: TxDOT	CK:
REVISIONS 9-08	STATE DISTRICT: YKM	FEDERAL REGION: 6	PROJECT NUMBER	
	COUNTY: GONZALES, ETC	CONTROL: 1442	SECTION: 03	JOB: 016, ETC

LEVELS DISPLAYED
ACC:

1	2	3	4	5	6	7	8	9	10	11	12	13	14	15	16
17	18	19	20	21	22	23	24	25	26	27	28	29	30	31	32
33	34	35	36	37	38	39	40	41	42	43	44	45	46	47	48
49	50	51	52	53	54	55	56	57	58	59	60	61	62	63	

DISCLAIMER
The use of this standard is governed by the "Texas Engineering Practice Act". No warranty of any kind is made by TxDOT for any purpose whatsoever. TxDOT assumes no responsibility for the conversion of this standard to other formats or for incorrect results or damages resulting from its use.

SM RD SGN ASSM TY XXXXX(1)XX(T)
(* - See Note 12)

All dimensions are in english unless detailed otherwise.

Detail A

Detail B

Detail F

Splices shall only be allowed behind the sign substrate.

Detail C

Detail E

Detail D

FRICTION CAP DETAIL

Friction caps may be manufactured from hot rolled or cold rolled steel sheets. The minimum sheet metal thickness shall be 24 gauge for all cap sizes.

The rim edges shall be reasonably straight and smooth. Caps shall be sized and formed in such a manner as to produce a drive-on friction fit and have no tendency to rock when seated on the pipe. The depth shall be sufficient to give positive protection against entrance of rainwater. They shall be free of sharp creases or indentations and show no evidence of metal fracture.

Caps shall have an electrodeposited coating of zinc in accordance with the requirements of ASTM B633 Class FE/ZN 8.

GENERAL NOTES:

1.

SIGN SUPPORT	# OF POSTS	MAX. SIGN AREA
10 BWG	1	16 SF
10 BWG	2	32 SF
Sch 80	1	32 SF
Sch 80	2	64 SF

2. The Engineer may require that a Schedule 80 post be used in place of a 10 BWG where a sign height is abnormally high due to a fill slope.
3. Sign supports shall not be spliced except where shown. Sign support posts shall not be spliced.
4. Aluminum sign blanks shall conform to Departmental Material Specifications DMS-7110 and shall have the following minimum thicknesses: 0.080 for signs less than 7.5 sq. ft., 0.100 for signs 7.5 to 15 sq. ft., and 0.125 for signs greater than 15 sq. ft.
5. Signs that require specific supports due to reasons in addition to windloading are indicated on the "REQUIRED SUPPORT" table on this sheet.
6. For horizontal rectangular signs fabricated from flat aluminum, T-brackets are used for signs 24 inches or less in height. U-brackets are used for signs of greater height.
7. When two triangular slipbase supports are used to support a single sign, they shall not be "rigidly" connected to each other except through the sign panel. This will allow each support to act independently when impacted by an errant vehicle.
8. Wing channel shall meet ASTM A 1011 SS Gr 50 and be galvanized per ASTM A 123.
9. Excess pipe, wing channel, or windbeam shall be cut off so that it does not extend beyond the sign panel (i.e., excess support shall not be visible when the sign is viewed from the front.) Repair galvanized coating at cut support ends per Item 445, "Galvanizin
10. Additional route markers may be added vertically, provided the total sign area does not exceed the maximum allowable amount per Note 1.
11. Additional sign clamp required on the "T-bracket" pos for 24 inch height signs. Place the clamp 3 inches ab bottom of sign when possible.
12. Post open ends shall be fitted with Friction Caps.
13. Sign blanks shall be the sizes and shapes shown on th plans.

REQUIRED SUPPORT

	SIGN DESCRIPTION	SUPPORT
Regulatory	48-inch STOP sign (R1-1)	TY 10BWG(1)XX(T) TY 10BWG(1)XX(P-BM)
Regulatory	60-inch YIELD sign (R1-2)	TY 10BWG(1)XX(T) TY 10BWG(1)XX(P-BM)
Regulatory	48x16-inch ONE-WAY sign (R6-1)	TY 10BWG(1)XX(T) TY 10BWG(1)XX(P-BM)
Regulatory	36x48, 48x36, and 48x48-inch signs	TY 10BWG(1)XX(T)
Regulatory	48x60-inch signs	TY S80(1)XX(T)
Warning	48x48-inch signs (diamond or square)	TY 10BWG(1)XX(T)
Warning	48x60-inch signs	TY S80(1)XX(T)
Warning	48-inch Advance School X-ing sign (S1-1)	TY 10BWG(1)XX(T)
Warning	48-inch School X-ing sign (S2-1)	TY 10BWG(1)XX(T)
Warning	Large Arrow sign (W1-6 & W1-7)	TY 10BWG(1)XX(T)

STANDARD PLANS
Texas Department of Transportatio
Traffic Operations Division

SIGN MOUNTING DETAILS SMALL ROADSIDE SIGNS TRIANGULAR SLIPBASE SYST

SMD(SLIP-2)-0

©TxDOT July 2002 | DN: TxDOT | CK: TxDOT | DW: TxDOT | CK:
REVISIONS 9-08 | STATE DISTRICT YKM | FEDERAL REGION 6 | PROJECT NUMBER
COUNTY GONZALES, ETC | CONTROL 1442 | SECTION 03 | JOB 016, ETC

LEVELS DISPLAYED
ACC:

DISCLAIMER
The use of this standard is governed by the "Texas Engineering Practice Act". No warranty of any kind is made by TxDOT for any purpose whatsoever. TxDOT assumes no responsibility for the conversion of this standard to other formats or for incorrect results or damages resulting from its use.

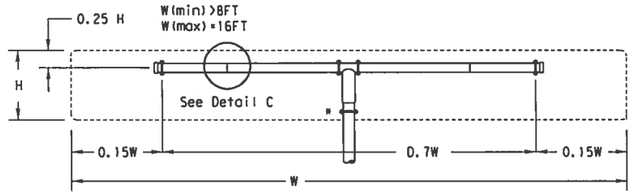

SM RD SGN ASSM TY XXXXX(1)XX(T-2EXT)
(* - See Note 12)

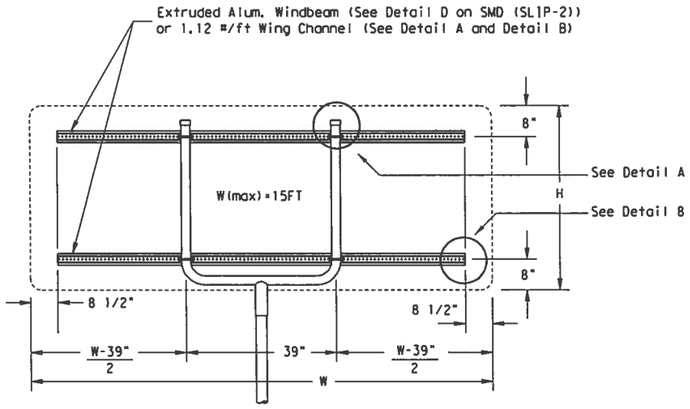

SM RD SGN ASSM TY XXXXX(1)XX(U-XX)

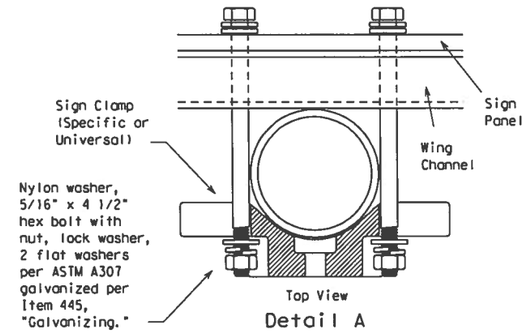

Detail A

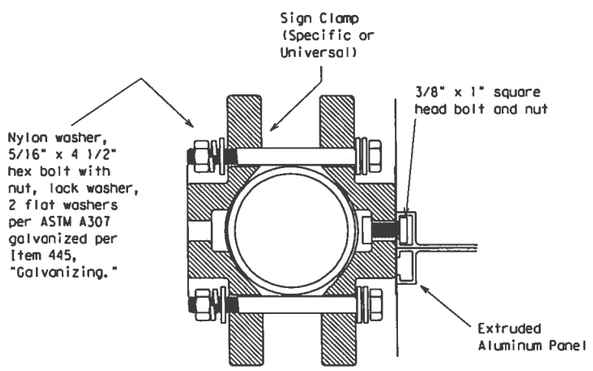

Detail D
EXTRUDED ALUMINUM SIGN WITH T BRACKET

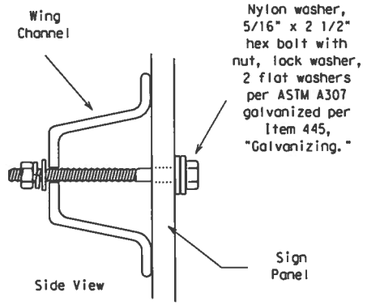

Detail B

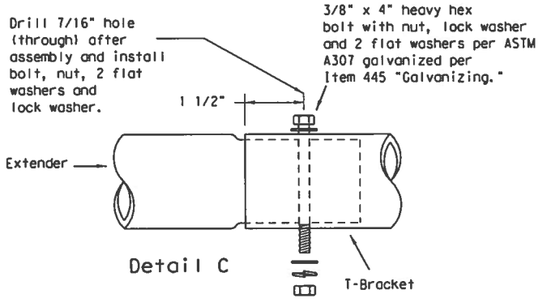

Detail C

Splices shall only be allowed behind the sign substrate.

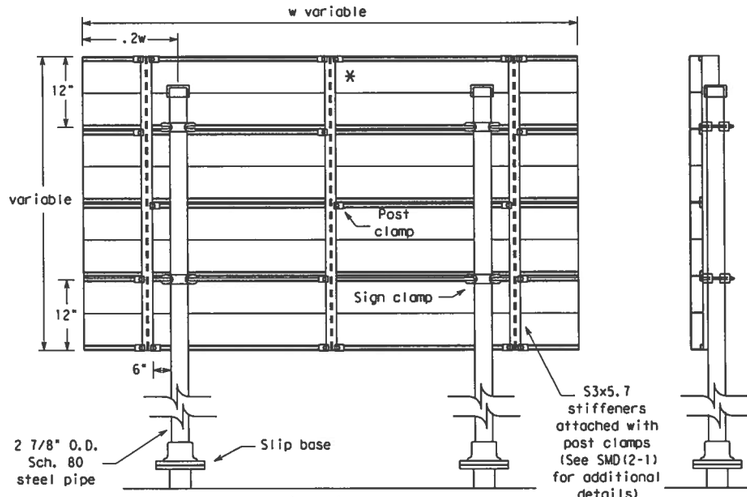

Typical Sign Mount
SM RD SGN ASSM TY S80(2)XX(P-EXAL)

* Additional stiffener placed at approximate center of signs when sign width is greater than 10'.

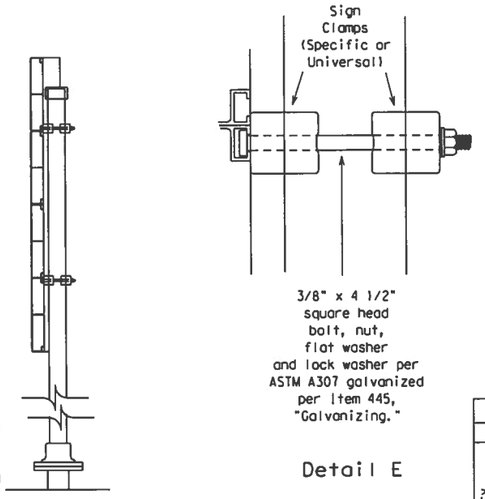

See Detail E
for clamp installation

Detail E

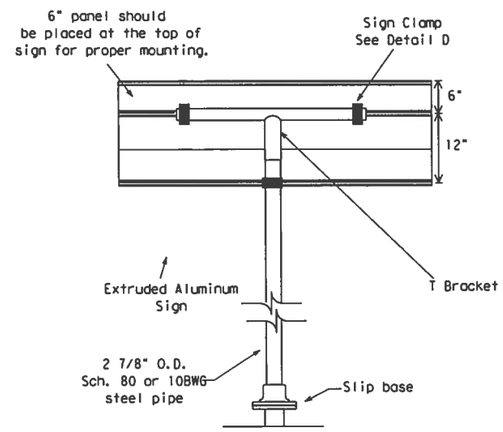

Extruded Aluminum Sign
With T Bracket

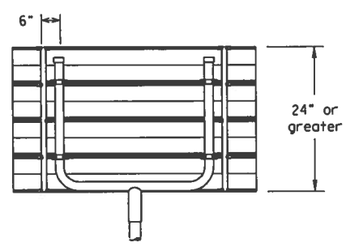

Use Extruded Alum. Windbeam as stiffeners
See SMD (2-1) for additional details

See Detail E
for clamp installation

GENERAL NOTES:

1.

SIGN SUPPORT	# OF POSTS	MAX. SIGN AREA
10 BWG	1	16 SF
10 BWG	2	32 SF
Sch 80	1	32 SF
Sch 80	2	64 SF

2. The Engineer may require that a Schedule 80 post be used in place of a 10 BWG where a sign height is abnormally high due to a fill slope.
3. Sign supports shall not be spliced except where shown. Sign support posts shall not be spliced.
4. Aluminum sign blanks shall conform to Departmental Material Specifications DMS-7110 and shall have the following minimum thicknesses: 0.080 for signs less than 7.5 sq. ft., 0.100 for signs 7.5 to 15 sq. ft., and 0.125 for signs greater than 15 sq. ft.
5. Signs that require specific supports due to reasons in addition to windloading are indicated on the "REQUIRED SUPPORT" table on this sheet.
6. For horizontal rectangular signs fabricated from flat aluminum, T-brackets are used for signs 24 inches or less in height. U-brackets are used for signs of greater height.
7. When two triangular slipbase supports are used to support a single sign, they shall not be "rigidly" connected to each other except through the sign panel. This will allow each support to act independently when impacted by an errant vehicle.
8. Wing channel shall meet ASTM A 1011 SS Gr 50 and be galvanized per ASTM A 123.
9. Excess pipe, wing channel, or windbeam shall be cut off so that it does not extend beyond the sign panel (i.e., excess support shall not be visible when the sign is viewed from the front.) Repair galvanized coating at cut support ends per Item 445, "Galvanizing."
10. Sign blanks shall be the sizes and shapes shown on the plans.
11. Additional sign clamp required on the "T-bracket" post for 24 inch high signs. Place the clamp 3 inches above bottom of sign when possible.
12. Post open ends shall be fitted with Friction Caps.

REQUIRED SUPPORT

	SIGN DESCRIPTION	SUPPORT
Regulatory	48-inch STOP sign (R1-1)	TY 10BWG(1)XX(T) TY 10BWG(1)XX(P-BM)
	60-inch YIELD sign (R1-2)	TY 10BWG(1)XX(T) TY 10BWG(1)XX(P-BM)
	48x16-inch ONE-WAY sign (R6-1)	TY 10BWG(1)XX(T) TY 10BWG(1)XX(P-BM)
	36x48, 48x36, and 48x48-inch signs	TY 10BWG(1)XX(T)
	48x60-inch signs	TY S80(1)XX(T)
Warning	48x48-inch signs (diamond or square)	TY 10BWG(1)XX(T)
	48x60-inch signs	TY S80(1)XX(T)
	48-inch Advance School X-ing sign (S1-1)	TY 10BWG(1)XX(T)
	48-inch School X-ing sign (S2-1)	TY 10BWG(1)XX(T)
	Large Arrow sign (W1-6 & W1-7)	TY 10BWG(1)XX(T)

STANDARD PLANS
Texas Department of Transportation
Traffic Operations Division

SIGN MOUNTING DETAILS SMALL ROADSIDE SIGNS TRIANGULAR SLIPBASE SYST

SMD(SLIP-3)-0

© TxDOT July 2002

DN: TxDOT	CK: TxDOT	DW: TxDOT	CK:

REVISIONS	STATE DISTRICT	FEDERAL REGION	PROJECT NUMBER
9-08	YKM	6	

COUNTY	CONTROL	SECTION	JOB
GONZALES, ETC	1442	03	016, ETC

ACC:

LEVELS DISPLAYED

1	2	3	4	5	6	7	8	9	10	11	21	31	41	51	61	
17	18	19	20	21	22	23	24	25	26	27	28	29	30	01	32	
33	34	35	36	37	38	39	40	41	42	43	44	45	46	47	48	
49	50	51	52	53	54	55	56	57	58	59	60	61	62	63		

SITE DESCRIPTION

PROJECT LIMITS: *FM 1680 From US 90 to Moulton City Limits*

PROJECT DESCRIPTION: *Construction of Restoration of Existing Roadway Consisting of Restore Roadway.*

MAJOR SOIL DISTURBING ACTIVITIES: *Topsoil removal, excavation and embankment for roadway and structures, and topsoil work for seeding.*

TOTAL PROJECT AREA: *Approximately 127.3 acres.*

TOTAL AREA TO BE DISTURBED: *Approximately 40.5 acres.*

EXISTING CONDITION OF SOIL & VEGETATIVE COVER AND % OF EXISTING VEGETATIVE COVER: *The existing soil is of the Pursley-Ganado-Degola formation. The soils are well drained and moderately well drained, very slowly permeable to moderately permeable, very deep loamy and clayey soils.*

NAME OF RECEIVING WATERS: *The various outfalls in the project drains into Peach Creek. Peach Creek drains for 24.0 miles to its confluence with the Guadalupe River Stream Segment No. 1803.*

EROSION AND SEDIMENT CONTROLS

SOIL STABILIZATION PRACTICES:

- [✓] TEMPORARY SEEDING
- [✓] PERMANENT PLANTING, SODDING, OR SEEDING
- [ ] MULCHING
- [ ] SOIL RETENTION BLANKET
- [ ] BUFFER ZONES

OTHER: *Disturbed areas on which construction activity has ceased (temporarily or permanently) shall be stabilized within 14 days unless activities are scheduled to resume, and do resume, within 21 days.*

STRUCTURAL PRACTICES:

- [✓] SILT FENCES
- [ ] HAY BALES
- [ ] SANDBAGS
- [ ] DIVERSION, INTERCEPTOR, OR PERIMETER DIKES
- [ ] DIVERSION, INTERCEPTOR, OR PERIMETER SWALES
- [ ] DIVERSION DIKE AND SWALE COMBINATIONS
- [✓] ROCK FILTER DAMS
- [ ] PAVED FLUMES/RIPRAP
- [✓] ROCK BEDDING AT CONSTRUCTION EXIT
- [ ] TIMBER MATTING AT CONSTRUCTION EXIT
- [ ] CHANNEL LINERS
- [ ] SEDIMENT TRAPS/BASINS
- [ ] GABIONS
- [ ] STORM INLET SEDIMENT TRAP
- [ ] STONE OUTLET STRUCTURES
- [ ] CURBS AND GUTTERS
- [ ] STORM SEWERS
- [ ] VELOCITY CONTROL DEVICES
- [ ] BIODEGRADABLE EROSION CONTROL LOGS

OTHER:

NARRATIVE - SEQUENCE OF CONSTRUCTION (STORM WATER MANAGEMENT) ACTIVITIES:

The order of activities will be as follows:

1. *Existing topsoil will be bladed and windrowed.*
2. *Install silt fence and rock filter dam in ditches at structure locations as soon as excavation and embankment activities begin.*
3. *Windrowed topsoil will be bladed back onto completed front slope. Then seed and sod all disturbed areas.*
4. *Remove all temporary controls and reseed or resod any areas disturbed by their removal.*

Contractor-generated schedules are incorporated into the projects SW3P by reference.

The Yoakum District of the Texas Department of Transportation uses SiteManager, a computer based construction record-keeping system. Documentation describing major grading activities, temporary or permanent cessation of construction, and stabilization measures is a part of this system and is incorporated by reference into this SW3P.

STORM WATER MANAGEMENT: *Storm Water Drainage will be provided by grass "flat bottom & V bottom" ditches. This system will carry drainage within the right of way to lows in the highway where cross drainage occurs. The cross drainage structures will be protected with silt fences.*

Sediment control devices will remain in place until at least 70% regrowth of vegetation has occurred. At this time the new vegetation will act as a filter strip for post construction TSS control upon removal of the device.

A site (visual & odor) assessment of water quality leaving the project site: water quality leaving the construction site has been of good quality, with no visually apparent sediments, litter, fertilizers, or surfactants. The water has no petroleum or other odor. Even so, it might be expected that some sediment and litter will escape the project site and that petroleum products leaking from motor vehicles that travel through the site may lower the quality of runoff water.

OTHER EROSION AND SEDIMENT CONTROLS:

MAINTENANCE: *All erosion and sediment controls will be maintained in good working order. If a repair is necessary, it will be done at the earliest date possible, but no later than 7 calendar days after the surrounding exposed ground has dried sufficiently to prevent further damage from heavy equipment. The areas adjacent to creeks and drainage ways shall have priority followed by devices protecting storm sewer inlets. Sediment must be removed from control measures when the design capacity is reduced by 50 percent. If sediment escapes the construction site, off site accumulation of sediment must be remove at a frequency to minimize off-site impacts.*

INSPECTION: *An inspection will be performed by a TxDOT inspector at least every 7 calendar days. An inspection and Maintenance Report will be made per each inspection. Based on the inspection results, the controls shall be revised per the inspection report.*

WASTE MATERIALS: *The contractor shall adequately store all construction waste materials to prevent these materials from becoming pollutants and to minimize pollutant discharges from the storage locations. No construction waste material will be buried on site. Litter and construction chemicals shall be properly contained and prevented from becoming a pollutant in storm water discharge.*

Potential pollutants will primarily be from the sediments leaving the project right-of-way and petroleum products. Principal sources of pollution will be disturbed soil from grading and excavating and other roadway construction activities, litter and debris from construction activities, gasoline, oil, and grease from asphalt distributor vehicles, scrappers, trucks, rollers, compactors, and fuel trucks during daily, routine operations.

The contractor will maintain a clean, orderly construction site. Construction waste includi trash, rubble, scrap and vegetation shall be disposed of in lidded dumpsters or in a man approved by the Project Engineer. Disposal methods must meet Federal, State, and Local waste management guidelines. No construction waste will be buried or burned on site. S disposal, material storage, and material resulting from the destruction of existing roads structures shall be stored in areas approved by the Project Engineer and protected from runoff. All waterways shall be cleared of temporary embankment, temporary bridges, matti false work piling, debris, or other obstructions placed during construction operations, th are not part of the finished work, as soon as practicable. All excess soil generated by th construction will be collected and disposed of by the contractor. Disposal areas, stockpile and haul roads shall be constructed in a manner that will minimize and control the amount o sediment that may enter receiving waters. Disposal areas shall not be located in any wetlan water body, or stream bed.

HAZARDOUS WASTE (INCLUDING SPILL REPORTING): *At a minimum, any product in the followi categories are considered to be hazardous: Paints, Acids for cleaning masonry surfaces, Cleaning Solvents, Asphalt Products, Chemical Additives for soil stabilization, or Concrete Curing Compounds and additives. In event of a spill which may be hazardous, the Spill Coordinator should be contacted immediately.*

SANITARY WASTE: *All sanitary waste will be collected from the portable units as necessary or as required by local regulation by a licensed sanitary waste management contractor.*

OFFSITE VEHICLE TRACKING:

- [✓] HAUL ROADS DAMPENED FOR DUST CONTROL
- [ ] LOADED HAUL TRUCKS TO BE COVERED WITH TARPAULIN
- [ ] EXCESS DIRT ON ROAD REMOVED DAILY
- [✓] STABILIZED CONSTRUCTION ENTRANCE

OTHER:

REMARKS: *Disposal areas, stockpiles, and haul roads shall be constructed in a manner that will minimize and control the amount of sediment that may enter receiving waters. Disposal areas sha not be located in any wetland, waterbody or streambed.*

On and off site project specific locations including borrow pits and equipment staging areas are under the control of the contractor. The contractor will be obligated to comply with the requirements of the construction general permit.

All waterways shall be cleared as soon as practicable of temporary embankment, temporary bridges, matting, falsework, piling, debris or other obstructions placed during construction operations that are not a part of the finished work.

TxDOT STORM WATER POLLUTIO PREVENTION PLAN (SW3P)

Texas Department of Transportati
© 2006 by Texas Department of Transportat
all rights reserved

FED.RD. DIV.NO.	FEDERAL AID PROJECT NO.		SHEET NO.
6			99
STATE	DIST.	COUNTY	
TEXAS	YKM	GONZALES, ETC	
CONT.	SECT.	JOB	HIGHWAY NO.
1442	03	016, ETC	FM 1680

Rev: 04/17/06

LEVELS DISPLAYED
1 2 3 4 5 6 7 8 9 10 11 12 13 14 15 16
17 18 19 20 21 22 23 24 25 26 27 28 29 30 31 32
33 34 35 36 37 38 39 40 41 42 43 44 45 46 47 48
49 50 51 52 53 54 55 56 57 58 59 60 61 62 63

ACC: 144.45.31.223
FILE US77kcsw3p.dgn 2/2006

DISCLAIMER:
The use of this standard is governed by the "Texas Engineering Practice Act". No warranty of any kind is made by TxDOT for any purpose whatsoever. TxDOT assumes no responsibility for the conversion of this standard to other formats or for incorrect results or damages resulting from its use.

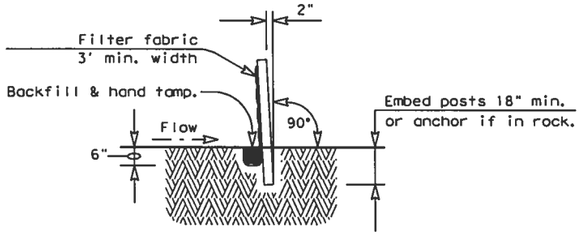

SECTION A-A

SEDIMENT CONTROL FENCE USAGE GUIDELINES

A sediment control fence may be constructed near the downstream perimeter of a disturbed area along a contour to intercept sediment from overland runoff. A 2 year storm frequency may be used to calculate the flow rate to be filtered.

Sediment control fence should be sized to filter a max. flow through rate of 100 GPM/FT^2. Sediment control fence is not recommended to control erosion from a drainage area larger than 2 acres.

PLAN SHEET LEGEND

Sediment Control Fence —— SCF ——

GENERAL NOTES

1. The guidelines shown hereon are suggestions only and may be modified by the Engineer.

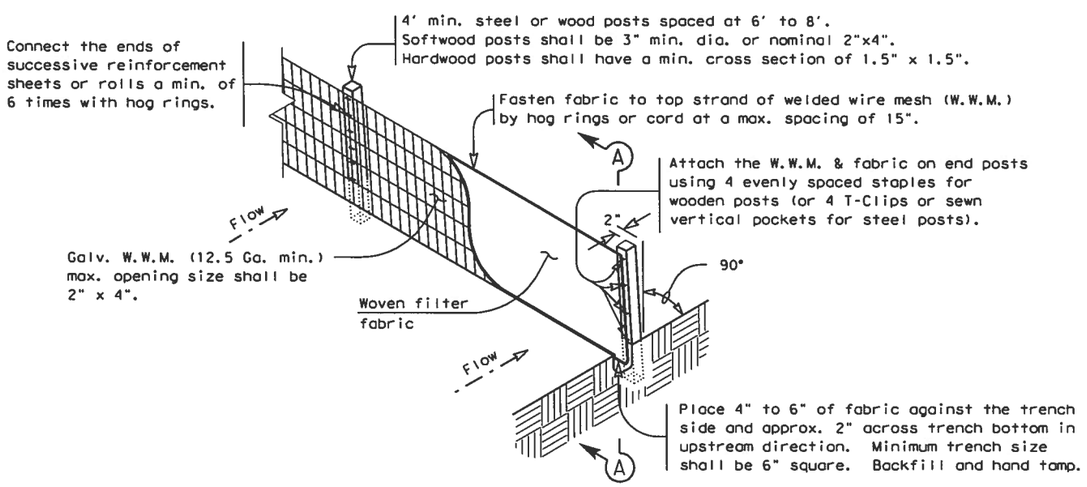

TEMPORARY SEDIMENT CONTROL FENCE

SCF

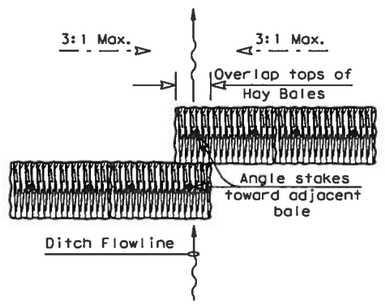

PLAN VIEW

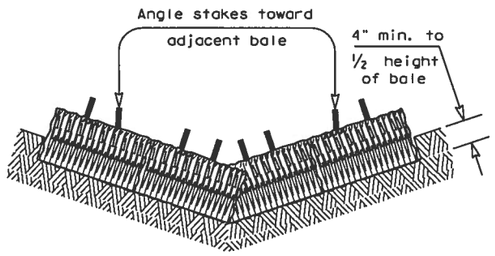

PROFILE VIEW

PLANS SHEET LEGEND

Baled Hay —— BH ——

BALED HAY USAGE GUIDELINES

A Baled Hay installation may be constructed near the downstream perimeter of a disturbed area along a contour to intercept sediment from overland runoff. A two year storm frequency may be used to calculate the flow rate to be filtered. The installation should be sized to filter a maximum flow thru rate of 5 GPM/FT^2 of cross sectional area. Baled hay may be used at the following locations:

1. Where the runoff approaching the baled hay flows over disturbed soil for less than 100'. If the slope of the disturbed soil exceeds 10%, the length of slope upstream the baled hay should be less than 50'.
2. Where the installation will be required for less than 3 months.
3. Where the contributing drainage area is less than ½ acre.

For Baled Hay installations in small ditches, the additional following considerations apply:

1. The ditch sideslopes should be graded as flat as possible to maximize the drainage flowrate thru the hay.
2. The ditch should be graded large enough to contain the overtopping drainage when sediment has filled to the top of the baled hay.

Bales should be replaced usually every 2 months or more often during wet weather when loss of structural integrity is accelerated.

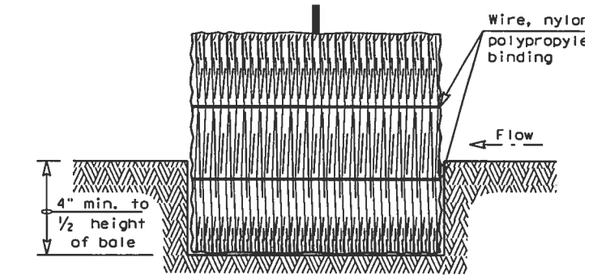

SECTION B-B

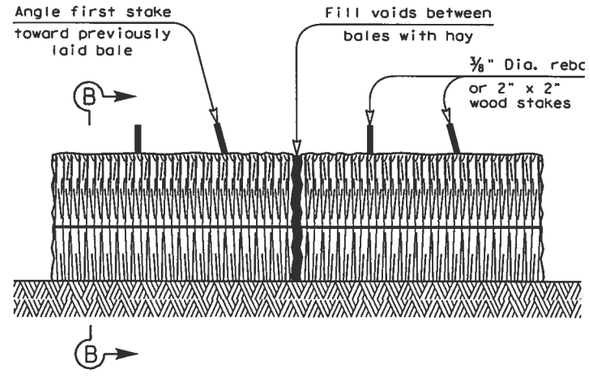

BALED HAY FOR EROSION CONTROL

BH

GENERAL NOTES

1. Hay bales shall be a minimum of 30" in length and weigh a minimum of 50 Lbs.
2. Hay bales shall be bound by either wire or nylon or polypropylene string. The bales shall be composed entirely of vegetative matter.
3. Hay bales shall be embedded in the soil a minimum of 4" and where possible ½ the height of the bale.
4. Hay bales shall be placed in a row with ends tightly abuttir the adjacent bales. The bales shall be placed with bindings parallel to the ground.
5. Hay bales shall be securely anchored in place with ⅜" Dia. rebor or 2" x 2" wood stakes, driven through the bales. The first stake shall be angled towards the previously laid bale to force the bales together.
6. The guidelines shown hereon are suggestions only and may be modified by the Engineer.

Texas Department of Transportati
Design Division (Roadway)

TEMPORARY EROSION, SEDIMENT AND WATER POLLUTION CONTROL MEASU

FENCED & BALED HAY

EC(1)-93

FILE: EC193.DGN	DN: HEJ	CK: HEJ	DW: BGD	CK	
©TxDOT JUNE 1993	DISTRICT	PROJECT NUMBER			
REVISIONS	YKM				
	COUNTY	CONTROL	SECT	JOB	
	GONZALES, ETC	1442	03	016, ET	

LEVELS DISPLAYED
1

DISCLAIMER:
The use of this standard is governed by the "Texas Engineering Practice Act". No warranty of any kind is made by TxDOT for any purpose whatsoever. TxDOT assumes no responsibility for the conversion of this standard to other formats or for incorrect results or damages resulting from its use.

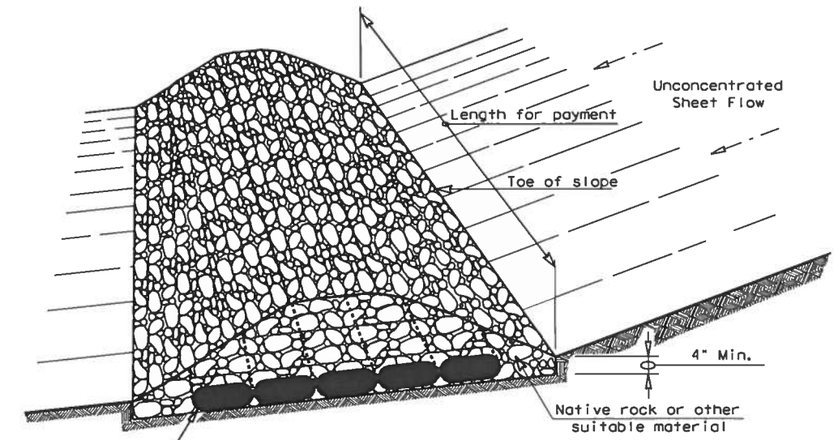

FILTER DAM AT TOE OF SLOPE

RFD1
TYPE 1

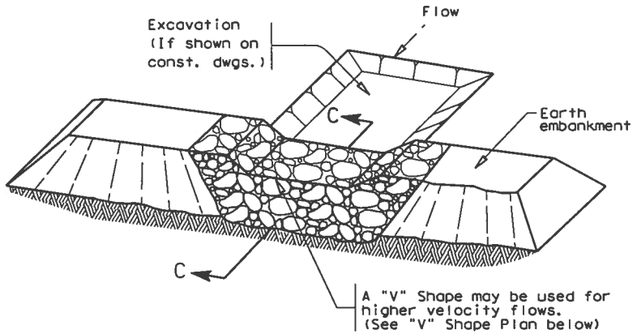

FILTER DAM AT SEDIMENT TRAP

RFD1 — OR — RFD2
TYPE 1 OR TYPE 2

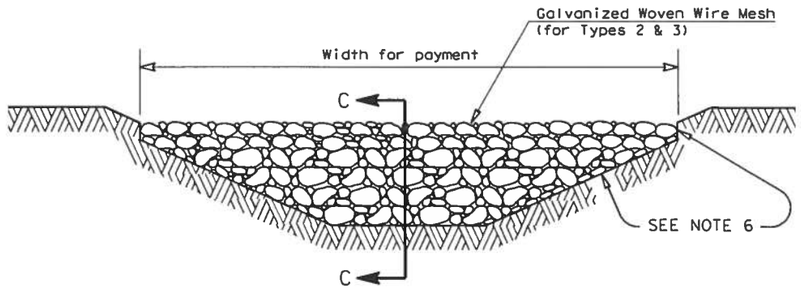

FILTER DAM AT CHANNEL SECTIONS

RFD1 — OR — RFD2 — OR — RFD3
TYPE 1 OR TYPE 2

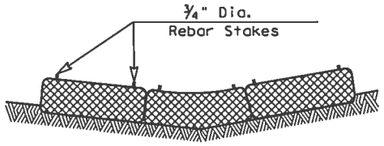

SECTION B-B

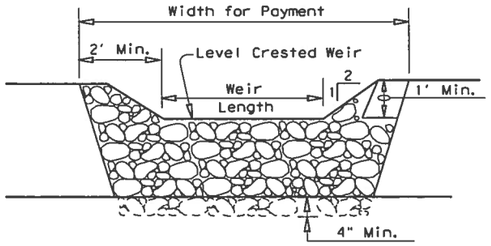

PROFILE

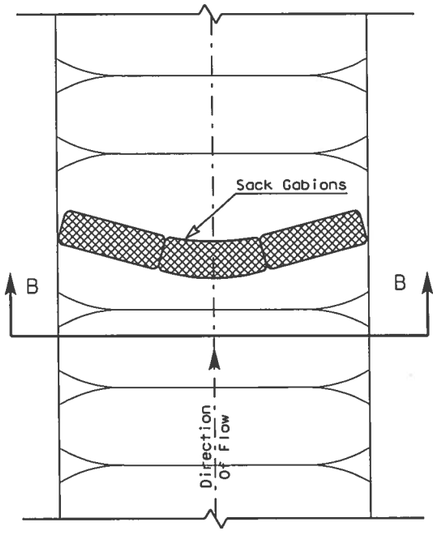

PLAN VIEW

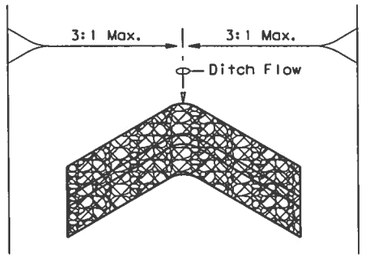

"V" SHAPE
(Plan View)

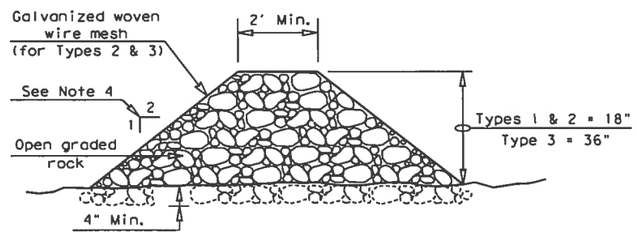

SECTION C-C

PLANS SHEET LEGEND

Type 1 Rock Filter Dam — RFD1
Type 2 Rock Filter Dam — RFD2
Type 3 Rock Filter Dam — RFD3

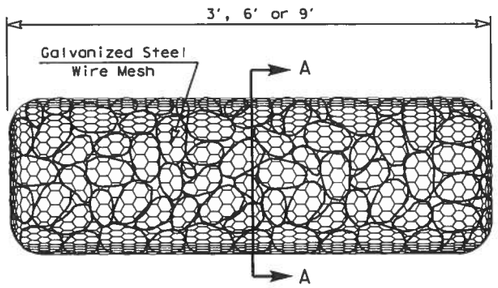

TYPE 4 (SACK GABIONS)

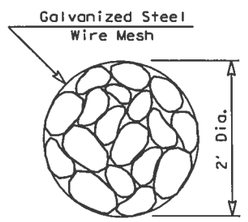

SECTION A-A

ROCK FILTER DAM USAGE GUIDELINES

Rock Filter Dams should be constructed downstream from disturbed areas to intercept sediment from overland runoff and/or concentrated flow. The dams should be sized to filter a maximum flow through rate of 60 GPM/FT^2 of cross sectional area. A 2 year storm frequency may be used to calculate the flow rate.

Type 1 (18" high with no wire mesh): Type 1 may be used at the toe of slopes, around inlets, in small ditches, and at dike or swale outlets. This type of dam is recommended to control erosion from a drainage area of 5 acres or less. Type 1 may not be used in concentrated high velocity flows (approx. 8 Ft/Sec or more) in which aggregate wash out may occur. Sandbags may be used at the embedded foundation (4" deep min.) for better filtering efficiency of low flows if called for on the plans or directed by the Engineer.

Type 2 (18" high with wire mesh): Type 2 may be used in ditches and at dike or swale outlets.

Type 3 (36" high with wire mesh): Type 3 may be used in stream flow and should be secured to the stream bed.

Type 4 (Sack gabions): Type 4 May be used in ditches and smaller channels to form an erosion control dam.

GENERAL NOTES

1. If shown on the plans or directed by the Engineer, filter dams should be placed near the toe of slopes where erosion is anticipated, upstream and/or downstream at drainage structures, and in roadway ditches and channels to collect sediment.
2. Materials (aggregate, wire mesh, sandbags, etc.) shall be as indicated by the specification for "Rock Filter Dams for Erosion and Sedimentation Control".
3. The rock filter dam dimensions shall be as indicated on the SW3P plans.
4. Side slopes should be 2:1 or flatter. Dams within the safety zone shall have sideslopes of 6:1 or flatter.
5. Maintain a minimum of 1' between top of rock filter dam weir and top of embankment for filter dams at sediment traps.
6. Filter dams should be embedded a minimum of 4" into existing ground.
7. The sediment trap for ponding of sediment laden runoff shall be of the dimensions shown on the plans.
8. Rock filter dam types 2 & 3 shall be secured with 20 gauge galvanized woven wire mesh with 1" diameter hexagonal openings. The aggregate shall be placed on the mesh to the height & slopes specified. The mesh shall be folded at the upstream side over the aggregate and tightly secured to itself on the downstream side using wire ties or hog rings. In stream use the mesh should be secured or staked to the stream bed prior to aggregate placement.
9. Sack Gabions should be staked down with ¾" dia. rebar stakes.
10. Flow outlet should be onto a stabilized area (vegetation, rock, etc.).
11. The guidelines shown hereon are suggestions only and may be modified by the Engineer.

LEVELS DISPLAYED
1

Texas Department of Transportation
Design Division (Roadway)

TEMPORARY EROSION, SEDIMENT AND WATER POLLUTION CONTROL MEASURE

ROCK FILTER DAMS

EC(2)-93

FILE: EC293.DGN	DN: HEJ	CK: HEJ	DW: BGD	CK:
©TxDOT JUNE 1993	DISTRICT	PROJECT NUMBER		
REVISIONS	YKM			
	COUNTY	CONTROL	SECT	JOB
	GONZALES, ETC	1442	03	016, ETC

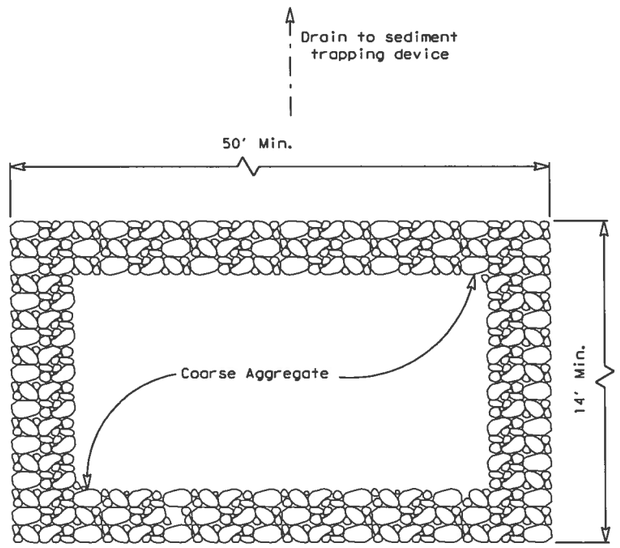

PLAN

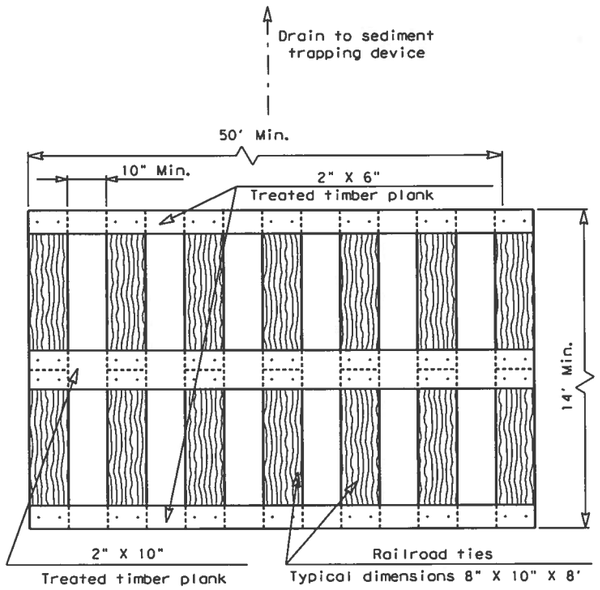

PLAN

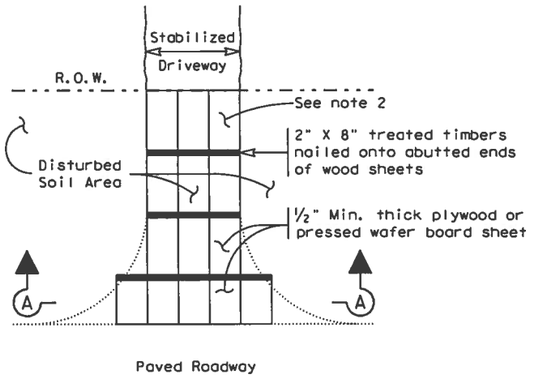

PLAN

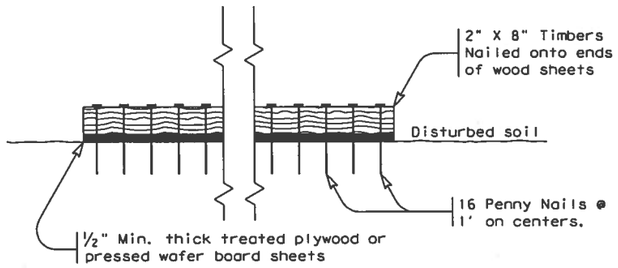

SECTION A-A

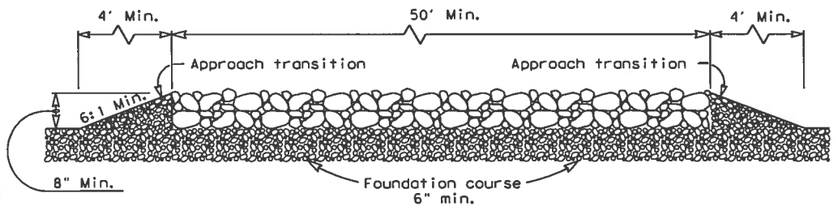

PROFILE

CONSTRUCTION EXIT (TYPE 1)

GENERAL NOTES

1. The length of the type 1 construction exit shall be as indicated on the plans, but not less than 50'.
2. The coarse aggregate should be open graded with a size of 4" to 8".
3. The approach transitions should be no steeper than 6:1 and constructed as directed by the Engineer.
4. The construction exit foundation course shall be flexible base, bituminous concrete, portland cement concrete or other material as approved by the Engineer.
5. The construction exit shall be graded to allow drainage to a sediment trapping device.
6. The guidelines shown hereon are suggestions only and may be modified by the Engineer.

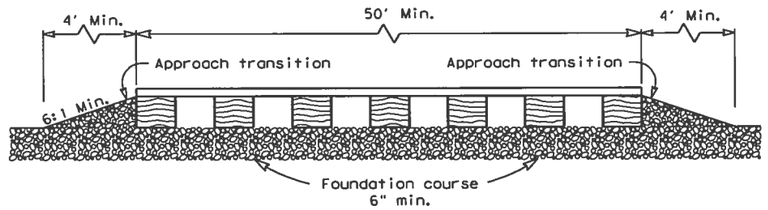

PROFILE

CONSTRUCTION EXIT (TYPE 2)

GENERAL NOTES

1. The length of the type 2 construction exit shall be as indicated on the plans, but not less than 50'.
2. The treated timber planks shall be attached to the railroad ties with ½"x 6" min. lag bolts. Other fasteners may be used as approved by the Engineer.
3. The treated timber planks shall be #2 grade min., and should be free from large and loose knots.
4. The approach transitions shall be no steeper than 6:1 and constructed as directed by the Engineer.
5. The construction exit foundation course shall be flexible base, bituminous concrete, portland cement concrete or other material as approved by the Engineer.
6. The construction exit should be graded to allow drainage to a sediment trapping device.
7. The guidelines shown hereon are suggestions only and may be modified by the Engineer.

CONSTRUCTION EXIT (TYPE 3)

GENERAL NOTES

1. The length of the type 3 construction exit shall be as shown on the plans, or as directed by the Engineer.
2. The type 3 construction exit may be constructed from oper graded crushed stone with a size of two to four inches spread a min. of 4" thick to the limits shown on the plar
3. The treated timber planks shall be #2 grade min., and should be free from large and loose knots.
4. The guidelines shown hereon are suggestions only and may be modified by the Engineer.

DISCLAIMER:
The use of this standard is governed by the "Texas Engineering Practice Act". No warranty of any kind is made by TxDOT for any purpose whatsoever. TxDOT assumes no responsibility for the conversion of this standard to other formats or for incorrect results or damages resulting from its use.

LEVELS DISPLAYED

1

Texas Department of Transportatio
Design Division (Roadway)

TEMPORARY EROSION, SEDIMENT AND WATER POLLUTION CONTROL MEASUI

CONSTRUCTION EXITS

EC(3)-93

FILE: EC393.DGN	DN: HEJ	CK: HEJ	DW: BGD	CK	
©TxDOT JUNE 1993	DISTRICT	PROJECT NUMBER			
REVISIONS	YKM				
	COUNTY	CONTROL	SECT	JOB	
	GONZALES, ETC	1442	03	016, ET	