SH71 Express Project

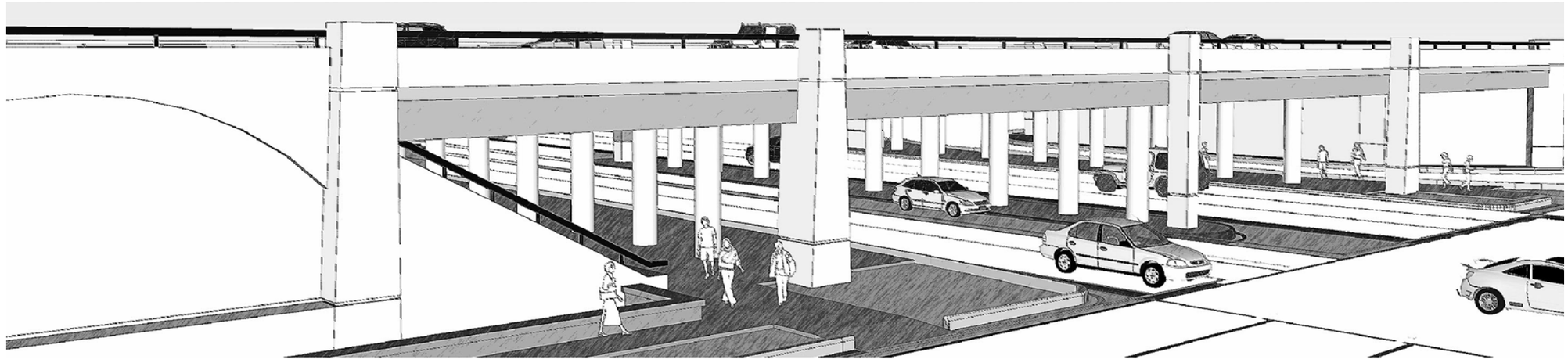

SH 71 AESTHETIC GUIDELINES

ATTACHMENT 15-1
AESTHETIC GUIDELINES

Texas Department of Transportation

AESTHETIC COMPONENTS

Project Overview	Sheet 1
Presidential Boulevard	Sheet 2
Spirit of Texas Drive	Sheet 3
FM 973	Sheet 4
SH 130 Aesthetic Coordination	Sheet 5
1.0 Retaining Walls	Sheet 6
Presidential Boulevard	Sheets 7-9
Spirit of Texas Drive	Sheet 10
FM 973	Sheet 11
2.0 Bridge Abutment Walls & Rip Rap	Sheet 12
Presidential Boulevard	Sheets 13-17
Spirit of Texas Drive	Sheet 18-21
FM 973	Sheet 22-24
3.0 Pylons	Sheet 25
Presidential Boulevard	Sheets 26-28
Spirit of Texas Drive	Sheet 26, 29
FM 973	Sheet 26, 30
4.0 Lighting Standards	Sheet 31
Light Pole	Sheet 32
Bollard & Sconce	Sheet 33
Icon Element	Sheet 34
5.0 Paving, Hardscape & Shared Use Path	Sheet 35
Presidential Boulevard	Sheets 36-40
Spirit of Texas Drive	Sheets 41-42
FM 973	Sheets 43-44
6.0 Landscape	Sheet 45
Presidential Boulevard	Sheets 46-48
Spirit of Texas Drive	Sheets 49-51
FM 973	Sheets 52-54
Shared Use Path	Sheet 55
Tree Protection	Sheet 56
Plant List and Details	Sheet 57-58
Irrigation	Sheet 59
7.0 Finish Schedule	Sheet 60-61

DIMENSIONS ARE APPROXIMATE AND ARE FOR PROPORTIONAL RELATIONSHIPS. ALL DIMENSIONS OF EXISTING ELEMENTS REQUIRE FIELD VERIFICATION. FIELD ADJUSTMENTS TO LAYOUT ARE EXPECTED.

Texas Department of Transportation

* NOT INTENDED FOR PERMIT OR CONSTRUCTION. ALL MATERIALS, DETAILS, AND LOCATION OF ELEMENTS SHOWN AS PART OF THIS DOCUMENT ARE SUBJECT TO FINAL PLANS AND SPECIFICATIONS.

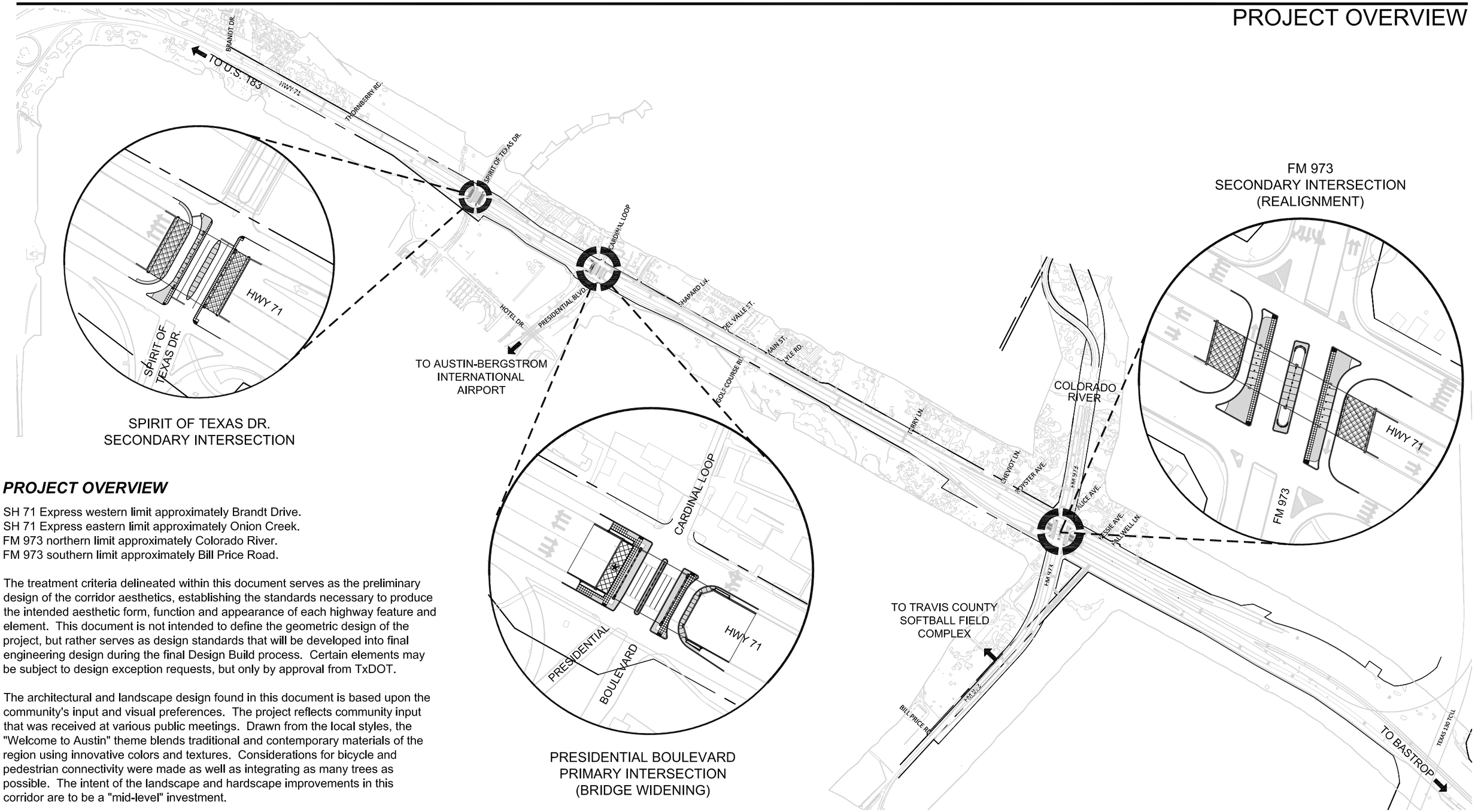

PROJECT OVERVIEW

SH 71 Express western limit approximately Brandt Drive.
SH 71 Express eastern limit approximately Onion Creek.
FM 973 northern limit approximately Colorado River.
FM 973 southern limit approximately Bill Price Road.

The treatment criteria delineated within this document serves as the preliminary design of the corridor aesthetics, establishing the standards necessary to produce the intended aesthetic form, function and appearance of each highway feature and element. This document is not intended to define the geometric design of the project, but rather serves as design standards that will be developed into final engineering design during the final Design Build process. Certain elements may be subject to design exception requests, but only by approval from TxDOT.

The architectural and landscape design found in this document is based upon the community's input and visual preferences. The project reflects community input that was received at various public meetings. Drawn from the local styles, the "Welcome to Austin" theme blends traditional and contemporary materials of the region using innovative colors and textures. Considerations for bicycle and pedestrian connectivity were made as well as integrating as many trees as possible. The intent of the landscape and hardscape improvements in this corridor are to be a "mid-level" investment.

CONTEXT DIAGRAM

SCALE: 1" = 1200' (CONTEXT)
SCALE: 1" = 200' (AREA ENLARGEMENTS)

DIMENSIONS ARE APPROXIMATE AND ARE FOR PROPORTIONAL RELATIONSHIPS. ALL DIMENSIONS OF EXISTING ELEMENTS REQUIRE FIELD VERIFICATION. FIELD ADJUSTMENTS TO LAYOUT ARE EXPECTED.

N

Texas Department of Transportation

* NOT INTENDED FOR PERMIT OR CONSTRUCTION. ALL MATERIALS, DETAILS, AND LOCATION OF ELEMENTS SHOWN AS PART OF THIS DOCUMENT ARE SUBJECT TO FINAL PLANS AND SPECIFICATIONS.

INTERSECTION & OVERPASS ELEVATION - PRESIDENTIAL BOULEVARD

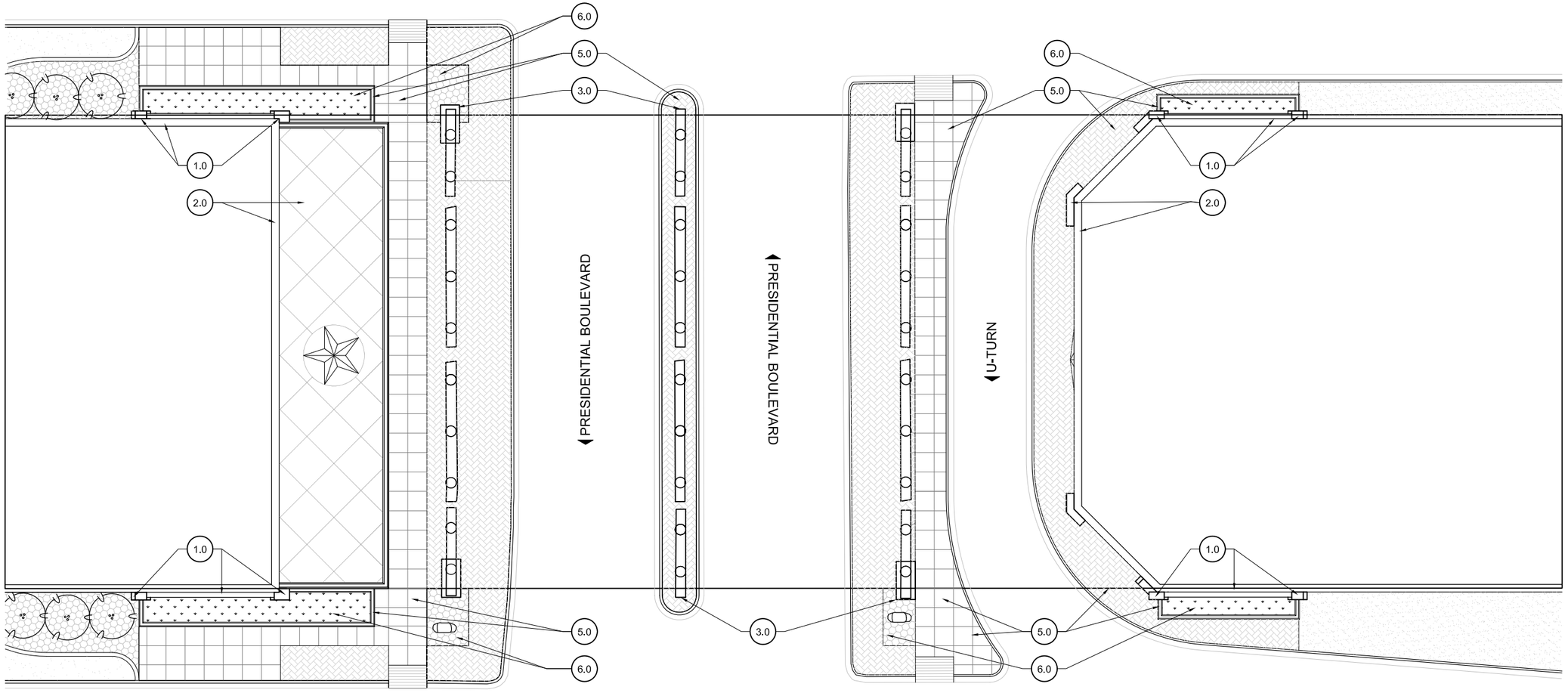

PRESIDENTIAL PLAN

SCALE: 1"= 30'-0"

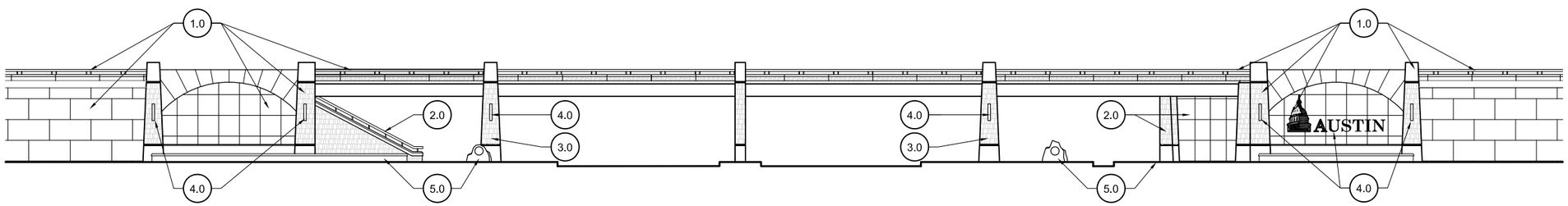

PRESIDENTIAL SOUTH SOUTHWEST ELEVATION

SCALE: 1"= 30'-0"

(1.0) RETAINING WALLS & PILASTERS - Sheets 6-11

(2.0) BRIDGE ABUTMENT WALLS & RIP RAP - Sheets 12-24

(3.0) PYLONS - Sheets 25-30

(4.0) LIGHTING STANDARDS - Sheets 31-34

(5.0) PAVING/ HARDSCAPE - Sheets 35-44

(6.0) LANDSCAPE - Sheets 45-59

(7.0) FINISH SCHEDULE - Sheets 60-61

DIMENSIONS ARE APPROXIMATE AND ARE FOR PROPORTIONAL RELATIONSHIPS. ALL DIMENSIONS OF EXISTING ELEMENTS REQUIRE FIELD VERIFICATION. FIELD ADJUSTMENTS TO LAYOUT ARE EXPECTED.

Texas Department of Transportation

* NOT INTENDED FOR PERMIT OR CONSTRUCTION. ALL MATERIALS, DETAILS, AND LOCATION OF ELEMENTS SHOWN AS PART OF THIS DOCUMENT ARE SUBJECT TO FINAL PLANS AND SPECIFICATIONS.

INTERSECTION & OVERPASS ELEVATION - SPIRIT OF TEXAS DRIVE

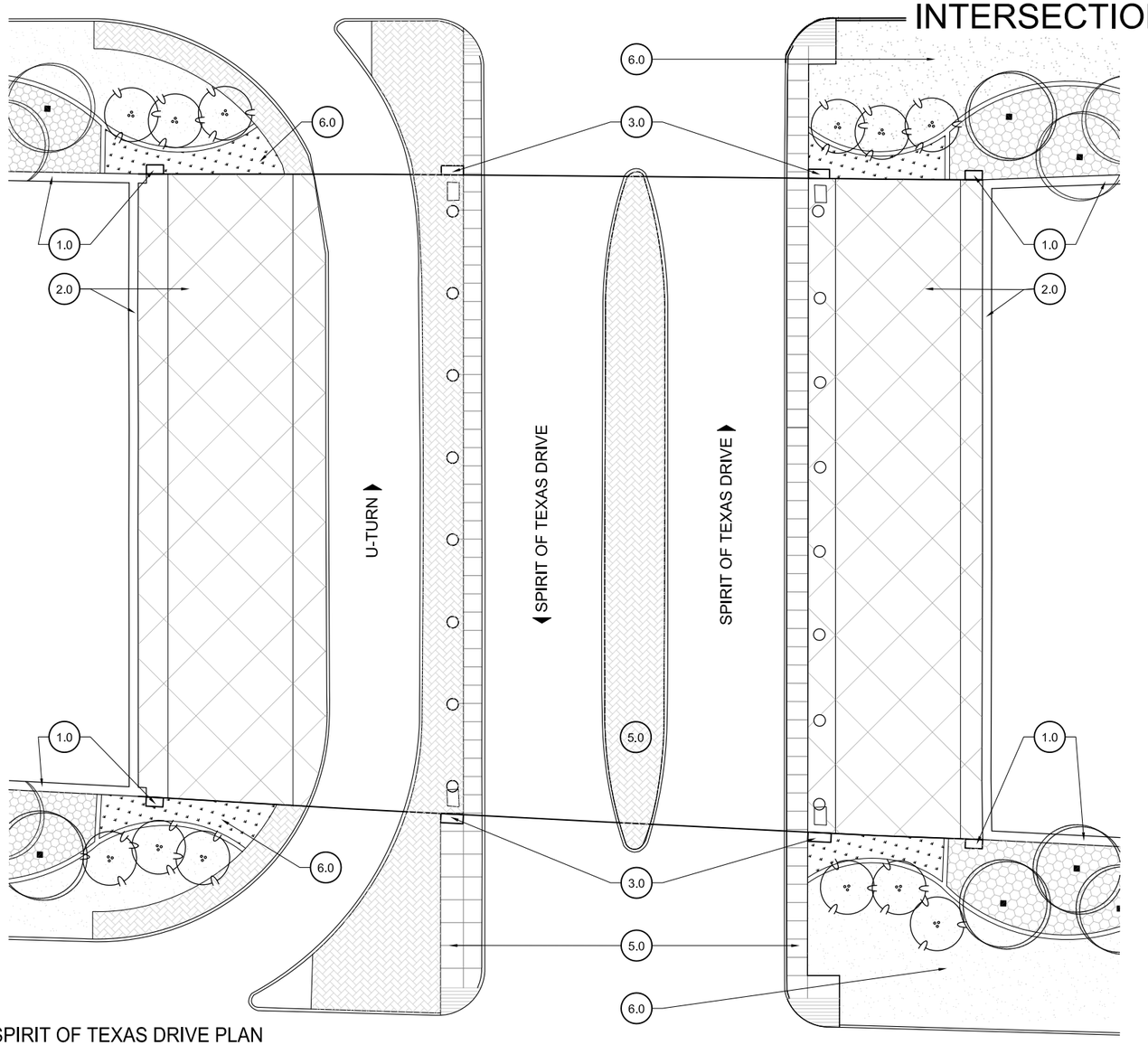

SPIRIT OF TEXAS DRIVE PLAN

SCALE: 1"= 30'-0"

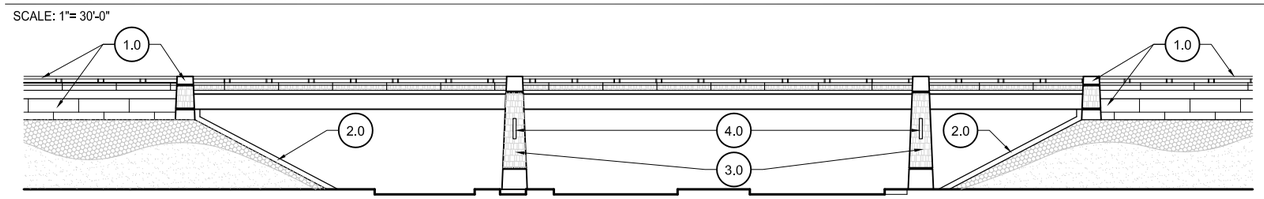

SPIRIT OF TEXAS DRIVE SOUTH SOUTHWEST ELEVATION

SCALE: 1"= 30'-0"

(1.0) RETAINING WALLS & PILASTERS - Sheets 6-11

(2.0) BRIDGE ABUTMENT WALLS & RIP RAP - Sheets 12-24

(3.0) PYLONS - Sheets 25-30

(4.0) LIGHTING STANDARDS - Sheets 31-34

(5.0) PAVING/ HARDSCAPE - Sheets 35-44

(6.0) LANDSCAPE - Sheets 45-59

(7.0) FINISH SCHEDULE - Sheets 60-61

DIMENSIONS ARE APPROXIMATE AND ARE FOR PROPORTIONAL RELATIONSHIPS. ALL DIMENSIONS OF EXISTING ELEMENTS REQUIRE FIELD VERIFICATION. FIELD ADJUSTMENTS TO LAYOUT ARE EXPECTED.

Texas Department of Transportation

* NOT INTENDED FOR PERMIT OR CONSTRUCTION. ALL MATERIALS, DETAILS, AND LOCATION OF ELEMENTS SHOWN AS PART OF THIS DOCUMENT ARE SUBJECT TO FINAL PLANS AND SPECIFICATIONS.

INTERSECTION & OVERPASS ELEVATION - FM 973

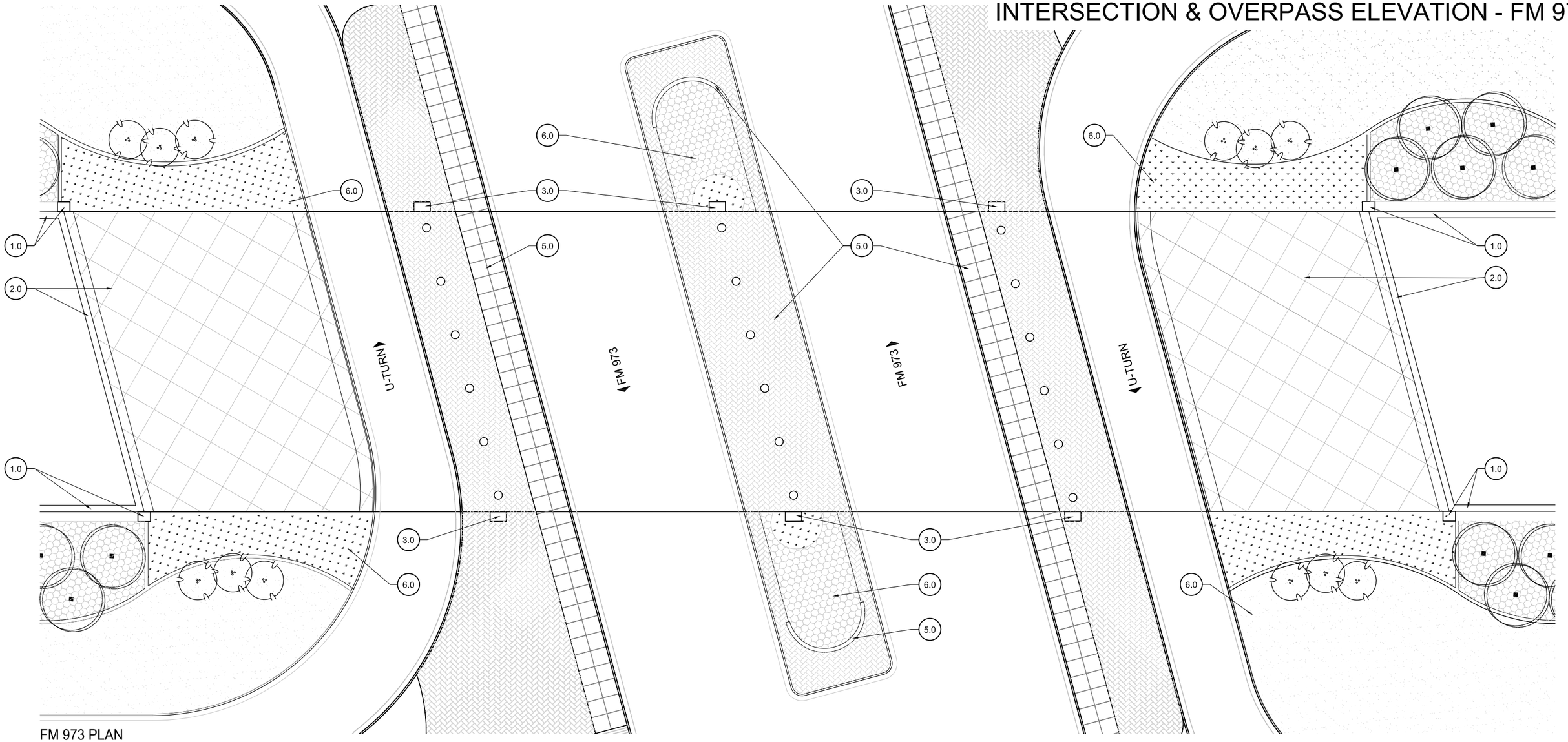

FM 973 PLAN

SCALE: 1"= 30'-0"

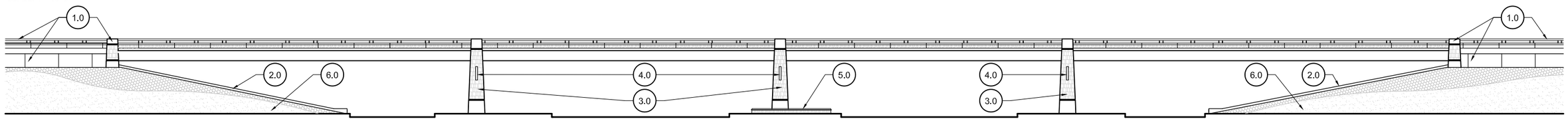

FM 973 SOUTH SOUTHWEST ELEVATION

SCALE: 1"= 30'-0"

(1.0) RETAINING WALLS & PILASTERS - Sheets 6-11

(2.0) BRIDGE ABUTMENT WALLS & RIP RAP - Sheets 12-24

(3.0) PYLONS - Sheets 25-30

(4.0) LIGHTING STANDARDS - Sheets 31-34

(5.0) PAVING/ HARDSCAPE - Sheets 35-44

(6.0) LANDSCAPE - Sheets 45-59

(7.0) FINISH SCHEDULE - Sheets 60-61

DIMENSIONS ARE APPROXIMATE AND ARE FOR PROPORTIONAL RELATIONSHIPS. ALL DIMENSIONS OF EXISTING ELEMENTS REQUIRE FIELD VERIFICATION. FIELD ADJUSTMENTS TO LAYOUT ARE EXPECTED.

Texas Department of Transportation

* NOT INTENDED FOR PERMIT OR CONSTRUCTION. ALL MATERIALS, DETAILS, AND LOCATION OF ELEMENTS SHOWN AS PART OF THIS DOCUMENT ARE SUBJECT TO FINAL PLANS AND SPECIFICATIONS.

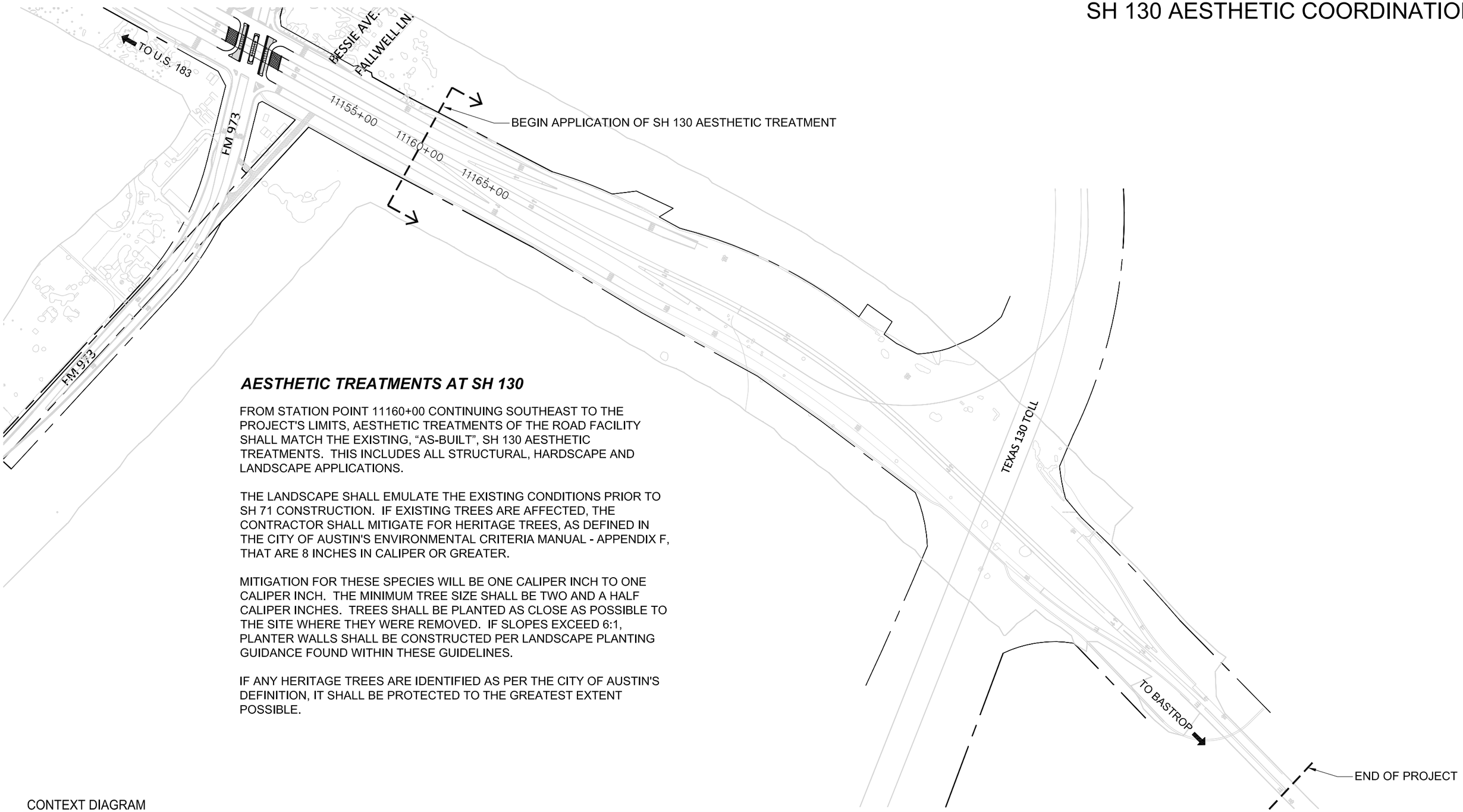

AESTHETIC TREATMENTS AT SH 130

FROM STATION POINT 11160+00 CONTINUING SOUTHEAST TO THE PROJECT'S LIMITS, AESTHETIC TREATMENTS OF THE ROAD FACILITY SHALL MATCH THE EXISTING, "AS-BUILT", SH 130 AESTHETIC TREATMENTS. THIS INCLUDES ALL STRUCTURAL, HARDSCAPE AND LANDSCAPE APPLICATIONS.

THE LANDSCAPE SHALL EMULATE THE EXISTING CONDITIONS PRIOR TO SH 71 CONSTRUCTION. IF EXISTING TREES ARE AFFECTED, THE CONTRACTOR SHALL MITIGATE FOR HERITAGE TREES, AS DEFINED IN THE CITY OF AUSTIN'S ENVIRONMENTAL CRITERIA MANUAL - APPENDIX F, THAT ARE 8 INCHES IN CALIPER OR GREATER.

MITIGATION FOR THESE SPECIES WILL BE ONE CALIPER INCH TO ONE CALIPER INCH. THE MINIMUM TREE SIZE SHALL BE TWO AND A HALF CALIPER INCHES. TREES SHALL BE PLANTED AS CLOSE AS POSSIBLE TO THE SITE WHERE THEY WERE REMOVED. IF SLOPES EXCEED 6:1, PLANTER WALLS SHALL BE CONSTRUCTED PER LANDSCAPE PLANTING GUIDANCE FOUND WITHIN THESE GUIDELINES.

IF ANY HERITAGE TREES ARE IDENTIFIED AS PER THE CITY OF AUSTIN'S DEFINITION, IT SHALL BE PROTECTED TO THE GREATEST EXTENT POSSIBLE.

CONTEXT DIAGRAM

SCALE: 1" = 1200'

DIMENSIONS ARE APPROXIMATE AND ARE FOR PROPORTIONAL RELATIONSHIPS. ALL DIMENSIONS OF EXISTING ELEMENTS REQUIRE FIELD VERIFICATION. FIELD ADJUSTMENTS TO LAYOUT ARE EXPECTED.

N

Texas Department of Transportation

* NOT INTENDED FOR PERMIT OR CONSTRUCTION. ALL MATERIALS, DETAILS, AND LOCATION OF ELEMENTS SHOWN AS PART OF THIS DOCUMENT ARE SUBJECT TO FINAL PLANS AND SPECIFICATIONS.

SH71 Express Project

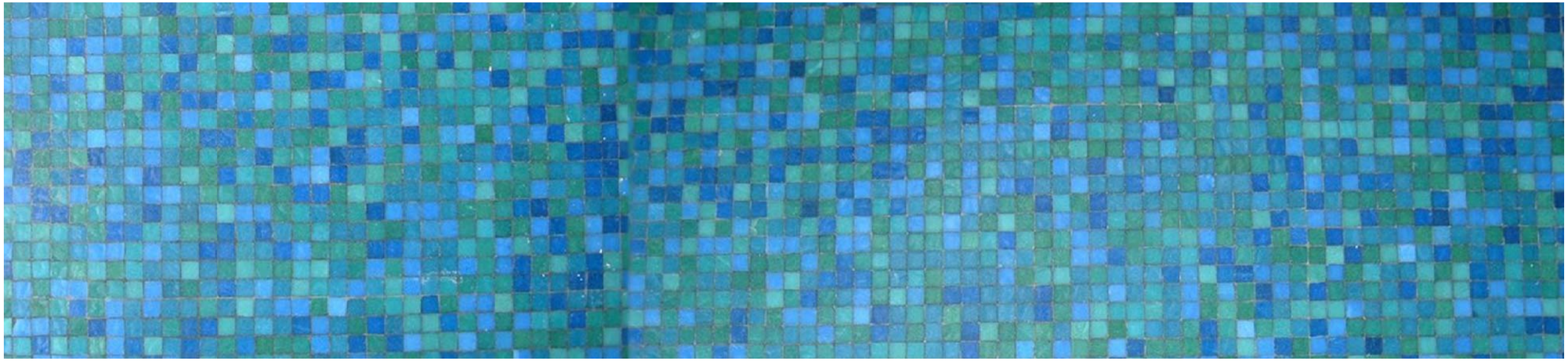

1.0 RETAINING WALLS

Texas Department of Transportation

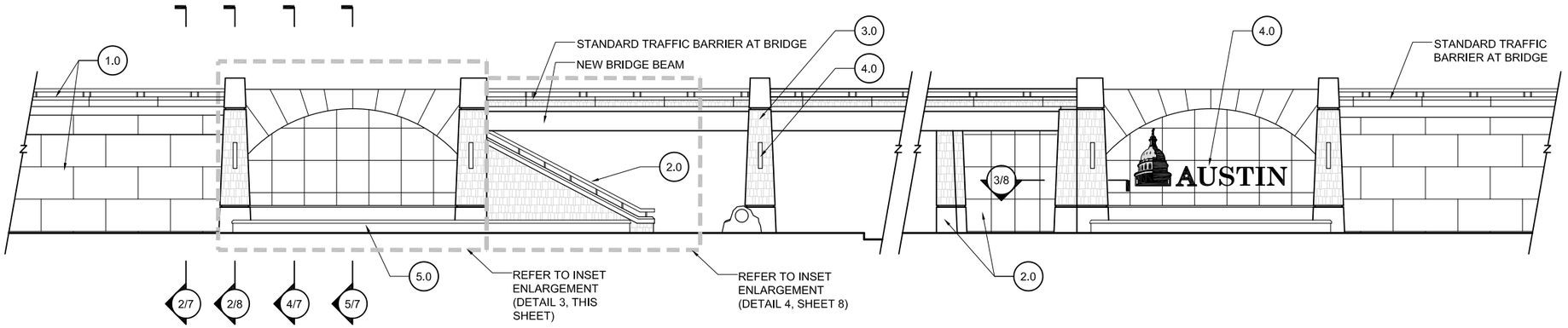

1 RETAINING WALL ELEVATION

SCALE: 1" = 20'

NOTES:
1. CONTRACTOR SHALL DIRECT DRAINAGE AWAY FROM BACKS OF WALLS AND PAVED SURFACES.
2. EXPANSION JOINTS SHALL BE CONSIDERED DURING FINAL DESIGN. THEY SHALL BE LOCATED AT REVEALS OR AT EDGES BETWEEN DIFFERENT ELEMENTS, SUCH AS PILASTERS AND RETAINING WALL PANELS, WHENEVER POSSIBLE.

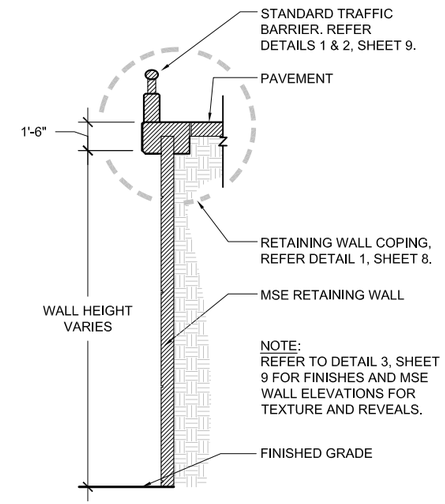

2 MSE WALL SECTION

SCALE: 1/8" = 1'-0"

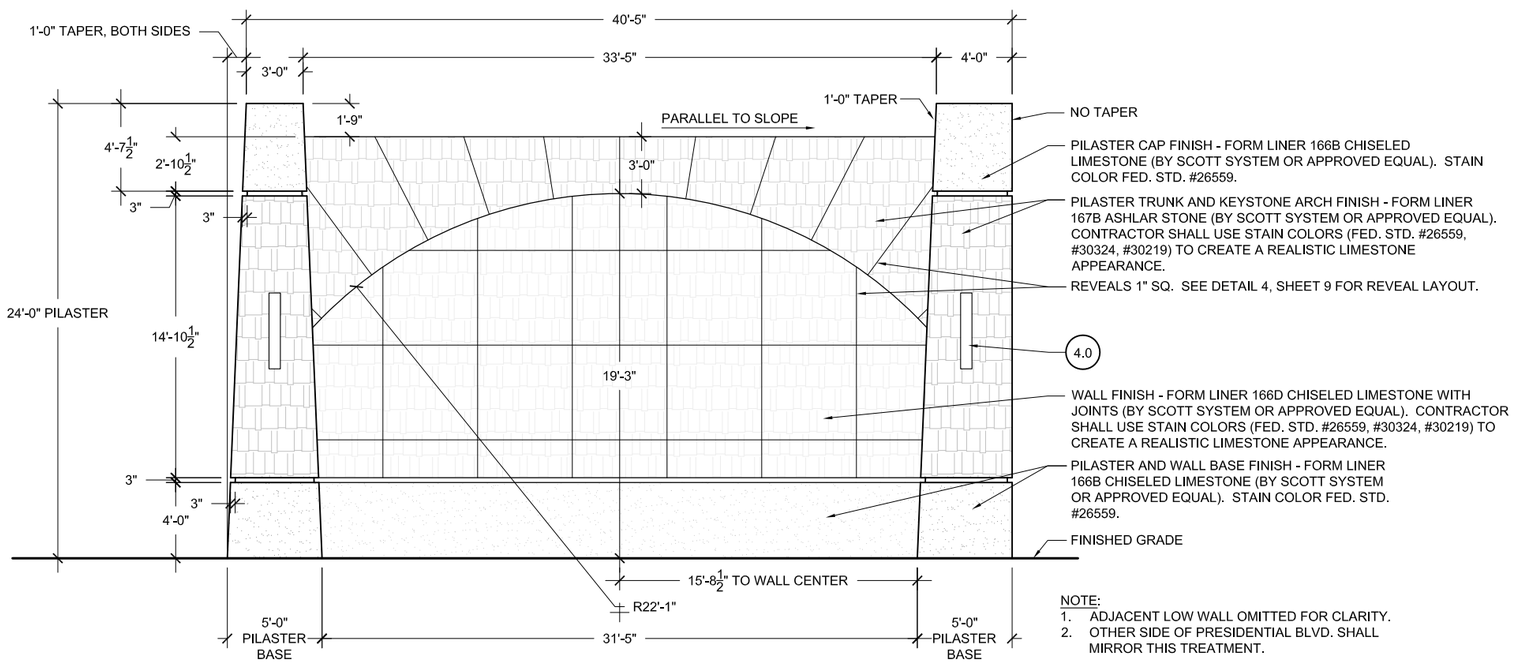

NOTE:
1. ADJACENT LOW WALL OMITTED FOR CLARITY.
2. OTHER SIDE OF PRESIDENTIAL BLVD. SHALL MIRROR THIS TREATMENT.

3 FEATURE WALL

SCALE: 1/8" = 1'-0"

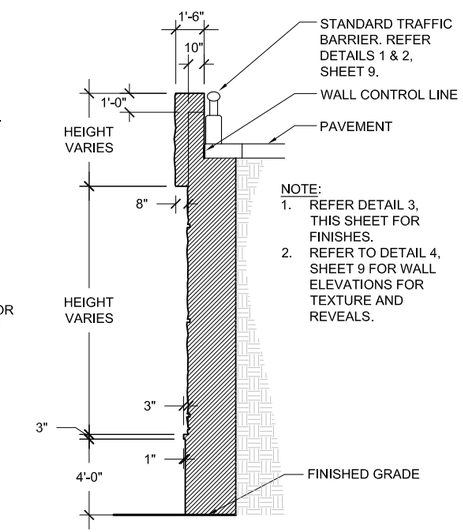

4 FEATURE WALL SECTION

SCALE: 1/8" = 1'-0"

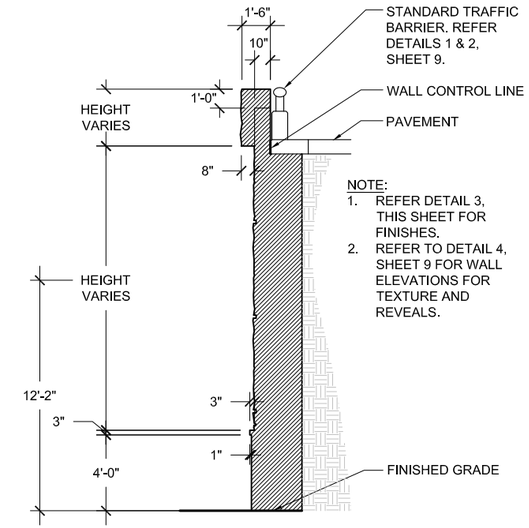

5 FEATURE WALL SECTION

SCALE: 1/8" = 1'-0"

1.0 RETAINING WALLS & PILASTERS - Sheets 6-11
2.0 BRIDGE ABUTMENT WALLS & RIP RAP - Sheets 12-24
3.0 PYLONS - Sheets 25-30
4.0 LIGHTING STANDARDS - Sheets 31-34
5.0 PAVING/ HARDSCAPE - Sheets 35-44
6.0 LANDSCAPE - Sheets 45-59
7.0 FINISH SCHEDULE - Sheets 60-61

DIMENSIONS ARE APPROXIMATE AND ARE FOR PROPORTIONAL RELATIONSHIPS. ALL DIMENSIONS OF EXISTING ELEMENTS REQUIRE FIELD VERIFICATION. FIELD ADJUSTMENTS TO LAYOUT ARE EXPECTED.

Texas Department of Transportation

* NOT INTENDED FOR PERMIT OR CONSTRUCTION. ALL MATERIALS, DETAILS, AND LOCATION OF ELEMENTS SHOWN AS PART OF THIS DOCUMENT ARE SUBJECT TO FINAL PLANS AND SPECIFICATIONS.

RETAINING WALLS - PRESIDENTIAL BOULEVARD

NOTES:
1. CONTRACTOR SHALL DIRECT DRAINAGE AWAY FROM BACKS OF WALLS AND PAVED SURFACES.
2. EXPANSION JOINTS SHALL BE CONSIDERED DURING FINAL DESIGN. THEY SHALL BE LOCATED AT REVEALS OR AT EDGES BETWEEN DIFFERENT ELEMENTS, SUCH AS PILASTERS AND RETAINING WALL PANELS, WHENEVER POSSIBLE.

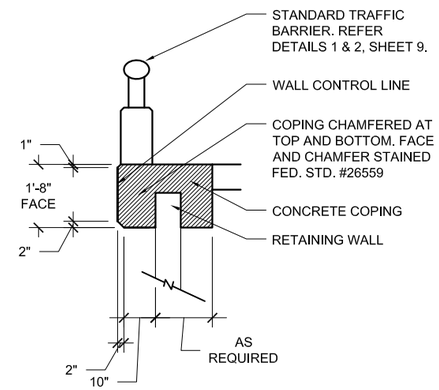

1 COPING DETAIL
SCALE: 1/4" = 1'-0"

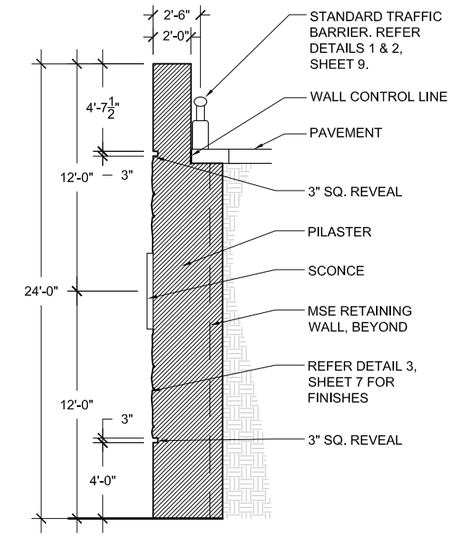

2 PILASTER SECTION
SCALE: 1/8" = 1'-0"

NOTE:
REFER DETAIL 3, SHEET 7 FOR FINISHES.

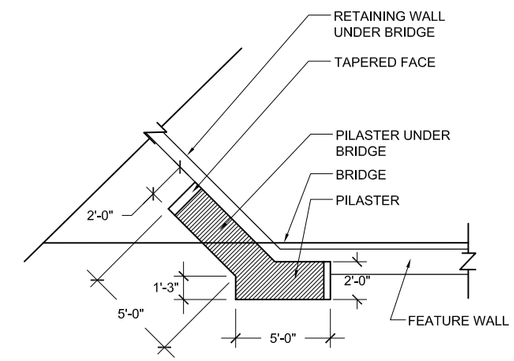

3 PILASTER PLAN SECTION
SCALE: 1/8" = 1'-0"

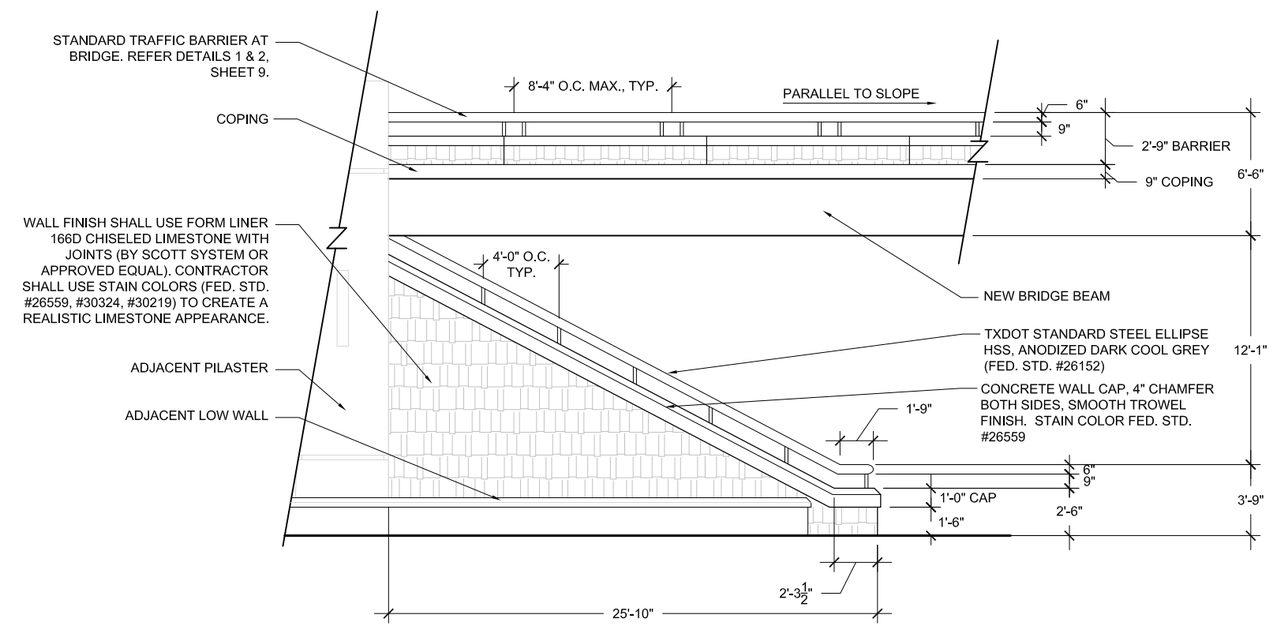

4 SLOPED RETAINING WALL, TRAFFIC BARRIER AND RAILING ELEVATION
SCALE: 1/8" = 1'-0"

DIMENSIONS ARE APPROXIMATE AND ARE FOR PROPORTIONAL RELATIONSHIPS. ALL DIMENSIONS OF EXISTING ELEMENTS REQUIRE FIELD VERIFICATION. FIELD ADJUSTMENTS TO LAYOUT ARE EXPECTED.

Texas Department of Transportation

* NOT INTENDED FOR PERMIT OR CONSTRUCTION. ALL MATERIALS, DETAILS, AND LOCATION OF ELEMENTS SHOWN AS PART OF THIS DOCUMENT ARE SUBJECT TO FINAL PLANS AND SPECIFICATIONS.

TRAFFIC BARRIER & MSE WALL - PRESIDENTIAL BOULEVARD

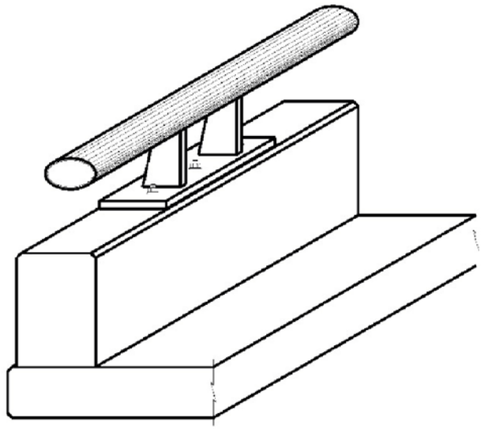

TRAFFIC BARRIER NOTES PER TXDOT BRIDGE RAILING MANUAL. VERIFY CURRENT REQUIREMENTS AND STANDARDS.

NOTE:
TRAFFIC RAILING TYPE T401-
THIS RAILING IS 33-INCHES HIGH WITH AN 18-INCH CONCRETE PARAPET AND A STEEL ELLIPSE HSS 15 INCHES ABOVE THE CONCRETE. IT HAS TWIN STEEL POSTS SPACED A MAXIMUM OF 10 FT APART. IT FEATURES A BOLT ANCHORAGE SYSTEM FOR THE STEEL RAIL POSTS THAT MAY BE DRILLED AND EPOXY-ANCHORED ALLOWING SLIP-FORMING OF THE CONCRETE PARAPET.

1 STANDARD TRAFFIC BARRIER
SCALE: NOT TO SCALE

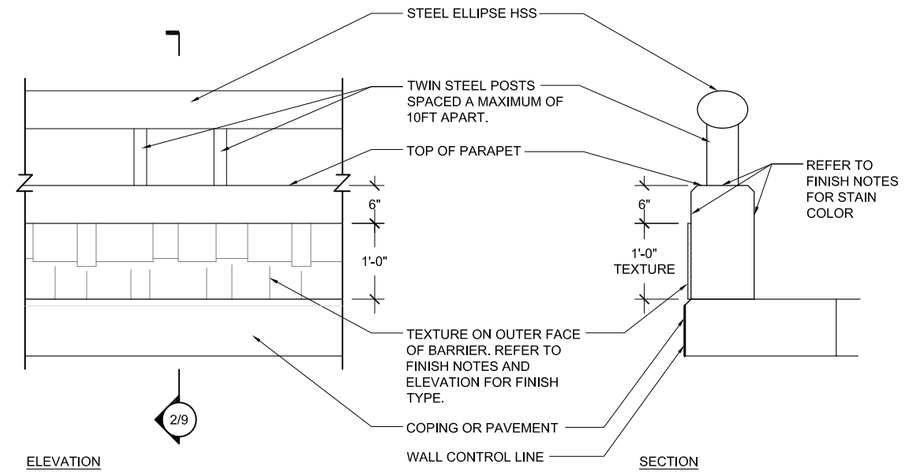

FINISH NOTES:
1. TEXTURE OF BARRIER AT BRIDGE - 166D CHISELED LIMESTONE WITH JOINTS. CONTRACTOR SHALL USE STAIN COLORS (FED. STD. #26559, #30324, #30219) TO CREATE A REALISTIC LIMESTONE APPEARANCE.
2. TEXTURE OF BARRIER ATOP RETAINING WALLS - 166A CHISELED LIMESTONE. CONTRACTOR SHALL USE STAIN COLOR FED. STD. #30324.
3. TEXTURE FINISHES BY SCOTT SYSTEM OR APPROVED EQUAL.
4. STEEL ELLIPSE HSS AND TWIN STEEL POSTS ANODIZED DARK COOL GREY (FED. STD. #26152)
5. CONCRETE SURFACES OF THE BARRIERS WITHOUT APPLIED TEXTURE SHALL BE STAINED FED. STD. COLOR #26559.

2 STANDARD TRAFFIC BARRIER
SCALE: 1/2" = 1'-0"

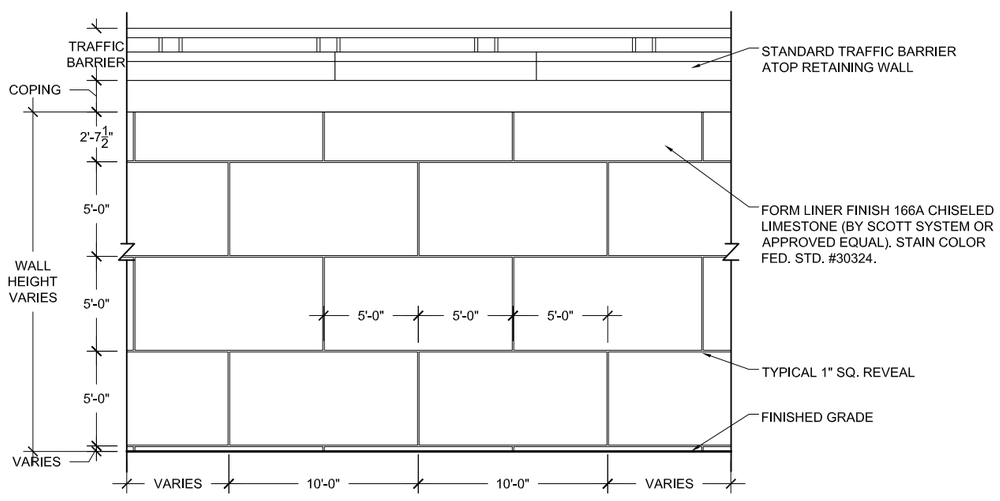

3 MSE WALL ELEVATION
SCALE: 1/8" = 1'-0"

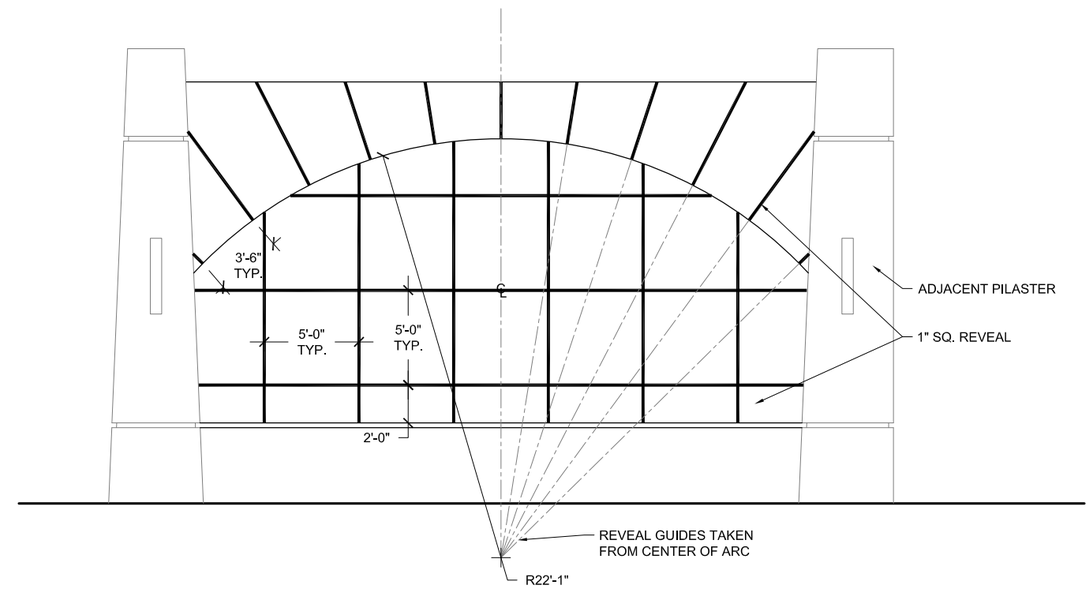

4 SCORING AT RETAINING WALL FEATURE
SCALE: 1/8" = 1'-0"

NOTES:
1. CONTRACTOR SHALL DIRECT DRAINAGE AWAY FROM BACKS OF WALLS AND PAVED SURFACES.
2. EXPANSION JOINTS SHALL BE CONSIDERED DURING FINAL DESIGN. THEY SHALL BE LOCATED AT REVEALS OR AT EDGES BETWEEN DIFFERENT ELEMENTS, SUCH AS PILASTERS AND RETAINING WALL PANELS, WHENEVER POSSIBLE.

DIMENSIONS ARE APPROXIMATE AND ARE FOR PROPORTIONAL RELATIONSHIPS. ALL DIMENSIONS OF EXISTING ELEMENTS REQUIRE FIELD VERIFICATION. FIELD ADJUSTMENTS TO LAYOUT ARE EXPECTED.

Texas Department of Transportation

* NOT INTENDED FOR PERMIT OR CONSTRUCTION. ALL MATERIALS, DETAILS, AND LOCATION OF ELEMENTS SHOWN AS PART OF THIS DOCUMENT ARE SUBJECT TO FINAL PLANS AND SPECIFICATIONS.

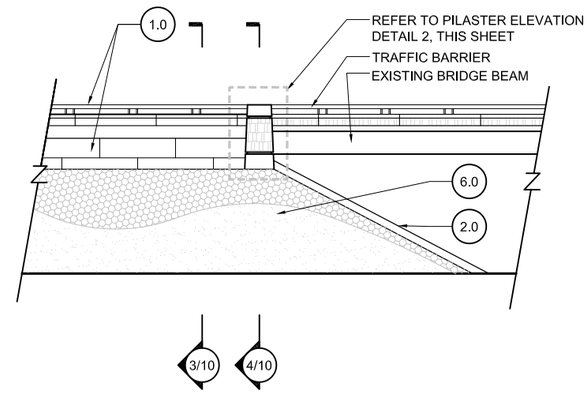

1 RETAINING WALL ELEVATION
SCALE: 1" = 20'

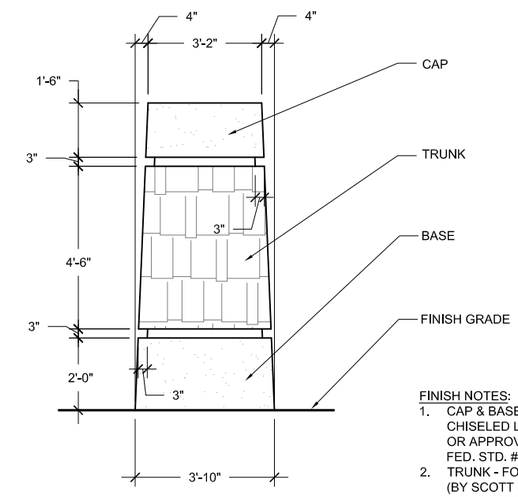

FINISH NOTES:
1. CAP & BASE - FORM LINER FINISH 166B CHISELED LIMESTONE (BY SCOTT SYSTEM OR APPROVED EQUAL). STAIN COLOR FED. STD. #26559.
2. TRUNK - FORM LINER 167B ASHLAR STONE (BY SCOTT SYSTEM OR APPROVED EQUAL). CONTRACTOR SHALL USE STAIN COLORS (FED. STD. #26559, #30324, #30219) TO CREATE A REALISTIC LIMESTONE APPEARANCE.

2 PILASTER ELEVATION
SCALE: 1/4" = 1'-0"

NOTES:
1. CONTRACTOR SHALL DIRECT DRAINAGE AWAY FROM BACKS OF WALLS AND PAVED SURFACES.
2. EXPANSION JOINTS SHALL BE CONSIDERED DURING FINAL DESIGN. THEY SHALL BE LOCATED AT REVEALS OR AT EDGES BETWEEN DIFFERENT ELEMENTS, SUCH AS PILASTERS AND RETAINING WALL PANELS, WHENEVER POSSIBLE.

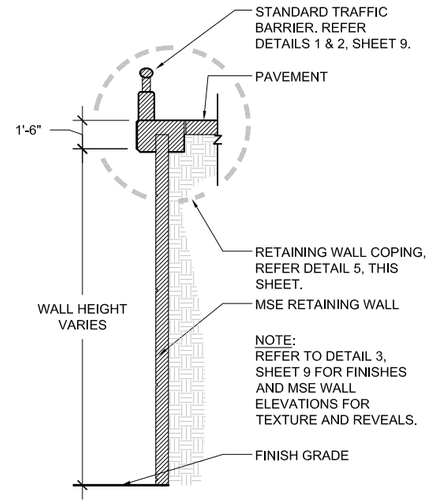

3 RETAINING WALL SECTION
SCALE: 1/8" = 1'-0"

NOTE:
REFER DETAIL 2, THIS SHEET FOR FINISHES.

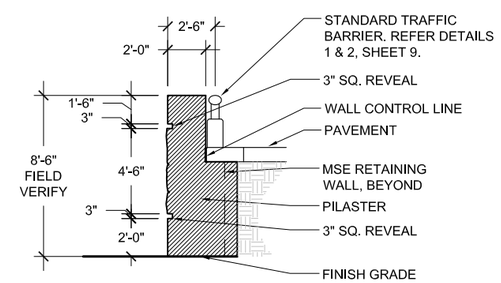

4 PILASTER SECTION
SCALE: 1/8" = 1'-0"

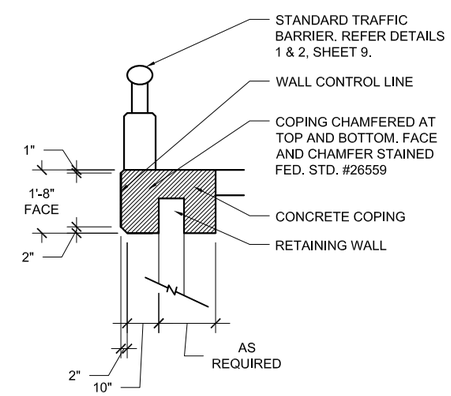

5 COPING DETAIL
SCALE: 1/4" = 1'-0"

1.0 RETAINING WALLS & PILASTERS - Sheets 6-11
2.0 BRIDGE ABUTMENT WALLS & RIP RAP - Sheets 12-24
3.0 PYLONS - Sheets 25-30
4.0 LIGHTING STANDARDS - Sheets 31-34
5.0 PAVING/ HARDSCAPE - Sheets 35-44
6.0 LANDSCAPE - Sheets 45-59
7.0 FINISH SCHEDULE - Sheets 60-61

DIMENSIONS ARE APPROXIMATE AND ARE FOR PROPORTIONAL RELATIONSHIPS. ALL DIMENSIONS OF EXISTING ELEMENTS REQUIRE FIELD VERIFICATION. FIELD ADJUSTMENTS TO LAYOUT ARE EXPECTED.

Texas Department of Transportation

* NOT INTENDED FOR PERMIT OR CONSTRUCTION. ALL MATERIALS, DETAILS, AND LOCATION OF ELEMENTS SHOWN AS PART OF THIS DOCUMENT ARE SUBJECT TO FINAL PLANS AND SPECIFICATIONS.

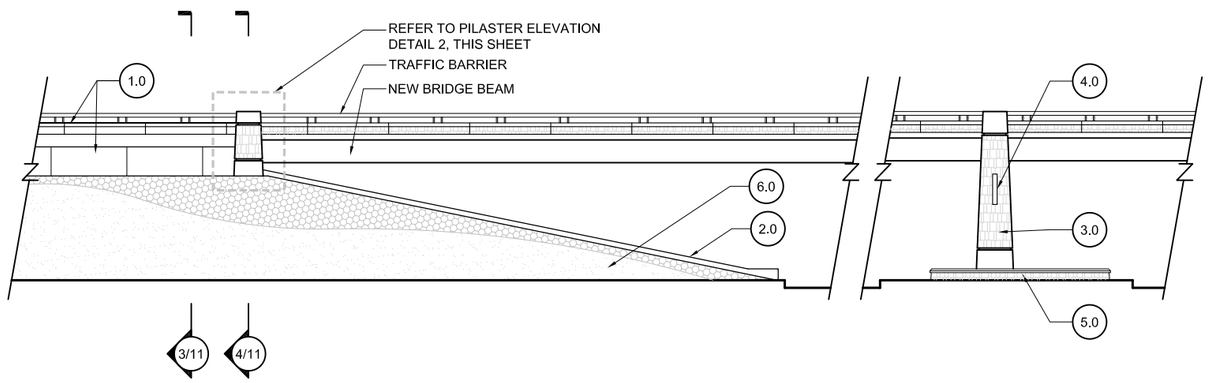

1 RETAINING WALL ELEVATION
SCALE: 1" = 20'

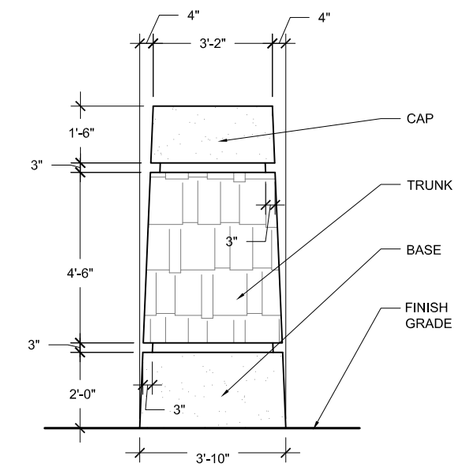

FINISH NOTES:
1. CAP & BASE - FORM LINER FINISH 166B CHISELED LIMESTONE (BY SCOTT SYSTEM OR APPROVED EQUAL). STAIN COLOR FED. STD. #26559.
2. TRUNK - FORM LINER 167B ASHLAR STONE (BY SCOTT SYSTEM OR APPROVED EQUAL). CONTRACTOR SHALL USE STAIN COLORS (FED. STD. #26559, #30324, #30219) TO CREATE A REALISTIC LIMESTONE APPEARANCE.

2 PILASTER ELEVATION
SCALE: 1/4" = 1'-0"

NOTES:
1. CONTRACTOR SHALL DIRECT DRAINAGE AWAY FROM BACKS OF WALLS AND PAVED SURFACES.
2. EXPANSION JOINTS SHALL BE CONSIDERED DURING FINAL DESIGN. THEY SHALL BE LOCATED AT REVEALS OR AT EDGES BETWEEN DIFFERENT ELEMENTS, SUCH AS PILASTERS AND RETAINING WALL PANELS, WHENEVER POSSIBLE.

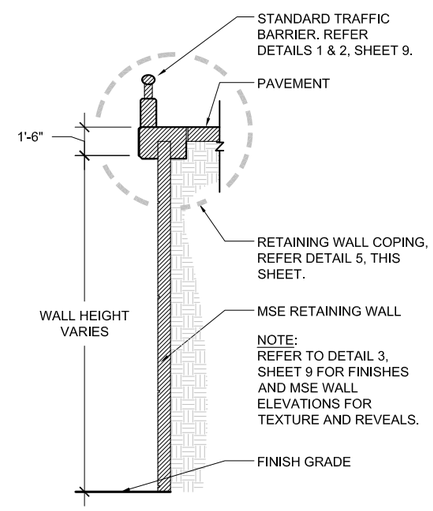

3 RETAINING WALL SECTION
SCALE: 1/8" = 1'-0"

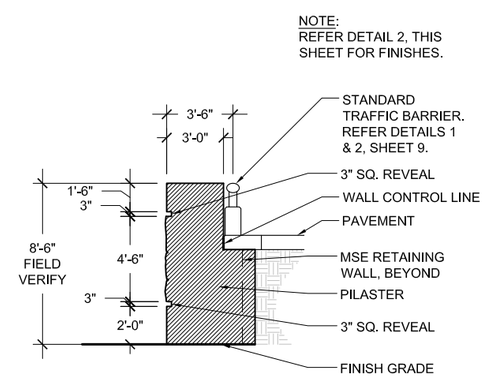

4 PILASTER SECTION
SCALE: 1/8" = 1'-0"

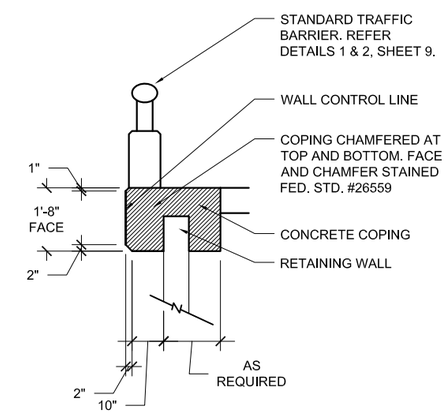

5 COPING DETAIL
SCALE: 1/4" = 1'-0"

1.0 RETAINING WALLS & PILASTERS - Sheets 6-11
2.0 BRIDGE ABUTMENT WALLS & RIP RAP - Sheets 12-24
3.0 PYLONS - Sheets 25-30
4.0 LIGHTING STANDARDS - Sheets 31-34
5.0 PAVING/ HARDSCAPE - Sheets 35-44
6.0 LANDSCAPE - Sheets 45-59
7.0 FINISH SCHEDULE - Sheets 60-61

DIMENSIONS ARE APPROXIMATE AND ARE FOR PROPORTIONAL RELATIONSHIPS. ALL DIMENSIONS OF EXISTING ELEMENTS REQUIRE FIELD VERIFICATION. FIELD ADJUSTMENTS TO LAYOUT ARE EXPECTED.

Texas Department of Transportation

* NOT INTENDED FOR PERMIT OR CONSTRUCTION. ALL MATERIALS, DETAILS, AND LOCATION OF ELEMENTS SHOWN AS PART OF THIS DOCUMENT ARE SUBJECT TO FINAL PLANS AND SPECIFICATIONS.

SH71 Express Project

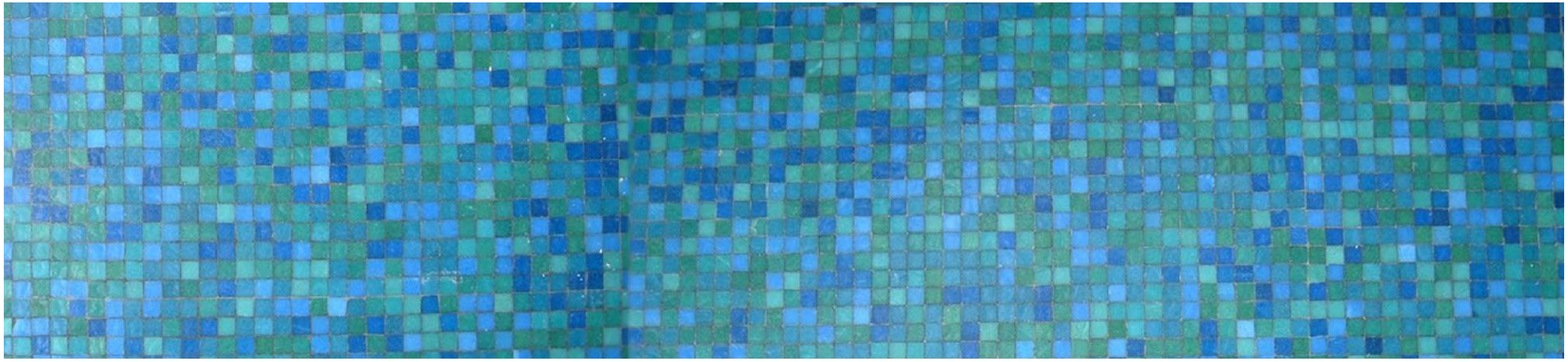

2.0 BRIDGE ABUTMENT WALLS & RIP RAP

Texas Department of Transportation

BRIDGE ABUTMENT WALLS & RIP RAP - PRESIDENTIAL BOULEVARD

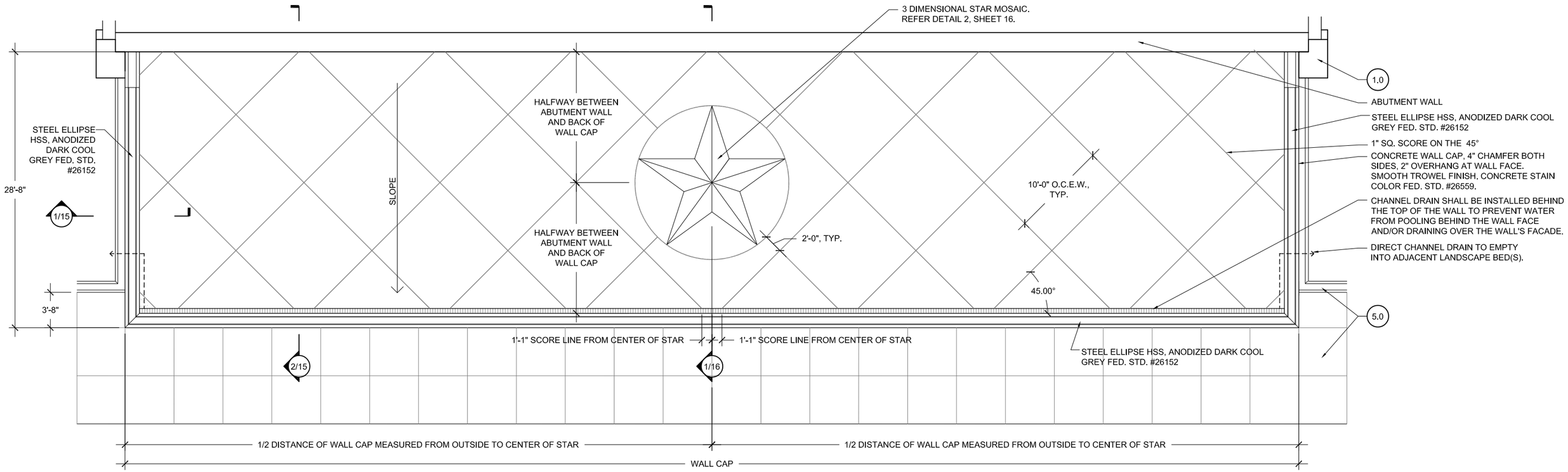

NORTHWEST ABUTMENT AND SLOPED RIP RAP WALL PLAN

SCALE: 1" = 10'

NOTES:
1. CONTRACTOR SHALL DIRECT DRAINAGE AWAY FROM BEHIND WALLS AND PAVED SURFACES.
2. EXPANSION JOINTS SHALL BE CONSIDERED DURING FINAL DESIGN. THEY SHALL BE LOCATED AT REVEALS OR AT EDGES BETWEEN DIFFERENT ELEMENTS, SUCH AS PILASTERS AND RETAINING WALL PANELS, WHENEVER POSSIBLE.

1.0 RETAINING WALLS & PILASTERS - Sheets 6-11
2.0 BRIDGE ABUTMENT WALLS & RIP RAP - Sheets 12-24
3.0 PYLONS - Sheets 25-30
4.0 LIGHTING STANDARDS - Sheets 31-34
5.0 PAVING/ HARDSCAPE - Sheets 35-44
6.0 LANDSCAPE - Sheets 45-59
7.0 FINISH SCHEDULE - Sheets 60-61

DIMENSIONS ARE APPROXIMATE AND ARE FOR PROPORTIONAL RELATIONSHIPS. ALL DIMENSIONS OF EXISTING ELEMENTS REQUIRE FIELD VERIFICATION. FIELD ADJUSTMENTS TO LAYOUT ARE EXPECTED.

* NOT INTENDED FOR PERMIT OR CONSTRUCTION. ALL MATERIALS, DETAILS, AND LOCATION OF ELEMENTS SHOWN AS PART OF THIS DOCUMENT ARE SUBJECT TO FINAL PLANS AND SPECIFICATIONS.

BRIDGE ABUTMENT WALLS & RIP RAP - PRESIDENTIAL BOULEVARD

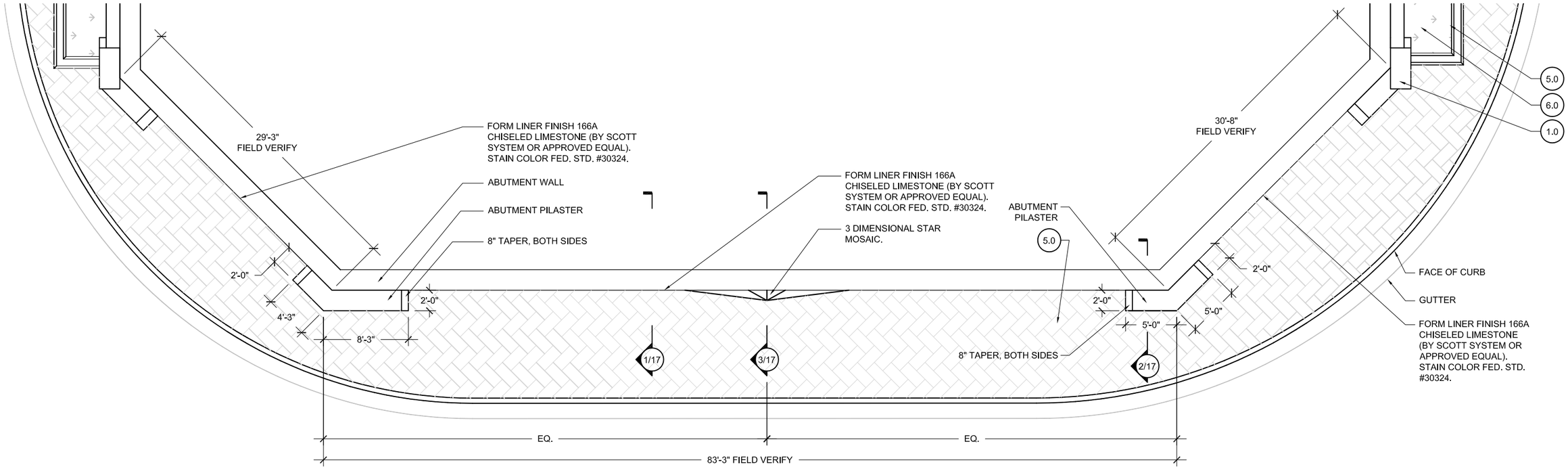

SOUTHEAST ABUTMENT WALL PLAN

SCALE: 1" = 10'

NOTES:

1. CONTRACTOR SHALL DIRECT DRAINAGE AWAY FROM BEHIND WALLS AND PAVED SURFACES.
2. EXPANSION JOINTS SHALL BE CONSIDERED DURING FINAL DESIGN. THEY SHALL BE LOCATED AT REVEALS OR AT EDGES BETWEEN DIFFERENT ELEMENTS, SUCH AS PILASTERS AND RETAINING WALL PANELS, WHENEVER POSSIBLE.

1.0 RETAINING WALLS & PILASTERS - Sheets 6-11
2.0 BRIDGE ABUTMENT WALLS & RIP RAP - Sheets 12-24
3.0 PYLONS - Sheets 25-30
4.0 LIGHTING STANDARDS - Sheets 31-34
5.0 PAVING/ HARDSCAPE - Sheets 35-44
6.0 LANDSCAPE - Sheets 45-59
7.0 FINISH SCHEDULE - Sheets 60-61

DIMENSIONS ARE APPROXIMATE AND ARE FOR PROPORTIONAL RELATIONSHIPS. ALL DIMENSIONS OF EXISTING ELEMENTS REQUIRE FIELD VERIFICATION. FIELD ADJUSTMENTS TO LAYOUT ARE EXPECTED.

Texas Department of Transportation

* NOT INTENDED FOR PERMIT OR CONSTRUCTION. ALL MATERIALS, DETAILS, AND LOCATION OF ELEMENTS SHOWN AS PART OF THIS DOCUMENT ARE SUBJECT TO FINAL PLANS AND SPECIFICATIONS.

BRIDGE ABUTMENT WALLS & RIP RAP - PRESIDENTIAL BOULEVARD

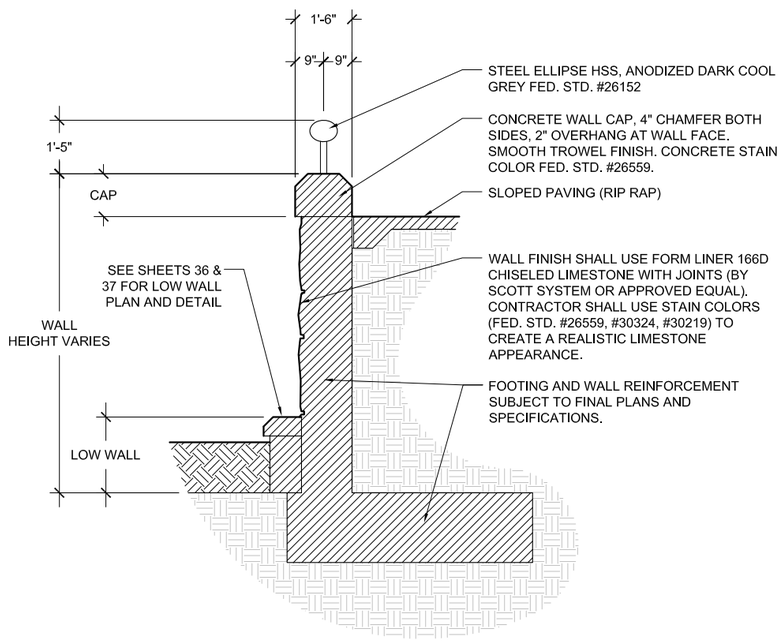

1 SLOPED RIP RAP WALL SECTION

SCALE: 1/4" = 1'-0"

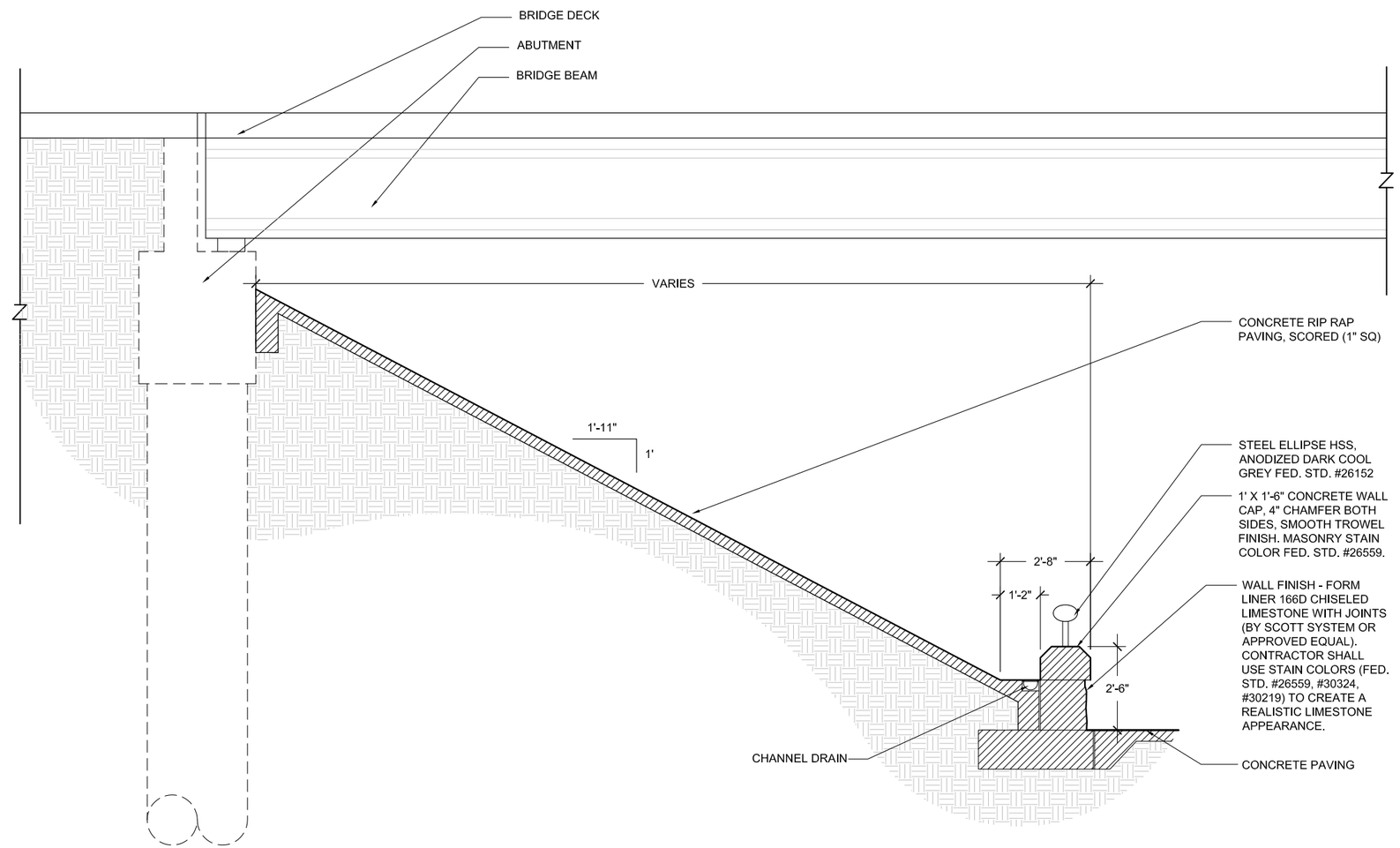

2 ABUTMENT AND SLOPED RIP RAP WALL SECTION

SCALE: 1/4" = 1'-0"

NOTES:

1. CONTRACTOR SHALL DIRECT DRAINAGE AWAY FROM BEHIND WALLS AND PAVED SURFACES.
2. EXPANSION JOINTS SHALL BE CONSIDERED DURING FINAL DESIGN. THEY SHALL BE LOCATED AT REVEALS OR AT EDGES BETWEEN DIFFERENT ELEMENTS, SUCH AS PILASTERS AND RETAINING WALL PANELS, WHENEVER POSSIBLE.

DIMENSIONS ARE APPROXIMATE AND ARE FOR PROPORTIONAL RELATIONSHIPS. ALL DIMENSIONS OF EXISTING ELEMENTS REQUIRE FIELD VERIFICATION. FIELD ADJUSTMENTS TO LAYOUT ARE EXPECTED.

Texas Department of Transportation

* NOT INTENDED FOR PERMIT OR CONSTRUCTION. ALL MATERIALS, DETAILS, AND LOCATION OF ELEMENTS SHOWN AS PART OF THIS DOCUMENT ARE SUBJECT TO FINAL PLANS AND SPECIFICATIONS.

BRIDGE ABUTMENT WALLS & RIP RAP - PRESIDENTIAL BOULEVARD

NOTES:
1. STAR MOSAIC SHALL RECEIVE A DEDICATED SPOT LIGHT FIXTURE SEPARATE FROM REQUIRED UNDER DECK ROADWAY LIGHTING.
2. SPOT LIGHT FIXTURE SHALL BE MOUNTED UNDER DECK, CONDUIT HIDDEN AND CREATE AN EVEN WASH OF LIGHT OVER THE STAR MOSAIC.
3. SPOT LIGHT FIXTURE SHALL NOT CREATE GLARE TO DRIVERS.

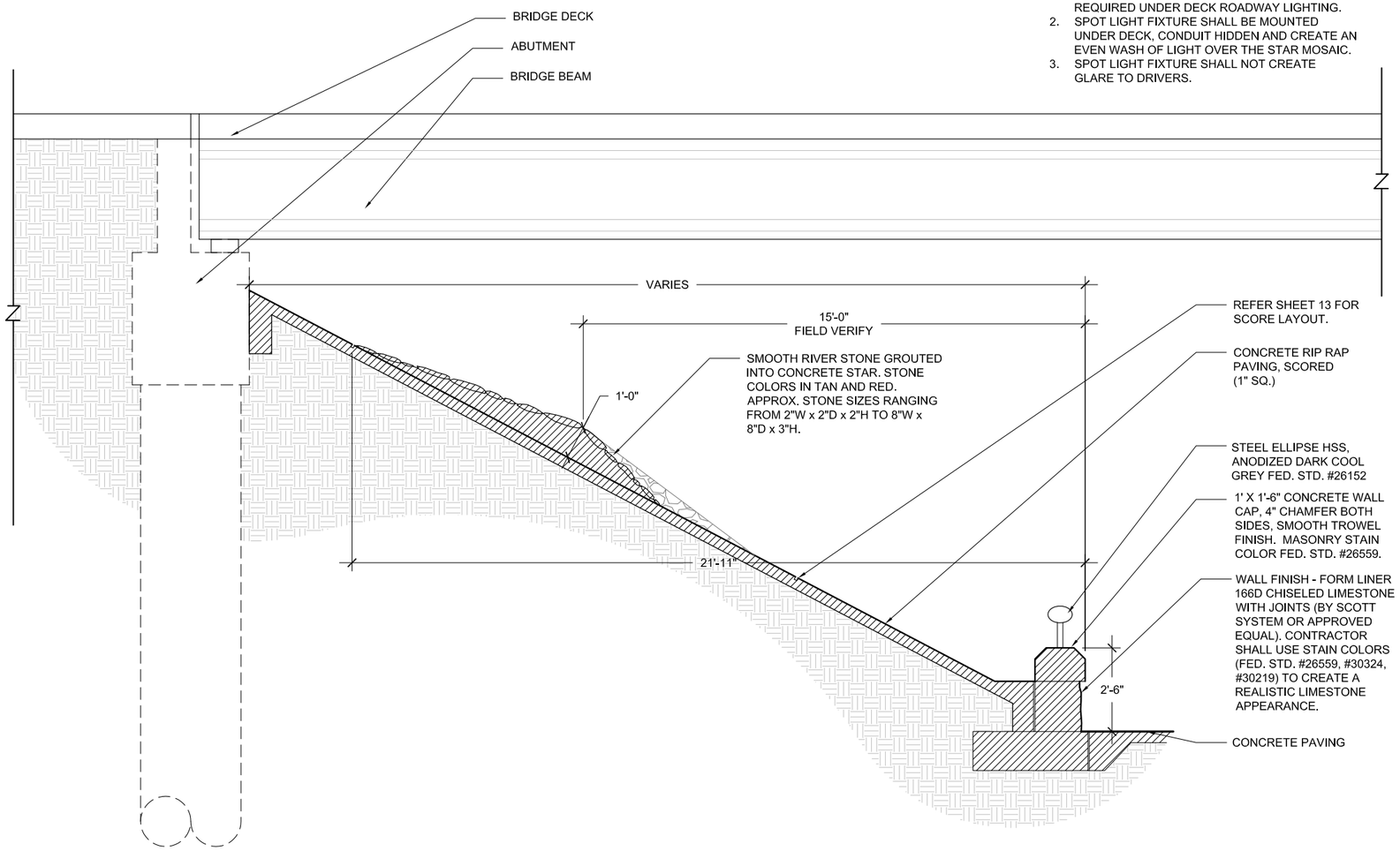

1 ABUTMENT, SLOPED RIP RAP AND STAR MOSAIC SECTION

SCALE: 1/4" = 1'-0"

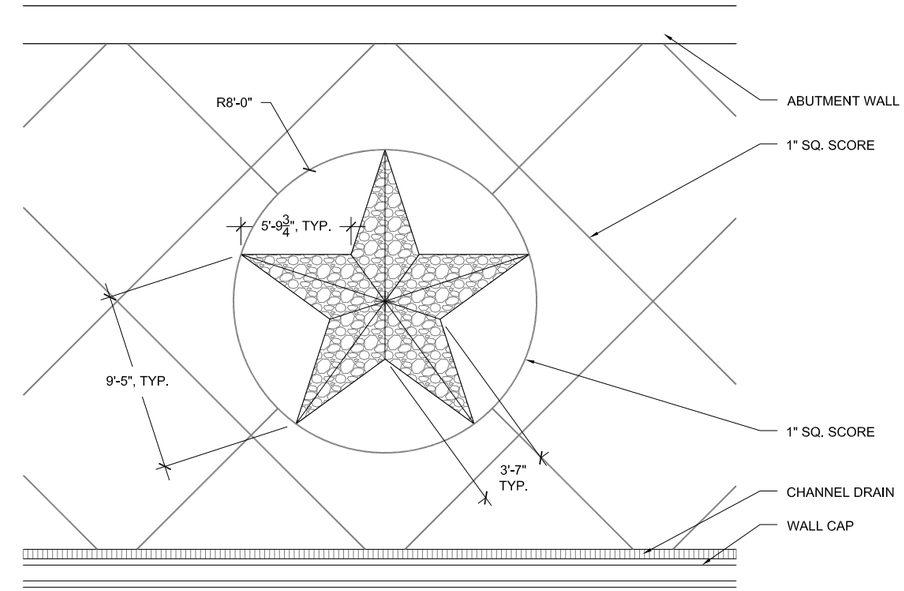

2 STAR MOSAIC DETAIL

SCALE: 1/8" = 1'-0"

NOTES:
1. CONTRACTOR SHALL DIRECT DRAINAGE AWAY FROM BEHIND WALLS AND PAVED SURFACES.
2. EXPANSION JOINTS SHALL BE CONSIDERED DURING FINAL DESIGN. THEY SHALL BE LOCATED AT REVEALS OR AT EDGES BETWEEN DIFFERENT ELEMENTS, SUCH AS PILASTERS AND RETAINING WALL PANELS, WHENEVER POSSIBLE.

DIMENSIONS ARE APPROXIMATE AND ARE FOR PROPORTIONAL RELATIONSHIPS. ALL DIMENSIONS OF EXISTING ELEMENTS REQUIRE FIELD VERIFICATION. FIELD ADJUSTMENTS TO LAYOUT ARE EXPECTED.

* NOT INTENDED FOR PERMIT OR CONSTRUCTION. ALL MATERIALS, DETAILS, AND LOCATION OF ELEMENTS SHOWN AS PART OF THIS DOCUMENT ARE SUBJECT TO FINAL PLANS AND SPECIFICATIONS.

BRIDGE ABUTMENT WALLS & RIP RAP - PRESIDENTIAL BOULEVARD

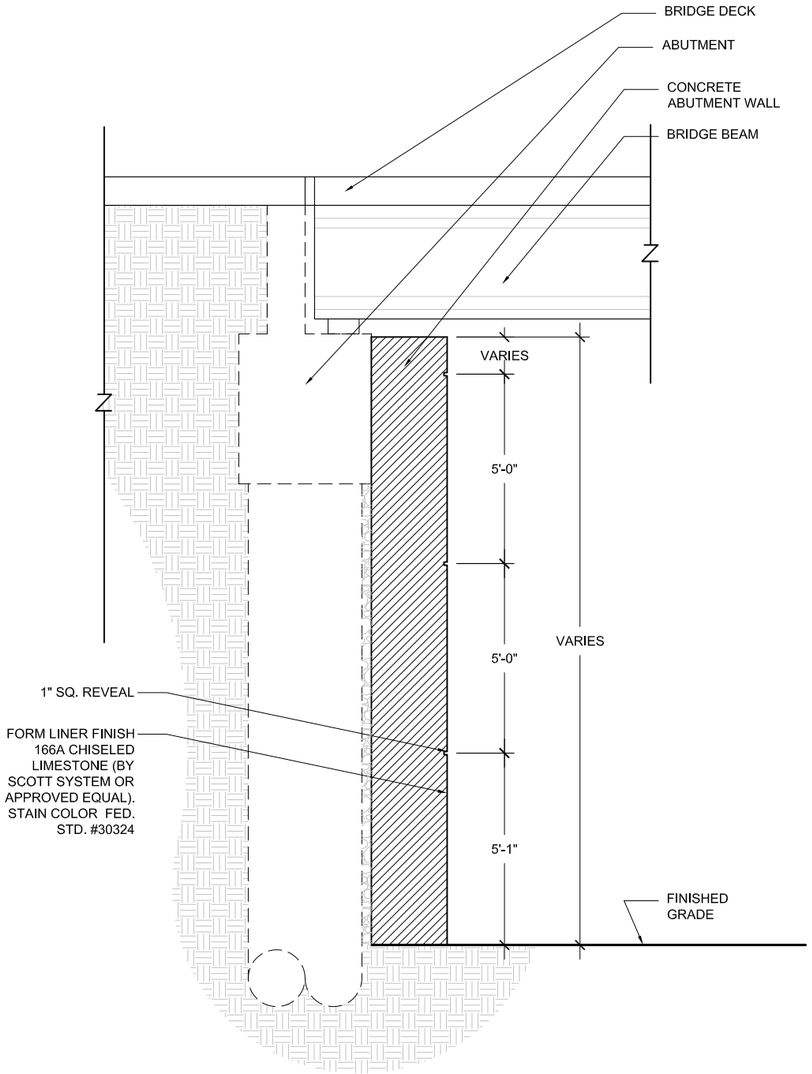

1 ABUTMENT WALL SECTION

SCALE: 1/4" = 1'-0"

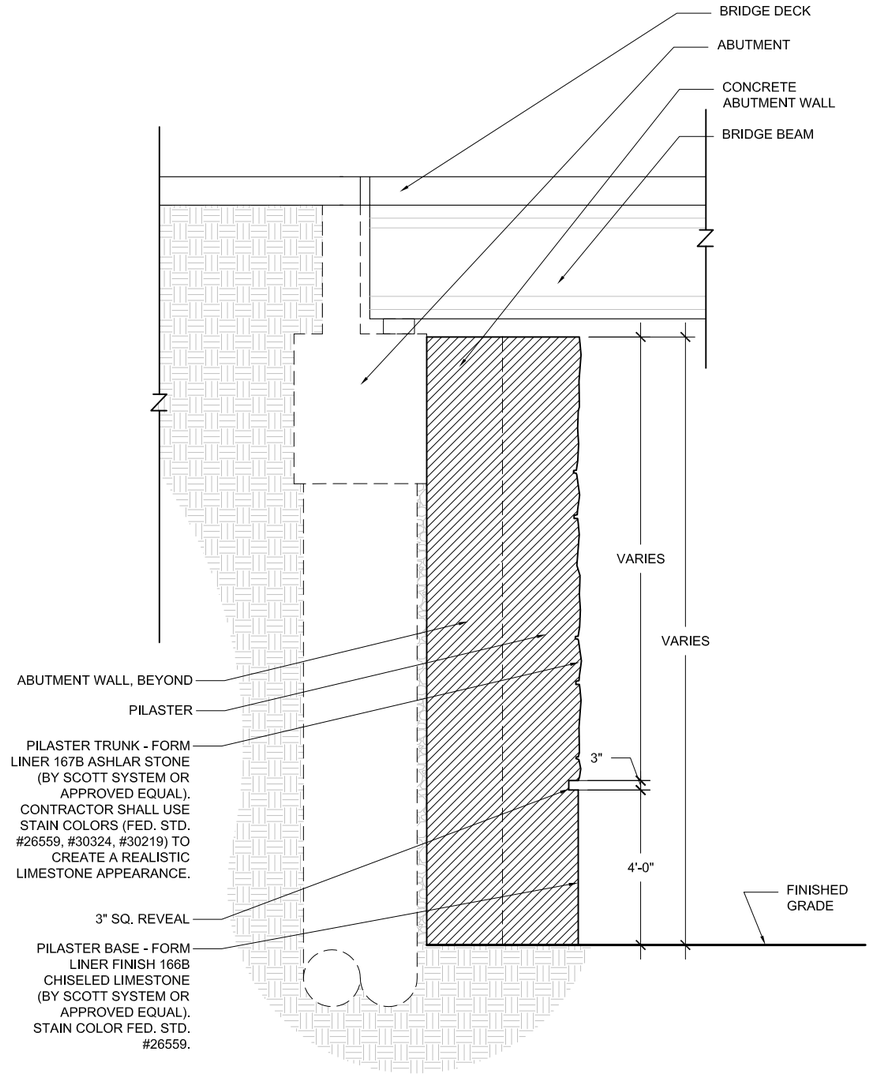

2 ABUTMENT WALL PILASTER SECTION

SCALE: 1/4" = 1'-0"

NOTES:
1. STAR MOSAIC SHALL RECEIVE A DEDICATED SPOT LIGHT FIXTURE SEPARATE FROM REQUIRED UNDER DECK ROADWAY LIGHTING.
2. SPOT LIGHT FIXTURE SHALL BE MOUNTED UNDER DECK, CONDUIT HIDDEN AND CREATE AN EVEN WASH OF LIGHT OVER THE STAR MOSAIC.
3. SPOT LIGHT FIXTURE SHALL NOT CREATE GLARE TO DRIVERS.

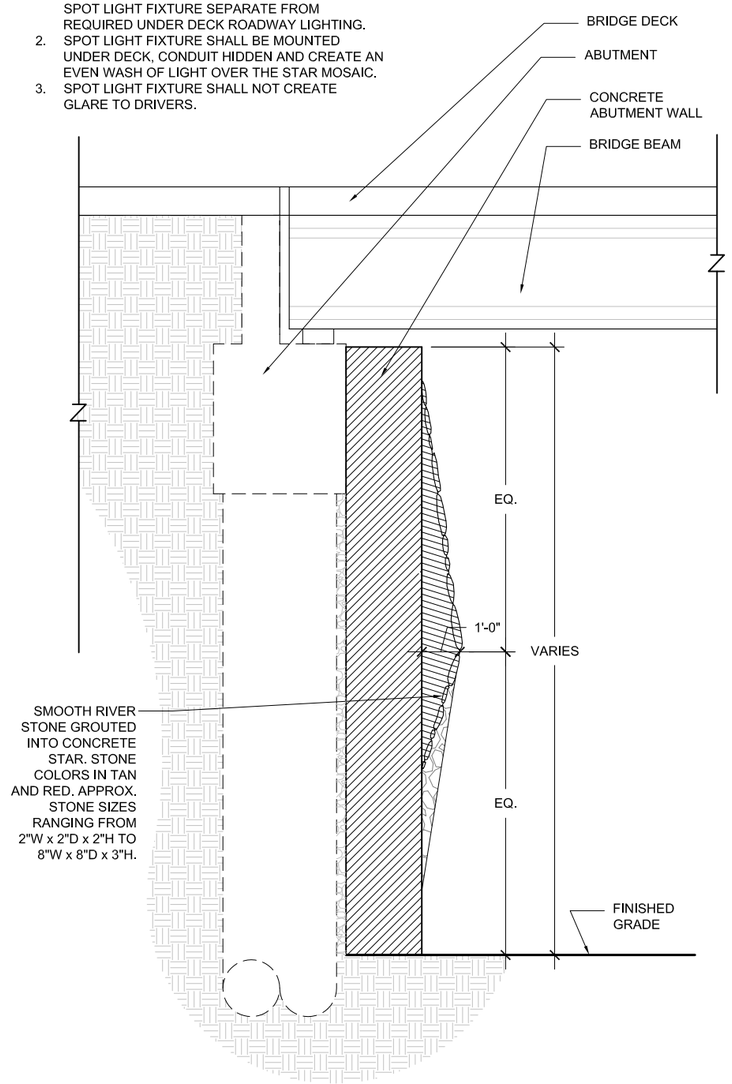

3 ABUTMENT AND STAR MOSAIC SECTION

SCALE: 1/4" = 1'-0"

NOTES:
1. CONTRACTOR SHALL DIRECT DRAINAGE AWAY FROM BEHIND WALLS AND PAVED SURFACES.
2. EXPANSION JOINTS SHALL BE CONSIDERED DURING FINAL DESIGN. THEY SHALL BE LOCATED AT REVEALS OR AT EDGES BETWEEN DIFFERENT ELEMENTS, SUCH AS PILASTERS AND RETAINING WALL PANELS, WHENEVER POSSIBLE.

DIMENSIONS ARE APPROXIMATE AND ARE FOR PROPORTIONAL RELATIONSHIPS. ALL DIMENSIONS OF EXISTING ELEMENTS REQUIRE FIELD VERIFICATION. FIELD ADJUSTMENTS TO LAYOUT ARE EXPECTED.

Texas Department of Transportation

* NOT INTENDED FOR PERMIT OR CONSTRUCTION. ALL MATERIALS, DETAILS, AND LOCATION OF ELEMENTS SHOWN AS PART OF THIS DOCUMENT ARE SUBJECT TO FINAL PLANS AND SPECIFICATIONS.

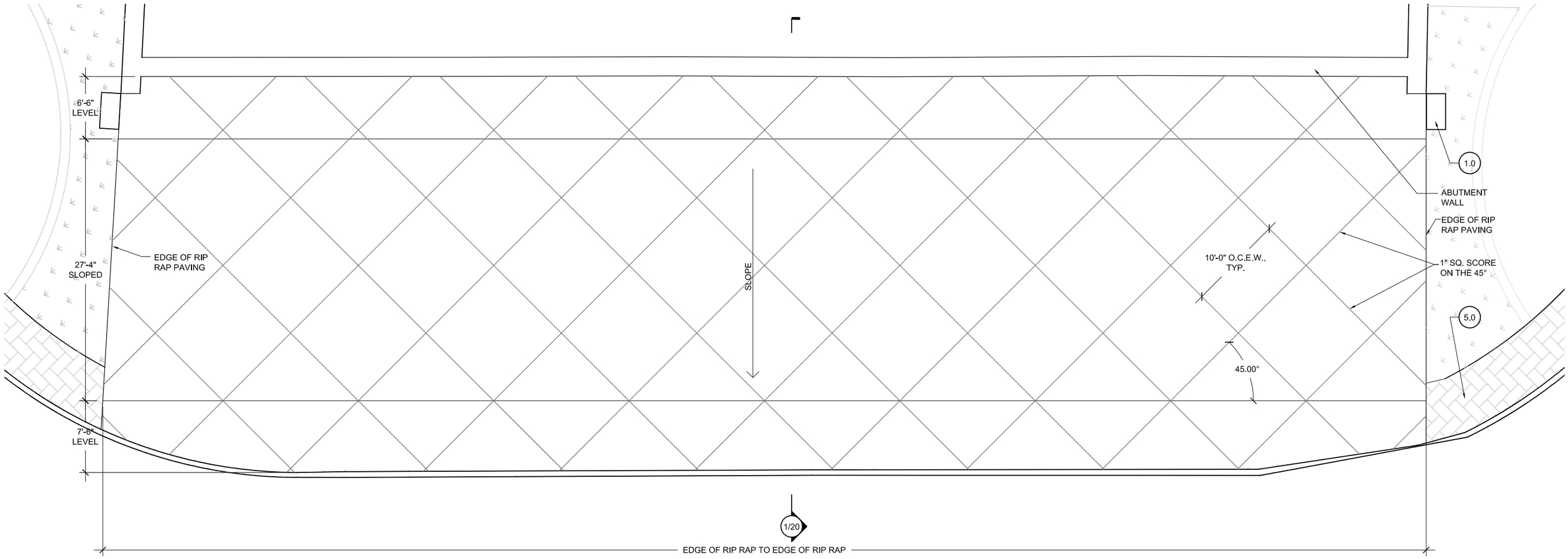

NORTHWEST ABUTMENT AND SLOPED RIP RAP WALL PLAN

SCALE: 1" = 10'

NOTE:
EXPANSION JOINTS SHALL BE CONSIDERED DURING FINAL DESIGN. THEY SHALL BE LOCATED AT REVEALS OR AT EDGES BETWEEN DIFFERENT ELEMENTS, SUCH AS PILASTERS AND RETAINING WALL PANELS, WHENEVER POSSIBLE.

1.0 RETAINING WALLS & PILASTERS - Sheets 6-11
2.0 BRIDGE ABUTMENT WALLS & RIP RAP - Sheets 12-24
3.0 PYLONS - Sheets 25-30
4.0 LIGHTING STANDARDS - Sheets 31-34
5.0 PAVING/ HARDSCAPE - Sheets 35-44
6.0 LANDSCAPE - Sheets 45-59
7.0 FINISH SCHEDULE - Sheets 60-61

DIMENSIONS ARE APPROXIMATE AND ARE FOR PROPORTIONAL RELATIONSHIPS. ALL DIMENSIONS OF EXISTING ELEMENTS REQUIRE FIELD VERIFICATION. FIELD ADJUSTMENTS TO LAYOUT ARE EXPECTED.

Texas Department of Transportation

* NOT INTENDED FOR PERMIT OR CONSTRUCTION. ALL MATERIALS, DETAILS, AND LOCATION OF ELEMENTS SHOWN AS PART OF THIS DOCUMENT ARE SUBJECT TO FINAL PLANS AND SPECIFICATIONS.

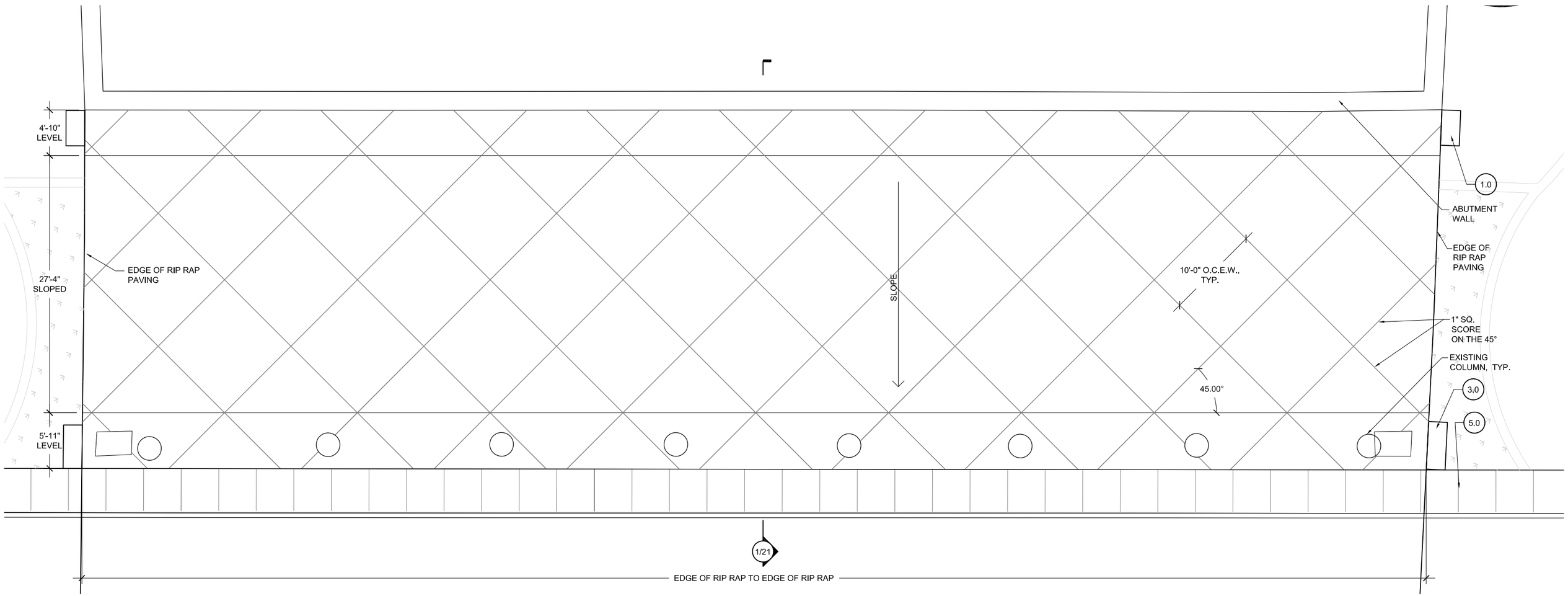

SOUTHEAST ABUTMENT AND SLOPED RIP RAP WALL PLAN

SCALE: 1" = 10'

NOTE:
EXPANSION JOINTS SHALL BE CONSIDERED DURING FINAL DESIGN. THEY SHALL BE LOCATED AT REVEALS OR AT EDGES BETWEEN DIFFERENT ELEMENTS, SUCH AS PILASTERS AND RETAINING WALL PANELS, WHENEVER POSSIBLE.

1.0 RETAINING WALLS & PILASTERS - Sheets 6-11
2.0 BRIDGE ABUTMENT WALLS & RIP RAP - Sheets 12-24
3.0 PYLONS - Sheets 25-30
4.0 LIGHTING STANDARDS - Sheets 31-34
5.0 PAVING/ HARDSCAPE - Sheets 35-44
6.0 LANDSCAPE - Sheets 45-59
7.0 FINISH SCHEDULE - Sheets 60-61

DIMENSIONS ARE APPROXIMATE AND ARE FOR PROPORTIONAL RELATIONSHIPS. ALL DIMENSIONS OF EXISTING ELEMENTS REQUIRE FIELD VERIFICATION. FIELD ADJUSTMENTS TO LAYOUT ARE EXPECTED.

Texas Department of Transportation

* NOT INTENDED FOR PERMIT OR CONSTRUCTION. ALL MATERIALS, DETAILS, AND LOCATION OF ELEMENTS SHOWN AS PART OF THIS DOCUMENT ARE SUBJECT TO FINAL PLANS AND SPECIFICATIONS.

BRIDGE ABUTMENT WALLS & RIP RAP - SPIRIT OF TEXAS DRIVE

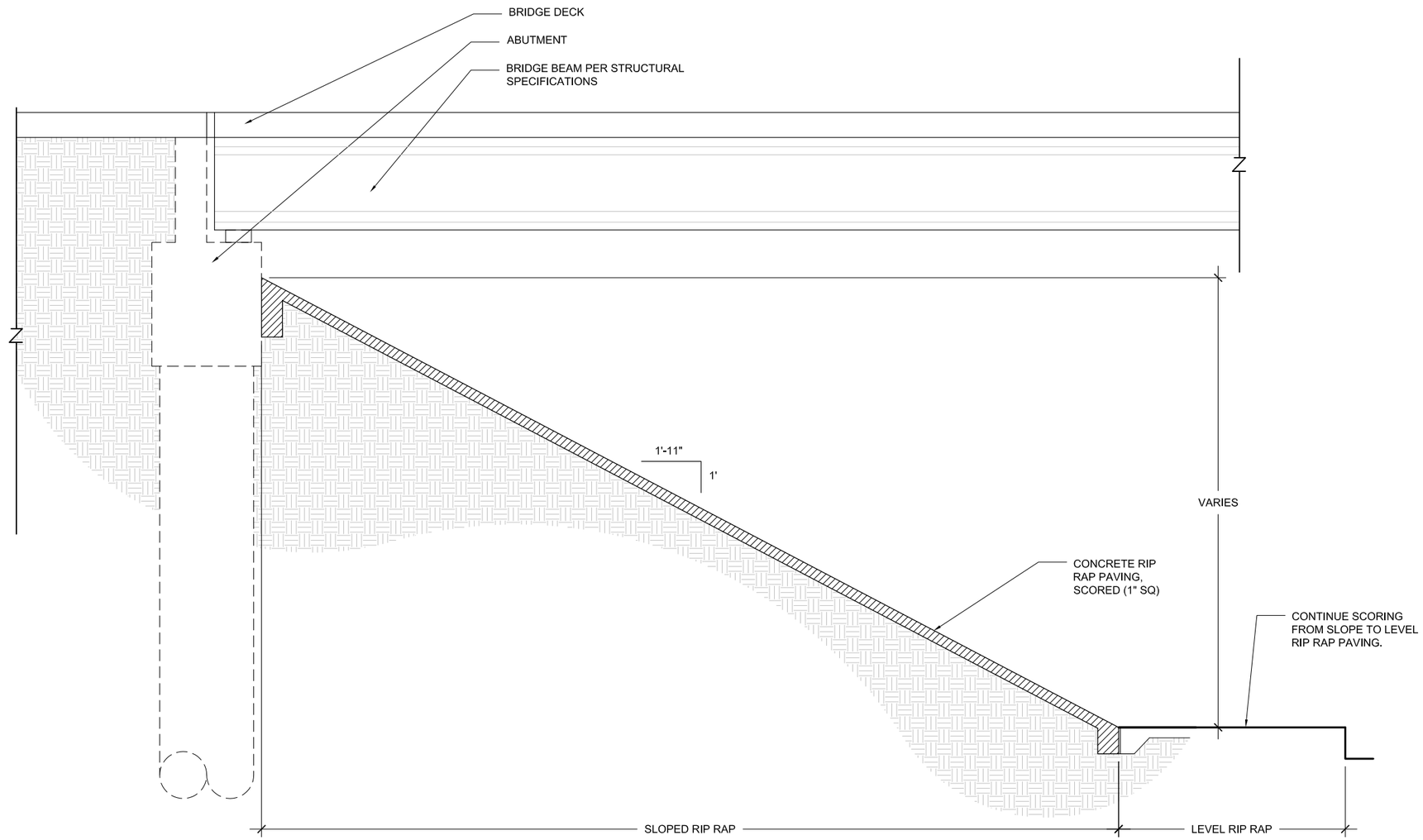

1 ABUTMENT AND SLOPED RIP RAP WALL SECTION

SCALE: 1" = 10'

NOTE:
EXPANSION JOINTS SHALL BE CONSIDERED DURING FINAL DESIGN. THEY SHALL BE LOCATED AT REVEALS OR AT EDGES BETWEEN DIFFERENT ELEMENTS, SUCH AS PILASTERS AND RETAINING WALL PANELS, WHENEVER POSSIBLE.

DIMENSIONS ARE APPROXIMATE AND ARE FOR PROPORTIONAL RELATIONSHIPS. ALL DIMENSIONS OF EXISTING ELEMENTS REQUIRE FIELD VERIFICATION. FIELD ADJUSTMENTS TO LAYOUT ARE EXPECTED.

Texas Department of Transportation

* NOT INTENDED FOR PERMIT OR CONSTRUCTION. ALL MATERIALS, DETAILS, AND LOCATION OF ELEMENTS SHOWN AS PART OF THIS DOCUMENT ARE SUBJECT TO FINAL PLANS AND SPECIFICATIONS.

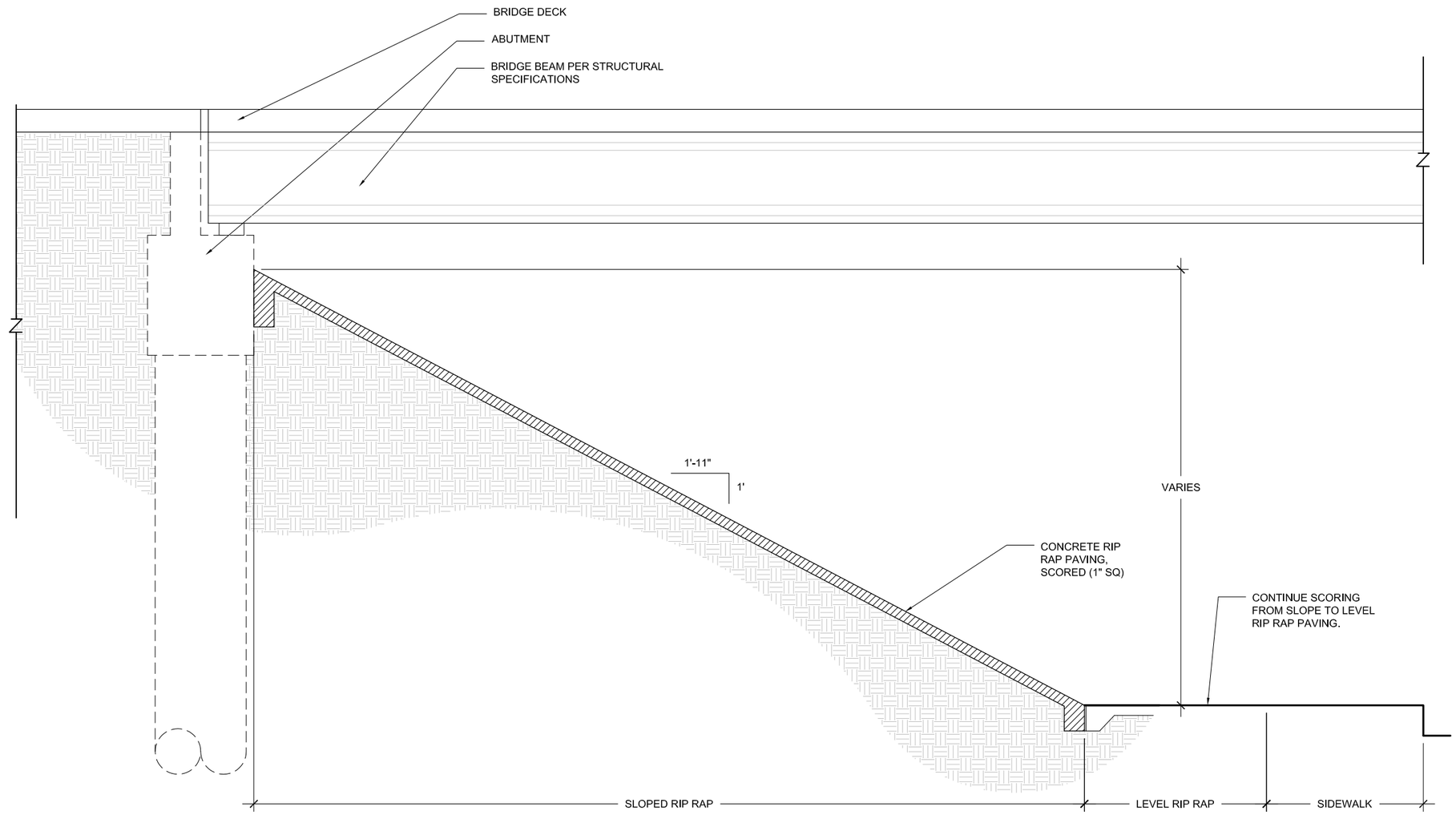

1 ABUTMENT AND SLOPED RIP RAP WALL SECTION

SCALE: 1" = 10'

NOTE:
EXPANSION JOINTS SHALL BE CONSIDERED DURING FINAL DESIGN. THEY SHALL BE LOCATED AT REVEALS OR AT EDGES BETWEEN DIFFERENT ELEMENTS, SUCH AS PILASTERS AND RETAINING WALL PANELS, WHENEVER POSSIBLE.

DIMENSIONS ARE APPROXIMATE AND ARE FOR PROPORTIONAL RELATIONSHIPS. ALL DIMENSIONS OF EXISTING ELEMENTS REQUIRE FIELD VERIFICATION. FIELD ADJUSTMENTS TO LAYOUT ARE EXPECTED.

Texas Department of Transportation

* NOT INTENDED FOR PERMIT OR CONSTRUCTION. ALL MATERIALS, DETAILS, AND LOCATION OF ELEMENTS SHOWN AS PART OF THIS DOCUMENT ARE SUBJECT TO FINAL PLANS AND SPECIFICATIONS.

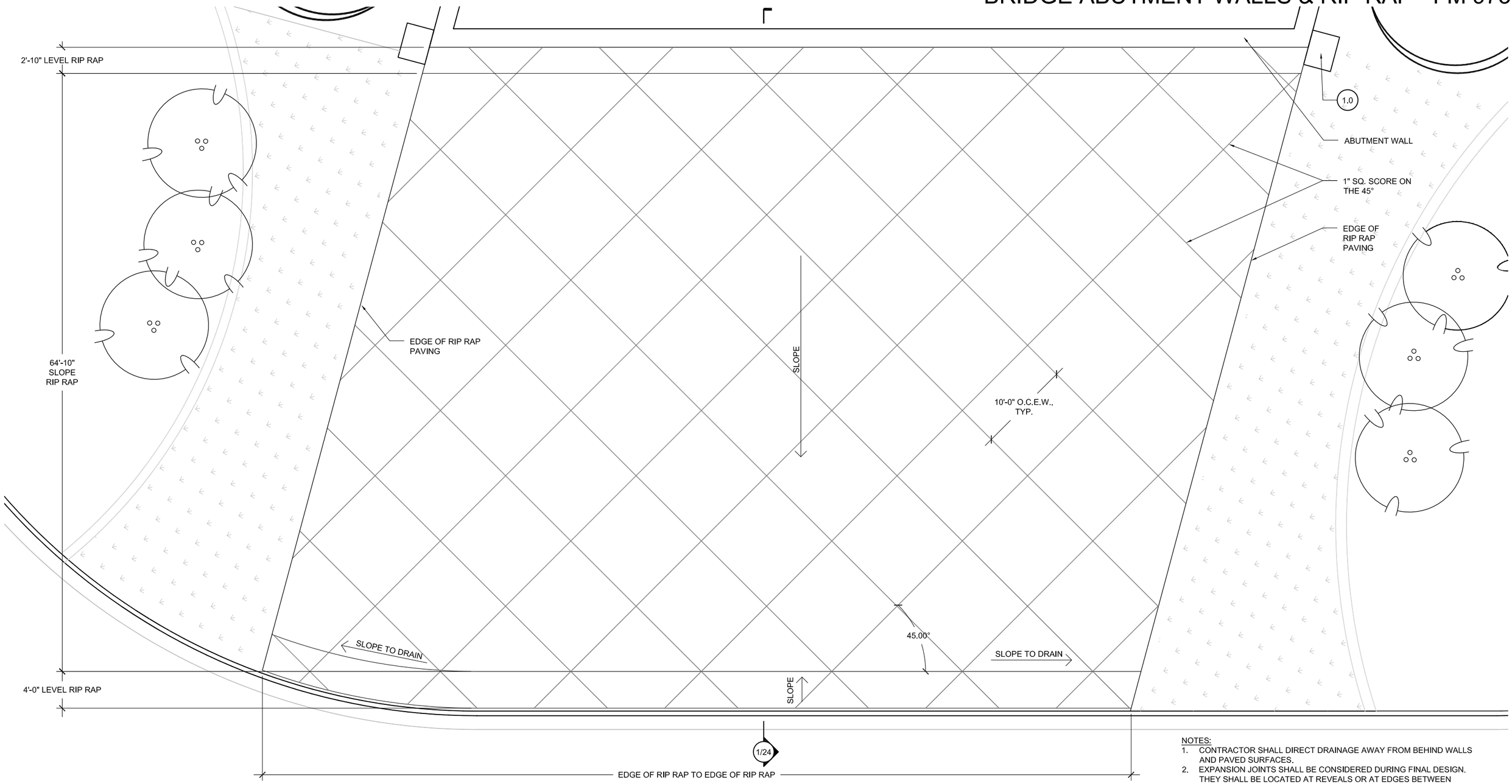

NOTES:
1. CONTRACTOR SHALL DIRECT DRAINAGE AWAY FROM BEHIND WALLS AND PAVED SURFACES.
2. EXPANSION JOINTS SHALL BE CONSIDERED DURING FINAL DESIGN. THEY SHALL BE LOCATED AT REVEALS OR AT EDGES BETWEEN DIFFERENT ELEMENTS, SUCH AS PILASTERS AND RETAINING WALL PANELS, WHENEVER POSSIBLE.

NORTHWEST ABUTMENT AND SLOPED RIP RAP WALL PLAN

SCALE: 1" = 10'

1.0 RETAINING WALLS & PILASTERS - Sheets 6-11
2.0 BRIDGE ABUTMENT WALLS & RIP RAP - Sheets 12-24
3.0 PYLONS - Sheets 25-30
4.0 LIGHTING STANDARDS - Sheets 31-34
5.0 PAVING/ HARDSCAPE - Sheets 35-44
6.0 LANDSCAPE - Sheets 45-59
7.0 FINISH SCHEDULE - Sheets 60-61

DIMENSIONS ARE APPROXIMATE AND ARE FOR PROPORTIONAL RELATIONSHIPS. ALL DIMENSIONS OF EXISTING ELEMENTS REQUIRE FIELD VERIFICATION. FIELD ADJUSTMENTS TO LAYOUT ARE EXPECTED.

Texas Department of Transportation

* NOT INTENDED FOR PERMIT OR CONSTRUCTION. ALL MATERIALS, DETAILS, AND LOCATION OF ELEMENTS SHOWN AS PART OF THIS DOCUMENT ARE SUBJECT TO FINAL PLANS AND SPECIFICATIONS.

BRIDGE ABUTMENT WALLS & RIP RAP - FM 973

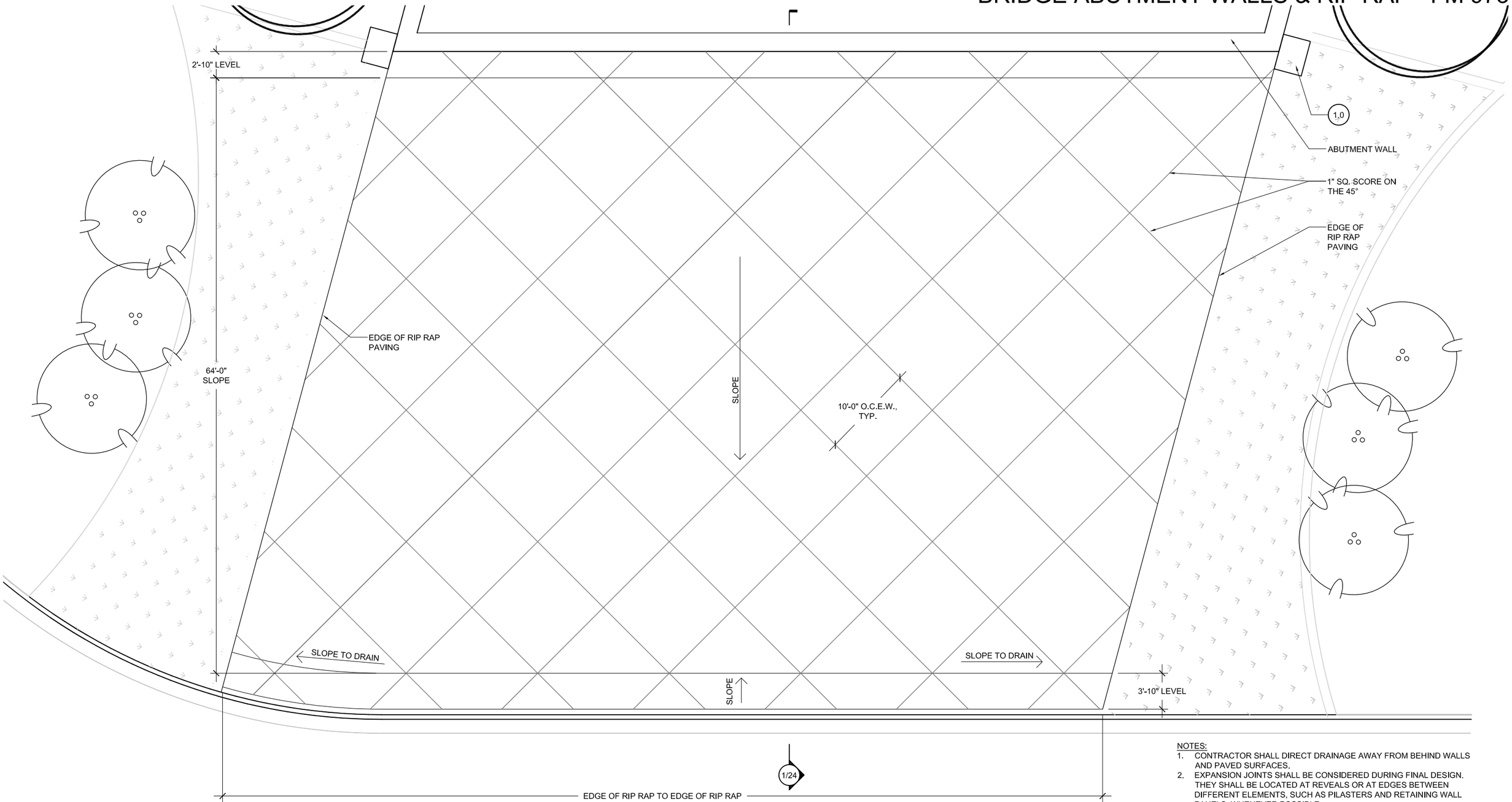

SOUTHEAST ABUTMENT AND SLOPED RIP RAP WALL PLAN

SCALE: 1" = 10'

NOTES:
1. CONTRACTOR SHALL DIRECT DRAINAGE AWAY FROM BEHIND WALLS AND PAVED SURFACES.
2. EXPANSION JOINTS SHALL BE CONSIDERED DURING FINAL DESIGN. THEY SHALL BE LOCATED AT REVEALS OR AT EDGES BETWEEN DIFFERENT ELEMENTS, SUCH AS PILASTERS AND RETAINING WALL PANELS, WHENEVER POSSIBLE.

1.0 RETAINING WALLS & PILASTERS - Sheets 6-11
2.0 BRIDGE ABUTMENT WALLS & RIP RAP - Sheets 12-24
3.0 PYLONS - Sheets 25-30
4.0 LIGHTING STANDARDS - Sheets 31-34
5.0 PAVING/ HARDSCAPE - Sheets 35-44
6.0 LANDSCAPE - Sheets 45-59
7.0 FINISH SCHEDULE - Sheets 60-61

DIMENSIONS ARE APPROXIMATE AND ARE FOR PROPORTIONAL RELATIONSHIPS. ALL DIMENSIONS OF EXISTING ELEMENTS REQUIRE FIELD VERIFICATION. FIELD ADJUSTMENTS TO LAYOUT ARE EXPECTED.

Texas Department of Transportation

* NOT INTENDED FOR PERMIT OR CONSTRUCTION. ALL MATERIALS, DETAILS, AND LOCATION OF ELEMENTS SHOWN AS PART OF THIS DOCUMENT ARE SUBJECT TO FINAL PLANS AND SPECIFICATIONS.

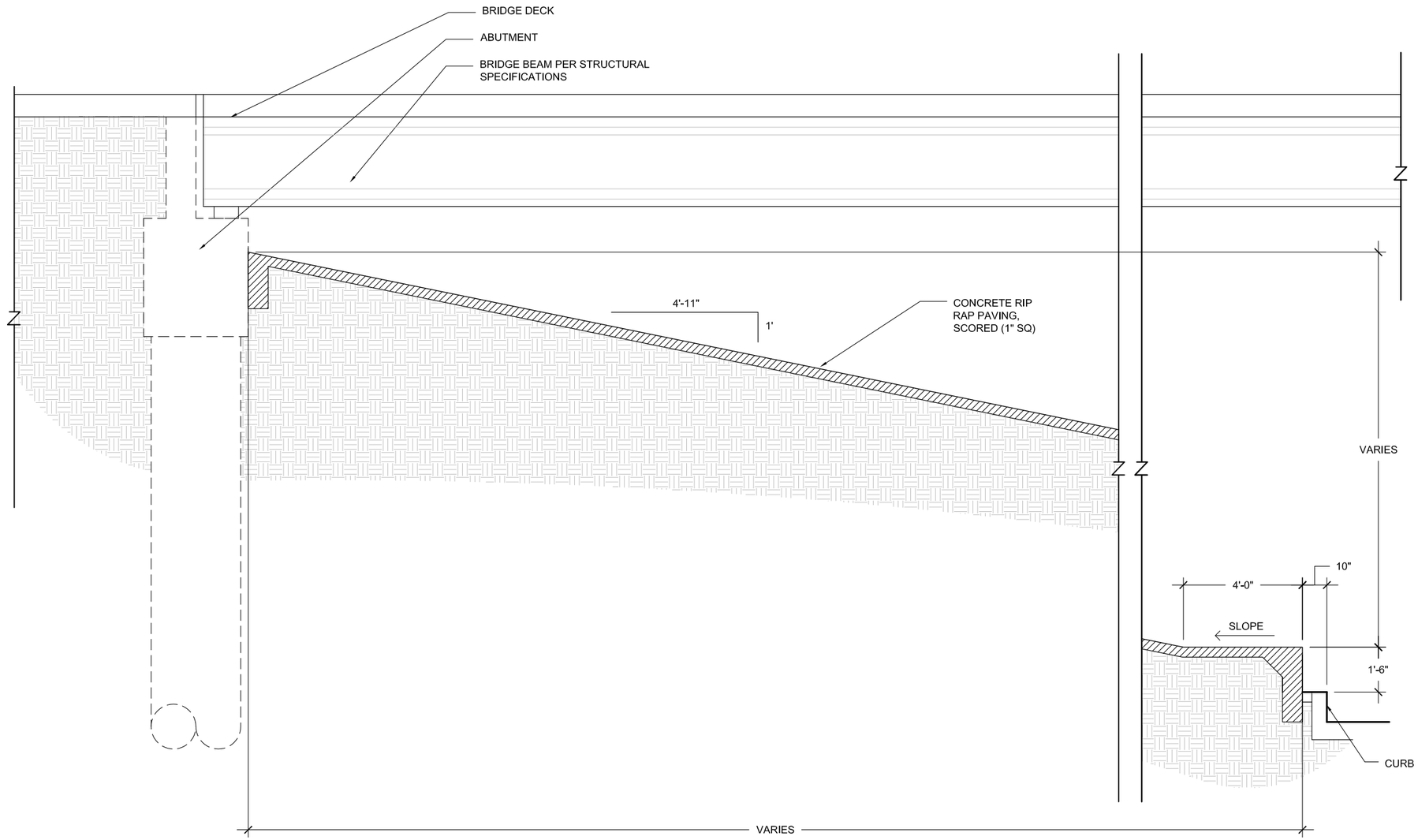

1 ABUTMENT AND SLOPED RIP RAP WALL SECTION
SCALE: 1/4" = 1'-0"

NOTES:
1. CONTRACTOR SHALL DIRECT DRAINAGE AWAY FROM BEHIND WALLS AND PAVED SURFACES.
2. EXPANSION JOINTS SHALL BE CONSIDERED DURING FINAL DESIGN. THEY SHALL BE LOCATED AT REVEALS OR AT EDGES BETWEEN DIFFERENT ELEMENTS, SUCH AS PILASTERS AND RETAINING WALL PANELS, WHENEVER POSSIBLE.

DIMENSIONS ARE APPROXIMATE AND ARE FOR PROPORTIONAL RELATIONSHIPS. ALL DIMENSIONS OF EXISTING ELEMENTS REQUIRE FIELD VERIFICATION. FIELD ADJUSTMENTS TO LAYOUT ARE EXPECTED.

Texas Department of Transportation

* NOT INTENDED FOR PERMIT OR CONSTRUCTION. ALL MATERIALS, DETAILS, AND LOCATION OF ELEMENTS SHOWN AS PART OF THIS DOCUMENT ARE SUBJECT TO FINAL PLANS AND SPECIFICATIONS.

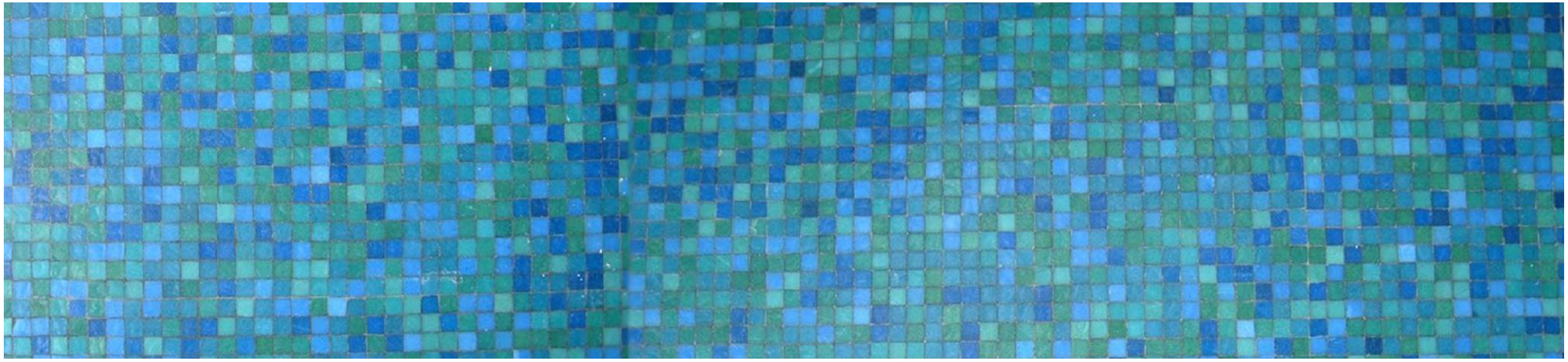

3.0 PYLONS

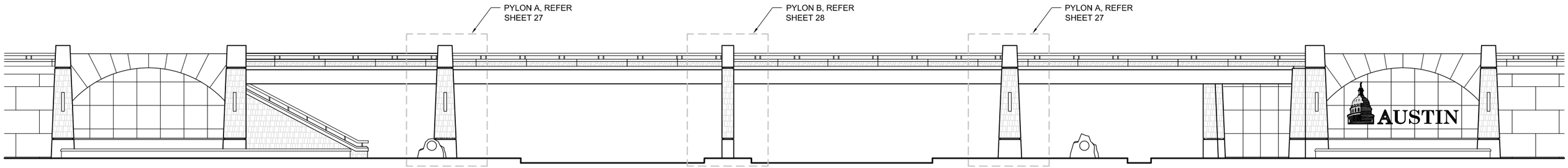

1 PRESIDENTIAL BOULEVARD ELEVATION

SCALE: 1" = 20'-0"

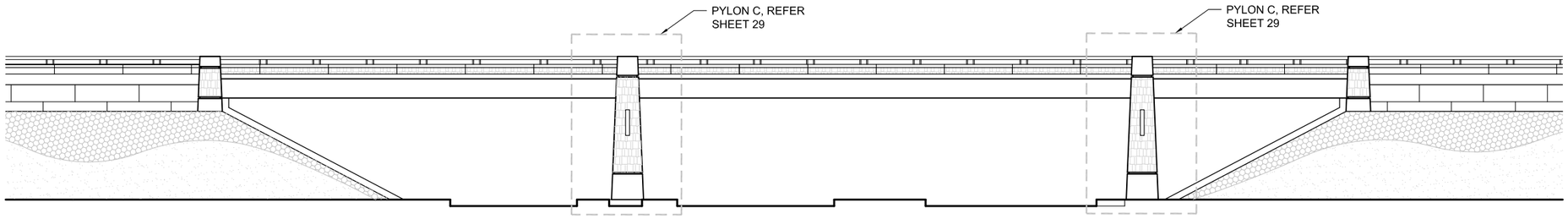

2 SPIRIT OF TEXAS DRIVE ELEVATION

SCALE: 1" = 20'-0"

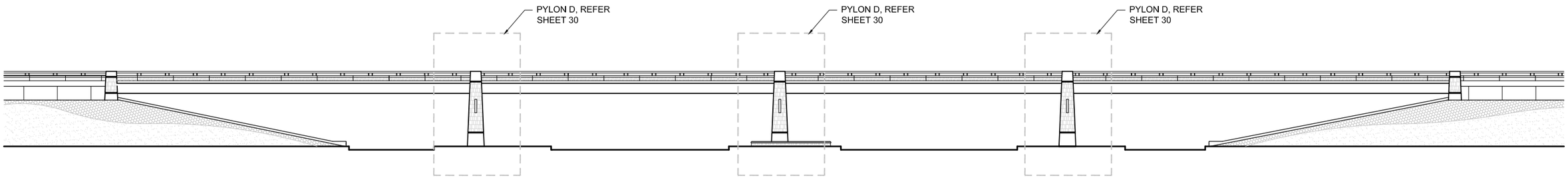

3 FM 973 ELEVATION

SCALE: 1" = 30'-0"

DIMENSIONS ARE APPROXIMATE AND ARE FOR PROPORTIONAL RELATIONSHIPS. ALL DIMENSIONS OF EXISTING ELEMENTS REQUIRE FIELD VERIFICATION. FIELD ADJUSTMENTS TO LAYOUT ARE EXPECTED.

Texas Department of Transportation

* NOT INTENDED FOR PERMIT OR CONSTRUCTION. ALL MATERIALS, DETAILS, AND LOCATION OF ELEMENTS SHOWN AS PART OF THIS DOCUMENT ARE SUBJECT TO FINAL PLANS AND SPECIFICATIONS.

PYLONS - PRESIDENTIAL BOULEVARD DETAILS

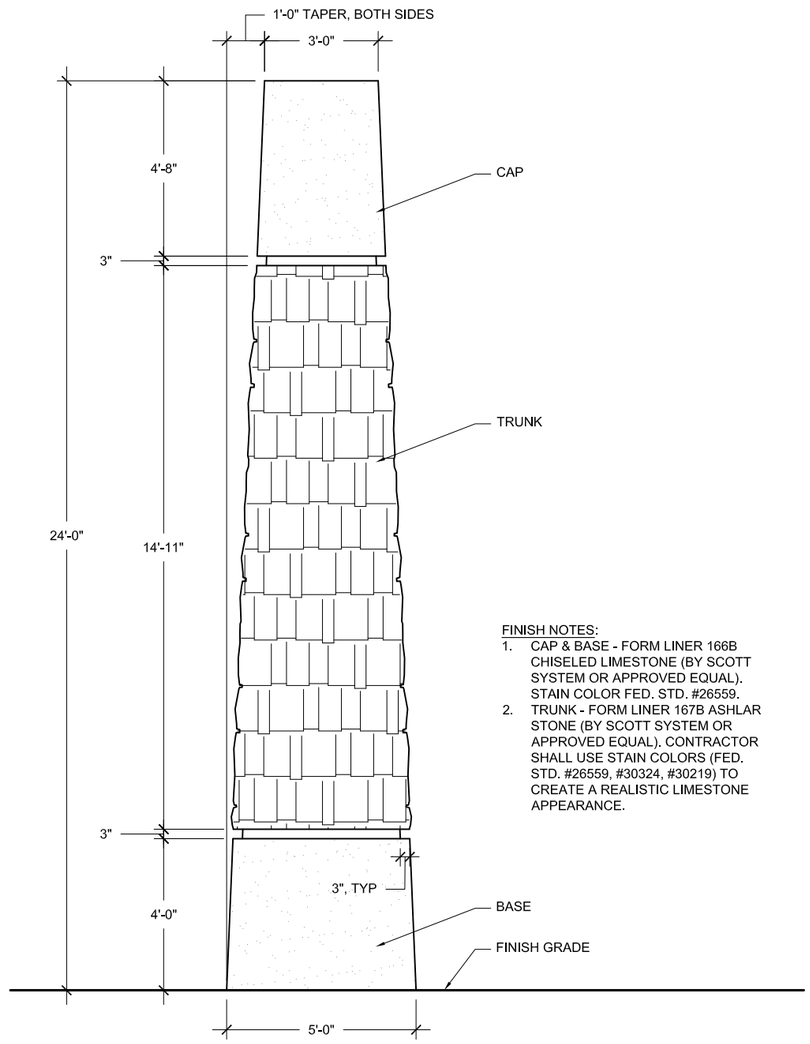

FINISH NOTES:

1. CAP & BASE - FORM LINER 166B CHISELED LIMESTONE (BY SCOTT SYSTEM OR APPROVED EQUAL). STAIN COLOR FED. STD. #26559.
2. TRUNK - FORM LINER 167B ASHLAR STONE (BY SCOTT SYSTEM OR APPROVED EQUAL). CONTRACTOR SHALL USE STAIN COLORS (FED. STD. #26559, #30324, #30219) TO CREATE A REALISTIC LIMESTONE APPEARANCE.

1 PYLON A ELEVATION

SCALE: 1/4" = 1'-0"

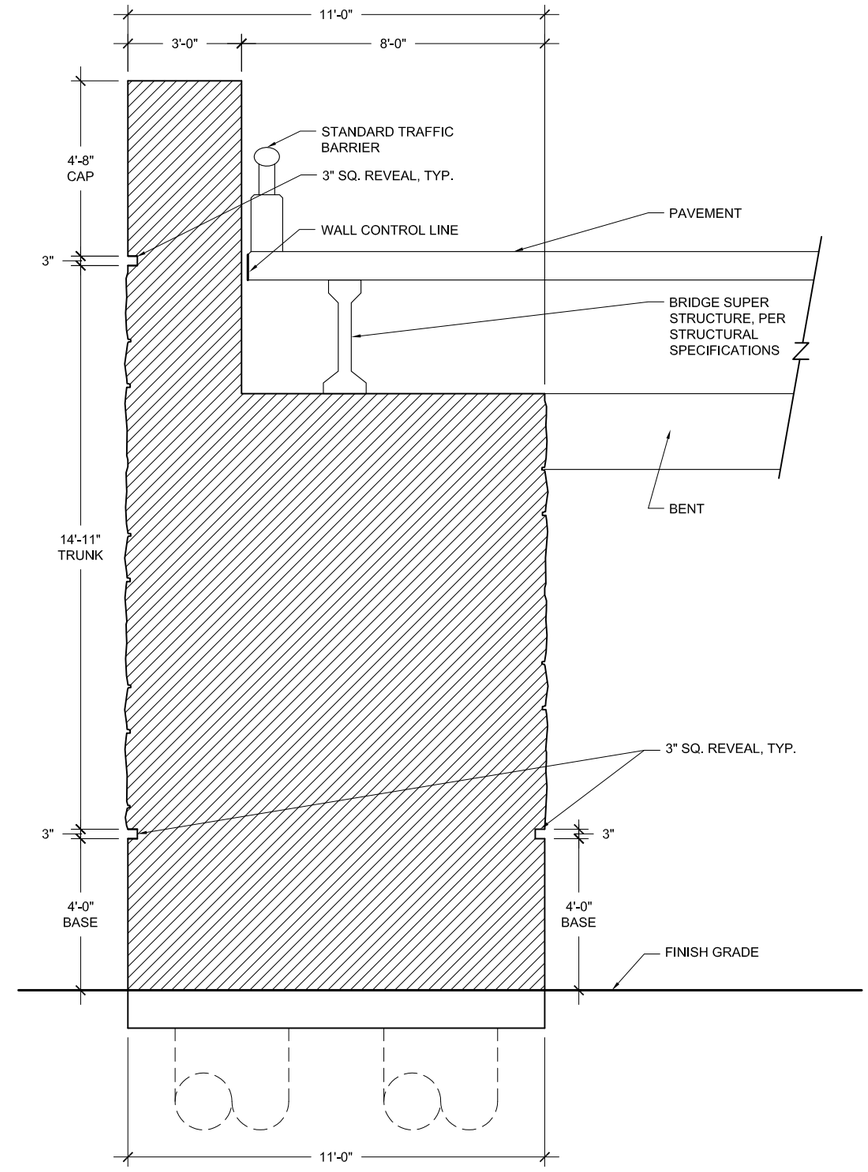

2 PYLON A SECTION

SCALE: 1/4" = 1'-0"

DIMENSIONS ARE APPROXIMATE AND ARE FOR PROPORTIONAL RELATIONSHIPS. ALL DIMENSIONS OF EXISTING ELEMENTS REQUIRE FIELD VERIFICATION. FIELD ADJUSTMENTS TO LAYOUT ARE EXPECTED.

* NOT INTENDED FOR PERMIT OR CONSTRUCTION. ALL MATERIALS, DETAILS, AND LOCATION OF ELEMENTS SHOWN AS PART OF THIS DOCUMENT ARE SUBJECT TO FINAL PLANS AND SPECIFICATIONS.

PYLONS - PRESIDENTIAL BOULEVARD DETAILS

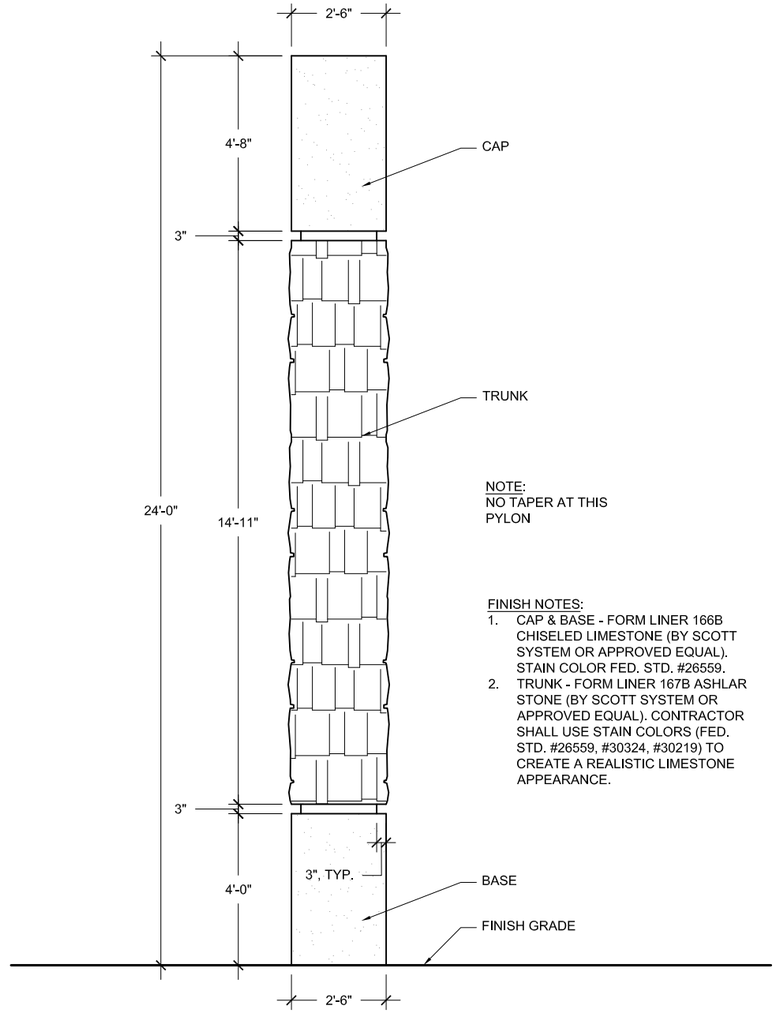

NOTE:
NO TAPER AT THIS PYLON

FINISH NOTES:
1. CAP & BASE - FORM LINER 166B CHISELED LIMESTONE (BY SCOTT SYSTEM OR APPROVED EQUAL). STAIN COLOR FED. STD. #26559.
2. TRUNK - FORM LINER 167B ASHLAR STONE (BY SCOTT SYSTEM OR APPROVED EQUAL). CONTRACTOR SHALL USE STAIN COLORS (FED. STD. #26559, #30324, #30219) TO CREATE A REALISTIC LIMESTONE APPEARANCE.

1 PYLON B ELEVATION
SCALE: 1/4" = 1'-0"

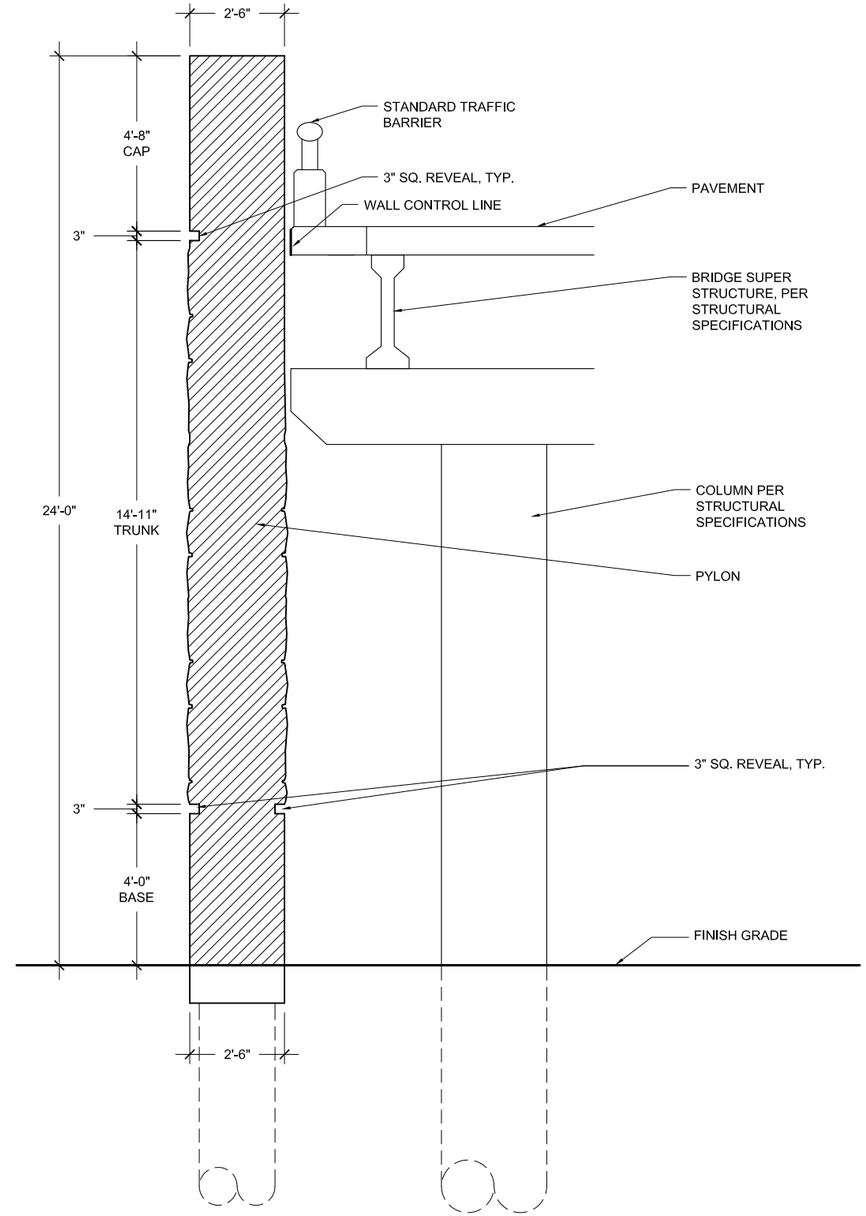

2 PYLON B SECTION
SCALE: 1/4" = 1'-0"

DIMENSIONS ARE APPROXIMATE AND ARE FOR PROPORTIONAL RELATIONSHIPS. ALL DIMENSIONS OF EXISTING ELEMENTS REQUIRE FIELD VERIFICATION. FIELD ADJUSTMENTS TO LAYOUT ARE EXPECTED.

* NOT INTENDED FOR PERMIT OR CONSTRUCTION. ALL MATERIALS, DETAILS, AND LOCATION OF ELEMENTS SHOWN AS PART OF THIS DOCUMENT ARE SUBJECT TO FINAL PLANS AND SPECIFICATIONS.

PYLONS - SPIRIT OF TEXAS DRIVE DETAILS

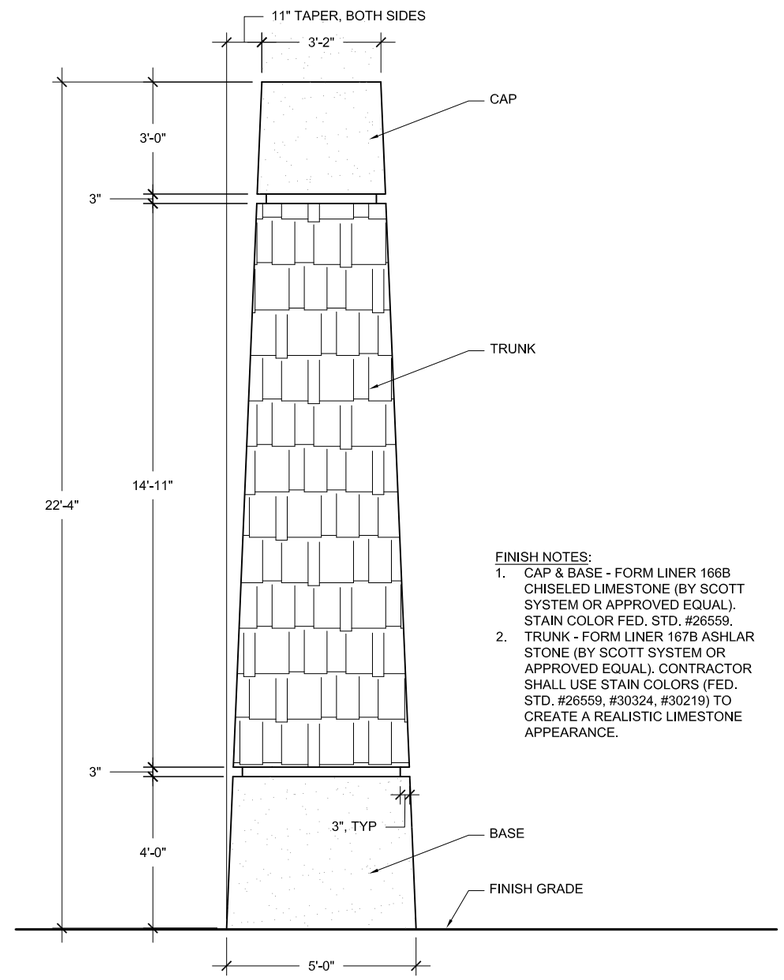

FINISH NOTES:

1. CAP & BASE - FORM LINER 166B CHISELED LIMESTONE (BY SCOTT SYSTEM OR APPROVED EQUAL). STAIN COLOR FED. STD. #26559.
2. TRUNK - FORM LINER 167B ASHLAR STONE (BY SCOTT SYSTEM OR APPROVED EQUAL). CONTRACTOR SHALL USE STAIN COLORS (FED. STD. #26559, #30324, #30219) TO CREATE A REALISTIC LIMESTONE APPEARANCE.

1 PYLON C ELEVATION

SCALE: 1/4" = 1'-0"

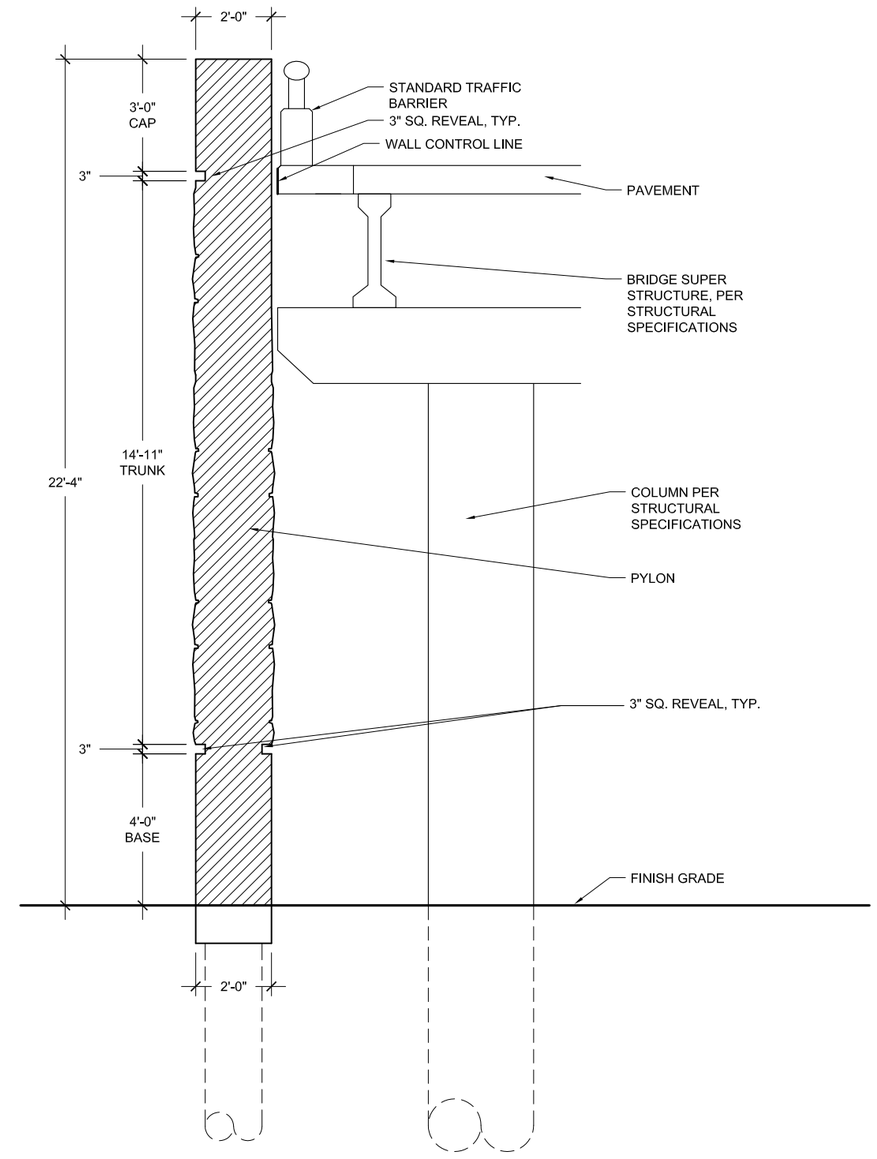

2 PYLON C SECTION

SCALE: 1/4" = 1'-0"

DIMENSIONS ARE APPROXIMATE AND ARE FOR PROPORTIONAL RELATIONSHIPS. ALL DIMENSIONS OF EXISTING ELEMENTS REQUIRE FIELD VERIFICATION. FIELD ADJUSTMENTS TO LAYOUT ARE EXPECTED.

* NOT INTENDED FOR PERMIT OR CONSTRUCTION. ALL MATERIALS, DETAILS, AND LOCATION OF ELEMENTS SHOWN AS PART OF THIS DOCUMENT ARE SUBJECT TO FINAL PLANS AND SPECIFICATIONS.

PYLONS - FM 973 DETAILS

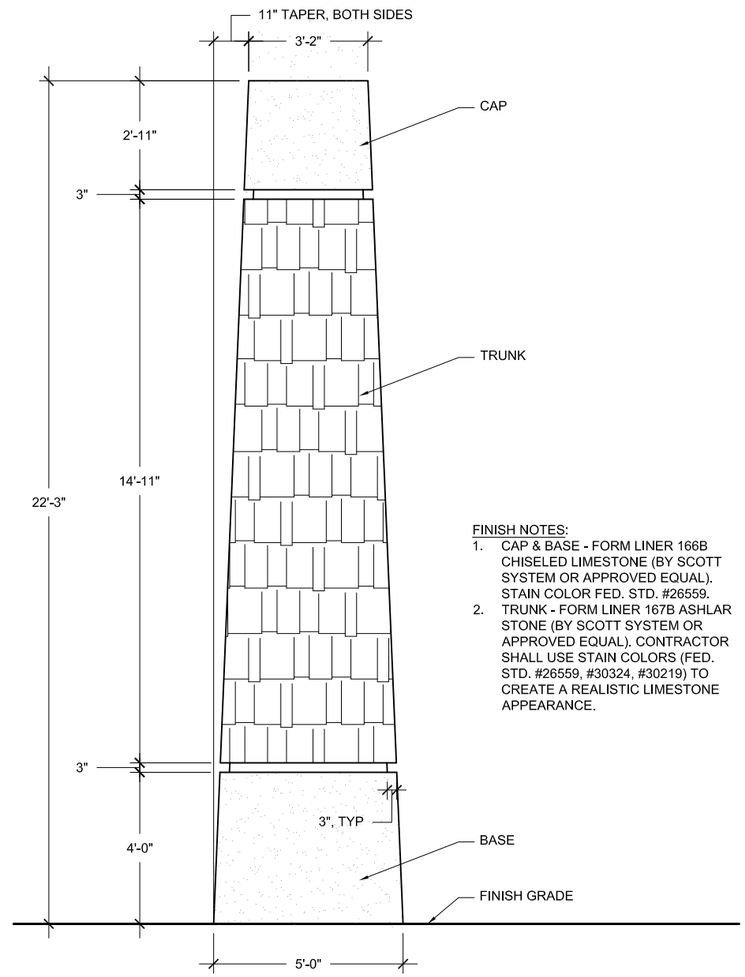

FINISH NOTES:

1. CAP & BASE - FORM LINER 166B CHISELED LIMESTONE (BY SCOTT SYSTEM OR APPROVED EQUAL). STAIN COLOR FED. STD. #26559.
2. TRUNK - FORM LINER 167B ASHLAR STONE (BY SCOTT SYSTEM OR APPROVED EQUAL). CONTRACTOR SHALL USE STAIN COLORS (FED. STD. #26559, #30324, #30219) TO CREATE A REALISTIC LIMESTONE APPEARANCE.

1 PYLON D ELEVATION

SCALE: 1/4" = 1'-0"

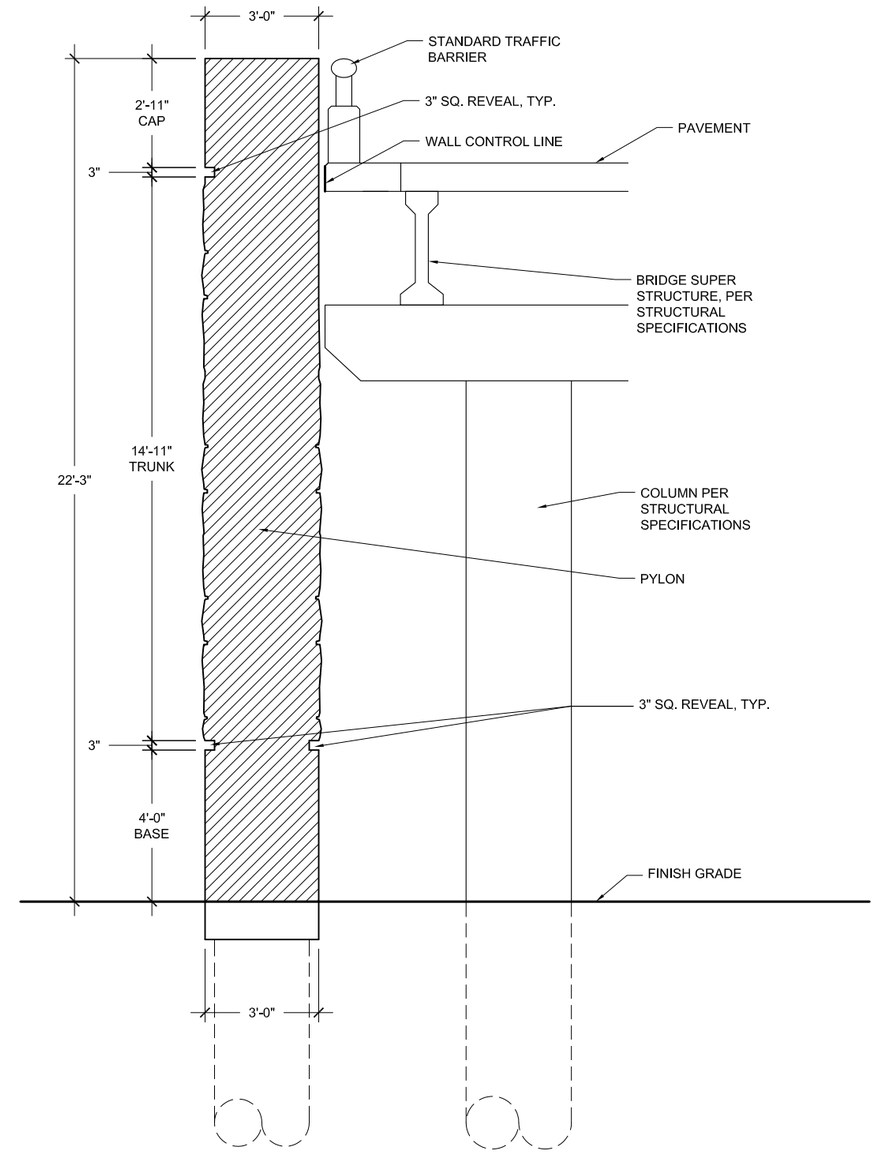

2 PYLON D SECTION

SCALE: 1/4" = 1'-0"

DIMENSIONS ARE APPROXIMATE AND ARE FOR PROPORTIONAL RELATIONSHIPS. ALL DIMENSIONS OF EXISTING ELEMENTS REQUIRE FIELD VERIFICATION. FIELD ADJUSTMENTS TO LAYOUT ARE EXPECTED.

* NOT INTENDED FOR PERMIT OR CONSTRUCTION. ALL MATERIALS, DETAILS, AND LOCATION OF ELEMENTS SHOWN AS PART OF THIS DOCUMENT ARE SUBJECT TO FINAL PLANS AND SPECIFICATIONS.

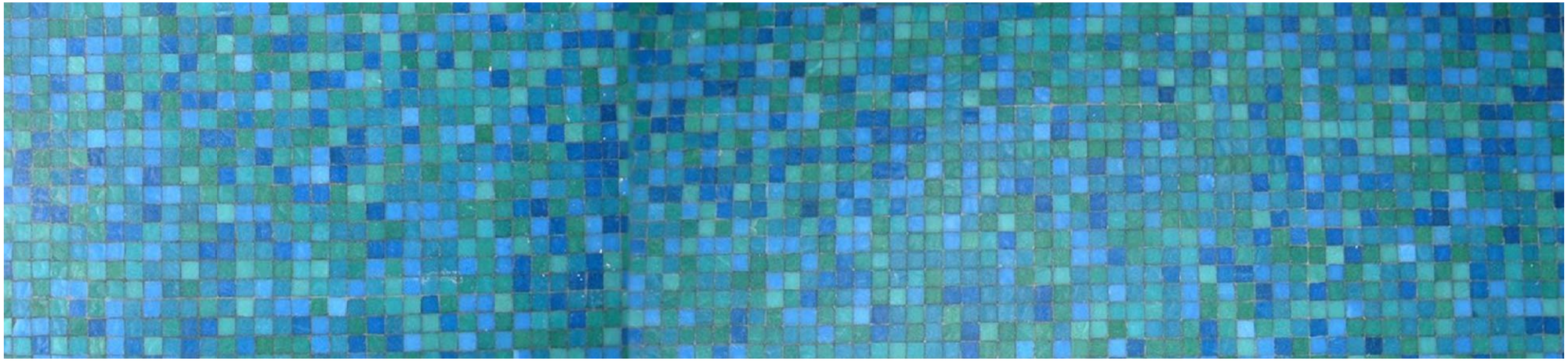

4.0 LIGHTING STANDARDS

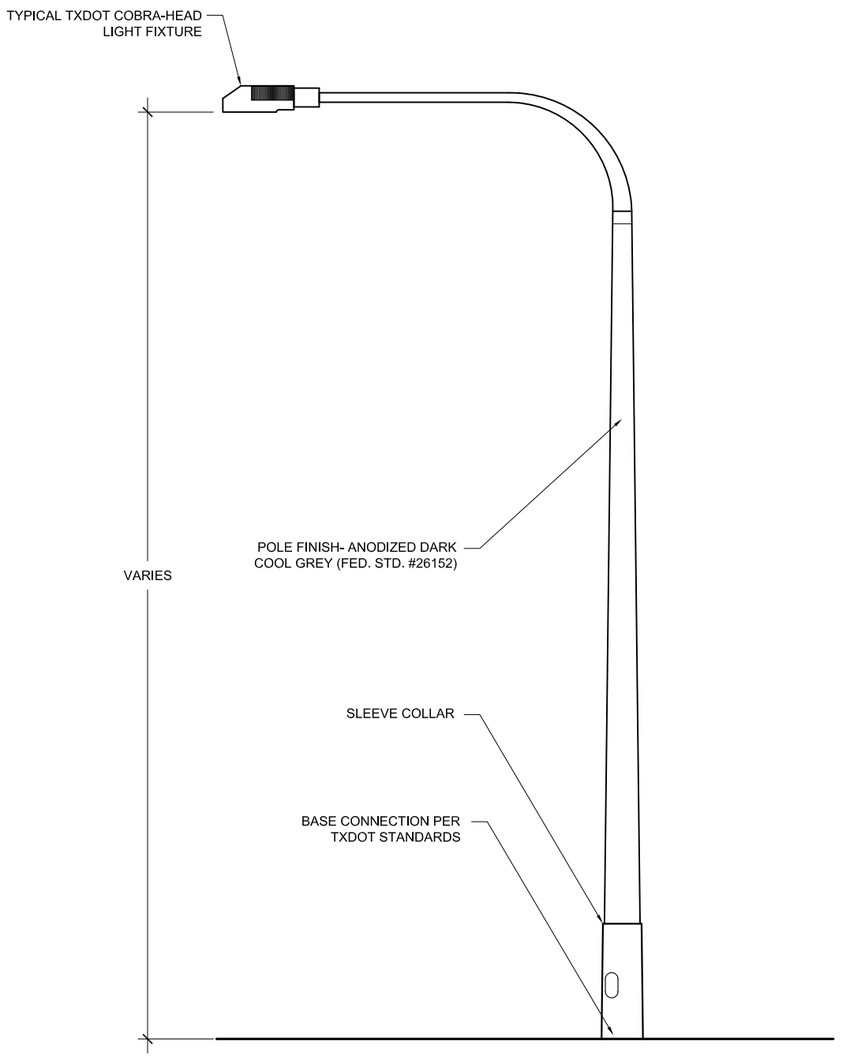

1 SINGLE DAVIT STYLE HORIZONTAL ARM W/ POLE

SCALE: 1/4" = 1'-0"

NOTES:

1. DEPICTION OF POLES ARE NOT INTENDED TO INDICATE FURNISHING TYPE, BUT INSTEAD TO SHOW FINISH AND REQUIRED FULL CUT-OFF.
2. CONTRACTOR SHALL VERIFY WITH LOCAL, STATE AND FEDERAL AGENCIES REGARDING THE HEIGHTS OF LIGHT POLES AND FIXTURES WITHIN PROXIMITY TO AIRPORTS.
3. SAFETY LIGHTING SHALL BE PROVIDED WITHIN THE ENTIRE PROJECT LIMITS PER TXDOT STANDARDS.
4. LIGHT FIXTURES AND POLES MUST BE APPROVED BY TXDOT AND THE AUSTIN-BERGSTROM INTERNATIONAL AIRPORT

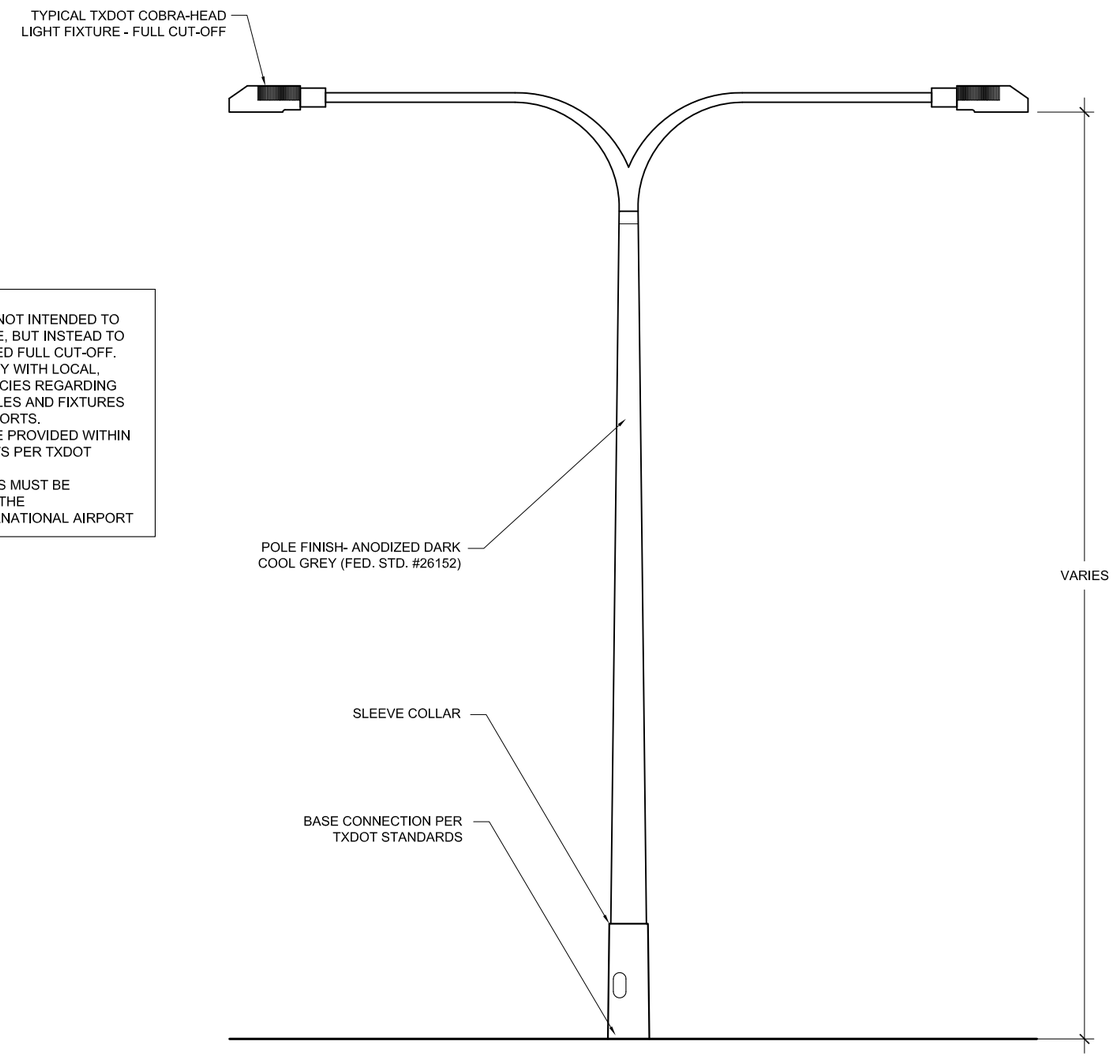

2 DOUBLE DAVIT STYLE HORIZONTAL ARM W/ POLE

SCALE: 1/4" = 1'-0"

DIMENSIONS ARE APPROXIMATE AND ARE FOR PROPORTIONAL RELATIONSHIPS. ALL DIMENSIONS OF EXISTING ELEMENTS REQUIRE FIELD VERIFICATION. FIELD ADJUSTMENTS TO LAYOUT ARE EXPECTED.

* NOT INTENDED FOR PERMIT OR CONSTRUCTION. ALL MATERIALS, DETAILS, AND LOCATION OF ELEMENTS SHOWN AS PART OF THIS DOCUMENT ARE SUBJECT TO FINAL PLANS AND SPECIFICATIONS.

NOTES:
1. BOLLARD LIGHTING SHALL MAINTAIN A MINIMUM .2 FOOTCANDLES AND A MAXIMUM 1 FOOTCANDLES AT THE SHARED USE PATH. CONTRACTOR SHALL OBTAIN AUSTIN-BERGSTROM INTERNATIONAL AIRPORT APPROVAL FOR ALL LIGHTING LEVELS.
2. BOLLARD SHALL BE FULL CUT OFF.
3. NUMBER OF UNITS SHALL DEPEND ON STATE, FEDERAL AND AVIATION LIGHTING REQUIREMENTS FOR PEDESTRIAN AND BICYCLE SHARED USED PATHS AND MANUFACTURER RECOMMENDATIONS.

1 SHARED USE PATH - TYPICAL\ BOLLARD

SCALE: NOT TO SCALE

NOTES:
1. MATTE SILVER FINISH
2. CONTRACTOR SHALL ENSURE ONCOMING VEHICLES DO NOT RECEIVE GLARE FROM THE SCONCE FIXTURES.
3. COORDINATE LIGHT LEVELS WITH THE AUSTIN-BERGSTROM INTERNATIONAL AIRPORT.
4. PRESIDENTIAL BOULEVARD SCONCE TOTAL: 12
5. SPIRIT OF TEXAS DRIVE SCONCE TOTAL: 4
6. FM 973 SCONCE TOTAL: 6

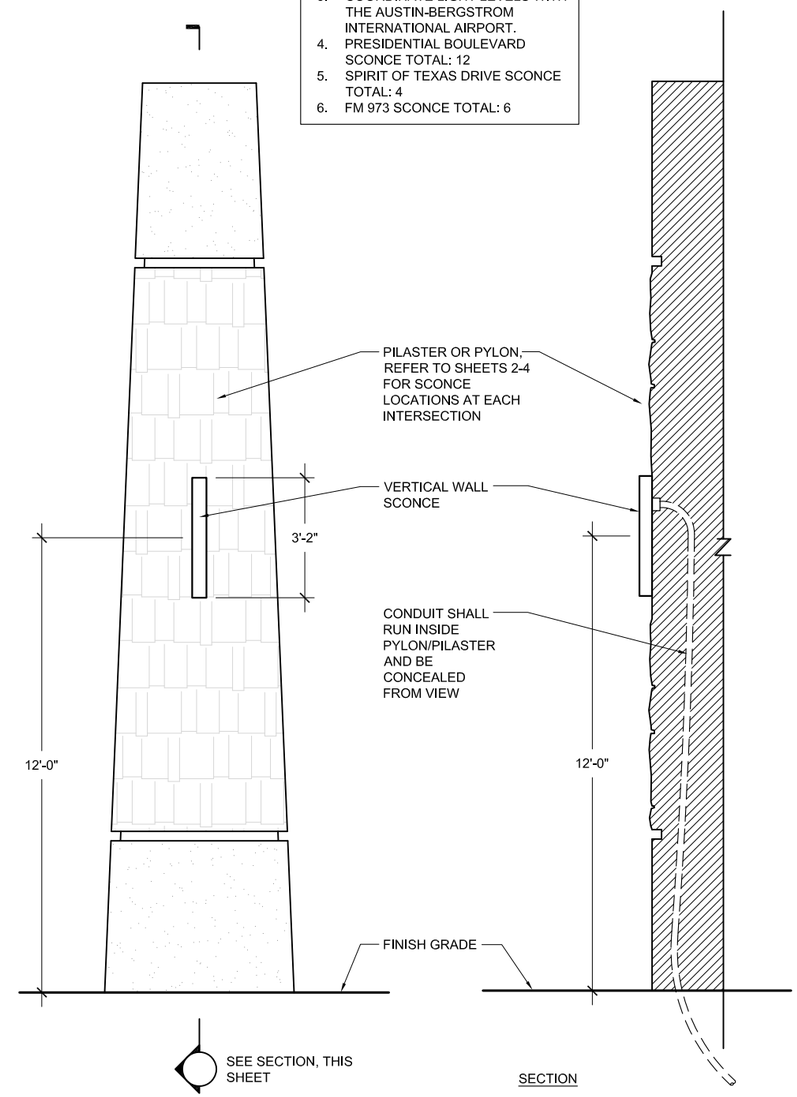

2 TYPICAL DECORATIVE SCONCE

SCALE: 1/4" = 1'-0"

DIMENSIONS ARE APPROXIMATE AND ARE FOR PROPORTIONAL RELATIONSHIPS. ALL DIMENSIONS OF EXISTING ELEMENTS REQUIRE FIELD VERIFICATION. FIELD ADJUSTMENTS TO LAYOUT ARE EXPECTED.

* NOT INTENDED FOR PERMIT OR CONSTRUCTION. ALL MATERIALS, DETAILS, AND LOCATION OF ELEMENTS SHOWN AS PART OF THIS DOCUMENT ARE SUBJECT TO FINAL PLANS AND SPECIFICATIONS.

ICON ELEMENT - PRESIDENTIAL BOULEVARD

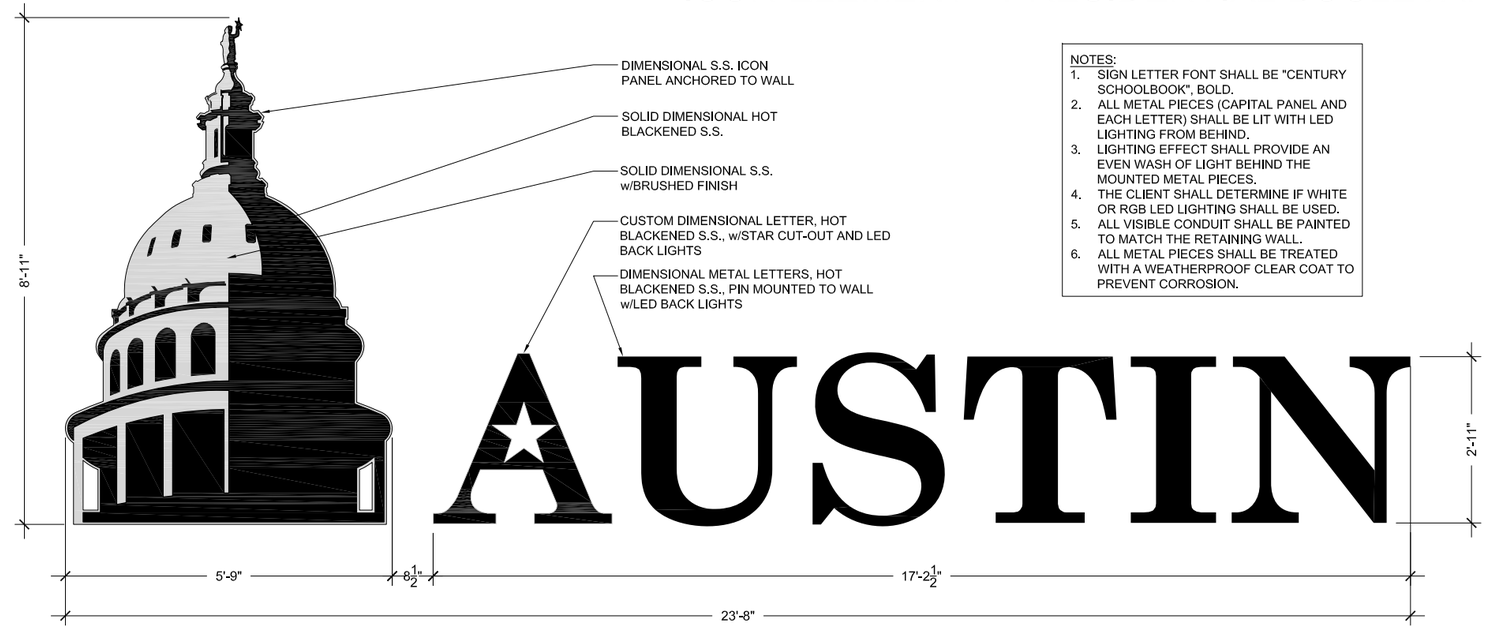

NOTES:
1. SIGN LETTER FONT SHALL BE "CENTURY SCHOOLBOOK", BOLD.
2. ALL METAL PIECES (CAPITAL PANEL AND EACH LETTER) SHALL BE LIT WITH LED LIGHTING FROM BEHIND.
3. LIGHTING EFFECT SHALL PROVIDE AN EVEN WASH OF LIGHT BEHIND THE MOUNTED METAL PIECES.
4. THE CLIENT SHALL DETERMINE IF WHITE OR RGB LED LIGHTING SHALL BE USED.
5. ALL VISIBLE CONDUIT SHALL BE PAINTED TO MATCH THE RETAINING WALL.
6. ALL METAL PIECES SHALL BE TREATED WITH A WEATHERPROOF CLEAR COAT TO PREVENT CORROSION.

1 ICON ELEMENT DETAIL
SCALE: 1/4" = 1'-0"

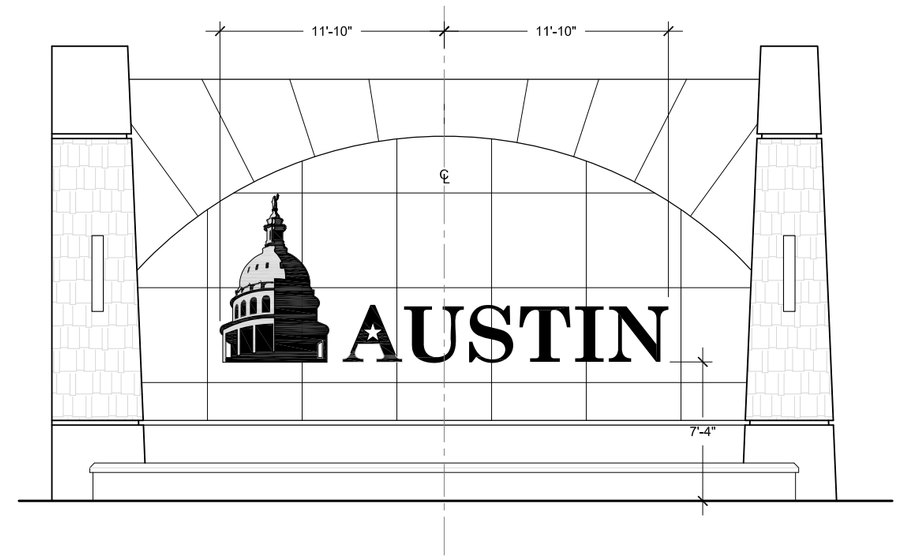

2 ICON ELEMENT WALL PLACEMENT DETAIL
SCALE: 1/8" = 1'-0"

DIMENSIONS ARE APPROXIMATE AND ARE FOR PROPORTIONAL RELATIONSHIPS. ALL DIMENSIONS OF EXISTING ELEMENTS REQUIRE FIELD VERIFICATION. FIELD ADJUSTMENTS TO LAYOUT ARE EXPECTED.

Texas Department of Transportation

* NOT INTENDED FOR PERMIT OR CONSTRUCTION. ALL MATERIALS, DETAILS, AND LOCATION OF ELEMENTS SHOWN AS PART OF THIS DOCUMENT ARE SUBJECT TO FINAL PLANS AND SPECIFICATIONS.

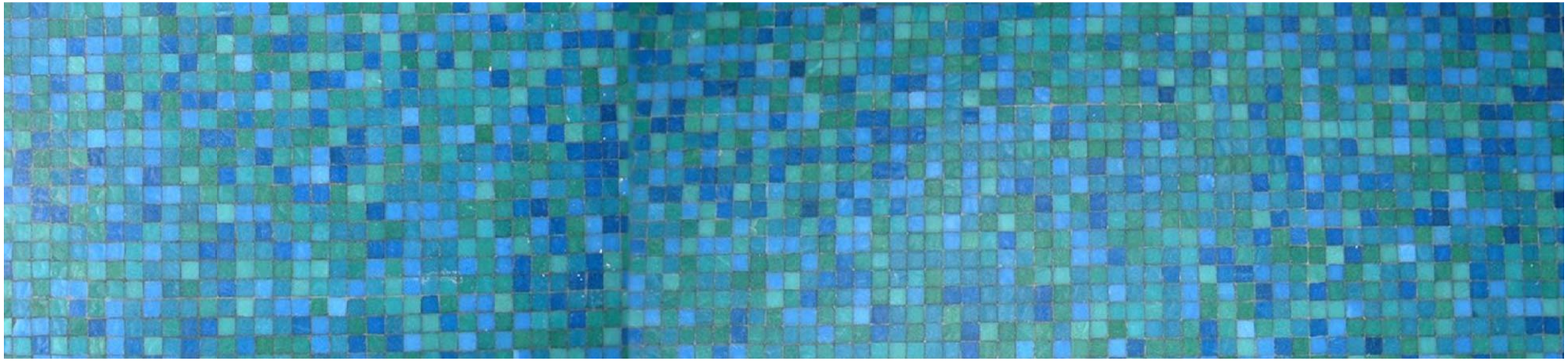

5.0 PAVING, HARDSCAPE & SHARED USE PATH

PAVING/ HARDSCAPE - PRESIDENTIAL BOULEVARD

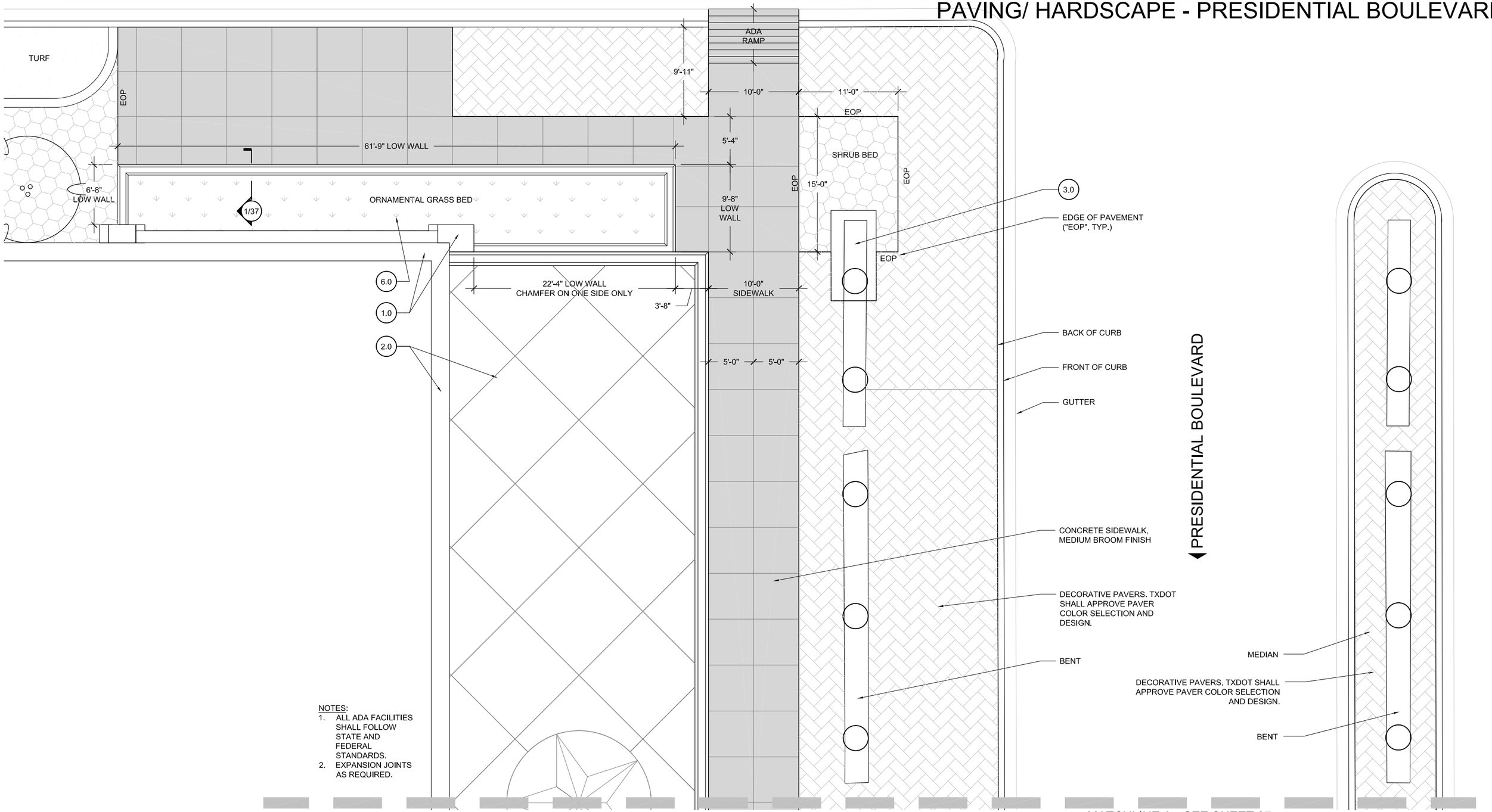

NOTES:
1. ALL ADA FACILITIES SHALL FOLLOW STATE AND FEDERAL STANDARDS.
2. EXPANSION JOINTS AS REQUIRED.

HARDSCAPE PLAN

SCALE: 1" = 10'

(1.0) RETAINING WALLS & PILASTERS - Sheets 6-11

(2.0) BRIDGE ABUTMENT WALLS & RIP RAP - Sheets 12-24

(3.0) PYLONS - Sheets 25-30

(4.0) LIGHTING STANDARDS - Sheets 31-34

(5.0) PAVING/ HARDSCAPE - Sheets 35-44

(6.0) LANDSCAPE - Sheets 45-59

(7.0) FINISH SCHEDULE - Sheets 60-61

DIMENSIONS ARE APPROXIMATE AND ARE FOR PROPORTIONAL RELATIONSHIPS. ALL DIMENSIONS OF EXISTING ELEMENTS REQUIRE FIELD VERIFICATION. FIELD ADJUSTMENTS TO LAYOUT ARE EXPECTED.

* NOT INTENDED FOR PERMIT OR CONSTRUCTION. ALL MATERIALS, DETAILS, AND LOCATION OF ELEMENTS SHOWN AS PART OF THIS DOCUMENT ARE SUBJECT TO FINAL PLANS AND SPECIFICATIONS.

PAVING/ HARDSCAPE - PRESIDENTIAL BOULEVARD

CONSTRUCTION NOTES:
1. FOOTING AND WALL REINFORCEMENT SUBJECT TO FINAL PLANS AND SPECIFICATIONS.
2. CONTRACTOR SHALL PLACE WEEP HOLES IN WALL TO ALLOW FOR BED DRAINAGE.

FINISH NOTES:
1. CONCRETE WALL CAP - 3" CHAMFER BOTH SIDES UNLESS OTHERWISE NOTED ON PLAN. SMOOTH TROWEL FINISH. INSTALLATION & REINFORCEMENT PER STRUCTURAL SPECIFICATIONS. STAIN COLOR FED. STD. #26559.
2. WALL FACE - FORM LINER 166D CHISELED LIMESTONE WITH JOINTS (BY SCOTT SYSTEM OR APPROVED EQUAL). CONTRACTOR SHALL USE STAIN COLORS (FED. STD. #26559, #30324, #30219) TO CREATE A REALISTIC LIMESTONE APPEARANCE.

1 LOW WALL SECTION
SCALE: 1/2" = 1'-0"

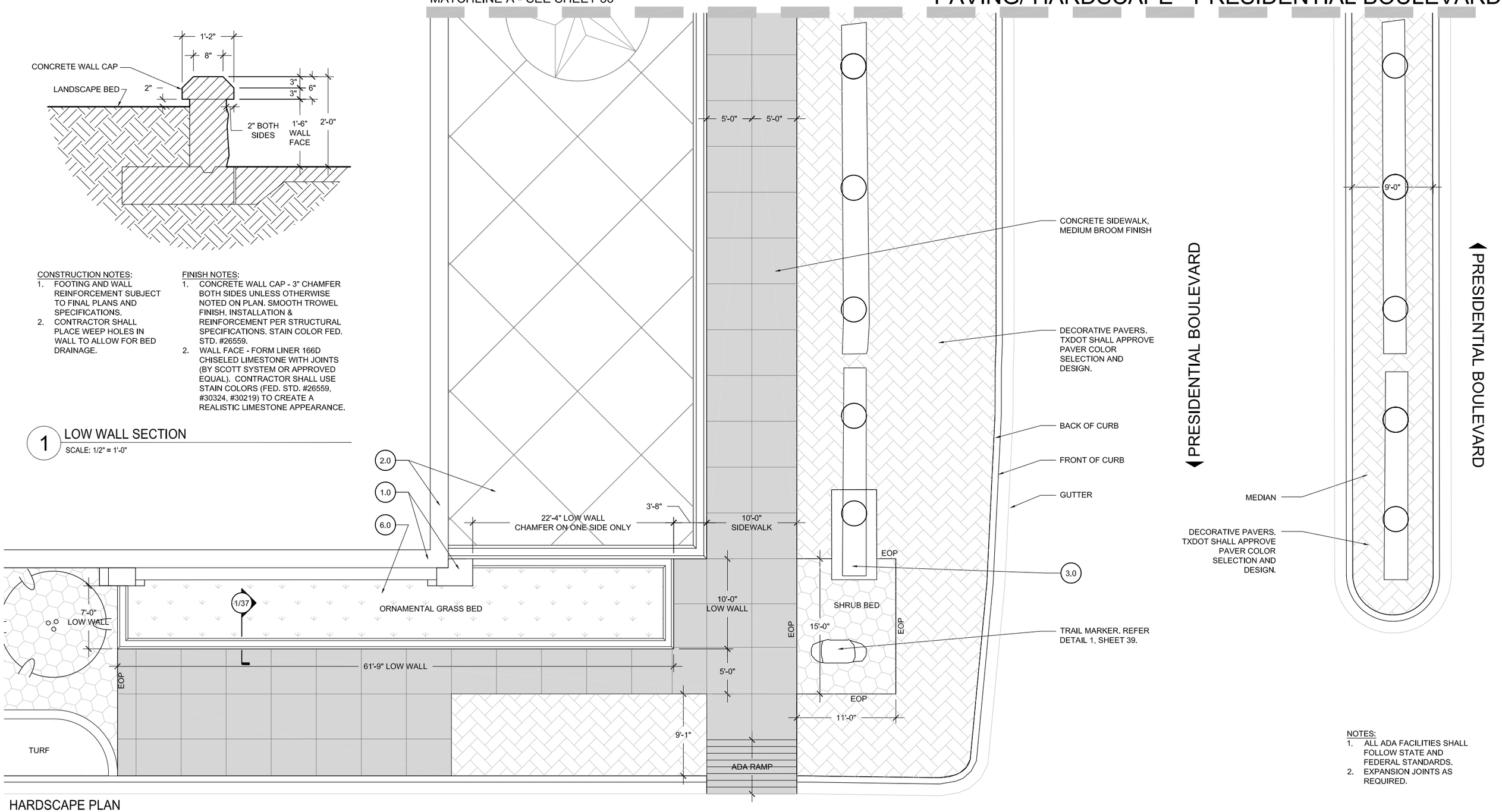

HARDSCAPE PLAN
SCALE: 1" = 10'

NOTES:
1. ALL ADA FACILITIES SHALL FOLLOW STATE AND FEDERAL STANDARDS.
2. EXPANSION JOINTS AS REQUIRED.

1.0 RETAINING WALLS & PILASTERS - Sheets 6-11
2.0 BRIDGE ABUTMENT WALLS & RIP RAP - Sheets 12-24
3.0 PYLONS - Sheets 25-30
4.0 LIGHTING STANDARDS - Sheets 31-34
5.0 PAVING/ HARDSCAPE - Sheets 35-44
6.0 LANDSCAPE - Sheets 45-59
7.0 FINISH SCHEDULE - Sheets 60-61

DIMENSIONS ARE APPROXIMATE AND ARE FOR PROPORTIONAL RELATIONSHIPS. ALL DIMENSIONS OF EXISTING ELEMENTS REQUIRE FIELD VERIFICATION. FIELD ADJUSTMENTS TO LAYOUT ARE EXPECTED.

N

Texas Department of Transportation

* NOT INTENDED FOR PERMIT OR CONSTRUCTION. ALL MATERIALS, DETAILS, AND LOCATION OF ELEMENTS SHOWN AS PART OF THIS DOCUMENT ARE SUBJECT TO FINAL PLANS AND SPECIFICATIONS.

PAVING/ HARDSCAPE - PRESIDENTIAL BOULEVARD

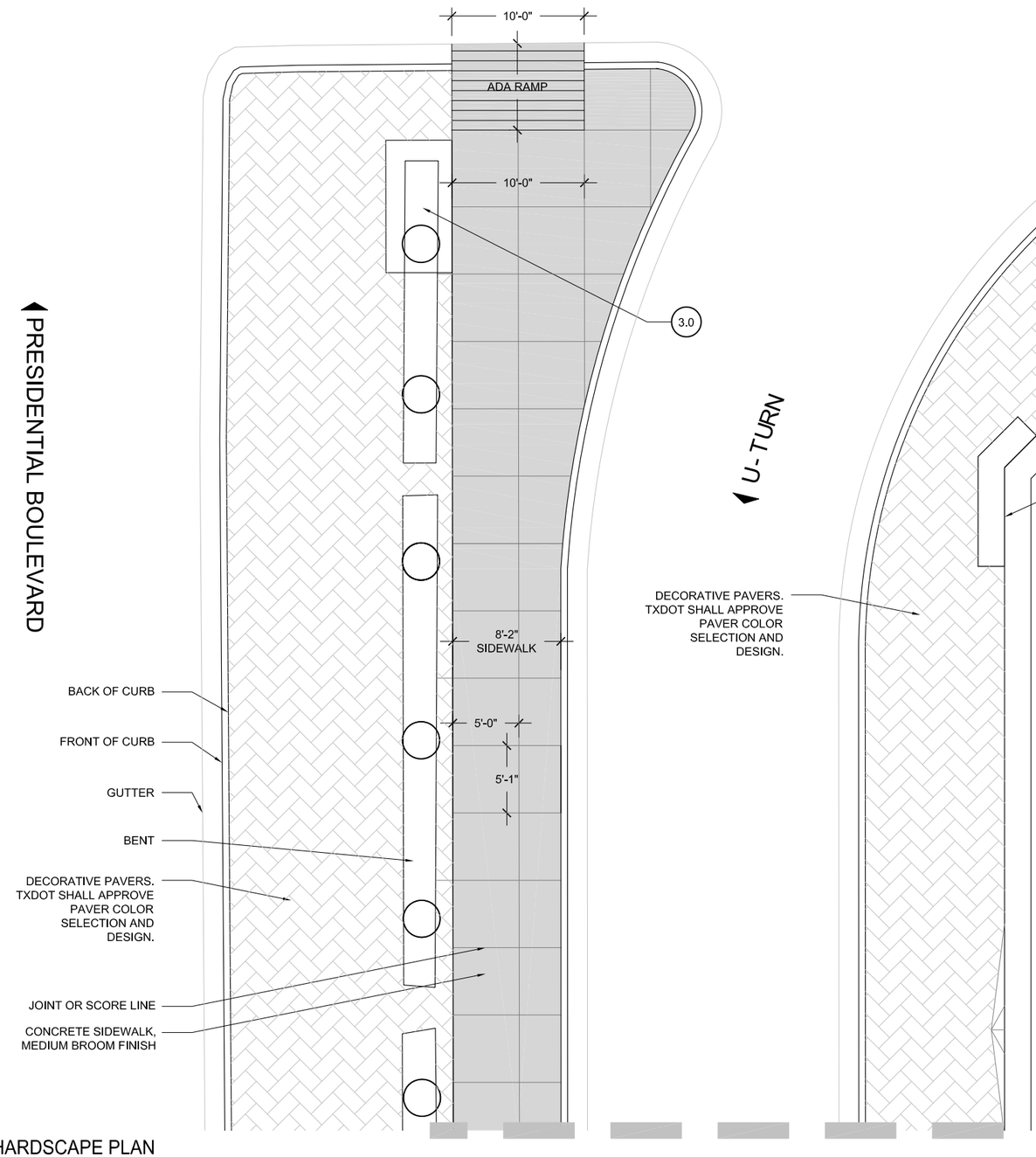

HARDSCAPE PLAN

SCALE: 1" = 10'

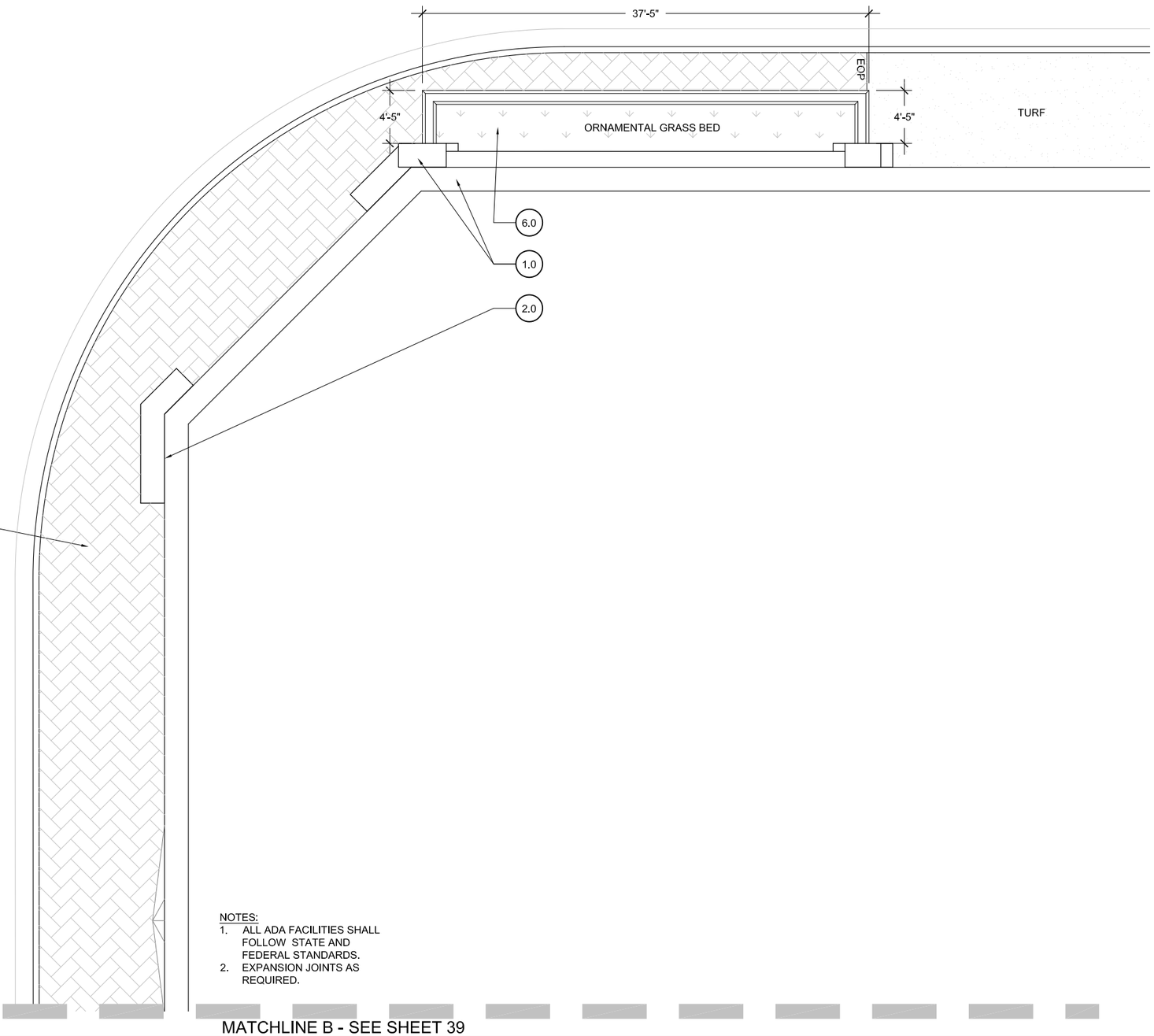

MATCHLINE B - SEE SHEET 39

NOTES:
1. ALL ADA FACILITIES SHALL FOLLOW STATE AND FEDERAL STANDARDS.
2. EXPANSION JOINTS AS REQUIRED.

(1.0) RETAINING WALLS & PILASTERS - Sheets 6-11

(2.0) BRIDGE ABUTMENT WALLS & RIP RAP - Sheets 12-24

(3.0) PYLONS - Sheets 25-30

(4.0) LIGHTING STANDARDS - Sheets 31-34

(5.0) PAVING/ HARDSCAPE - Sheets 35-44

(6.0) LANDSCAPE - Sheets 45-59

(7.0) FINISH SCHEDULE - Sheets 60-61

DIMENSIONS ARE APPROXIMATE AND ARE FOR PROPORTIONAL RELATIONSHIPS. ALL DIMENSIONS OF EXISTING ELEMENTS REQUIRE FIELD VERIFICATION. FIELD ADJUSTMENTS TO LAYOUT ARE EXPECTED.

Texas Department of Transportation

* NOT INTENDED FOR PERMIT OR CONSTRUCTION. ALL MATERIALS, DETAILS, AND LOCATION OF ELEMENTS SHOWN AS PART OF THIS DOCUMENT ARE SUBJECT TO FINAL PLANS AND SPECIFICATIONS.

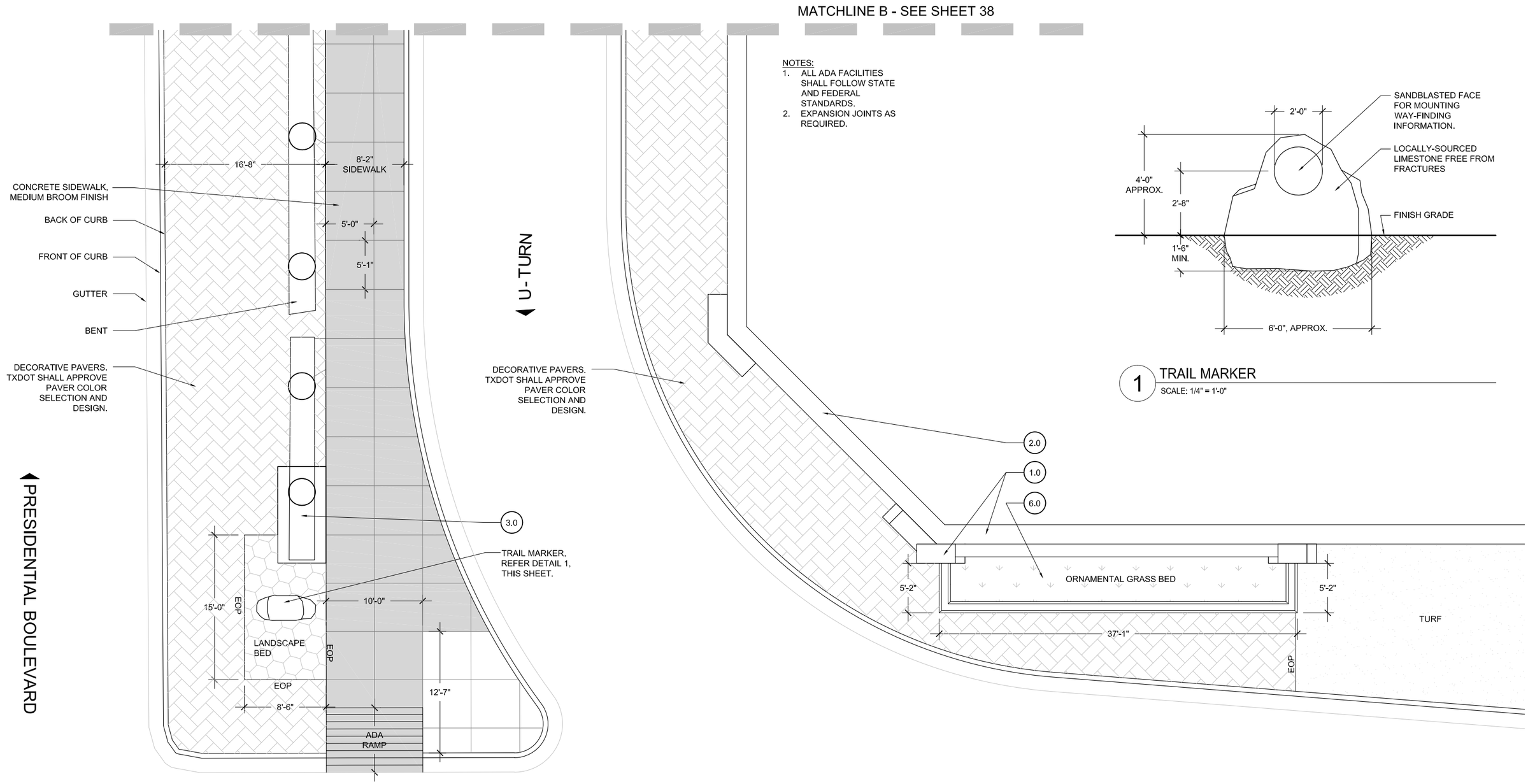

1 TRAIL MARKER
SCALE: 1/4" = 1'-0"

HARDSCAPE PLAN
SCALE: 1" = 10'

(1.0) RETAINING WALLS & PILASTERS - Sheets 6-11
(2.0) BRIDGE ABUTMENT WALLS & RIP RAP - Sheets 12-24
(3.0) PYLONS - Sheets 25-30
(4.0) LIGHTING STANDARDS - Sheets 31-34
(5.0) PAVING/ HARDSCAPE - Sheets 35-44
(6.0) LANDSCAPE - Sheets 45-59
(7.0) FINISH SCHEDULE - Sheets 60-61

DIMENSIONS ARE APPROXIMATE AND ARE FOR PROPORTIONAL RELATIONSHIPS. ALL DIMENSIONS OF EXISTING ELEMENTS REQUIRE FIELD VERIFICATION. FIELD ADJUSTMENTS TO LAYOUT ARE EXPECTED.

Texas Department of Transportation

* NOT INTENDED FOR PERMIT OR CONSTRUCTION. ALL MATERIALS, DETAILS, AND LOCATION OF ELEMENTS SHOWN AS PART OF THIS DOCUMENT ARE SUBJECT TO FINAL PLANS AND SPECIFICATIONS.

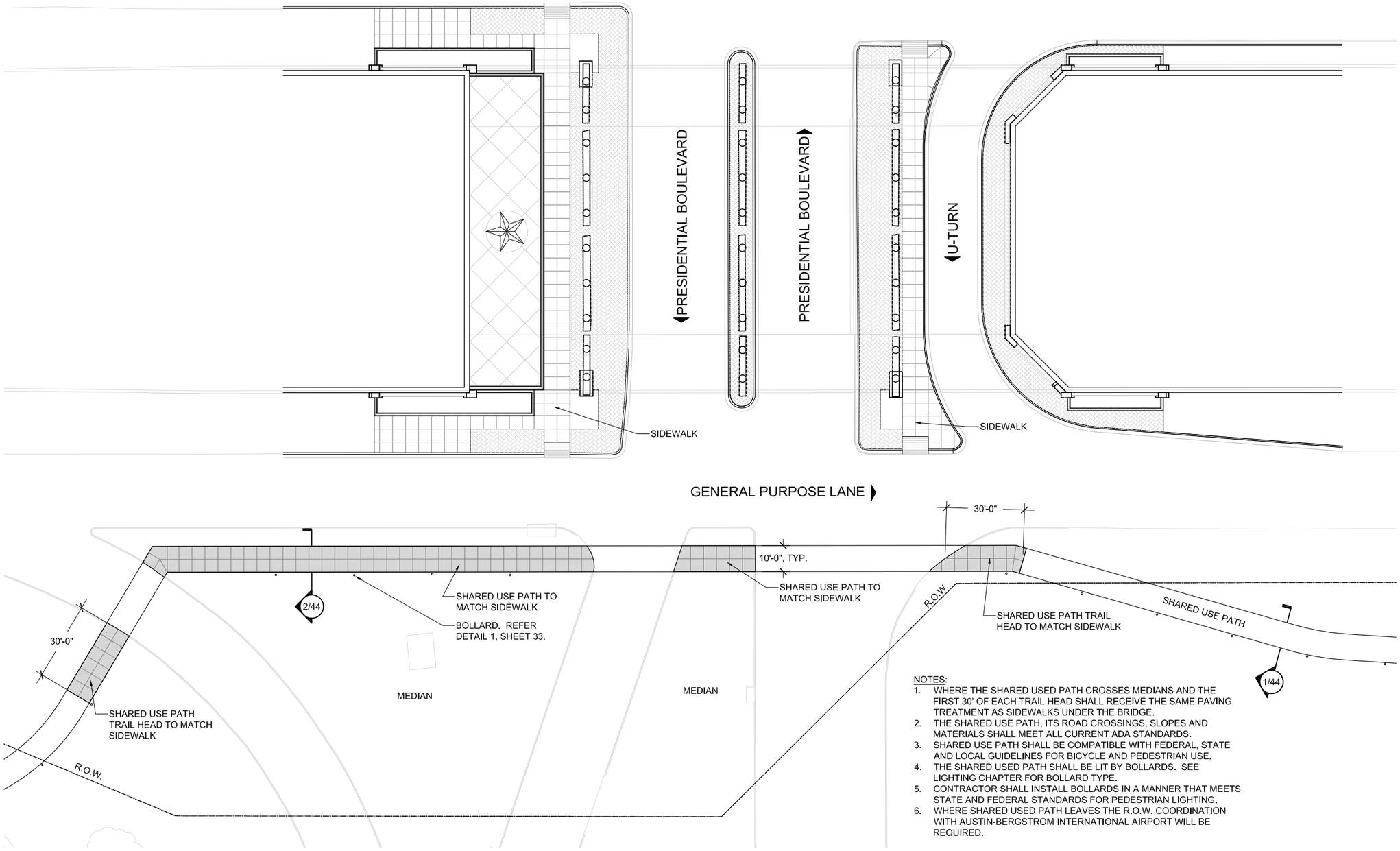

NOTES:
1. WHERE THE SHARED USED PATH CROSSES MEDIANS AND THE FIRST 30' OF EACH TRAIL HEAD SHALL RECEIVE THE SAME PAVING TREATMENT AS SIDEWALKS UNDER THE BRIDGE.
2. THE SHARED USE PATH, ITS ROAD CROSSINGS, SLOPES AND MATERIALS SHALL MEET ALL CURRENT ADA STANDARDS.
3. SHARED USE PATH SHALL BE COMPATIBLE WITH FEDERAL, STATE AND LOCAL GUIDELINES FOR BICYCLE AND PEDESTRIAN USE.
4. THE SHARED USED PATH SHALL BE LIT BY BOLLARDS. SEE LIGHTING CHAPTER FOR BOLLARD TYPE.
5. CONTRACTOR SHALL INSTALL BOLLARDS IN A MANNER THAT MEETS STATE AND FEDERAL STANDARDS FOR PEDESTRIAN LIGHTING.
6. WHERE SHARED USED PATH LEAVES THE R.O.W. COORDINATION WITH AUSTIN-BERGSTROM INTERNATIONAL AIRPORT WILL BE REQUIRED.

SHARED USE PATH PLAN

SCALE: 1" = 40'

1.0 RETAINING WALLS & PILASTERS - Sheets 6-11
2.0 BRIDGE ABUTMENT WALLS & RIP RAP - Sheets 12-24
3.0 PYLONS - Sheets 25-30
4.0 LIGHTING STANDARDS - Sheets 31-34
5.0 PAVING/ HARDSCAPE - Sheets 35-44
6.0 LANDSCAPE - Sheets 45-59
7.0 FINISH SCHEDULE - Sheets 60-61

DIMENSIONS ARE APPROXIMATE AND ARE FOR PROPORTIONAL RELATIONSHIPS. ALL DIMENSIONS OF EXISTING ELEMENTS REQUIRE FIELD VERIFICATION. FIELD ADJUSTMENTS TO LAYOUT ARE EXPECTED.

* NOT INTENDED FOR PERMIT OR CONSTRUCTION. ALL MATERIALS, DETAILS, AND LOCATION OF ELEMENTS SHOWN AS PART OF THIS DOCUMENT ARE SUBJECT TO FINAL PLANS AND SPECIFICATIONS.

HARDSCAPE - SPIRIT OF TEXAS DRIVE

NOTES:
1. ALL ADA FACILITIES SHALL FOLLOW STATE AND FEDERAL STANDARDS.
2. EXPANSION JOINTS AS REQUIRED.

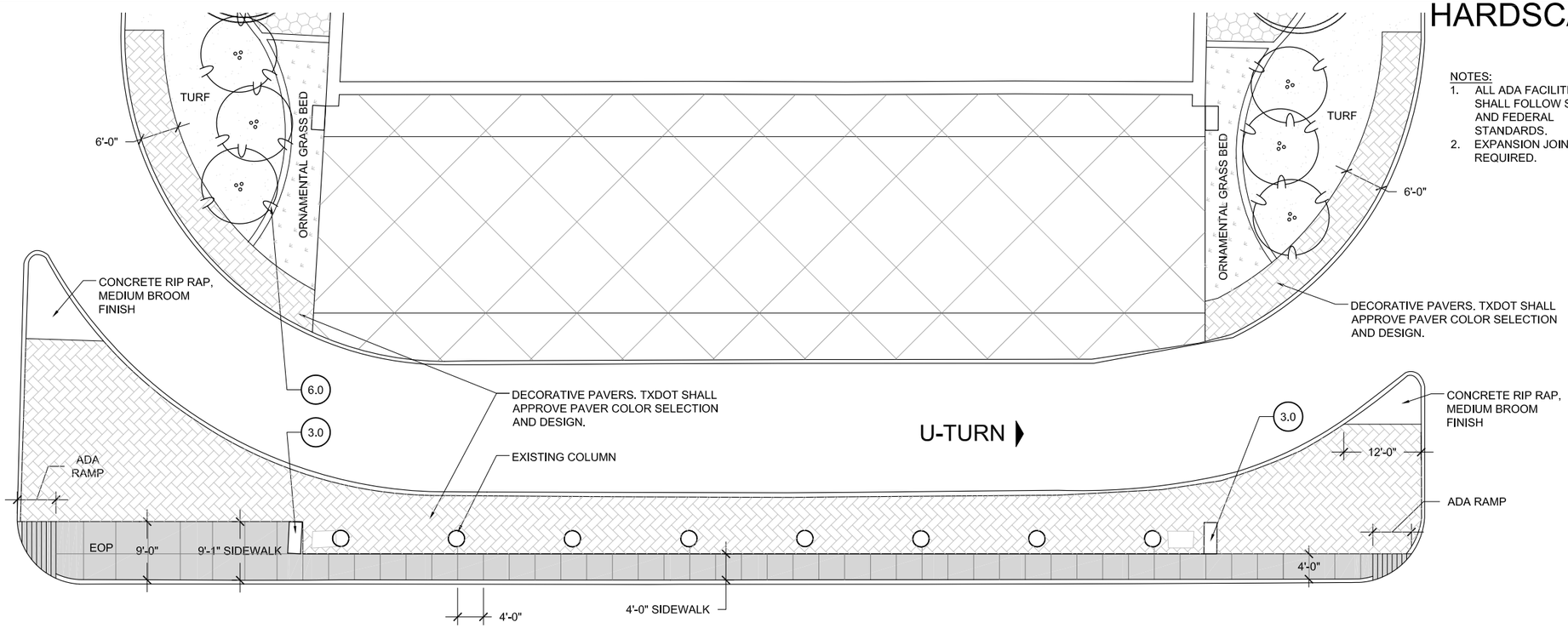

SPIRIT OF TEXAS DRIVE

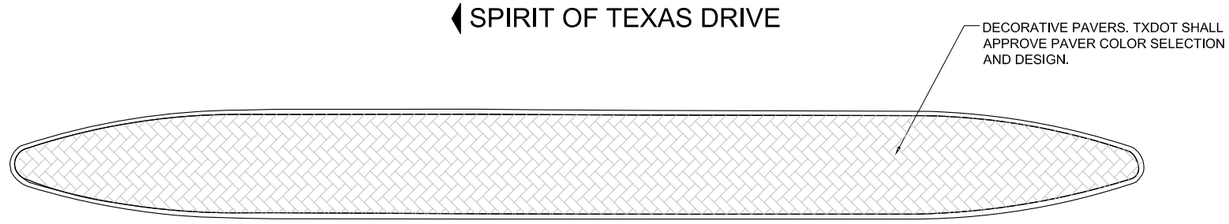

SPIRIT OF TEXAS DRIVE

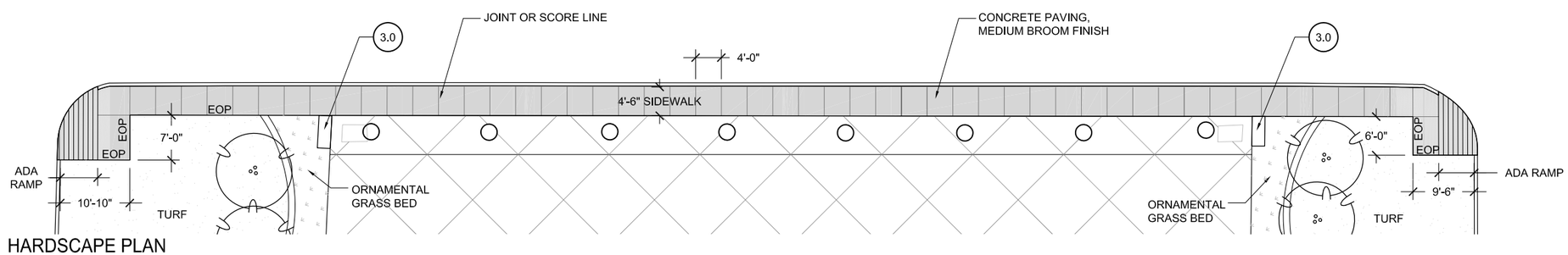

HARDSCAPE PLAN

SCALE: 1" = 20'

1.0 RETAINING WALLS & PILASTERS - Sheets 6-11

2.0 BRIDGE ABUTMENT WALLS & RIP RAP - Sheets 12-24

3.0 PYLONS - Sheets 25-30

4.0 LIGHTING STANDARDS - Sheets 31-34

5.0 PAVING/ HARDSCAPE - Sheets 35-44

6.0 LANDSCAPE - Sheets 45-59

7.0 FINISH SCHEDULE - Sheets 60-61

DIMENSIONS ARE APPROXIMATE AND ARE FOR PROPORTIONAL RELATIONSHIPS. ALL DIMENSIONS OF EXISTING ELEMENTS REQUIRE FIELD VERIFICATION. FIELD ADJUSTMENTS TO LAYOUT ARE EXPECTED.

Texas Department of Transportation

* NOT INTENDED FOR PERMIT OR CONSTRUCTION. ALL MATERIALS, DETAILS, AND LOCATION OF ELEMENTS SHOWN AS PART OF THIS DOCUMENT ARE SUBJECT TO FINAL PLANS AND SPECIFICATIONS.

SHARED USE PATH - SPIRIT OF TEXAS DRIVE

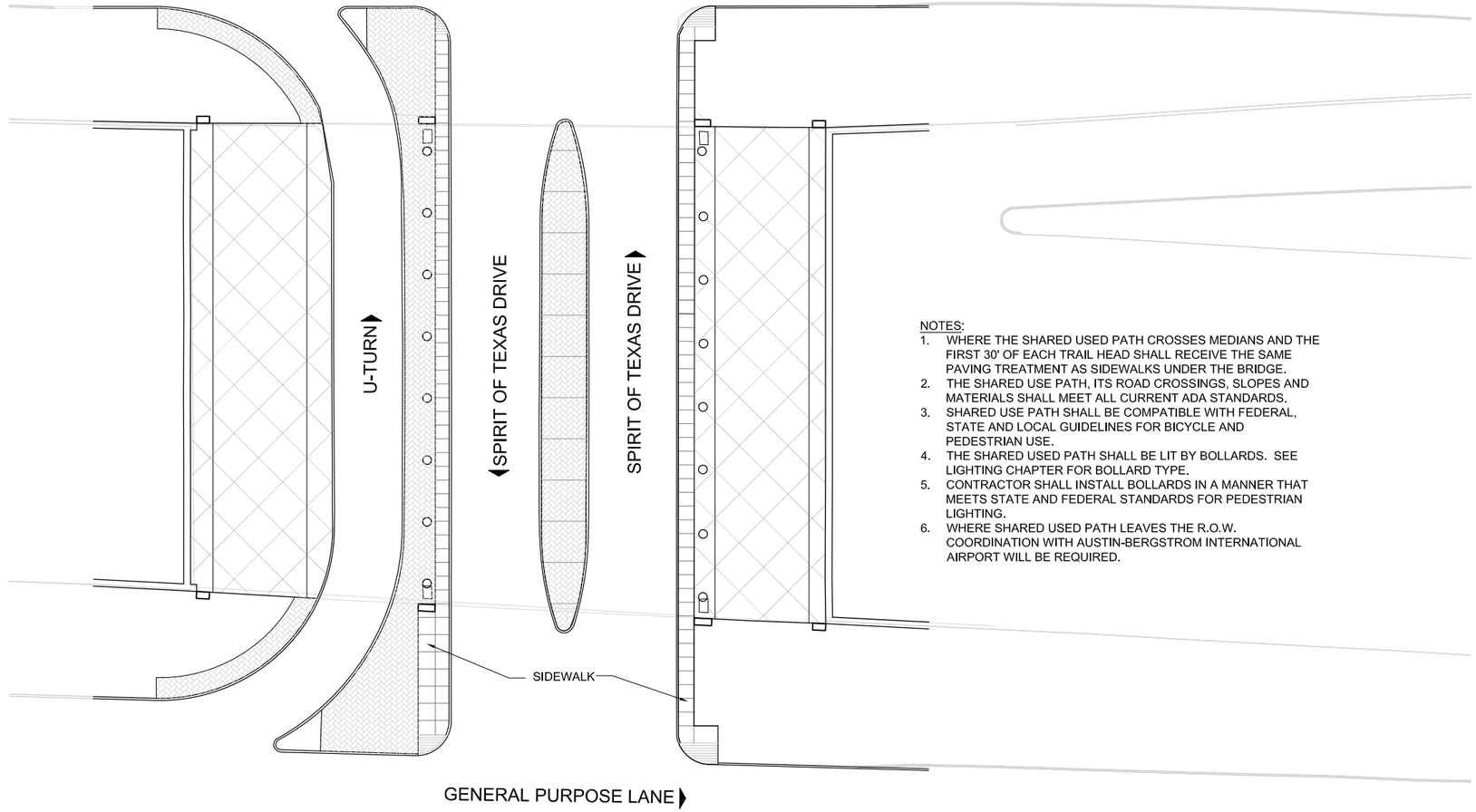

NOTES:

1. WHERE THE SHARED USED PATH CROSSES MEDIANS AND THE FIRST 30' OF EACH TRAIL HEAD SHALL RECEIVE THE SAME PAVING TREATMENT AS SIDEWALKS UNDER THE BRIDGE.
2. THE SHARED USE PATH, ITS ROAD CROSSINGS, SLOPES AND MATERIALS SHALL MEET ALL CURRENT ADA STANDARDS.
3. SHARED USE PATH SHALL BE COMPATIBLE WITH FEDERAL, STATE AND LOCAL GUIDELINES FOR BICYCLE AND PEDESTRIAN USE.
4. THE SHARED USED PATH SHALL BE LIT BY BOLLARDS. SEE LIGHTING CHAPTER FOR BOLLARD TYPE.
5. CONTRACTOR SHALL INSTALL BOLLARDS IN A MANNER THAT MEETS STATE AND FEDERAL STANDARDS FOR PEDESTRIAN LIGHTING.
6. WHERE SHARED USED PATH LEAVES THE R.O.W. COORDINATION WITH AUSTIN-BERGSTROM INTERNATIONAL AIRPORT WILL BE REQUIRED.

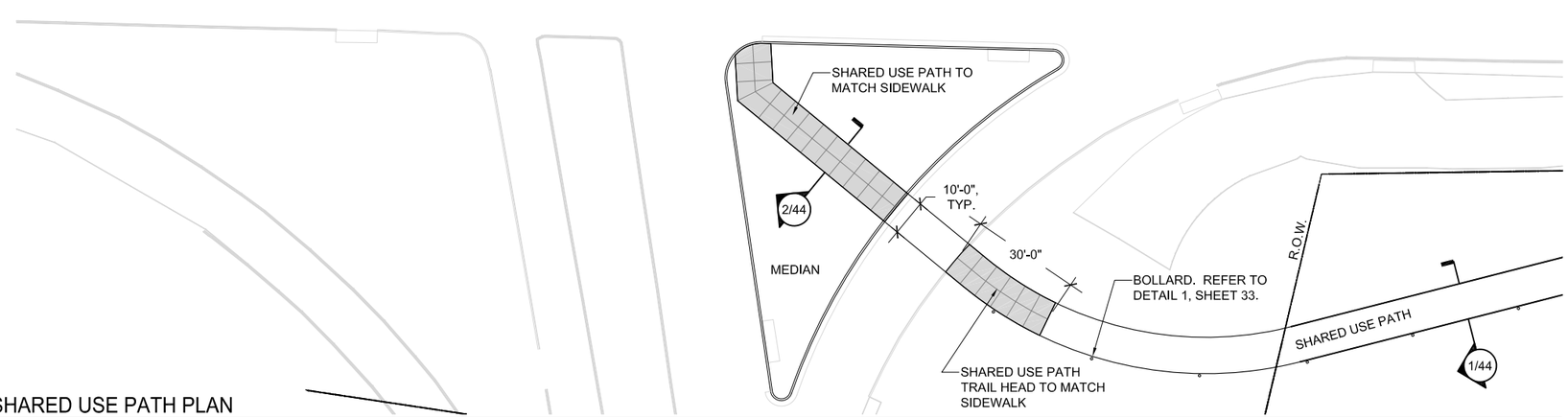

SHARED USE PATH PLAN

SCALE: 1" = 40'

(1.0) RETAINING WALLS & PILASTERS - Sheets 6-11
(2.0) BRIDGE ABUTMENT WALLS & RIP RAP - Sheets 12-24
(3.0) PYLONS - Sheets 25-30
(4.0) LIGHTING STANDARDS - Sheets 31-34
(5.0) PAVING/ HARDSCAPE - Sheets 35-44
(6.0) LANDSCAPE - Sheets 45-59
(7.0) FINISH SCHEDULE - Sheets 60-61

DIMENSIONS ARE APPROXIMATE AND ARE FOR PROPORTIONAL RELATIONSHIPS. ALL DIMENSIONS OF EXISTING ELEMENTS REQUIRE FIELD VERIFICATION. FIELD ADJUSTMENTS TO LAYOUT ARE EXPECTED.

N

Texas Department of Transportation

* NOT INTENDED FOR PERMIT OR CONSTRUCTION. ALL MATERIALS, DETAILS, AND LOCATION OF ELEMENTS SHOWN AS PART OF THIS DOCUMENT ARE SUBJECT TO FINAL PLANS AND SPECIFICATIONS.

HARDSCAPE - FM 973

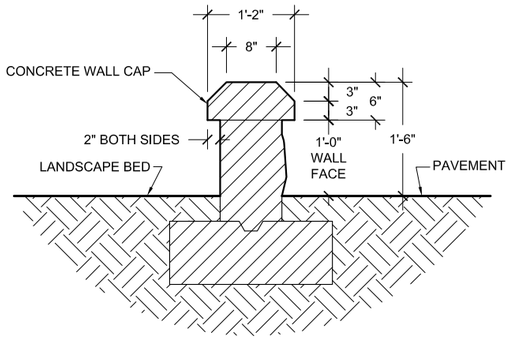

CONSTRUCTION NOTES:
1. FOOTING AND WALL REINFORCEMENT SUBJECT TO FINAL PLANS AND SPECIFICATIONS.
2. CONTRACTOR SHALL PLACE WEEP HOLES IN WALL TO ALLOW FOR BED DRAINAGE.

FINISH NOTES:
1. CONCRETE WALL CAP- 3" CHAMFER BOTH SIDES. SMOOTH TROWEL FINISH. INSTALLATION & REINFORCEMENT PER STRUCTURAL SPECIFICATIONS. STAIN COLOR FED. STD. #26559.
2. OUTER WALL FACE- (PAVEMENT SIDE) FORM LINER 166D CHISELED LIMESTONE WITH JOINTS (BY SCOTT SYSTEM OR APPROVED EQUAL). CONTRACTOR SHALL USE STAIN COLORS (FED. STD. #26559, #30324, #30219) TO CREATE A REALISTIC LIMESTONE APPEARANCE.
3. INNER WALL FACE- (LANDSCAPE BED SIDE) SMOOTH TROWEL FINISH. STAIN COLOR FED. STD. #26559.

1 FREE STANDING LOW WALL
SCALE: 1/2" = 1'-0"

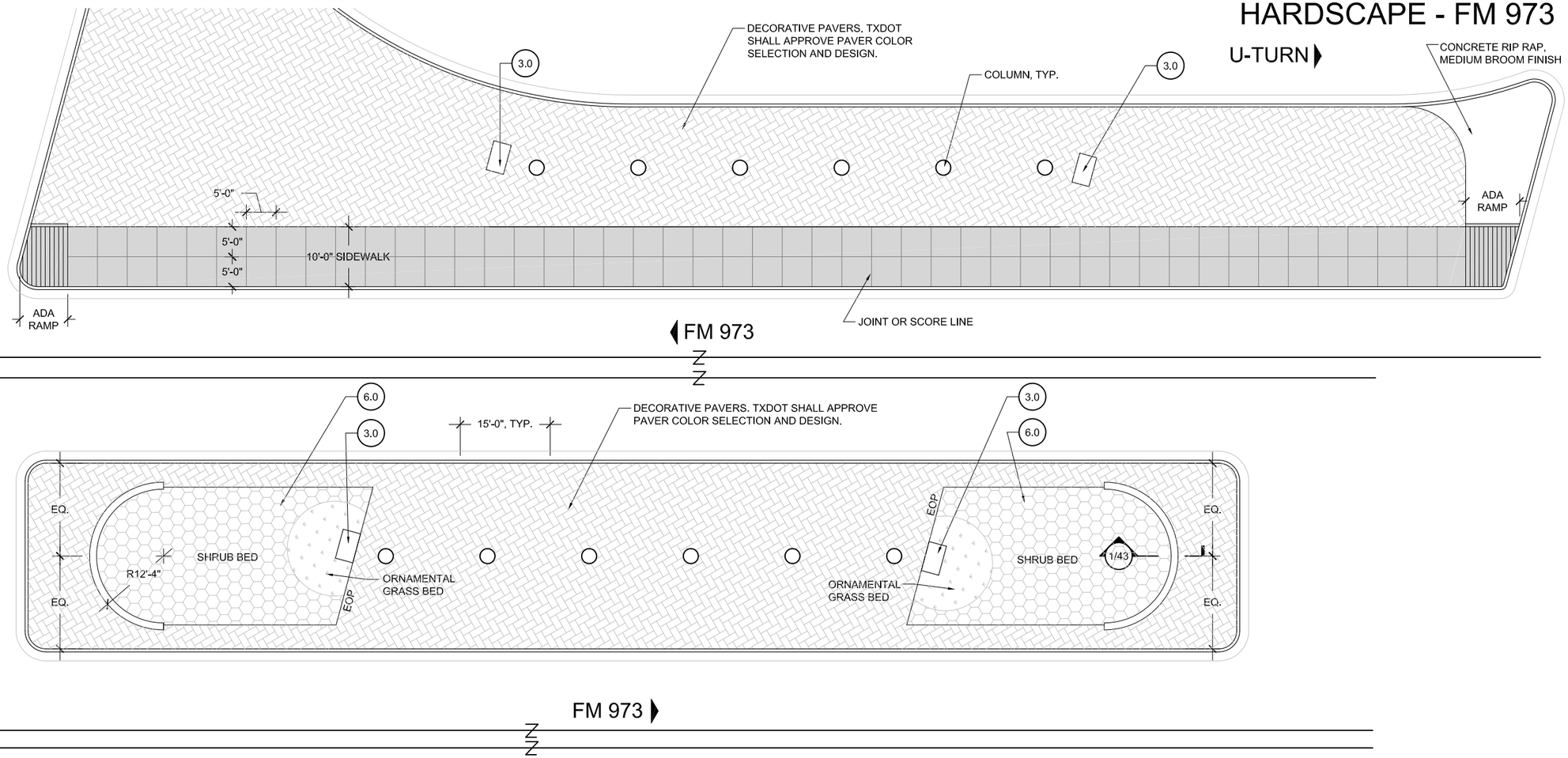

NOTES:
1. ALL ADA FACILITIES SHALL FOLLOW STATE AND FEDERAL STANDARDS.
2. EXPANSION JOINTS AS REQUIRED.

2 HARDSCAPE PLAN
SCALE: 1" = 20'

1.0 RETAINING WALLS & PILASTERS - Sheets 6-11
2.0 BRIDGE ABUTMENT WALLS & RIP RAP - Sheets 12-24
3.0 PYLONS - Sheets 25-30
4.0 LIGHTING STANDARDS - Sheets 31-34
5.0 PAVING/ HARDSCAPE - Sheets 35-44
6.0 LANDSCAPE - Sheets 45-59
7.0 FINISH SCHEDULE - Sheets 60-61

DIMENSIONS ARE APPROXIMATE AND ARE FOR PROPORTIONAL RELATIONSHIPS. ALL DIMENSIONS OF EXISTING ELEMENTS REQUIRE FIELD VERIFICATION. FIELD ADJUSTMENTS TO LAYOUT ARE EXPECTED.

Texas Department of Transportation

* NOT INTENDED FOR PERMIT OR CONSTRUCTION. ALL MATERIALS, DETAILS, AND LOCATION OF ELEMENTS SHOWN AS PART OF THIS DOCUMENT ARE SUBJECT TO FINAL PLANS AND SPECIFICATIONS.

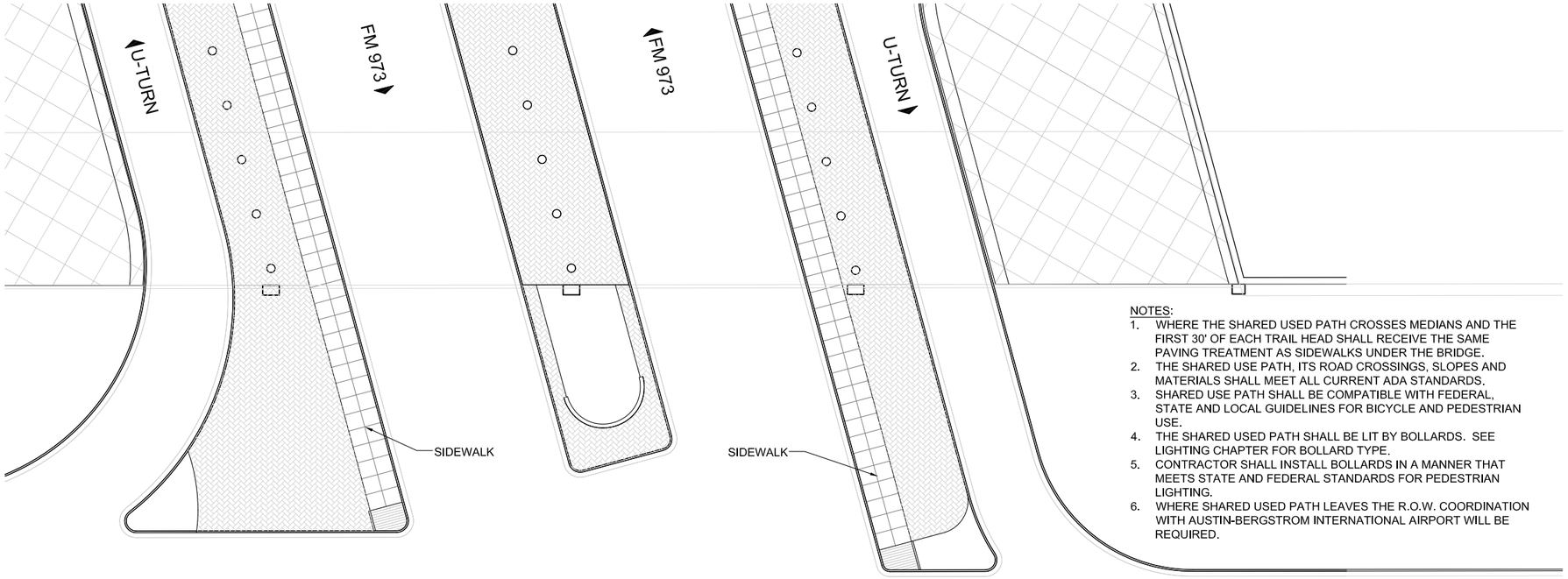

NOTES:
1. WHERE THE SHARED USED PATH CROSSES MEDIANS AND THE FIRST 30' OF EACH TRAIL HEAD SHALL RECEIVE THE SAME PAVING TREATMENT AS SIDEWALKS UNDER THE BRIDGE.
2. THE SHARED USE PATH, ITS ROAD CROSSINGS, SLOPES AND MATERIALS SHALL MEET ALL CURRENT ADA STANDARDS.
3. SHARED USE PATH SHALL BE COMPATIBLE WITH FEDERAL, STATE AND LOCAL GUIDELINES FOR BICYCLE AND PEDESTRIAN USE.
4. THE SHARED USED PATH SHALL BE LIT BY BOLLARDS. SEE LIGHTING CHAPTER FOR BOLLARD TYPE.
5. CONTRACTOR SHALL INSTALL BOLLARDS IN A MANNER THAT MEETS STATE AND FEDERAL STANDARDS FOR PEDESTRIAN LIGHTING.
6. WHERE SHARED USED PATH LEAVES THE R.O.W. COORDINATION WITH AUSTIN-BERGSTROM INTERNATIONAL AIRPORT WILL BE REQUIRED.

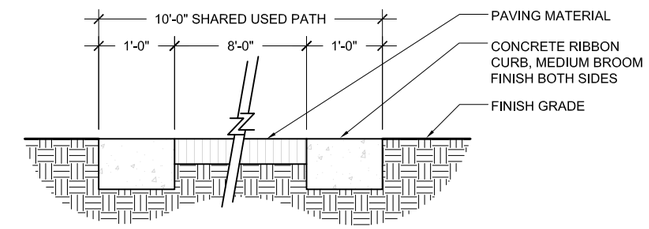

1 SHARED USE PATH SECTION
SCALE: 1/2" = 1'-0"

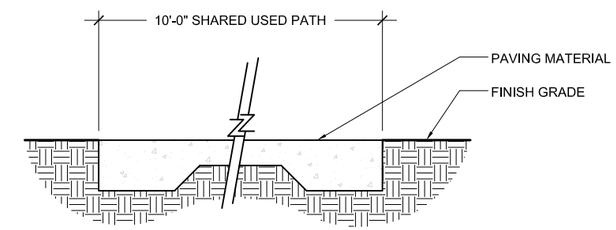

2 SHARED USE PATH AT TRAIL HEAD SECTION
SCALE: 1/2" = 1'-0"

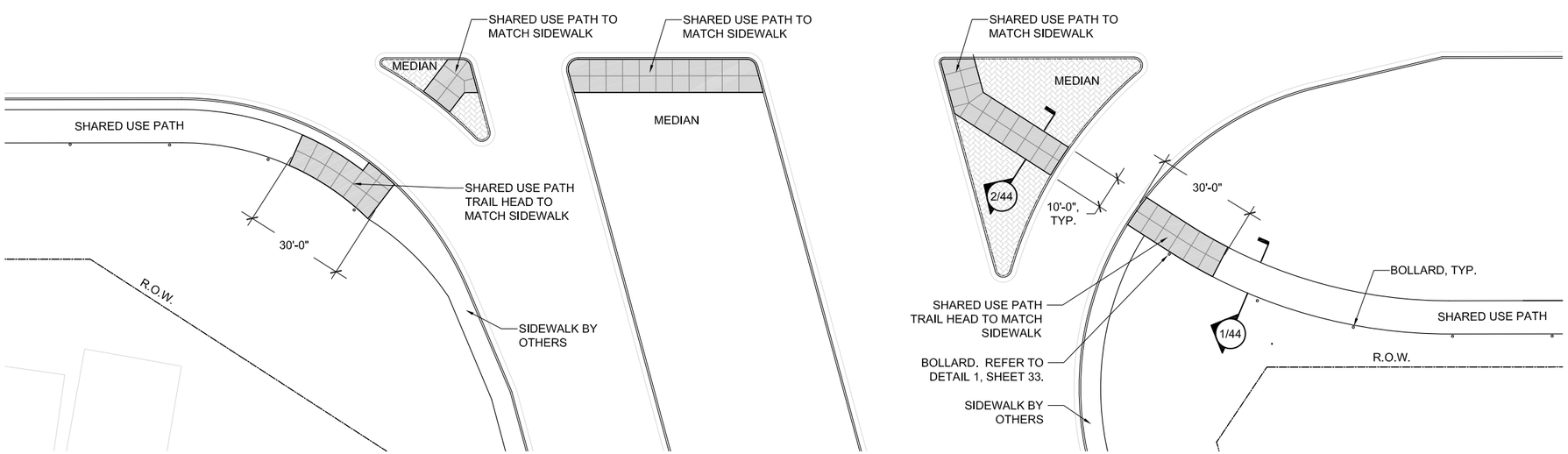

SHARED USE PATH PLAN
SCALE: 1" = 40'

1.0 RETAINING WALLS & PILASTERS - Sheets 6-11
2.0 BRIDGE ABUTMENT WALLS & RIP RAP - Sheets 12-24
3.0 PYLONS - Sheets 25-30
4.0 LIGHTING STANDARDS - Sheets 31-34
5.0 PAVING/ HARDSCAPE - Sheets 35-44
6.0 LANDSCAPE - Sheets 45-59
7.0 FINISH SCHEDULE - Sheets 60-61

DIMENSIONS ARE APPROXIMATE AND ARE FOR PROPORTIONAL RELATIONSHIPS. ALL DIMENSIONS OF EXISTING ELEMENTS REQUIRE FIELD VERIFICATION. FIELD ADJUSTMENTS TO LAYOUT ARE EXPECTED.

N

Texas Department of Transportation

* NOT INTENDED FOR PERMIT OR CONSTRUCTION. ALL MATERIALS, DETAILS, AND LOCATION OF ELEMENTS SHOWN AS PART OF THIS DOCUMENT ARE SUBJECT TO FINAL PLANS AND SPECIFICATIONS.

SH71 Express Project

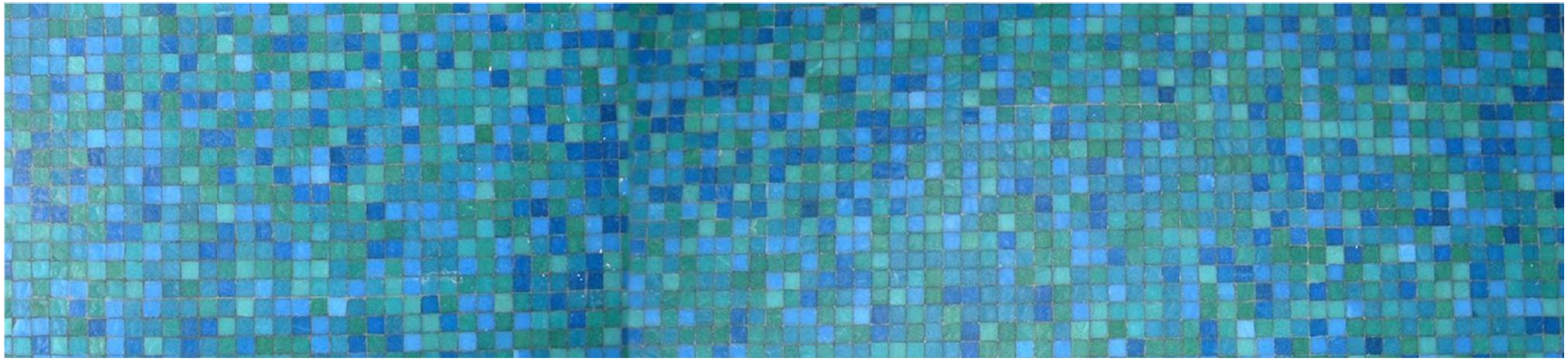

6.0 LANDSCAPE

Texas Department of Transportation

LANDSCAPE LAYOUT PLAN - PRESIDENTIAL BOULEVARD

NOTES:
1. ALL TREE (SPECIES, MATURE HEIGHTS, PLACEMENT), THE SHARED USE PATH AND LIGHTING (ROADWAY, ACCENT AND BOLLARDS) SHALL BE SUBJECT TO APPROVAL BY TXDOT AND AUSTIN-BERGSTROM INTERNATIONAL AIRPORT.
2. THE CONTRACTOR IS RESPONSIBLE FOR MODIFYING LANDSCAPE AND HARDSCAPE TREATMENTS WHERE UTILITIES WILL REMAIN.
3. NO TREES WHERE DISTANCES BETWEEN BACK OF CURB AND RETAINING WALLS ARE LESS THAN 20'-0". IF THERE IS NO CURB, MEASURE FROM EDGE OF PAVEMENT.
4. ALL TREES ASSOCIATED WITH THE SHARED USE PATH SHALL BE LOCATED MINIMUM 30'-0" FROM BACK OF CURB.
5. CONTRACTOR IS RESPONSIBLE FOR LOCATING SLOPES THAT REQUIRE EROSION CONTROL SEEDING.

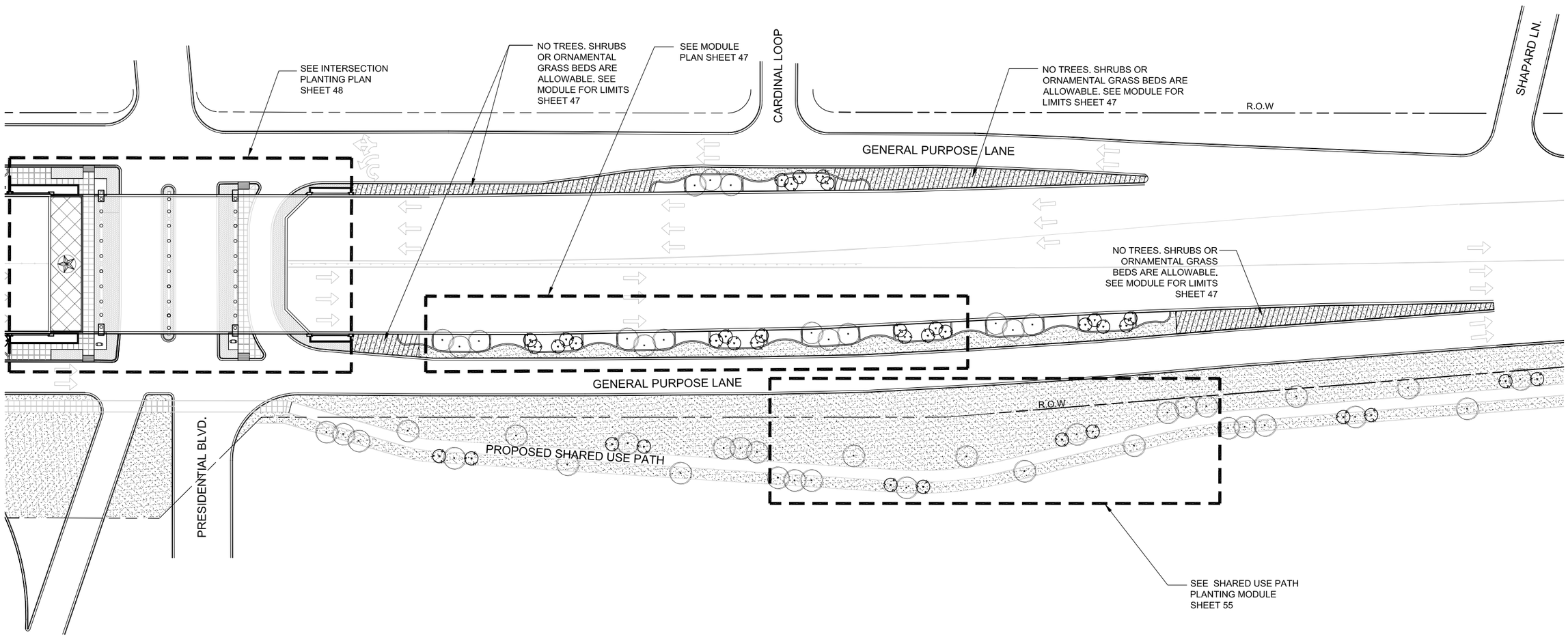

LANDSCAPE PLAN

SCALE: NOT TO SCALE

DIMENSIONS ARE APPROXIMATE AND ARE FOR PROPORTIONAL RELATIONSHIPS. ALL DIMENSIONS OF EXISTING ELEMENTS REQUIRE FIELD VERIFICATION. FIELD ADJUSTMENTS TO LAYOUT ARE EXPECTED.

* NOT INTENDED FOR PERMIT OR CONSTRUCTION. ALL MATERIALS, DETAILS, AND LOCATION OF ELEMENTS SHOWN AS PART OF THIS DOCUMENT ARE SUBJECT TO FINAL PLANS AND SPECIFICATIONS.

320'-0" MODULE PLAN - PRESIDENTIAL BOULEVARD

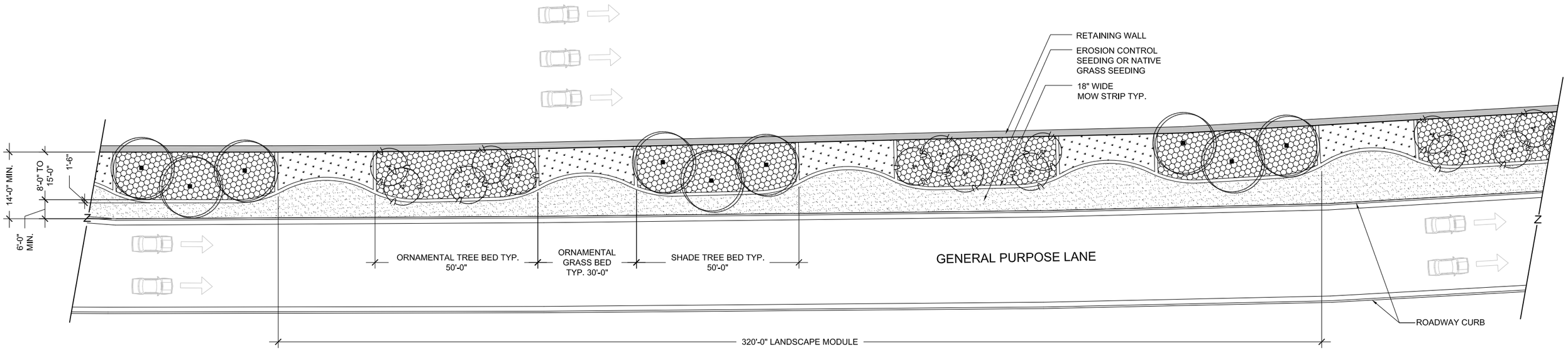

ROADWAY MODULE PLANTING PLAN

SCALE: 1" = 30'-0"

NOTES:
1. ALL TREE (SPECIES, MATURE HEIGHTS, PLACEMENT), THE SHARED USE PATH AND LIGHTING (ROADWAY, ACCENT AND BOLLARDS) SHALL BE SUBJECT TO APPROVAL BY TXDOT AND AUSTIN-BERGSTROM INTERNATIONAL AIRPORT.
2. THE CONTRACTOR IS RESPONSIBLE FOR MODIFYING LANDSCAPE AND HARDSCAPE TREATMENTS WHERE UTILITIES WILL REMAIN.
3. NO TREES WHERE DISTANCES BETWEEN BACK OF CURB AND RETAINING WALLS ARE LESS THAN 20'-0". IF THERE IS NO CURB, MEASURE FROM EDGE OF PAVEMENT.
4. ALL TREES ASSOCIATED WITH THE SHARED USE PATH SHALL BE LOCATED MINIMUM 30'-0" FROM BACK OF CURB.
5. CONTRACTOR IS RESPONSIBLE FOR LOCATING SLOPES THAT REQUIRE EROSION CONTROL SEEDING.

DIMENSIONS ARE APPROXIMATE AND ARE FOR PROPORTIONAL RELATIONSHIPS. ALL DIMENSIONS OF EXISTING ELEMENTS REQUIRE FIELD VERIFICATION. FIELD ADJUSTMENTS TO LAYOUT ARE EXPECTED.

* NOT INTENDED FOR PERMIT OR CONSTRUCTION. ALL MATERIALS, DETAILS, AND LOCATION OF ELEMENTS SHOWN AS PART OF THIS DOCUMENT ARE SUBJECT TO FINAL PLANS AND SPECIFICATIONS.

INTERSECTION PLANTING PLAN - PRESIDENTIAL BOULEVARD

NOTES:
1. ALL TREE (SPECIES, MATURE HEIGHTS, PLACEMENT), THE SHARED USE PATH AND LIGHTING (ROADWAY, ACCENT AND BOLLARDS) SHALL BE SUBJECT TO APPROVAL BY TXDOT AND AUSTIN-BERGSTROM INTERNATIONAL AIRPORT.
2. THE CONTRACTOR IS RESPONSIBLE FOR MODIFYING LANDSCAPE AND HARDSCAPE TREATMENTS WHERE UTILITIES WILL REMAIN.
3. NO TREES WHERE DISTANCES BETWEEN BACK OF CURB AND RETAINING WALLS ARE LESS THAN 20'-0". IF THERE IS NO CURB, MEASURE FROM EDGE OF PAVEMENT.
4. ALL TREES ASSOCIATED WITH THE SHARED USE PATH SHALL BE LOCATED MINIMUM 30'-0" FROM BACK OF CURB.
5. CONTRACTOR IS RESPONSIBLE FOR LOCATING SLOPES THAT REQUIRE EROSION CONTROL SEEDING.

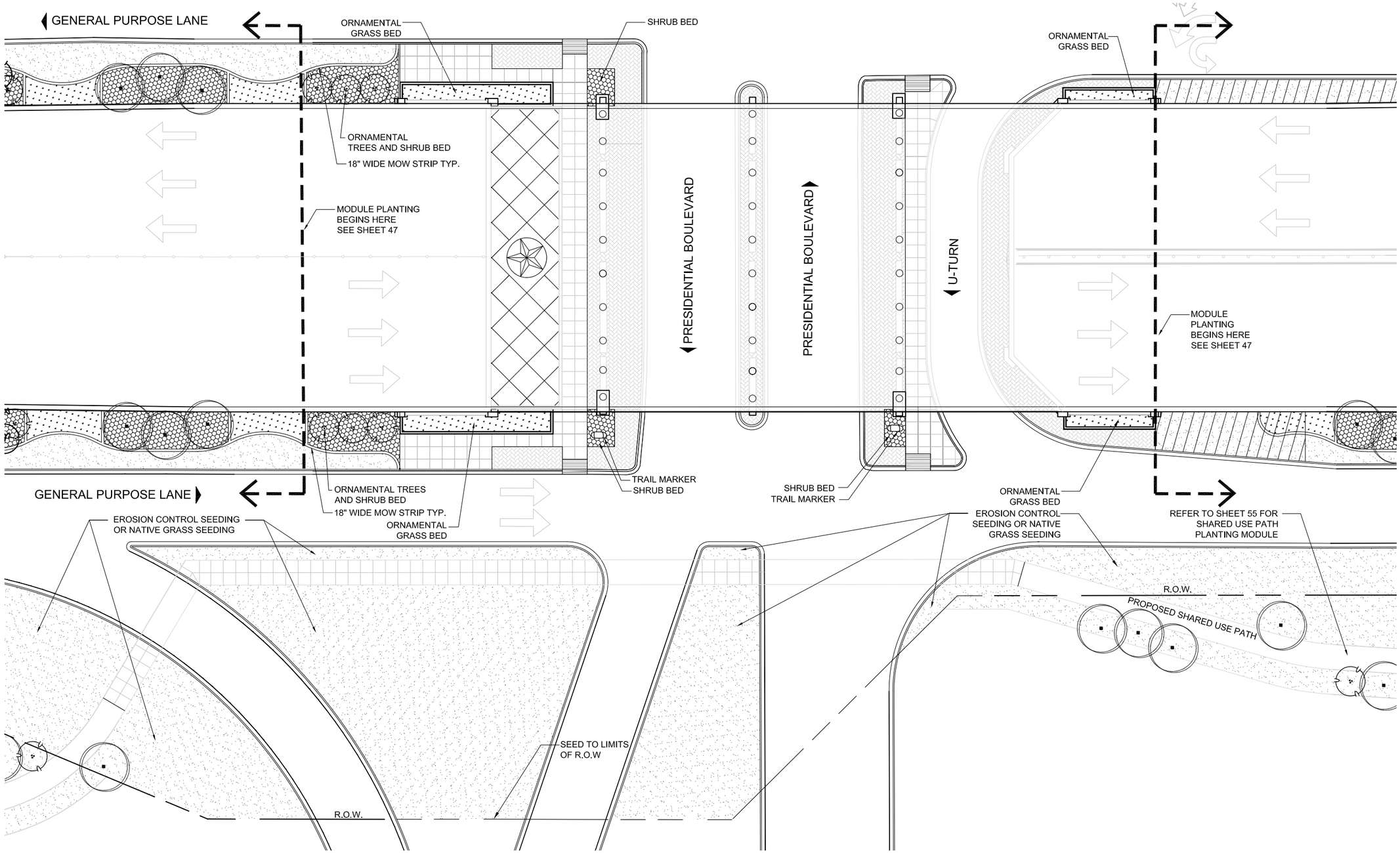

INTERSECTION PLANTING PLAN

SCALE: 1" = 40'-0"

DIMENSIONS ARE APPROXIMATE AND ARE FOR PROPORTIONAL RELATIONSHIPS. ALL DIMENSIONS OF EXISTING ELEMENTS REQUIRE FIELD VERIFICATION. FIELD ADJUSTMENTS TO LAYOUT ARE EXPECTED.

Texas Department of Transportation

* NOT INTENDED FOR PERMIT OR CONSTRUCTION. ALL MATERIALS, DETAILS, AND LOCATION OF ELEMENTS SHOWN AS PART OF THIS DOCUMENT ARE SUBJECT TO FINAL PLANS AND SPECIFICATIONS.

LANDSCAPE LAYOUT PLAN - SPIRIT OF TEXAS DRIVE

NOTES:
1. ALL TREE (SPECIES, MATURE HEIGHTS, PLACEMENT), THE SHARED USE PATH AND LIGHTING (ROADWAY, ACCENT AND BOLLARDS) SHALL BE SUBJECT TO APPROVAL BY TXDOT AND AUSTIN-BERGSTROM INTERNATIONAL AIRPORT.
2. THE CONTRACTOR IS RESPONSIBLE FOR MODIFYING LANDSCAPE AND HARDSCAPE TREATMENTS WHERE UTILITIES WILL REMAIN.
3. NO TREES WHERE DISTANCES BETWEEN BACK OF CURB AND RETAINING WALLS ARE LESS THAN 20'-0". IF THERE IS NO CURB, MEASURE FROM EDGE OF PAVEMENT.
4. ALL TREES ASSOCIATED WITH THE SHARED USE PATH SHALL BE LOCATED MINIMUM 30'-0" FROM BACK OF CURB.
5. CONTRACTOR IS RESPONSIBLE FOR LOCATING SLOPES THAT REQUIRE EROSION CONTROL SEEDING.

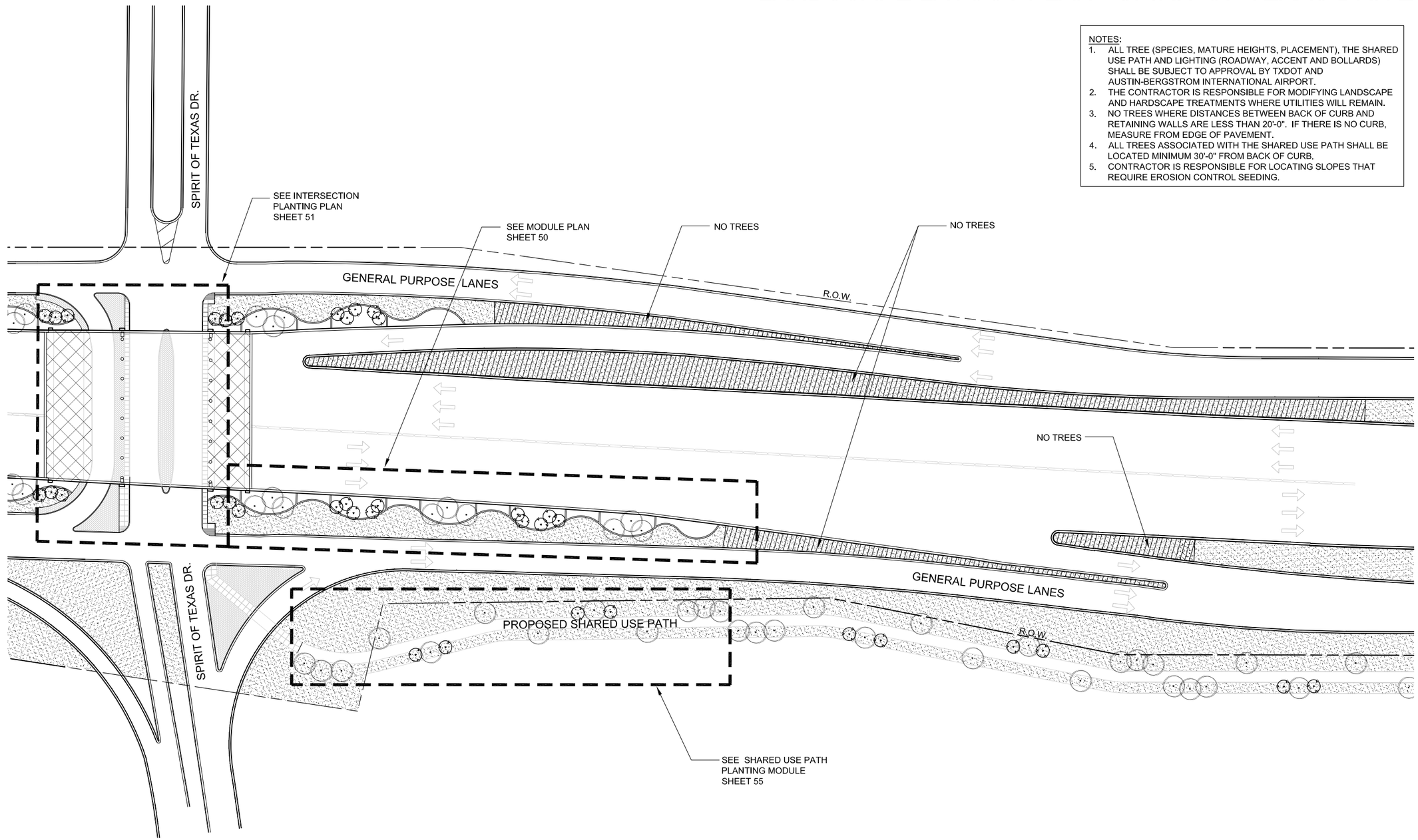

LANDSCAPE PLAN

SCALE: NOT TO SCALE

DIMENSIONS ARE APPROXIMATE AND ARE FOR PROPORTIONAL RELATIONSHIPS. ALL DIMENSIONS OF EXISTING ELEMENTS REQUIRE FIELD VERIFICATION. FIELD ADJUSTMENTS TO LAYOUT ARE EXPECTED.

* NOT INTENDED FOR PERMIT OR CONSTRUCTION. ALL MATERIALS, DETAILS, AND LOCATION OF ELEMENTS SHOWN AS PART OF THIS DOCUMENT ARE SUBJECT TO FINAL PLANS AND SPECIFICATIONS.

320'-0" MODULE PLAN - SPIRIT OF TEXAS DRIVE

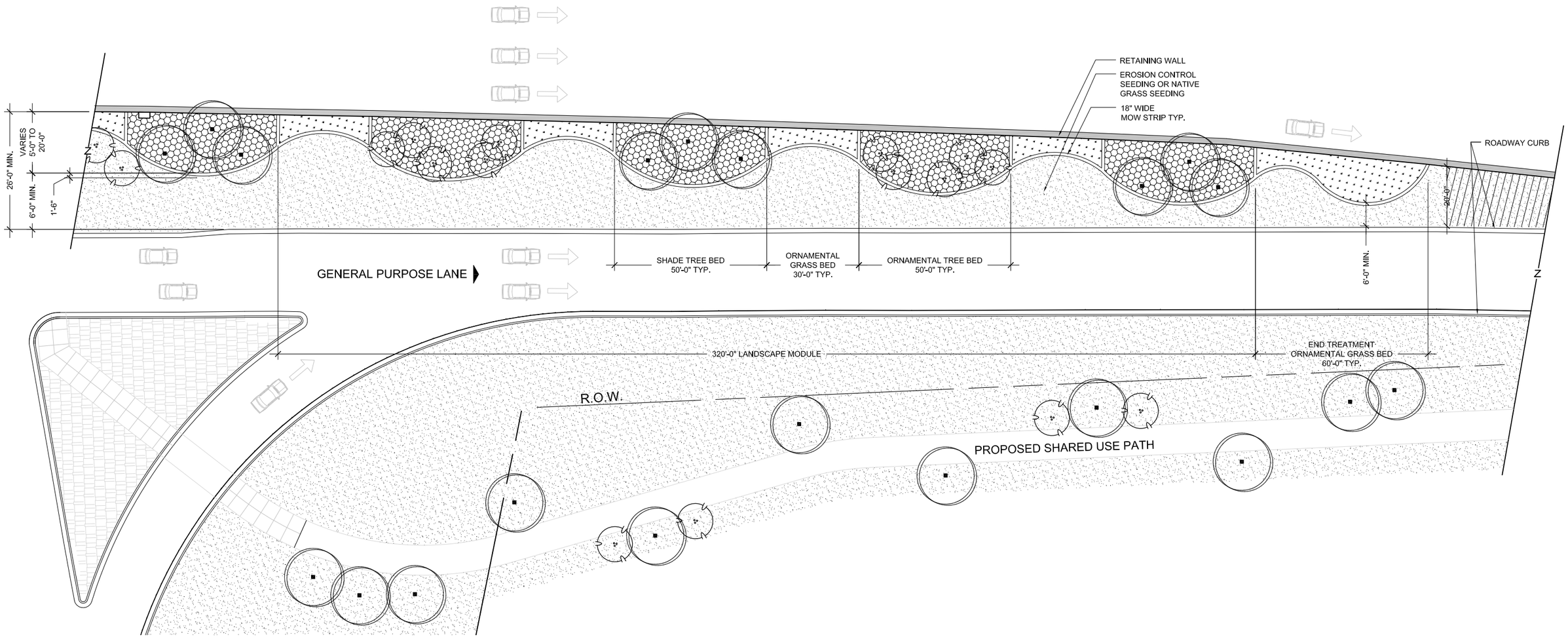

ROADWAY MODULE PLANTING PLAN

SCALE: 1" = 30'-0"

NOTES:

1. ALL TREE (SPECIES, MATURE HEIGHTS, PLACEMENT), THE SHARED USE PATH AND LIGHTING (ROADWAY, ACCENT AND BOLLARDS) SHALL BE SUBJECT TO APPROVAL BY TXDOT AND AUSTIN-BERGSTROM INTERNATIONAL AIRPORT.
2. THE CONTRACTOR IS RESPONSIBLE FOR MODIFYING LANDSCAPE AND HARDSCAPE TREATMENTS WHERE UTILITIES WILL REMAIN.
3. NO TREES WHERE DISTANCES BETWEEN BACK OF CURB AND RETAINING WALLS ARE LESS THAN 20'-0". IF THERE IS NO CURB, MEASURE FROM EDGE OF PAVEMENT.
4. ALL TREES ASSOCIATED WITH THE SHARED USE PATH SHALL BE LOCATED MINIMUM 30'-0" FROM BACK OF CURB.
5. CONTRACTOR IS RESPONSIBLE FOR LOCATING SLOPES THAT REQUIRE EROSION CONTROL SEEDING.

DIMENSIONS ARE APPROXIMATE AND ARE FOR PROPORTIONAL RELATIONSHIPS. ALL DIMENSIONS OF EXISTING ELEMENTS REQUIRE FIELD VERIFICATION. FIELD ADJUSTMENTS TO LAYOUT ARE EXPECTED.

* NOT INTENDED FOR PERMIT OR CONSTRUCTION. ALL MATERIALS, DETAILS, AND LOCATION OF ELEMENTS SHOWN AS PART OF THIS DOCUMENT ARE SUBJECT TO FINAL PLANS AND SPECIFICATIONS.

INTERSECTION PLANTING PLAN - SPIRIT OF TEXAS DRIVE

NOTES:
1. ALL TREE (SPECIES, MATURE HEIGHTS, PLACEMENT), THE SHARED USE PATH AND LIGHTING (ROADWAY, ACCENT AND BOLLARDS) SHALL BE SUBJECT TO APPROVAL BY TXDOT AND AUSTIN-BERGSTROM INTERNATIONAL AIRPORT.
2. THE CONTRACTOR IS RESPONSIBLE FOR MODIFYING LANDSCAPE AND HARDSCAPE TREATMENTS WHERE UTILITIES WILL REMAIN.
3. NO TREES WHERE DISTANCES BETWEEN BACK OF CURB AND RETAINING WALLS ARE LESS THAN 20'-0". IF THERE IS NO CURB, MEASURE FROM EDGE OF PAVEMENT.
4. ALL TREES ASSOCIATED WITH THE SHARED USE PATH SHALL BE LOCATED MINIMUM 30'-0" FROM BACK OF CURB.
5. CONTRACTOR IS RESPONSIBLE FOR LOCATING SLOPES THAT REQUIRE EROSION CONTROL SEEDING.

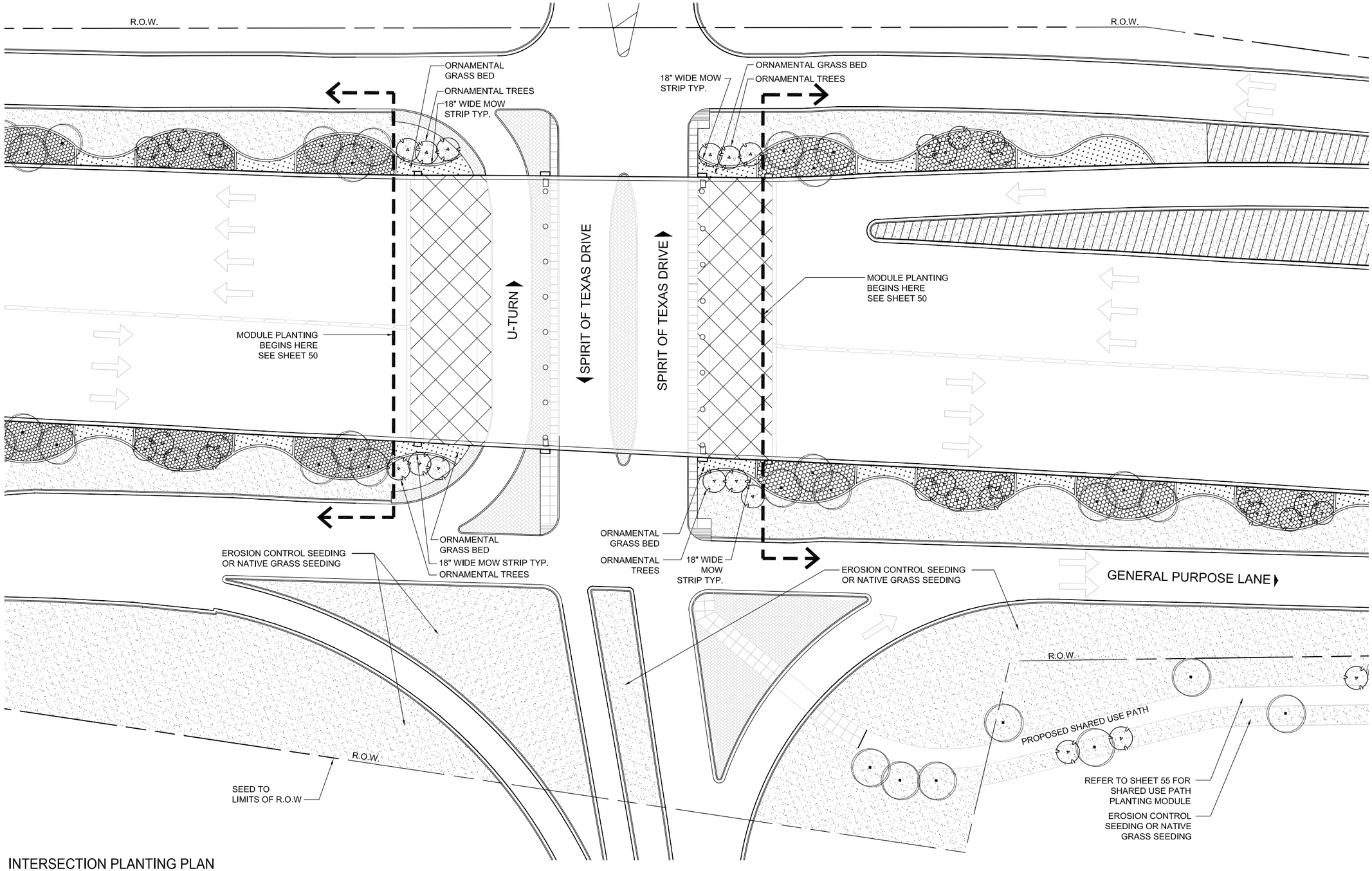

INTERSECTION PLANTING PLAN

SCALE: 1" = 50'-0"

DIMENSIONS ARE APPROXIMATE AND ARE FOR PROPORTIONAL RELATIONSHIPS. ALL DIMENSIONS OF EXISTING ELEMENTS REQUIRE FIELD VERIFICATION. FIELD ADJUSTMENTS TO LAYOUT ARE EXPECTED.

N

Texas Department of Transportation

* NOT INTENDED FOR PERMIT OR CONSTRUCTION. ALL MATERIALS, DETAILS, AND LOCATION OF ELEMENTS SHOWN AS PART OF THIS DOCUMENT ARE SUBJECT TO FINAL PLANS AND SPECIFICATIONS.

LANDSCAPE LAYOUT PLAN - FM 973

NOTES:
1. ALL TREE (SPECIES, MATURE HEIGHTS, PLACEMENT), THE SHARED USE PATH AND LIGHTING (ROADWAY, ACCENT AND BOLLARDS) SHALL BE SUBJECT TO APPROVAL BY TXDOT AND AUSTIN-BERGSTROM INTERNATIONAL AIRPORT.
2. THE CONTRACTOR IS RESPONSIBLE FOR MODIFYING LANDSCAPE AND HARDSCAPE TREATMENTS WHERE UTILITIES WILL REMAIN.
3. NO TREES WHERE DISTANCES BETWEEN BACK OF CURB AND RETAINING WALLS ARE LESS THAN 20'-0". IF THERE IS NO CURB, MEASURE FROM EDGE OF PAVEMENT.
4. ALL TREES ASSOCIATED WITH THE SHARED USE PATH SHALL BE LOCATED MINIMUM 30'-0" FROM BACK OF CURB.
5. CONTRACTOR IS RESPONSIBLE FOR LOCATING SLOPES THAT REQUIRE EROSION CONTROL SEEDING.

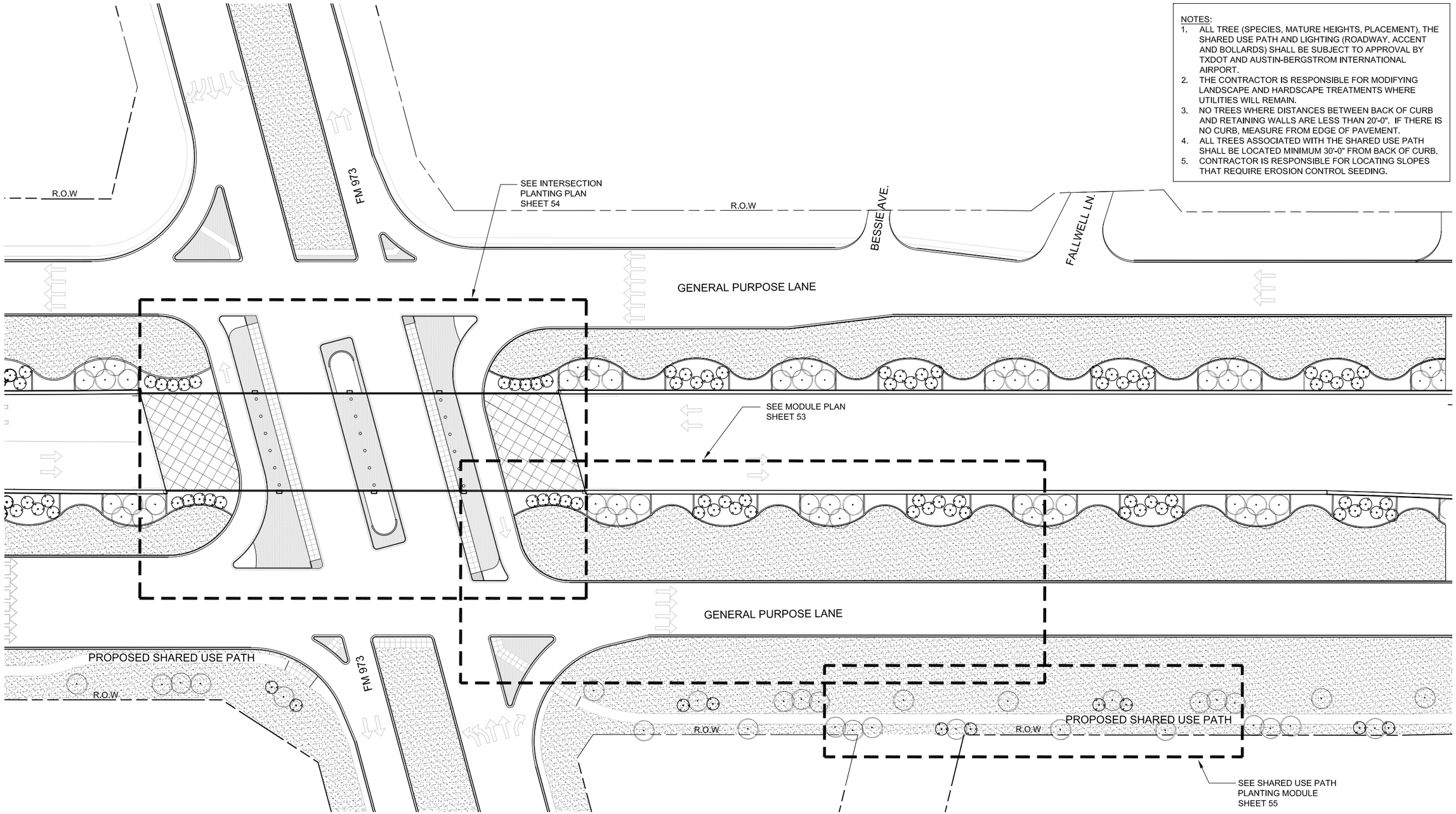

LANDSCAPE PLAN

SCALE: NOT TO SCALE

DIMENSIONS ARE APPROXIMATE AND ARE FOR PROPORTIONAL RELATIONSHIPS. ALL DIMENSIONS OF EXISTING ELEMENTS REQUIRE FIELD VERIFICATION. FIELD ADJUSTMENTS TO LAYOUT ARE EXPECTED.

Texas Department of Transportation

* NOT INTENDED FOR PERMIT OR CONSTRUCTION. ALL MATERIALS, DETAILS, AND LOCATION OF ELEMENTS SHOWN AS PART OF THIS DOCUMENT ARE SUBJECT TO FINAL PLANS AND SPECIFICATIONS.

300'-0" MODULE PLAN - FM 973

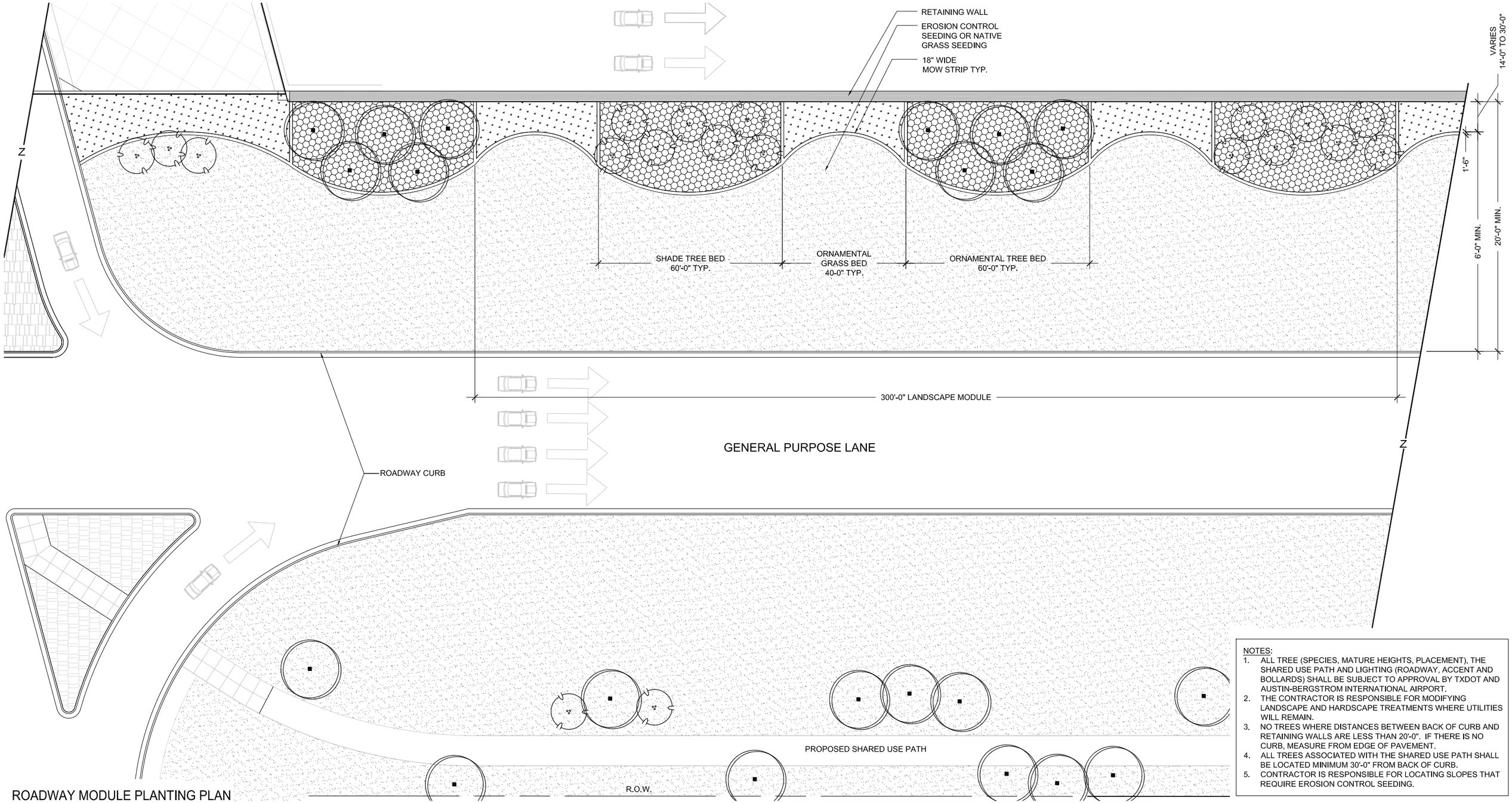

ROADWAY MODULE PLANTING PLAN

SCALE: 1" = 30'-0"

NOTES:

1. ALL TREE (SPECIES, MATURE HEIGHTS, PLACEMENT), THE SHARED USE PATH AND LIGHTING (ROADWAY, ACCENT AND BOLLARDS) SHALL BE SUBJECT TO APPROVAL BY TXDOT AND AUSTIN-BERGSTROM INTERNATIONAL AIRPORT.
2. THE CONTRACTOR IS RESPONSIBLE FOR MODIFYING LANDSCAPE AND HARDSCAPE TREATMENTS WHERE UTILITIES WILL REMAIN.
3. NO TREES WHERE DISTANCES BETWEEN BACK OF CURB AND RETAINING WALLS ARE LESS THAN 20'-0". IF THERE IS NO CURB, MEASURE FROM EDGE OF PAVEMENT.
4. ALL TREES ASSOCIATED WITH THE SHARED USE PATH SHALL BE LOCATED MINIMUM 30'-0" FROM BACK OF CURB.
5. CONTRACTOR IS RESPONSIBLE FOR LOCATING SLOPES THAT REQUIRE EROSION CONTROL SEEDING.

DIMENSIONS ARE APPROXIMATE AND ARE FOR PROPORTIONAL RELATIONSHIPS. ALL DIMENSIONS OF EXISTING ELEMENTS REQUIRE FIELD VERIFICATION. FIELD ADJUSTMENTS TO LAYOUT ARE EXPECTED.

N

Texas Department of Transportation

* NOT INTENDED FOR PERMIT OR CONSTRUCTION. ALL MATERIALS, DETAILS, AND LOCATION OF ELEMENTS SHOWN AS PART OF THIS DOCUMENT ARE SUBJECT TO FINAL PLANS AND SPECIFICATIONS.

INTERSECTION PLANTING PLAN - FM 973

NOTES:
1. ALL TREE (SPECIES, MATURE HEIGHTS, PLACEMENT), THE SHARED USE PATH AND LIGHTING (ROADWAY, ACCENT AND BOLLARDS) SHALL BE SUBJECT TO APPROVAL BY TXDOT AND AUSTIN-BERGSTROM INTERNATIONAL AIRPORT.
2. THE CONTRACTOR IS RESPONSIBLE FOR MODIFYING LANDSCAPE AND HARDSCAPE TREATMENTS WHERE UTILITIES WILL REMAIN.
3. NO TREES WHERE DISTANCES BETWEEN BACK OF CURB AND RETAINING WALLS ARE LESS THAN 20'-0". IF THERE IS NO CURB, MEASURE FROM EDGE OF PAVEMENT.
4. ALL TREES ASSOCIATED WITH THE SHARED USE PATH SHALL BE LOCATED MINIMUM 30'-0" FROM BACK OF CURB.
5. CONTRACTOR IS RESPONSIBLE FOR LOCATING SLOPES THAT REQUIRE EROSION CONTROL SEEDING.

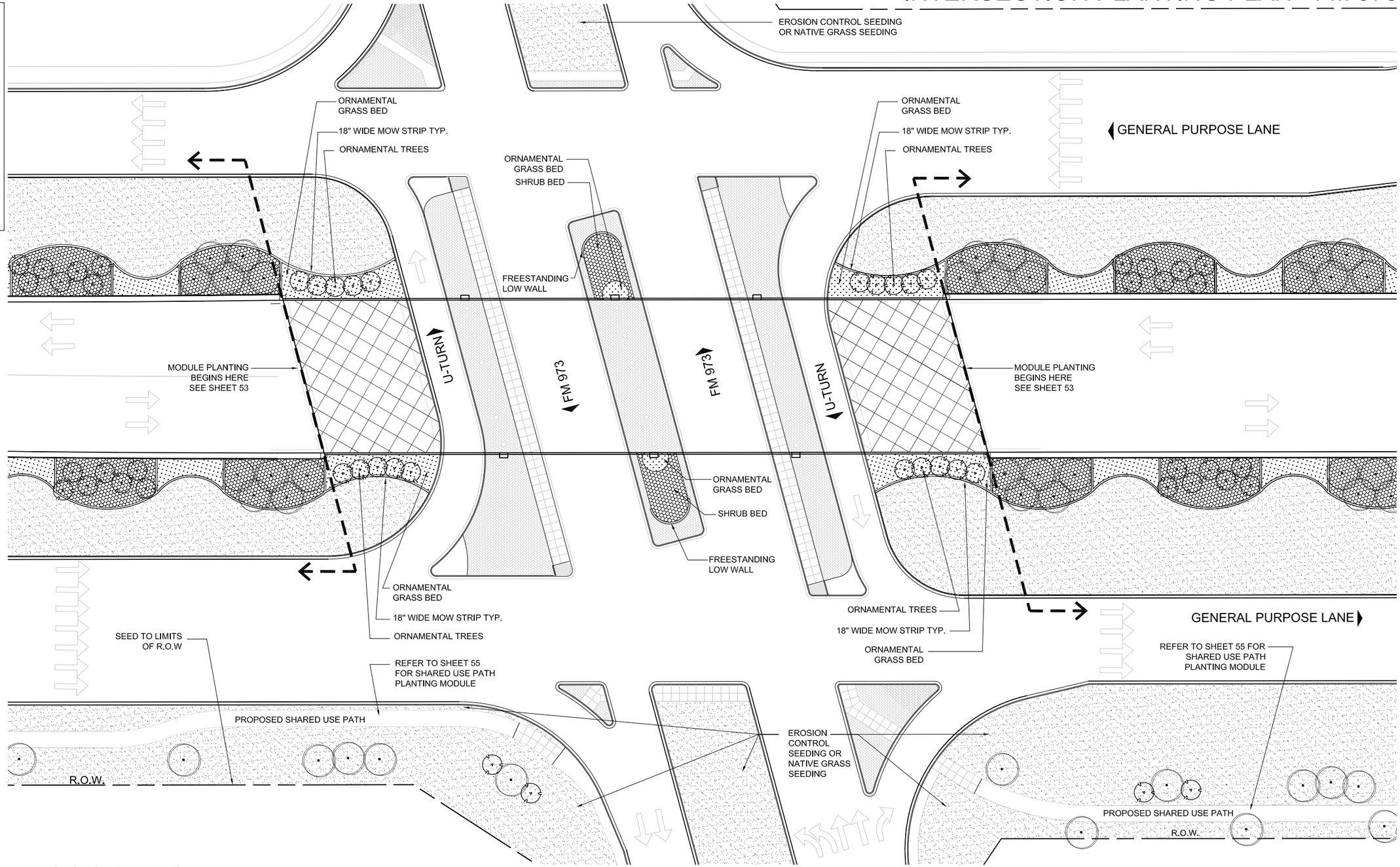

INTERSECTION PLANTING PLAN

SCALE: 1" = 60'-0"

DIMENSIONS ARE APPROXIMATE AND ARE FOR PROPORTIONAL RELATIONSHIPS. ALL DIMENSIONS OF EXISTING ELEMENTS REQUIRE FIELD VERIFICATION. FIELD ADJUSTMENTS TO LAYOUT ARE EXPECTED.

N

Texas Department of Transportation

* NOT INTENDED FOR PERMIT OR CONSTRUCTION. ALL MATERIALS, DETAILS, AND LOCATION OF ELEMENTS SHOWN AS PART OF THIS DOCUMENT ARE SUBJECT TO FINAL PLANS AND SPECIFICATIONS.

400'-0" SHARED USE PATH MODULE PLAN

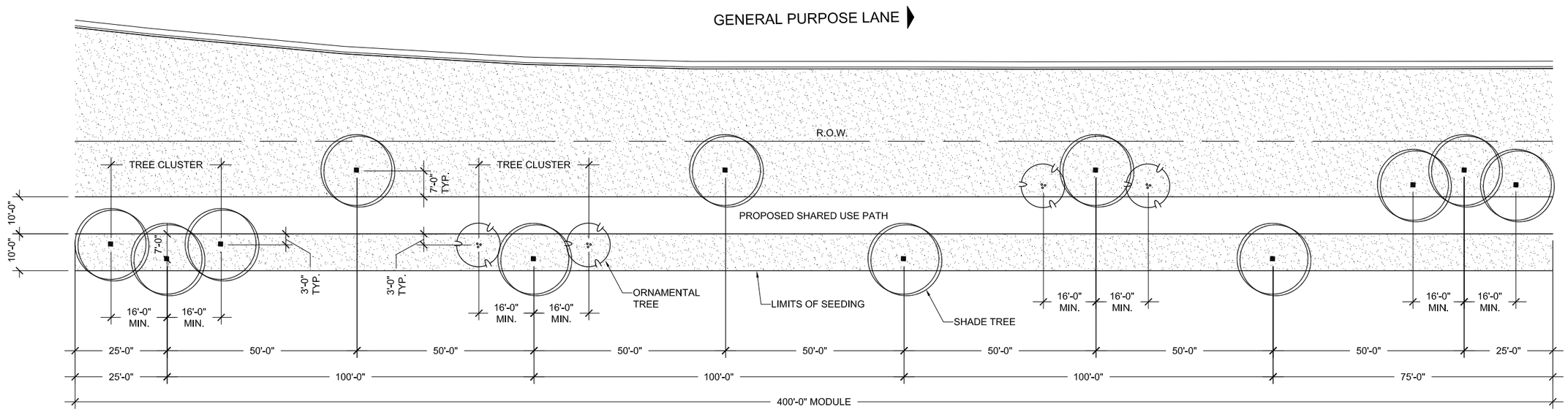

SHARED USE PATH MODULE PLANTING PLAN

SCALE: 1" = 30'-0"

SHARED USE PATH MODULE PLANT KEY AND REQUIREMENTS

CANOPY TREES

QTY: 12 PER MODULE LENGTH OF LANDSCAPE
TREE CLUSTER SPACING: 16'-0" MIN., 20'-0" MAX.
REFER TO SHEET 57 FOR SPECIES OPTIONS
(MIN. 2 SPECIES PER MODULE)

ORNAMENTAL TREES

QTY: 4 PER MODULE LENGTH OF LANDSCAPE
TREE CLUSTER SPACING: 16'-0" MIN., 20'-0" MAX.
REFER TO SHEET 57 FOR SPECIES OPTIONS
(1 SPECIES PER MODULE)

SEEDED NATIVE GRASS AREAS

SQUARE FOOTAGE OF SEED PER MODULE OF LANDSCAPE WILL VARY (CALICHE MIX)
REFER TO SHEET 57 FOR SEED MIX INFORMATION

EROSION CONTROL SEEDING (APPLIED TO SLOPES GREATER THAN 6:1)

DONE IN ACCORDANCE WITH 2004 TEXAS STANDARD SPECIFICATIONS FOR CONSTRUCTION AND MAINTENANCE OF HIGHWAYS, STREETS, AND BRIDGES- ITEM 164 WITH THE ADDITION OF WILDFLOWER SEED MIX AS SHOWN IN TXDOT'S "BLACKLAND PRAIRIE REGION" SEED LIST (FOUND ON TXDOT'S WEBSITE)-
http://www.dot.state.tx.us/mnt/wildflower/Seed_List_htm/blackland.htm

NOTES:
1. ALL TREE (SPECIES, MATURE HEIGHTS, PLACEMENT), THE SHARED USE PATH AND LIGHTING (ROADWAY, ACCENT AND BOLLARDS) SHALL BE SUBJECT TO APPROVAL BY TXDOT AND AUSTIN-BERGSTROM INTERNATIONAL AIRPORT.
2. THE CONTRACTOR IS RESPONSIBLE FOR MODIFYING LANDSCAPE AND HARDSCAPE TREATMENTS WHERE UTILITIES WILL REMAIN.
3. NO TREES WHERE DISTANCES BETWEEN BACK OF CURB AND RETAINING WALLS ARE LESS THAN 20'-0". IF THERE IS NO CURB, MEASURE FROM EDGE OF PAVEMENT.
4. ALL TREES ASSOCIATED WITH THE SHARED USE PATH SHALL BE LOCATED MINIMUM 30'-0" FROM BACK OF CURB.
5. CONTRACTOR IS RESPONSIBLE FOR LOCATING SLOPES THAT REQUIRE EROSION CONTROL SEEDING.

DIMENSIONS ARE APPROXIMATE AND ARE FOR PROPORTIONAL RELATIONSHIPS. ALL DIMENSIONS OF EXISTING ELEMENTS REQUIRE FIELD VERIFICATION. FIELD ADJUSTMENTS TO LAYOUT ARE EXPECTED.

Texas Department of Transportation

* NOT INTENDED FOR PERMIT OR CONSTRUCTION. ALL MATERIALS, DETAILS, AND LOCATION OF ELEMENTS SHOWN AS PART OF THIS DOCUMENT ARE SUBJECT TO FINAL PLANS AND SPECIFICATIONS.

TREE PROTECTION:

A. IF A TREE/TREES IN THE R.O.W. IS/ARE DETERMINED TO BE PROTECTED, THE CONTRACTOR SHOULD FOLLOW THE CURRENT CITY OF AUSTIN STANDARD NOTES FOR TREE AND NATURAL AREA PROTECTION BELOW.

B. IF A TREE/TREES ON AUSTIN-BERGSTROM INTERNATIONAL AIRPORT PROPERTY IS/ARE DETERMINED TO BE PROTECTED, THE CONTRACTOR SHALL FOLLOW THE CURRENT CITY OF AUSTIN STANDARD NOTES FOR TREE AND NATURAL AREA PROTECTION.

C. THE CONTRACTOR SHALL COORDINATE TREE REMOVAL AND PROTECTION WITH TXDOT AND AUSTIN- BERGSTROM INTERNATIONAL AIRPORT.

CITY OF AUSTIN STANDARD NOTES FOR TREE AND NATURAL AREA PROTECTION :

1. ALL TREES AND NATURAL AREAS SHOWN ON PLAN TO BE PRESERVED SHALL BE PROTECTED DURING CONSTRUCTION WITH TEMPORARY FENCING.
2. PROTECTIVE FENCES SHALL BE ERECTED ACCORDING TO CITY OF AUSTIN STANDARDS FOR TREE PROTECTION.
3. PROTECTIVE FENCES SHALL BE INSTALLED PRIOR TO THE START OF ANY SITE PREPARATION WORK (CLEARING, GRUBBING OR GRADING), AND SHALL BE MAINTAINED THROUGHOUT ALL PHASES OF THE CONSTRUCTION PROJECT.
4. EROSION AND SEDIMENTATION CONTROL BARRIERS SHALL BE INSTALLED OR MAINTAINED IN A MANNER WHICH DOES NOT RESULT IN SOIL BUILD-UP WITHIN TREE DRIP LINES.
5. PROTECTIVE FENCES SHALL SURROUND THE TREES OR GROUP OF TREES, AND WILL BE LOCATED AT THE OUTERMOST LIMIT OF BRANCHES (DRIP LINE) , FOR NATURAL AREAS, PROTECTIVE FENCES SHALL FOLLOW THE LIMIT OF CONSTRUCTION LINE, IN ORDER TO PREVENT THE FOLLOWING:
   A. SOIL COMPACTION IN THE ROOT ZONE AREA RESULTING FROM VEHICULAR TRAFFIC OR STORAGE OF EQUIPMENT OR MATERIALS;
   B. ROOT ZONE DISTURBANCES DUE TO GRADE CHANGES (GREATER THAN 6 INCHES CUT OR FILL), OR TRENCHING NOT REVIEWED AND AUTHORIZED BY THE CITY ABORIST;
   C. WOUNDS TO EXPOSED ROOTS, TRUNK OR LIMBS BY MECHANICAL EQUIPMENT;
   D. OTHER ACTIVITIES DETRIMENTAL TO TREES SUCH AS CHEMICAL STORAGE, CEMENT TRUCK CLEANING, AND FIRES.
6. EXCEPTIONS TO INSTALLING FENCES AT TREE DRIP LINES MAY BE PERMITTED IN THE FOLLOWING CASES:
   A. WHERE THERE IS TO BE AN APPROVED GRADE CHANGE, IMPERMEABLE PAVING SURFACE, TREE WELL, OR OTHER SUCH SITE DEVELOPMENT, ERECT THE FENCE APPROXIMATELY 2 TO 4 FEET BEYOND THE AREA DISTURBED;
   B. WHERE PERMEABLE PAVING IS TO BE INSTALLED WITHIN A TREE'S DRIP LINE, ERECT THE FENCE AT THE OUTER LIMITS OF THE PERMEABLE PAVING AREA (PRIOR TO SITE GRADING SO THAT THIS AREA IS GRADED SEPARATELY PRIOR TO PAVING INSTALLATION TO MINIMIZED ROOT DAMAGE);
   C. WHERE TREES ARE CLOSE TO PROPOSED BUILDINGS, ERECT THE FENCE TO ALLOW 10 FEET OF WORK SPACE BETWEEN THE FENCE AND THE BUILDING;
   D. WHERE THERE ARE SEVERE SPACE CONSTRAINTS DUE TO TRACT SIZE, OR OTHER SPECIAL REQUIREMENTS, CONTACT THE CITY ARBORIST AT (512) 974-1876 TO DISCUSS ALTERNATIVES.

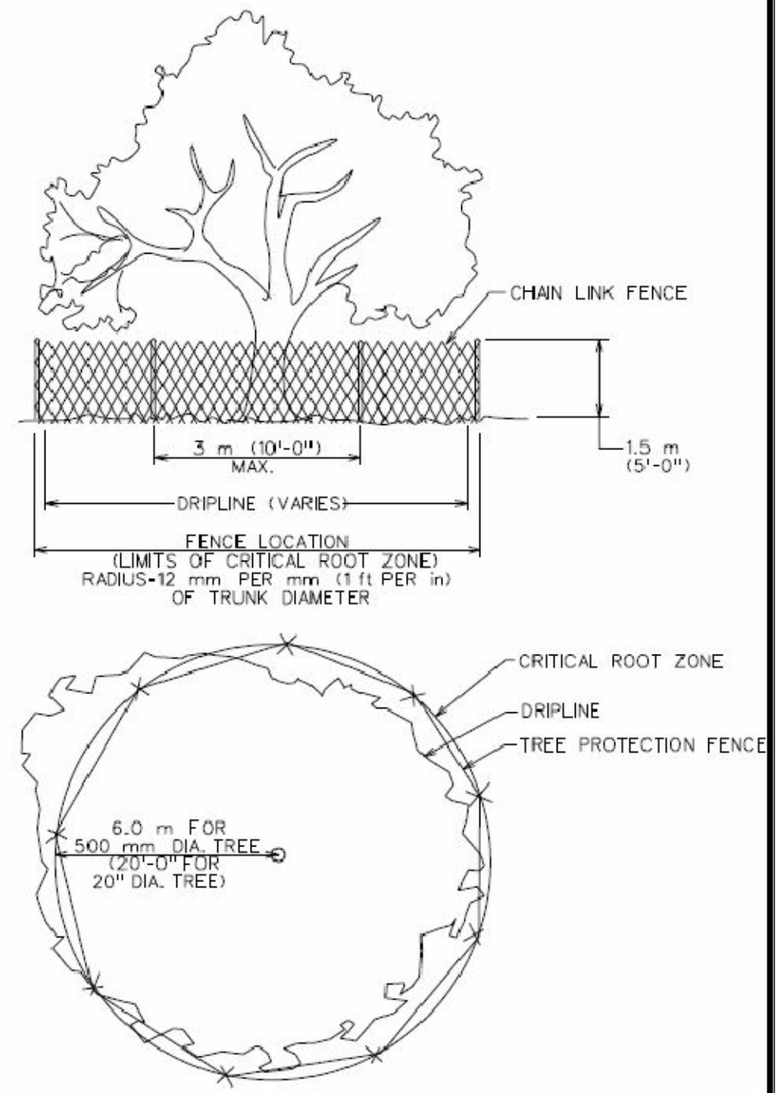

CITY OF AUSTIN WATERSHED PROTECTION DEPARTMENT		TREE PROPTECTION FENCE TYPE A - CHAIN LINK	
RECORD COPY SIGNED BY J. PATRICK MURPHY	11/15/99 ADOPTED	THE ARCHITECT/ENGINEER ASSUMES RESPONSIBILITY FOR APPROPRIATE USE OF THIS STANDARD.	STANDARD NO. 610S-2

CHAIN LINK TREE PROTECTION FENCE

SCALE: NOT TO SCALE

DIMENSIONS ARE APPROXIMATE AND ARE FOR PROPORTIONAL RELATIONSHIPS. ALL DIMENSIONS OF EXISTING ELEMENTS REQUIRE FIELD VERIFICATION. FIELD ADJUSTMENTS TO LAYOUT ARE EXPECTED.

Texas Department of Transportation

* NOT INTENDED FOR PERMIT OR CONSTRUCTION. ALL MATERIALS, DETAILS, AND LOCATION OF ELEMENTS SHOWN AS PART OF THIS DOCUMENT ARE SUBJECT TO FINAL PLANS AND SPECIFICATIONS.

PLANT MATERIAL:

1. ALL PLANT MATERIAL SHALL BE DROUGHT TOLERANT, COLD HARDY, LOW MAINTENANCE AND NATIVE OR ADAPTED SPECIES.
2. NO ONE SHADE TREE, ORNAMENTAL TREE, SHRUB, OR ORNAMENTAL GRASS SHALL BE USED FOR MORE THAN 40% OF THE PROJECT AREA.
   - A MINIMUM OF THREE (3) SHADE TREE SPECIES SHALL BE USED.
   - A MINIMUM OF THREE (3) ORNAMENTAL TREE SPECIES SHALL BE USED.
   - A MINIMUM OF TWO (2) 5 GALLON SHRUBS SHALL BE USED.
   - A MINIMUM OF THREE (3) 3 GALLON SHRUBS SHALL BE USED.
   - A MINIMUM OF THREE (3) 1 GALLON SHRUBS SHALL BE USED.
   - A MINIMUM OF THREE (3) ORNAMENTAL GRASSES SHALL BE USED.
3. IT IS NOT REQUIRED FOR ALL RECOMMENDED PLANT MATERIAL TO BE USED.
4. IF THE CONTRACTOR WOULD LIKE TO PROPOSE A PLANT THAT IS NOT IDENTIFIED IN THIS DOCUMENT, THE PLANT TYPE AND ITS SIZE CAN BE SUBMITTED TO THE OWNER FOR APPROVAL.
5. THE PLANT SIZES LISTED ARE MINIMUM REQUIREMENTS. IF ORNAMENTAL GRASSES/SHRUBS ARE NOT AVAILABLE IN THE IDENTIFIED SIZES, AN ALTERNATIVE PLANT SIZE WITH A MODIFIED SPACING CAN BE SUBMITTED TO THE OWNER FOR APPROVAL.

SITE CONDITIONS:

1. TREES, SHRUBS AND ORNAMENTAL GRASSES SHALL NOT BE LOCATED IN DITCHES OR SWALES.
2. NO PLANT MATERIAL SHALL BE LOCATED ON SLOPES GREATER THAN 3:1.
3. CONTRACTOR SHALL COORDINATE PLANT SPECIES AND PLACEMENT WITH AUSTIN-BERSTROM INTERNATIONAL AIRPORT.

ROADWAY MODULE PLANT KEY AND REQUIREMENTS

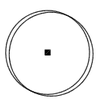

CANOPY TREES

QTY: 6 PER MODULE LENGTH OF LANDSCAPE SPACING: 15'-0" MAX.
SEE SECTION, THIS SHEET FOR SPECIES OPTIONS
(MIN. 2 SPECIES PER MODULE)

ORNAMENTAL TREES

QTY: 10 PER MODULE LENGTH OF LANDSCAPE
SPACING: 10'-0" MAX.
SEE SECTION, THIS SHEET FOR SPECIES OPTIONS
(MIN. 2 SPECIES PER MODULE)

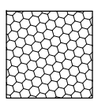

SHRUB BEDS

QTY: 6 PER MODULE LENGTH OF LANDSCAPE SPACING: PER PLANT LIST
SEE SECTION, THIS SHEET FOR SPECIES OPTIONS
(MIN. 2 SPECIES PER MODULE)

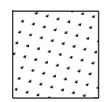

ORNAMENTAL GRASS BEDS

QTY: 10 PER MODULE LENGTH OF LANDSCAPE
SPACING: PER PLANT LIST
SEE SECTION, THIS SHEET FOR SPECIES OPTIONS
(MIN. 2 SPECIES PER MODULE)

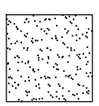

SEEDED NATIVE GRASS AREAS

SQUARE FOOTAGE OF SEED PER MODULE OF LANDSCAPE WILL VARY (CALICHE MIX)
SEE SECTION, THIS SHEET FOR SEED MIX INFORMATION

EROSION CONTROL SEEDING (APPLIED TO SLOPES GREATER THAN 6:1)

DONE IN ACCORDANCE WITH 2004 TEXAS STANDARD SPECIFICATIONS FOR CONSTRUCTION AND MAINTENANCE OF HIGHWAYS, STREETS, AND BRIDGES- ITEM 164 WITH THE ADDITION OF WILDFLOWER SEED MIX AS SHOWN IN TXDOT'S "BLACKLAND PRAIRIE REGION" SEED LIST (FOUND ON TXDOT'S WEBSITE)-
http://www.dot.state.tx.us/mnt/wildflower/Seed_List_htm/blackland.htm

PLANT LIST

Botanical Name	Common Name	Plant Size	Spacing
SHADE TREES			
Quercus macrocarpa	Burr Oak	3"-3.5" CAL	15' MAX
Quercus texana	Texas Red Oak	3"-3.5" CAL	15' MAX
Quercus virginiana	Live Oak	3"-3.5" CAL	15' MAX
Ulmus crassifolia	Cedar Elm	3"-3.5" CAL	15' MAX
ORNAMENTAL TREES			
Cercis canadensis var. texana	Texas Redbud	2" CAL	10' MAX
Rhus lanceolata	Prairie Flameleaf Sumac	2" CAL	10' MAX
Sophora secundiflora	Texas Mountain Laurel - Multi Trunk	2" CAL	10' MAX
Ungnadia speciosa	Mexican Buckeye	2" CAL	10' MAX
SHRUBS/ PERENNIALS			
Elaeagnus pungens	Elaeagnus	5 GAL	60" MAX
Leucophyllum frutescens	Texas Sage	5 GAL	48" MAX
Mahonia trifoliolata	Agarita	5 GAL	48" MAX
Ansacanthus quadrifidus v. wrightii	Flame Acanthus	3 GAL	36" MAX
Dasylirion texanum	Texas Sotol	3 GAL	48" MAX
Hesperaloe parviflora	Red Yucca	3 GAL	36" MAX
Hibiscus martianus	Heartleaf Rosemallow	3 GAL	36" MAX
Salvia leucantha	Mexican Bush Sage	3 GAL	36" MAX
Dalea frutescens	Black Dalea	3 GAL	36" MAX
Chrysactinia mexicana	Damianita	1 GAL	18" MAX
Glandularia bipinnatifida v bipinnatifida	Prairie Verbena	1 GAL	18" MAX
Pavonia lasiopetala	Texas Rock Rose	1 GAL	36" MAX
Penstemon triflorus	Hill Country Penstemon	1 GAL	18" MAX
Salvia greggii 'White'	White Autumn Sage	1 GAL	36" MAX
Tagetes lemmonii	Copper Canyon Daisy	1 GAL	36" MAX
ORNAMENTAL GRASSES			
Bouteloua curtipendula	Sideoats Grama	1 GAL	18" MAX
Nassella tenuissima	Mexican Feathergrass	1 GAL	18" MAX
Muhlenbergia capillaris	Gulf Muhly	1 GAL	24" MAX
Muhlenbergia lindheimerii	Lindheimer's Muhly	1 GAL	36" MAX
Schizachyrium scoparium	Little Bluestem	1 GAL	18" MAX
CALICHE SEED MIX FOR NATIVE GRASSES			
Bouteloua curtipendula	Sideoats Grama	Refer to TxDOT Specifications for Rates.	
Bouteloua gracilis	Blue Grama		
Buchloe dactyloides	Buffalograss		
Elymus canadensis	Prairie Wildrye		
Eragrostis trichodes (Nutt.) Wood	Sand Lovegrass		
Leptochloa dubia	Green Sprangletop		
Schizachyrium scoparium	Little Bluestem		
Sporoblus cryptandrus (Torr.) Gray	Sand Dropseed		

DIMENSIONS ARE APPROXIMATE AND ARE FOR PROPORTIONAL RELATIONSHIPS. ALL DIMENSIONS OF EXISTING ELEMENTS REQUIRE FIELD VERIFICATION. FIELD ADJUSTMENTS TO LAYOUT ARE EXPECTED.

* NOT INTENDED FOR PERMIT OR CONSTRUCTION. ALL MATERIALS, DETAILS, AND LOCATION OF ELEMENTS SHOWN AS PART OF THIS DOCUMENT ARE SUBJECT TO FINAL PLANS AND SPECIFICATIONS.

CONSTRUCTION NOTES:
1. FOOTING AND WALL REINFORCEMENT SUBJECT TO FINAL PLANS AND SPECIFICATIONS.
2. CONTRACTOR SHALL PLACE WEEP HOLES IN WALL TO ALLOW FOR BED DRAINAGE.
3. THE CONTRACTOR MAY BUILD THIS WALL IN PLACE OF MOW STRIP IN AREAS WHERE SLOPES EXCEED 6:1.

FINISH NOTES:
1. CONCRETE WALL CAP- 3" CHAMFER BOTH SIDES. INSTALLATION & REINFORCEMENT PER STRUCTURAL SPECIFICATIONS. STAIN COLOR FED. STD. #26559.
2. WALL FACE - FORM LINER 166D CHISELED LIMESTONE WITH JOINTS BY SCOTT SYSTEM OR APPROVED EQUAL. CONTRACTOR SHALL USE STAIN COLORS (FED. STD. #26559, #30324, #30219) TO CREATE A REALISTIC LIMESTONE APPEARANCE.

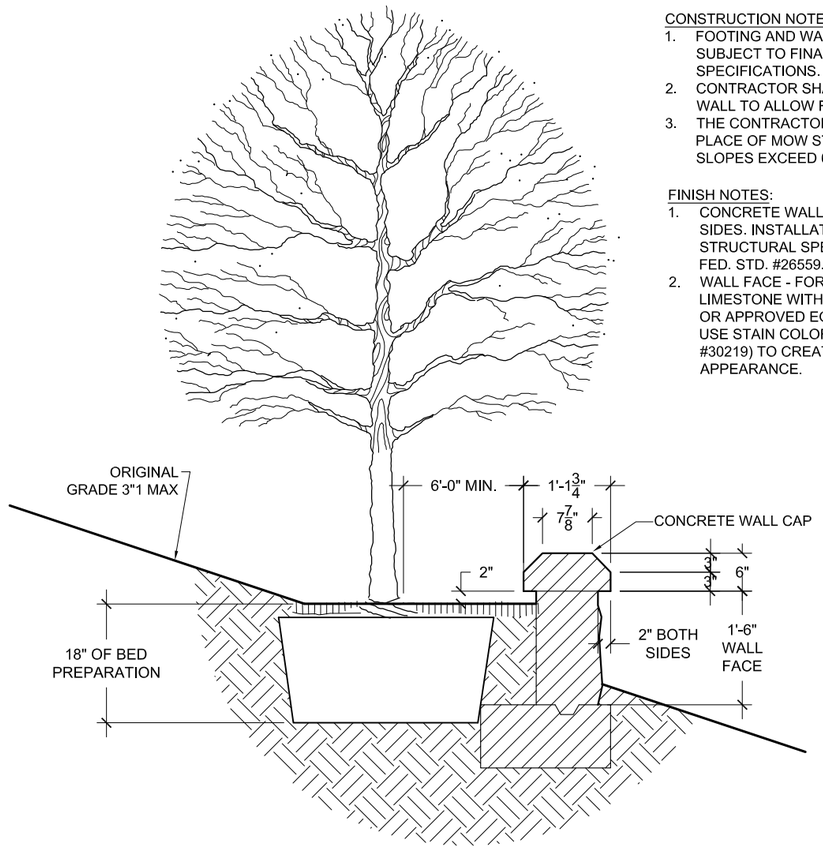

1 PLANT INSTALLATION ON SLOPES STEEPER THAN 6:1
SCALE: NOT TO SCALE

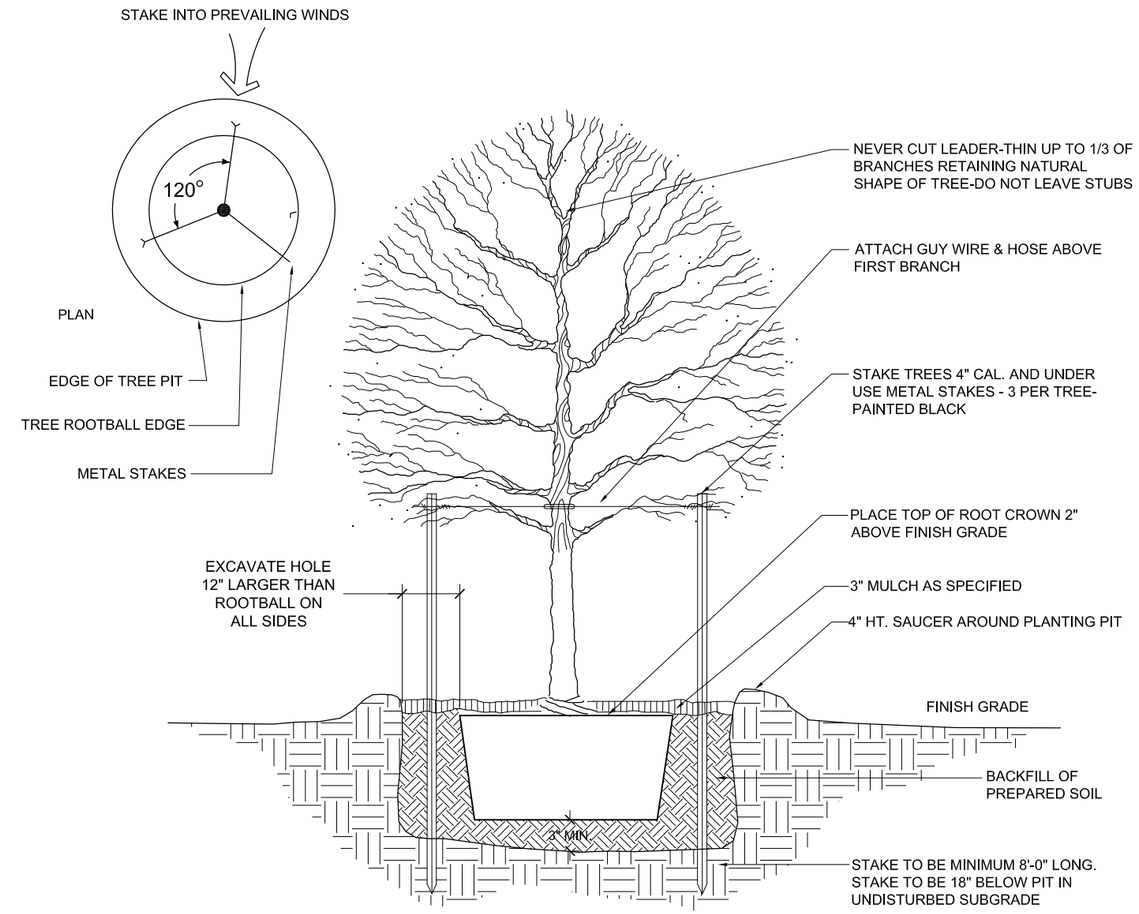

3 SHRUB BED AND BED PREPARATION DETAIL
SCALE: NOT TO SCALE

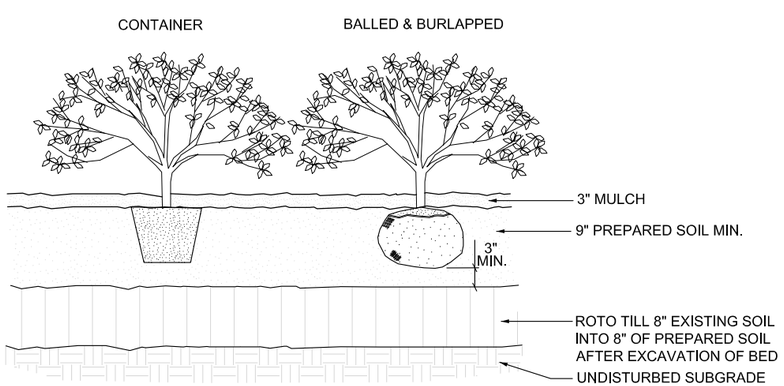

NOTE:
PLANT SHRUBS USING TRIANGULAR SPACING

2 SHRUB BED AND BED PREPARATION DETAIL
SCALE: NOT TO SCALE

DIMENSIONS ARE APPROXIMATE AND ARE FOR PROPORTIONAL RELATIONSHIPS. ALL DIMENSIONS OF EXISTING ELEMENTS REQUIRE FIELD VERIFICATION. FIELD ADJUSTMENTS TO LAYOUT ARE EXPECTED.

Texas Department of Transportation

* NOT INTENDED FOR PERMIT OR CONSTRUCTION. ALL MATERIALS, DETAILS, AND LOCATION OF ELEMENTS SHOWN AS PART OF THIS DOCUMENT ARE SUBJECT TO FINAL PLANS AND SPECIFICATIONS.

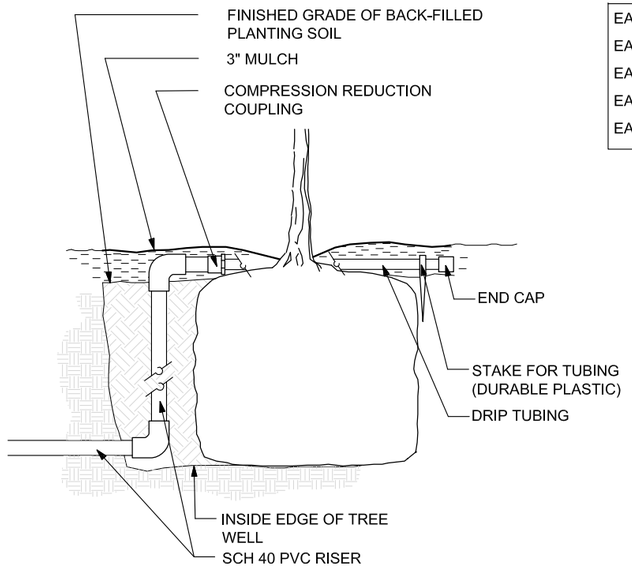

EACH 45 GAL TREE SHALL HAVE 20 EMITTERS, MIN.
EACH 30 GAL TREE SHALL HAVE 15 EMITTERS, MIN.
EACH 15 GAL TREE SHALL HAVE 10 EMITTERS, MIN.
EACH 5 GAL SHRUB SHALL HAVE 5 EMITTERS, MIN.
EACH 3 GAL AND 1 GAL SHRUB SHALL HAVE 5 EMITTERS, MIN.

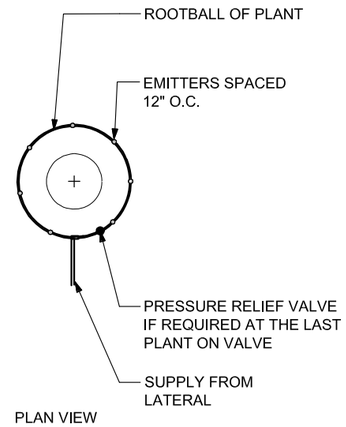

1 TYPICAL INSTALLATION OF DRIP IRRIGATION AT TREES
SCALE: NOT TO SCALE

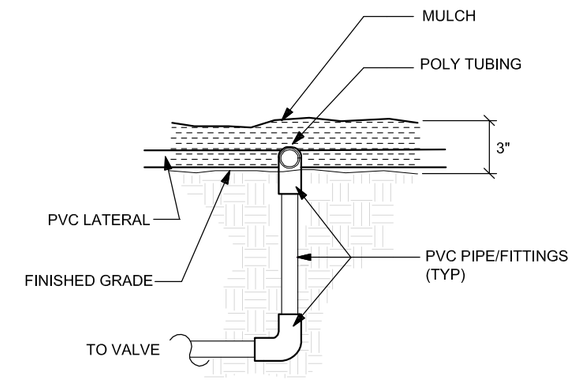

2 TYPICAL DRIP IRRIGATION PVC/ HEADER CONNECTION
SCALE: NOT TO SCALE

NOTES:

1. ALL LANDSCAPE PLANTING BEDS AND TREES SHALL HAVE DRIP IRRIGATION WITH POWER CONTROLLERS. ALL IRRIGATION IMPROVEMENTS SHALL BE OF OPERATIONAL QUALITY FOR A MINIMUM OF 5 YEARS.
2. INSTALLATION OF ALL IRRIGATION SYSTEMS SHALL BE DONE IN ACCORDANCE WITH THE CITY OF AUSTIN SITE DEVELOPMENT PERMIT - IRRIGATION NOTES.
3. THE CONTRACTOR SHALL BE RESPONSIBLE FOR OBTAINING ALL PERMITS AND LICENSES REQUIRED, AND FOR THE PAYMENT OF ALL FEES NECESSARY FOR THE INSTALLATION AND OPERATION OF THE IRRIGATION SYSTEM.
4. IRRIGATION SYSTEMS SHALL MAINTAIN A DISTANCE BETWEEN TREES AND STRUCTURES EQUAL TO OR GREATER THAN THE RADIUS OF THE MATURE DRIPLINE.
5. CONTRACTOR SHALL PROVIDE TXDOT WITH AN IRRIGATION DESIGN AND SUBMITTALS FOR REVIEW AND APPROVAL.
6. IRRIGATION CONTROLLER(S) LOCATION(S) SHALL BE APPROVED BY TXDOT.
7. IRRIGATION CONTROLLER(S) SHALL BE A.C.

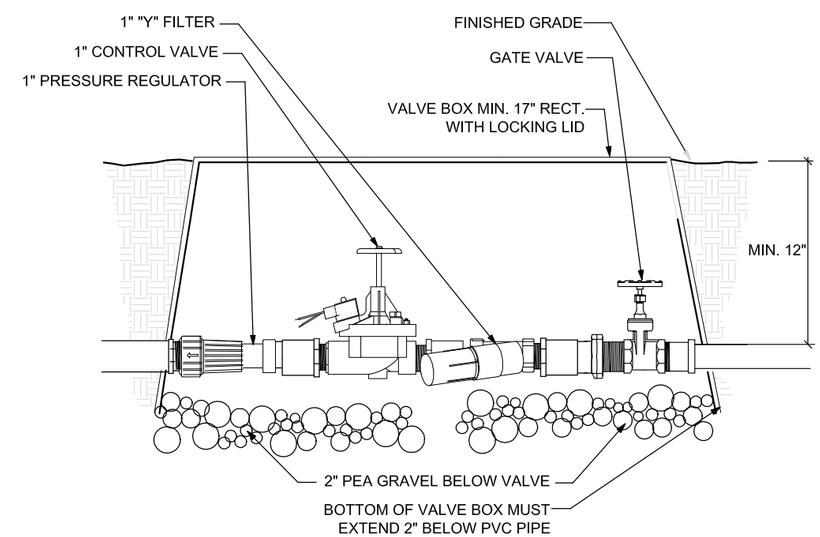

3 TYPICAL VALVE ASSEMBLY FOR DRIP IRRIGATION SECTION
SCALE: NOT TO SCALE

DIMENSIONS ARE APPROXIMATE AND ARE FOR PROPORTIONAL RELATIONSHIPS. ALL DIMENSIONS OF EXISTING ELEMENTS REQUIRE FIELD VERIFICATION. FIELD ADJUSTMENTS TO LAYOUT ARE EXPECTED.

* NOT INTENDED FOR PERMIT OR CONSTRUCTION. ALL MATERIALS, DETAILS, AND LOCATION OF ELEMENTS SHOWN AS PART OF THIS DOCUMENT ARE SUBJECT TO FINAL PLANS AND SPECIFICATIONS.

SH71 Express Project

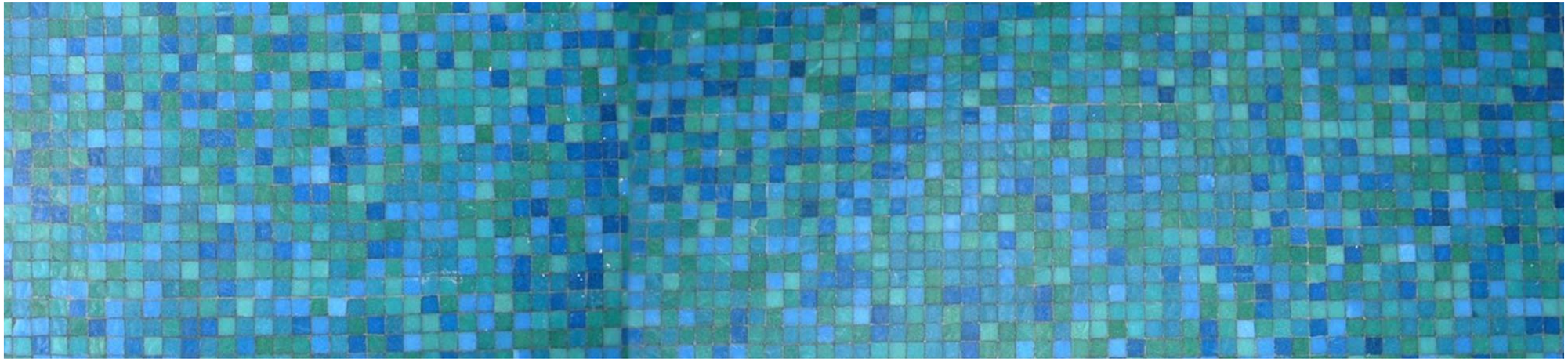

7.0 FINISH SCHEDULE

Texas Department of Transportation

FORM LINER	STAIN COLOR	FACILITY ELEMENTS
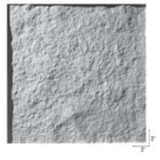	FED. STD. #30324	STANDARD TRAFFIC BARRIER TEXTURE ATOP RETAINING WALLS MSE WALL BRIDGE ABUTMENT WALL (PRESIDENTIAL BOULEVARD)

166A CHISELED LIMESTONE
SCOTT SYSTEM (OR APPROVED EQUAL)

STAIN COLOR	FACILITY ELEMENTS
FED. STD. #26152	STEEL ELLIPSE HSS LIGHT POLE AND ARM

FORM LINER	STAIN COLOR	FACILITY ELEMENTS
	FED. STD. #26559	FEATURE WALL PILASTER CAP AND BASE RETAINING WALL PILASTER CAP & BASE BRIDGE ABUTMENT WALL PILASTER BASE (PRESIDENTIAL BOULEVARD) PYLONS "A" THROUGH "D" CAP & BASE

166B 1 1/4" CHISELED LIMESTONE
SCOTT SYSTEM (OR APPROVED EQUAL)

FORM LINER	STAIN COLOR(S)			FACILITY ELEMENTS
	FED. STD. #26559	FED. STD. #30324	FED. STD. #30219	FEATURE WALL MSE RETAINING WALL SLOPED RETAINING WALL STANDARD TRAFFIC BARRIER AT BRIDGE LOW WALL FREE STANDING LOW WALL PLANT INSTALLATION ON SLOPES STEEPER THAN 6:1

166D CHISELED LIMESTONE W/ JOINTS
SCOTT SYSTEM (OR APPROVED EQUAL)

FORM LINER	STAIN COLOR(S)			FACILITY ELEMENTS
	FED. STD. #26559	FED. STD. #30324	FED. STD. #30219	FEATURE WALL PILASTER TRUNK KEYSTONE ARCH AT FEATURE WALL RETAINING WALL PILASTER TRUNK BRIDGE ABUTMENT WALL PILASTER TRUNK (PRESIDENTIAL BOULEVARD) PYLONS "A" THROUGH "D" TRUNK

167B ASHLAR STONE B
SCOTT SYSTEM (OR APPROVED EQUAL)

DIMENSIONS ARE APPROXIMATE AND ARE FOR PROPORTIONAL RELATIONSHIPS. ALL DIMENSIONS OF EXISTING ELEMENTS REQUIRE FIELD VERIFICATION. FIELD ADJUSTMENTS TO LAYOUT ARE EXPECTED.

* NOT INTENDED FOR PERMIT OR CONSTRUCTION. ALL MATERIALS, DETAILS, AND LOCATION OF ELEMENTS SHOWN AS PART OF THIS DOCUMENT ARE SUBJECT TO FINAL PLANS AND SPECIFICATIONS.